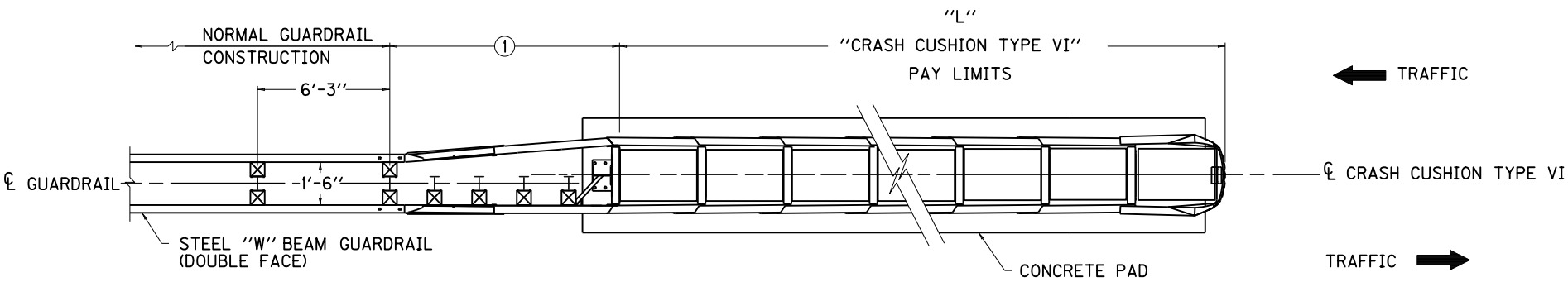

~ PLAN ~

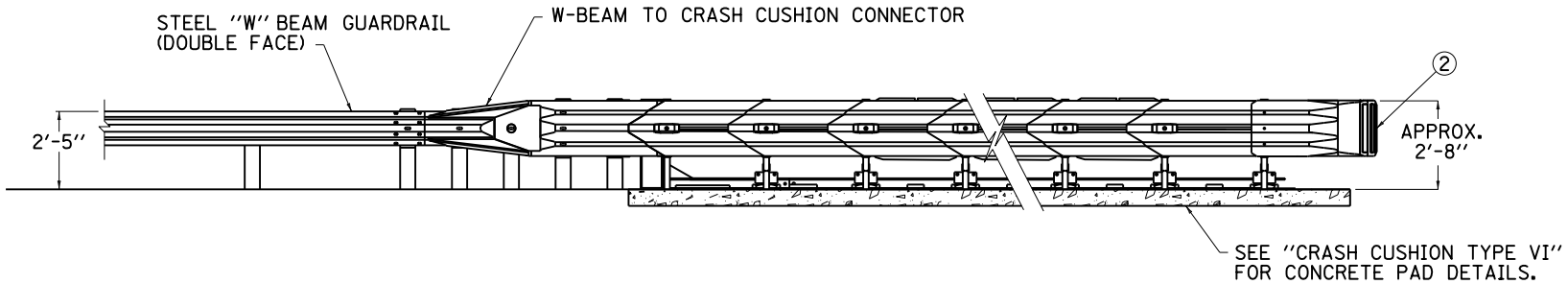

~ ELEVATION ~

~ NOTES ~

1. ALL HARDWARE, POSTS, OFFSET BLOCKS, ADDITIONAL GUARDRAIL, W-BEAM TO CRASH CUSHION CONNECTOR, LABOR AND INCIDENTALS WITHIN THE TRANSITION LENGTH, AS REQUIRED BY THE CRASH CUSHION MANUFACTURER SHALL BE INCLUDED IN THE CONTRACT UNIT PRICE FOR "CRASH CUSHION TYPE VI ☆ △." △ADD SUFFIX OF 1 TO BID ITEM WHICH DENOTES A BACK-UP SYSTEM OTHER THAN CONCRETE, AS DETAILED ON PLANS AND APPROVED SHOP DRAWINGS.
2. OBJECT MARKER TYPE 1, (SEE CURRENT MUTCD MANUAL FOR DETAILS) CENTER HORIZ. AND VERT.

BID ITEM AND UNIT TO BID	
OBJECT MARKER TYPE 1	EACH

USE WITH CUR. STD. DWG.
RBE-060

KENTUCKY
DEPARTMENT OF HIGHWAYS

CONNECTION DETAILS OF CRASH CUSHION TYPE VI TO DOUBLE FACE GUARDRAIL

STANDARD DRAWING NO. RBC-110-11

SUBMITTED William S. Hulet — DIRECTOR, DIVISION OF DESIGN — 12-01-15 DATE

APPROVED — STATE HIGHWAY ENGINEER — 12-01-15 DATE