Contrary to Standard Drawings for Guardrail, place splices between posts off of bridge as shown.

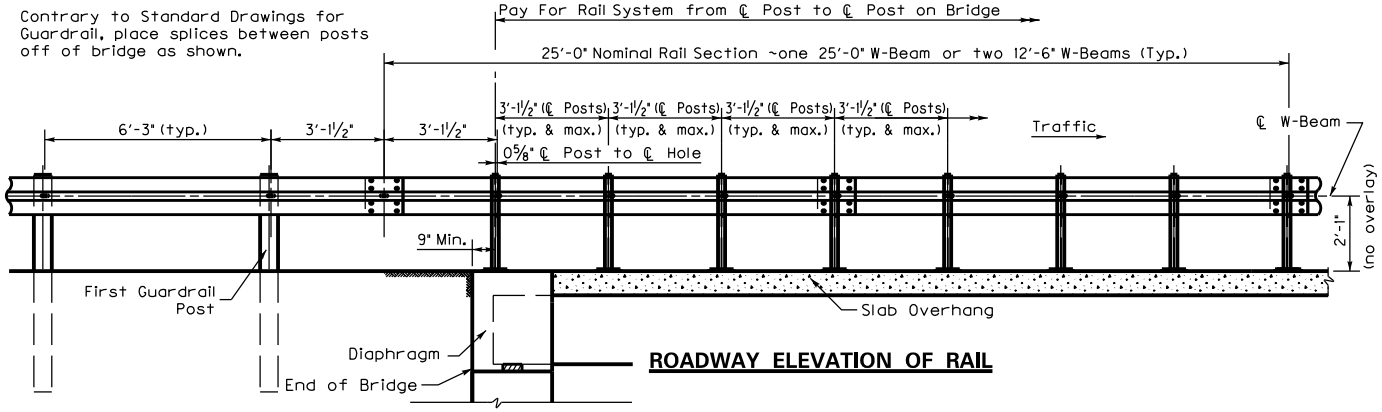

ROADWAY ELEVATION OF RAIL

TRANSITION AND END TREATMENT NOTES:
This traffic railing must be anchored by a minimum of 25 feet of pay item "G/R, Steel W Beam, S Face (7 Foot Post)" Bid Code 21802EN. This 25 feet at each corner of the bridge is to be paid with the roadway plans. This traffic railing is 2'-1" tall at the center of the rail while the associated standard drawings indicate 1'-11" at the center with the "Guardrail, Steel W Beam, Single Face." Contrary to the standard drawings, transition the guardrail down 2" in the first 4 posts off the bridge. This is ½" per post so it transitions 25' from the last post on the bridge.

CONSTRUCTION NOTES:
Face of rail post must be plumb unless otherwise approved by the Engineer. Post must be perpendicular to adjacent roadway grade. Use epoxy mortar with Type III binder conforming to Section 826 and ASTM C881 under post base plates if gaps larger than 1/16" exist. Fully anchored guardrail must be attached to each end of rail. Typical guardrail construction as indicated above and not bridge rail transition or bridge end connector. It is recommended that the bridge plans show rail post locations. Round or chamfer exposed edges of rail posts and backer Plate to approximately 1/16" by grinding. Shop drawings are not required.

MATERIAL NOTES:
Galvanize all steel components. Anchor bolts for base plate must be ⅝"Ø ASTM-A325 or A449 bolts with one hardened washer and one regular lock washer placed under each heavy hex nut. Nuts must conform to A563 requirements. W-beam must meet the requirements of Std. Dwg. RBR-001-12 except as modified in these plans. The contractor may furnish rail elements of 25'-0" or 12'-6" (Nominal) lengths. W-beam must have slotted holes at 3'-1½".

GENERAL NOTES:
This railing has been successfully evaluated by full scale crash test to meet MASH TL-3 criteria. This railing can be used for speeds 50 mph and greater.
This rail is designed to deflect approximately 4' - 4'-6" as it contains and redirects the errant vehicle. This rail may not be installed on top of or behind curbs that project above finished grade, on bridges with expansion joints providing more than 5" of movement, on retaining walls, or on grade separations and interchanges.
Repairs to impact-damaged post and base plate unit are not permitted. Replace all impact-damaged posts with a new post and base plate unit.
Average weight of railing with no overlay: 19 plf total.

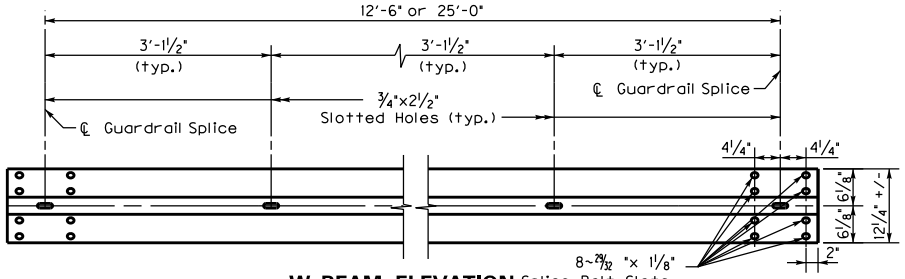

W-BEAM ELEVATION

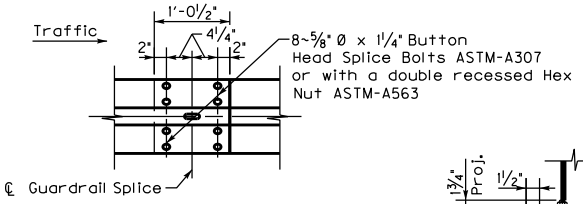

W-BEAM SPLICE ELEVATION

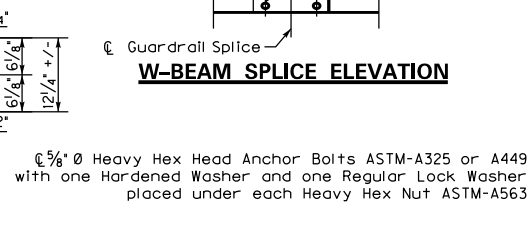

ALTERNATE ANCHORAGE

(For Concrete >11" Thick)

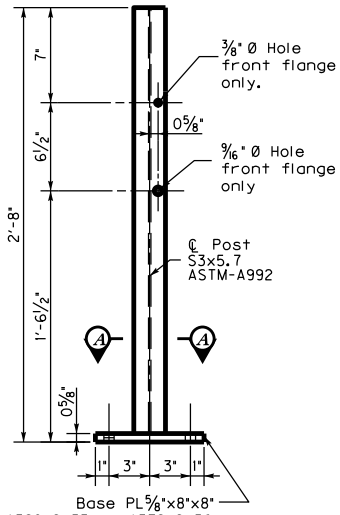

POST ELEVATION

℄5/16" Ø x2½" Hex Head Bolt ASTM-A307 with one Regular Washer and one Regular Lock Washer placed under two Hex Nuts. (Tighten the first hex nut by hand until the top and bot. edges of the W-beam engage the backer plate snug against the post. Then tighten hex nut one revolution with wrench and secure with the 2nd hex nut.)

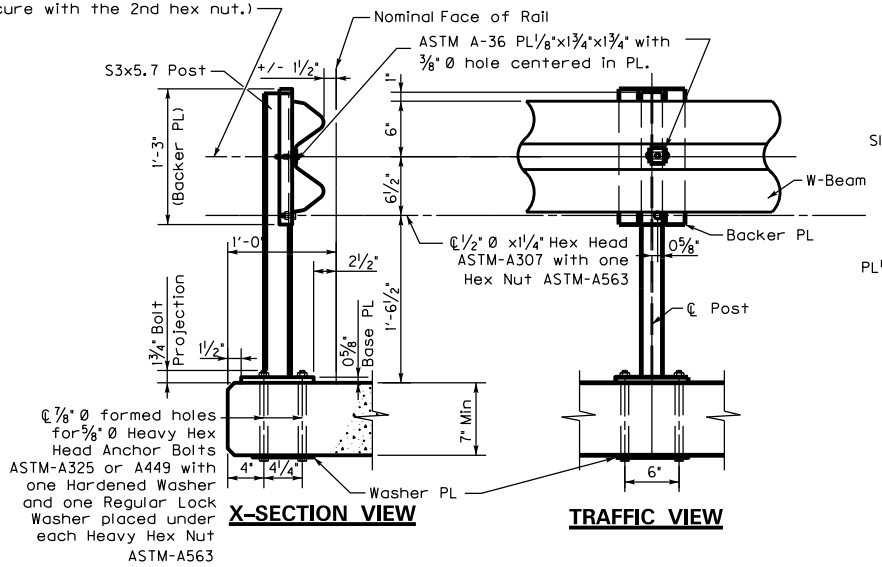

X-SECTION VIEW

TRAFFIC VIEW

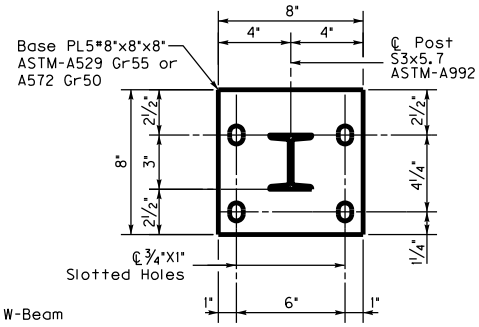

SECTION A-A

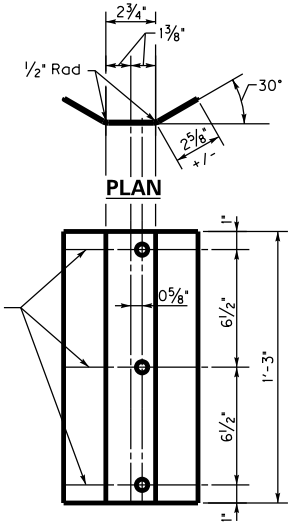

PLAN

ELEVATION

(Bent Plate)
Backer PL ⅛"x8"x1'-3"
ASTM-A1011 CS or SS Gr 33, or A1008 CS or SS Gr 33
(11 Gage acceptable)

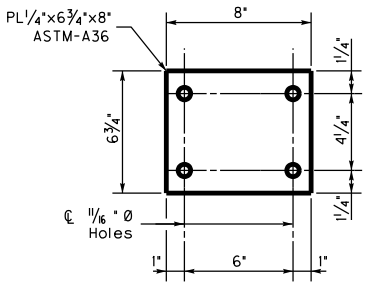

WASHER PLATE

KENTUCKY
DEPARTMENT OF HIGHWAYS

RAILING SYSTEM
TYPE T631

STANDARD DRAWING NO. BHS-010-01

SUBMITTED Mark Hite — DIRECTOR DIVISION OF STRUCTURAL DESIGN — 12-02-11 DATE

APPROVED [signature] — STATE HIGHWAY ENGINEER — 12-02-11 DATE