COUNTY OF	ITEM NO.	SHEET NO.
KENTON	6-162.00	R1A

REVISION DATE: MAY 7, 2021

RIGHT OF WAY REVISION NO. 1

REVISED PLANS DATE: MARCH 21, 2017

SHEETS REVISED: R1, R1A, R3, R3A, R3B, R4, R4A, R5, R6A, R7, R8A, R9, R10A, R11, R12A, R13, R14A, R15, R16A, R17, R18A, R19, R20A, R21, R22A, R23, R24A, R25, R26A, R27, R28A, R29, R30A, R31, R32A, R33, R34A, R35, R36A, R37, R38A, R39, R40A, R41, R42A, R43, R44A, R45, R46A, R49-R88, R90, R91

PARCELS INVOLVED: 2, 3, 4, 5, 6, 11, 13, 36, 37, 43, 45, 69, 79, 147, 149, 178, 186, 195

REMARKS:

PARCEL 2, 3, 4, 5, 11	-	ADDED PARCELS FOR RIGHT OF WAY.
PARCEL 13	-	REVISED PROPERTY LINES FOR PARCEL 11.
PARCEL 6, 36	-	REMOVED PROPOSED TEMPORARY EASEMENT.
PARCEL 37	-	REVISED PROPOSED TEMPORARY EASEMENT AND ADDED TWO PERMANENT DRAINAGE EASEMENTS.
PARCEL 43	-	REVISED PROPOSED TEMPORARY EASEMEMT.
PARCEL 45	-	REVISED PROPOSED RIGHT OF WAY AND REMOVED PROPOSED TEMPORARY EASEMENT.
PARCEL 79	-	ADDED PARCEL 79 FOR THE LOUISVILLE & NASHVILLE RAILROAD.
PARCEL 147	-	REMOVED PROPOSED RIGHT OF WAY AND EDITED PROPOSED TEMPORARY EASEMENT AND PROPOSED CONTROLLED ACCESS LINE.
PARCEL 149	-	ADDED PROPOSED PERMANENT DRAINAGE EASEMENT.
PARCEL 178	-	ADDED PROPOSED TEMPORARY EASEMENT.
PARCEL 186	-	REVISED PROPOSED TEMPORARY EASEMENT.
PARCELS 69, 195	-	REVISED EXISTING RAILROAD RIGHT OF WAY LINE.

ADDED CONTROLLED ACCESS BREAKS ALONG KY 536.

ADDED ALIGNMENT DATA TABLES FOR APPROACH ROADS TO COORDINATE CONTROL SHEETS AND MODIFIED ALIGNMENT DATA TABLES FOR WEST END EXTENSION.

UPDATED RIGHT OF WAY MONUMENT SHEETS.

RIGHT OF WAY REVISION NO. 2 (INTERIM SUBMITTAL)

REVISED PLANS DATE: JANUARY 19, 2018

SHEETS REVISED: R1A, R3B, R5, R7, R9, R11, R13, R45, R56, R57, R62

PARCELS INVOLVED: 4, 5, 6, 7, 9, 10, 12-17, 19, 25-27, 30, 36, 37, 44, 191

REMARKS:

THIS REVISION APPLIES ONLY TO PARCELS REQUIRED FOR CONSTRUCTION OF ITEM NO. 6-162.20

THE PLANS HAVE BEEN MODIFIED TO REFLECT THE CHANGE IN METHODOLOGY TO REDUCE PERMANENT RIGHT OF WAY ACQUISITION AND INSTEAD UTILIZE TEMPORARY EASEMENTS AS MUCH AS PRACTICAL.

THE ONLY SHEETS INCLUDED ARE THE PLAN SHEETS AND RIGHT OF WAY SUMMARY SHEETS THAT ENCOMPASS THE PARCELS NOTED ABOVE (THE SUMMARY SHEETS ARE SHADED SO THAT THE UPDATED PARCELS ARE EASILY TRACKED). THIS INTERIM SUBMITTAL IS TO ALLOW INITIATION OF THE APPRAISAL PROCESS.

THE REMAINDER OF THE SHEETS FOR THIS AREA AND CORRESPONDING DEEDS WILL BE INCLUDED IN A FUTURE REVISION.

PARCEL 2 WILL BE COORDINATED WITH THE ADJACENT SECTION 6-14.00

RIGHT OF WAY REVISION NO. 2B(INTERIM SUBMITTAL)

REVISED PLANS DATE: APRIL 19, 2018

SHEETS REVISED: R7, R8A, R56

PARCELS INVOLVED: 6, 13

REMARKS:

THIS REVISION APPLIES ONLY TO PARCELS REQUIRED FOR CONSTRUCTION OF ITEM NO. 6-162.20

THIS SUBMITTAL IS TO INCORPORATE CHANGES TO SIGMON LANE, THE ENTRANCE ADDED TO PARCEL 6 AND THE ADDITION BUILT ONTO PARCEL 13

THE ONLY SHEETS INCLUDED ARE THE PLAN SHEETS AND RIGHT OF WAY SUMMARY SHEETS THAT ENCOMPASS THE PARCELS NOTED ABOVE (THE SUMMARY SHEETS ARE SHADED SO THAT THE UPDATED PARCELS ARE EASILY TRACKED). THIS INTERIM SUBMITTAL IS TO ALLOW INITIATION OF THE APPRAISAL PROCESS.

THE REMAINDER OF THE SHEETS FOR THIS AREA AND CORRESPONDING DEEDS WILL BE INCLUDED IN A FUTURE REVISION.

RIGHT OF WAY REVISION NO. 3

REVISED PLANS DATE: JUNE 15, 2018

SHEETS REVISED: R1, R1A, R3, R3A R3B, R4, R4A, R5, R6, R6A, R7, R8, R8A, R9, R10, R10A, R11, R12, R12A, R13, R14, R14A, R15, R16, R16A, R39, R40, R40A, R41, R42, R42A, R43, R44, R44A, R45, R46, R46A, R49, R55, R55A, R55B, R55C, R55D, R55E, R55F, R55G, R55H, R56, R57, R61, R62, R63, R64, R65, R66, R67, R68, R69, R70, R71, R78, R79, R80, R81, R82, R90, R91

PARCELS INVOLVED: 2, 4-10, 12-17, 19, 25-27, 30, 36, 37, 44-46, 51, 149, 156-158, 163-170, 173-178, 186, 191

REMARKS:

THE REVISIONS REFLECT THE CHANGE IN METHODOLOGY TO REDUCE PERMANENT RIGHT OF WAY AQUISITION AND INSTEAD UTILIZE TEMPORARY EASEMENTS AS MUCH AS PRACTICAL. THIS REVISION INCORPORATES THE METHODOLOGY CHANGE FOR SECTIONS 6-162.10 AND 6-162.20.

PARCEL 2	-	REMOVED PARCEL NUMBER. R/W WILL BE AQUIRED WITH ITEM NO. 6-14.
PARCEL 4	-	MODIFIED TOEBBEN DRIVE CENTERLINE DUE TO TOEBBEN DRIVE SURVEY. PARCEL 4 R/W AND EASEMENTS WERE MODIFIED TO INCORPORATE UPDATED CENTERLINE
PARCELS 4, 7, 9, 12, 13, 17, 19, 26, 27, 36, 173, 174, 178, 186	-	ADDED PROPOSED PERMANENT DRAINAGE EASEMENT.
SHEETS R55A-R55H	-	SHEETS ADDED FOR APPROACH AND ENTRANCE PROFILES ON 6-162.10 AND 6-162.20.

UPDATED CONTROLLED ACCESS BREAKS ALONG KY 536.

UPDATED RIGHT OF WAY MONUMENT SHEETS AND RIGHT OF WAY SUMMARY SHEETS.

RIGHT OF WAY REVISION NO. 4

REVISED PLANS DATE: JANUARY 28, 2019

SHEETS REVISED: R1A, R3B, R4A, R5, R6A, R7, R8A, R9, R10A, R11, R12A, R13 R14A, R56, R57, R68, R69, R70, R71

ADDITIONAL SHEETS INCLUDED : R45, R46, R46A, R62

PARCELS INVOLVED: 3, 6, 7, 9, 10, 16, 21, 23, 26, 36, 37, 43, 44

REMARKS:

PARCEL 3	-	CHANGED OWNERSHIP TO CINCINNATI SOUTHERN RAILWAY AND ADDED STATE PLANE COORDINATES FOR PROPERTY CORNERS
PARCEL 9	-	CHANGED P9 TO TOTAL TAKE, ELIMINATED C/A BREAKS AND MODIFIED EASEMENTS.
PARCEL 10	-	MODIFIED DEED TO CHANGE STA./OFFSET TO KY536
PARCELS 21&23	-	MISSING STA./OFFSETS ADDED
PARCEL 26	-	ADDED C/A BREAK FOR ENTRANCE RT. STA. 143+60
PARCEL 36	-	ADDED TEMPORARY EASEMENT FOR DIVERSION CONSTRUCTION
PARCELS 7, 37, 44	-	ADDED PERMANENT EASEMENTS FOR WATER LINE RELOCATION
PARCELS 3, 6, 9, 16, 21, 23, 43	-	CHANGED OWNERS AND DEED REFERENCES.
SHEET R10A	-	ADDED STA./OFFSET TO EXISTING R/W LINE

UPDATED RIGHT OF WAY SUMMARY SHEETS, STRIP MAPS, AND DEEDS.

RIGHT OF WAY REVISION NO. 5

REVISED PLANS DATE: AUGUST 5, 2019

SHEETS REVISED: R1A, R9, R13, R14A, R15, R16A, R17, R18A, R19, R20A, R21, R22A, R23, R24A, R41, R42A, R43, R44A, R45, R46A, R57-R59, R62, R71-R74

PARCELS INVOLVED: 26, 43-48, 50, 52-78, 81, 85-90, 93-100, 103, 109-113, 115, 178, 194-203

REMARKS:

WITH THE EXCEPTION OF P26, THIS REVISION IS TO MODIFY THE RIGHT OF WAY FOR 6-162.30 TO SHIFT THE PROPOSED RIGHT OF WAY TO 5' BEHIND THE SHARED-USE PATH FOR MOST PARCELS, AND INCORPORATE JOINT INSPECTION COMMENTS. THE REVISION INCLUDES ALL PARCELS WEST OF WILLILAMSWOODS DRIVE AND CALVARY ROAD.

PARCEL 26	-	WIDENED ENTRANCE TO 24 FEET

UPDATED DEEDS, COORDINATE CONTROL SHEETS, AND RIGHT OF WAY MONUMENT SHEETS ARE NOT INCLUDED. THEY WILL BE INCLUDED IN A LATER REVISION.

RIGHT OF WAY REVISION NO. 6

REVISED PLANS DATE: DECEMBER 6, 2019

SHEETS REVISED: R1A, R5, R6A, R7, R8A, R14A, R56-R57, R63, R65, R68-R69

PARCELS INVOLVED: 6, 7, 11, 13, 43, 45

ADDITIONAL SHEETS INCLUDED:
TYPICAL SECTIONS: R2, R2A, R2B, R2C, R2D
PROFILE SHEETS: R3A, R4, R6, R8, R10, R12, R14, R16, R18, R20, R22, R24, R26, R28, R30, R32, R34, R36, R38, R40, R42, R44, R46, R48, R49-R55

REMARKS:

THIS MODIFICATION AFFECTS 6-162.20, AND IS TO WIDEN THE ACCESS CONTROL BREAK FOR PARCEL 7, AND TO CHANGE THE SIGMON LANE TIE-DOWN FROM RIGHT OF WAY TO TEMPORARY EASEMENT (IMPACTS PARCELS 6 AND 11). AN UPDATED DEED FOR PARCEL 13 IS ALSO INCLUDED (NO AREAS CHANGED, JUST VERBIAGE RELATED TO THE LINE-TYPE CHANGE ON THE ADJACENT PARCEL 11).

PREVIOUSLY SUBMITTED CHANGES FOR PARCELS 43 AND 45 ARE INCLUDED IN THIS REVISION.

UPDATED DEEDS, COORDINATE CONTROL SHEETS, RIGHT OF WAY MONUMENT SHEETS AND STRIP MAPS ARE INCLUDED.

RIGHT OF WAY REVISION NO. 7

REVISED PLANS DATE: MARCH 23, 2020

SHEETS REVISED: R1A, R3B, R4A, R14A, R56, R57, R63, R68

PARCELS INVOLVED: 5, 25, 44

REMARKS:

PARCEL 5 HAD RIGHT OF WAY ADDED TO ACCOMMODATE RELOCATED OVERHEAD ELECTRIC LINES. PARCELS 25 AND 44 HAD UPDATES RELATED TO EXCESS PURCHASES.

UPDATED STRIP MAP AND RIGHT OF WAY MONUMENT SHEETS ARE INCLUDED. THE UPDATED DEED FOR PARCEL 5 IS ALSO INCLUDED, UPDATED DEEDS FOR PARCELS 25 AND 44 WERE PREVIOUSLY SUBMITTED.

RIGHT OF WAY REVISION NO. 8

REVISED PLANS DATE: FEBRUARY 17, 2021

SHEETS REVISED: R1A, R5, R6A, R56, R63, R69

PARCELS INVOLVED: 7

REMARKS:

PERMANENT EASEMENTS SWITCHED TO PROPOSED RIGHT OF WAY AS PART OF NEGOTIATION

UPDATED STRIP MAP AND RIGHT OF WAY MONUMENT SHEETS ARE INCLUDED. THE UPDATED DEED FOR PARCEL 7 IS ALSO INCLUDED.

RIGHT OF WAY REVISION NO. 9

REVISED PLANS DATE: APRIL 20, 2021

SHEETS REVISED: R1A, R3B, R4A, R13, R14A, R15, R16A, R17, R18A, R39, R40A, R41, R42A, R43, R44A, R45, R46A, R56, R57, R61, R62, R63, R66, R68, R71, R72, R78, R79

PARCELS INVOLVED: 3, 53, 149, 157, 158, 159, 160, 162, 163, 165, 166, 167, 168, 169, 170, 173, 174, 178, 183, 184, 185, 186

REMARKS:

PARCEL 3 IS FOR THE RAILROAD OWNERSHIP CHANGE. THE REMAINDER OF THIS REVISION IS TO UPDATE THE RIGHT OF WAY PLANS FOR SECTION 6-162.10. VARIOUS MODIFICATIONS ARE INCLUDED TO REFLECT CHANGES DIRECTED AT THE JOINT INSPECTION.

UPDATED STRIP MAP AND RIGHT OF WAY MONUMENT SHEETS ARE INCLUDED. THE UPDATED DEEDS ARE ALSO INCLUDED.

RIGHT OF WAY REVISION NO. 10

REVISED PLANS DATE: MAY 7, 2021

SHEETS REVISED: R1A, R41, R42A, R61, R78, R79

PARCELS INVOLVED: 168

REMARKS:

A TEMPORARY EASEMENT FOR BUILDING REMOVAL WAS ADDED TO PARCEL 168. SOME TEXT WAS ALSO CLEANED UP ON STRIP MAP R78.

THE UPDATED DEED IS ALSO INCLUDED.

RIGHT OF WAY PLANS

KY 536
RIGHT OF WAY REVISION SHEET

FILE NAME: V:\1785\ACTIVE\17856100\ROADWAY\PLAN SHEETS\ROW PLANS\RW_REVISION.DGN
USER: gnsharp
DATE PLOTTED: May 7, 2021
E-SHEET NAME:
MicroStation v8.11.9.832

COUNTY OF	ITEM NO.	SHEET NO.
KENTON	6-162.00	R2

TYPICAL SECTIONS
KY 536

RIGHT OF WAY PLANS

PREPARED BY ____ DATE ____
CHECKED BY ____ DATE ____
APPROVED BY ____ DATE ____

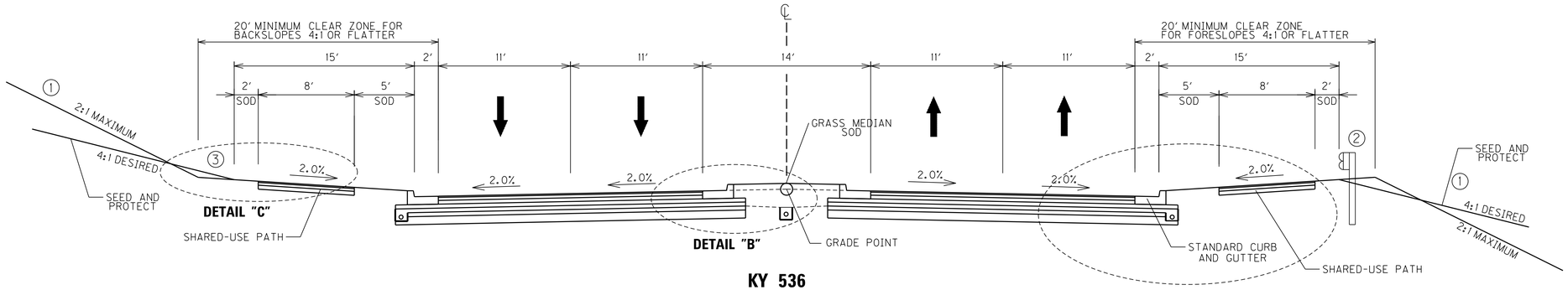

KY 536
STA. 102+58.48 TO STA. 353+00
NORMAL SECTION

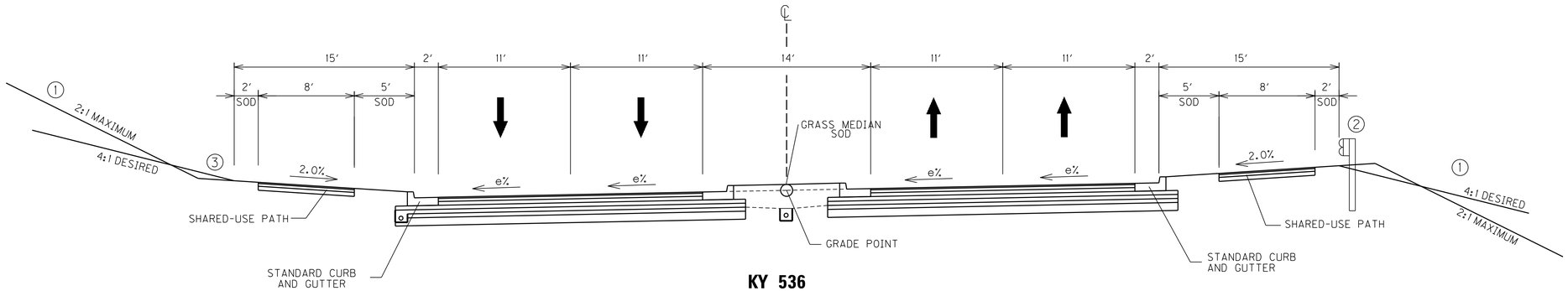

KY 536
STA. 102+58.48 TO STA. 353+00
SUPERELEVATED SECTION

① SEE CROSS SECTIONS FOR SLOPES OUTSIDE BERM LIMITS

② BERM SHALL BE WIDENED 3' WHERE GUARDRAIL IS REQUIRED

③ 3.0' BERM WIDENING AT 2.0% WHERE BACKSLOPES ARE GREATER THAN 4:1

PAVEMENT DESIGN - KY 536

26.75" BASE
- 3.00" CL3 ASPHALT BASE 1.00D PG 64-22
- 3.75" CL3 ASPHALT BASE 1.00D PG 64-22
- 4.00" CL3 ASPHALT BASE 1.00D PG 64-22
- 4.00" DRAINAGE BLANKET - TYPE II - ASPHALT
- 4.00" DGA BASE
- 8.00" LIME STABILIZED ROADBED

1.25" SURFACE
- 1.25" CL3 ASPHALT SURFACE 0.38A PG 76-22

PAVEMENT DESIGN - SHARED-USE PATH

6.75" BASE
- 2.75" CL2 ASPHALT BASE 0.75D PG 64-22
- 4.00" DGA BASE

1.25" SURFACE
- 1.25" CL2 ASPHALT SURFACE 0.38D PG 64-22

KY 536
TYPICAL SECTIONS

USER: $$$$USER$$$$
DATE: $$$$DATE$$$$
FILE NAME: $$$$design$file$specification$$$$
E-SHEET NAME:

COUNTY OF	ITEM NO.	SHEET NO.
KENTON	6-162.00	R2A

TYPICAL SECTIONS
KY 1303

RIGHT OF WAY PLANS

PREPARED BY ____ DATE ____
CHECKED BY ____ DATE ____
APPROVED BY ____ DATE ____

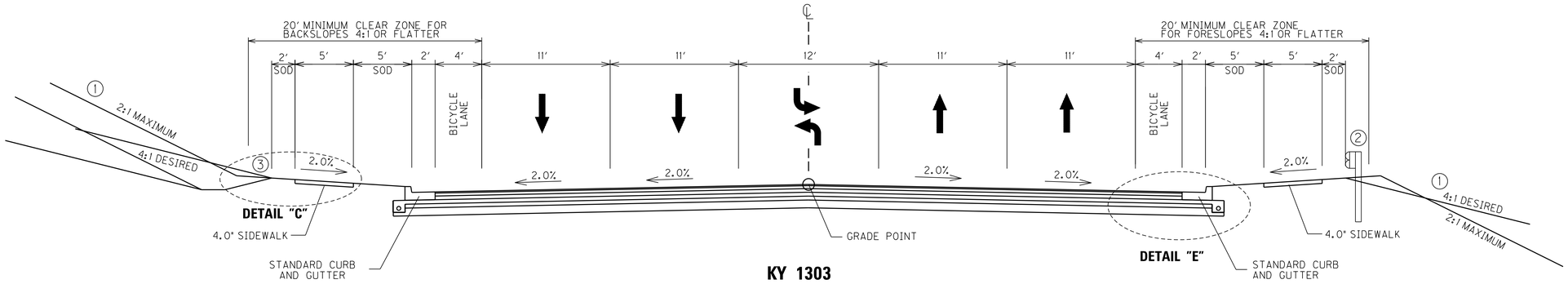

KY 1303
STA. 46+65.64 TO STA. 99+70.73
NORMAL SECTION

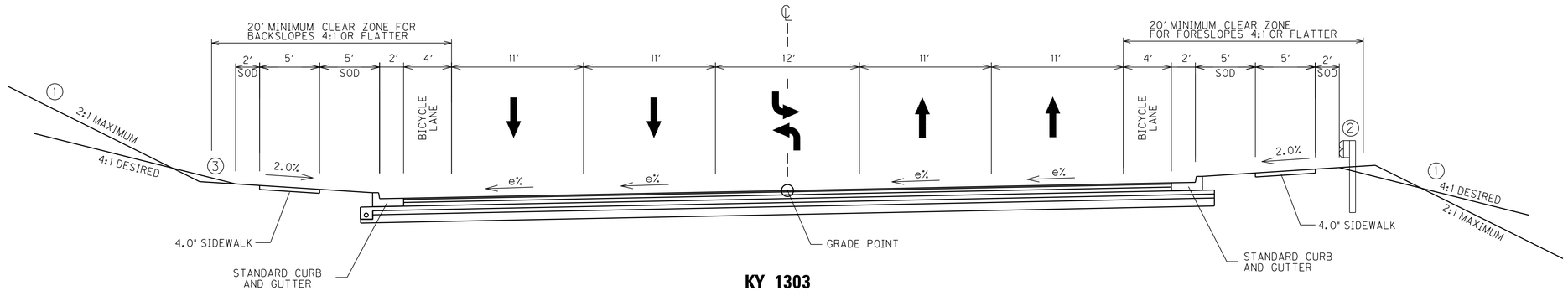

KY 1303
STA. 46+65.64 TO STA. 99+70.73
SUPERELEVATED SECTION

PAVEMENT DESIGN - KY 1303

22.75" BASE	3.00" CL3 ASPHALT BASE 1.00D PG 64-22 3.75" CL3 ASPHALT BASE 1.00D PG 64-22 4.00" DRAINAGE BLANKET - TYPE II - ASPHALT 4.00" DGA BASE 8.00" LIME STABILIZED ROADBED
1.25" SURFACE	1.25" CL3 ASPHALT SURFACE 0.38A PG 76-22

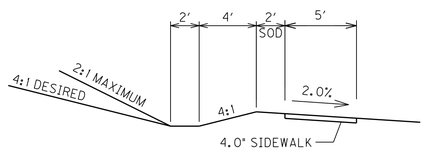

KY 1303
NORMAL INTERCEPTOR DITCH

(1) SEE CROSS SECTIONS FOR SLOPES OUTSIDE BERM LIMITS

(2) BERM SHALL BE WIDENED 3' WHERE GUARDRAIL IS REQUIRED

(3) 2.0' BERM WIDENING AT 2.0% WHERE BACKSLOPES ARE GREATER THAN 4:1

KY 1303
TYPICAL SECTIONS

USER: $$$$USER$$$$
DATE: $$$$DATE$$$$
FILE NAME: $$$$design$file$specification$$$$
E-SHEET NAME:

COUNTY OF	ITEM NO.	SHEET NO.
KENTON	6-162.00	R2B

TYPICAL SECTIONS
ROUNDABOUT

RIGHT OF WAY PLANS

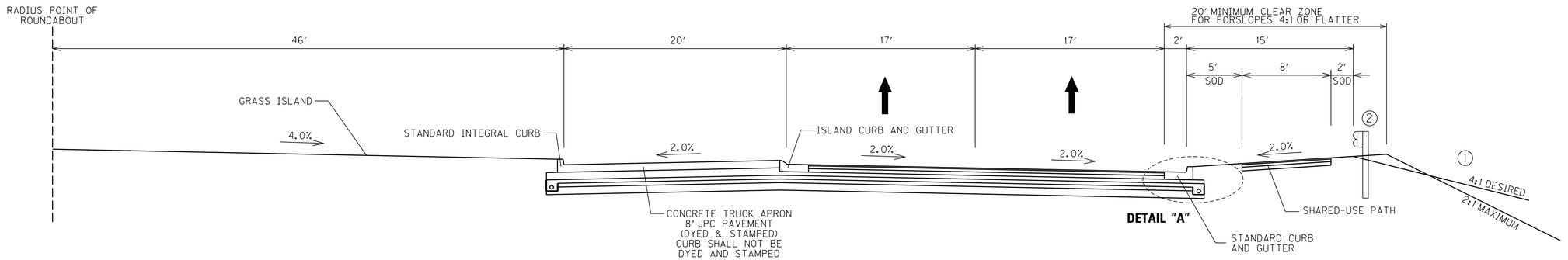

KY 536
ROUNDABOUT SECTION

(1) SEE CROSS SECTIONS FOR SLOPES OUTSIDE BERM LIMITS

(2) BERM SHALL BE WIDENED 3' WHERE GUARDRAIL IS REQUIRED

ROUNDABOUT TYPICAL SECTION

PREPARED BY _____ DATE _____
CHECKED BY _____ DATE _____
APPROVED BY _____ DATE _____

USER: $$$$USER$$$$
DATE: $$$$DATE$$$$
FILE NAME: $$$$design$file$specification$$$$
E-SHEET NAME:

COUNTY OF	ITEM NO.	SHEET NO.
KENTON	6-162.00	R2C

TYPICAL SECTIONS
APPROACH ROADS & ENTRANCES

RIGHT OF WAY PLANS

PREPARED BY ____ DATE ____
CHECKED BY ____ DATE ____
APPROVED BY ____ DATE ____

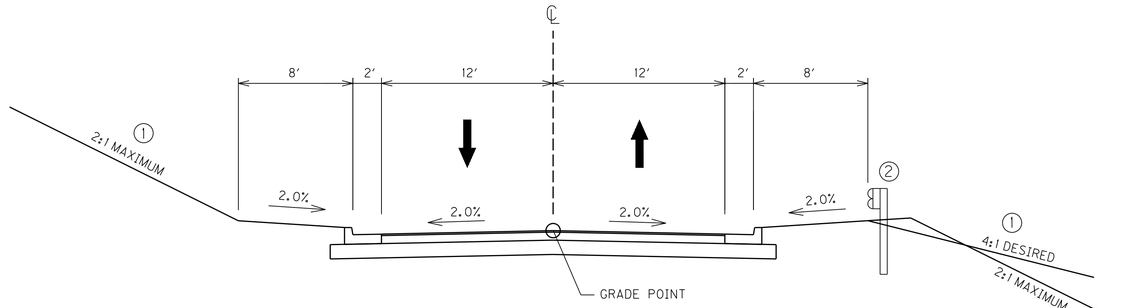

APPROACH ROADS
CURB AND GUTTER SECTION

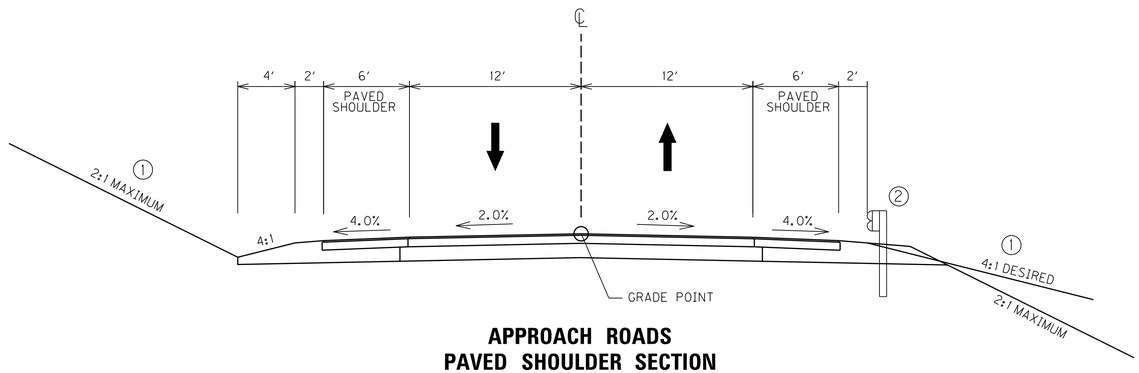

APPROACH ROADS
PAVED SHOULDER SECTION

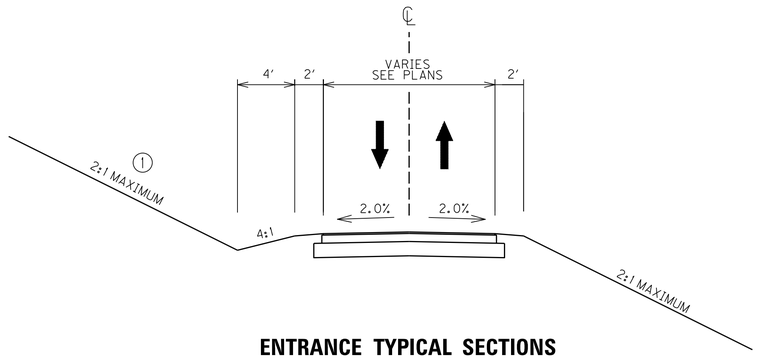

ENTRANCE TYPICAL SECTIONS

(1) SEE CROSS SECTIONS FOR SLOPES OUTSIDE BERM LIMITS

(2) BERM SHALL BE WIDENED 3' WHERE GUARDRAIL IS REQUIRED

APPROACH AND ENTRANCE TYPICAL SECTIONS

USER: $$$$USER$$$$
DATE: $$$$DATE$$$$
FILE NAME: $$$$design$file$specification$$$$
E-SHEET NAME:

COUNTY OF	ITEM NO.	SHEET NO.
KENTON	6-162.00	R2D

TYPICAL SECTIONS DETAILS

RIGHT OF WAY PLANS

DATE
DATE
DATE
PREPARED BY
CHECKED BY
APPROVED BY

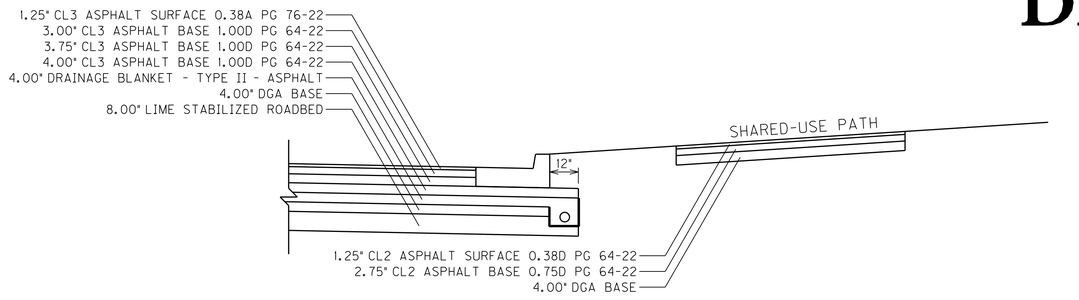

DETAIL "A"

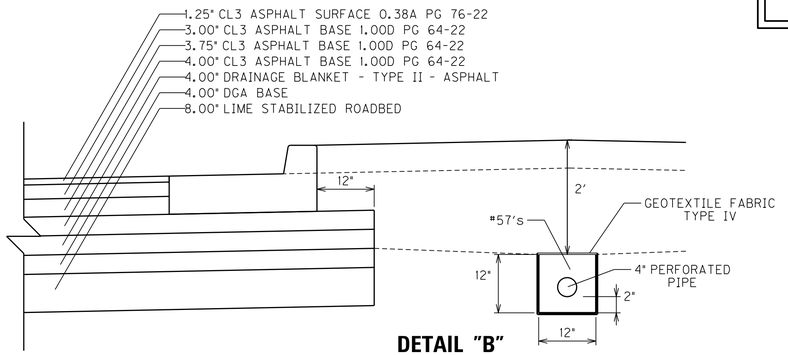

DETAIL "B"

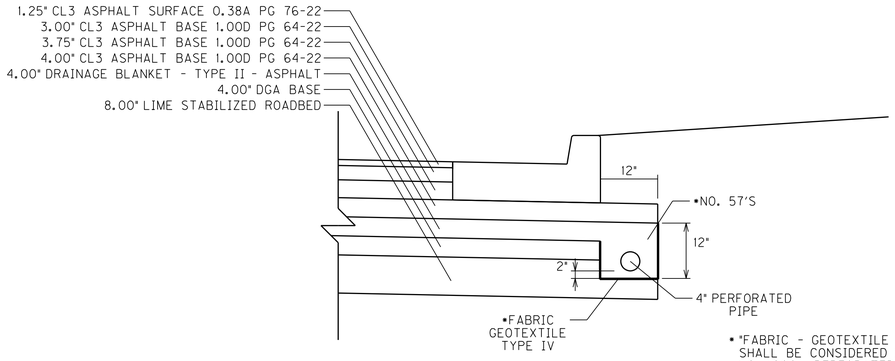

PERFORATED PIPE TRENCH DETAIL

• "FABRIC - GEOTEXTILE TYPE IV" AND "CRUSHED AGGREGATE SIZE NO.57" SHALL BE CONSIDERED INCIDENTAL TO THE UNIT PRICE FOR BID ITEM NO. 1000, "PERFORATED PIPE - 4IN."

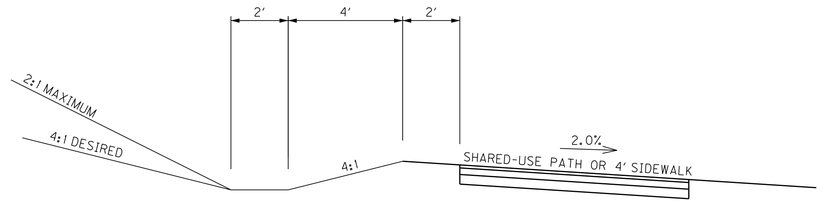

DETAIL "C" *

• TYPICAL TO BE APPLIED IN CUT SECTIONS WHERE OFFSITE DRAINAGE CAN OVERTOP THE SHARED-USE PATH

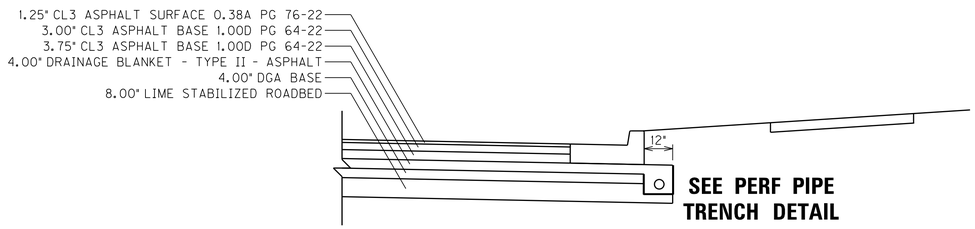

DETAIL "E"

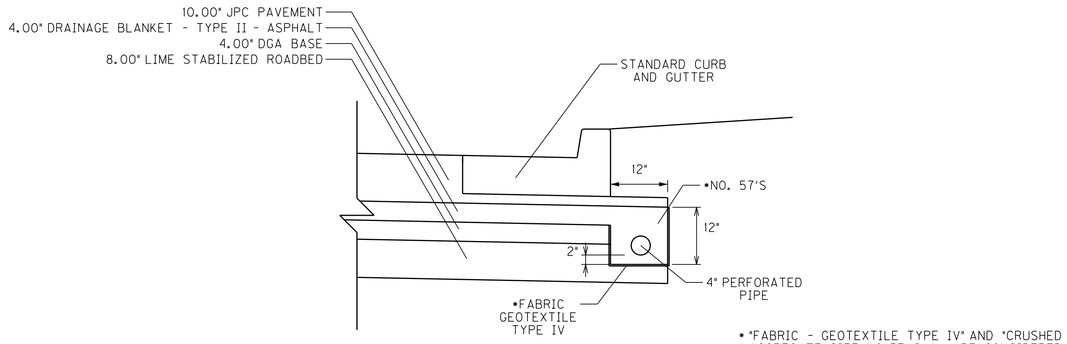

PERFORATED PIPE TRENCH DETAIL FOR PAVEMENT AT ROUNDABOUTS

• "FABRIC - GEOTEXTILE TYPE IV" AND "CRUSHED AGGREGATE SIZE NO.57" SHALL BE CONSIDERED INCIDENTAL TO THE UNIT PRICE FOR BID ITEM NO. 1000, "PERFORATED PIPE - 4IN."

DETAIL
TYPICAL SECTIONS

USER: $$$$USER$$$$
DATE: $$$$DATE$$$$
FILE NAME: $$$$design$file$specification$$$$
E-SHEET NAME:

COUNTY OF	ITEM NO.	SHEET NO.
KENTON	6-162.00	R3A

DATUM 1000 995 990 985 980 975 970 965 960 955 950 945 940 935 930 925 920 915 910

80+00 80+50 81+00 81+50 82+00 82+50 83+00 83+50 84+00 84+50 85+00 85+50 86+00 86+50 87+00 87+50 88+00 88+50 89+00 89+50 90+00 90+50 91+00 91+50 92+00 92+50

955.9

93+00 93+50 94+00 94+50 95+00

955.4 955.1 955.2 955.6 955.5

MATCHLINE STA. 95+00

RIGHT OF WAY PLANS

SCALE: 1" = 50' HORIZONTAL
1" = 5' VERTICAL

KY 536
PROFILE SHEET
STA. 92+01.98 TO STA. 95+00

FILE NAME: V:\1785\ACTIVE\178560\ROADWAY\PLAN SHEETS\ROW PLANS\KY536_PR_9202.DGN
USER: cdawahare
DATE PLOTTED: March 21, 2017
E-SHEET NAME:
MicroStation v8.11.7.443

COUNTY OF	ITEM NO.	SHEET NO.
KENTON	6-162.00	R3B

REVISION DATE: APRIL 20, 2021

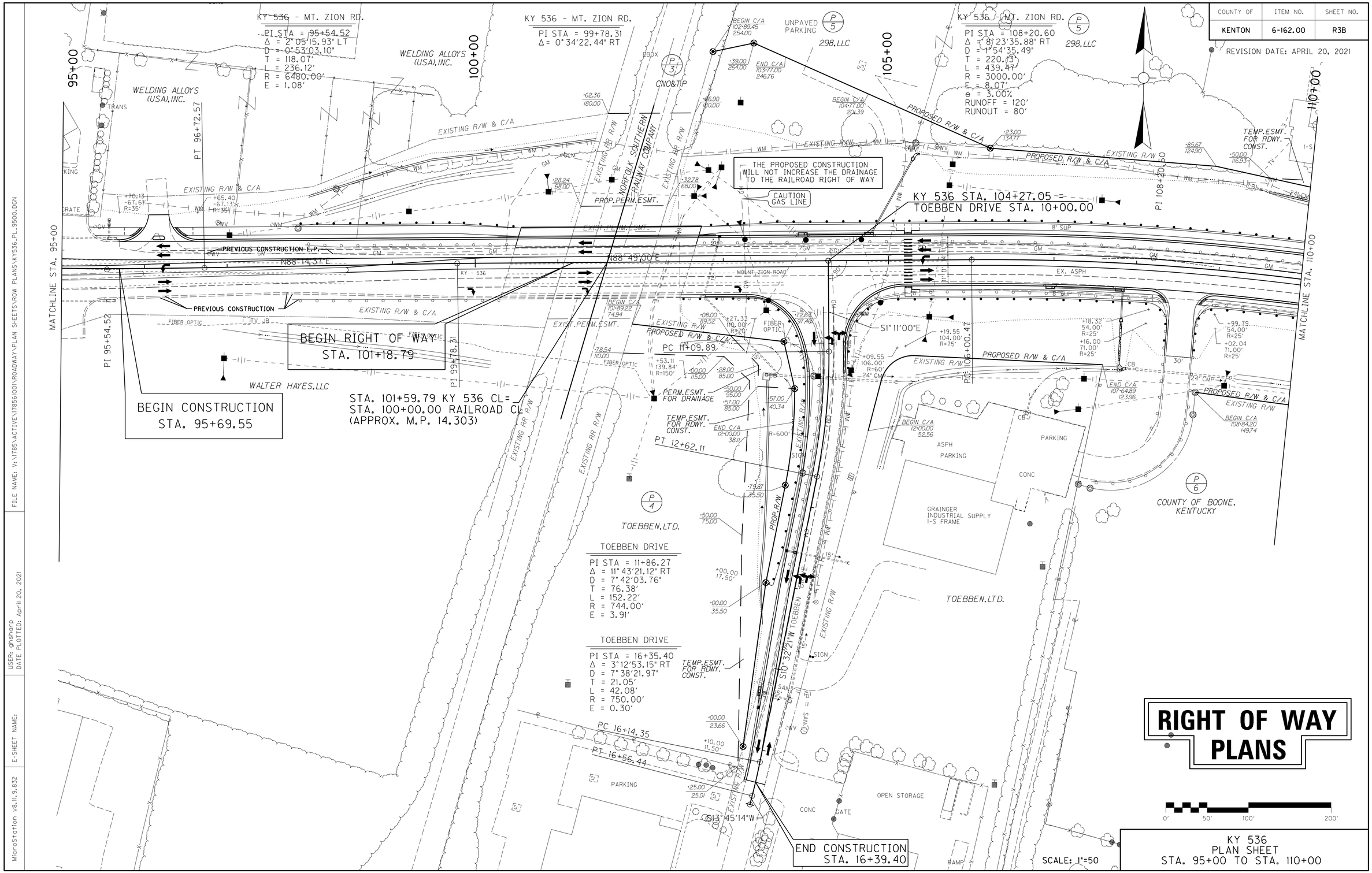

KY 536
PLAN SHEET
STA. 95+00 TO STA. 110+00

FILE NAME: V:\1785\ACTIVE\17856100\ROADWAY\PLAN SHEETS\ROW PLANS\KY536_PL_9500.DGN

USER: ghsharp
DATE PLOTTED: April 20, 2021

E-SHEET NAME:

MicroStation v8.11.9.832

COUNTY OF	ITEM NO.	SHEET NO.
KENTON	6-162.00	R4

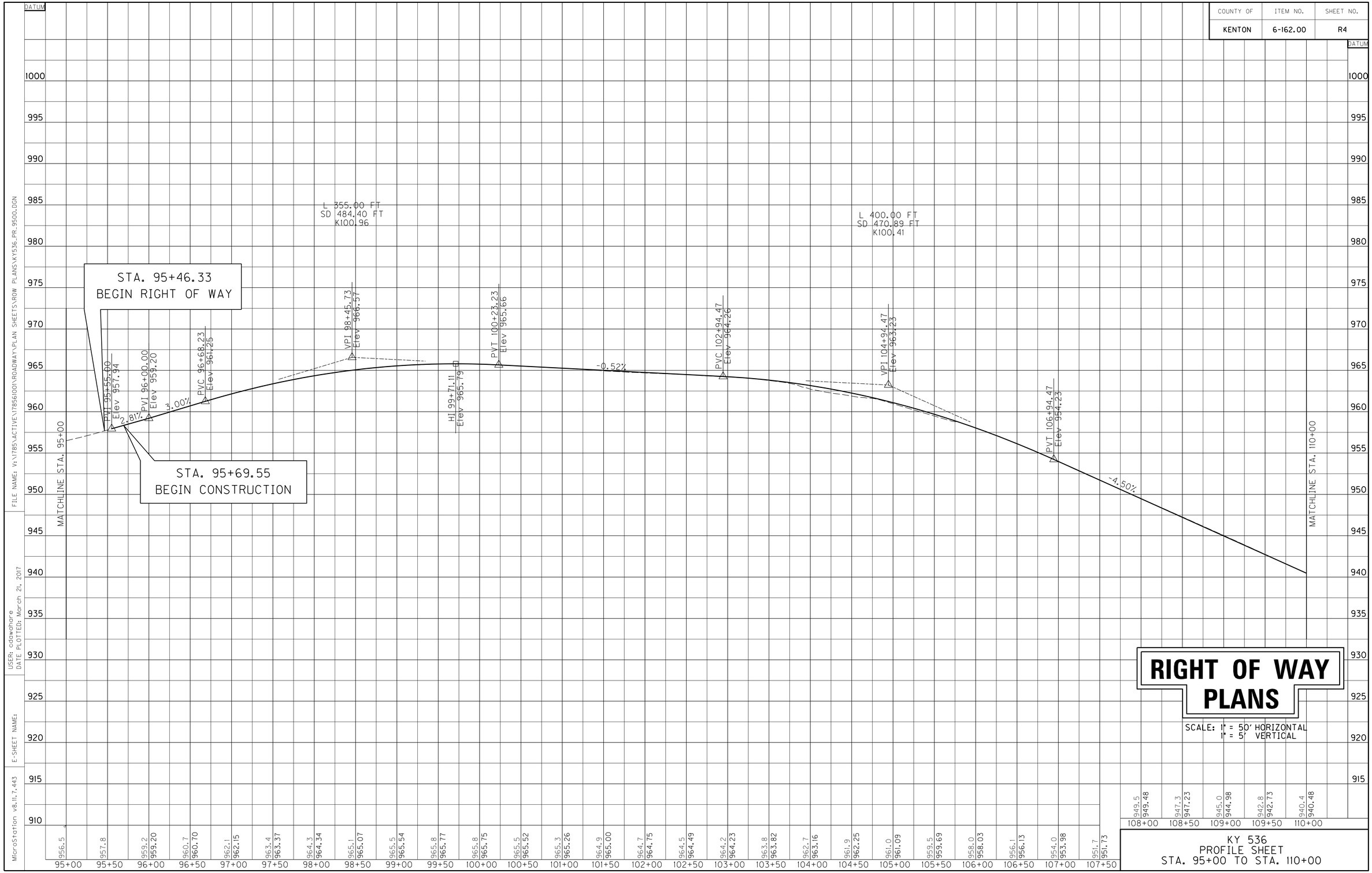

RIGHT OF WAY PLANS

SCALE: 1" = 50' HORIZONTAL
1" = 5' VERTICAL

KY 536
PROFILE SHEET
STA. 95+00 TO STA. 110+00

FILE NAME: V:\1785\ACTIVE\178561001\ROADWAY\PLAN SHEETS\ROW PLANS\KY536_PR_9500.DGN
USER: cdawahare
DATE PLOTTED: March 21, 2017
E-SHEET NAME:
MicroStation v8.11.7.443

COUNTY OF	ITEM NO.	SHEET NO.
KENTON	6-162.00	R4A

REVISION DATE: APRIL 20, 2021

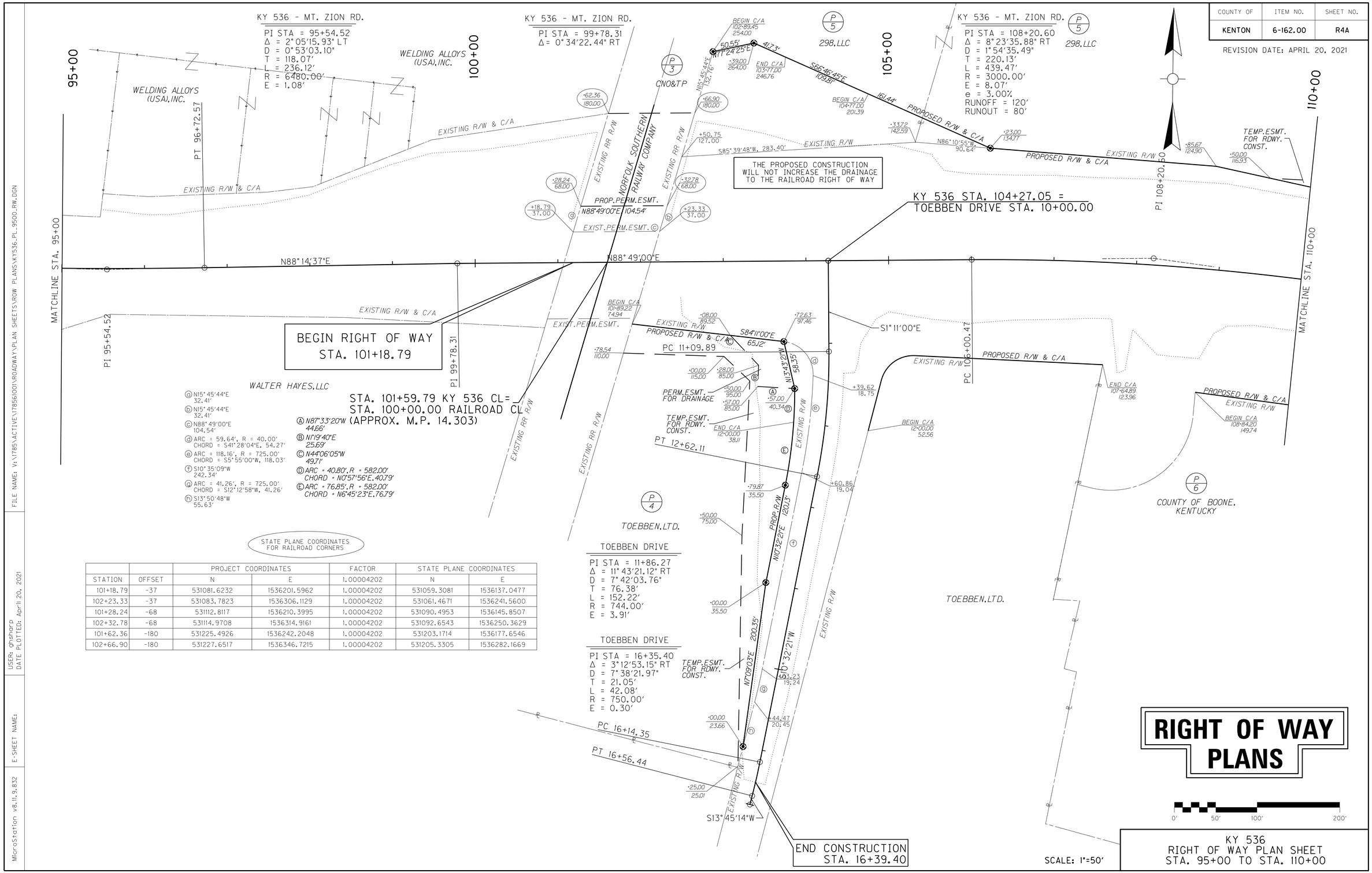

ⓐ N15°45'44"E 32.41'
ⓑ N15°45'44"E 32.41'
ⓒ N88°49'00"E 104.54'
ⓓ ARC = 59.64', R = 40.00' CHORD = S41°28'04"E, 54.27'
ⓔ ARC = 118.16', R = 725.00' CHORD = S5°55'00"W, 118.03'
ⓕ S10°35'09"W 242.34'
ⓖ ARC = 41.26', R = 725.00' CHORD = S12°12'58"W, 41.26'
ⓗ S13°50'48"W 55.63'

Ⓐ N87°33'20"W 44.66'
Ⓑ N1°19'40"E 25.69'
Ⓒ N44°06'05"W 49.71'
Ⓓ ARC = 40.80', R = 582.00' CHORD = N0°57'56"E, 40.79'
Ⓔ ARC = 76.85', R = 582.00' CHORD = N6°45'23"E, 76.79'

STATE PLANE COORDINATES FOR RAILROAD CORNERS

STATION	OFFSET	PROJECT COORDINATES N	PROJECT COORDINATES E	FACTOR	STATE PLANE COORDINATES N	STATE PLANE COORDINATES E
101+18.79	-37	531081.6232	1536201.5962	1.00004202	531059.3081	1536137.0477
102+23.33	-37	531083.7823	1536306.1129	1.00004202	531061.4671	1536241.5600
101+28.24	-68	531112.8117	1536210.3995	1.00004202	531090.4953	1536145.8507
102+32.78	-68	531114.9708	1536314.9161	1.00004202	531092.6543	1536250.3629
101+62.36	-180	531225.4926	1536242.2048	1.00004202	531203.1714	1536177.6546
102+66.90	-180	531227.6517	1536346.7215	1.00004202	531205.3305	1536282.1669

TOEBBEN DRIVE
PI STA = 11+86.27
Δ = 11°43'21.12" RT
D = 7°42'03.76"
T = 76.38'
L = 152.22'
R = 744.00'
E = 3.91'

TOEBBEN DRIVE
PI STA = 16+35.40
Δ = 3°12'53.15" RT
D = 7°38'21.97"
T = 21.05'
L = 42.08'
R = 750.00'
E = 0.30'

RIGHT OF WAY PLANS

0' 50' 100' 200'

SCALE: 1"=50'

KY 536
RIGHT OF WAY PLAN SHEET
STA. 95+00 TO STA. 110+00

FILE NAME: V:\178S\ACTIVE\17856100\ROADWAY\PLAN SHEETS\ROW PLANS\KY536_PL_9500_RW.DGN
USER: ghsharp
DATE PLOTTED: April 20, 2021
E-SHEET NAME:
MicroStation v8.11.9.832

COUNTY OF	ITEM NO.	SHEET NO.
KENTON	6-162.00	R5

REVISION DATE: FEBRUARY 17, 2021

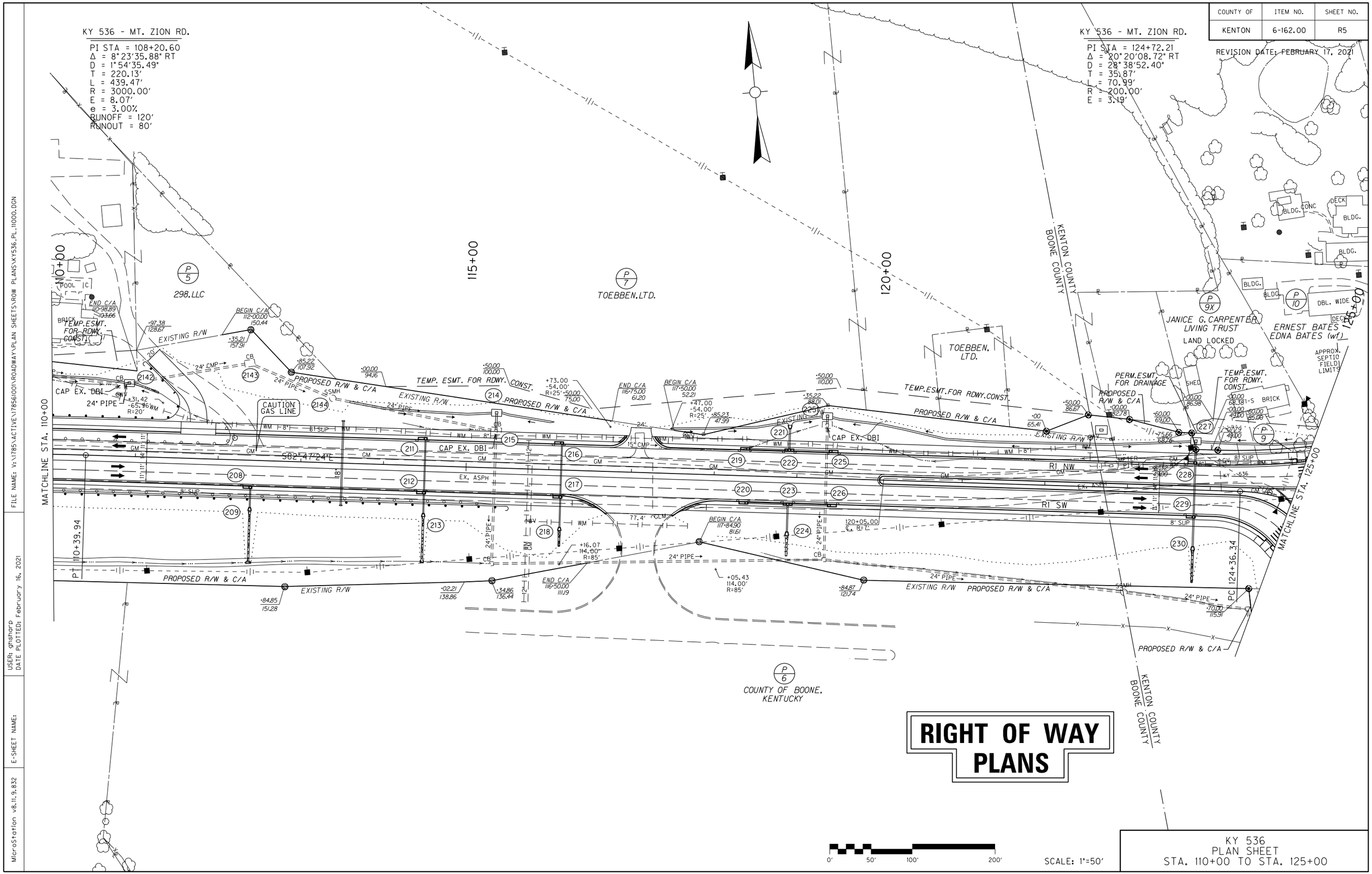

RIGHT OF WAY PLANS

0' 50' 100' 200'

SCALE: 1"=50'

KY 536
PLAN SHEET
STA. 110+00 TO STA. 125+00

FILE NAME: V:\1785\ACTIVE\17856100\ROADWAY\PLAN SHEETS\ROW PLANS\KY536_PL_11000.DGN

USER: ghsharp
DATE PLOTTED: February 16, 2021

E-SHEET NAME:

MicroStation v8.11.9.832

COUNTY OF	ITEM NO.	SHEET NO.
KENTON	6-162.00	R6

DATUM

960 955 950 945 940 935 930 925 920 915 910 905 900 895 890 885 880 875 870

MATCHLINE STA. 110+00

-4.50%

PVC 113+86.84
Elev 923.07

VPI 116+86.84
Elev 909.57

L 600.00 FT
SD 481.23 FT
K111.11

LO 118+86.83
Elev 911.82

PVT 119+86.84
Elev 912.27

0.90%

PVC 120+79.56
Elev 913.10

HI 123+10.03
Elev 914.14

MATCHLINE STA. 125+00

940.4	938.1	935.8	933.4	931.0	928.9	926.5	924.2	922.1	920.0	918.1	916.5	915.1	914.0	913.0	912.3	911.8	911.5	911.5	911.7	911.9	912.3	912.8	913.4	913.9	913.6	913.3	913.6	914.5	914.7	912.9
940.48	938.23	935.98	933.73	931.48	929.23	926.98	924.73	922.48	920.41	918.55	916.92	915.52	914.34	913.39	912.66	912.16	911.88	911.83	912.00	912.39	912.84	913.28	913.64	913.90	914.07	914.14	914.11	913.98	913.76	913.44
110+00	110+50	111+00	111+50	112+00	112+50	113+00	113+50	114+00	114+50	115+00	115+50	116+00	116+50	117+00	117+50	118+00	118+50	119+00	119+50	120+00	120+50	121+00	121+50	122+00	122+50	123+00	123+50	124+00	124+50	125+00

RIGHT OF WAY PLANS

SCALE: 1" = 50' HORIZONTAL
1" = 5' VERTICAL

KY 536
PROFILE SHEET
STA. 110+00 TO STA. 125+00

FILE NAME: V:\1785\ACTIVE\178560I\ROADWAY\PLAN SHEETS\ROW PLANS\KY536_PR_I1000.DGN
USER: cdawahare
DATE PLOTTED: March 21, 2017
E-SHEET NAME:
MicroStation v8.11.7.443

COUNTY OF	ITEM NO.	SHEET NO.
KENTON	6-162.00	R6A

REVISION DATE: FEBRUARY 17, 2021

KY 536 - MT. ZION RD.
PI STA = 108+20.60
Δ = 8°23'35.88" RT
D = 1°54'35.49"
T = 220.13'
L = 439.47'
R = 3000.00'
E = 8.07'
e = 3.00%
RUNOFF = 120'
RUNOUT = 80'

KY 536 - MT. ZION RD.
PI STA = 124+72.21
Δ = 20°20'08.72" RT
D = 28°38'52.40"
T = 35.87'
L = 70.99'
R = 200.00'
E = 3.19'

110+00 | 115+00 | 120+00 | 125+00

MATCHLINE STA. 110+00

PT 110+39.94

MATCHLINE STA. 125+00

PC 124+36.34

P/5 298.LLC

P/7 TOEBBEN.LTD.

TOEBBEN, LTD.

P/6 COUNTY OF BOONE, KENTUCKY

P/9X JANICE G. CARPENTER LIVING TRUST
LAND LOCKED

P/10 ERNEST BATES
EDNA BATES (wf)

P/9

KENTON COUNTY
BOONE COUNTY

KENTON COUNTY
BOONE COUNTY

S82°47'24"E

S87°32'23"E
97.18'

N0°56'55"W
119.71'

TEMP.ESMT. FOR RDWY. CONST.

PROPOSED R/W & C/A

EXISTING R/W

TEMP.ESMT.FOR RDWY.CONST.

PERM.ESMT. FOR DRAINAGE

TEMP.ESMT. FOR RDWY. CONST.

BEGIN C/A 112+00.00 150.44
END C/A 110+98.89 103.66
BEGIN C/A 117+50.00 52.21
END C/A 116+75.00 61.20
BEGIN C/A 117+84.90 81.61
END C/A 116+50.00 111.19

ⓐ S8°46'46"E 20.55'
Ⓑ S82°47'24"E 26.47'
Ⓒ ARC = 133.17', R = 780.00'
CHORD = S87°40'53"E, 133.01'
Ⓓ S81°54'30"E 24.35'
Ⓔ S7°12'36"W 19.38'
Ⓕ N81°54'30"W 15.66'
Ⓖ N7°41'0'45"E 54.33'
Ⓗ N82°47'24"W 18.68'
Ⓘ S78°20'34"E 50.15'
Ⓙ S69°51'27"E 61.56'

ⓐ N7°57'51"W 25.13'
ⓑ S8°46'46"E 6.87'
ⓒ NOT USED
ⓓ N86°45'55"W 80.36'
ⓔ ARC = 84.27', R = 950.40'
CHORD = N83°04'30"W, 84.24'
ⓕ S83°21'43"E 57.08'
ⓖ S77°54'42"E 80.08'

RIGHT OF WAY PLANS

0' 50' 100' 200'

SCALE: 1"=50'

KY 536
RIGHT OF WAY PLAN SHEET
STA. 110+00 TO STA. 125+00

MicroStation v8.11.9.832 | E-SHEET NAME: | USER: gnsharp DATE PLOTTED: February 16, 2021 | FILE NAME: V:\1785\ACTIVE\1785100\ROADWAY\PLAN SHEETS\ROW PLANS\KY536_PL_11000_RW.DGN

COUNTY OF	ITEM NO.	SHEET NO.
KENTON	6-162.00	R7

REVISION DATE: DECEMBER 6, 2019

KY 536 - MT. ZION RD.
PI STA = 124+72.21
Δ = 20°20'08.72" RT
D = 28°38'52.40"
T = 35.87'
L = 70.99'
R = 200.00'
E = 3.19'

KY 536 - MT. ZION RD.
PI STA = 127+51.47
Δ = 18°14'47.70" LT
D = 28°38'52.40"
T = 32.12'
L = 63.69'
R = 200.00'
E = 2.56'

KY 536 - MT. ZION RD.
PI STA = 128+37.05
Δ = 7°39'25.39" RT
D = 7°05'59.46"
T = 54.00'
L = 107.85'
R = 807.00'
E = 1.80'

KY 536 - MT. ZION RD.
PI STA = 132+04.82
Δ = 14°34'40.08" RT
D = 4°35'01.18"
T = 159.88'
L = 318.04'
R = 1250.00'
E = 10.18'
e = 5.00%
RUNOFF = 190'
RUNOUT = 80'

KY 536 - MT. ZION RD.
PI STA = 137+19.56
Δ = 9°19'45.82" LT
D = 4°35'01.18"
T = 101.99'
L = 203.54'
R = 1250.00'
E = 4.15'
e = 5.00%
RUNOFF = 190'
RUNOUT = 80'

BEGIN CONSTRUCTION
STA. 10+31.88

KY 536 - MT. ZION RD.
PI STA = 126+12.91
Δ = 6°44'47.57" RT

SIGMON LANE
PI STA = 11+98.53
Δ = 24°51'08.81" RT
D = 17°54'17.75"
T = 70.51'
L = 138.80'
R = 320.00'
E = 7.68'

SIGMON LANE
PI STA = 14+72.38
Δ = 30°41'54.44" LT
D = 11°27'32.96"
T = 137.25'
L = 267.89'
R = 500.00'
E = 18.49'

KY 536 STA. 126+12.91 =
SIGMON LANE STA. 12+83.34

KY 536 STA. 136+17.57 =
KY 536 APPR. LT STA. 0+00

END CONSTRUCTION
STA. 17+00.14

MATCHLINE STA. 125+00

MATCHLINE STA. 140+00

CHRISTOPHER D.RACHFORD
ANGELINA RACHFORD (wf)

J.D.MARTIN
EULA RUTH MARTIN (wf)

THOMAS DIXON

BARBARA M.GRIFFITH
BRADLEY B.SLATER

RICK L.KIMBERLIN
REBECCA KIMBERLIN (wf)

TERRY DOWNS
TODD DOWNS

NICKIE REINHART
DANA ZIMMERMAN

DAVID A.KENNETT

DAVID L.
STIEBY
JOYCE ANN
STIEBY (wf)

TOM W.ADAMS
LOLA M.ADAMS (wf)

TOTTEN
(Access strip)
DB 1-66,Pg 2/8

BETHESDA COMMUNITY CHURCH

GEORGE JOSEPH
FRYMAN

STEPHEN
MASON
JENNIFER
MASON (wf)

ENID MAIR MASON
(widow)

COUNTY OF BOONE,
KENTUCKY

PROPERTY OWNERS

P/10	ERNEST BATES EDNA BATES (wf)
P/11	TOEBBEN.LTD.
P/17	RICHARD P.HARRIS TAMMY D.HARRIS (wf)
P/25	KIRBY C.MASDEN DEBORAH F.MASDEN (wf)

RIGHT OF WAY PLANS

KY 536
PLAN SHEET
STA. 125+00 TO STA. 140+00

SCALE: 1"=50'

0' 50' 100' 200'

FILE NAME: V:\1785\ACTIVE\1785100\ROADWAY\PLAN SHEETS\ROW PLANS\KY536_PL_125000.DGN
USER: ghsharp
DATE PLOTTED: December 12, 2019
E-SHEET NAME:
MicroStation v8.11.9.832

COUNTY OF	ITEM NO.	SHEET NO.
KENTON	6-162.00	R8

DATUM

945 940 935 930 925 920 915 910 905 900 895 890 885 880 875 870 865 860 855

L 900.00 FT
SD 743.39 FT
K256.05

VPI 125+29.56
Elev 917.13

MATCHLINE STA. 125+00

PVT 129+79.56
Elev 905.39

-2.61%

MATCHLINE STA. 140+00

RIGHT OF WAY PLANS

SCALE: 1" = 50' HORIZONTAL
1" = 5' VERTICAL

125+00	125+50	126+00	126+50	127+00	127+50	128+00	128+50	129+00	129+50	130+00	130+50	131+00	131+50	132+00	132+50	133+00	133+50	134+00	134+50	135+00	135+50	136+00	136+50	137+00	137+50
912.9 913.44	911.7 913.02	910.3 912.50	908.8 911.88	907.8 911.17	905.0 910.36	900.6 909.45	894.8 908.45	887.8 907.34	887.8 906.14	887.9 904.85	888.2 903.54	882.2 902.24	879.1 900.93	875.3 899.62	874.1 898.31	873.2 897.01	872.5 895.70	871.6 894.39	879.8 893.09	880.0 891.78	883.8 890.47	883.7 889.16	883.3 887.86	882.5 886.55	883.0 885.24

138+00	138+50	139+00	139+50	140+00
883.7 883.93	884.4 882.63	883.5 881.32	882.5 880.01	883.2 878.70

KY 536
PROFILE SHEET
STA. 125+00 TO STA. 140+00

FILE NAME: V:\1785\ACTIVE\178561001\ROADWAY\PLAN SHEETS\ROW PLANS\KY536_PR_12500.DGN
USER: cdawahare
DATE PLOTTED: March 21, 2017
E-SHEET NAME:
MicroStation v8.11.7.443

COUNTY OF	ITEM NO.	SHEET NO.
KENTON	6-162.00	R8A

REVISION DATE: DECEMBER 6, 2019

KY 536 - MT. ZION RD.
PI STA = 124+72.21
Δ = 20°20'08.72" RT
D = 28°38'52.40"
T = 35.87'
L = 70.99'
R = 200.00'
E = 3.19'

KY 536 - MT. ZION RD.
PI STA = 127+51.47
Δ = 18°14'47.70" LT
D = 28°38'52.40"
T = 32.12'
L = 63.69'
R = 200.00'
E = 2.56'

KY 536 - MT. ZION RD.
PI STA = 128+37.05
Δ = 7°39'25.39" RT
D = 7°05'59.46"
T = 54.00'
L = 107.85'
R = 807.00'
E = 1.80'

KY 536 - MT. ZION RD.
PI STA = 132+04.82
Δ = 14°34'40.08" RT
D = 4°35'01.18"
T = 159.88'
L = 318.04'
R = 1250.00'
E = 10.18'
e = 5.00%
RUNOFF = 190'
RUNOUT = 80'

KY 536 - MT. ZION RD.
PI STA = 137+19.56
Δ = 9°19'45.82" LT
D = 4°35'01.18"
T = 101.99'
L = 203.54'
R = 1250.00'
E = 4.15'
e = 5.00%
RUNOFF = 190'
RUNOUT = 80'

TOTTEN
(Access strip)
DB 1-66, Pg 2/8

BEGIN CONSTRUCTION
STA. 10+31.88

KY 536 - MT. ZION RD.
PI STA = 126+12.91
Δ = 6°44'47.57" RT

SIGMON LANE
PI STA = 11+98.53
Δ = 24°51'08.81" RT
D = 17°54'17.75"
T = 70.51'
L = 138.80'
R = 320.00'
E = 7.68'

P 14 CHRISTOPHER D. RACHFORD
ANGELINA RACHFORD (wf)

P 15 J.D. MARTIN
EULA RUTH MARTIN (wf)

P 16 BARBARA M. GRIFFITH
BRADLEY B. SLATER

P 18 RICK L. KIMBERLIN
REBECCA KIMBERLIN (wf)

P 20 TERRY DOWNS
TODD DOWNS

P 12 THOMAS DIXON

P 10

P 23 NICKIE REINHART
DANA ZIMMERMAN

P 21 DAVID A. KENNETT

P 24 DAVID L. STIEBY
JOYCE ANN STIEBY (wf)

P 191 TOM W. ADAMS
LOLA M. ADAMS (wf)

P 17

P 11 TOEBBEN, LTD.

P 6 COUNTY OF BOONE, KENTUCKY
TEMP. ESMT. FOR ROADWAY CONST.

P 13 BETHESDA COMMUNITY CHURCH

P 19 GEORGE JOSEPH FRYMAN

P 25

P 27 STEPHEN MASON
JENNIFER MASON (wf)

P 26 ENID MAIR MASON
(widow)

LAND LOCKED

PERM. ESMT. FOR DRAINAGE

TEMP. ESMT. FOR RDWY. CONST.

TEMP. ESMT. FOR ENTR. CONST.

TEMP. ESMT. FOR RDWY. CONST.

PROP. R/W & C/A

EXISTING R/W

PROPOSED R/W & C/A

DO NOT DISTURB

SIGMON LANE
PI STA = 14+72.38
Δ = 30°41'54.44" LT
D = 11°27'32.96"
T = 137.25'
L = 267.89'
R = 500.00'
E = 18.49'

KY 536 STA. 126+12.91 =
SIGMON LANE STA. 12+83.34

KY 536 STA. 136+17.57 =
KY 536 APPR. LT STA. 0+00

MATCHLINE STA. 125+00

MATCHLINE STA. 140+00

END CONSTRUCTION
STA. 17+00.14

Ⓐ N83°11'42"W 31.64'
Ⓑ N83°11'42"W 60.01'
Ⓒ ARC = 58.17', R = 130.00' CHORD = S41°59'00"W, 57.68'
Ⓓ ARC = 57.98', R = 80.00' CHORD = N75°33'47"E, 56.72'
Ⓙ ARC = 38.50', R = 1201.00' CHORD = N65°22'45"W, 38.50'
Ⓚ ARC = 4.31', R = 1201.00' CHORD = S64°21'28"E, 4.31'
Ⓛ ARC = 24.51', R = 1201.00' CHORD = S63°40'13"E, 24.51'
Ⓜ S26°54'51"W 30.16'
Ⓝ S26°54'51"W 15.84'
Ⓞ S63°46'24"E 27.72'
Ⓟ S25°32'21"W 46.00'
Ⓠ ARC = 97.78', R = 1201.00' CHORD = S54°03'07"E, 97.75'
Ⓡ ARC = 115.64', R = 1299.00' CHORD = N54°16'12"W, 115.60'
Ⓢ ARC = 95.87', R = 1299.00' CHORD = S58°56'05"E, 95.85'
Ⓣ ARC = 133.17', R = 780.00' CHORD = S87°40'53"E, 133.01'
Ⓤ ARC = 44.53', R = 80.00' CHORD = S71°26'34"W, 43.96'
Ⓥ ARC = 25.63', R = 180.00' CHORD = S51°25'01"W, 25.61'
Ⓦ ARC = 23.95', R = 80.00' CHORD = S38°45'36"W, 23.86'
Ⓧ ARC = 28.96', R = 80.00' CHORD = N19°48'40"E, 28.80'
Ⓨ ARC = 38.83', R = 280.00' CHORD = S5°28'01"W, 38.80'
Ⓩ ARC = 78.06', R = 280.00' CHORD = S06°29'32"E, 77.80'
Ⓐⓐ ARC = 26.12', R = 280.00' CHORD = S2°32'28"E, 26.11'
Ⓑⓑ N67°37'14"W 45.37'
Ⓒⓒ S12°28'48"W 25.00'
Ⓓⓓ S66°13'05"E 38.68'
Ⓔⓔ ARC = 0.52', R = 780.00' CHORD = N87°24'30"E, 0.52'
Ⓕⓕ N28°57'04"E 31.00'
Ⓖⓖ N61°02'56"W 30.00'
Ⓗⓗ S28°57'04"W 31.00'

ⓐ ARC = 84.27', R = 950.40' CHORD = N83°04'30"W, 84.24'
ⓑ ARC = 98.93', R = 950.40' CHORD = N77°33'10"W, 98.88'
ⓒ ARC = 55.36', R = 950.40' CHORD = N72°54'08"W, 55.35'
ⓓ S83°21'43"E 57.08'
ⓔ ARC = 60.08', R = 900.40' CHORD = S81°12'49"E, 60.07'
ⓕ ARC = 153.34', R = 900.40' CHORD = S74°25'23"E, 153.16'
ⓖ ARC = 31.97', R = 1355.87' CHORD = S68°52'07"E, 31.97'
ⓗ ARC = 48.60', R = 666.85' CHORD = S57°00'01"E, 48.59'
ⓘ ARC = 63.27', R = 466.79' CHORD = S44°20'53"E, 63.22'
ⓙ S71°03'22"E 3.26'
ⓚ S12°07'06"W 5.04'
ⓛ N24°13'07"W 14.01'

PROPERTY OWNERS

P 10 ERNEST BATES
EDNA BATES (wf)

P 11 TOEBBEN, LTD.

P 17 RICHARD P. HARRIS
TAMMY D. HARRIS (wf)

P 25 KIRBY C. MASDEN
DEBORAH F. MASDEN (wf)

0' 50' 100' 200'

SCALE: 1"=50'

RIGHT OF WAY PLANS

KY 536
RIGHT OF WAY PLAN SHEET
STA. 125+00 TO STA. 140+00

FILE NAME: V:\7856\ACTIVE\7856100\ROADWAY\PLAN SHEETS\ROW PLANS\KY536_PL_12500_RW.DGN
USER: ghsharp
DATE PLOTTED: December 5, 2019
E-SHEET NAME:
MicroStation v8.11.9.832

COUNTY OF	ITEM NO.	SHEET NO.
KENTON	6-162.00	R9

REVISION DATE: AUGUST 5, 2019

KY 536 - APPR LT 144+57.73

KY 536 - MT. ZION RD.

PI STA = 1+21.95
Δ = 9°01'24.74" LT
D = 9°32'57.47"
T = 47.35'
L = 94.49'
R = 600.00'
E = 1.87'

PI STA = 145+44.50
Δ = 16°56'00.82" RT
D = 2°51'53.24"
T = 297.72'
L = 591.09'
R = 2000.00'
E = 22.04'
e = 4.00%
RUNOFF = 160'
RUNOUT = 80'

TOTTEN LANE PROPERTIES,LLC

JOHN E.LEMBERG
CHRISTY A.LEMBERG (wf)

DAVID L.SETTERS
REBECCA A.
SETTERS (wf)

TOTTEN
(Access strip)
DB 1-66,Pg 218

CHARLIE SCOTT III &
DEBORAH
S.SCOTT (wf)

KYNY
INVESTMENTS,LLC

CHESTER
LANCE
KEMPER

FURLONG HILL,LLC

LAND LOCKED

STEPHEN MASON
JENNIFER MASON (wf)

JENNIFER MEYER
JEREMY MEYER

ENID MAIR MASON (widow)

LOUISA A.ODER

LLOYD SPEGAL
JUDITH LYNN SPEGAL (wf)

KY 536 STA. 144+57.74 =
KY 536 APPR. LT STA. 0+00

MATCHLINE STA. 140+00

MATCHLINE STA. 155+00

RIGHT OF WAY PLANS

0' 50' 100' 200' SCALE: 1"=50'

KY 536
PLAN SHEET
STA. 140+00 TO STA. 155+00

FILE NAME: V:\1785\ACTIVE\17856100\ROADWAY\PLAN SHEETS\ROW PLANS\KY536_PL_140000.DGN
USER: ghsharp
DATE PLOTTED: August 5, 2019
E-SHEET NAME:
MicroStation v8.11.9.832

COUNTY OF	ITEM NO.	SHEET NO.
KENTON	6-162.00	R10

REVISION DATE: JUNE 15, 2018

DATUM: 895, 890, 885, 880, 875, 870, 865, 860, 855, 850, 845, 840, 835, 830, 825, 820, 815, 810, 805

MATCHLINE STA. 140+00

PROP. 15" PIPE

PROP. 15" PIPE

9577 CY
TRANS. BENCHING

KY 536 STA. 144+57.74 =
KY 536 APPR LT STA. 0+00

-2.61%

FLOOD DATA			
	STORM (YR)	RUNOFF (cfs)	HEADWATER ELEV (ft)
DESIGN	25	5.4	853.47
CHECK	100	6.4	853.53

PROP. 15" PIPE

HW 100

PROP. 18" PIPE

PROP. 15" PIPE

PROP. 15" PIPE

MATCHLINE STA. 155+00

STA. 142+45
CONSTRUCT 200' OF 4" PERFORATED PIPE,
10' OF 4" NON-PERFORATED PIPE
AND 1 PERF. PIPE HDWL. TYPE 1

RIGHT OF WAY PLANS

SCALE: 1" = 50' HORIZONTAL
1" = 5' VERTICAL

| | | |

COUNTY OF	ITEM NO.	SHEET NO.
KENTON	6-162.00	RIOA

REVISION DATE: MAY 1, 2020

KY 536 - APPR LT 144+57.73
PI STA = 1+21.95
Δ = 9°01'24.74" LT
D = 9°32'57.47"
T = 47.35'
L = 94.49'
R = 600.00'
E = 1.87'

KY 536 - MT. ZION RD.
PI STA = 145+44.50
Δ = 16°56'00.82" RT
D = 2°51'53.24"
T = 297.72'
L = 591.09'
R = 2000.00'
E = 22.04'
e = 4.00%
RUNOFF = 160'
RUNOUT = 80'

TOTTEN LANE PROPERTIES.LLC

P 29 JOHN E.LEMBERG CHRISTY A.LEMBERG (wf)

DAVID L.SETTERS REBECCA A. SETTERS (wf)

TOTTEN (Access strip) DB 1-66,Pg 218

CHARLIE SCOTT III & DEBORAH S.SCOTT (wf)

KYNY INVESTMENTS.LLC

P 191

P 34 CHESTER LANCE KEMPER

P 37 FURLONG HILL,LLC

140+00

145+00

150+00

155+00

PT 1+69.10

PC 0+74.60

PT 145+44.50

TEMP.ESMT. FOR ENTR. CONST.

TEMP.ESMT. FOR ENTR. CONST.

TEMP. ESMT. FOR RDWY. CONST.

EXISTING R/W

PROPOSED R/W & C/A

PROPOSED R/W

EXISTING R/W PROPOSED R/W & C/A

PROP.C/A

EXISTING R/W

S64°33'18"E 230.88'

S49°57'11"E 136.38'

S42°36'44"E 302.08'

S21°56'56"E, 101.34'

S30°14'33"W 129.81'

S54°21'42"E 397.70'

N85°34'54"E 970'

178.17'

ARC = 114.49' R = 444.50'
CHORD = N30°30'17"W, 114.17'

ARC = 134.17' R = 394.50'
CHORD = S32°52'08"E, 133.52'

N23°07'33"W 133.20'

N36°49'03"E 175.63'

S23°07'33"E 66.05'

S23°07'33"E 67.57'

DIVERSION DISTURB LIMITS

ARC = 515.22'
R = 1073.55'
CHORD = N36°37'04"W, 510.29'

ARC = 538.73'
R = 1123.89'
CHORD = S36°38'18"E, 533.59'

S44°06'55"E

N39°24'06"E 205.49'

MATCHLINE STA. 140+00

MATCHLINE STA. 155+00

TEMP.ESMT. FOR DRAINAGE

PERM.ESMT. FOR DRAINAGE

TEMP.ESMT. FOR RDWY. CONST.

TEMP.ESMT. FOR RDWY. CONST.

PERM.ESMT. FOR DRAINAGE

LAND LOCKED

JENNIFER MEYER JEREMY MEYER

P 30 LAND LOCKED

P 27 STEPHEN MASON JENNIFER MASON (wf)

EXISTING EASEMENT

KY 536 STA. 144+57.74 = KY 536 APPR. LT STA. 0+00

P 26 ENID MAIR MASON (widow)

P 35X

P 35 LOUISA A.ODER

P 36 LLOYD SPEGAL JUDITH LYNN SPEGAL (wf)

PROPOSED R/W N85°34'54"E 178.17' & C/A

PROPOSED R/W & C/A

N39°35'12"W 125.39'

N26°22'15"W 134.32'

N26°22'15"W 128.17'

N60°48'53"W 313.21'

PROPOSED R/W & C/A

N34°37'43"W 288.55'

N45°35'08"E 201.95'

N16°23'08"E 174.75'

N28°14'11"E 142.65'

N6°52'52"W 155.99'

N6°02'56"W 154.45'

S61°02'56"E

ARC = 175.33', R = 1951.00'
CHORD = N52°36'06"W, 175.27'

S42°21'52"W 56.00'

S90°08'20"E 90.38'

S71°03'22"E 178.43'

S6°37'06"W 152.13'

S30°31'05"E 30.77'

Ⓐ S39°35'12"E 10.63'
Ⓑ S45°53'05"W 24.90'
Ⓒ N44°06'55"W 29.23'
Ⓓ N44°06'55"W 20.77'
Ⓔ S45°53'05"W 28.86'
Ⓕ N6°52'52"W 55.01'
Ⓖ N28°57'04"E 44.98'
Ⓗ S6°52'52"E 16.63'
Ⓘ ARC = 52.17', R = 1951.00' CHORD = N49°15'40"W, 52.17'
Ⓙ ARC = 29.26', R = 1951.00' CHORD = S48°03'55"E, 29.26'
Ⓚ S48°03'55"E 28.42'
Ⓛ ARC = 82.92', R = 1951.00' CHORD = N46°25'05"W, 82.91'
Ⓜ S61°18'49"W 47.57'
Ⓝ ARC = 48.78', R = 1951.00' CHORD = N58°05'31"W, 48.77'
Ⓞ ARC = 74.90', R = 1951.00' CHORD = N56°16'33"W, 74.90'

ⓐ ARC = 41.50', R = 863.80' CHORD = S69°40'47"E, 41.50'
ⓑ ARC = 57.19', R = 868.80' CHORD = S66°26'28"E, 57.18'
ⓒ ARC = 12.59', R = 522.18' CHORD = S63°51'51"E, 12.59'
ⓓ ARC = 13.23', R = 522.18' CHORD = S50°40'43"E, 13.22'
ⓔ S34°37'43"E 10.18'
ⓕ S45°35'08"W 26.34'
ⓖ ARC = 61.64', R = 522.18' CHORD = N59°47'30"W, 61.61'
ⓗ N17°37'06"E 5.01'
ⓘ ARC = 10.47', R = 1161.93' CHORD = S49°41'42"E, 10.47'
ⓙ ARC = 109.24', R = 1161.93' CHORD = S46°44'37"E, 109.20'
ⓚ ARC = 29.16', R = 1161.93' CHORD = S43°19'52"E, 29.16'
ⓛ ARC = 45.62', R = 522.18' CHORD = S53°54'26"E, 45.61'

RIGHT OF WAY PLANS

0' 50' 100' 200' SCALE: 1"=50'

KY 536
RIGHT OF WAY PLAN SHEET
STA. 140+00 TO STA. 155+00

FILE NAME: V:\785\ACTIVE\178561001\ROADWAY\PLAN SHEETS\ROW PLANS\KY536_PL_140001_RW.DGN
USER: ghsharp
DATE PLOTTED: May 1, 2020
E-SHEET NAME:
MicroStation v8.11.9.832

COUNTY OF	ITEM NO.	SHEET NO.
KENTON	6-162.00	R11

REVISION DATE: DECEMBER 19, 2019

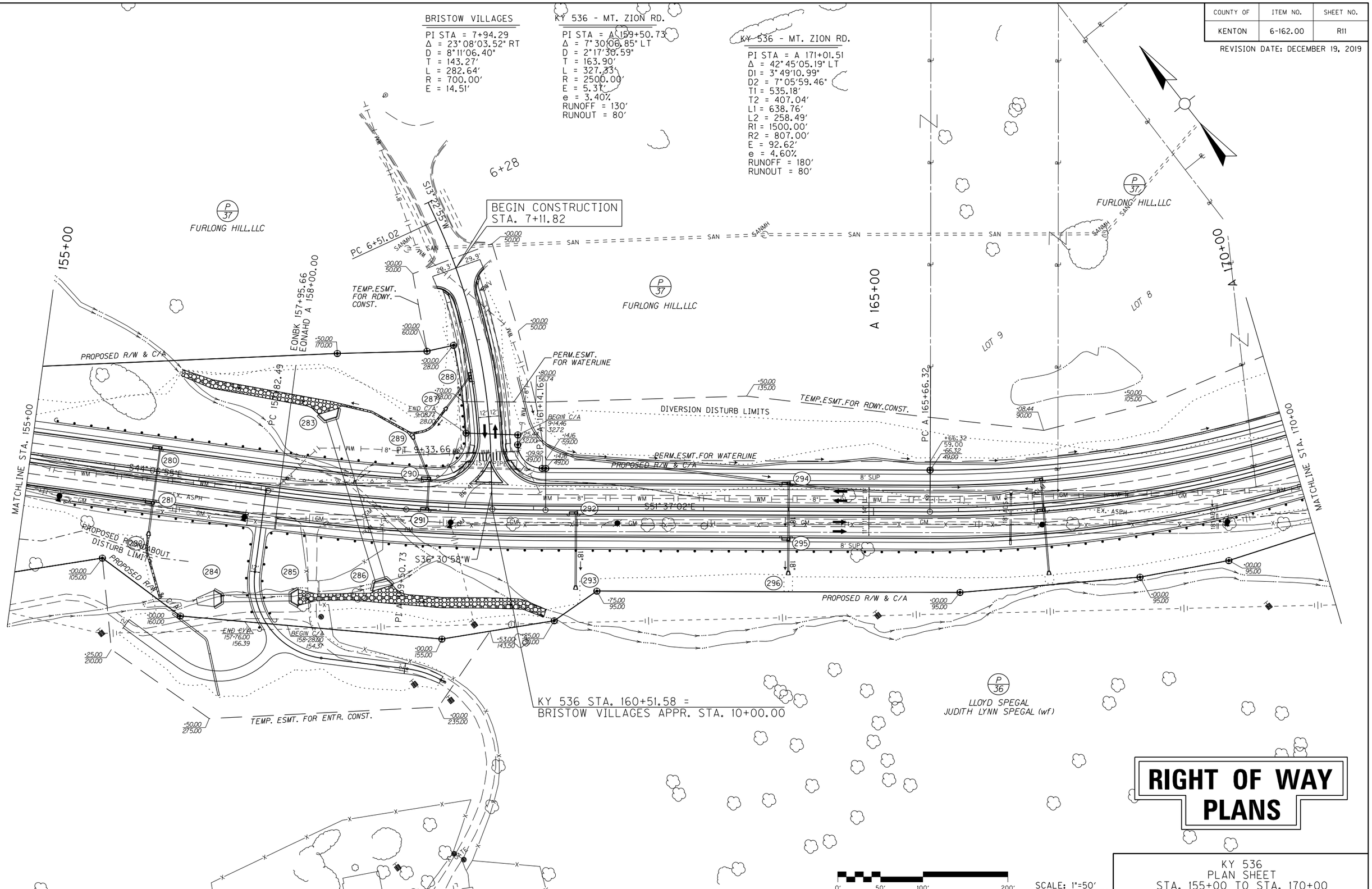

RIGHT OF WAY PLANS

KY 536
PLAN SHEET
STA. 155+00 TO STA. 170+00

FILE NAME: V:\1785\ACTIVE\17856001\ROADWAY\DEEDS\PROPOSED\2019_12_18_P37\R11.DGN

USER: ghsharp
DATE PLOTTED: December 19, 2019

E-SHEET NAME:

MicroStation v8.11.9.832

COUNTY OF	ITEM NO.	SHEET NO.
KENTON	6-162.00	R12

DATUM

855 850 845 840 835 830 825 820 815 810 805 800 795 790 785 780 775 770 765

MATCHLINE STA. 155+00

-2.61%

PVC A 162+37.84
Elev 820.30

VPI A 164+57.84
Elev 814.55

PVT A 166+77.84
Elev 812.74

L 440.00 FT
SD 13254.50 FT
K245.14

MATCHLINE STA. A 170+00

842.8	838.0	833.8	829.5	824.8	819.3	815.6	813.7	812.9	812.1	811.4	811.3	811.4	811.7	812.1	812.3	812.4	812.5	812.1	811.6	810.8	810.0	808.8	807.6	806.5	805.5
839.48	838.17	836.86	835.56	834.25	832.94	831.75	830.44	829.13	827.83	826.52	825.21	823.90	822.60	821.29	819.98	818.75	817.62	816.60	815.67	814.85	814.12	813.50	812.99	812.56	812.15

155+00 155+50 156+00 156+50 157+00 157+50 A 158+00A 158+50A 159+00A 159+50A 160+00A 160+50A 161+00 A 161+50A 162+00A 162+50A 163+00A 163+50A 164+00A 164+50A 165+00A 165+50A 166+00A 166+50A 167+00A 167+50

803.7	806.7	808.4	810.2	811.2
811.74	811.33	810.92	810.51	810.10

A 168+00A 168+50A 169+00A 169+50A 170+00

RIGHT OF WAY PLANS

SCALE: 1" = 50' HORIZONTAL
1" = 5' VERTICAL

KY 536
PROFILE SHEET
STA. 155+00 TO STA. A 170+00

FILE NAME: V:\1785\ACTIVE\1785G001\ROADWAY\PLAN SHEETS\ROW PLANS\KY536_PR_15500.DGN
USER: cdawahare
DATE PLOTTED: March 21, 2017
E-SHEET NAME:
MicroStation v8.11.7.443

COUNTY OF	ITEM NO.	SHEET NO.
KENTON	6-162.00	R12A

REVISION DATE: DECEMBER 19, 2019

BRISTOW VILLAGES
PI STA = 7+94.29
Δ = 23°08'03.52" RT
D = 8°11'06.40"
T = 143.27'
L = 282.64'
R = 700.00'
E = 14.51'

KY 536 - MT. ZION RD.
PI STA = A 159+50.73
Δ = 7°30'06.85" LT
D = 2°17'30.59"
T = 163.90'
L = 327.33'
R = 2500.00'
E = 5.37'
e = 3.40%
RUNOFF = 130'
RUNOUT = 80'

KY 536 - MT. ZION RD.
PI STA = A 171+01.51
Δ = 42°45'05.19" LT
D1 = 3°49'10.99"
D2 = 7°05'59.46"
T1 = 535.18'
T2 = 407.04'
L1 = 638.76'
L2 = 258.49'
R1 = 1500.00'
R2 = 807.00'
E = 92.62'
e = 4.60%
RUNOFF = 180'
RUNOUT = 80'

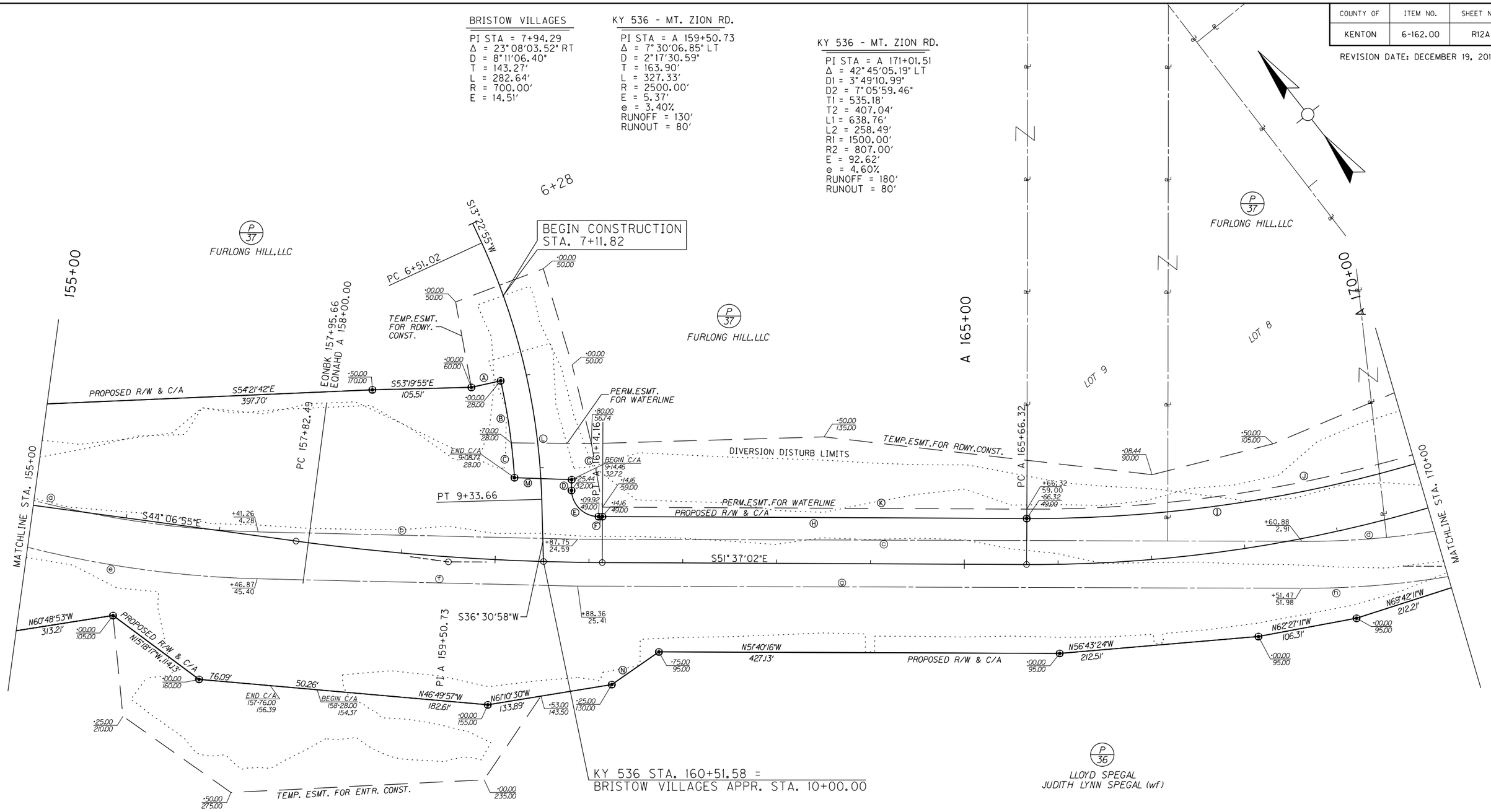

P/37 FURLONG HILL,LLC

P/36 LLOYD SPEGAL
JUDITH LYNN SPEGAL (wf)

Ⓐ S64°25'26"E 32.00'
Ⓑ ARC = 67.20', R = 672.00' CHORD = S28°26'27"W, 67.17'
Ⓒ ARC = 37.22', R = 672.00' CHORD = S32°53'33"W, 37.22'
Ⓓ S38°59'43"W 11.51'
Ⓔ ARC = 44.22', R = 29.00' CHORD = S7°50'18"E, 40.06'
Ⓕ ARC = 4.16', R = 2451.00' CHORD = S5°34'07"E, 4.16'
Ⓖ S28°13'54"W 68.86'
Ⓗ S51°37'02"E 452.16'
Ⓘ ARC = 555.35', R = 1451.00' CHORD = S62°34'55"E, 551.97'
Ⓙ ARC = 551.52', R = 1441.00' CHORD = S62°34'55"E, 548.16'
Ⓚ S51°37'02"E 452.16'
Ⓛ S51°25'04"E 85.35'
Ⓜ S49°55'03"E 60.99'
Ⓝ N86°36'34"W 61.03'

ⓐ ARC = 515.22', R = 1073.55' CHORD = N36°37'04"W, 510.29'
ⓑ N50°33'26"W 340.63'
ⓒ S51°42'43"E 771.54'
ⓓ ARC = 180.99', R = 887.91' CHORD = N57°29'23"W, 180.67'
ⓔ ARC = 538.73', R = 1123.89' CHORD = S36°38'18"E, 533.59'
ⓕ S50°33'32"E 341.64'
ⓖ S51°42'38"E 771.49'
ⓗ ARC = 191.18', R = 937.91' CHORD = S57°29'23"E, 190.85'

0' 50' 100' 200'

SCALE: 1"=50'

RIGHT OF WAY PLANS

KY 536
RIGHT OF WAY PLAN SHEET
STA. 155+00 TO STA. 170+00

FILE NAME: V:\1785\ACTIVE\17856100\ROADWAY\DEEDS\PROPOSED\2019_12_18_P37\R12A.DGN
USER: gnsharp
DATE PLOTTED: December 19, 2019
E-SHEET NAME:
MicroStation v8.11.9.832

COUNTY OF	ITEM NO.	SHEET NO.
KENTON	6-162.00	R13

REVISION DATE: APRIL 20, 2021

KY 1303 - BRISTOW RD.
PI STA = 97+33.48
Δ = 7°10'38.56" LT
D = 7°05'59.46"
T = 50.61'
L = 101.09'
R = 807.00'
E = 1.59'

KY 1303 - BRISTOW RD.
PI STA = 100+86.97
Δ = 11°54'55.68" LT
D = 28°38'52.40"
T = 20.87'
L = 41.59'
R = 200.00'
E = 1.09'

KY 536 - MT. ZION RD.
PI STA = A 177+76.56
Δ = 17°38'38.89" LT
D = 28°38'52.40"
T = 31.04'
L = 61.59'
R = 200.00'
E = 2.39'

KY 536 - MT. ZION RD.
PI STA = A 179+05.49
Δ = 13°54'03.26" RT
D = 7°05'59.46"
T = 98.38'
L = 195.79'
R = 807.00'
E = 5.97'

KY 1303 - BRISTOW RD.
PI STA = 98+58.95
Δ = 21°15'14.57" RT
D = 19°05'54.94"
T = 56.29'
L = 111.29'
R = 300.00'
E = 5.24'

KY 536 ENTR. LT.
STA A 184+00.00
PI STA = 1+86.18
Δ = 16°46'22.99" LT
D = 11°27'32.96"
T = 73.71'
L = 146.37'
R = 500.00'
E = 5.40'

KY 536 ENTR. LT.
STA A 184+00.00
ENTR. RT. STA 2+25.00
PI STA = 0+73.01
Δ = 34°41'05.73" LT
D = 57°17'44.81"
T = 31.23'
L = 60.54'
R = 100.00'
E = 4.76'

R2-OC ENTR. RT.
STA 6+43.71
PI STA = 0+96.95
Δ = 65°44'06.25" LT
D = 143°14'22.02"
T = 25.85'
L = 45.89'
R = 40.00'
E = 7.62'

R2-SE ENTR. RT.
STA 4+44.81
PI STA = 0+76.33
Δ = 15°42'09.94" RT
D = 28°38'52.40"
T = 27.58'
L = 54.81'
R = 200.00'
E = 1.89'

KY 536 STA. A 176+34.91 =
KY 1303 STA. 99+70.73

END CONSTRUCTION
STA. 102+72.97

MATCHLINE STA. 97+00

MATCHLINE STA. 170+00

MATCHLINE STA. 185+00

A 175+00

A 180+00

A 185+00

PI A 171+01.51

PC A 172+05.08

PC A 175+26.03

PC A 177+45.52

PRC A 178+07.11

PI A 179+05.49

PC 100+69.70

PI 102+07.70

PC 101+07.70

PRC 103+29.26

PI 102+92.90

PT 104+80.25

PT A 180+02.90

PC A 182+74.00

PT A 183+74.00

PC A 184+24.00

PT A 185+24.00

R2 NE

R2 NW

R2 SW

R2 SE

S51°43'49"E

S55°27'03"E

PROPOSED R/W & C/A

EXISTING R/W

TEMP.ESMT. FOR RDWY.CONST.

PERM.ESMT. FOR WATERLINE

PERM.ESMT. FOR DRAINAGE

TEMP.ESMT. FOR DIVERSION CONST.

DIVERSION DISTURB LIMITS

PERM.ESMT. FOR DRAINAGE CONST.

TEMP.ESMT. FOR RDWY.CONST. [5]

REMOVE EXISTING BRIDGE

CAUTION GAS LINE

SUBSTATION

CEMETERY

GRAVES LAND LOCKED

MOUNT ZION ROAD

MON. 228

MON. 230

EX. ASPH.

GRAVEL

CONC

18" ENT. PIPE

P 37 FURLONG HILL, LLC

P 44 MELISSA KAY HOFFMAN & CYNTHIA M. DOERFLEIN

P 36 LLOYD SPEGAL & JUDITH LYNN SPEGAL (wf)

P 43 Y. WOLTENBERG, NOCERO, C. LITMER

P 53 BRISTOW ROAD, LLC

P 46 EAST KENTUCKY POWER COOPERATIVE, INC.

P 45 BONIFACE NOCERO, RINZY (AKA RIZZIERO) NOCERO, ROGER (AKA ROGGIERO) NOCERO, ERMINIA DESIDERIO & MACISTRO NOCERO

P 51 DANIEL P. COOK

0' 50' 100' 200'

SCALE: 1"=50'

RIGHT OF WAY PLANS

KY 536
PLAN SHEET
STA. 170+00 TO STA. 185+00

FILE NAME: V:\1785\ACTIVE\178561001\ROADWAY\PLAN SHEETS\ROW PLANS\KY536_PL_17000.DGN
USER: gnsharp
DATE PLOTTED: April 20, 2021
E-SHEET NAME:
MicroStation v8.11.9.832

COUNTY OF	ITEM NO.	SHEET NO.
KENTON	6-162.00	R14



RIGHT OF WAY PLANS

SCALE: 1" = 50' HORIZONTAL
1" = 5' VERTICAL

KY 536
PROFILE SHEET
STA. A 170+00 TO STA. A 185+00

FILE NAME: V:\1785\ACTIVE\178561001\ROADWAY\PLAN SHEETS\ROW PLANS\KY536_PR_17000.DGN
USER: cdawahare
DATE PLOTTED: March 21, 2017
E-SHEET NAME:
MicroStation v8.11.7.443

COUNTY OF	ITEM NO.	SHEET NO.
KENTON	6-162.00	R14A

REVISION DATE: APRIL 20, 2021

KY 1303 - BRISTOW RD.
PI STA = 97+33.48
Δ = 7°10'38.56" LT
D = 7°05'59.46"
T = 50.61'
L = 101.09'
R = 807.00'
E = 1.59'

KY 1303 - BRISTOW RD.
PI STA = 100+86.97
Δ = 11°54'55.68" LT
D = 28°38'52.40"
T = 20.87'
L = 41.59'
R = 200.00'
E = 1.09'

KY 536 - MT. ZION RD.
PI STA = A 177+76.56
Δ = 17°38'38.89" LT
D = 28°38'52.40"
T = 31.04'
L = 61.59'
R = 200.00'
E = 2.39'

KY 536 - MT. ZION RD.
PI STA = A 179+05.49
Δ = 13°54'03.26" RT
D = 7°05'59.46"
T = 98.38'
L = 195.79'
R = 807.00'
E = 5.97'

KY 1303 - BRISTOW RD.
PI STA = 98+58.95
Δ = 21°15'14.57" RT
D = 19°05'54.94"
T = 56.29'
L = 111.29'
R = 300.00'
E = 5.24'

KY 536 ENTR. LT.
STA A 184+00.00
PI STA = 1+86.18
Δ = 16°46'22.99" LT
D = 11°27'32.96"
T = 73.71'
L = 146.37'
R = 500.00'
E = 5.40'

KY 536 ENTR. LT.
STA A 184+00.00
ENTR. RT. STA 2+25.00
PI STA = 0+73.01
Δ = 34°41'05.73" LT
D = 57°17'44.81"
T = 31.23'
L = 60.54'
R = 100.00'
E = 4.76'

R2-OC ENTR. RT.
STA 6+43.71
PI STA = 0+96.95
Δ = 65°44'06.25" LT
D = 143°14'22.02"
T = 25.85'
L = 45.89'
R = 40.00'
E = 7.62'

R2-SE ENTR. RT.
STA 4+44.81
PI STA = 0+76.33
Δ = 15°42'09.94" RT
D = 28°38'52.40"
T = 27.58'
L = 54.81'
R = 200.00'
E = 1.89'

KY 536 STA. A 176+34.91 =
KY 1303 STA. 99+70.73

END CONSTRUCTION
STA. 102+72.97

MATCHLINE STA. 170+00

MATCHLINE STA. 185+00

A 170+00

A 175+00

A 180+00

A 185+00

PROPOSED R/W & C/A

EXISTING R/W

TEMP.ESMT. FOR RDWY.CONST.

TEMP. ESMT. FOR RDWY. CONST.

PERM.ESMT. FOR DRAINAGE

PERM.ESMT. FOR WATERLINE

PERM.ESMT. FOR DRAINAGE CONST.

TEMP.ESMT. FOR DIVERSION CONST.

TEMP.ESMT. FOR RDWY.CONST.

PERM.ESMT. FOR RDWY. CONST.

PC A 172+05.08

PT A 175+26.03

PC A 177+45.52

PRC A 178+07.11

PI A 179+05.49

PT A 180+02.90

P1 A 171+01.51

PC 100+66.10

PC 101+07.70

BEGIN C/A A 177+62.00 175.20

END C/A A 174+50.00 220.00

END C/A A 183+74.00 49.00

BEGIN C/A A 184+24.00 49.00

CEMETERY

GRAVES

LAND LOCKED

P 37 FURLONG HILL, LLC

P 44 MELISSA KAY HOFFMAN & CYNTHIA M. DOERFLEIN

P 51

P 53 BRISTOW ROAD, LLC

P 36 LLOYD SPEGAL JUDITH LYNN SPEGAL (wf)

P 43 Y.WOLTENBERG, NOCERO, C. LITMER

P 46 EAST KENTUCKY POWER COOPERATIVE, INC.

P 45 BONIFACE NOCERO, RINZY (AKA RIZZIERO) NOCERO, ROGER (AKA ROGGIERO) NOCERO, ERMINIA DESIDERIO & MACISTRO NOCERO

P 51 DANIEL P. COOK

Ⓐ S37°14'28"E 15.22'
Ⓑ ARC = 555.35', R = 1451.00' CHORD = S62°34'55"E, 551.97'
Ⓒ ARC = 137.20', R = 780.00' CHORD = S78°35'08"E, 137.02'
Ⓓ ARC = 20.26', R = 780.00' CHORD = S84°22'07"E, 20.26'
Ⓔ ARC = 80.80', R = 780.00' CHORD = S6°21'18"E, 80.76'
Ⓕ ARC = 60.45', R = 80.00' CHORD = S45°48'43"E, 59.03'
Ⓖ N34°32'57"E 20.00'
Ⓗ S55°27'03"E 24.00'
Ⓘ S34°32'57"W 20.00'
Ⓙ ARC = 551.52', R = 1441.00' CHORD = S62°34'55"E, 548.16'
Ⓚ ARC = 137.25', R = 770.00' CHORD = S78°39'10"E, 137.07'
Ⓛ ARC = 181.9', R = 770.00' CHORD = S84°26'10"E, 181.9'
Ⓜ S81°54'21"E 10.28'
Ⓝ N69°42'11"W 212.21'
Ⓞ N6°18'39"E 106.33'
Ⓟ N6°24'40"E 113.82'
Ⓠ N7°06'49"E 65.71'
Ⓡ ARC = 164.93', R = 780.00' CHORD = S15°22'49"E, 164.62'
Ⓢ S24°09'49"E 75.34'
Ⓣ ARC = 179.42', R = 856.00' CHORD = S6°27'20"E, 179.09'
Ⓤ S55°27'03"E 371.10'
Ⓥ S55°27'03"E 24.00'
Ⓦ S55°27'03"E 50.00'
Ⓧ S55°27'03"E 501.00'
Ⓨ ARC = 9.11', R = 20.00' CHORD = N81°50'02"E, 9.03'
Ⓐ ARC = 41.15', R = 105.00' CHORD = N80°00'32"E, 40.89'
Ⓑ ARC = 36.27', R = 759.00' CHORD = N89°52'05"E, 36.27'
Ⓒ ARC = 41.15', R = 105.00' CHORD = S80°16'23"E, 40.89'
Ⓓ ARC = 9.11', R = 20.00' CHORD = S82°05'53"E, 9.03'
Ⓔ ARC = 29.23', R = 770.00' CHORD = N83°45'41"E, 29.23'
Ⓕ ARC = 13.67', R = 30.00' CHORD = N81°50'02"E, 13.55'
Ⓖ ARC = 37.23', R = 95.00' CHORD = N80°00'32"E, 37.00'
Ⓗ ARC = 36.75', R = 769.00' CHORD = N89°52'05"E, 36.74'
Ⓘ ARC = 37.23', R = 95.00' CHORD = S80°16'23"E, 37.00'
Ⓙ ARC = 13.67', R = 30.00' CHORD = S82°05'53"E, 13.55'
Ⓚ ARC = 37.56', R = 780.00' CHORD = N83°28'10"E, 37.56'
Ⓛ N34°32'57"E 8.45'
Ⓜ ARC = 20.01', R = 3294.28' CHORD = S57°33'35"E, 20.01'
Ⓝ S34°32'57"W 9.19'
Ⓞ N55°27'03"W 20.00'
Ⓐ ARC = 48.40', R = 1161.08' CHORD = S76°28'06"E, 48.40'
Ⓑ S77°39'45"E 57.93'
Ⓒ ARC = 60.31', R = 730.49' CHORD = S80°01'40"E, 60.29'
Ⓓ ARC = 41.94', R = 20.30' CHORD = S32°14'09"W, 34.87'
Ⓔ S88°36'01"E 9.38'
Ⓕ ARC = 166.53', R = 3456.65' CHORD = N56°53'54"W, 166.51'
Ⓖ ARC = 191.18', R = 937.91' CHORD = S57°29'23"E, 190.85'
Ⓗ S63°22'30"E 72.02'
Ⓘ ARC = 14.91', R = 646.90' CHORD = N3°57'13"W, 14.91'
Ⓙ ARC = 79.14', R = 730.49' CHORD = S85°29'47"E, 79.10'
Ⓚ N77°39'45"W 57.93'
Ⓛ ARC = 129.73', R = 680.49' CHORD = N83°07'27"W, 129.54'
Ⓜ N16°38'32"E 10.16'
Ⓝ ARC = 288.19', R = 696.90' CHORD = S15°05'46"E, 286.14'
Ⓞ ARC = 180.99', R = 887.91' CHORD = N57°29'23"W, 180.67'
Ⓟ N63°22'30"W 179.32'
Ⓠ ARC = 65.13', R = 1111.08' CHORD = N65°03'16"W, 65.12'
Ⓡ ARC = 211.93', R = 1111.08' CHORD = N72°11'54"W, 211.61'
Ⓢ N3°17'37"W 167.63'
Ⓣ S56°53'57"W 72.53'
Ⓤ ARC = 253.44', R = 646.90' CHORD = N15°50'15"W, 251.82'
Ⓥ ARC = 84.09', R = 149.04' CHORD = N43°13'32"W, 82.98'
Ⓦ N59°23'24"W 162.11'
Ⓧ ARC = 226.00', R = 3344.28' CHORD = N57°27'15"W, 225.96'

0' 50' 100' 200'

SCALE: 1"=50'

RIGHT OF WAY PLANS

KY 536
RIGHT OF WAY PLAN SHEET
STA. 170+00 TO STA. 185+00

FILE NAME: V:\1785\ACTIVE\17856100\ROADWAY\PLAN SHEETS\ROW PLANS\KY536_PL_17000_RW.DGN
USER: gnsharp
DATE PLOTTED: April 20, 2021
E-SHEET NAME:
MicroStation v8.11.9.832

COUNTY OF	ITEM NO.	SHEET NO.
KENTON	6-162.00	R15

REVISION DATE: APRIL 20, 2021

KY 536 - MT. ZION RD.
PI STA = A 199+39.20
Δ = 8°43'07.05" LT
D = 7°05'59.46"
T = 61.52'
L = 122.80'
R = 807.00'
E = 2.34'

KY 536 ENTR. RT.
STA A 195+00.00
PI STA = 1+08.55
Δ = 72°40'14.23" LT
D = 114°35'29.61"
T = 36.78'
L = 63.42'
R = 50.00'
E = 12.07'

RIGHT OF WAY PLANS

KY 536
PLAN SHEET
STA. 185+00 TO STA. 200+00

SCALE: 1"=50'

MicroStation v8.11.9.832 | E-SHEET NAME: | USER: ghsharp DATE PLOTTED: April 20, 2021 | FILE NAME: V:\1785\ACTIVE\17856100\ROADWAY\PLAN SHEETS\ROW PLANS\KY536_PL_18500.DGN

COUNTY OF	ITEM NO.	SHEET NO.
KENTON	6-162.00	R16

DATUM 830 825 820 815 810 805 800 795 790 785 780 775 770 765 760 755 750 745 740

MATCHLINE STA. A 185+00

-0.82%

-0.82%

MATCHLINE STA. A 200+00

A 185+00	A 185+50	A 186+00	A 186+50	A 187+00	A 187+50	A 188+00	A 188+50	A 189+00	A 189+50	A 190+00	A 190+50	A 191+00	A 191+50	A 192+00	A 192+50	A 193+00	A 193+50	A 194+00	A 194+50	A 195+00	A 195+50	A 196+00	A 196+50	A 197+00	A 197+50	A 198+00	A 198+50	A 199+00	A 199+50	A 200+00
800.8	803.4	804.9	803.2	802.5	800.0	795.8	787.9	787.5	793.0	795.0	797.5	797.3	797.3	798.3	797.5	796.5	794.2	788.9	789.7	794.4	795.2	796.0	796.5	796.4	795.8	796.4	796.3	796.3	795.4	787.9
797.80	797.39	796.98	796.57	796.16	795.75	795.34	794.93	794.52	794.11	793.70	793.29	792.88	792.47	792.06	791.65	791.24	790.83	790.42	790.01	789.60	789.19	788.78	788.37	787.96	787.55	787.14	786.73	786.32	785.91	785.50

RIGHT OF WAY PLANS

SCALE: 1" = 50' HORIZONTAL
1" = 5' VERTICAL

KY 536
PROFILE SHEET
STA. A 185+00 TO STA. A 200+00

FILE NAME: V:\1785\ACTIVE\178561001\ROADWAY\PLAN SHEETS\ROW PLANS\KY536_PR_18500.DGN
USER: cdawahare
DATE PLOTTED: March 21, 2017
E-SHEET NAME:
MicroStation v8.11.7.443

COUNTY OF	ITEM NO.	SHEET NO.
KENTON	6-162.00	R16A

REVISION DATE: APRIL 20, 2021

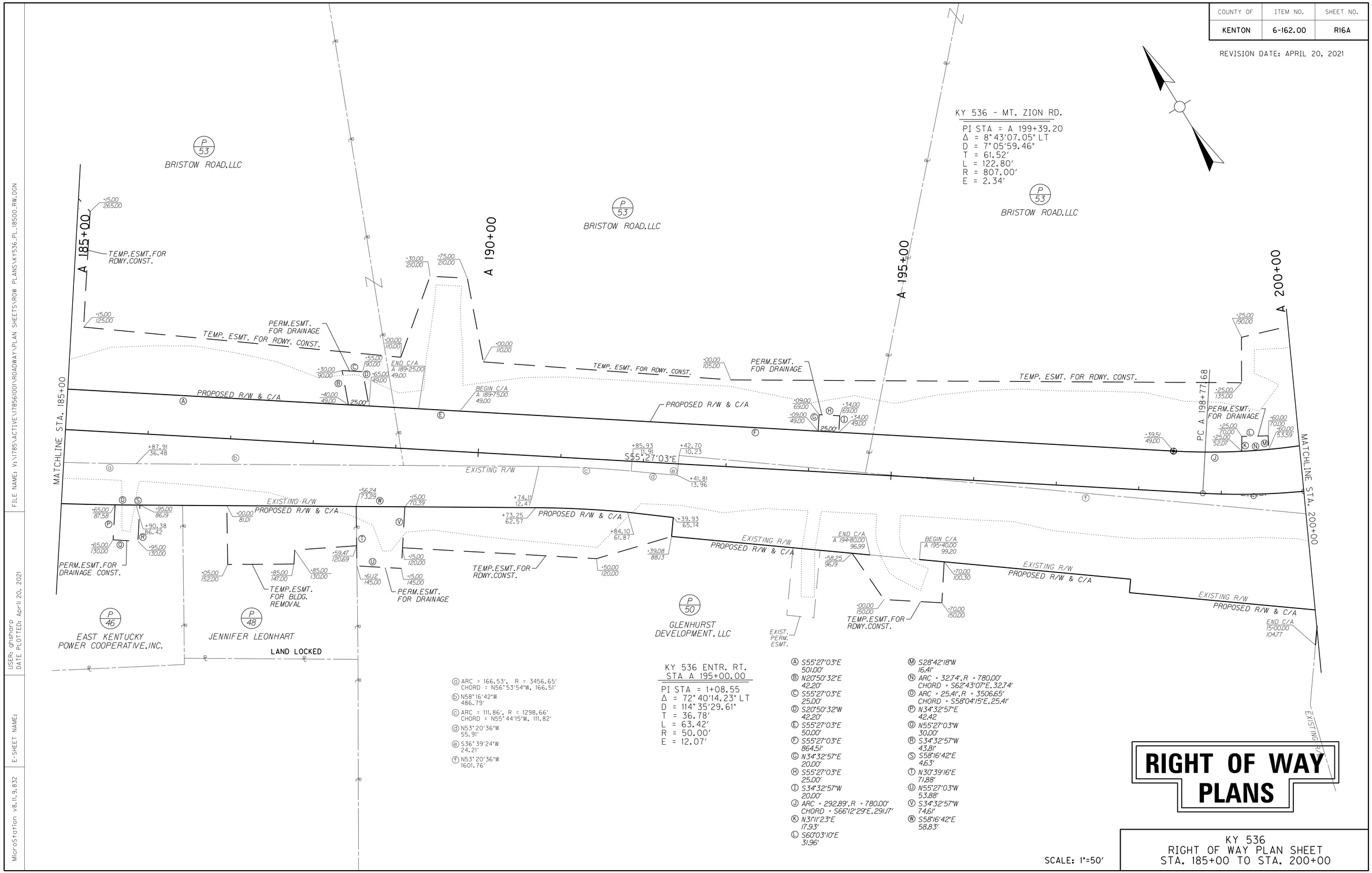

KY 536 ENTR. RT.
STA A 195+00.00

PI STA = 1+08.55
Δ = 72°40'14.23" LT
D = 114°35'29.61"
T = 36.78'
L = 63.42'
R = 50.00'
E = 12.07'

(a) ARC = 166.53', R = 3456.65'
CHORD = N56°53'54"W, 166.51'
(b) N58°16'42"W
486.79'
(c) ARC = 111.86', R = 1298.66'
CHORD = N55°44'15"W, 111.82'
(d) N53°20'36"W
55.91'
(e) S36°39'24"W
24.21'
(f) N53°20'36"W
1601.76'

(A) S55°27'03"E
501.00'
(B) N20°50'32"E
42.20'
(C) S55°27'03"E
25.00'
(D) S20°50'32"W
42.20'
(E) S55°27'03"E
50.00'
(F) S55°27'03"E
864.51'
(G) N34°32'57"E
20.00'
(H) S55°27'03"E
25.00'
(I) S34°32'57"W
20.00'
(J) ARC = 292.89', R = 780.00'
CHORD = S66°12'29"E, 291.17'
(K) N31°11'23"E
17.93'
(L) S60°03'10"E
31.96'
(M) S28°42'18"W
16.41'
(N) ARC = 32.74', R = 780.00'
CHORD = S62°43'07"E, 32.74'
(O) ARC = 25.41', R = 3506.65'
CHORD = S58°04'15"E, 25.41'
(P) N34°32'57"E
42.42
(Q) N55°27'03"W
30.00'
(R) S34°32'57"W
43.81'
(S) S58°16'42"E
4.63'
(T) N30°39'16"E
71.88'
(U) N55°27'03"W
53.88'
(V) S34°32'57"W
74.61'
(W) S58°16'42"E
58.83'

RIGHT OF WAY PLANS

SCALE: 1"=50'

KY 536
RIGHT OF WAY PLAN SHEET
STA. 185+00 TO STA. 200+00

FILE NAME: V:\1785\ACTIVE\17856100\ROADWAY\PLAN SHEETS\ROW PLANS\KY536_PL_18500_RW.DGN
USER: ghsharp
DATE PLOTTED: April 20, 2021
E-SHEET NAME:
MicroStation v8.11.9.832

COUNTY OF	ITEM NO.	SHEET NO.
KENTON	6-162.00	R17

REVISION DATE: APRIL 20, 2021

BEGIN CONSTRUCTION
STA. 10+00.00

KY 536 - MT. ZION RD.
PI STA = A 176+34.91
Δ = 11°03'37.73" RT

KY 536 - MT. ZION RD.
PI STA = A 200+32.49
Δ = 18°11'12.14" RT
D = 28°38'52.40"
T = 32.01'
L = 63.48'
R = 200.00'
E = 2.55'

R3-NW ENTR. RT.
STA 9+52.49
PI STA = 2+19.27
Δ = 51°36'13.34" RT
D = 71°37'11.01"
T = 38.68'
L = 72.05'
R = 80.00'
E = 8.86'

R3-NW ENTR. RT.
STA 9+52.49
PI STA = 0+92.88
Δ = 59°05'38.50" LT
D = 71°37'11.01"
T = 45.35'
L = 82.51'
R = 80.00'
E = 11.96'

KY 536 - MT. ZION RD.
PI STA = A 202+77.02
Δ = 26°25'42.22" LT
D = 28°38'52.40"
T = 46.96'
L = 92.25'
R = 200.00'
E = 5.44'

HOGREFE ROAD
PI STA = 12+28.22
Δ = 15°49'11.41" RT
D = 14°19'26.00"
T = 55.58'
L = 110.44'
R = 400.00'
E = 3.84'

KY 536 - MT. ZION RD.
PI STA = A 203+78.90
Δ = 8°01'20.52" RT
D = 7°05'59.46"
T = 56.59'
L = 112.99'
R = 807.00'
E = 1.98'

KY 536 ENTR. LT.
STA A 207+80.00
PI STA = 0+88.67
Δ = 27°05'16.29" LT
D = 57°17'44.81"
T = 24.09'
L = 47.28'
R = 100.00'
E = 2.86'

KY 536 - MT. ZION RD.
PI STA = A 207+38.37
Δ = 9°37'28.47" RT
D = 3°34'51.55"
T = 134.70'
L = 268.77'
R = 1600.00'
E = 5.66'
e = 4.40%
RUNOFF = 170'
RUNOUT = 80'

KY 536 ENTR. LT.
STA A 214+70.00
PI STA = 1+00.58
Δ = 93°36'28.07" LT
D = 143°14'22.02"
T = 42.60'
L = 65.35'
R = 40.00'
E = 18.44'

KY 536 STA. A 201+70.82 =
HOGREFE RD STA. 13+23.10

END CONSTRUCTION
STA. 15+12.84

HOGREFE ROAD
PI STA = 14+28.98
Δ = 18°18'52.52" LT
D = 14°19'26.20"
T = 64.48'
L = 127.86'
R = 400.00'
E = 5.16'

KY 536 ENTR. RT.
STA A 208+45.00
PI STA = 0+88.73
Δ = 7°40'39.41" LT
D = 28°38'52.40"
T = 13.42'
L = 26.80'
R = 200.00'
E = 0.45'

KY 536 ENTR. RT.
STA A 211+25.00
PI STA = 0+74.51
Δ = 10°54'44.84" LT
D = 28°38'52.40"
T = 19.10'
L = 38.09'
R = 200.00'
E = 0.91'

KY 536 ENTR. RT.
STA A 213+01.00
PI STA = 0+65.89
Δ = 6°00'21.83" LT
D = 19°05'54.94"
T = 15.74'
L = 31.45'
R = 300.00'
E = 0.41'

RIGHT OF WAY PLANS

KY 536
PLAN SHEET
STA. 200+00 TO STA. 215+00

SCALE: 1"=50'

MATCHLINE STA. 200+00

MATCHLINE STA. 215+00

PROPOSED R/W & C/A

BRISTOW ROAD, LLC

DAVID WILSON
CHARLENE WILSON (wf)

CARRIE MARIE KUNSTMAN
LAND LOCKED

LOUIS KUNSTMAN
MARIE KUNSTMAN (wf)

RANDY C.WORLEY
DONNA WORLEY (wf)

STEPHEN DORA

DANIEL J.BRADFORD
HILLARY R.BRADFORD (wf)

JEFFREY M.HANS
STACEE D.HANS (wf)

RONALD FLACK
PATRICIA A. FLACK (wf)

J.MICHAEL BALLARD
(married)

PATRICIA T.TUNNING,
IRENE T.WALTER &
LUCILLE LYNCH

SHARRON M.STOUT

COMMONWEALTH OF KENTUCKY

TEMP.ESMT. FOR RDWY.CONST.

PERM.ESMT. FOR DRAINAGE

TEMP. ESMT. FOR RDWY. CONST.

EXISTING R/W

PROPOSED R/W & C/A

TEMP.ESMT. FOR RDWY.CONST.

EXIST. PERM. ESMT.

FILE NAME: V:\1785\ACTIVE\1785610001\ROADWAY\PLAN SHEETS\ROW PLANS\KY536_PL_20000.DGN
USER: ghsharp
DATE PLOTTED: April 20, 2021
E-SHEET NAME:
MicroStation v8.11.9.832

COUNTY OF	ITEM NO.	SHEET NO.
KENTON	6-162.00	R18

DATUM

820 815 810 805 800 795 790 785 780 775 770 765 760 755 750 745 740 735 730

MATCHLINE STA. A 200+00

PVC A 202+91.69
Elev 783.11

VPI A 203+91.69
Elev 782.29

LO A 203+99.67
Elev 782.67

PVT A 204+91.69
Elev 782.99

0.70%

PVC A 207+46.89
Elev 784.77

HI A 208+29.45
Elev 785.06

VPI A 208+46.89
Elev 785.47

PVT A 209+46.89
Elev 784.47

-1.00%

PVC A 211+07.46
Elev 782.86

LO A 213+01.90
Elev 781.89

MATCHLINE STA. A 215+00

L 200.00 FT
SD 735.26 FT
K117.73

L 200.00 FT
SD 555.69 FT
K131.68

| | | |

COUNTY OF	ITEM NO.	SHEET NO.
KENTON	6-162.00	R18A

REVISION DATE: APRIL 20, 2021

FILE NAME: V:\1785\ACTIVE\17856100\ROADWAY\PLAN SHEETS\ROW PLANS\KY536_PL_20000_RW.DGN
USER: ghsharp
DATE PLOTTED: April 20, 2021
E-SHEET NAME:
MicroStation v8.11.9.832

N

MATCHLINE STA. 200+00

MATCHLINE STA. 215+00

TEMP.ESMT. FOR RDWY.CONST.

·30.00 100.00

·30.00 110.00

·06.00 173.00

·03.00 195.00

S50°44'31"E 64.00'

·80.00 32.00

·80.00 32.00

S39°15'29"W 120.00'

BEGIN C/A 11°00.00 32.00

N39°15'29"E 120.00'

END C/A 11°00.00 32.00

S39°15'29"W 37.62'

N39°15'29"E 39.59'

·39.59 32.00

·37.62 32.00

PROPOSED R/W & C/A

·09.92 103.40

·50.00 135.00

·00.00 125.00

PERM.ESMT. FOR DRAINAGE

TEMP. ESMT. FOR RDWY. CONST.

·35.00 110.00

·75.00 180.00

·35.00 170.00

·30.00 100.00

·73.18 99.56

·00.00 100.00

TEMP.ESMT.FOR RDWY.CONST.

·29.28 107.11

·36.27 105.11

·71.87 49.00

·21.13 72.34

·36.30 49.00

PROPOSED R/W & C/A

·55.00 90.00

·60.00 49.00

·85.00 90.00

·90.00 49.00

·03.67 49.00

PROPOSED R/W & C/A

END C/A A 207°55.00 49.00

BEGIN C/A A 208°05.00 49.00

·72.44 49.00

S43°42'13"E 194.10'

+80.90 49.00

PROPOSED R/W & C/A

·75.00 49.00

·97.95 48.08

·22.11 48.71

+00.27 86.17

·23.35 82.99

·45.00 80.00

·59.50 43.01

·85.00 130.00

·60.00 80.00

TEMP. ESMT. FOR RDWY. CONST.

·00.00 90.00

·75.00 130.00

·90.00 75.00

BEGIN C/A A 214°90.00 51.27

END C/A A 214°35.00 50.90

PROPOSED R/W & C/A

EXISTING R/W

+48.62 23.08

+84.02 28.61

+57.94 114.78

END C/A A 208°25.00 118.78

BEGIN C/A A 208°75.00 112.44

·20.00 119.32

·30.00 155.00

·80.00 111.58

·75.00 150.00

+63.64 151.40

·75.03 85.96

·41.61 94.82

·76.50 109.49

·46.86 126.63

·47.08 127.51

BEGIN C/A 15°00.00 80.28

EXISTING R/W

PROPOSED R/W & C/A

EXIST. PERM. ESMT.

TEMP.ESMT.FOR RDWY.CONST.

TEMP.ESMT.FOR RDWY.CONST.

TEMP.ESMT.FOR RDWY.CONST.

TEMP.ESMT.FOR RDWY.CONST.

TEMP.ESMT.FOR RDWY.CONST.

·10.00 95.00

·48.50 71.30

·51.00 91.10

·15.00 85.00

+46.96 56.49

+50.31 82.38

+54.52 55.35

·50.00 75.00

BEGIN C/A A 213°20.00 58.71

+54.31 86.06

+51.62 65.47

+59.89 65.89

PROPOSED R/W & C/A

P 53 BRISTOW ROAD, LLC

P 53 BRISTOW ROAD, LLC

P 62 DAVID WILSON CHARLENE WILSON (Wf)

P 56 CARRIE MARIE KUNSTMAN LAND LOCKED

P 60 LOUIS KUNSTMAN MARIE KUNSTMAN (wf)

P 54 RANDY C.WORLEY DONNA WORLEY (wf)

STEPHEN DORA

P 55 DANIEL J.BRADFORD HILLARY R.BRADFORD (wf)

P 52 JEFFREY M.HANS STACEE D.HANS (wf)

P 57 RONALD FLACK PATRICIA A. FLACK (wf)

P 58 J.MICHAEL BALLARD (married)

P 59 PATRICIA I.TUNNING, IRENE T.WALTER & LUCILLE LYNCH

P 63 COMMONWEALTH OF KENTUCKY

SHARRON M.STOUT

EXISTING R/W

EXISTING R/W

EXISTING R/W

COUNTY OF	ITEM NO.	SHEET NO.
KENTON	6-162.00	R19

REVISION DATE: AUGUST 5, 2019

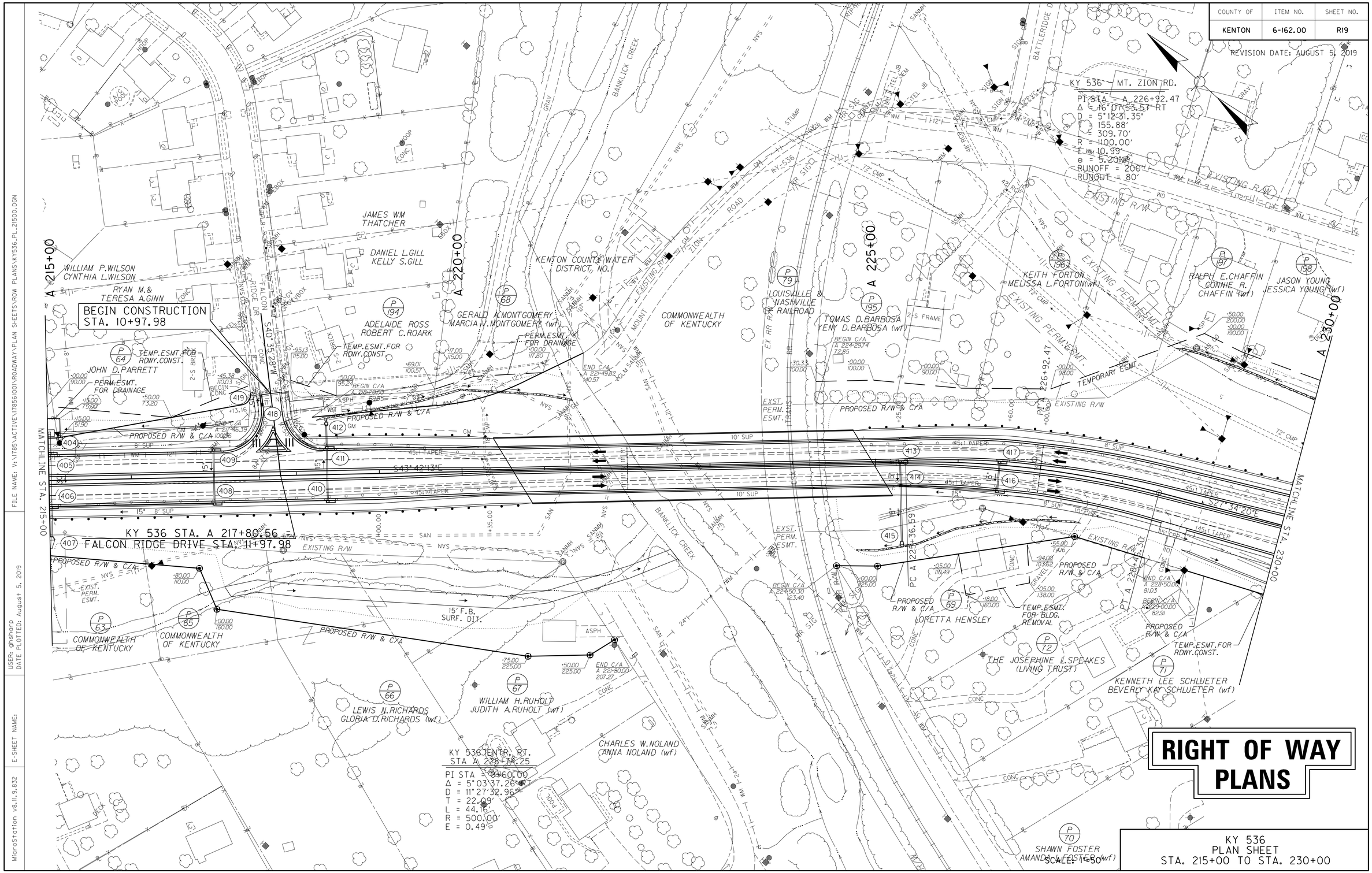

RIGHT OF WAY PLANS

KY 536
PLAN SHEET
STA. 215+00 TO STA. 230+00

SCALE: 1"=50'

FILE NAME: V:\1785\ACTIVE\178561001\ROADWAY\PLAN SHEETS\ROW PLANS\KY536_PL_21500.DGN

USER: ghsharp
DATE PLOTTED: August 5, 2019

E-SHEET NAME:

MicroStation v8.11.9.832

COUNTY OF	ITEM NO.	SHEET NO.
KENTON	6-162.00	R20

DATUM

835 830 825 820 815 810 805 800 795 790 785 780 775 770 765 760 755 750 745

L 830.00 FT
SD 575.97 FT
K153.70

VPI A 226+33.11
Elev 821.64

HI A 228+94.41
Elev 818.26

PVT A 221+57.46
Elev 800.71

4.40%

PVC A 222+18.11
Elev 803.38

MATCHLINE STA. A 230+00

MATCHLINE STA. A 215+00

VPI A 216+32.46
Elev 777.61

L 1050.00 FT
SD 780.24 FT
K194.44

| | | |

COUNTY OF	ITEM NO.	SHEET NO.
KENTON	6-162.00	R20A

REVISION DATE: AUGUST 5, 2019

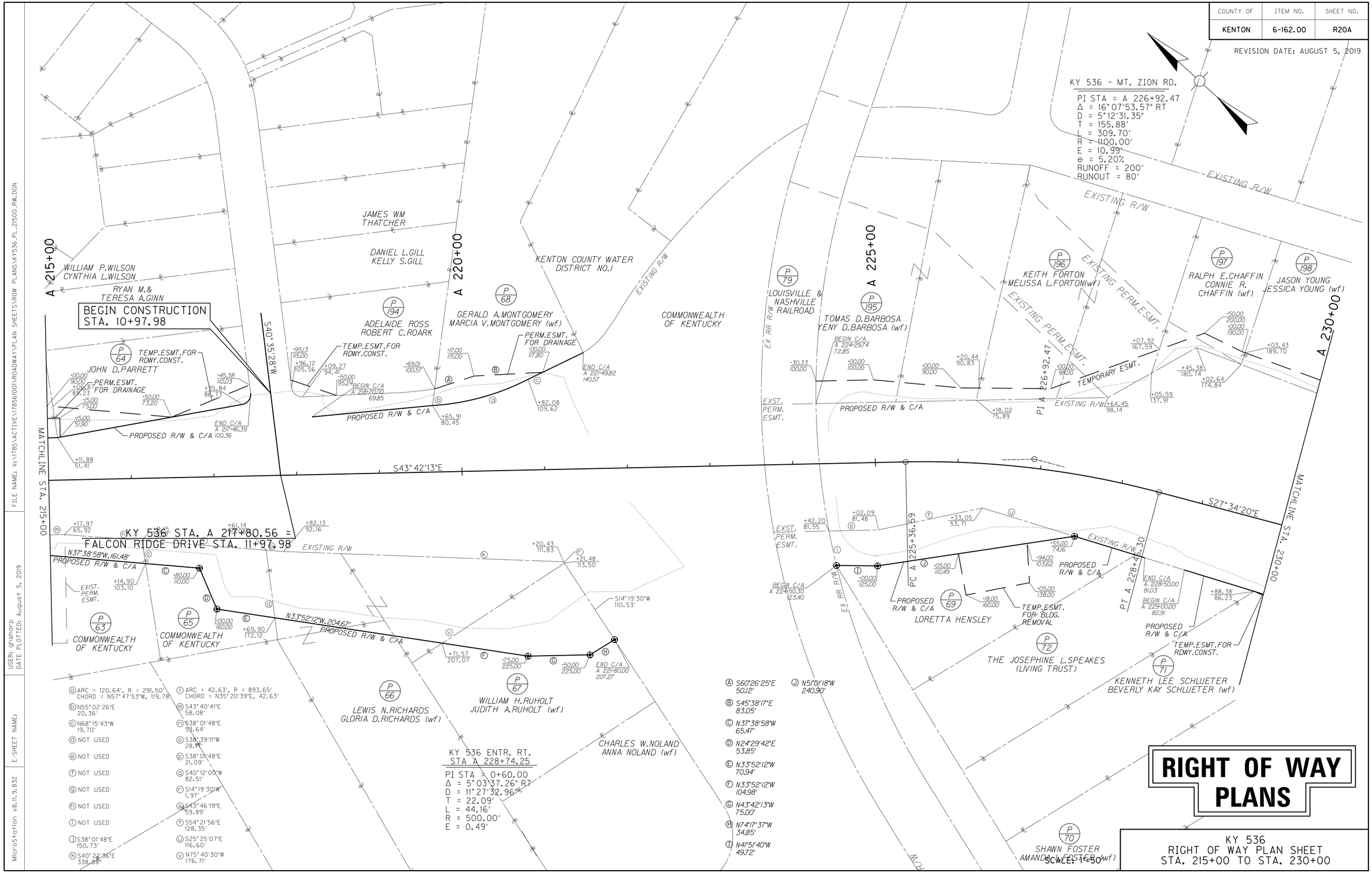

RIGHT OF WAY PLANS

KY 536
RIGHT OF WAY PLAN SHEET
STA. 215+00 TO STA. 230+00

SCALE: 1"=50'

FILE NAME: V:\1785\ACTIVE\17856100\ROADWAY\PLAN SHEETS\ROW PLANS\KY536_PL_21500_RW.DGN

USER: ghsharp
DATE PLOTTED: August 5, 2019

E-SHEET NAME:

MicroStation v8.11.9.832

COUNTY OF	ITEM NO.	SHEET NO.
KENTON	6-162.00	R21

REVISION DATE: AUGUST 5, 2019

RIGHT OF WAY PLANS

KY 536
PLAN SHEET
STA. 230+00 TO STA. 245+00

SCALE: 1"=50'

BEGIN CONSTRUCTION
STA. 8+62.72

END CONSTRUCTION
STA. 11+36.76

END CONSTRUCTION
STA. 14+19.31

KY 536 STA. A 233+72.23 =
BANKLICK RD STA. 10+00.00

KY 536 STA. B 241+66.58 =
OLD BRISTOW RD
BRISTOW LAKES DR
STA. 10+00.00

OLD BRISTOW ROAD
PI STA = 8+70.07
Δ = 27°41'50.67" RT
D = 24°54'40.35"
T = 56.70'
L = 111.18'
R = 230.00'
E = 6.89'

OLD BRISTOW ROAD
ENTR. LT.
STA 8+97.86

KY 536 ENTR. LT.
STA B 244+90.00
PI STA = 0+69.09
Δ = 16°08'49.05" RT
D = 57°17'44.81"
T = 14.18'
L = 28.18'
R = 100.00'
E = 1.00'

PI STA = 0+48.42
Δ = 21°32'23.06" LT
D = 57°17'44.81"
T = 19.02'
L = 37.59'
R = 100.00'
E = 1.79'

BANKLICK ROAD
PI STA = 12+95.46
Δ = 45°24'53.35" RT
D = 19°05'54.94"
T = 125.54'
L = 237.79'
R = 300.00'
E = 25.21'
e = 6.00%
RUNOFF = 72'
RUNOUT = 24'

PI A 238+25.73

PC A 231+81.37

PC 11+69.92

PT 9+24.55

PC 8+13.37

MATCHLINE STA. 230+00

MATCHLINE STA. 245+00

TIMOTHY FERGUSON
LORIE FERGUSON (wf)

HANNAH MOORE

GREGORY A. MARSHALL

CLAUDE D. ELY JR.
JEAN K. ELY (wf)

MARK CHESTER
JOAN CHESTER (wf)

THOMAS ROSENACKER
BARBARA ROSENACKER (wf)

JAMES B. BOSSE

WILLIAM J. WISSMAN

ELLA ST AMBAUGH

NICOLE CONNETT

SHARON OLIVER

EDWARD LUEBBE

FIRST SECURITY TRUST BANK, INC.

SHAWN FOSTER
AMANDA L. FOSTER (wf)

RANDALL B. &
WILMA L. HAGGARD

BRISTOW ROAD
KY 536

EONAKA
EONAKA

PROPOSED R/W & C/A

EXISTING R/W

TEMP. ESMT. FOR RDWY. CONST.

TEMP. ESMT. FOR DRAINAGE CONST.

PERM. ESMT. FOR DRAINAGE

TEMPORARY ESMT.

S21°34'20"E

S8°14'20"E

N82°35'40"W

S51°59'26"W

FILE NAME: V:\1785\ACTIVE\17856100\ROADWAY\PLAN SHEETS\ROW PLANS\KY536_PL_23000.DGN
USER: ghsharp
DATE PLOTTED: August 5, 2019
E-SHEET NAME:
MicroStation v8.11.9.832

COUNTY OF	ITEM NO.	SHEET NO.
KENTON	6-162.00	R22

DATUM

880 875 870 865 860 855 850 845 840 835 830 825 820 815 810 805 800 795 790

MATCHLINE STA. A 230+00

PVT A 230+48.11
Elev 817.49

PVC A 230+69.52
Elev 817.28

LO A 231+52.86
Elev 816.86

VPI A 231+94.52
Elev 816.33

L 250.00 FT
SD 460.00 FT
K83.33

PVT A 233+19.52
Elev 818.53

PVC A 234+14.07
Elev 820.42

2.00%

VPI A 235+64.07
Elev 823.42

L 300.00 FT
SD 414.29 FT
K85.71

PVT A 237+14.07
Elev 831.67

5.50%

PVC B 241+50.40
Elev 854.60

MATCHLINE STA. B 245+00

| | | |

COUNTY OF	ITEM NO.	SHEET NO.
KENTON	6-162.00	R22A

REVISION DATE: AUGUST 5, 2019

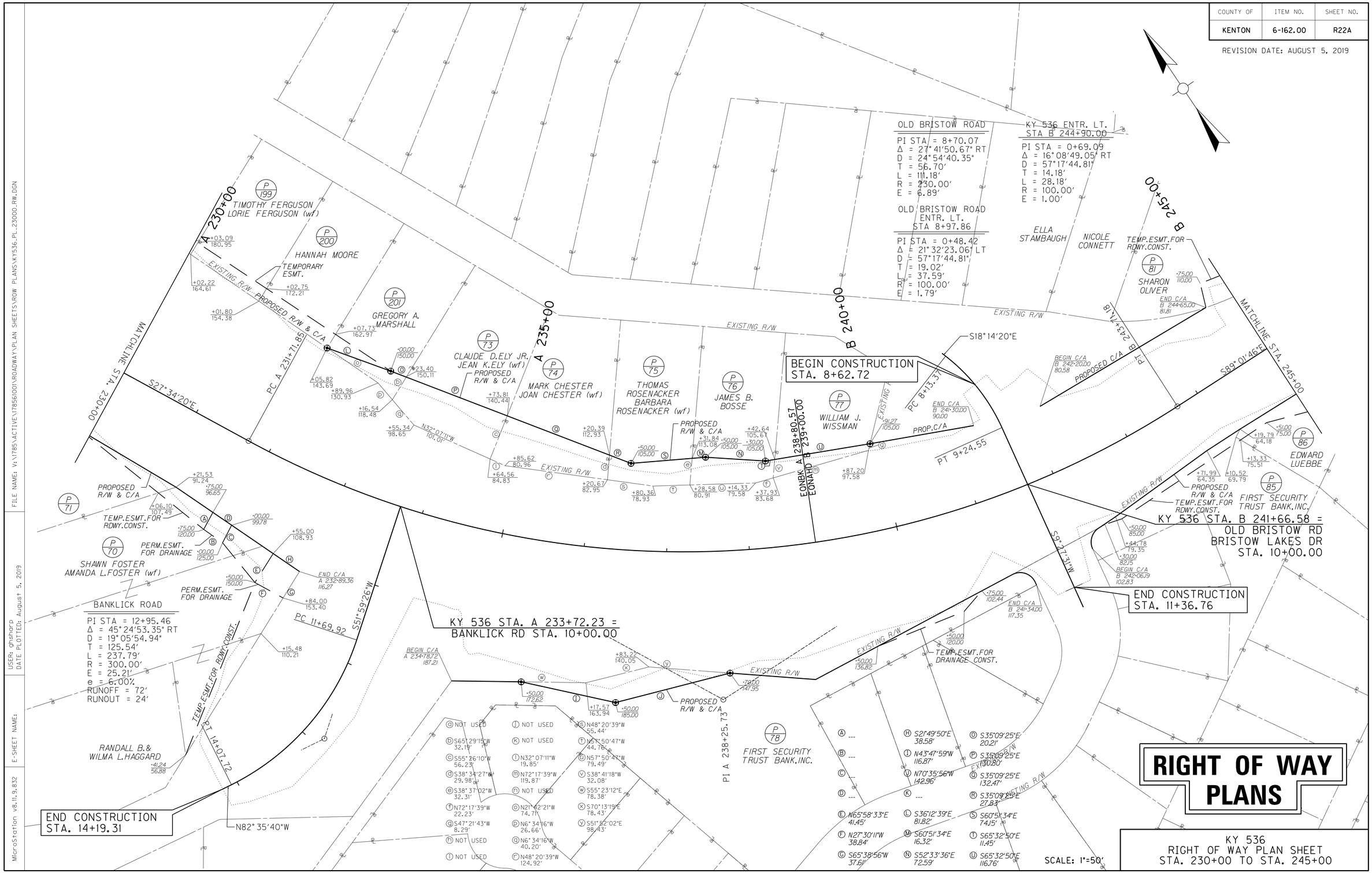

RIGHT OF WAY PLANS

KY 536
RIGHT OF WAY PLAN SHEET
STA. 230+00 TO STA. 245+00

FILE NAME: V:\1785\ACTIVE\17856100\ROADWAY\PLAN SHEETS\ROW PLANS\KY536_PL_23000_RW.DGN
USER: ghsharp
DATE PLOTTED: August 5, 2019
E-SHEET NAME:
MicroStation v8.11.9.832

COUNTY OF	ITEM NO.	SHEET NO.
KENTON	6-162.00	R23

REVISION DATE: AUGUST 5, 2019

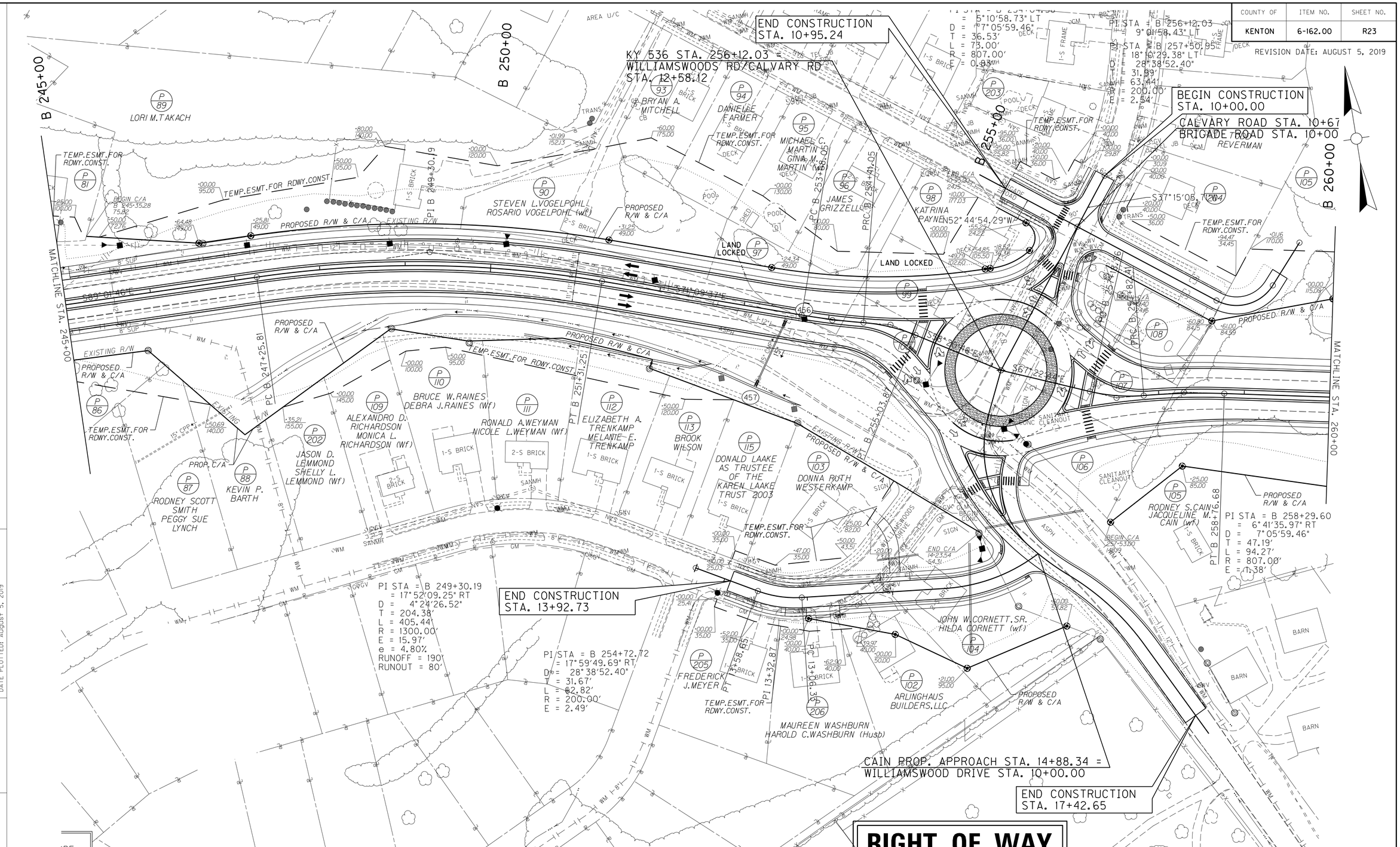

RIGHT OF WAY PLANS

SCALE: 1"=50'

KY 536
PLAN SHEET
STA. 245+00 TO STA. 260+00

FILE NAME: V:\1785\ACTIVE\17856100\ROADWAY\PLAN SHEETS\ROW PLANS\KY536_PL_24500.DGN

USER: ghsharp
DATE PLOTTED: August 5, 2019

E-SHEET NAME:

MicroStation v8.11.9.832

COUNTY OF	ITEM NO.	SHEET NO.
KENTON	6-162.00	R24

DATUM

930 925 920 915 910 905 900 895 890 885 880 875 870 865 860 855 850 845 840

L 950.00 FT
SD 715.96 FT
K237.50

PVT B 251+00.40
Elev 887.85

VPI B 246+25.40
Elev 880.72

1.50%

MATCHLINE STA. B 245+00

MATCHLINE STA. B 260+00

| | | |

COUNTY OF	ITEM NO.	SHEET NO.
KENTON	6-162.00	R24A

REVISION DATE: AUGUST 5, 2019

B 245+00

B 250+00

B 255+00

B 260+00

MATCHLINE STA. 245+00

MATCHLINE STA. 260+00

KY 536 STA. 256+12.03 = WILLIAMSWOODS RD/CALVARY RD STA. 12+58.12

END CONSTRUCTION STA. 10+95.24

PI STA = B 254+04.58
= 5°10'58.73" LT
D = 7°05'59.46"
T = 36.53'
L = 73.00'
R = 807.00'
E = 0.83'

PI STA = B 256+12.03
= 9°01'58.43" LT
D = 28°38'52.40"
T = 31.99'
L = 63.44'
R = 200.00'
E = 2.54'

BEGIN CONSTRUCTION STA. 10+00.00

CALVARY ROAD STA. 10+67

BRIGADE ROAD STA. 10+00

REVERMAN

LORI M.TAKACH (P 89)

BRYAN A. MITCHELL (P 93)

DANIELLE FARMER (P 94)

MICHAEL C. MARTIN
GINA M. MARTIN (wf) (P 95)

JAMES GRIZZELL (P 96)

KATRINA PAYNE (P 98)

LAND LOCKED (P 97)

STEVEN L.VOGELPOHL
ROSARIO VOGELPOHL (wf) (P 90)

TEMP.ESMT.FOR RDWY.CONST. (P 81)

TEMP.ESMT.FOR RDWY.CONST. (P 203)

TEMP.ESMT.FOR RDWY.CONST. (P 204)

TEMP.ESMT.FOR RDWY.CONST. (P 105)

BEGIN C/A B 245+35.28
75.82

END C/A
42+95.00
24.15
10.00
177.03

BEGIN C/A
B 257+53.00
148.9

END C/A
14+23.54
54.31

N18°52'04"E, 163.55'

N52°44'54.29"W

S37°15'05.71"W

S89°01'46"E

S71°09'37"E

S58°20'46"E

S67°22'44"E

S37°10'15"W, 96.16'

PROPOSED R/W & C/A

EXISTING R/W

PROPOSED R/W & C/A © EXISTING R/W

TEMP.ESMT.FOR RDWY.CONST.

PROPOSED R/W & C/A

PROPOSED R/W & C/A

PROPOSED R/W & C/A

PROPOSED R/W & C/A

PROPOSED R/W & C/A

PROPOSED R/W & C/A

PROPOSED R/W & C/A

PROPOSED R/W & C/A

EXISTING R/W

EXISTING R/W

PROP. C/A

PC B 247+25.81

PT B 251+31.25

PC B 253+48.05

PRC B 254+41.05

PRC B 255+41.96

PC B 255+03.87

PC B 257+48.96

PC B 258+76.68

PI B 249+30.19

PI STA = B 249+30.19
= 17°52'09.25" RT
D = 4°24'26.52"
T = 204.38'
L = 405.44'
R = 1300.00'
E = 15.97'
e = 4.80%
RUNOFF = 190'
RUNOUT = 80'

END CONSTRUCTION STA. 13+92.73

PI STA = B 254+72.72
= 17°59'49.69" RT
D = 28°38'52.40"
T = 31.67'
L = 62.82'
R = 200.00'
E = 2.49'

PI STA = B 258+29.6
= 6°41'35.97" RT
D = 7°05'59.46"
T = 47.19'
L = 94.27'
R = 807.00'
E = 1.38'

JASON D. LEMMOND
SHELLY L. LEMMOND (wf) (P 202)

BRUCE W.RAINES
DEBRA J.RAINES (wf) (P 110)

ALEXANDRO D. RICHARDSON
MONICA L. RICHARDSON (wf) (P 109)

RONALD A.WEYMAN
NICOLE L.WEYMAN (wf) (P 111)

ELIZABETH A. TRENKAMP
MELANIE E. TRENKAMP (P 112)

BROOK WILSON (P 113)

DONALD LAAKE AS TRUSTEE OF THE KAREN LAAKE TRUST 2003 (P 115)

DONNA RUTH WESTERKAMP (P 103)

RODNEY SCOTT SMITH
PEGGY SUE LYNCH (P 87)

KEVIN P. BARTH (P 88)

FREDERICK J.MEYER (P 205)

MAUREEN WASHBURN
HAROLD C.WASHBURN (Husb) (P 206)

ARLINGHAUS BUILDERS,LLC (P 102)

JOHN W.CORNETT,SR.
HILDA CORNETT (wf) (P 104)

RODNEY S.CAIN
JACQUELINE M.CAIN (wf) (P 105)

P 86 P 99 P 100 P 107 P 108 P 106

CAIN PROP. APPROACH STA. 14+88.34 = WILLIAMSWOOD DRIVE STA. 10+00.00

END CONSTRUCTION STA. 17+42.65

ⓐ N77°18'09"W 4.58'	Ⓚ ARC = 32.18', R = 150.00' CHORD = N86°43'21"E, 32.12'	Ⓤ S9°24'55"E 14.32'
Ⓑ ARC = 294.82', R = 1148.29' CHORD = N69°14'02"W, 294.01'	Ⓛ ARC = 63.88', R = 150.00' CHORD = N68°22'36"E, 63.40'	Ⓥ ARC = 18.24', R = 12.50' CHORD = N88°10'08"E, 16.66'
Ⓒ N89°20'57"W 52.50'	Ⓜ ARC = 107.97', R = 1148.29' CHORD = N50°58'26"W, 107.93'	Ⓦ ARC = 25.68', R = 150.00' CHORD = N51°16'19"E, 25.64'
Ⓓ ARC = 250.14', R = 1148.29' CHORD = N82°49'47"W, 249.65'	Ⓝ ARC = 31.65', R = 20.15' CHORD = S7°38'15"E, 28.49'	Ⓧ ARC = 80.90', R = 49.04' CHORD = S84°40'28"W, 72.03'
Ⓔ S17°20'53"W 5.32'	Ⓞ ARC = 57.74', R = 47.80' CHORD = N5°04'22"W, 54.29'	Ⓨ S52°49'45"E 160.00'
Ⓕ S28°01'29"W 26.75'	Ⓟ S37°12'08"W 64.79'	Ⓩ S52°49'45"E 160.00'
Ⓖ ARC = 164.56', R = 1148.29' CHORD = N57°46'23"W, 164.42'	Ⓠ S17°21'38"E 98.16'	ⓐⓐ ARC = 5.99', R = 1162.14' CHORD = N34°12'06"W, 5.99'
Ⓗ S37°25'49"W 54.29'	Ⓡ S77°12'08"W 80.00'	ⓑⓑ ARC = 31.42', R = 20.00' CHORD = N82°10'15"E, 28.28'
Ⓘ S37°25'49"W 22.21'	Ⓢ ARC = 128.11', R = 1162.14' CHORD = N37°30'27"W, 128.05'	ⓒⓒ S52°38'47"E 5.88'
Ⓙ S52°49'45"E 63.45'	Ⓣ S52°49'45"E 160.75'	ⓓⓓ N37°10'15"E 80.00'

Ⓐ ARC = 112.09', R = 780.00' CHORD = S75°16'38"E, 112.00'	Ⓗ ARC = 113.21', R = 780.00' CHORD = S83°33'07"E, 113.11'	Ⓞ N72°44'42"W 220.78'	
Ⓑ S89°01'46"E 61.33'	Ⓘ ARC = 25.56', R = 780.00' CHORD = S88°38'56"E, 25.56'	Ⓟ N76°20'50"W 36.54'	
Ⓒ ARC = 246.71', R = 1349.00' CHORD = S83°47'24"E, 246.37'	Ⓙ ARC = 5.83', R = 120.00' CHORD = S88°11'46"E, 5.83'	Ⓠ N55°33'18"W 76.34'	
Ⓓ ARC = 174.01', R = 1349.00' CHORD = S74°51'20"E, 173.89'	Ⓚ ARC = 51.52', R = 80.00' CHORD = N74°44'44"E, 50.64'	Ⓡ N55°33'18"W 16.73'	
Ⓔ S71°09'37"E 124.73'	Ⓛ ARC = 38.03', R = 20.00' CHORD = N14°49'28"E, 32.55'	Ⓢ S76°14'22"W 126.64'	
Ⓕ S71°09'37"E 68.36'	Ⓜ N88°52'23"E 143.93'		
Ⓖ N70°20'50"W 66.54'	Ⓝ S61°11'23"W 106.55'		

RIGHT OF WAY PLANS

SCALE: 1"=50'

KY 536
RIGHT OF WAY PLAN SHEET
STA. 245+00 TO STA. 260+00

FILE NAME: V:\1785\ACTIVE\17856100\ROADWAY\PLAN SHEETS\ROW PLANS\KY536_PL_24500_RW.DGN
USER: ghsharp
DATE PLOTTED: August 5, 2019
E-SHEET NAME:
MicroStation v8.11.9.832

COUNTY OF	ITEM NO.	SHEET NO.
KENTON	6-162.00	R26

L 800.00 FT
SD 517.77 FT
K124.21

VPI B 264+65.36
Elev 908.32

PVC B 260+65.36
Elev 902.32

1.50%

HI B 262+51.68
Elev 903.72

PVT B 268+65.36
Elev 888.56

-4.94%

MATCHLINE STA. B 260+00

MATCHLINE STA. B 275+00

DATUM

920 915 910 905 900 895 890 885 880 875 870 865 860 855 850 845 840 835 830

B 260+00	260+50	261+00	261+50	262+00	262+50	263+00	263+50	264+00	264+50	265+00	265+50	266+00	266+50	267+00	267+50	268+00	268+50	269+00	269+50	270+00	270+50	271+00	271+50	272+00	272+50
902.4	904.1	906.6	908.4	910.0	910.4	910.4	908.9	906.5	905.2	903.8	901.1	894.3	888.4	890.8	892.1	894.6	894.0	888.9	885.7	888.3	888.8	885.7	881.0	873.5	868.6
901.34	902.09	902.79	903.30	903.61	903.72	903.63	903.33	902.83	902.14	901.24	900.14	898.84	897.33	895.63	893.72	891.62	889.31	886.85	884.38	881.91	879.44	876.97	874.50	872.03	869.56

B 273+00	273+50	274+00	274+50	275+00
866.3	868.6	869.2	869.3	868.6
867.09	864.62	862.15	859.68	857.21

RIGHT OF WAY PLANS

SCALE: 1" = 50' HORIZONTAL
1" = 5' VERTICAL

KY 536
PROFILE SHEET
STA. B 260+00 TO STA. B 275+00

MicroStation v8.11.7.443
E-SHEET NAME:
USER: cdawahare
DATE PLOTTED: March 21, 2017
FILE NAME: V:\1785\ACTIVE\178560\ROADWAY\PLAN SHEETS\ROW PLANS\KY536_PR_26000.DGN

COUNTY OF	ITEM NO.	SHEET NO.
KENTON	6-162.00	R28

DATUM

880 875 870 865 860 855 850 845 840 835 830 825 820 815 810 805 800 795 790

MATCHLINE STA. B 275+00

-4.94%

PVC B 276+92.34
Elev. 847.70

VPI B 278+92.34
Elev. 837.82

PVT B 280+92.34
Elev. 836.82

L 400.00 FT
SD 404.42 FT
K90.08

-0.50%

MATCHLINE STA. B 290+00

B 275+00	275+50	276+00	276+50	277+00	277+50	278+00	278+50	279+00	279+50	280+00	280+50	281+00	281+50	282+00	282+50	283+00	283+50	284+00	284+50	285+00	285+50	286+00	286+50	287+00	287+50
868.6	862.2	857.4	852.5	847.0	841.0	835.3	829.7	824.7	823.1	829.4	835.1	841.7	848.0	853.3	858.0	860.7	861.8	861.5	857.4	852.2	847.8	840.6	837.8	834.7	831.1
857.21	854.74	852.27	849.79	847.33	845.04	843.03	841.29	839.84	838.66	837.76	837.13	836.78	836.53	836.28	836.03	835.78	835.53	835.28	835.03	834.78	834.53	834.28	834.03	833.78	833.53

826.0	825.0	822.9	822.0	820.6
833.28	833.03	832.78	832.53	832.28

B 288+00 288+50 289+00 289+50 290+00

RIGHT OF WAY PLANS

SCALE: 1" = 50' HORIZONTAL
1" = 5' VERTICAL

KY 536
PROFILE SHEET
STA. B 275+00 TO STA. B 290+00

MicroStation v8.11.7.443
E-SHEET NAME:
USER: cdawahare
DATE PLOTTED: March 21, 2017
FILE NAME: V:\1785\ACTIVE\178560\ROADWAY\PLAN SHEETS\ROW PLANS\KY536_PR_27500.DGN

COUNTY OF	ITEM NO.	SHEET NO.
KENTON	6-162.00	R30

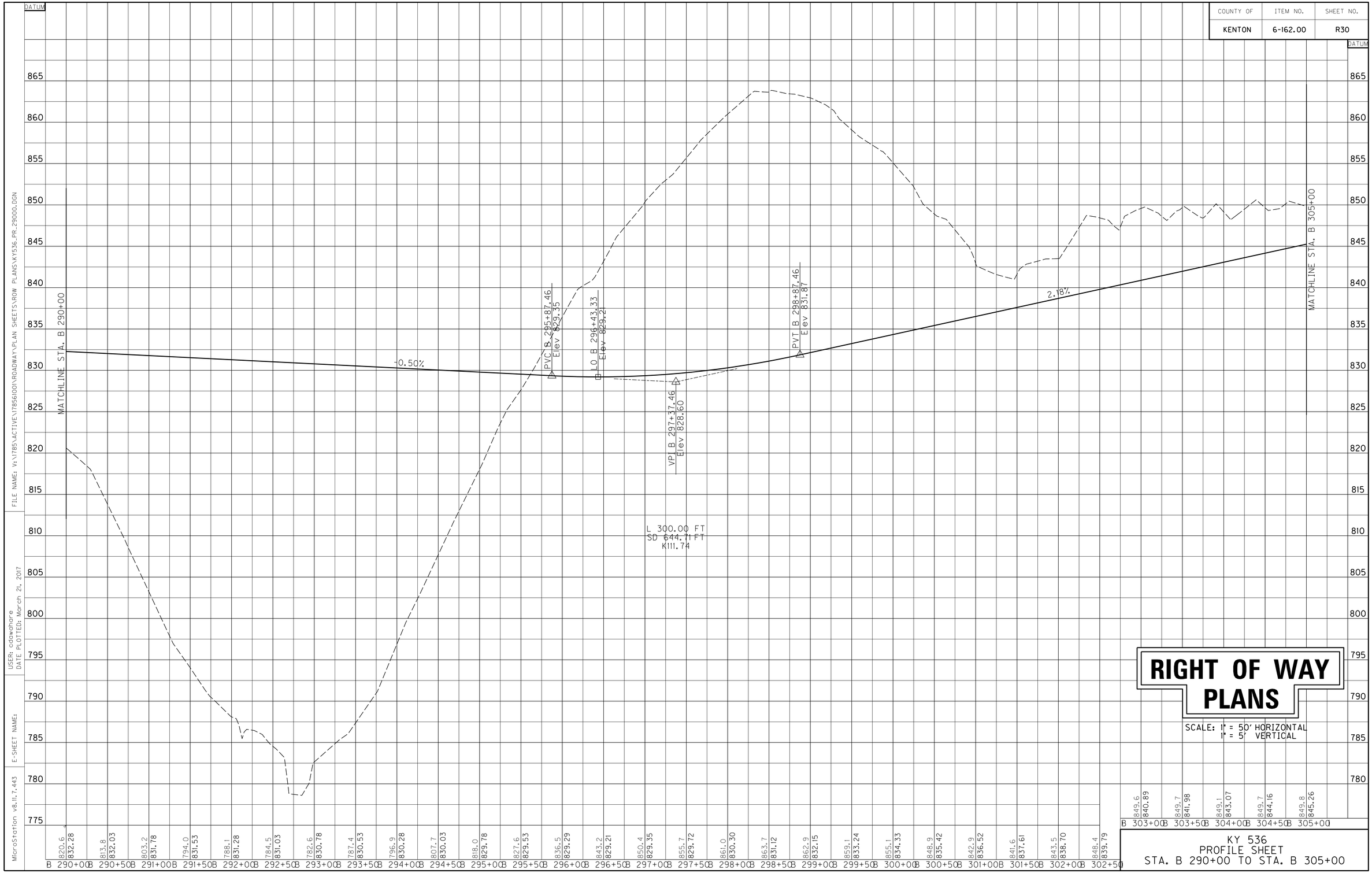

RIGHT OF WAY PLANS

SCALE: 1" = 50' HORIZONTAL
1" = 5' VERTICAL

KY 536
PROFILE SHEET
STA. B 290+00 TO STA. B 305+00

FILE NAME: V:\1785\ACTIVE\178561001\ROADWAY\PLAN SHEETS\ROW PLANS\KY536_PR_29000.DGN
USER: cdawahare
DATE PLOTTED: March 21, 2017
E-SHEET NAME:
MicroStation v8.11.7.443

COUNTY OF	ITEM NO.	SHEET NO.
KENTON	6-162.00	R32

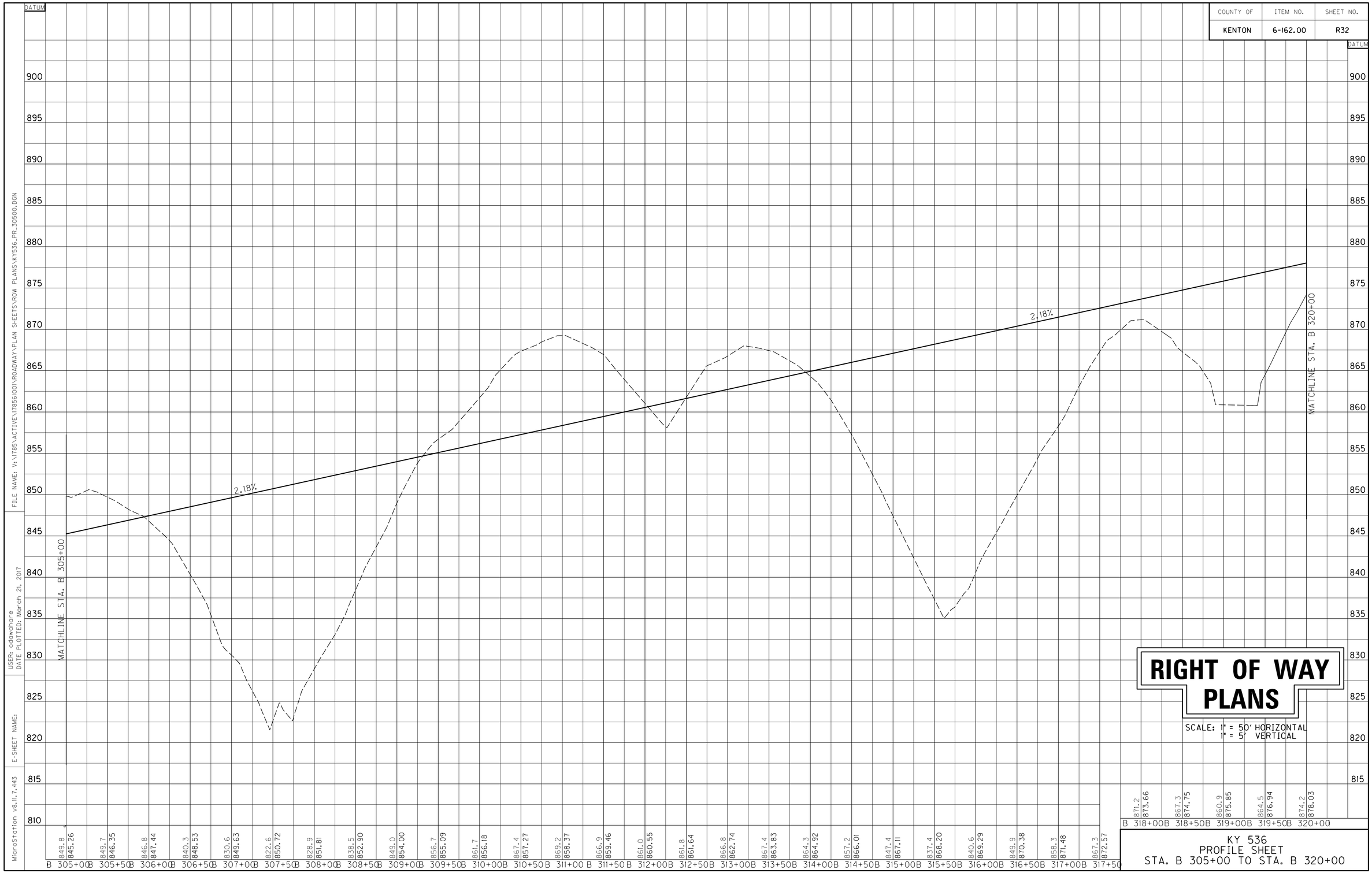

RIGHT OF WAY PLANS

SCALE: 1" = 50' HORIZONTAL
1" = 5' VERTICAL

KY 536
PROFILE SHEET
STA. B 305+00 TO STA. B 320+00

MicroStation v8.11.7.443
E-SHEET NAME:
USER: cdawahare
DATE PLOTTED: March 21, 2017
FILE NAME: V:\1785\ACTIVE\178560\ROADWAY\PLAN SHEETS\ROW PLANS\KY536_PR_30500.DGN

COUNTY OF	ITEM NO.	SHEET NO.
KENTON	6-162.00	R34

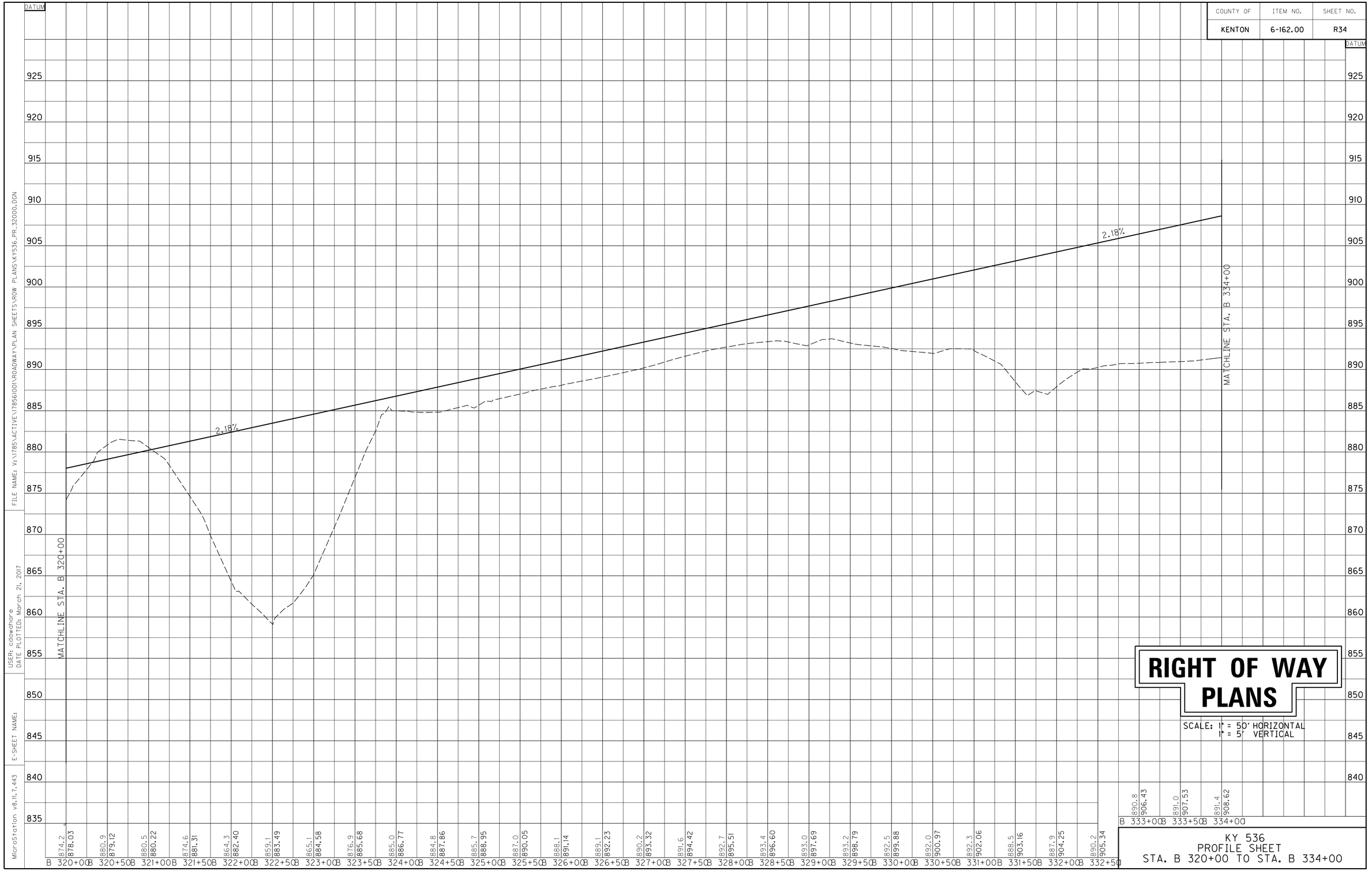

RIGHT OF WAY PLANS

SCALE: 1" = 50' HORIZONTAL
1" = 5' VERTICAL

KY 536
PROFILE SHEET
STA. B 320+00 TO STA. B 334+00

MicroStation v8.11.7.443
E-SHEET NAME:
USER: cdawahare
DATE PLOTTED: March 21, 2017
FILE NAME: V:\1785\ACTIVE\17856100\ROADWAY\PLAN SHEETS\ROW PLANS\KY536_PR_32000.DGN

COUNTY OF	ITEM NO.	SHEET NO.
KENTON	6-162.00	R36

DATUM

960 955 950 945 940 935 930 925 920 915 910 905 900 895 890 885 880 875 870

2.18%

PVC B 345+03.74
Elev 932.73

HI B 347+02.82
Elev 934.91

MATCHLINE STA. B 334+00

MATCHLINE STA. B 348+00

	B 334+00	B 334+50	B 335+00	B 335+50	B 336+00	B 336+50	B 337+00	B 337+50	B 338+00	B 338+50	B 339+00	B 339+50	B 340+00	B 340+50	B 341+00	B 341+50	B 342+00	B 342+50	B 343+00	B 343+50	B 344+00	B 344+50	B 345+00	B 345+50	B 346+00	B 346+50
	891.4	896.8	904.7	908.9	903.9	906.4	909.8	915.0	916.4	918.0	919.2	920.2	922.8	925.2	926.5	926.5	927.3	927.7	929.8	930.4	932.2	933.9	935.8	937.1	937.2	938.0
	908.62	909.71	910.80	911.90	912.99	914.08	915.17	916.27	917.36	918.45	919.54	920.64	921.73	922.82	923.91	925.01	926.10	927.19	928.28	929.38	930.47	931.56	932.65	933.63	934.33	934.76

B 347+00	B 347+50	B 348+00
937.7	937.1	934.3
934.91	934.79	934.39

RIGHT OF WAY PLANS

SCALE: 1" = 50' HORIZONTAL
1" = 5' VERTICAL

KY 536
PROFILE SHEET
STA. B 334+00 TO STA. B 348+00

FILE NAME: V:\1785\ACTIVE\178561001\ROADWAY\PLAN SHEETS\ROW PLANS\KY536_PR_33400.DGN
USER: cdawahare
DATE PLOTTED: March 21, 2017
E-SHEET NAME:
MicroStation v8.11.7.443

COUNTY OF	ITEM NO.	SHEET NO.
KENTON	6-162.00	R38

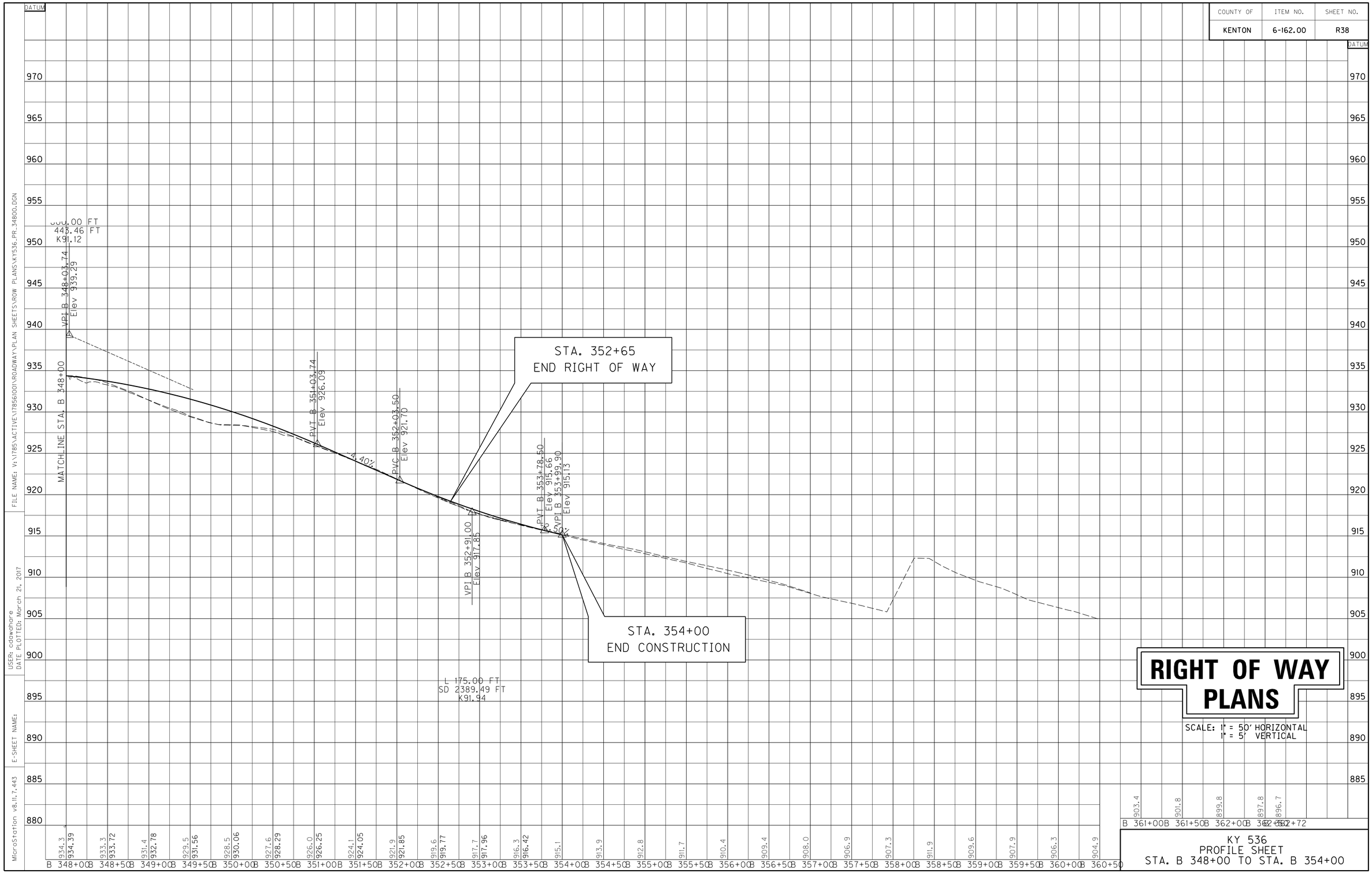

RIGHT OF WAY PLANS

SCALE: 1" = 50' HORIZONTAL
1" = 5' VERTICAL

KY 536
PROFILE SHEET
STA. B 348+00 TO STA. B 354+00

FILE NAME: V:\1785\ACTIVE\178561001\ROADWAY\PLAN SHEETS\ROW PLANS\KY536_PR_34800.DGN
USER: cdawahare
DATE PLOTTED: March 21, 2017
E-SHEET NAME:
MicroStation v8.11.7.443

COUNTY OF	ITEM NO.	SHEET NO.
KENTON	6-162.00	R40

DATUM

940 935 930 925 920 915 910 905 900 895 890 885 880 875 870 865 860 855 850

SPLINE GRADE TO MATCH EXISTING CURB AND GUTTER LT.

STA. 46+00
BEGIN RIGHT OF WAY

BEGIN CONSTRUCTION
STA. 46+65.64

+50.00

VPI 52+00.00
Elev 900.08

0.92%

PVC 53+45.00
Elev 901.41

VPI 55+35.00
Elev 903.15

L 380 FT
SD 377 FT

MATCHLINE STA. 57+00

| | | |

COUNTY OF	ITEM NO.	SHEET NO.
KENTON	6-162.00	R39

REVISION DATE: APRIL 20, 2021

KY 1303 - BRISTOW RD.

P.I. STA. 57+19.81
Δ = 10°24'55.88"RT
D = 4°05'33.20"
T = 127.60'
L = 254.50'
R = 1400.00'
E = 5.80'
e = 4.80%
RUNOFF = 180'
RUNOUT = 80'

WEDGEWOOD DRIVE

45+00

50+00

55+00

TRACE OF FENCE

BEGIN CONSTRUCTION
STA. 46+65.64

BEGIN RIGHT OF WAY
STA. 46+00.00

EXISTING R/W

PROPOSED R/W

TEMP.ESMT. FOR RDWY. CONST.

TEMP.ESMT. FOR DRAINAGE

BRISTOW ROAD

EX. ASPH

KY 1303 S22°01'35"E

MATCHLINE STA. 57+00

P 154 BRADLEY J.GAMM

P 156 MELANIE McKINNEY (wf) DAVID McKINNEY

P 157 TIMOTHY EDWARD SCHRECK

P 158 GEORGE HOWARD CARNEY ESTELLE CARNEY (wf)

P 149 MURRAY GUTTMAN A.J.RANDMAN

KENTON COUNTY BOARD OF EDUCATION FINANCE CORP

BASEBALL FIELD

BENCH

PLAYGROUND

PC 55+92.21

RIGHT OF WAY PLANS

KY 1303
PLAN SHEET
STA. 46+65.64 TO STA. 57+00

0' 50' 100' 200' SCALE: 1"=50'

FILE NAME: V:\1785\ACTIVE\17856100\ROADWAY\PLAN SHEETS\ROW PLANS\KY1303_PL_4666.DGN
USER: gnsharp
DATE PLOTTED: April 20, 2021
E-SHEET NAME:
MicroStation v8.11.9.832

COUNTY OF	ITEM NO.	SHEET NO.
KENTON	6-162.00	R40A

REVISION DATE: APRIL 20, 2021

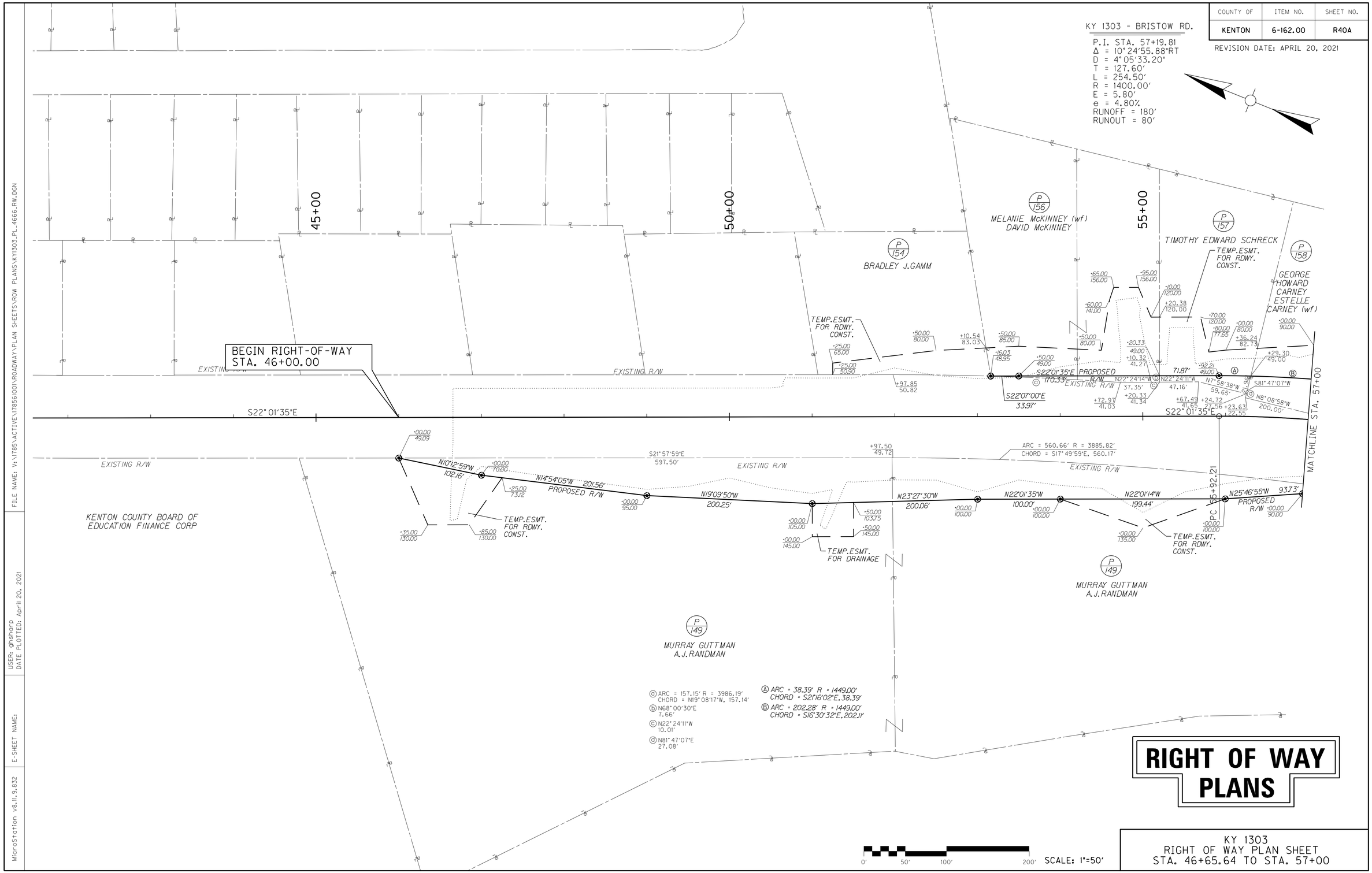

RIGHT OF WAY PLANS

KY 1303
RIGHT OF WAY PLAN SHEET
STA. 46+65.64 TO STA. 57+00

FILE NAME: V:\1785\ACTIVE\178561001\ROADWAY\PLAN SHEETS\ROW PLANS\KY1303_PL_4666_RW.DGN

USER: ghsharp
DATE PLOTTED: April 20, 2021

E-SHEET NAME:

MicroStation v8.11.9.832

COUNTY OF	ITEM NO.	SHEET NO.
KENTON	6-162.00	R41

REVISION DATE: MAY 7, 2021

KY 1303 - BRISTOW RD.
P.I. STA. 57+19.81
Δ = 10°24'55.88"RT
D = 4°05'33.20"
T = 127.60'
L = 254.50'
R = 1400.00'
E = 5.80'
e = 4.80%
RUNOFF = 180'
RUNOUT = 80'

KY 1303 - BRISTOW RD.
P.I. STA. 63+15.86
Δ = 20°38'42.98"LT
D = 5°43'46.48"
T = 182.14'
L = 360.33'
R = 1000.00'
E = 16.45'
e = 5.40%
RUNOFF = 210'
RUNOUT = 80'

KY 1303 - BRISTOW RD.
P.I. STA. 70+42.82
Δ = 31°42'11.16"RT
D = 5°43'46.48"
T = 283.84'
L = 553.32'
R = 1000.00'
E = 39.53'
e = 5.40%
RUNOFF = 210'
RUNOUT = 80'

KY 1303 - APPR LT 68+70
P.I. STA. 1+02.41
Δ = 19°48'47.37"LT
D = 57°17'44.81"
T = 17.46'
L = 34.58'
R = 100.00'
E = 1.51'

KY 1303 - APPR LT 68+70
P.I. STA. 1+98.59
Δ = 55°04'52.83"RT
D = 114°35'29.61"
T = 26.07'
L = 48.07'
R = 50.00'
E = 6.39'

APPR LT 68+70 - ENTR RT
P.I. STA. 0+65.98
Δ = 7°01'30.06"RT
D = 19°05'54.94"
T = 18.41'
L = 36.78'
R = 300.00'
E = 0.56'

APPR LT 68+70 - ENTR RT
P.I. STA. 2+13.01
Δ = 64°21'01.90"LT
D = 143°14'22.02"
T = 25.17'
L = 44.93'
R = 40.00'
E = 7.26'

KY 1303 STA. 58+01.38 = BEECHGROVE DRIVE STA. 10+00.00

KY 1303 STA. 68+70.00 = KY 1303-APPR LT STA. 0+00.00

MATCHLINE STA. 57+00

MATCHLINE STA. 72+00

END CONSTRUCTION STA. 11+03.30

END APPROACH STA. 0+89.91

P 158 GEORGE HOWARD CARNEY ESTELLE CARNEY (wf)

P 163 TERRENCE KOENIG SHAHRZAD ANSARI-KOENIG (wf)

P 164 MICHAEL A.PHILLIPS DEBORAH S. PHILLIPS (wf)

P 165 SCOTT GLASS KELLY GLASS (wf)

P 169 DAVID JACKSON FRANCES JACKSON (wf)

P 173 LAWRENCE GLASS JOAN GLASS

P 174 WALTER HAMLIN GENEVA H.HAMLIN REVOCABLE TRUST WALTER HAMLIN AND GENEVA H.HAMLIM (TRUSTEES)

P 176 ALBERT A BORNE DONALD C.BORNE (husb)

P 178 R.EHMET HAYES

P 149 MURRAY GUTTMAN A.J.RANDMAN

P 160 ALEX RAGUS OLIVIA R.RAGUS (wf)

P 175 AZA CONSTRUCTION, INC.

P 162 965 STILLMEADOW, LLC

P 159 961 STILLMEADOW, LLC

P 160 SATYADEV MUSTI

949 STILLMEADOW LLC

DAVID KEMP

P 166 1740 MARQUETTE PROPERTIES, LLC

P 167 957 STILLMEADOW, LLC

P 168 STEPHEN J. CRILE

P 170 BEECHGROVE HOMEOWNERS ASSOCIATION, INC.

P 175 P 177 MICHAEL BROOKS

PROPOSED R/W

EXISTING R/W

TEMP.ESMT. FOR RDWY. CONST.

PERM.ESMT. FOR DRAINAGE

TEMP.ESMT. FOR BLDG. REMOVAL

PERM.DRAIN. ESMT.

TIMBER LANE DRIVE

WOODDALE DRIVE

BEECHGROVE DRIVE

0' 50' 100' 200' SCALE: 1"=50'

RIGHT OF WAY PLANS

KY 1303
PLAN SHEET
STA. 57+00 TO STA. 72+00

MicroStation v8.11.9.832 | E-SHEET NAME: | USER: ghsharp DATE PLOTTED: May 7, 2021 | FILE NAME: V:\1785\ACTIVE\17856100\ROADWAY\PLAN SHEETS\ROW PLANS\KY1303_PL_5700.DGN

COUNTY OF	ITEM NO.	SHEET NO.
KENTON	6-162.00	R42A

REVISION DATE: MAY 7, 2021

KY 1303 - BRISTOW RD.
P.I. STA. 57+19.81
Δ = 10°24'55.88"RT
D = 4°05'33.20"
T = 127.60'
L = 254.50'
R = 1400.00'
E = 5.80'
e = 4.80%
RUNOFF = 180'
RUNOUT = 80'

KY 1303 - BRISTOW RD.
P.I. STA. 63+15.85
Δ = 20°38'42.98"LT
D = 5°43'46.48"
T = 182.14'
L = 360.33'
R = 1000.00'
E = 16.45'
e = 5.40%
RUNOFF = 210'
RUNOUT = 80'

KY 1303 - BRISTOW RD.
P.I. STA. 70+42.82
Δ = 31°42'11.16"RT
D = 5°43'46.48"
T = 283.94'
L = 553.32'
R = 1000.00'
E = 39.53'
e = 5.40%
RUNOFF = 210'
RUNOUT = 80'

KY 1303 - APPR LT 68+70
P.I. STA. 1+02.41
Δ = 19°48'47.37"LT
D = 57°17'44.81"
T = 17.46'
L = 34.58'
R = 100.00'
E = 1.51'

KY 1303 - APPR LT 68+70
P.I. STA. 1+98.59
Δ = 55°04'52.83"RT
D = 114°35'29.61"
T = 26.07'
L = 48.07'
R = 50.00'
E = 6.39'

APPR LT 68+70 - ENTR RT
P.I. STA. 0+65.98
Δ = 7°01'30.06"RT
D = 19°05'54.94"
T = 18.41'
L = 36.78'
R = 300.00'
E = 0.56'

APPR LT 68+70 - ENTR RT
P.I. STA. 2+13.01
Δ = 64°21'01.90"LT
D = 143°14'22.02"
T = 25.17'
L = 44.93'
R = 40.00'
E = 7.26'

KY 1303 STA. 58+01.38 = BEECHGROVE DRIVE STA. 10+00.00

KY 1303 STA. 68+70.00 = KY 1303-APPR LT STA. 0+00.00

END CONSTRUCTION STA. 11+03.30

END APPROACH STA. 0+89.91

P 158 GEORGE HOWARD CARNEY ESTELLE CARNEY (wf)

P 163 TERRENCE KOENIG SHAHRZAD ANSARI-KOENIG (wf)

P 164 MICHAEL A.PHILLIPS DEBORAH S. PHILLIPS (wf)

P 165 SCOTT GLASS KELLY GLASS (wf)

P 169 DAVID JACKSON FRANCES JACKSON (wf)

P 173 LAWRENCE GLASS JOAN GLASS

P 174 WALTER HAMLIN GENEVA H.HAMLIN REVOCABLE TRUST WALTER HAMLIN AND GENEVA H.HAMLIN (TRUSTEES)

P 176 ALBERT A BORNE DONALD C.BORNE (husb)

P 178 R.EHMET HAYES

P 175 AZA CONSTRUCTION, INC.

P 177 MICHAEL BROOKS

P 170 BEECHGROVE HOMEOWNERS ASSOCIATION, INC.

P 149 MURRAY GUTTMAN A.J.RANDMAN

P 160 ALEX RAGUS OLIVIA R.RAGUS (wf)

P 162 965 STILLMEADOW, LLC

P 159 961 STILLMEADOW, LLC

P 160 SATYADEV MUSTI

949 STILLMEADOW LLC

DAVID KEMP

P 166 1740 MARQUETTE PROPERTIES, LLC

P 167 937 STILLMEADOW, LLC

P 168 STEPHEN CRILE

TEMP.ESMT. FOR RDWY. CONST.

PERM.ESMT. FOR DRAINAGE

TEMP. ESMT. FOR RDWY. CONST.

TEMP.ESMT. FOR BLDG. REMOVAL

PERM.DRAIN. ESMT.

PROPOSED R/W

EXISTING R/W

MATCHLINE STA. 57+00

MATCHLINE STA. 72+00

PI 57+19.81

PT 58+46.71

PC 61+33.72

PI 63+15.86

PT 64+94.05

PI 70+42.82

ⓐ S81°42'03"W 24.72'
ⓑ S8°25'23"E 42.52'
ⓒ S54°11'21"W 29.45'
ⓓ S32°31'27"E 35.50'
ⓔ N68°31'22"E 27.19'
ⓕ S27°32'36"E 57.81'
ⓖ ARC = 31.14' R = 20.00' CHORD = S51°25'35"W, 28.09'
ⓗ N42°13'58"W 62.60'
ⓘ S42°13'58"E 20.90'
ⓙ S56°48'58"W 10.59'
ⓚ N56°48'58"E 29.73'
Ⓘ S57°28'29"W 43.59'
ⓜ ARC = 39.70' R = 305.00' CHORD = S35°53'44"E, 39.67'
ⓝ ARC = 560.66' R = 3885.82' CHORD = S17°49'59"E, 560.17'
ⓞ N81°44'56"E 10.00'

Ⓐ ARC = 22.73' R = 1449.00' CHORD = S12°03'37"E, 22.73'
Ⓑ N58°37'48"E 38.00'
Ⓒ S32°15'22"E 20.00'
Ⓓ S57°44'38"W 34.38'
Ⓔ S15°58'01"E 37.16'
Ⓕ S15°58'01"E 10.16'
Ⓖ S20°12'53"E 51.47'
Ⓗ N60°40'22"E 15.29'
Ⓘ S51°56'39"E 25.36'
Ⓙ S22°43'04"W 26.01'
Ⓚ ARC = 69.20' R = 1049.00' CHORD = S13°00'06"E, 69.19'
Ⓛ ARC = 193.32' R = 1049.00' CHORD = S5°49'57"E, 193.04'
Ⓜ N73°23'44"E 28.18'
Ⓝ N18°44'09"W 9.70'
Ⓞ N18°44'09"W 30.61'
Ⓟ S78°23'21"W 20.70'

RIGHT OF WAY PLANS

0 50' 100' 200'

SCALE: 1"=50'

KY 1303
RIGHT OF WAY PLAN SHEET
STA. 57+00 TO STA. 72+00

FILE NAME: V:\7856\ACTIVE\7856100\ROADWAY\PLAN SHEETS\ROW PLANS\KY1303_PL_5700_RW.DGN
USER: ghsharp
DATE PLOTTED: May 7, 2021
E-SHEET NAME:
MicroStation v8.11.9.832

COUNTY OF	ITEM NO.	SHEET NO.
KENTON	6-162.00	R43

REVISION DATE: APRIL 20, 2021

KY 1303 - BRISTOW RD.

P.I. STA. 70+42.82
Δ = 31°42'11.16"RT
D = 5°43'46.48"
T = 283.94'
L = 553.32'
R = 1000.00'
E = 39.53'
e = 5.40%
RUNOFF = 210'
RUNOUT = 80'

TIMBER LANE

P.I. STA. 12+03.32
Δ = 4°21'51.10"LT
D = 2°17'30.59"
T = 95.26'
L = 190.42'
R = 2500.00'
E = 1.81'

KY 1303 STA. 72+38.77 =
TIMBER LANE STA. 10+00.00

ENTR LT 80+00

P.I. STA. 0+59.00
Δ = 16°40'47.23"LT
D = 60°57'10.64"
T = 13.78'
L = 27.37'
R = 94.00'
E = 1.00'

ENTR LT 80+00

P.I. STA. 1+67.73
Δ = 12°03'45.70"LT
D = 28°38'52.40"
T = 21.13'
L = 42.11'
R = 200.00'
E = 1.11'

ENTR RT 76+20

P.I. STA. 0+96.24
Δ = 6°07'00.00"RT
D = 11°27'32.96"
T = 26.71'
L = 53.38'
R = 500.00'
E = 0.71'

ENTR RT 80+10

P.I. STA. 0+82.18
Δ = 9°42'14.90"RT
D = 28°38'52.40"
T = 16.98'
L = 33.87'
R = 200.00'
E = 0.72'

ENTR RT 80+93

P.I. STA. 0+87.17
Δ = 6°01'39.54"RT
D = 11°27'32.96"
T = 26.32'
L = 52.60'
R = 500.00'
E = 0.69'

ENTR RT 82+93

P.I. STA. 0+76.98
Δ = 4°31'18.15"LT
D = 11°27'32.96"
T = 19.74'
L = 39.46'
R = 500.00'
E = 0.39'

RIGHT OF WAY PLANS

KY 1303
PLAN SHEET
STA. 72+00 TO STA. 87+00

SCALE: 1"=50'

0' 50' 100' 200'

MATCHLINE STA. 72+00

MATCHLINE STA. 87+00

END CONSTRUCTION
STA. 11+36.74

PT 73+12.20

PC 11+08.06

75+00

80+00

85+00

P/178 R.EHMET HAYES

P/53 BRISTOW ROAD,LLC

P/179 DEBRA J.MARVIN
DWIGHT MARVIN (husb)

P/183 CRAIG S.JOBE
SUSAN E.JOBE (wf)

P/180 GWEN D.McCORMACK

P/184 KEVIN W.WHITAKER

P/185 RAYMOND C.MILLER
ANN W.MILLER (wf)

P/186 CHARLES DAVID BAKER

BRISTOW ROAD KY 1303

EXISTING R/W

PROPOSED R/W

TEMP. ESMT. FOR RDWY. CONST.

TEMP.ESMT.FOR RDWY.CONST.

PERM.ESMT. FOR DRAINAGE

TEMP.ESMT. FOR DRAINAGE

TEMP.ESMT. FOR ENTR. CONST.

PERM.ESMT. FOR DRAINAGE

PROP. R/W

CAUTION GAS LINE

S0°33'11"E 7118'

S0°33'11"E 1529.25'

3 F.B.

METAL BLDG.

SHED

BARN

2-S BRICK W/BASEMENT

1-S BRICK W/BASEMENT

SPLIT-LEVEL BRICK

A/G POOL

GARAGE

GATE

GRAV.

EX. ASPH.

B-TOP

EBOX

SAN MH

FILE NAME: V:\1785\ACTIVE\178561001\ROADWAY\PLAN SHEETS\ROW PLANS\KY1303_PL_7200.DGN
USER: ghsharp
DATE PLOTTED: April 20, 2021
E-SHEET NAME:
MicroStation v8.11.9.832

COUNTY OF	ITEM NO.	SHEET NO.
KENTON	6-162.00	R44A

REVISION DATE: APRIL 20, 2021

KY 1303 - BRISTOW RD.

P.I. STA. 70+42.82
Δ = 31°42'11.16"RT
D = 5°43'46.48"
T = 283.94'
L = 553.32'
R = 1000.00'
E = 39.53'
e = 5.40%
RUNOFF = 210'
RUNOUT = 80'

TIMBER LANE

P.I. STA. 12+03.32
Δ = 4°21'51.10"LT
D = 2°17'30.59"
T = 95.26'
L = 190.42'
R = 2500.00'
E = 1.81'

KY 1303 STA. 72+38.77 =
TIMBER LANE STA. 10+00.00

ENTR LT 80+00

P.I. STA. 0+59.00
Δ = 16°40'47.23"LT
D = 60°57'10.64"
T = 13.78'
L = 27.37'
R = 94.00'
E = 1.00'

ENTR LT 80+00

P.I. STA. 1+67.73
Δ = 12°03'45.70"LT
D = 28°38'52.40"
T = 21.13'
L = 42.11'
R = 200.00'
E = 1.11'

75+00 80+00 85+00

MATCHLINE STA. 72+00

MATCHLINE STA. 87+00

P 178 R.EHMET HAYES

P 53 BRISTOW ROAD,LLC

P 179 DEBRA J.MARVIN
DWIGHT MARVIN (husb)

P 180 GWEN D.McCORMACK

P 183 CRAIG S.JOBE
SUSAN E.JOBE (wf)

P 184 KEVIN W.WHITAKER

P 185 RAYMOND C.MILLER
ANN W.MILLER (wf)

P 186 CHARLES DAVID BAKER

P 186 CHARLES DAVID BAKER

PT 73+12.20

PC 11+08.06

END CONSTRUCTION
STA. 11+36.74

TEMP. ESMT. FOR RDWY. CONST.

PERM.ESMT. FOR DRAINAGE

PROPOSED R/W

EXISTING R/W

TEMP.ESMT. FOR RDWY. CONST.

TEMP.ESMT. FOR DRAINAGE

TEMP.ESMT. FOR ENTR. CONST.

PERM.ESMT. FOR DRAINAGE

TEMP.ESMT. FOR ENTR. CONST.

PERM.ESMT. FOR DRAINAGE

TEMP.ESMT. FOR ENTR. CONST.

PROP. R/W

EXISTING R/W

S0°33'11"E 711.18'

S0°33'11"E

S0°33'11"E 1529.25'

N7°10'11"E 237.47'

N83°08'15"W

ARC = 425.75'
R = 3023.40'
CHORD = N3°08'08"E, 425.40'

NO°53'55"W 275.51'

S0°53'55"E 116.13'

ARC = 145.03'
R = 1160.23'
CHORD = N4°28'46"W, 144.93'

N8°03'37"W 142.45'

ARC = 99.34'
R = 648.78'
CHORD = N3°40'26"W, 99.24'

NO°42'45"E 169.38'

S0°42'45"W 144.73'

NO°33'11"W 236.38'

N66°53'33"E 101.04'

ⓐ N89°26'49"E 21.00'
Ⓑ S0°33'11"E 28.00'
Ⓒ S89°26'49"W 21.00'
Ⓓ N89°26'49"E 27.00'
Ⓔ S0°33'11"E 23.78'
Ⓕ S89°26'49"W 27.00'
Ⓖ S89°26'49"W 34.52'
Ⓗ NO°33'11"W 18.39'
Ⓘ S89°43'18"E 32.16'
Ⓙ N82°34'23"E 74.65'
Ⓚ NO°33'11"W 20.14'
Ⓛ S82°34'23"W 73.28'
Ⓜ S89°26'49"W 43.17'
Ⓝ NO°33'11"W 20.00'
Ⓞ N89°26'49"E 43.05'
Ⓟ S0°19'42"W 59.09'
Ⓠ S0°33'11"E 28.00'
Ⓡ S0°33'11"E 2.22'

ⓐ ARC = 91.68' R = 598.78'
CHORD = S3°40'26"E, 91.59'
ⓑ ARC = 20.35' R = 3073.40'
CHORD = S3°17'15"W, 20.35'
ⓒ S0°53'55"E, 20.00'
ⓓ S8°03'37"E, 18.08'

ENTR RT 76+20

P.I. STA. 0+96.24
Δ = 6°07'00.00"RT
D = 11°27'32.96"
T = 26.71'
L = 53.38'
R = 500.00'
E = 0.71'

ENTR RT 80+10

P.I. STA. 0+82.18
Δ = 9°42'14.90"RT
D = 28°38'52.40"
T = 16.98'
L = 33.87'
R = 200.00'
E = 0.72'

ENTR RT 80+93

P.I. STA. 0+87.17
Δ = 6°01'39.54"RT
D = 11°27'32.96"
T = 26.32'
L = 52.60'
R = 500.00'
E = 0.69'

ENTR RT 82+93

P.I. STA. 0+76.98
Δ = 4°31'18.15"LT
D = 11°27'32.96"
T = 19.74'
L = 39.46'
R = 500.00'
E = 0.39'

RIGHT OF WAY PLANS

0' 50' 100' 200'

SCALE: 1"=50'

KY 1303
RIGHT OF WAY PLAN SHEET
STA. 72+00 TO STA. 87+00

FILE NAME: V:\1785\ACTIVE\1785610001\ROADWAY\PLAN SHEETS\ROW PLANS\KY1303_PL_7200_RW.DGN
USER: gnsharp
DATE PLOTTED: April 20, 2021
E-SHEET NAME:
MicroStation v8.11.9.832

COUNTY OF	ITEM NO.	SHEET NO.
KENTON	6-162.00	R45

REVISION DATE: APRIL 20, 2021

KY 1303 - BRISTOW RD.
PI STA = 97+33.48
Δ = 7°10'38.56" LT
D = 7°05'59.46"
T = 50.61'
L = 101.09'
R = 807.00'
E = 1.59'

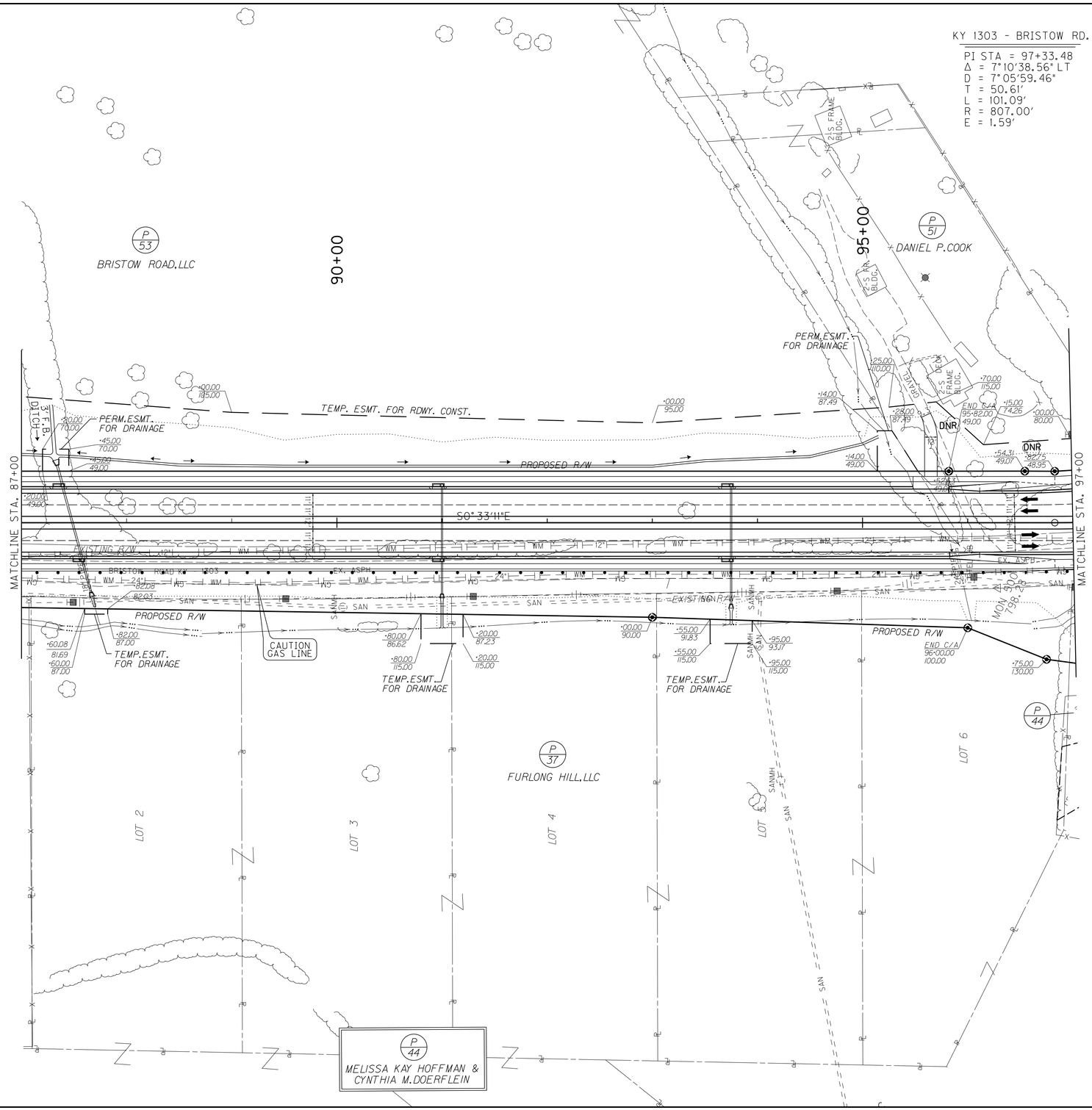

SCALE: 1"=50'

RIGHT OF WAY PLANS

0' 50' 100' 200'

KY 1303
PLAN SHEET
STA. 87+00 TO STA. 97+00

FILE NAME: V:\1785\ACTIVE\178561001\ROADWAY\PLAN SHEETS\ROW PLANS\KY1303_PL_8700.DGN
USER: gnsharp
DATE PLOTTED: April 20, 2021
E-SHEET NAME:
MicroStation v8.11.9.832

COUNTY OF	ITEM NO.	SHEET NO.
KENTON	6-162.00	R46A

REVISION DATE: APRIL 20, 2021

KY 1303 - BRISTOW RD.
PI STA = 97+33.48
Δ = 7°10'38.56" LT
D = 7°05'59.46"
T = 50.61'
L = 101.09'
R = 807.00'
E = 1.59'

P 53 BRISTOW ROAD,LLC

90+00

95+00

P 51 DANIEL P.COOK

PERM.ESMT. FOR DRAINAGE

TEMP. ESMT. FOR RDWY. CONST.

PERM.ESMT. FOR DRAINAGE

DNR

DNR

END C/A

S0°33'11"E 1529.25'

PROPOSED R/W

S0°36'17"E 72.31'

N56°49'48"E 73.94'

S0° 33'11"E

MATCHLINE STA. 87+00

MATCHLINE STA. 97+00

ARC = 349.55'
R = 8148.33'
CHORD = N0°31'00"W, 349.53'

N0°42'45"E 169.38' EXISTING R/W

N1°44'44"W 146.62'

N1°18'32"W 361.00'

N1°18'32"W 27.31'

N3°17'37"W 167.63'

ARC = 351.70'
R = 8198.33'
CHORD = S0°31'00"E, 351.67'

S1°45'50"E 143.49'

S1°18'46"E 389.63'

EXISTING R/W

N0°19'42"E 590.98'

PROPOSED R/W

N1°21'22"E 300.17'

PROPOSED R/W

N2°14'54"E 80.78'

TEMP.ESMT. FOR DRAINAGE

TEMP.ESMT. FOR DRAINAGE

TEMP.ESMT. FOR DRAINAGE

P 44

P 37 FURLONG HILL,LLC

LOT 2

LOT 3

LOT 4

LOT 5

LOT 6

P 44 MELISSA KAY HOFFMAN & CYNTHIA M.DOERFLEIN

Ⓞ N89°18'20"E 10.61'
ⓓ S0° 42'45"W 25.24'
ⓒ S3°14'59"E 89.78'
ⓓ S3°14'59"E 80.48'
ⓔ S88° 33'47"E 73.89'
ⓕ S0° 42'45"W 144.13'

Ⓐ S0°19'46"E 28.44'
Ⓑ S0°33'11"E 25.00'
Ⓒ S89°26'49"W 21.00'
Ⓓ
Ⓔ N89°26'49"E 21.00'
Ⓕ S0°33'11"E 14.00'
Ⓖ S56°49'48"W 45.69'
Ⓗ ARC = 80.80'R = 780.00' CHORD = S62°21'18"E, 80.76'

Ⓘ N89°26'49"E 38.49'
Ⓙ N7°06'49"E 22.05'
Ⓚ N7°06'49"E 65.71'
Ⓛ S0°33'11"E 29.37'
Ⓜ S0°19'42"W 59.09'
Ⓝ S0°33'11"E 25.00'
Ⓞ S0°33'11"E 38.63'

RIGHT OF WAY PLANS

0' 50' 100' 200'

SCALE: 1"=50'

KY 1303
RIGHT OF WAY PLAN SHEET
STA. 87+00 TO STA. 97+00

MicroStation v8.11.9.832
E-SHEET NAME:
USER: gnsharp
DATE PLOTTED: April 20, 2021
FILE NAME: V:\1785\ACTIVE\1785100\ROADWAY\PLAN SHEETS\ROW PLANS\KY1303_PL_8700_RW.DGN

COUNTY OF	ITEM NO.	SHEET NO.
KENTON	6-162.00	R46

REVISION DATE: JUNE 15, 2018

DATUM 865 860 855 850 845 840 835 830 825 820 815 810 805 800 795 790 785 780

+00.00

SEE ROUNDABOUT PLANS FOR DETAIL

MATCHLINE STA. 87+00

-1.00%

KY 536
ROUNDABOUT
AT KY 1303

819.7 819.44 | 816.0 818.94 | 818.7 818.44 | 818.4 817.94 | 817.6 817.44 | 815.6 816.94 | 814.5 816.44 | 814.5 815.94 | 813.2 815.44 | 814.7 814.94 | 812.4 814.44 | 812.3 813.94 | 811.8 813.44 | 811.0 | 811.3 | 810.4 | 807.3 | 802.4 | 801.1 | 805.0 | 804.2 | 803.3 | 802.8 | 802.9 | 795.3 | 793.8

87+00 87+50 88+00 88+50 89+00 89+50 90+00 90+50 91+00 91+50 92+00 92+50 93+00 93+50 94+00 94+50 95+00 95+50 96+00 96+50 97+00 97+50 98+00 98+50 99+00 99+50 100+00

RIGHT OF WAY PLANS

SCALE: 1" = 50' HORIZONTAL
1" = 5' VERTICAL

KY 1303
PROFILE SHEET
STA. 87+00 TO STA. 99+70.73

FILE NAME: V:\1785\ACTIVE\178561001\ROADWAY\PLAN SHEETS\ROW PLANS\KY1303_PR_8700.DGN
USER: gnsharp
DATE PLOTTED: February 11, 2019
E-SHEET NAME:
MicroStation v8.11.9.832

COUNTY OF	ITEM NO.	SHEET NO.
KENTON	6-162.00	R46A

REVISION DATE: AUGUST 5, 2019

KY 1303 - BRISTOW RD.
PI STA = 97+33.48
Δ = 7°10'38.56" LT
D = 7°05'59.46"
T = 50.61'
L = 101.09'
R = 807.00'
E = 1.59'

P/178 R.EHMET HAYES

90+00

95+00

P/51 DANIEL P.COOK

PERM.ESMT. FOR DRAINAGE

TEMP. ESMT. FOR RDWY. CONST.

PERM.ESMT. FOR DRAINAGE

PROPOSED R/W

EXISTING R/W

MATCHLINE STA. 87+00

MATCHLINE STA. 97+00

S0°33'11"E 769.00'

S0°33'11"E

N0°42'45"E 169.38'

ARC = 349.55'
R = 8148.33'
CHORD = N0°31'00"W, 349.53'

N1°44'44"W 146.62'

N1°18'32"W 361.00'

N1°18'32"W 27.31'

N3°17'37"W 167.63'

S0°36'17"E 72.31'

N56°49'48"W 73.94'

38.63'

END C/A 95+82.00 49.00

DNR

DNR

ARC = 351.70'
R = 8198.33'
CHORD = S0°31'00"E, 351.67'

S1°45'50"E 143.49'

S1°18'46"E 389.63'

N0°19'42"E 590.98'

N1°21'22"E 300.17'

N2°14'54"E 80.78'

END C/A 96+00.00 100.00

TEMP.ESMT. FOR DRAINAGE

TEMP.ESMT. FOR DRAINAGE

TEMP.ESMT. FOR DRAINAGE

P/37 FURLONG HILL,LLC

P/44 MELISSA KAY HOFFMAN & CYNTHIA M.DOERFLEIN

P/44

LOT 2

LOT 3

LOT 4

LOT 5

LOT 6

ⓞ N89°18'20"E 10.61'
ⓓ S0°42'45"W 25.24'
ⓒ S3°14'59"E 89.78'
ⓓ S3°14'59"E 80.48'
ⓔ S88°33'47"E 73.89'
ⓕ S0°42'45"W 144.13'

Ⓐ S0°19'46"E 28.44'
Ⓑ S0°33'11"E 25.00'
Ⓒ S89°26'49"W 21.00'
Ⓓ S0°33'11"E 684.00'
Ⓔ N89°26'49"E 21.00'
Ⓕ S0°33'11"E 14.00'
Ⓖ S56°49'48"W 45.69'
Ⓗ ARC = 80.80 R = 780.00' CHORD = S62°21'18"E, 80.76'

Ⓘ N89°26'49"E 38.49'
Ⓙ N7°06'49"E 22.05'
Ⓚ N7°06'49"E 65.71'
Ⓛ S0°33'11"E 29.37'
Ⓜ S0°19'42"W 59.09'

RIGHT OF WAY PLANS

0' 50' 100' 200'

SCALE: 1"=50'

KY 1303
RIGHT OF WAY PLAN SHEET
STA. 87+00 TO STA. 97+00

FILE NAME: V:\1785\ACTIVE\1785600\ROADWAY\PLAN SHEETS\ROW PLANS\KY1303_PL_8700_RW.DGN
USER: gnsharp
DATE PLOTTED: August 5, 2019
E-SHEET NAME:
MicroStation v8.11.9.832

COUNTY OF	ITEM NO.	SHEET NO.
BOONE & KENTON	6-162.00	R56

REVISION DATE: APRIL 20, 2021

RIGHT OF WAY PLANS

RIGHT OF WAY SUMMARY

PARCEL NO.	OWNER(S)	TOTAL AREA OF TRACT		PERMANENT R/W ACQUIRED		EASEMENTS		AREA SEVERED				EXCESS PURCHASED		PORTION REMAINING		SEWER SYSTEM TYPE	SEWER SYSTEM AFFECTED BY PROJECT		BUILDINGS ACQUIRED NUMBER				SOURCE OF TITLE	REMARKS*
						PERMANENT	TEMPORARY	LEFT		RIGHT							YES	NO	C	R	F	S		
		ACRES	SQ. FT.	ACRES	SQ. FT.	SQ. FT.	SQ. FT.	ACRES	SQ. FT.	ACRES	SQ. FT.	ACRES	SQ. FT.	ACRES	SQ. FT.									
1	NOT USED																							
2	NOT USED																							
3	CNO&TP	N/A				3,241	11,708									5							DB. 28, PG 206	
4	TOEBBEN, LTD.	3.13 (2)			7,386	2,672	19,662			2.960				2.960		3		X					DB. 414, PG 85	
5	298, LLC	12.052 (1)			26,360		1,896	11.447						11.447		1		X					DB. 1035, PG 581	
6	COUNTY OF BOONE, KENTUCKY	48.302 (3)			9,314		3,399			48.088				48.088		3		X					DB. I-4027,PG 173 DB. 1098, PG 449 (BC)	
7	TOEBBEN, LTD.	14.235 (1)			5,120		19,268	14.117						14.117				X					DB. 835, PG 676 (BC)	12.932 ACRES IN BOONE COUNTY 1.303 ACRES IN KENTON COUNTY
8	NOT USED																							
9	JANICE G. CARPENTER LIVING TRUST		27,114 (3)		868	421	4545		26,246				26,246			1		X		1		1	DB. I-3550, PG 281	
10	ERNEST BATES EDNA BATES (WF)		39,308 (3)		8,297		4,280		31,011						31,011	1		X					DB. 296, PG 52	
11	TOEBBEN, LTD.	1.823 (1)			19,501		8,954			1.375				1.375		5		X					DB. I-1574, PG 248	
12	THOMAS DIXON	7.031 (1)			7,171	1,016	14,785	6.866						6.866		1		X					DB. 303, PG 54 (C)	
13	BETHESDA COMMUNITY CHURCH	6.76 (3)		1.496		932	32,050			5.264				5.264		1		X					DB. I-1632, PG 146	
14	CHRISTOPHER D. RACHFORD ANGELINA RACHFORD (WF)	2.51 (1)					9,378	2.51						2.51		1		X					DB. I-1657, PG 136	
15	J. D. MARTIN EULA RUTH MARTIN (WF)	1.44 (3)					7,699	1.44						1.44		1		X					DB. 131, PG 40	
16	BARBARA M. GRIFFITH BRADLEY B. SLATER	2.66 (4)					3,086	2.66						2.66		1		X					DB. I-3146, PG 263	
17	RICHARD P. HARRIS TAMMY D. HARRIS (WF)	1.00 (1)			32,204	371	9,085				LL 11,356				11,356	1	X		1	1		1	DB. 398, PG 28	
18	RICK L. KIMBERLIN REBECCA KIMBERLIN (WF)		42,819 (3)				1,548		42,819						42,819	1		X					DB. 300, PG 227	
19	GEORGE JOSEPH FRYMAN	2.20 (3)			32,607	5,513	24,661			LL 1.451		1.451		0		1	X			1			DB. I-2107, PG 289	
20	TERRY DOWNS (1/2 INTEREST) TODD DOWNS (1/2 INTEREST)	1.18 (3)					1,759	1.18						1.18		1		X					DB. I-3172, PG 328	
21	DAVID A KENNETT		36,329 (3)				604		36,329						36,329	1		X					DB. I-3820, PG 212	
22	NOT USED																							
23	NICKIE REINHART DANA ZIMMERMAN		24,482 (3)				378		24,482						24,482	1		X					DB. I-3983, PG 263	
24	DAVID L. STIEBY JOYCE ANN STIEBY (WF)		21,448 (3)				697		21,448						21,448	1		X					DB. 155, PG 707	
25	KIRBY C. MASDEN DEBORAH F. MASDEN (WF)		26,358 (1)		14,976		11,382				LL 11,382				11,382	1	X			1		2	DB. 453, PG 111 DB. I-622, PG 145	
26	ENID MAIR MASON (WIDOW)	95.48 (3)		1.391		930	34,692			94.089				94.089		1	X			1		2	DB. 108, PG 504	
27	STEPHEN MASON JENNIFER MASON (WF)	1.34 (3)			20,369	1,900	6,785				LL 38,001				38,001	1	X			1			DB. 352, PG 11	
28	NOT USED																							
29	JOHN E. LEMBERG CHRISTY A. LEMBERG (WF)	1.33 (3)					699	1.33						1.33		1		X					DB. I-2629, PG 6	
30	JENNIFER MEYER JEREMY MEYER		43,124 (1)		20,710		19,249				LL 22,414				22,414	1	X			1		1	DB. I-3494, PG 229	

NOTE: PERMANENT R/W ACQUIRED + AREA SEVERED = TOTAL AREA OF TRACT.

BASIS OF DETERMINATION:
- (1) DEED
- (2) P.V.A.
- (3) CALCULATED
- (4) OTHER

NOTE: ALL DOCUMENTS LOCATED AT INDEPENDENCE, KY - KENTON CO. UNLESS NOTED OTHERWISE.
- (BC) DOCUMENT LOCATED IN BOONE COUNTY
- (C) DOCUMENT LOCATED AT COVINGTON, KY - KENTON COUNTY

THE CONTROL OF ACCESS ON THIS PROJECT SHALL BE PARTIALLY CONTROLLED ON KY 536 AND BY PERMIT ON KY 1303

TYPE SEWER SYSTEM
1. PRIVATE - INDIVIDUAL
2. PRIVATE - MULTI PARTY
3. PUBLIC
4. NONE
5. NOT APPLICABLE

BUILDINGS ACQUIRED CODE
- C - COMMERICAL
- R - RESIDENTIAL
- F - FARM
- S - STORAGE

*INCLUDES HAZARDOUS WASTE (UST - UNDERGROUND STORAGE TANKS)

KY 536
RIGHT OF WAY SUMMARY SHEET

FILE NAME: V:\1785\ACTIVE\178561001\ROADWAY\PLAN SHEETS\ROW PLANS\RW_SUM_1.DGN
USER: gnsharp
DATE PLOTTED: April 20, 2021
E-SHEET NAME:
MicroStation v8.11.9.832

COUNTY OF	ITEM NO.	SHEET NO.
KENTON	6-162.00	R57

REVISION DATE: APRIL 20, 2021

RIGHT OF WAY PLANS

RIGHT OF WAY SUMMARY

PARCEL NO.	OWNER(S)	TOTAL AREA OF TRACT		PERMANENT R/W ACQUIRED		EASEMENTS		AREA SEVERED				EXCESS PURCHASED		PORTION REMAINING		SEWER SYSTEM TYPE	SEWER SYSTEM AFFECTED BY PROJECT		BUILDINGS ACQUIRED NUMBER				SOURCE OF TITLE	REMARKS*
						PERMANENT	TEMPORARY	LEFT		RIGHT														
		ACRES	SQ. FT.	ACRES	SQ. FT.	SQ. FT.	SQ. FT.	ACRES	SQ. FT.	ACRES	SQ. FT.	ACRES	SQ. FT.	ACRES	SQ. FT.		YES	NO	C	R	F	S		
31	NOT USED																							
32	NOT USED																							
33	NOT USED																						DB. I-226, PG 247	
34	CHESTER LANCE KEMPER	1.52 (2)			26,727		2,133		39,484						39,484	1		X					DB. 381, PG 218	
35	LOUISA A. ODER	1.4879 (1)		1.307		1,032					LL 7,880		7,880	0		1	X			1			DB. I-3602, PG 269	
36	LLOYD SPEGAL JUDITH LYNN SPEGAL (WF)	108.44 (2)		5.081		1,928	53,266			103.359				103.359		1		X					DB. 385, PG 217	
37	FURLONG HILL, LLC	64.39 (2)		4.748		15,772	118,364	59.642						59.642		3	X						DB. I-1976, PG 115	INCLUDES LOTS 2 THRU 9 OF WILLIAMSBURG SOUTH SUBD. SECT 1 PLAT BOOK 19, PG 24
38	NOT USED																							
39	NOT USED																							
40	NOT USED																							
41	NOT USED																							
42	NOT USED																							
43	Y. WOLTENBERG, NOCERO, C. LITMER	8.66 (2)			13,804		8,594			8.343				8.343		1		X					DB. I-3391, PG 85	
44	MELISSA KAY HOFFMAN CYNTHIA M. DOERFLEIN	2.61 (3)		1.881		3,023	12,247		LL 31,755						31,755	1	X			1		2	DB. 407, PG 20	
45	BONIFACE NOCERO, RINZY (AKA RIZZIERO) NOCERO, ROGER (AKA ROGGIERO) NOCERO, ERMINIA DESIDERIO & MACISTRO NOCERO	9.28 (2)			17,447					8.880				8.880		4		X					DB. 417, PG 256 (C) DB 1192, PG 232	
46	EAST KENTUCKY POWER COOPERATIVE, INC.	4.66 (1)				1,470	23,562			4.66				4.66		3		X					DB. 255, PG 85 (C)	
47	NOT USED																							
48	JENNIFER LEONHART		38,842 (3)				9,510				LL 38,842				38,842	1	X			1			DB. I-2536, PG 247	
49	NOT USED																							
50	GLENHURST DEVELOPMENT, LLC	13.93 (2)				4,124	21,320			13.93				13.93		4		X					DB. I-2045, PG 198	
51	DANIEL P. COOK	2.03 (2)			12,825		8,623	1.736						1.736		1		X					DB. I-2836, PG 4	
52	JEFFREY M. HANS STACEE D. HANS (WF)	1.02 (2)					591			1.02				1.02		1		X					DB. I-1862, PG 246	LOT 8 JANLEE ACRES PLAT BOOK 17, PG 12 OR PLAT CAB B, SLIDE 425
53	BRISTOW ROAD, LLC	270.100 (2)		8.475		5,823	418,548	261.625						261.625		4		X					DB. I-2990, PG. 184 DB. I-3816, PG. 167 DB. KC 150-55 6 DB. KC 156-59 4 DB. KC 160-64 5	
54	RANDY C. WORLEY DONNA WORLEY (WF)	1.61 (2)					1,415			1.61				1.61		3		X					DB. I-2012, PG. 231	LOT 33 THE OAKS SUBD., SECT. 3, PLAT CAB. A, SLIDE 555
55	DANIEL J. BRADFORD HILLARY R. BRADFORD (WF)	1.51 (3)					1,214			1.51				1.51		1		X					DB. 298, PG. 195 DB. 335, PG. 90	LOT 9 JANLEE ACRES PLAT BOOK 17, PG 12 OR PLAT CAB B, SLIDE 425
56	CARRIE MARIE KUNSTMAN		15,452 (4)				857		LL 15,452						15,452	4		X					DB. 250, PG. 31 MISC. BK. 108, PG 76	
57	RONALD FLACK PATRICIA A. FLACK (WF)		22,000 (1)				845				22,000				22,000	1		X					DB. I-2316, PG 4	WESTERN 1/2 OF LOT 7 JANLEE ACRES PLAT BOOK 17, PG 12 OR PLAT CAB. B, SLIDE 425
58	J. MICHAEL BALLARD (Married)		22,000 (1)				2,269				22,000				22,000	1		X					DB. I-1956, PG. 19	EASTERN 1/2 OF LOT 7 JANLEE ACRES PLAT BOOK 17, PG 12 OR PLAT CAB. B, SLIDE 425
59	PATRICIA I. TUNNING, IRENE T. WALTER & LUCILLE LYNCH		40,383 (3)		2,030		1,914				38,353				38,353	1	X						DB. 289, PG. 250	LOT 6 JANLEE ACRES PLAT BOOK 17, PG 12 OR PLAT CAB B, SLIDE 425
60	LOUIS KUNSTMAN MARIE KUNSTMAN (WF)	1.29 (3)				1,432	16,122	1.29						1.29		1		X					DB. 117, PG 582 DB 140, PG 199	

NOTE: PERMANENT R/W ACQUIRED + AREA SEVERED = TOTAL AREA OF TRACT.

BASIS OF DETERMINATION:
(1) DEED
(2) P.V.A.
(3) CALCULATED
(4) OTHER

NOTE: ALL DOCUMENTS LOCATED AT INDEPENDENCE, KY - KENTON CO. UNLESS NOTED OTHERWISE.
(BC) DOCUMENT LOCATED IN BOONE COUNTY
(C) DOCUMENT LOCATED AT COVINGTON, KY - KENTON COUNTY

THE CONTROL OF ACCESS ON THIS PROJECT SHALL BE PARTIALLY CONTROLLED ON KY 536 AND BY PERMIT ON KY 1303

TYPE SEWER SYSTEM
1. PRIVATE - INDIVIDUAL
2. PRIVATE - MULTI PARTY
3. PUBLIC
4. NONE
5. NOT APPLICABLE

BUILDINGS ACQUIRED CODE
C - COMMERICAL
R - RESIDENTIAL
F - FARM
S - STORAGE

*INCLUDES HAZARDOUS WASTE (UST - UNDERGROUND STORAGE TANKS)

KY 536
RIGHT OF WAY SUMMARY SHEET

MicroStation v8.11.9.832
E-SHEET NAME:
USER: gnsharp
DATE PLOTTED: April 20, 2021
FILE NAME: V:\1785\ACTIVE\178561001\ROADWAY\PLAN SHEETS\ROW PLANS\RW_SUM_2.DGN

COUNTY OF	ITEM NO.	SHEET NO.
KENTON	6-162.00	R58

REVISION DATE: AUGUST 5, 2019

RIGHT OF WAY PLANS

RIGHT OF WAY SUMMARY

PARCEL NO.	OWNER(S)	TOTAL AREA OF TRACT		PERMANENT R/W ACQUIRED		EASEMENTS		AREA SEVERED				EXCESS PURCHASED		PORTION REMAINING		SEWER SYSTEM TYPE	SEWER SYSTEM AFFECTED BY PROJECT		BUILDINGS ACQUIRED NUMBER				SOURCE OF TITLE	REMARKS*
						PERMANENT	TEMPORARY	LEFT		RIGHT							YES	NO	C	R	F	S		
		ACRES	SQ. FT.	ACRES	SQ. FT.	SQ. FT.	SQ. FT.	ACRES	SQ. FT.	ACRES	SQ. FT.	ACRES	SQ. FT.	ACRES	SQ. FT.									
61	TRACY SCOTT	4.527 (1)			11,992	673	23,356	4.252						4.252		4		X				1	DB. I-3201, PG. 180	
62	DAVID WILSON CHARLENE WILSON (WF)	4.631 (1)			1,855		10,634	4.588						4.588		4		X					DB. I-3246, PG. 276	SEE DB. I-3201, PG 180 & DB. I-150, PG. 266 FOR PLATS
63	COMMONWEALTH OF KENTUCKY		23,614 (1)		4,114						19,500				19,500	4		X					DB. I-81, PG. 42	A PORTION OF LOT 5 JANLEE ACRES PLAT BOOK 17, PG 12 OR PLAT CAB. B, SLIDE 425
64	JOHN D. PARRETT		23,949 (3)			110	3,591		23,949						23,949	3		X					DB. I-2291, PG. 199	LOT 11, FALCON RIDGE SUBDIVISION SLIDE A-136
65	COMMONWEALTH OF KENTUCKY		18,174 (1)		8,037						10,137				10,137	4		X					DB. I-174, PG. 307	A PORTION OF LOTS 4 & 5 JANLEE ACRES PLAT BOOK 17, PG 12 OR PLAT CAB. B, SLIDE 425
66	LEWIS N. RICHARDS GLORIA D. RICHARDS (WF)	2.05 (2)			26,877					1.433				1.433		1		X					DB. 209, PG. 45 (C) DB. 220, PG. 152 (C) DB. I-435, PG. 241	A PORTION OF LOTS 3, 4 & ALL OF LOT 10 JANLEE ACRES PLAT BOOK 17, PG 12 OR PLAT CAB. B, SLIDE 425
67	WILLIAM H. RUHOLT JUDITH A. RUHOLT (WF)	1.00 (1)			12,290						31,270				31,270	1		X				1	DB. I-802, PG. 316	LOT 2 JANLEE ACRES PLAT BOOK 17, PG 12 OR PLAT CAB. B, SLIDE 425
68	GERALD A. MONTGOMERY MARCIA V. MONTGOMERY (WF)	17.374 (1)				2,535		17.374						17.374		1		X					DB. 244, PG. 28	
69	LORETTA HENSLEY	1.04 (2)			11,133		3,980				34,170				34,170	1	X			1		1	DB. 467, PG. 210 DB. I-436, PG. 217	REMAINDER OF LOT 16 OF LELAND PHILPOT LAND DIVISION PLAT BOOK 15, PG. 5
70	SHAWN FOSTER AMANDA L. FOSTER (WF)	2.80 (2)				2,179	7,562			2.80				2.80		1		X					DB. I-2894, PG. 8	REMAINDER OF LOTS 19 & 20 OF LELAND PHILPOT LAND DIVISION PLAT BOOK 15, PG. 5
71	KENNETH LEE SCHLUETER BEVERLY KAY SCHLUETER (WF)	1.05 (2)					1,121			1.05				1.05		1		X					DB. 291, PG. 200	REMAINDER OF LOT 18 OF LELAND PHILPOT LAND DIVISION PLAT BOOK 15, PG. 5
72	THE JOSEPHINE L. SPEAKES (LIVING TRUST)		41,396 (2)								41,396				41,396	1		X					DB. I-1221, PG. 303	REMAINDER OF LOT 17 OF LELAND PHILPOT LAND DIVISION PLAT BOOK 15, PG. 5
73	CLAUDE D. ELY JR. JEAN K. ELY (WF)		24,110 (3)		6,780				17,330						17,330	1		X					DB. I-2060, PG. 1 DB. I-180, PG. 280	REMAINDER OF LOT 6 OF LELAND PHILPOT LAND DIVISION PLAT BOOK 15, PG. 5
74	MARK CHESTER JOAN CHESTER (WF)		22,300 (3)		6,221				16,079						16,079	1		X					DB. 296, PG. 132 DB. I-259, PG. 223	REMAINDER OF LOT 5 OF LELAND PHILPOT LAND DIVISION PLAT BOOK 15, PG. 5
75	THOMAS ROSENACKER BARBARA ROSENACKER (WF)		19,509 (3)		2,867				16,642						16,642	1		X					DB. I-2151, PG. 29	REMAINDER OF LOT 4 OF LELAND PHILPOT LAND DIVISION PLAT BOOK 15, PG. 5
76	JAMES B. BOSSE		18,624 (3)		2,934				15,690						15,690	1		X					DB. 366. PG. 297	REMAINDER OF LOT 3 OF LELAND PHILPOT LAND DIVISION PLAT BOOK 15, PG. 5
77	WILLIAM J. WISSMAN		17,491 (3)		1,700				15,791						15,791	1		X					DB. I-55, PG 124 DB. I-244, PG. 167	REMAINDER OF LOT 2 OF LELAND PHILPOT LAND DIVISION PLAT BOOK 15, PG. 5
78	FIRST SECURITY TRUST BANK, INC.	1.87 (2)			7,299		844			1.702				1.702		5		X					DB. I-2482, PG. 315	
79	LOUISVILLE & NASHVILLE RAILROAD	N/A														5								
80	NOT USED																							
81	SHARON OLIVER		22,139 (2)				1,770		22,139						22,139	1		X					DB. 222, PG. 200	
82	NOT USED																							
83	NOT USED																							
84	NOT USED																							
85	FIRST SECURITY TRUST BANK, INC.		27,335 (2)				1,741				27,335				27,335	5		X					DB. I-2482, PG. 313	LOTS 55, 56 AND PARCEL "A" OF BRISTOW LAKES SUBDIVISION PLAT SLIDE A-753
86	EDWARD LUEBBE		12,212 (2)				4,719				12,212				12,212	4		X					DB. I-46, PG 262	
87	RODNEY SCOTT SMITH PEGGY SUE LYNCH		19,219 (3)				1,361				19,219				19,219	3		X					DB. I-2357, PG. 292	LOT 30-SECT. 3 OF WILLIAMS WOODS SUBDIVISION, SLIDE 516-A
88	KEVIN P. BARTH		14,223 (2)				293				14,223				14,223	3		X					DB. I-3288, PG. 265	LOT 29-SECT. 3 OF WILLIAMS WOODS SUBDIVISION, SLIDE 516-A
89	LORI M. TAKACH	2.41 (3)			619		24,143	2.396						2.396		1		X		1			DB. I-1238, PG. 344	REMAINDER OF LOT 154, SECT. 12, BATTLERIDGE SUBDIVISION SLIDE 310-A
90	STEVEN L. VOGELPOHL ROSARIO VOGELPOHL (WF)		28,234 (3)		3,865		22,015		24,369						24,369	1		X		1			DB. I-2553, PG. 1	REMAINDER OF LOT 153, SECT. 11, SLIDE 309-A, (TOTAL TAKE)

NOTE: PERMANENT R/W ACQUIRED + AREA SEVERED = TOTAL AREA OF TRACT.

BASIS OF DETERMINATION: (1) DEED, (2) P.V.A., (3) CALCULATED, (4) OTHER

NOTE: ALL DOCUMENTS LOCATED AT INDEPENDENCE, KY - KENTON CO. UNLESS NOTED OTHERWISE.
(BC) DOCUMENT LOCATED IN BOONE COUNTY
(C) DOCUMENT LOCATED AT COVINGTON, KY - KENTON COUNTY

THE CONTROL OF ACCESS ON THIS PROJECT SHALL BE PARTIALLY CONTROLLED ON KY 536 AND BY PERMIT ON KY 1303

TYPE SEWER SYSTEM
1. PRIVATE - INDIVIDUAL
2. PRIVATE - MULTI PARTY
3. PUBLIC
4. NONE
5. NOT APPLICABLE

BUILDINGS ACQUIRED CODE
C - COMMERICAL
R - RESIDENTIAL
F - FARM
S - STORAGE

*INCLUDES HAZARDOUS WASTE (UST - UNDERGROUND STORAGE TANKS)

RIGHT OF WAY SUMMARY SHEET

FILE NAME: V:\1785\ACTIVE\17856100\ROADWAY\PLAN SHEETS\ROW PLANS\RW_SUM_3.DGN
USER: ghsharp
DATE PLOTTED: August 5, 2019
E-SHEET NAME:
MicroStation v8.11.9.832

COUNTY OF	ITEM NO.	SHEET NO.
KENTON	6-162.00	R61

REVISION DATE: MAY 7, 2021

RIGHT OF WAY PLANS

RIGHT OF WAY SUMMARY

PARCEL NO.	OWNER(S)	TOTAL AREA OF TRACT		PERMANENT R/W ACQUIRED		EASEMENTS		AREA SEVERED				EXCESS PURCHASED		PORTION REMAINING		SEWER SYSTEM TYPE	SEWER SYSTEM AFFECTED BY PROJECT		BUILDINGS ACQUIRED NUMBER				SOURCE OF TITLE	REMARKS*
						PERMANENT	TEMPORARY	LEFT		RIGHT							YES	NO	C	R	F	S		
		ACRES	SQ. FT.	ACRES	SQ. FT.	SQ. FT.	SQ. FT.	ACRES	SQ. FT.	ACRES	SQ. FT.	ACRES	SQ. FT.	ACRES	SQ. FT.									
149	MURRAY GUTTMAN A. J. RANDMAN	10.09 ③		1.001			11,473			9.089				9.089		4							DB. 279, PG. 31 DB. 279, PG 35	
150	NOT USED																							
151	INDEPENDENCE CENTER, LLC	3.037 ④			2,348		3,572	2.983						2.983		3		X					DB. I-2094, PG. 38	LOTS 11 & 12, SECTION 7, OF THE INDEPENDENCE TOWNE CENTER, PLAT SLIDE A-760 AND ALSO LOT 13-A, SECTION 8, OF THE INDEPENDENCE TOWNE CENTER, PLAT SLIDE A-822
152	NOT USED																							
153	NOT USED																							
154	BRADLEY J. GAMM		35,541 ③				4,725		35,541						35,541	3	X						DB. I-2383, PG. 174	
155	NOT USED																							
156	MELANIE McKINNEY (WF) DAVID McKINNEY	1.48 ③			918		11,032	1.459						1.459		3	X						DB. I-57, PG. 163	LOTS 1 & 2 OF GEORGE BILZ SUB-DIVISION, PLAT SLIDE 168-B (PLAT BOOK 7, PG. 21)
157	TIMOTHY EDWARD SCHRECK		33,121 ③		1,250		5,733		31,871						31,871	3	X						DB. 317, PG. 216	LOT 3 OF GEORGE BILZ SUBDIVISION, PLAT SLIDE 168-B (PLAT BOOK 7, PG. 21)
158	GEORGE HOWARD CARNEY ESTELLE CARNEY (WF)	1.12 ③			8,830		7,747		39,957						39,957	3	X						DB 144, PG. 609 Ⓒ	LOTS 4 & 5 OF GEORGE BILZ SUB-DIVISION, PLAT SLIDE 168-B (PLAT BOOK 7, PG. 21)
159	961 STILLMEADOW, LLC		18,779 ③			137	2,411				18,779				18,779	3		X					DB. I-1114, PG. 222	LOT 2A, SECTION 1 OF BRISTOW MEADOWS RESUBDIVISION, PLAT SLIDE A-372
160	ALEX RAGUS OLIVIA R. RAGUS (WF)		10,934 ③			870	621				10.934				10,934	3		X					DB. I-2157, PG. 256	LOT 3A, SECTION 1 OF BRISTOW MEADOWS RESUBDIVISION, PLAT SLIDE A-372
161	NOT USED																							
162	965 STILLMEADOW, LLC		14,803 ②				512				14,803				14,803	3		X					DB. I-1195, PG. 308	LOT 1A, SECTION 1 OF BRISTOW MEADOWS RESUBDIVISION, PLAT SLIDE A-372
163	TERRENCE KOENIG SHAHRZAD ANSARI-KOENIG (WF)		24,475 ③		5,974		11,931		18,501						18,501	3	X			1			DB. 320, PG. 109 Ⓒ	LOT 6 OF GEORGE BILZ SUBDIVISION, PLAT SLIDE 168-B (PLAT BOOK 7, PG. 21)
164	MICHAEL A. PHILLIPS DEBORAH S. PHILLIPS (WF)		31,382 ③		7,572		10,467		23,810						23,810	3	X			1			DB. 401, PG. 209	LOT 7 & A PORTION OF LOT 8 OF GEORGE BILZ SUBDIVISION, PLAT SLIDE 168-B (PLAT BOOK 7, PG. 21)
165	SCOTT GLASS KELLY GLASS (WF)		43,883 ③		12,942		14,669		30,941						30,941	3	X			1			DB. 417, PG 102	A PORTION OF LOT 8 OF GEORGE BILZ SUBDIVISION, PLAT SLIDE 168-B (PLAT BOOK 7, PG. 21)
166	1740 MARQUETTE PROPERTIES, LLC		40,349 ③		188						40,161				40,161	3		X					DB. I-1741, PG. 131	LOTS 6 & 7A, SECTION 1 OF BRISTOW MEADOWS RESUBDIVISION, PLAT SLIDE A-372
167	937 STILLMEADOW, LLC		13,958 ③		1,293						12,665				12,665	3	X						DB. I-1116, PG. 245	LOT 8, SECTION 1 OF BRISTOW MEADOWS RESUBDIVISION, PLAT SLIDE A-372
168	STEPHEN J. CRILE		13,341 ③		2,225		3,620				11,116				11,116	3	X						DB. I-3028, PG. 291	LOT 9, SECTION 1 OF BRISTOW MEADOWS RESUBDIVISION, PLAT SLIDE A-372
169	DAVID JACKSON FRANCES JACKSON (WF)	1.932 ③			8,739		18,224	1.731						1.731		3	X						DB. 420, PG. 160	
170	BEECHGROVE HOMEOWNERS ASSOCIATION, INC.	3.07 ①		1.263			9,353			1.807				1.807		4		X					DB. 290, PG. 346 Ⓒ	
171	NOT USED																							
172	NOT USED																							
173	LAWRENCE GLASS JOAN GLASS	13.200 ③			330	734	13,754	13.192						13.192		3		X					DB. 129, PG. 483 DB. I-1366, PG. 191 DB. I-1467, PG. 341 DB. I-1526, PG. 269	
174	WALTER HAMLIN AND GENEVA H. HAMLIN REVOCABLE TRUST WALTER HAMLIN AND GENEVA H. HAMLIN (TRUSTEES)	3.69 ③				602	15,597	3.69						3.69		1		X					DB. I-1415, PG. 220	
175	AZA CONSTRUCTION, INC.		18,753 ④		14,402		627				4,351				4,351	4	X						DB. 468, PG. 138	LOT 1, SECTION 1, WOODCUTTER'S CROSSING SUBDIVISION, PLAT SLIDE 735-B
176	ALBERTA BORNE DONALD C. BORNE (HUSB)	11.22 ③			957		9,041	11.198						11.198		3		X					DB. 158, PG 616	
177	MICHAEL BROOKS		23,004 ④		5,673		8,581				17,331				17,331	3	X			1			DB. I-677, PG. 195	LOT 2, SECTION 1, WOODCUTTER'S CROSSING SUBDIVISION, PLAT SLIDE 735-B

NOTE: PERMANENT R/W ACQUIRED + AREA SEVERED = TOTAL AREA OF TRACT.

BASIS OF DETERMINATION:
① DEED
② P.V.A.
③ CALCULATED
④ OTHER

NOTE: ALL DOCUMENTS LOCATED AT INDEPENDENCE, KY - KENTON CO. UNLESS NOTED OTHERWISE.
(BC) DOCUMENT LOCATED IN BOONE COUNTY
Ⓒ DOCUMENT LOCATED AT COVINGTON, KY - KENTON COUNTY

THE CONTROL OF ACCESS ON THIS PROJECT SHALL BE PARTIALLY CONTROLLED ON KY 536 AND BY PERMIT ON KY 1303

TYPE SEWER SYSTEM
1. PRIVATE - INDIVIDUAL
2. PRIVATE - MULTI PARTY
3. PUBLIC
4. NONE
5. NOT APPLICABLE

BUILDINGS ACQUIRED CODE
C - COMMERICAL
R - RESIDENTIAL
F - FARM
S - STORAGE

*INCLUDES HAZARDOUS WASTE (UST - UNDERGROUND STORAGE TANKS)

RIGHT OF WAY SUMMARY SHEET

FILE NAME: V:\1785\ACTIVE\1785100\ROADWAY\PLAN SHEETS\ROW PLANS\RW_SUM_6.DGN
USER: gnsharp
DATE PLOTTED: May 7, 2021
E-SHEET NAME:
MicroStation v8.11.9.832

COUNTY OF	ITEM NO.	SHEET NO.
KENTON	6-162.00	R62

REVISION DATE: APRIL 20, 2021

RIGHT OF WAY PLANS

RIGHT OF WAY SUMMARY

PARCEL NO.	OWNER(S)	TOTAL AREA OF TRACT		PERMANENT R/W ACQUIRED		EASEMENTS		AREA SEVERED				EXCESS PURCHASED		PORTION REMAINING		SEWER SYSTEM TYPE	SEWER SYSTEM AFFECTED BY PROJECT		BUILDINGS ACQUIRED NUMBER				SOURCE OF TITLE	REMARKS*
						PERMANENT	TEMPORARY	LEFT		RIGHT							YES	NO	C	R	F	S		
		ACRES	SQ. FT.	ACRES	SQ. FT.	SQ. FT.	SQ. FT.	ACRES	SQ. FT.	ACRES	SQ. FT.	ACRES	SQ. FT.	ACRES	SQ. FT.									
178	R. EHMET HAYES	31.818 (2)		1.808		799	63,877	30.010						30.010		1	X			2		2	DB. 407, PG. 138	
179	DEBRA J. MARVIN DWIGHT MARVIN (HUSB)		21,156 (4)				876				21,156				21,156	3		X					DB. I-2120, PG. 202	LOTS 35 & 36, SECTION 1, WOODCUTTER'S CROSSING SUBDIVISION, PLAT SLIDE 735-B
180	GWEN D. McCORMACK	9.77 (3)				1,479	2,306			9.77				9.77		3		X					DB. 462, PG. 282	
181	NOT USED																							
182	NOT USED																							
183	CRAIG S. JOBE SUSAN E. JOBE (WF)	6.99 (3)				862	3,683			6.99				6.99		3		X					DB. 430, PG. 307	
184	KEVIN W. WHITAKER	1.25 (3)					3,052			1.25				1.25		3		X					DB. I-2860, PG. 21	
185	RAYMOND C. MILLER ANN W. MILLER (WF)		34,793 (3)				4,075				34,793				34,793	3		X					DB. 178, PG. 85	
186	CHARLES DAVID BAKER	2.78 (4)			2,947	605	7,569			2.712				2.712		3		X					DB. I-2297, PG. 321	LOT 1, SECTION 1, WILLIAMSBURG SOUTH SUBDIVISION, PLAT BOOK 19, PG. 24
187-190	NOT USED																							
191	TOM W. ADAMS LOLA M. ADAMS (WF)		35,164 (3)				1,964		35,164						35,164	1		X					DB. 266, PG. 13 (C)	
192	NOT USED																							
193	NOT USED																							
194	ADELAIDE ROSS ROBERT C. ROARK		23,072 (2)				523		23,072						23,072	3		X					DB. I-2153, PG. 202	LOT 1, SECTION 1, FALCON RIDGE SUBDIVISION, SLIDE A-136
195	TOMAS D. BARBOSA YENY D. BARBOSA (WF)	1.31 (2)					4,446	1.31						1.31		1		X					DB. I-2569, PG. 161	REMAINING PORT. OF LOTS 14 & 15 OF THE LELAND PHILPOT LAND DVISION PLAT BOOK 15, PG. 5 - SLIDE B-384
196	KEITH FORTON MELISSA L. FORTON (WF)	1.22 (2)					4,572	1.22						1.22		1		X					DB. I-200, PG. 323	REMAINING PORT. OF LOTS 12 & 13 OF THE LELAND PHILPOT LAND DVISION PLAT BOOK 15, PG. 5 - SLIDE B-384
197	RALPH E. CHAFFIN CONNIE R. CHAFFIN (WF)		16,541 (2)				1,971		16,541						16,541	1		X					DB. I-1794, PG. 148	REMAINING PORT. OF LOT 11 OF THE LELAND PHILPOT LAND DVISION PLAT BOOK 15, PG. 5 - SLIDE B-384
198	JASON YOUNG JESSICA YOUNG (WF)		16,314 (2)				1,562		16,314						16,314	1		X					DB. I-1758, PG. 158	REMAINING PORT. OF LOT 10 OF THE LELAND PHILPOT LAND DVISION PLAT BOOK 15, PG. 5 - SLIDE B-384
199	TIMOTHY FERGUSON LORIE FERGUSON (WF)		16,769 (2)				1,710		16,769						16,769	1		X				1	DB. I-2395, PG. 241	REMAINING PORT. OF LOT 9 OF THE LELAND PHILPOT LAND DVISION PLAT BOOK 15, PG. 5 - SLIDE B-384
200	HANNAH MOORE		17,332 (2)				1,858		17,332						17,332	1		X					DB. I-2664, PG. 62	REMAINING PORT. OF LOT 8 OF THE LELAND PHILPOT LAND DVISION PLAT BOOK 15, PG. 5 - SLIDE B-384
201	GREGORY A. MARSHALL		18,002 (2)		1,365		774		16,637						16,637	1		X					DB. I-1012, PG. 78	REMAINING PORT. OF LOT 7 OF THE LELAND PHILPOT LAND DVISION PLAT BOOK 15, PG. 5 - SLIDE B-384
202	JASON D. LEMMOND SHELLY L. LEMMOND (WF)		13,903 (2)				336				13,903				13,903	3		X					DB. I-1673, PG. 76	LOT 28, SEC 3 WILLIAMS WOODS SUBDIVISION - SLIDE 516-A
203	DAVID L. DAVIS SUSAN C. DAVIS (WF)		16,590 (2)				974		16,590						16,590	3		X					DB. I-1695, PG. 109	LOT 128, SEC 10 BATTLE RIDGE SUBDIVISION - SLIDE A-295
204	RACHAEL D. BRETT HARRY BRETT (HUSB)		17,733 (2)				2,727		17,733						17,733	3		X					DB. I-3429, PG. 85	LOT 121, SEC 16 BATTLE RIDGE SUBDIVISION - SLIDE A-360
205	FREDERICK J. MEYER		18,058 (2)				717				18,058				18,058	3		X					DB. I-1329, PG. 317	LOT 4, SEC 1 WILLIAMS WOODS SUBDIVISION - SLIDE 514-A
206	MAUREEN WASHBURN HAROLD C. WASHBURN (HUSB)		20,440 (2)		64		926				20,376				20,376	3		X					DB. I-3102, PG. 293	LOT 3, SEC 1 WILLIAMS WOODS SUBDIVISION - SLIDE 514-A
207	NATIONAL RETAIL PROPERTIES, LP	1.423 (4)			2,686			1.361						1.361		3		X					DB. I-3645, PG. 1	LOT 10, SEC 7 INDEPENDENCE TOWNE CENTER SUBDIVISION - SLIDE A-760

NOTE: PERMANENT R/W ACQUIRED + AREA SEVERED = TOTAL AREA OF TRACT.

BASIS OF DETERMINATION:
(1) DEED
(2) P.V.A.
(3) CALCULATED
(4) OTHER

NOTE: ALL DOCUMENTS LOCATED AT INDEPENDENCE, KY - KENTON CO. UNLESS NOTED OTHERWISE.
(BC) DOCUMENT LOCATED IN BOONE COUNTY
(C) DOCUMENT LOCATED AT COVINGTON, KY - KENTON COUNTY

THE CONTROL OF ACCESS ON THIS PROJECT SHALL BE PARTIALLY CONTROLLED ON KY 536 AND BY PERMIT ON KY 1303

TYPE SEWER SYSTEM
1. PRIVATE - INDIVIDUAL
2. PRIVATE - MULTI PARTY
3. PUBLIC
4. NONE
5. NOT APPLICABLE

BUILDINGS ACQUIRED CODE
C - COMMERICAL
R - RESIDENTIAL
F - FARM
S - STORAGE

*INCLUDES HAZARDOUS WASTE (UST - UNDERGROUND STORAGE TANKS)

RIGHT OF WAY SUMMARY SHEET

FILE NAME: V:\1785\ACTIVE\178561001\ROADWAY\PLAN SHEETS\ROW PLANS\RW_SUM_7.DGN
USER: gnsharp
DATE PLOTTED: April 20, 2021
E-SHEET NAME:
MicroStation v8.11.9.832

COUNTY OF	ITEM NO.	SHEET NO.
BOONE	6-162.00	R68

REVISION DATE: APRIL 20, 2021

92+02
95+00
100+00
105+00
110+00
115+00
120+00

WELDING ALLOYS (USA), INC.

EXISTING R/W

EXISTING RR R/W

PERM. ESMT.

EXIST. PERM.ESMT.

BEGIN C/A 102+89.45 254.00

END C/A 103+77.00 246.76

BEGIN C/A 104+71.00 201.39

298, LLC

TEMP. ESMT.

END C/A 110+98.89 103.66

BEGIN C/A 112+00.00 150.44

PROPOSED R/W & C/A

TOEBBEN, LTD.

END C/A 116+75.00 61.20

BEGIN C/A 117+50.00 52.21

TEMP.ESMT.

EXISTING R/W & C/A

STA. 101+18.79
BEGIN RIGHT OF WAY

BEGIN C/A 101+89.22 74.94

END C/A 12+00.00 38.11

PROPOSED R/W

EXISTING R/W & C/A

BEGIN C/A 12+00.00 52.28

END C/A 107+64.89 123.96

BEGIN C/A 108+84.20 149.74

WALTER HAYES, LLC

TOEBBEN, LTD.

COUNTY OF BOONE, KENTUCKY

END C/A 116+50.00 111.19

BEGIN C/A 117+84.90 81.61

MATCHLINE STA. 120+00

P 3 CNO&TP

RIGHT OF WAY PLANS

SCALE: 1"=100'

KY 536
RIGHT OF WAY STRIP MAP
STA. 95+00 TO STA. 120+00

MicroStation v8.11.9.832 | E-SHEET NAME: | USER: gnsharp DATE PLOTTED: April 20, 2021 | FILE NAME: V:\1785\ACTIVE\178561001\ROADWAY\PLAN SHEETS\ROW PLANS\RW_STRIP_MAP_9500.DGN

COUNTY OF	ITEM NO.	SHEET NO.
KENTON	6-162.00	R69

REVISION DATE: FEBRUARY 17, 2021

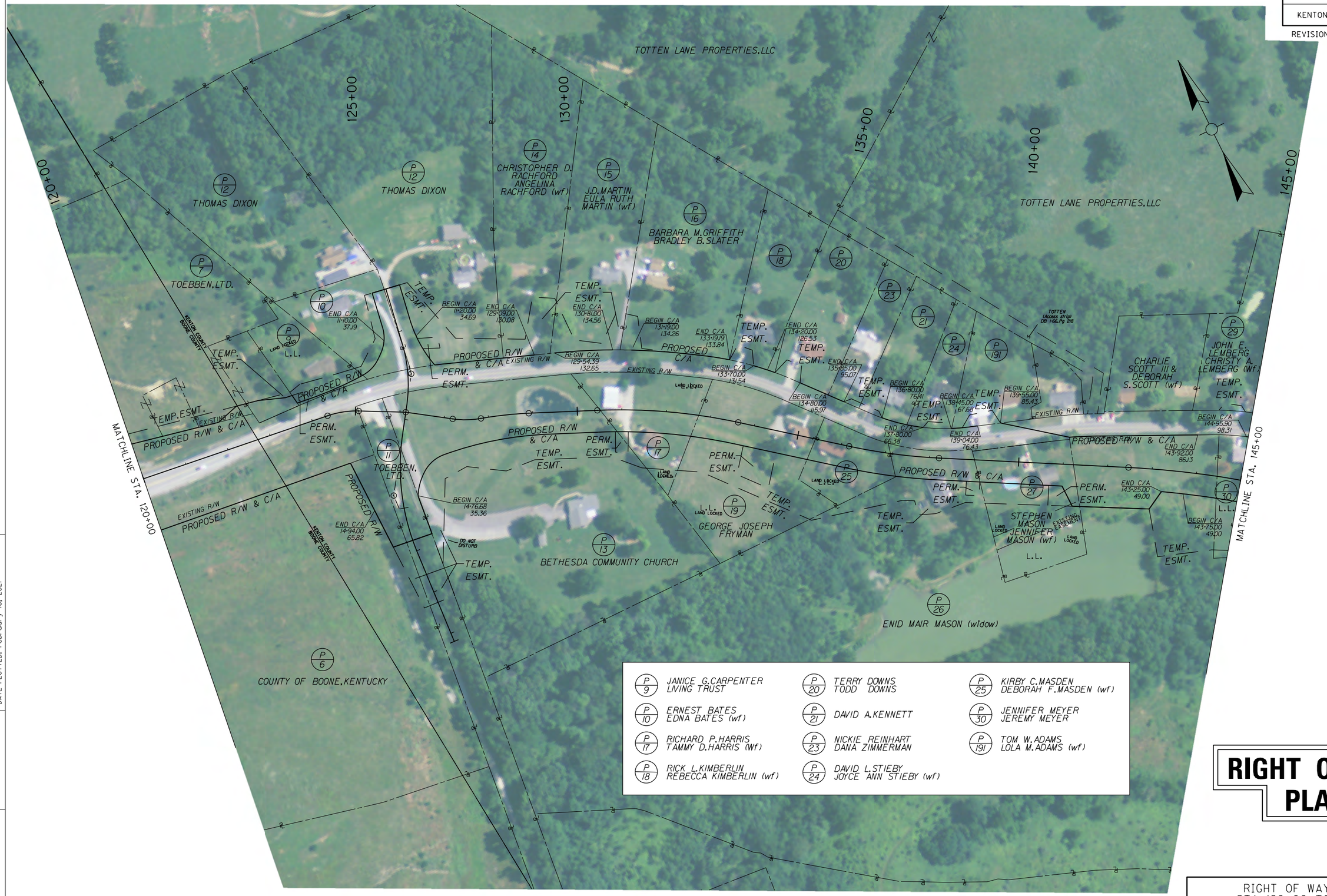

P 9 JANICE G.CARPENTER LIVING TRUST	P 20 TERRY DOWNS TODD DOWNS	P 25 KIRBY C.MASDEN DEBORAH F.MASDEN (wf)
P 10 ERNEST BATES EDNA BATES (wf)	P 21 DAVID A.KENNETT	P 30 JENNIFER MEYER JEREMY MEYER
P 17 RICHARD P.HARRIS TAMMY D.HARRIS (Wf)	P 23 NICKIE REINHART DANA ZIMMERMAN	P 191 TOM W.ADAMS LOLA M.ADAMS (wf)
P 18 RICK L.KIMBERLIN REBECCA KIMBERLIN (wf)	P 24 DAVID L.STIEBY JOYCE ANN STIEBY (wf)	

RIGHT OF WAY PLANS

SCALE: 1"=100'

RIGHT OF WAY STRIP MAP
STA 120+00 TO STA 145+00

FILE NAME: V:\1785\ACTIVE\1785I001\ROADWAY\PLAN SHEETS\ROW PLANS\RW_STRIP_MAP_I2000.DGN
USER: gnsharp
DATE PLOTTED: February 16, 2021
E-SHEET NAME:
MicroStation v8.11.9.832

COUNTY OF	ITEM NO.	SHEET NO.
KENTON	6-162.00	R70

REVISION DATE: JANUARY 28, 2019

MATCHLINE STA. 145+00

MATCHLINE STA. 170+00

145+00

150+00

155+00

160+00

A 165+00

A 170+00

DAVID L.SETTERS
REBECCA A.
SETTERS (wf)

P 29

P 34

CHESTER
LANCE
KEMPER

TEMP.
ESMT.

PROPOSED R/W
& C/A

EXISTING R/W

BEGIN C/A
147+30.00
98.98

END C/A
146+82.00
97.22

END C/A
148+34.00
100.94

BEGIN C/A
148+84.55
99.97

P 35

P 30

PROPOSED R/W
& C/A

PERM.
L.L. ESMT.

LOUISA A.ODER

PERM.
ESMT.

L.L.

P 26

ENID MAIR MASON (widow)

P 36

LLOYD SPEGAL
JUDITH LYNN SPEGAL (wf)

END C/A
151+20.00
290.00

TEMP.
ESMT.

BEGIN C/A
154+15.00
225.00

P 37

FURLONG HILL,LLC

PROPOSED R/W & C/A

END C/A
9+08.77
28.00

BEGIN C/A
9+14.46
32.72

TEMP.
ESMT.

LOT 1

LOT 2

LOT

LOT 9

LOT 8

FURLONG HILL,LLC

TEMP.
ESMT.

PERM.ESMT.

PERM. ESMT.

EXISTING R/W

PROPOSED R/W & C/A

EXISTING R/W

PROPOSED R/W & C/A

END C/A
157+76.00
156.39

BEGIN C/A
158+28.00
154.37

TEMP.
ESMT.

P 36

LLOYD SPEGAL
JUDITH LYNN SPEGAL (wf)

P 29 JOHN E.LEMBERG
CHRISTY A.LEMBERG (Wf)

P 30 JENNIFER MEYER
JEREMY MEYER

RIGHT OF WAY PLANS

SCALE: 1"=100'

RIGHT OF WAY STRIP MAP
STA 145+00 TO STA 170+00

MicroStation v8.11.9.832 | E-SHEET NAME: | USER: ghsharp DATE PLOTTED: February 11, 2019 | FILE NAME: W:\1785\ACTIVE\1785601\ROADWAY\PLAN SHEETS\ROW PLANS\RW_STRIP_MAP_14500.DGN

COUNTY OF	ITEM NO.	SHEET NO.
KENTON	6-162.00	R71

REVISION DATE: APRIL 20, 2021

MATCHLINE STA. 90+00

MATCHLINE STA. 170+00

MATCHLINE STA. 195+00

A 170+00

A 175+00

95+00

A 180+00

A 185+00

A 190+00

A 195+00

P 53 BRISTOW ROAD, LLC

P 51 DANIEL P. COOK

P 53 BRISTOW ROAD, LLC

P 53 BRISTOW ROAD, LLC

P 37 FURLONG HILL, LLC

P 44 MELISSA KAY HOFFMAN
CYNTHIA M. DOERFLEIN

P 45 EAST KENTUCKY POWER COOPERATIVE, INC.

P 48 L.L. JENNIFER LEONHART
LAND LOCKED

P 50 GLENHURST DEVELOPMENT, LLC

P 36 LLOYD SPEGAL
JUDITH LYNN SPEGAL (wf)

P 43 Y. WOLTENBERG, NOCERO, C. LITMER

P 45 BONIFACE NOCERO,
RINZY (AKA RIZZIERO) NOCERO
ROGER (AKA ROGGIERO) NOCERO
ERMINA DESIDERIO
MACISTRO NOCERO

TEMP. ESMT.
PROPOSED R/W
PERM. ESMT.
PERM. ESMT.
TEMP. ESMT.
PROPOSED R/W & C/A
TEMP. ESMT.
PERM. ESMT.
TEMP. ESMT.
PERM. ESMT.
TEMP. ESMT.
PERM. ESMT.

COUNTY OF	ITEM NO.	SHEET NO.
KENTON	6-162.00	R72

REVISION DATE: APRIL 20, 2021

A 195+00 A 200+00 A 205+00 A 210+00 A 215+00 A 220+00 A 225+00

MATCHLINE STA. 195+00

MATCHLINE STA. 225+00

P 53 BRISTOW ROAD,LLC

P 62 DAVID WILSON CHARLENE WILSON (wf)

P 56 L.L. LAND LOCKED

WILLIAM P.& CYNTHIA L.WILSON

RYAN M.& TERESA A.GINN

P 64

P 60

JAMES WM THATCHER

DANIEL L.& KELLY S.GILL

P 194

P 68

KENTON COUNTY WATER DISTRICT NO.1

P 79

P 195

TEMPORARY ESMT.

EXISTING R/W

EX RR R/W

COMMONWEALTH OF KENTUCKY

P 69

P 53 BRISTOW ROAD,LLC

TEMP. ESMT.

PROP. R/W

PERM. ESMT.

PROPOSED R/W & C/A

EXISTING R/W

BEGIN C/A 11+00.00 32.00

END C/A 11+00.00 32.00

END C/A A 207+55.00 49.00

BEGIN C/A A 208+05.00 49.00

END C/A A 214+35.00 50.90

BEGIN C/A A 214+90.00 51.27

END C/A A 217+46.39 100.36

BEGIN C/A A 218+20.00 69.85

END C/A A 221+49.82 140.57

BEGIN C/A A 224+29.74 72.85

BEGIN C/A A 224+90.30 129.40

END C/A A 208+25.00 118.78

BEGIN C/A A 208+75.00 112.44

END C/A A 211+00.00 78.60

BEGIN C/A A 213+20.00 58.71

BEGIN C/A A 195+40.00 99.20

END C/A 15+00.00 104.77

BEGIN C/A 15+00.00 80.28

END C/A 22+80.00 207.27

P 50 GLENHURST DEVELOPMENT, LLC

EXISTING R/W

P 54 RANDY C. WORLEY DONNA WORLEY (wf)

STEPHEN DORA

SHARRON M. STOUT

P 55 DANIEL J. BRADFORD HILLARY R. BRADFORD (wf)

P 52 JEFFREY M. HANS STACEE D. HANS (wf)

P 57

P 58

P 59 PATRICIA I.TUNNING, IRENE T.WALTER & LUCILLE LYNCH

P 63

P 65

P 66

P 67 CHARLES W.NOLAND ANNA NOLAND (wf)

P 56 CARRIE MARIE KUNSTMAN	P 63 COMMONWEALTH OF KENTUCKY	P 67 WILLIAM H.RUHOLT JUDITH A.RUHOLT (wf)	P 194 ADELAIDE ROSS ROBERT C.ROARK
P 57 RONALD FLACK PATRICIA A.FLACK (wf)	P 64 JOHN D.PARRETT	P 68 GERALD A.MONTGOMERY MARCIA V.MONTGOMERY (wf)	P 195 TOMAS D.BARBOSA YENY D.BARBOSA (wf)
P 58 J.MICHAEL BALLARD (MARRIED)	P 65 COMMONWEALTH OF KENTUCKY	P 69 LORETTA HENSLEY	
P 60 LOUIS KUNSTMAN MARIE KUNSTMAN (wf)	P 66 LEWIS N.RICHARDS GLORIA D.RICHARDS (wf)	P 79 LOUISVILLE & NASHVILLE RAILROAD	

SCALE: 1"=100'

RIGHT OF WAY PLANS

RIGHT OF WAY STRIP MAP
STA 195+00 TO STA 225+00

FILE NAME: V:\1785\ACTIVE\178561001\ROADWAY\PLAN SHEETS\ROW PLANS\RW_STRIP_MAP_19500.DGN
USER: ghsharp
DATE PLOTTED: April 20, 2021
E-SHEET NAME:
MicroStation v8.11.9.832

COUNTY OF	ITEM NO.	SHEET NO.
KENTON	6-162.00	R73

REVISION DATE: AUGUST 5, 2019

P 90 STEVEN L.VOGELPOHL ROSARIO VOGELPOHL (Wf)	P 98 KATRINA PAYNE
P 93 BRYAN A.MITCHELL	P 99 TAYLOR MADE INVESTMENT,LLC
P 94 DANIELLE FARMER	P 100 CHESIRE RIDGE,INC.& HOPPENJANS DEVELOPMENT,INC.
P 95 MICHAEL C.MARTIN GINA M.MARTIN (Wf)	P 197 RALPH E.CHAFFIN CONNIE R.CHAFFIN (wf)
P 96 JAMES GRIZZELL	P 198 JASON YOUNG JESSICA YOUNG (wf)
P 97 HABITAT FOR HUMANITY TRISTATE,OHIO KENTUCKY INDIANA,INC.	P 199 TIMOTHY FERGUSON LORIE FERGUSON (wf)

P 75 THOMAS ROSENACKER BARBARA ROSENACKER (Wf)	P 103 DONNA RUTH WESTERKAMP	P 113 BROOK WILSON
P 79 LOUISVILLE & NASHVILLE RAILROAD	P 109 ALEXANDRO D.RICHARDSON MONICA L.RICHARDSON (Wf)	P 115 DONALD LAAKE AS TRUSTEE OF THE KAREN LAAKE TRUST 2003
P 86 EDWARD LUEBBE	P 110 BRUCE W.RAINES DEBRA J.RAINES (Wf)	P 202 JASON D.LEMMOND SHELLY L.LEMMOND (Wf)
P 87 RODNEY SCOTT SMITH PEGGY SUE LYNCH	P 111 RONALD A.WEYMAN NICOLE L.WEYMAN (Wf)	P 203 DAVID L.DAVIS SUSAN C.DAVIS (Wf)
P 88 KEVIN P.BARTH	P 112 ELIZABETH A.TRENKAMP MELANIE E.TRENKAMP	

RIGHT OF WAY PLANS

RIGHT OF WAY STRIP MAP
STA 225+00 TO STA 255+00

SCALE: 1"=100'

FILE NAME: V:\1785\ACTIVE\17856100\ROADWAY\PLAN SHEETS\ROW PLANS\RW_STRIP_MAP_22500.DGN
USER: ghshorp
DATE PLOTTED: August 5, 2019
E-SHEET NAME:
MicroStation v8.11.9.832

COUNTY OF	ITEM NO.	SHEET NO.
KENTON	6-162.00	R74

REVISION DATE: AUGUST 5, 2019

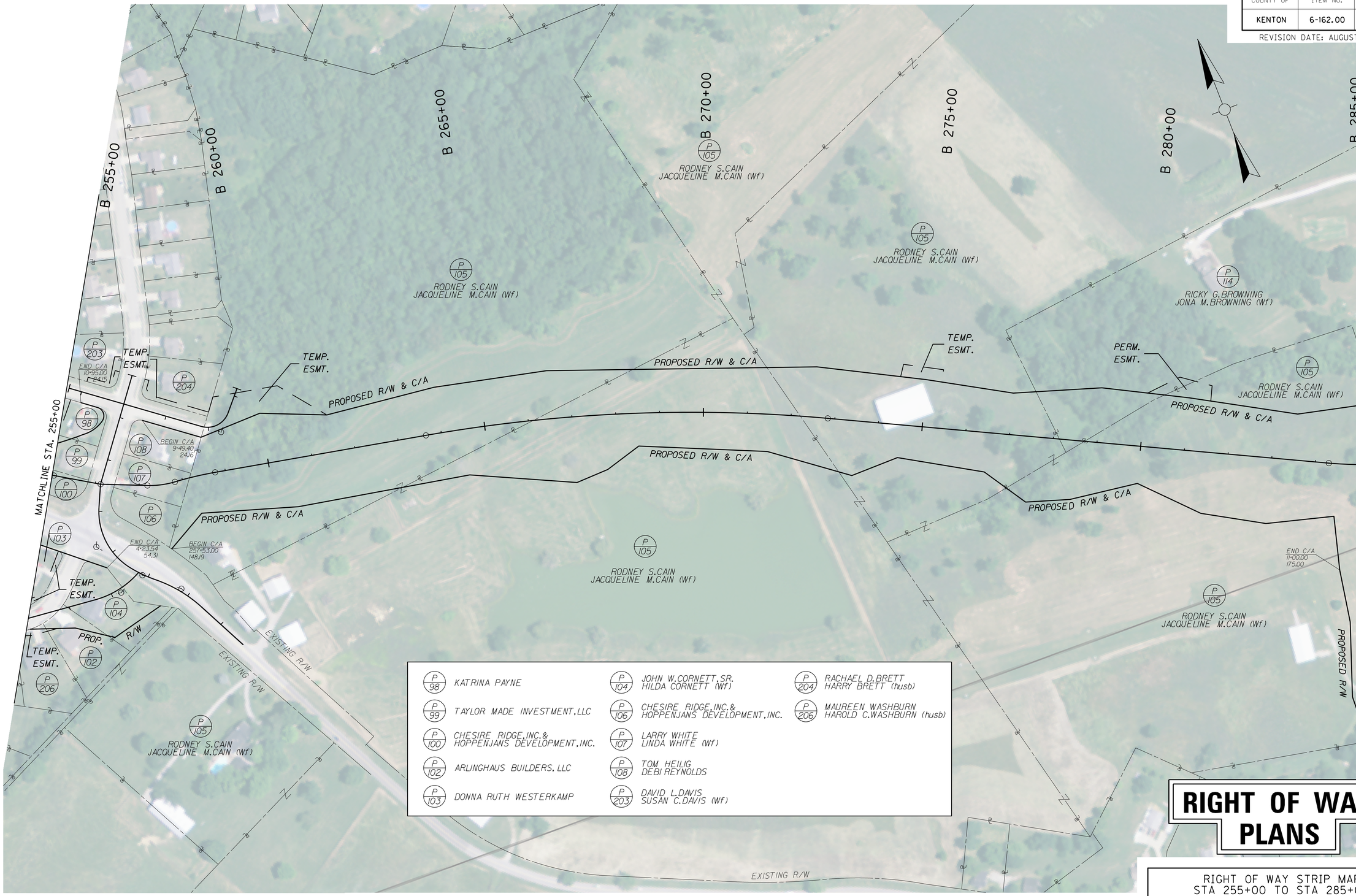

RIGHT OF WAY PLANS

RIGHT OF WAY STRIP MAP
STA 255+00 TO STA 285+00

SCALE: 1"=100'

FILE NAME: V:\1785\ACTIVE\17856100\ROADWAY\PLAN SHEETS\ROW PLANS\RW_STRIP_MAP_25500.DGN

USER: ghsharp
DATE PLOTTED: August 5, 2019

E-SHEET NAME:

MicroStation v8.11.9.832

COUNTY OF	ITEM NO.	SHEET NO.
KENTON	6-162.00	R78

REVISION DATE: MAY 7, 2021

41+02
45+00
50+00
55+00
60+00

P 173 LAWRENCE GLASS JOAN GLASS

P 156 MELANIE McKINNEY (Wf) DAVID McKINNEY

P 157 TIMOTHY EDWARD SCHRECK

P 158 GEORGE HOWARD CARNEY ESTELLE CARNEY (Wf)

TEMP. ESMT.

P 154 BRADLEY J.GAMM

MARVIN J. CALLAHAN VICKY J. CALLAHAN (Wf)

RALPH E. COOPER,Sr. PATRICIA F. COOPER (Wf)

GREGORY C. DUE JENNIFER J. DUE (Wf)

MARTY JOHNSON MICOLE JOHNSON (Wf)

EXISTING R/W

PROPOSED R/W

P 163

P 164

PERM. ESMT.

MATCHLINE STA. 60+00

P 159

P 160

P 162

P 149 MURRAY GUTTMAN A.J.RANDMAN

KENTON COUNTY BOARD OF EDUCATION FINACE CORP

STA. 46+00
BEGIN RIGHT OF WAY

- P 159 961 STILLMEADOW,LLC
- P 160 ALEX RAGUS OLIVIA R.RAGUS (Wf)
- P 162 965 STILLMEADOW,LLC
- P 163 TERRENCE KOENIG SHAHRZAD ANSARI-KOENIG (Wf)
- P 164 MICHAEL A.PHILLIPS DEBORAH S.PHILLIPS (Wf)

RIGHT OF WAY PLANS

RIGHT OF WAY STRIP MAP
STA 41+02 TO STA 60+00

SCALE: 1"=100'

FILE NAME: V:\7856\ACTIVE\7856100\ROADWAY\PLAN SHEETS\ROW PLANS\RW_STRIP_MAP_4600.DGN
USER: gnsharp
DATE PLOTTED: May 7, 2021
E-SHEET NAME:
MicroStation v8.11.9.832

COUNTY OF	ITEM NO.	SHEET NO.
KENTON	6-162.00	R79

REVISION DATE: MAY 7, 2021

60+00
65+00
70+00
75+00
80+00
85+00
90+00

MATCHLINE STA. 60+00

MATCHLINE STA. 90+00

P 174 WALTER HAMLIN AND GENEVA H.HAMLIN REVOCABLE TRUST WALTER HAMLIN AND GENEVA H.HAMLIN (TRUSTEES)

P 176 ALBERTA BORNE DONALD C. BORNE (Husb)

P 178 R.EHMET HAYES

P 53 BRISTOW ROAD,LLC

P 173 LAWRENCE GLASS JOAN GLASS

P 169 DAVID JACKSON FRANCES JACKSON (Wf)

P 164 MICHAEL A.PHILLIPS DEBORAH S.PHILLIPS (Wf)

P 165 SCOTT GLASS KELLY GLASS (Wf)

P 166 1740 MARQUETTE PROPERTIES,LLC

P 167 937 STILLMEADOW,LLC

P 168 STEPHEN J.CRILE

P 175 AZA CONSTRUCTION,INC.

P 177 MICHAEL BROOKS

P 179 DEBRA J.MARVIN DWIGHT MARVIN (husb)

P 170 BEECHGROVE HOMEOWNERS ASSOCIATION,INC.

P 180 GWEN D.McCORMACK

P 183 CRAIG S.JOBE SUSAN E.JOBE (Wf)

P 184 KEVIN W.WHITAKER

P 185 RAYMOND C. MILLER ANN W. MILLER (Wf)

P 186 CHARLES DAVID BAKER

P 37 FURLONG HILL,LLC

LOT 1

LOT 2

PERM. ESMT.

TEMP. ESMT.

PROPOSED R/W

EXISTING R/W

RIGHT OF WAY PLANS

RIGHT OF WAY STRIP MAP
STA 60+00 TO STA 90+00

SCALE: 1"=100'

FILE NAME: V:\17856\ACTIVE\17856100\ROADWAY\PLAN SHEETS\ROW PLANS\RW_STRIP_MAP_6000.DGN
USER: gnsharp
DATE PLOTTED: May 7, 2021
E-SHEET NAME:
MicroStation v8.11.9.832

COUNTY OF	ITEM NO.	SHEET NO.
KENTON	6-162.00	R63

REVISION DATE: APRIL 20, 2021

RIGHT OF WAY MONUMENT POINTS

ROUTE	STATION	OFFSET	SIDE	TYPE	DESCRIPTON	PROJECT COORDINATES		STATE PLANE COORDINATES	
						NORTH (Y)	EAST (X)	NORTH (Y)	EAST (X)
KY 536	102+89.45	254.00	LT	1	R/W MONUMENT	531,302.1016	1,536,367.7357	531,279.7772	1,536,303.1802
KY 536	103+39.00	264.00	LT	1	R/W MONUMENT	531,313.1228	1,536,417.0699	531,290.7980	1,536,352.5124
KY 536	103+72.63	97.46	RT	1	R/W MONUMENT	530,952.4346	1,536,458.1577	530,930.1249	1,536,393.5984
KY 536	106+23.00	134.77	LT	1	R/W MONUMENT	531,189.7232	1,536,704.6920	531,167.4035	1,536,640.1224
KY 536	122+00.00	65.41	LT	1	R/W MONUMENT	530,950.7999	1,538,281.5036	530,928.4903	1,538,216.8677
KY 536	122+50.00	86.67	LT	1	R/W MONUMENT	530,965.6119	1,538,333.7758	530,943.3017	1,538,269.1377
KY 536	123+00.00	82.78	LT	1	R/W MONUMENT	530,955.4785	1,538,382.8924	530,933.1687	1,538,318.2523
KY 536	123+60.00	69.00	LT	1	R/W MONUMENT	530,934.2794	1,538,440.6888	530,911.9705	1,538,376.0462
KY 536	123+75.66	68.76	LT	1	R/W MONUMENT	530,932.0755	1,538,456.1912	530,909.7667	1,538,391.5480
KY 536	123+81.32	49.00	LT	1	R/W MONUMENT	530,911.7620	1,538,459.3284	530,889.4540	1,538,394.6851
KY 536	124+07.79	49.00	LT	1	R/W MONUMENT	530,908.4403	1,538,485.5867	530,886.1325	1,538,420.9423
KY 536	124+70.00	115.91	RT	1	R/W MONUMENT	530,738.3045	1,538,507.0413	530,716.0038	1,538,442.3960
KY 536	125+14.79	80.51	LT	1	R/W MONUMENT	530,903.0825	1,538,619.0099	530,880.7749	1,538,554.3598
KY 536	126+62.21	113.95	LT	1	R/W MONUMENT	530,852.6948	1,538,773.6994	530,830.3893	1,538,709.0428
KY 536	129+30.57	49.00	RT	1	R/W MONUMENT	530,601.9289	1,538,932.0913	530,579.6339	1,538,867.4281
KY 536	130+44.93	49.00	RT	1	R/W MONUMENT	530,555.9546	1,539,036.8106	530,533.6616	1,538,972.1430
KY 536	133+62.97	49.00	RT	1	R/W MONUMENT	530,399.0365	1,539,298.0534	530,376.7501	1,539,233.3748
KY 536	136+17.57	49.00	RT	1	R/W MONUMENT	530,241.3090	1,539,497.9112	530,219.0292	1,539,433.2242
KY 536	138+21.11	49.00	RT	1	R/W MONUMENT	530,124.3396	1,539,673.8594	530,102.0647	1,539,609.1650
KY 536	141+00.00	49.00	RT	1	R/W MONUMENT	529,989.3401	1,539,917.9005	529,967.0709	1,539,853.1959
KY 536	141+25.00	93.18	RT	1	R/W MONUMENT	529,938.5747	1,539,918.3890	529,916.3076	1,539,853.6843
KY 536	143+00.00	90.00	RT	1	R/W MONUMENT	529,857.2195	1,540,070.6327	529,834.9558	1,540,005.9217
KY 536	143+25.00	49.00	RT	1	R/W MONUMENT	529,880.0555	1,540,112.3671	529,857.7909	1,540,047.6543
KY 536	148+00.00	49.00	RT	1	R/W MONUMENT	529,595.4787	1,540,476.6657	529,573.2260	1,540,411.9376
KY 536	148+75.00	101.14	RT	1	R/W MONUMENT	529,506.2471	1,540,491.0471	529,483.9982	1,540,426.3184
KY 536	150+00.00	145.44	LT	1	R/W MONUMENT	529,588.1562	1,540,755.0901	529,565.9038	1,540,690.3503
KY 536	150+50.00	115.00	RT	1	R/W MONUMENT	529,370.9622	1,540,602.9119	529,348.7190	1,540,538.1785
KY 536	151+20.00	290.00	LT	1	R/W MONUMENT	529,602.6292	1,540,942.4047	529,580.3762	1,540,877.6570
KY 536	153+00.00	195.00	RT	1	R/W MONUMENT	529,135.7889	1,540,719.5031	529,113.5555	1,540,654.7648
KY 536	154+15.00	225.00	LT	1	R/W MONUMENT	529,345.5903	1,541,101.0898	529,323.3481	1,541,036.3355
KY 536	154+50.00	100.00	LT	1	R/W MONUMENT	529,233.4492	1,541,035.7111	529,211.2117	1,540,970.9595
KY 536	156+00.00	105.00	RT	1	R/W MONUMENT	528,983.0566	1,540,992.9494	528,960.8297	1,540,928.1996
KY 536	157+00.00	160.00	RT	1	R/W MONUMENT	528,872.9769	1,541,023.0733	528,850.7546	1,540,958.3222
KY 536	158+50.00	170.00	LT	1	R/W MONUMENT	529,001.7224	1,541,358.9278	528,979.4947	1,541,294.1626
KY 536	160+00.00	155.00	RT	1	R/W MONUMENT	528,661.6116	1,541,248.4104	528,639.3982	1,541,183.6499
KY 536	161+09.92	49.00	LT	1	R/W MONUMENT	528,746.6857	1,541,465.1044	528,724.4687	1,541,400.3348
KY 536	161+14.16	49.00	LT	1	R/W MONUMENT	528,744.0998	1,541,468.3634	528,721.8829	1,541,403.5936
KY 536	161+25.00	130.00	RT	1	R/W MONUMENT	528,597.0564	1,541,365.7151	528,574.8457	1,541,300.9496
KY 536	161+75.00	95.00	RT	1	R/W MONUMENT	528,593.4466	1,541,426.6410	528,571.2360	1,541,361.8730
KY 536	165+66.32	49.00	LT	1	R/W MONUMENT	528,463.3498	1,541,822.8014	528,441.1447	1,541,758.0167
KY 536	166+00.00	95.00	RT	1	R/W MONUMENT	528,328.5520	1,541,761.7097	528,306.3526	1,541,696.9276
KY 536	168+00.00	95.00	RT	1	R/W MONUMENT	528,211.9523	1,541,939.3742	528,189.7578	1,541,874.5846
KY 536	169+00.00	95.00	RT	1	R/W MONUMENT	528,162.7848	1,542,033.6352	528,140.5923	1,541,968.8417
KY 536	171+00.00	89.36	RT	1	R/W MONUMENT	528,089.1732	1,542,232.6667	528,066.9838	1,542,167.8648
KY 536	171+40.42	49.00	LT	1	R/W MONUMENT	528,209.1799	1,542,312.7652	528,186.9855	1,542,247.9599
KY 536	172+84.78	52.82	LT	1	R/W MONUMENT	528,182.0627	1,542,447.0752	528,159.8694	1,542,382.2643
KY 536	173+06.46	53.50	LT	1	R/W MONUMENT	528,180.0743	1,542,467.2417	528,157.8811	1,542,402.4300
KY 536	173+20.54	56.88	LT	1	R/W MONUMENT	528,181.9992	1,542,480.6556	528,159.8059	1,542,415.8433
KY 536	173+59.34	66.08	LT	1	R/W MONUMENT	528,188.4179	1,542,517.0906	528,166.2244	1,542,452.2768
KY 536	173+99.37	67.20	LT	1	R/W MONUMENT	528,188.5026	1,542,553.8352	528,166.3091	1,542,489.0198
KY 536	174+00.00	165.22	RT	1	R/W MONUMENT	527,956.0848	1,542,553.8217	527,933.9010	1,542,489.0063
KY 536	174+38.81	60.18	LT	1	R/W MONUMENT	528,182.2519	1,542,590.2994	528,160.0586	1,542,525.4825
KY 536	174+50.00	220.00	RT	1	R/W MONUMENT	527,903.1117	1,542,617.2779	527,880.9301	1,542,552.4598
KY 536	174+53.16	57.59	LT	1	R/W MONUMENT	528,180.3889	1,542,603.7221	528,158.1957	1,542,538.9046
KY 536	174+85.00	60.56	LT	1	R/W MONUMENT	528,184.6602	1,542,641.0340	528,162.4668	1,542,576.2149
KY 536	175+50.00	315.00	RT	1	R/W MONUMENT	527,806.8081	1,542,629.4016	527,784.6306	1,542,564.5830
KY 536	177+03.90	214.76	RT	1	R/W MONUMENT	527,881.9119	1,542,706.6839	527,859.7312	1,542,641.8621
KY 536	177+54.55	127.75	RT	1	R/W MONUMENT	527,915.5016	1,542,805.0879	527,893.3195	1,542,740.2620
KY 536	177+54.87	368.21	RT	1	R/W MONUMENT	527,719.7177	1,542,665.4918	527,697.5438	1,542,600.6717
KY 536	177+67.21	69.52	LT	1	R/W MONUMENT	528,071.0878	1,542,927.0728	528,048.8992	1,542,862.2417
KY 536	177+73.21	281.22	RT	1	R/W MONUMENT	527,766.4222	1,542,753.1431	527,744.2464	1,542,688.3193
KY 536	177+76.03	366.02	RT	1	R/W MONUMENT	527,689.2587	1,542,717.2009	527,667.0861	1,542,652.3786
KY 536	177+78.99	287.22	RT	1	R/W MONUMENT	527,754.3091	1,542,762.3511	527,732.1338	1,542,697.5269
KY 536	178+33.75	49.00	LT	1	R/W MONUMENT	528,029.9461	1,542,969.3972	528,007.7592	1,542,904.5644
KY 536	180+02.90	49.00	LT	1	R/W MONUMENT	527,944.3683	1,543,126.7201	527,922.1850	1,543,061.8806
KY 536	186+50.00	83.48	RT	1	R/W MONUMENT	527,468.2790	1,543,584.5651	527,446.1157	1,543,519.7064

RIGHT OF WAY MONUMENT POINTS

ROUTE	STATION	OFFSET	SIDE	TYPE	DESCRIPTON	PROJECT COORDINATES		STATE PLANE COORDINATES	
						NORTH (Y)	EAST (X)	NORTH (Y)	EAST (X)
KY 536	189+50.00	125.00	RT	1	R/W MONUMENT	527,263.9433	1,543,808.1075	527,241.7886	1,543,743.2394
KY 536	191+75.00	120.00	RT	1	R/W MONUMENT	527,140.4607	1,543,996.2619	527,118.3112	1,543,931.3859
KY 536	192+39.08	88.13	RT	1	R/W MONUMENT	527,130.3735	1,544,067.1165	527,108.2244	1,544,002.2375
KY 536	193+00.00	105.00	LT	1	R/W MONUMENT	527,254.8902	1,544,226.8175	527,232.7359	1,544,161.9318
KY 536	198+00.00	130.00	LT	1	R/W MONUMENT	526,991.9240	1,544,652.8149	526,969.7807	1,544,587.9113
KY 536	199+50.00	125.00	LT	1	R/W MONUMENT	526,911.3915	1,544,765.7838	526,889.2516	1,544,700.8755
KY 536	200+83.00	164.00	LT	1	R/W MONUMENT	526,847.6234	1,544,928.5941	526,825.4862	1,544,863.6789
KY 536	203+50.00	150.00	LT	1	R/W MONUMENT	526,674.4705	1,545,080.2535	526,652.3406	1,545,015.3320
KY 536	204+00.00	93.76	RT	1	R/W MONUMENT	526,441.0177	1,544,993.4214	526,418.8976	1,544,928.5035
KY 536	204+50.00	145.00	LT	1	R/W MONUMENT	526,605.6643	1,545,173.2311	526,583.5373	1,545,108.3056
KY 536	206+00.00	110.00	LT	1	R/W MONUMENT	526,488.0074	1,545,272.6386	526,465.8853	1,545,207.7090
KY 536	208+50.00	100.00	LT	1	R/W MONUMENT	526,305.9736	1,545,466.6943	526,283.8592	1,545,401.7565
KY 536	210+00.00	100.00	LT	1	R/W MONUMENT	526,196.6369	1,545,571.4232	526,174.5270	1,545,506.4810
KY 536	211+50.00	90.00	LT	1	R/W MONUMENT	526,081.2892	1,545,667.8332	526,059.1842	1,545,602.8870
KY 536	211+55.63	70.23	RT	1	R/W MONUMENT	525,966.5106	1,545,555.8940	525,944.4104	1,545,490.9525
KY 536	212+00.00	70.00	LT	1	R/W MONUMENT	526,031.3244	1,545,687.9212	526,009.2215	1,545,622.9741
KY 536	213+00.00	80.00	LT	1	R/W MONUMENT	525,965.9414	1,545,764.2433	525,943.8412	1,545,699.2930
KY 536	213+50.00	75.00	RT	1	R/W MONUMENT	525,822.7013	1,545,686.7366	525,800.6072	1,545,621.7896
KY 536	214+00.00	75.00	LT	1	R/W MONUMENT	525,890.1944	1,545,829.7215	525,868.0974	1,545,764.7685
TOEBBEN DR	11+57.00	40.34	RT	3	R/W MONUMENT	530,895.7522	1,536,471.9990		
TOEBBEN DR	12+79.87	35.50	RT	3	R/W MONUMENT	530,778.7118	1,536,462.2772		
TOEBBEN DR	14+00.00	35.50	RT	3	R/W MONUMENT	530,660.6119	1,536,440.3053		
TOEBBEN DR	16+00.00	23.66	RT	3	R/W MONUMENT	530,461.8200	1,536,415.3653		

RIGHT OF WAY PLANS

SCALE: NTS

KY 536
RIGHT OF WAY MONUMENTS

MicroStation v8.11.9.832 | E-SHEET NAME: | USER: gnsharp DATE PLOTTED: April 20, 2021 | FILE NAME: V:\1785\ACTIVE\17856100\ROADWAY\PLAN SHEETS\ROW PLANS\RW_MONUMENT_SUM_1.DGN

COUNTY OF	ITEM NO.	SHEET NO.
KENTON	6-162.00	R66

REVISION DATE: APRIL 20, 2021

RIGHT OF WAY MONUMENT POINTS

ROUTE	STATION	OFFSET	SIDE	TYPE	DESCRIPTON	PROJECT COORDINATES		STATE PLANE COORDINATES	
						NORTH (Y)	EAST (X)	NORTH (Y)	EAST (X)
Bristow	9+25.44	32.00	LT	1	R/W MONUMENT	528,786.3693	1,541,459.6414	528,764.1506	1,541,394.8720
KY 1303	46+00.00	49.09	RT	1	R/W MONUMENT	533,255.0368	1,541,793.3939	533,232.6304	1,541,728.6105
KY 1303	47+00.00	70.00	RT	1	R/W MONUMENT	533,154.4940	1,541,811.5143	533,132.0918	1,541,746.7301
KY 1303	49+00.00	95.00	RT	1	R/W MONUMENT	532,959.7159	1,541,863.3455	532,937.3219	1,541,798.5591
KY 1303	51+00.00	105.00	RT	1	R/W MONUMENT	532,770.5632	1,541,929.0819	532,748.1771	1,541,864.2928
KY 1303	53+00.00	100.00	RT	1	R/W MONUMENT	532,587.0360	1,542,008.7234	532,564.6576	1,541,943.9309
KY 1303	53+16.03	48.95	LT	1	R/W MONUMENT	532,628.0322	1,542,152.8117	532,605.6521	1,542,088.0132
KY 1303	53+50.00	49.00	LT	1	R/W MONUMENT	532,596.5653	1,542,165.5998	532,574.1865	1,542,100.8007
KY 1303	54+00.00	100.00	RT	1	R/W MONUMENT	532,494.3349	1,542,046.2266	532,471.9604	1,541,981.4325
KY 1303	55+92.21	49.00	LT	1	R/W MONUMENT	532,372.0358	1,542,256.4355	532,349.6665	1,542,191.6326
KY 1303	56+00.00	100.00	RT	1	R/W MONUMENT	532,309.4410	1,542,121.0057	532,287.0743	1,542,056.2085
KY 1303	57+00.00	90.00	RT	1	R/W MONUMENT	532,225.0422	1,542,161.7726	532,202.6790	1,542,096.9737
KY 1303	57+63.56	105.00	RT	1	R/W MONUMENT	532,164.0831	1,542,163.9895	532,141.7225	1,542,099.1905
KY 1303	58+17.45	110.50	RT	1	R/W MONUMENT	532,114.4753	1,542,170.6090	532,092.1168	1,542,105.8097
KY 1303	58+46.71	49.00	LT	1	R/W MONUMENT	532,120.2431	1,542,332.5452	532,097.8843	1,542,267.7391
KY 1303	60+00.00	67.64	RT	1	R/W MONUMENT	531,946.6122	1,542,249.1463	531,924.2607	1,542,184.3437
KY 1303	61+33.72	49.00	LT	1	R/W MONUMENT	531,839.0994	1,542,390.3109	531,816.7525	1,542,325.5024
KY 1303	61+94.32	80.71	RT	1	R/W MONUMENT	531,749.2859	1,542,278.3661	531,726.9427	1,542,213.5623
KY 1303	62+85.00	75.00	RT	1	R/W MONUMENT	531,657.9265	1,542,313.4790	531,635.5872	1,542,248.6737
KY 1303	63+45.00	64.00	RT	1	R/W MONUMENT	531,602.5551	1,542,347.7055	531,580.2181	1,542,282.8988
KY 1303	63+60.00	80.00	RT	1	R/W MONUMENT	531,581.3374	1,542,339.6834	531,559.0013	1,542,274.8770
KY 1303	64+50.00	95.00	RT	1	R/W MONUMENT	531,487.4403	1,542,371.0033	531,465.1081	1,542,306.1956
KY 1303	64+94.05	49.00	LT	1	R/W MONUMENT	531,522.9475	1,542,517.6174	531,500.6138	1,542,452.8035
KY 1303	65+89.41	49.00	LT	1	R/W MONUMENT	531,442.3038	1,542,568.5117	531,419.9735	1,542,503.6957
KY 1303	66+00.00	95.00	RT	1	R/W MONUMENT	531,356.4968	1,542,452.3857	531,334.1701	1,542,387.5746
KY 1303	70+00.00	100.00	RT	1	R/W MONUMENT	531,023.8281	1,542,625.6334	531,001.5154	1,542,560.8150
KY 1303	70+61.95	49.00	LT	1	R/W MONUMENT	531,008.7153	1,542,785.6168	530,986.4033	1,542,720.7917
KY 1303	70+70.00	49.00	RT	1	R/W MONUMENT	530,976.1239	1,542,692.8459	530,953.8132	1,542,628.0247
KY 1303	71+56.00	50.00	RT	1	R/W MONUMENT	530,895.9748	1,542,708.8118	530,873.6675	1,542,643.9899
KY 1303	71+81.33	69.61	RT	1	R/W MONUMENT	530,869.4456	1,542,693.0689	530,847.1394	1,542,628.2477
KY 1303	73+12.20	49.00	LT	1	R/W MONUMENT	530,749.2581	1,542,820.7992	530,726.9570	1,542,755.9726
KY 1303	84+13.62	80.00	RT	1	R/W MONUMENT	529,646.6495	1,542,702.4348	529,624.3947	1,542,637.6132
KY 1303	86+50.00	80.00	RT	1	R/W MONUMENT	529,410.2790	1,542,704.7161	529,388.0341	1,542,639.8944
KY 1303	93+00.00	90.00	RT	1	R/W MONUMENT	528,760.2127	1,542,700.9897	528,737.9951	1,542,636.1681
KY 1303	95+82.00	49.00	LT	1	R/W MONUMENT	528,479.5673	1,542,842.7048	528,457.3615	1,542,777.8773
KY 1303	96+00.00	100.00	RT	1	R/W MONUMENT	528,460.1302	1,542,693.8854	528,437.9252	1,542,629.0641
KY 1303	96+54.31	49.07	LT	1	R/W MONUMENT	528,407.2623	1,542,843.4678	528,385.0596	1,542,778.6402
KY 1303	96+75.00	130.00	RT	1	R/W MONUMENT	528,384.8441	1,542,664.6106	528,362.6423	1,542,599.7906
KY 1303	96+82.75	48.95	LT	1	R/W MONUMENT	528,378.8214	1,542,843.6314	528,356.6199	1,542,778.8038
KY 1303	97+50.00	145.00	RT	1	R/W MONUMENT	528,297.7637	1,542,653.7430	528,275.5656	1,542,588.9234
KY 1303	99+03.06	96.91	LT	1	R/W MONUMENT	528,139.8274	1,542,896.2326	528,117.6359	1,542,831.4028
Hogreffe Road	10+00.00	90.00	RT	1	R/W MONUMENT	526,957.0459	1,545,030.8935	526,934.9041	1,544,965.9740
Hogreffe Road	10+00.00	116.00	LT	1	R/W MONUMENT	526,826.6864	1,545,190.4003	526,804.5501	1,545,125.4741
Hogreffe Road	14+97.00	79.80	LT	1	R/W MONUMENT	526,504.9144	1,544,813.5318	526,482.7916	1,544,748.6215
Banklick Road	14+41.24	56.88	RT	1	R/W MONUMENT	524,204.0029	1,546,616.5169	524,181.9768	1,546,551.5308
Caln Property Appr.	15+60.00	53.82	RT	1	R/W MONUMENT	523,325.6007	1,549,072.2502	523,303.6115	1,549,007.1609
Williamswood Drive	11+21.00	95.00	LT	1	R/W MONUMENT	523,295.4767	1,548,949.2429	523,273.4887	1,548,884.1588
Williamswood Drive	12+00.00	50.00	LT	1	R/W MONUMENT	523,348.1203	1,548,872.4880	523,326.1301	1,548,807.4071
Williamswood Drive	13+00.00	24.98	LT	1	R/W MONUMENT	523,382.7892	1,548,775.4099	523,360.7976	1,548,710.3331
Independence Road	11+00.00	175.00	RT	1	R/W MONUMENT	522,434.7730	1,551,609.2725	522,412.8212	1,551,544.0766
Independence Road	12+00.00	140.00	RT	1	R/W MONUMENT	522,315.6417	1,551,588.8567	522,293.6949	1,551,523.6617
Independence Road	12+50.00	125.00	LT	1	R/W MONUMENT	522,168.7597	1,551,815.0068	522,146.8191	1,551,749.8023
Independence Road	13+50.00	140.00	RT	1	R/W MONUMENT	522,154.4752	1,551,532.1859	522,132.5352	1,551,466.9933
Independence Road	16+00.00	90.00	LT	1	R/W MONUMENT	521,862.3115	1,551,718.7536	521,840.3838	1,551,653.5531
Independence Road	16+87.26	100.00	RT	1	R/W MONUMENT	521,794.5944	1,551,520.9423	521,772.6695	1,551,455.7501
Independence Road	16+88.50	100.00	LT	1	R/W MONUMENT	521,773.2537	1,551,719.8044	521,751.3297	1,551,654.6039
Shaw Road	12+53.00	60.00	RT	1	R/W MONUMENT	519,948.5557	1,553,900.6819	519,926.7084	1,553,835.3897
Shaw Road	13+00.00	65.00	LT	1	R/W MONUMENT	519,829.7139	1,553,839.9711	519,807.8716	1,553,774.6815
Shaw Road	14+25.00	60.00	RT	1	R/W MONUMENT	519,986.8700	1,553,754.8169	519,965.0211	1,553,689.5309
Shaw Road	15+00.00	45.00	RT	1	R/W MONUMENT	520,001.6723	1,553,679.7776	519,979.8227	1,553,614.4947
Shaw Road	15+00.00	50.00	LT	1	R/W MONUMENT	519,913.8840	1,553,643.4704	519,892.0381	1,553,578.1890
Shaw Road	15+50.00	26.12	RT	1	R/W MONUMENT	520,003.3302	1,553,626.3559	519,981.4806	1,553,561.0753
Shaw Road	15+50.00	23.89	LT	1	R/W MONUMENT	519,957.1234	1,553,607.2458	519,935.2757	1,553,541.9660
Shaw Road Conn. West	2+00.00	24.30	RT	1	R/W MONUMENT	519,747.6964	1,554,115.5450	519,725.8575	1,554,050.2438
Delaware Crossing	9+09.00	50.32	LT	1	R/W MONUMENT	519,759.9851	1,555,572.1293	519,738.1457	1,555,506.7669
Delaware Crossing	7+50.00	37.27	RT	1	R/W MONUMENT	519,881.1961	1,555,437.2587	519,859.3516	1,555,371.9020
Delaware Crossing	8+75.00	50.00	RT	1	R/W MONUMENT	519,766.5639	1,555,466.4135	519,744.7242	1,555,401.0555
High School Approach	10+73.00	96.31	LT	1	R/W MONUMENT	519,613.7243	1,555,659.4184	519,591.8910	1,555,594.0523
High School Approach	11+65.00	90.00	RT	1	R/W MONUMENT	519,473.5255	1,555,504.8578	519,451.6981	1,555,439.4982
High School Approach	11+70.00	62.87	LT	1	R/W MONUMENT	519,513.8362	1,555,652.4025	519,492.0071	1,555,587.0367
High School Approach	12+95.00	85.00	LT	1	R/W MONUMENT	519,416.8476	1,555,715.0465	519,395.0226	1,555,649.6781

FILE NAME: V:\1785\ACTIVE\178561001\ROADWAY\PLAN SHEETS\ROW PLANS\RW_MONUMENT_SUM_4.DGN

USER: gnsharp
DATE PLOTTED: April 20, 2021

E-SHEET NAME:

MicroStation v8.11.9.832

RIGHT OF WAY PLANS

SCALE: NTS

KY 536
RIGHT OF WAY MONUMENTS