35° SKEW VARIABLE BRIDGE WIDTH 2:1 FILL SLOPES
WINGS PARALLEL TO ROADWAY

ABUTMENT SKEW CORRECTION FACTOR (SCF) = 1.221

For fanning A1 & A2 bars with an acute angle, space @ 12" at face of toe, then as you get closer to the corner start pulling every other bar back toward the heel. (Similar to as shown)

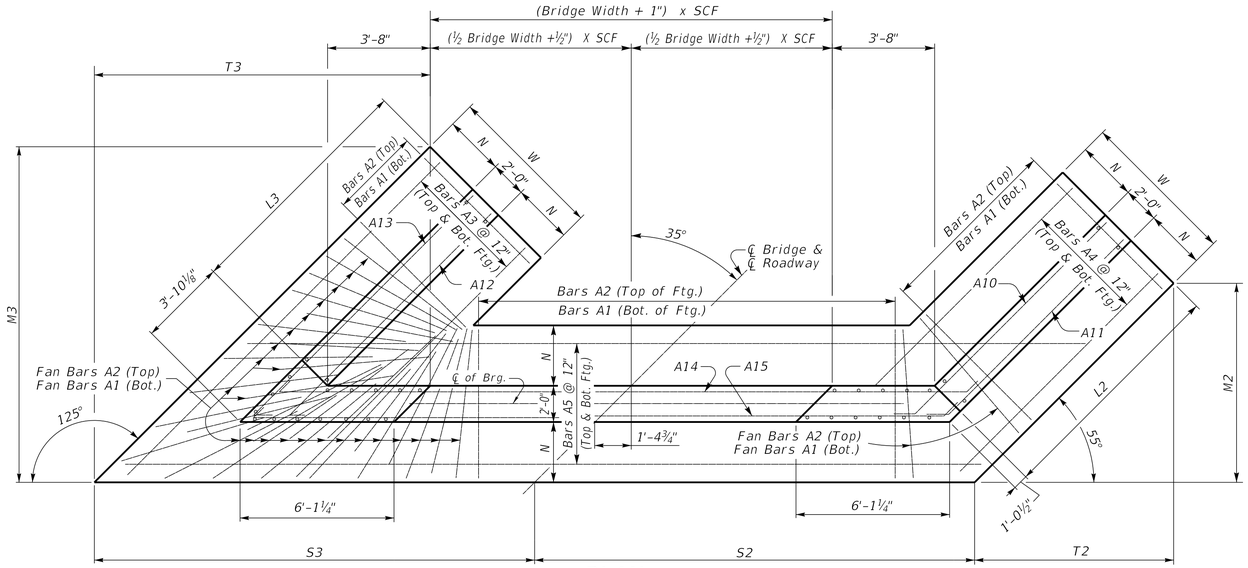

(Left Skew as shown;right skew opp. hand)

PLAN

NOTE: Trim A16 & A17 bars if necessary
Trim A3 bars as necessary

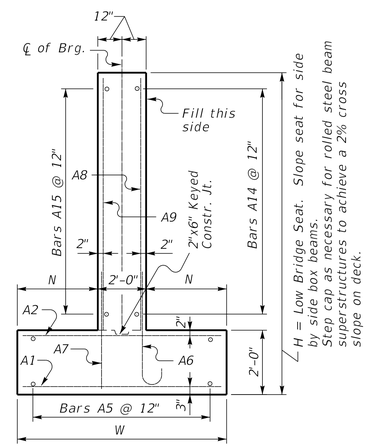

WALL SECTION

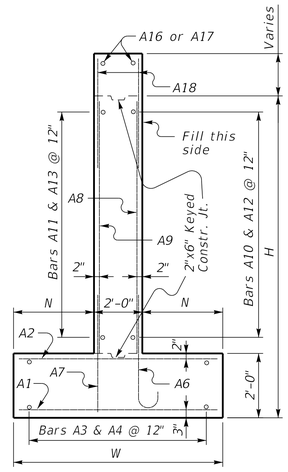

WING SECTION

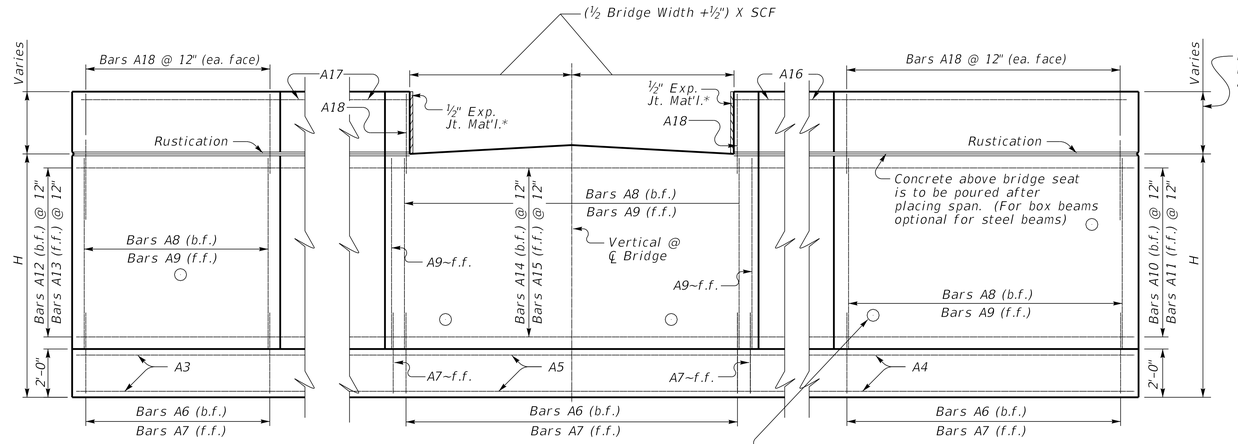

ELEVATION

Place 4" weep hole drains at 8'-0" centers at such elevation as to afford best drainage of backfill, in accordance with the Standard Specifications.

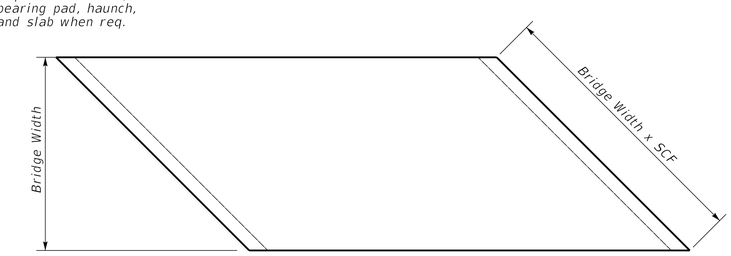

PLAN OF SUPERSTRUCTURE SLAB

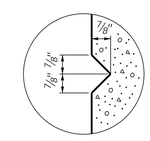

RUSTICATION GROOVE

*Expansion Joint Material:
AASHTO M153
Type-I Sponge Rubber
Type-II Cork permitted with contractor provided documentation that the Build America Buy America requirments are satisfied.

SUBMITTED Michael Cornett — DIVISION DIRECTOR — 10/25/2024 DATE

COMMONWEALTH OF KENTUCKY
DEPARTMENT OF HIGHWAYS
TEAM KENTUCKY TRANSPORTATION CABINET

DRAWING TITLE: SEPIA 076 - 35° SKEW VARIABLE WIDTH ABUTMENT PARALLEL WINGS

ITEM NO. COUNTY OF
SHEET NO.