45° SKEW 16'-0" - 17'-6" BRIDGE WIDTH (No Seismic Load)

Bill of Reinforcement

MARK	P1				P2				P3				P4								P5								P6				P7		P8				P9(e)		P10(e)		P11(e)	
TYPE	Str.				Str.				Str.				Type 4								Type 10								Str.				Type 31		Str.				Str.		Str.		Type 14	
SIZE																																	#4						#8		#5		#5	
H	No.	Size	Length ft.	Length in.	No.	Size	Length ft.	Length in.	No.	Size	Length ft.	Length in.	No.	Size	Length ft.	Length in.	A in.	B ft.	B in.	C ft.	C in.	D ft.	D in.	No.	Size	Length ft.	Length in.	A in.	No.	Size	Length ft.	Length in.	No.	Size	Length ft.	Length in.	No.	Size	Length ft.	Length in.	No.	Length ft.	Length in.	No.	Length ft.	Length in.
10-11	40	7	10	8	8	22	6	26	8	12	40	5	10	8	8	62	8	8	10	8	7	5	1	5	0	8	7	9	10	5	7	5	12	2	6	50	2	5	62	8	8	0	8	8	29	2	4	29	2	29	13	2
12-13	40	7	10	8	8	22	6	26	8	12	40	5	10	8	8	62	8	8	10	8	7	5	1	5	0	8	7	9	14	5	7	5	12	2	6	70	2	5	62	8	10	0	8	8	29	2	4	29	2	29	13	2
14-15	40	7	10	8	8	22	6	26	8	12	40	5	10	8	8	62	8	8	10	8	7	5	1	5	0	8	7	9	18	5	7	5	12	2	6	90	2	5	62	8	12	0	8	8	29	2	4	29	2	29	13	2
16-17	40	7	10	8	8	22	6	26	8	12	40	5	10	8	8	62	8	8	10	8	7	5	1	5	0	8	7	9	22	5	7	5	12	2	6	110	2	5	62	8	14	0	8	8	29	2	4	29	2	29	13	2
18-19	40	7	10	8	8	22	6	26	8	12	40	5	10	8	8	62	8	8	10	8	7	5	1	5	0	8	7	9	26	5	7	5	12	2	6	130	2	5	62	8	16	0	8	8	29	2	4	29	2	29	13	2
20-21	40	7	10	8	8	22	6	26	8	12	40	5	10	8	8	62	8	8	10	8	7	5	1	5	0	8	7	9	30	5	7	5	12	2	6	150	2	5	62	8	18	0	8	8	29	2	4	29	2	29	13	2
22-23	40	7	10	8	8	22	6	26	8	12	40	5	10	8	8	62	8	8	10	8	7	5	1	5	0	8	7	9	34	5	7	5	12	2	6	34	5	19	6	12	170	2	5	62	8	20	0	8	8	29	2	4	29	2	29	13	2
24-25	40	7	10	8	8	22	6	26	8	12	40	5	10	8	8	62	8	8	10	8	7	5	1	5	0	8	7	9	38	5	7	5	12	2	6	38	5	19	6	12	190	2	5	62	8	22	0	8	8	29	2	4	29	2	29	13	2

Reinforcement Details

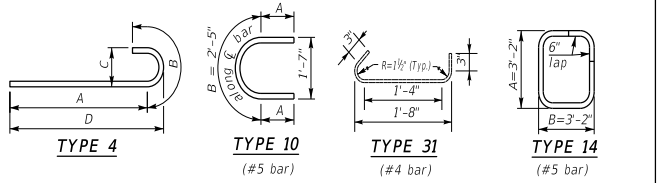

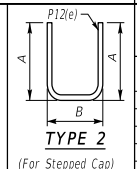

DIMENSIONS TABLE

H	A ft.	A in.	B ft.	B in.	C ft.	C in.	D ft.	D in.
10-11	2	6	2	9	13	6	4	6
12-13	2	6	2	9	13	6	4	6
14-15	2	6	2	9	13	6	4	6
16-17	2	6	2	9	13	6	4	6
18-19	2	6	2	9	13	6	4	6
20-21	2	6	2	9	13	6	4	6
22-23	2	6	2	9	13	6	4	6
24-25	2	6	2	9	13	6	4	6

QUANTITIES

H	CONCRETE CLASS "A" CU. YDS. (1)	STEEL REINFORCEMENT EPOXY COATED LBS.	STEEL REINFORCEMENT LBS.
10-11	49.1	1146	5362
12-13	52.2	1146	5839
14-15	55.3	1146	6317
16-17	58.5	1146	6794
18-19	61.6	1146	7271
20-21	64.7	1146	7748
22-23	67.8	1146	8225
24-25	70.9	1146	8692

Note: All bars in cap shall be epoxy coated.

Note: All concrete shall be Class "A"

(1) Quantity is based on taller height. Reduce by 1.5 cubic yd. for shorter height.

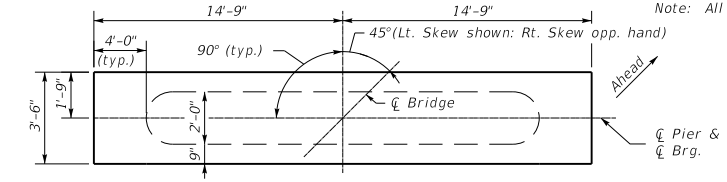

PLAN OF CAP

Note: Grade cap to roadway grade for box beams. Step cap if necessary for steel beams.

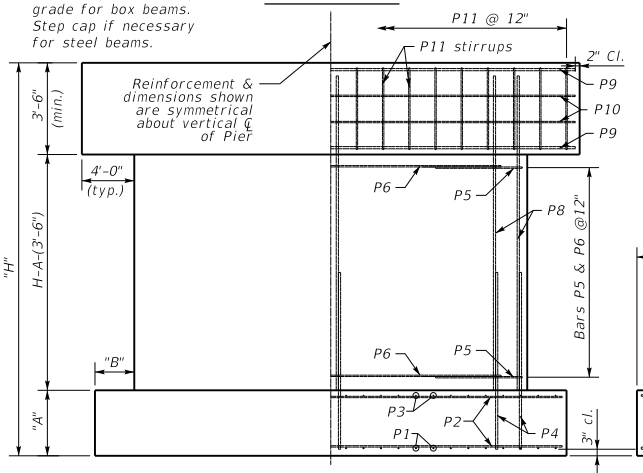

ELEVATION

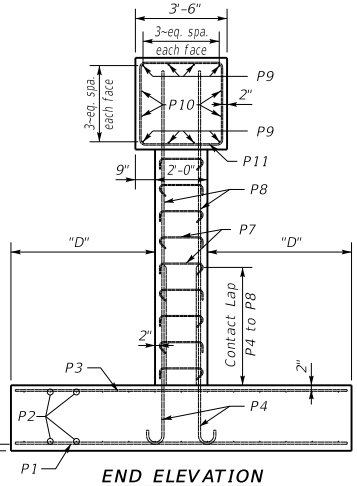

END ELEVATION

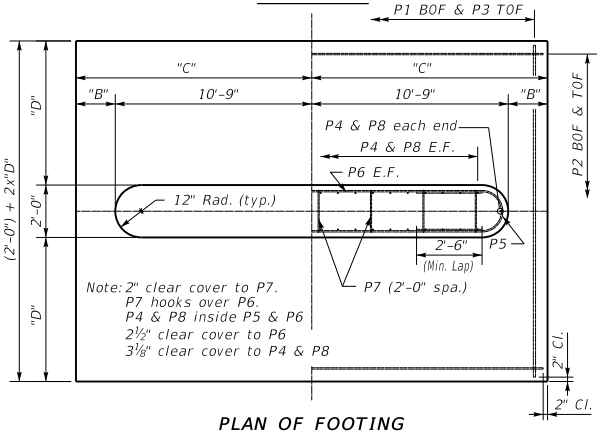

PLAN OF FOOTING

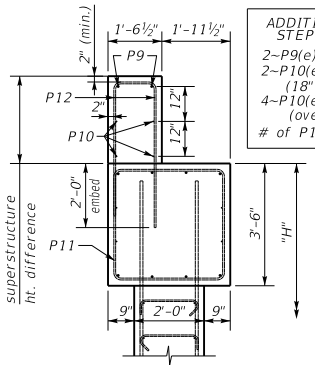

STEPPED CAP
(if necessary)

ADDITIONAL BARS FOR STEPPED PIER CAP
2~P9(e)'s
2~P10(e)'s
(18" to 28" ht. diff.)
4~P10(e)'s
(over 28" ht. diff.)
# of P12(e)=# of P11(e)

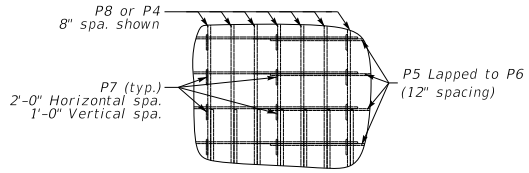

P7 BAR PLACEMENT
(alternate 90° & 135° bar ends)

GENERAL NOTES

SPECIFICATIONS: Construct piers according to the current edition of the Kentucky Department of Highways Standard Specifications for Road and Bridge Construction. Piers are designed for side by side box beams as detailed in Standard Drawings BDP-001 through BDP-012, current edition. They may be slightly modified to allow for 17'-6" rolled steel beam bridge width.

FOUNDATION PRESSURE: Construct pier footings on solid rock bearing material that can support a pressure of 8000 psf service or 10,800 psf strength factored as recommended by a geotechnical engineer.

DESIGN LOADS: Pier is designed for the CB42 beam superstructure with 3~97 foot spans. Pier is designed to handle a half a 97 foot span for thermal load with expansion bearings under the beams. Pier is designed for 100 mph wind. Wind on superstructure is for 1~97' span longitudinal and transverse. Pier is designed for stream flow of 10 ft./sec. up to the top of the pier. It is not designed for flow acting on the superstructure. Pier is not designed for earthquake loading.

DESIGN APPLICABILITY: Consult with a structural engineer to determine if these details are applicable for any particular project.

FOOTING ELEVATION: Construct bottom of footing below the anticipated scour elevation. (This typically entails embedding the footings 1'-0" to 2'-0" into rock and pouring concrete directly against cut rock faces as recommended by geotechnical engineer.)

NOTE: Distances to bars shown are clear dimensions unless otherwise noted.

MATERIAL SPECIFICATIONS:
Concrete, Class "A" = 3500 psi
Steel Reinforcement = Grade 60

KENTUCKY
DEPARTMENT OF HIGHWAYS

Standard Pier
45° Skew
16'-0"-17'-6" Bridge Width

STANDARD DRAWING NO. BSP-010

SUBMITTED _____ DIRECTOR DIVISION OF STRUCTURAL DESIGN — DATE 02-26-20

APPROVED _____ STATE HIGHWAY ENGINEER — DATE 02-26-20