5 ~ 1" Dia holes and 2½" Dia x 2" deep recesses. Form or core holes and recesses. Percussion drilling is not permitted. Adjust placement of reinforcing steel as necessary to avoid bolt holes and recesses. Bolt recesses are only required when pedestrian sidewalks are adjacent to back of rail. Tighten the 5 Terminal Connection Bolts in a well distributed pattern so to prevent damage or distortion of the Thrie-Beam Connection and the guardrail Transition. Cut bolts off after installation so as to extend no more than ¾" beyond nut. Paint ends of cut-off bolts with Zinc-rich paint.

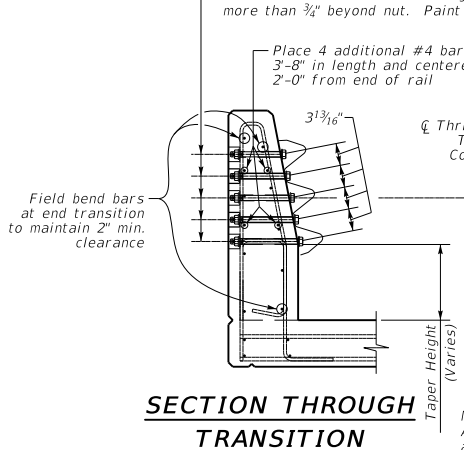

SECTION THROUGH TRANSITION

NOTE:
All guardrail transition fasteners and terminal connectors are included in the lump sum price bid for the guardrail transition.

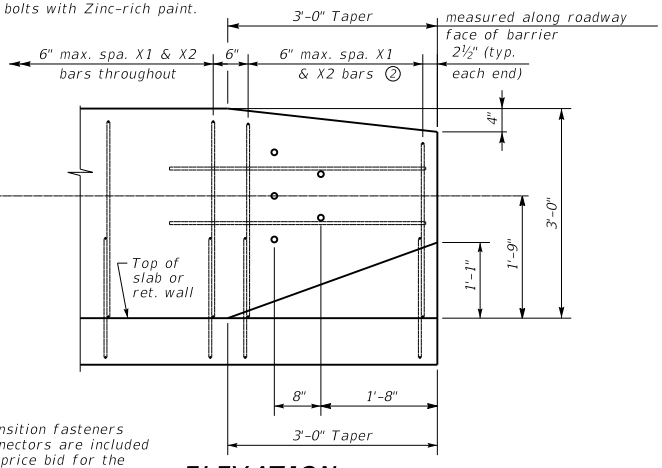

ELEVATION

General Notes

This rail system has been structurally evaluated to be equivalent or greater in strength to other single slope railings which have been crash tested to MASH TL-4 Criteria. This rail system can be used for speeds of 50 mph or greater when a TL-3 rated transition is used. When a TL-2 transition is used, this railing can only be used for 45 mph or less.

CONCRETE: Use Class "AA" Concrete throughout.

SHOP DRAWINGS: Are not required for this rail.

OPTIONAL WELDED WIRE REINFORCEMENT: At the contractor's option, deformed welded wire reinforcement (WWR) in accordance with ASTM A1064 and epoxy coated in accordance with ASTM A884 may be used in place of stirrup bars X1, X2, and X3 as well as the straight or longitudinal reinforcement attached to these stirrups. Use size D20 wire for both stirrups and straight reinforcement. Locate and space the wire reinforcement the same as the conventional reinforcement. Use a minimum 1'-11" lap for the straight reinforcement between sheets of WWR.

MEASUREMENT: The linear foot bid for the barrier is measured along the roadway gutter line. Include all reinforcement shown and all concrete above the top of slab in the bid item for Rail System, 36 Inch Single Slope.

REINFORCEMENT: All reinforcement shown on this sheet is to be epoxy coated Grade 60. Use stirrup bend diameters for all bent bars. Straight reinforcement is to be Size #4 and lapped 1'-11" when necessary.

Average weight of rail is 412 lb/ft.

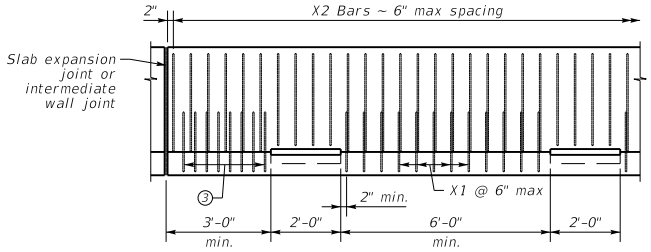

OPTIONAL SIDE SLOT DRAIN DETAIL

③ Space X1 @ 4" max. when end region of barrier is less than 6'-0" from joint to side slot. Space X1 @ 6" max. when end region is greater than 6'-0" from joint to edge of side slot.

Note: Open joints are not required.

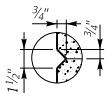

"V-Groove" Rustication

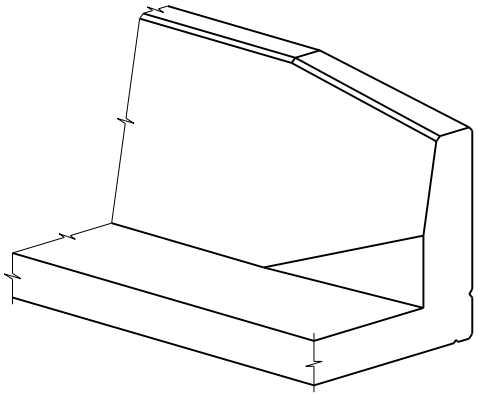

OBLIQUE VIEW

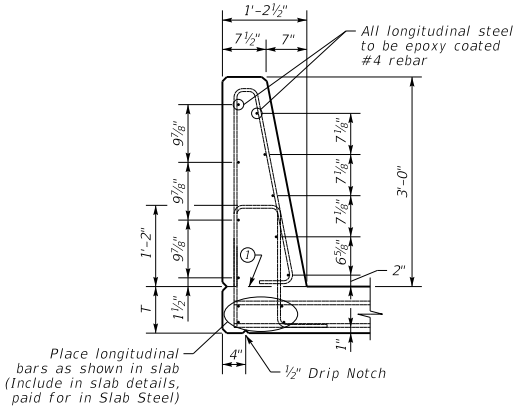

TYPICAL 36" BARRIER SECTION

① Mandatory roughened construction joint. Concrete above this joint is to be placed after slab has been properly cured and included in the bid for Rail System, 36 Inch Single Slope.

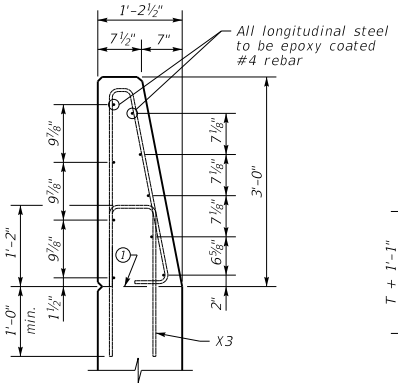

TYPICAL 36" BARRIER SECTION ON RETAINING WALL

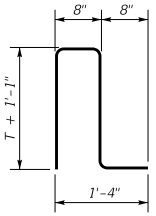

X1(e) Bars

#4 Bar

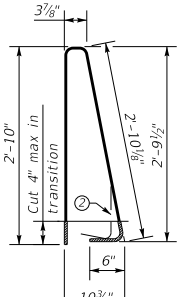

X2(e) Bars

#4 Bar

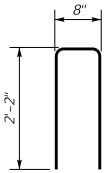

X3(e) Bars

#4 Bar

② Bend and field cut X2 bar as necessary to maintain 2" min. clearance to sides of taper and 2" to top of barrier.

KENTUCKY
DEPARTMENT OF HIGHWAYS

RAILING SYSTEM
36 INCH
SINGLE SLOPE

STANDARD DRAWING NO. BHS-009

SUBMITTED _____ DIRECTOR DIVISION OF STRUCTURAL DESIGN — 02-26-20 DATE

APPROVED _____ STATE HIGHWAY ENGINEER — 02-26-20 DATE