KENTUCKY STANDARD DRAWINGS

- ROADWAY
  - BARRIERS
    - GUARDRAIL AND BRIDGE END DRAINAGE RBB-SERIES
    - GUARDRAIL CONNECTORS TO BRIDGE ENDS RBC-SERIES
    - ENERGY ABSORPTION DEVICES RBE-SERIES
    - TYPICAL BARRIER INSTALLATIONS RBI-SERIES
    - CONCRETE MEDIAN BARRIERS RBM-SERIES
    - GUARDRAIL HARDWARE RBR-SERIES
  - DRAINAGE
    - BOX INLETS AND OUTLETS RDB-SERIES
    - PAVED DITCHES, FLUME INLETS & CHANNEL LINING RDD-SERIES
    - HEADWALLS RDH-SERIES
    - TYPICAL DRAINAGE INSTALLATIONS RDI-SERIES
    - MANHOLES RDM-SERIES
    - PERFORATED PIPE RDP-SERIES
    - MISCELLANEOUS DRAINAGE RDX-SERIES
  - FENCES AND GRATES
    - CHAIN LINK FENCE RFC-SERIES
    - GATES RFG-SERIES
    - WOVEN WIRE FENCE RFW-SERIES
  - GENERAL
    - SUPERELEVATION AND CURVE WIDENING RGS-SERIES
    - MISCELLANEOUS STANDARDS RGX-SERIES
  - PAVEMENT
    - MEDIANS, CURBS, APPROACHES, ETC. RPM-SERIES
    - NON-REINFORCED CONC. PAVEMENT RPN-SERIES
    - STANDARD REINF. CONC. PAVEMENT RPS-SERIES
    - MISCELLANEOUS PAVING RPX-SERIES
- TRAFFIC
  - PERMANENT
    - MARKERS TPM-SERIES
    - RUMBLE STRIPS TPR-SERIES
  - TEMPORARY
    - TRAFFIC CONTROL TTC-SERIES
    - DEVICES TTD-SERIES
    - STRIPING OPERATIONS TTS-SERIES
- BRIDGES
  - SEE OVERLEAF

~ DRAWING NUMBER EXPLANATION ~

R F G - 0 0 1

- DIVISION HEADING (ROADWAY)
- SECTION HEADING (FENCES & GRATES)
- SUB-SECTION (GATES)
- THREE OR FOUR DIGIT NUMBER

R G X - 0 0 1 - 0 1

- MISCELLANEOUS
- NO. OF TIMES DRAWING REVISED

KENTUCKY DEPARTMENT OF HIGHWAYS

LAYOUT CHART FOR KENTUCKY STANDARD DRAWINGS

2020

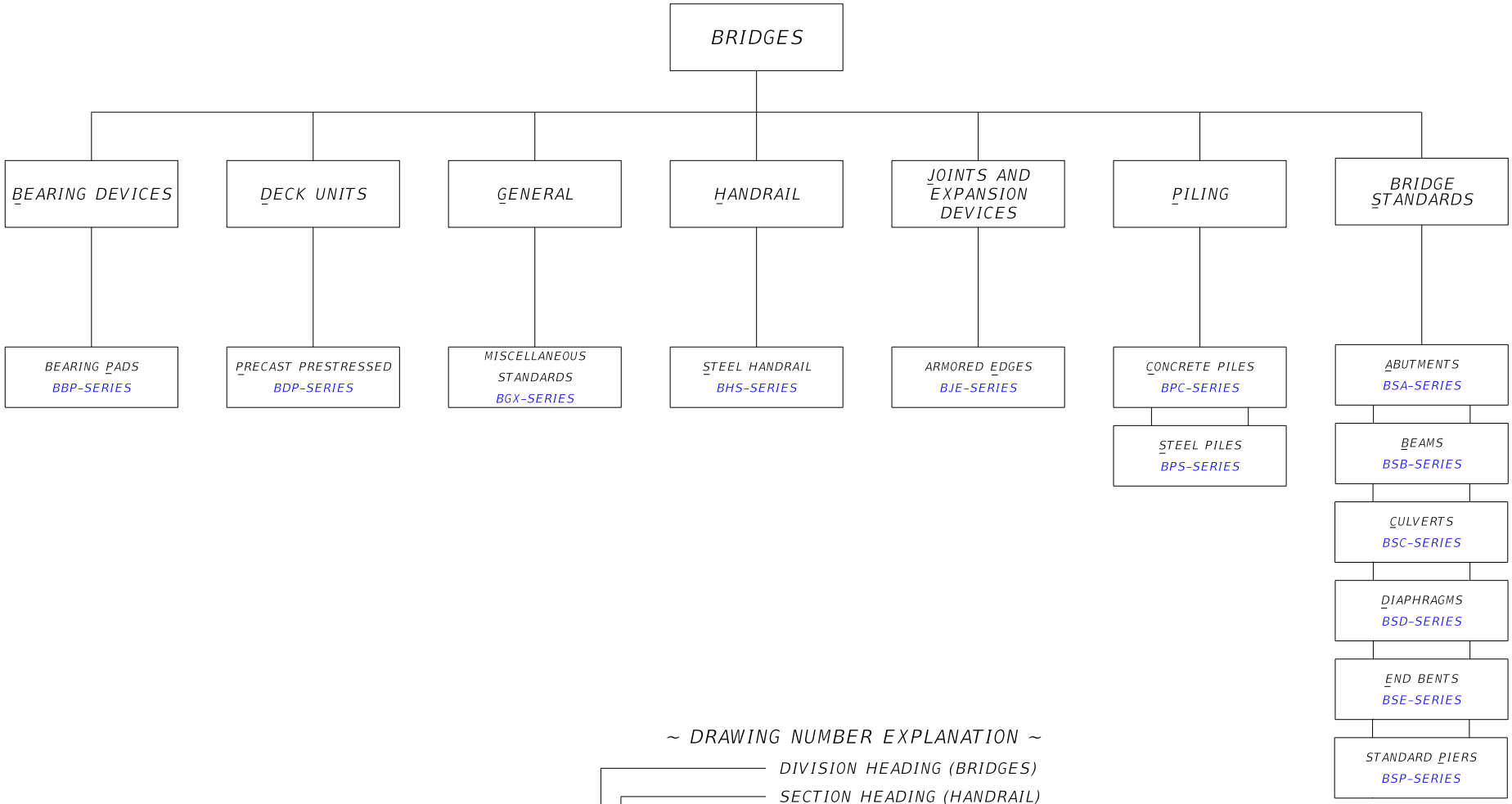

~ DRAWING NUMBER EXPLANATION ~

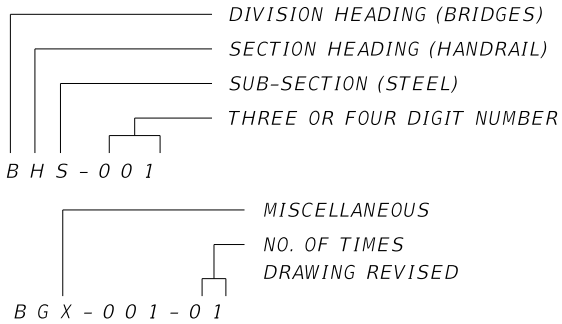

KENTUCKY
DEPARTMENT OF HIGHWAYS

LAYOUT CHART FOR
KENTUCKY
STANDARD DRAWINGS

2020

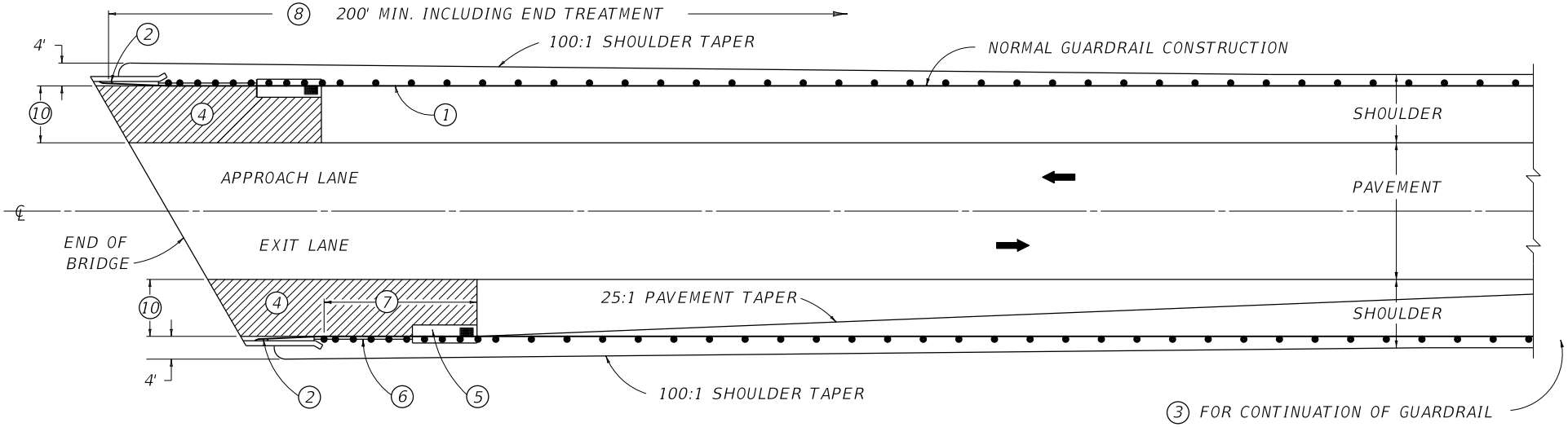

~ NOTES ~

7. VARIABLE LENGTH, SEE APPLICABLE "BRIDGE END CONNECTOR" DRAWINGS.
8. SHOWN FOR FILL CONDITION. LENGTH MAY BE REDUCED SHOULD FIELD CONDITIONS WARRANT.
9. TO TERMINATE GUARDRAIL INSTALLATION:
   A. ALL FILLS; ALSO SOLID ROCK CUTS WITH ADEQUATE VEHICLE RECOVERY ZONE BEHIND GUARDRAIL, USE END TREATMENT TYPE 1 OR 4A.
   B. SOLID ROCK CUTS WITHOUT ADEQUATE VEHICLE RECOVERY ZONE BEHIND GUARDRAIL, USE END TREATMENT TYPE 2A.
   C. EARTH CUTS AND SOFT ROCK CUTS, USE END TREATMENT TYPE 3.
10. USE ISLAND CURB AND GUTTER AND SAME PAVEMENT AS SHOWN ON MAINLINE DESIGN, (SEE DETAIL A).
11. NO ANGLES PERMITTED IN NORMAL GUARDRAIL ALIGNMENT.
12. THIS ILLUSTRATION IS FOR TWO-WAY TRAFFIC FLOW. FOR ONE-WAY TRAFFIC FLOW, MAKE THE FOLLOWING ALTERATIONS:

    APPROACH END OF STRUCTURE-
    A. NO PAVEMENT TAPER REQUIRED
    B. ALIGN FACE OF GUARDRAIL WITH STRUCTURE GUTTERLINE

    EXIT END OF STRUCTURE-
    A. PAVEMENT TAPER REQUIRED FOR BOTH OUTSIDE LANES
    B. FOR GUARDRAIL ALIGNMENT SEE BRIDGE END CONNECTOR DRAWINGS

ITEM	STD. DWG. NO. (CURRENT EDITION)
1 STEEL W BEAM GUARDRAIL - S FACE	RBR-001
2 BRIDGE END CONNECTORS	RBC-SERIES
3 END TREATMENT TYPE 1, 2A, 3 OR 4A (NOTE 9)	RBR-SERIES
DRAINAGE ITEMS (WHEN REQUIRED)	
4 BRIDGE END DRAINAGE AREA (NOTE 10)	
5 CURB BOX INLET TYPE B	RDB-SERIES
6 ISL. HEADER CURB OR ISL. CURB AND GUTTER	RPM-SERIES

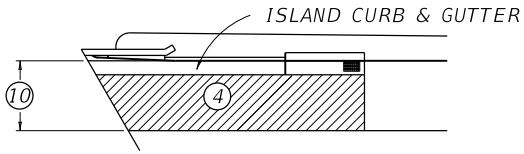

DETAIL A

USE WITH CUR. STD. DWGS.
RBC-005 RBC-006 RBR-001

KENTUCKY
DEPARTMENT OF HIGHWAYS

GUARDRAIL AND
BRIDGE END DRAINAGE
FOR SINGLE STRUCTURES

STANDARD DRAWING NO. RBB-001-09

SUBMITTED _____ DIRECTOR DIVISION OF DESIGN _____ 02-26-20 DATE

APPROVED _____ STATE HIGHWAY ENGINEER _____ 02-26-20 DATE

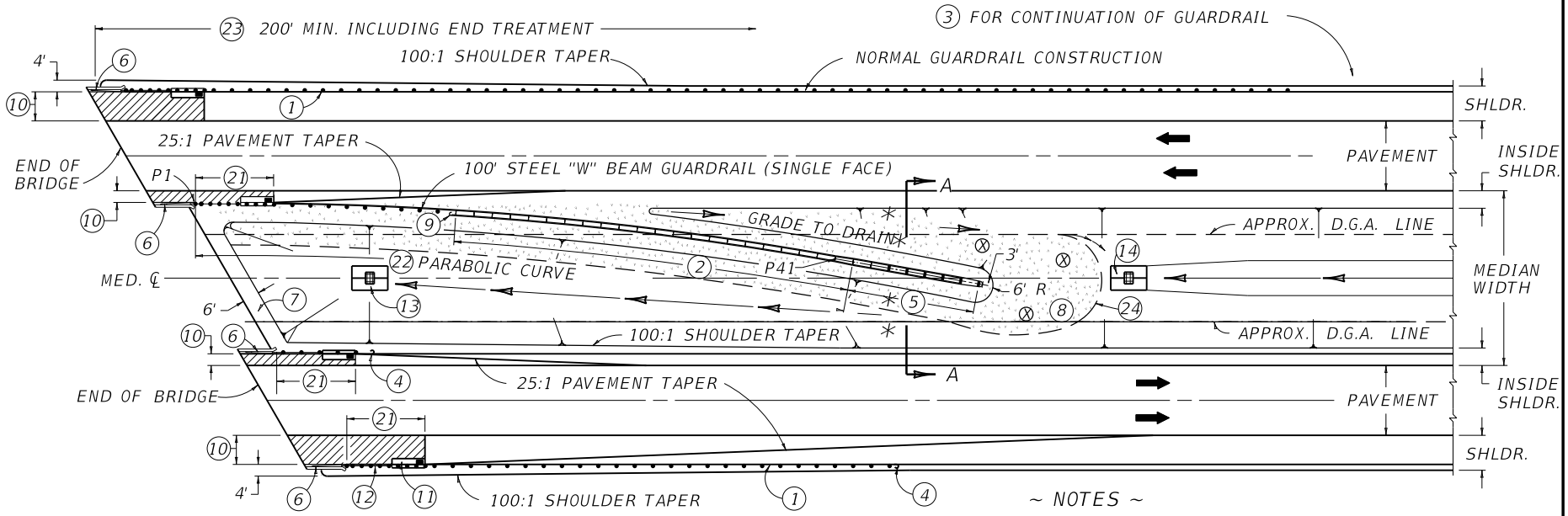

~ NOTES ~

15. NO ANGLES PERMITTED IN NORMAL GUARDRAIL ALIGNMENT.
16. TO TERMINATE GUARDRAIL INSTALLATION:
    A. ALL FILLS; ALSO SOLID ROCK CUTS WITH ADEQUATE VEHICLE RECOVERY ZONE BEHIND GUARDRAIL, USE END TREATMENT TYPE 1 OR 4A.
    B. SOLID ROCK CUTS WITHOUT ADEQUATE VEHICLE RECOVERY ZONE BEHIND GUARDRAIL, USE END TREATMENT TYPE 2A.
    C. EARTH CUTS AND SOFT ROCK CUTS, USE END TREATMENT TYPE 3.
17. USE ROADWAY OR BORROW EXCAVATION, OR EMBANKMENT IN PLACE.
18. WHEN THIS DIMENSION IS 6'-0" OR LESS USE ISLAND CURB AND GUTTER AND SAME PAVEMENT AS SHOWN ON MAINLINE DESIGN, (SEE DETAIL A).
19. FLATTEN SLOPES AND ELIMINATE INLET WHEN MEDIAN SLOPES AWAY FROM BRIDGE. (SEE PLANS FOR TYPE)
20. LOCATE AS CLOSE TO GUARDRAIL AS SLOPE WILL PERMIT. (SEE PLANS FOR TYPE)
21. VARIABLE LENGTH. SEE APPLICABLE "BRIDGE END CONNECTOR" DRAWINGS (RBC SERIES).
22. SEE STD. DWG. RBB-003, CURRENT EDITION, FOR MEDIAN GUARDRAIL POST ALIGNMENT.
23. SHOWN FOR FILL CONDITION. REDUCE LENGTH SHOULD FIELD CONDITIONS WARRANT.
24. ROUND SLOPES IN ACCORDANCE WITH CURRENT STD. DWG. RGX-001.

ITEM	STD. DWG. NO. (CURRENT EDITION)
1 STEEL W BEAM GUARDRAIL - S FACE (NOTE 15)	
2 137'-6" STEEL W BEAM GUARDRAIL - D FACE	
3 END TREATMENT TYPE 1, 2A, 3 OR 4A (NOTE 16)	
4 END TREATMENT TYPE 2A	
5 CRASH CUSHION TYPE IX-A	RBE-SERIES
6 BRIDGE END CONNECTORS	RBC-SERIES
7 6' EARTH DIKE	RGX-SERIES
8 GUARDRAIL EARTH BERM (NOTE 17)	
9 TERMINAL SECTION NO. 1	RBR-SERIES
DRAINAGE ITEMS (WHEN REQUIRED)	
10 BRIDGE END DRAINAGE AREA (NOTE 18) (TYP.)	
11 CURB BOX INLET TYPE B	RDB-SERIES
12 ISL. HEADER CURB OR ISL. CURB AND GUTTER	RPM-SERIES
13 DROP BOX INLET (NOTE 19)	RDB-SERIES
14 DROP BOX INLET (NOTE 20)	

USE WITH CUR. STD. DWGS.
RBB-003 RBC-005 RBC-006

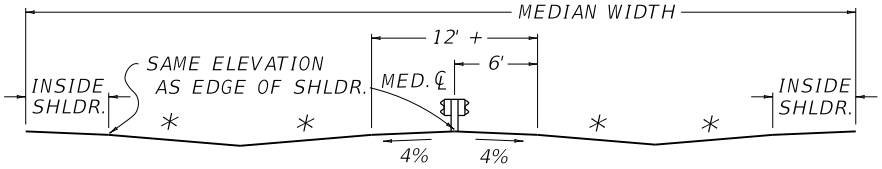

SECTION A-A

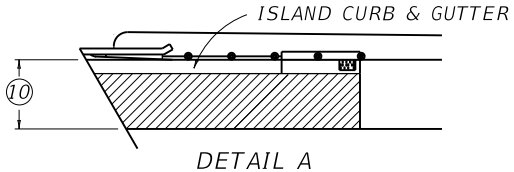

DETAIL A

* SLOPES 12:1 DESIRABLE, 6:1 MINIMUM
⊗ SLOPES 12:1 OR FLATTER REQUIRED

KENTUCKY
DEPARTMENT OF HIGHWAYS

GUARDRAIL AND BRIDGE END DRAINAGE FOR TWIN STRUCTURES

STANDARD DRAWING NO. RBB-002-09

SUBMITTED William E. Ginkel DIRECTOR, DIVISION OF DESIGN 12-01-15 DATE

APPROVED STATE HIGHWAY ENGINEER 12-01-15 DATE

CALCULATIONS FOR MEDIAN GUARDRAIL LOCATION (DEPRESSED MEDIANS)

POST NUMBER	36'		40'		50'		60'		64'		84'	
	DISTANCE	OFFSET	DISTANCE	OFFSET	DISTANCE	OFFSET	DISTANCE	OFFSET	DISTANCE	OFFSET	DISTANCE	OFFSET
P_1	0.00	0.00	0.00	0.00	0.00	0.00	0.00	0.00	0.00	0.00	0.00	0.00
P_9	25.0	0.1	25.0	0.1	25.0	0.2	25.0	0.2	25.0	0.3	25.0	0.4
P_{13}	50.0	0.5	50.0	0.6	50.0	0.8	50.0	1.0	50.0	1.1	50.0	1.5
P_{17}	75.0	1.1	75.0	1.3	75.0	1.8	75.0	2.2	75.0	2.4	74.9	3.3
P_{21}	100.0	2.0	100.0	2.3	99.9	3.1	99.9	3.9	99.9	4.3	99.8	5.9
P_{25}	124.9	3.2	124.9	3.7	124.9	4.9	124.8	6.2	124.8	6.7	124.6	9.2
P_{29}	149.9	4.6	149.9	5.3	149.8	7.1	149.7	8.9	149.6	9.6	149.2	13.2
P_{33}	174.9	6.2	174.8	7.2	174.6	9.6	174.4	12.1	174.4	13.0	173.8	17.9
P_{37}	199.8	8.1	199.7	9.4	199.5	12.6	199.2	15.8	199.0	17.0	198.2	23.4
P_{41}	224.7	10.3	224.6	11.9	224.3	15.9	223.8	19.9	223.6	21.5	222.4	29.5

DISTANCE IN ABOVE CHART REFERS TO POINTS ALONG AN EXTENDED LINE AT VARIOUS DISTANCES IN FEET FROM A POINT ON FACE OF GUARDRAIL AT LOCATION OF CENTERLINE OF POST NUMBER P1.
OFFSET REFERS TO DISTANCE IN FEET AT 90 DEGREES FROM POINTS ALONG AN EXTENDED LINE TO FACE OF GUARDRAIL AT CORRESPONDING LISTED POST NUMBER.

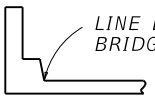

LINE EXTENDED FROM THIS POINT ON GUTTERLINE OF BRIDGE PARALLELING EDGE OF PAVEMENT.

USE WITH CURRENT STD. DWG.
RBB-002

KENTUCKY
DEPARTMENT OF HIGHWAYS

LAYOUT OF GUARDRAIL AT TWIN STRUCTURES (DEPRESSED MEDIAN)

STANDARD DRAWING NO. RBB-003-03

SUBMITTED William E. Ginkel — DIRECTOR, DIVISION OF DESIGN — 12-01-15 DATE

APPROVED — STATE HIGHWAY ENGINEER — 12-01-15 DATE

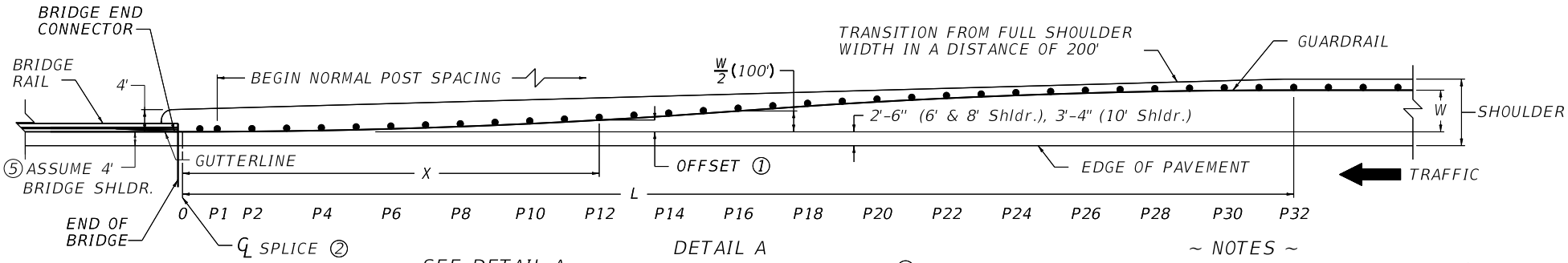

DETAIL A

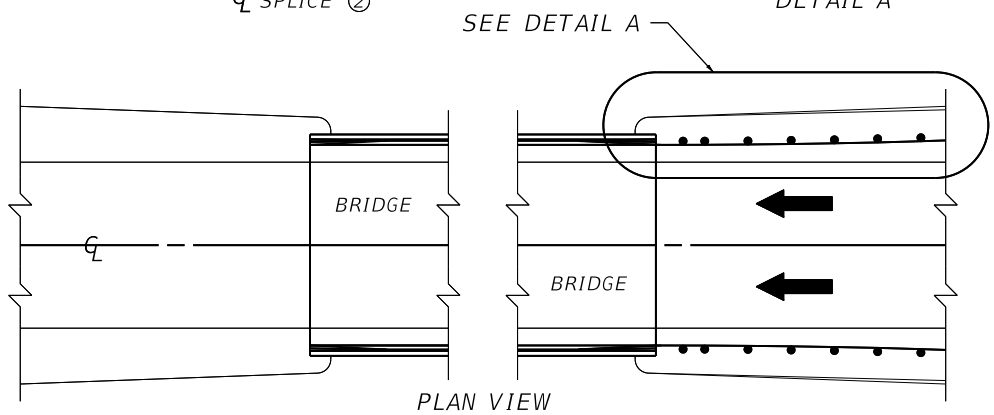

PLAN VIEW

~ NOTES ~

① OFFSETS SHOWN ARE CALCULATED FROM FACE OF GUARDRAIL (TANGENT EXTENDED FROM BRIDGE). OFFSET DIMENSIONS SHOWN ARE FOR 6 FOOT USABLE SHOULDERS, WITH W EQUAL TO 7.5 FEET.

② DISTANCES ARE FROM CENTER LINE OF SPLICE. SEE CURRENT STANDARD DRAWING RBC-002 FOR DETAILS.

3. CALCULATIONS FROM 0 FEET TO 100 FEET ARE BASED ON THE FOLLOWING FORMULA: $OFFSET = \left(\frac{X}{L/2}\right)^2 X \frac{W}{2}$

FROM 100 FEET TO 200 FEET THE PROCEDURE IS AS FOLLOWS, FOR EXAMPLE AT P28: 7.5 FEET MINUS 0.23 FEET = 7.27 FEET, ETC.

4. THE ENGINEER SHALL USE THE OFFSET FORMULA AND CALCULATE OFFSETS NEEDED FOR FIELDCONDITIONS DIFFERENT THAN THAT SHOWN IN THE CHART.

⑤ BRIDGE SHOULDER WIDTH VARIES PER KYTC & AASHTO GUIDANCE.

6' USABLE SHOULDER GUARDRAIL FLARE DIMENSIONS

POST NUMBER	DISTANCE	OFFSET
	FEET	
0	0	0
P1	6.25	0.01
P2	12.5	0.02
P4	25.0	0.08
P6	37.5	0.19
P8	50.0	0.34
P10	62.5	0.52
P12	75.0	0.75
P14	87.5	1.03
P16	100.0	1.34
P18	112.5	1.64
P20	125.0	1.92
P22	137.5	2.15
P24	150.0	2.33
P26	162.5	2.48
P28	175.0	2.59
P30	187.5	2.65
P32	200.0	2.67

8' USABLE SHOULDER GUARDRAIL FLARE DIMENSIONS

POST NUMBER	DISTANCE	OFFSET
	FEET	
0	0	0
P1	6.25	0.01
P2	12.5	0.04
P4	25.0	0.15
P6	37.5	0.33
P8	50.0	0.59
P10	62.5	0.91
P12	75.0	1.32
P14	87.5	1.79
P16	100.0	2.34
P18	112.5	2.88
P20	125.0	3.35
P22	137.5	3.76
P24	150.0	4.08
P26	162.5	4.34
P28	175.0	4.52
P30	187.5	4.63
P32	200.0	4.67

10' USABLE SHOULDER GUARDRAIL FLARE DIMENSIONS

POST NUMBER	DISTANCE	OFFSET
	FEET	
0	0	0
P1	6.25	0.01
P2	12.5	0.05
P4	25.0	0.21
P6	37.5	0.47
P8	50.0	0.84
P10	62.5	1.30
P12	75.0	1.88
P14	87.5	2.56
P16	100.0	3.34
P18	112.5	4.11
P20	125.0	4.79
P22	137.5	5.37
P24	150.0	5.83
P26	162.5	6.20
P28	175.0	6.46
P30	187.5	6.62
P32	200.0	6.67

USE WITH CUR. STD. DWG. RBC-002

KENTUCKY DEPARTMENT OF HIGHWAYS

GUARDRAIL TRANSITION FROM NORMAL SHOULDER TO NARROW BRIDGE

STANDARD DRAWING NO. RBB-010-06

SUBMITTED _____ DIRECTOR DIVISION OF DESIGN 02-26-20 DATE

APPROVED _____ STATE HIGHWAY ENGINEER 02-26-20 DATE

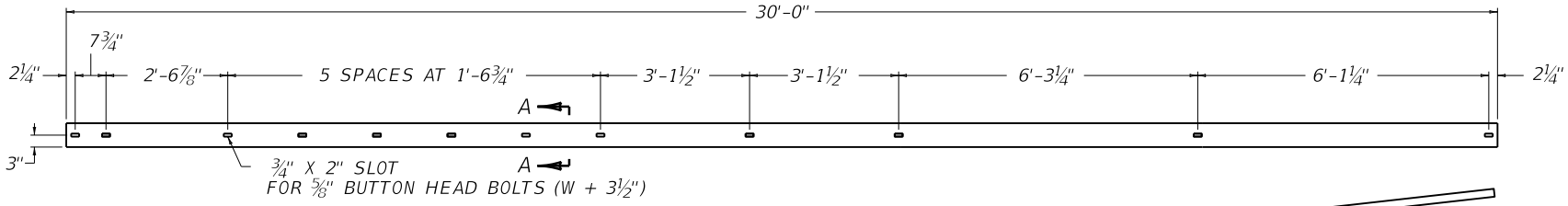

ELEVATION VIEW

PLAN VIEW

C6 X 8.2 RUB RAIL

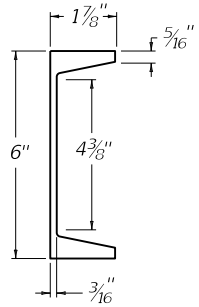

SECTION A-A

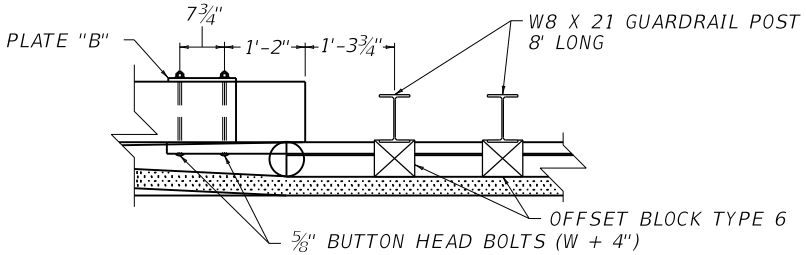

RUB RAIL
ATTACHED TO
CONCRETE PARAPET

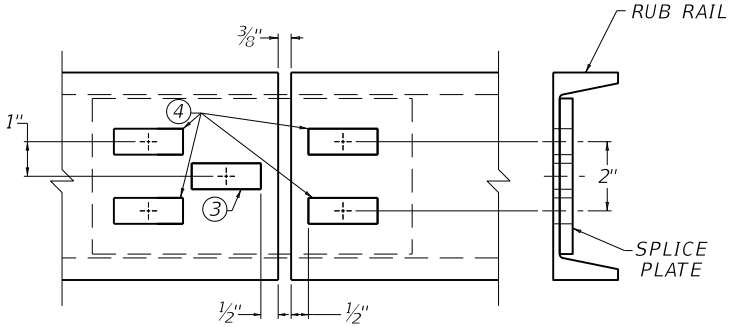

RUB RAIL SPLICE (TYP.)

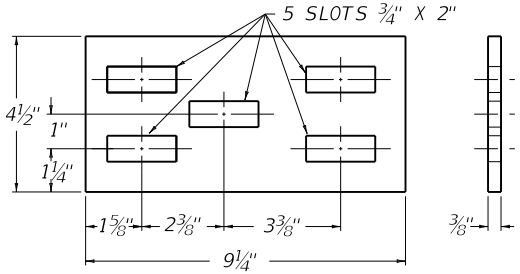

RUB RAIL SPLICE PLATE

~ NOTES ~

1. RUB RAIL IS DETAILED AS ONE CONTINUOUS PIECE, A SPLICE IS PERMITTED PROVIDING IT IS DONE AT A GUARDRAIL POST. SEE "RUB RAIL SPLICE" DETAIL.
2. MATERIAL REQUIREMENTS

   ALL HARDWARE SHALL BE GALVANIZED. (AASHTO M-232)

   ⅝" STEEL PLATE "B" (AASHTO M-270)

   ⅜" STEEL PLATE "RUB RAIL SPLICE PLATE" (AASHTO M-270)

   ⅝" BUTTON HEAD BOLTS (AASHTO M-180)

   ⅝" HEAVY HEX NUTS (⅝" THICK) (AASHTO M-291)

   ⅝" FLAT WASHERS (⅛" THICK) (AASHTO M-293)

   C6 X 8.2 RUB RAIL (AASHTO M160 AND M270)
   GRADE 36, GALVANIZED ACCORDING TO AASHTO M111 AFTER PUNCHING AND CUTTING ARE COMPLETE.

③ THIS SLOT FOR BOLTING RAIL AND SPLICE PLATE TO GUARDRAIL POST WITH A ⅝" X 3½" BUTTON HEAD BOLT AND HEX HEAD NUT.

④ THESE SLOTS FOR BOLTING RAIL TO SPLICE PLATE WITH A ⅝" X 1½" BUTTON HEAD BOLT AND HEX HEAD NUT.

~ MAINTENANCE NOTES ~

1. NOT FOR NEW CONSTRUCTION. ONLY USE FOR REPAIRING OR RESTORING EXISTING HARDWARE.
2. FOR NEW CONSTRUCTION, REFER TO BHS-013 AND BHS-014 FOR THRIE-BEAM CONNECTIONS.
3. USE 3500 PSI CONCRETE FOR REPAIRS TO EXISTING JERSEY SHAPES.

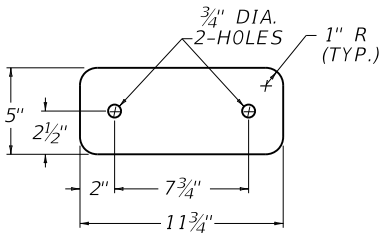

⅝" STEEL PLATE "B"

USE WITH CUR. STD. DWG.
RBC-005 RBC-003

KENTUCKY
DEPARTMENT OF HIGHWAYS

GUARDRAIL CONNECTOR
TO BRIDGE END
TYPE A COMPONENTS

STANDARD DRAWING NO. RBC-002-04

SUBMITTED William E. Ballard — DIRECTOR DIVISION OF DESIGN — 12-01-15 DATE

APPROVED — STATE HIGHWAY ENGINEER — 12-01-15 DATE

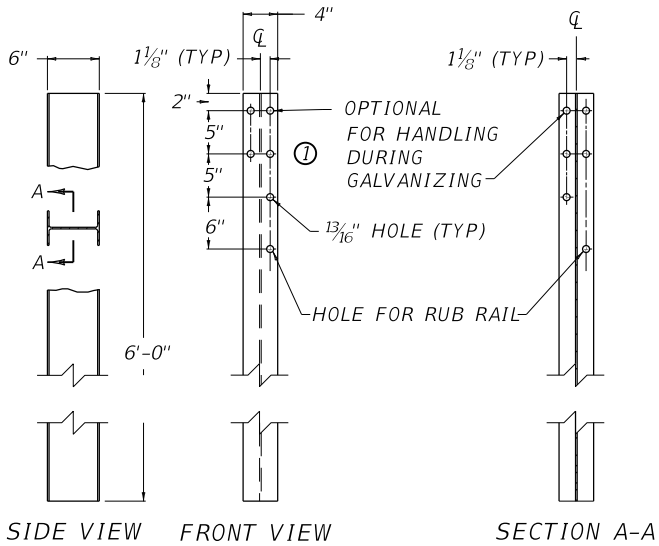

~ W6 X 9.0 STEEL GUARDRAIL POST ~

(USED WITH C6 X 8.2 RUB RAIL)

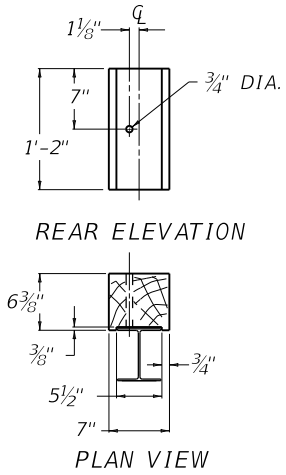

OFFSET BLOCK TYPE 6

(TIMBER OR APPROVED COMPOSITE)

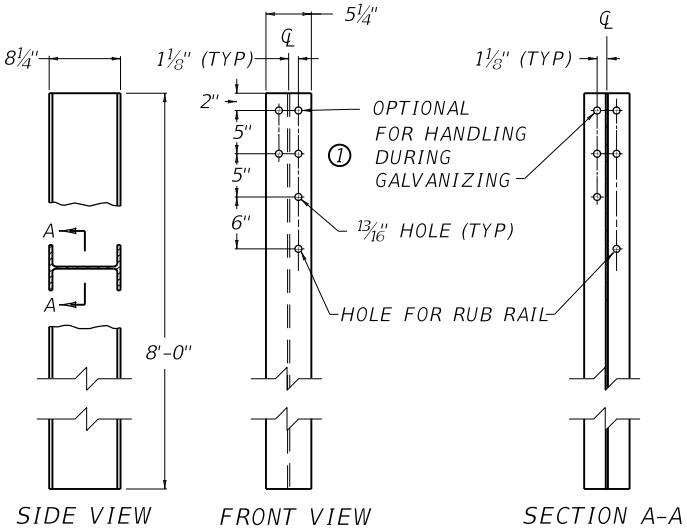

~ W8 X 21 STEEL GUARDRAIL POST ~

~ NOTES ~

1 THESE HOLES ARE REQUIRED FOR ATTACHING RAIL.

~ MAINTENANCE NOTES ~

1. NOT FOR NEW CONSTRUCTION. ONLY USE FOR REPAIRING OR RESTORING EXISTING HARDWARE.
2. FOR NEW CONSTRUCTION, REFER TO BHS-013 AND BHS-014 FOR THRIE-BEAM CONNECTIONS.
3. USE 3500 PSI CONCRETE FOR REPAIRS TO EXISTING JERSEY SHAPES.

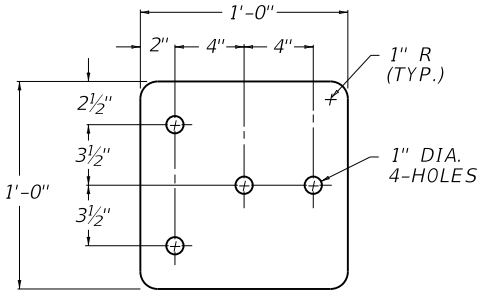

⅝" STEEL PLATE "A"

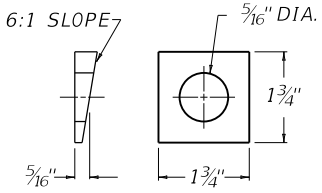

BEVELED WASHER

USE WITH CUR. STD. DWGS.
RBC-002 RBC-005 RBC-006

KENTUCKY
DEPARTMENT OF HIGHWAYS

GUARDRAIL CONNECTOR
TO BRIDGE END
TYPE A AND A-1
COMPONENTS

STANDARD DRAWING NO. RBC-003-09

SUBMITTED _____ DIRECTOR DIVISION OF DESIGN 02-26-20 DATE

APPROVED _____ STATE HIGHWAY ENGINEER 02-26-20 DATE

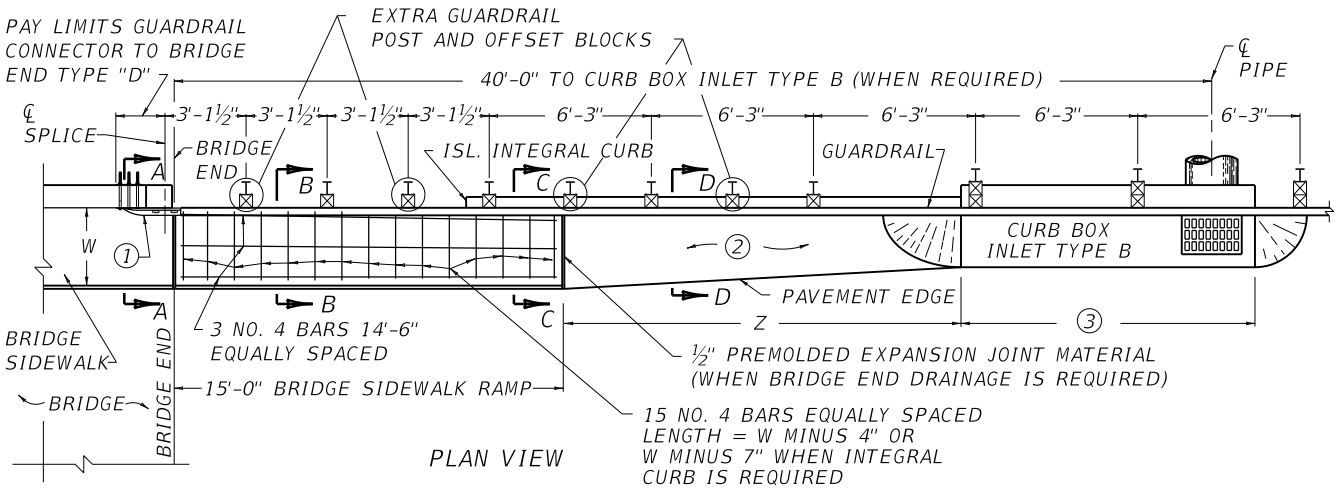

PLAN VIEW

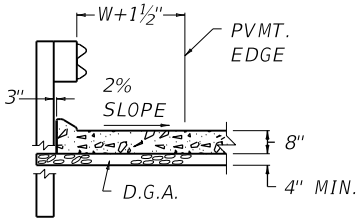

SECTION D-D

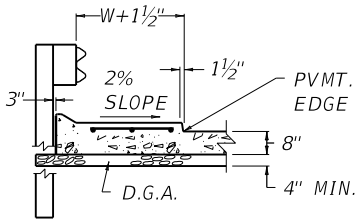

SECTION C-C

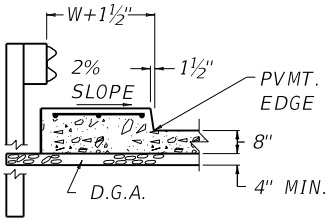

SECTION B-B

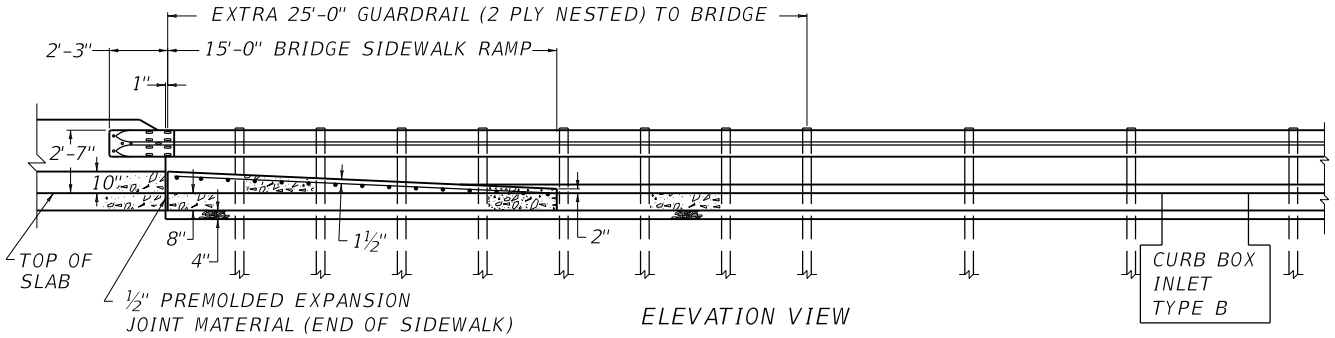

ELEVATION VIEW

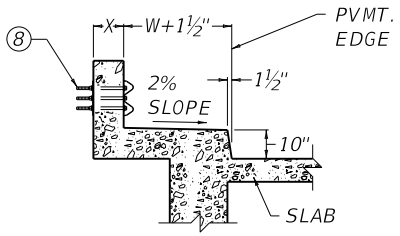

SECTION A-A
(THRU BRIDGE)

~ NOTES ~

SEE CURRENT STANDARD DRAWING NUMBER RBC-004N FOR ALL NOTES AND APPLICABLE MAINTENANCE NOTES.

NOT FOR NEW CONSTRUCTION. ONLY USE FOR REPAIRING OR RESTORING EXISTING HARDWARE.

FOR NEW CONSTRUCTION, REFER TO BHS-013 AND BHS-014 FOR THRIE-BEAM CONNECTIONS.

USE WITH CUR. STD. DWG. RDB-280

APPROXIMATE QUANTITIES

"W"	SIDEWALK RAMP	GUTTER PAVING	STEEL REINFORCEMENT	ISLAND INTERGAL CURB
	CUBIC YARDS CLASS "A" CONC.		LBS.	LINEAR FEET
2'-6"	1.9	2 0.1	51	19'-6"
3'-0"	2.3		56	
3'-6"	2.7		61	
4'-0"	3.1		66	

KENTUCKY DEPARTMENT OF HIGHWAYS

GUARDRAIL CONNECTOR TO BRIDGE END TYPE "D"

STANDARD DRAWING NO. RBC-004-08

SUBMITTED _____ DIRECTOR DIVISION OF DESIGN 02-26-20 DATE

APPROVED _____ STATE HIGHWAY ENGINEER 02-26-20 DATE

~NOTES~

(1) TERMINAL SECTION NO. 2

(2) APPROX. QUANTITY PER LIN. FT. Z DIMENSION.

(3) 6'-4" WHEN L= 5'-0" (Z= 20'-4")

★ 11'-4" WHEN L= 10'-0" (Z= 15'-4")

16'-4" WHEN L= 15'-0" (Z= 10'-4")

21'-4" WHEN L= 20'-0" (Z= 5'-4")

★ 10'-0" LENGTH IS USED MOST FREQUENTLY.

4. GUARDRAIL CONNECTOR TO BRIDGE END TYPE "D" SHALL BE PAID FOR AT THE CONTRACT UNIT PRICE EACH, AND SHALL INCLUDE TERMINAL SECTION NO. 2, EXTRA GUARDRAIL POST AND OFFSET BLOCKS, EXTRA GUARDRAIL, BRIDGE SIDEWALK RAMP (INCLUDING CLASS "A" CONCRETE, STEEL REINF. AND STRUCTURE EXCAVATION) ALL COMPLETELY INSTALLED.

5. THIS DRAWING DEPICTS GUARDRAIL CONNECTED TO A POST AT THE END OF THE BRIDGE. WHEN A BRIDGE WING EXTENDS BEYOND THE END OF THE BRIDGE, THE GUARDRAIL SHALL BE MOVED BACK AND CONNECTED IN A CORRESPONDING MANNER.

6. THE GUARDRAIL CONNECTOR TO BRIDGE END TYPE "D" SHALL BE APPLIED ON EACH END OF THE BRIDGE, WHERE A SIDEWALK EITHER EXISTS OR IS PROPOSED, ON THE STRUCTURE AND NOT ON THE ROADWAY. THIS IS ONLY APPLICABLE TO RURAL STRUCTURES THAT HAVE TWO DIRECTIONAL TRAFFIC WITH SIDEWALK.

7. SEE STANDARD DRAWING NO. RBR-SERIES (CURRENT EDITION) FOR ALL OTHER APPLICABLE MATERIAL AND CONSTRUCTION REQUIREMENTS.

BID ITEMS AND UNIT TO BID	
GUARDRAIL CONNECTOR TO BRIDGE END TY D	EACH
ISLAND INTEGRAL CURB (AS REQUIRED)	LF
DGA BASE (AS REQUIRED)	TON
CONCRETE-CLASS A (AS REQUIRED)	CUYD
CURB BOX INLET TYPE B (AS REQUIRED)	EACH

(8) CONNECT GUARDRAIL TO BRIDGE END WITH :

4-7/8" (LTH. = "Z" PLUS 3") HEX HEAD BOLTS OR 4-7/8" (LENGTH = "Z" PLUS 4") STEEL THREADED RODS WITH 4 NUTS FOR THE BOLTS AND 8 NUTS FOR THE RODS AND WITH 8 FLAT WASHERS FOR EITHER.

FORM 1" HOLES FOR THE 7/8" BOLTS WITH PLASTIC PIPE IN PROPOSED BRIDGE ENDS.

DRILL 1" HOLES FOR THE 7/8" BOLTS THROUGH EXISTING BRIDGE ENDS.

BOTH THE 7/8" BOLTS AND STEEL THREADED RODS SHALL HAVE A MINIMUM OF 50,000 LBS. TENSILE STRENGTH AT THEIR NARROWEST POINT.

ALL HARDWARE SHALL BE GALVANIZED IN ACCORDANCE WITH ASTM A153.

~MAINTENANCE NOTES~

1. NOT FOR NEW CONSTRUCTION. ONLY USE FOR REPAIRING OR RESTORING EXISTING HARDWARE.

2. FOR NEW CONSTRUCTION, REFER TO BHS-013 AND BHS-014 FOR THRIE-BEAM CONNECTIONS.

3. USE 3500 PSI CONCRETE FOR REPAIRS TO EXISTING JERSEY SHAPES.

KENTUCKY
DEPARTMENT OF HIGHWAYS

GUARDRAIL CONNECTOR TO BRIDGE END TYPE "D" NOTES

STANDARD DRAWING NO. RBC-004N

SUBMITTED _____ DIRECTOR DIVISION OF DESIGN — DATE 02-26-20

APPROVED _____ STATE HIGHWAY ENGINEER — DATE 02-26-20

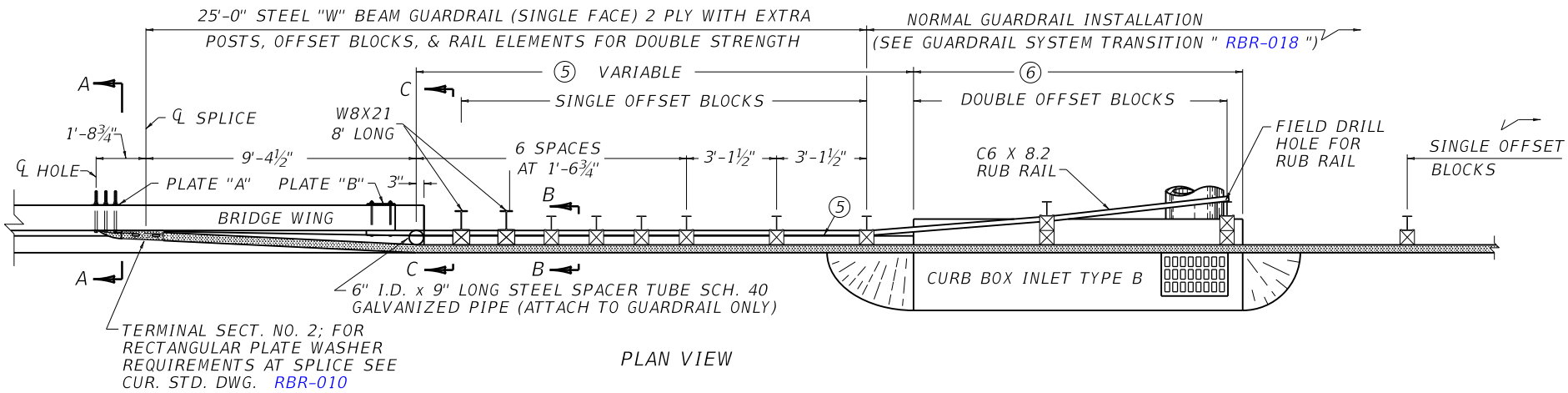

PLAN VIEW

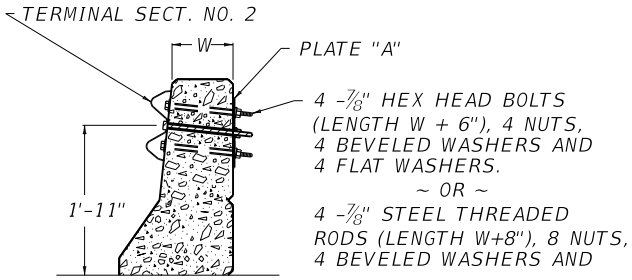

SECTION A-A

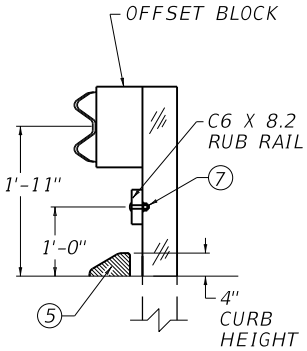

SECTION B-B

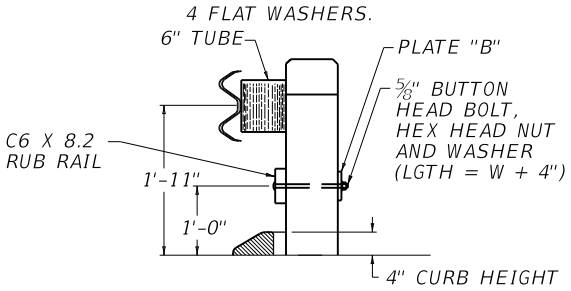

SECTION C-C

~ NOTES ~

SEE CURRENT STANDARD DRAWING NUMBER RBC-005N FOR ALL NOTES AND APPLICABLE MAINTENANCE NOTES.

NOT FOR NEW CONSTRUCTION. ONLY USE FOR REPAIRING OR RESTORING EXISTING HARDWARE.

FOR NEW CONSTRUCTION, REFER TO BHS-013 AND BHS-014 FOR THRIE-BEAM CONNECTIONS.

USE WITH CUR. STD. DWGS.
BHS-008 RBC-002 RBC-003
RBR-010

KENTUCKY
DEPARTMENT OF HIGHWAYS

GUARDRAIL CONNECTOR
TO BRIDGE END
TYPE A

STANDARD DRAWING NO. RBC-005-01

SUBMITTED _____ DIRECTOR DIVISION OF DESIGN 02-26-20 DATE

APPROVED _____ STATE HIGHWAY ENGINEER 02-26-20 DATE

~ NOTES ~

1. GENERAL
   a. SEE CUR. STD. DWGS. IN THE RBB, RBI, RBR, AND RPM-SERIES FOR OTHER RELATED GUARDRAIL DETAILS AND BRIDGE PLANS FOR BRIDGE WING DETAIL.
   b. SEE CUR. STD. DWG. RDB-SERIES FOR CURB BOX INLET TYPE B.
   c. GUARDRAIL CONNECTOR TO BRIDGE END TYPE A IS FOR USE ON BOTH BRIDGE ENDS OF AN UNDIVIDED HIGHWAY AND ON THE APPROACH BRIDGE ENDS OF A DIVIDED HIGHWAY.
2. MATERIAL REQUIREMENTS

   ALL HARDWARE SHALL BE GALVANIZED. (AASHTO M-232)

   5/8" STEEL PLATE "A" AND "B" (AASHTO M-270)

   7/8" HEX HEAD BOLTS OR STEEL THREADED RODS (LENGTH AS SHOWN)

   7/8" HEAVY HEX NUTS (7/8" THICK) (AASHTO M-291)

   7/8" FLAT WASHERS (3/16" THICK) (AASHTO M-293)

   7/8" BEVELED WASHERS (5/16" MEAN THICKNESS) (AASHTO M-293)

   BOTH THE BOLT AND THREADED ROD SHALL HAVE A MINIMUM OF 50,000 LBS. TENSILE STRENGTH AT THE NARROWEST POINT.
3. CONSTRUCTION METHODS
   a. ELIMINATE EXTRA OFFSET BLOCKS WHEN CURB BOX INLET TYPE B IS NOT REQUIRED.
   b. HOLES TO BE FORMED THROUGH BRIDGE WING WITH 1" I.D. PLASTIC PIPE FOR 7/8" BOLTS AND 3/4" I.D. PLASTIC PIPE FOR 5/8" BOLTS, PIPE SHALL REMAIN IN PLACE.
4. METHOD OF MEASUREMENT AND BASIS OF PAYMENT
   a. GUARDRAIL CONNECTOR TO BRIDGE END TYPE A SHALL BE PAID FOR AT THE CONTRACT UNIT PRICE EACH, AND INCLUDES: TERMINAL SECTION NO. 2; ALL ITEMS WHICH ARE IN ADDITION TO THE NORMAL INSTALLATION OF STEEL BEAM GUARDRAIL (EXTRA POSTS, OFFSET BLOCKS, RAIL ELEMENTS, SPACER TUBE, HARDWARE, RUB RAIL, ETC.) , AND OTHER INCIDENTALS NECESSARY TO COMPLETE THE INSTALLATION AS DETAILED. STEEL "W" BEAM GUARDRAIL (SINGLE FACE) AND ISLAND HEADER CURB ARE SEPARATE BID ITEMS WHICH ARE ALWAYS REQUIRED. CURB BOX INLET TYPE B IS A SEPARATE BID ITEM THAT WILL BE USED WHEN REQUIRED FOR BRIDGE END DRAINAGE.

   BID ITEMS AND UNIT TO BID

GUARDRAIL CONNECTOR TO BRIDGE END TY A	EACH
GUARDRAIL-STEEL "W" BEAM-S FACE	LF
ISLAND HEADER CURB TYPE 1 OR 2	LF
CURB BOX INLET TYPE B (AS REQUIRED)	EACH

   b. THE PLASTIC PIPE AND COST OF FORMING SHALL BE INCLUDED IN THE UNIT PRICE BID FOR BRIDGE SUPERSTRUCTURE CONCRETE.

(5) ISLAND HEADER CURB. TRANSITION FROM ISLAND CURB SHAPE TO SHAPE ON BRIDGE WING WITHIN 7'-3". LENGTH OF CURB VARIABLE (22'-3" WHEN L=5'-0") (17'-3" WHEN L=10'-0") (12'-3" WHEN L=15'-0") (7'-3" WHEN L=20'-0"). ON APPROACH END CONSTRUCT 25'-0" OF ISLAND HEADER CURB EVEN WHEN CURB BOX INLET TYPE B IS NOT REQUIRED.

(6) 6'-4" WHEN L=5'-0"
11'-4" WHEN L=10'-0" ☆
16'-4" WHEN L=15'-0"
21'-4" WHEN L=20'-0"

(7) 5/8" X 3 1/2" BUTTON HEAD BOLT, HEX HEAD NUT.

8. CURB BOX NOT REQUIRED UNLESS NEEDED FOR DRAINAGE.

☆ 10'-0" LENGTH IS REQUIRED UNLESS OTHERWISE NOTED.

L EQUALS THROAT LENGTH OF BOX.

~ MAINTENANCE NOTES ~

1. NOT FOR NEW CONSTRUCTION. ONLY USE FOR REPAIRING OR RESTORING EXISTING HARDWARE.
2. FOR NEW CONSTRUCTION, REFER TO BHS-013 AND BHS-014 FOR THRIE-BEAM CONNECTIONS.
3. USE 3500 PSI CONCRETE FOR REPAIRS TO EXISTING JERSEY SHAPES.

KENTUCKY
DEPARTMENT OF HIGHWAYS

GUARDRAIL CONNECTOR TO BRIDGE END TYPE A NOTES

STANDARD DRAWING NO. RBC-005N

SUBMITTED _____ DIRECTOR DIVISION OF DESIGN — 02-26-20 DATE

APPROVED _____ STATE HIGHWAY ENGINEER — 02-26-20 DATE

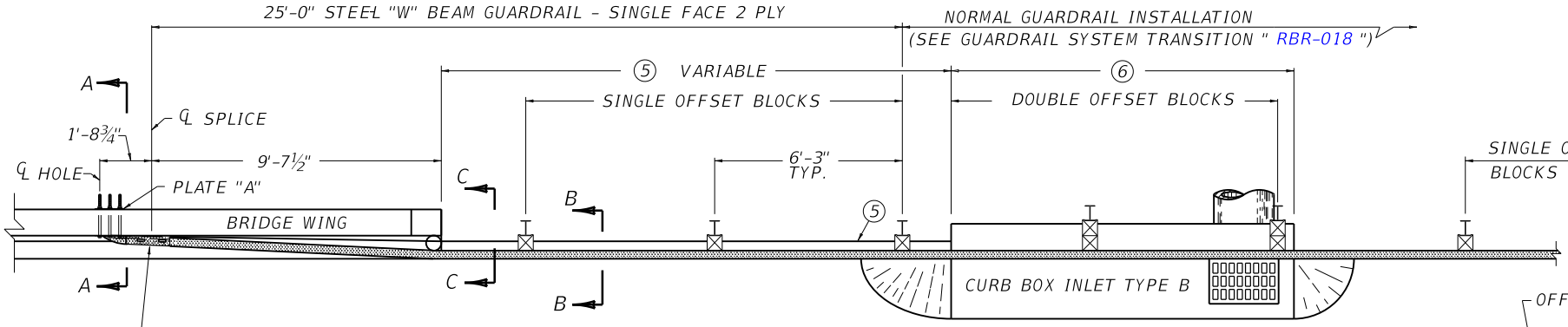

PLAN VIEW

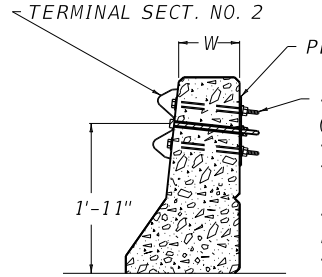

SECTION A-A

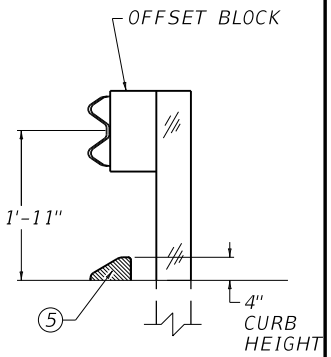

SECTION B-B

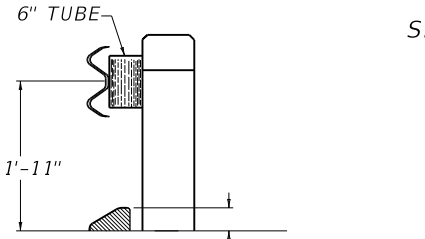

SECTION C-C

~ NOTES ~

1. GENERAL
   a. SEE CUR. STD. DWGS. IN THE RBB, RBI, RBR, AND RPM-SERIES FOR OTHER RELATED GUARDRAIL DETAILS AND BRIDGE PLANS FOR BRIDGE WING DETAIL.
   b. SEE CUR. STD. DWG. RDB-SERIES FOR CURB BOX INLET TYPE B.
   c. GUARDRAIL CONNECTOR TO BRIDGE END TYPE A-1 IS FOR USE ON THE EXIT END OF A DIVIDED HIGHWAY.
2. MATERIAL REQUIREMENTS
   ALL HARDWARE SHALL BE GALVANIZED. (AASHTO M-232)
   ⅝" STEEL PLATE "A" (AASHTO M-270)
   ⅞" HEX HEAD BOLTS OR STEEL THREADED RODS (LENGTH AS SHOWN)
   ⅞" HEAVY HEX NUTS (⅞" THICK) (AASHTO M-291)
   ⅞" FLAT WASHERS (3⁄16" THICK) (AASHTO M-293)
   ⅞" BEVELED WASHERS (5⁄16" MEAN THICKNESS) (AASHTO M-293)
   BOTH THE BOLT AND THREADED ROD SHALL HAVE A MINIMUM OF 50,000 LBS. TENSILE STRENGTH AT THE NARROWEST POINT.
3. CONSTRUCTION METHODS
   a. ELIMINATE EXTRA OFFSET BLOCKS WHEN CURB BOX INLET TYPE B IS NOT REQUIRED.
   b. HOLES TO BE FORMED THROUGH BRIDGE WING WITH 1" I.D. PLASTIC PIPE FOR ⅞" BOLTS. PLASTIC PIPE SHALL REMAIN IN PLACE.
4. METHOD OF MEASUREMENT AND BASIS OF PAYMENT
   a. GUARDRAIL CONNECTOR TO BRIDGE END TYPE A-1 SHALL BE PAID FOR AT THE CONTRACT UNIT PRICE EACH, WHICH INCLUDES TERMINAL SECT. NO. 2, RAIL ELEMENTS, SPACER TUBE, HARDWARE AND ALL OTHER INCIDENTALS NECESSARY TO COMPLETE THE INSTALLATION. STEEL "W" BEAM GUARDRAIL (SINGLE FACE) AND ISLAND HEADER CURB ARE SEPARATE BID ITEMS WHICH ARE ALWAYS REQUIRED. CURB BOX INLET TYPE B IS A SEPARATE BID ITEM THAT WILL BE USED WHEN REQUIRED FOR BRIDGE END DRAINAGE.

   BID ITEMS AND UNIT TO BID

GUARDRAIL CONNECTOR TO BRIDGE END TY A-1	EACH
GUARDRAIL-STEEL "W" BEAM-S FACE	LF
ISLAND HEADER CURB TYPE 1 OR 2	LF
CURB BOX INLET TYPE B (AS REQUIRED)	EACH

   b. THE PLASTIC PIPE AND COST OF FORMING SHALL BE INCLUDED IN THE UNIT PRICE BID FOR BRIDGE SUPERSTRUCTURE CONCRETE.

5 ISLAND HEADER CURB. TRANSITION FROM ISLAND CURB SHAPE TO SHAPE ON BRIDGE WING WITHIN 7'-3". LENGTH OF CURB VARIABLE (22'-3" WHEN L=5'-0") (17'-3" WHEN L=10'-0") (12'-3" WHEN L=15'-0") (7'-3" WHEN L=20'-0"). ON THE APPROACH END CONSTRUCT 25'-0" OF ISLAND HEADER CURB EVEN WHEN CURB BOX INLET TYPE B IS NOT REQUIRED.

6 6'-4" WHEN L=5'-0"
11'-4" WHEN L=10'-0" ☆
16'-4" WHEN L=15'-0"
21'-4" WHEN L=20'-0"

7. CURB BOX NOT REQUIRED UNLESS NEEDED FOR DRAINAGE.

☆ 10'-0" LENGTH IS REQUIRED UNLESS OTHERWISE NOTED.

L EQUALS THROAT LENGTH OF BOX.

USE WITH CUR. STD. DWGS.
BHS-008 RBC-002 RBC-003
RBR-010

~ MAINTENANCE NOTES ~

1. NOT FOR NEW CONSTRUCTION. ONLY USE FOR REPAIRING OR RESTORING EXISTING HARDWARE.
2. FOR NEW CONSTRUCTION, REFER TO BHS-013 AND BHS-014 FOR THRIE-BEAM CONNECTIONS.
3. USE 3500 PSI CONCRETE FOR REPAIRS TO EXISTING JERSEY SHAPES.

KENTUCKY
DEPARTMENT OF HIGHWAYS

GUARDRAIL CONNECTOR TO BRIDGE END TYPE A-1

STANDARD DRAWING NO. RBC-006-01

SUBMITTED _____ DIRECTOR DIVISION OF DESIGN — DATE 02-26-20

APPROVED _____ STATE HIGHWAY ENGINEER — DATE 02-26-20

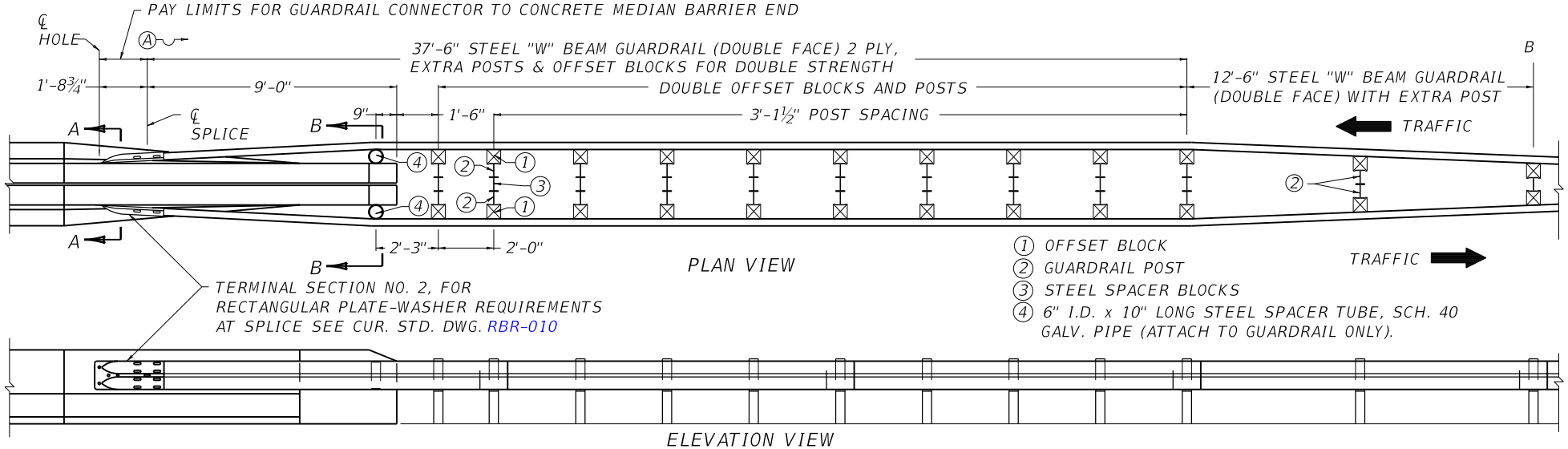

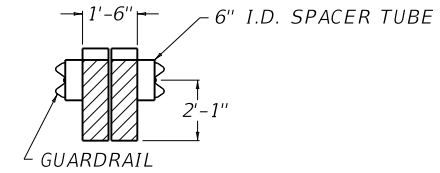

SECTION B-B

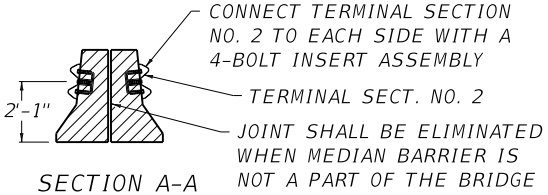

SECTION A-A

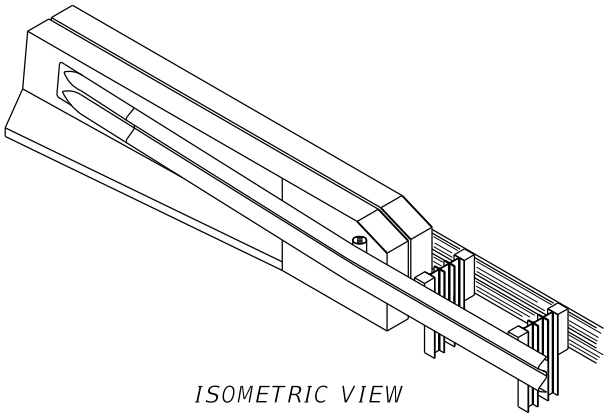

ISOMETRIC VIEW

FOUR BOLT INSERT ASSEMBLY

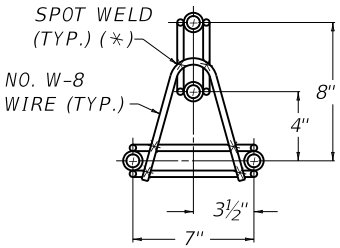

PLAN VIEW

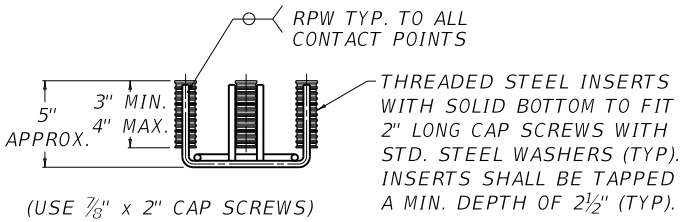

ELEVATION VIEW

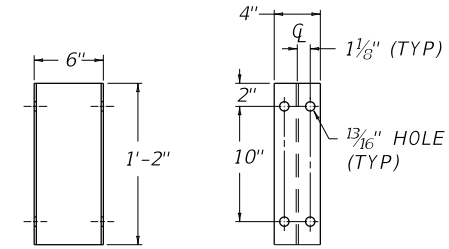

SIDE VIEW FRONT VIEW

SPACER BLOCK
(W6 X 9.0)

USE WITH CUR. STD. DWG. RBR-010

~ NOTES ~

SEE CURRENT STANDARD DRAWING NUMBER RBC-100N FOR ALL NOTES AND APPLICABLE MAINTENANCE NOTES.

NOT FOR NEW CONSTRUCTION. ONLY USE FOR REPAIRING OR RESTORING EXISTING HARDWARE.

KENTUCKY
DEPARTMENT OF HIGHWAYS

GUARDRAIL CONNECTOR TO CONCRETE MEDIAN BARRIER END

STANDARD DRAWING NO. RBC-100-05

SUBMITTED _____ DIRECTOR DIVISION OF DESIGN — DATE 02-26-20

APPROVED _____ STATE HIGHWAY ENGINEER — DATE 02-26-20

~ NOTES ~

1. GUARDRAIL CONNECTOR TO CONCRETE MEDIAN BARRIER END SHALL BE PAID FOR AT THE CONTRACT UNIT PRICE EACH AND INCLUDES TERMINAL SECTION NO. 2, ADDITIONAL POSTS, ADDITIONAL OFFSET BLOCKS, ADDITIONAL RAIL ELEMENTS, HARDWARE, ETC., AND OTHER INCIDENTALS AS SHOWN BETWEEN POINTS (A) AND (B) NECESSARY TO COMPLETE THE INSTALLATION AS DETAILED.
2. THE STEEL "W" BEAM GUARDRAIL (DOUBLE FACE), IS A SEPARATE BID ITEM AND SHALL BEGIN PAYMENT AT POINT (A).
3. THE 4-BOLT INSERT ASSEMBLY INSTALLATION SHALL BE INCIDENTAL TO THE COST OF THE BRIDGE SUPERSTRUCTURE CONCRETE OR CONCRETE MEDIAN BARRIER END AS APPLICABLE.
4. 4-BOLT ASSEMBLIES:
   - (a) THE 7/8" x 2" CAP SCREWS WITH STANDARD STEEL WASHERS SHALL BE GALVANIZED AND CONFORM TO ASTM A-325.
   - (b) NO. W-8 GAGE WIRE, COLD DRAWN CONFORMING TO ASTM A-82.
   - (c) STEEL INSERTS SHALL CONFORM TO ASTM A-108 GRADES C1008 AND C1010 OR B1113.
5. SEE CUR. STD. DWGS. IN THE RBI, RBE, AND RBR-SERIES AS APPLICABLE.
6. SEE BRIDGE PLANS FOR CONSTRUCTION DETAILS WHEN APPLICABLE.

BID ITEMS AND UNIT TO BID

GUARDRAIL CONNECTOR TO CONCRETE MEDIAN BARRIER END	EACH
GUARDRAIL-STEEL W BEAM-D FACE	LF

~ MAINTENANCE NOTES ~

1. NOT FOR NEW CONSTRUCTION. ONLY USE FOR REPAIRING OR RESTORING EXISTING HARDWARE.
2. USE 3500 PSI CONCRETE FOR REPAIRS TO EXISTING JERSEY SHAPES.

KENTUCKY
DEPARTMENT OF HIGHWAYS

GUARDRAIL CONNECTOR TO CONCRETE MEDIAN BARRIER END NOTES

STANDARD DRAWING NO. RBC-100N

SUBMITTED _____ DIRECTOR DIVISION OF DESIGN — DATE 02-26-20

APPROVED _____ STATE HIGHWAY ENGINEER — DATE 02-26-20

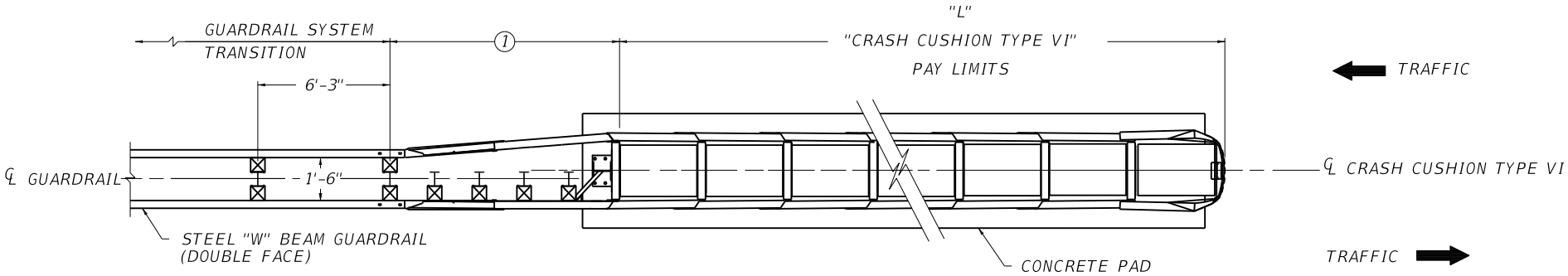

~ PLAN ~

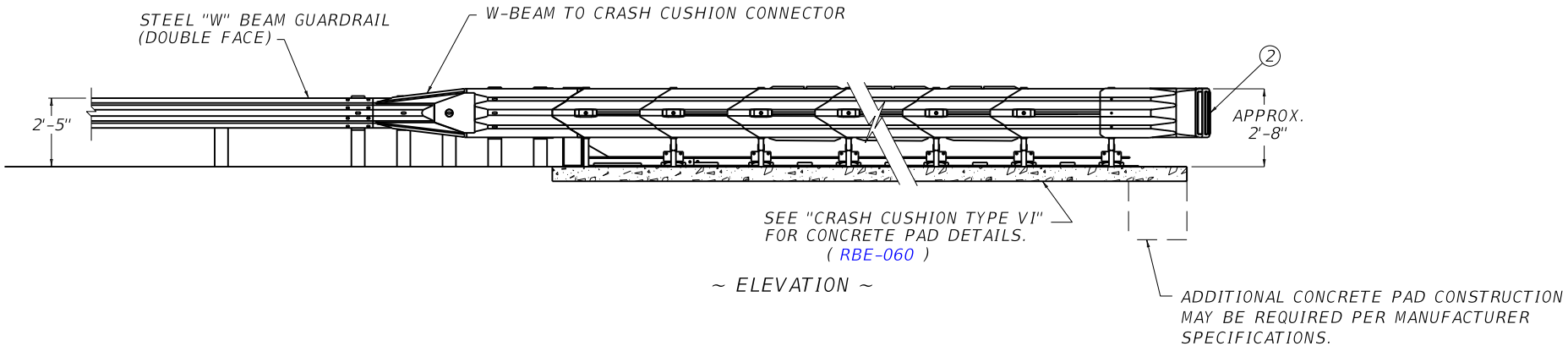

~ ELEVATION ~

~ NOTES ~

1. ALL HARDWARE, POSTS, OFFSET BLOCKS, ADDITIONAL GUARDRAIL, W-BEAM TO CRASH CUSHION CONNECTOR, LABOR AND INCIDENTALS WITHIN THE TRANSITION LENGTH, AS REQUIRED BY THE CRASH CUSHION MANUFACTURER SHALL BE INCLUDED IN THE CONTRACT UNIT PRICE FOR "CRASH CUSHION TYPE VI ★ △." △ ADD SUFFIX OF 1 TO BID ITEM WHICH DENOTES A BACK-UP SYSTEM OTHER THAN CONCRETE, AS DETAILED ON PLANS AND APPROVED SHOP DRAWINGS.
2. OBJECT MARKER TYPE 1, (SEE CURRENT MUTCD MANUAL FOR DETAILS) CENTER HORIZ. AND VERT.

   BID ITEM AND UNIT TO BID
   OBJECT MARKER TYPE 1 EACH
3. CRASH CUSHIONS ARE TO BE INSTALLED PER MANUFACTURER SPECIFICATIONS, INCLUDING THE CONCRETE PAD. MANUFACTURER SHALL FURNISH TWO (2) SETS OF SHOP PLANS TO THE CONTRACTOR WITH EACH INSTALLATION.

USE WITH CUR. STD. DWG.
RBE-060

KENTUCKY
DEPARTMENT OF HIGHWAYS

CONNECTION DETAILS OF CRASH CUSHION TYPE VI TO DOUBLE FACE GUARDRAIL

STANDARD DRAWING NO. RBC-110-12

SUBMITTED _____ DIRECTOR DIVISION OF DESIGN 02-26-20 DATE

APPROVED _____ STATE HIGHWAY ENGINEER 02-26-20 DATE

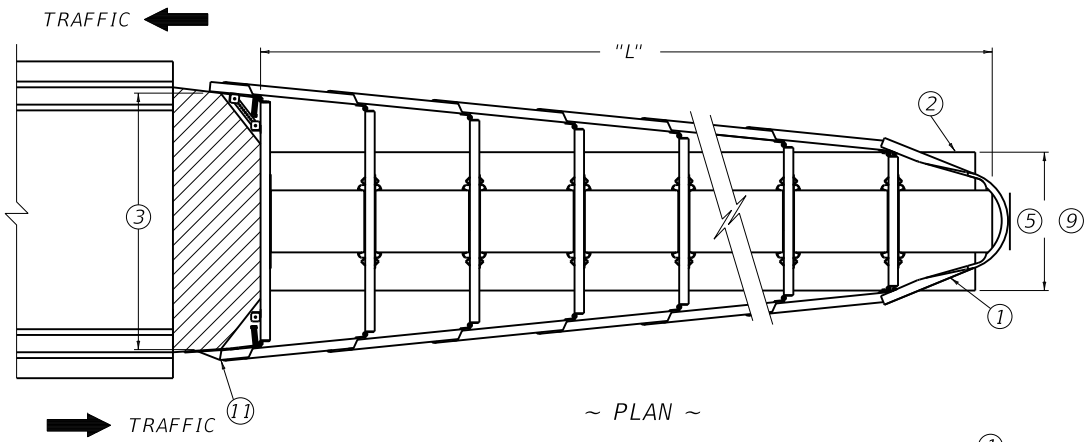

~ PLAN ~

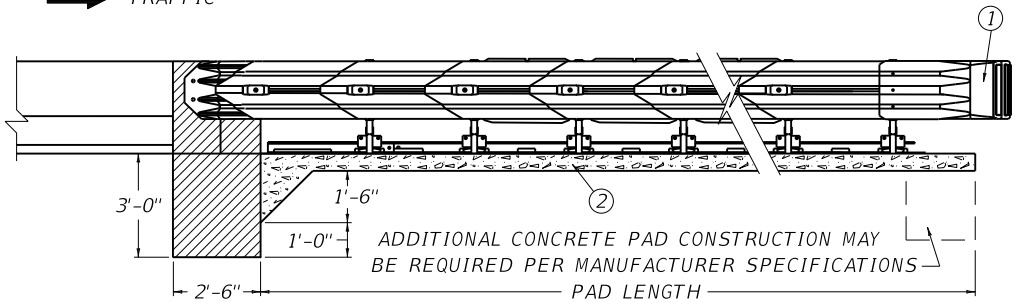

~ ELEVATION ~

~ CONCRETE PAD SECTION ~
(PER MANUFACTURER SPECIFICATIONS)
REFER TO NOTES 5

~ NOTES ~

1. NOSE ASSEMBLY (OBJECT MARKER TYPE 1 AS REQUIRED)
2. 6" CONCRETE PAD PER MANUFACTURER SPECIFICATIONS.
3. MEDIUM WIDTH = 70 ½", APPROX. 2.8 CU. YD. CONC. AND 265 LBS. OF STEEL FOR MED. BACKUP. WIDE WIDTH = 91 ½", APPROX. 3.8 CU. YD. CONC. AND 299 LBS. OF STEEL FOR WIDE BACKUP.

CLASS	SPEED (MPH)	ATTENUATOR			SUGGESTED ADT* RANGE (P.C.P.L.) **
		MODEL	PRODUCT NAME	LENGTH	
B	45 & LESS	TL2	3-BAY QUADGUARD M10	12'-0"	UP TO 12,000
	OVER 45	TL3	5-BAY QUADGUARD M10	18'-0"	
C	OVER 45	TL3	SCI100GM	23'-0"	8,000 AND OVER
			QUADGUARD ELITE M10	26'-7"	

* AVERAGE DAILY TRAFFIC
** PASSENGER CARS PER LANE

4. THE CONTRACT UNIT PRICE SHALL BE CRASH CUSHION TYPE VII, CLASS ♠ , ⬡ , △ .
   - ♠ CLASS B OR C, AS REQUIRED
   - ⬡ TEST LEVEL 2 (TL2) OR TEST LEVEL 3 (TL3), AS REQUIRED.
   - △ EITHER M MEDIUM, OR W WIDE, OR S SPECIAL WIDE UNITS

5. THE CONCRETE PAD, PAD EXCAVATION AND STEEL REINFORCEMENT, INSTALLED IN PLACE SHALL BE INCLUDED IN THE UNIT PRICE BID FOR CRASH CUSHION TYPE VI. DIMENSION AND REINFORCEMENT SPECIFICATIONS FOR CONCRETE PADS ARE TO BE PROVIDED BY THE MANUFACTURER. THE PAD WILL NOT BE REQUIRED WHEN THE UNIT IS CONSTRUCTED ON RIGID PAVEMENT.

6. THE CROSS SLOPE ON THE PAD OR PAVEMENT SHALL BE PER MANUFACTURER SPECIFICATIONS.

7. WHEN INSTALLED ON A STRUCTURE, DETAILS FOR ANCHORAGE SHALL BE DEVELOPED AND SHOWN ELSEWHERE ON THE PLANS .

8. SPECIAL WIDTH UNITS ARE AVAILABLE FROM THE MANUFACTURERS. WHEN SPECIAL WIDE UNITS ARE REQUIRED DETAILS OF THE UNIT SHALL BE DEVELOPED AND SHOWN ELSEWHERE ON THE PLANS.

9. CRASH CUSHIONS ARE TO BE INSTALLED PER MANUFACTURER SPECIFICATIONS, INCLUDING THE CONCRETE PAD. THE MANUFACTURER SHALL FURNISH TWO (2) SETS OF SHOP PLANS TO THE CONTRACTOR WITH EACH INSTALLATION.

10. CONCRETE PAD AND BELOW GRADE ANCHOR SHALL BE PLACED MONOLITHICALLY.

11. END SHOE MAY BE ELIMINATED WITH ONE WAY TRAFFIC.

12. THE CRASH CUSHION TYPE VII MAY ALSO BE UTILIZED FOR TEMPORARY USE AND CONSTRUCTION ZONES (CLASS BT).

13. A CRASH CUSHION TYPE VII CLASS B IS TO BE USED IN AREAS WHERE CRASH HISTORY IS NOT KNOWN TO BE SEVERE.

14. A CRASH CUSHION TYPE VII CLASS C IS CONSIDERED A SEVERE USE CRASH CUSHION.

ADDITIONAL BID ITEMS AND UNIT TO BID

OBJECT MARKER TYPE 1 (AS REQUIRED)	EACH

KENTUCKY
DEPARTMENT OF HIGHWAYS

CRASH CUSHION
TYPE VII
CLASS B AND C
(ONE & TWO DIRECTION)

STANDARD DRAWING NO. RBE-040-11

SUBMITTED _____ DIRECTOR DIVISION OF DESIGN — DATE 02-26-20

APPROVED _____ STATE HIGHWAY ENGINEER — DATE 02-26-20

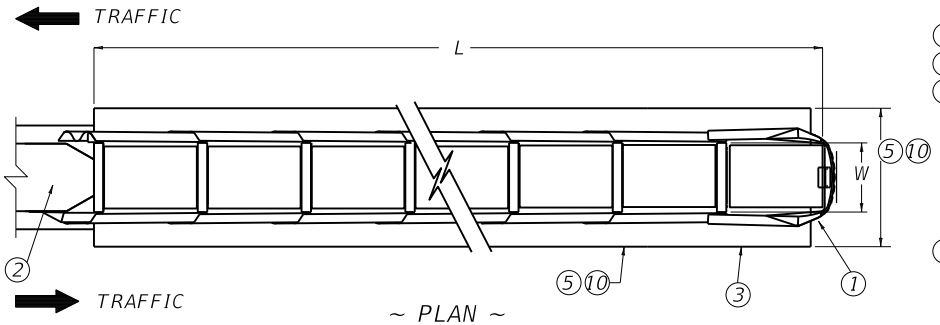

~ PLAN ~

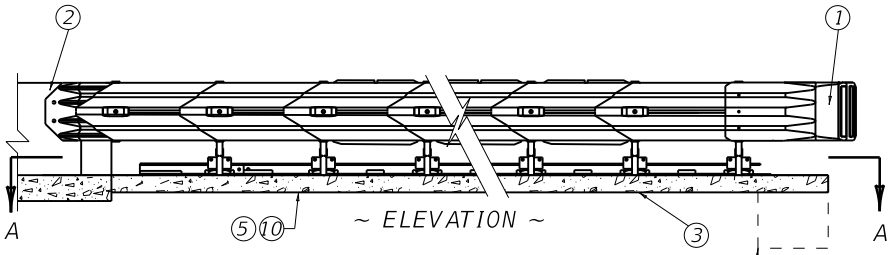

~ ELEVATION ~

Additional Concrete Pad Construction may be Required Per Manufacturer Specifications

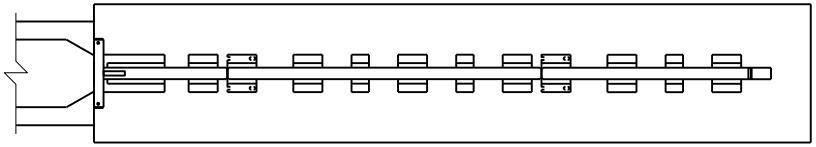

~ SECTION A-A ~

Reinforcement Per Manufacturer Specifications

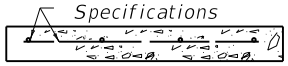

~ CONCRETE PAD SECTION ~
(Per Manufacturer Specifications)
Refer to Notes 5

~ NOTES ~

1. NOSE ASSEMBLY (OBJECT MARKER TYPE 1 AS REQUIRED)
2. BACKUP
3. 6" CONCRETE PAD PER MANUFACTURER SPECIFICATIONS.
4. CRASH CUSHION TYPE VI , CLASS A , B , C
   - A CLASS B OR C, AS REQUIRED
   - B EITHER TEST LEVEL 2 (TL2) OR TEST LEVEL 3 (TL3),AS REQUIRED.
   - C SEE "CONNECTION DETAILS OF CRASH CUSHION TYPE VI TO DOUBLE FACE GUARDRAIL".
5. THE CONCRETE PAD, PAD EXCAVATION AND STEEL REINFORCEMENT, INSTALLED IN PLACE SHALL BE INCLUDED IN THE UNIT PRICE BID FOR CRASH CUSHION TYPE VI. DIMENSION AND REINFORCEMENT SPECIFICATIONS FOR CONCRETE PADS ARE TO BE PROVIDED BY THE MANUFACTURER. THE PAD WILL NOT BE REQUIRED WHEN THE UNIT IS CONSTRUCTED ON RIGID PAVEMENT.
6. CRASH CUSHION TYPE VI MAY BE USED AT THE END OF: CONCRETE MEDIAN BARRIER, BRIDGE PIERS AND STEEL "W" BEAM GUARDRAIL (DOUBLE FACE).
7. WHEN CRASH CUSHION TYPE VI CONNECTS TO: CONCRETE MEDIAN BARRIER OR BRIDGE PIER THE CONTRACT UNIT PRICE SHALL INCLUDE: CRASH CUSHION TYPE VI, ALL HARD-WARE, ADDITIONAL RAIL ELEMENTS, POST, CONCRETE PAD AND ALL OTHER INCIDENTALS NECESSARY TO COMPLETE THE INSTALLATION.
8. THIS DRAWING DEPICTS A CONNECTION OF CRASH CUSHION TYPE VI TO CONCRETE MEDIAN BARRIER END. FOR THIS APPLICATION SEE CURRENT STD. DWG. RBE-065 " CONCRETE MEDIAN BARRIER END ".
9. WHEN CRASH CUSHION TYPE VI CONNECTS TO DOUBLE FACE GUARDRAIL SEE CURRENT SEPIA 018 "CONNECTION DETAILS OF CRASH CUSHION TYPE VI TO DOUBLE FACE GUARDRAIL".
10. CRASH CUSHIONS ARE TO BE INSTALLED PER MANUFACTURER SPECIFICATIONS, INCLUDING THE CONCRETE PAD.
    THE MANUFACTURER SHALL FURNISH TWO (2) SETS OF SHOP PLANS TO THE CONTRACTOR WITH EACH INSTALLATION.
11. THE CRASH CUSHION TYPE VI MAY ALSO BE UTILIZED FOR TEMPORARY USE AND CONSTRUCTION ZONES (CLASS BT).
12. A CRASH CUSHION TYPE VI CLASS B IS TO BE USED IN AREAS WHERE CRASH HISTORY IS NOT KNOWN TO BE SEVERE.
13. A CRASH CUSHION TYPE VI CLASS C IS CONSIDERED A SEVERE USE CRASH CUSHION.

ADDITIONAL BID ITEMS AND UNIT TO BID

OBJECT MARKER TYPE 1 (AS REQUIRED) EACH

CLASS	SPEED (MPH)	ATTENUATOR			SUGGESTED ADT* RANGE (P.C.P.L.) **
		MODEL	PRODUCT NAME	LENGTH	
B	45 & LESS	TL2	UNIVERSAL TAU-M	14'-2"	UP TO 12,000
			3-BAY QUADGUARD M10	12'-0"	
	OVER 45	TL3	UNIVERSAL TAU-M	22'-9"	
			5-BAY QUADGUARD M10	18'-0"	
C	OVER 45	TL3	SCI100GM	23'-0"	8,000 AND OVER
			QUADGUARD ELITE M10	26'-7"	

W= 2'-0" (INSIDE BAY WIDTH)

* AVERAGE DAILY TRAFFIC
** PASSENGER CARS PER LANE

USE WITH CUR. STD. DWG.
RBE-065 RBC-110

KENTUCKY
DEPARTMENT OF HIGHWAYS

CRASH CUSHION
TYPE VI A B C
(ONE & TWO DIRECTION)

STANDARD DRAWING NO. RBE-060-15

SUBMITTED _____ DIRECTOR DIVISION OF DESIGN 02-26-20 DATE

APPROVED _____ STATE HIGHWAY ENGINEER 02-26-20 DATE

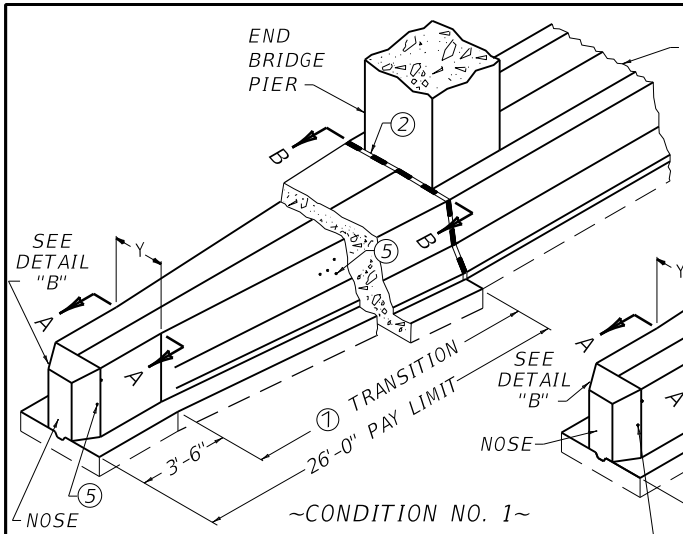

~CONDITION NO. 1~
FOR MEDIAN BARRIER SHAPE AROUND BRIDGE PIER

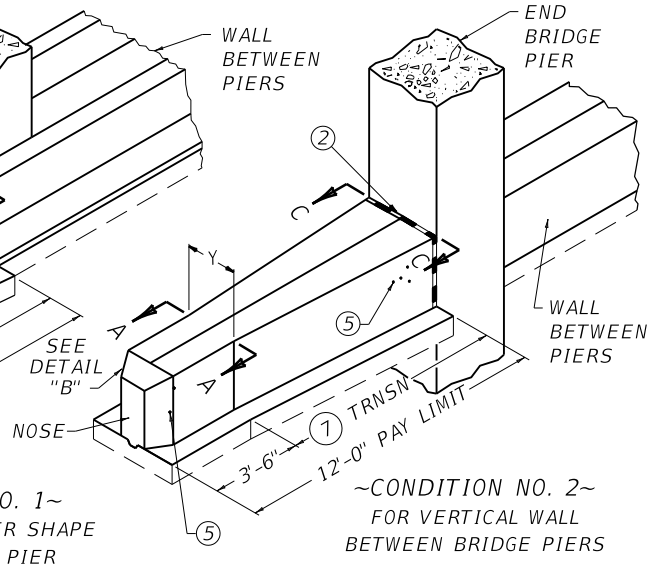

~CONDITION NO. 2~
FOR VERTICAL WALL BETWEEN BRIDGE PIERS

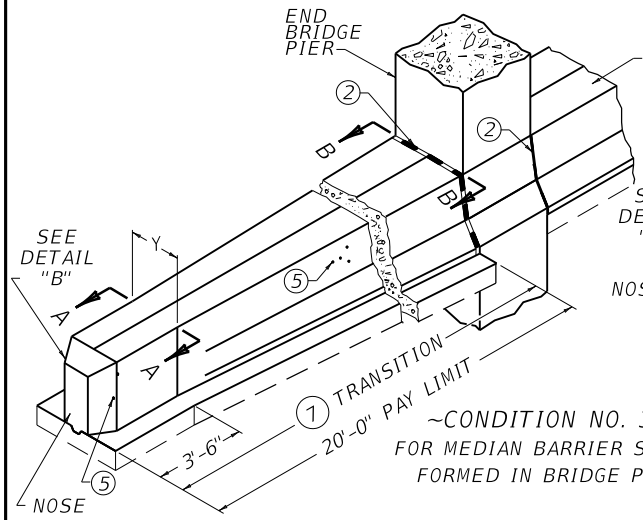

~CONDITION NO. 3~
FOR MEDIAN BARRIER SHAPE FORMED IN BRIDGE PIER

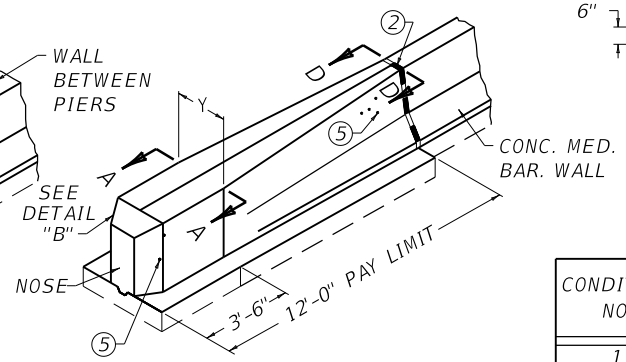

~CONDITION NO. 4~
FOR CONCRETE MEDIAN BARRIER

~ NOTES ~

SEE CURRENT STANDARD DRAWING NUMBER RBE-065N FOR ALL NOTES AND APPLICABLE MAINTENANCE NOTES.

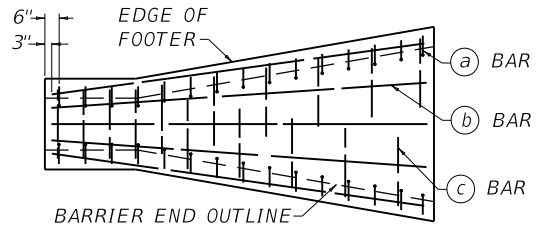

TYPICAL STEEL PLACEMENT

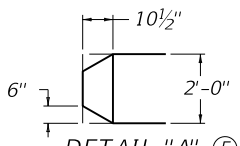

DETAIL "A" 5

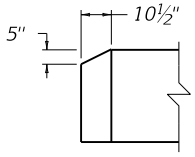

DETAIL "B"

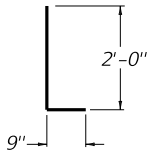

BAR a

CONDITION NO.	NO. 5 STEEL REINFORCEMENT BARS								CUBIC YARD 4 CLASS "A" CONC.	
	W	BAR a		BAR b		BAR c		LBS.		
		QTY.	LGTH.	QTY.	LGTH.	QTY.	LGTH.		Y=2'-0"	Y=1'-6"
1	6"	52	2'-9"	5	25'-6"	26	2'-8"	354	11.56	10.19
2	-	24			11'-6"	12		163	4.07	3.58
3	-	40			19'-6"	20		272	7.70	6.96
4	9"	24			11'-6"	12		163	3.38	2.89
	12"								3.51	3.03

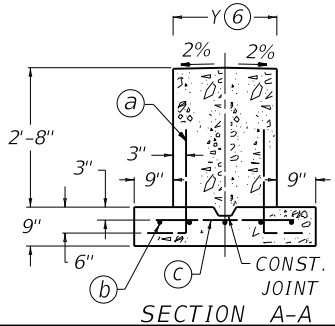

SECTION A-A

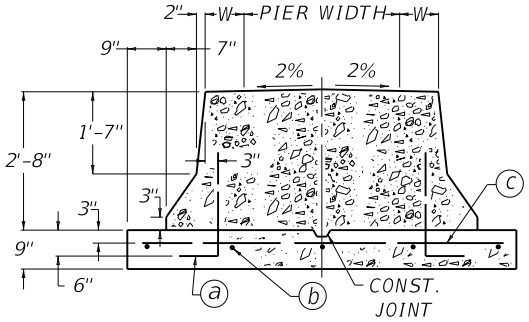

SECTION B-B

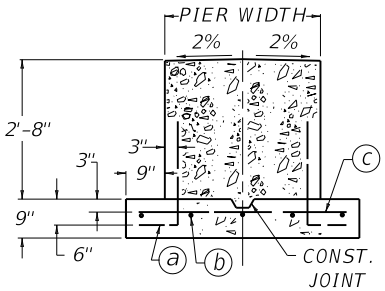

SECTION C-C

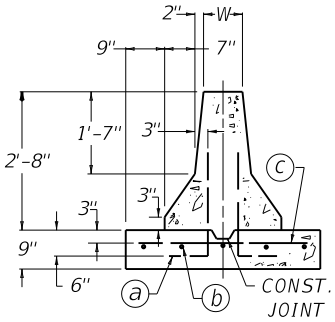

SECTION D-D

USE WITH CUR. STD. DWG.
RBE-060 RBC-100

KENTUCKY
DEPARTMENT OF HIGHWAYS

CONCRETE MEDIAN BARRIER END

STANDARD DRAWING NO. RBE-065-08

SUBMITTED William E. Ginkel DIRECTOR, DIVISION OF DESIGN 12-01-15 DATE

APPROVED STATE HIGHWAY ENGINEER 12-01-15 DATE

~ NOTES ~

1. THE CONTRACT UNIT PRICE SHALL INCLUDE ALL MATERIALS, TOOLS, FORMS, LABOR, EXCAVATION, AND INCIDENTALS NECESSARY TO COMPLETE THE WORK IN ACCORDANCE WITH THIS DRAWING.

(2) ½" PREMOLDED EXPANSION JOINT MATERIAL REQUIRED.

3. STEEL REINFORCING BARS SHALL BE EVENLY SPACED AS SHOWN AND SHALL BE GRADE 40 MINIMUM.

(4) CONCRETE QUANTITIES FOR CONDITION NO.'S. 1, 2, AND 3 ARE BASED ON A BRIDGE PIER WIDTH OF 3'-0".

(5) USE DETAIL "A" FOR ENERGY ABSORPTION SYSTEM'S QUADGUARD CRASH CUSHION ALTERNATE. ALL OTHER CONNECTIONS REQUIRE A SQUARE NOSE.

(6) Y=2'-0" FOR CRASH CUSHION TYPE VI, AND Y=1'-6" FOR GUARDRAIL CONNECTOR TO CONCRETE MEDIAN BARRIER END.

WHEN THE CONCRETE MEDIAN BARRIER END IS PLACED AT A PIER WIDER THAN 3'-0" THE BARRIER END TRANSITION SHALL BE CONSTRUCTED ON A 12:1 MIN. TAPER AND ADDITIONAL CONCRETE AND STEEL QUANTITIES SHALL BE CALCULATED.

BID ITEMS AND UNIT TO BID:

STEEL REINFORCEMENT	LB
CONCRETE-CLASS A	CUYD

~ MAINTENANCE NOTES ~

1. NOT FOR NEW CONSTRUCTION. ONLY USE FOR REPAIRING OR RESTORING EXISTING HARDWARE.
2. USE 3500 PSI CONCRETE FOR REPAIRS TO EXISTING JERSEY SHAPES.

KENTUCKY
DEPARTMENT OF HIGHWAYS

CONCRETE MEDIAN
BARRIER END NOTES

STANDARD DRAWING NO. RBE-065N

SUBMITTED _____ DIRECTOR DIVISION OF DESIGN _____ 02-26-20 DATE

APPROVED _____ STATE HIGHWAY ENGINEER _____ 02-26-20 DATE

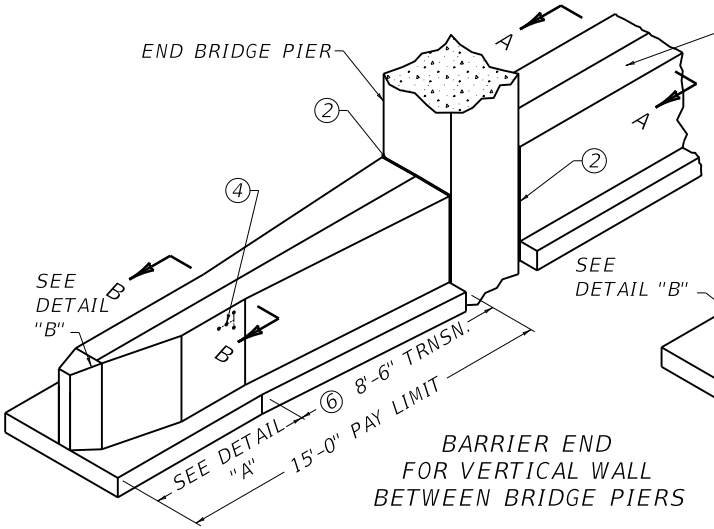

BARRIER END FOR VERTICAL WALL BETWEEN BRIDGE PIERS

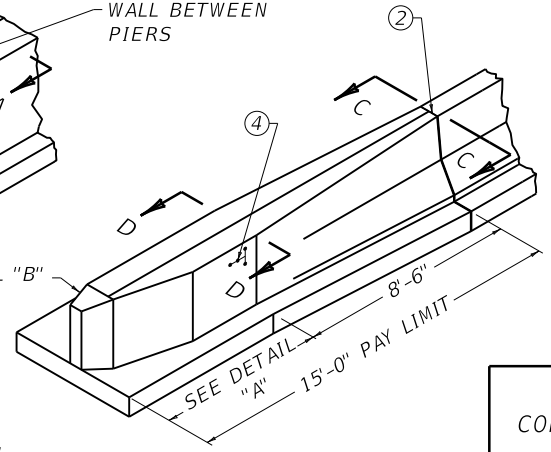

BARRIER END FOR CONCRETE MEDIAN BARRIER

~ NOTES ~

SEE CURRENT STANDARD DRAWING NUMBER RBE-070N FOR ALL NOTES AND APPLICABLE MAINTENANCE NOTES.

CONDITION	NO. 5 STEEL REINF. BARS						POUNDS OF STEEL	CU. YDS. CLASS "A" CONC.
	ⓐ BAR		ⓑ BAR		ⓒ BAR			
	QTY.	LGTH.	QTY.	LGTH.	QTY.	LGTH.		
BARRIER END AT BRIDGE PIERS	30	2'-9"	5	14'-4"	15	2'-3"	196	⑤ 5.73
9" WALL								3.71
12" WALL								3.87
14" WALL								3.96

QUANTITIES FOR ONE CONCRETE MEDIAN BARRIER END

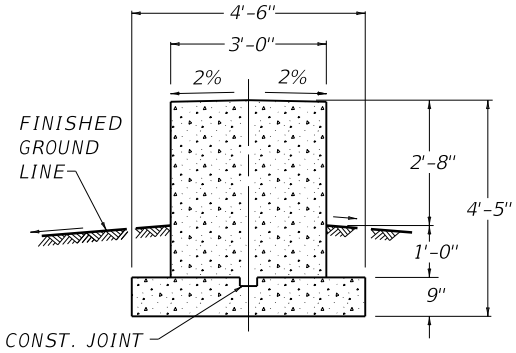

SECTION A-A
(WALL BETWEEN BRIDGE PIERS)

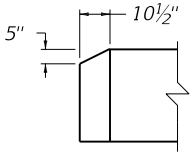

DETAIL "B"

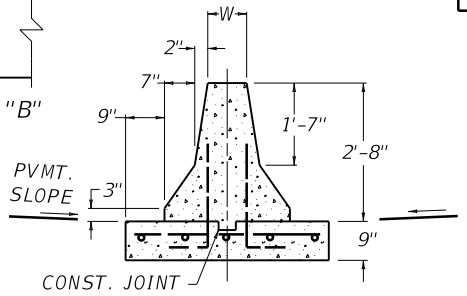

SECTION C-C

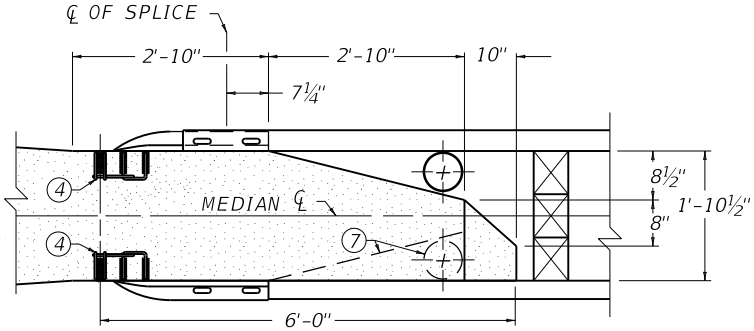

DETAIL "A"

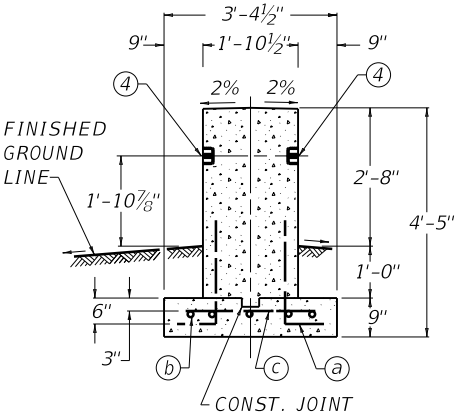

SECTION B-B

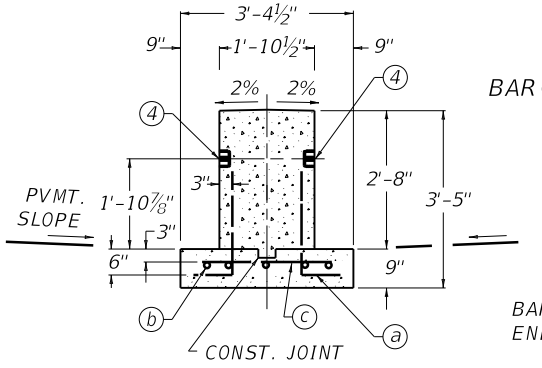

SECTION D-D

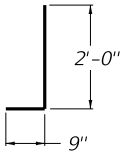

BAR ⓐ DETAIL

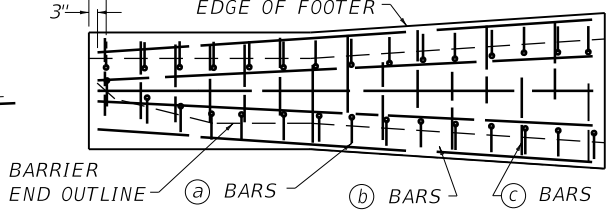

TYPICAL STEEL PLACEMENT

USE WITH CUR. STD. DWG.
RBC-100 RBE-200

KENTUCKY
DEPARTMENT OF HIGHWAYS

CONCRETE MEDIAN BARRIER END FOR CRASH CUSHION TYPE IX

STANDARD DRAWING NO. RBE-070-07

SUBMITTED William E. Ginkel — DIRECTOR, DIVISION OF DESIGN — 12-01-15 DATE

APPROVED — STATE HIGHWAY ENGINEER — 12-01-15 DATE

~ NOTES ~

1. THE CONTRACT UNIT PRICE SHALL INCLUDE ALL MATERIALS, TOOLS, FORMS, LABOR, EXCAVATION, AND INCIDENTALS NECESSARY TO COMPLETE THE WORK IN ACCORDANCE WITH THIS DRAWING.

(2) ½" PREMOLDED EXPANSION JOINT MATERIAL REQUIRED.

3. STEEL REINFORCING BARS SHALL BE EVENLY SPACED AS SHOWN AND SHALL BE GRADE 40 MINIMUM.

(4) 4-BOLT INSERT ASSEMBLIES ARE REQUIRED. (SEE CURRENT STD. DWG. RBC-100 FOR INSERT DETAIL).

(5) CONCRETE QUANTITIES AT BRIDGE PIERS ARE BASED ON A BRIDGE PIER WIDTH OF 3'-0".

(6) WHEN THE CONCRETE MEDIAN BARRIER END IS PLACED AT A PIER WIDER THAN 3'-0" THE BARRIER END TRANSITION SHALL BE CONSTRUCTED ON A 12:1 MIN. TAPER AND ADDITIONAL CONCRETE AND STEEL QUANTITIES SHALL BE CALCULATED.

(7) ALTERNATE END DEPENDENT ON TRAFFIC DIRECTION.

BID ITEMS AND UNIT TO BID

STEEL REINFORCEMENT	LB
CONCRETE-CLASS A	CUYD

~ MAINTENANCE NOTES ~

1. NOT FOR NEW CONSTRUCTION. ONLY USE FOR REPAIRING OR RESTORING EXISTING HARDWARE.
2. USE 3500 PSI CONCRETE FOR REPAIRS TO EXISTING JERSEY SHAPES.

KENTUCKY
DEPARTMENT OF HIGHWAYS

CONCRETE MEDIAN BARRIER END FOR CRASH CUSHION TYPE IX NOTES

STANDARD DRAWING NO. RBE-070N

SUBMITTED _____ DIRECTOR DIVISION OF DESIGN — DATE 02-26-20

APPROVED _____ STATE HIGHWAY ENGINEER — DATE 02-26-20

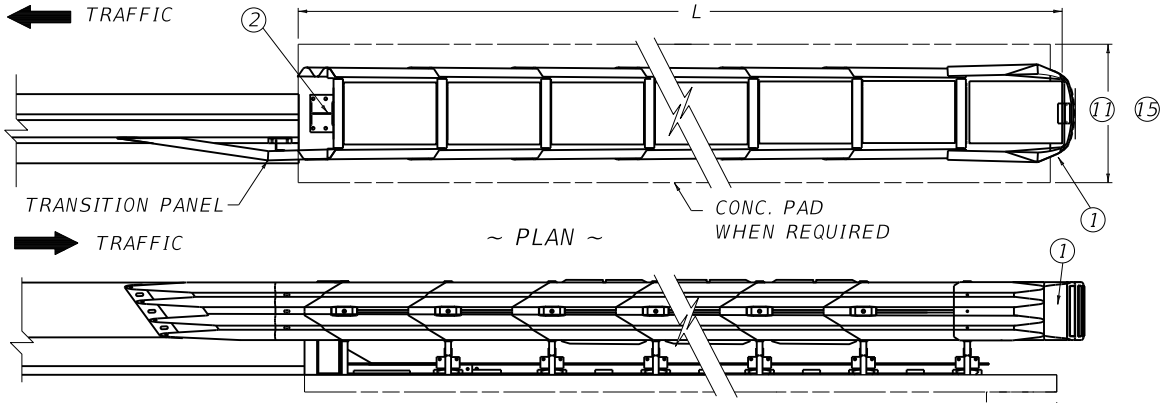

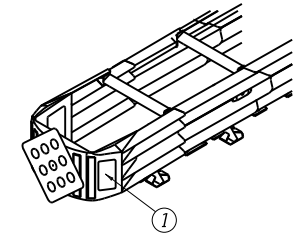

~ PICTORIAL VIEW ~

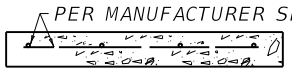

~ CONCRETE PAD SECTION ~
(PER MANUFACTURER SPECIFICATIONS)
REFER TO NOTES 11 14

~ NOTES ~

Additional Concrete Pad Construction may be Required Per Manufacturer Specifications

1. NOSE ASSEMBLY (OBJECT MARKER TYPE 1 AS NECESSARY)
2. CONSTRUCTION ZONE BACKUP
3. CRASH CUSHION TYPE VI , CLASS B, ☆ , △
   ☆ EITHER TEST LEVEL 2 (TL2) OR TEST LEVEL 3 (TL3),AS REQUIRED.
   △ SEE "CONNECTION DETAILS OF CRASH CUSHION TYPE VI TO DOUBLE FACE GUARDRAIL".
4. CRASH CUSHION TYPE VI-BT IS DEPICTED ATTACHED TO A CONCRETE BARRIER (TEMPORARY).
5. WHEN CRASH CUSHION TYPE VI-BT IS ATTACHED TO STEEL "W" BEAM GUARDRAIL (DOUBLE FACE), ALL APPLICABLE DETAILS SHOWN ON RBC-110 , "CONNECTION DETAIL OF CRASH CUSHION TYPE VI TO DOUBLE FACE GUARDRAIL" SHALL BE REQUIRED.
6. WHEN CRASH CUSHION TYPE VI-BT IS ATTACHED TO STEEL "W" BEAM GUARDRAIL (DOUBLE FACE), THE TRANSITION PANEL SHALL BE ELIMINATED.
7. IN A TWO-WAY TRAFFIC SITUATION FOR A 6" OR 9" TOP WIDTH WALL THE UNIT SHALL BE OFFSET FROM THE CENTERLINE OF THE WALL AS SHOWN IN THE PLAN VIEW. FOR A 12" TOP WIDTH WALL, THE UNIT SHALL BE CENTERED ON THE END OF THE BARRIER.
8. FOR ONE-WAY APPROACH TRAFFIC THE UNIT SHALL BE CENTERED ON THE END OF THE BARRIER.
9. THE COMPLETE INSTALLATION SHALL MEET ALL APPLICABLE REQUIREMENTS OF ENERGY ABSORPTIONS INC. OR TRINITY INDUSTRIES INC.
10. ANCHORAGE DEVICES TO SECURE THE CRASH CUSHION TO THE EXISTING SURFACE SHALL BE SHOWN ON APPROVED SHOP DRAWINGS.
11. THE CONRETE PAD, PAD EXCAVATION AND STEEL REINFORCEMENT, INSTALLED IN PLACE SHALL BE INCLUDED IN THE UINT PRICE BID FOR CRASH CUSHION TYPE VI. DIMENSION AND REINFORCEMENT SPECIFICATIONS FOR CONCRETE PADS ARE TO BE PROVIDED BY THE MANUFACTURER. THE PAD WILL NOT BE REQUIRED WHEN UNIT IS CONSTRUCTED ON RIGID PAVEMENT.
12. THE PAD WILL NOT BE REQUIRED WHEN THE UNIT IS CONSTRUCTED ON EXISTING PAVEMENT OR BRIDGES AND THE COST OF ANCHORING SHALL BE INCLUDED IN THE UNIT PRICE OF THE CRASH CUSHION.
13. USE WITH CUR. STD. DWG. RBC-110 WHEN CONNECTING TO DOUBLE FACE GUARDRAIL.
14. CRASH CUSHIONS ARE TO BE INSTALLED PER MANUFACTURER SPECIFICATIONS, INCLUDING THE CONCRETE PAD. THE MANUFACTURER SHALL FURNISH TWO (2) SETS OF SHOP DRAWINGS TO THE CONTRACTOR WITH EACH INSTALLATION.

CLASS	SPEED (MPH)	ATTENUATOR		
		MODEL	PRODUCT NAME	LENGTH
B	45 & LESS	TL2	UNIVERSAL TAU-M	14'-2"
			3-BAY QUADGUARD M10	12'-0"
	OVER 45	TL3	UNIVERSAL TAU-M	22'-9"
			5-BAY QUADGUARD M10	18'-0"

A TYPE VI-CLASS C CAN BE USED AT THE CONTRACTOR'S DISCRETION.

THE TRACC AND SHORTRACC CRASH CUSHIONS CAN ALSO BE USED FOR TEMPORARY SITUATIONS, BUT CANNOT BE LEFT IN PLACE AS A PERMANENT INSTALL. PER DESIGN MEMO 03-19, WORK ZONE DEVICES MANUFACTURED PRIOR TO DEC. 31, 2019 AND ARE IN GOOD WORKING ORDER, CAN BE USED UNTIL JUNE 30, 2024 PROVIDED THEY MEET THE SPECIFICATIONS IN SECTION 509 OF THE KENTUCKY STANDARD SPECIFICATIONS FOR ROAD AND BRIDGE CONSTRUCTION.

USE WITH CUR. STD. DWG.
RBC-110 RBE-060

KENTUCKY
DEPARTMENT OF HIGHWAYS

CRASH CUSHION
TYPE VI-BT

STANDARD DRAWING NO. RBE-100-11

SUBMITTED _____ DIRECTOR DIVISION OF DESIGN — DATE 02-26-20

APPROVED _____ STATE HIGHWAY ENGINEER — DATE 02-26-20

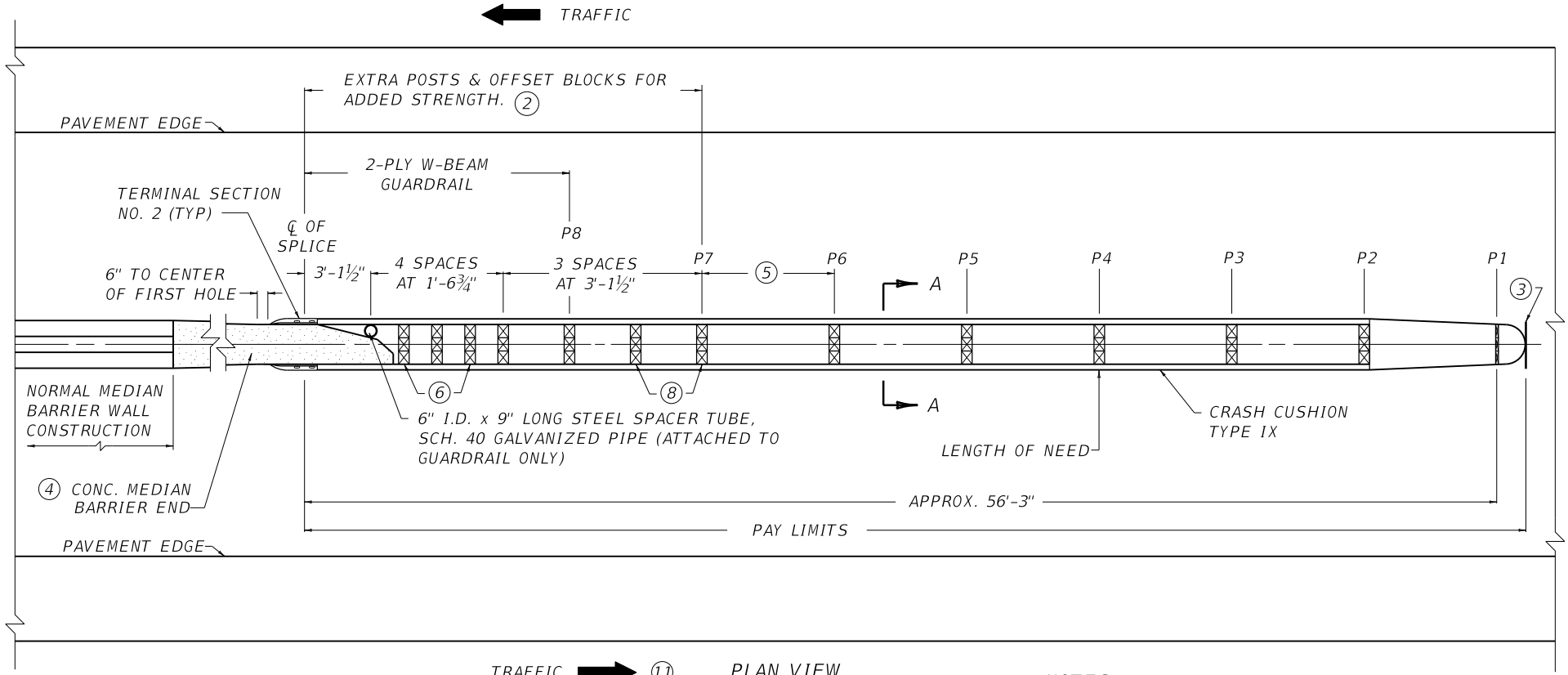

TRAFFIC → (11) PLAN VIEW

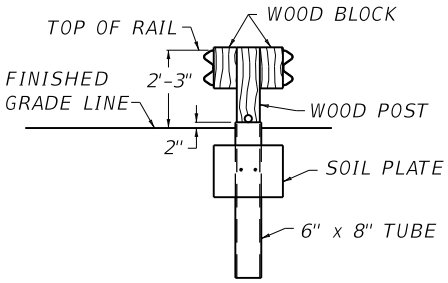

SECTION A-A

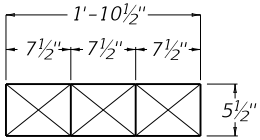

WOOD POST (2)
WOOD OFFSET BLOCKS

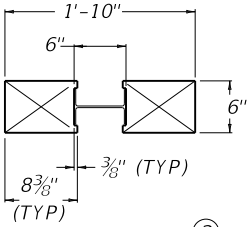

STEEL POST (2)
(WOOD OFFSET OR COMPOSITE OFFSET BLOCKS)

~ NOTES ~

1. CRASH CUSHION TYPE IX SHALL BE PAID FOR AT THE CONTRACT UNIT PRICE EACH, AND INCLUDES TERMINAL SECTIONS NO. 2, POST, RAIL ELEMENTS, SPACER TUBE, OBJECT MARKER TYPE 1, HARDWARE, AND ALL OTHER INCIDENTALS NECESSARY TO COMPLETE THE INSTALLATION AS DETAILED.

(2) POSTS AND OFFSET BLOCKS MAY BE WOOD OR STEEL POSTS AND WOOD OR COMPOSITE OFFSET BLOCKS.

(3) OBJECT MARKER TYPE 1, (SEE CURRENT MUTCD MANUAL FOR DETAILS) CENTER HORIZ. AND VERT.

(4) SEE CUR. STD. DWG. RBE-070 FOR DETAILS OF CRASH CUSHION BARRIER END.

(5) POST P1 THROUGH P7 ARE SPACED 6'-3" ON CENTER.

(6) GUARDRAIL NOT REQUIRED TO BE ATTACHED TO POST AT THESE LOCATIONS.

7. CRASH CUSHION TYPE IX IS A PATENTED (ONE SOURCE) PRODUCT MANUFACTURED BY TRINITY INDUSTRIES, INC. OF DALLAS TX.

(8) BACK-UP PLATES REQUIRED AT THESE POSTS.

9. THE MANUFACTURER SHALL FURNISH TWO (2) SETS OF SHOP PLANS TO THE CONTRACTOR WITH EACH INSTALLATION.

10. FOR NON-PAVEMENT APPLICATIONS SEE ROADWAY PLANS FOR GRADING DETAILS

(11) SEE RBE-070 FOR ALTERNATE END DEPENDENT ON TRAFFIC DIRECTION.

BID ITEM AND UNIT TO BID
CRASH CUSHION TYPE IX — EACH

USE WITH CUR. STD. DWG. RBE-070

KENTUCKY
DEPARTMENT OF HIGHWAYS

CRASH CUSHION
TYPE IX

STANDARD DRAWING NO. RBE-200-07

SUBMITTED _____ DIRECTOR DIVISION OF DESIGN — DATE 02-26-20

APPROVED _____ STATE HIGHWAY ENGINEER — DATE 02-26-20

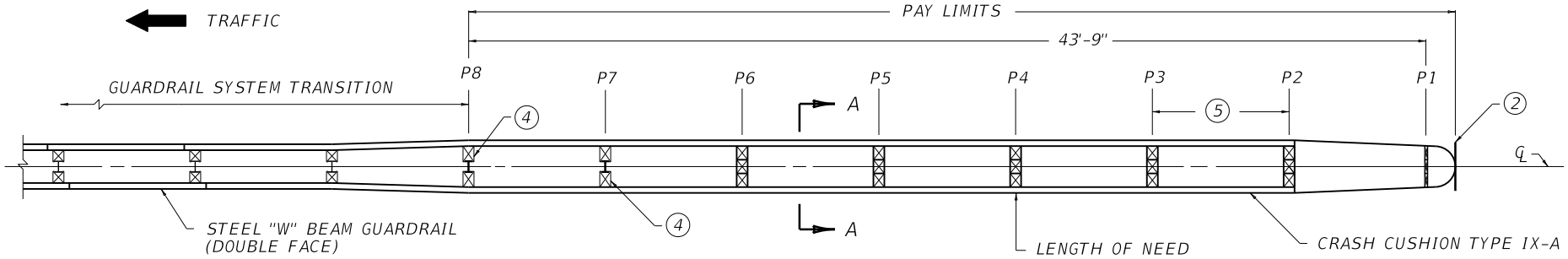

PLAN VIEW

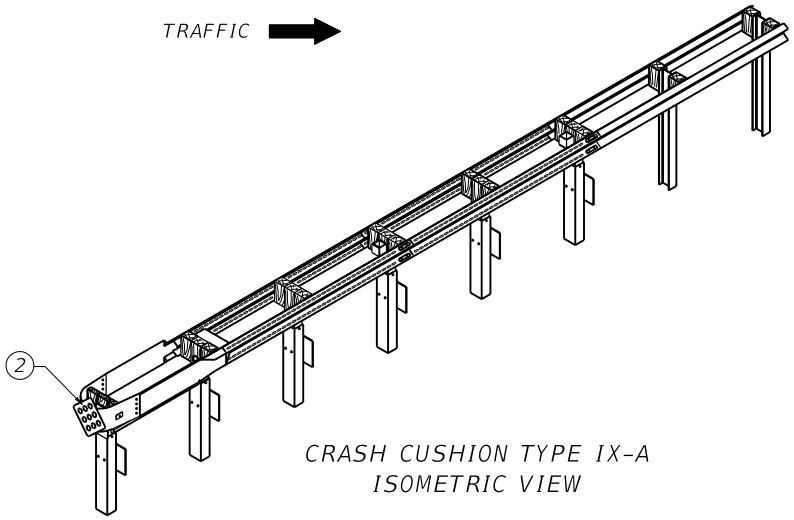

CRASH CUSHION TYPE IX-A
ISOMETRIC VIEW

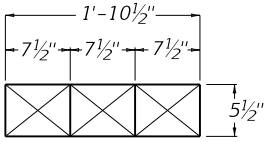

WOOD POST (4)
WOOD OFFSET BLOCKS

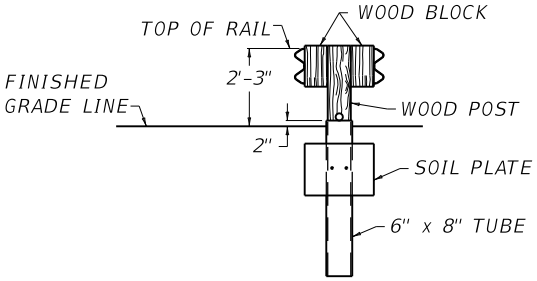

SECTION A-A

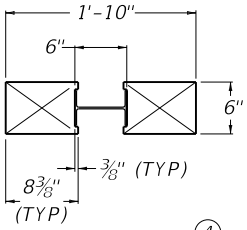

STEEL POST (4)
WOOD OFFSET BLOCKS

~ NOTES ~

1. CRASH CUSHION TYPE IX-A SHALL BE PAID FOR AT THE CONTRACT UNIT PRICE EACH, AND INCLUDES POSTS, RAIL ELEMENTS, OBJECT MARKER TYPE 1, HARDWARE, AND ALL OTHER INCIDENTALS NECESSARY TO COMPLETE THE INSTALLATION AS DETAILED.

(2) OBJECT MARKER TYPE 1, (SEE CURRENT MUTCD MANUAL FOR DETAILS) CENTER HORIZ. AND VERT.

3. CRASH CUSHION TYPE IX-A IS A PATENTED (ONE SOURCE) PRODUCT MANUFACTURED BY TRINITY INDUSTRIES, INC. OF DALLAS, TX.

(4) AT POST P7 AND P8 THE POSTS AND OFFSET BLOCKS MAY BE WOOD OR STEEL POST AND WOOD OFFSET BLOCKS.

(5) POST P1 THROUGH P8 ARE SPACED 6'-3" ON CENTER.

6. BACK-UP PLATES REQUIRED AT POST P7.

7. THE MANUFACTURER SHALL FURNISH TWO (2) SETS OF SHOP PLANS TO THE CONTRACTOR WITH EACH INSTALLATION.

8. FOR NON-PAVEMENT APPLICATIONS SEE ROADWAY PLANS FOR GRADING DETAILS.

BID ITEM AND UNIT TO BID	
CRASH CUSHION TYPE IX-A	EACH

KENTUCKY
DEPARTMENT OF HIGHWAYS

CRASH CUSHION
TYPE IX-A

STANDARD DRAWING NO. RBE-205-07

SUBMITTED _____ DIRECTOR DIVISION OF DESIGN — 02-26-20 DATE

APPROVED _____ STATE HIGHWAY ENGINEER — 02-26-20 DATE

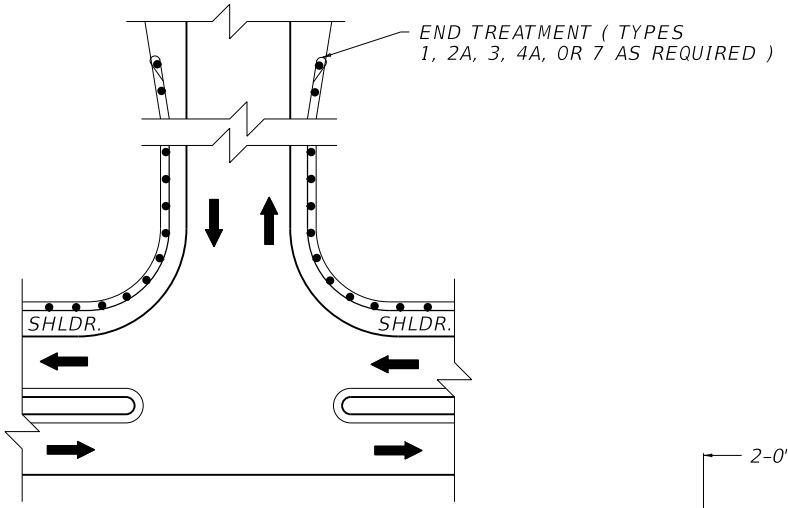

APPROACH ROADS

~ NOTES ~

1. FOR END TREATMENT TYPE 4A USE CUR. STD. DWG. RBR-035 FOR OFFSETS.
2. THE MINIMUM LENGTH OF GUARDRAIL, INCLUDING THE END TREATMENT, PRECEDING A FIXED OBJECT IS 200 FEET: (LENGTH MAY BE REDUCED SHOULD FIELD CONDITIONS WARRANT).

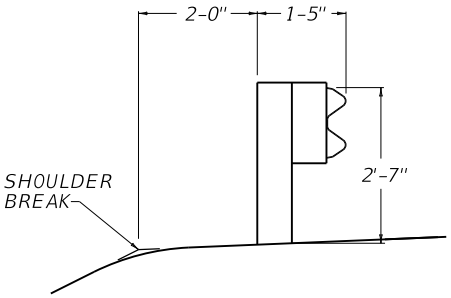

NORMAL GUARDRAIL INSTALLATION

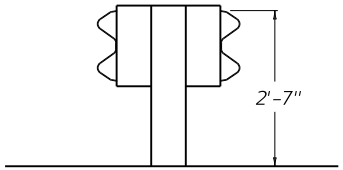

TYPICAL DOUBLE FACE
GUARDRAIL INSTALLATION

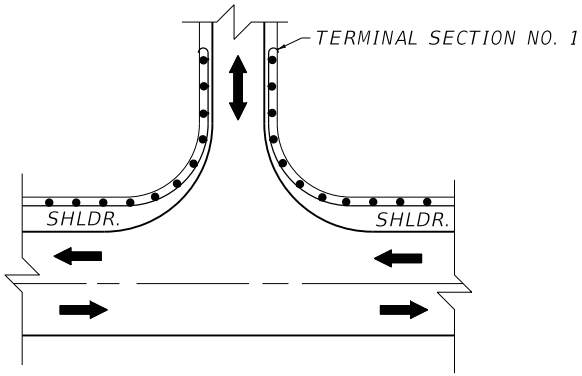

ENTRANCES

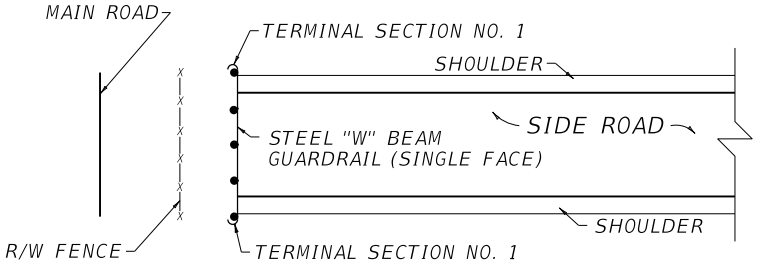

GUARDRAIL USED AS A BARRICADE

USE WITH CUR. STD. DWG.
RBI-002 RBR-035

KENTUCKY
DEPARTMENT OF HIGHWAYS

TYPICAL GUARDRAIL
INSTALLATIONS

STANDARD DRAWING NO. RBI-001-12

SUBMITTED _____ DIRECTOR DIVISION OF DESIGN 02-26-20 DATE

APPROVED _____ STATE HIGHWAY ENGINEER 02-26-20 DATE

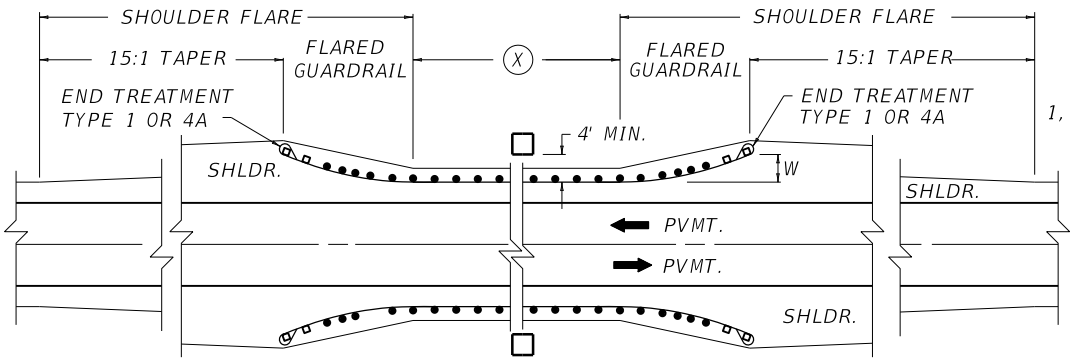

AT A FIXED OBJECT - TWO WAY TRAFFIC (FILL)

FIGURE 1

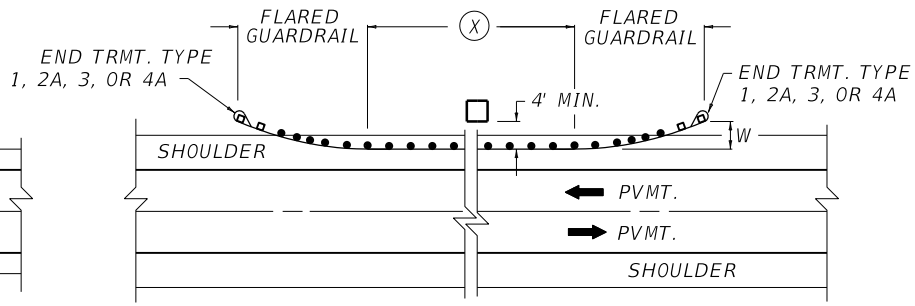

AT A FIXED OBJECT - TWO WAY TRAFFIC (CUT)

FIGURE 4

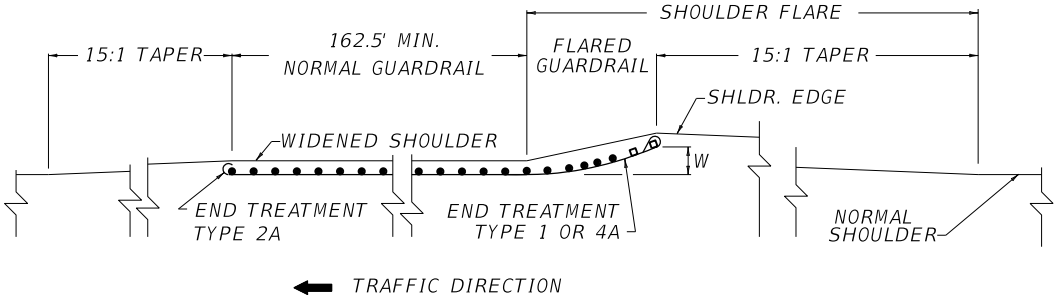

ONE DIRECTION TRAFFIC-FOR SHOULDERS LESS THAN 12' (FILL)

FIGURE 2

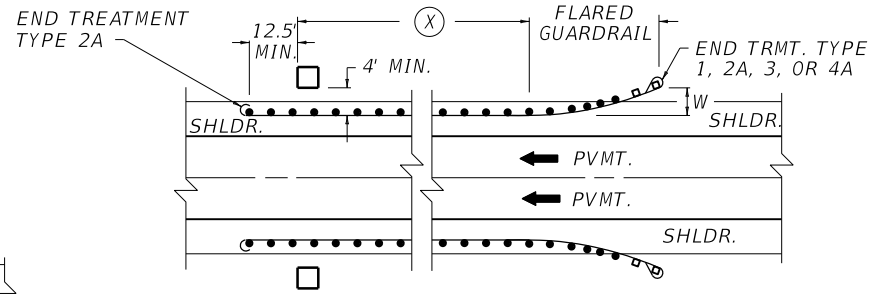

AT A FIXED OBJECT - ONE WAY TRAFFIC (CUT)

FIGURE 5

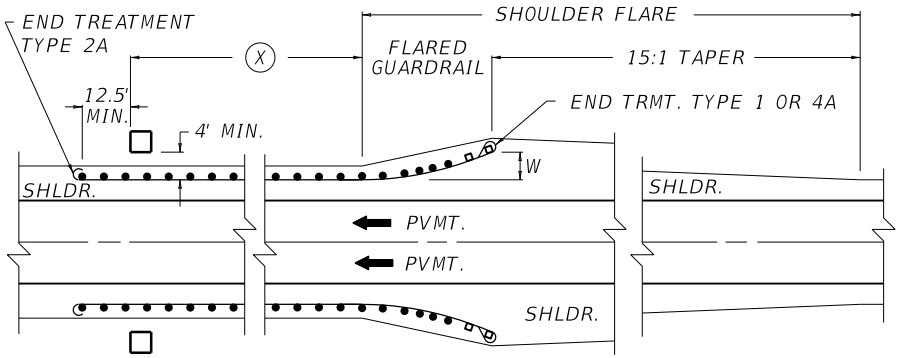

AT A FIXED OBJECT - ONE WAY TRAFFIC (FILL)

FIGURE 3

~ NOTES ~

GENERAL APPLICATION OF END TREATMENTS

(a.) ALL FILLS; ALSO SOLID ROCK CUTS WITH ADEQUATE VEHICLE RECOVERY ZONE BEHIND GUARDRAIL, USE END TREATMENT TYPE 1 OR 4A.

(b.) SOLID ROCK CUTS WITHOUT ADEQUATE VEHICLE RECOVERY ZONE BEHIND GUARDRAIL, USE END TREATMENT TYPE 2A.

(c.) EARTH CUTS AND SOFT ROCK CUTS, USE END TREATMENT TYPE 3.

(X) NORMAL GUARDRAIL INSTALLATION. FOR FIXED OBJECTS, SPECIFY "X" IN 12'-6" INCREMENTS.

□ FIXED OBJECTS SUCH AS (PIERS, NEAR OR AT GRADE CULVERTS, POST, OR POLE LOCATED IN THE SAFETY ZONE AND NOT HAVING BREAKAWAY FEATURE).

SEE APPROPRIATE CURRENT STANDARD DRAWING FOR PROPER OFFSET "W".

THE MINIMUM LENGTH OF GUARDRAIL, INCLUDING THE END TREATMENT, PRECEDING A FIXED OBJECT IS 200 FEET (LENGTH MAY BE REDUCED SHOULD FIELD CONDITIONS WARRANT).

USE WITH CUR. STD. DWGS.
RBI-003 RBI-004 RBR-030
RBR-035

KENTUCKY
DEPARTMENT OF HIGHWAYS

TYPICAL GUARDRAIL INSTALLATIONS

STANDARD DRAWING NO. RBI-002-07

SUBMITTED William E. Ginkel 12-01-15
DIRECTOR, DIVISION OF DESIGN DATE

APPROVED 12-01-15
STATE HIGHWAY ENGINEER DATE

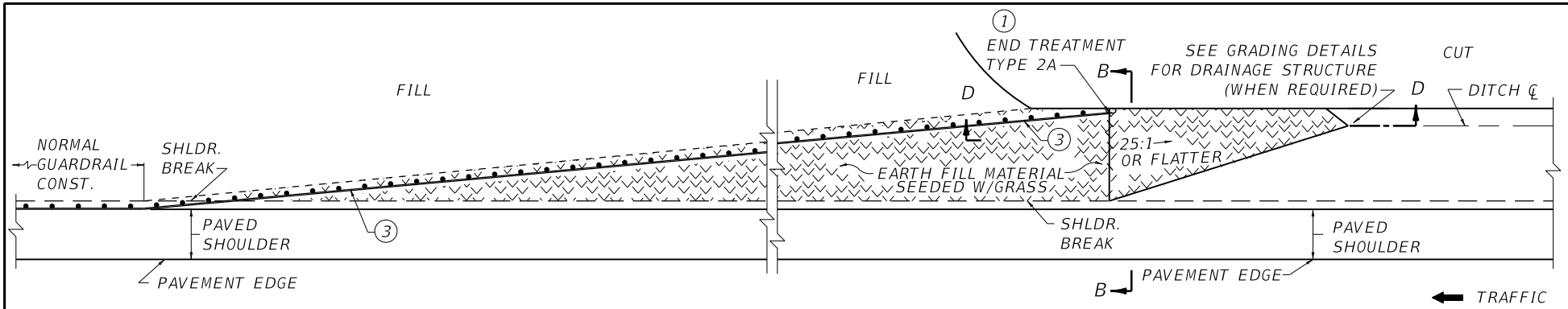

DETAIL OF GUARDRAIL FOR FILL TO SOLID ROCK CUT SECTION

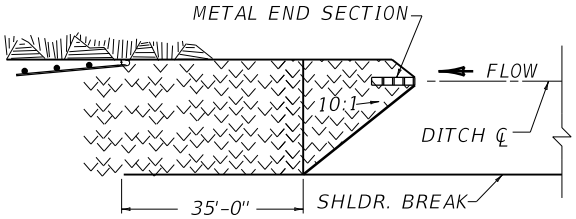

FLOW TOWARD METAL END SECTION

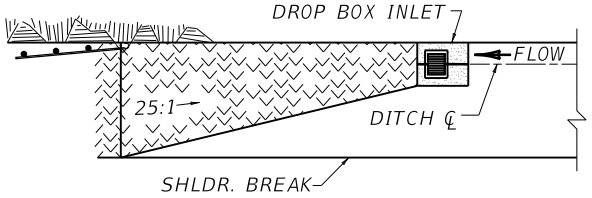

FLOW TOWARD DROP BOX INLET

GRADING DETAILS

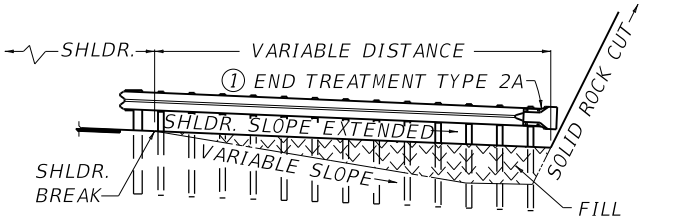

SECTION B-B (SOLID ROCK CUT)
DETAIL OF END TREATMENT TYPE 2A

~ NOTES ~

1. SOLID ROCK CUTS WITHOUT AN ADEQUATE RECOVERY ZONE.
2. INTENDED USE: FOR END TREATMENTS AGAINST SOLID ROCK CUTS ONLY. END TREATMENT SHALL NOT ABUT LOOSE ROCK. FOR INSTALLATION WHERE SOLID ROCK IS NOT ENCOUNTERED SEE CURRENT STANDARD DRAWING RBR-030 .

BID ITEMS AND UNIT TO BID:

GUARDRAIL END TREATMENT TYPE 2A	EACH
ROADWAY OR BORROW EXCAVATION, OR EMBANKMENT IN PLACE	CUYD

DRAINAGE STRUCTURE BID SEPARATELY.

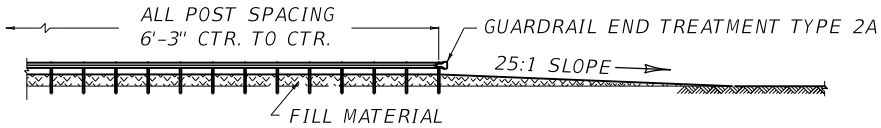

SECTION D-D (GUARDRAIL END TREATMENT TYPE 2A)

3			
DESIGN SPEED	70+ MPH	60 MPH	50 MPH OR LESS
FLARE RATES	15:1	13:1	11:1

USE WITH CUR. STD. DWGS.
RBI-001 RBI-002 RDB-005
RBR-030

KENTUCKY
DEPARTMENT OF HIGHWAYS

TYPICAL INSTALLATION
FOR GUARDRAIL END
TREATMENT TYPE 2A

STANDARD DRAWING NO. RBI-003-09

SUBMITTED William E. Ginkel — DIRECTOR DIVISION OF DESIGN — 12-01-15 DATE

APPROVED — STATE HIGHWAY ENGINEER — 12-01-15 DATE

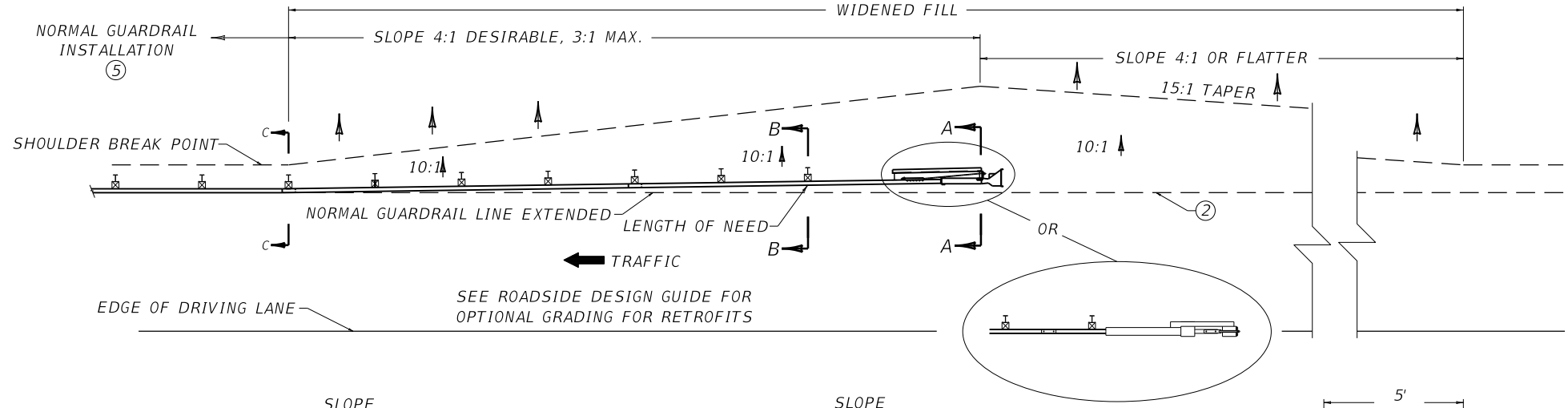

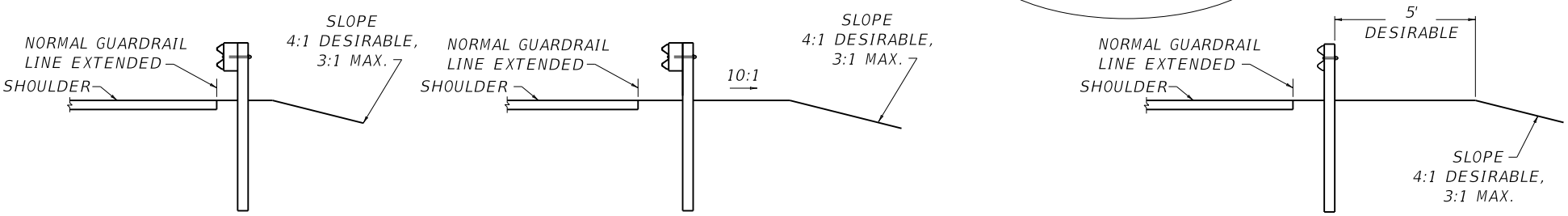

SECTION C-C

SECTION B-B

SECTION A-A

~ NOTES ~

BID ITEMS AND UNIT TO BID:

GUARDRAIL END TREATMENT TYPE 1	EACH
ROADWAY OR BORROW EXCAVATION, OR EMBANKMENT IN PLACE	CUYD

1. THE MINIMUM LENGTH OF GUARDRAIL, INCLUDING THE END TREATMENT, PRECEDING A FIXED OBJECT IS 200 FEET (LENGTH MAY BE REDUCED SHOULD FIELD CONDITIONS WARRANT).

② GUARDRAIL EXTRUDER EDGE CLOSEST TO TRAFFIC SHALL BE PLACED ON NORMAL GUARDRAIL LINE EXTENDED.

③ END TREATMENT TYPE 1 MAY BE ATTACHED TO CURVED GUARDRAIL PROVIDED CURVE IS A 550' RADIUS OR MORE. END TREATMENT TYPE 1 SHALL BE INSTALLED ON A STRAIGHT LINE TAPER WITHIN THE PAY LIMITS.

4. INTENDED USE: FILLS WITH ADEQUATE VEHICLE RECOVERY ZONE BEHIND GUARDRAIL.

⑤ FOR MAINTENANCE AND REPAIR PROJECTS, USE "GUARDRAIL SYSTEM TRANSITION" (RBR-018), TO TRANSITION BACK TO 27" OR 29" GUARDRAIL HEIGHT, IF ONLY THE TERMINAL IS PROPOSED TO BE REPLACED.

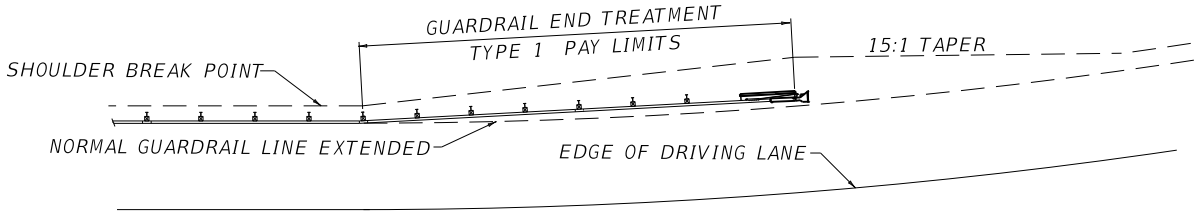

GUARDRAIL END TREATMENT TYPE 1 INSTALLED ON A CURVE ③

USE WITH CUR. STD. DWG. RBR-020

KENTUCKY DEPARTMENT OF HIGHWAYS

INSTALLATION OF GUARDRAIL END TREATMENT TYPE 1

STANDARD DRAWING NO. RBI-004-06

SUBMITTED — DIRECTOR DIVISION OF DESIGN — 02-26-20 DATE

APPROVED — STATE HIGHWAY ENGINEER — 02-26-20 DATE

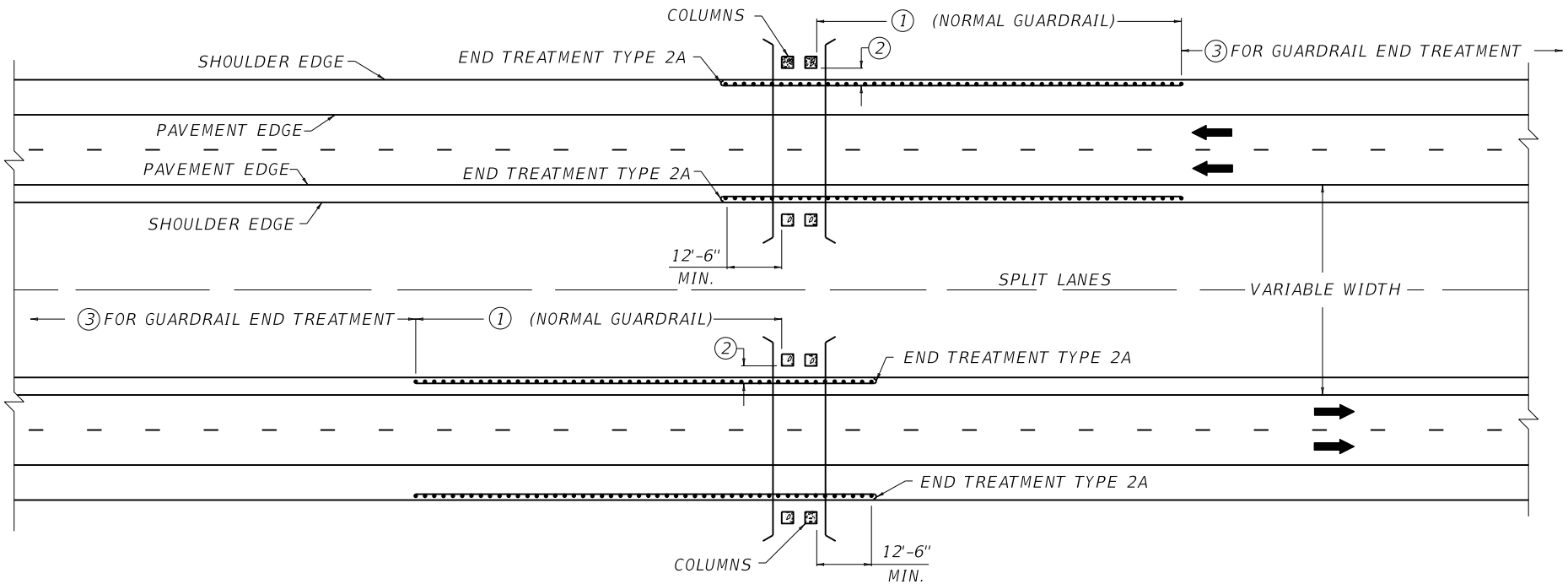

LOCATION OF GUARDRAIL WITH VARIABLE WIDTH MEDIAN

~ NOTES ~

1. THE MIN. LENGTH OF GUARDRAIL, INCLUDING THE END TREATMENT, PRECEDING A FIXED OBJECT IS 200 FEET (LENGTH MAY BE REDUCED SHOULD FIELD CONDITIONS WARRANT).
2. 4'-0" OR MORE FROM NORMAL GUARDRAIL ALIGNMENT. HOWEVER, IF COLUMNS, PIERS, ABUTMENTS, ETC. ARE LOCATED IN THE CLEAR ZONE DISTANCE OR 30'-0" WHICHEVER IS GREATER FROM THE EDGE OF A THROUGH TRAVEL LANE, GUARDRAIL SHALL NOT BE REQUIRED.
3. TO TERMINATE GUARDRAIL INSTALLATION:
   A. ALL FILLS, ALSO SOLID ROCK CUTS WITH ADEQUATE VEHICLE RECOVERY ZONE BEHIND GUARDRAIL; USE END TREATMENT TYPE 1 OR 4A.
   B. SOLID ROCK CUTS WITHOUT ADEQUATE VEHICLE RECOVERY ZONE BEHIND GUARDRAIL; USE END TREATMENT TYPE 2A.
   C. EARTH CUTS AND SOFT ROCK CUTS; USE END TREATMENT TYPE 3.
4. SEE CUR. STD. DWG. RBI-007 OR CUR. STD. DWG. RBI-009 AS APPLICABLE.
5. WHEN CONCRETE MEDIAN BARRIER WALL IS REQUIRED, SEE CUR. STD. DWG. RBM-015 FOR APPLICABLE DETAILS.

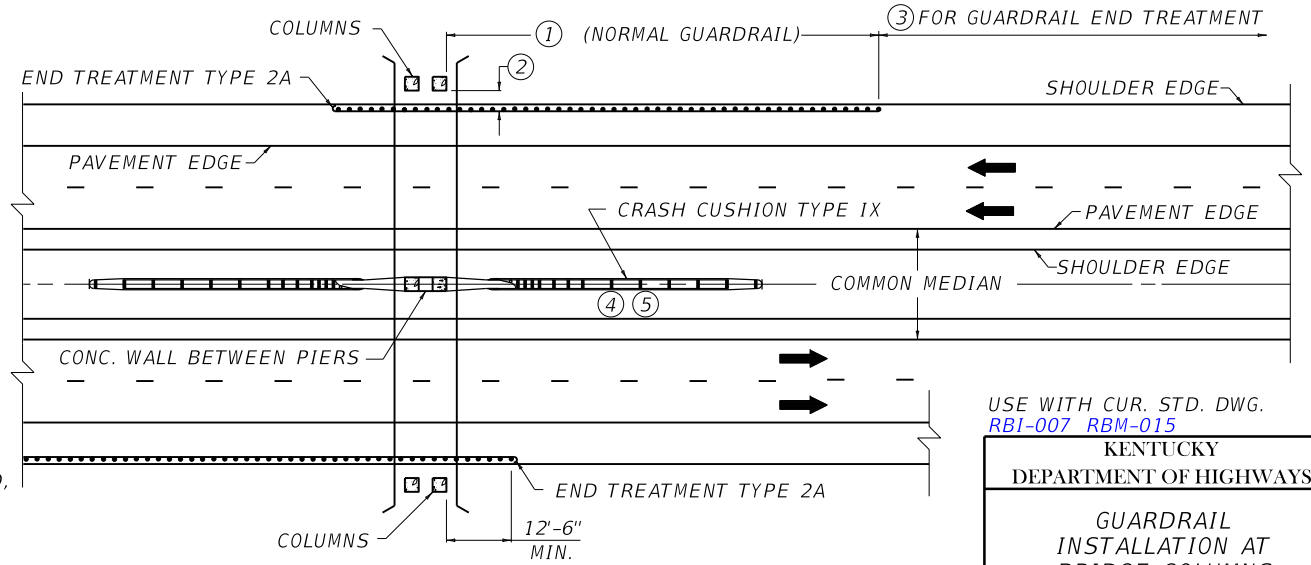

LOCATION OF GUARDRAIL WITH CONSTANT WIDTH MEDIAN

USE WITH CUR. STD. DWG.
RBI-007 RBM-015

KENTUCKY
DEPARTMENT OF HIGHWAYS

GUARDRAIL
INSTALLATION AT
BRIDGE COLUMNS

STANDARD DRAWING NO. RBI-005-08

SUBMITTED _____ DIRECTOR, DIVISION OF DESIGN — 12-01-15 DATE

APPROVED _____ STATE HIGHWAY ENGINEER — 12-01-15 DATE

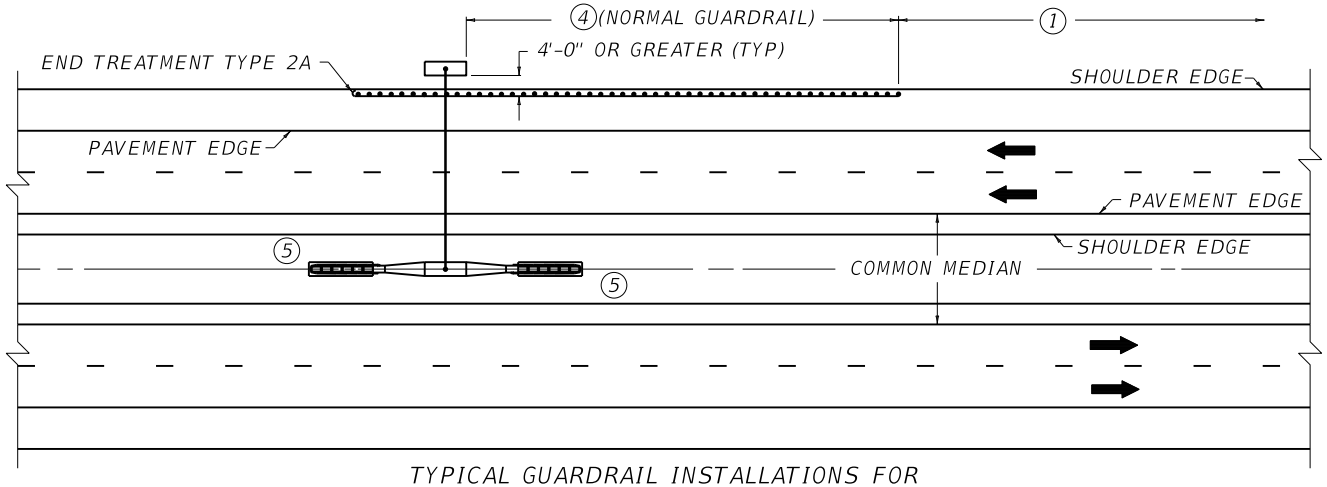

TYPICAL GUARDRAIL INSTALLATIONS FOR
OVERHEAD SIGN SUPPORT - TRUSS (RAISED MEDIAN)

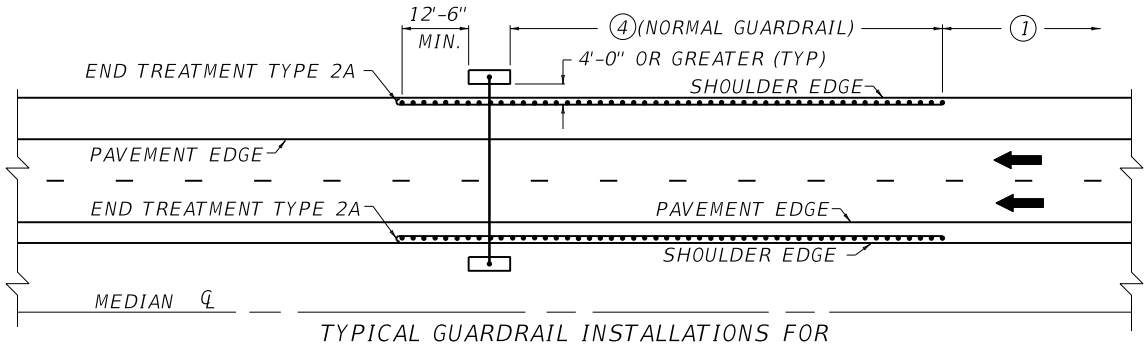

TYPICAL GUARDRAIL INSTALLATIONS FOR
OVERHEAD SIGN SUPPORT - TRUSS (DEPRESSED MEDIAN)

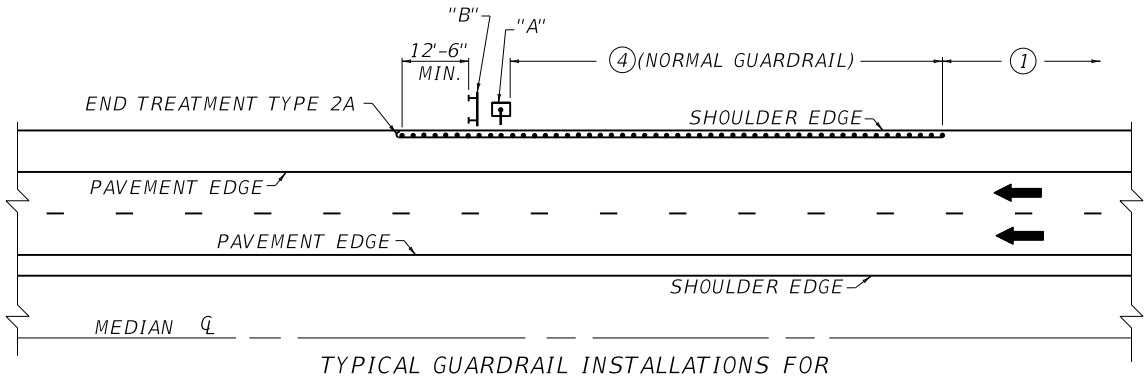

TYPICAL GUARDRAIL INSTALLATIONS FOR
"A" CANTILEVER SIGN SUPPORT OR "B" OVERHEAD SIGN SUPPORT

~ NOTES ~

① TO TERMINATE GUARDRAIL INSTALLATION:
A. ALL FILLS, ALSO SOLID ROCK CUTS WITH ADEQUATE VEHICLE RECOVERY ZONE BEHIND GUARDRAIL; USE END TREATMENT TYPE 1 OR 4A.
B. SOLID ROCK CUTS WITHOUT ADEQUATE VEHICLE RECOVERY ZONE BEHIND GUARDRAIL; USE END TREATMENT TYPE 2A.
C. EARTH CUTS AND SOFT ROCK CUTS; USE END TREATMENT TYPE 3.

2. IF GAPS OF 200 FEET OR LESS SHOULD OCCUR BETWEEN SECTIONS OF GUARDRAIL, THE GUARDRAIL SHALL BE EXTENDED THROUGH SUCH GAPS TO PROVIDE A COUNTINUOUS SECTION.

3. GUARDRAIL INSTALLATION IS NOT NECESSARY FOR SIGNS MOUNTED ON:
A. CHANNEL POST IN TYPE "B" OR "C" BASES.
B. TYPE "B" BREAKAWAY BEAMS.
C. SIGNS MOUNTED IN CAST ALUMINUM SHOES. (SEE SIGN PLAN).

④ THE MIN. LENGTH OF GUARDRAIL, INCLUDING THE END TREATMENT, PRECEDING A FIXED OBJECT IS 200 FEET (LENGTH MAY BE REDUCED SHOULD FIELD CONDITIONS WARRANT).

⑤ WHEN CONCRETE BARRIER WALL IS REQUIRED SEE CUR. STD. DWG. RBM-015 FOR APPLICABLE DETAILS.

USE WITH CUR. STD. DWG.
RBM-015

KENTUCKY
DEPARTMENT OF HIGHWAYS

GUARDRAIL
INSTALLATION AT
SIGN SUPPORTS

STANDARD DRAWING NO. RBI-006-07

SUBMITTED William E. Ginkel — DIRECTOR, DIVISION OF DESIGN — 12-01-15 DATE

APPROVED — STATE HIGHWAY ENGINEER — 12-01-15 DATE

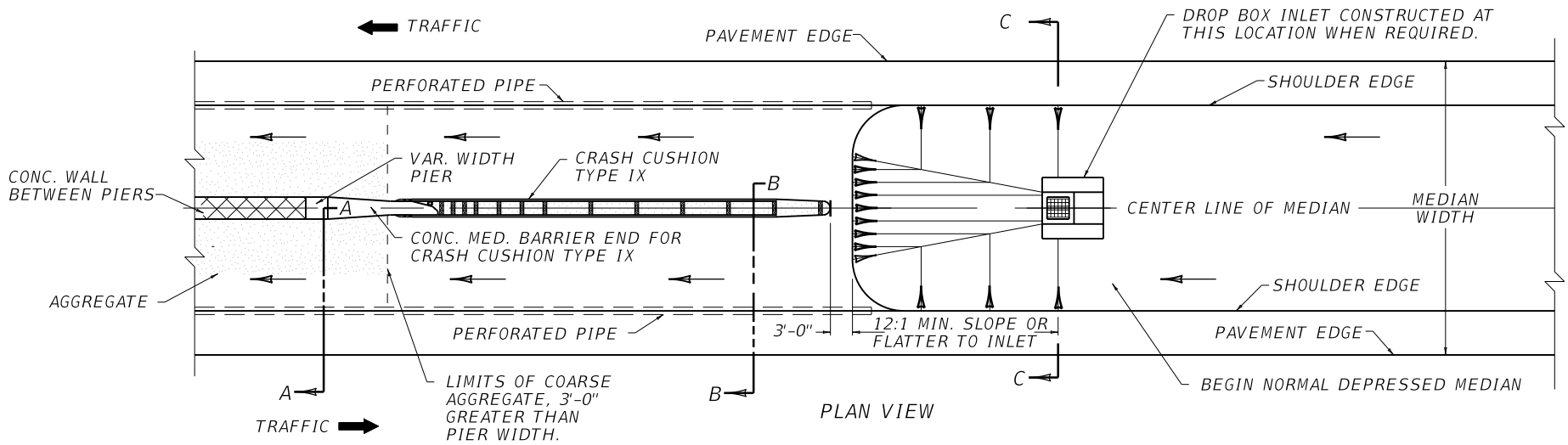

PLAN VIEW

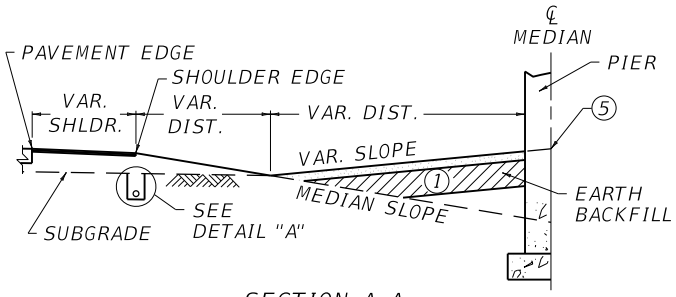

SECTION A-A

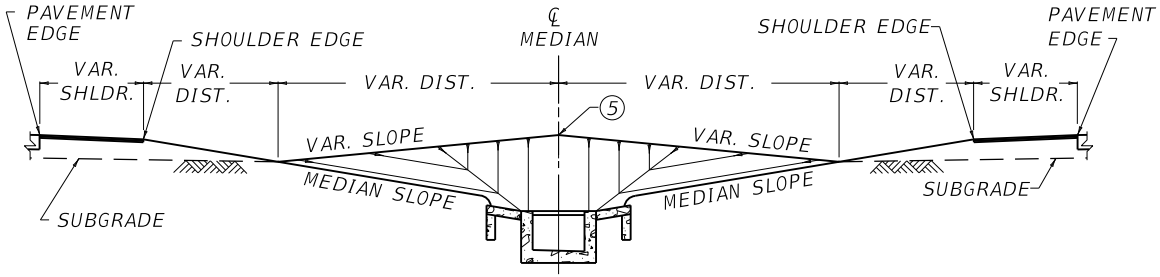

SECTION C-C

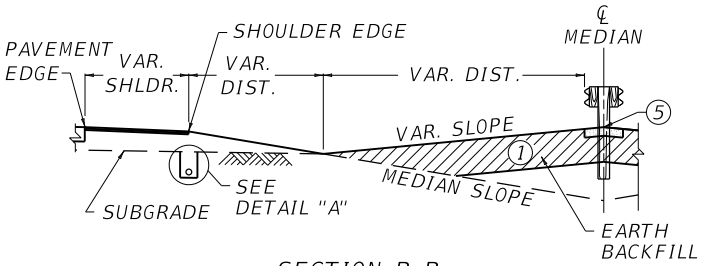

SECTION B-B

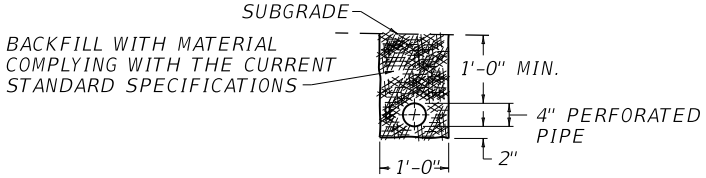

DETAIL "A"

~ NOTES ~

BID ITEMS AND UNIT TO BID:

CRASH CUSHION TYPE IX	EACH
CONC MED BAR END FOR CRASH CUSHION TY IX	EACH
CONCRETE-CLASS A	CUYD
ROADWAY OR BORROW EXCAVATION OR EMBANKMENT-IN-PLACE	CUYD
CRUSHED AGGREGATE SIZE NO 57	TON
PERFORATED PIPE HEADWALL TY (VARIES WITH SLOPE)-4 IN	EACH
PERFORATED PIPE-4 IN	EACH

(1) WHEN SOLID ROCK IS ENCOUNTERED, THIS MATERIAL SHALL BE REMOVED AND BACKFILLED WITH EARTH (ROADWAY OR BORROW EXCAVATION OR EMBANKMENT-IN-PLACE), A DEPTH OF 2'-0".

2. WHEN CRASH CUSHION TYPE IX IS INSTALLED AT THE SUMMIT OF A VERTICAL CURVE, 4" PERFORATED PIPE SHALL BE PLACED AS DETAILED IN BOTH DIRECTIONS. CONSTRUCT A PERFORATED PIPE HEADWALL AT EACH OUTLET OR EXTEND PIPE TO A BOX INLET. WHEN PERFORATED PIPE IS PLACED IN A SAG VERTICAL CURVE, IT SHALL BE INSTALLED AS DIRECTED BY THE ENGINEER.

3. AREA IN DEPRESSED MEDIAN SHALL BE GRADED IN ORDER TO PROVIDE COMPLETE DRAINAGE.

4. THIS DRAWING DEPICTS THE APPLICATION OF MATERIALS NECESSARY TO COMPLETE THE INSTALLATION.

(5) THIS POINT SAME ELEVATION AS INSIDE PAVEMENT EDGE.

6. 6" OF CRUSHED AGGREGATE SIZE NO. 57 (LOOSE DEPTH).

USE WITH CUR. STD. DWG.
RBE-070 RBE-200 RDP-010

KENTUCKY
DEPARTMENT OF HIGHWAYS

CRASH CUSHION TYPE IX INSTALLATION AT MEDIAN PIERS
(DEPRESSED MEDIAN)

STANDARD DRAWING NO. RBI-007-09

SUBMITTED William E. Ginkel — DIRECTOR, DIVISION OF DESIGN — 12-01-15 DATE

APPROVED — STATE HIGHWAY ENGINEER — 12-01-15 DATE

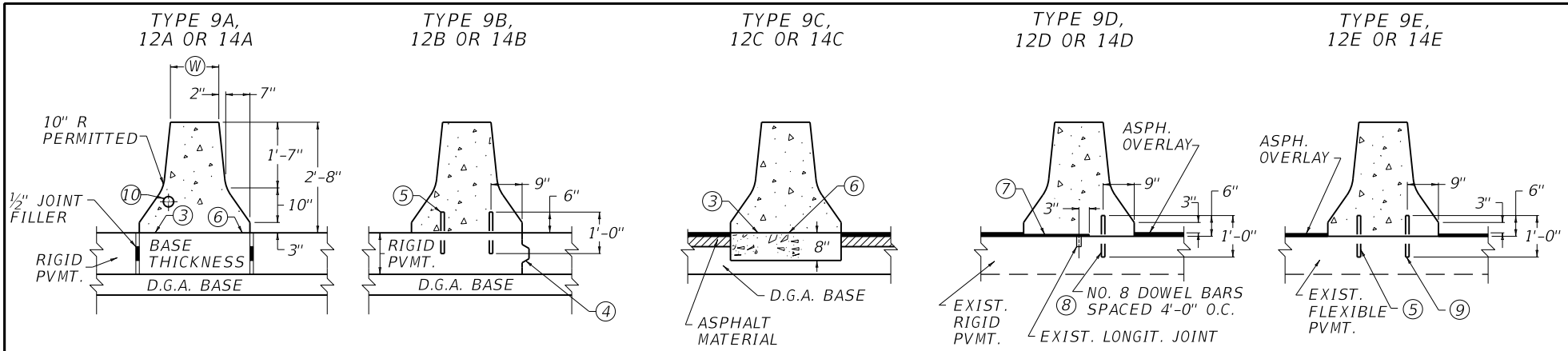

NEW RIGID PAVEMENT

NEW FLEXIBLE PAVEMENT

NEW FLEXIBLE OVERLAY OVER EXISTING RIGID PAVEMENT

NEW FLEXIBLE OVERLAY OVER EXISTING FLEXIBLE PAVEMENT

~ NOTES ~

BID ITEM AND UNIT TO BID

CONC MEDIAN BARRIER TYPE ⊕ ⊕ LF

⊕ 9, 12, OR 14 DEPENDING ON W

⊕ A, B, C, D, OR E DEPENDING ON PAVEMENT TYPE.

1. FOR WALLS IN TRANSITION AND SEPARATE SEGMENT WALLS, SEE CUR. STD. DWG. RBM-015. FOR APPROPRIATE BID ITEMS.
2. THE CONTRACT UNIT PRICE PER LINEAR FOOT FOR CONCRETE MEDIAN BARRIER INCLUDING THE BASE IN TYPES A AND C SHALL BE FULL COMPENSATION FOR ALL MATERIALS, EQUIPMENT, LABOR AND INCIDENTALS NECESSARY TO COMPLETE THE WORK.

(3) WHEN A CONSTRUCTION JOINT IS USED, DOWEL BARS WILL BE REQUIRED AS SHOWN WITH TYPE 9B, 12B, OR 14B BARRIER. SEE NOTE 5.

(4) LONGITUDINAL CONSTRUCTION JOINT WITHOUT TIE BARS IS REQUIRED AND SHALL BE PLACED AT THE LOCATION SHOWN OR MAY BE INSTALLED AT THE CORRESPONDING POINT ON THE OPPOSITE SIDE OF THE BARRIER, AT THE OPTION OF THE CONTRACTOR. IT SHALL BE REQUIRED ON THE LOW SIDE OF A SUPERELEVATED SECTION.

(5) NO. 8 DOWEL BARS SPACED 4'-0" O.C. AND STAGGERED 2'-0".

(6) CONSTRUCTION JOINT PERMITTED WHEN FIXED FORMS OR SLIP FORMS ARE USED.

(7) POLYETHYLENE (6 MILS THICK) BOND BREAKER.

(8) PAVEMENT SHALL BE DRILLED AND BARS GROUTED.

(9) BARS SHALL BE EITHER DRILLED AND GROUTED OR DRIVEN.

(10) 3" RACEWAY (TYPICAL) SEE ELSEWHERE IN THE PLANS FOR LOCATION AND PAYMENT FOR RACEWAY WHEN REQUIRED.

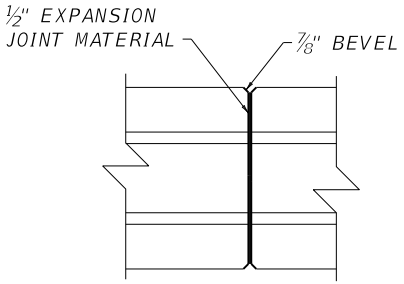

EXPANSION JOINT DETAIL

APPROXIMATE QUANTITIES PER LINEAR FOOT

TYPE	CONC.- CUYD (W)			STEEL - POUNDS		
	9"	12"	14"	9"	12"	14"
A	0.18	0.20	0.21	▲ 1.34	▲ 1.34	▲ 1.34
B	0.13	0.15	0.16	1.34	1.34	1.34
C	0.18	0.20	0.21	▲ 1.34	▲ 1.34	▲ 1.34
D	0.14	0.16	0.17	0.67	0.67	0.67
E	0.14	0.16	0.17	1.34	1.34	1.34

▲ WHEN REQUIRED

CONCRETE QUANTITIES SHOWN INCLUDE 8" BASE THICKNESS FOR TYPE A, BUT DO NOT INCLUDE QUANTITIES NECESSARY FOR ASPHALT OVERLAY THICKNESS SHOWN FOR TYPE D AND E.

USE WITH CUR. STD. DWG. RBM-015

KENTUCKY
DEPARTMENT OF HIGHWAYS

CONCRETE MEDIAN BARRIER
FIXED-FORM OR SLIP-FORM
(PERMANENT)

STANDARD DRAWING NO. RBM-001-11

SUBMITTED _____ DIRECTOR DIVISION OF DESIGN — 02-26-20 DATE

APPROVED _____ STATE HIGHWAY ENGINEER — 02-26-20 DATE

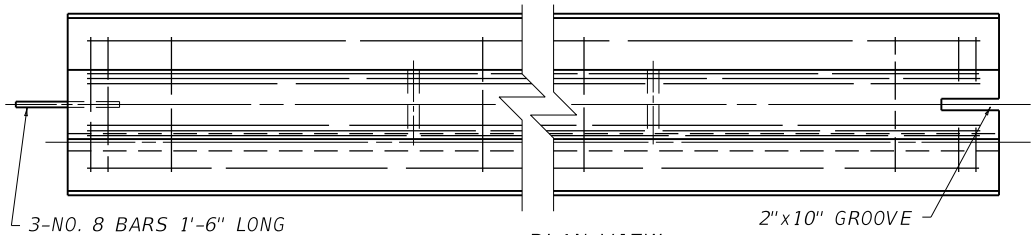

PLAN VIEW

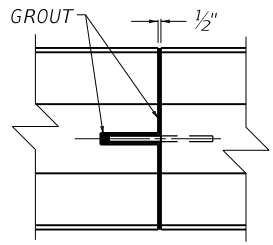

CONNECTION DETAIL

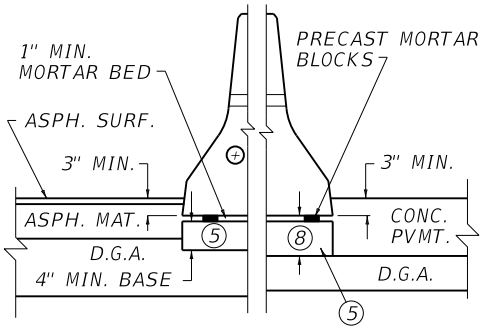

PAVEMENT DETAIL ⑦

(SEE RIGHT ELEVATION FOR DIMENSIONS)

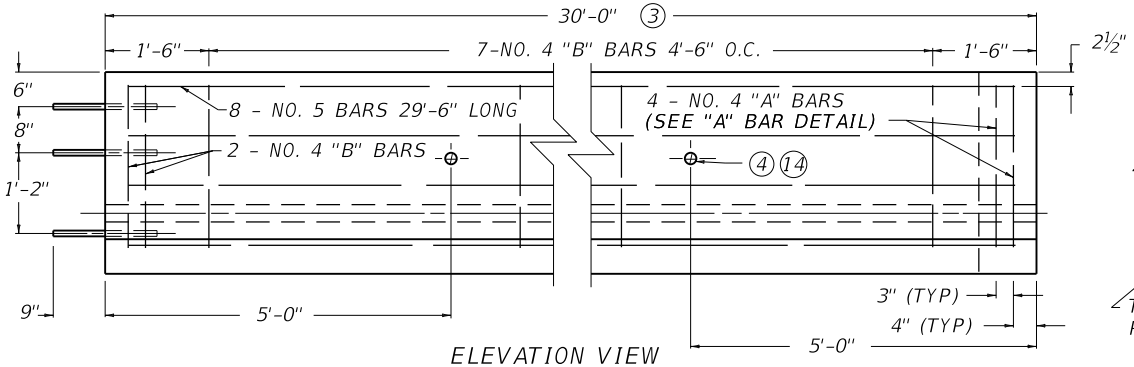

ELEVATION VIEW

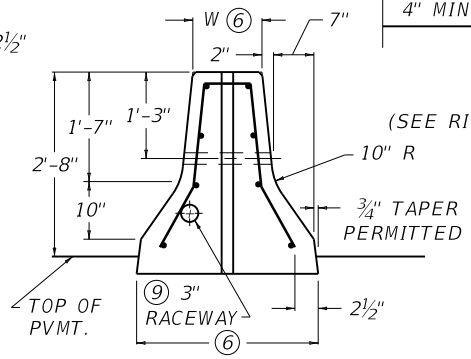

RIGHT ELEVATION VIEW

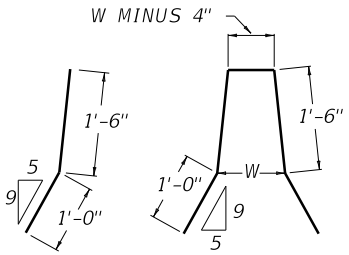

DETAIL OF "A" BAR

DETAIL OF "B" BAR

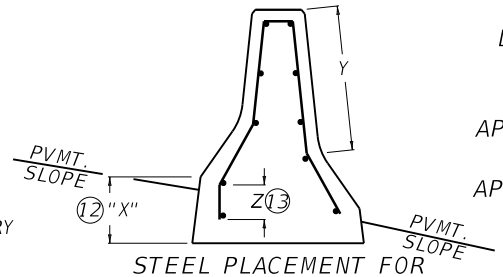

STEEL PLACEMENT FOR ASYMMETRICAL WALL SECTION

APPROX. REINF./30' SECTION

289 LBS.

APPROX. CU. YD. CONC./LIN. FT.

9" WIDE TOP = 0.16

12" WIDE TOP = 0.18

14" WIDE TOP = 0.20

APPROX. WEIGHT/30' SECTION BASED ON 150 LBS./CU. FT

9" WIDE TOP = 9.8 TONS

12" WIDE TOP = 11.1 TONS

14" WIDE TOP = 12.1 TONS

~ NOTES ~

NOT FOR NEW CONSTRUCTION. ONLY USE FOR REPAIRING OR RESTORING EXISTING HARDWARE.

BID ITEM AND UNIT TO BID:
CONCRETE MEDIAN BARRIER TYPE ⊕ ⊕ LF

⊕ 9 OR 12 OR 14 DEPENDING ON "W".

⊕ A OR C DEPENDING ON PAVEMENT TYPE (SEE CUR. STD. DWG. RBM-001 FOR TYPE).

1. WITH FLEXIBLE PAVEMENT THE CONTRACT UNIT PRICE PER LINEAR FOOT SHALL INCLUDE THE BASE, ALL CONCRETE, LABOR, REINFORCING STEEL AND ALL OTHER INCIDENTALS NECESSARY TO COMPLETE THE PERMANENT INSTALLATION.
2. WITH RIGID PAVEMENT THE CONTRACT UNIT PRICE PER LINEAR FOOT SHALL INCLUDE, THE BASE, ALL CONCRETE, LABOR, REINFORCING STEEL AND ALL OTHER INCIDENTALS NECESSARY TO COMPLETE THE PERMANENT INSTALLATION.

③ SHORTER SECTIONS MAY BE PERMITTED IF APPROVED IN WRITING BY THE ENGINEER.

④ 2" DIA. LIFTING HOLE - 2 REQUIRED AT EACH SECTION. FORMED WITH 2" P.V.C. PIPE OR EQUAL.

⑤ SEE ELSEWHERE IN THE PLANS FOR BASE REQUIREMENTS.

⑥ 9" WIDE TOP WITH 2'-3" WIDE BASE, OR 12" WIDE TOP WITH 2'-6" WIDE BASE OR 14" WIDE TOP 2'-8" WIDE BASE. (TAPER NOT INCLUDED IN BASE WIDTH).

⑦ OTHER METHODS OF ANCHORAGE WILL BE ACCEPTABLE IF APPROVED IN WRITING BY THE ENGINEER.

⑧ PAVEMENT THICKNESS MINUS 3".

⑨ THE RACEWAY SHALL BE TIED TO EACH OF THE "A" AND "B" BARS TO PREVENT SAG. SEE ELSEWHERE IN THE PLANS FOR SIZE, LOCATION, AND PAYMENT FOR RACEWAY WHEN REQUIRED.

10. PLACE ALL STEEL REINFORCEMENT A CLEAR DISTANCE OF 2" MIN. FROM OUTSIDE FACE OF WALL, EXCEPT WHERE SHOWN OTHERWISE.
11. SHOP DRAWINGS SHALL BE APPROVED PRIOR TO MANUFACTURE.

⑫ WHEN THE "X" DIMENSION EQUALS 10" THE BAR SHALL BE TURNED DOWN 6" ("Z" DIMENSION) AND AN ADDITIONAL LONGITUDINAL BAR SHALL BE ADDED AT THE BOTTOM OF THE TURN DOWN ("Z" DIMENSION) AND TO THE "Y" PORTION OF THE BAR. FOR EACH 6" INCREMENT OF THE "X" DIMENSION ABOVE 10", AN ADDITIONAL LONGITUDINAL BAR SHALL BE ADDED IN THE "Z" AND "Y" PORTION OF THE BAR.

⑬ THE "Z" DIMENSION SHALL INCREASE INCH FOR INCH WHEN THE "X" DIMENSION EXCEEDS 10".

⑭ LIFTING BARS SHALL BE REQUIRED TO PREVENT SPALLING OF CONCRETE AROUND HOLES.

15. WHEN THE PRECAST WALL IS USED IN PERMANENT CONSTRUCTION THE LIFTING HOLES SHALL BE FILLED WITH GROUT.

USE WITH CUR. STD. DWG. RBM-001

KENTUCKY
DEPARTMENT OF HIGHWAYS

CONCRETE MEDIAN BARRIER PRECAST (PERMANENT - NEW PAVEMENT)

STANDARD DRAWING NO. RBM-003-12

SUBMITTED _____ DIRECTOR DIVISION OF DESIGN — 02-26-20 DATE

APPROVED _____ STATE HIGHWAY ENGINEER — 02-26-20 DATE

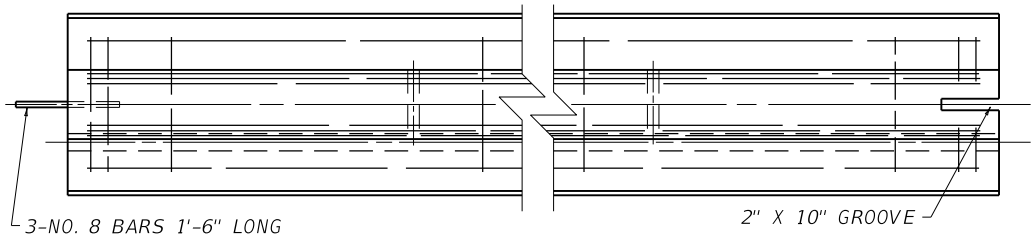

PLAN VIEW

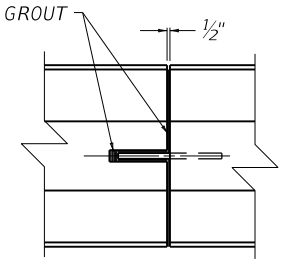

CONNECTION DETAIL

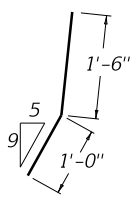

DETAIL OF "A" BAR

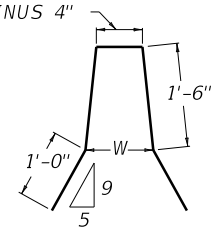

DETAIL OF "B" BAR

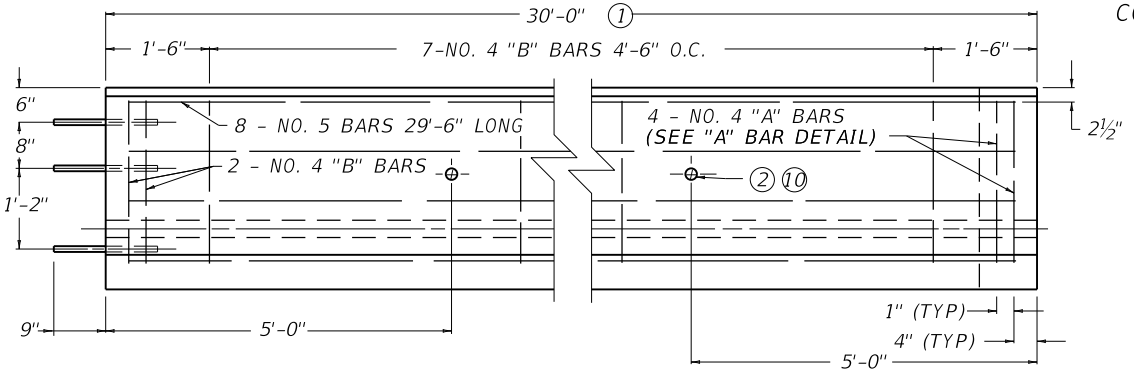

ELEVATION VIEW

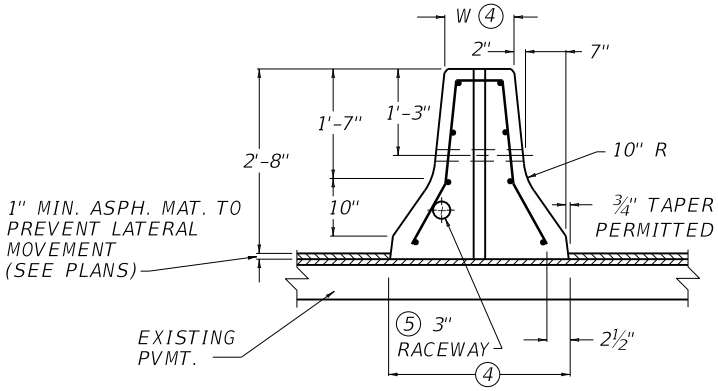

RIGHT ELEVATION VIEW

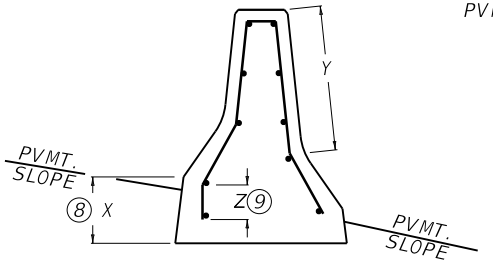

STEEL PLACEMENT FOR ASYMMETRICAL WALL SECTION

APPROX. REINF./30' SECTION
289 LBS.

APPROX. CU. YD. CONC./LIN. FT.
9" WIDE TOP = 0.14
12" WIDE TOP = 0.16
14" WIDE TOP = 0.17

APPROX. WEIGHT/30' SECTION BASED ON 150 LBS./CU. FT.
9" WIDE TOP = 8.1 TONS
12" WIDE TOP = 9.7 TONS
14" WIDE TOP = 10.6 TONS

~ NOTES ~

NOT FOR NEW CONSTRUCTION. ONLY USE FOR REPAIRING OR RESTORING EXISTING HARDWARE.

BID ITEM AND UNIT TO BID:
CONCRETE MEDIAN BARRIER TYPE ⊕ ⊕ LF
⊕ 9 OR 12 OR 14 DEPENDING ON "W".
⊕ D OR E DEPENDING ON PAVEMENT TYPE. (SEE CUR. STD. DWG. RBM-001 FOR TYPE).

1. SHORTER SECTIONS MAY BE PERMITTED IF APPROVED IN WRITING BY THE ENGINEER.
2. 2" DIA. LIFTING HOLE - 2 REQUIRED AT EACH SECTION. FORMED WITH 2" P.V.C. PIPE OR EQUAL.
3. SEE ELSEWHERE IN THE PLANS FOR BASE REQUIREMENTS.
4. 9" WIDE TOP WITH 2'-3" WIDE BASE OR 12" WIDE TOP WITH 2'-6" BASE. 14" WIDE TOP WITH 2'-8" WIDE BASE. (TAPER NOT INCLUDED IN BASE WIDTH).
5. THE RACEWAY SHALL BE TIED TO EACH OF THE "A" AND "B" BARS TO PREVENT SAG. SEE ELSEWHERE IN THE PLANS FOR SIZE, LOCATION, AND PAYMENT FOR RACEWAY WHEN REQUIRED.
6. PLACE ALL STEEL REINFORCEMENT A CLEAR DISTANCE OF 2" MIN. FROM OUTSIDE FACE OF WALL, EXCEPT WHERE SHOWN OTHERWISE.
7. SHOP DRAWINGS SHALL BE APPROVED PRIOR TO MANUFACTURE.
8. WHEN THE "X" DIMENSION EQUALS 10" THE BAR SHALL BE TURNED DOWN 6" ("Z" DIMENSION) AND AN ADDITIONAL LONGITUDINAL BAR SHALL BE ADDED AT THE BOTTOM OF THE TURN DOWN ("Z" DIMENSION) AND TO THE "Y" PORTION OF THE BAR. FOR EACH 6" INCREMENT OF THE "X" DIMENSION ABOVE 10" AN ADDITIONAL LONGITUDINAL BAR SHALL BE ADDED IN THE "Z" AND "Y" PORTION OF THE BAR.
9. THE "Z" DIMENSION SHALL INCREASE INCH FOR INCH WHEN THE "X" DIMENSION EXCEEDS 10".
10. LIFTING BARS SHALL BE REQUIRED TO PREVENT SPALLING OF CONCRETE AROUND HOLES.
11. WHEN THE PRECAST WALL IS USED IN PERMANENT CONSTRUCTION THE LIFTING HOLES SHALL BE FILLED WITH GROUT.

USE WITH CUR. STD. DWG. RBM-001

KENTUCKY
DEPARTMENT OF HIGHWAYS

CONCRETE MEDIAN BARRIER PRECAST (PERMANENT - EXISTING PAVEMENT)

STANDARD DRAWING NO. RBM-006-11

SUBMITTED _____ DIRECTOR DIVISION OF DESIGN — 02-26-20 DATE

APPROVED _____ STATE HIGHWAY ENGINEER — 02-26-20 DATE

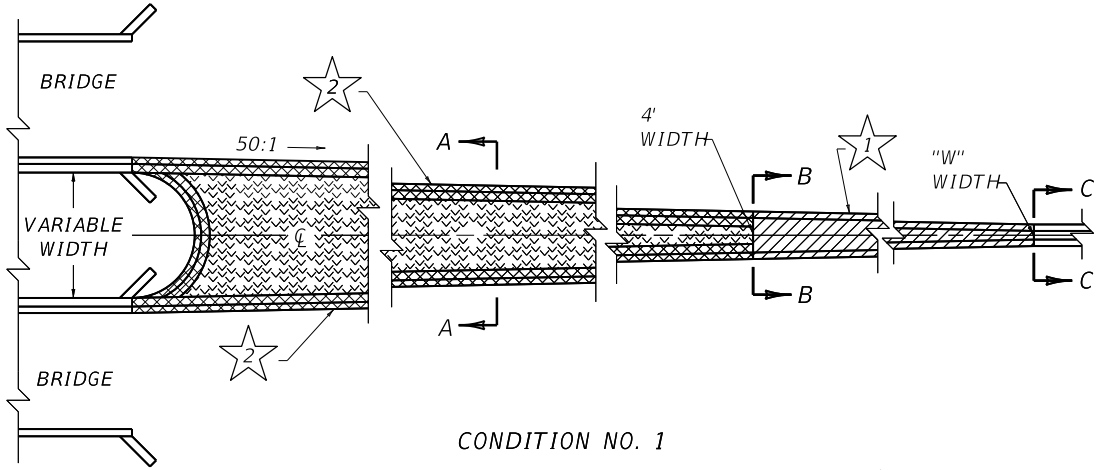

CONDITION NO. 1

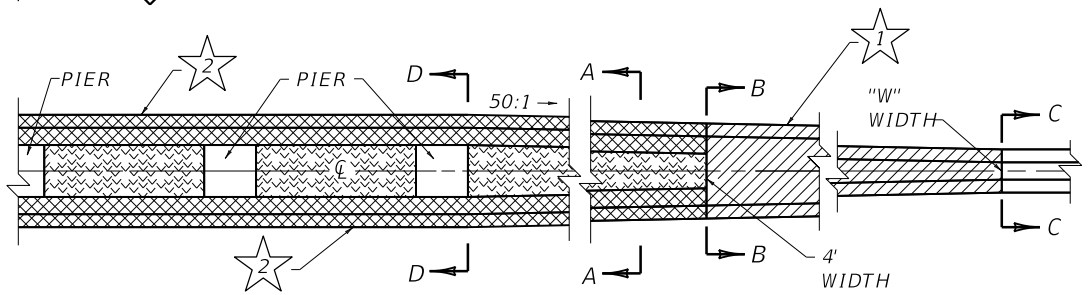

CONDITION NO. 2

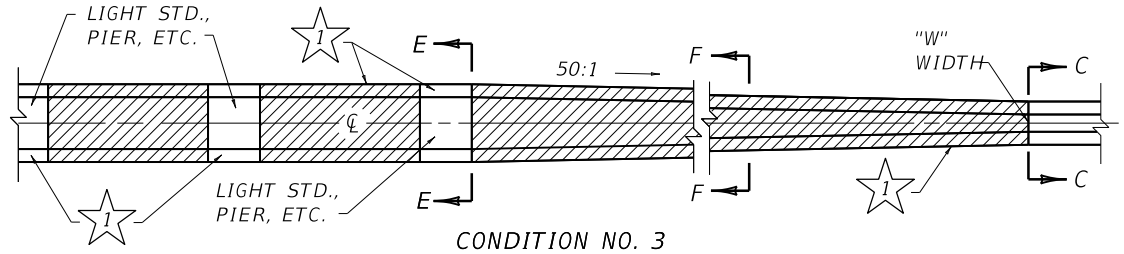

CONDITION NO. 3

~ NOTES ~

BID ITEM AND UNIT TO BID:
CONCRETE MEDIAN BARRIER TYPE ⊕ ⊕ ☆ LF

⊕ 9, 12, OR 14 DEPENDING ON "W"

⊕ A, B, C, D OR E DEPENDING ON PAVEMENT APPLICATION.

☆ 1 = SOLID SEGMENT– DENOTES BARRIER WALL WITH:
a. TRANSITION FROM "W" WIDTH TO MAX. WIDTH OF 4'.
b. CONSTANT WIDTH WALL GREATER THAN "W" WIDE BUT NOT GREATER THAN 4' WIDE. (EX.: WALL BETWEEN BRDG. PIERS).
2 = SEPARATE SEGMENT

THE METHOD OF MEASUREMENT FOR CONCRETE MEDIAN BARRIER FOR EACH TYPE WILL BE IN LINEAR FEET MEASURED ALONG THE TOP CENTERLINE OF THE BARRIER.

1. TRANSITION CONDITION NO. 1, 2 AND 3 ALONG WITH SYMMETRICAL AND ASYMMETRICAL BARRIER SECTIONS ARE DEPICTED ON THIS DRAWING FOR ILLUSTRATION PURPOSES ONLY AT STRUCTURES AND FIXED OBJECTS. (SEE PLANS FOR ADDITIONAL DETAILS)
2. ALL PAVEMENT, FILL MATERIAL, PIPE DRAINAGE (EXCLUSIVE OF WEEP HOLE PIPE) PLACED BETWEEN SEGMENTS OF THE BARRIER SHALL BE SHOWN SEPARATELY OR INCLUDED WITH OTHER LIKE PAY ITEMS ON THE PROJECT.
3. FOR APPLICATION DETAILS TO NEW OR EXISTING PAVEMENT SEE CUR. STD. DWG. RBM-001.

(4) SEE ELSEWHERE IN PLANS FOR SIZE, LOCATION AND PAYMENT FOR RACEWAY WHEN REQUIRED.

(5) 4" PIPE FOR WEEP HOLES SPACED ON 20' CENTERS AND STAGGERED 10' WITH EACH WALL.

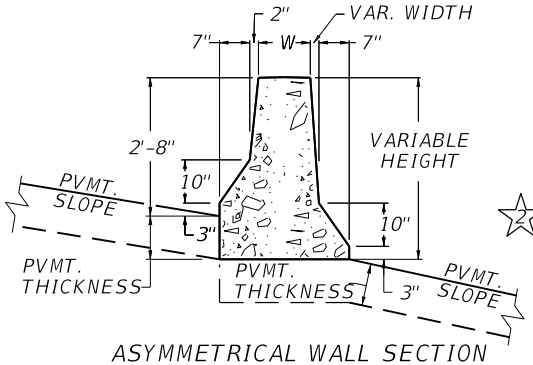

ASYMMETRICAL WALL SECTION

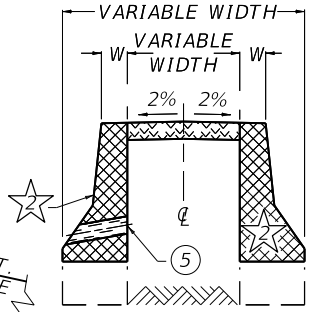

SECTION A-A

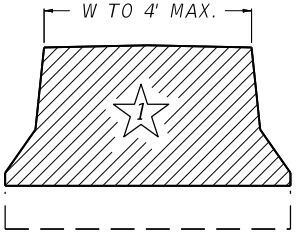

SECTION B-B

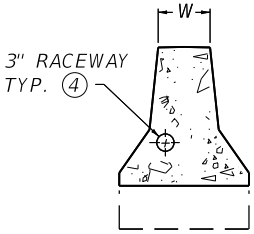

NORMAL SECTION C-C

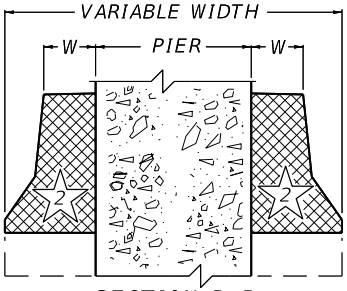

SECTION D-D

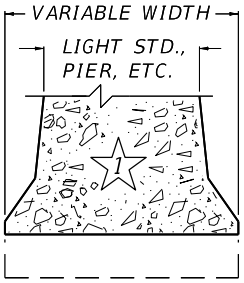

SECTION E-E

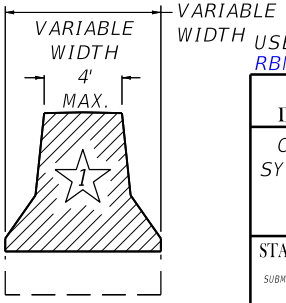

SECTION F-F

USE WITH CUR. STD. DWG. RBM-001

KENTUCKY DEPARTMENT OF HIGHWAYS

CONCRETE MEDIAN BARRIER SYMMETRICAL & ASYMMETRICAL SEPARATE & TRANSITION DETAILS

STANDARD DRAWING NO. RBM-015-06

SUBMITTED William E. Ginkel DIRECTOR, DIVISION OF DESIGN 12-01-15 DATE

APPROVED STATE HIGHWAY ENGINEER 12-01-15 DATE

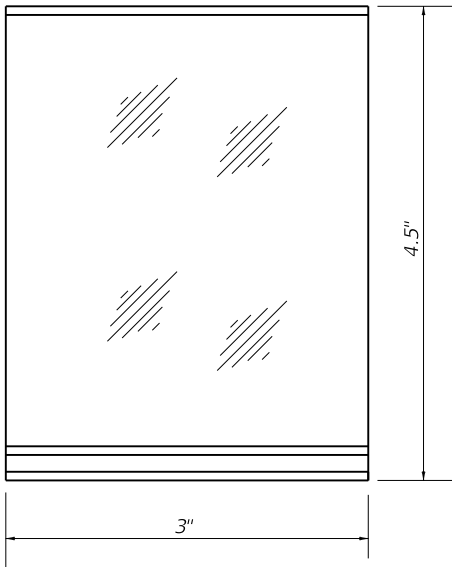

FRONT ELEVATION

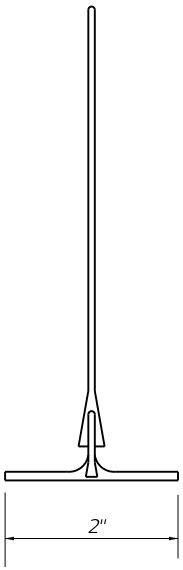

SIDE ELEVATION

~ NOTES ~

BID ITEM AND UNIT TO BID

DELINEATOR FOR BARRIER WALL - M/W	EACH
DELINEATOR FOR BARRIER WALL - M/Y	EACH
DELINEATOR FOR BARRIER WALL - B/Y	EACH
DELINEATOR FOR BARRIER WALL - B/W	EACH

1. BARRIER WALL DELINEATORS SHALL BE REQUIRED ON ALL BARRIER WALLS.
2. DELINEATORS SHALL BE MEASURED AND PAID FOR AT THE CONTRACT UNIT PRICE EACH, AND SHALL INCLUDE ALL MATERIALS AND LABOR NECESSARY FOR ONE COMPLETE INSTALLATION.
3. THE COLOR OF DELINEATORS SHALL MATCH THE COLOR OF THE EDGELINE THAT THEY SUPPLEMENT. IN GENERAL, DELINEATORS ON BARRIER WALL ALONG THE LEFT SIDE OF DRIVING LANES SHALL BE YELLOW, AND DELINEATORS ON BARRIER WALL ALONG THE RIGHT SIDE OF DRIVING LANES SHALL BE WHITE. DELINEATORS IN BOTH DIRECTIONS ON A TWO-LANE, TWO-WAY ROADWAY SHALL BE BI-DIRECTIONAL WHITE.
4. TYPES OF DELINEATORS PERMITTED SHALL BE FROM THE LIST OF APPROVED MATERIALS. THE DELINEATOR SHAPE AND DIMENSIONS ARE FOR ILLUSTRATION PURPOSES ONLY.
5. THE DELINEATOR UNIT SHALL HAVE THE REFLECTIVE SURFACE INSTALLED FACING TRAFFIC.
6. DELINEATORS SHALL BE INSTALLED IN ACCORDANCE WITH MANUFACTURER'S RECOMENDATION.
7. DELINEATORS SHALL BE ATTACHED TO CONCRETE MEDIAN BARRIER WITH AN APPROVED ADHESIVE.
8. DELINEATOR SHEETING SHALL BE TYPE IX, YELLOW OR WHITE.

(9) DELINEATORS SHOULD BE MOUNTED AT A HEIGHT OF APPROXIMATELY 4' ABOVE PAVEMENT. WHEN CONCRETE BARRIERS EXTEND ACROSS BRIDGE STRUCTURES IN LIEU OF STEEL BEAM GUARDRAIL, DELINEATORS SHALL BE INSTALLED AT THE SAME VERTICAL ALIGNMENT AS ON THE GUARDRAIL.

(10) FOR BARRIER WALLS 50" OR LESS IN HEIGHT, DELINEATORS MAY BE INSTALLED ON TOP OF THE BARRIER WALL. FOR MEDIAN BARRIER WALLS 50" OR LESS IN HEIGHT THAT SEPARATE TWO-WAY TRAFFIC, BI-DIRECTIONAL YELLOW DELINEATORS MAY BE INSTALLED ON THE TOP OF THE BARRIER WALL IN LIEU OF SIDE-MOUNTED MONO-DIRECTIONAL YELLOW DELINEATORS.

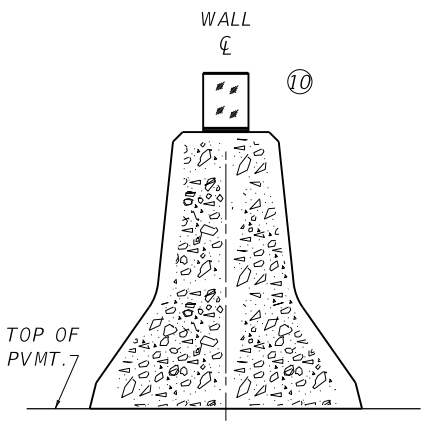

NORMAL (SOLID) WALL SECTION

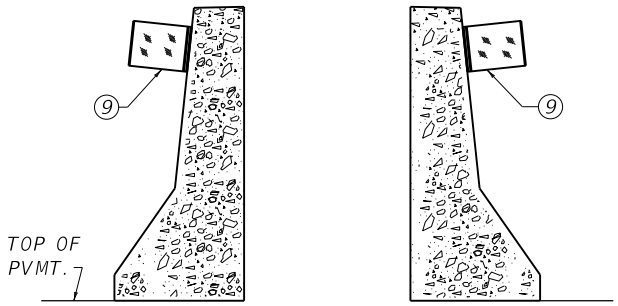

(SEPARATE SEGMENT) WALL SECTION

APPROXIMATE DELINEATOR SPACING	
TANGENT	100'
CURVE	50'

SPACING SHOULD BE ADJUSTED IN CURVES SO THAT SEVERAL DELINEATORS ARE ALWAYS SIMULTANEOUSLY VISIBLE TO THE ROAD USER.

KENTUCKY
DEPARTMENT OF HIGHWAYS

DELINEATORS FOR CONCRETE BARRIERS

STANDARD DRAWING NO. RBM-020-09

SUBMITTED William E. Ginkel — DIRECTOR, DIVISION OF DESIGN — 12-01-15 DATE

APPROVED — STATE HIGHWAY ENGINEER — 12-01-15 DATE

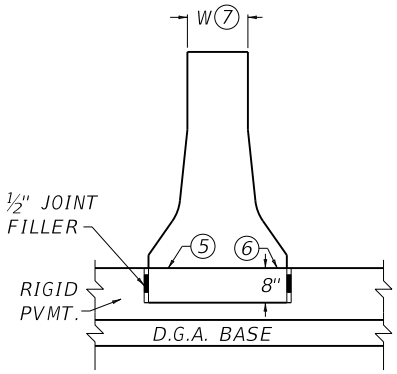

TYPE A BARRIER
(NEW RIGID PAVEMENT)

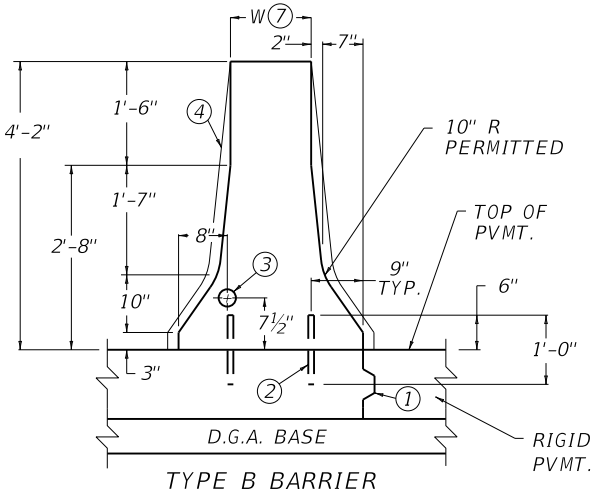

TYPE B BARRIER
(NEW RIGID PAVEMENT)

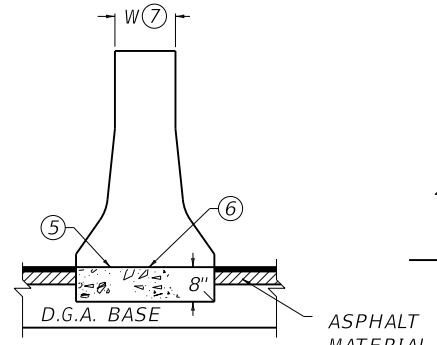

TYPE C BARRIER
(NEW FLEXIBLE PAVEMENT)

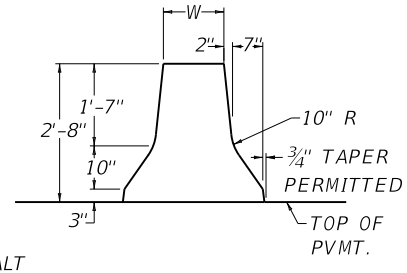

SECTION A-A

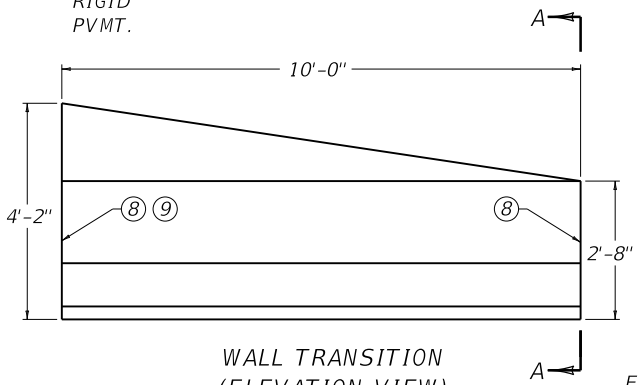

WALL TRANSITION
(ELEVATION VIEW)

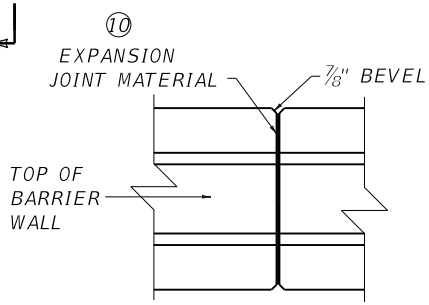

EXPANSION JOINT DETAIL

~ NOTES ~

THE CONTRACT UNIT PRICE PER LINEAR FOOT FOR "CONCRETE MEDIAN BARRIER TYPE ★ ⊕ 50" SHALL BE FULL COMPENSATION FOR ALL MATERIALS, EQUIPMENT, LABOR AND INCIDENTALS NECESSARY TO COMPLETE THE WORK.

★ 12 OR 14 DEPENDING ON "W".

⊕ A, B OR C DEPENDING ON PAVEMENT TYPE.

1. LONGITUDINAL CONSTRUCTION JOINT WITHOUT TIE BARS IS REQUIRED AND SHALL BE PLACED AT THE LOCATION SHOWN OR MAY BE INSTALLED AT THE CORRESPONDING POINT ON THE OPPOSITE SIDE OF THE BARRIER, AT THE OPTION OF THE CONTRACTOR. IT SHALL BE REQUIRED ON THE LOW SIDE OF A SUPERELEVATED SECTION.
2. NO. 8 DOWEL BARS SPACED 4'-0" O.C. AND STAGGERED 2'-0".
3. 3" RACEWAY (TYPICAL). SEE ELSEWHERE IN THE PLANS FOR LOCATION AND PAYMENT FOR RACEWAY WHEN REQUIRED.
4. WALL MAY BE FIXED-FORMED AS DEPICTED BY PHANTOM LINES.
5. WHEN A CONSTRUCTION JOINT IS USED, DOWEL BARS WILL BE REQUIRED AS SHOWN WITH TYPE B BARRIERS.
6. CONSTRUCTION JOINT PERMITTED WHEN FIXED FORMS OR SLIP FORMS ARE USED.
7. A 14" WALL WITH 3" RACEWAY IS REQUIRED WHEN THE ROADWAY WILL BE LIGHTED FROM THE MEDIAN.
8. THE WALL TRANSITION DETAILED IS FOR A FIXED-FORM OR SLIP-FORM WALL. SEE CURRENT STANDARD DRAWING RBM-053 FOR CONNECTION DETAILS, STEEL PLACEMENT, LIFTING HOLE DIMENSIONS, ETC. WHEN WALL IS PRECAST.
9. SEE TYPE B BARRIER DETAIL FOR WALL DIMENSIONS.
10. TRANSVERSE EXPANSION JOINTS SHALL BE INSTALLED PER STANDARD SPECIFICATONS FOR ROAD AND BRIDGE CONSTRUCTION.

APPROX. QUANTITIES PER LINEAR FOOT

TYPE	12" WALL		14" WALL	
	CONC. IN CU. YDS.	STEEL IN POUNDS	CONC. IN CU. YDS.	STEEL IN POUNDS
A	0.27	△ 1.34	0.30	△ 1.34
B	0.21	1.34	0.23	1.34
C	0.27	△ 1.34	0.30	△ 1.34

△ WHEN REQUIRED

CONCRETE QUANTITIES SHOWN INCLUDE 8" BASE THICKNESS FOR TYPE A AND TYPE C. THE CONTRACTOR IS RESPONSIBLE FOR ADDITIONAL CONCRETE QUANTITIES.

USE WITH CUR. STD. DWG. RBM-053

KENTUCKY
DEPARTMENT OF HIGHWAYS

CONCRETE MEDIAN BARRIER
FIXED-FORM OR SLIP-FORM
(PERMANENT)
(50" TALL WALL)

STANDARD DRAWING NO. RBM-050-02

SUBMITTED _____ DIRECTOR DIVISION OF DESIGN — 02-26-20 DATE

APPROVED _____ STATE HIGHWAY ENGINEER — 02-26-20 DATE

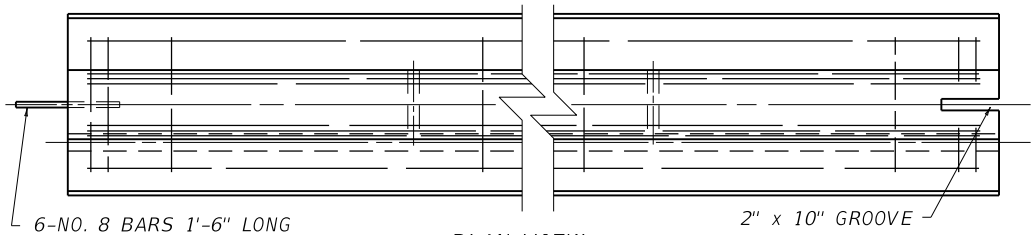

PLAN VIEW

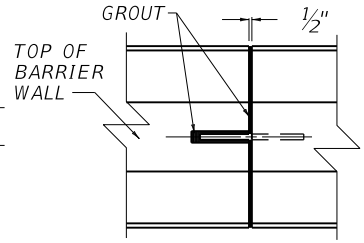

CONNECTION DETAIL

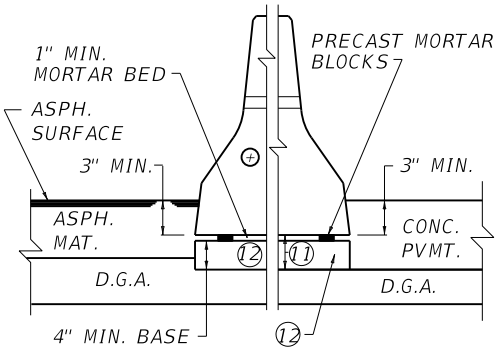

PAVEMENT DETAIL

(SEE RIGHT ELEVATION FOR DIMENSIONS)

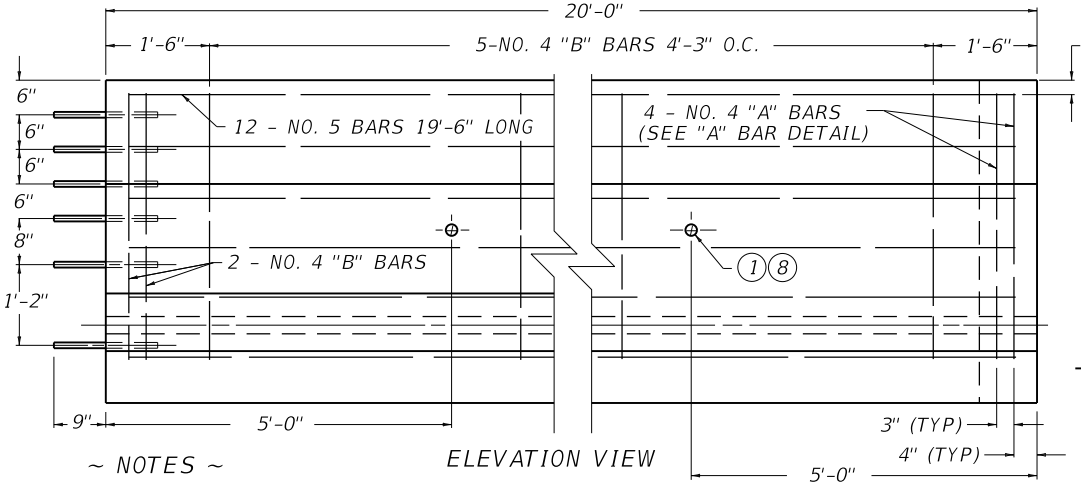

ELEVATION VIEW

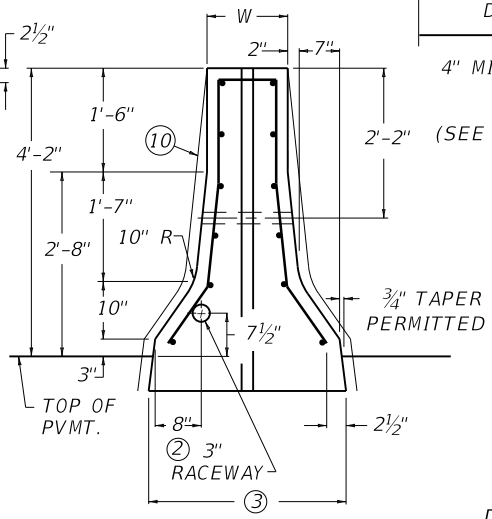

RIGHT ELEVATION VIEW

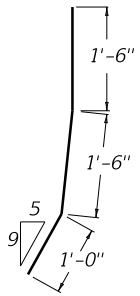

DETAIL OF "A" BAR

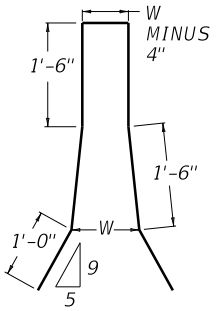

DETAIL OF "B" BAR

APPROX. REINF./20' SECTION

296 LBS.

APPROX. CU. YD. CONC./LIN. FT.

12" WIDE TOP = 0.23

14" WIDE TOP = 0.26

APPROX. WEIGHT/20' SECTION BASED ON 150 LBS./CU. FT.

12" WIDE TOP = 9.3 TONS

14" WIDE TOP = 10.4 TONS

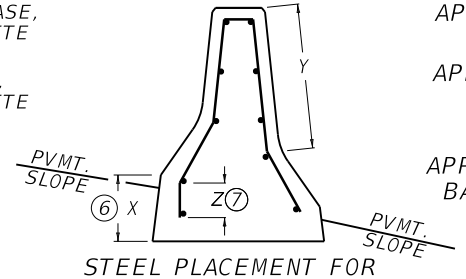

STEEL PLACEMENT FOR ASYMMETRICAL WALL SECTION

USE WITH CUR. STD. DWG. RBM-050

~ NOTES ~

BID ITEM AND UNIT TO BID:

A. CONCRETE MEDIAN BARRIER TYPE ☆ ⊕ 50 LF

☆ 12 OR 14 DEPENDING ON "W".

⊕ A OR C DEPENDING ON PAVEMENT TYPE. SEE CURRENT STANDARD DRAWING RBM-050 FOR PAVEMENT TYPE.

B. WITH FLEXIBLE PAVEMENT THE CONTRACT UNIT PRICE PER LINEAR FOOT SHALL INCLUDE THE BASE, ALL CONCRETE, LABOR, REINFORCING STEEL AND ALL OTHER INCIDENTALS NECESSARY TO COMPLETE THE PERMANENT INSTALLATION.

C. WITH RIGID PAVEMENT THE CONTRACT UNIT PRICE PER LINEAR FOOT SHALL INCLUDE, THE BASE, ALL CONCRETE, LABOR, REINFORCING STEEL AND ALL OTHER INCIDENTALS NECESSARY TO COMPLETE THE PERMANENT INSTALLATION.

1. 2" DIA. LIFTING HOLE - 2 REQUIRED AT EACH SECTION. FORMED WITH 2" P.V.C. PIPE OR EQUAL.
2. THE RACEWAY SHALL BE TIED TO EACH OF THE A AND B BARS TO PREVENT SAG. SEE ELSEWHERE IN THE PLANS FOR LOCATION AND PAYMENT FOR RACEWAY WHEN REQUIRED.
3. 12" W WITH 2'-6" WIDE BASE OR 14" W WITH 2'-8" BASE (TAPER NOT INCLUDED IN BASE WIDTH).
4. PLACE ALL STEEL REINFORCEMENT A CLEAR DISTANCE OF 2" MIN. FROM OUTSIDE FACE OF WALL, EXCEPT WHERE SHOWN OTHERWISE.
5. SHOP DRAWINGS SHALL BE APPROVED PRIOR TO MANUFACTURE.
6. WHEN THE "X" DIMENSION EQUALS 10" THE BAR SHALL BE TURNED DOWN 6" ("Z" DIMENSION) AND AN ADDITIONAL LONGITUDINAL BAR SHALL BE ADDED AT THE BOTTOM OF THE TURN DOWN ("Z" DIMENSION) AND TO THE "Y" PORTION OF THE BAR. FOR EACH 6" INCREMENT OF THE "X" DIMENSION ABOVE 10" AN ADDITIONAL LONGITUDINAL BAR SHALL BE ADDED IN THE "Z" AND "Y" PORTION OF THE BAR.
7. THE "Z" DIMENSION SHALL INCREASE INCH FOR INCH WHEN THE "X" DIMENSION EXCEEDS 10".
8. LIFTING BARS SHALL BE REQUIRED TO PREVENT SPALLING OF CONCRETE AROUND HOLES.
9. THE LIFTING HOLES SHALL BE FILLED WITH GROUT WHEN COMPLETE.
10. WALL MAY BE FORMED AS DEPICTED BY PHANTOM LINES.
11. PAVEMENT THICKNESS MINUS 3".
12. SEE ELSEWHERE IN PLANS FOR BASE REQUIREMENTS.
13. SEE CURRENT STANDARD DRAWING RBM-050 FOR WALL TRANSITION WHEN APPLICABLE.

NOT FOR NEW CONSTRUCTION. ONLY USE FOR REPAIRING OR RESTORING EXISTING HARDWARE.

KENTUCKY DEPARTMENT OF HIGHWAYS

CONCRETE MEDIAN BARRIER PRECAST (PERMANENT) (50" TALL WALL)

STANDARD DRAWING NO. RBM-053-02

SUBMITTED: DIRECTOR DIVISION OF DESIGN — DATE 02-26-20

APPROVED: STATE HIGHWAY ENGINEER — DATE 02-26-20

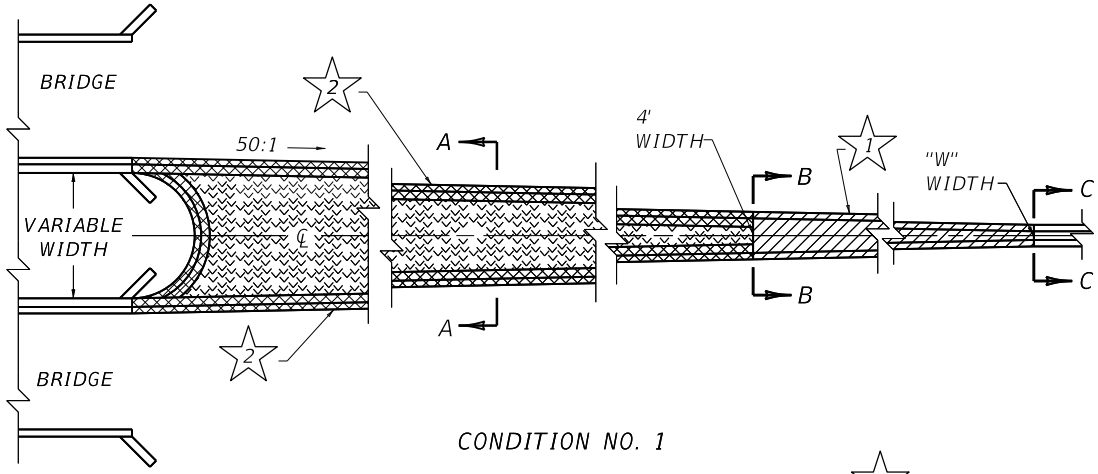

CONDITION NO. 1

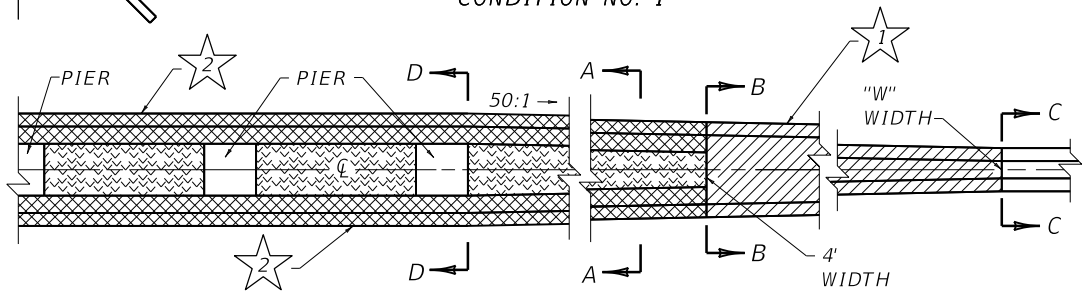

CONDITION NO. 2

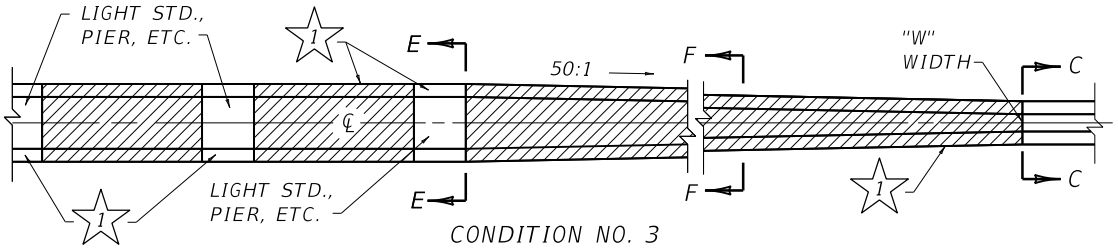

CONDITION NO. 3

~ NOTES ~

1. TRANSITION CONDITION NO. 1, 2 AND 3 ALONG WITH SYMMETRICAL AND ASYMMETRICAL BARRIER SECTIONS ARE DEPICTED ON THIS DRAWING FOR ILLUSTRATION PURPOSES ONLY AT STRUCTURES AND FIXED OBJECTS. (SEE PLANS FOR ADDITIONAL DETAILS)
2. ALL PAVEMENT, FILL MATERIAL, PIPE DRAINAGE (EXCLUSIVE OF WEEP HOLE PIPE) PLACED BETWEEN SEGMENTS OF THE BARRIER SHALL BE SHOWN SEPARATELY OR INCLUDED WITH OTHER LIKE PAY ITEMS ON THE PROJECT.
3. FOR APPLICATION DETAILS SEE CURRENT STANDARD DRAWING RBM-050

THE METHOD OF MEASUREMENT FOR CONCRETE MEDIAN BARRIER FOR EACH TYPE WILL BE IN LINEAR FEET MEASURED ALONG THE TOP CENTERLINE OF THE BARRIER.

BID ITEM AND UNIT TO BID

CONCRETE MEDIAN BARRIER TYPE ⊕ ⊕ ☆ (50) LF

⊕ 12, OR 14 DEPENDING ON "W"

⊕ A, B OR C DEPENDING ON PAVEMENT APPLICATION.

☆ 1 = SOLID SEGMENT- DENOTES BARRIER WALL WITH:
- a. TRANSITION FROM "W" WIDTH TO MAX. WIDTH OF 4'.
- b. CONSTANT WIDTH WALL GREATER THAN "W" WIDE BUT NOT GREATER THAN 4' WIDE. (EX.: WALL BETWEEN BRDG. PIERS).

2 = SEPARATE SEGMENT

(4) SEE ELSEWHERE IN PLANS FOR LOCATION AND PAYMENT FOR RACEWAY WHEN REQUIRED.

(5) 4" PIPE FOR WEEP HOLES SPACED ON 20' CENTERS AND STAGGERED 10' WITH EACH WALL.

(6) VARIABLE WIDTH

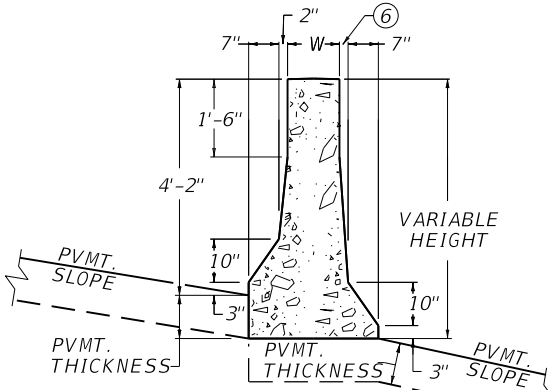

ASYMMETRICAL WALL SECTION

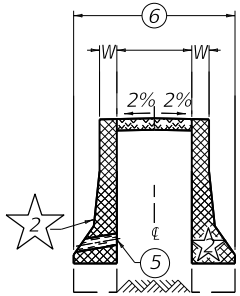

SECTION A-A

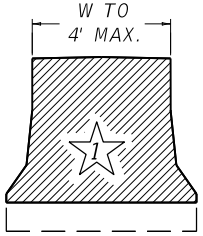

SECTION B-B

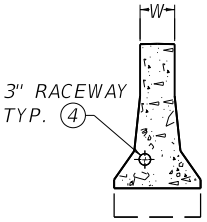

NORMAL SECTION C-C

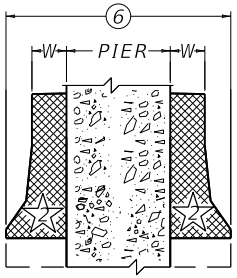

SECTION D-D

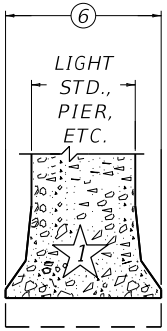

SECTION E-E

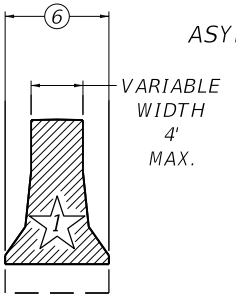

SECTION F-F

USE WITH CUR. STD. DWG. RBM-050

KENTUCKY DEPARTMENT OF HIGHWAYS

CONCRETE MEDIAN BARRIER SYMMETRICAL & ASYMMETRICAL SEPARATE & TRANSITION DETAILS (50" TALL WALL)

STANDARD DRAWING NO. RBM-060-01

SUBMITTED William S. Ghaled — DIRECTOR DIVISION OF DESIGN — 12-01-15 DATE

APPROVED — STATE HIGHWAY ENGINEER — 12-01-15 DATE

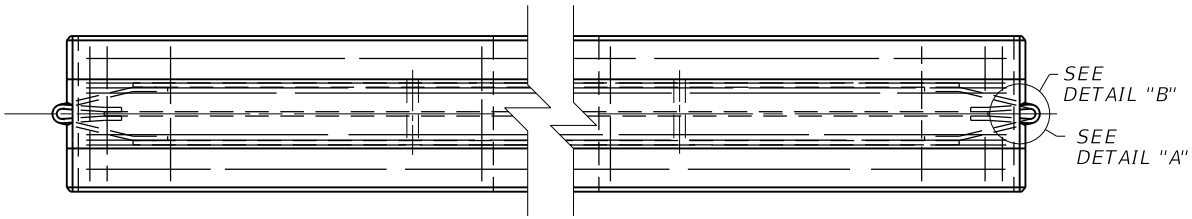

PLAN VIEW

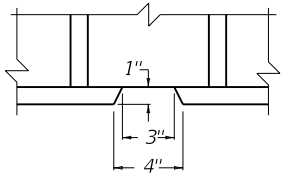

DETAIL "A"

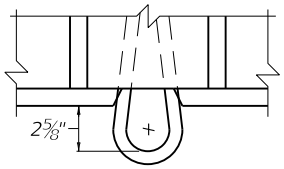

DETAIL "B"

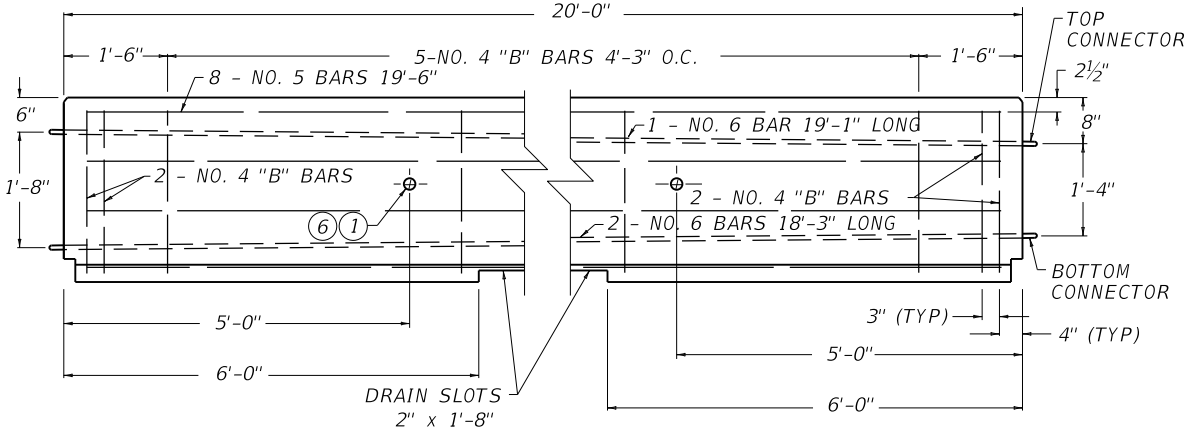

ELEVATION VIEW

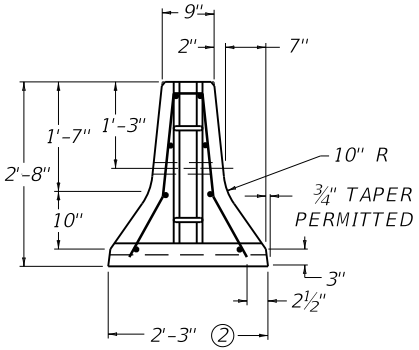

RIGHT ELEVATION VIEW

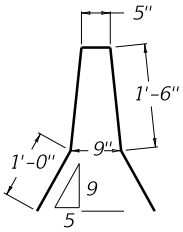

DETAIL OF "B" BAR

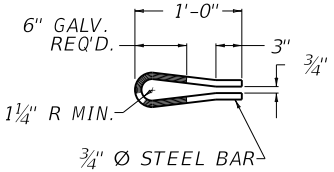

TOP CONNECTOR
(HOT DIP GALVANIZE AFTER FORMING)

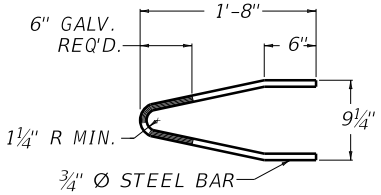

BOTTOM CONNECTOR
(HOT DIP GALVANIZE AFTER FORMING)

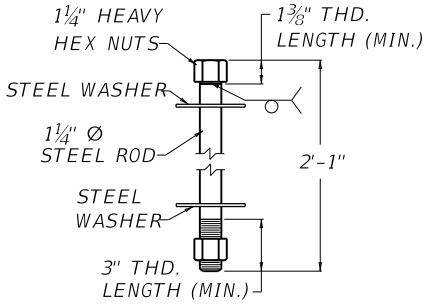

CONNECTOR PIN

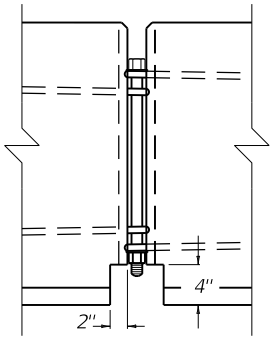

ELEVATION OF CONNECTON DETAIL

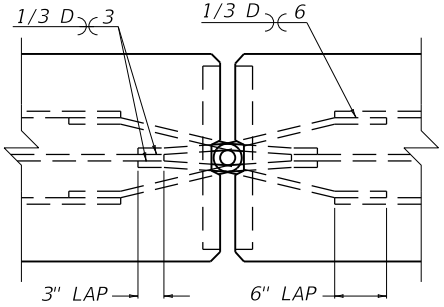

PLAN OF CONNECTION DETAIL

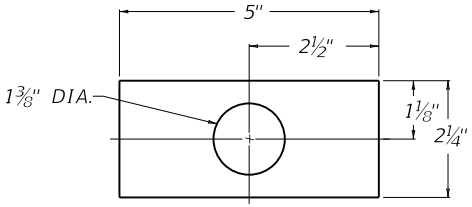

½" THICK STEEL WASHER

~ NOTES ~

BID ITEM AND UNIT TO BID
CONCRETE BARRIER WALL TYPE 9T LF

1. 2" DIA. LIFTING HOLE - 2 REQUIRED FOR EACH SECTION. FORMED WITH 2" P.V.C. PIPE OR EQUAL.
2. TAPER NOT INCLUDED IN BASE WIDTH.
3. SHOP DRAWINGS SHALL BE APPROVED PRIOR TO MANUFACTURE.
4. BASED ON 150 LBS./CU. FT.
5. PLACE ALL STEEL REINFORCEMENT A CLEAR DISTANCE OF 2" MIN. FROM OUTSIDE FACE OF WALL, EXCEPT WHERE SHOWN OTHERWISE.
6. LIFTING BARS SHALL BE REQUIRED TO PREVENT SPALLING OF CONCRETE AROUND HOLES.
7. PREVIOUS WALL MANUFACTURED ACCORDING TO STANDARD DRAWING RBM-115 MAY STILL BE USED. ANY NEW BARRIER WALL TYPE 9T MANUFACTURED SHALL COMPLY TO THIS STANDARD DRAWING.
8. A PERMISSABLE ALTERNATE FOR THE PIN AND LOOP CONNECTOR IS JJ HOOK MANUFACTURED BY EASI-SET INDUSTRIES OUT OF MIDLAND, VA. SEE MANUFACTURER'S SHOP DRAWINGS FOR DETAILS ON JJ HOOK CONNECTOR AND RECOMMENDED REINFORCEMENT. THE BARRIER WALL'S DIMENSIONS, SHAPE, LENGTH AND THE DRAIN SLOT DIMENSIONS AND LOCATIONS SHALL MATCH THIS DRAWINGS CURRENT DIMENSIONS. 1 6

APPROXIMATE QUANTITIES

20'		
REINF.	CONC.	WEIGHT 4
LBS.	CU. YD./FT.	TONS
195	0.12	5.0

USE WITH CUR. STD. DWG. RBM-120

KENTUCKY
DEPARTMENT OF HIGHWAYS

CONCRETE BARRIER WALL TYPE 9T (TEMPORARY)

STANDARD DRAWING NO. RBM-115-10

SUBMITTED William E. Ginkel — DIRECTOR DIVISION OF DESIGN — 12-01-15 DATE

APPROVED — STATE HIGHWAY ENGINEER — 12-01-15 DATE

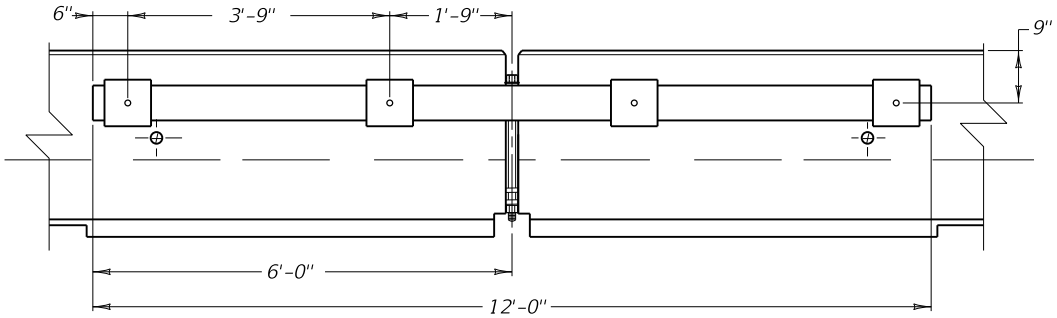

ELEVATION VIEW

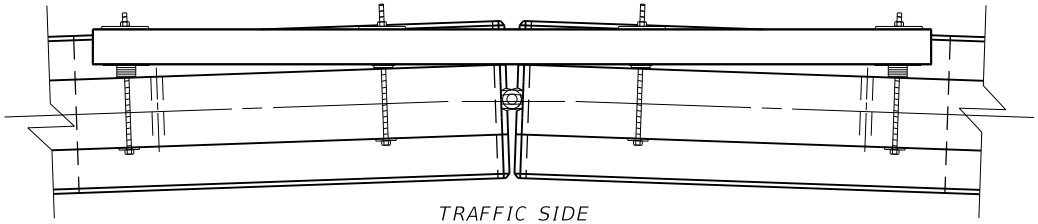

PLAN VIEW

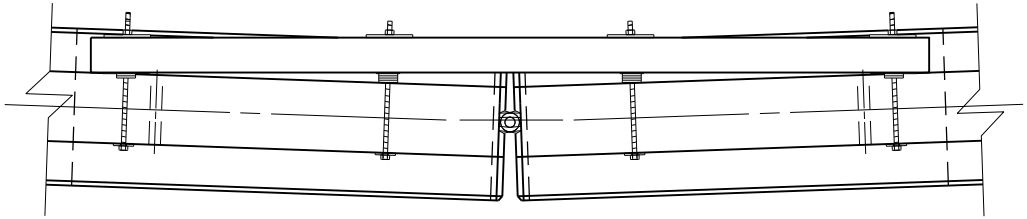

PLAN VIEW

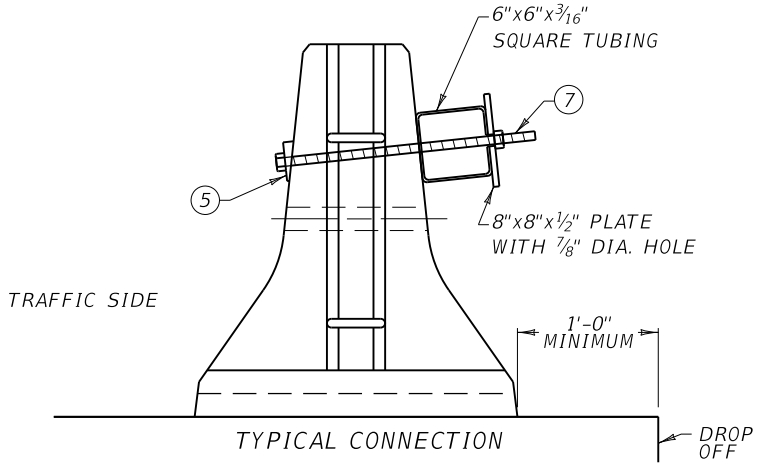

TYPICAL CONNECTION

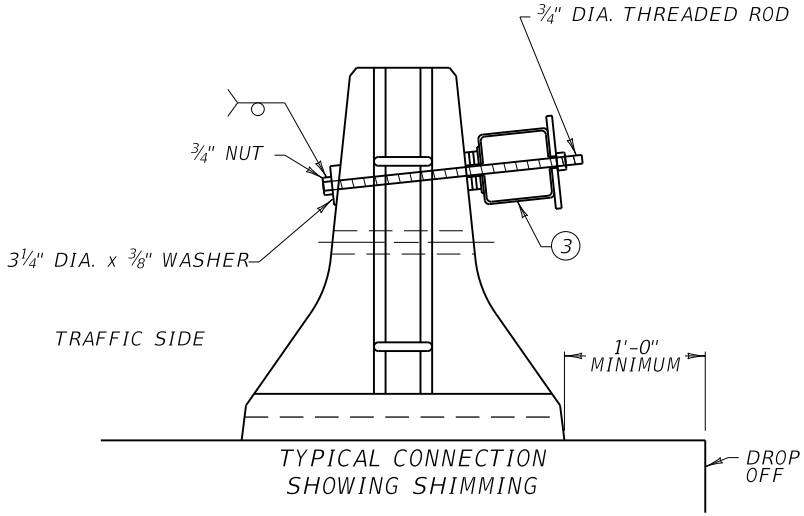

TYPICAL CONNECTION
SHOWING SHIMMING

~ NOTES ~

1. STIFFENED BARRIER WALL IS REQUIRED IN WORK ZONES WHEN THE EDGE OF THE WALL FURTHEST FROM TRAFFIC IS LOCATED WITHIN 3'-0" OF THE BRIDGE DECK EDGE PARALLEL TO THE DIRECTION OF TRAFFIC. MAY ALSO BE USED IN OTHER TEMPORARY SITUATIONS WHERE SUBSTANTIAL DROP OFFS EXIST. MAINTAIN 1'-0" MINIMUM FROM EDGE OF BARRIER TO DROP OFF.
2. STIFFENER SHALL BE INSTALLED WHEN BARRIER IS SET AND BEFORE EXPOSED TO TRAFFIC.
3. SQUARE TUBING SHALL BE 50 GRADE STRUCTURAL STEEL.
4. WHEN BARRIER WALL SECTIONS ARE PLACED ON A RADIUS, THE AREA BETWEEN THE SQUARE TUBING AND BARRIER WALL SHALL BE SHIMMED AS SHOWN ABOVE. SHIM SHALL CONSIST OF ONE SQUARE PLATE (4" NEAR END OF BARRIER WALL SECTION, 8" NEAR END OF TUBING SECTIONS) 3/16" THICK WITH AS MANY 3 1/4" DIA. x 3/8" THICK WASHERS AS NEEDED.
5. BEVEL WASHER TO BE PARALLEL WITH PLANE OF BARRIER AND BOLT HEAD. (TYP.)
6. ALL MATERIALS, LABOR INVOLVED WITH THIS PROCESS TO BE INCIDENTAL TO LINEAR FEET OF WALL.
7. ROD PERPENDICULAR TO BARRIER WALL SURFACE. (TYP.)

USE WITH CUR. STD. DWG.
RBM-115

KENTUCKY
DEPARTMENT OF HIGHWAYS

BOX BEAM STIFFENING
PF TEMPORARY
CONCRETE BARRIER

STANDARD DRAWING NO. RBM-120-02

SUBMITTED _____ 02-26-20
DIRECTOR DIVISION OF DESIGN — DATE

APPROVED _____ 02-26-20
STATE HIGHWAY ENGINEER — DATE

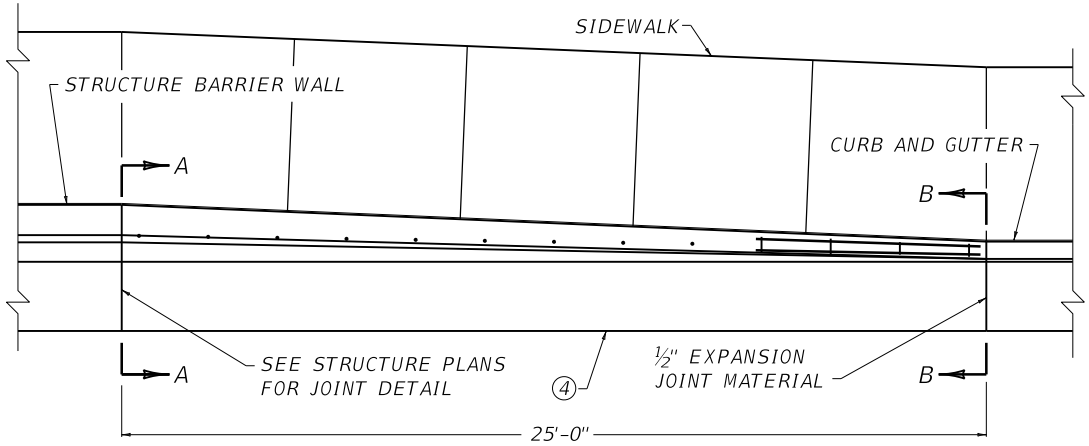

PLAN VIEW

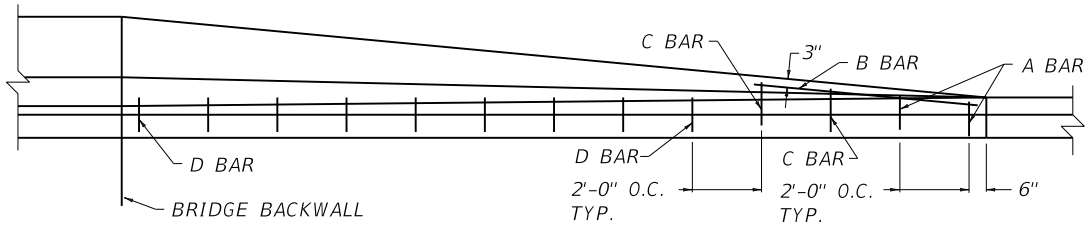

ELEVATION VIEW

~ NOTES ~

BID ITEM AND UNIT TO BID
CURB TO BARRIER WALL TRANS EACH

1. THE CONTRACT UNIT PRICE EACH FOR THE CURB TO BARRIER WALL TRANSITION SHALL INCLUDE CONCRETE, FORMS, STEEL REINFORCEMENT, EXPANSION JOINT MATERIAL, AND ALL INCIDENTALS NECESSARY TO COMPLETE THE INSTALLATION.
2. FOR ILLUSTRATION PURPOSES THE DETAILS DEPICT THE CURB TO BARRIER WALL TRANSITION CONNECTING TO A STANDARD CURB, HOWEVER THE CURB TO BARRIER WALL TRANSITION MAY BE CONSTRUCTED TO MATCH ANY ADJOINING CURB.
3. THE AMOUNT OF CLASS "A" CONCRETE REQUIRED FOR A TRANSITION SECTION WITH A 10½" WIDE TOP IS APPROXIMATELY 2.61 CU. YDS.

(4) WHEN THE CURB TO BARRIER WALL TRANSITION ABUTS RIGID PAVEMENT A LONGITUDINAL SAWED CONSTRUCTION JOINT SHALL BE INSTALLED IN ACCORDANCE WITH CUR. STD. DWG. RPS-010 .

(5) SEE STRUCTURE PLANS FOR DIMENSIONS.

6. CURB TO BARRIER WALL TRANSITION NOT FOR USE ON APPROACH ENDS ON HIGH SPEED N.H.S.

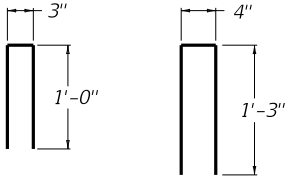

BAR A BAR C

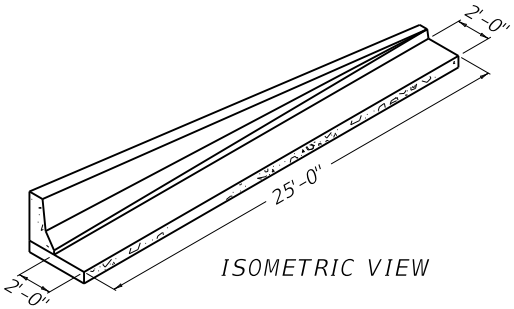

ISOMETRIC VIEW

BILL OF REINFORCEMENT				
BAR	QTY.	SIZE	LENGTH	TOTAL LBS. OF STEEL
A	2	5	2'-2"	48
B	2	5	6'-6"	
C	2	5	2'-9"	
D	9	8	1'-0"	

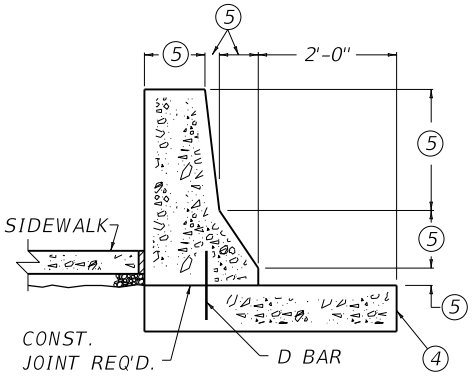

SECTION A-A

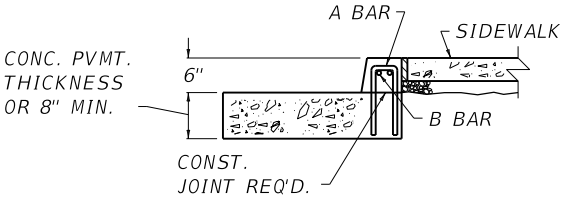

SECTION B-B

USE WITH CUR. STD. DWG.
RPS-010

KENTUCKY
DEPARTMENT OF HIGHWAYS

CURB TO BARRIER
WALL TRANSITION

STANDARD DRAWING NO. RBM-130-05

SUBMITTED William E. Ginkel — DIRECTOR DIVISION OF DESIGN — 12-01-15 DATE

APPROVED — STATE HIGHWAY ENGINEER — 12-01-15 DATE

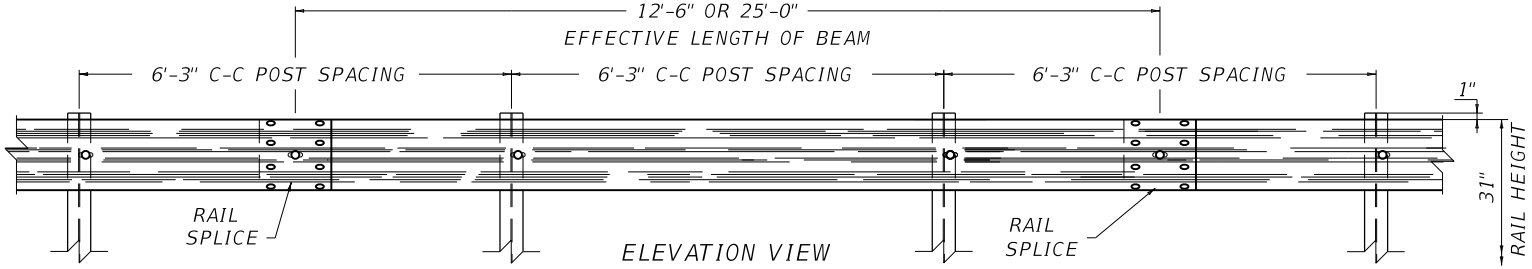

ELEVATION VIEW

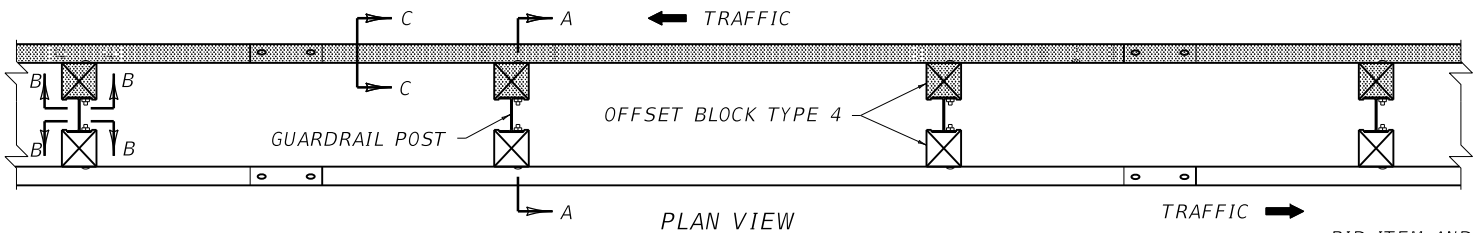

PLAN VIEW
(DOUBLE FACE RAIL OR SINGLE FACE RAIL)

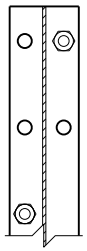

SECTION B-B

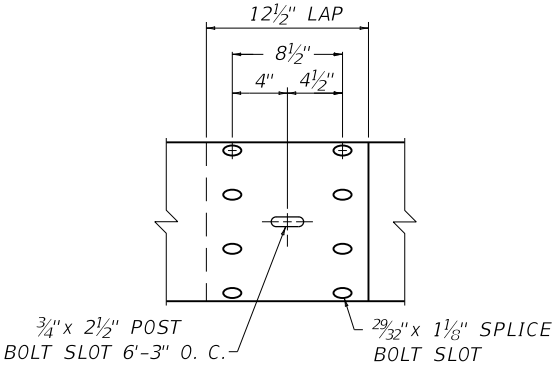

RAIL SPLICE ⑤

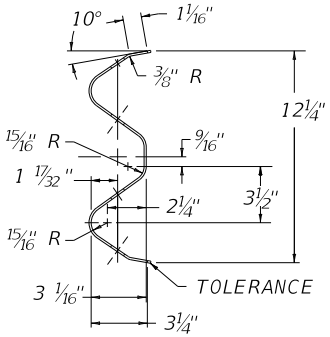

SECTION C-C
(RAIL CORRUGATED
SHEET STEEL BEAM)

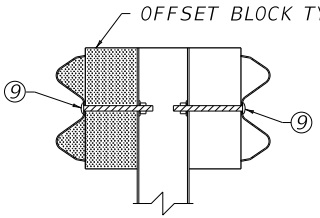

SECTION A-A
DOUBLE FACE RAIL WITH
STEEL POST (W6x9)
(TIMBER OR APPROVED
COMPOSITE OFFSET BLOCK)

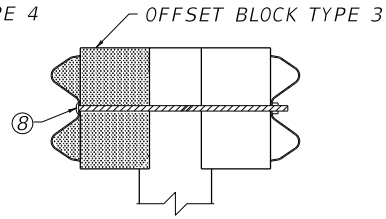

SECTION A-A
DOUBLE FACE RAIL WITH
ROUND TIMBER POST

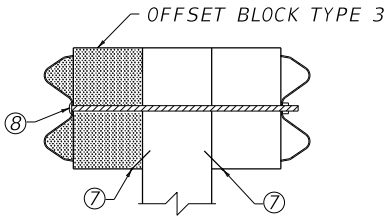

SECTION A-A
DOUBLE FACE RAIL WITH
TIMBER POST

~ NOTES ~

BID ITEM AND UNIT TO BID
GUARDRAIL-STEEL W BEAM-S FACE LF
OR
GUARDRAIL-STEEL W BEAM-D FACE LF

1. DIMENSIONAL TOLERANCES NOT SHOWN OR IMPLIED ARE INTENDED TO BE THOSE CONSISTENT WITH THE PROPER FUNCTIONING OF THE PART, INCLUDING ITS APPEARANCE AND ACCEPTED MANUFACTURING PRACTICES.
2. THE RAIL ELEMENT SHALL COMPLY WITH AASHTO M-180 -CLASS A, TYPE II.
3. ALL LAPS SHALL BE PLACED IN THE DIRECTION OF TRAFFIC FLOW.

④ TOLERANCE + 1¼", -¼"

⑤ 8-⅝"x 1," LONG BUTTON HEAD BOLTS AND HEX HEAD RECESS NUTS REQUIRED FOR EACH RAIL SPLICE.

⑥ LENGTH EQUALS POST AND BLOCK WIDTH PLUS 2" FOR BOLT OR 2¼" FOR THREADED ROD.

⑦ GALVANIZED STEEL 10d COMMON COATED NAIL (DRIVE NAIL AT THE TOP OR BOTTOM CENTER OF BLOCK AND POST AFTER BOLT IS INSTALLED).

⑧ ⅝"x ⑥ STEEL THREADED ROD AND TWO (2) HEX HEAD NUTS OR ⅝"x ⑥ BUTTON OR HEX HEAD BOLT AND HEX HEAD NUT.

⑨ ⅝"x8" BUTTON HEAD BOLT, HEX HEAD RECESS NUT AND ONE ⅝" ROUND WASHER (TYP.). BOLT SHALL HAVE A MINIMUM THREAD LENGTH OF 2".

REQUIRED FOR DOUBLE RAIL

10. BOTH 12'-6" AND 25' LENGTHS OF "W" BEAM GUARDRAIL SECTIONS WILL BE PERMITTED UNLESS OTHERWISE DIRECTED BY THE ENGINEER.

KENTUCKY
DEPARTMENT OF HIGHWAYS

STEEL BEAM
GUARDRAIL
("W" BEAM)

STANDARD DRAWING NO. RBR-001-13

SUBMITTED _____ DIRECTOR DIVISION OF DESIGN 02-26-20 DATE

APPROVED _____ STATE HIGHWAY ENGINEER 02-26-20 DATE

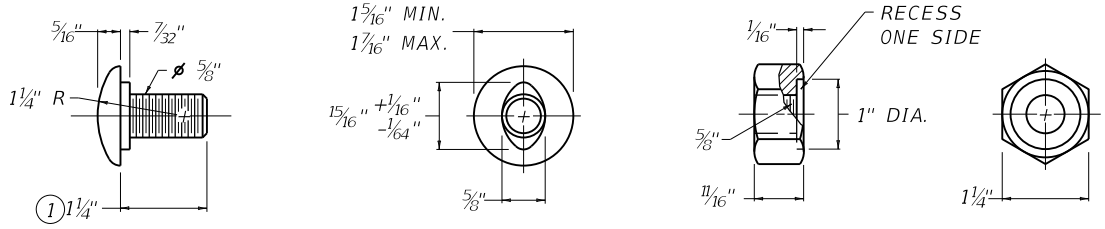

5/8" BUTTON HEAD BOLT AND RECESSED NUT

~ NOTES ~

1. RAIL BOLT SIMILAR EXCEPT LENGTH.
2. THE THRIE BEAM TO "W" BEAM CONNECTOR SHALL COMPLY WITH AASHTO M-180 CLASS A, TYPE 2 EXCEPT WHERE IT IS IN CONFLICT WITH THIS DETAIL.

BID ITEM AND UNIT TO BID
THRIE BEAM TO W BEAM CONNECTOR EACH

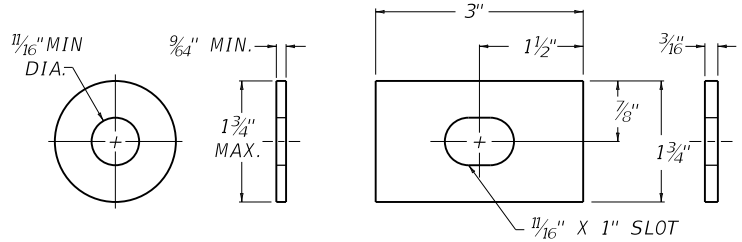

ROUND WASHER AND RECTANGULAR PLATE WASHER

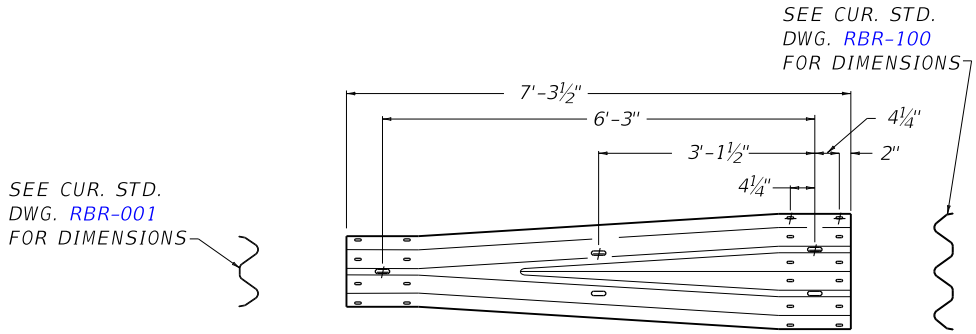

THRIE BEAM TO "W" BEAM CONNECTOR (2)

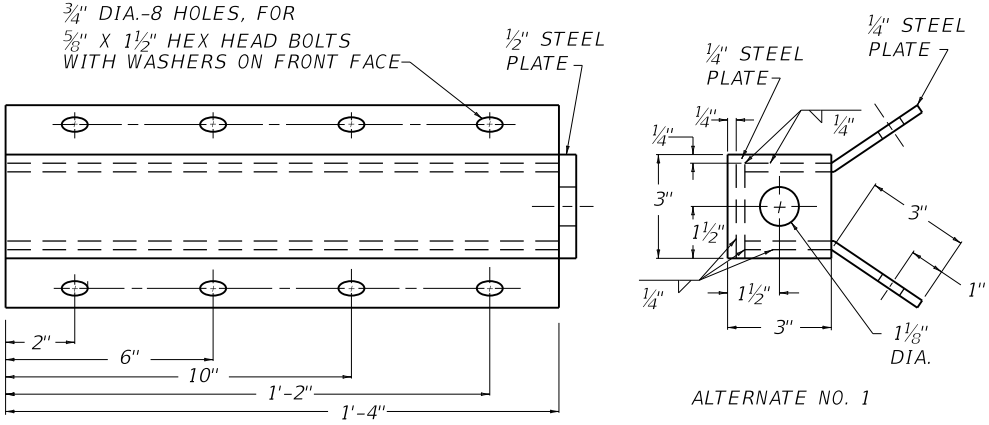

ALTERNATE NO. 1

ALTERNATE NO. 2

RAIL ANCHOR ASSEMBLY

USE WITH CUR. STD. DWG.
RBR-001 RBR-100

KENTUCKY
DEPARTMENT OF HIGHWAYS

GUARDRAIL
COMPONENTS

STANDARD DRAWING NO. RBR-005-11

SUBMITTED William E. Ellard — DIRECTOR, DIVISION OF DESIGN — 12-01-15 DATE

APPROVED — STATE HIGHWAY ENGINEER — 12-01-15 DATE

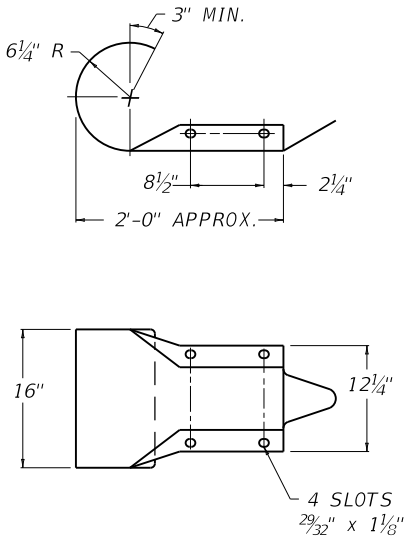

TERMINAL SECTION NO. 1

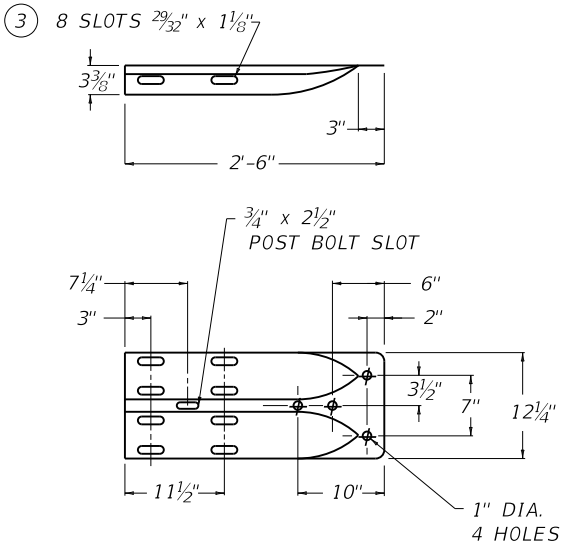

TERMINAL SECTION NO. 2

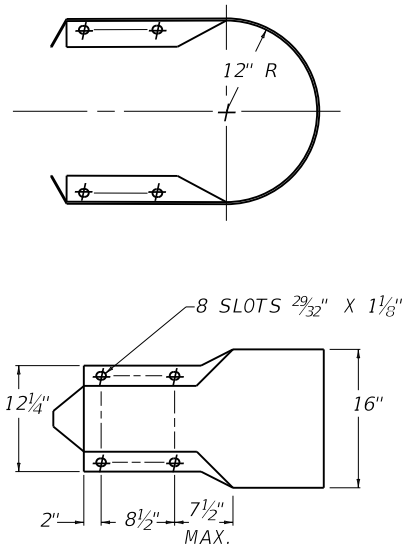

TERMINAL SECT. NO. 3

~ NOTES ~

BID ITEM AND UNIT TO BID	
GUARDRAIL TERMINAL SECTION NO 1	EACH
GUARDRAIL TERMINAL SECTION NO 2	EACH
GUARDRAIL TERMINAL SECTION NO 3	EACH

1. TERMINAL SECTIONS SHALL BE PAID FOR AT THE CONTRACT UNIT PRICE BID EACH COMPLETE AND INSTALLED, EXCEPT WHEN INCIDENTAL TO OTHER BID ITEMS.
2. TERMINAL SECTIONS SHALL COMPLY WITH AASHTO M-180 AS FOLLOWS:
   A. TERMINAL SECTIONS NO. 1, 3, -CLASS A OR B, TYPE 2
   B. TERMINAL SECTION NO. 2-CLASS B, TYPE 2

3 WHEN SLOTTED HOLES ARE EXPOSED (8) EIGHT RECTANGULAR FLAT WASHERS SHALL BE REQUIRED - 2" SPLICE BOLTS ARE TO BE USED IF NEEDED.

4. TERMINAL SECTIONS ARE INTENDED FOR USE WITH OTHER GUARDRAIL COMPONENTS AND SYSTEMS.

KENTUCKY
DEPARTMENT OF HIGHWAYS

GUARDRAIL
TERMINAL SECTIONS

STANDARD DRAWING NO. RBR-010-06

SUBMITTED William E. Ginkel — DIRECTOR DIVISION OF DESIGN — 12-01-15 DATE

APPROVED — STATE HIGHWAY ENGINEER — 12-01-15 DATE

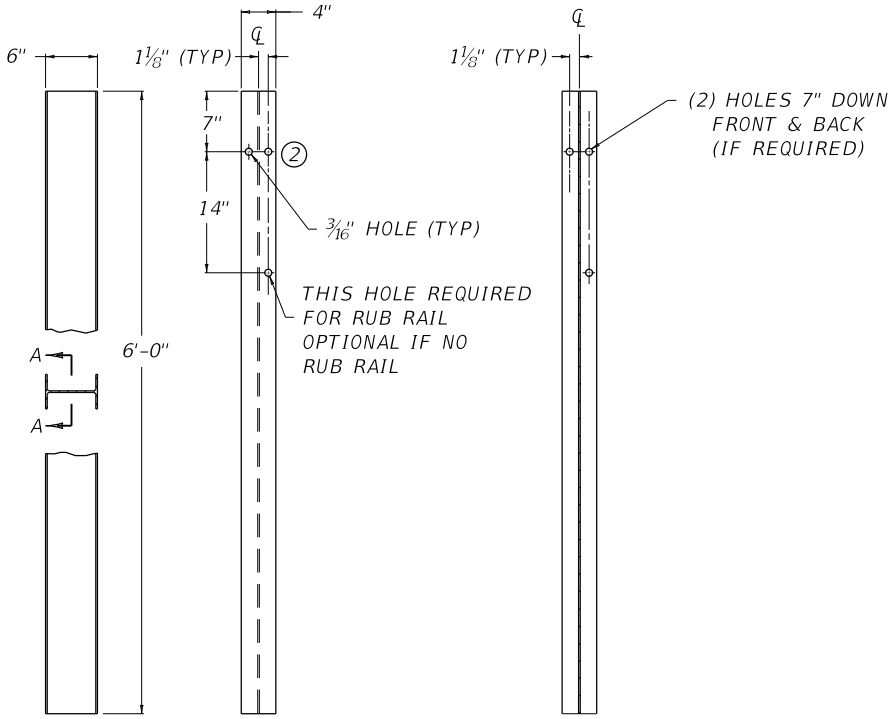

~ W6 X 9.0 STEEL POST ① ~

~ NOTES ~

① W6 X 8.5 IS AN ACCEPTABLE ALTERNATE.

② THESE HOLES ARE REQUIRED FOR ATTACHING RAIL.

③ TIMBER OR COMPOSITE BLOCKOUTS MAY BE USED WITH STEEL POST.

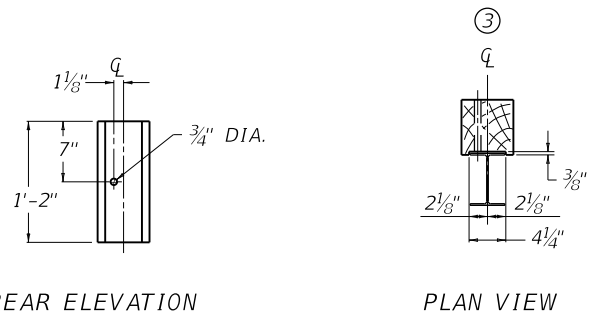

OFFSET BLOCK TYPE 4
6" X 8" (Nominal Size)
(TIMBER OR APPROVED COMPOSITE)
(FOR USE WITH STEEL POST ONLY)

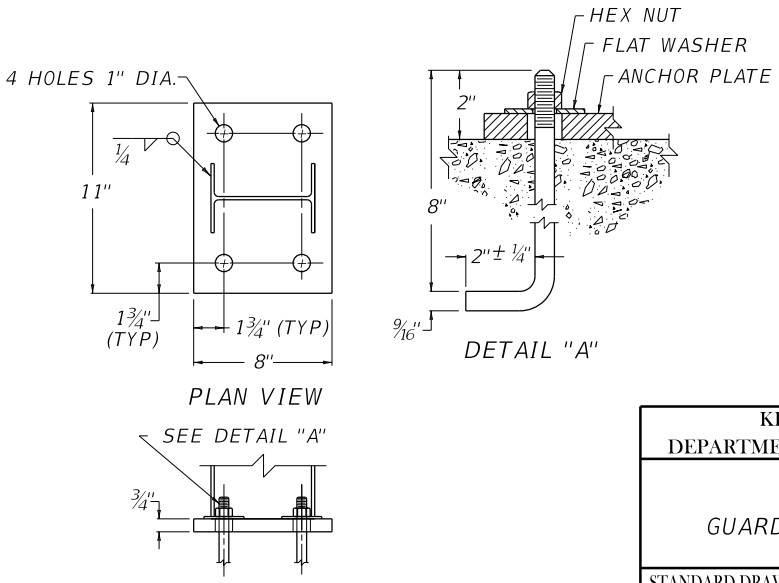

KENTUCKY
DEPARTMENT OF HIGHWAYS

STEEL
GUARDRAIL POSTS

STANDARD DRAWING NO. RBR-015-06

SUBMITTED _____ DIRECTOR DIVISION OF DESIGN — 02-26-20 DATE

APPROVED _____ STATE HIGHWAY ENGINEER — 02-26-20 DATE

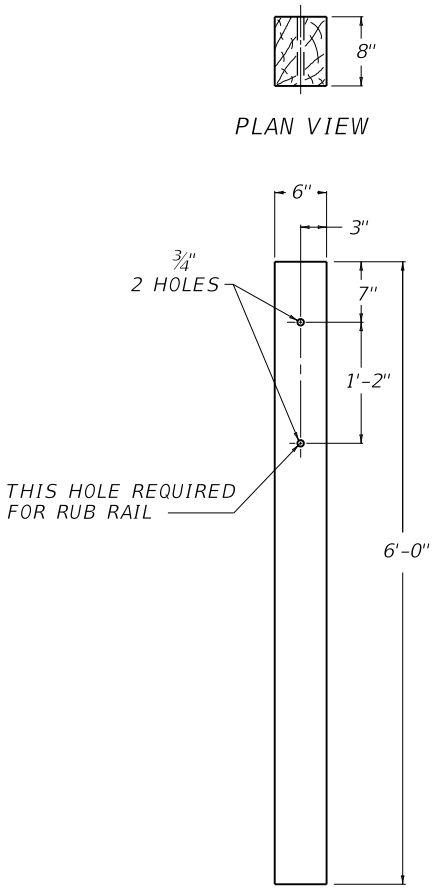

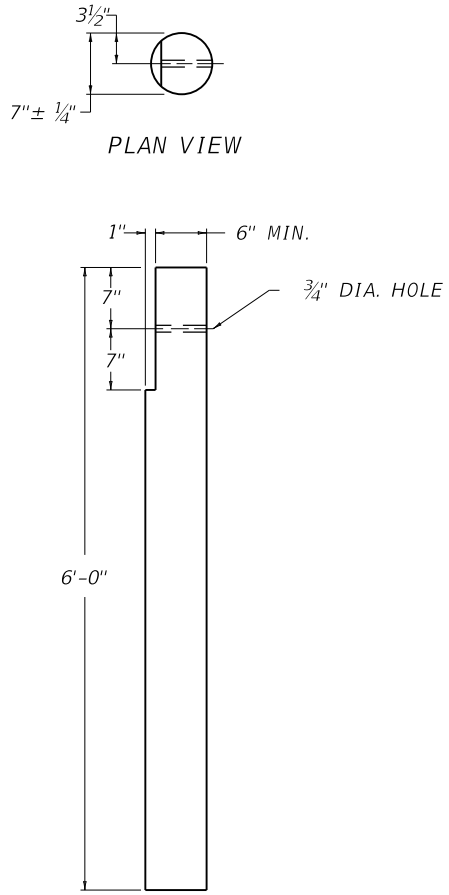

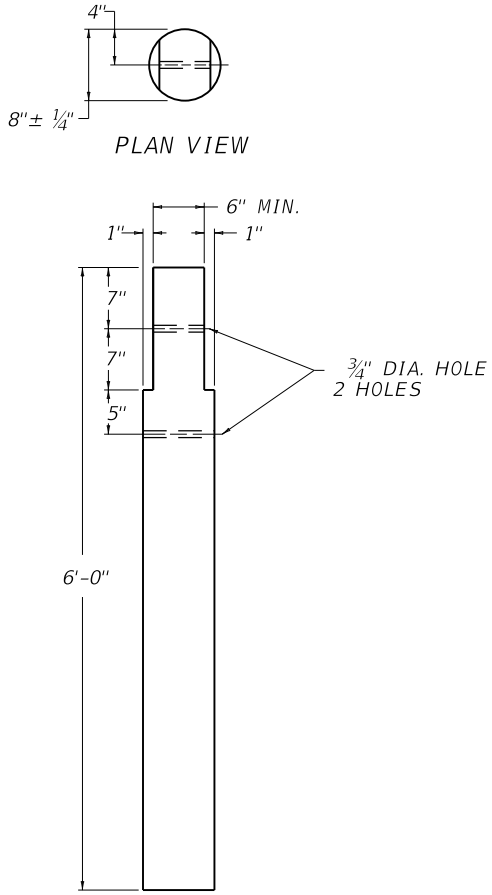

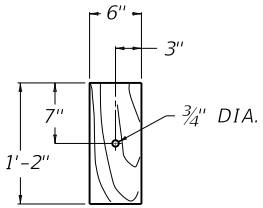

FRONT ELEVATION
OFFSET BLOCK TYPE 3
(6" X 8" TIMBER)
(FOR USE WITH RECTANGULAR
AND ROUND POSTS)

KENTUCKY
DEPARTMENT OF HIGHWAYS

TIMBER
GUARDRAIL POSTS

STANDARD DRAWING NO. RBR-016-05

SUBMITTED _____ DIRECTOR, DIVISION OF DESIGN — 12-01-15 DATE

APPROVED _____ STATE HIGHWAY ENGINEER — 12-01-15 DATE

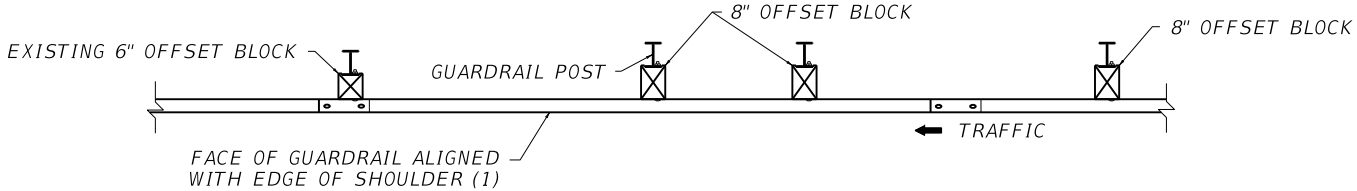

PLAN VIEW

* 12'-6' TRANSITION FROM 29" TO 31" SHOWN,
25'-0" REQUIRED FOR 27" TO 31" TRANSITION.

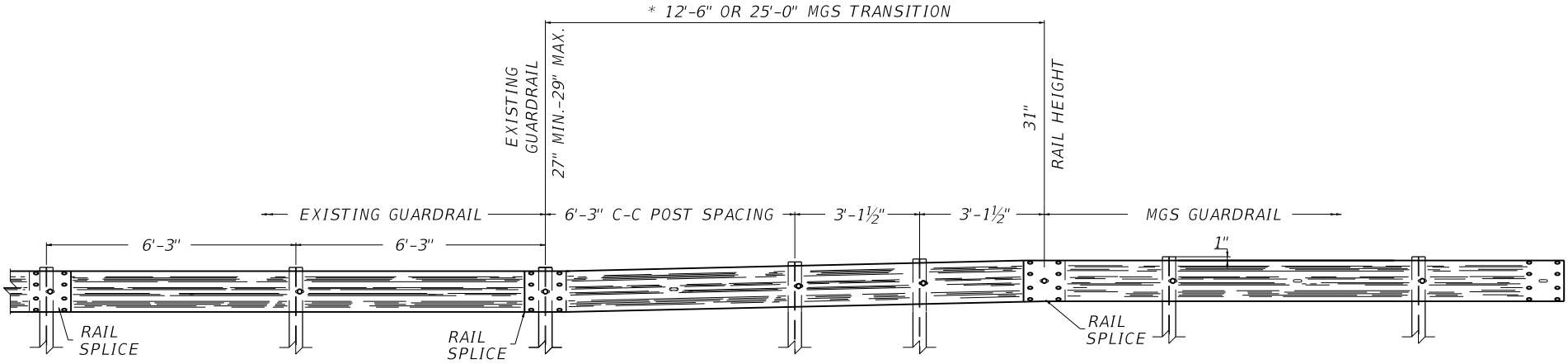

ELEVATION VIEW

~ NOTES ~

1) WHERE POST OFFSET IS CONSTRAINED, AND WHEN THE EXISTING SHOULDER IS WIDER THAN 4 FEET, THE EXISTING SHOULDER MAY BE REDUCED UP TO 2 INCHES TO ACCOMMODATE THE 8 INCH BLOCKS OF THE MGS GUARDRAIL. WHERE SITE CONSTRAINTS PROHIBIT THE POST FROM BEING PLACED AT LEAST 6 INCHES IN FRONT OF THE SLOPE BREAK POINT, USE 7 FOOT POSTS.

2) MGS TRANSITION FROM EXISTING GUARDRAIL SHALL BE COMPLETED OUTSIDE THE 50 FEET MGS END TERMINAL LIMITS.

KENTUCKY
DEPARTMENT OF HIGHWAYS

GUARDRAIL SYSTEM
TRANSITION

STANDARD DRAWING NO. RBR-018

SUBMITTED _____ DIRECTOR DIVISION OF DESIGN _____ 02-26-20 DATE

APPROVED _____ STATE HIGHWAY ENGINEER _____ 02-26-20 DATE

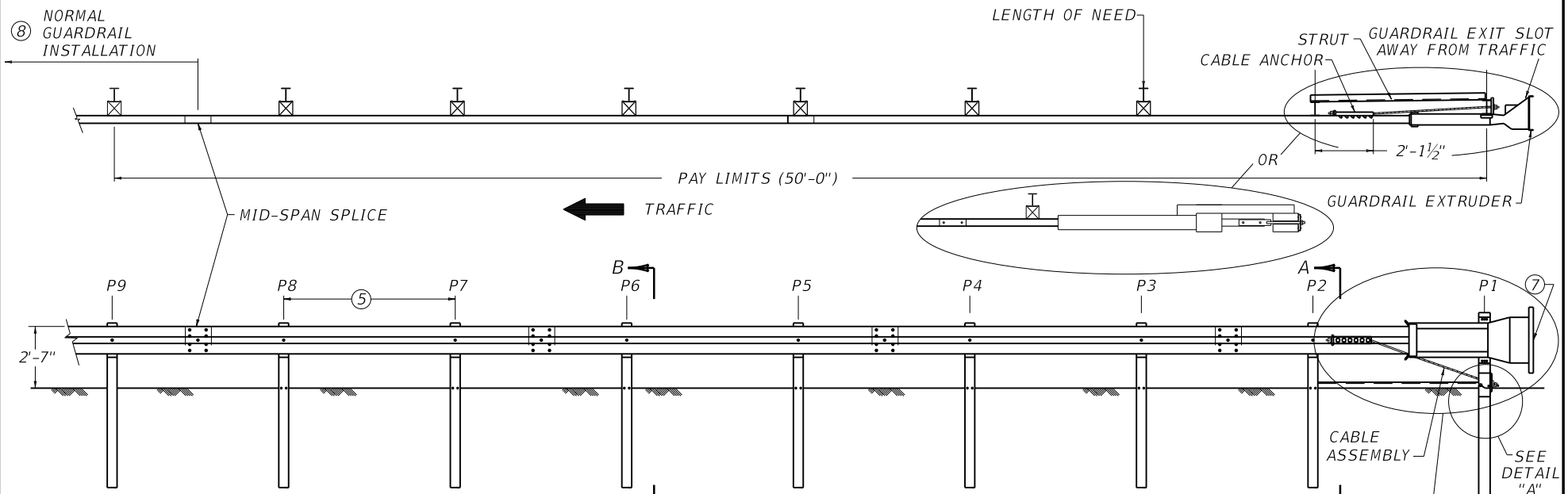

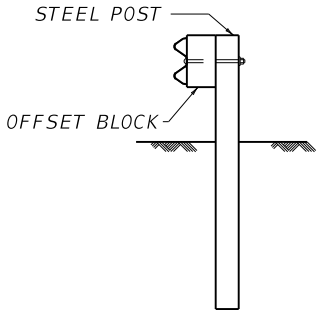

SECTION B-B
(POSTS P3 THRU P8)

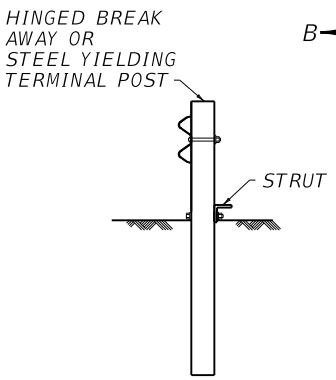

SECTION A-A
(POST P2)

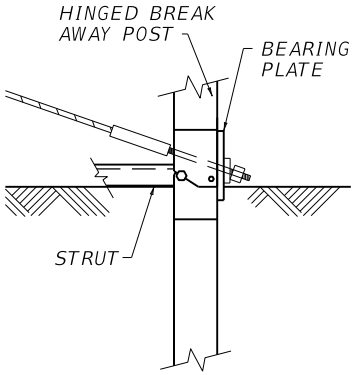

DETAIL "A"

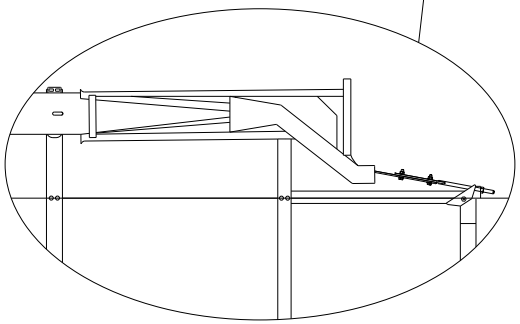

~ NOTES ~

BID ITEM AND UNIT TO BID		
GUARDRAIL END TREATMENT TYPE 1	EACH	
OBJECT MARKER TY 3	EACH	

1. GUARDRAIL END TREATMENT TYPE 1 SHALL BE PAID FOR AT THE CONTRACT UNIT PRICE EACH, AND INCLUDES POSTS, RAIL ELEMENTS, GUARDRAIL EXTRUDER AND ALL OTHER INCIDENTALS NECESSARY TO COMPLETE THE INSTALLATION AS DETAILED.
2. PERMISSIBLE ALTERNATES FOR GUARDRAIL END TREATMENT TYPE 1 ARE PATENTED ITEMS: SOFT-STOP MANUACTURED BY TRINITY INDUSTRIES OF DALLAS, TEXAS OR MSKT MANUFACTURED BY ROAD SYSTEMS INC. OF BIG SPRINGS, TEXAS.
3. THE MANUFACTURER SHALL FURNISH TWO (2) SETS OF SHOP PLANS TO THE CONTRACTOR WITH EACH INSTALLATION.
4. THE COMPLETED INSTALLATION SHALL MEET ALL APPLICABLE REQUIREMENTS OF THE MANUFACTURER (SEE SHOP DRAWINGS).
5. POSTS P1 THROUGH P9 ARE SPACED 6'-3" ON CENTER.
6. INTENDED USE: AREAS WITH ADEQUATE VEHICLE RECOVERY ZONE BEHIND END TREATMENT.
7. OBJECT MARKER TYPE 3 (SEE CURRENT MUTCD MANUAL FOR DETAILS)
8. FOR MAINTENANCE AND REPAIR PROJECTS, USE "GUARDRAIL SYSTEM TRANSITION" (RBR-018) TO TRANSITION BACK TO 27" OR 29" GUARDRAIL HEIGHT, IF ONLY THE TERMINAL IS PROPOSED TO BE REPLACED.

USE WITH CUR. STD. DWG.
RBI-004

KENTUCKY
DEPARTMENT OF HIGHWAYS

GUARDRAIL
END TREATMENT
TYPE 1

STANDARD DRAWING NO. RBR-020-07

SUBMITTED _____ DIRECTOR DIVISION OF DESIGN 02-26-20 DATE

APPROVED _____ STATE HIGHWAY ENGINEER 02-26-20 DATE

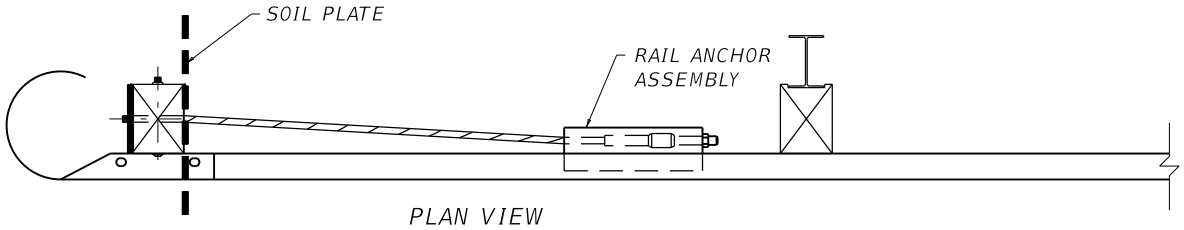

PLAN VIEW

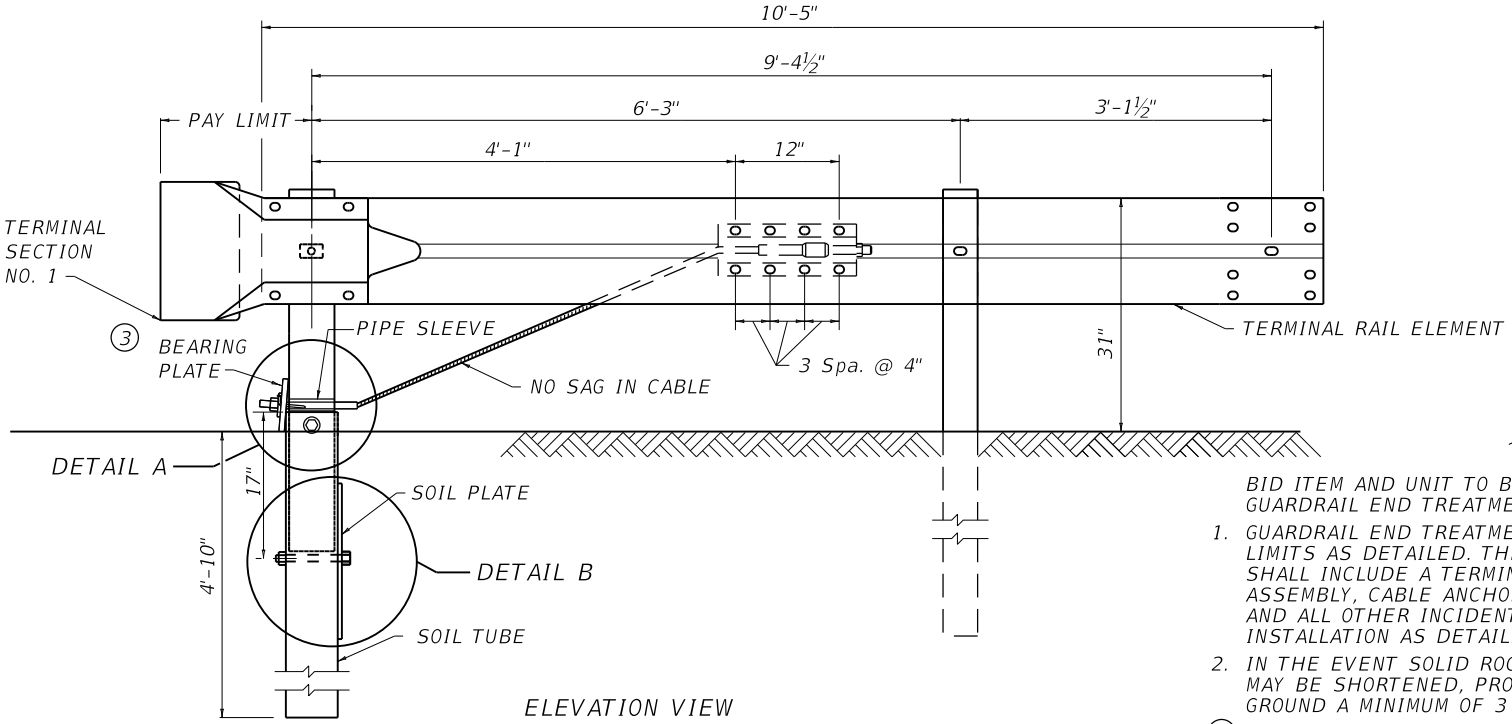

ELEVATION VIEW

~ NOTES ~

BID ITEM AND UNIT TO BID
GUARDRAIL END TREATMENT TYPE 2A EACH

1. GUARDRAIL END TREATMENT TYPE 2A SHALL BE TO THE PAY LIMITS AS DETAILED. THE CONTRACT UNIT BID IS EACH AND SHALL INCLUDE A TERMINAL SECTION NO. 1, RAIL ANCHOR ASSEMBLY, CABLE ANCHOR ASSEMBLY, SOIL TUBE, SOIL PLATE AND ALL OTHER INCIDENTALS NECESSARY FOR A COMPLETE INSTALLATION AS DETAILED.
2. IN THE EVENT SOLID ROCK IS ENCOUNTERED, THE SOIL TUBE MAY BE SHORTENED, PROVIDED IT EXTENDS INTO THE SOLID GROUND A MINIMUM OF 3 FEET.

(3) INSTALL BEARING PLATE SO THAT THE "V" OPENING IS AT THE TOP.

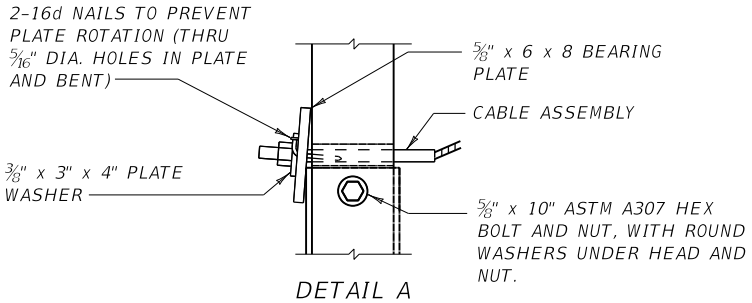

DETAIL A

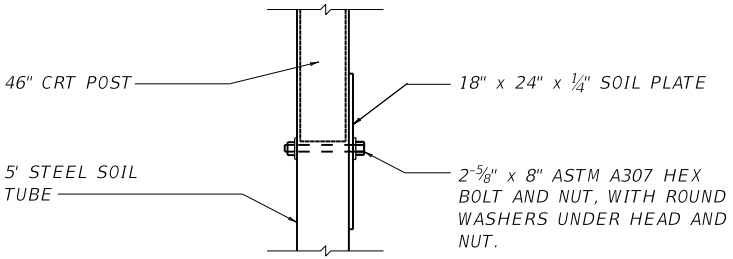

DETAIL B

USE WITH CUR. STD. DWGS.
RBI-002 RBI-003 RBR-010
RBI-001

KENTUCKY
DEPARTMENT OF HIGHWAYS

GUARDRAIL
END TREATMENT
TYPE 2A

STANDARD DRAWING NO. RBR-025-06

SUBMITTED _____ DIRECTOR DIVISION OF DESIGN 02-26-20 DATE

APPROVED _____ STATE HIGHWAY ENGINEER 02-26-20 DATE

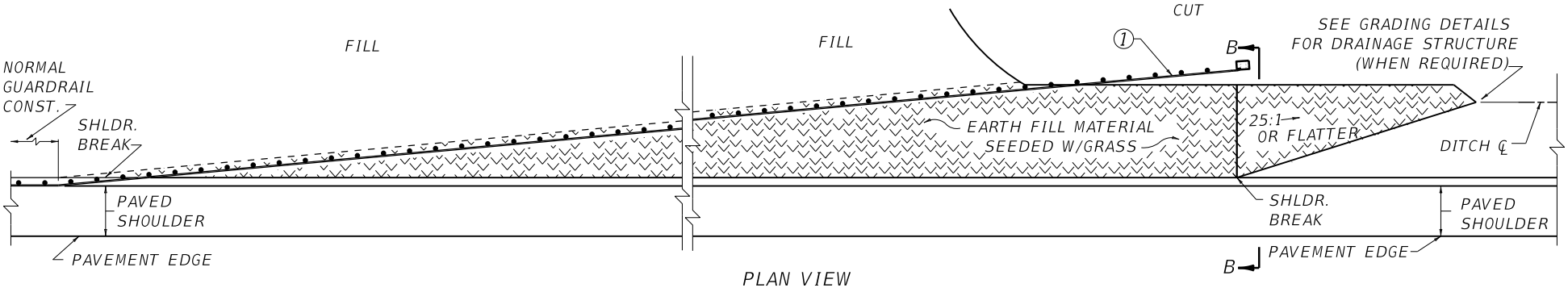

PLAN VIEW
(FLOW TOWARD END TREATMENT)

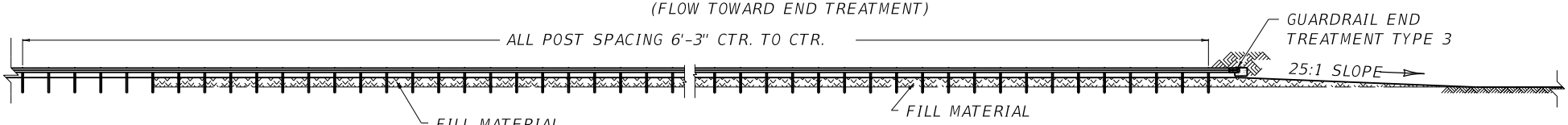

ELEVATION VIEW

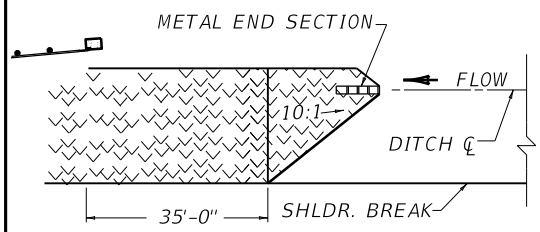

FLOW TOWARD METAL END SECTION

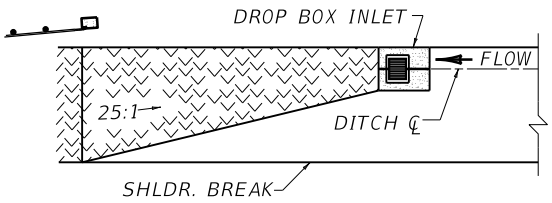

FLOW TOWARD DROP BOX INLET

GRADING DETAILS

~ NOTES ~

1. BID ITEMS AND UNIT TO BID
   GUARDRAIL END TREATMENT TYPE 3 — EACH
   ROADWAY OR BORROW EXCAVATION, — CU. YD.
   OR EMBANKMENT IN PLACE — CU. YD.
   DRAINAGE STRUCTURE BID SEPARATELY — EACH
2. THE CONTRACT UNIT PRICE FOR GUARDRAIL END TREATMENT TYPE 3 SHALL INCLUDE THE CONCRETE BLOCK, TERMINAL SECTION NO. 2, FOUR BOLT INSERT ASSEMBLY AND ALL INCIDENTALS NECESSARY TO COMPLETE THE WORK.
3. OFFSET BLOCKS MAY BE ELIMINATED ON ANY POST THAT IS COMPLETELY BELOW GRADE.
4. SEE CUR. STD. DWG. RBC-100 FOR 4-BOLT INSERT ASSEMBLY DETAILS.

(5) SEE CUR. STD. DWG. RBR-032 FOR ALTERNATE END ANCHOR.

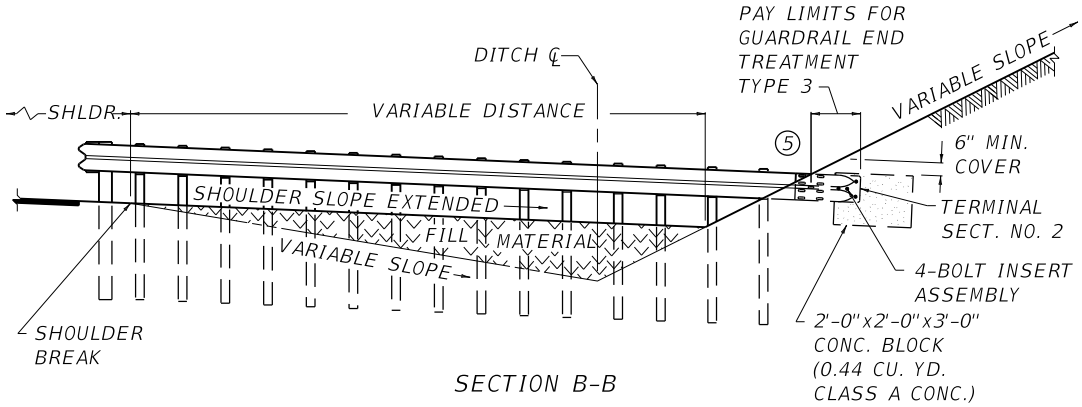

SECTION B-B

1 FLARE RATES			
DESIGN SPEED	70+ MPH	60 MPH	50 MPH OR LESS
FLARE RATES	15:1	13:1	11:1

USE WITH CUR. STD. DWGS.
RBC-100 RDB-005 RBR-032

KENTUCKY
DEPARTMENT OF HIGHWAYS

GUARDRAIL END
TREATMENT TYPE 3

STANDARD DRAWING NO. RBR-030-05

SUBMITTED — DIRECTOR DIVISION OF DESIGN — 12-01-15 DATE

APPROVED — STATE HIGHWAY ENGINEER — 12-01-15 DATE

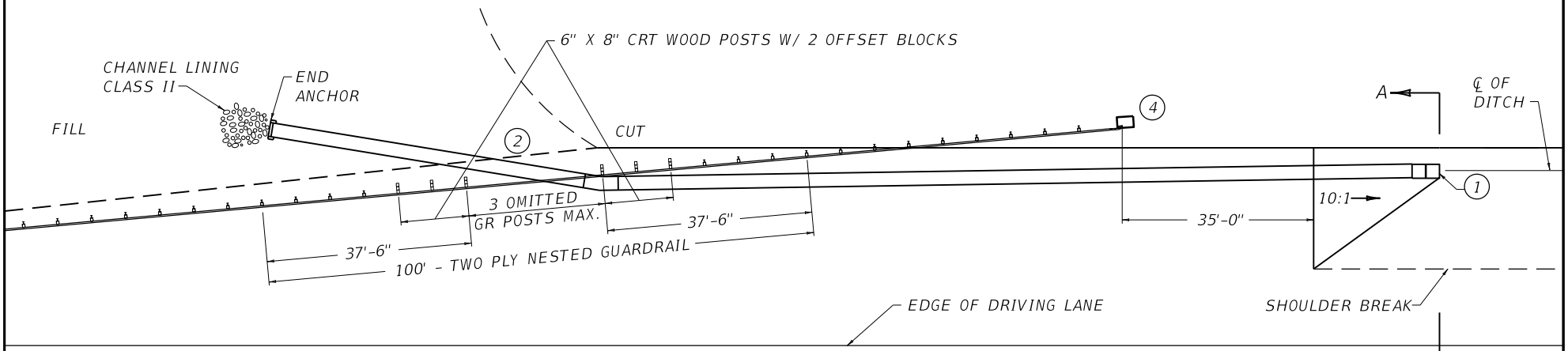

PLAN VIEW

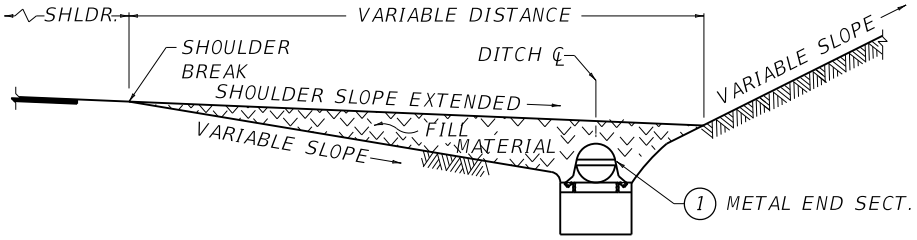

SECTION A-A

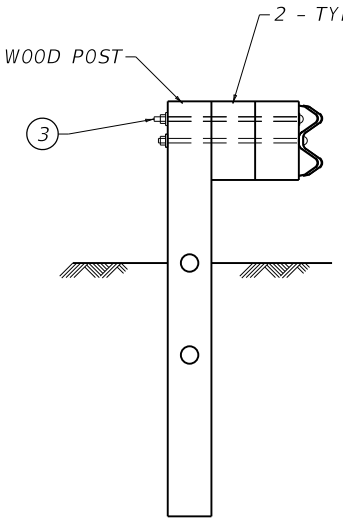

6" X 8" CRT WOOD POST W/ 2 OFFSET BLOCKS

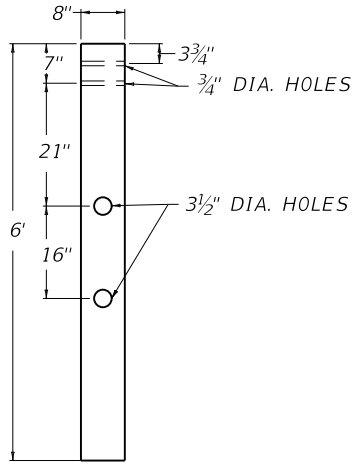

6" X 8" CRT WOOD POST

~ NOTES ~

BID ITEMS AND UNIT TO BID

CHANNEL LINING CLASS II	TON
END ANCHOR	CUYD
PIPE	LF
METAL END SECTION	EACH

SEE CURRENT STANDARD DRAWING RBR-030 FOR OTHER BID ITEMS.

1. SEE CURRENT STANDARD DRAWING RDB-150 AND RDB-160 FOR METAL END SECTIONS.
2. A MINIMUM DISTANCE OF 5'-0" BEHIND THE RAIL SHALL BE CLEAR OF ANY FIXED OBJECT HAZARDS.
3. 1 - ⅝" DIA. BOLT WITH TWO ROUND WASHERS.
4. SEE CURRENT STANDARD DRAWING RBR-032 FOR ALTERNATE END ANCHOR.

USE WITH CUR. STD. DWGS.
RBR-030 RBR-032 RDB-150
RDB-160 RDX-060 RDX-065

KENTUCKY
DEPARTMENT OF HIGHWAYS

GUARDRAIL END TREATMENT TYPE 3 PIPE DRAINAGE DETAIL

STANDARD DRAWING NO. RBR-031-01

SUBMITTED William E. Ginkel — DIRECTOR DIVISION OF DESIGN — 12-01-15 DATE

APPROVED — STATE HIGHWAY ENGINEER — 12-01-15 DATE

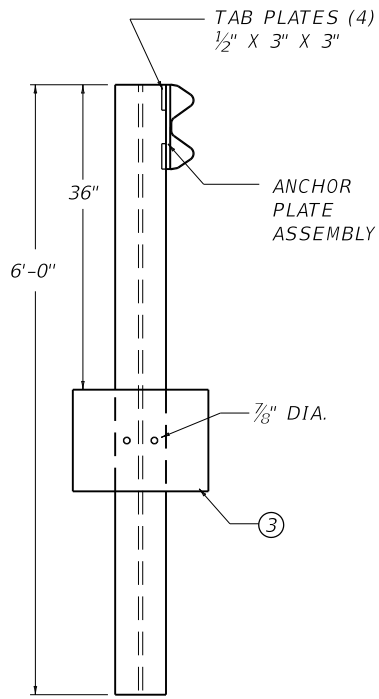

SIDE VIEW

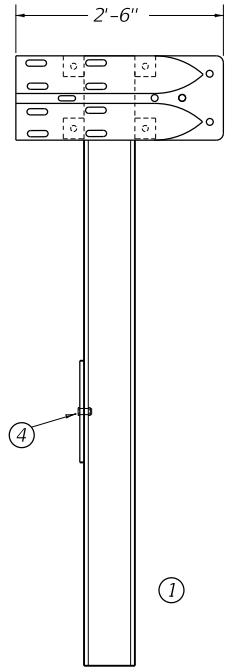

FRONT VIEW

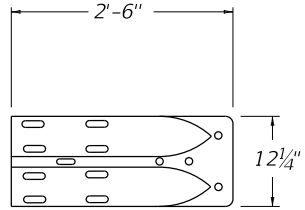

TERMINAL SECTION NO. 2

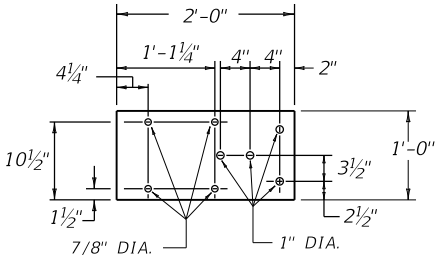

ANCHOR PLATE
ASSMEBLY 2

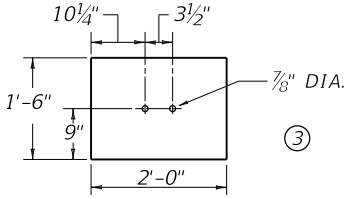

SOIL PLATE

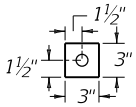

TAB PLATE

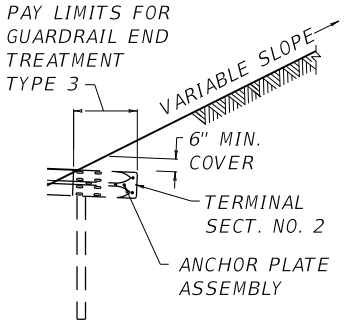

ELEVATION VIEW

~ NOTES ~

5. OFFSET BLOCKS MAY BE ELIMINATED ON ANY POST THAT IS COMPLETELY BELOW GRADE.
6. SEE CUR. STD. DWG. RBR-001 , RBR-005 , RBR-010 AND RBR-015 FOR APPLICABLE DETAILS AND SPECIFICATIONS.
7. GUARDRAIL END TREATMENT TYPE 3 SHALL BE TO THE PAY LIMITS AS DETAILED AND THE CONTRACT UNIT PRICE EACH SHALL INCLUDE TERMINAL SECTION NO. 2, GUARDRAIL ANCHOR POST, 4-BOLT ASSEMBLY PLATE, SOIL PLATE, HARDWARE, LABOR, EXCAVATION AND ALL INCIDENTALS NECESSARY FOR THE INSTALLATION.

BID ITEM AND UNIT TO BID	
GUARDRAIL END TREATMENT TYPE 3	EACH
ROADWAY OR BORROW EXCAVATION, OR EMBANKMENT-IN-PLACE	CUYD

BILL OF MATERIAL

NO.	QTY.	DESCRIPTION
1	1	W6x15 W-BEAM W/TAB PLATES (4 EA)
2	1	2' x 1' x ½" PLATE
3	1	2' x 18" x ¼" PLATE
4	2	¾" DIA. x 2" HEAVY HEX HD BOLT w/NUT & (2) FLAT WASHERS

USE WITH CUR. STD. DWGS.
RBR-001 RBR-005 RBR-010
RBR-015 RBR-030 RBR-031

KENTUCKY
DEPARTMENT OF HIGHWAYS

GUARDRAIL END
TREATMENT TYPE 3
ALTERNATE ANCHOR

STANDARD DRAWING NO. RBR-032

SUBMITTED DIRECTOR, DIVISION OF DESIGN 12-01-15 DATE

APPROVED STATE HIGHWAY ENGINEER 12-01-15 DATE

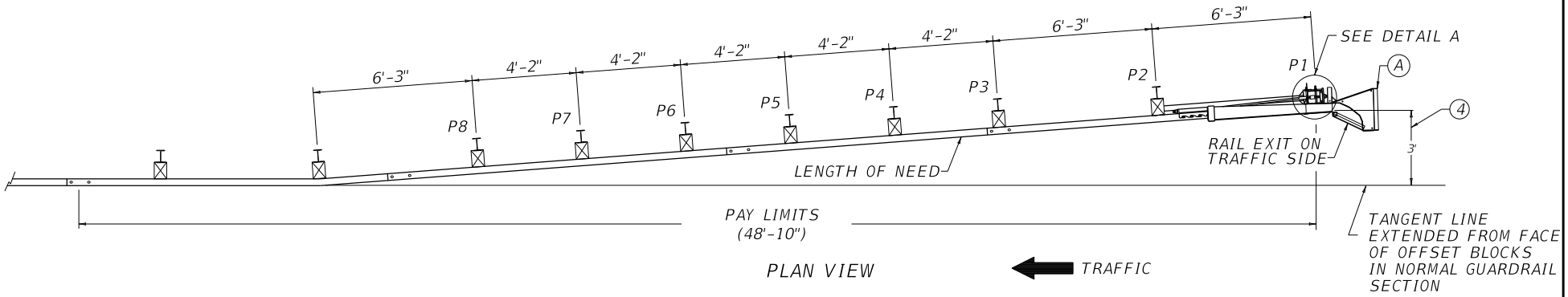

PLAN VIEW

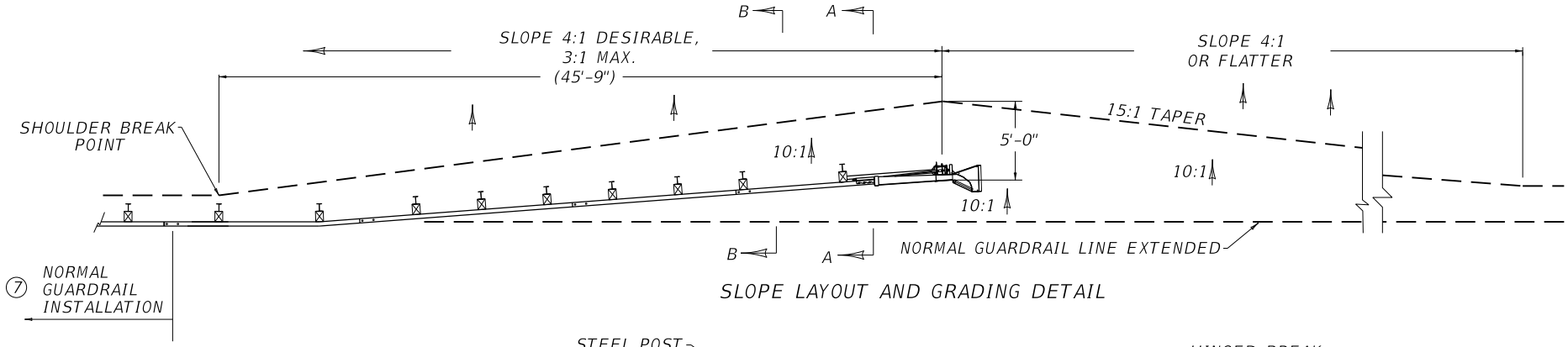

SLOPE LAYOUT AND GRADING DETAIL

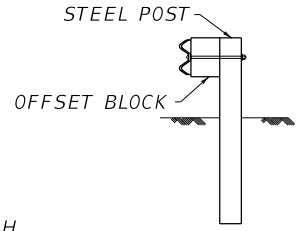

SECTION B-B
(POSTS P3 THRU P8)

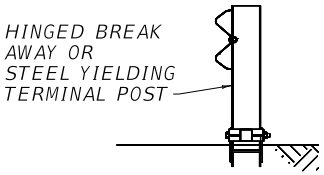

SECTION A-A
POST #2

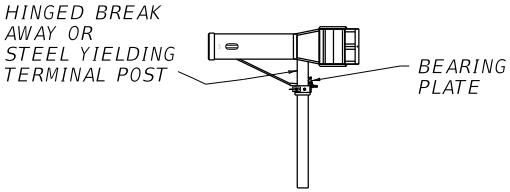

DETAIL "A"
(ENLARGED VIEW P1)

~ NOTES ~

BID ITEMS AND UNIT TO BID:	
GUARDRAIL END TREATMENT TYPE 4A	EACH
ROADWAY OR BORROW EXCAVATION OR EMBANKMENT-IN-PLACE	CUYD
OBJECT MARKER TY 3	EACH

1. INTENDED USE: AREAS WITH ADEQUATE VEHICLE RECOVERY ZONE BEHIND GUARDRAIL.
2. PERMISSIBLE ALTERNATES FOR GUARDRAIL END TREATMENT TYPE 4A ARE PATENTED ITEMS: MFLEAT MANUFACTURED BY ROAD SYSTEMS INC. OF BIG SPRINGS, TEXAS.
3. THE MANUFACTURER SHALL FURNISH TWO (2) SETS OF SHOP PLANS TO THE CONTRACTOR WITH EACH INSTALLATION.

4. SYSTEM OFFSET OF 3'-0" SHALL BE MEASURED FROM FACE OF OFFSET BLOCK AT NORMAL GUARDRAIL SECTION TO FACE OF POST AT P1.

5. OBJECT MARKER TYPE 3 (SEE CURRENT MUTCD MANUAL FOR DETAILS).

6. THE COMPLETED INSTALLATION SHALL MEET ALL APPLICABLE REQUIREMENTS OF THE MANUFACTURER. (SEE SHOP DRAWINGS)

7. FOR MAINTENANCE AND REPAIR PROJECTS, USE GUARDRAIL SYSTEM TRANSITION RBR-018, TO TRANSITION BACK TO 27" OR 29" GUARDRAIL HEIGHT, IF ONLY THE TERMINAL IS PROPOSED TO BE REPLACED.

KENTUCKY
DEPARTMENT OF HIGHWAYS

GUARDRAIL
END TREATMENT
TYPE 4A

STANDARD DRAWING NO. RBR-035-12

SUBMITTED _____ DIRECTOR DIVISION OF DESIGN — 02-26-20 DATE

APPROVED _____ STATE HIGHWAY ENGINEER — 02-26-20 DATE

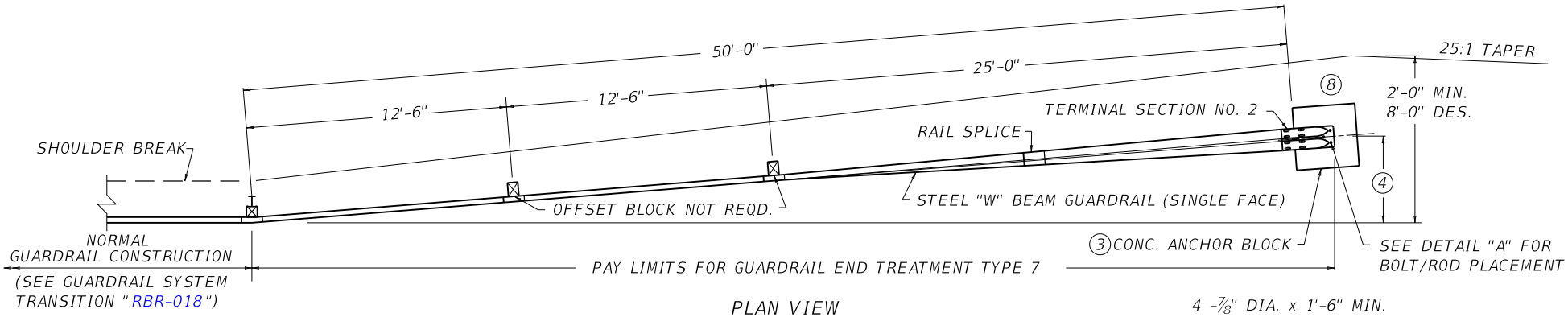

PLAN VIEW

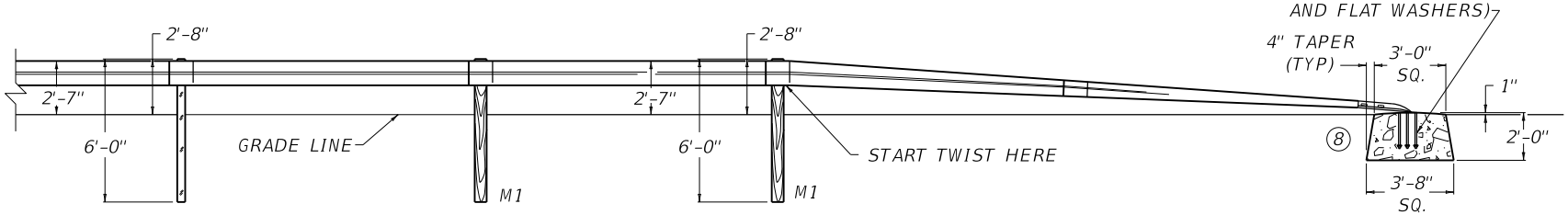

ELEVATION VIEW

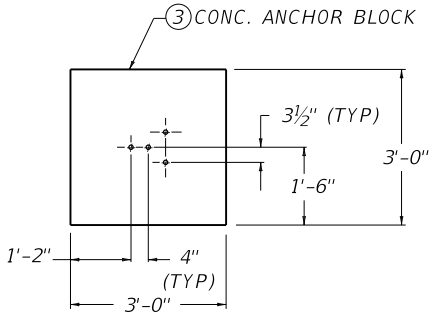

DETAIL "A"

USE WITH CUR. STD. DWG.
RBR-001 RBR-005 RBR-010
RBR-015 RBR-051

~ NOTES ~

BID ITEM AND UNIT TO BID
GUARDRAIL END TREATMENT TYPE 7 EACH

1. GUARDRAIL END TREATMENT TYPE 7 SHALL BE TO THE PAY LIMITS AS DETAILED AND THE CONTRACT UNIT PRICE EACH SHALL INCLUDE TERMINAL SECTION NO. 2, STEEL "W" BEAM GUARDRAIL (SINGLE FACE), GUARDRAIL POSTS M1, CONCRETE ANCHOR BLOCK, EXCAVATION, LABOR, HARDWARE AND INCIDENTALS NECESSARY FOR THE INSTALLATION.
2. SPLICE BOLTS AT TERMINAL SECTION NO. 2 SHALL BE LOOSELY TIGHTENED AND CENTERED TO ALLOW MAXIMUM MOVEMENT DUE TO EXPANSION. ONE (1) ½" ROUND WASHER AND ONE (1) RECTANGULAR PLATE WASHER REQUIRED FOR EACH SPLICE BOLT, AT TERMINAL SECTION NO. 2.

(3) THE CONCRETE ANCHOR BLOCK MAY BE PRECAST OR CAST-IN-PLACE. WHEN THE CONCRETE ANCHOR BLOCK IS CAST-IN-PLACE FORMING OF THE SIDES SHALL BE REQUIRED.

(4) THE DESIREABLE OFFSET DISTANCE FROM THE NORMAL GUARDRAIL LINE SHALL BE 4'-0". THE MINIMUM OFFSET DISTANCE FROM THE NORMAL GUARDRAIL LINE IS ZERO FEET.

5. SEE CUR. STD. DWG. RBR-001, RBR-005, RBR-010, AND RBR-015 FOR APPLICABLE DETAILS AND SPECIFICATIONS.
6. APPROX. QUANTITY FOR ANCHOR BLOCK: 0.83 CU. YD. CLASS "A" CONCRETE FOR TYPE 7 INSTALLATON.
7. THIS GUARDRAIL END TREATMENT IS NOT FOR USE ON APPROACH END ON HIGH SPEED NHS ROUTES ABOVE 35 MPH.

(8) SEE CUR. STD. DWG. RBR-051 FOR ALTERNATE END ANCHOR.

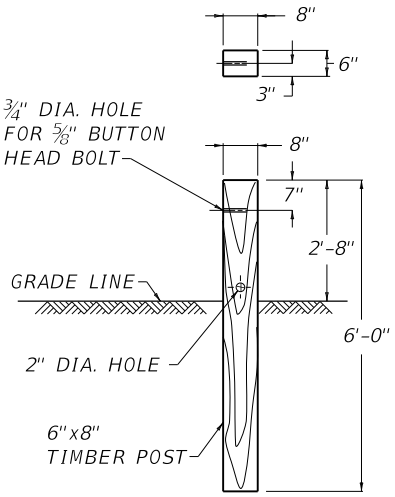

M1 POST DETAIL

KENTUCKY
DEPARTMENT OF HIGHWAYS

GUARDRAIL
END TREATMENT
TYPE 7

STANDARD DRAWING NO. RBR-050-08

SUBMITTED _____ DIRECTOR DIVISION OF DESIGN 02-26-20 DATE

APPROVED _____ STATE HIGHWAY ENGINEER 02-26-20 DATE

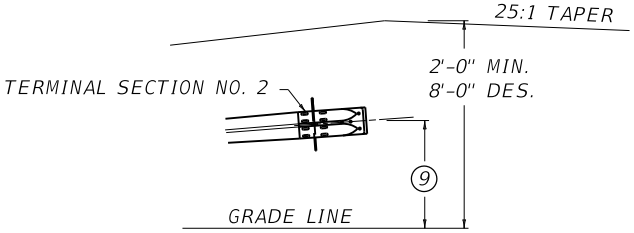

PLAN VIEW

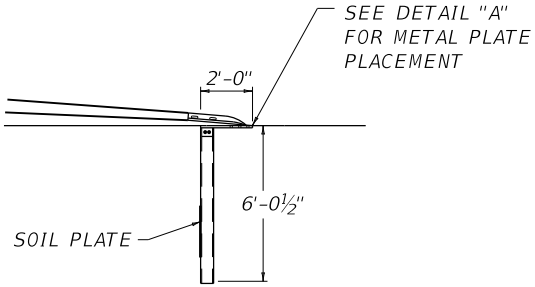

ELEVATION VIEW

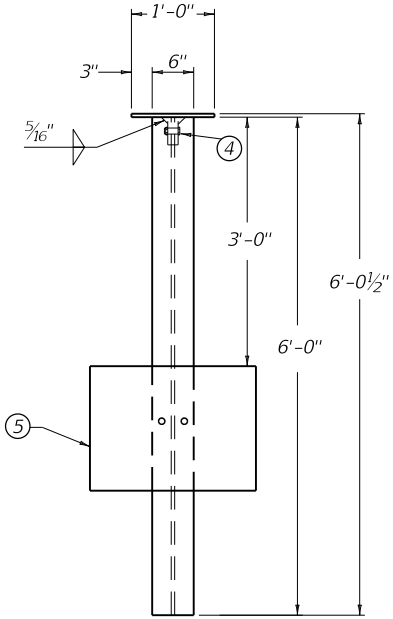

SIDE VIEW

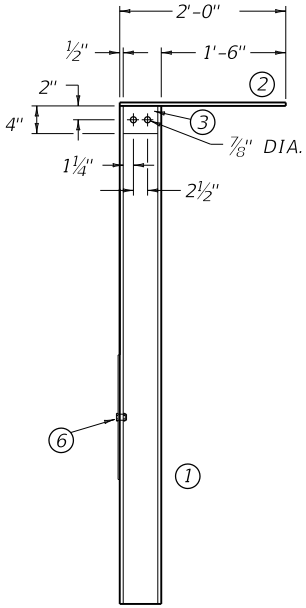

FRONT VIEW

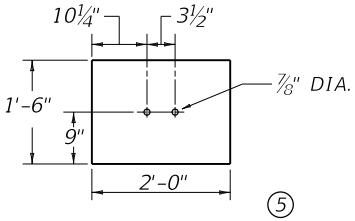

SOIL PLATE

DETAIL "A"

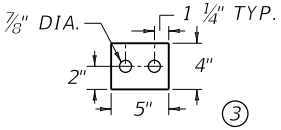

TAB PLATE

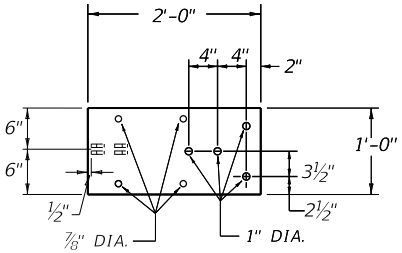

ANCHOR PLATE
ASSMEBLY 2

~ NOTES ~

BID ITEM AND UNIT TO BID
GUARDRAIL END TREATMENT TYPE 7 — EACH

7. GUARDRAIL END TREATMENT TYPE 7 SHALL BE TO THE PAY LIMITS AS DETAILED AND THE CONTRACT UNIT PRICE EACH SHALL INCLUDE TERMINAL SECTION NO. 2, STEEL "W" BEAM GUARDRAIL (SINGLE FACE), GUARDRAIL POSTS M1, STEEL ANCHOR PLATE AND POST, SOIL PLATE, TAB PLATES, EXCAVATION, LABOR, HARDWARE AND ALL INCIDENTALS NECESSARY FOR THE INSTALLATION.
8. SPLICE BOLTS AT TERMINAL SECTION NO. 2 SHALL BE LOOSELY TIGHTENED AND CENTERED TO ALLOW MAXIMUM MOVEMENT DUE TO EXPANSION. ONE (1) 11/16" ROUND WASHER AND (1) RECTANGULAR PLATE WASHER REQUIRED FOR EACH SPLICE BOLT, AT TERMINAL SECTION NO. 2.
9. THE DESIREABLE OFFSET DISTANCE FROM THE NORMAL GUARDRAIL LINE SHALL BE 4'-0". THE MINIMUM OFFSET DISTANCE FROM THE NORMAL GUARDRAIL LINE IS ZERO FEET.
10. SEE CUR. STD. DWG. RBR-001 , RBR-005 , RBR-010 AND RBR-015 FOR APPLICABLE DETAILS AND SPECIFICATIONS.
11. LEAVE CLEARANCE IN BETWEEN TAB PLATES FOR GALVANIZED W6 x 15 W-BEAM POST.

BILL OF MATERIAL

NO.	QTY.	DESCRIPTION
1	1	W6x15 W-BEAM
2	1	2' x 1' x ½" ANCHOR PLATE ASSEMBLY
3	2	4" x 5" x ½" TAB PLATE
4	2	¾" DIA. x 2½" HEAVY HEX HD BOLT w/NUT & (2) FLAT WASHERS
5	1	2' x 18" x ¼" SOIL PLATE
6	2	¾" DIA. x 2" HEAVY HEX HD BOLT w/NUT & (2) FLAT WASHERS

USE WITH CUR. STD. DWG.
RBR-001 RBR-005 RBR-010
RBR-015 RBR-050

KENTUCKY
DEPARTMENT OF HIGHWAYS

GUARDRAIL END
TREATMENT TYPE 7
ALTERNATE ANCHOR

STANDARD DRAWING NO. RBR-051-01

SUBMITTED _____ DIRECTOR DIVISION OF DESIGN — DATE 02-26-20

APPROVED _____ STATE HIGHWAY ENGINEER — DATE 02-26-20

~ NOTES ~

BID ITEMS AND UNIT TO BID

DELINEATOR FOR GUARDRAIL B/W	EACH
DELINEATOR FOR GUARDRAIL M/W	EACH
DELINEATOR FOR GUARDRAIL M/Y	EACH

1. DELINEATORS SHALL BE MEASURED AND PAID FOR AT THE CONTRACT UNIT PRICE EACH AND SHALL INCLUDE ALL MATERIALS AND LABOR NECESSARY FOR ONE COMPLETE INSTALLATION.
2. DELINEATOR SHAPE AND DIMENSIONS ARE SHOWN FOR ILLUSTRATION PURPOSES ONLY. TYPES OF DELINEATORS PERMITTED SHALL BE FROM THE LIST OF APPROVED MATERIALS.
3. GUARDRAIL DELINEATORS SHALL BE REQUIRED ON ALL GUARDRAIL.
4. DELINEATORS SHALL NOT BE INSTALLED WITHIN THE PAY LIMITS OF THE END TREATMENT.
5. DELINEATORS SHALL BE MANUFACTURED FROM 12 GA. GALVANIZED STEEL.
6. DIMENSIONS SHOWN ARE APPROXIMATE AND ARE SUBJECT TO MANUFACTURER'S TOLERANCES.
7. WHEN CONCRETE BARRIERS EXTEND ACROSS BRIDGE STRUCTURES IN LIEU OF STEEL BEAM GUARDRAIL, DELINEATORS SHALL BE INSTALLED AT SAME VERTICAL ALIGNMENT AS ON THE GUARDRAIL, AND DELINEATORS SHALL COMPLY WITH CURRENT STANDARD DRAWING RBM-020.
8. DELINEATORS SHALL BE INSTALLED IN ACCORDANCE WITH MANUFACTURER'S RECOMMENDATIONS.

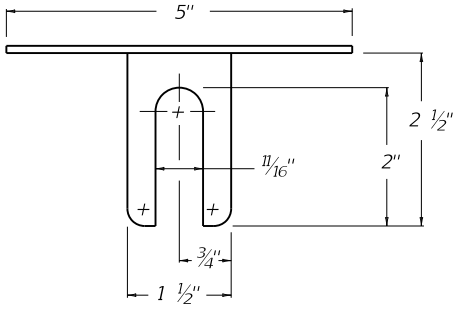

PLAN VIEW

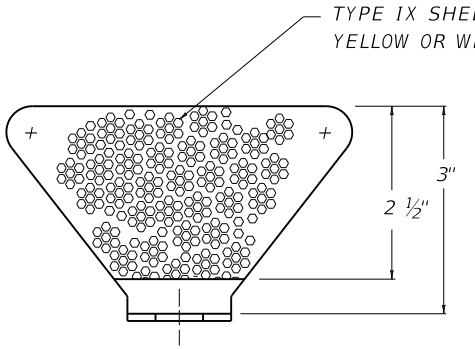

FRONT VIEW

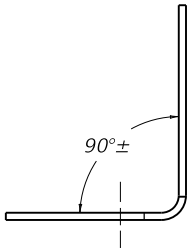

SIDE VIEW

DIMENSIONS SHOWN ARE FOR ONE VERSION OF A WEB-MOUNTED GUARDRAIL DELINEATOR. DELINEATORS WITH ALTERNATE DIMENSIONS MAY BE CONSIDERED FOR INCLUSION ON THE APPROVED PRODUCTS LIST.

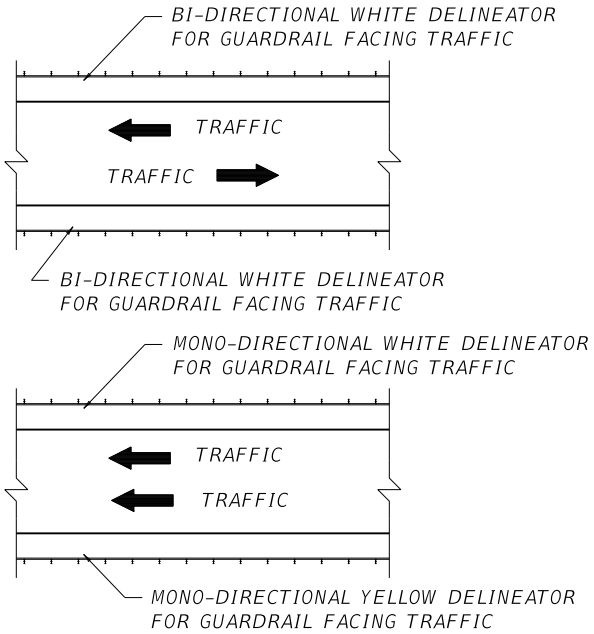

PLACEMENT OF DELINEATORS FOR GUARDRAIL

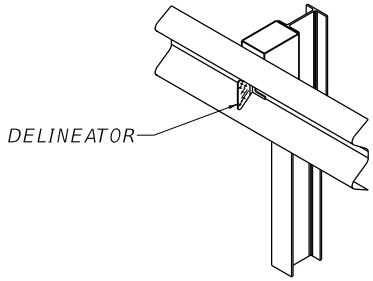

ISOMETRIC VIEW

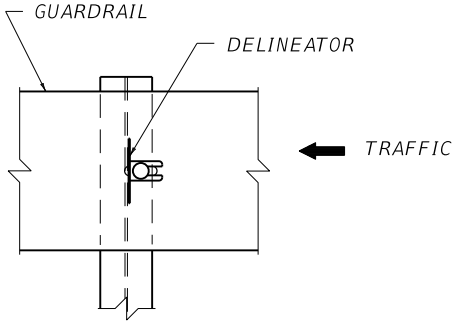

FRONT VIEW

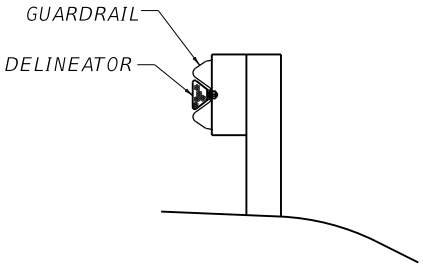

SIDE VIEW

APPROXIMATE DELINEATOR SPACING	
TANGENT	100'
CURVE	50'

SPACING SHOULD BE ADJUSTED IN CURVES SO THAT SEVERAL DELINEATORS ARE ALWAYS SIMULTANEOUSLY VISIBLE TO THE ROAD USER.

USE WITH CUR. STD. DWGS.
RBM-020 RBR-060

KENTUCKY
DEPARTMENT OF HIGHWAYS

DELINEATORS
FOR GUARDRAIL

STANDARD DRAWING NO. RBR-055-01

SUBMITTED _____ DIRECTOR DIVISION OF DESIGN _____ 02-26-20 DATE

APPROVED _____ STATE HIGHWAY ENGINEER _____ 02-26-20 DATE

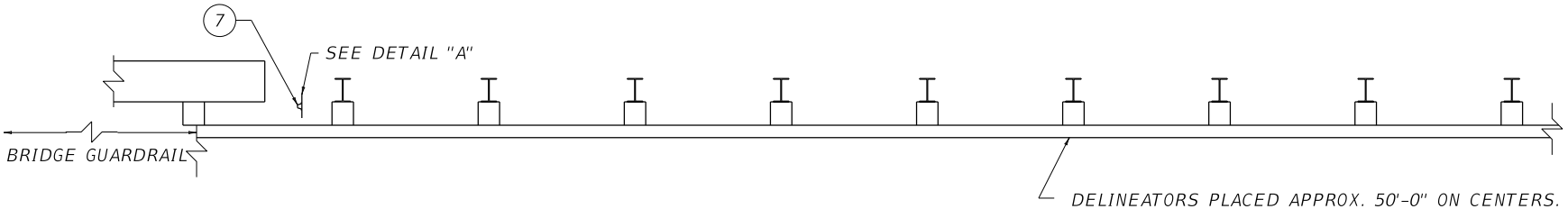

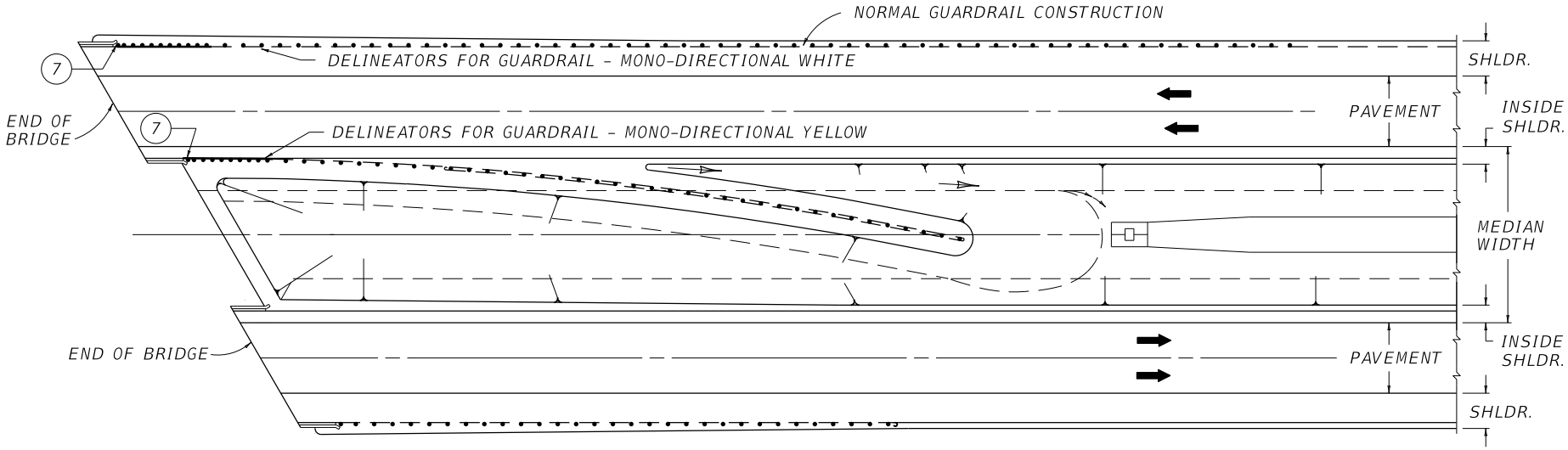

~ NOTES ~

BID ITEMS AND UNIT TO BID

DELINEATORS FOR CONCRETE BARRIERS	
DELINEATOR FOR BARRIER - WHITE	EACH
DELINEATOR FOR BARRIER - YELLOW	EACH
DELINEATORS ON GUARDRAIL	
DELINEATOR FOR GUARDRAIL M/W	EACH
DELINEATOR FOR GUARDRAIL M/Y	EACH
OBJECT MARKER TYPE 2	EACH
STEEL POST TYPE 1	LF

1. DELINEATOR SHALL BE MEASURED AND PAID FOR AT THE CONTRACT UNIT PRICE EACH, AND SHALL INCLUDE ALL MATERIALS AND LABOR NECESSARY FOR ONE COMPLETE INSTALLATION.
2. THE DELINEATORS SHALL BE YELLOW IN COLOR WHEN THE BARRIER IS PLACED IN THE MEDIAN AND/OR ON THE LEFT SIDE OF THE DRIVING LANE. THE DELINEATORS SHALL BE WHITE IN COLOR WHEN THE BARRIER IS PLACED ON THE RIGHT SIDE OF THE DRIVING LANE.
3. DELINEATORS SHALL BE APPLIED 300 FEET IN ADVANCE OF AND THROUGHOUT THE LENGTH OF ALL BRIDGES THAT DO NOT HAVE FULL WIDTH SHOULDERS. SPACING ON BRIDGES AND 300 FEET IN ADVANCE OF BRIDGES SHALL BE 50 FEET ON CENTERS. THE FIRST DELINEATOR ON THE GUARDRAIL SHALL BE PLACED 50 FEET FROM THE DELINEATOR AT THE END OF THE BRIDGE. DELINEATORS SHALL BE INSTALLED IN ACCORDANCE WITH THE MANUFACTURER'S RECOMMENDATIONS.
4. DELINEATORS SHALL NOT BE INSTALLED WITHIN THE PAY LIMITS OF THE END TREATMENT.
5. WHEN CONCRETE BARRIERS EXTEND ACROSS NARROW SHOULDER WIDTH STRUCTURES IN LIEU OF STEEL BEAM GUARDRAIL, DELINEATORS SHALL BE INSTALLED AT SAME VERTICAL ALIGNMENT AS ON THE GUARDRAIL AND DELINEATORS SHALL COMPLY WITH CURRENT STANDARD DRAWING RBM-020 .
6. GUARDRAIL DELINEATORS SHALL COMPLY WITH CURRENT STANDARD DRAWING RBR-055.

(7) SEE SECTION 718 OF THE CURRENT STANDARD SPECIFICATIONS FOR "OBJECT MARKER TYPE 2".

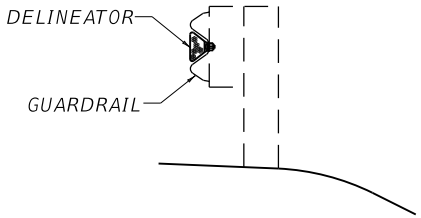

ELEV. VIEW

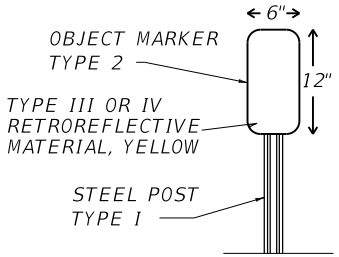

OBJECT MARKER TYPE 2
DETAIL "A" (7)

PRIMARY USE:
(PAVEMENT REHABILITATION PROJECTS)

USE WITH CUR. STD. DWGS.
RBM-020 RBR-055

KENTUCKY
DEPARTMENT OF HIGHWAYS

DELINEATORS AT NARROW SHOULDER BRIDGES

STANDARD DRAWING NO. RBR-060

SUBMITTED William E. Ginkel — DIRECTOR, DIVISION OF DESIGN — 12-01-15 DATE

APPROVED — STATE HIGHWAY ENGINEER — 12-01-15 DATE

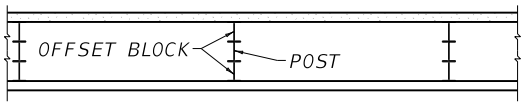

PLAN VIEW

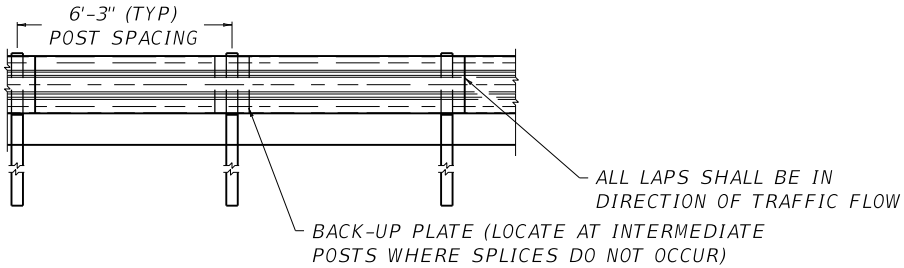

ELEVATION VIEW

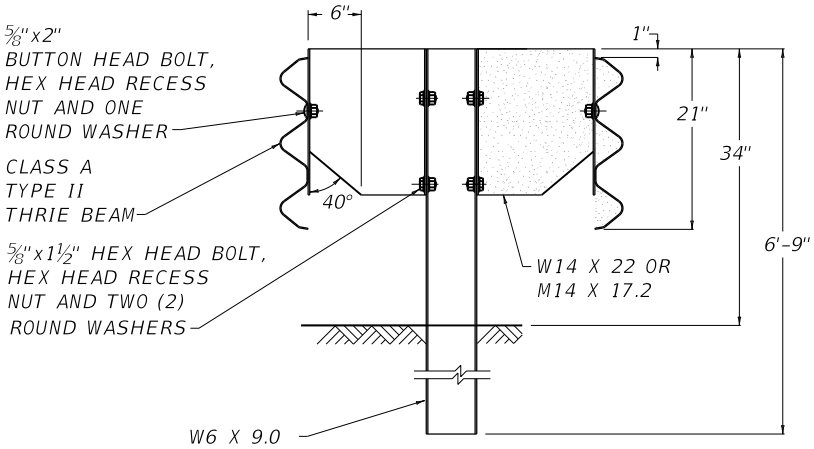

NEW CONSTRUCTION

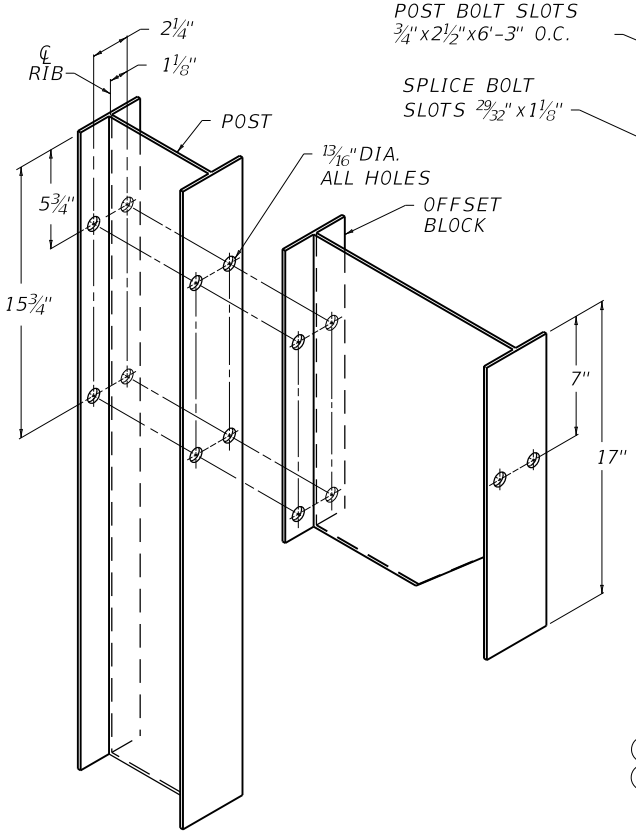

POST & OFFSET BLOCK DETAIL

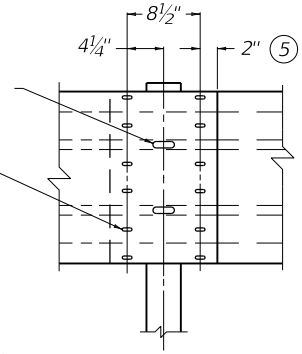

(4) RAIL SPLICE

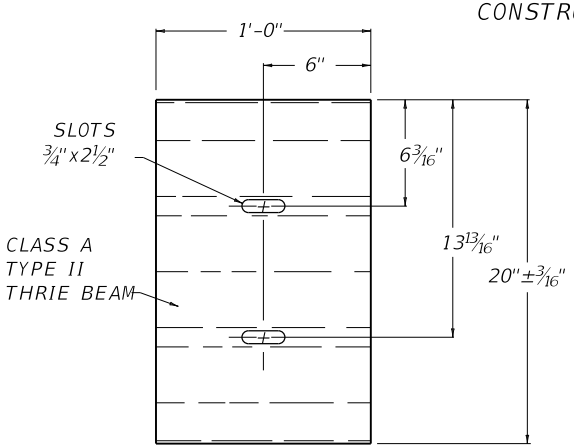

BACK-UP PLATE

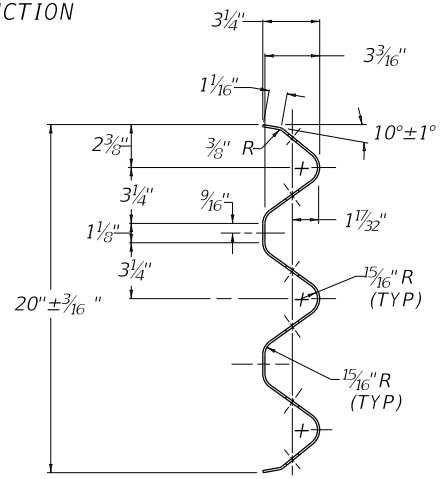

SECTION OF RAIL ELEMENT & BACK-UP PLATE

~ NOTES ~

BID ITEM AND UNIT TO BID
GUARDRAIL THRIE BEAM LF

1. DIMENSIONAL TOLERANCES NOT SHOWN OR IMPLIED ARE INTENDED TO BE THOSE CONSISTENT WITH THE PROPER FUNCTIONING OF THE PART, INCLUDING ITS APPEARANCE AND ACCEPTED MANUFACTURING PRACTICES.
2. THE SAME TYPE OF RAIL ELEMENT, POST, FASTENINGS AND ACCESSORIES SHALL BE USED THROUGHOUT THE WORK.
3. CONNECT OFFSET BLOCK TO STEEL POST WITH TWO DIAGONALLY LOCATED BLOTS.

(4) 12 5/8"x 1 1/4" BUTTON HEAD BOLTS AND HEX HEAD RECESS NUTS.

(5) TOLERANCE + 1 1/4",-3/16"

6. AASHTO M-180 SHALL APPLY EXCEPT WHERE IN CONFLICT WITH THIS DRAWING.

[ ] REQUIRED FOR DOUBLE RAIL NOT REQUIRED FOR SINGLE RAIL.

USE WITH CUR. STD. DWG.
RBR-005

KENTUCKY
DEPARTMENT OF HIGHWAYS

STEEL BEAM GUARDRAIL (THRIE BEAM)

STANDARD DRAWING NO. RBR-100-07

SUBMITTED William S. Ratliff — DIRECTOR, DIVISION OF DESIGN — 12-01-15 DATE

APPROVED — STATE HIGHWAY ENGINEER — 12-01-15 DATE

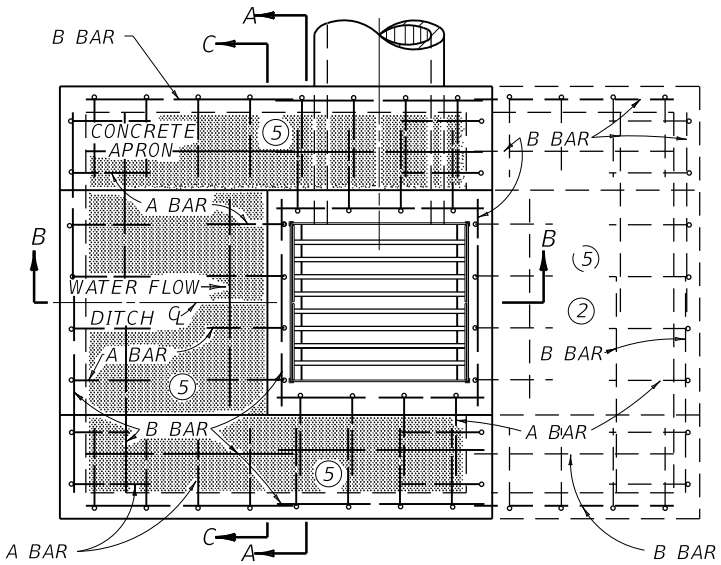

PLAN VIEW

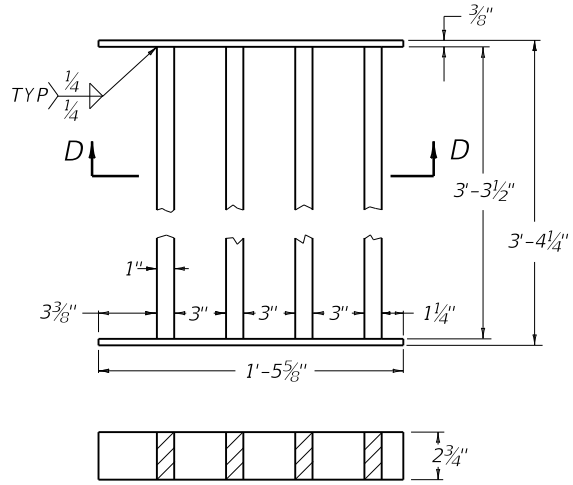

SECTION D-D

DETAIL OF GRATE

(TWO REQUIRED)

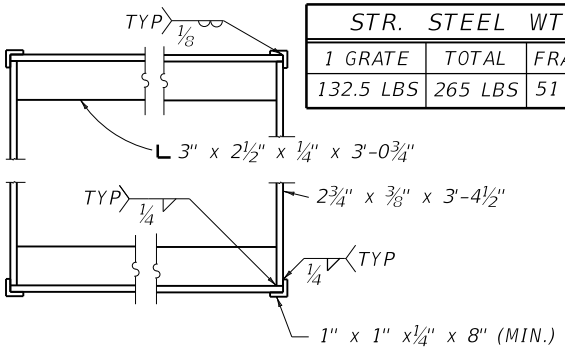

DETAIL OF FRAME

STR. STEEL WTS.		
1 GRATE	TOTAL	FRAME
132.5 LBS	265 LBS	51 LBS

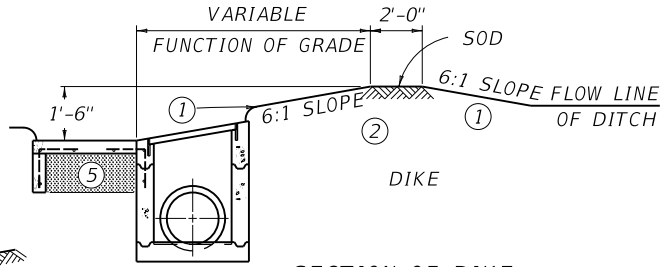

SECTION OF DIKE

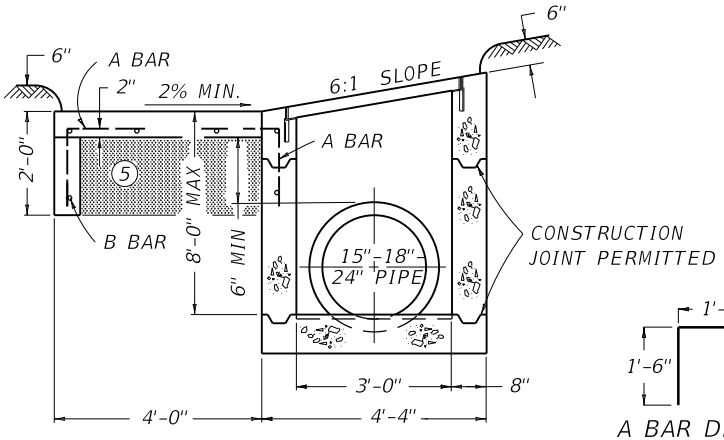

SECTION B-B

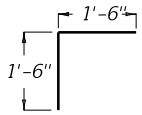

A BAR DETAIL

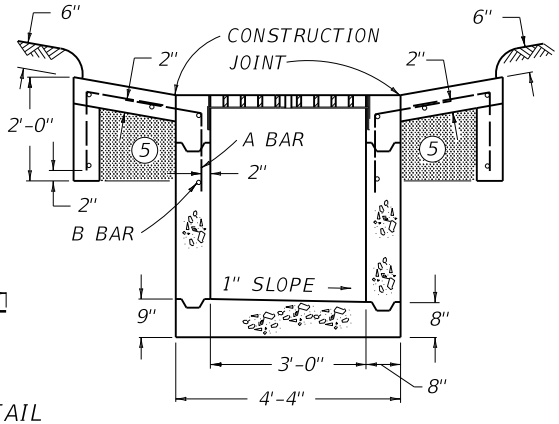

SECTION A-A

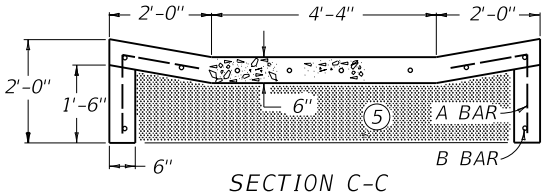

SECTION C-C

BILL OF REINFORCEMENT

BAR	NO. OF BARS	SIZE	LENGTH	APPROX. SPACING
A	40 OR 56	#5	3'-0"	1'-0" C TO C
B	25 OR 40	#4	4'-0"	AS SHOWN

NOTE: PRIMARY USE (ROADSIDE DITCH LOCATION)

~ NOTES ~

BID ITEM AND UNIT TO BID
DROP BOX INLET TYPE 1 — EACH

1. 6:1 SLOPES ARE WITH REFERENCE TO DITCH GRADE.
2. WHEN A BOX INLET IS PLACED IN A SAG, OMIT THE EARTH DIKE AND LONGITUDINAL SLOPE OF THE GRATE, AND PROVIDE A CONCRETE APRON ON EACH SIDE OF THE INLET.
3. RATE OF INCREASE OR DECREASE 0.36 CU. YD. PER FOOT IN HEIGHT.
4. DEDUCT APPROX. 0.1 CU. YD. OF CONCRETE PER PIPE.
5. ▩ COMPACT THIS VOLUME WITH D.G.A. BASE OR GRAVEL BASE AND INCLUDE IN THE UNIT PRICE OF THE BOX. SODDING IS NOT INCLUDED.
6. DOWNSTREAM DIKE COMPLETE AND IN PLACE IS INCLUDED IN THE CONTRACT UNIT PRICE OF THE INLET. SODDING IS NOT INCLUDED.

APPROX. QUANTITIES

TYPE	CONCRETE 3'-9" ③ BOX	REINF. STEEL
SAG	4.4 CU. YD. ④	282 LBS
GRADE	3.4 CU. YD. ④	192 LBS

KENTUCKY
DEPARTMENT OF HIGHWAYS

DROP BOX
INLET
TYPE 1

STANDARD DRAWING NO. RDB-001-12

SUBMITTED William E. Ginkel — DIRECTOR DIVISION OF DESIGN — 12-01-15 DATE

APPROVED — STATE HIGHWAY ENGINEER — 12-01-15 DATE

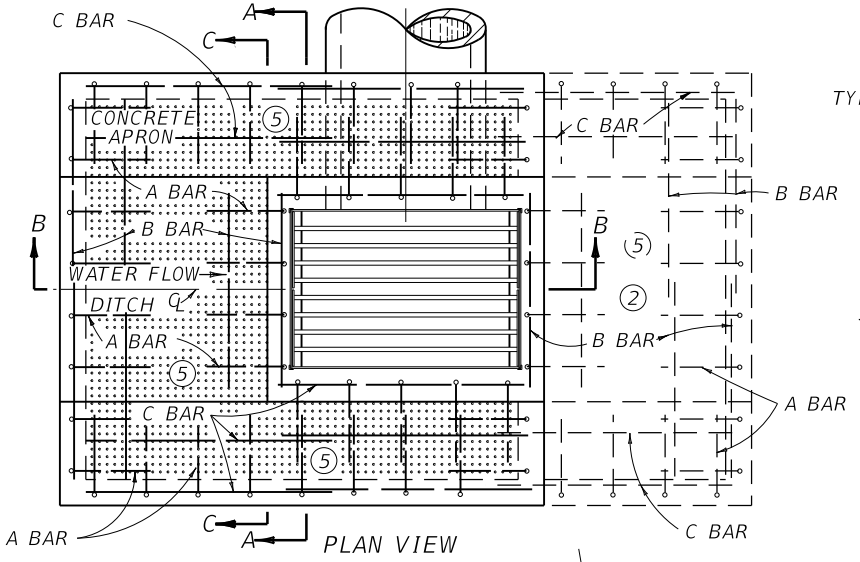

PLAN VIEW

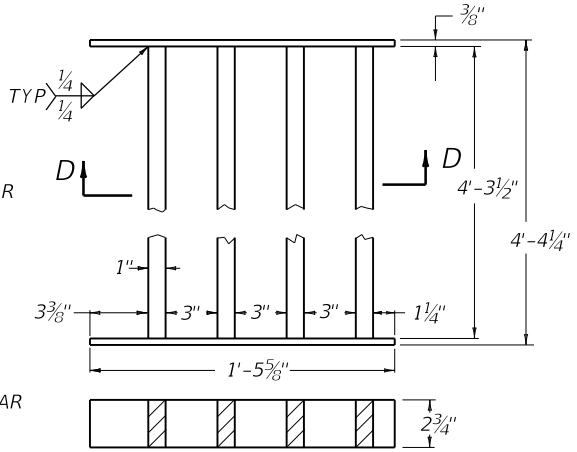

SECTION D-D
DETAIL OF GRATE
(TWO REQUIRED)

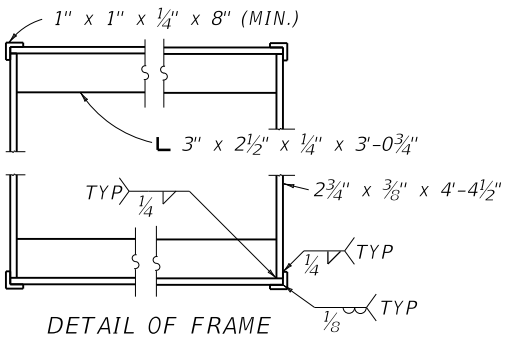

DETAIL OF FRAME

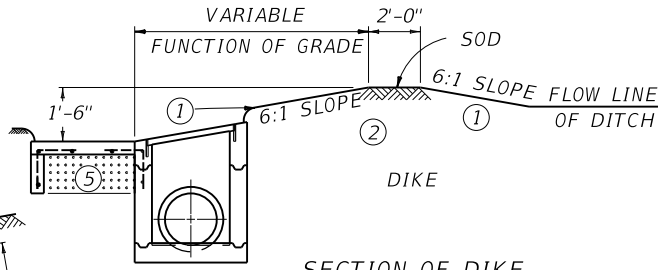

SECTION OF DIKE

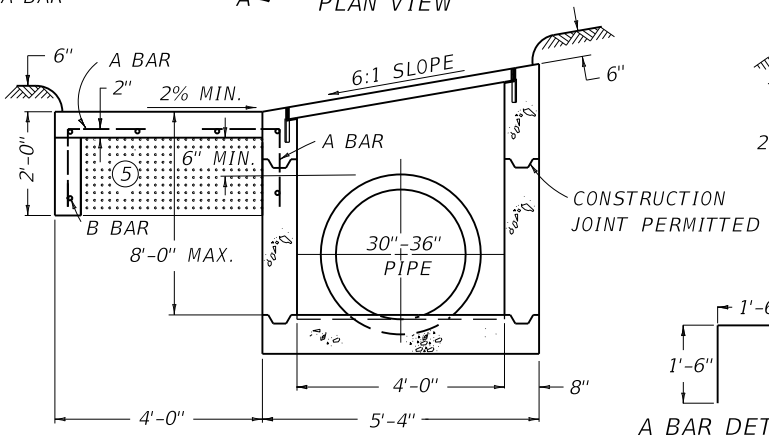

SECTION B-B

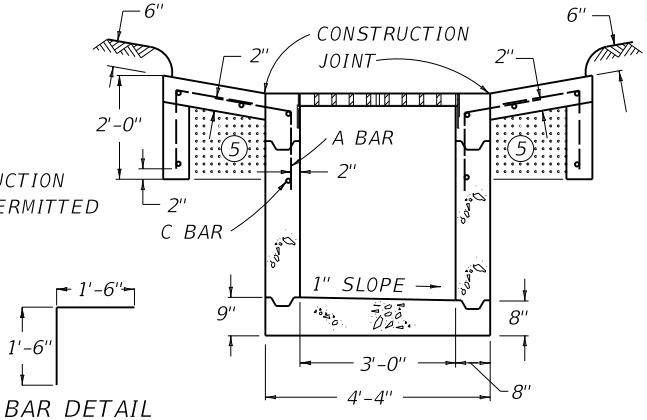

SECTION A-A

A BAR DETAIL

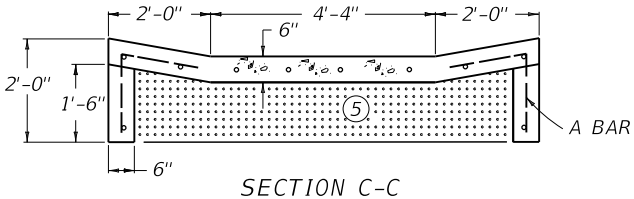

SECTION C-C

BILL OF REINFORCEMENT

BAR	NO. OF BARS	SIZE	LENGTH	APPROX. SPACING
A	44 OR 60	#5	3'-0"	1'-0" C TO C
B	9 OR 18	#4	3'-9"	AS SHOWN
C	16 OR 22	#4	4'-9"	AS SHOWN

NOTE: PRIMARY USE (ROADSIDE DITCH LOCATION)

~ NOTES ~

BID ITEM AND UNIT TO BID
DROP BOX INLET TYPE 2 EACH

1. 6:1 SLOPES ARE WITH REFERENCE TO DITCH GRADE.
2. WHEN A BOX INLET IS PLACED IN A SAG, OMIT THE EARTH DIKE AND LONGITUDINAL SLOPE OF THE GRATE, AND PROVIDE A CONCRETE APRON ON EACH SIDE OF THE INLET.
3. RATE OF INCREASE OR DECREASE 0.41 CU. YD. PER FOOT IN HEIGHT.
4. DEDUCT APPROX. 0.2 CU. YD. OF CONCRETE FOR A 30" PIPE AND 0.3 CU. YD. OF CONCRETE FOR A 36" PIPE.
5. COMPACT THIS VOLUME WITH D.G.A. BASE OR GRAVEL BASE AND INCLUDE IN THE UNIT PRICE OF THE BOX.
6. DOWNSTREAM DIKE COMPLETE AND IN PLACE IS INCLUDED IN THE CONTRACT UNIT PRICE OF THE INLET. SODDING IS NOT INCLUDED.

STR. STEEL WTS.

1 GRATE	TOTAL	FRAME
170 LBS	340 LBS	58 LBS

APPROX. QUANTITIES

TYPE	CONCRETE 3'-9" 3 BOX	REINF. STEEL
SAG	4.8 CU. YD. 4	303 LBS
GRADE	3.9 CU. YD. 4	212 LBS

KENTUCKY
DEPARTMENT OF HIGHWAYS

DROP BOX
INLET
TYPE 2

STANDARD DRAWING NO. RDB-002-12

SUBMITTED William S. Gilbert — DIRECTOR DIVISION OF DESIGN — 12-01-15 DATE

APPROVED — STATE HIGHWAY ENGINEER — 12-01-15 DATE

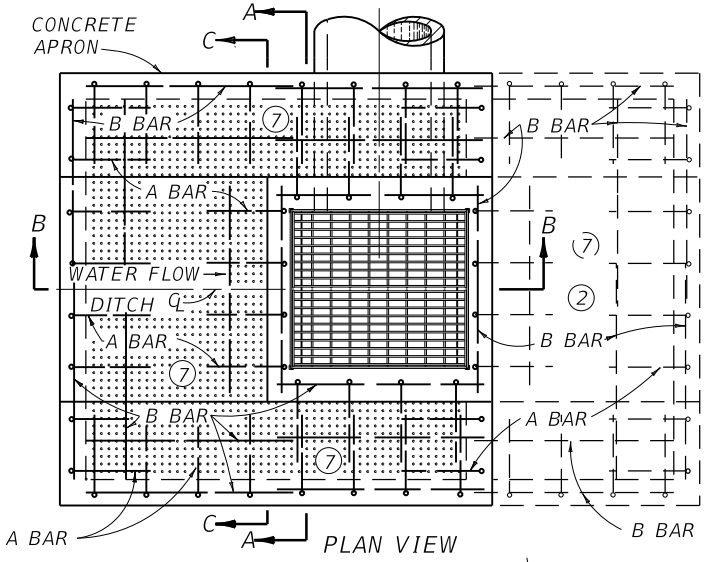

PLAN VIEW

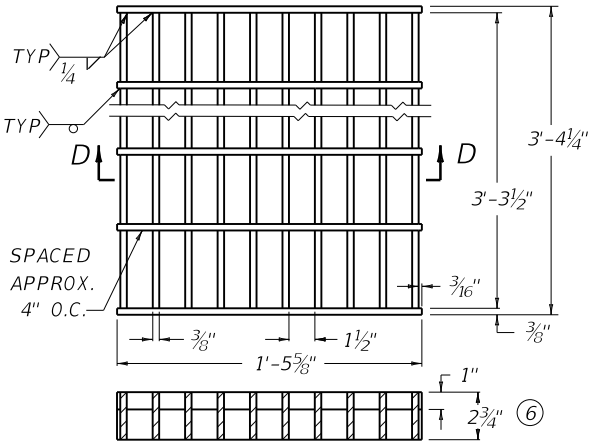

⑤ SECTION D-D
DETAIL OF GRATE
(TWO REQUIRED)

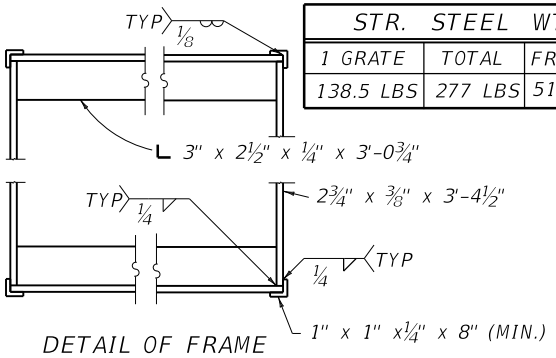

DETAIL OF FRAME

STR. STEEL WTS.		
1 GRATE	TOTAL	FRAME
138.5 LBS	277 LBS	51 LBS

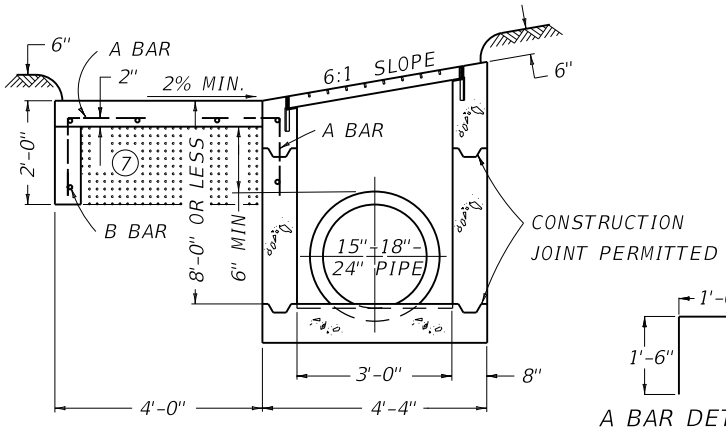

SECTION B-B

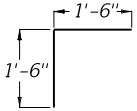

A BAR DETAIL

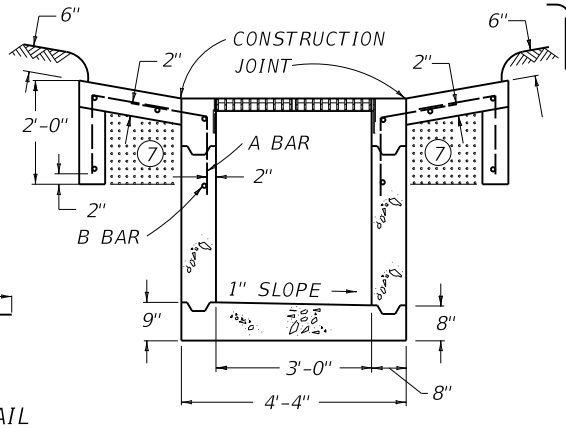

SECTION A-A

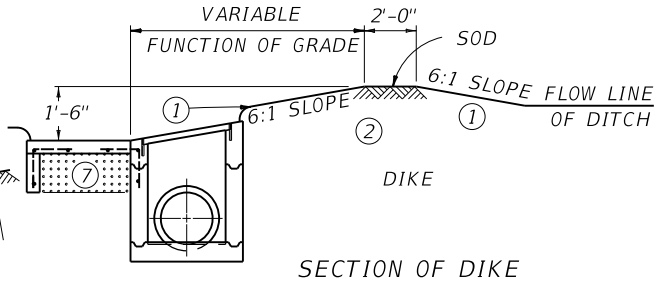

SECTION OF DIKE

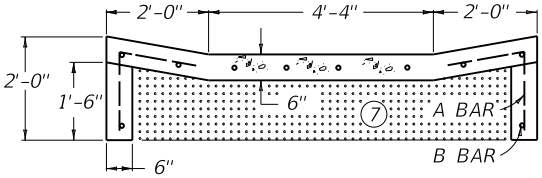

SECTION C-C

BILL OF REINFORCEMENT

BAR	NO. OF BARS	SIZE	LENGTH	APPROX. SPACING
A	40 OR 56	#5	3'-0"	1'-0" C TO C
B	25 OR 40	#4	4'-0"	AS SHOWN

NOTE: PRIMARY USE (ROADSIDE DITCH LOCATION)

~ NOTES ~

BID ITEM AND UNIT TO BID
DROP BOX INLET TYPE 3 — EACH

1. 6:1 SLOPES ARE WITH REFERENCE TO DITCH GRADE.
2. WHEN A BOX INLET IS PLACED IN A SAG, OMIT THE EARTH DIKE AND LONGITUDINAL SLOPE OF THE GRATE, AND PROVIDE A CONCRETE APRON ON EACH SIDE OF THE INLET.
3. RATE OF INCREASE OR DECREASE 0.36 CU. YD. PER FOOT IN HEIGHT.
4. DEDUCT APPROX. 0.1 CU. YD. OF CONCRETE PER PIPE.
5. RELIANCE STEEL (CAT. NO. H2-12D) AND GARY STEEL (CAT. NO. HW3-D-300) ARE ACCEPTABLE ALTERNATES PROVIDED MATCHED GRATES ARE SUPPLIED.
6. THE 2 3/4" BAR SHALL BE NOTCHED TO RECEIVE THE 1" BAR.
7. COMPACT THIS VOLUME WITH D.G.A. BASE OR GRAVEL BASE AND INCLUDE IN THE UNIT PRICE OF THE BOX.
8. DOWNSTREAM DIKE COMPLETE AND IN PLACE IS INCLUDED IN THE CONTRACT UNIT PRICE OF THE INLET. SODDING IS NOT INCLUDED.

APPROX. QUANTITIES

TYPE	CONCRETE 3'-9" ③ BOX	REINF. STEEL
SAG	4.4 CU. YD. ④	282 LBS
GRADE	3.4 CU. YD. ④	192 LBS

KENTUCKY
DEPARTMENT OF HIGHWAYS

DROP BOX INLET TYPE 3

STANDARD DRAWING NO. RDB-003-08

SUBMITTED William S. Gabel — DIRECTOR DIVISION OF DESIGN — 12-01-15 DATE

APPROVED — STATE HIGHWAY ENGINEER — 12-01-15 DATE

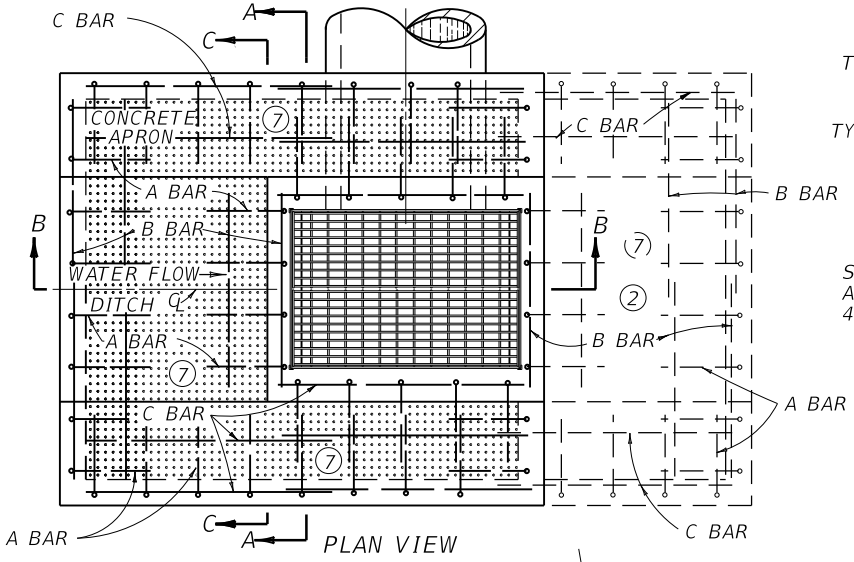

PLAN VIEW

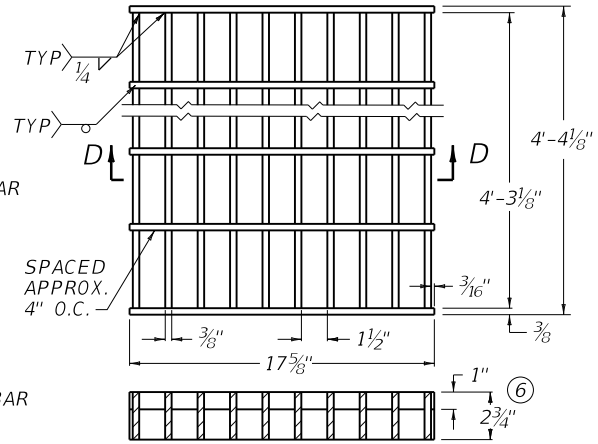

5 SECTION D-D
DETAIL OF GRATE
(TWO REQUIRED)

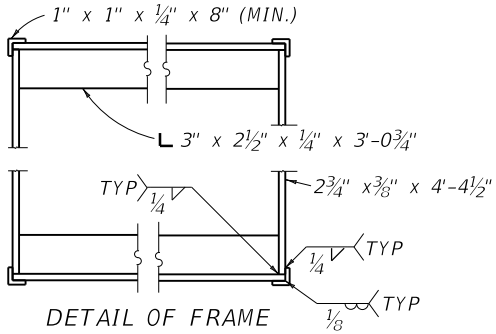

DETAIL OF FRAME

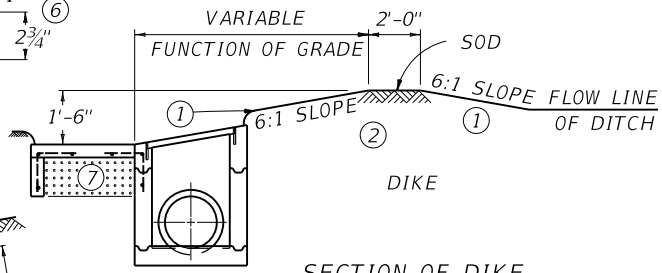

DIKE

SECTION OF DIKE

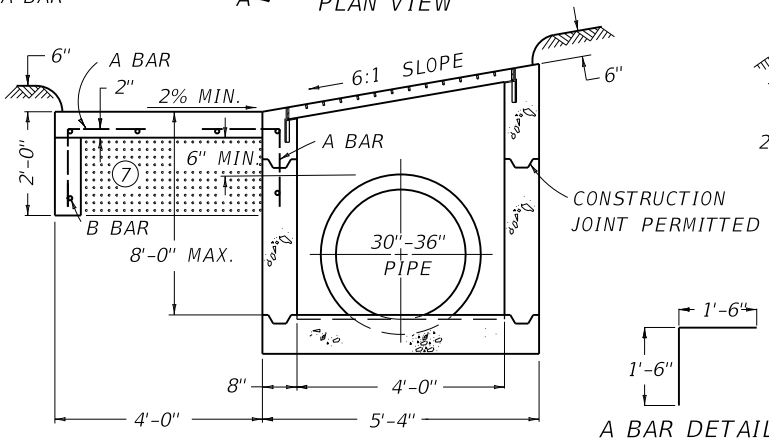

SECTION B-B

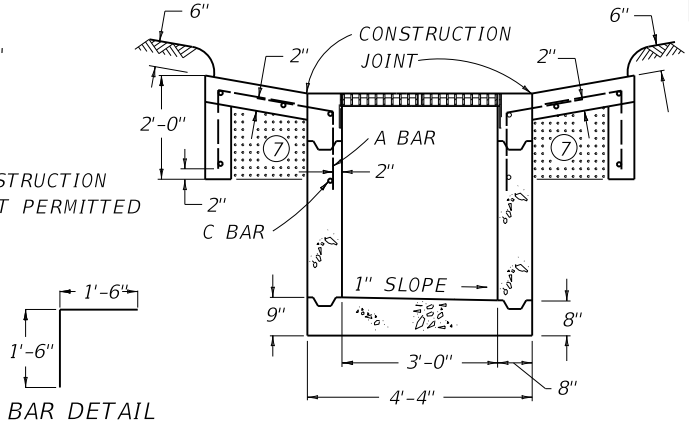

SECTION A-A

A BAR DETAIL

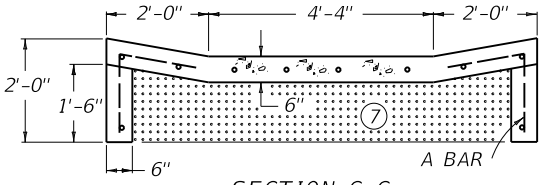

SECTION C-C

BILL OF REINFORCEMENT

BAR	NO. OF BARS	SIZE	LENGTH	APPROX. SPACING
A	44 OR 60	#5	3'-0"	1'-0" C TO C
B	9 OR 18	#4	3'-9"	AS SHOWN
C	16 OR 20	#4	4'-9"	AS SHOWN

NOTE: PRIMARY USE (ROADSIDE DITCH LOCATION)

~ NOTES ~

BID ITEM AND UNIT TO BID
DROP BOX INLET TYPE 4 EACH

1. 6:1 SLOPES ARE WITH REFERENCE TO DITCH GRADE.
2. WHEN A BOX INLET IS PLACED IN A SAG, OMIT THE EARTH DIKE AND LONGITUDINAL SLOPE OF THE GRATE, AND PROVIDE A CONCRETE APRON ON EACH SIDE OF THE INLET.
3. RATE OF INCREASE OR DECREASE 0.41 CU. YD. PER F.T IN HEIGHT.
4. DEDUCT APPROX. 0.2 CU. YD OF CONCRETE OR A 30" PIPE AND 0.3 CU. YD. OF CONCRETE FOR A 36" PIPE.
5. RELIANCE STEEL (CAT. NO. H2-12D) AND GARY STEEL (CAT. NO. HW3-D-300) ARE ACCEPTABLE ALTERNATES PROVIDED MATCHED GRATES ARE SUPPLIED.
6. THE 2 3/4" BAR SHALL BE NOTCHED TO RECEIVE THE 1" BAR.
7. COMPACT THIS VOLUME WITH D.G.A. BASE OR GRAVEL BASE AND INCLUDE IN THE UNIT PRICE OF THE BOX.
8. DOWNSTREAM DIKE COMPLETE AND IN PLACE IS INCLUDED IN THE CONTRACT UNIT PRICE OF THE INLET. SODDING IS NOT INCLUDED.

STR. STEEL WTS.

1 GRATE	TOTAL	FRAME
176 LBS	352 LBS	58 LBS

APPROX. QUANTITIES

TYPE	CONCRETE 3'-9" 3 BOX	REINF. STEEL
SAG	4.8 CU. YD. 4	303 LBS
GRADE	3.9 CU. YD. 4	212 LBS

KENTUCKY
DEPARTMENT OF HIGHWAYS

DROP BOX
INLET
TYPE 4

STANDARD DRAWING NO. RDB-004-10

SUBMITTED William E. Ginkel — DIRECTOR DIVISION OF DESIGN — 12-01-15 DATE

APPROVED — STATE HIGHWAY ENGINEER — 12-01-15 DATE

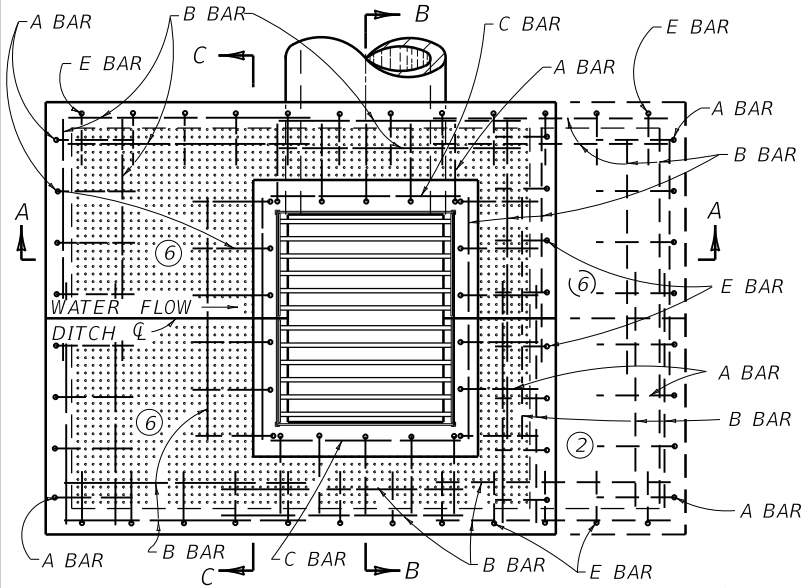

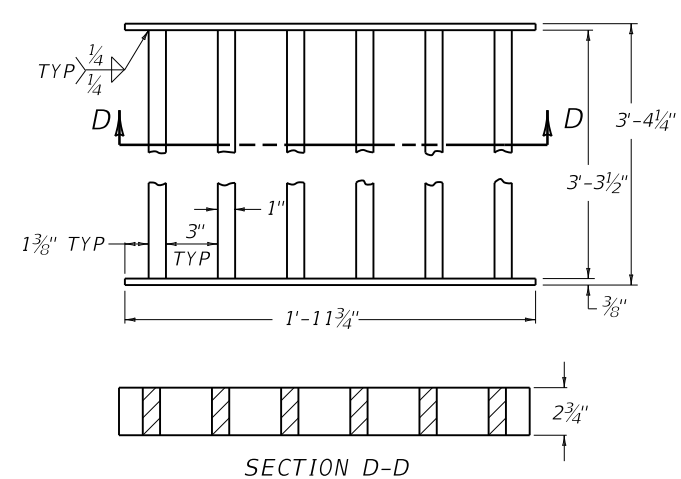

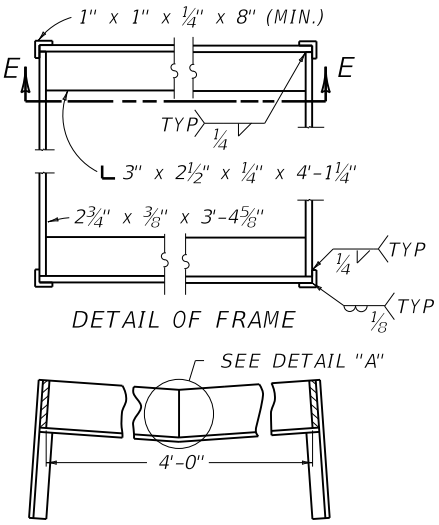

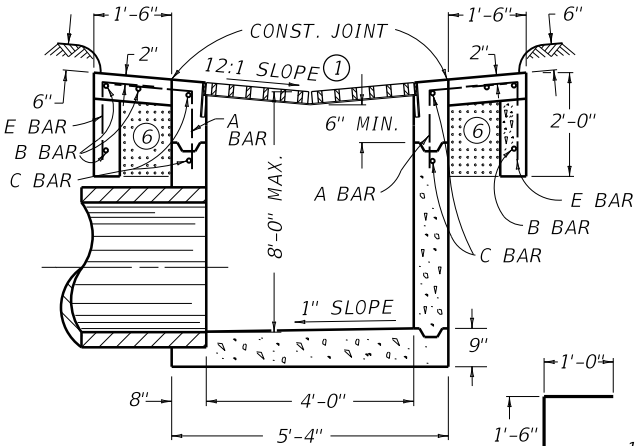

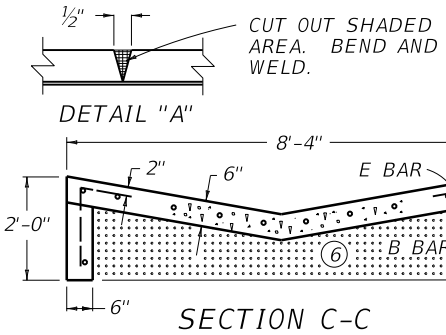

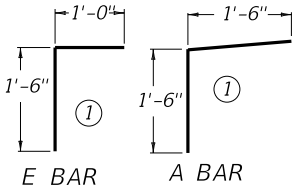

BILL OF REINFORCEMENT

BAR	NO. OF BARS	SIZE	LENGTH
A	30 OR 38	#5	3'-0"
B	29 OR 36	#4	4'-8"
C	4	#4	3'-8"
E	26 OR 24	#5	2'-6"

NOTE: PRIMARY USE (DEPRESSED MEDIAN)

~ NOTES ~

BID ITEM AND UNIT TO BID
DROP BOX INLET TYPE 5 (A, B, C, D, E, F) EACH

(1) RELATES TO MEDIAN CROSS SLOPE – 5A=12:1, 5B=6:1, 5C=5:1, 5D=4:1, 5E=3:1, 5F EQUALS ANY ADDITIONAL SLOPE AS SPECIFIED BY THE ENGINEER

(2) WHEN A BOX INLET IS PLACED IN A SAG CONSTRUCT APRON 4'-0" ON EACH SIDE AS SHOWN.

(3) RATE OF INCREASE OR DECREASE 0.41 CU. YD. PER FT. IN HEIGHT.

(4) DEDUCT APPROX. 0.10 CU. YD OF CONCRETE FOR 15", 18", 24" PIPE AND 0.20 CU. YD. OF CONCRETE FOR A 30" PIPE.

5. DETAILS ARE SHOWN FOR A TYPE 5A . IT IS NECESSARY TO REVISE VARIOUS DETAILS INCLUDING FRAME FOR TYPES B, C, D, E, AND F.

(6) COMPACT THIS VOLUME WITH D.G.A. BASE OR GRAVEL BASE AND INCLUDE IN THE UNIT PRICE OF THE BOX.

7. WHEN D.B.I. TYPE 5 IS CONSTRUCTED IN CONJUNCTION WITH PAVED DITCH TYPE 3, SEE PAVED DITCH TYPE 3 DETAIL FOR ADDITIONAL STEEL REQUIREMENTS.

STR. STEEL WTS.

1 GRATE	TOTAL	FRAME
198 LBS	396 LBS	64 LBS

APPROX. QUANTITIES

TYPE	CONCRETE 3'-6" (3) BOX	REINF. STEEL
SAG	4.0 CU. YD. (4)	304 LBS
GRADE	3.4 CU. YD. (4)	262 LBS

KENTUCKY
DEPARTMENT OF HIGHWAYS

DROP BOX
INLET TYPE
5A-5B-5C-5D-5E & 5F

STANDARD DRAWING NO. RDB-005-09

SUBMITTED William E. Ghaled — DIRECTOR DIVISION OF DESIGN — 12-01-15 DATE

APPROVED — STATE HIGHWAY ENGINEER — 12-01-15 DATE

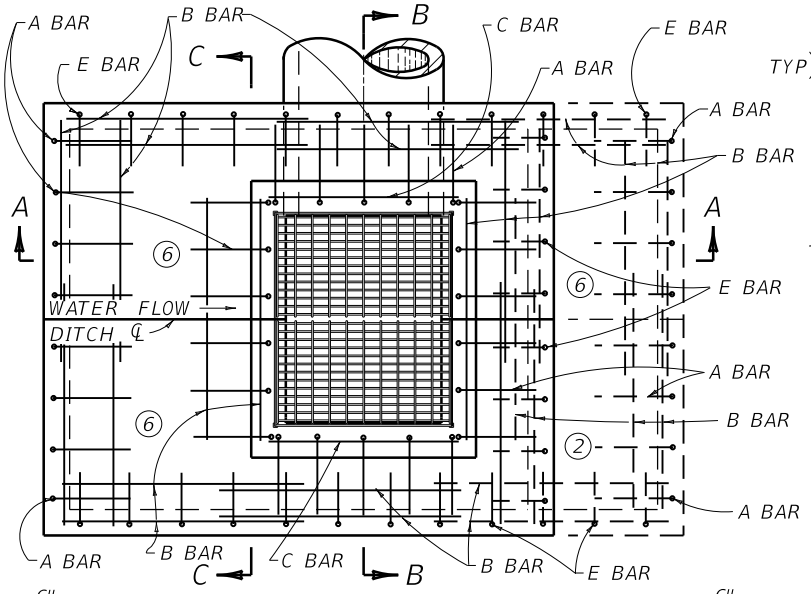

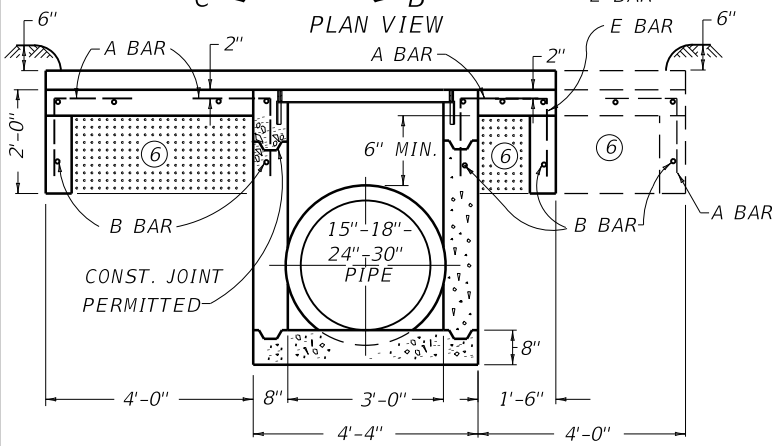

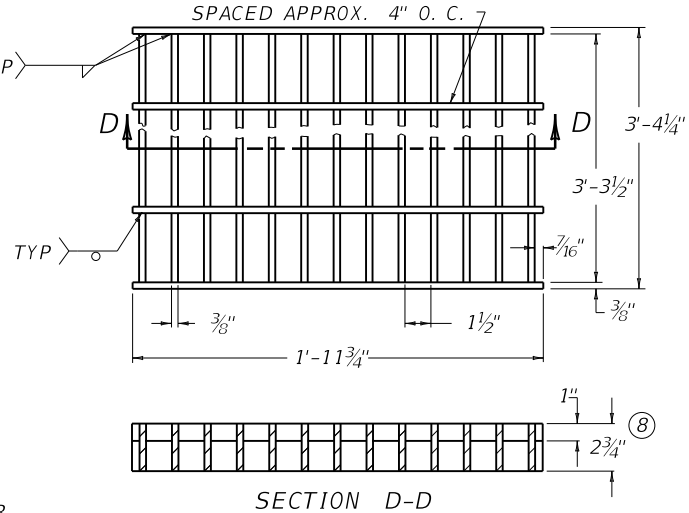

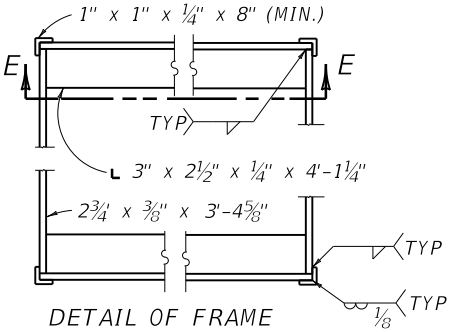

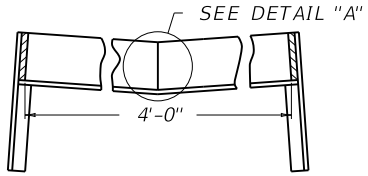

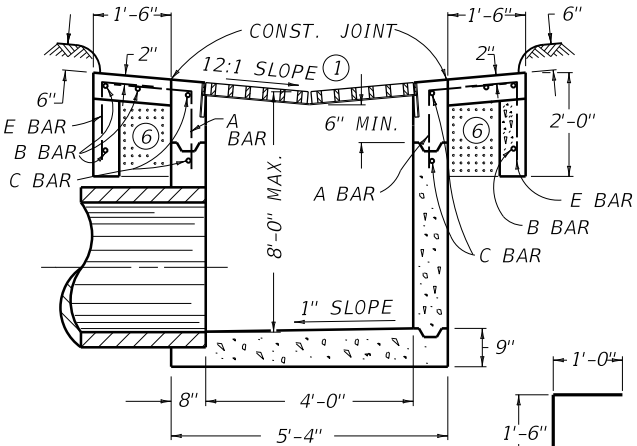

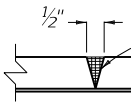

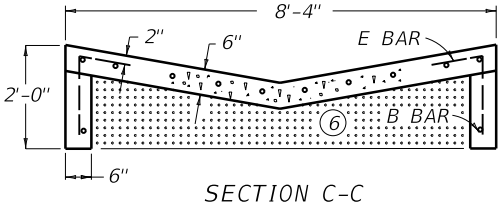

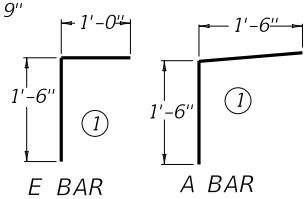

BILL OF REINFORCEMENT

BAR	NO. OF BARS	SIZE	LENGTH
A	30 OR 38	#5	3'-0"
B	29 OR 36	#4	4'-8"
C	4	#4	3'-8"
E	26 OR 24	#5	2'-6"

NOTE: PRIMARY USE (DEPRESSED MEDIAN)

~ NOTES ~

BID ITEM AND UNIT TO BID
DROP BOX INLET TYPE 6 (A, B, C, D, E, F) EACH

1. RELATES TO MEDIAN CROSS SLOPE - 6A=12:1, 6B=6:1, 6C=5:1, 6D=4:1, 6E=3:1, 6F EQUALS ANY ADDITIONAL SLOPE AS SPECIFIED BY THE ENGINEER
2. WHEN A BOX INLET IS PLACED IN A SAG CONSTRUCT APRON 4'-0" ON EACH SIDE AS SHOWN.
3. RATE OF INCREASE OR DECREASE 0.41 CU. YD. PER FT. IN HEIGHT.
4. DEDUCT APPROX. 0.1 CU. YD. OF CONCRETE FOR 15"-18"-24" PIPE AND 0.2 CU. YD. OF CONCRETE FOR FOR A 30" PIPE.
5. DETAILS ARE SHOWN FOR A TYPE 6A. IT IS NECESSARY TO REVISE VARIOUS DETAILS INCLUDING FRAME FOR TYPES B, C, D, E, AND F.
6. COMPACT THIS VOLUME WITH D.G.A. BASE OR GRAVEL BASE AND INCLUDE IN THE UNIT PRICE OF THE BOX.
7. RELIANCE STEEL (CAT. NO. H2-12D) AND GARY STEEL (CAT. NO. HW3-D-300) ARE ACCEPTABLE ALTERNATES PROVIDED MATCHED GRATES ARE SUPPLIED.
8. THE 2¾" BAR SHALL BE NOTCHED TO RECEIVE THE 1" CROSS BAR.

STR. STEEL WTS.		
1 GRATE	TOTAL	FRAME
181 LBS.	362 LBS.	64 LBS.

APPROX. QUANTITIES

TYPE	CONCRETE 3'-6" 3 BOX	REINF. STEEL
SAG	4.0 CU. YD. 4	304 LBS.
GRADE	3.4 CU. YD. 4	262 LBS.

KENTUCKY
DEPARTMENT OF HIGHWAYS

DROP BOX
INLET TYPE
6A-6B-6C-6D-6E & 6F

STANDARD DRAWING NO. RDB-006-08

SUBMITTED William E. Ghaled — DIRECTOR DIVISION OF DESIGN — 12-01-15 DATE

APPROVED — STATE HIGHWAY ENGINEER — 12-01-15 DATE

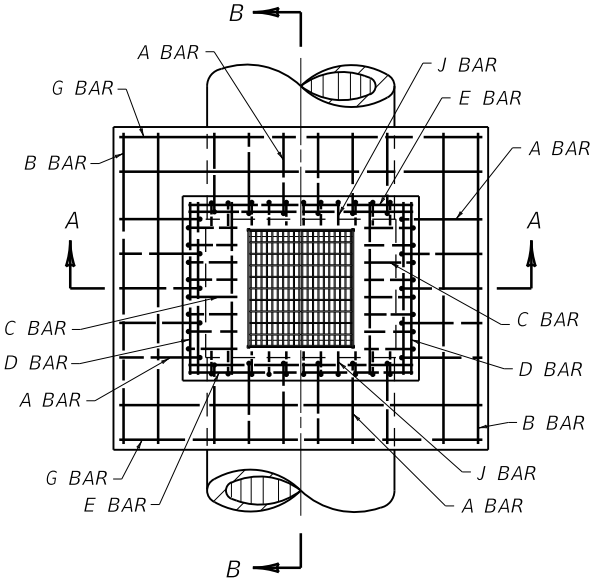

PLAN VIEW

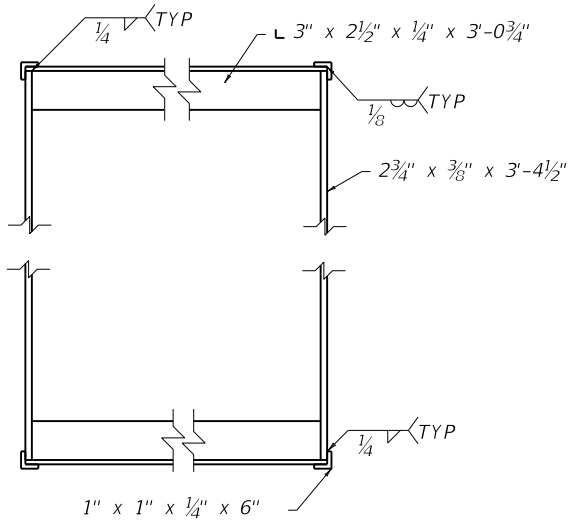

FRAME DETAIL

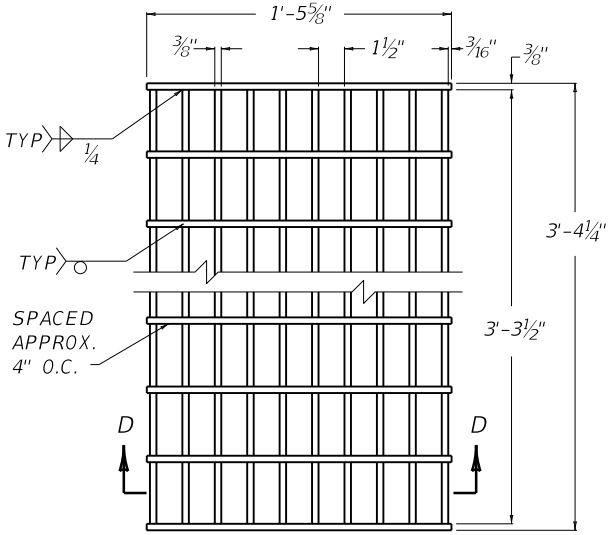

① GRATE DETAIL
(TWO GRATES REQ'D.)

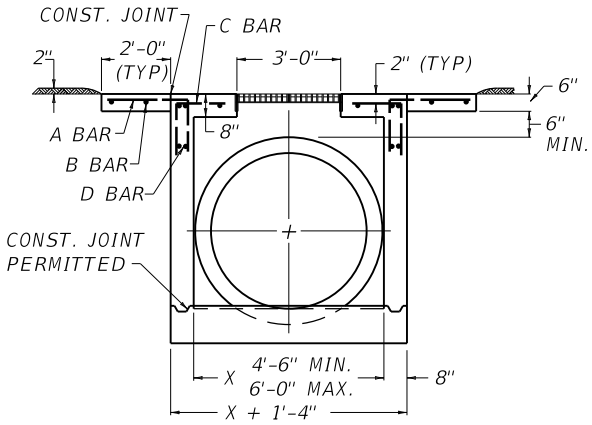

SECTION A-A

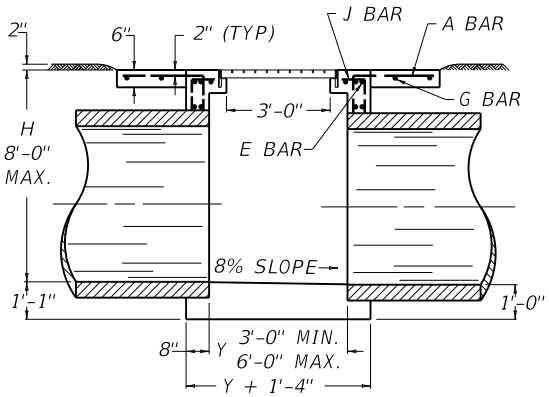

SECTION B-B

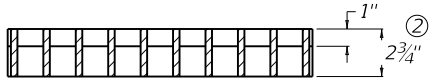

SECTION D-D

~ NOTES ~

BID ITEM AND UNIT TO BID
DROP BOX INLET TYPE 7 EACH

① RELIANCE STEEL (CAT. NO. H2-12D) AND GARY STEEL (CAT. NO. HW3-D-300) ARE ACCEPTABLE ALTERNATES PROVIDED MATCHED GRATES ARE SUPPLIED.

② THE 2 3/4" BAR SHALL BE NOTCHED TO RECEIVE THE 1" CROSS BAR.

3. REINFORCEMENT SHALL HAVE A CLEAR DISTANCE OF 2" FROM OUTSIDE FACE UNLESS OTHERWISE SHOWN.

4. THIS BOX IS TO BE USED PRIMARILY FOR SUMP CONDITIONS WHERE A GRATED INLET IS REQUIRED FOR PIPE SIZES 42" THRU 60".

5. SEE CURRENT STANDARD DRAWING RDB-008 FOR DIMENSIONS AND STEEL CHARTS.

USE WITH CUR. STD. DWG.
RDB-008

KENTUCKY
DEPARTMENT OF HIGHWAYS

DROP BOX INLET
TYPE 7
(LAYOUT AND STEEL PATTERN)

STANDARD DRAWING NO. RDB-007-03

SUBMITTED _____ DIRECTOR DIVISION OF DESIGN — 12-01-15 DATE

APPROVED _____ STATE HIGHWAY ENGINEER — 12-01-15 DATE

DIMENSIONS AND ESTIMATE OF QUANTITIES

INLET SIZE			PIPE		(4)	CONCRETE		REINF. STEEL
NO.	X	Y	MAX. DIA.	SIDE	H	CUBIC YARDS	(6) Q	LBS.
1	4'-6"	3'-0"	42"	X	5'-½"	4.3	0.4	240
2		3'-6"				4.7	0.5	252
3		4'-0"				5.0		348
4		4'-6"		X OR Y		5.3		365
5	5'-0"	3'-0"	48"	X	5'-7"	4.9	0.5	255
6		3'-6"				5.2		268
7		4'-0"				5.6		372
8		4'-6"				5.9		390
9		5'-0"		X OR Y		6.3	0.6	416
10	5'-6"	3'-0"	54"	X	6'-1½"	5.4	0.5	262
11		3'-6"				5.8		276
12		4'-0"				6.2		388
13		4'-6"				6.6	0.6	407
14		5'-0"				7.0		434
15		5'-6"		X OR Y		7.4		453
16	6'-0"	3'-0"	60"	X	6'-8"	6.0	0.5	278
17		3'-6"				6.4		292
18		4'-0"				6.8	0.6	412
19		4'-6"				7.3		432
20		5'-0"				7.7		460
21		5'-6"				8.1		480
22		6'-0"		X OR Y		8.5	0.7	508

REFERENCE CHART

DIA. OF PIPE	D.B.I. TYPE 7 PIPE ON "X" SIDE OF INLET	D.B.I. TYPE 7 PIPE ON "Y" SIDE OF INLET	CONCRETE TO DEDUCT FOR EACH PIPE CUBIC YARDS
0	(5)	3'-0"	—
12"			0.1
15"-18"			
21"-24"			
27"			0.2
30"-33"		3'-6"	
36"		4'-0"	0.3
42"	4'-6"	4'-6"	0.4
48"	5'-0"	5'-0"	0.5
54"	5'-6"	5'-6"	0.6
60"	6'-0"	6'-0"	0.7

BILL OF REINFORCEMENT

NUMBER 5 REINFORCEMENT BARS

MARK	NO. (1)	LGTH. FT.	LGTH. IN.	K FT.	K IN.
4'-6" x 3'-0"					
A	18	3	10	2	4
B	4	8	0		
C	12	2	5	0	11
D	10	4	0		
E	4	5	6		
G	4	9	6		
4'-6" x 3'-6"					
A	18	3	10	2	4
B	4	8	0		
C	14	2	5	0	11
D	10	4	0		
E	4	5	6		
G	4	9	6		
4'-6" x 4'-0"					
A	20	3	10	2	4
B	4	9	0		
C	16	2	5	0	11
D	10	5	0		
E	10	5	6		
G	4	9	6		
J	18	2	2	0	8
4'-6" x 4'-6"					
A	20	3	10	2	4
B	4	9	6		
C	18	2	5	0	11
D	10	5	6		
E	10	5	6		
G	4	9	6		
J	18	2	5	0	11
5'-0" x 3'-0"					
A	20	3	10	2	4
B	4	8	0		
C	12	2	8	1	2
D	10	4	0		
E	4	6	0		
G	4	10	0		
5'-0" x 3'-6"					
A	20	3	10	2	4
B	4	8	6		
C	14	2	8	1	2
D	10	4	6		
E	4	6	0		
G	4	10	0		
5'-0" x 4'-0"					
A	22	3	10	2	4
B	4	9	0		
C	16	2	8	1	2
D	10	5	0		
E	10	6	0		
G	4	10	0		
J	20	2	2	0	8
5'-0" x 4'-6"					
A	22	3	10	2	4
B	4	9	6		
C	18	2	8	1	2
D	10	5	6		
E	10	6	0		
G	4	10	0		
J	20	2	5	0	11
5'-0" x 5'-0"					
A	24	3	10	2	4
B	4	10	0		
C	20	2	8	1	2
D	10	6	0		
E	10	6	0		
G	4	10	0		
J	20	2	8	1	2
5'-6" x 3'-0"					
A	20	3	10	2	4
B	4	8	0		
C	12	2	11	1	5
D	10	4	0		
E	4	6	6		
G	4	10	6		
5'-6" x 3'-6"					
A	20	3	10	2	4
B	4	8	6		
C	14	2	11	1	5
D	10	4	6		
E	4	6	6		
G	4	10	6		
5'-6" x 4'-0"					
A	22	3	10	2	4
B	4	9	0		
C	16	2	11	1	5
D	10	5	0		
E	10	6	6		
G	4	10	6		
J	22	2	2	0	8
5'-6" x 4'-6"					
A	22	3	10	2	4
B	4	9	6		
C	18	2	11	1	5
D	10	5	6		
E	10	6	6		
G	4	10	6		
J	22	2	5	0	11
5'-6" x 5'-0"					
A	24	3	10	2	4
B	4	10	0		
C	20	2	11	1	5
D	10	6	0		
E	10	6	6		
G	4	10	6		
J	22	2	8	1	2
5'-6" x 5'-6"					
A	24	3	10	2	4
B	4	10	6		
C	22	2	11	1	5
D	10	6	6		
E	10	6	6		
G	4	10	6		
J	22	2	11	1	5
6'-0" x 3'-0"					
A	22	3	10	2	4
B	4	8	0		
C	12	3	2	1	8
D	10	4	0		
E	4	7	0		
G	4	11	0		
6'-0" x 3'-6"					
A	22	3	10	2	4
B	4	8	6		
C	14	3	2	1	8
D	10	4	6		
E	4	7	0		
G	4	11	0		
6'-0" x 4'-0"					
A	24	3	10	2	4
B	4	9	0		
C	16	3	2	1	8
D	10	5	0		
E	10	7	0		
G	4	11	0		
J	24	2	2	0	8
6'-0" x 4'-6"					
A	24	3	10	2	4
B	4	9	6		
C	18	3	2	1	8
D	10	5	6		
E	10	7	0		
G	4	11	0		
J	24	2	5	0	11
6'-0" x 5'-0"					
A	26	3	10	2	4
B	4	10	0		
C	20	3	2	1	8
D	10	6	0		
E	10	7	0		
G	4	11	0		
J	24	2	8	1	2
6'-0" x 5'-6"					
A	26	3	10	2	4
B	4	10	6		
C	22	3	2	1	8
D	10	6	6		
E	10	7	0		
G	4	11	0		
J	24	2	11	1	5
6'-0" x 6'-0"					
A	28	3	10	2	4
B	4	11	0		
C	24	3	2	1	8
D	10	7	0		
E	10	7	0		
G	4	11	0		
J	24	3	2	1	8

~ BAR NOTES ~

(1) NUMBER OF BARS IN ONE D.B.I. TYPE 7.
2. DIMENSIONS ARE O. TO O. OF BARS.
3. ALL BARS ARE STRAIGHT EXCEPT THOSE SHOWN BELOW.

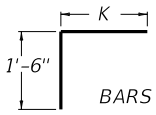

BARS A, C AND J

BENT BAR SHAPES

~ NOTES ~

(4) BASED ON "H" AS EQUAL TO D+T+1'-2".
(5) FOR PIPE SIZES LESS THAN 42" USE APPLICABLE CURRENT RDB-SERIES.
(6) Q=CUBIC YARDS OF CONCRETE PER FOOT INCREASE OR DECREASE WHEN "H" VARIES FROM D+T+1'-2".
7. NO DEDUCTIONS HAVE BEEN MADE FOR PIPE, SEE REFERENCE CHART FOR QUANTITIES TO DEDUCT.
8. "T" IS CONCRETE PIPE WALL THICKNESS OR METAL PIPE CORRUGATION DEPTH.
9. D=INSIDE DIAMETER OF PIPE.
10. A, B AND G BARS SPACED 1'-0" O.C., C AND J BARS SPACED 6" O.C., ALL OTHER BARS SPACED AS SHOWN.

USE WITH CUR. STD. DWG. RDB-007

KENTUCKY DEPARTMENT OF HIGHWAYS

DROP BOX INLET TYPE 7 (DIMENSION & STEEL CHARTS)

STANDARD DRAWING NO. RDB-008-04

SUBMITTED William E. Ginkel DIRECTOR DIVISION OF DESIGN 12-01-15 DATE

APPROVED STATE HIGHWAY ENGINEER 12-01-15 DATE

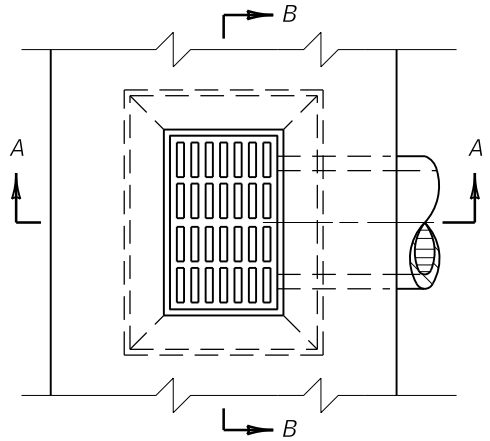

PLAN VIEW

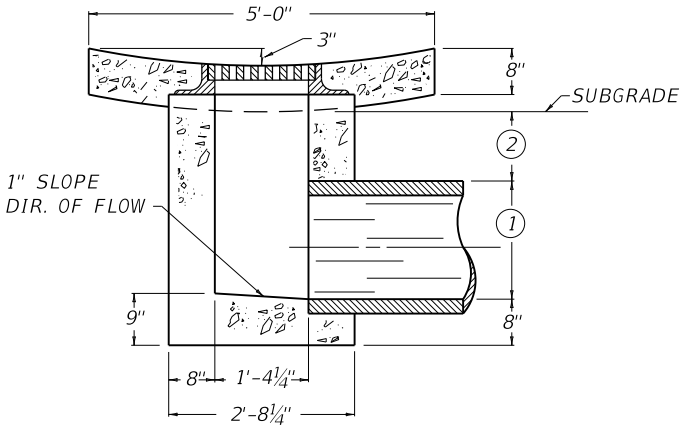

SECTION A-A

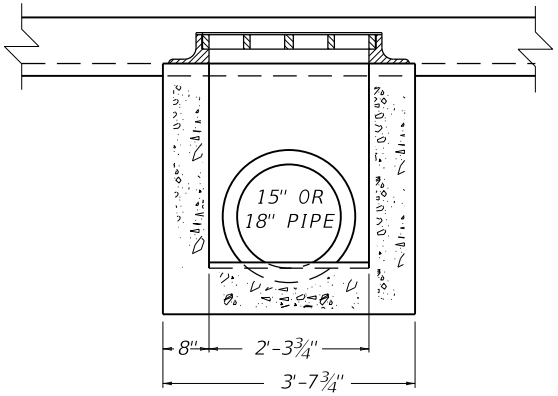

SECTION B-B

~ NOTES ~

BID ITEM AND UNIT TO BID
DROP BOX INLET TYPE 10 — EACH

1. 1'-5¼" FOR 15" PIPE
   1'-8½" FOR 18" PIPE
2. 1'-0" MINIMUM COVER BELOW SUBGRADE.
3. PRIMARY USE: VALLEY GUTTER LOCATION
4. CONSTRUCT VALLEY GUTTER IN ACCORDANCE WITH CUR. STD. DWG. RPM-100.

APPROX. CONCRETE QUANTITIES

PIPE SIZE	MIN. HEIGHT	CU. YDS. CONC.
15"	3'-4"	0.90
18"	3'-8"	0.97
APPROXIMATE WEIGHTS		
FRAME 365 LBS.		
GRATE 185 LBS.		

NO DEDUCTIONS HAVE BEEN MADE FOR PIPE.

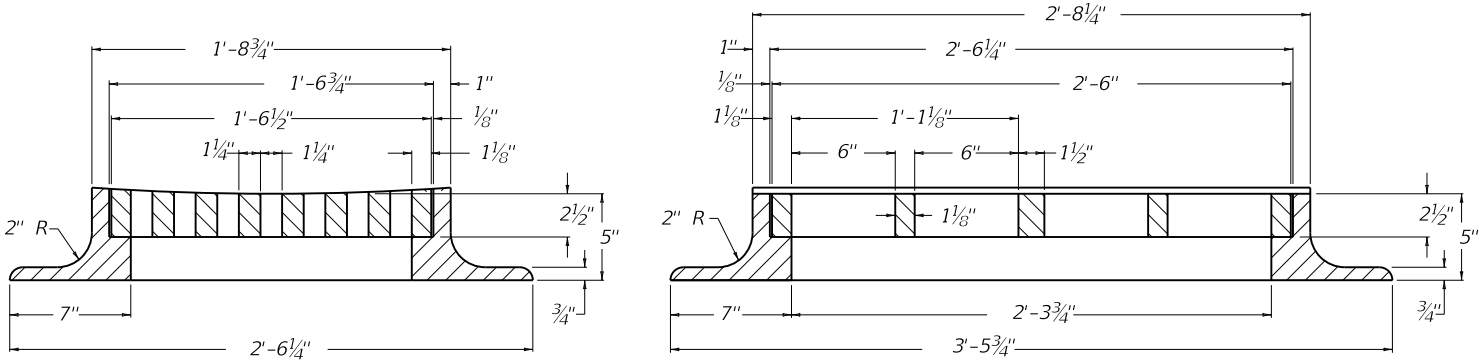

SECTIONAL VIEW OF FRAME AND GRATE

USE WITH CUR. STD. DWG.
RPM-100

KENTUCKY
DEPARTMENT OF HIGHWAYS

DROP BOX INLET
TYPE 10

STANDARD DRAWING NO. RDB-010-07

SUBMITTED William E. Ginkel — DIRECTOR DIVISION OF DESIGN — 12-01-15 DATE

APPROVED — STATE HIGHWAY ENGINEER — 12-01-15 DATE

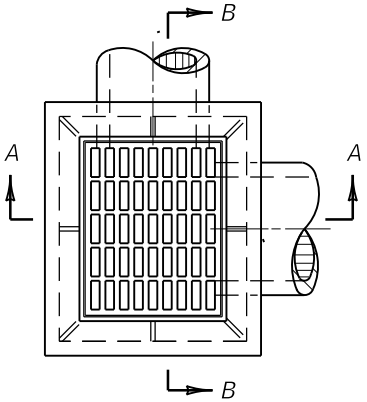

PLAN VIEW

APPROX. CONCRETE QUANTITIES

PIPE SIZE	MIN. HEIGHT	CU. YDS. CONC.
15"	2'-11"	0.89
18"	3'-3"	0.97
24"	4'-9"	1.38
APPROXIMATE WEIGHTS		
FRAME 195 LBS.		
GRATE 265 LBS.		

NO DEDUCTIONS HAVE BEEN MADE FOR PIPE.

BID ITEM AND UNIT TO BID
DROP BOX INLET TYPE 11 EACH

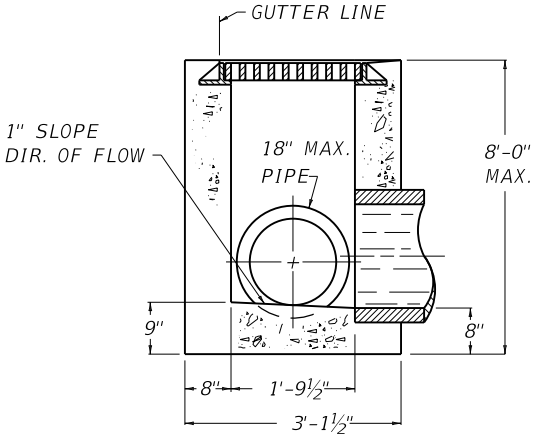

SECTION A-A

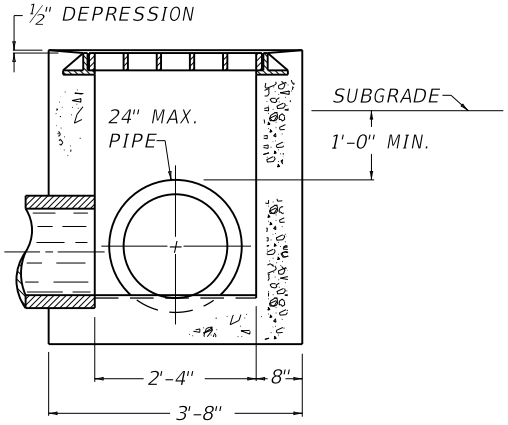

SECTION B-B

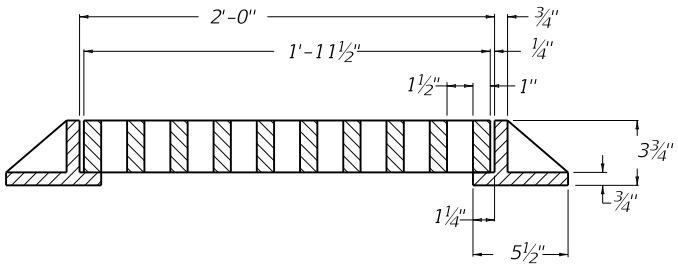

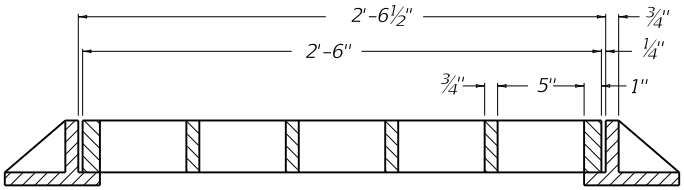

SECTIONAL VIEW OF FRAME AND GRATE

KENTUCKY
DEPARTMENT OF HIGHWAYS

DROP BOX
INLET TYPE 11

STANDARD DRAWING NO. RDB-011-08

SUBMITTED William E. Ginkel — DIRECTOR, DIVISION OF DESIGN — 12-01-15 DATE

APPROVED — STATE HIGHWAY ENGINEER — 12-01-15 DATE

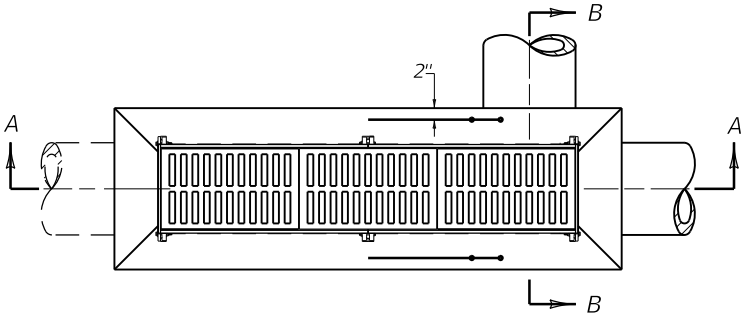

PLAN VIEW

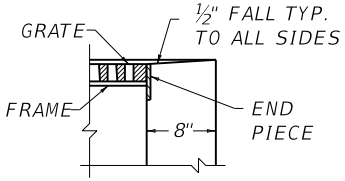

DETAIL "A"

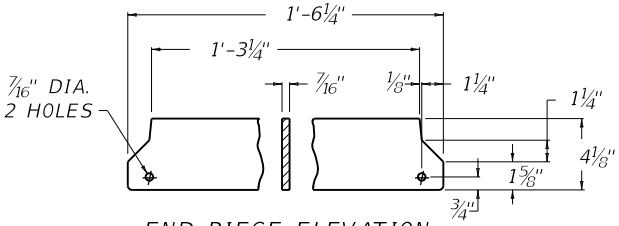

END PIECE ELEVATION

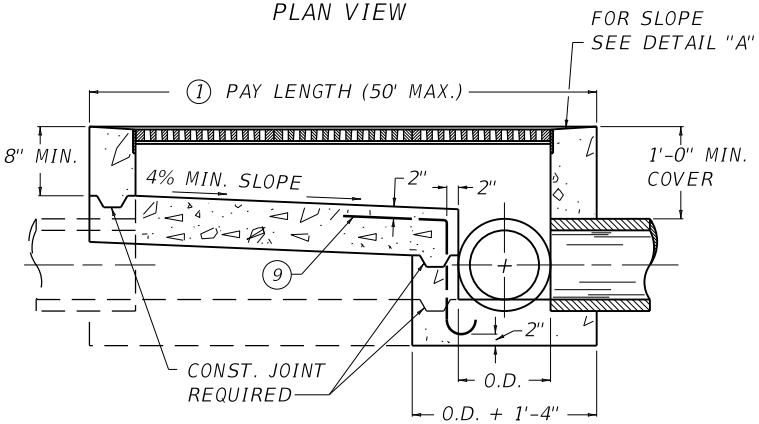

SECTION A-A

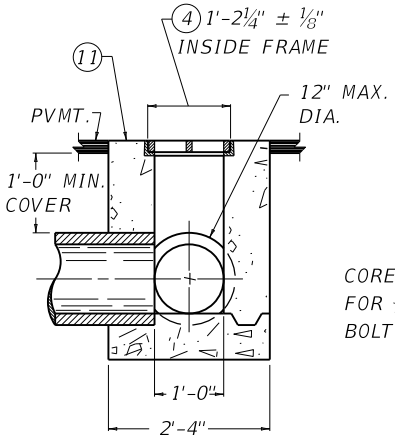

SECTION B-B

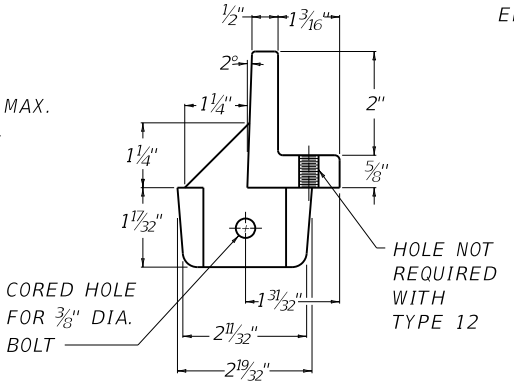

FRAME ELEVATION

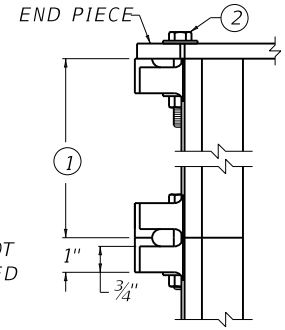

FRAME & END PIECE
PLAN VIEW

VARIATIONS OF
DRAINAGE PATTERNS

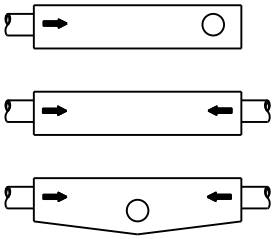

COMBINATIONS OF THE
ABOVE MAY BE REQUIRED
(SEE PIPE SECTIONS FOR
APPROPRIATE DETAILS)

~ NOTES ~

BID ITEM AND UNIT TO BID

DROP BOX INLET TYPE 12	LF
DROP BOX INLET TYPE 12A	LF

12 WHEN THE GRATES ARE NOT TO BE BOLTED TO THE FRAME.
12A WHEN THE GRATES ARE TO BE BOLTED TO THE FRAME.

1. THE UNIT LENGTHS ARE 3'-0" FOR THE FRAMES AND 1'-11⅞" FOR THE GRATES AND ARE TO BE CONSTRUCTED IN MULTIPLE LENGTHS OF 6'-0" FOR TYPE 12 INLET.
   THE UNIT LENGTHS ARE 2'-0" FOR THE FRAMES AND 1'-11⅞" FOR THE GRATES AND ARE TO BE CONSTRUCTED IN MULTIPLE LENGTHS OF 2'-0" FOR TYPE 12A INLET.
2. THE FRAME AND END PIECES SHALL BE ASSEMBLED WITH ⅜" X 2½" HEX HEAD BOLTS, NUTS AND FLAT WASHERS (COMMERCIAL QUALITY).
3. WHEN DROP BOX INLET TYPE 12A IS A BID ITEM, THE GRATES SHALL BE BOLTED TO THE FRAME WITH FOUR ⅜"-16 X 2" STAINLESS STEEL HEX BOLTS AND FLAT WASHERS (COMMERCIAL QUALITY).
4. THIS IS A CONTROL DIMENSION TO PREVENT FRAME FROM SPREADING.
5. THE WALLS AND BASE OF THE STRUCTURE SHALL BE 8" THICK.
6. SEE PIPE SECTIONS IN THE PLANS FOR FLOW LINE ELEVATIONS, PIPE SIZES, AND OTHER PERTINENT DETAILS.
7. SECURITY DEVICES ARE REQUIRED FOR TYPE 12 ONLY.
8. APPROXIMATE WEIGHT OF CASTINGS:
   FRAME 15 LBS. PER FT. (BOTH SIDES)
   GRATE 50 LBS. PER FT.
11. TOP SLOPE OF INLET SHALL BE CONSTRUCTED TO MATCH SLOPE OF ADJACENT PAVEMENT.
12. THESE GRATES ARE BICYCLE FRIENDLY.

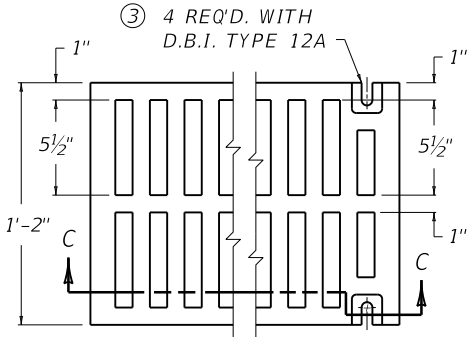

GRATE PLAN VIEW

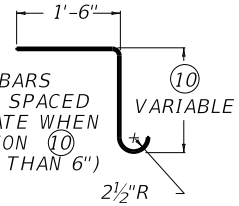

9 3 NO. 5 BARS EQUALLY SPACED (ELIMINATE WHEN DIMENSION 10 IS LESS THAN 6")

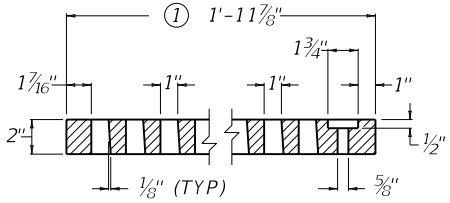

SECTION C-C

KENTUCKY
DEPARTMENT OF HIGHWAYS

DROP BOX INLET
TYPE 12 OR 12A

STANDARD DRAWING NO. RDB-012-10

SUBMITTED William E. Ginkel — DIRECTOR DIVISION OF DESIGN — 12-01-15 DATE

APPROVED — STATE HIGHWAY ENGINEER — 12-01-15 DATE

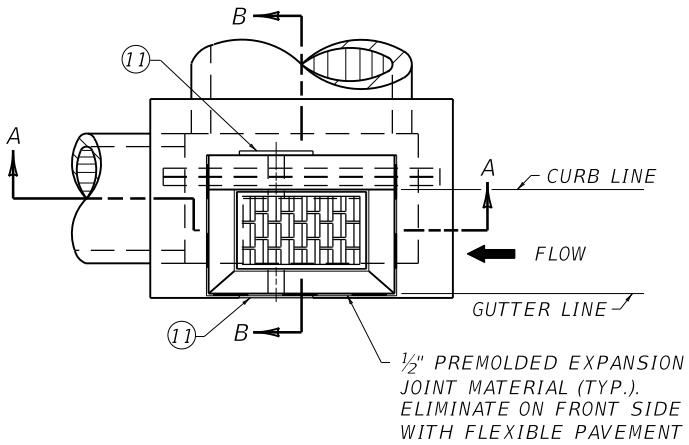

PLAN VIEW

~ NOTES ~

BID ITEM AND UNIT TO BID
DROP BOX INLET TYPE 13 (Δ)(✳) EACH

(Δ) = "S" (SAG CONDITION)
(Δ) = "G" (GRADE CONDITION)
(✳) = "T" (TOP PHASE)
(✳) = "B" (BOTTOM PHASE)

WITH NO "T" OR "B" SUFFIX A COMPLETE INLET IS REQUIRED.

1. BOX INLET SHALL BE CONSTRUCTED IN TWO PHASES (BOTTOM AND TOP) AND MAY BE CONSTRUCTED IN A SAG VERTICAL CURVE OR ON GRADE.
2. FOR ILLUSTRATION PURPOSES THIS DRAWING DEPICTS A BOX LOCATED ON A GRADE CONDITION. SEE CUR. STD. DWG. RDB-014 FOR DETAILS OF SAG AND GRADE CONDITIONS.
3. DIMENSION VARIES DEPENDING UPON LOCATION OF BOX; GRADE CONDITION = 2'-3", SAG CONDITION = 4'-11".
4. GRADE CONDITION: "X" = 2'-3" MIN. TO 5'-0" MAX., SAG CONDITION: "X" = 4'-11".
5. 2'-0" DESIRED COVER, 1'-0" MINIMUM COVER OVER PIPE AND/OR LID.
6. "t" IS CONCRETE PIPE WALL THICKNESS OR METAL CORRUGATION DEPTH.
7. ALL WALLS AND SLABS ARE 8" THICK UNLESS OTHERWISE SHOWN.
8. THICKNESS = CURB WIDTH + 2" (MINIMUM WIDTH 8" WITHOUT CURB). INLET MAY BE CONSTRUCTED WITH OR WITHOUT A CURB. THE CURB ON THE BOX SHALL BE CONSTRUCTED TO MATCH THE ADJOINING CURB WITH THE SAME CONSTRUCTION AND MATERIAL DETAILS (SEE CUR. STD. DWG. RPM-100). THIS DRAWING DEPICTS A LIP CURB APPLICATION.
9. THE TOP PHASE SHALL BE CAST AFTER THE ADJOINING CURB AND GUTTER HAVE BEEN CAST.
10. SEE CUR. STD. DWG. RDB-014, RDB-015, RDB-016, RDB-018, AND RDB-019 FOR FRAME AND GRATE DETAIL, STEEL PATTERN, DIMENSIONS AND QUANTITIES.
11. FABRIC WRAPPED BACKFILL DRAIN, (ONE PER WEEP HOLE).
12. THIS GRATE IS BICYCLE FRIENDLY.

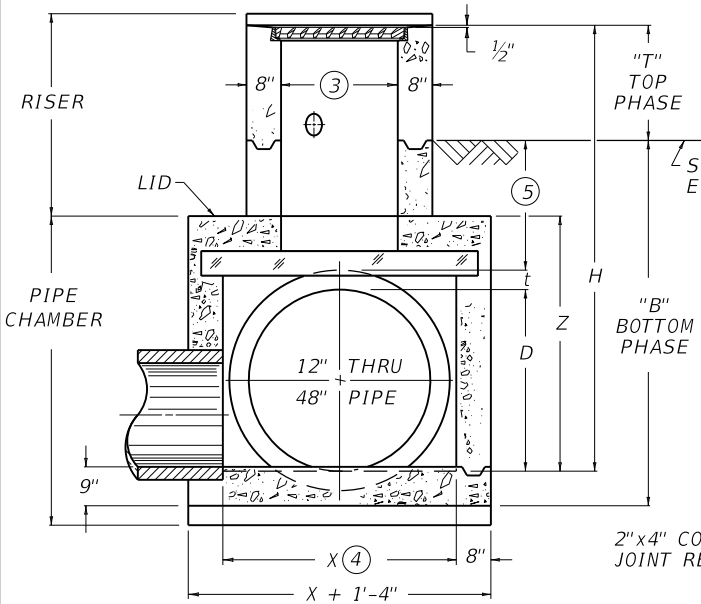

SECTION A-A

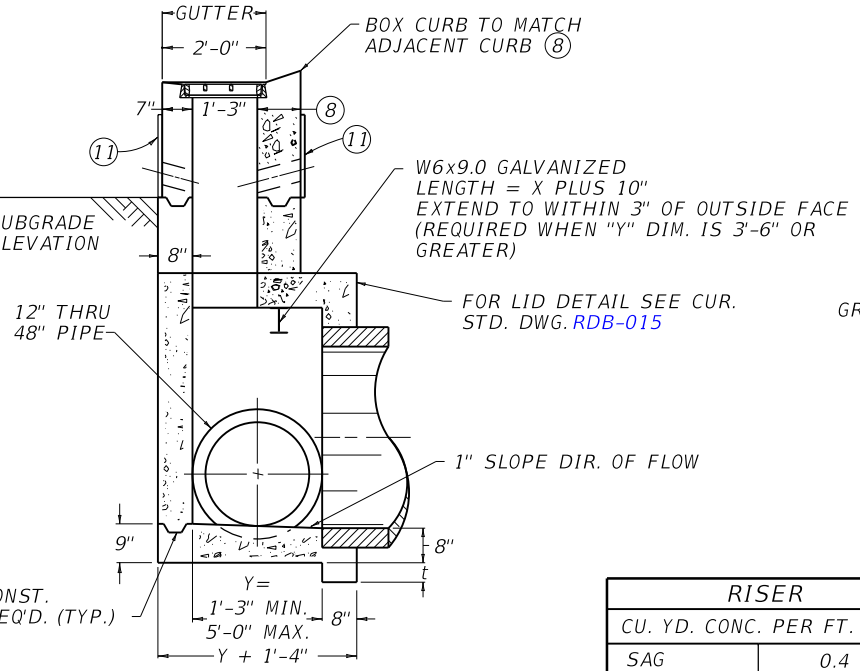

SECTION B-B

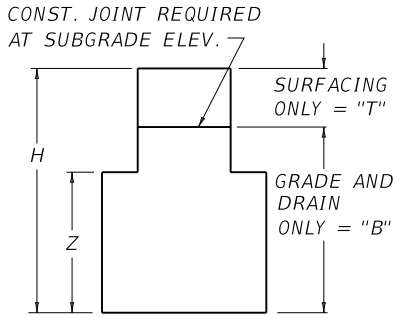

CONSTRUCTION SEQUENCE FOR GRADE & DRAIN AND/OR SURFACING

USE WITH CUR. STD. DWGS.
RDB-014 RDB-015 RDB-016
RDB-017 RDB-018 RDB-019
RPM-100

RISER	
CU. YD. CONC. PER FT. HT.	
SAG	0.4
GRADE	0.2

KENTUCKY
DEPARTMENT OF HIGHWAYS

DROP BOX INLET
TYPE 13
(DETAIL SHEET)

STANDARD DRAWING NO. RDB-013-07

SUBMITTED William E. Ginkel — DIRECTOR DIVISION OF DESIGN — 12-01-15 DATE

APPROVED — STATE HIGHWAY ENGINEER — 12-01-15 DATE

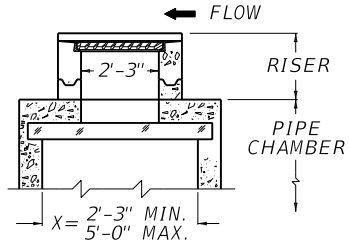

GRADE CONDITION
(1 GRATE & 1 FRAME REQ'D.)

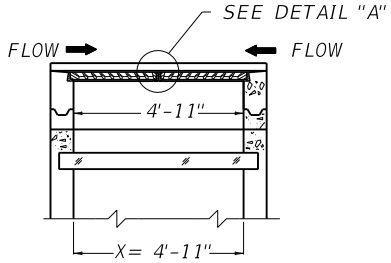

SAG CONDITION
(2 GRATES & 2 FRAMES REQ'D.)

~ NOTES ~

1. ALL FILLETS AND ROUNDS SHALL BE 1/8" r.
2. THE FRAME AND GRATE SHALL BE MANUFACTURED OF CAST GRAY IRON CONFORMING TO ASTM A-48 CLASS 35B.

APPROX. WEIGHT	
1 GRATE	160 LBS.
1 FRAME	70 LBS.

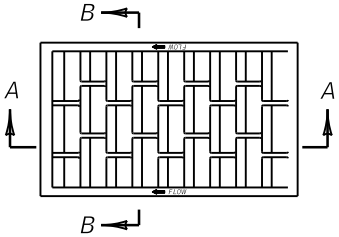

GRATE PLAN VIEW

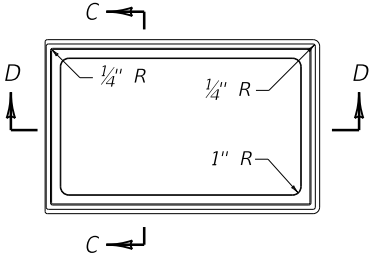

FRAME PLAN VIEW

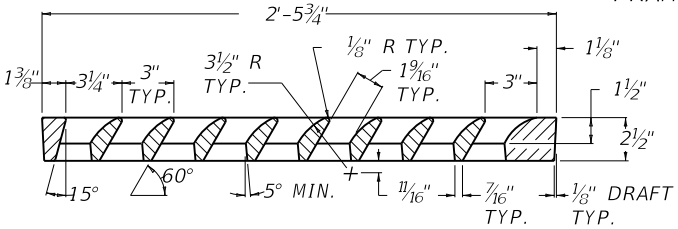

SECTION A-A

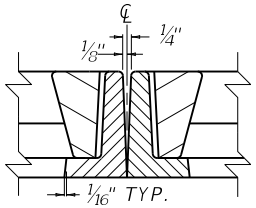

DETAIL "A"

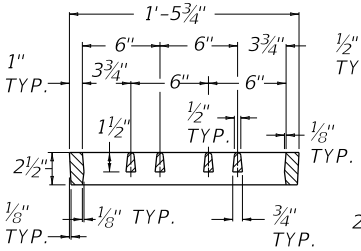

SECTION B-B

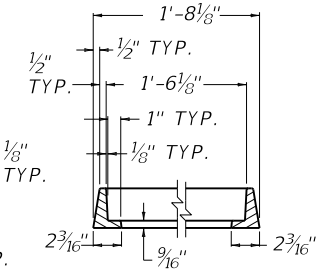

SECTION C-C

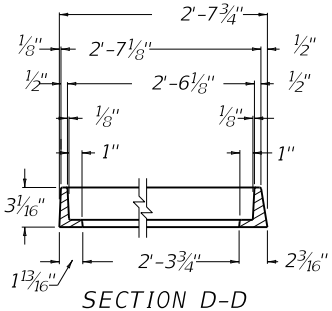

SECTION D-D

GRAY IRON CASTING

~ NOTES ~

1. THE 2 3/4" BAR SHALL BE NOTCHED TO RECEIVE THE 1" BAR.
2. THE FRAME AND GRATE SHALL BE ASSEMBLED WITH 2 (TWO) 1/2" X 2 1/4" STAINLESS HEX HEAD BOLTS AND NUTS (COMMERICAL QUALITY).
3. ALL STRUCTURAL STEEL SHALL CONFORM TO ASTM A-36.

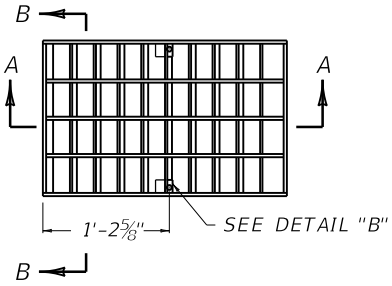

GRATE PLAN VIEW

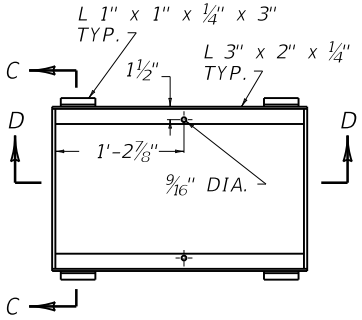

FRAME PLAN VIEW

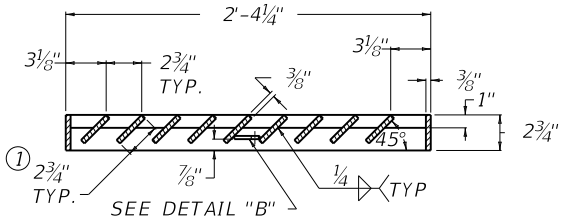

SECTION A-A

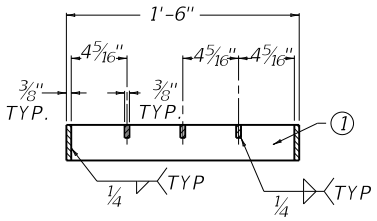

SECTION B-B

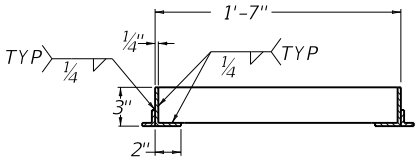

SECTION C-C

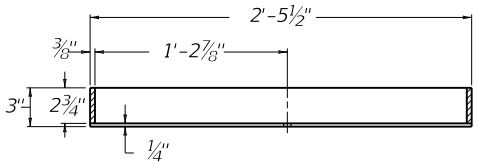

SECTION D-D

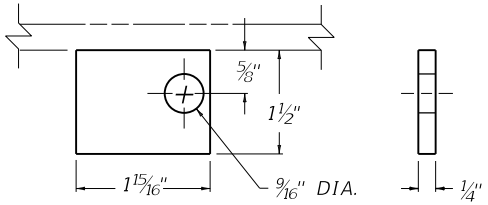

DETAIL "B"

3 STR. STEEL WTS.		
1 GRATE	TOTAL	1 FRAME
82 LBS.	126 LBS.	44 LBS.

STRUCTURAL STEEL

USE WITH CUR. STD. DWGS.
RDB-013 RDB-015 RDB-016
RDB-017 RDB-018 RDB-019
RDB-030 RDB-031 RDB-032
RDB-033 RDB-034 RDB-035

KENTUCKY
DEPARTMENT OF HIGHWAYS

DROP BOX INLET
TYPE 13 AND TYPE 16
(FRAME AND GRATE DETAILS)

STANDARD DRAWING NO. RDB-014-06

SUBMITTED William S. Gilbert — DIRECTOR DIVISION OF DESIGN — 12-01-15 DATE

APPROVED — STATE HIGHWAY ENGINEER — 12-01-15 DATE

REINFORCEMENT STEEL FOR 8" LID

(GRADE CONDITION)

SIZE		NO. 5 STEEL BARS								
X	Y	BAR s		BAR t		BAR u		BAR v		LBS.
		QTY.	LIN. FT.	QTY.	LIN. FT.	QTY.	LIN. FT.	QTY.	LIN. FT.	
2'-3"	1'-3"	--	--	--	--	--	--	--	--	7
	2'-0"	4	3'-0"	8	3'-3"	--	--	10	1'-0"	57
	2'-6"		3'-6"	10					1'-6"	71
	3'-0"		4'-0"	12					2'-0"	85
	3'-6"		4'-6"	14					2'-6"	99
	4'-0"		5'-0"	16					3'-0"	113
	4'-6"		5'-6"	18					3'-6"	127
	5'-0"		6'-0"	20					4'-0"	142
2'-6"	1'-3"	8	2'-3"	4	3'-6"	--	--	--	--	40
	2'-0"		3'-0"	8				8	1'-0"	70
	2'-6"		3'-6"	10					1'-6"	85
	3'-0"		4'-0"	12					2'-0"	101
	3'-6"		4'-6"	14					2'-6"	116
	4'-0"		5'-0"	16					3'-0"	132
	4'-6"		5'-6"	18					3'-6"	148
	5'-0"		6'-0"	20					4'-0"	163
3'-0"	1'-3"	8	2'-3"	4	4'-0"	--	--	--	--	42
	2'-0"		3'-0"	8				10	1'-0"	76
	2'-6"		3'-6"	10					1'-6"	94
	3'-0"		4'-0"	12					2'-0"	111
	3'-6"		4'-6"	14					2'-6"	129
	4'-0"		5'-0"	16					3'-0"	147
	4'-6"		5'-6"	18					3'-6"	164
	5'-0"		6'-0"	20					4'-0"	182
3'-6"	1'-3"	12	2'-3"	4	4'-6"	12	0'-11"	--	--	65
	2'-0"		3'-0"	8				8	1'-0"	102
	2'-6"		3'-6"	10					1'-6"	122
	3'-0"		4'-0"	12					2'-0"	142
	3'-6"		4'-6"	14					2'-6"	161
	4'-0"		5'-0"	16					3'-0"	181
	4'-6"		5'-6"	18					3'-6"	201
	5'-0"		6'-0"	20					4'-0"	221
4'-0"	1'-3"	12	2'-3"	4	5'-0"	12	1'-2"	--	--	71
	2'-0"		3'-0"	8				10	1'-0"	111
	2'-6"		3'-6"	10					1'-6"	133
	3'-0"		4'-0"	12					2'-0"	155
	3'-6"		4'-6"	14					2'-6"	177
	4'-0"		5'-0"	16					3'-0"	199
	4'-6"		5'-6"	18					3'-6"	221
	5'-0"		6'-0"	20					4'-0"	243
4'-6"	1'-3"	16	2'-3"	4	5'-6"	12	1'-5"	--	--	85
	2'-0"		3'-0"	8				8	1'-0"	129
	2'-6"		3'-6"	10					1'-6"	153
	3'-0"		4'-0"	12					2'-0"	177
	3'-6"		4'-6"	14					2'-6"	201
	4'-0"		5'-0"	16					3'-0"	225
	4'-6"		5'-6"	18					3'-6"	249
	5'-0"		6'-0"	20					4'-0"	273

(GRADE CONDITION)

SIZE		NO. 5 STEEL BARS								
X	Y	BAR s		BAR t		BAR u		BAR v		LBS.
		QTY.	LIN. FT.	QTY.	LIN. FT.	QTY.	LIN. FT.	QTY.	LIN. FT.	
5'-0"	1'-3"	16	2'-3"	4	6'-0"	12	1'-8"	--	--	90
	2'-0"		3'-0"	8				10	1'-0"	138
	2'-6"		3'-6"	10					1'-6"	164
	3'-0"		4'-0"	12					2'-0"	191
	3'-6"		4'-6"	14					2'-6"	217
	4'-0"		5'-0"	16					3'-0"	243
	4'-6"		5'-6"	18					3'-6"	269
	5'-0"		6'-0"	20					4'-0"	295

REINFORCEMENT STEEL FOR 8" LID
(SAG CONDITION)

SIZE		NO. 5 STEEL BARS								
X	Y	BAR s		BAR t		BAR u		BAR v		LBS.
		QTY.	LIN. FT.	QTY.	LIN. FT.	QTY.	LIN. FT.	QTY.	LIN. FT.	
4'-11"	1'-3"	--	--	--	--	--	--	--	--	7
	2'-0"	4	3'-0"	8	5'-11"	--	--	22	1'-0"	92
	2'-6"		3'-6"	10					1'-6"	118
	3'-0"		4'-0"	12					2'-0"	144
	3'-6"		4'-6"	14					2'-6"	169
	4'-0"		5'-0"	16					3'-0"	195
	4'-6"		5'-6"	18					3'-6"	221
	5'-0"		6'-0"	20					4'-0"	247

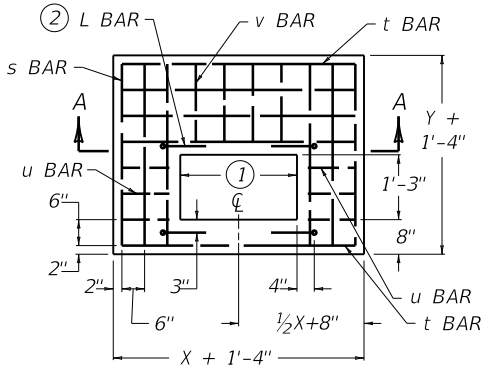

PLAN VIEW OF 8" LID

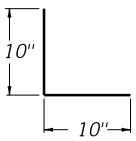

L BAR DETAIL

SECTION A-A

~ NOTES ~

1. DIMENSION VARIES DEPENDING UPON LOCATION OF BOX: GRADE CONDITION= 2'-3" SAG CONDITION= 4'-11"
2. IN ADDITION TO THE CHARTED STEEL, FOUR L BARS ARE REQUIRED IN THE LID AND ARE INCLUDED IN THE TOTALS.
3. CONCRETE QUANTITIES FOR LID ARE INCLUDED ON " DIMENSIONS AND ESTIMATE OF QUANTITIES FOR D.B.I. TYPE 13" . SEE CUR. STD. DWGS. RDB-016 AND RDB-017.
4. REINFORCEMENT SHALL HAVE A CLEAR DISTANCE OF 2" FROM THE OUTSIDE FACE UNLESS OTHERWISE SHOWN.

USE WITH CUR. STD. DWGS.
RDB-013 RDB-014 RDB-016
RDB-017 RDB-018 RDB-019

KENTUCKY
DEPARTMENT OF HIGHWAYS

DROP BOX INLET
TYPE 13
(DETAIL & BAR CHART
FOR LID)

STANDARD DRAWING NO. RDB-015-04

SUBMITTED William E. Ginkel — DIRECTOR, DIVISION OF DESIGN — 12-01-15 DATE

APPROVED — STATE HIGHWAY ENGINEER — 12-01-15 DATE

DIMENSIONS AND ESTIMATE OF QUANTITIES
(PIPE CHAMBER-GRADE CONDITION)

INLET SIZE ④ NO. ⑥	X	Y	MAX. PIPE DIA.	PIPE LOCATION	Z ①	CONCRETE CU. YD. ①②	CONCRETE Q ③
1	2'-3"	1'-3"	12"	X OR Y	2'-2"	0.8	0.2
2			15"	X	2'-5"		
3		2'-0"		X OR Y		1.0	0.3
4		1'-3"	18"	X	2'-9"	0.9	0.2
5		2'-0"		X OR Y		1.1	0.3
6		1'-3"	21"	X	3'-0"	1.0	0.2
7		2'-0"				1.2	0.3
8		2'-6"		X OR Y		1.3	
9			24"	Y	3'-3"	1.4	
10	2'-6"	1'-3"		X		1.1	
11		2'-0"				1.3	
12		2'-6"		X OR Y		1.5	
13	2'-3"	3'-0"	27"	Y	3'-6"	1.6	
14	2'-6"					1.7	
15	3'-0"	1'-3"		X		1.3	
16		2'-0"				1.6	
17		2'-6"				1.7	
18		3'-0"		X OR Y		1.9	0.4
19	2'-3"	3'-6"	30"	Y	4'-1"	2.0	0.3
20	2'-6"					2.1	0.4
21	3'-0"					2.3	
22	3'-6"	1'-3"		X	3'-10"	1.5	0.3
23		2'-0"				1.8	
24		2'-6"				2.0	0.4
25		3'-0"				2.2	
26		3'-6"		X OR Y	4'-1"	2.5	
27	2'-3"		33"	Y	4'-4"	2.1	0.3
28	2'-6"					2.2	0.4
29	3'-0"					2.4	
30	3'-6"	1'-3"		X	4'-1"	1.6	0.3
31		2'-0"				1.9	
32		2'-6"				2.1	0.4
33		3'-0"				2.3	
34		3'-6"		X OR Y	4'-4"	2.6	
35	2'-3"	4'-0"	36"	Y	4'-7"	2.4	
36	2'-6"					2.5	
37	3'-0"					2.7	
38	3'-6"					3.0	
39	4'-0"	1'-3"		X	4'-4"	1.8	0.3
40		2'-0"				2.2	0.4
41		2'-6"				2.4	
42		3'-0"				2.6	
43		3'-6"			4'-7"	3.0	
44		4'-0"		X OR Y		3.2	0.5
45	2'-3"	4'-6"	42"	Y	5'-2"	2.8	0.4
46	2'-6"					2.9	

INLET SIZE ④ NO. ⑥	X	Y	MAX. PIPE DIA.	PIPE LOCATION	Z ①	CONCRETE CU. YD. ①②	CONCRETE Q ③
47	3'-0"	4'-6"	42"	Y	5'-2"	3.2	0.4
48	3'-6"					3.4	0.5
49	4'-0"					3.7	
50	4'-6"	1'-3"		X	4'-11"	2.2	0.3
51		2'-0"				2.6	0.4
52		2'-6"				2.8	
53		3'-0"				3.1	
54		3'-6"			5'-2"	3.4	0.5
55		4'-0"				3.7	
56		4'-6"		X OR Y		4.0	
57	2'-3"	5'-0"	48"	Y	5'-8"	3.2	0.4
58	2'-6"					3.3	
59	3'-0"					3.6	0.5
60	3'-6"					3.9	
61	4'-0"					4.2	
62	4'-6"					4.5	
63	5'-0"	1'-3"		X	5'-5"	2.5	0.4
64		2'-0"				3.0	
65		2'-6"				3.2	
66		3'-0"				3.5	0.5
67		3'-6"			5'-8"	3.9	
68		4'-0"				4.2	
69		4'-6"				4.5	
70		5'-0"		X OR Y		4.8	0.6

REFERENCE CHART

DIA. OF PIPE	D.B.I. TYPE 13 PIPE ON "X" SIDE OF INLET	D.B.I. TYPE 13 PIPE ON "Y" SIDE OF INLET	CONCRETE TO DEDUCT FOR EACH PIPE CUBIC YARDS
0	2'-3"	1'-3"	----
12"			0.1
15"-18"		2'-0"	
21"		2'-6"	
24"	2'-6"		
27"	3'-0"	3'-0"	0.2
30"-33"	3'-6"	3'-6"	
36"	4'-0"	4'-0"	0.3
42"	4'-6"	4'-6"	0.4
48"	5'-0"	5'-0"	0.5

~ NOTES ~

① BASED ON "Z" AS EQUAL TO D+†+1'-0" WHEN "Y" DIMENSION IS LESS THAN 3'-6". BASED ON "Z" AS EQUAL TO D+†+1'-3" WHEN "Y" DIMENSION IS 3'-6" OR GREATER.

② SEE REFERENCE CHART FOR QUANTITIES TO DEDUCT FOR PIPE.

③ Q = CU. YD. PER FT. INCREASE OR DECREASE WHEN Z VARIES.

④ SEE CUR. STD. DWGS. RDB-013 AND RDB-014 FOR DIMENSIONS.

5. SEE CUR. STD. DWGS. RDB-018 AND RDB-019 FOR STEEL REINFORCEMENT IN PIPE CHAMBER AND RISER WHEN H = 8'-0" OR GREATER.

⑥ INLET IS SHOWN ON PLANS AS "DROP BOX INLET TYPE 13". FOLLOWING THIS IS A NUMBER AND A BOX HEIGHT. USE THIS NUMBER WITH THIS CHART.

7. SEE CUR. STD. DWG. RDB-017 FOR DIMENSIONS AND ESTIMATE OF QUANTITIES WHEN BOXES ARE LOCATED IN A SAG CONDITION.

USE WITH CUR. STD. DWGS.
RDB-013 RDB-014 RDB-015
RDB-017 RDB-018 RDB-019

KENTUCKY
DEPARTMENT OF HIGHWAYS

DROP BOX INLET
TYPE 13
(PIPE CHAMBER-GRADE CONDTN.)

STANDARD DRAWING NO. RDB-016-03

SUBMITTED William E. Ginkel — DIRECTOR DIVISION OF DESIGN — 12-01-15 DATE

APPROVED — STATE HIGHWAY ENGINEER — 12-01-15 DATE

DIMENSIONS AND ESTIMATE OF QUANTITIES
(PIPE CHAMBER-SAG CONDITION)

INLET SIZE ④			MAX. PIPE DIA.	PIPE LOCATION	Z ①	CONCRETE	
NO. ⑥	X	Y				CU. YD. ①②	Q ③
71	4'-11"	1'-3"	12"	X OR Y	2'-2"	1.2	0.4
72			15"	X	2'-5"	1.3	
73		2'-0"		X OR Y		1.6	
74		1'-3"	18"	X	2'-9"	1.4	
75		2'-0"		X OR Y		1.8	
76		1'-3"	21"	X	3'-0"	1.5	
77		2'-0"				1.9	
78		2'-6"		X OR Y		2.1	
79		1'-3"	24"	X	3'-3"	1.6	
80		2'-0"				2.0	
81		2'-6"		X OR Y		2.2	
82		1'-3"	27"	X	3'-6"	1.7	
83		2'-0"				2.1	
84		2'-6"				2.3	
85		3'-0"		X OR Y		2.5	0.5
86		1'-3"	30"	X	3'-10"	1.8	0.4
87		2'-0"				2.2	
88		2'-6"				2.4	
89		3'-0"				2.7	0.5
90		3'-6"		X OR Y	4'-1"	3.0	
91		1'-3"	33"	X		1.9	0.4
92		2'-0"				2.3	
93		2'-6"				2.5	
94		3'-0"				2.8	0.5
95		3'-6"		X OR Y	4'-4"	3.2	
96		1'-3"	36"	X		2.0	0.4
97		2'-0"				2.4	
98		2'-6"				2.7	
99		3'-0"				2.9	0.5
100		3'-6"			4'-7"	3.3	
101		4'-0"		X OR Y		3.5	
102		1'-3"	42"	X	4'-11"	2.2	0.4
103		2'-0"				2.6	
104		2'-6"				2.9	
105		3'-0"				3.2	0.5
106		3'-6"			5'-2"	3.6	
107		4'-0"				3.8	
108		4'-6"		X OR Y		4.1	
109		1'-3"	48"	X	5'-5"	2.4	0.4
110		2'-0"				2.8	
111		2'-6"				3.1	
112		3'-0"				3.4	0.5
113		3'-6"			5'-8"	3.8	
114		4'-0"				4.1	
115		4'-6"				4.4	
116		5'-0"		X OR Y		4.6	0.6

REFERENCE CHART

DIA. OF PIPE	D.B.I. TYPE 13		CONCRETE TO DEDUCT FOR EACH PIPE
	PIPE ON "X" SIDE OF INLET	PIPE ON "Y" SIDE OF INLET	CUBIC YARDS
0	4'-11"	1'-3"	----
12"			0.1
15"-18"		2'-0"	
21"		2'-6"	
24"			
27"		3'-0"	0.2
30"-33"		3'-6"	
36"		4'-0"	0.3
42"		4'-6"	0.4
48"		5'-0"	0.5

~ NOTES ~

① BASED ON "Z" AS EQUAL TO D+†+1'-0" WHEN "Y" DIMENSION IS LESS THAN 3'-6". BASED ON "Z" AS EQUAL TO D+†+1'-3" WHEN "Y" DIMENSION IS 3'-6" OR GREATER.

② SEE REFERENCE CHART FOR QUANTITIES TO DEDUCT FOR PIPE.

③ Q = CU. YD. PER FT. INCREASE OR DECREASE WHEN Z VARIES.

④ SEE CUR. STD. DWGS. RDB-013 AND RDB-014 FOR DIMENSIONS.

5. SEE CUR. STD. DWGS. RDB-018 AND RDB-019 FOR STEEL REINFORCEMENT IN PIPE CHAMBER AND RISER WHEN H = 8'-0" OR GREATER.

⑥ INLET IS SHOWN ON PLANS AS "DROP BOX INLET TYPE 13". FOLLOWING THIS IS A NUMBER AND A BOX HEIGHT. USE THIS NUMBER WITH THIS CHART.

7. SEE CUR. STD. DWG. RDB-016 FOR DIMENSIONS AND ESTIMATE OF QUANTITIES WHEN BOXES ARE LOCATED IN A GRADE CONDITION.

USE WITH CUR. STD. DWGS.
RDB-013 RDB-014 RDB-015
RDB-016 RDB-018 RDB-019

KENTUCKY
DEPARTMENT OF HIGHWAYS

DROP BOX INLET
TYPE 13
(PIPE CHAMBER-SAG CONDITION)

STANDARD DRAWING NO. RDB-017-03

SUBMITTED William E. Ginkel — DIRECTOR DIVISION OF DESIGN — 12-01-15 DATE

APPROVED — STATE HIGHWAY ENGINEER — 12-01-15 DATE

ADDITIONAL STEEL REINFORCEMENT REQUIREMENTS

(RISER, H = 8'-0" TO 15'-0", GRADE AND SAG CONDITION)

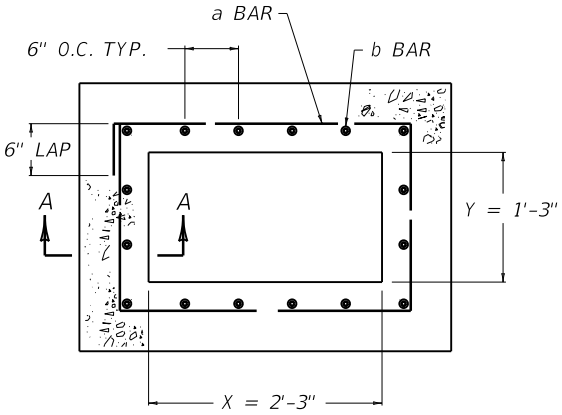

GRADE CONDITION

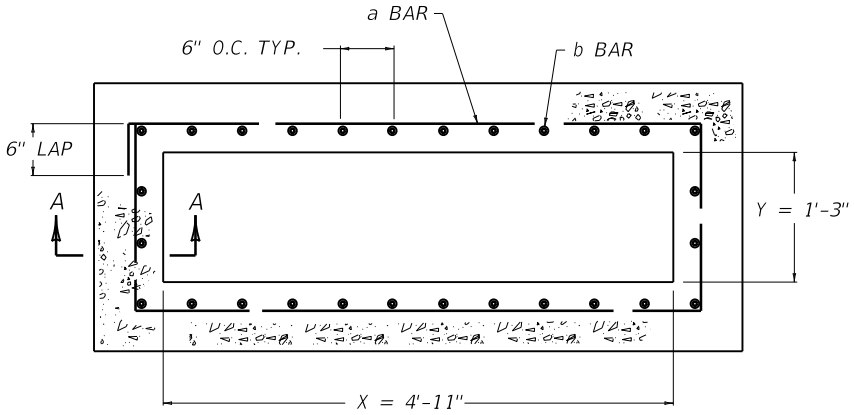

SAG CONDITION

~ NOTES ~

1. STEEL REINFORCEMENT SHALL HAVE A CLEAR DISTANCE OF 2" FROM THE FACE UNLESS OTHERWISE SHOWN.
2. ALL STEEL REINFORCEMENT SHALL BE NO. 5 BARS.

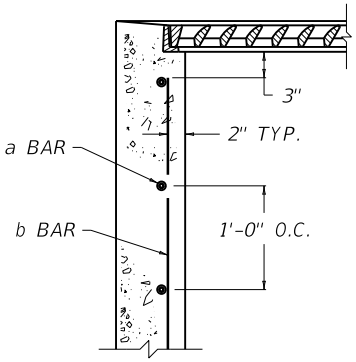

SECTION A-A

APPROXIMATE RISER QUANTITIES PER ONE FOOT IN HEIGHT

COND-ITION	SIZE		BAR a		BAR b		LBS STEEL
	X	Y	QTY.	LIN. FT.	QTY.	LIN. FT.	
GRADE	2'-3"	1'-3"	3	9'-3"	16	1'-0"	26
SAG	4'-11"		3	14'-7"	28		44

USE WITH CUR. STD. DWGS.
RDB-013 RDB-014 RDB-015
RDB-016 RDB-017 RDB-019

KENTUCKY
DEPARTMENT OF HIGHWAYS

DROP BOX INLET
TYPE 13
(ADDITIONAL STEEL - RISER)

STANDARD DRAWING NO. RDB-018-04

SUBMITTED William E. Ginkel 12-01-15
DIRECTOR, DIVISION OF DESIGN DATE

APPROVED 12-01-15
STATE HIGHWAY ENGINEER DATE

① ADDITIONAL STEEL REINFORCEMENT REQUIRMENTS

(PIPE CHAMBER, H = 8' TO 15', GRADE CONDITION)

SIZE ②		NO. 5 STEEL BARS									
		③ BAR n		④ BAR p		BAR q		BAR r		LBS. ⑤	
X	Y	QTY.	LIN. FT.	QTY.	LIN. FT.	QTY.	LIN. FT.	QTY.	LIN. FT.	TOTAL	⑥
2'-3"	1'-3"	16	6'-0"	6	9'-3"	4	1'-9"	3	2'-9"	174	26
	2'-0"	20			10'-9"		2'-6"	4		214	32
	2'-6"	22			11'-9"		3'-0"	5		238	35
	3'-0"	24			12'-9"		3'-6"	6		262	38
	3'-6"	26			13'-9"		4'-0"	7		286	41
	4'-0"	28			14'-9"		4'-6"	8		309	45
	4'-6"	30			15'-9"		5'-0"	9		333	48
	5'-0"	32			16'-9"		5'-6"	10		357	51
2'-6"	1'-3"	20	6'-0"	6	9'-9"	5	1'-9"	3	3'-0"	205	31
	2'-0"	22			11'-3"		2'-6"	4		234	35
	2'-6"	24			12'-3"		3'-0"	5		258	38
	3'-0"	26			13'-3"		3'-6"	6		283	41
	3'-6"	28			14'-3"		4'-0"	7		307	44
	4'-0"	30			15'-3"		4'-6"	8		332	47
	4'-6"	32			16'-3"		5'-0"	9		356	50
	5'-0"	34			17'-3"		5'-6"	10		381	53
3'-0"	1'-3"	22	6'-0"	6	10'-9"	6	1'-9"	3	3'-6"	227	34
	2'-0"	24			12'-3"		2'-6"	4		257	38
	2'-6"	26			13'-3"		3'-0"	5		283	41
	3'-0"	28			14'-3"		3'-6"	6		308	44
	3'-6"	30			15'-3"		4'-0"	7		334	47
	4'-0"	32			16'-3"		4'-6"	8		359	50
	4'-6"	34			17'-3"		5'-0"	9		385	53
	5'-0"	36			18'-3"		5'-6"	10		410	57
3'-6"	1'-3"	24	6'-0"	6	11'-9"	7	1'-9"	3	4'-0"	249	37
	2'-0"	26			13'-3"		2'-6"	4		281	41
	2'-6"	28			14'-3"		3'-0"	5		307	44
	3'-0"	30			15'-3"		3'-6"	6		334	47
	3'-6"	32			16'-3"		4'-0"	7		360	50
	4'-0"	34			17'-3"		4'-6"	8		387	53
	4'-6"	36			18'-3"		5'-0"	9		414	57
	5'-0"	38			19'-3"		5'-6"	10		440	60
4'-0"	1'-3"	26	6'-0"	6	12'-9"	8	1'-9"	3	4'-6"	271	40
	2'-0"	28			14'-3"		2'-6"	4		304	44
	2'-6"	30			15'-3"		3'-0"	5		332	47
	3'-0"	32			16'-3"		3'-6"	6		359	50
	3'-6"	34			17'-3"		4'-0"	7		387	53
	4'-0"	36			18'-3"		4'-6"	8		415	57
	4'-6"	38			19'-3"		5'-0"	9		442	60
	5'-0"	40			20'-3"		5'-6"	10		470	63
4'-6"	1'-3"	28	6'-0"	6	13'-9"	9	1'-9"	3	5'-0"	293	44
	2'-0"	30			15'-3"		2'-6"	4		328	47
	2'-6"	32			16'-3"		3'-0"	5		356	50
	3'-0"	34			17'-3"		3'-6"	6		385	53
	3'-6"	36			18'-3"		4'-0"	7		414	57
	4'-0"	38			19'-3"		4'-6"	8		442	60
	4'-6"	40			20'-3"		5'-0"	9		471	63
	5'-0"	42			21'-3"		5'-6"	10		500	66

SIZE ②		NO. 5 STEEL BARS									
		③ BAR n		④ BAR p		BAR q		BAR r		LBS. ⑤	
X	Y	QTY.	LIN. FT.	QTY.	LIN. FT.	QTY.	LIN. FT.	QTY.	LIN. FT.	TOTAL	⑥
5'-0"	1'-3"	30	6'-0"	6	14'-9"	10	1'-9"	3	5'-6"	316	47
	2'-0"	32			16'-3"		2'-6"	4		351	50
	2'-6"	34			17'-3"		3'-0"	5		381	53
	3'-0"	36			18'-3"		3'-6"	6		410	57
	3'-6"	38			19'-3"		4'-0"	7		440	60
	4'-0"	40			20'-3"		4'-6"	8		470	63
	4'-6"	42			21'-3"		5'-0"	9		500	66
	5'-0"	44			22'-3"		5'-6"	10		529	69

① ADDITIONAL STEEL REINFORCEMENT REQUIRMENTS

(PIPE CHAMBER, H = 8' TO 15', SAG CONDITION)

SIZE ②		NO. 5 STEEL BARS									
		③ BAR n		④ BAR p		BAR q		BAR r		LBS. ⑤	
X	Y	QTY.	LIN. FT.	QTY.	LIN. FT.	QTY.	LIN. FT.	QTY.	LIN. FT.	TOTAL	⑥
4'-11"	1'-3"	28	6'-0"	6	14'-7"	10	1'-9"	3	5'-5"	302	44
	2'-0"	32			16'-1"		2'-6"	4		350	50
	2'-6"	34			17'-1"		3'-0"	5		379	53
	3'-0"	36			18'-1"		3'-6"	6		409	56
	3'-6"	38			19'-1"		4'-0"	7		438	60
	4'-0"	40			20'-1"		4'-6"	8		468	63
	4'-6"	42			21'-1"		5'-0"	9		498	66
	5'-0"	44			22'-1"		5'-6"	10		527	69

~ NOTES ~

1. BASED ON "Z" AS EQUAL TO 6'-0".
2. SEE CUR. STD. DWGS. RDB-013 AND RDB-014 FOR LOCATION AND DIMENSIONS.
3. LENGTH OF "n" BAR IS ALWAYS SAME AS "Z" DIMENSION.
4. ADD OR SUBTRACT ONE "p" BAR PER EVEN FT. VARIANCE FROM 6'-0" "Z".
5. NO DEDUCTIONS HAVE BEEN MADE FOR PIPE.
6. ADD OR SUBTRACT LBS. STEEL PER FT. VARIANCE FROM 6'-0" "Z".
7. REINFORCEMENT SHALL HAVE A CLEAR DISTANCE OF 2" FROM THE FACE UNLESS OTHERWISE SHOWN.

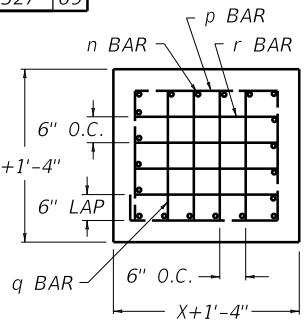

SECTION B-B

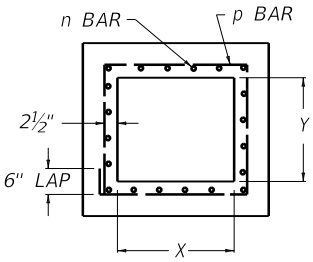

SECTION C-C

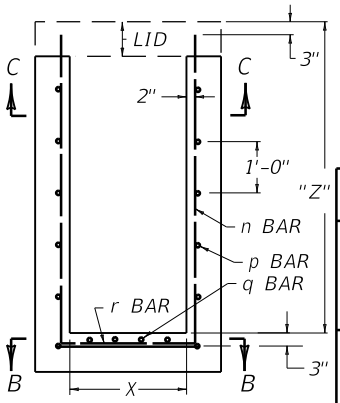

SECTION A-A

USE WITH CUR. STD. DWGS.
RDB-013 RDB-014 RDB-015
RDB-016 RDB-017 RDB-018

KENTUCKY
DEPARTMENT OF HIGHWAYS

DROP BOX INLET
TYPE 13
(ADDITIONAL STEEL - CHAMBER)

STANDARD DRAWING NO. RDB-019-04

SUBMITTED _____ DIRECTOR, DIVISION OF DESIGN — 12-01-15 DATE

APPROVED _____ STATE HIGHWAY ENGINEER — 12-01-15 DATE

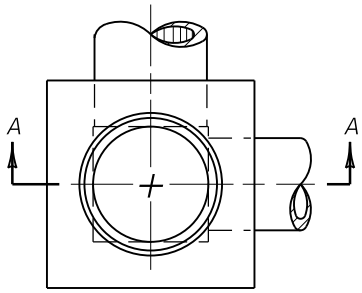

PLAN VIEW

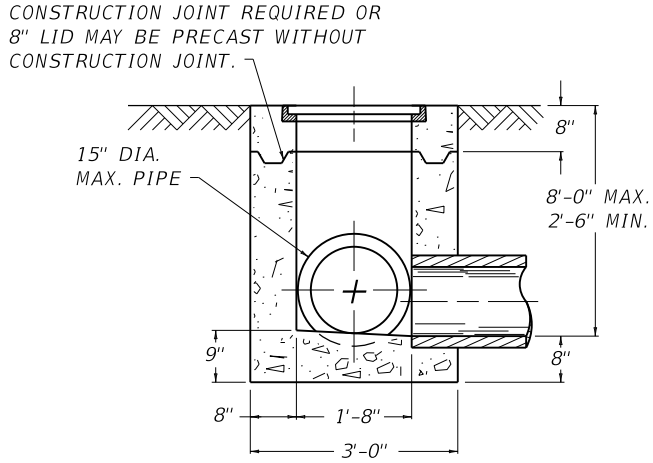

SECTION A-A

~ NOTES ~

1. TYPE 14 RADIAL GRATE HAS APPROXIMATELY 140 SQ. IN. OF TOTAL OPENING AREA.
2. APPROX. WEIGHT OF TYPE 14 ---- 95 LBS.
   APPROX. WEIGHT OF TYPE 15 ---- 120 LBS.
   APPROX. WEIGHT OF FRAME ------ 95 LBS.

BID ITEM AND UNIT TO BID

DROP BOX INLET TYPE 14	EACH
OR	
DROP BOX INLET TYPE 15	EACH

LIMITATIONS:
TYPE 14 - FLUSH GRATE AND IS TRAVERSABLE.
TYPE 15 - NON-TRAVERSABLE WITH MAXIMUM RESISTANCE TO CLOGGING.

PRIMARY USE:
YARD SUMP

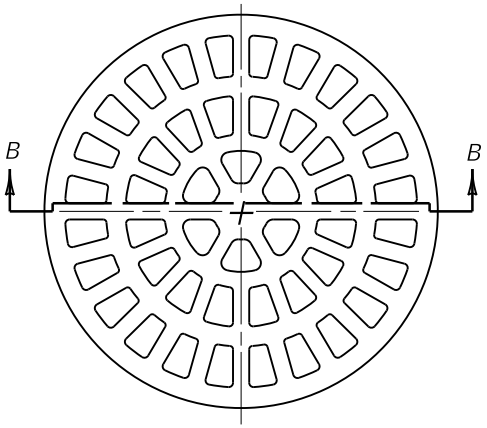

PLAN VIEW

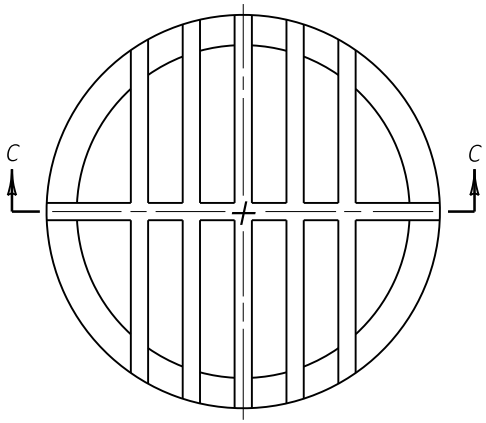

PLAN VIEW

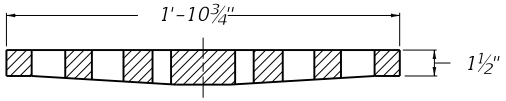

SECTION B-B TYPE 14
(RADIAL)

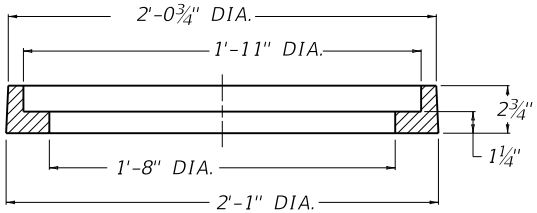

SECTIONAL DETAIL OF FRAME

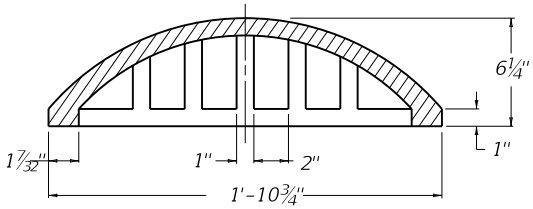

SECTION C-C TYPE 15
(BEEHIVE)

KENTUCKY
DEPARTMENT OF HIGHWAYS

DROP BOX INLET
TYPE 14 AND 15

STANDARD DRAWING NO. RDB-020-05

SUBMITTED William E. Ginkel — DIRECTOR DIVISION OF DESIGN — 12-01-15 DATE

APPROVED — STATE HIGHWAY ENGINEER — 12-01-15 DATE

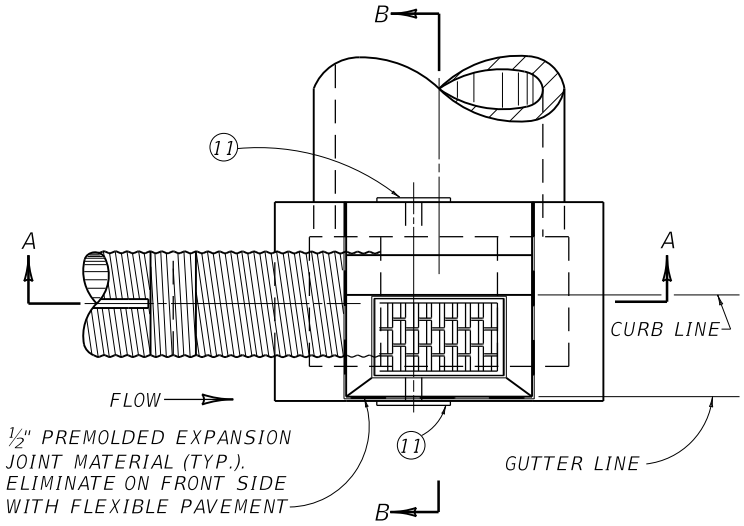

PLAN VIEW

~ NOTES ~

BID ITEM AND UNIT TO BID
DROP BOX INLET TYPE 16 (Δ)(✳) EACH

(Δ) = "S" (SAG CONDITION)
(Δ) = "G" (GRADE CONDITION)
(✳) = "T" (TOP PHASE)
(✳) = "B" (BOTTOM PHASE)

WITH NO "T" OR "B" SUFFIX A COMPLETE INLET IS REQUIRED.

1. BOX INLET MAY BE CONSTRUCTED IN TWO PHASES (BOTTOM AND TOP) AND MAY BE CONSTRUCTED IN A SAG VERTICAL CURVE OR ON GRADE.
2. FOR ILLUSTRATION PURPOSES THIS DRAWING DEPICTS A BOX LOCATED ON A GRADE CONDITION. SEE CUR. STD. DWG. RDB-014 FOR DETAILS OF SAG AND GRADE CONDITIONS.
3. DIMENSION VARIES DEPENDING UPON LOCATION OF BOX: GRADE CONDITION = 2'-3", SAG CONDITION = 4'-11".
4. GRADE CONDITION: X = 2'-3" MIN. TO 5'-0" MAX. , SAG CONDITION: X=4'-11".
5. 2'-0" DESIRED COVER, 1'-0" MIN. COVER OVER PIPE AND/OR LID.
6. "t" IS CONCRETE PIPE WALL THICKNESS OR METAL CORRUGATION DEPTH.
7. ALL WALLS AND SLABS ARE 8" THICK UNLESS OTHERWISE SHOWN.
8. THE CURB ON THE BOX SHALL BE CONSTRUCTED TO MATCH THE ADJOINING CURB WITH THE SAME CONSTRUCTION AND MATERIAL DETAILS (SEE CUR. STD. DWG. RPM-100). THIS DRAWING DEPICTS A LIP CURB APPLICATION.
9. THE TOP PHASE SHALL BE CAST AFTER THE ADJOINING CURB AND GUTTER HAVE BEEN CAST.
10. SEE CUR.T STD. DWG. RDB-014 FOR FRAME AND GRATE DETAIL. SEE CUR. STD. DWG. RDB-031 FOR STEEL PATTERN. SEE CUR. STD. DWG. RDB-033 FOR DIMENSIONS AND QUANTITIES.
11. FABRIC WRAPPED BACKFILL DRAIN, (ONE PER WEEP HOLE) .
12. 2'-0" FOR 12", 15", AND 18" OR 2'-6" FOR 24" SLOTTED DRAIN PIPE.
13. MINIMUM HEIGHT FOR LONGITUDINAL PIPE SHALL BE H = 11" + INSIDE DIAMETER OF PIPE.
14. THIS GRATE IS BICYCLE FRIENDLY.

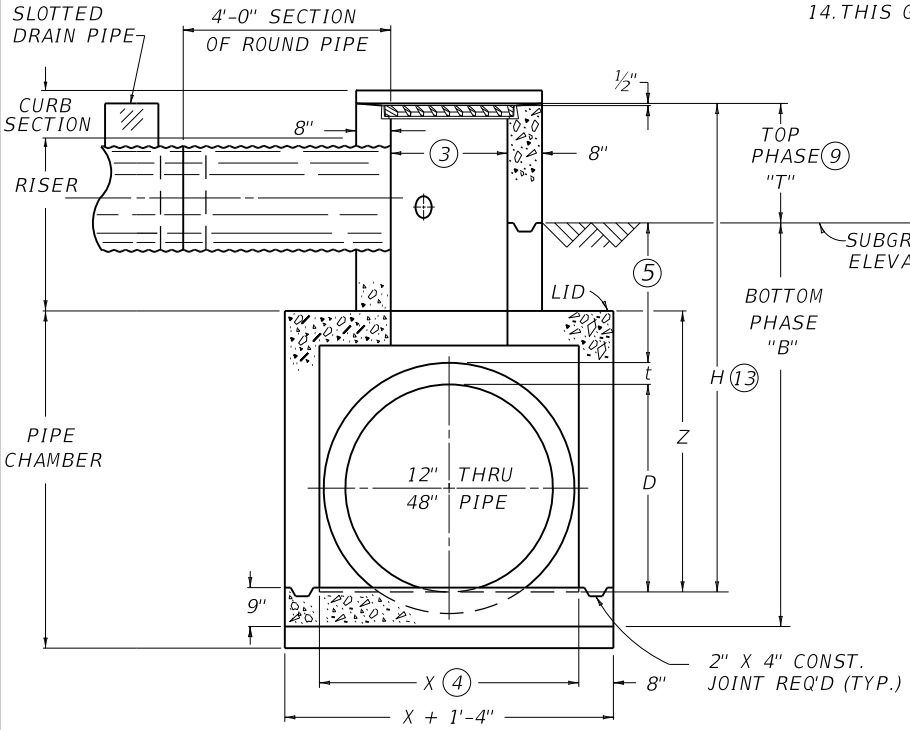

SECTION A-A

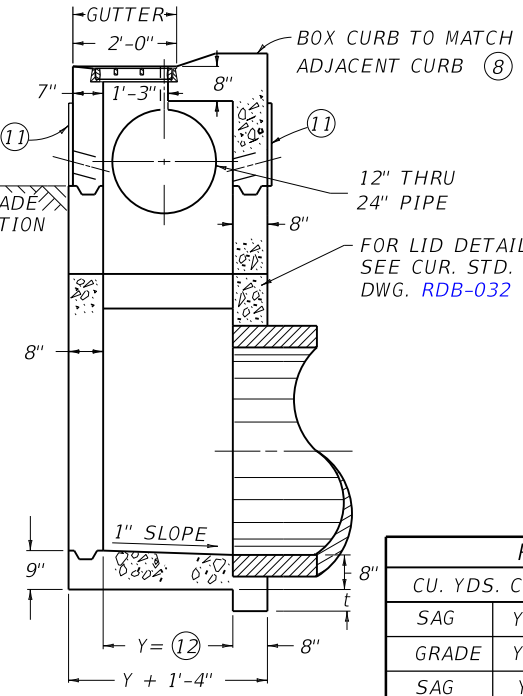

SECTION B-B

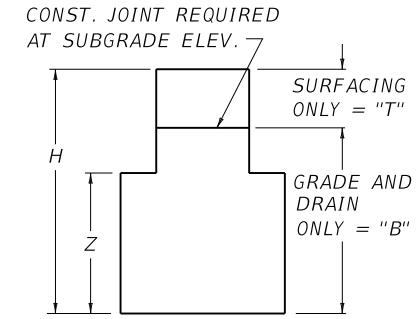

CONSTRUCTION SEQUENCE FOR GRADE & DRAIN AND/OR SURFACING

USE WITH CUR. STD. DWGS.
RDB-014 RDB-031 RDB-032
RDB-033 RDB-034 RDB-035
RDI-200

RISER		
CU. YDS. CONC. PER FT. HT		
SAG	Y = 2'-0"	0.4
GRADE	Y = 2'-0"	0.3
SAG	Y = 2'-6"	0.4
GRADE	Y = 2'-6"	0.3

KENTUCKY
DEPARTMENT OF HIGHWAYS

DROP BOX INLET
TYPE 16
(DETAIL SHEET)

STANDARD DRAWING NO. RDB-030-04

SUBMITTED William S. Ghaled DIRECTOR DIVISION OF DESIGN 12-01-15 DATE

APPROVED STATE HIGHWAY ENGINEER 12-01-15 DATE

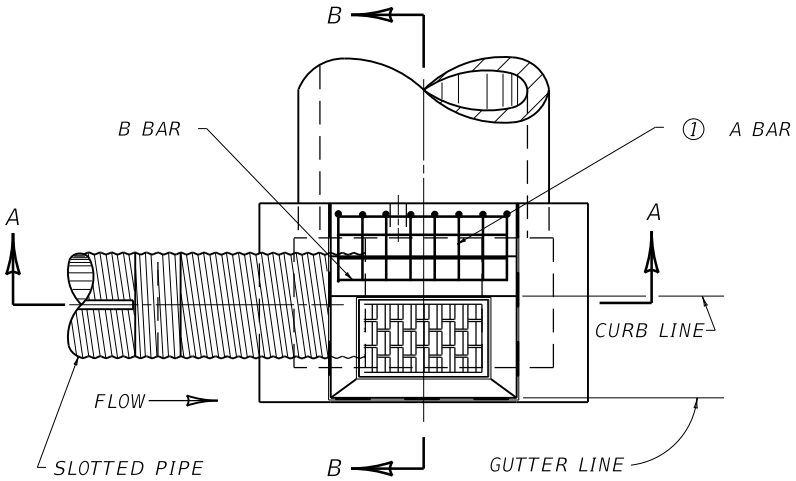

PLAN VIEW

~ NOTES ~

1. ① SLOTTED PIPE SIZE DENOTES WHICH "A" BAR TO USE, SEE STEEL CHART ON THIS DRAWING.
2. SEE CUR. STD. DWG. RDB-032 FOR LID REINFORCEMENT.
3. REINFORCEMENT SHALL HAVE A CLEAR DISTANCE OF 2" FROM THE OUTSIDE FACE UNLESS OTHERWISE SHOWN.
4. SPACE "A" BARS APPROXIMATELY 6" CENTER TO CENTER.
5. SPACE "B" BARS AS SHOWN.

STEEL REINFORCEMENT CHART

NO. 5 BAR	SLOTTED PIPE SIZE	CONDITION	QTY.	LGTH.	TOTAL LBS
A BAR	12" THRU 18"	GRADE	8	2'-7"	22
B BAR			6	3'-3"	20
A BAR		SAGE	13	2'-7"	35
B BAR			6	5'-11"	37
A BAR	24"	GRADE	8	3'-10"	32
B BAR			6	3'-3"	20
A BAR		SAGE	13	3'-10"	52
B BAR			6	5'-11"	37

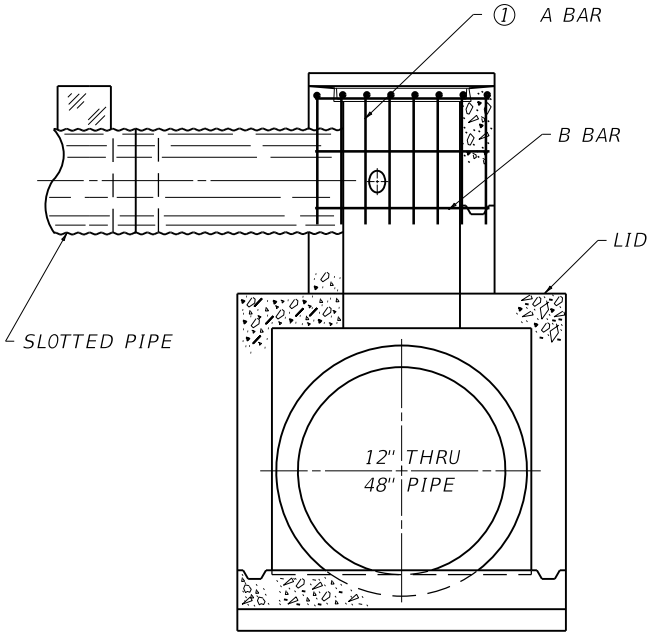

SECTION A-A

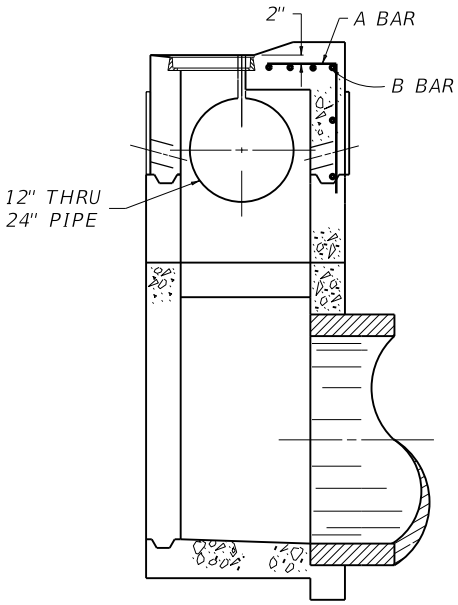

SECTION B-B

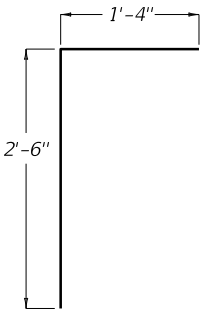

A BAR DETAIL
24" PIPE

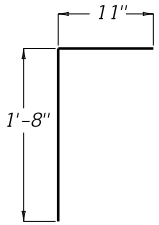

A BAR DETAIL
12" - 18" PIPE

USE WITH CUR. STD. DWGS.
RDI-200 RDB-014 RDB-030
RDB-032 RDB-033 RDB-034
RDB-035

KENTUCKY
DEPARTMENT OF HIGHWAYS

DROP BOX INLET
TYPE 16
(STEEL SHEET)

STANDARD DRAWING NO. RDB-031-04

SUBMITTED William E. Ginkel — DIRECTOR, DIVISION OF DESIGN — 12-01-15 DATE

APPROVED — STATE HIGHWAY ENGINEER — 12-01-15 DATE

REINFORCEMENT STEEL FOR 8" LID

(GRADE CONDITION)

SIZE		NO. 5 STEEL BARS						
X	Y	BAR s		BAR t		BAR u		LBS.
		QTY.	LIN. FT.	QTY.	LIN. FT.	QTY.	LIN. FT.	
2'-3"	2'-0"	4	3'-0"	4	3'-3"	--	--	33
	2'-6"		3'-6"			--	--	35
2'-6"	2'-0"	8	3'-0"		3'-6"	--	--	47
	2'-6"		3'-6"			--	--	51
3'-0"	2'-0"		3'-0"		4'-0"	--	--	49
	2'-6"		3'-6"			--	--	53
3'-6"	2'-0"	12	3'-0"		4'-6"	20	0'-11"	82
	2'-6"		3'-6"			24		89
4'-0"	2'-0"		3'-0"		5'-0"	20	1'-2"	86
	2'-6"		3'-6"			24		101
4'-6"	2'-0"	16	3'-0"		5'-6"	20	1'-5"	110
	2'-6"		3'-6"			24		124
5'-0"	2'-0"		3'-0"		6'-0"	20	1'-8"	117
	2'-6"		3'-6"			24		132

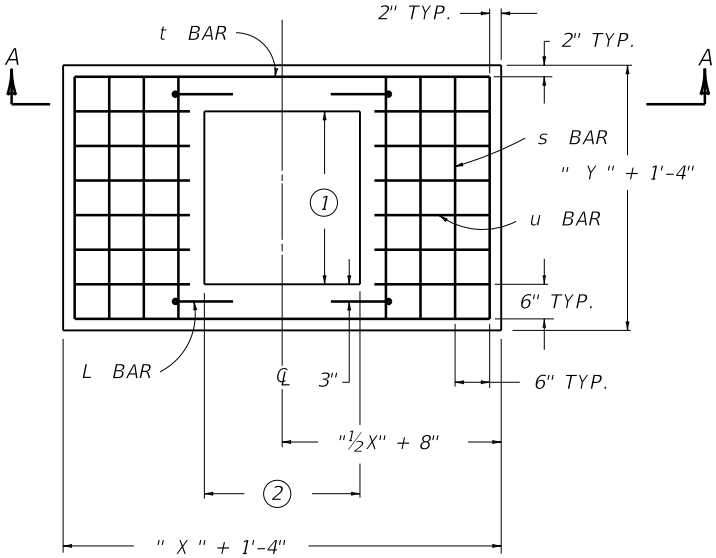

DETAIL OF 8" LID
PLAN VIEW

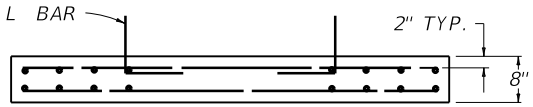

SECTION A-A

~ NOTES ~

1. 2'-0" FOR 12", 15", AND 18" OR 2'-6" FOR 24" SLOTTED DRAIN PIPE.
2. DIMENSION VARIES DEPENDING UPON LOCATION OF BOX:
   GRADE CONDITION = 2'-3"
   SAG CONDITION = 4'-11"
3. IN ADDITION TO THE CHARTED STEEL, FOUR "L" BARS ARE REQUIRED IN THE LID AND ARE INCLUDED IN THE TOTALS.
4. CONCRETE QUANTITIES FOR LID ARE INCLUDED ON " DIMENSIONS AND ESTIMATE OF QUANTITIES FOR D.B.I. TYPE 16". SEE CUR. STD. DWG. RDB-033
5. LID REINFORCING STEEL NOT REQUIRED IN SAG LOCATION.
6. REINFORCEMENT SHALL HAVE A CLEAR DISTANCE OF 2" FROM THE OUTSIDE FACE UNLESS OTHERWISE SHOWN.

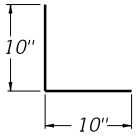

L BAR DETAIL

USE WITH CUR. STD. DWGS.
RDI-200 RDB-014 RDB-030
RDB-031 RDB-033 RDB-034
RDB-035

KENTUCKY
DEPARTMENT OF HIGHWAYS

DROP BOX INLET
TYPE 16
(DETAIL & BAR CHART FOR LID)

STANDARD DRAWING NO. RDB-032-04

SUBMITTED _____ DIRECTOR, DIVISION OF DESIGN — 12-01-15 DATE

APPROVED _____ STATE HIGHWAY ENGINEER — 12-01-15 DATE

DIMENSIONS AND ESTIMATE OF QUANTITIES
(GRADE CONDITION)

INLET SIZE ④			MAX. PIPE DIA.	LOCATION	Z ①	CONCRETE	
NO. ⑥	X	Y				CU. YD. ①②	Q ③
1	2'-3"	2'-0"	12"	X OR Y	2'-2"	0.9	0.3
2			15"		2'-5"	1.0	
3			18"		2'-9"	1.1	
4			21"	X	3'-0"		
5		2'-6"		X OR Y		1.3	
6			24"	Y	3'-3"		
7	2'-6"	2'-0"		X			
8		2'-6"		X OR Y		1.4	
9	3'-0"	2'-0"	27"	X	3'-6"	1.5	
10		2'-6"				1.7	
11	3'-6"	2'-0"	30"		3'-10"	1.8	
12		2'-6"				2.0	0.4
13		2'-0"	33"		4'-1"	1.9	0.3
14		2'-6"				2.0	0.4
15	4'-0"	2'-0"	36"		4'-4"	2.1	
16		2'-6"				2.3	
17	4'-6"	2'-0"	42"		4'-11"	2.5	
18		2'-6"				2.7	
19	5'-0"	2'-0"	48"		5'-5"	2.9	
20		2'-6"				3.2	

DIMENSIONS AND ESTIMATE OF QUANTITIES
(SAG CONDITION)

INLET SIZE ④			MAX. PIPE DIA.	LOCATION	Z ①	CONCRETE	
NO. ⑥	X	Y				CU. YD. ①②	Q ③
21	4'-11"	2'-0"	12"	X OR Y	2'-2"	1.4	0.4
22			15"		2'-5"	1.5	
23			18"		2'-9"	1.7	
24			21"	X	3'-0"	1.8	
25		2'-6"		X OR Y		1.9	
26		2'-0"	24"	X	3'-3"		
27		2'-6"		X OR Y		2.0	
28		2'-0"	27"	X	3'-6"		
29		2'-6"				2.1	
30		2'-0"	30"		3'-10"		
31		2'-6"				2.3	
32		2'-0"	33"		4'-1"	2.2	
33		2'-6"				2.4	
34		2'-0"	36"		4'-4"	2.3	
35		2'-6"				2.5	
36		2'-0"	42"		4'-11"		
37		2'-6"				2.8	
38		2'-0"	48"		5'-5"		
39		2'-6"				3.0	

~ NOTES ~

① BASED ON "Z" AS EQUAL TO D++12" .
② SEE REFERENCE CHART FOR QUANTITIES TO DEDUCT FOR PIPE.
③ Q = CU. YDS. PER FT. INCREASE OR DECREASE WHEN "Z" VARIES.
④ SEE CUR. STD. DWG. RDB-030 FOR DIMENSIONS.
5. SEE CUR. STD. DWGS. RDB-034 AND RDB-035 FOR STEEL REINFORCEMENT IN PIPE CHAMBER AND RISER WHEN H = 8'-0" OR GREATER.
⑥ INLET IS SHOWN ON PLANS AS "DROP BOX INLET TYPE 16". FOLLOWING THIS IS A NUMBER AND A BOX HEIGHT. USE THIS NUMBER WITH THIS CHART.

REFERENCE CHART
(GRADE CONDITION)

DIA. OF PIPE	D.B.I. TYPE 16		CONCRETE TO DEDUCT FOR EACH PIPE
	PIPE ON "X" SIDE OF INLET	PIPE ON "Y" SIDE OF INLET	CU. YDS.
0	2'-3"	2'-0"	----
12"			0.1
15"-18"			
21"		2'-6"	
24"	2'-6"		
27"	3'-0"	----	0.2
30"-33"	3'-6"		
36"	4'-0"		0.3
42"	4'-6"		0.4
48"	5'-0"		0.5

REFERENCE CHART
(SAG CONDITION)

DIA. OF PIPE	D.B.I. TYPE 16		CONCRETE TO DEDUCT FOR EACH PIPE
	PIPE ON "X" SIDE OF INLET	PIPE ON "Y" SIDE OF INLET	CU. YDS.
0	4'-11"	2'-0"	----
12"			0.1
15"-18"			
21"		2'-6"	
24"			
27"		----	0.2
30"-33"			
36"			0.3
42"			0.4
48"			0.5

USE WITH CUR. STD. DWGS.
RDI-200 RDB-014 RDB-030
RDB-031 RDB-032 RDB-034
RDB-035

KENTUCKY
DEPARTMENT OF HIGHWAYS

DROP BOX INLET
TYPE 16
(DIMENSIONS & ESTIMATE OF QUANTITIES)

STANDARD DRAWING NO. RDB-033-03

SUBMITTED William E. Ginkel DIRECTOR DIVISION OF DESIGN 12-01-15 DATE
APPROVED STATE HIGHWAY ENGINEER 12-01-15 DATE

ADDITIONAL STEEL REINFORCEMENT REQUIREMENTS

(RISER, H = 8'-0" TO 15'-0", GRADE AND SAG CONDITION)

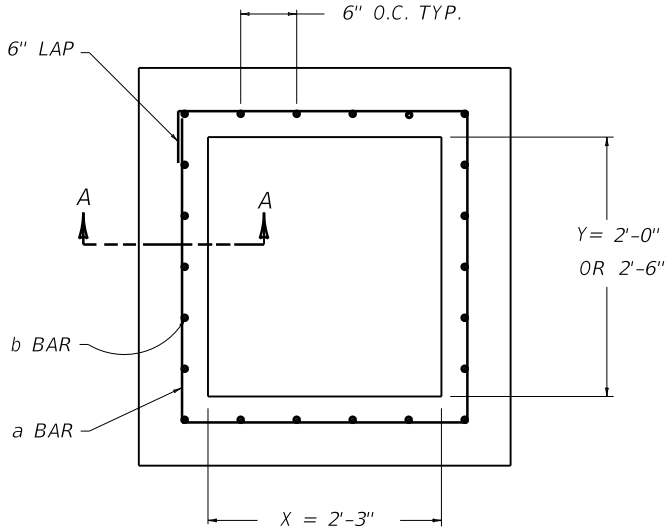

GRADE CONDITION

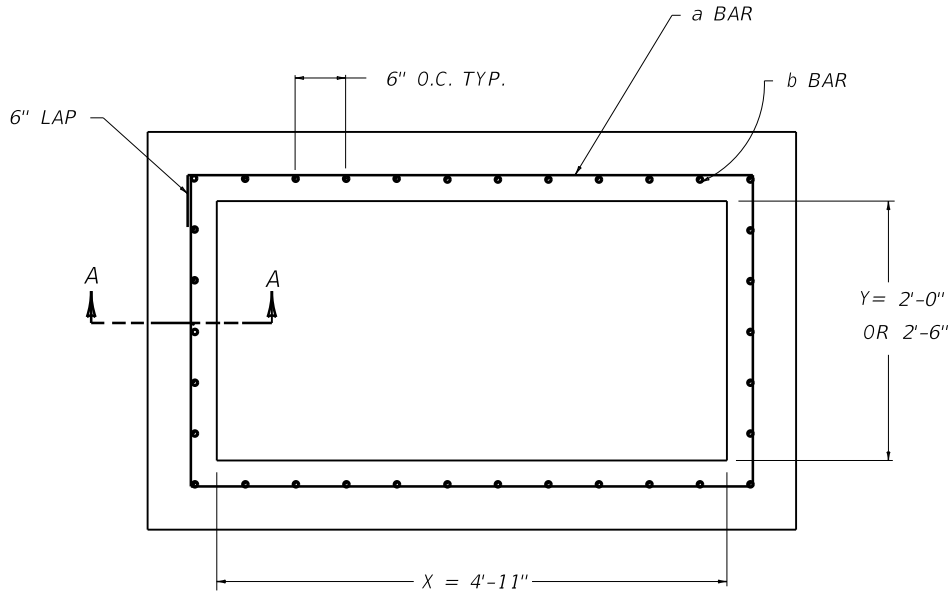

SAG CONDITION

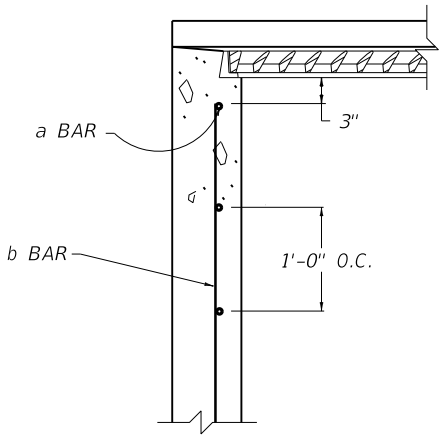

SECTION A-A

APPROXIMATE RISER QUANTITIES
PER FT. IN HEIGHT-NO. 5 BARS

COND-ITION	SIZE		BAR a		BAR b		LBS STEEL
	X	Y	QTY.	LIN. FT.	QTY.	LIN. FT.	
GRADE	2'-3"	2'-0"	1	10'-9"	20	1'-0"	32
		2'-6"	1	11'-6"	22		35
SAG	4'-11"	2'-0"	1	16'-1"	32		50
		2'-6"	1	17'-1"	34		53

USE WITH CUR. STD. DWGS.
RDI-200 RDB-014 RDB-030
RDB-031 RDB-032 RDB-033
RDB-035

KENTUCKY
DEPARTMENT OF HIGHWAYS

DROP BOX INLET
TYPE 16
(ADDITIONAL STEEL- RISER)

STANDARD DRAWING NO. RDB-034-04

SUBMITTED William E. Ginkel — DIRECTOR, DIVISION OF DESIGN — 12-01-15 DATE

APPROVED — STATE HIGHWAY ENGINEER — 12-01-15 DATE

① ADDITIONAL STEEL REINFORCEMENT FOR PIPE CHAMBER

(H = 8' TO 15' , GRADE CONDITION)

SIZE ②		NO. 5 STEEL BARS									
X	Y	BAR n ③		BAR p ④		BAR q		BAR r		LBS. ⑤	
		QTY.	LIN. FT.	QTY.	LIN. FT.	QTY.	LIN. FT.	QTY.	LIN. FT.	TOTAL	⑥
2'-3"	2'-0"	20	6'-0"	6	10'-9"	4	2'-6"	4	2'-9"	214	32
	2'-6"	22			11'-9"		3'-0"	5		238	35
2'-6"	2'-0"				11'-3"	5	2'-6"	4	3'-0"	234	
	2'-6"	24			12'-3"		3'-0"	5		258	38
3'-0"	2'-0"					6	2'-6"	4	3'-6"	257	
	2'-6"	26			13'-3"		3'-0"	5		283	41
3'-6"	2'-0"					7	2'-6"	4	4'-0"	281	
	2'-6"	28			14'-3"		3'-0"	5		307	44
4'-0"	2'-0"					8	2'-6"	4	4'-6"	304	
	2'-6"	30			15'-3"		3'-0"	5		332	47
4'-6"	2'-0"					9	2'-6"	4	5'-0"	328	
	2'-6"	32			16'-3"		3'-0"	5		356	50
5'-0"	2'-0"					10	2'-6"	4	5'-6"	351	
	2'-6"	34			17'-3"		3'-0"	5		381	53

① ADDITIONAL STEEL REINFORCEMENT FOR PIPE CHAMBER

(H = 8' TO 15' , SAG CONDITION)

SIZE ②		NO. 5 STEEL BARS									
X	Y	BAR n ③		BAR p ④		BAR q		BAR r		LBS. ⑤	
		QTY.	LIN. FT.	QTY.	LIN. FT.	QTY.	LIN. FT.	QTY.	LIN. FT.	TOTAL	⑥
4'-11"	2'-0"	32	6'-0"	6	16'-1"	10	2'-6"	4	5'-5"	350	50
	2'-6"	34			17'-1"		3'-0"	5		379	53

~ NOTES ~

1. BASED ON "Z" AS EQUAL TO 6'-0".
2. SEE CUR. STD. DWG. RDB-030 FOR LOCATION AND DIMENSIONS.
3. LENGTH OF "n" BAR IS ALWAYS SAME AS "Z" DIMENSION.
4. ADD OR SUBTRACT ONE "p" BAR PER EVEN FT. VARIANCE FROM 6'-0" "Z".
5. NO DEDUCTIONS HAVE BEEN MADE FOR PIPE.
6. ADD OR SUBTRACT LBS. STEEL PER FT. VARIANCE FROM 6'-0" "Z".
7. REINFORCEMENT SHALL HAVE A CLEAR DISTANCE OF 2" FROM THE FACE UNLESS OTHERWISE SHOWN.

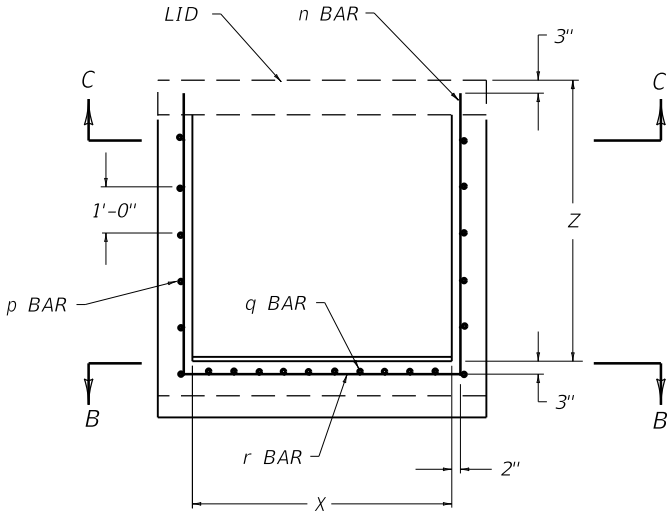

SECTION A-A

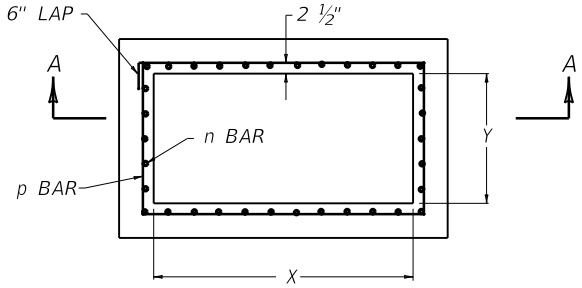

SECTION C-C

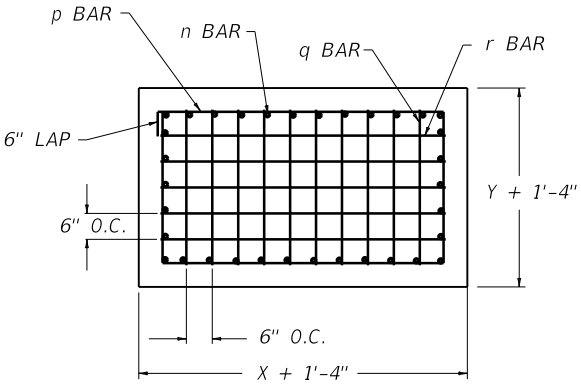

SECTION B-B

USE WITH CUR. STD. DWGS.
RDI-200 RDB-014 RDB-030
RDB-031 RDB-032 RDB-033
RDB-034

KENTUCKY
DEPARTMENT OF HIGHWAYS

DROP BOX INLET
TYPE 16
(ADDITIONAL STEEL- CHAMBER)

STANDARD DRAWING NO. RDB-035-04

SUBMITTED _____ DIRECTOR DIVISION OF DESIGN — 12-01-15 DATE

APPROVED _____ STATE HIGHWAY ENGINEER — 12-01-15 DATE

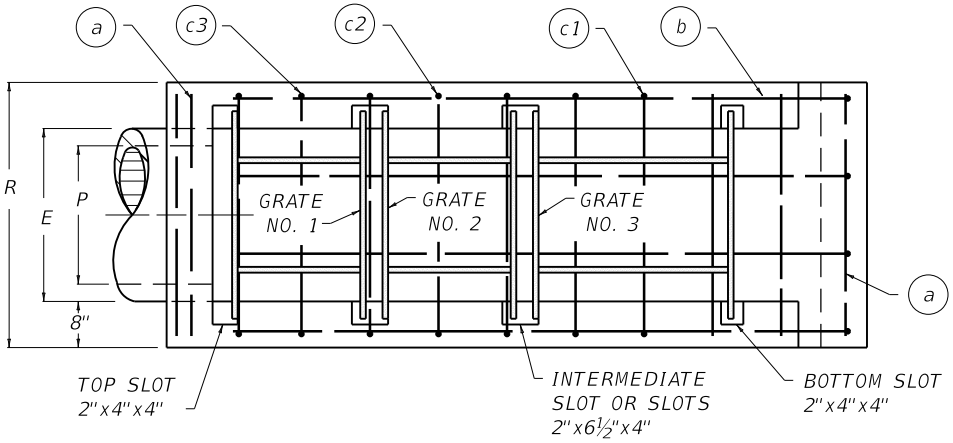

PLAN VIEW

~ NOTES ~

BID ITEM AND UNIT TO BID
SLOPED BOX OUTLET TYPE 1 - ★ IN (SIZE OF PIPE) EACH

1. THE MINIMUM REQUIREMENT FOR REINFORCING STEEL SHALL BE GRADE 40. FIELD BENDING WILL BE PERMITTED.
2. ONE ADDITIONAL a BAR WILL BE REQUIRED FOR EACH 15° SKEW.
3. "t" IS THE CONCRETE PIPE WALL THICKNESS OR METAL PIPE CORRUGATION DEPTH.
4. SEE CUR. STD. DWG. RDB-101 FOR REINFORCING STEEL AND GRATE DETAILS.

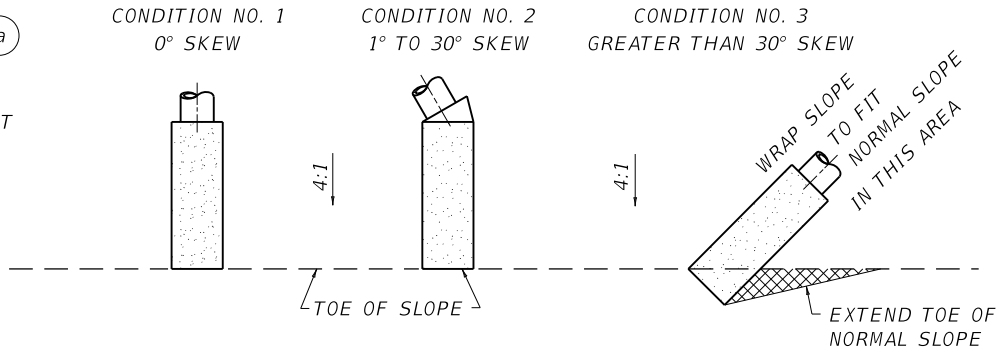

PLAN VIEW OF STRUCTURE LOCATIONS

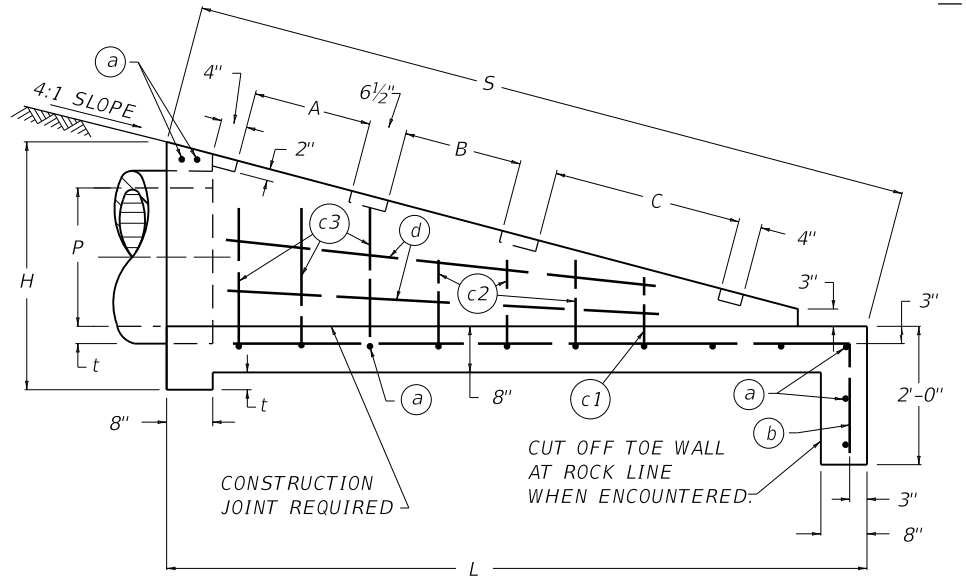

ELEVATION VIEW

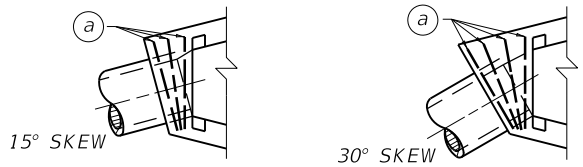

(2) a BAR DETAIL FOR 15° AND 30° SKEW

A, B FOR 2 GRATES
A, B, C FOR 3 GRATES

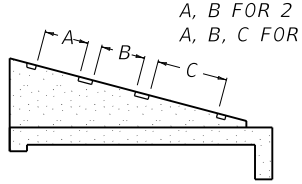

DETAIL SHOWING LOCATION OF SLOTS FOR GRATES

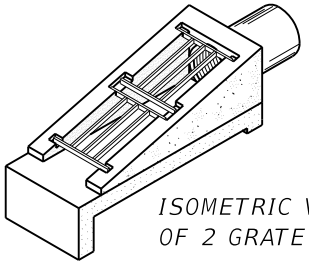

ISOMETRIC VIEW OF 2 GRATE BOX

DIMENSIONS									NO. OF GRATES REQ'D.	
P	H	L	S	R	E	A	B	C	2'	3'
15"	3'-0"	8'-2"	8'-5½"	3'-3"	1'-11"	1'-8½"	2'-8¾"	-----	1	1
18"										
24"	3'-7"	10'-1½"	10'-5⅝"	3'-10"	2'-6"		1'-8½"	2'-8¾"	2	1

USE WITH CUR. STD. DWG. RDB-101

KENTUCKY
DEPARTMENT OF HIGHWAYS

SLOPED BOX
OUTLET TYPE 1

STANDARD DRAWING NO. RDB-100-05

SUBMITTED William E. Ginkel DIRECTOR DIVISION OF DESIGN 12-01-15 DATE

APPROVED STATE HIGHWAY ENGINEER 12-01-15 DATE

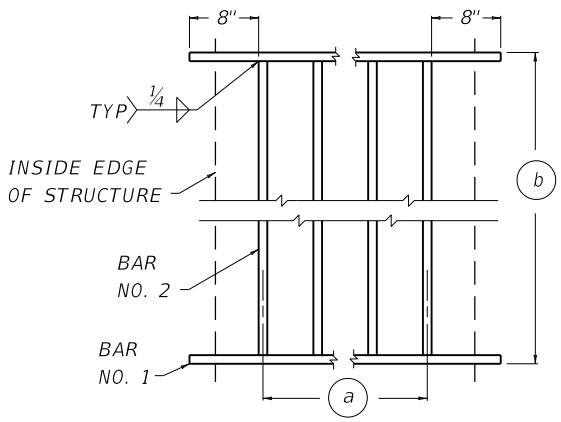

TYPICAL GRATE

~ NOTES ~

1. ADDITIONAL "a" BARS: 1 REQUIRED FOR 15° SKEW, 2 REQUIRED FOR 30° SKEW.
2. ALL COMPONENTS ARE 1" X 2" STRUCTURAL STEEL BARS.
   a. EQUALLY SPACE BARS NO. 2.
   b. LENGTH OF GRATE SHALL BE EITHER 2'-0" OR 3'-0".
3. FOR SLOPED BOX DETAILS SEE CUR. STD. DWG RDB-100.

1" X 2" STRUCTURAL STEEL BARS

BOX SIZE	GRATE		BAR NO. 1	BAR NO. 2		LBS STRUCTURAL STEEL	
	NO.	LG.	LENGTH	NO. BARS	LENGTH	EACH GRATE	TOTAL
15" - 18"	1	2'-0"	2'-5"	3	1'-10"	70	161
	2	3'-0"			2'-10"	91	
24"	1	2'-0"	3'-0"	4	1'-10"	91	300
	2						
	3	3'-0"			2'-10"	118	

NO. 4 REINFORCEMENT BARS

PIPE SIZE	(1) BAR a		BAR b		BAR c1		BAR c2		BAR c3		BAR d		TOTAL STEEL	CLASS A CONC.
	NO.	LG.	NO.	LG.	NO.	LG.	NO.	LG.	NO.	LG.	NO.	LG.	LBS.	CU.YDS.
15"	12	2'-5"	4	8'-6"	0	0	6	1'-0"	4	1'-6"	4	4'-3"	62	1.2
18"														
24"	14	3'-0"	4	10'-6"	2	1'-0"	6	1'-3"	6	2'-0"	4	6'-3"	87	1.83

USE WITH CUR. STD. DWG. RDB-100

KENTUCKY
DEPARTMENT OF HIGHWAYS

GRATES FOR
SLOPED BOX
OUTLET TYPE 1

STANDARD DRAWING NO. RDB-101-05

SUBMITTED William S. Sahd — DIRECTOR, DIVISION OF DESIGN — 12-01-15 DATE

APPROVED — STATE HIGHWAY ENGINEER — 12-01-15 DATE

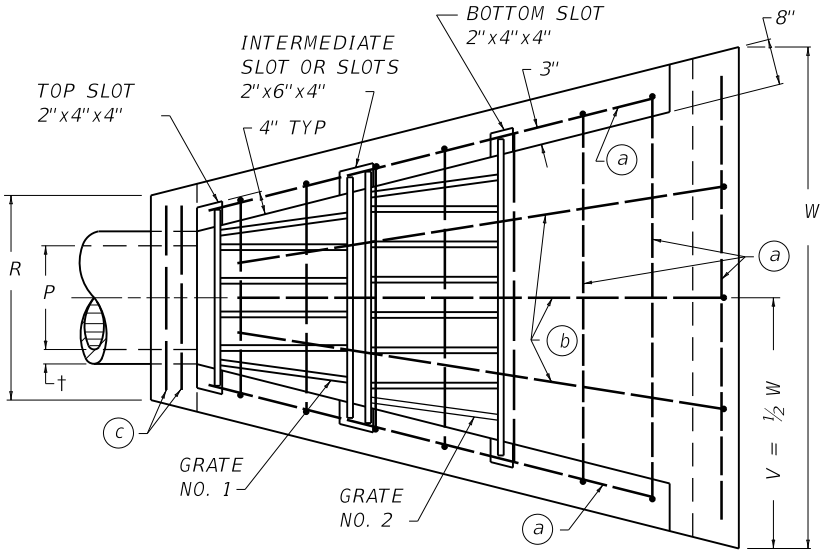

PLAN VIEW

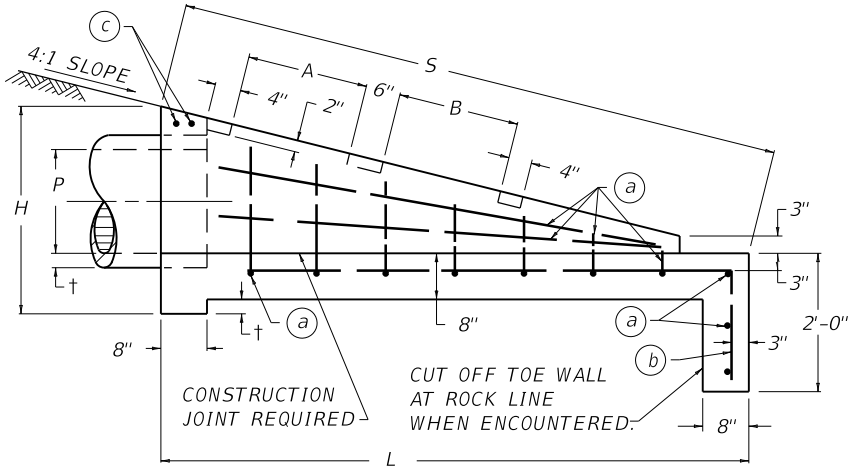

ELEVATION VIEW

~ NOTES ~

BID ITEM AND UNIT TO BID
S & F BOX INLET-OUTLET - ★IN (SIZE OF PIPE) EACH

1. THE MINIMUM REQUIREMENT FOR REINFORCING STEEL SHALL BE GRADE 40. FIELD BENDING WILL BE PERMITTED.
2. ONE ADDITIONAL (c) BAR WILL BE REQUIRED FOR EACH 15° SKEW.
3. "†" IS THE CONCRETE PIPE WALL THICKNESS OR METAL PIPE CORRUGATION DEPTH.

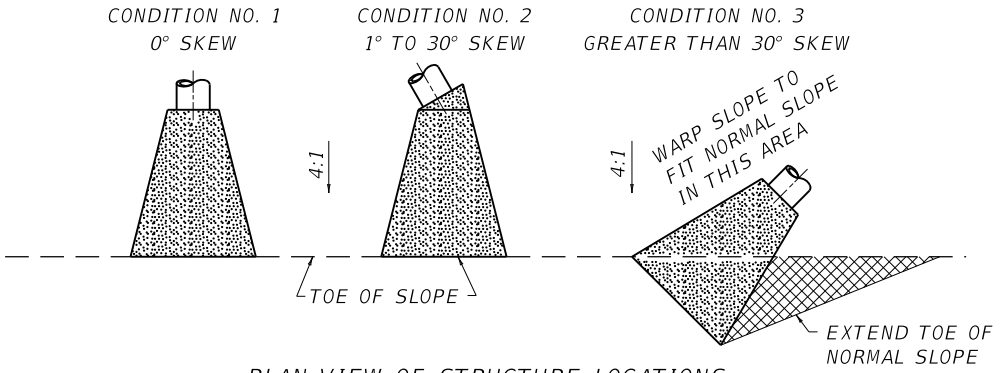

PLAN VIEW OF STRUCTURE LOCATIONS

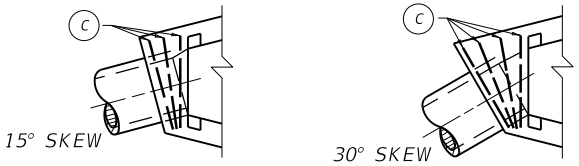

(2) (c) BAR DETAIL FOR 15° AND 30° SKEW

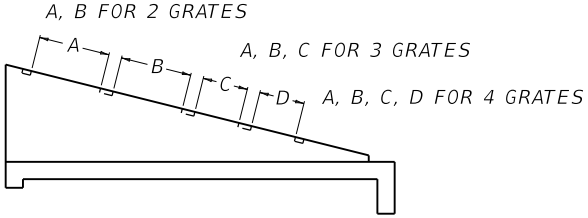

DETAIL SHOWING LOCATION
OF SLOTS FOR GRATES

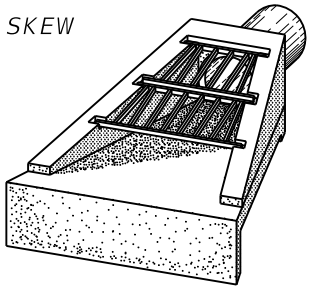

PICTORIAL VIEW
OF 18" OR 24" STRUCTURE

USE WITH CUR. STD. DWG.
RDB-106

DIMENSIONS											NO. OF GRATES REQ'D.		NO. 4 REINFORCEMENT BARS NUMBER - LENGTH AND WEIGHT				CLASS A CONC.
P	H	L	S	R	V	W	A	B	C	D	2'	3'	(a)	(b)	(3) (c)	LBS.	CU.YDS.
18"	3'-0"	8'-6"	8'-9⅛"	2'-11½"	3'-7½"	7'-3"	1'-9"	1'-9"	-----	-----	2	--	14 @ 6'-5"	3 @ 8'-6"	2 @ 2'-8"	81	1.8
24"	3'-7"	10'-8"	11'-0"	3'-6½"	4'-5½"	8'-11"	2'-9"	2'-9"	-----	-----	--	2	16 @ 8'-0"	3 @ 10'-6"	2 @ 3'-3"	111	2.7
30"	4'-2"	12'-10"	13'-2¾"	4'-1½"	5'-3½"	10'-7"	2'-9"	2'-9"	1'-9"	-----	1	2		3 @ 12'-9"	2 @ 3'-10"	146	3.8
36"	4'-9"	15'-0"	15'-5½"	4'-8½"	6'-1½"	12'-3"	2'-9"	2'-9"	1'-9"	1'-9"	2	2	20 @ 11'-4"	3 @ 15'-0"	2 @ 4'-5"	187	5.1

KENTUCKY
DEPARTMENT OF HIGHWAYS

SLOPED AND FLARED
BOX INLET - OUTLET
18" - 24" - 30" - 36"
ALL SKEWS

STANDARD DRAWING NO. RDB-105-06

SUBMITTED William E. Ginkel — DIRECTOR DIVISION OF DESIGN — 12-01-15 DATE

APPROVED — STATE HIGHWAY ENGINEER — 12-01-15 DATE

BOX INLET - OUTLET SIZE	GRATE		BAR NO. 1	BAR NO. 2	BARS NO. 3		BARS NO. 4	LBS. STRUCTURAL STEEL	
	NO.	SIZE	LENGTH	LENGTH	NO. BARS	LENGTH	LENGTH	EACH GRATE	TOTAL
18"	1	2'-0"	2'-6½"	3'-5¾"	4	1'-10"	1'-10¼"	116	272
	2	2'-0"	3'-7⅝"	4'-6⅞"	6	1'-10"	1'-10¼"	156	
24"	1	3'-0"	3'-1½"	4'-6⅝"	5	2'-10"	2'-10⅜"	187	454
	2	3'-0"	4'-8½"	6'-1⅝"	8	2'-10"	2'-10⅜'	267	
30"	1	3'-0"	3'-8½"	5'-1½"	6	2'-10"	2'-10⅜"	215	796
	2	3'-0"	5'-3½"	6'-8⅝"	9	2'-10"	2'-10⅜"	294	
	3	2'-0"	6'-10½"	7'-9¾"	13	1'-10"	1'-10¼"	287	
36"	1	3'-0"	4'-3½"	5'-8½"	7	2'-10"	2'-10⅜"	242	1218
	2	3'-0"	5'-10½"	7'-3⅝"	10	2'-10"	2'-10⅜'	321	
	3	2'-0"	7'-5½"	8'-4¾"	14	1'-10"	1'-10¼"	308	
	4	2'-0"	8'-6¾"	9'-5⅞"	16	1'-10"	1'-10¼"	347	

~ NOTES ~

1. ALL COMPONENTS ARE 1" X 2" STRUCTURAL STEEL BARS.
2. (a) EQUALLY SPACE BARS NO. 3.
   (b) SIZE OF GRATE EITHER 2'-0" OR 3'-0".
   (c) 5½" FOR 2'-0" GRATE, 7" FOR 3'-0" GRATE.

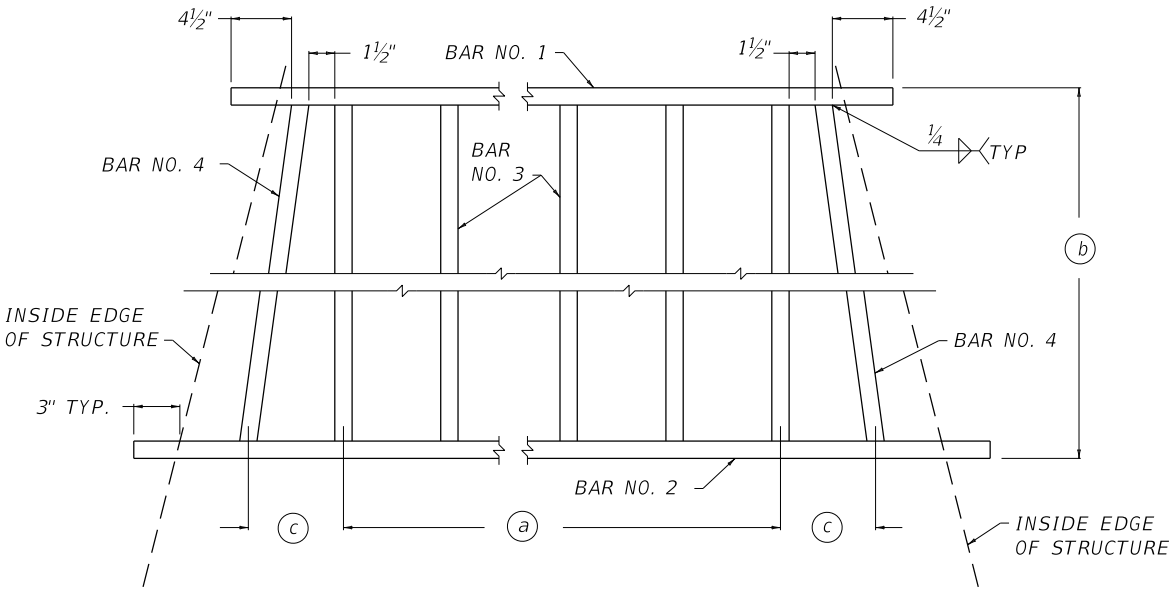

TYPICAL GRATE

USE WITH CUR. STD. DWG. RDB-105

KENTUCKY DEPARTMENT OF HIGHWAYS

GRATES FOR SLOPED AND FLARED BOX INLET - OUTLET

STANDARD DRAWING NO. RDB-106-05

SUBMITTED William E. Ginkel DIRECTOR DIVISION OF DESIGN 12-01-15 DATE

APPROVED STATE HIGHWAY ENGINEER 12-01-15 DATE

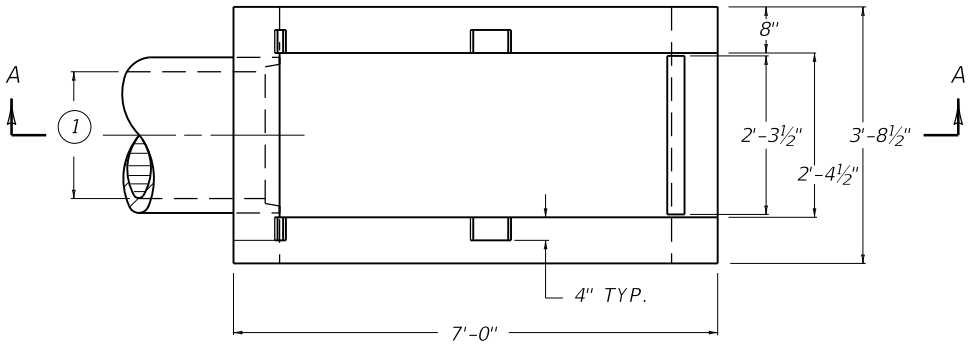

PLAN VIEW

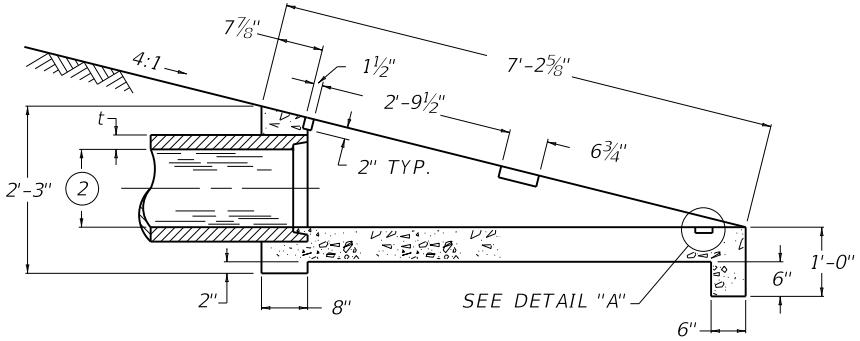

SECTION A-A

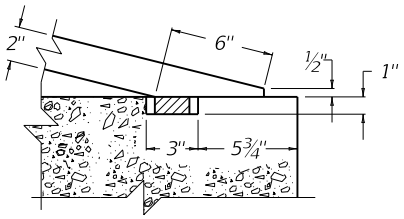

DETAIL "A"

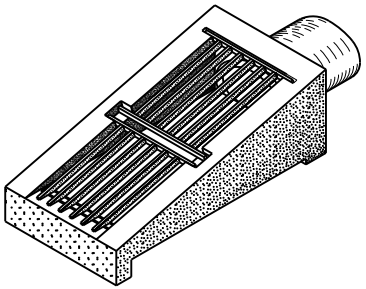

ISOMETRIC VIEW

~ NOTES ~

BID ITEM AND UNIT TO BID
SLOPED BOX INLET-OUTLET TYPE 1 — EACH

1. INTERIOR SPAN
2. INTERIOR RISE
3. THE UNIT PRICE BID FOR EACH STRUCTURE SHALL INCLUDE CONCRETE, STRUCTURAL STEEL GRATINGS, EXCAVATION, LABOR AND ALL INCIDENTALS NECESSARY FOR ITS CONSTRUCTION AS DETAILED ON THIS SHEET.
4. SIZE AND LOCATION OF PIPE SHALL BE SHOWN ON PLANS.
5. SLOPED BOX INLET OR OUTLET TYPE 1 IS INTENDED TO BE USED WITH THE FOLLOWING PIPE SIZES:
   - METAL PIPE ARCH - (15" EQUIV. ROUND)
   - METAL PIPE ARCH - (18" EQUIV. ROUND)
   - CONCRETE ELLIPTICAL PIPE - (18" EQUIV. ROUND)

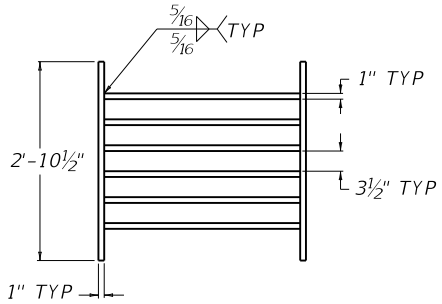

GRATE NO. 1
PLAN VIEW

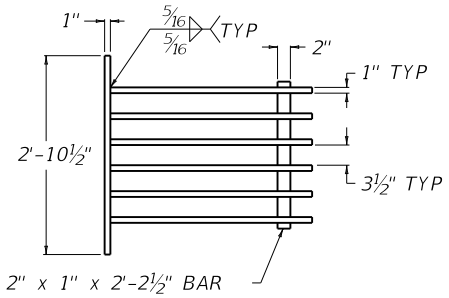

GRATE NO. 2
PLAN VIEW

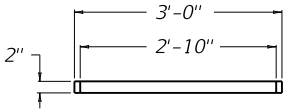

GRATE NO. 1
SIDE ELEVATION

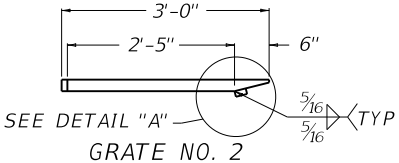

GRATE NO. 2
SIDE ELEVATION

APPROXIMATE QUANTITIES			
CLASS "A" CONC.	GRATE	LBS STRUCTURAL STEEL	
CU. YDS.	NUMBER	EACH GRATE	TOTAL LBS
0.9	1	155	298
	2	143	

KENTUCKY
DEPARTMENT OF HIGHWAYS

SLOPED BOX
INLET OR OUTLET
TYPE 1

STANDARD DRAWING NO. RDB-110-08

SUBMITTED William E. Ginkel — DIRECTOR DIVISION OF DESIGN — 12-01-15 DATE

APPROVED — STATE HIGHWAY ENGINEER — 12-01-15 DATE

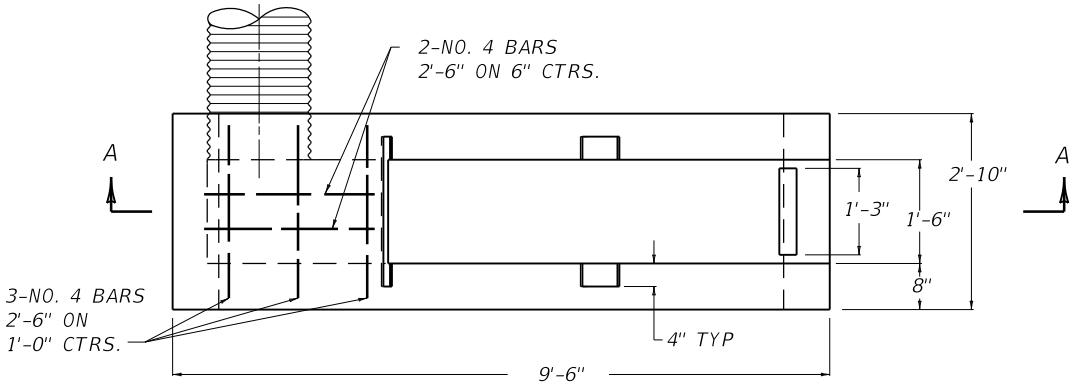

PLAN VIEW

~ NOTES ~

BID ITEM AND UNIT TO BID
SLOPED BOX INLET-OUTLET TYPE 2 EACH

1. THE UNIT PRICE BID FOR EACH STRUCTURE SHALL INCLUDE ALL CONCRETE, STRUCTURAL STEEL GRATINGS, STEEL REINFORCEMENT, EXCAVATION, LABOR, AND ALL OTHER INCIDENTIALS NECESSARY FOR ITS CONSTRUCTION AS DETAILED ON THIS SHEET.
2. PRIMARY USE 6:1 DEPRESSED MEDIAN LOCATION.
3. PIPE SHALL BE METAL PIPE ARCH (15" EQUIV. ROUND).

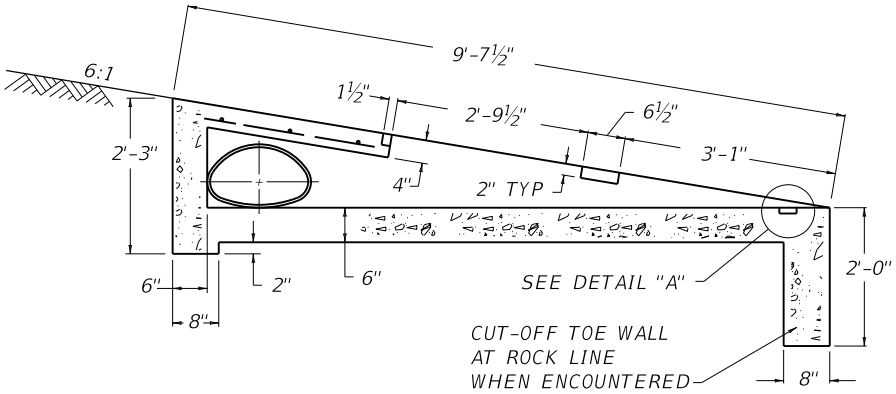

SECTION A-A

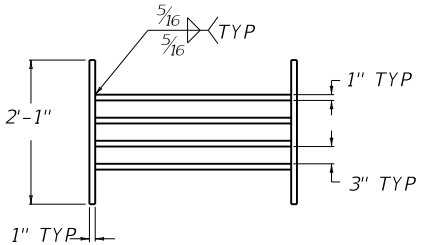

GRATE NO. 1
PLAN VIEW

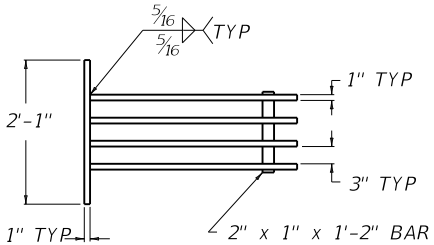

GRATE NO. 2
PLAN VIEW

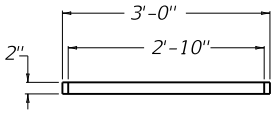

GRATE NO. 1
SIDE ELEVATION

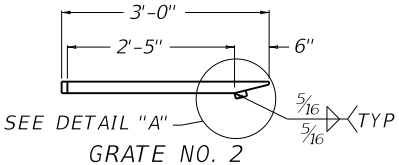

GRATE NO. 2
SIDE ELEVATION

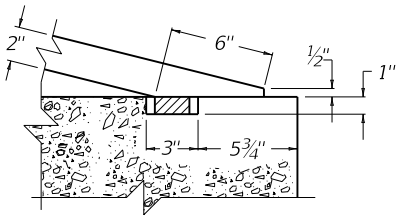

DETAIL "A"

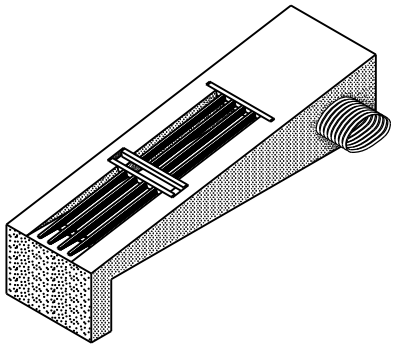

ISOMETRIC VIEW

APPROXIMATE QUANTITIES				
CLASS "A" CONC.	GRATE	LBS. STRUCTURAL STEEL		STEEL REINF.
CU. YDS.	NUMBER	EACH GRATE	TOTAL LBS.	LBS.
1.1	1	106	206	8
	2	100		

KENTUCKY
DEPARTMENT OF HIGHWAYS

SLOPED BOX
INLET OR OUTLET
TYPE 2

STANDARD DRAWING NO. RDB-111-08

SUBMITTED William E. Ginkel — DIRECTOR DIVISION OF DESIGN — 12-01-15 DATE

APPROVED — STATE HIGHWAY ENGINEER — 12-01-15 DATE

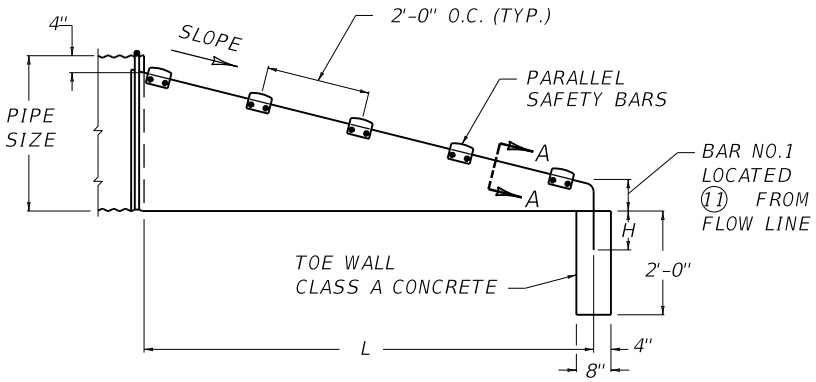

SIDE ELEVATION

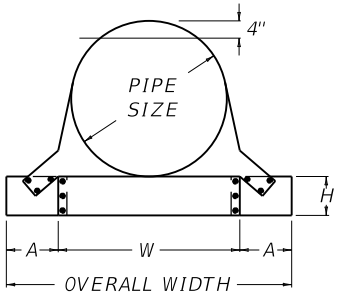

END SECT. FRONT VIEW
CIRCULAR PIPE

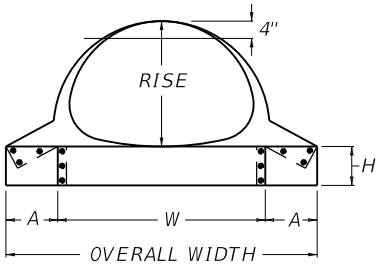

END SECT. FRONT VIEW
ARCHED PIPE

~ NOTES ~

BID ITEM AND UNIT TO BID
METAL END SECTION TY ⊗ △ IN EACH

⊗ 1 = PARALLEL STRUCTURE ON 6:1 SLOPE, 2 = PARALLEL STRUCTURE ON 10:1 SLOPE

△ SIZE IN INCHES

BID ITEM EXAMPLE: METAL END SECTION TY 1-15 IN.

THE CONTRACT UNIT PRICE EACH FOR METAL END SECTION SHALL INCLUDE CLASS A CONCRETE, EXCAVATION, AND ALL INCIDENTALS NECESSARY TO COMPLETE ONE INSTALLATION AS DETAILED.

1. METAL END SECTIONS SHALL BE FABRICATED FROM GALVANIZED SHEETS, CONFORMING TO AASHTO M218.
2. METAL END SECTIONS & TAPERED SLEEVES SHALL BE ASPHALT COATED IN ACCORDANCE WITH SECTION 806 OF THE CURRENT KENTUCKY STANDARD SPECIFICATIONS FOR ROAD AND BRIDGE CONSTRUCTION. ASPHALT COATING IS NOT REQUIRED ON SAFETY BARS.
3. SAFETY BARS SHALL BE REQUIRED ON ALL METAL END SECTIONS CONSTRUCTED PARALLEL TO THE ROADWAY.
4. SAFETY BARS SHALL BE CONSTRUCTED OF SCHEDULE 40 GALVANIZED STEEL PIPE (COMMERCIAL GRADE).
5. THE TAPERED SLEEVE SHALL BE GALVANIZED SMOOTH METAL CONFORMING TO AASHTO M218, WITH A WALL THICKNESS AS FOLLOWS: 18" DIA. OR LESS = .079", 21" DIA. OR LARGER = .109".

(6) SLOTTED HOLES FOR SAFETY GRATE ATTACHMENT SHALL BE PUNCHED PRIOR TO GALVANIZING. FIELD DRILLING OF HOLES SHALL NOT BE PERMITTED.

(7) WATERPROOF MASTIC CONFORMING TO 807.02.03 OF THE CURRENT KENTUCKY STANDARD SPECIFICATIONS FOR ROAD AND BRIDGE CONSTRUCTION SHALL BE PLACED IN THE VOID BETWEEN THE TAPERED SLEEVE AND CONCRETE PIPE.

(8) FORM ½" x 2⅔" CORRUGATIONS. MAINTAIN INSIDE DIAMETER OF SLEEVE. FINISHED END IS TO BE THE SAME DIAMETER AS CORRUGATED STEEL PIPE DIAMETER.

9. ALL MISCELLANEOUS HARDWARE SHALL COMPLY WITH AASHTO M36.
10. THE WELDS USED IN THE MANUFACTURE OF THE TAPERED SLEEVE FOR ELLIPTICAL CONC. PIPE SHALL BE REPAIRED IN ACCORDANCE WITH AASHTO M36 USING ZINC OXIDE-ZINC DUST PRIMER, FEDERAL SPECIFICATION TT-P-641, TYPE II, NO COLOR ADDED.

(11) TYPE 1 = 6", TYPE 2 = 4"

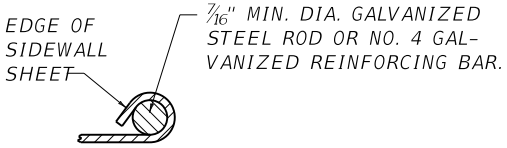

SECTION A-A

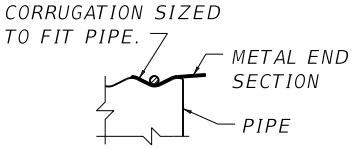

SECTION B-B

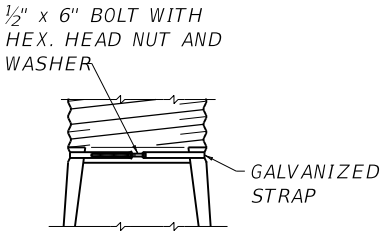

TYPE 1 CONNECTOR

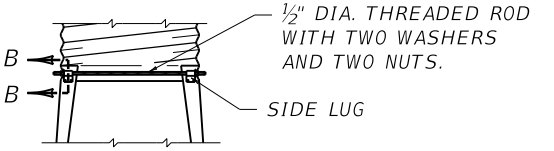

TYPE 2 CONNECTOR

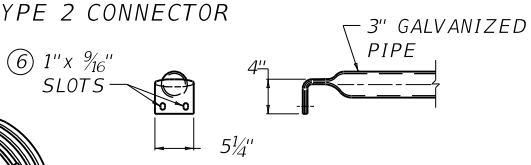

PARALLEL SAFETY BAR

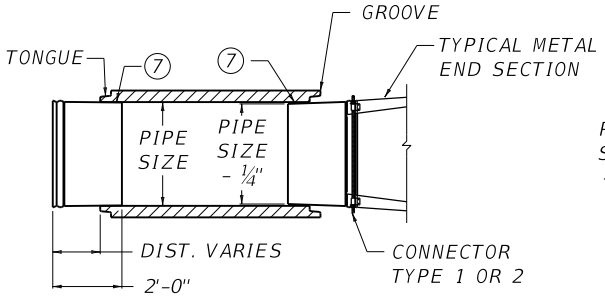

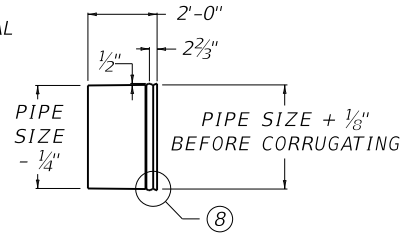

SMOOTH TAPERED SLEEVE FOR USE WITH CONCRETE PIPE

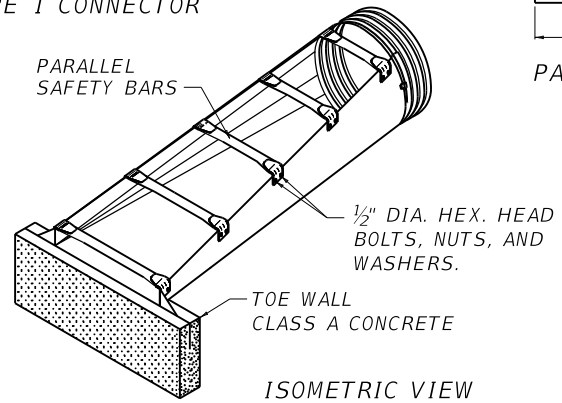

ISOMETRIC VIEW

USE WITH CUR. STD. DWG.
RDB-160

KENTUCKY
DEPARTMENT OF HIGHWAYS

METAL END SECTION
TYPE 1 AND 2
(PARALLEL STRUCTURES)

STANDARD DRAWING NO. RDB-150-02

SUBMITTED William E. Ginkel — DIRECTOR, DIVISION OF DESIGN — 12-01-15 DATE

APPROVED — STATE HIGHWAY ENGINEER — 12-01-15 DATE

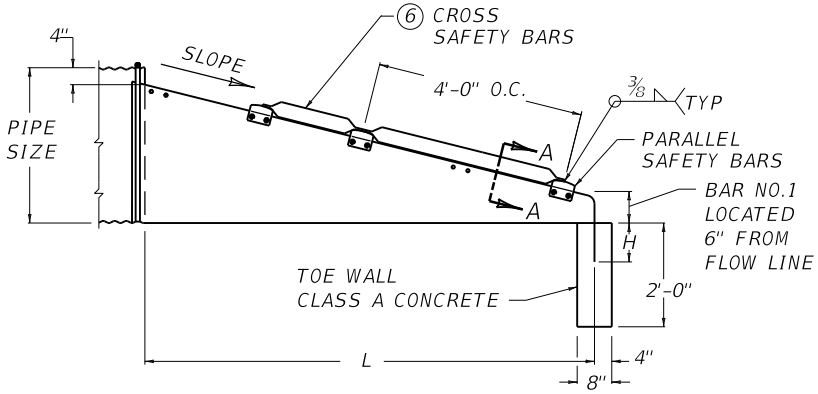

SIDE ELEVATION

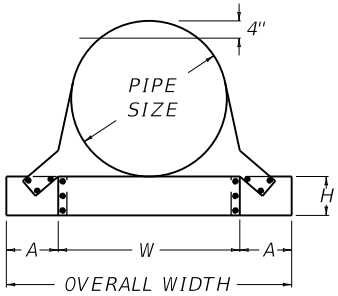

END SECT. FRONT VIEW
CIRCULAR PIPE

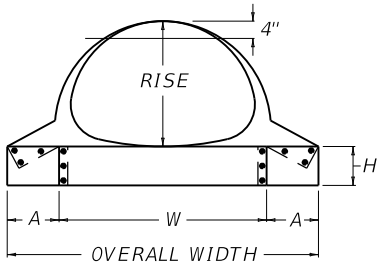

END SECT. FRONT VIEW
ARCHED PIPE

~ NOTES ~

BID ITEM AND UNIT TO BID
METAL END SECTION TY ⊗ △ IN EACH
⊗ 3 = CROSSDRAIN STRUCTURE ON 4:1 SLOPE, 4 = CROSSDRAIN STRUCTURE ON 6:1 SLOPE
△ SIZE IN INCHES
BID ITEM EXAMPLE: METAL END SECTION TY 3-15 IN

THE CONTRACT UNIT PRICE EACH FOR METAL END SECTION SHALL INCLUDE CLASS A CONCRETE, EXCAVATION, AND ALL INCIDENTALS NECESSARY TO COMPLETE ONE INSTALLATION AS DETAILED.

1. FABRICATE METAL END SECTIONS FROM GALVANIZED SHEETS CONFORMING TO AASHTO M218.
2. METAL END SECTIONS & TAPERED SLEEVES SHALL BE ASPHALT COATED IN ACCORDANCE WITH SECT. 806 OF THE CURRENT KENTUCKY STANDARD SPECIFICATIONS FOR ROAD & BRIDGE CONSTRUCTION. ASPHALT COATING IS NOT REQUIRED ON SAFETY BARS.
3. SAFETY BARS SHALL BE REQUIRED ON ALL 30" ROUND PIPE AND LARGER.
4. SAFETY BARS SHALL BE REQUIRED ON ALL 24" ELLIPTICAL EQUIVALENT PIPE AND LARGER.
5. SAFETY BARS SHALL BE CONSTRUCTED OF SCHEDULE 40 GALVANIZED STEEL PIPE (COML. GRADE).
6. CROSS SAFETY BARS SHALL BE SPACED A MAXIMUM OF 30" O.C. AND WELDED TO PARALLEL SAFETY BARS. GALVANIZING REQUIRED AFTER FABRICATION.
7. THE TAPERED SLEEVE SHALL BE GALVANIZED SMOOTH METAL CONFORMING TO AASHTO M218, WITH A WALL THICKNESS AS FOLLOWS: 18" DIA. OR LESS = .079", 21" DIA. OR LARGER = .109".
8. SLOTTED HOLES FOR SAFETY BAR ATTACHMENT SHALL BE PUNCHED PRIOR TO GALVANIZING. FIELD DRILLING OF HOLES SHALL NOT BE PERMITTED.
9. WATERPROOF MASTIC CONFORMING TO 807.02.03 OF THE CURRENT KENTUCKY STANDARD SPECIFICATIONS FOR ROAD AND BRIDGE CONSTRUCTION SHALL BE PLACED IN THE VOID BETWEEN THE TAPERED SLEEVE AND CONCRETE PIPE.
10. FORM 1/2" x 2 2/3" CORRUGATIONS. MAINTAIN INSIDE DIAMETER OF SLEEVE. FINISHED END TO BE THE SAME DIAMETER AS CORRUGATED STEEL PIPE DIAMETER.
11. ALL MISCELLANEOUS HARDWARE SHALL COMPLY WITH AASHTO M36.
12. THE WELDS USED IN THE MANUFACTURE OF THE TAPERED SLEEVE FOR ELLIPTICAL CONCRETE PIPE SHALL BE REPAIRED IN ACCORDANCE WITH AASHTO M36 USING ZINC OXIDE-ZINC DUST PRIMER, FEDERAL SPECIFICATION TT-P-641, TYPE II, NO COLOR ADDED.

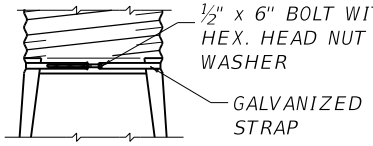

TYPE 1 CONNECTOR

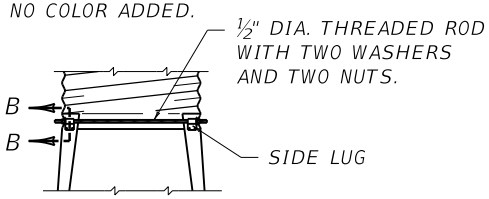

TYPE 2 CONNECTOR

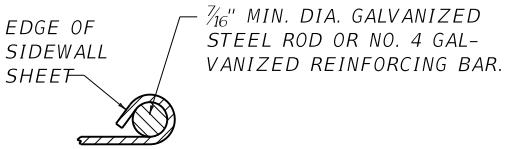

SECTION A-A

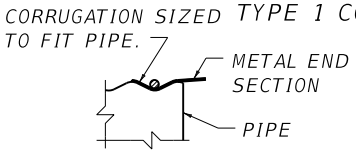

SECTION B-B

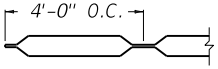

CROSS SAFETY BAR

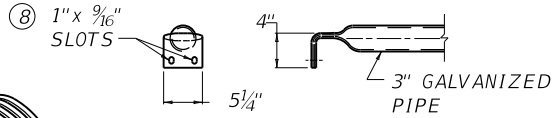

PARALLEL SAFETY BAR

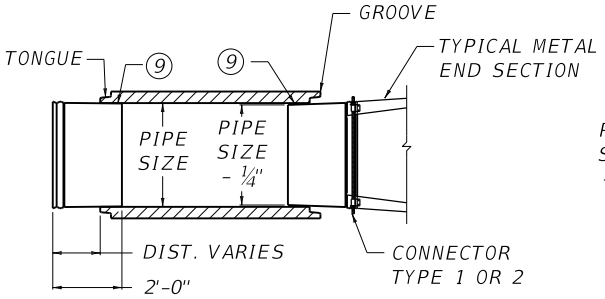

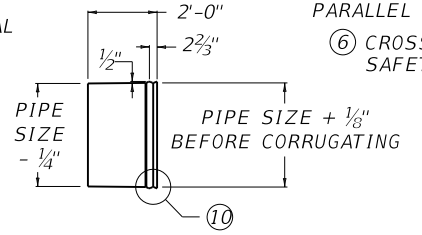

SMOOTH TAPERED SLEEVE FOR USE WITH CONCRETE PIPE

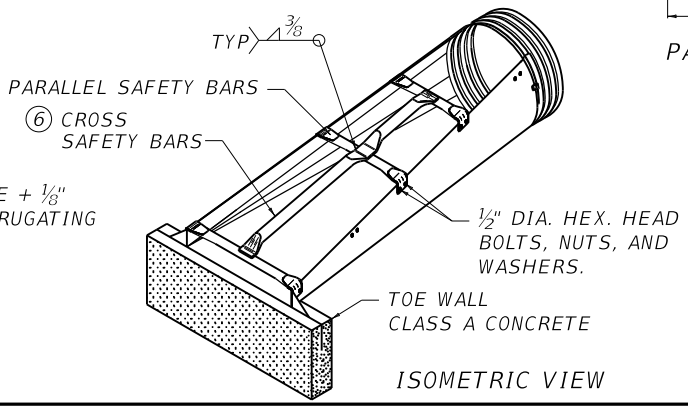

ISOMETRIC VIEW

USE WITH CUR. STD. DWG.
RDB-160

KENTUCKY
DEPARTMENT OF HIGHWAYS

METAL END SECTION
TYPE 3 AND 4
(CROSS STRUCTURES)

STANDARD DRAWING NO. RDB-155-02

SUBMITTED William E. Ginkel — DIRECTOR DIVISION OF DESIGN — 12-01-15 DATE
APPROVED — STATE HIGHWAY ENGINEER — 12-01-15 DATE

METAL END SECTIONS FOR CONC. OR METAL CIRCULAR PIPE	PIPE DIA. (IN.)	MIN. THICK. IN INCHES	DIMENSIONS				L DIMENSIONS ①						CONCRETE	CONC. OR METAL CIRCULAR PIPE
			A	H	W	OVERALL WIDTH	SLOPE	LENGTH	SLOPE	LENGTH	SLOPE	LENGTH	CU. YDS.	
	15②	0.064	8"	6"	21"	3'-1"	4:1	1'-8"	6:1	2'-6"	10:1	5'-10"	0.15	
	18②	0.064	8"	6"	24"	3'-4"	4:1	2'-8"	6:1	4'-0"	10:1	8'-4"	0.16	
	21②	0.064	8"	6"	27"	3'-7"	4:1	3'-8"	6:1	5'-6"	10:1	10'-10"	0.18	
	24②	0.064	8"	6"	30"	3'-10"	4:1	4'-8"	6:1	7'-0"	10:1	13'-4"	0.19	
	30	0.109	12"	9"	36"	5'-0"	4:1	6'-8"	6:1	10'-0"			0.25	
	36	0.109	12"	9"	42"	5'-6"	4:1	8'-8"	6:1	13'-0"			0.27	
	42	0.109	16"	12"	48"	6'-8"	4:1	10'-8"	6:1	16'-0"			0.33	
	48	0.109	16"	12"	54"	7'-2"	4:1	12'-8"	6:1	19'-0"			0.35	
	54	0.109	16"	12"	60"	7'-8"	4:1	14'-8"	6:1	22'-0"			0.38	
	60	0.109	16"	12"	66"	8'-2"	4:1	16'-8"	6:1	25'-0"			0.40	

~ NOTES ~

① DIMENSIONAL TOLERANCE +1" -0"

② FOR METAL END SECTIONS WITH A SLOPE OF 10:1 USE A METAL THICKNESS OF .109" MIN.

METAL END SECTIONS FOR METAL ARCHED PIPE	EQUV. DIA. (IN.)	SPAN (IN.)	RISE (IN.)	MIN. THICK. IN INCHES	DIMENSIONS				L DIMENSIONS ①						CONCRETE	METAL ARCHED PIPE
					A	H	W	OVERALL WIDTH	SLOPE	LENGTH	SLOPE	LENGTH	SLOPE	LENGTH	CU. YDS.	
	18 ②	21	15	.064	8"	6"	27"	3'-7"	4:1	1'-8"	6:1	2'-6"	10:1	5'-10"	0.18	
	21 ②	24	18	.064	8"	6"	30"	3'-10"	4:1	2'-8"	6:1	4'-0"	10:1	8'-4"	0.19	
	24 ②	28	20	.064	8"	6"	34"	4'-2"	4:1	3'-4"	6:1	5'-0"	10:1	10'-0"	0.21	
	30	35	24	.079	12"	9"	41"	5'-5"	4:1	4'-8"	6:1	7'-0"			0.27	
	36	42	29	.109	12"	9"	48"	6'-0"	4:1	6'-4"	6:1	9'-6"			0.30	
	42	49	33	.109	16"	12"	55"	7'-3"	4:1	7'-8"	6:1	11'-6"			0.36	
	48	57	38	.109	16"	12"	63"	7'-11"	4:1	9'-4"	6:1	14'-0"			0.39	
	54	64	43	.109	16"	12"	70"	8'-6"	4:1	11'-0"	6:1	16'-6"			0.42	
	60	71	47	.109	16"	12"	77"	9'-1"	4:1	12'-4"	6:1	18'-6"			0.45	
	72	83	57	.109	16"	12"	89"	10'-1"	4:1	15'-8"	6:1	23'-6"			0.50	

METAL END SECTIONS FOR CONCRETE ELLIPTICAL PIPE	EQUV. DIA. (IN.)	SPAN (IN.)	RISE (IN.)	MIN. THICK. IN INCHES	DIMENSIONS				L DIMENSIONS				CONCRETE	CONCRETE ELLIPTICAL PIPE
					A	H	W	OVERALL WIDTH	SLOPE	LENGTH	SLOPE	LENGTH	CU. YDS.	
	18	23	14	.064	8"	6"	29"	3'-9"	4:1	1'-4"	6:1	2'-0"	0.19	
	24	30	19	.064	8"	6"	36"	4'-4"	4:1	3'-0"	6:1	4'-6"	0.21	
	30	38	24	.079	12"	9"	44"	5'-8"	4:1	4'-8"	6:1	7'-0"	0.28	
	36	45	29	.109	16"	12"	51"	6'-11"	4:1	6'-4"	6:1	9'-6"	0.34	
	42	53	34	.109	16"	12"	59"	7'-7"	4:1	8'-0"	6:1	12'-0"	0.37	
	48	60	38	.109	16"	12"	66"	8'-2"	4:1	9'-4"	6:1	14'-0"	0.40	
	54	68	43	.109	16"	12"	74"	8'-10"	4:1	11'-0"	6:1	16'-6"	0.44	
	60	76	48	.109	16"	12"	80"	9'-4"	4:1	12'-8"	6:1	19'-0"	0.46	

USE WITH CUR. STD. DWGS.
RDB-150 RDB-155

KENTUCKY
DEPARTMENT OF HIGHWAYS

DIMENSIONS FOR
METAL END SECTIONS

STANDARD DRAWING NO. RDB-160-02

SUBMITTED _____ DIRECTOR DIVISION OF DESIGN — 12-01-15 DATE

APPROVED _____ STATE HIGHWAY ENGINEER — 12-01-15 DATE

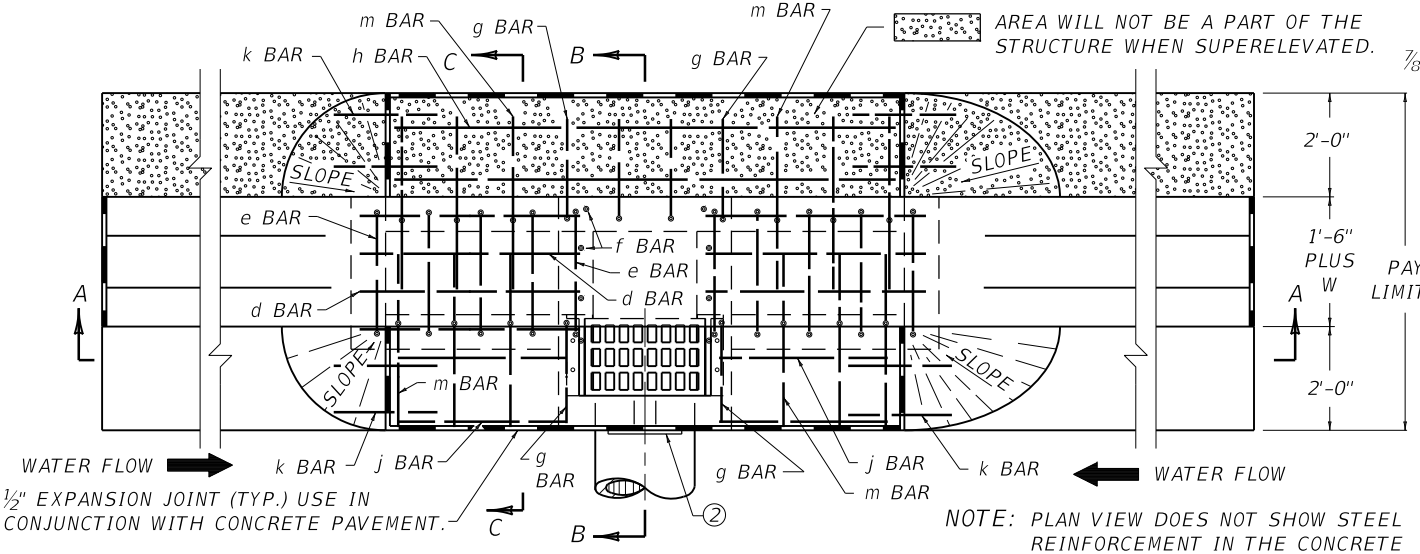

PLAN VIEW (BOX INLET TYPE A)

NOTE: PLAN VIEW DOES NOT SHOW STEEL REINFORCEMENT IN THE CONCRETE MEDIAN BARRIER.

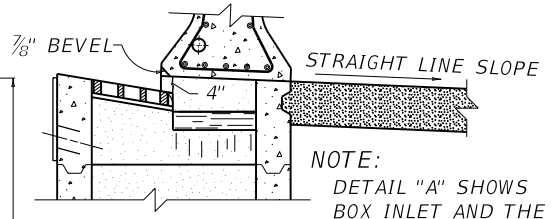

DETAIL "A"

NOTE:
DETAIL "A" SHOWS BOX INLET AND THE 25' CONCRETE MEDIAN BARRIER IN SUPERELEVATION.

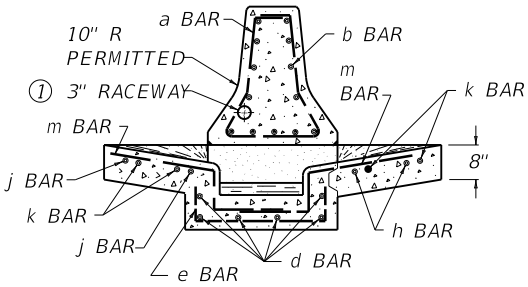

SECTION C-C

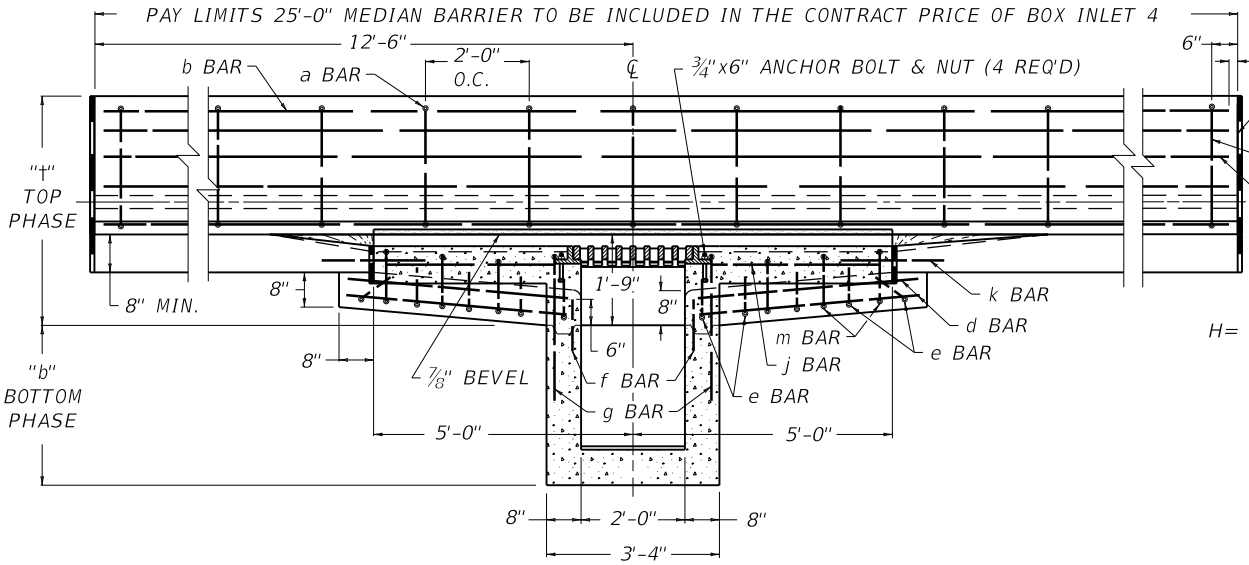

SECTION A-A

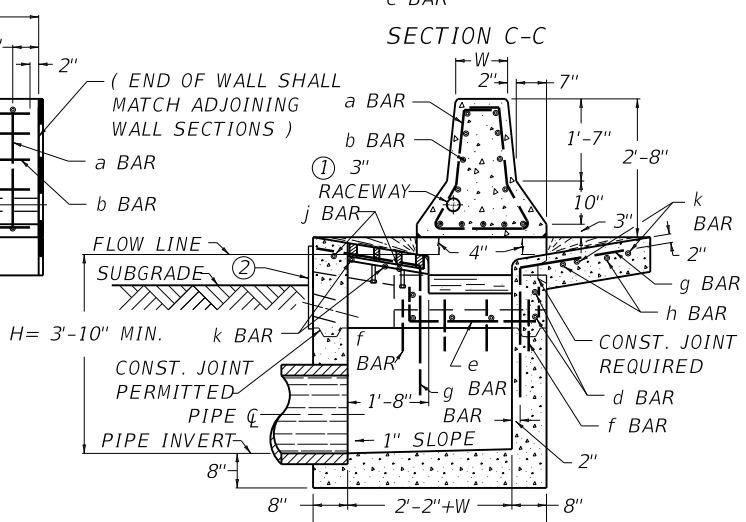

SECTION B-B

USE WITH CUR. STD. DWGS.
RBM-001 RDB-231

~ NOTES ~

① SEE PLANS FOR SIZE, LOCATION AND PAYMENT FOR RACEWAY WHEN REQUIRED.
② FABRIC WRAPPED BACKFILL DRAIN, (ONE PER WEEP HOLE) .
3. ALL WALLS AND SLABS ARE 8" THICK UNLESS OTHERWISE SHOWN.
④ MEDIAN BARRIER WALL MAY BE CAST-IN-PLACE, FIXED OR SLIP-FORMED, CONTRACTOR'S OPTION.
5. WALL REINFORCEMENT IS DETAILED FOR CAST-IN-PLACE WALLS. FOR SLIP-FORMED WALLS SEE CURRENT STANDARD DRAWING RDB-231 FOR STEEL DETAIL.

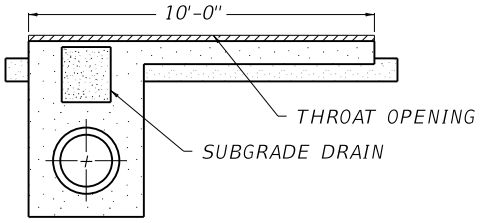

BOX INLET TYPE B

KENTUCKY
DEPARTMENT OF HIGHWAYS

CONCRETE MEDIAN BARRIER BOX INLET (CAST-IN-PLACE)

STANDARD DRAWING NO. RDB-230-09

SUBMITTED William E. Ginkel — DIRECTOR DIVISION OF DESIGN — 12-01-15 DATE

APPROVED — STATE HIGHWAY ENGINEER — 12-01-15 DATE

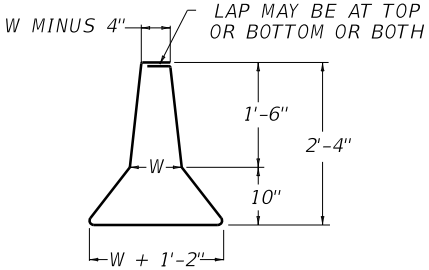

a BAR

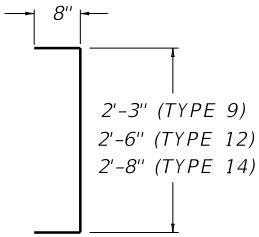

e BAR

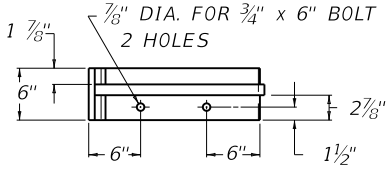

FRAME PLAN VIEW
(LEFT HALF)

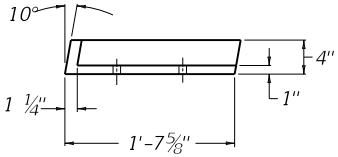

FRAME ELEVATION

~ NOTES ~

BID ITEM AND UNIT TO BID
CONC MED BARR BOX INLET TY ☆ ⊗ ⊕ △ EACH

☆ 9, 12, OR 14 DEPENDING ON "W" WIDTH

⊗ = "A" FOR SAG VERTICALS
"B" FOR STRAIGHT GRADE

⊕ = 1 FOR OPENING ON ONE SIDE OF BOX INLET
2 FOR OPENING ON BOTH SIDES OF BOX INLET

△ (b) = BOTTOM PHASE (†) = TOP PHASE
NO (b) OR (t) SUFFIX INDICATES COMPLETE INLET.

1. ALL STEEL REINFORCEMENT BARS SHALL BE NO. 5 BARS.
2. THE RATE OF INCREASE OF ADDITIONAL CLASS "A" CONCRETE PER FT. OF HEIGHT ABOVE THE MINIMUM 3'-10" SHALL BE 0.32 CU. YDS. FOR A TYPE 9 BOX INLET AND 0.35 CU. YDS. FOR A TYPE 12 AND 0.37 CU. YDS. FOR A TYPE 14 BOX INLET.
3. PLACE ALL STEEL REINFORCEMENT 2" MINIMUM FROM OUTSIDE FACE OF WALL, EXCEPT AS OTHERWISE SHOWN.
4. SEE CUR. STD. DWG. RDB-420 FOR STEEL REINFORCEMENT IN BOTTOM OF BOX WHEN H = 8'-0" TO 15'-0".
5. USE CHAMBER DIMENSIONS TO BEST FIT AND EQUALLY SPACE REINFORCEMENT STEEL.
6. A SYMMETRICAL WALL IS DETAILED, AN ASYMMETRICAL WALL MAY BE REQUIRED (SEE PLANS).

(7) 2'-6" FOR MIN. HEIGHT OF 3'-10"

(8) STEEL QUANTITIES ARE FOR CAST-IN-PLACE WALL.

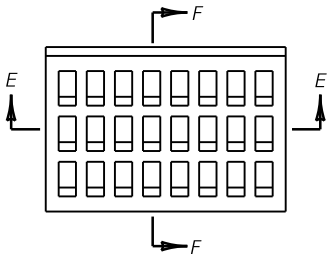

GRATE PLAN VIEW

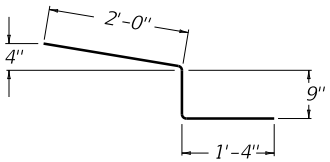

m BAR

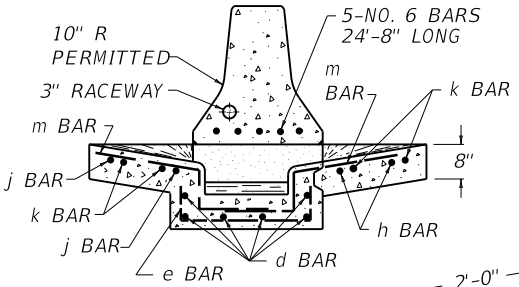

SECTION C-C
(SLIP-FORM WALL)

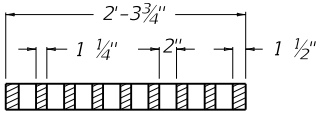

SECTION E-E

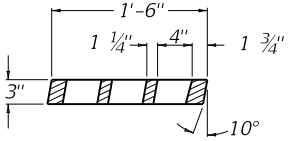

SECTION F-F

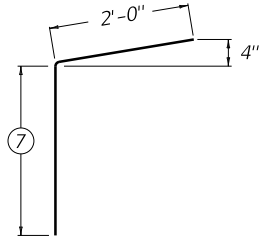

g BAR

REINFORCEMENT BARS FOR BOX INLET

BAR	QTY. A1	QTY. A2	LIN. FT. A1	LIN. FT. A2	QTY. B1	QTY. B2	LIN. FT. B1	LIN. FT. B2
TYPE 9								
e	10		3'-6"		9		3'-6"	
TYPE 12								
e	10		3'-9"		9		3'-9"	
TYPE 14								
e	10		3'-11"		9		3'-11"	
ALL TYPES								
d	12		4'-3"		6		7'-5"	
f	8		1'-0"		8		1'-0"	
g	2	6	4'-6"		1	5	4'-6"	
h	0	2	0	9'-8"	0	2	0	9'-8"
j	4		3'-3"		2		7'-0"	
k	4	8	2'-0"		4	8	2'-0"	
m	6	12	4'-1"		6	12	4'-1"	

APPROX. QTYS. FOR 25' CONC. MEDIAN BARRIER

INLET	W	BAR a QTY.	BAR a LENGTH	BAR b QTY.	BAR b LENGTH	STEEL LBS. (8)	CONC. CU. YDS.
TYPE 9	9"	13	7'-4 1/4"	13	24'-8"	434	3.15
TYPE 12	12"	13	8'-1"	13	24'-8"	444	3.77
TYPE 14	14"	13	8'-7 1/2"	13	24'-8"	451	4.18

APPROX. QUANTITIES FOR INLET

TYPE	CLASS "A" CONC. CU. YDS.	STEEL LBS.
9A 1	3.76	155
9B 1	3.72	141
12A 1	3.96	158
12B 1	3.89	143
14A 1	4.09	159
14B 1	3.98	145

FOR APPROX. QUANTITIES FOR TYPE A2 OR B2 (ALL "W" WIDTHS) ADD 1.48 CU. YDS. CONCRETE AND 73 LBS. STEEL.

USE WITH CUR. STD. DWGS.
RBM-001 RDB-230 RDB-420

KENTUCKY
DEPARTMENT OF HIGHWAYS

CONCRETE MEDIAN
BARRIER BOX INLET
(SLIP-FORM)

STANDARD DRAWING NO. RDB-231-11

SUBMITTED William E. Ginkel — DIRECTOR DIVISION OF DESIGN — 12-01-15 DATE

APPROVED — STATE HIGHWAY ENGINEER — 12-01-15 DATE

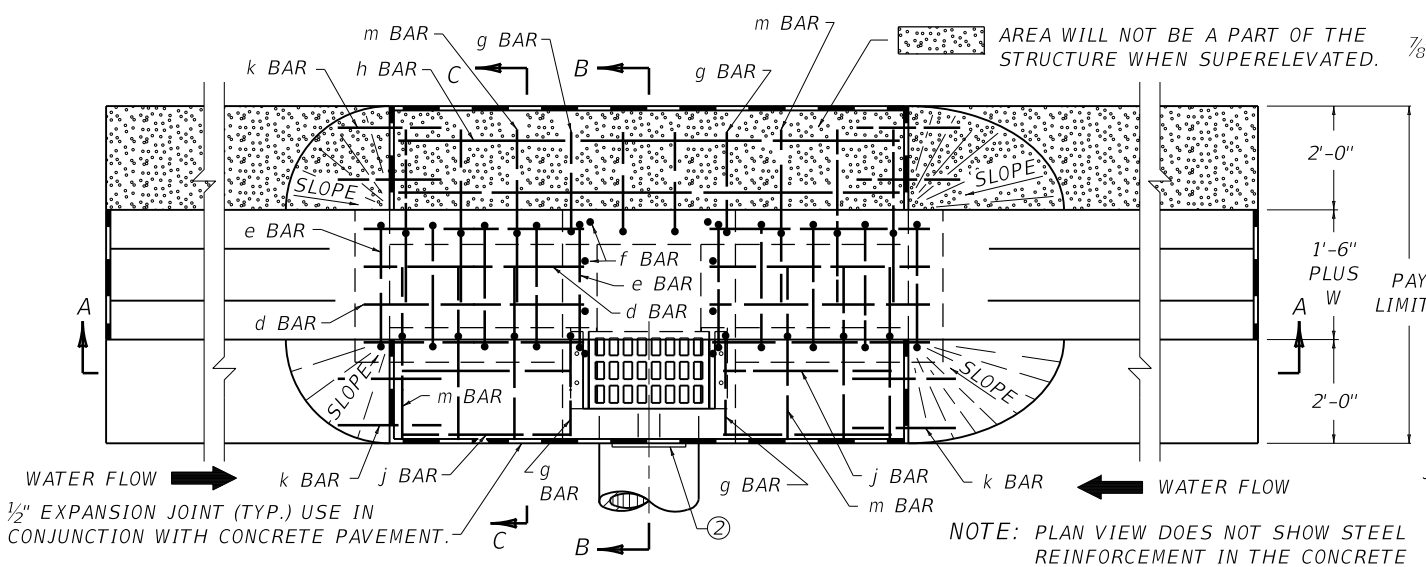

PLAN VIEW (BOX INLET TYPE A)

NOTE: PLAN VIEW DOES NOT SHOW STEEL REINFORCEMENT IN THE CONCRETE MEDIAN BARRIER.

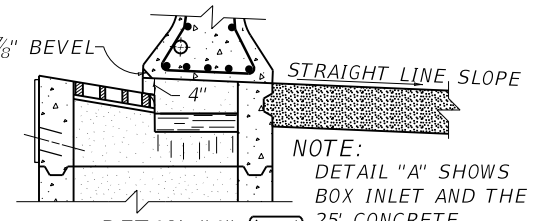

DETAIL "A"

NOTE: DETAIL "A" SHOWS BOX INLET AND THE 25' CONCRETE MEDIAN BARRIER IN SUPERELEVATION.

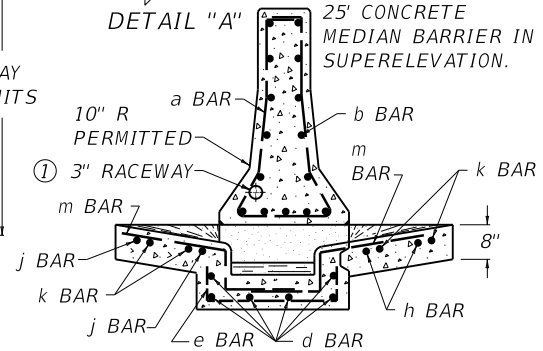

SECTION C-C

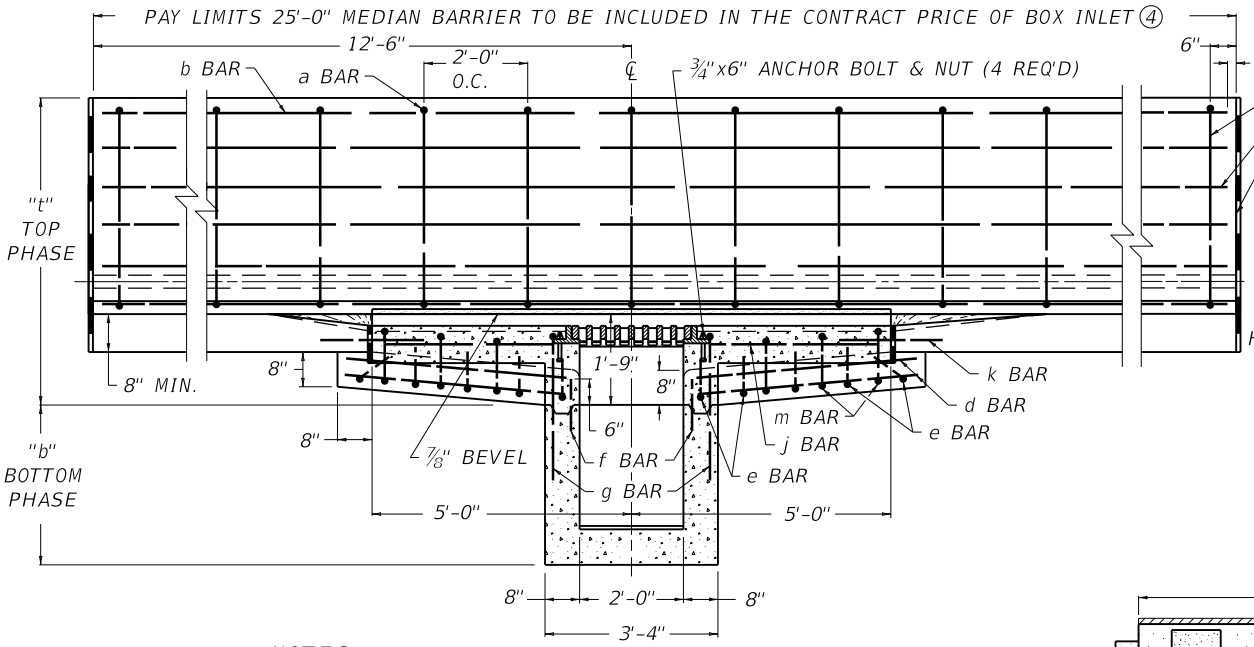

SECTION A-A

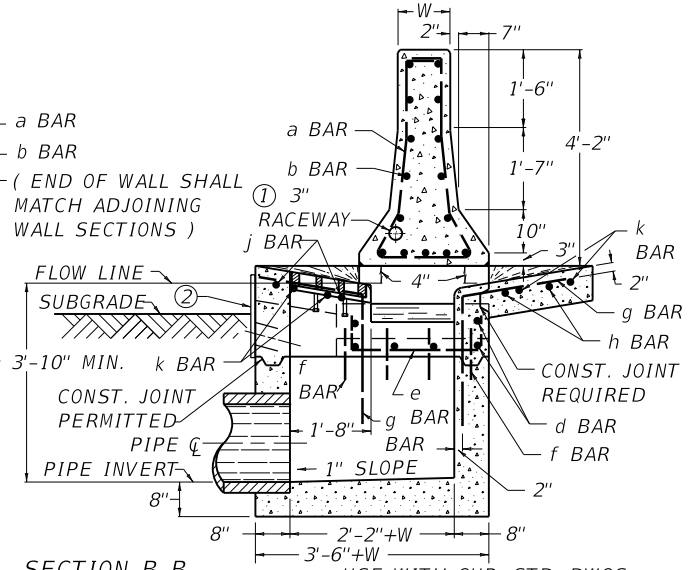

SECTION B-B

USE WITH CUR. STD. DWGS.
RBM-050 RBM-053 RDB-241

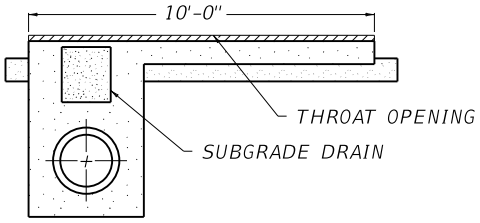

BOX INLET TYPE B

~ NOTES ~

① SEE PLANS FOR SIZE, LOCATION AND PAYMENT FOR RACEWAY WHEN REQUIRED.
② FABRIC WRAPPED BACKFILL DRAIN, (ONE PER WEEP HOLE) .
3. ALL WALLS AND SLABS ARE 8" THICK UNLESS OTHERWISE SHOWN.
④ MEDIAN BARRIER WALL MAY BE CAST-IN-PLACE, FIXED OR SLIP-FORMED, CONTRACTOR'S OPTION.
5. WALL REINFORCEMENT IS DETAILED FOR CAST-IN-PLACE WALLS. FOR SLIP-FORMED WALLS SEE CURRENT STANDARD DRAWING RDB-241 FOR STEEL DETAIL.

KENTUCKY
DEPARTMENT OF HIGHWAYS

CONCRETE MEDIAN BARRIER BOX INLET (50" TALL WALL CAST-IN-PLACE)

STANDARD DRAWING NO. RDB-240-02

SUBMITTED William E. Ginkel — DIRECTOR DIVISION OF DESIGN — 12-01-15 DATE

APPROVED — STATE HIGHWAY ENGINEER — 12-01-15 DATE

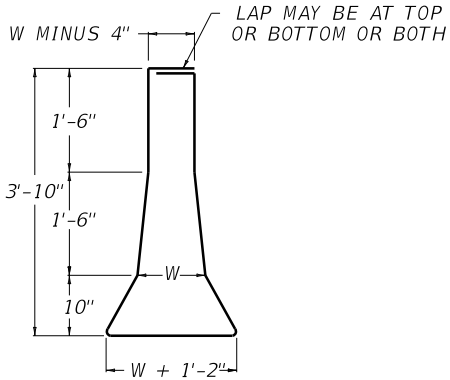

a BAR

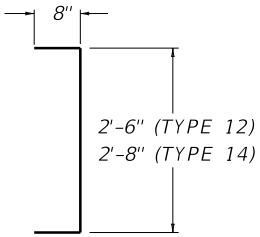

e BAR

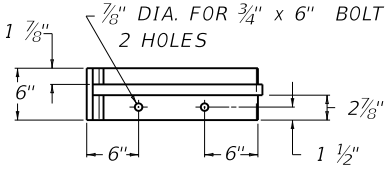

FRAME PLAN VIEW
(LEFT HALF)

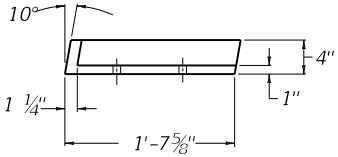

FRAME ELEVATION

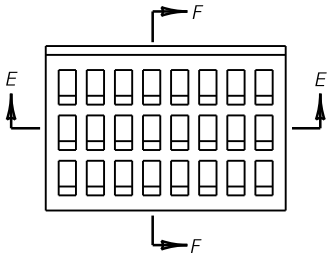

GRATE PLAN VIEW

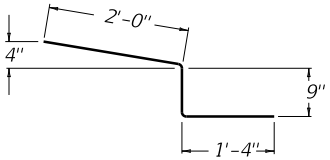

m BAR

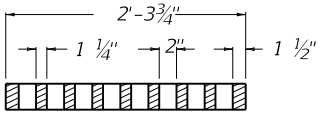

SECTION E-E

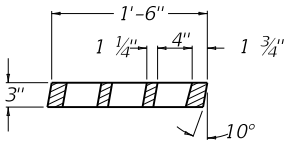

SECTION F-F

~ NOTES ~

BID ITEM AND UNIT TO BID
CONC. MED BARR BOX INLET TY ☆ ⊗ ⊕ △ -50 EACH

☆ 12 OR 14 DEPENDING ON "W" WIDTH

⊗ = "A" FOR SAG VERTICALS
"B" FOR STRAIGHT GRADE

⊕ = 1 FOR OPENING ON ONE SIDE OF BOX INLET
2 FOR OPENING ON BOTH SIDES OF BOX INLET

△ (b) = BOTTOM PHASE (†) = TOP PHASE
NO (b) OR (†) SUFFIX INDICATES COMPLETE INLET.

1. ALL STEEL REINFORCEMENT BARS SHALL BE NO. 5 BARS.
2. THE RATE OF INCREASE OF ADDITIONAL CLASS "A" CONCRETE PER FT. OF HEIGHT ABOVE THE MINIMUM 3'-10" SHALL BE 0.35 CU. YD.S FOR A TYPE 12 AND 0.37 CU. YDS. FOR A TYPE 14 BOX INLET.
3. PLACE ALL STEEL REINFORCEMENT 2" MINIMUM FROM OUTSIDE FACE OF WALL, EXCEPT AS OTHERWISE SHOWN.
4. SEE CUR. STD. DWG. RDB-420 FOR STEEL REINFORCEMENT IN BOTTOM OF BOX WHEN H = 8'-0" TO 15'-0".
5. USE CHAMBER DIMENSIONS TO BEST FIT AND EQUALLY SPACE REINFORCEMENT STEEL.
6. A SYMMETRICAL WALL IS DETAILED, AN ASYMMETRICAL WALL MAY BE REQUIRED (SEE PLANS).

(7) 2'-6" FOR MIN. HEIGHT OF 3'-10"

(8) STEEL QUANTITIES ARE FOR CAST-IN-PLACE WALL.

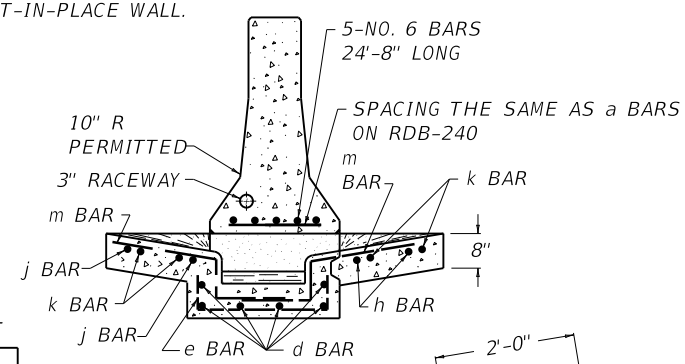

SECTION C-C
(SLIP-FORM WALL)

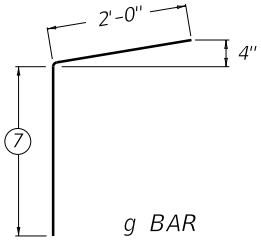

g BAR

REINFORCEMENT BARS FOR BOX INLET

BAR	BOX TYPE							
	A1	A2	A1	A2	B1	B2	B1	B2
	QTY.		LENGTH		QTY.		LENGTH	
TYPE 12								
e	10		3'-9"		9		3'-9"	
TYPE 14								
e	10		3'-11"		9		3'-11"	
ALL TYPES								
d	12		4'-3"		6		7'-5"	
f	8		1'-0"		8		1'-0"	
g	2	6	4'-6"		1	5	4'-6"	
h	0	2	0	9'-8"	0	2	0	9'-8"
j	4		3'-3"		2		7'-0"	
k	4	8	2'-0"		4	8	2'-0"	
m	6	12	4'-1"		6	12	4'-1"	

APPROX. QTYS. FOR 25' CONC. MEDIAN BARRIER

INLET	W	BAR a		BAR b		STEEL	CONC.
		QTY.	LENGTH	QTY.	LENGTH	LBS. (8)	CU. YDS.
TYPE 12	12"	13	11'-6"	15	24'-8"	542	5.16
TYPE 14	14"	13	12'-0"	15	24'-8"	549	5.8

APPROX. QUANTITIES FOR INLET

TYPE	CLASS "A" CONC.	STEEL
	CU. YDS.	LBS.
12A 1	3.96	158
12B 1	3.89	143
14A 1	4.09	159
14B 1	3.98	145

FOR APPROX. QUANTITIES FOR TYPE A2 OR B2 (ALL "W" WIDTHS) ADD 1.48 CU. YDS. CONCRETE AND 73 LBS. STEEL.

USE WITH CUR. STD. DWGS.
RDB-240 RDB-420

KENTUCKY
DEPARTMENT OF HIGHWAYS

CONCRETE MEDIAN
BARRIER BOX INLET
(50" TALL WALL
SLIP-FORM)

STANDARD DRAWING NO. RDB-241-02

SUBMITTED William S. Gilbert DIRECTOR, DIVISION OF DESIGN 12-01-15 DATE

APPROVED STATE HIGHWAY ENGINEER 12-01-15 DATE

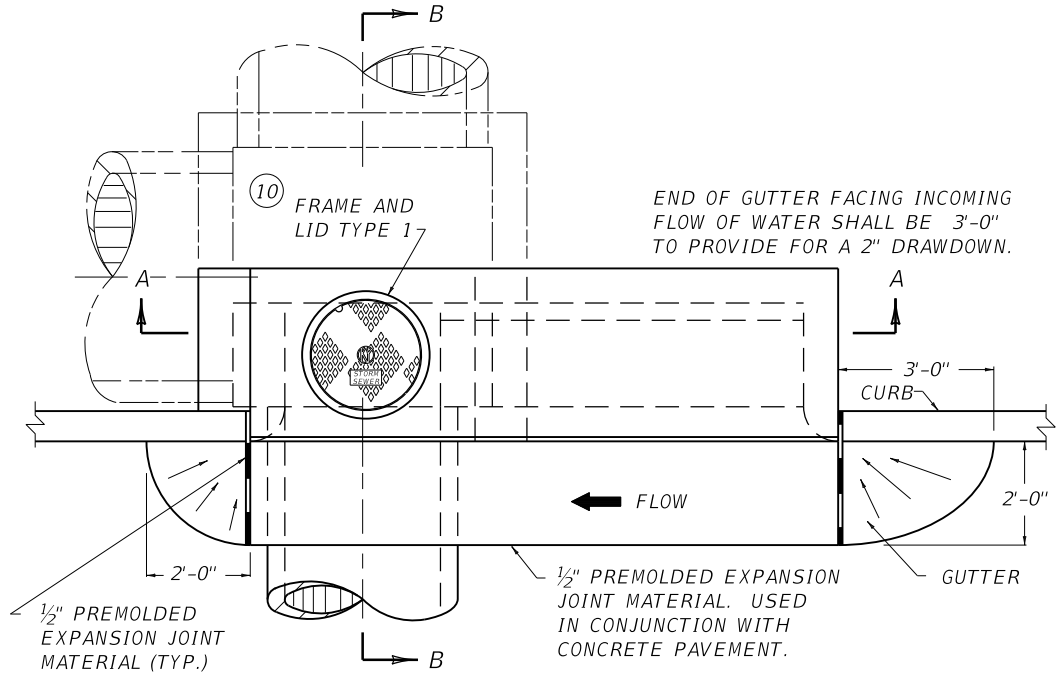

PLAN VIEW

~ NOTES ~

BID ITEM AND UNIT TO BID
CURB BOX INLET TYPE A △ EACH
△ (B) = BOTTOM PHASE ONLY, △ (T) = TOP PHASE ONLY
NO SUFFIX INDICATES COMPLETE INLET.

1. INLET SHALL BE CONSTRUCTED IN TWO PHASES (BOTTOM AND TOP)
2. SEE CUR. STD. DWGS. RDB-271, RDB-272, RDB-273, RDB-400, RDB-410 AND RDB-420 FOR STEEL PATTERN, DIMENSIONS AND QUANTITIES.
3. ALL WALLS, SLABS AND GUTTERS ARE 8" THICK UNLESS OTHERWISE INDICATED.

(4) 2'-0" DESIRED COVER, 1'-0" MINIMUM COVER.

(5) SPALLS OR CRUSHED STONE AROUND END OF 4" OR 6" PIPE FOR SUBGRADE DRAINAGE.

(6) 2" MINIMUM DRAWDOWN.

(7) GUTTER CROSS SLOPE.

(8) FLOW LINE (2" BELOW NORMAL GUTTERLINE ELEVATION).

(9) LID MAY BE RAISED OR LOWERED IF APPROVED BY THE ENGINEER.

(10) SEE CUR. STD. DWG. RDM-100 FOR FRAME AND LID TYPE 1.

11. "†" IS CONCRETE PIPE WALL THICKNESS OR METAL PIPE CORRUGATION DEPTH.

(12) MINIMUM HEIGHTS
H = Z + 1'-8" FOR STANDARD CURB
H = Z + 1'-10" FOR ISLAND CURB
H = Z + 1'-5" FOR BARRIER CURB

(13) CHAMBER MAY BE SHIFTED TO ROADWAY SIDE OF BOX PROVIDED THERE IS 1'-0" MINIMUM COVER BETWEEN SUBGRADE ELEVATION AND TOP OF PIPE.

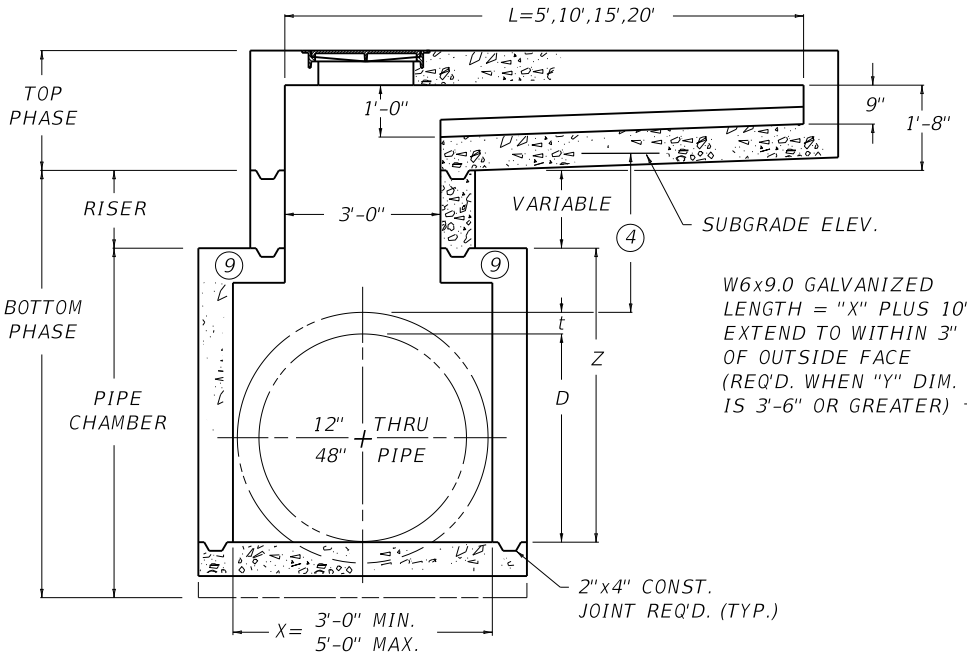

SECTION A-A

W6x9.0 GALVANIZED
LENGTH = "X" PLUS 10"
EXTEND TO WITHIN 3"
OF OUTSIDE FACE
(REQ'D. WHEN "Y" DIM.
IS 3'-6" OR GREATER)

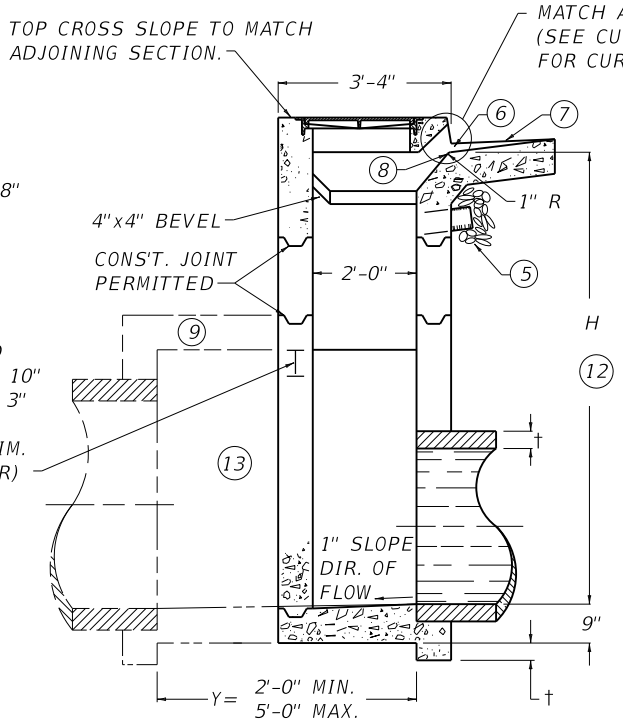

SECTION B-B

RISER
CU. YDS. CONC. PER FT. HT.
0.3

USE WITH CUR. STD. DWGS.
RDB-271 RDB-272 RDB-273
RDB-400 RDB-410 RDB-420
RDM-100

KENTUCKY
DEPARTMENT OF HIGHWAYS

CURB BOX INLET
TYPE A
(DETAIL DRAWING)

STANDARD DRAWING NO. RDB-270-09

SUBMITTED William E. Ginkel DIRECTOR, DIVISION OF DESIGN 12-01-15 DATE

APPROVED STATE HIGHWAY ENGINEER 12-01-15 DATE

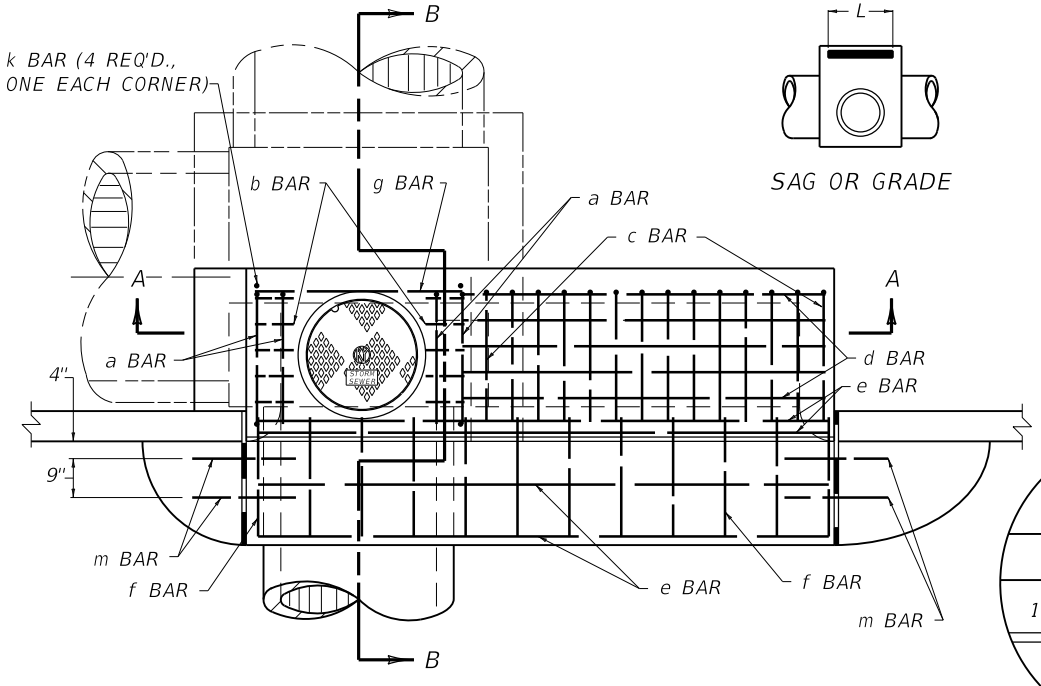

PLAN VIEW

SAG OR GRADE

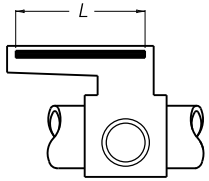

GRADE

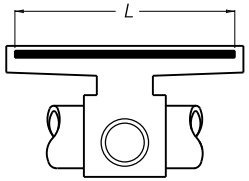

SAG

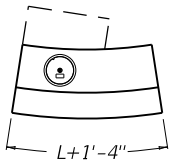

CURVE LAYOUT

~ NOTES ~

1. SEE CUR. STD. DWG. RDB-273 FOR LID REINFORCEMENT.
2. e, f, AND g BARS SPACED 1'-0" O.C. ALL OTHER BARS SPACED 6" O.C. EXCEPT WHERE OTHERWISE SPECIFIED.
3. PLACE ALL STEEL REINFORCEMENT 2" FROM INSIDE OF INLET WALL EXCEPT WHERE OTHERWISE SPECIFIED.

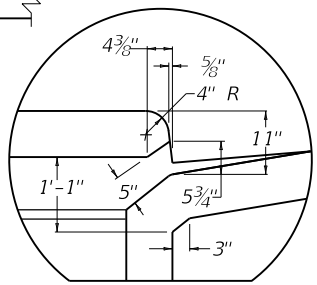

BARRIER CURB

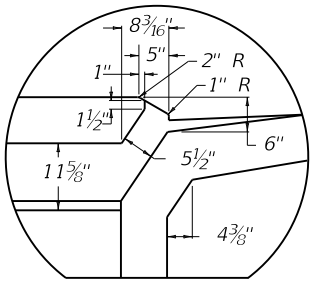

ISLAND CURB

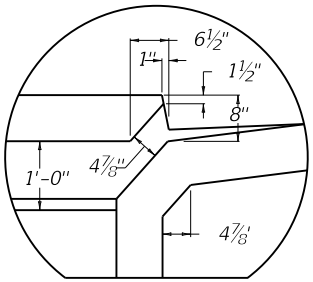

STANDARD CURB

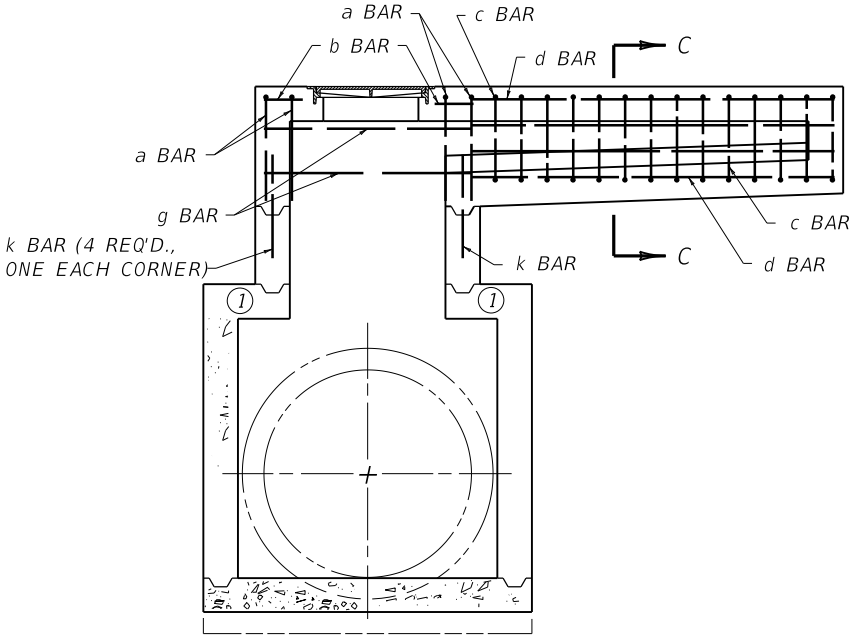

SECTION A-A

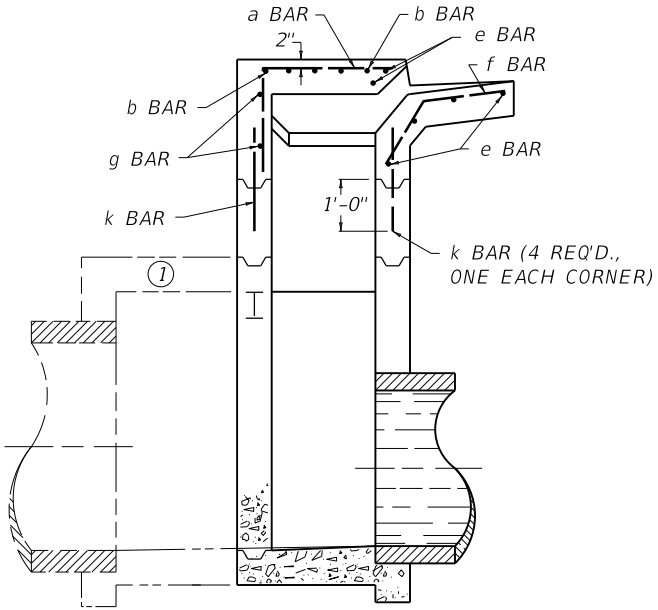

SECTION B-B

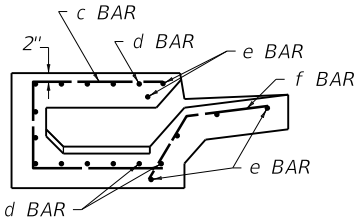

SECTION C-C

USE WITH CUR. STD. DWGS.
RDB-270 RDB-272 RDB-273
RDB-400 RDB-410 RDB-420

KENTUCKY
DEPARTMENT OF HIGHWAYS

CURB BOX INLET
TYPE A
(STEEL DRAWING)

STANDARD DRAWING NO. RDB-271-05

SUBMITTED William S. Sahd — DIRECTOR DIVISION OF DESIGN — 12-01-15 DATE

APPROVED — STATE HIGHWAY ENGINEER — 12-01-15 DATE

DIMENSIONS AND ESTIMATE OF QUANTITIES (TOP PHASE)

(3) SIZE NO.		THROAT "L"	CONC.	NO. 5 STEEL BARS																				LBS.
				BAR a		BAR b		BAR c		BAR d (4)		BAR d (5)		BAR e		BAR f		BAR g		BAR k (1)		BAR m		
GRADE	SAG	FT.	CU.YDS.	QTY.	LIN. FT.	QTY.	LIN. FT.	QTY.	LIN. FT.	QTY.	LIN. FT.	QTY.	LIN. FT.	QTY.	LIN. FT.	QTY.	LIN. FT.	QTY.	LIN. FT.	QTY.	LIN. FT.	QTY.	LIN. FT.	
1	5	5'-0"	1.4	4	4'-6"	10	0'-9"	4	6'-7"	13	2'-0"	26	1'-0"	6	6'-0"	7	3'-0"	2	4'-0"	4	2'-0"	4	2'-0"	165
2	6	10'-0"	2.7					14			7'-0"		3'-6"		11'-0"	12								349
3	7	15'-0"	3.9					24			12'-0"		6'-0"		16'-0"	17								532
4	8	20'-0"	5.1					34			17'-0"		8'-6"		21'-0"	22								716

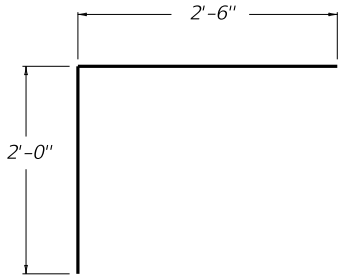

a BAR

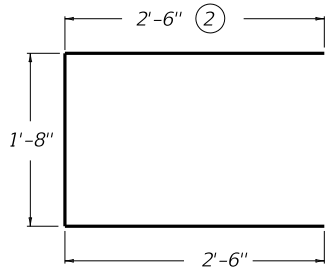

c BAR

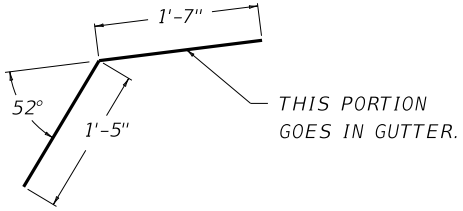

f BAR

~ NOTES ~

(1) USE "k" BARS ONLY IN CONJUNCTION WITH THE RISER.
(2) 2'-3" FOR ISLAND CURB.
(3) INLETS ARE SHOWN ON PLANS AS "CURB BOX INLET TYPE A". FOLLOWING THIS ON THE PLANS ARE TWO NUMBERS AND A BOX HEIGHT. USE SECOND NUMBER WITH THIS CHART.
(4) THIS SET OF "d" BARS ARE TO BE USED ONLY WHEN THE BOX INLET IS BUILT ON GRADE.
(5) THIS SET OF "d" BARS ARE TO BE USED ONLY WHEN THE BOX INLET IS BUILT IN A SAG.
6. "b", "d", "e", "g", "k", AND "m" BARS ARE ALL STRAIGHT BARS.
7. THE ENGINEER MAY REQUIRE ADDITIONAL REINFORCEMENT TO ELIMINATE SETTLEMENT OF ADJOINING SIDEWALK WHEN APPLICABLE. THIS WORK SHALL BE INCIDENTAL TO THE COST OF THE CURB BOX.

USE WITH CUR. STD. DWGS.
RDB-270 RDB-271 RDB-273
RDB-400 RDB-410 RDB-420

KENTUCKY
DEPARTMENT OF HIGHWAYS

CURB BOX INLET
TYPE A
(TOP PHASE TABLE)

STANDARD DRAWING NO. RDB-272-07

SUBMITTED William S. Gabbard — DIRECTOR, DIVISION OF DESIGN — 12-01-15 DATE
APPROVED — STATE HIGHWAY ENGINEER — 12-01-15 DATE

REINFORCEMENT STEEL FOR 8" LID

SIZE		NO. 5 STEEL BARS								LBS.
		BAR s		BAR t		BAR u		BAR v		
X	Y	QTY.	LIN. FT.	QTY.	LIN. FT.	QTY.	LIN. FT.	QTY.	LIN. FT.	
3'-0"	2'-0"	-	-	-	-	-	-	-	-	7
	2'-6"	4	3'-6"	6	4'-0"			14	0'-10"	59
	3'-0"		4'-0"	8					1'-4"	77
	3'-6"		4'-6"	10					1'-10"	94
	4'-0"		5'-0"	12					2'-4"	112
	4'-6"		5'-6"	14					2'-10"	130
	5'-0"		6'-0"	16					3'-4"	147
3'-6"	2'-0"	4	3'-0"	4	4'-6"	-	-	-	-	38
	2'-6"		3'-6"	6				14	0'-10"	62
	3'-0"		4'-0"	8					1'-4"	81
	3'-6"		4'-6"	10					1'-10"	100
	4'-0"		5'-0"	12					2'-4"	118
	4'-6"		5'-6"	14					2'-10"	137
	5'-0"		6'-0"	16					3'-4"	156
4'-0"	2'-0"	8	3'-0"	4	5'-0"	20	0'-10"	-	-	70
	2'-6"		3'-6"	6				14	0'-10"	97
	3'-0"		4'-0"	8					1'-4"	119
	3'-6"		4'-6"	10					1'-10"	141
	4'-0"		5'-0"	12					2'-4"	163
	4'-6"		5'-6"	14					2'-10"	185
	5'-0"		6'-0"	16					3'-4"	207
4'-6"	2'-0"	8	3'-0"	4	5'-6"	20	1'-1"	-	-	78
	2'-6"		3'-6"	6				14	0'-10"	105
	3'-0"		4'-0"	8					1'-4"	128
	3'-6"		4'-6"	10					1'-10"	151
	4'-0"		5'-0"	12					2'-4"	174
	4'-6"		5'-6"	14					2'-10"	197
	5'-0"		6'-0"	16					3'-4"	220
5'-0"	2'-0"	12	3'-0"	4	6'-0"	20	1'-4"	-	-	97
	2'-6"		3'-6"	6				14	0'-10"	127
	3'-0"		4'-0"	8					1'-4"	154
	3'-6"		4'-6"	10					1'-10"	180
	4'-0"		5'-0"	12					2'-4"	207
	4'-6"		5'-6"	14					2'-10"	233
	5'-0"		6'-0"	16					3'-4"	259

~ NOTES ~

1. IN ADDITION TO THE CHARTED STEEL, FOUR "L" BARS ARE REQUIRED IN THE LID AND ARE INCLUDED IN THE TOTALS.
2. CONCRETE QUANTITIES FOR LID ARE INCLUDED ON "DIMENSIONS AND ESTIMATE OF QUANTITIES (PIPE CHAMBER)", SEE CUR. STD. DWG. RDB-410.
3. REINFORCEMENT SHALL HAVE A CLEAR DISTANCE OF 2" FROM THE OUTSIDE FACE UNLESS OTHERWISE SHOWN.

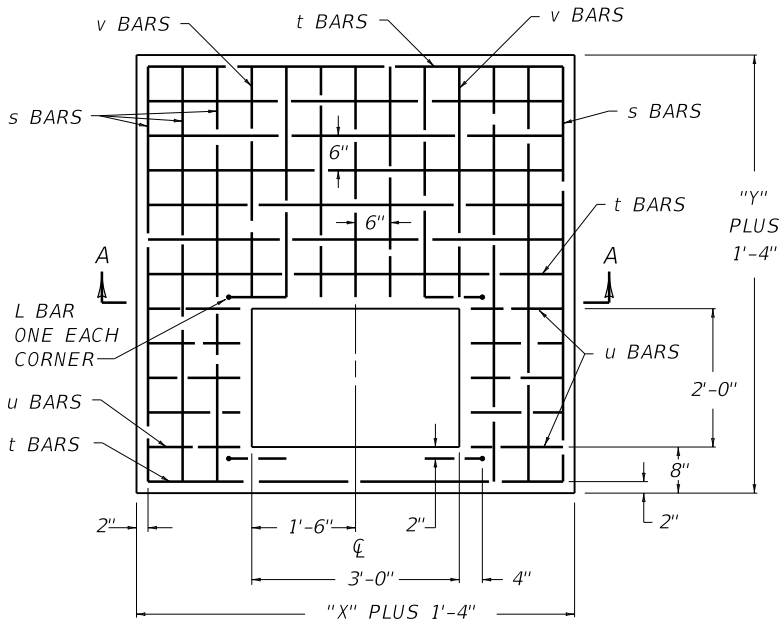

DETAIL OF 8" LID
PLAN VIEW

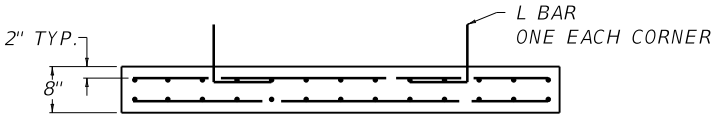

SECTION A-A

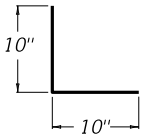

L BAR DETAIL

USE WITH CUR. STD. DWGS.
RDB-271 RDB-272 RDB-400
RDB-410 RDB-420 RDB-270

KENTUCKY
DEPARTMENT OF HIGHWAYS

CURB BOX INLET
TYPE A
(DETAIL & BAR CHART FOR 8" LID)

STANDARD DRAWING NO. RDB-273-06

SUBMITTED William E. Ginkel — DIRECTOR DIVISION OF DESIGN — 12-01-15 DATE

APPROVED — STATE HIGHWAY ENGINEER — 12-01-15 DATE

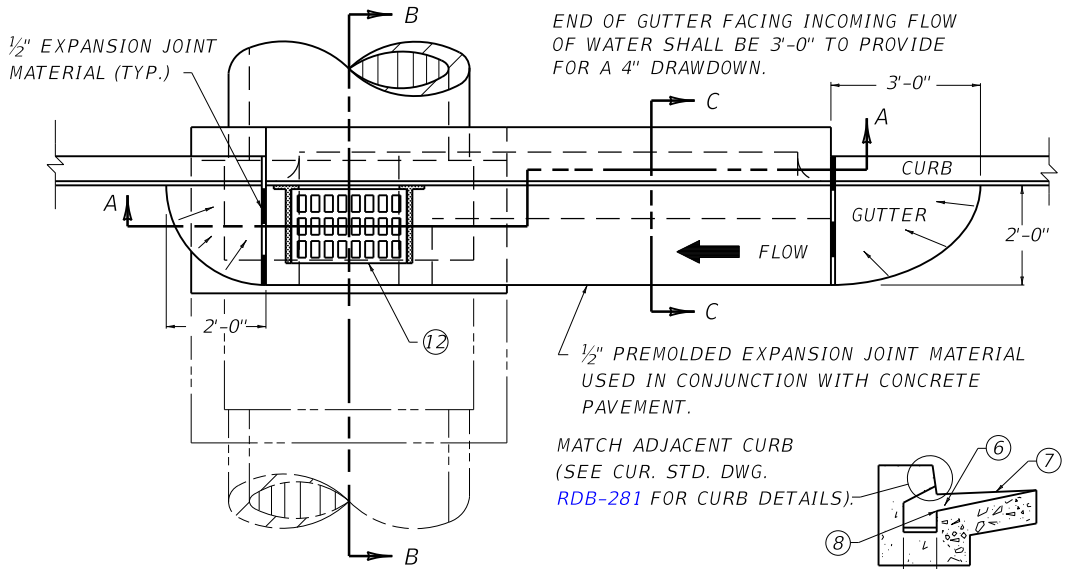

PLAN VIEW

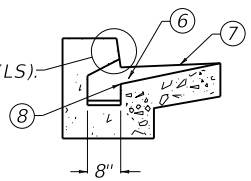

SECTION C-C

~ NOTES ~

BID ITEM AND UNIT TO BID
CURB BOX INLET TYPE B △ EACH
△ (B) = BOTTOM PHASE ONLY △ (T) = TOP PHASE ONLY
NO SUFFIX INDICATES COMPLETE INLET.

1. INLET SHALL BE CONSTRUCTED IN TWO PHASES (BOTTOM AND TOP).
2. SEE CUR. STD. DWGS. RDB-281 RDB-282 RDB-283 RDB-400 RDB-410 AND RDB-420 FOR STEEL PATTERN, DIMENSIONS AND QUANTITIES.
3. ALL WALLS, SLABS AND GUTTERS ARE 8" THICK UNLESS OTHERWISE INDICATED.

(4) 24" DESIRED COVER, 12" MINIMUM COVER.
(5) SPALLS OR CRUSHED STONE AROUND END OF A 4" OR 6" PIPE FOR SUBGRADE DRAINAGE.
(6) 4" MINIMUM DRAWDOWN.
(7) GUTTER CROSS SLOPE.
(8) FLOW LINE (4" BELOW NORMAL GUTTERLINE ELEVATION).
(9) LID MAY BE RAISED OR LOWERED IF APPROVED BY THE ENGINEER.
(10) "t" IS CONCRETE PIPE WALL THICKNESS OR METAL PIPE CORRUGATION DEPTH.
(11) MINIMUM HEIGHT
H = Z + 1'-4" FOR ALL CURB TYPES
(12) SEE CUR. STD. DWG. RDB-282 FOR FRAME AND GRATE DETAIL.

RISER
CU. YDS. CONC. PER FT. HT.
0.3

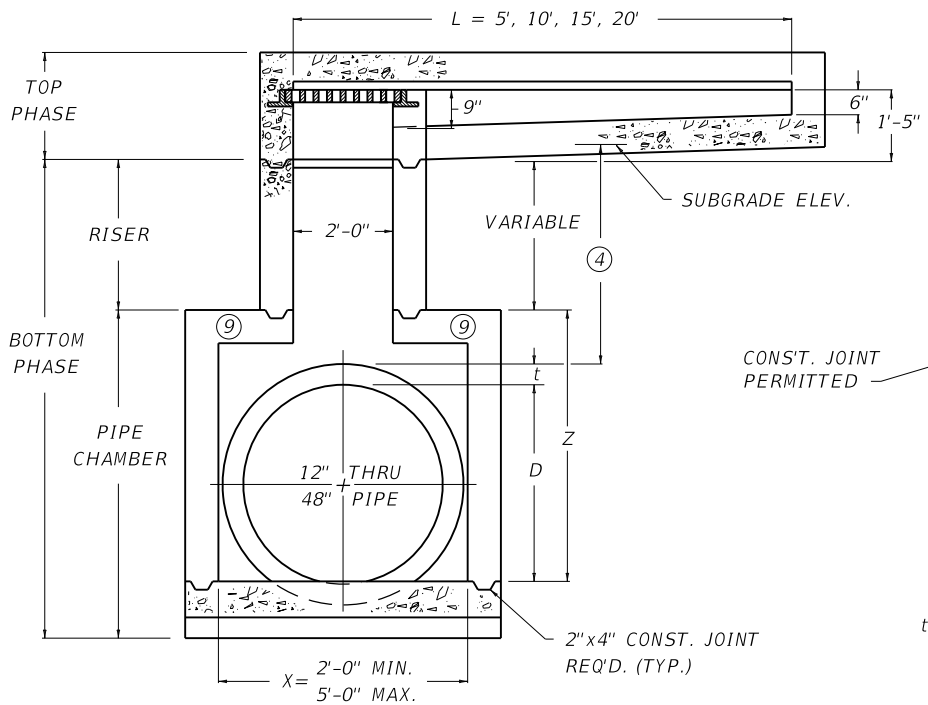

SECTION A-A

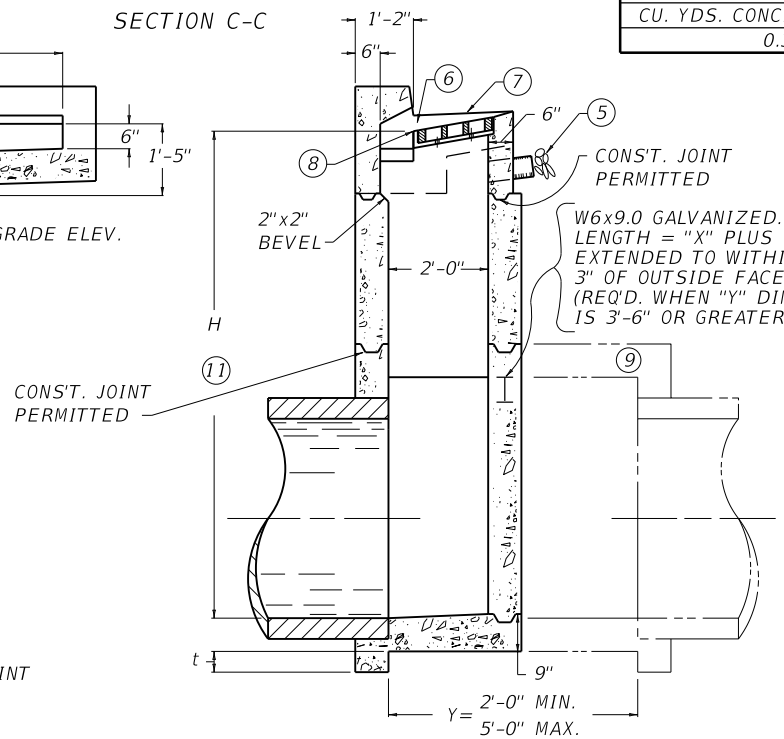

SECTION B-B

STEEL BEAM GUARDRAIL LOCATION (WHEN REQ'D.)

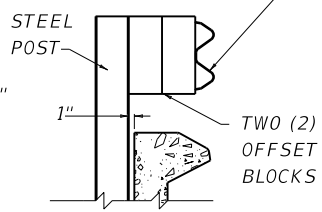

GUARDRAIL DETAIL

USE WITH CUR. STD. DWGS.
RDB-281 RDB-282 RDB-283
RDB-400 RDB-410 RDB-420

KENTUCKY
DEPARTMENT OF HIGHWAYS

CURB BOX INLET
TYPE B
(DETAIL DRAWING)

STANDARD DRAWING NO. RDB-280-06

SUBMITTED — DIRECTOR, DIVISION OF DESIGN — 12-01-15 DATE
APPROVED — STATE HIGHWAY ENGINEER — 12-01-15 DATE

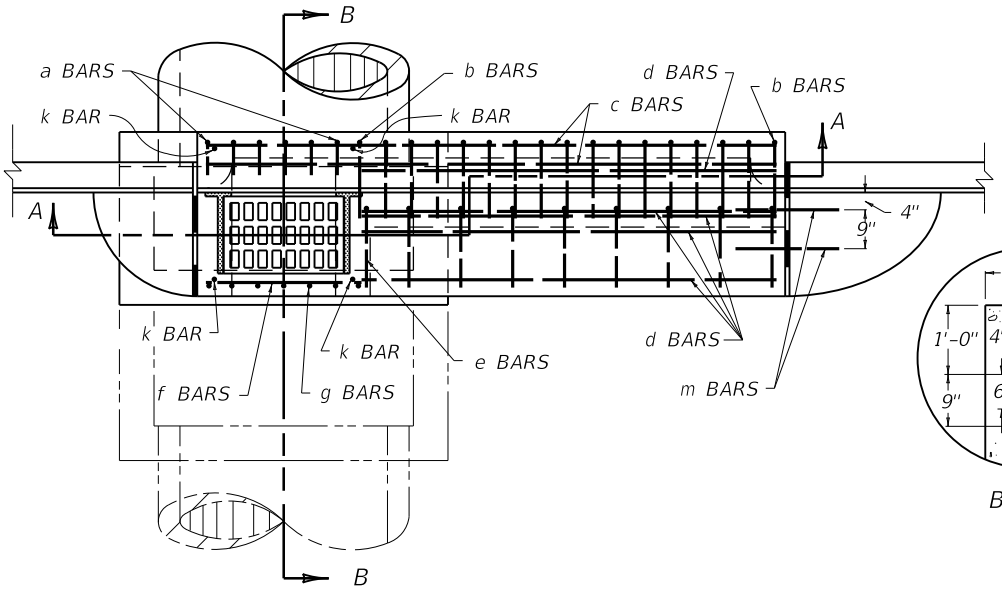

PLAN VIEW

~ NOTES ~

1. SEE CUR. STD. DWG. RDB-283 FOR LID REINFORCEMENT.
2. "e" and "d" BARS SPACED 1'-0" O.C. ALL OTHER BARS SPACED 6" O.C. EXCEPT WHERE OTHERWISE SPECIFIED.
3. PLACE ALL STEEL REINFORCEMENT 2" FROM INSIDE OF INLET WALL EXCEPT WHERE OTHERWISE SPECIFIED.

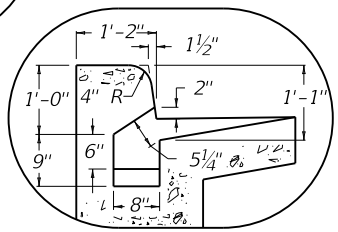

BARRIER CURB

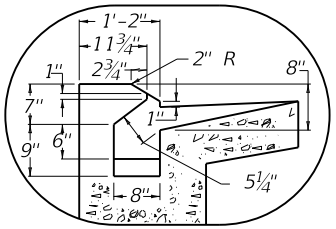

ISLAND CURB

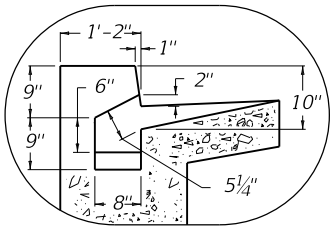

STANDARD CURB

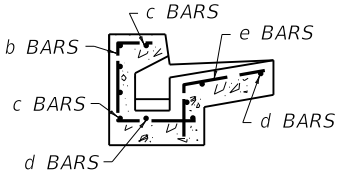

SECTION C-C

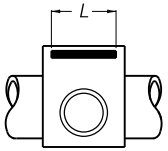

SAG OR GRADE

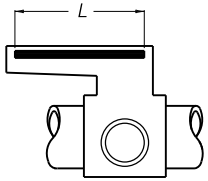

GRADE

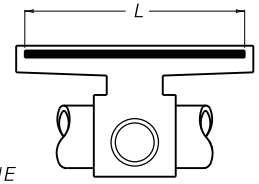

SAG

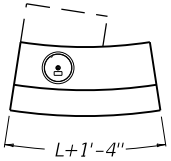

CURVE LAYOUT

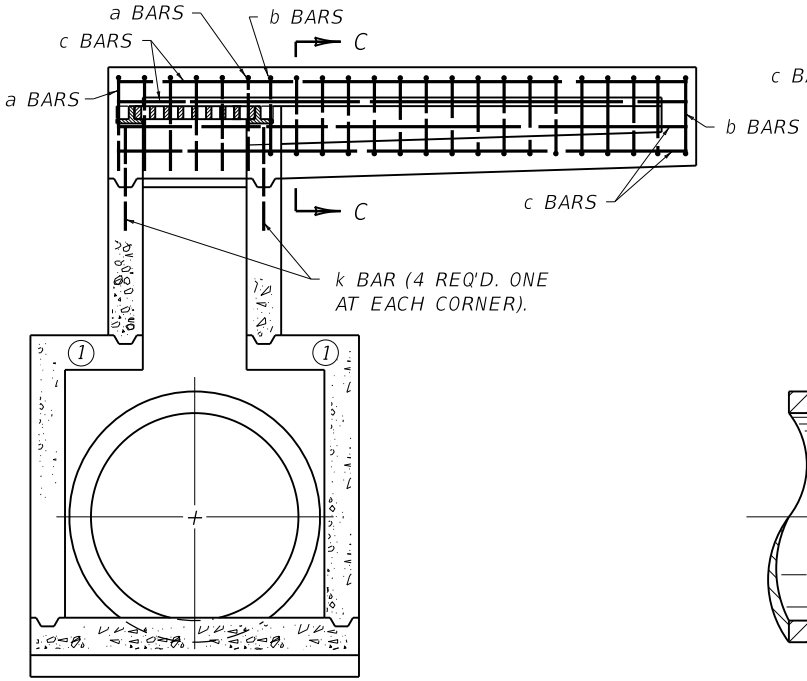

SECTION A-A

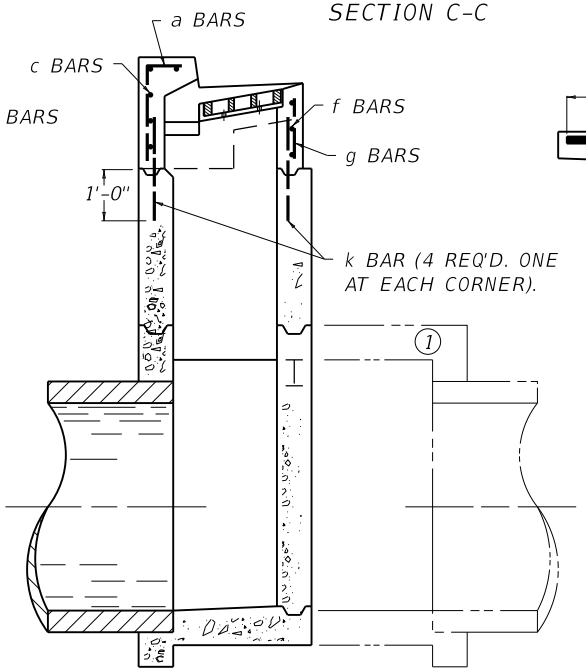

SECTION B-B

USE WITH CUR. STD. DWGS.
RDB-280 RDB-282 RDB-283
RDB-400 RDB-410 RDB-420

KENTUCKY
DEPARTMENT OF HIGHWAYS

CURB BOX INLET
TYPE B
(STEEL DRAWING)

STANDARD DRAWING NO. RDB-281-03

SUBMITTED William E. Ginkel — DIRECTOR DIVISION OF DESIGN — 12-01-15 DATE

APPROVED — STATE HIGHWAY ENGINEER — 12-01-15 DATE

DIMENSIONS AND ESTIMATE OF QUANTITIES (TOP PHASE)

(2) SIZE NO.		THROAT "L"	CONC.	NO. 5 STEEL BARS																				LBS.
				BAR a		BAR b		BAR c		BAR d (4)		BAR d (5)		BAR e		BAR f		BAR g		BAR k (1)		BAR m		
GRADE	SAG	FT.	CU.YDS.	QTY.	LIN. FT.	QTY.	LIN. FT.	QTY.	LIN. FT.	QTY.	LIN. FT.	QTY.	LIN. FT.	QTY.	LIN. FT.	QTY.	LIN. FT.	QTY.	LIN. FT.	QTY.	LIN. FT.	QTY.	LIN. FT.	
1	5	5'-0"	0.8	6	2'-6"	7	3'-7"	5	6'-0"	5	3'-0"	10	1'-6"	4	2'-7"	3	3'-0"	7	1'-2"	4	2'-0"	4	2'-0"	127
2	6	10'-0"	1.5			17			11'-0"		8'-0"		4'-0"	10										233
3	7	15'-0"	2.1			27			16'-0"		13'-0"		6'-6"	14										333
4	8	20'-0"	2.8			37			21'-0"		18'-0"		9'-0"	20										439

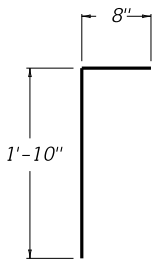

a BAR

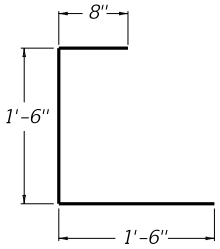

b BAR

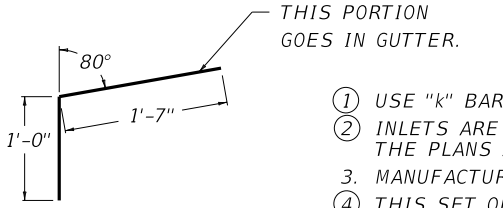

e BAR

~ NOTES ~

1. USE "k" BARS ONLY IN CONJUNCTION WITH THE RISER.
2. INLETS ARE SHOWN ON PLANS AS "CURB BOX INLET TYPE B". FOLLOWING THIS ON THE PLANS ARE TWO NUMBERS AND A BOX HEIGHT. USE SECOND NUMBER WITH THIS CHART.
3. MANUFACTURES' DRAFT WILL BE ACCEPTED ON ALL CASTINGS.
4. THIS SET OF "d" BARS ARE TO BE USED ONLY WHEN THE BOX INLET IS BUILT ON GRADE.
5. THIS SET OF "d" BARS ARE TO BE USED ONLY WHEN THE BOX INLET IS BUILT IN A SAG.
6. "c", "d", "f", "g", "k", AND "m" BARS ARE ALL STRAIGHT BARS.
7. THE ENGINEER MAY REQUIRE ADDITIONAL REINFORCEMENT, TO ELIMINATE SETTLEMENT OF ADJOINING SIDEWALK WHEN APPLICABLE. THIS WORK SHALL BE INCIDENTAL TO THE COST OF THE CURB BOX.

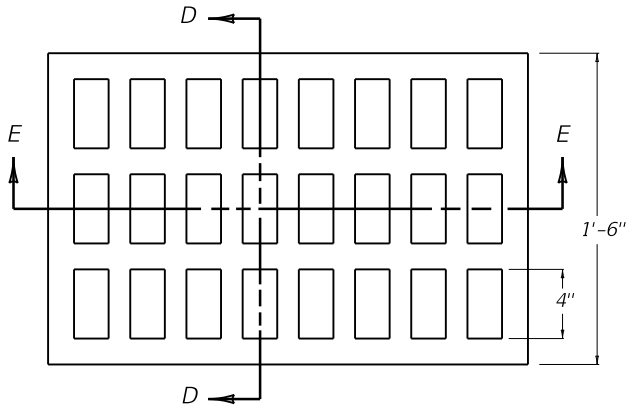

GRATE PLAN VIEW

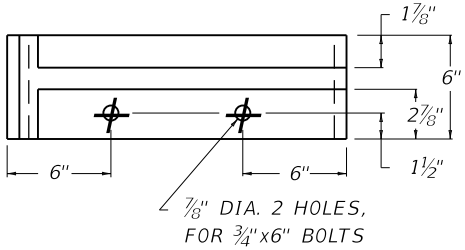

FRAME PLAN VIEW
(LEFT HALF)

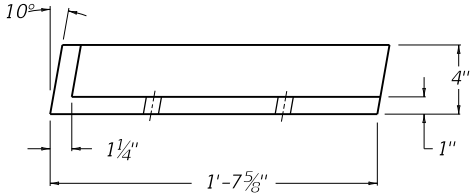

FRAME ELEVATION

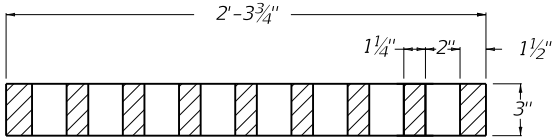

SECTION E-E

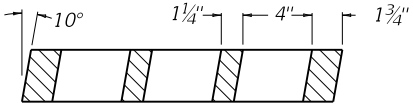

SECTION D-D

USE WITH CUR. STD. DWGS.
RDB-280 RDB-281 RDB-283
RDB-400 RDB-410 RDB-420

KENTUCKY
DEPARTMENT OF HIGHWAYS

CURB BOX INLET
TYPE B
(TOP PHASE TABLE)

STANDARD DRAWING NO. RDB-282-04

SUBMITTED William E. Ginkel — DIRECTOR DIVISION OF DESIGN — 12-01-15 DATE

APPROVED — STATE HIGHWAY ENGINEER — 12-01-15 DATE

REINFORCEMENT STEEL FOR 8" LID

SIZE		NO. 5 STEEL BARS								
		BAR s		BAR t		BAR u		BAR v		LBS.
X	Y	QTY.	LIN. FT.	QTY.	LIN. FT.	QTY.	LIN. FT.	QTY.	LIN. FT.	
2'-0"	2'-0"	-	-	-	-	-	-	-	-	7
	2'-6"	4	3'-6"	6	3'-0"			10	0'-10"	49
	3'-0"		4'-0"	8					1'-4"	63
	3'-6"		4'-6"	10					1'-10"	76
	4'-0"		5'-0"	12					2'-4"	90
	4'-6"		5'-6"	14					2'-10"	103
	5'-0"		6'-0"	16					3'-4"	117
2'-6"	2'-0"	4	3'-0"	4	3'-6"	-	-	-	-	34
	2'-6"		3'-6"	6				10	0'-10"	52
	3'-0"		4'-0"	8					1'-4"	67
	3'-6"		4'-6"	10					1'-10"	81
	4'-0"		5'-0"	12					2'-4"	96
	4'-6"		5'-6"	14					2'-10"	111
	5'-0"		6'-0"	16					3'-4"	125
3'-0"	2'-0"	8	3'-0"	4	4'-0"	20	0'-10"	-	-	66
	2'-6"		3'-6"	6				10	0'-10"	87
	3'-0"		4'-0"	8					1'-4"	105
	3'-6"		4'-6"	10					1'-10"	123
	4'-0"		5'-0"	12					2'-4"	141
	4'-6"		5'-6"	14					2'-10"	158
	5'-0"		6'-0"	16					3'-4"	178
3'-6"	2'-0"	8	3'-0"	4	4'-6"	20	1'-1"	-	-	73
	2'-6"		3'-6"	6				10	0'-10"	96
	3'-0"		4'-0"	8					1'-4"	114
	3'-6"		4'-6"	10					1'-10"	133
	4'-0"		5'-0"	12					2'-4"	152
	4'-6"		5'-6"	14					2'-10"	171
	5'-0"		6'-0"	16					3'-4"	190
4'-0"	2'-0"	12	3'-0"	4	5'-0"	20	1'-4"	-	-	93
	2'-6"		3'-6"	6				10	0'-10"	119
	3'-0"		4'-0"	8					1'-4"	141
	3'-6"		4'-6"	10					1'-10"	162
	4'-0"		5'-0"	12					2'-4"	184
	4'-6"		5'-6"	14					2'-10"	206
	5'-0"		6'-0"	16					3'-4"	228
4'-6"	2'-0"	12	3'-0"	4	5'-6"	20	1'-7"	-	-	101
	2'-6"		3'-6"	6				10	0'-10"	127
	3'-0"		4'-0"	8					1'-4"	150
	3'-6"		4'-6"	10					1'-10"	173
	4'-0"		5'-0"	12					2'-4"	196
	4'-6"		5'-6"	14					2'-10"	219
	5'-0"		6'-0"	16					3'-4"	242
5'-0"	2'-0"	16	3'-0"	4	6'-0"	20	1'-10"	-	-	120
	2'-6"		3'-6"	6				10	0'-10"	150
	3'-0"		4'-0"	8					1'-4"	176
	3'-6"		4'-6"	10					1'-10"	202
	4'-0"		5'-0"	12					2'-4"	228
	4'-6"		5'-6"	14					2'-10"	254
	5'-0"		6'-0"	16					3'-4"	280

~ NOTES ~

1. IN ADDITION TO THE CHARTED STEEL, FOUR "L" BARS ARE REQUIRED IN THE LID AND ARE INCLUDED IN THE TOTALS.
2. CONCRETE QUANTITIES FOR LID ARE INCLUDED ON "DIMENSIONS AND ESTIMATE OF QUANTITIES (PIPE CHAMBER)", SEE CUR. STD. DWG. RDB-410.
3. REINFORCEMENT SHALL HAVE A CLEAR DISTANCE OF 2" FROM THE OUTSIDE FACE UNLESS OTHERWISE SHOWN.

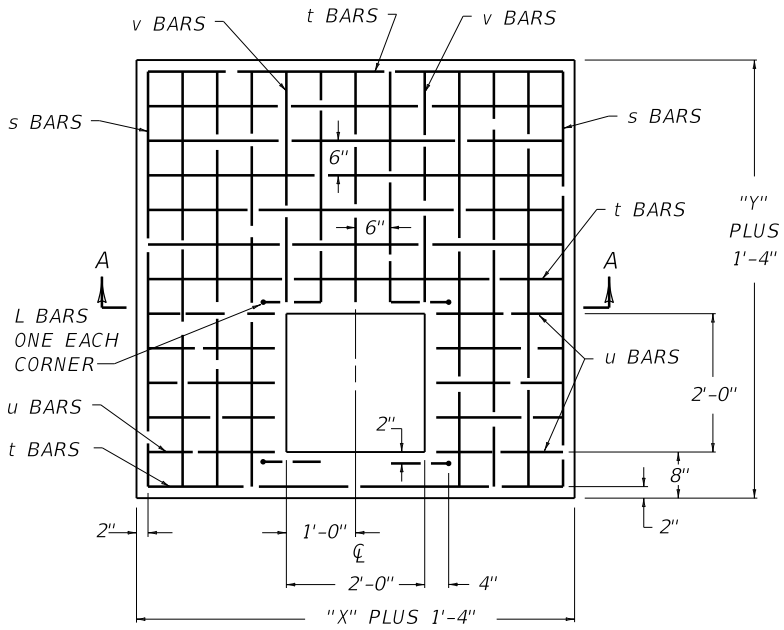

DETAIL OF 8" LID
PLAN VIEW

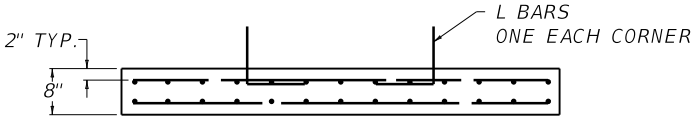

SECTION A-A

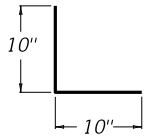

L BAR DETAIL

USE WITH CUR. STD. DWGS.
RDB-280 RDB-281 RDB-282
RDB-400 RDB-410 RDB-420

KENTUCKY
DEPARTMENT OF HIGHWAYS

CURB BOX INLET
TYPE B

(DETAIL & BAR CHART FOR 8" LID)

STANDARD DRAWING NO. RDB-283-04

SUBMITTED William E. Ginkel — DIRECTOR DIVISION OF DESIGN — 12-01-15 DATE

APPROVED — STATE HIGHWAY ENGINEER — 12-01-15 DATE

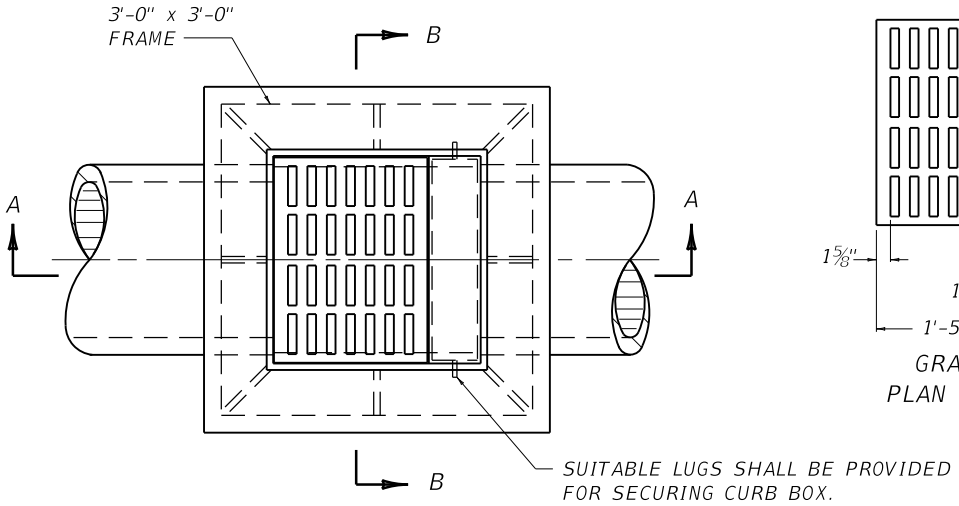

PLAN VIEW

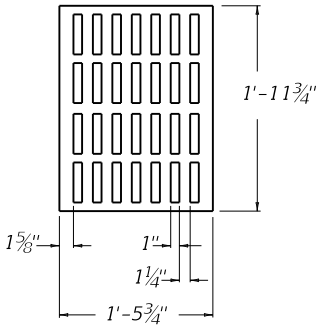

GRATE
PLAN VIEW

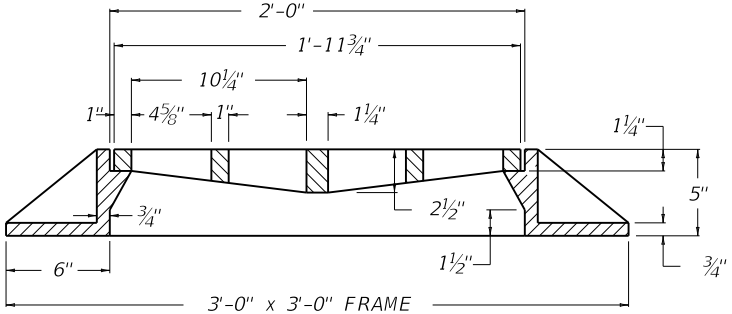

DETAIL OF FRAME & GRATE
AT SECTION A-A

BID ITEM AND UNIT TO BID
CURB BOX INLET TYPE F EACH

APPROXIMATE QUANTITIES

PIPE SIZE	MIN. HEIGHT	CU. YDS. CONC.
15"	4'-0"	1.15
18"	4'-3"	1.22
CURB FRAME WEIGHT = 61 LBS.		
FRAME WEIGHT = 277 LBS.		
GRATE WEIGHT = 127 LBS.		

NO DEDUCTIONS HAVE BEEN MADE FOR PIPE.

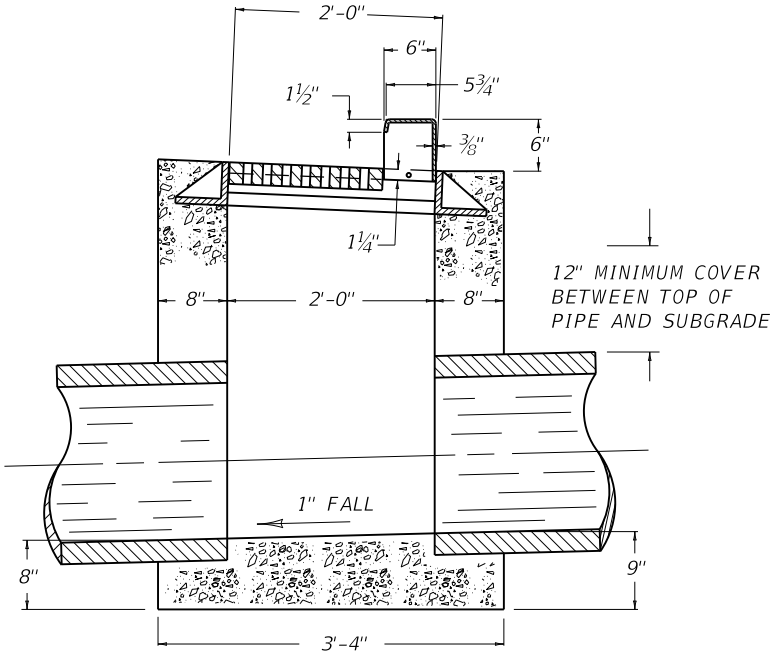

SECTION A-A

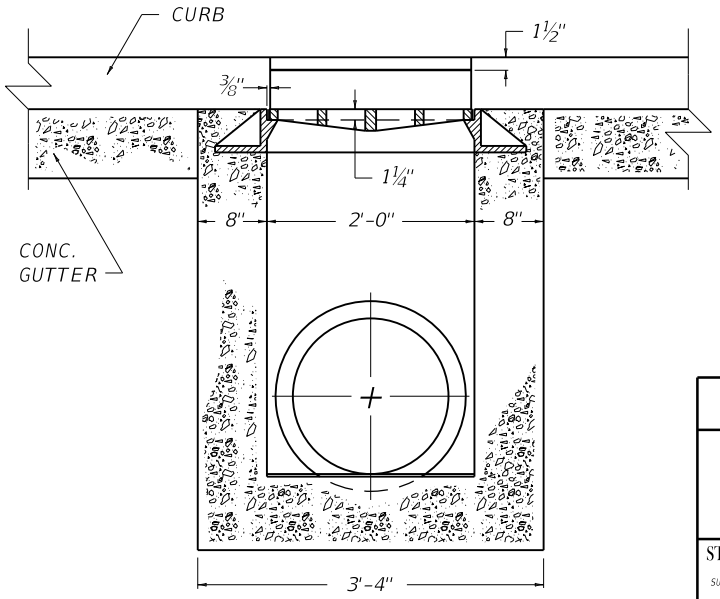

SECTION B-B

KENTUCKY
DEPARTMENT OF HIGHWAYS

CURB BOX INLET
TYPE F

STANDARD DRAWING NO. RDB-320-06

SUBMITTED William E. Ginkel — DIRECTOR, DIVISION OF DESIGN — 12-01-15 DATE

APPROVED — STATE HIGHWAY ENGINEER — 12-01-15 DATE

ADDITIONAL STEEL REQUIREMENTS FOR RISER
(WHEN H = 8' TO 15')

~ NOTES ~

1. USE WHEN "H" EXCEEDS 8'-0"
2. ALL REINFORCEMENT SHALL BE NO. 5 STEEL BARS.

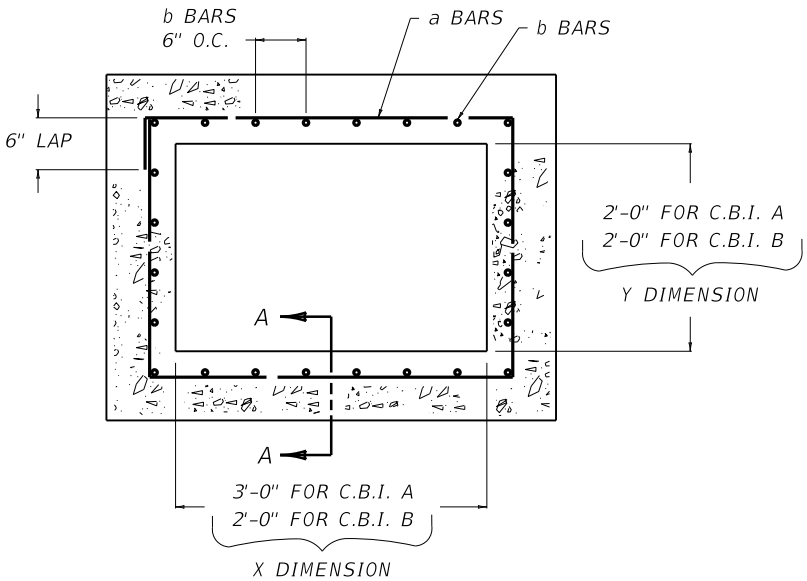

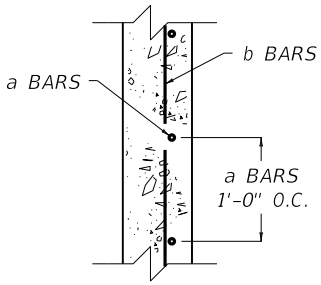

SECTION A-A
CURB BOX INLET TYPE A
AND
CURB BOX INLET TYPE B

(1) APPROXIMATE QUANTITIES PER ONE FT. IN HEIGHT	
C.B.I. A	C.B.I. B
LBS. STEEL	LBS. STEEL
38	31

(USE WITH C.B.I. A & C.B.I. B WHEN H = 8' TO 15')

KENTUCKY
DEPARTMENT OF HIGHWAYS

BOX INLET RISER

STANDARD DRAWING NO. RDB-400-05

SUBMITTED William E. Ginkel — DIRECTOR DIVISION OF DESIGN — 12-01-15 DATE

APPROVED — STATE HIGHWAY ENGINEER — 12-01-15 DATE

DIMENSIONS AND ESTIMATE OF QUANTITIES
(PIPE CHAMBER)

INLET SIZE (4)			PIPE		Z	CONCRETE	
NO. (6)	X	Y	MAX. DIA.	LOCA-TION	(1)	CU. YDS. (1) (2)	Q (3)
1	2'-0"	2'-0"	12"	X OR Y	2'-2"	0.9	0.3
2	3'-0"					1.1	
3	2'-0"		15"		2'-5"	0.9	
4	3'-0"					1.2	
5	2'-0"		18"		2'-9"	1.0	
6	3'-0"					1.3	
7	2'-0"	2'-6"	21"	Y	3'-0"	1.2	
8	2'-6"	2'-0"		X			
9		2'-6"		X OR Y		1.4	
10	3'-0"	2'-0"		X			
11		2'-6"		X OR Y		1.5	
12	2'-0"		24"	Y	3'-3"	1.3	
13	2'-6"	2'-0"		X			
14		2'-6"		X OR Y		1.5	
15	3'-0"	2'-0"		X		1.4	
16		2'-6"		X OR Y		1.6	
17	2'-0"	3'-0"	27"	Y	3'-6"	1.5	
18	2'-6"					1.7	
19	3'-0"	2'-0"		X		1.5	
20		2'-6"				1.7	
21		3'-0"		X OR Y		1.9	0.4
22	2'-0"	3'-6"	30"	Y	4'-1"		0.3
23	2'-6"					2.1	0.4
24	3'-0"					2.3	
25	3'-6"	2'-0"		X	3'-10"	1.8	0.3
26		2'-6"				2.0	0.4
27		3'-0"				2.2	
28		3'-6"		X OR Y	4'-1"	2.5	
29	2'-0"		33"	Y	4'-4"	2.0	0.3
30	2'-6"					2.2	0.4
31	3'-0"					2.4	
32	3'-6"	2'-0"		X	4'-1"	1.9	0.3
33		2'-6"				2.1	0.4
34		3'-0"				2.3	
35		3'-6"		X OR Y	4'-4"	2.6	
36	2'-0"	4'-0"	36"	Y	4'-7"	2.2	
37	2'-6"					2.5	
38	3'-0"					2.7	
39	3'-6"					2.9	
40	4'-0"	2'-0"		X	4'-4"	2.1	
41		2'-6"				2.4	
42		3'-0"				2.6	
43		3'-6"			4'-7"	2.9	
44		4'-0"		X OR Y		3.2	0.5
45	2'-0"	4'-6"	42"	Y	5'-2"	2.6	0.4
46	2'-6"					2.9	
47	3'-0"					3.2	
48	3'-6"	4'-6"	42"	Y	5'-2"	3.4	0.5
49	4'-0"					3.7	
50	4'-6"	2'-0"		X	4'-11"	2.5	0.4
51		2'-6"				2.8	
52		3'-0"				3.0	
53		3'-6"			5'-2"	3.4	0.5
54		4'-0"				3.5	
55		4'-6"		X OR Y		3.9	
56	2'-0"	5'-0"	48"	Y	5'-8"	3.0	0.4
57	2'-6"					3.3	
58	3'-0"					3.6	0.5
59	3'-6"					3.9	
60	4'-0"					4.2	
61	4'-6"					4.5	
62	5'-0"	2'-0"		X	5'-5"	2.9	0.4
63		2'-6"				3.2	
64		3'-0"				3.5	0.5
65		3'-6"			5'-8"	3.9	
66		4'-0"				4.2	
67		4'-6"				4.5	
68		5'-0"		X OR Y		4.7	0.6

~ NOTES ~

(1) BASED ON "Z" AS EQUAL TO D+t+12" WHEN "Y" DIMENSION IS LESS THAN 3'-6". BASED ON "Z" AS EQUAL TO D+t+15" WHEN "Y" DIMENSION IS 3'-6" OR GREATER.

(2) SEE REFERENCE CHART FOR QUANTITIES TO DEDUCT FOR PIPE.

(3) Q = CU. YDS. PER FT. INCREASE OR DECREASE WHEN "Z" VARIES.

(4) SEE THE FOLLOWING CUR. STD. DWGS. FOR STEEL PATTERN AND DIMENSIONS:
CURB BOX INLET TYPE A - RDB-270 AND RDB-271
CURB BOX INLET TYPE B - RDB-280 AND RDB-281

5. SEE CUR. STD. DWGS. RDB-400 AND RDB-420 FOR REINFORCEMENT IN PIPE CHAMBER AND RISER WHEN "H" = 8'-0" OR GREATER.

(6) INLETS ARE SHOWN ON PLANS AS CURB BOX INLET TYPE "A" OR CURB BOX INLET TYPE "B". FOLLOWING THIS ON THE PLANS ARE TWO NUMBERS AND A BOX HEIGHT. USE FIRST NUMBER WITH THIS CHART.

REFERENCE CHART

DIA. OF PIPE	C.B.I. TYPE A		C.B.I. TYPE B		CONCRETE TO DEDUCT FOR EACH PIPE
	PIPE ON "X" SIDE OF INLET	PIPE ON "Y" SIDE OF INLET	PIPE ON "X" SIDE OF INLET	PIPE ON "Y" SIDE OF INLET	CU. YDS.
0	3'-0"	2'-0"	2'-0"	2'-0"	-
12"					0.1
15"-18"					
21"-24"		2'-6"	2'-6"	2'-6"	
27"		3'-0"	3'-0"	3'-0"	0.2
30"-33"	3'-6"	3'-6"	3'-6"	3'-6"	
36"	4'-0"	4'-0"	4'-0"	4'-0"	0.3
42"	4'-6"	4'-6"	4'-6"	4'-6"	0.4
48"	5'-0"	5'-0"	5'-0"	5'-0"	0.5

USE THIS DRAWING FOR BOTTOM PHASE AND COMPLETE INLET WITH C.B.I. A AND C.B.I. B.

USE WITH CUR. STD. DWG.
RDB-270 RDB-271 RDB-280
RDB-281 RDB-400 RDB-420

KENTUCKY
DEPARTMENT OF HIGHWAYS

BOX INLET
PIPE CHAMBER

STANDARD DRAWING NO. RDB-410-06

SUBMITTED William E. Ginkel — DIRECTOR DIVISION OF DESIGN — 12-01-15 DATE

APPROVED — STATE HIGHWAY ENGINEER — 12-01-15 DATE

① ADDITIONAL STEEL REINFORCEMENT REQUIREMENTS

(PIPE CHAMBER, H = 8' TO 15')

SIZE ②		NO. 5 STEEL BARS									
		③ BAR n		④ BAR p		BAR q		BAR r		LBS. ⑤	
X	Y	QTY.	LIN. FT.	QTY.	LIN. FT.	QTY.	LIN. FT.	QTY.	LIN. FT.	TOTAL	⑥
2'-0"	2'-0"	20	6'-0"	7	10'-2"	4	2'-6"	4	2'-6"	220	31
	2'-6"	22			11'-2"		3'-0"	5		245	35
	3'-0"	24			12'-2"		3'-6"	6		269	38
	3'-6"	26			13'-2"		4'-0"	7		294	41
	4'-0"	28			14'-2"		4'-6"	8		318	44
	4'-6"	30			15'-2"		5'-0"	9		343	47
	5'-0"	32			16'-2"		5'-6"	10		367	50
2'-6"	2'-0"	22	6'-0"	7	11'-2"	5	2'-6"	4	3'-0"	245	35
	2'-6"	24			12'-2"		3'-0"	5		270	38
	3'-0"	26			13'-2"		3'-6"	6		296	41
	3'-6"	28			14'-2"		4'-0"	7		321	44
	4'-0"	30			15'-2"		4'-6"	8		347	47
	4'-6"	32			16'-2"		5'-0"	9		373	50
	5'-0"	34			17'-2"		5'-6"	10		398	53
3'-0"	2'-0"	24	6'-0"	7	12'-2"	6	2'-6"	4	3'-6"	268	38
	2'-6"	26			13'-2"		3'-0"	5		295	41
	3'-0"	28			14'-2"		3'-6"	6		321	44
	3'-6"	30			15'-2"		4'-0"	7		348	47
	4'-0"	32			16'-2"		4'-6"	8		374	50
	4'-6"	34			17'-2"		5'-0"	9		401	53
	5'-0"	36			18'-2"		5'-6"	10		427	57
3'-6"	2'-0"	26	6'-0"	7	13'-2"	7	2'-6"	4	4'-0"	293	41
	2'-6"	28			14'-2"		3'-0"	5		320	44
	3'-0"	30			15'-2"		3'-6"	6		348	47
	3'-6"	32			16'-2"		4'-0"	7		376	50
	4'-0"	34			17'-2"		4'-6"	8		404	53
	4'-6"	36			18'-2"		5'-0"	9		431	56
	5'-0"	38			19'-2"		5'-6"	10		459	60
4'-0"	2'-0"	28	6'-0"	7	14'-2"	8	2'-6"	4	4'-6"	317	44
	2'-6"	30			15'-2"		3'-0"	5		346	47
	3'-0"	32			16'-2"		3'-6"	6		374	50
	3'-6"	34			17'-2"		4'-0"	7		404	53
	4'-0"	36			18'-2"		4'-6"	8		432	56
	4'-6"	38			19'-2"		5'-0"	9		460	60
	5'-0"	40			20'-2"		5'-6"	10		490	63
4'-6"	2'-0"	30	6'-0"	7	15'-2"	9	2'-6"	4	5'-0"	342	47
	2'-6"	32			16'-2"		3'-0"	5		371	50
	3'-0"	34			17'-2"		3'-6"	6		401	53
	3'-6"	36			18'-2"		4'-0"	7		431	56
	4'-0"	38			19'-2"		4'-6"	8		460	60
	4'-6"	40			20'-2"		5'-0"	9		490	63
	5'-0"	42			21'-2"		5'-6"	10		519	66

SIZE ②		NO. 5 STEEL BARS									
		③ BAR n		④ BAR p		BAR q		BAR r		LBS. ⑤	
X	Y	QTY.	LIN. FT.	QTY.	LIN. FT.	QTY.	LIN. FT.	QTY.	LIN. FT.	TOTAL	⑥
5'-0"	2'-0"	32	6'-0"	7	16'-2"	10	2'-6"	4	5'-6"	367	50
	2'-6"	34			17'-2"		3'-0"	5		398	53
	3'-0"	36			18'-2"		3'-6"	6		427	56
	3'-6"	38			19'-2"		4'-0"	7		459	60
	4'-0"	40			20'-2"		4'-6"	8		490	63
	4'-6"	42			21'-2"		5'-0"	9		519	66
	5'-0"	44			22'-2"		5'-6"	10		551	69

~ NOTES ~

1. BASED ON "Z" AS EQUAL TO 6'-0".
2. SEE CUR. STD. DWGS. RDB-270 AND RDB-280 FOR LOCATION AND DIMENSIONS.
3. LENGTH OF "n" BAR IS ALWAYS SAME AS "Z" DIMENSION.
4. ADD OR SUBTRACT ONE "p" BAR PER EVEN FT. VARIANCE FROM 6'-0" "Z".
5. NO DEDUCTIONS HAVE BEEN MADE FOR PIPE.
6. ADD OR SUBTRACT LBS. STEEL PER FT. VARIANCE FROM 6'-0" "Z".
7. REINFORCEMENT SHALL HAVE A CLEAR DISTANCE OF 2" FROM THE FACE UNLESS OTHERWISE SHOWN.

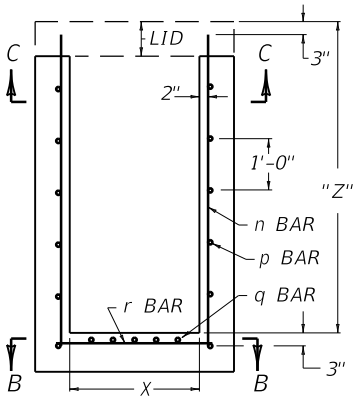

SECTION A-A

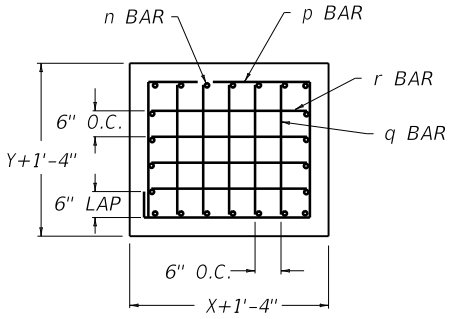

SECTION B-B

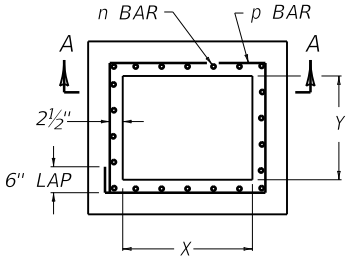

SECTION C-C

(USE WITH C.B.I. A and C.B.I. B WHEN H = 8' to 15')

USE WITH CUR. STD. DWGS.
RDB-270 RDB-280

KENTUCKY
DEPARTMENT OF HIGHWAYS

BOX INLET
PIPE CHAMBER
(ADDITIONAL STEEL)

STANDARD DRAWING NO. RDB-420-05

SUBMITTED William E. Ginkel — DIRECTOR DIVISION OF DESIGN — 12-01-15 DATE

APPROVED — STATE HIGHWAY ENGINEER — 12-01-15 DATE

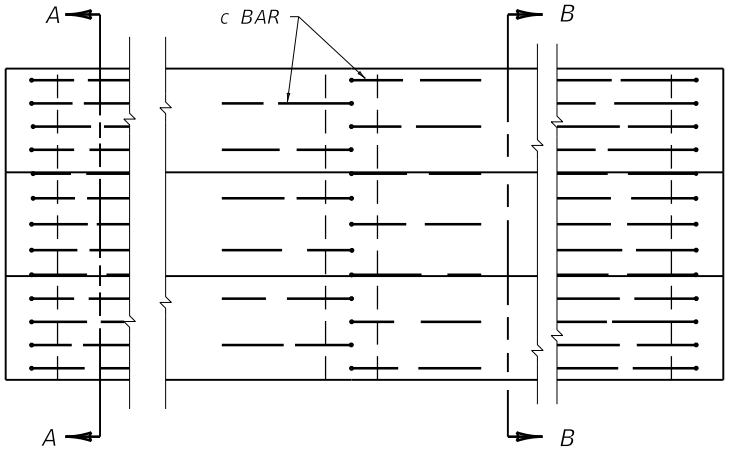

PLAN VIEW

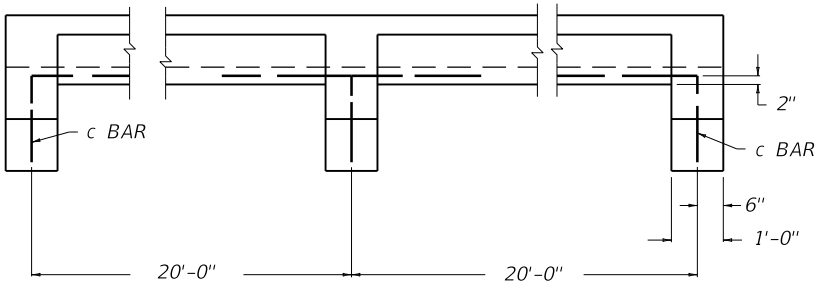

ELEVATION VIEW

~ NOTES ~

BID ITEM AND UNIT TO BID
PAVED DITCH TYPE 1 SQYD

1. ROADWAY EXCAVATION SHALL BE PAID FROM THE TOP OF THE PAVED DITCH SLAB TO THE ORIGINAL GROUND. THE EXCAVATION FROM THE TOP OF THE CONCRETE OF THE PAVED DITCH DOWN, WILL BE INCLUDED IN THE PRICE PAID FOR THE PAVED DITCH INCLUDING THE EXCAVATION FOR THE INTERMEDIATE AND END ANCHORS, AND NO DIRECT PAYMENT WILL BE MADE FOR THIS EXCAVATION.
2. ESTIMATE 0.080 CU. YDS. CLASS A CONCRETE PER LINEAR FT. OF PAVED DITCH AND 0.398 CU. YDS. CLASS A CONCRETE PER ANCHOR BASED ON MINIMUM DIMENSIONS SHOWN ON THIS DRAWING.
3. THE SECTION SHOWN WITHIN THE MINIMUM DIMENSION IS ESTIMATED AT 0.72 SQ. YD. PER LIN. FT.
4. COMPACTION, FINISHING AND CURING SHALL BE THE SAME AS REQUIRED FOR CONCRETE SIDEWALK.
5. IF THE CONTRACTOR ELECTS TO USE A CONSTRUCTION JOINT IN THE POURING OF THE PAVED DITCH, IT SHALL BE CONSTRUCTED AS DETAILED.
6. ANY LENGTH OF LONGITUDINAL REINFORCING STEEL WILL BE PERMITTED PROVIDED A 1'-0" LAP IS USED IN THE SPLICE. ADEQUATE TIES AT THE SPLICE SHALL BE REQUIRED.

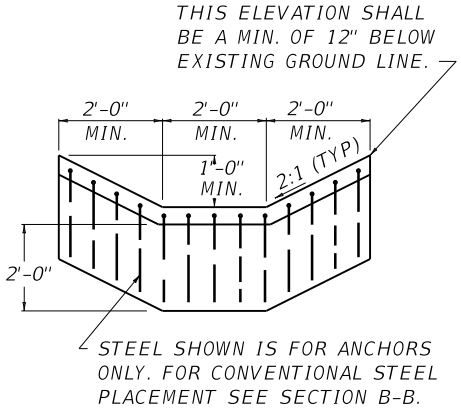

SECTION A-A

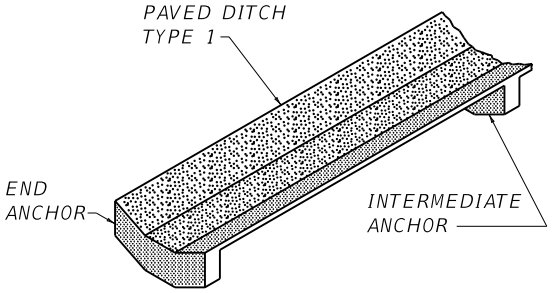

ISOMETRIC VIEW

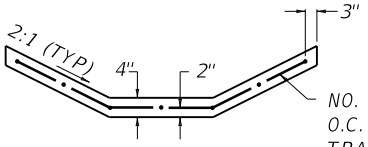

SECTION B-B

NO. 4 BARS SPACED 1'-0" O.C. LONGITUDINALLY AND TRANSVERSELY THROUGHOUT THE SECTION. (IN ADDITION TO ANCHOR STEEL).

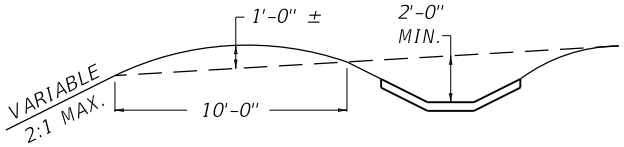

TYPICAL PAVED DITCH
(INTERCEPTOR DITCH)

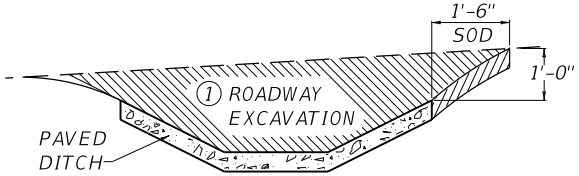

SHOULD THE TERRAIN OF THE EXISTING GROUND BE SO THAT WATER WOULD DRAIN INTO THE DITCH FROM BOTH SIDES, THEN SODDING WILL BE REQUIRED ON BOTH SIDES OF THE DITCH.

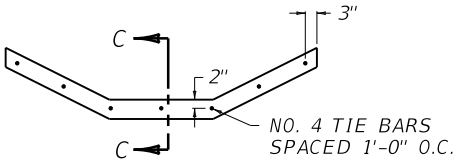

TIE BAR SECTIONAL VIEW

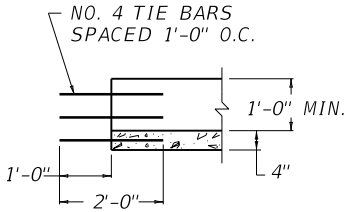

SECTION C-C

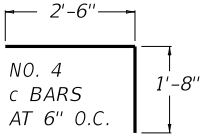

c BAR DETAIL

APPROX. STEEL QUANTITIES FOR MINIMUM SECTION SHOWN	
END ANCHORS (EACH)	36.19 LBS.
INTERMEDIATE ANCHORS (EACH)	36.19 LBS.
CONSTRUCTION JOINTS (EACH)	9.352 LBS.
BARS PER SQ. YD. OF DITCH	12.047 LBS.

KENTUCKY
DEPARTMENT OF HIGHWAYS

PAVED DITCH
TYPE 1

STANDARD DRAWING NO. RDD-001-06

SUBMITTED William E. Ginkel — DIRECTOR, DIVISION OF DESIGN — 12-01-15 DATE

APPROVED — STATE HIGHWAY ENGINEER — 12-01-15 DATE

~ NOTES ~

BID ITEM AND UNIT TO BID
PAVED DITCH TYPE 2 SQYD

1. ROADWAY EXCAVATION SHALL BE PAID FROM THE TOP OF THE PAVED DITCH SLAB TO THE ORIGINAL GROUND. THE EXCAVATION FROM THE TOP OF THE CONCRETE OF THE PAVED DITCH DOWN, WILL BE INCLUDED IN THE PRICE PAID FOR THE PAVED DITCH INCLUDING THE EXCAVATION FOR THE INTERMEDIATE AND END ANCHORS, AND NO DIRECT PAYMENT WILL BE MADE FOR THIS EXCAVATION.
2. ESTIMATE 0.032 CU. YDS. CLASS A CONCRETE PER LINEAR FT. OF PAVED DITCH AND 0.060 CU. YDS. CLASS A CONCRETE PER ANCHOR BASED ON MINIMUM DIMENSIONS SHOWN ON THIS DRAWING.
3. THE SECTION SHOWN WITHIN THE MINIMUM DIMENSION IS ESTIMATED AT 0.30 SQ. YD. PER LIN. FT.
4. COMPACTION, FINISHING AND CURING SHALL BE THE SAME AS REQUIRED FOR CONCRETE SIDEWALK.
5. IF THE CONTRACTOR ELECTS TO USE A CONSTRUCTION JOINT IN THE POURING OF THE PAVED DITCH, IT SHALL BE CONSTRUCTED AS DETAILED.
6. ANY LENGTH OF LONGITUDINAL REINFORCING STEEL WILL BE PERMITTED PROVIDED A 1'-0" LAP IS USED IN THE SPLICE. ADEQUATE TIES AT THE SPLICE SHALL BE REQUIRED.

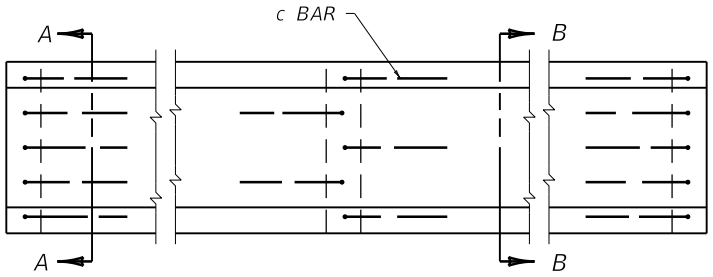

PLAN VIEW

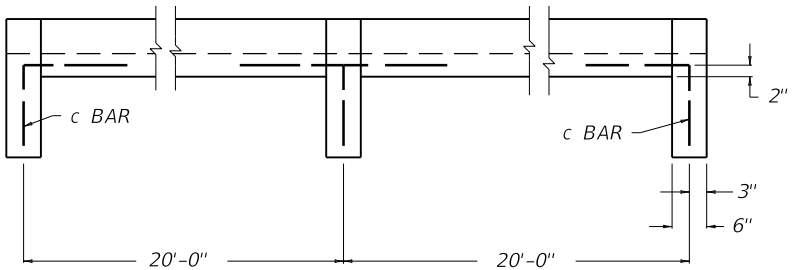

ELEVATION VIEW

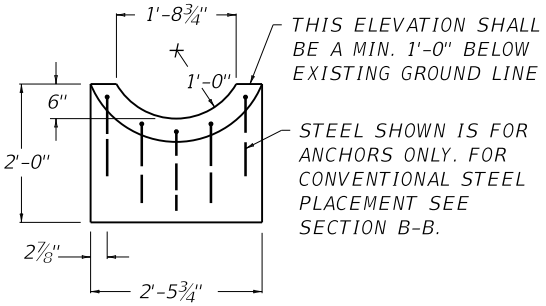

SECTION A-A

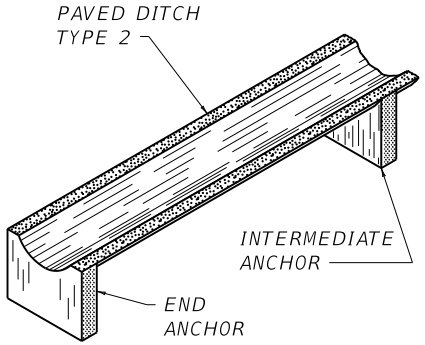

ISOMETRIC VIEW

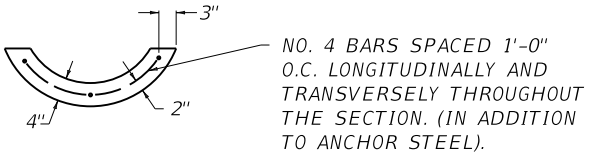

SECTION B-B

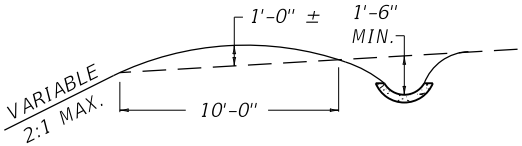

TYPICAL PAVED DITCH
(INTERCEPTOR DITCH)

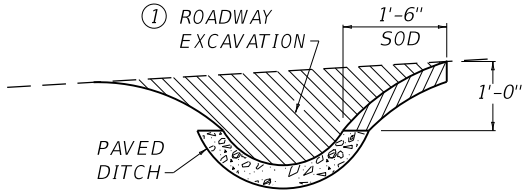

SHOULD THE TERRAIN OF THE EXISTING GROUND BE SO THAT WATER WOULD DRAIN INTO THE DITCH FROM BOTH SIDES, THEN SODDING WILL BE REQUIRED ON BOTH SIDES OF THE DITCH.

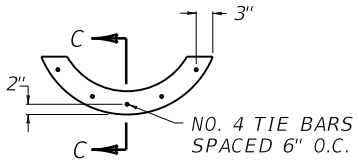

TIE BAR SECTIONAL VIEW

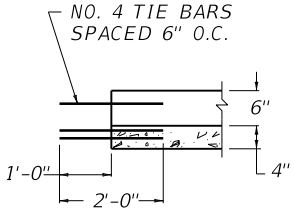

SECTION C-C

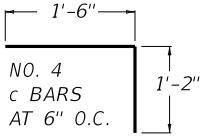

c BAR DETAIL

APPROX. STEEL QUANTITIES FOR MINIMUM SECTION SHOWN	
END ANCHORS (EACH)	8.90 LBS.
INTERMEDIATE ANCHORS (EACH)	8.90 LBS.
CONSTRUCTION JOINTS (EACH)	6.68 LBS.
BARS PER SQ. YD. OF DITCH	12.47 LBS.

KENTUCKY
DEPARTMENT OF HIGHWAYS

PAVED DITCH
TYPE 2

STANDARD DRAWING NO. RDD-002-07

SUBMITTED William E. Ginkel — DIRECTOR, DIVISION OF DESIGN — 12-01-15 DATE

APPROVED — STATE HIGHWAY ENGINEER — 12-01-15 DATE

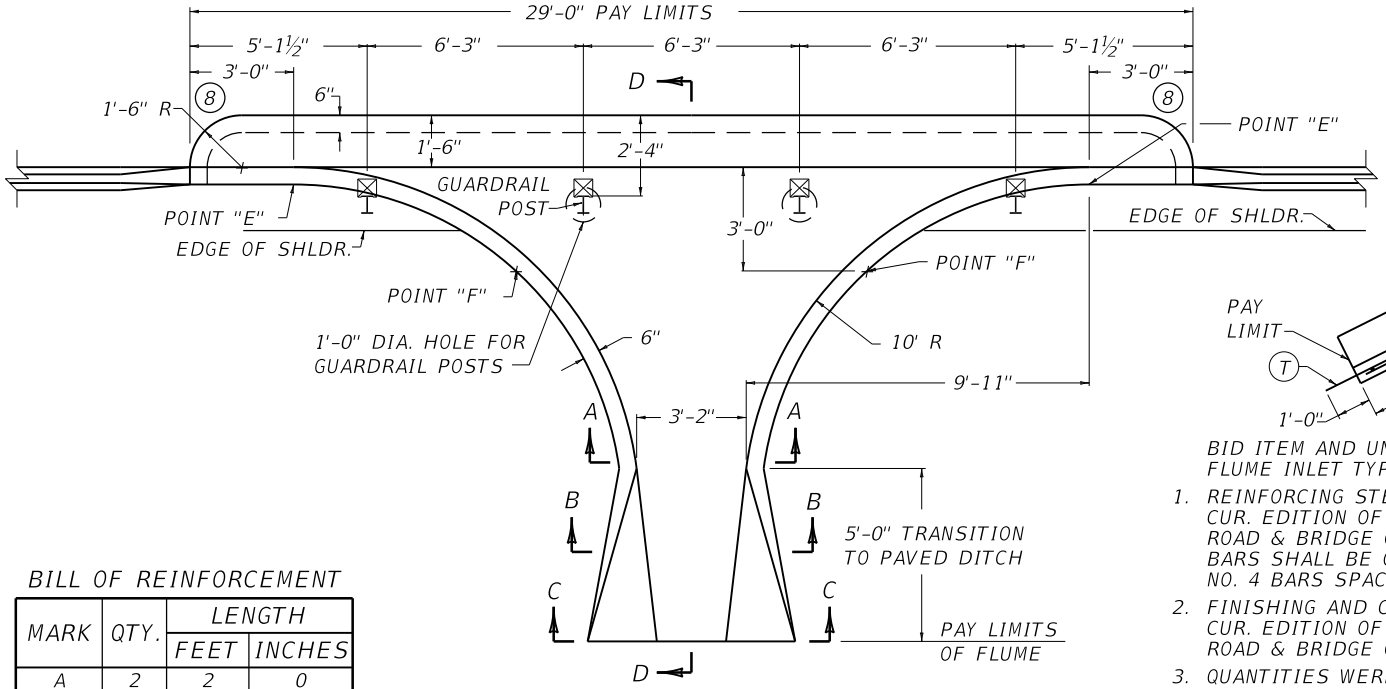

PLAN VIEW

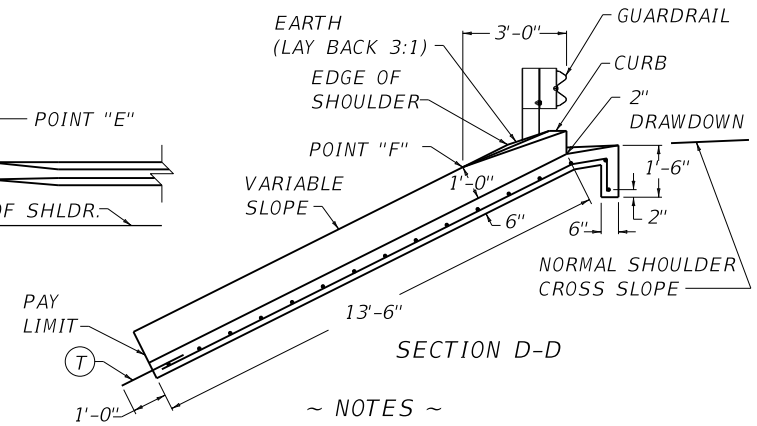

SECTION D-D

~ NOTES ~

BID ITEM AND UNIT TO BID
FLUME INLET TYPE 1 — EACH

1. REINFORCING STEEL SHALL MEET THE REQUIREMENTS OF THE CUR. EDITION OF THE DEPARTMENT'S STD. SPECIFICATIONS FOR ROAD & BRIDGE CONST. THE MIN. REQUIREMENT FOR REINFORCING BARS SHALL BE GRADE 40. ALL REINFORCEMENT SHALL BE NO. 4 BARS SPACED 12" O.C.
2. FINISHING AND CURING SHALL MEET THE REQUIREMENTS OF THE CUR. EDITION OF THE DEPARTMENT'S STD. SPECIFICATIONS FOR ROAD & BRIDGE CONSTRUCTION.
3. QUANTITIES WERE CALCULATED FOR APPLICATIONS ON A 2:1 FILL SLOPE. IT MAY BE NECESSARY TO ADJUST THE STEEL IN THE FIELD FOR APPLICATIONS OTHER THAN 2:1 SLOPE.
4. THE FLOW LINE OF THE FLUME AND THE NORMAL PAVED DITCH FROM POINT "F" ON THE FLUME TO THE LOWER END OF THE NORMAL PAVED DITCH SHALL BE A STRIGHT LINE GRADE.
5. TRANSITION 6" HIGH CURB FROM POINT "E" TO 12" HIGH CURB AT POINT "F".
6. USE 37'-6" GUARDRAIL STEEL W BEAM-S FACE (NESTED) ACROSS FLUME OPENING.
7. CONCRETE, REINFORCEMENT, EXCAVATION AND EXTRA GUARDRAIL (NESTED RAIL) SHALL BE INCIDENTAL TO UNIT BID PRICE.
8. TRANSITION FROM ADJACENT CURB TYPE TO 6" AT POINT "E".

BILL OF REINFORCEMENT

MARK	QTY.	LENGTH	
		FEET	INCHES
A	2	2	0
B	6	2	7
C	2	2	7
D	2	3	3
E	2	3	2
F	2	3	8
G	2	4	3
H	2	5	0
J	2	6	0
K	2	7	6
L	2	10	0
M	3	15	7
N	2	21	7
AA	2	26	6
BB	1	28	4
CC	1	16	2
DD	1	12	3
EE	1	9	9
FF	1	8	0
GG	1	6	5
HH	1	5	4
JJ	1	4	4
KK	1	3	10
LL	1	3	10
MM	1	4	3
NN	1	4	7
OO	1	4	11
PP	1	5	4
T	5	2	0

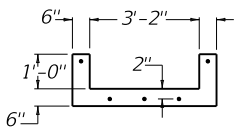

SECTION A-A

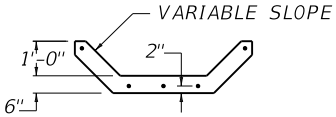

SECTION B-B

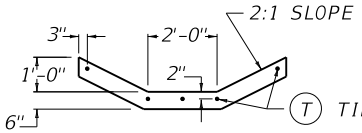

SECTION C-C

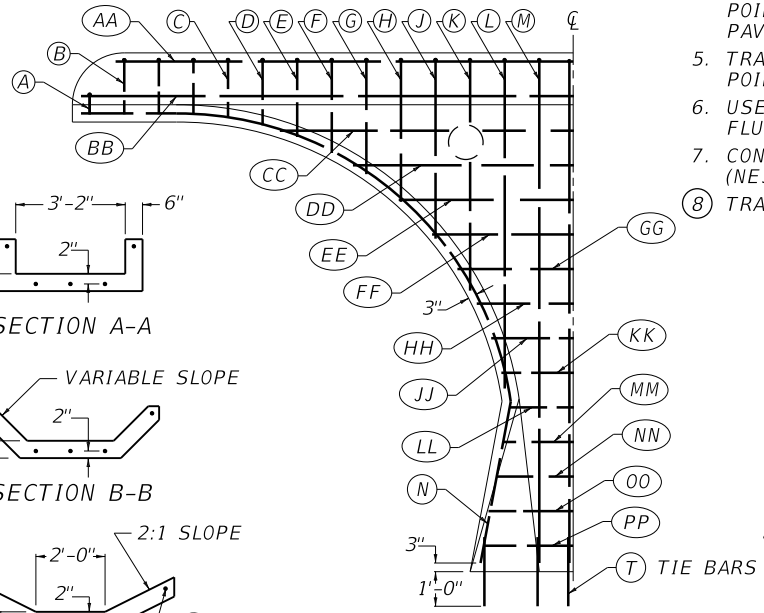

STEEL DIAGRAM
(STEEL SYMMETRICAL ABOUT CENTERLINE

ISOMETRIC VIEW

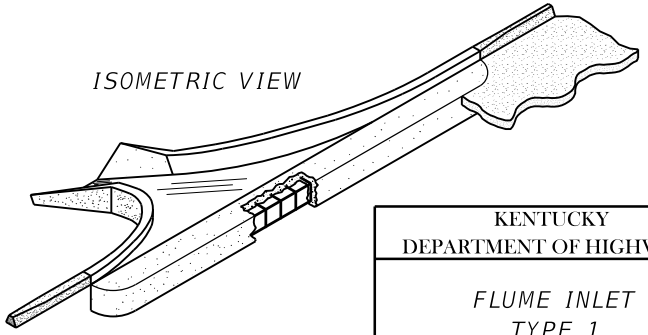

APPROX. QUANTITIES	
CLASS "A" CONC.	3.9 CU. YDS.
STEEL REINF.	255 LBS.

KENTUCKY
DEPARTMENT OF HIGHWAYS

FLUME INLET
TYPE 1

STANDARD DRAWING NO. RDD-020-07

SUBMITTED — DIRECTOR, DIVISION OF DESIGN — 12-01-15 DATE

APPROVED — STATE HIGHWAY ENGINEER — 12-01-15 DATE

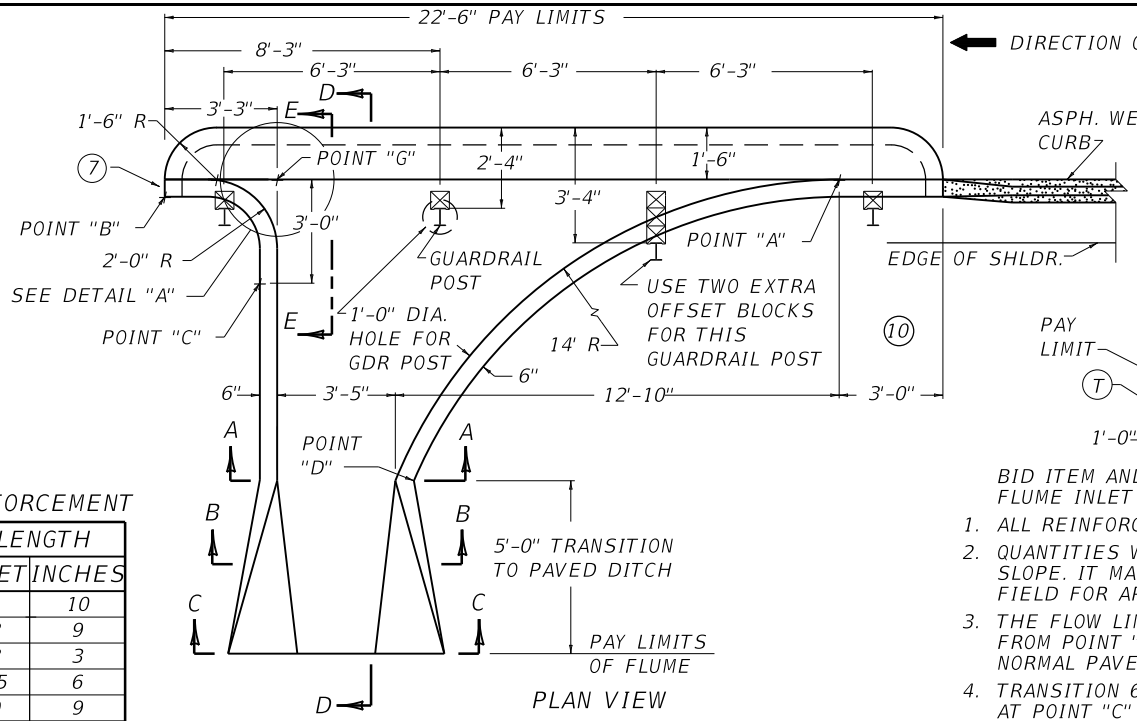

PLAN VIEW

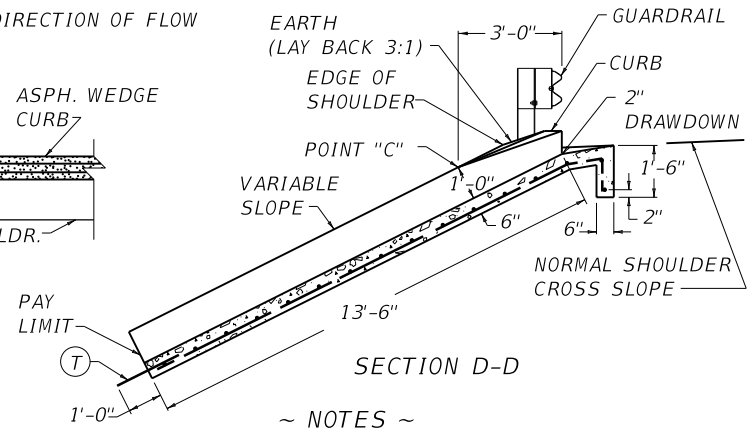

SECTION D-D

BILL OF REINFORCEMENT

MARK	QTY.	LENGTH	
		FEET	INCHES
A	2	1	10
B	5	2	9
C	1	3	3
D	4	15	6
E	1	9	9
F	1	8	2
G	1	7	0
H	1	6	0
J	1	5	0
K	1	4	6
L	1	4	0
M	1	3	8
N	1	3	5
O	1	3	0
P	1	2	10
Q	1	24	5
R	1	15	7
AA	2	19	7
BB	1	22	0
CC	1	14	2
DD	1	10	6
EE	1	8	6
FF	1	7	2
GG	1	6	3
HH	1	5	5
JJ	1	4	9
KK	1	4	0
LL	1	4	0
MM	1	4	2
NN	1	4	6
OO	1	4	10
PP	1	5	0
T	5	2	0

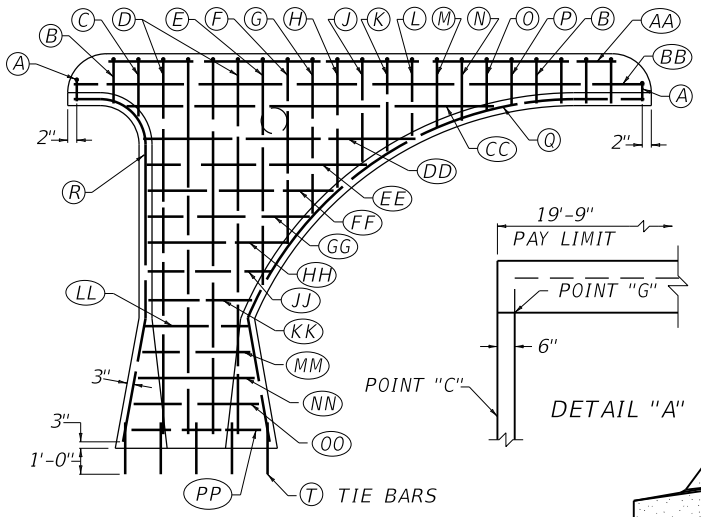

STEEL DIAGRAM

DETAIL "A"

~ NOTES ~

BID ITEM AND UNIT TO BID
FLUME INLET TYPE 2 — EACH

1. ALL REINFORCEMENT SHALL BE NO. 4 BARS SPACED 1'-0" O.C.
2. QUANTITIES WERE CALCULATED FOR APPLICATION ON A 2:1 FILL SLOPE. IT MAY BE NECESSARY TO ADJUST THE STEEL IN THE FIELD FOR APPLICATION OTHER THAN 2:1 SLOPE.
3. THE FLOW LINE OF THE FLUME AND THE NORMAL PAVED DITCH FROM POINT "G" ON THE FLUME TO THE LOWER END OF THE NORMAL PAVED DITCH SHALL BE A STRAIGHT LINE GRADE.
4. TRANSITION 6" HIGH CURB FROM POINT "B" TO 1'-0" HIGH CURB AT POINT "C" AND FROM POINT "A" TO 1'-0" HIGH CURB AT POINT "D".
5. WHEN A FLUME IS LAST ON A DOWN GRADE, SHORT RADIUS BETWEEN POINTS "B" AND "C" IS NOT NECESSARY. SIDE WALL CAN BE EXTENDED STRAIGHT AND TRANSITIONED FROM 1'-0" AT POINT "C" TO ½" HIGH AT POINT "G". SEE DETAIL "A"
6. WHEN FLUME IS SHORTENED AS DETAIL "A", STEEL REINFORCEMENT BARS A AND B DECREASED ONE BAR EACH. SHORTEN BAR AA TO 18'-3", BAR BB TO 19'-3", AND BAR CC TO 13'-6".

(7) IF CURB IS CONTINUED USE 2'-0" TRANSITION TO ADJACENT CURB.

8. USE 37'-6" GUARDRAIL STEEL W BEAM-S FACE (NESTED) ACROSS FLUME OPENING.
9. CONCRETE, REINFORCEMENT, EXCAVATION AND EXTRA GUARDRAIL (NESTED RAIL) SHALL BE INCIDENTAL TO UNIT BID PRICE.

(10) TRANSITION FROM ADJACENT CURB TO 6" AT POINT "A".

APPROX. QUANTITIES	
CLASS "A" CONC.	3.7 CU. YDS.
STEEL REINF.	225 LBS.

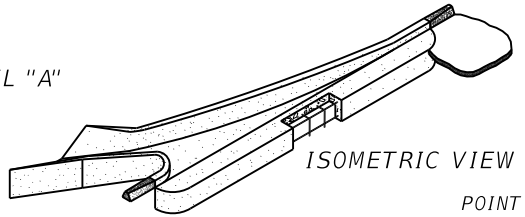

ISOMETRIC VIEW

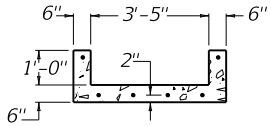

SECTION A-A

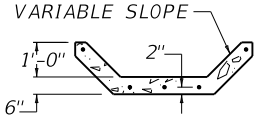

SECTION B-B

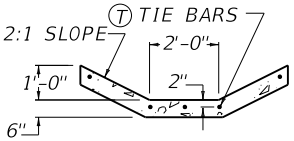

SECTION C-C

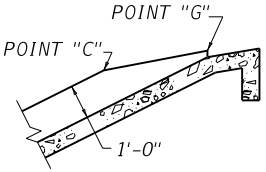

SECTION E-E

KENTUCKY
DEPARTMENT OF HIGHWAYS

FLUME INLET
TYPE 2

STANDARD DRAWING NO. RDD-021-07

SUBMITTED William S. Ghaled — DIRECTOR DIVISION OF DESIGN — 12-01-15 DATE

APPROVED — STATE HIGHWAY ENGINEER — 12-01-15 DATE

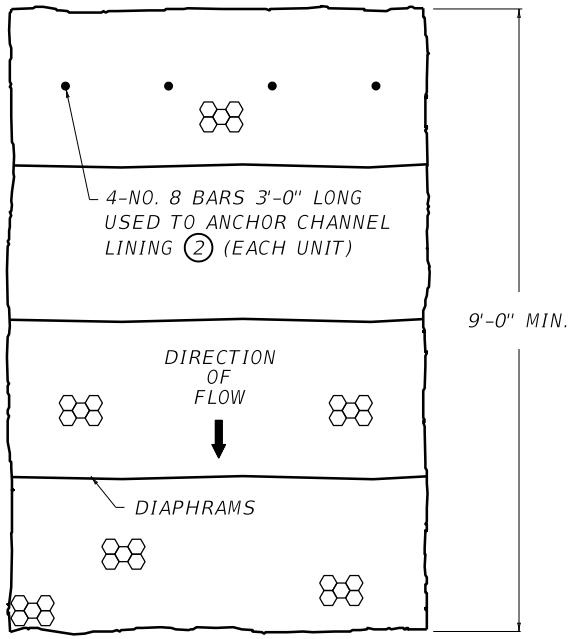

PLAN VIEW

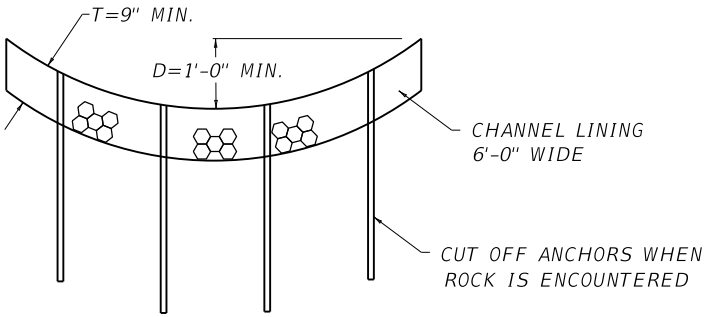

ELEVATION VIEW (5)

~ NOTES ~

BID ITEM AND UNIT TO BID
CHANNEL LINING CLASS I A TON

(1) ROADWAY EXCAVATION SHALL BE PAID FROM THE TOP OF LINING TO THE ORIGINAL GROUND LINE.

(2) ANCHORS REQUIRED WHEN LINING IS PLACED ON 5% GRADE OR GREATER.

3. SECURE THE LACING WIRE AT THE CORNER OF THE BASKET BY LOOPING AND TWISTING, CONTINUE LACING THROUGHOUT WITH DOUBLE LOOPS AT APPROXIMATELY 5" INTERVALS. EACH UNIT SHALL CONSIST OF LININGS SUPPLIED IN WIDTHS OF 6'-0" AS SHOWN AND LENGTHS IN MULTIPLES OF 3'-0". EACH UNIT SHALL BE SUBDIVIDED INTO COMPARTMENTS A MAXIMUM OF 3'-0" LONG.

4. AGGREGATE ESTIMATED ON THE BASIS OF 0.50 TON PER SQ. YD. PER FT. OF DEPTH.

(5) T= MATTRESS THICKNESS, D= DEPTH TO PROTECT.
SEE PLAN NOTES FOR THESE VALUES.

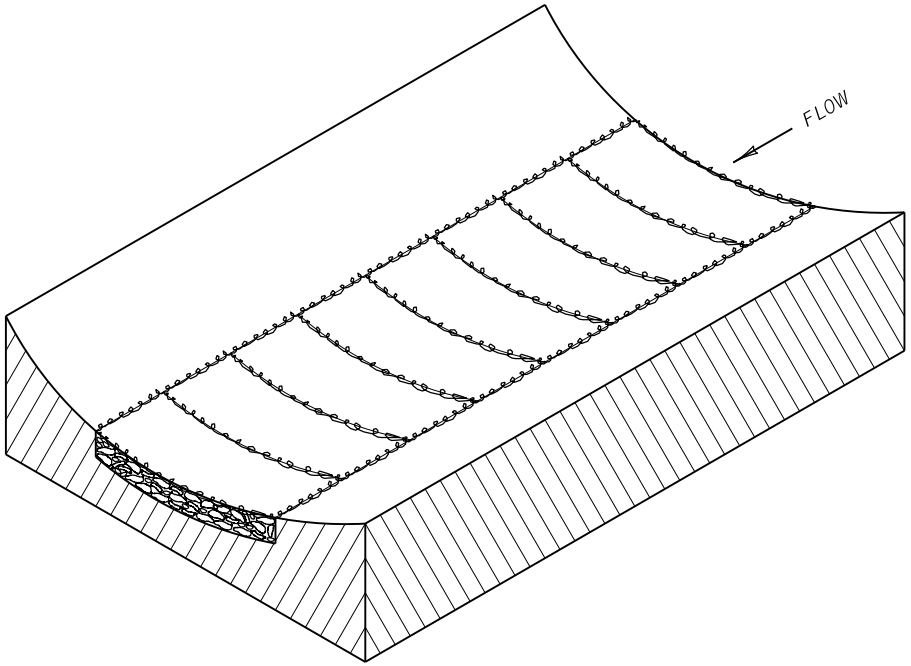

CHANNEL LINING
ISOMETRIC VIEW

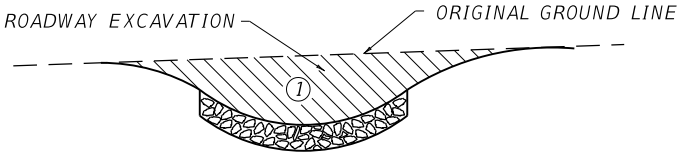

ROADWAY EXCAVATION (1)

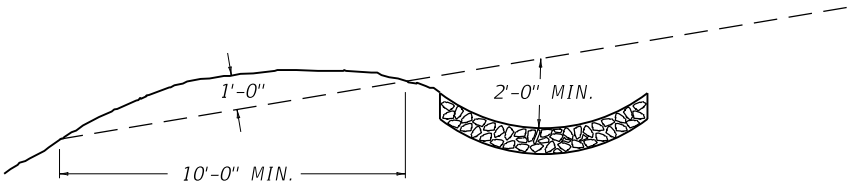

TYPICAL INTERCEPTOR DITCH

KENTUCKY
DEPARTMENT OF HIGHWAYS

CHANNEL LINING
CLASS IA
(MATTRESS UNITS)

STANDARD DRAWING NO. RDD-030-08

SUBMITTED William E. Ginkel — DIRECTOR, DIVISION OF DESIGN — 12-01-15 DATE

APPROVED — STATE HIGHWAY ENGINEER — 12-01-15 DATE

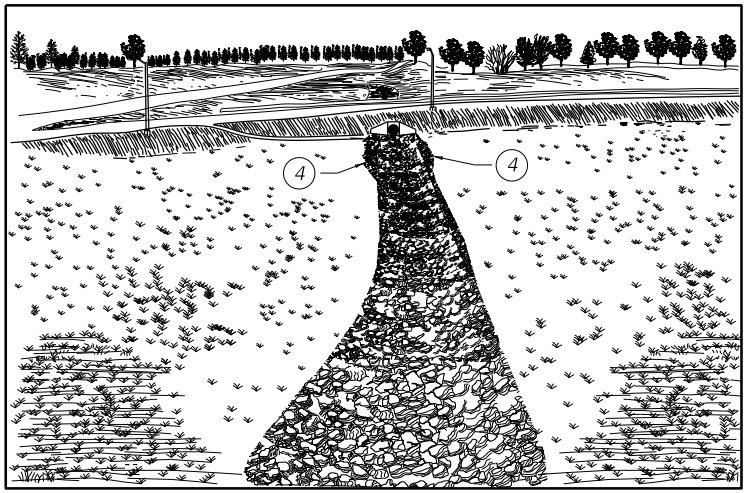

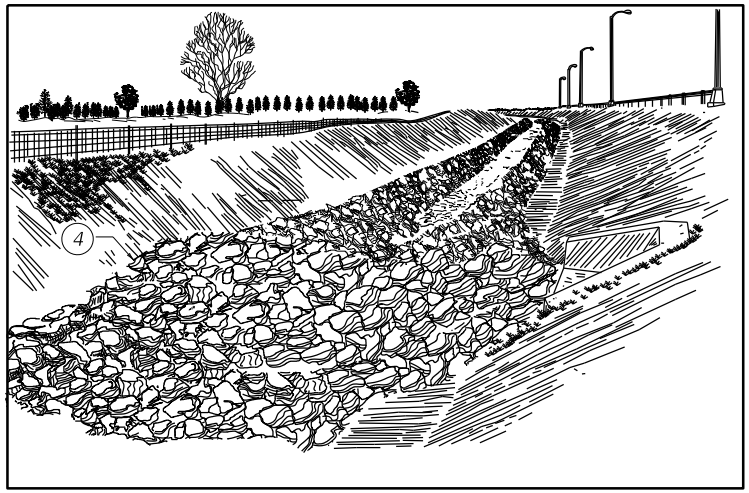

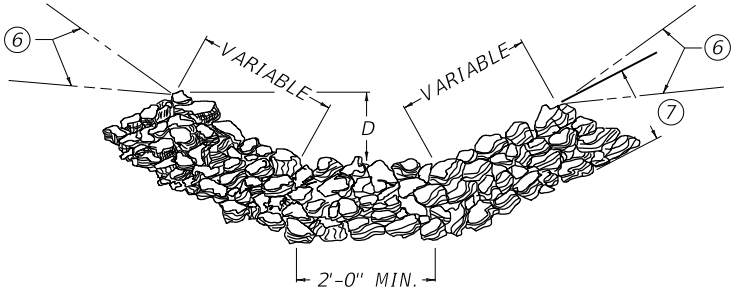

TYPICAL SECTION

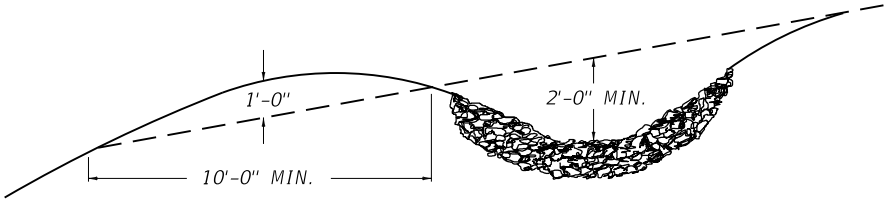

TYPICAL INTERCEPTOR DITCH

~ NOTES ~

BID ITEMS AND UNIT TO BID

CHANNEL LINING CLASS II	TON
CHANNEL LINING CLASS III	TON

1. CHANNEL LINING WILL BE PAID FOR AT THE CONTRACT UNIT PRICE PER TON FOR EACH CLASS.
2. CHANNEL LINING WILL NOT BE REQUIRED IN THE BOTTOM OF THE DITCH WHERE SOLID ROCK IS ENCOUNTERED.
3. CHANNEL LINING ESTIMATED ON THE BASIS OF 0.50 TON PER SQ. YD. PER FT. OF DEPTH.

(4) WIDEN CHANNEL LINING NEAR OUTLET END OF STRUCTURE AS DIRECTED BY THE ENGINEER.
(5) FROM THE TOP OF THE LINING TO THE ORIGINAL GROUNDLINE.
(6) ALTERNATE LOCATION OF GROUNDLINE.
(7) 15" MIN. CLASS II, OR 24" MIN. CLASS III.

8. D = DEPTH TO PROTECT, T = THICKNESS, (SEE PLAN NOTES FOR THESE VALUES)

KENTUCKY
DEPARTMENT OF HIGHWAYS

CHANNEL LINING
CLASS II AND III

STANDARD DRAWING NO. RDD-040-05

SUBMITTED William E. Ginkel — DIRECTOR DIVISION OF DESIGN — 12-01-15 DATE

APPROVED — STATE HIGHWAY ENGINEER — 12-01-15 DATE

PIPE DIA. (IN)	PIPE TYPE	CIRCULAR PIPE COVER HEIGHTS IN FEET					
		2-5	5-10	10-15	15-20	20-25	25-30
12 & 15	2⅔" x ½" CSPHS (1)	16 GA.					
	2⅔" x ½" CSPLS (1)	16 GA.					
	2⅔" x ½" CAPHS	16 GA.					
	PVC	SMOOTH WALL (SOLID WALL)					
	HDPE					FF	
	RCP (11)						
18	2⅔" x ½" CSPHS (1)	16 GA.					
	2⅔" x ½" CSPLS (1)	16 GA.					
	2⅔" x ½" CAPHS	16 GA.					
	SRS (1)	16 GA.					
	SRA	16 GA.					
	PVC	RIBBED (PROFILE WALL)					
	HDPE					FF	
	RCP (11)						
		2-5	5-10	10-15	15-20	20-25	25-30

PIPE DIA. (IN)	PIPE TYPE	CIRCULAR PIPE COVER HEIGHTS IN FEET												
		2-5	5-10	10-15	15-20	20-25	25-30	30-35	35-40	40-45	45-50	50-55	55-60	60-65
21	2⅔" x ½" CSPHS (1)	16 GA.												
	2⅔" x ½" CSPLS (1)	16 GA.					10 GA.							
	2⅔" x ½" CAPHS	16 GA.												
	SRS (1)	16 GA.												
	SRA	16 GA.				14 GA.								
	PVC	RIBBED (PROFILE WALL)												
	HDPE					FF								
	RCP (11)													
24 (6)	2⅔" x ½" CSPHS (1)	16 GA.											14 GA.	
	2⅔" x ½" CSPLS (1)	16 GA.					10 GA.							
	2⅔" x ½" CAPHS	16 GA.								14 GA.		12 GA.		
	SRS (1)	16 GA.							14 GA.			12 GA.		
	SRA	16 GA.				14 GA.		12 GA.			10 GA.			
	PVC	RIBBED (PROFILE WALL)												
	HDPE					FF								
	RCP (11)													
		2-5	5-10	10-15	15-20	20-25	25-30	30-35	35-40	40-45	45-50	50-55	55-60	60-65

~ NOTES ~

(1) GAGES FOR CORRUGATED STEEL PIPE ITEMS SHOWN ARE BASED ON ALUMINUM-COATED TYPE 2 STEEL AS PER AASHTO M-274. ALUMINUM COATED TYPE 2 STEEL IS ONLY PERMITTED IN Ph RANGES OF 5 TO 9

2. WHEN CORRUGATED STEEL PIPE IS ZINC COATED (GALVANIZED) THE GAGE SHALL BE ONE GAGE HEAVIER THAN SHOWN IN THE TABLES.
3. CSP, CAP, SRS AND SRA ARE SHOWN IN GAGE.
4. MAXIMUM COVER HEIGHT IS MEASURED FROM THE TOP OF PIPE TO SUBGRADE ELEVATION SHALL GOVERN GAGE OF PIPE TO BE USED FOR THE ENTIRE LENGTH OF PIPE INSTALLATION.
5. MINIMUM COVER HEIGHTS FOR PIPE SHALL BE 2 FEET. GAGE OF PIPE FOR COVER HEIGHTS LESS THAN 2 FEET SHALL BE THAT SHOWN FOR COVER HEIGHTS OF 30 FEET (SEE STD. SPECIFICATIONS FOR BACKFILL). HDPE AND PVC SHALL NOT BE PERMITTED FOR COVER HEIGHTS LESS THAN 2 FEET.

(6) 24" DIA. PIPE IS MINIMUM SIZE FOR COVER HEIGHTS FROM 30 FEET TO 65 FEET.

7. MINIMUM COVER HEIGHT FOR ENTRANCE PIPE SHALL BE 0.5 FEET.
8. GAGE OF ENTRANCE PIPE FOR COVER HEIGHTS LESS THAN 2 FEET SHALL MEET THE FOLLOWING REQUIREMENTS:
   a. GAGE OF CSP SHALL BE THAT SHOWN FOR HEIGHTS OF 30 FEET.
   b. GAGE OF CAP SHALL BE ONE GAGE HEAVIER THAN SHOWN IN THE TABLE.
9. ALL CIRCULAR STRUCTURAL PLATE SHALL BE 5% VERTICALLY ELONGATED.
10. SEE CUR. STD. DWG. RDI-035 FOR COATINGS, LININGS AND PAVINGS FOR NON-STRUCTURAL PIPE.

(11) SEE CUR. STD. DWGS. RDI-021 AND RDI-026 FOR RCP COVER HEIGHT AND BEDDING REQUIREMENTS.

LEGEND

CSPHS: CORRUGATED STEEL PIPE WITH HELICAL LOCK SEAM OR HELICAL WELDED SEAM (HELICAL CORR.)

CSPLS: CORRUGATED STEEL PIPE WITH LONGITUDINAL RIVETED OR SPOT WELDED SEAM (ANNULAR CORR.)

CAPHS: CORRUGATED ALUMINUM ALLOY PIPE WITH HELICAL LOCK SEAM (HELICAL CORR.)

HDPE: HIGH DENSITY POLYETHYLENE PIPE

PVC: POLYVINYL CHLORIDE

SRS: SPIRAL RIB STEEL

SRA: SPIRAL RIB ALUMINUM

RCP: CIRCULAR REINFORCED CONCRETE PIPE

FF: FLOWABLE FILL REQUIRED

12" PIPE - 24" PIPE

USE WITH CUR. STD. DWGS.
RDI-021 RDI-026 RDI-035

KENTUCKY
DEPARTMENT OF HIGHWAYS

CULVERT AND
STORM SEWER PIPE TYPES
AND COVER HEIGHTS

STANDARD DRAWING NO. RDI-001-10

SUBMITTED William E. Ginkel — DIRECTOR DIVISION OF DESIGN — 12-01-15 DATE

APPROVED — STATE HIGHWAY ENGINEER — 12-01-15 DATE

PIPE DIA. (IN)	PIPE TYPE	CIRCULAR PIPE COVER HEIGHTS IN FEET (3)												
		2-5	5-10	10-15	15-20	20-25	25-30	30-35	35-40	40-45	45-50	50-55	55-60	60-65
27 & 30 (8)	2⅔" x ½" CSPHS (1)	16 GA.								14 GA.			12 GA.	
	2⅔" x ½" CSPLS (1)	16 GA.				12 GA.								
	2⅔" x ½" CAPHS	14 GA.								12 GA.			10 GA.	
	SRS (1)	16 GA.						14 GA.		12 GA.				
	SRA	16 GA.			14 GA.		12 GA.		10 GA.					
	PVC	RIBBED (PROFILE WALL)												
	HDPE					FF								
	RCP (10)													
36	2⅔" x ½" CSPHS (1)	14 GA.									12 GA.			10 GA.
	2⅔" x ½" CSPLS (1)	14 GA.			12 GA.	10 GA.								
	2⅔" x ½" CAPHS	14 GA.						12 GA.			10 GA.			8 GA.
	SRS (1)	14 GA.							12 GA.					
	SRA	14 GA.				12 GA.		10 GA.						
	PVC	RIBBED (PROFILE WALL)												
	HDPE					FF								
	RCP (10)													
42	2⅔" x ½" CSPHS (1)	14 GA.								12 GA.			10 GA.	
	2⅔" x ½" CSPLS (1)	14 GA.					12 GA.		10 GA.					
	2⅔" x ½" CAPHS	12 GA.								10 GA.		8 GA.		
	SRS (1)	14 GA.						12 GA.						
	SRA	12 GA.					10 GA.							
	PVC	RIBBED (PROFILE WALL)												
	HDPE													
	RCP (10)													
		2-5	5-10	10-15	15-20	20-25	25-30	30-35	35-40	40-45	45-50	50-55	55-60	60-65

LEGEND

CSPHS: CORRUGATED STEEL PIPE WITH HELICAL LOCK SEAM OR HELICAL WELDED SEAM (HELICAL CORR.)

CSPLS: CORRUGATED STEEL PIPE WITH LONGITUDINAL RIVETED OR SPOT WELDED SEAM (ANNULAR CORR.)

CAPHS: CORRUGATED ALUMINUM ALLOY PIPE WITH HELICAL LOCK SEAM (HELICAL CORR.)

HDPE: HIGH DENSITY POLYETHYLENE PIPE

PVC: POLYVINYL CHLORIDE

SRS: SPIRAL RIB STEEL

SRA: SPIRAL RIB ALUMINUM

RCP: CIRCULAR REINFORCED CONCRETE PIPE

FF: FLOWABLE FILL REQUIRED

NOTES CONTINUED

(10) SEE DETAIL SHEET "PIPE BEDDING FOR CULVERTS, ENTRANCE, AND STORM SEWER REINFORCED CONC. PIPE" AND DETAIL SHEET "PIPE BEDDING TRENCH CONDITION REINFORCED CONC. PIPE" FOR RCP COVER HEIGHT AND BEDDING REQUIREMENTS.

~ NOTES ~

(1) GAGES FOR CORRUGATED STEEL PIPE ITEMS SHOWN ARE BASED ON ALUMINUM-COATED TYPE 2 STEEL AS PER AASHTO M-274. ALUMINUM COATED TYPE 2 STEEL IS ONLY PERMITTED IN Ph RANGES OF 5 TO 9.

2. WHEN CORRUGATED STEEL PIPE IS ZINC COATED (GALVANIZED) THE GAGE SHALL BE ONE GAGE HEAVIER THAN SHOWN IN THE TABLES.

(3) SEE CUR. STD. DWG. RDI-001 FOR EXPLANATION OF COVER HEIGHTS LESS THAN 2 FEET.

4. CSP, CAP, SRS AND SRA ARE SHOWN IN GAGE.

5. MAXIMUM COVER HEIGHT MEASURED FROM TOP OF PIPE TO SUB GRADE ELEVATION SHALL GOVERN GAGE OF PIPE TO BE USED FOR ENTIRE LENGTH OF PIPE INSTALLATION.

6. MINIMUM COVER HEIGHT FOR ENTRANCE PIPE SHALL BE 0.5 FEET.

7. ALL CIRCULAR STRUCTURAL PLATE SHALL BE 5% VERTICALLY ELONGATED.

(8) ENTRANCE PIPE GREATER THAN 30" DIA. SHALL BE A CULVERT PIPE.

9. SEE CUR. STD. DWG. RDI-035 FOR COATINGS, LININGS AND PAVINGS FOR NON-STRUCTURAL PIPE.

27" PIPE - 42" PIPE

USE WITH CUR. STD. DWGS.
RDI-001 RDI-035

KENTUCKY
DEPARTMENT OF HIGHWAYS

CULVERT AND
STORM SEWER PIPE TYPES
AND COVER HEIGHTS

STANDARD DRAWING NO. RDI-002-05

SUBMITTED William E. Ballard — DIRECTOR, DIVISION OF DESIGN — 12-01-15 DATE

APPROVED — STATE HIGHWAY ENGINEER — 12-01-15 DATE

PIPE DIA. (IN)	PIPE TYPE	CIRCULAR PIPE COVER HEIGHTS IN FEET (3)																							
		2-5	5-10	10-15	15-20	20-25	25-30	30-35	35-40	40-45	45-50	50-55	55-60	60-65	65-70	70-75	75-80	80-85	85-90	90-95	95-100	100-105	105-110	110-115	115-120
48	2⅔" x ½" CSPHS (1)	14 GA.							12 GA.		10 GA.														
	2⅔" x ½" CSPLS (1)	14 GA.				12 GA.																			
	2⅔" x ½" CAPHS	12 GA.							10 GA.		8 GA.														
	SRS (1)	14 GA.					12 GA.																		
	SRA	12 GA.					10 GA.																		
	PVC	RIBBED (PROFILE WALL)																							
	HDPE																								
	RCP (9)																								
54 (7)	2⅔" x ½" CSPHS (1)	14 GA.						12 GA.		10 GA.															
	2⅔" x ½" CSPLS (1)	14 GA.				12 GA.																			
	3"x1" CSPHS (1)	14 GA.							12 GA.		10 GA.														
	3"x1" CSPLS (1)	14 GA.				12 GA.		10 GA.		8 GA.															
	5"x1" CSPHS (1)	14 GA.						12 GA.		10 GA.															
	2⅔" x ½" CAPHS	12 GA.					10 GA.		8 GA.																
	3"x1" CAPHS	14 GA.					12 GA.		10 GA.		8 GA.														
	SRS (1)	14 GA.				12 GA.																			
	SRA	12 GA.				10 GA.																			
	RCP (9)																								
		2-5	5-10	10-15	15-20	20-25	25-30	30-35	35-40	40-45	45-50	50-55	55-60	60-65	65-70	70-75	75-80	80-85	85-90	90-95	95-100	100-105	105-110	110-115	115-120

~ NOTES ~

(1) GAGES FOR CORRUGATED STEEL PIPE ITEMS SHOWN ARE BASED ON ALUMINUM-COATED TYPE 2 STEEL AS PER AASHTO M-274. ALUMINUM COATED TYPE 2 STEEL IS ONLY PERMITTED IN Ph RANGES OF 5 TO 9.

2. WHEN CORRUGATED STEEL PIPE IS ZINC COATED (GALVANIZED) THE GAGE SHALL BE ONE GAGE HEAVIER THAN SHOWN IN THE TABLES.

(3) SEE CUR. STD. DWG. RDI-001 FOR EXPLANATION OF COVER HEIGHTS LESS THAN 2 FEET.

4. CSP, CAP, SRS AND SRA ARE SHOWN IN GAGE.

5. MAXIMUM COVER HEIGHT MEASURED FROM TOP OF PIPE TO SUBGRADE ELEVATION SHALL GOVERN GAGE OF PIPE TO BE USED FOR ENTIRE LENGTH OF PIPE INSTALLATION.

6. ALL CIRCULAR STRUCTURAL PLATE SHALL BE 5% VERTICALLY ELONGATED.

(7) 54" DIA. PIPE IS MINIMUM SIZE FOR COVER HEIGHTS GREATER THAN 65 FEET.

8. SEE CUR. STD. DWG. RDI-035 FOR COATINGS, LININGS AND PAVINGS FOR NON-STRUCTURAL PIPE.

(9) SEE CUR. STD. DWGS. RDI-021 AND RDI-026 FOR RCP COVER HEIGHT AND BEDDING REQUIREMENTS.

LEGEND

CSPHS: CORRUGATED STEEL PIPE WITH HELICAL LOCK SEAM OR HELICAL WELDED SEAM (HELICAL CORR.)

CSPLS: CORRUGATED STEEL PIPE WITH LONGITUDINAL RIVETED OR SPOT WELDED SEAM (ANNULAR CORR.)

CAPHS: CORRUGATED ALUMINUM ALLOY PIPE WITH HELICAL LOCK SEAM (HELICAL CORR.)

HDPE: HIGH DENSITY POLYETHYLENE PIPE

PVC: POLYVINYL CHLORIDE

SRS: SPIRAL RIB STEEL

SRA: SPIRAL RIB ALUMINUM

RCP: CIRCULAR REINFORCED CONCRETE PIPE

USE WITH CUR. STD. DWGS.
RDI-001 RDI-021 RDI-026
RDI-035

48" PIPE - 54" PIPE

KENTUCKY
DEPARTMENT OF HIGHWAYS

CULVERT AND
STORM SEWER PIPE TYPES
AND COVER HEIGHTS

STANDARD DRAWING NO. RDI-003-05

SUBMITTED William E. Ballard — DIRECTOR DIVISION OF DESIGN — 12-01-15 DATE

APPROVED — STATE HIGHWAY ENGINEER — 12-01-15 DATE

PIPE DIA. (IN)	PIPE TYPE	CIRCULAR PIPE COVER HEIGHTS IN FEET (4)																						
		2-5	5-10	10-15	15-20	20-25	25-30	30-35	35-40	40-45	45-50	50-55	55-60	60-65	65-70	70-75	75-80	80-85	85-90	90-95	95-100	100-105	105-110	110-115	115-120
60	2⅔" x ½" CSPHS (1)	12 GA.							10 GA.																
	2⅔" x ½" CSPLS (1)	12 GA.																							
	3"x1" CSPHS (1)	14 GA.						12 GA.		10 GA.															
	3"x1" CSPLS (1)	14 GA.				12 GA.			10 GA.																
	5"x1" CSPHS (1)	14 GA.					12 GA.			10 GA.															
	6"x2" CSPLSSB (1)	10 GA.							8 GA.			7 GA.			5 GA.		3 GA.				1 GA.				
	2⅔" x ½" CAPHS	10 GA.						8 GA.																	
	3"x1" CAPHS	14 GA.				12 GA.		10 GA.		8 GA.															
	9"x2½" CAPLSSB	10 GA.							8 GA.		7 GA.	5 GA.		3 GA.		1 GA.									
	SRS (1)	12 GA.																							
	SRA	10 GA.																							
	RCP (9)																								
66	2⅔" x ½" CSPHS (1)	10 GA.																							
	2⅔" x ½" CSPLS (1)	10 GA.																							
	3"x1" CSPHS (1)	14 GA.					12 GA.			10 GA.															
	3"x1" CSPLS (1)	14 GA.				12 GA.			10 GA.																
	5"x1" CSPHS (1)	14 GA.					12 GA.			10 GA.															
	6"x2" CSPLSSB (1)	10 GA.						8 GA.			7 GA.			5 GA.		3 GA.					1 GA.				
	2⅔" x ½" CAPHS	8 GA.																							
	3"x1" CAPHS	14 GA.				12 GA.		10 GA.		8 GA.															
	9"x2½" CAPLSSB	10 GA.						8 GA.		7 GA.		5 GA.	3 GA.		1 GA.										
	SRS (1)	12 GA.																							
	SRA	10 GA.																							
	RCP (9)																								
		2-5	5-10	10-15	15-20	20-25	25-30	30-35	35-40	40-45	45-50	50-55	55-60	60-65	65-70	70-75	75-80	80-85	85-90	90-95	95-100	100-105	105-110	110-115	115-120

~ NOTES ~

(1) GAGES FOR CORRUGATED STEEL PIPE ITEMS SHOWN ARE BASED ON ALUMINUM-COATED TYPE 2 STEEL AS PER AASHTO M-274. ALUMINUM COATED TYPE 2 STEEL IS ONLY PERMITTED IN Ph RANGES OF 5 TO 9.

2. WHEN CORRUGATED STEEL PIPE IS ZINC COATED (GALVANIZED) THE GAGE SHALL BE ONE GAGE HEAVIER THAN SHOWN IN THE TABLES.

3. CONTRARY TO NOTE 2, GAGES FOR 6" x 2" CSPLSSB ARE SHOWN FOR ZINC COATED (GALVANIZED).

(4) SEE CUR. STD. DWG. RDI-001 FOR EXPLANATION OF COVER HEIGHTS LESS THAN 2 FEET.

5. CSP, CAP, SRS AND SRA ARE SHOWN IN GAGE.

6. MAXIMUM COVER HEIGHT MEASURED FROM TOP OF PIPE TO SUBGRADE ELEVATION SHALL GOVERN GAGE OF PIPE TO BE USED FOR ENTIRE LENGTH OF PIPE INSTALLATION.

7. ALL CIRCULAR STRUCTURAL PLATE SHALL BE 5% VERTICALLY ELONGATED.

8. SEE CUR. STD. DWG. RDI-035 FOR COATINGS, LININGS AND PAVINGS FOR NON-STRUCTURAL PIPE.

(9) SEE CUR. STD. DWGS. RDI-021 AND RDI-026 FOR RCP COVER HEIGHT AND BEDDING REQUIREMENTS.

LEGEND

CSPHS: CORRUGATED STEEL PIPE WITH HELICAL LOCK SEAM OR HELICAL WELDED SEAM (HELICAL CORR.)

CSPLS: CORRUGATED STEEL PIPE WITH LONGITUDINAL RIVETED OR SPOT WELDED SEAM (ANNULAR CORR.)

CSPLSSB: CORRUGATED STEEL PIPE WITH LONGITUDINAL SEAMS WITH STEEL BOLTS (ANNULAR CORR.)

CAPHS: CORRUGATED ALUMINUM ALLOY PIPE WITH HELICAL LOCK SEAM (HELICAL CORR.)

CAPLSSB: CORRUGATED ALUMINUM ALLOY PIPE WITH LONGITUDINAL SEAMS WITH STEEL BOLTS (ANNULAR CORR.)

SRS: SPIRAL RIB STEEL

SRA: SPIRAL RIB ALUMINUM

RCP: CIRCULAR REINFORCED CONCRETE PIPE

60" PIPE - 66" PIPE

USE WITH CUR. STD. DWGS.
RDI-001 RDI-021 RDI-026
RDI-035

KENTUCKY
DEPARTMENT OF HIGHWAYS

CULVERT AND
STORM SEWER PIPE TYPES
AND COVER HEIGHTS

STANDARD DRAWING NO. RDI-004-04

SUBMITTED William E. Ginkel — DIRECTOR, DIVISION OF DESIGN — 12-01-15 DATE

APPROVED — STATE HIGHWAY ENGINEER — 12-01-15 DATE

PIPE DIA. (IN)	PIPE TYPE	CIRCULAR PIPE COVER HEIGHTS IN FEET (4)																						
		2-5	5-10	10-15	15-20	20-25	25-30	30-35	35-40	40-45	45-50	50-55	55-60	60-65	65-70	70-75	75-80	80-85	85-90	90-95	95-100	100-105	105-110	110-115	115-120
72	2 2/3" x 1/2" CSPHS (1)	10 GA.																							
	2 2/3" x 1/2" CSPLS (1)	10 GA.																							
	3"x1" CSPHS (1)	14 GA.					12 GA.		10 GA.																
	3"x1" CSPLS (1)	14 GA.			12 GA.			10 GA.																	
	5"x1" CSPHS (1)		14 GA.			12 GA.				10 GA.															
	6"x2" CSPLSSB (1)		10 GA.						8 GA.		7 GA.		5 GA.		3 GA.		1 GA.								
	2 2/3" x 1/2" CAPHS					8 GA.																			
	3"x1" CAPHS		14 GA.			12 GA.	10 GA.				8 GA.														
	9"x2 1/2" CAPLSSB				10 GA.				8 GA.	7 GA.	5 GA.	3 GA.			1 GA.										
	SRS (1)					12 GA.																			
	RCP (9)																								
78	3"x1" CSPHS (1)			12 GA.					10 GA.																
	3"x1" CSPLS (1)		12 GA.				10 GA.																		
	5"x1" CSPHS (1)			12 GA.				10 GA.																	
	6"x2" CSPLSSB (1)			10 GA.			8 GA.			7 GA.		5 GA.		3 GA.		1 GA.									
	3"x1" CAPHS			12 GA.			10 GA.		8 GA.																
	9"x2 1/2" CAPLSSB			10 GA.			8 GA.		7 GA.	5 GA.	3 GA.		1 GA.												
	SRS (1)					12 GA.																			
	RCP (9)																								
		2-5	5-10	10-15	15-20	20-25	25-30	30-35	35-40	40-45	45-50	50-55	55-60	60-65	65-70	70-75	75-80	80-85	85-90	90-95	95-100	100-105	105-110	110-115	115-120

LEGEND

CSPHS: CORRUGATED STEEL PIPE WITH HELICAL LOCK SEAM OR HELICAL WELDED SEAM (HELICAL CORR.)

CSPLS: CORRUGATED STEEL PIPE WITH LONGITUDINAL RIVETED OR SPOT WELDED SEAM (ANNULAR CORR.)

CSPLSSB: CORRUGATED STEEL PIPE WITH LONGITUDINAL SEAMS WITH STEEL BOLTS (ANNULAR CORR.)

CAPHS: CORRUGATED ALUMINUM ALLOY PIPE WITH HELICAL LOCK SEAM (HELICAL CORR.)

CAPLSSB: CORRUGATED ALUMINUM ALLOY PIPE WITH LONGITUDINAL SEAMS WITH STEEL BOLTS (ANNULAR CORR.) SEAMS WITH STEEL BOLTS (ANNULAR CORR.)

SRS: SPIRAL RIB STEEL

RCP: CIRCULAR REINFORCED CONCRETE PIPE

~ NOTES ~

(1) GAGES FOR CORRUGATED STEEL PIPE ITEMS SHOWN ARE BASED ON ALUMINUM-COATED TYPE 2 STEEL AS PER AASHTO M-274. ALUMINUM COATED TYPE 2 STEEL IS ONLY PERMITTED IN Ph RANGES OF 5 TO 9.

2. WHEN CORRUGATED STEEL PIPE IS ZINC COATED (GALVANIZED) THE GAGE SHALL BE ONE GAGE HEAVIER THAN SHOWN IN THE TABLES.

3. CONTRARY TO NOTE 2, GAGES FOR 6" x 2" CSPLSSB ARE SHOWN FOR ZINC COATED (GALVANIZED).

(4) SEE CUR. STD. DWG. RDI-001 FOR EXPLANATION OF COVER HEIGHTS LESS THAN 2 FEET.

5. CSP, CAP, SRS AND SRA ARE SHOWN IN GAGE.

6. MAXIMUM COVER HEIGHT MEASURED FROM TOP OF PIPE TO SUBGRADE ELEVATION SHALL GOVERN GAGE OF PIPE TO BE USED FOR ENTIRE LENGTH OF PIPE INSTALLATION.

7. ALL CIRCULAR STRUCTURAL PLATE SHALL BE 5% VERTICALLY ELONGATED.

8. SEE CUR. STD. DWG. RDI-035 FOR COATINGS, LININGS AND PAVINGS FOR NON-STRUCTURAL PIPE.

(9) SEE CUR. STD. DWGS. RDI-021 AND RDI-026 FOR RCP COVER HEIGHT AND BEDDING REQUIREMENTS.

USE WITH CUR. STD. DWGS.
RDI-001 RDI-021 RDI-026
RDI-035

KENTUCKY
DEPARTMENT OF HIGHWAYS

CULVERT AND
STORM SEWER PIPE TYPES
AND COVER HEIGHTS

STANDARD DRAWING NO. RDI-005-04

SUBMITTED William E. Ginkel — DIRECTOR DIVISION OF DESIGN — 12-01-15 DATE

APPROVED — STATE HIGHWAY ENGINEER — 12-01-15 DATE

72" PIPE - 78" PIPE

PIPE DIA. (IN)	PIPE TYPE	CIRCULAR PIPE COVER HEIGHTS IN FEET (4)																							
		2-5	5-10	10-15	15-20	20-25	25-30	30-35	35-40	40-45	45-50	50-55	55-60	60-65	65-70	70-75	75-80	80-85	85-90	90-95	95-100	100-105	105-110	110-115	115-120
84	3"x1" CSPHS (1)	12 GA.						10 GA.																	
	3"x1" CSPLS (1)	12 GA.				10 GA.																			
	5"x1" CSPHS (1)	12 GA.					10 GA.																		
	6"x2" CSPLSSB (1)	10 GA.					8 GA.		7 GA.			5 GA.	3 GA.		1 GA.										
	3"x1" CAPHS	12 GA.				10 GA.		8 GA.																	
	9"x2½" CAPLSSB	10 GA.					8 GA.	7 GA.		5 GA.	3 GA.	1 GA.													
	RCP (9)																								
90	3"x1" CSPHS (1)	12 GA.						10 GA.																	
	3"x1" CSPLS (1)	12 GA.				10 GA.																			
	5"x1" CSPHS (1)	12 GA.					10 GA.																		
	6"x2" CSPLSSB (1)	10 GA.					8 GA.		7 GA.		5 GA.	3 GA.		1 GA.											
	3"x1" CAPHS	12 GA.				10 GA.		8 GA.																	
	9"x2½" CAPLSSB	10 GA.					8 GA.	7 GA.	5 GA.	3 GA.	1 GA.														
	RCP (9)																								
96	3"x1" CSPHS (1)	12 GA.					10 GA.																		
	3"x1" CSPLS (1)	12 GA.																							
	5"x1" CSPHS (1)	12 GA.					10 GA.																		
	6"x2" CSPLSSB (1)	10 GA.				8 GA.		7 GA.		5 GA.		3 GA.		1 GA.											
	3"x1" CAPHS	12 GA.				10 GA.		8 GA.																	
	9"x2½" CAPLSSB	10 GA.				8 GA.		7 GA.	5 GA.	3 GA.	1 GA.														
	RCP (9)																								
		2-5	5-10	10-15	15-20	20-25	25-30	30-35	35-40	40-45	45-50	50-55	55-60	60-65	65-70	70-75	75-80	80-85	85-90	90-95	95-100	100-105	105-110	110-115	115-120

~ NOTES ~

(1) GAGES FOR CORRUGATED STEEL PIPE ITEMS SHOWN ARE BASED ON ALUMINUM-COATED TYPE 2 STEEL AS PER AASHTO M-274. ALUMINUM COATED TYPE 2 STEEL IS ONLY PERMITTED IN Ph RANGES OF 5 TO 9.

2. WHEN CORRUGATED STEEL PIPE IS ZINC COATED (GALVANIZED) THE GAGE SHALL BE ONE GAGE HEAVIER THAN SHOWN IN THE TABLES.

3. CONTRARY TO NOTE 2, GAGES FOR 6" x 2" CSPLSSB ARE SHOWN FOR ZINC COATED (GALVANIZED).

(4) SEE CUR. STD DWG. RDI-001 FOR EXPLANATION OF COVER HEIGHTS LESS THAN 2 FEET.

5. CSP, CAP, SRS AND SRA ARE SHOWN IN GAGE.

6. MAXIMUM COVER HEIGHT MEASURED FROM TOP OF PIPE TO SUBGRADE ELEVATION SHALL GOVERN GAGE OF PIPE TO BE USED FOR ENTIRE LENGTH OF PIPE INSTALLATION.

7. ALL CIRCULAR STRUCTURAL PLATE SHALL BE 5% VERTICALLY ELONGATED.

8. SEE CUR. STD. DWG. RDI-035 FOR COATINGS, LININGS AND PAVINGS FOR NON-STRUCTURAL PIPE.

(9) SEE CUR. STD. DWGS. RDI-021 AND RDI-026 FOR RCP COVER HEIGHT AND BEDDING REQUIREMENTS.

LEGEND

CSPHS: CORRUGATED STEEL PIPE WITH HELICAL LOCK SEAM OR HELICAL WELDED SEAM (HELICAL CORR.)

CSPLS: CORRUGATED STEEL PIPE WITH LONGITUDINAL RIVETED OR SPOT WELDED SEAM (ANNULAR CORR.)

CSPLSSB: CORRUGATED STEEL PIPE WITH LONGITUDINAL SEAMS WITH STEEL BOLTS (ANNULAR CORR.)

CAPHS: CORRUGATED ALUMINUM ALLOY PIPE WITH HELICAL LOCK SEAM (HELICAL CORR.)

CAPLSSB: CORRUGATED ALUMINUM ALLOY PIPE WITH LONGITUDINAL SEAMS WITH STEEL BOLTS (ANNULAR CORR.)

RCP: CIRCULAR REINFORCED CONCRETE PIPE

USE WITH CUR. STD. DWGS.
RDI-001 RDI-021 RDI-026
RDI-035

84" PIPE - 96" PIPE

KENTUCKY
DEPARTMENT OF HIGHWAYS

CULVERT AND
STORM SEWER PIPE TYPES
AND COVER HEIGHTS

STANDARD DRAWING NO. RDI-006-04

SUBMITTED William E. Ginkel 12-01-15
DIRECTOR DIVISION OF DESIGN DATE

APPROVED 12-01-15
STATE HIGHWAY ENGINEER DATE

PIPE DIA. (IN)	PIPE TYPE	CIRCULAR PIPE COVER HEIGHTS IN FEET (4)																							
		2-5	5-10	10-15	15-20	20-25	25-30	30-35	35-40	40-45	45-50	50-55	55-60	60-65	65-70	70-75	75-80	80-85	85-90	90-95	95-100	100-105	105-110	110-115	115-120
102	3"x1" CSPHS (1)	12 GA.					10 GA.																		
	3"x1" CSPLS (1)	12 GA.			10 GA.																				
	5"x1" CSPHS (1)	12 GA.				10 GA.																			
	6"x2" CSPLSSB (1)	10 GA.				8 GA.		7 GA.		5 GA.	3 GA.		1 GA.												
	3"x1" CAPHS	10 GA.				8 GA.																			
	9"x2½" CAPLSSB	10 GA.				8 GA.	7 GA.	5 GA.	3 GA.	1 GA.															
	RCP (9)																								
108	3"x1" CSPHS (1)	12 GA.					10 GA.																		
	3"x1" CSPLS (1)	12 GA.			10 GA.																				
	5"x1" CSPHS (1)	12 GA.				10 GA.																			
	6"x2" CSPLSSB (1)	10 GA.				8 GA.		7 GA.		5 GA.	3 GA.		1 GA.												
	3"x1" CAPHS	10 GA.				8 GA.																			
	9"x2½" CAPLSSB	10 GA.				8 GA.	7 GA.	5 GA.	3 GA.	1 GA.															
	RCP (9)																								
114	3"x1" CSPHS (1)	10 GA.																							
	3"x1" CSPLS (1)	10 GA.																							
	5"x1" CSPHS (1)	10 GA.																							
	6"x2" CSPLSSB (1)	10 GA.				8 GA.		7 GA.		5 GA.	3 GA.		1 GA.												
	3"x1" CAPHS	8 GA.																							
	9"x2½" CAPLSSB	10 GA.			8 GA.		7 GA.	3 GA.	1 GA.																
	RCP (9)																								
		2-5	5-10	10-15	15-20	20-25	25-30	30-35	35-40	40-45	45-50	50-55	55-60	60-65	65-70	70-75	75-80	80-85	85-90	90-95	95-100	100-105	105-110	110-115	115-120

~ NOTES ~

(1) GAGES FOR CORRUGATED STEEL PIPE ITEMS SHOWN ARE BASED ON ALUMINUM-COATED TYPE 2 STEEL AS PER AASHTO M-274. ALUMINUM COATED TYPE 2 STEEL IS ONLY PERMITTED IN Ph RANGES OF 5 TO 9.

2. WHEN CORRUGATED STEEL PIPE IS ZINC COATED (GALVANIZED) THE GAGE SHALL BE ONE GAGE HEAVIER THAN SHOWN IN THE TABLES.

3. CONTRARY TO NOTE 2, GAGES FOR 6" x 2" CSPLSSB ARE SHOWN FOR ZINC COATED (GALVANIZED).

(4) SEE CUR. STD. DWG. RDI-001 FOR EXPLANATION OF COVER HEIGHTS LESS THAN 2 FEET.

5. CSP, CAP, SRS AND SRA ARE SHOWN IN GAGE.

6. MAXIMUM COVER HEIGHT MEASURED FROM TOP OF PIPE TO SUBGRADE ELEVATION SHALL GOVERN GAGE OF PIPE TO BE USED FOR ENTIRE LENGTH OF PIPE INSTALLATION.

7. ALL CIRCULAR STRUCTURAL PLATE SHALL BE 5% VERTICALLY ELONGATED.

8. SEE CUR. STD. DWG. RDI-035 FOR COATINGS, LININGS AND PAVINGS FOR NON-STRUCTURAL PIPE.

(9) SEE CUR. STD. DWGS. RDI-021 AND RDI-026 FOR RCP COVER HEIGHT AND BEDDING REQUIREMENTS.

LEGEND

CSPHS: CORRUGATED STEEL PIPE WITH HELICAL LOCK SEAM OR HELICAL WELDED SEAM (HELICAL CORR.)

CSPLS: CORRUGATED STEEL PIPE WITH LONGITUDINAL RIVETED OR SPOT WELDED SEAM (ANNULAR CORR.)

CSPLSSB: CORRUGATED STEEL PIPE WITH LONGITUDINAL SEAMS WITH STEEL BOLTS (ANNULAR CORR.)

CAPHS: CORRUGATED ALUMINUM ALLOY PIPE WITH HELICAL LOCK SEAM (HELICAL CORR.)

CAPLSSB: CORRUGATED ALUMINUM ALLOY PIPE WITH LONGITUDINAL SEAMS WITH STEEL BOLTS (ANNULAR CORR.)

RCP: CIRCULAR REINFORCED CONCRETE PIPE

102" PIPE - 114" PIPE

USE WITH CUR. STD. DWGS.
RDI-001 RDI-021 RDI-026
RDI-035

KENTUCKY
DEPARTMENT OF HIGHWAYS

CULVERT AND
STORM SEWER PIPE TYPES
AND COVER HEIGHTS

STANDARD DRAWING NO. RDI-007-04

SUBMITTED William E. Ballard — DIRECTOR DIVISION OF DESIGN — 12-01-15 DATE

APPROVED — STATE HIGHWAY ENGINEER — 12-01-15 DATE

PIPE DIA. (IN)	PIPE TYPE	CIRCULAR PIPE COVER HEIGHTS IN FEET (4)																							
		2-5	5-10	10-15	15-20	20-25	25-30	30-35	35-40	40-45	45-50	50-55	55-60	60-65	65-70	70-75	75-80	80-85	85-90	90-95	95-100	100-105	105-110	110-115	115-120
120	3"x1" CSPHS (1)	10 GA.																							
	3"x1" CSPLS (1)	10 GA.																							
	5"x1" CSPHS (1)	10 GA.																							
	6"x2" CSPLSSB (1)	10 GA.			8 GA.		7 GA.		5 GA.	3 GA.	1 GA.														
	3"x1" CAPHS	8 GA.																							
	9"x2½" CAPLSSB	10 GA.			8 GA.	7 GA.	5 GA.	3 GA.	1 GA.																
	RCP (9)																								
		2-5	5-10	10-15	15-20	20-25	25-30	30-35	35-40	40-45	45-50	50-55	55-60	60-65	65-70	70-75	75-80	80-85	85-90	90-95	95-100	100-105	105-110	110-115	115-120

~ NOTES ~

(1) GAGES FOR CORRUGATED STEEL PIPE ITEMS SHOWN ARE BASED ON ALUMINUM-COATED TYPE 2 STEEL AS PER AASHTO M-274. ALUMINUM COATED TYPE 2 STEEL IS ONLY PERMITTED IN Ph RANGES OF 5 TO 9.

2. WHEN CORRUGATED STEEL PIPE IS ZINC COATED (GALVANIZED) THE GAGE SHALL BE ONE GAGE HEAVIER THAN SHOWN IN THE TABLES.

3. CONTRARY TO NOTE 2, GAGES FOR 6" x 2" CSPLSSB ARE SHOWN FOR ZINC COATED (GALVANIZED).

(4) SEE CUR. STD. DWG. DRAWING RDI-001 FOR EXPLANATION OF COVER HEIGHTS LESS THAN 2 FEET.

5. CSP, CAP, SRS AND SRA ARE SHOWN IN GAGE.

6. MAXIMUM COVER HEIGHT MEASURED FROM TOP OF PIPE TO SUBGRADE ELEVATION SHALL GOVERN GAGE OF PIPE TO BE USED FOR ENTIRE LENGTH OF PIPE INSTALLATION.

7. ALL CIRCULAR STRUCTURAL PLATE SHALL BE 5% VERTICALLY ELONGATED.

8. SEE CUR. STD. DWG. RDI-035 FOR COATINGS, LININGS AND PAVINGS FOR NON-STRUCTURAL PIPE.

(9) SEE CUR. STD. DWGS. RDI-021 AND RDI-026 FOR RCP COVER HEIGHT AND BEDDING REQUIREMENTS.

LEGEND

CSPHS: CORRUGATED STEEL PIPE WITH HELICAL LOCK SEAM OR HELICAL WELDED SEAM (HELICAL CORR.)

CSPLS: CORRUGATED STEEL PIPE WITH LONGITUDINAL RIVETED OR SPOT WELDED SEAM (ANNULAR CORR.)

CSPLSSB: CORRUGATED STEEL PIPE WITH LONGITUDINAL SEAMS WITH STEEL BOLTS (ANNULAR CORR.)

CAPHS: CORRUGATED ALUMINUM ALLOY PIPE WITH HELICAL LOCK SEAM (HELICAL CORR.)

CAPLSSB: CORRUGATED ALUMINUM ALLOY PIPE WITH LONGITUDINAL SEAMS WITH STEEL BOLTS (ANNULAR CORR.)

RCP: CIRCULAR REINFORCED CONCRETE PIPE

120" PIPE

USE WITH CUR. STD. DWGS.
RDI-001 RDI-021 RDI-026
RDI-035

KENTUCKY
DEPARTMENT OF HIGHWAYS

CULVERT AND
STORM SEWER PIPE TYPES
AND COVER HEIGHTS

STANDARD DRAWING NO. RDI-008-04

SUBMITTED William E. Ginkel 12-01-15
DIRECTOR DIVISION OF DESIGN DATE

APPROVED 12-01-15
STATE HIGHWAY ENGINEER DATE

EQUI. PIPE DIA. (IN)	PIPE TYPE	NON-CIRCULAR PIPE COVER HEIGHTS IN FEET					
		2 - 5	6	7	8	9	10
15	2⅔" x ½" CSPA (1)	16 GA.					
	2⅔" x ½" CAPA	16 GA.					
18	2⅔" x ½" CSPA (1)	16 GA.					
	2⅔" x ½" CAPA	16 GA.					
	SRSA (1)	16 GA.					
	SRAA	16 GA.					
	RCHEP (12)						
21	2⅔" x ½" CSPA (1)	16 GA.					
	2⅔" x ½" CAPA	16 GA.					
	SRSA (1)	16 GA.					
	SRAA	16 GA.					
24	2⅔" x ½" CSPA (1)	16 GA.					
	2⅔" x ½" CAPA	14 GA.					
	SRSA (1)	16 GA.					
	SRAA	14 GA.					
	RCHEP (12)						
		2 - 5	6	7	8	9	10

EQUI. PIPE DIA. (IN)	PIPE TYPE	NON-CIRCULAR PIPE COVER HEIGHTS IN FEET					
		2 - 5	6	7	8	9	10
30 (9)	2⅔" x ½" CSPA (1)	16 GA.					
	2⅔" x ½" CAPA	14 GA.					
	SRSA (1)	16 GA.					
	SRAA	14 GA.					
	RCHEP (12)						
36	2⅔" x ½" CSPA (1)	14 GA.					
	2⅔" x ½" CAPA	12 GA.					
	SRSA (1)	14 GA.					
		12 GA.					
	RCHEP (12)						
42	2⅔" x ½" CSPA (1)	14 GA.					
	2⅔" x ½" CAPA	12 GA.					
	SRSA (1)	14 GA.					
	SRAA	12 GA.					
	RCHEP (12)						
		2 - 5	6	7	8	9	10

EQUI. PIPE DIA. (IN)	PIPE TYPE	NON-CIRCULAR PIPE COVER HEIGHTS IN FEET					
		2 - 5	6	7	8	9	10
48	2⅔" x ½" CSPA (1)	12 GA.					
	2⅔" x ½" CAPA	10 GA.					
	SRSA (1)	14 GA.					
	SRAA	12 GA.					
	RCHEP (12)						
54	2⅔" x ½" CSPA (1)	12 GA.					
	(3) CSPA (1)	14 GA.					
	2⅔" x ½" CAPA	10 GA.					
	3"x1" CAPA	14 GA.					
	SRSA (1)	14 GA.					
	SRAA	12 GA.					
	RCHEP (12)						
60	2⅔" x ½" CSPA (1)	10 GA.					
	(3) CSPA (1)	14 GA.					
	2⅔" x ½" CAPA	8 GA.					
	3"x1" CAPA	14 GA.					
	SRSA (1)	12 GA.					
	SRAA	10 GA.					
	RCHEP (12)						
		2 - 5	6	7	8	9	10

~ NOTES ~

(1) GAGES FOR CORRUGATED STEEL PIPE ITEMS SHOWN ARE BASED ON ALUMINUM-COATED TYPE 2 STEEL AS PER AASHTO M-274. ALUMINUM COATED TYPE 2 STEEL IS ONLY PERMITTED IN Ph RANGES OF 5 TO 9.

2. WHEN CORRUGATED STEEL PIPE IS ZINC COATED (GALVANIZED) THE GAGE SHALL BE ONE GAGE HEAVIER THAN SHOWN IN THE TABLES.

(3) 3" x 1" OR 5" x 1"

4. CSPA, CAPA,SRSA AND SRAA ARE SHOWN IN GAGE.

5. MAXIMUM COVER HEIGHT MEASURED FROM TOP OF PIPE TO SUBGRADE ELEVATION SHALL GOVERN GAGE OF PIPE TO BE USED FOR ENTIRE LENGTH OF PIPE INSTALLATION.

6. MINIMUM COVER HEIGHTS FOR PIPE SHALL BE 2 FEET. GAGE OF PIPE FOR COVER HEIGHTS LESS THAN 2 FEET SHALL BE THAT SHOWN FOR COVER HEIGHTS OF 10 FEET. (SEE STANDARD SPECIFICATIONS FOR BACKFILL)

7. MAXIMUM COVER HEIGHT FOR NON-CIRCULAR PIPE IS 10 FEET. NON-CIRCULAR PIPE SHALL ONLY BE USED WHERE COVER LIMITATIONS EXIST.

8. GAGE OF ENTRANCE PIPE FOR COVER HEIGHTS LESS THAN 2 FEET SHALL MEET THE FOLLOWING REQUIREMENTS:
   a. GAGE OF CAPA SHALL BE ONE GAGE HEAVIER THAN SHOWN IN THE TABLE.
   b. GAGE OF CSPA SHALL BE THAT SHOWN IN TABLE.

(9) ENTRANCE PIPE GREATER THAN 30" DIA. SHALL BE CULVERT PIPE.

10. SEE CUR. STD. DWG. RDI-016 FOR NON-CIRCULAR PIPE ALTERNATES.

11. SEE CUR. STD. DWG. RDI-035 FOR COATINGS, LININGS AND PAVINGS FOR NON-STRUCTURAL PIPE.

(12) SEE CUR. STD. DWGS. RDI-021 AND RDI-026 FOR RCHEP COVER HEIGHT AND BEDDING REQUIREMENTS.

LEGEND

CSPA: CORRUGATED STEEL PIPE ARCH
CAPA: CORRUGATED ALUMINUM ALLOY PIPE ARCH
SRSA: SPIRAL RIB STEEL ARCH
SRAA: SPIRAL RIB ALUMINUM ARCH
RCHEP: REINFORCED CONCRETE HORIZONTAL ELLIPTICAL PIPE

NON-CIRCULAR
15" PIPE - 60" PIPE

USE WITH CUR. STD. DWGS.
RDI-016 RDI-021 RDI-026
RDI-035

KENTUCKY
DEPARTMENT OF HIGHWAYS

CULVERT, ENTRANCE AND STORM SEWER PIPE TYPES AND COVER HEIGHTS

STANDARD DRAWING NO. RDI-011-03

SUBMITTED William E. Ginkel — DIRECTOR DIVISION OF DESIGN — 12-01-15 DATE
APPROVED — STATE HIGHWAY ENGINEER — 12-01-15 DATE

EQUI. PIPE DIA. (IN)	PIPE TYPE	NON-CIRCULAR PIPE COVER HEIGHTS IN FEET (4)					
		2 - 5	6	7	8	9	10
66	(3) CSPA (1)	14 GA.					
	6"x2" CSPA (1)	12 GA.					
	3"x1" CAPA	14 GA.					
	RCHEP (11)						
72	(3) CSPA (1)	14 GA.					
	6"x2" CSPA (1)	12 GA.					
	3"x1" CAPA	12 GA.					
	RCHEP (11)						
78	(3) CSPA (1)	12 GA.					
	6"x2" CSPA (1)	12 GA.					
	3"x1" CAPA	12 GA.					
	9"x2½" CAPAASB	12 GA.					
	RCHEP (11)						
		2 - 5	6	7	8	9	10

EQUI. PIPE DIA. (IN)	PIPE TYPE	NON-CIRCULAR PIPE COVER HEIGHTS IN FEET (4)					
		2 - 5	6	7	8	9	10
84	(3) CSPA (1)	12 GA.					
	6"x2" CSPA (1)	12 GA.					
	3"x1" CAPA	12 GA.					
	9"x2½" CAPAASB	12 GA.					
	RCHEP (11)						
90	(3) CSPA (1)	12 GA.					
	6"x2" CSPA (1)	12 GA.					
	3"x1" CAPA	10 GA.					
	9"x2½" CAPAASB	12 GA.					
	RCHEP (11)						
96	(3) CSPA (1)	12 GA.					
	6"x2" CSPA (1)	12 GA.					
	3"x1" CAPA	8 GA.					
	9"x2½" CAPAASB	12 GA.					
	RCHEP (11)						
		2 - 5	6	7	8	9	10

EQUI. PIPE DIA. (IN)	PIPE TYPE	NON-CIRCULAR PIPE COVER HEIGHTS IN FEET (4)					
		2 - 5	6	7	8	9	10
102	(3) CSPA (1)	12 GA.					
	6"x2" CSPA (1)	12 GA.					
	3"x1" CAPA	8 GA.					
	9"x2½" CAPAASB	12 GA.					
	RCHEP (11)						
108	(3) CSPA (1)	10 GA.					
	6"x2" CSPA (1)	12 GA.					
	9"x2½" CAPAASB	12 GA.					
	RCHEP (11)						
114	(3) CSPA (1)	10 GA.					
	6"x2" CSPA (1)	12 GA.					
	9"x2½" CAPAASB	12 GA.					
	RCHEP (11)						
120	6"x2" CSPA (1)	12 GA.					
	9"x2½" CAPAASB	12 GA.					
	RCHEP (11)						
		2 - 5	6	7	8	9	10

~ NOTES ~

(1) GAGES FOR CORRUGATED STEEL PIPE ITEMS SHOWN ARE BASED ON ALUMINUM-COATED TYPE 2 STEEL AS PER AASHTO M-274. ALUMINUM COATED TYPE 2 STEEL IS ONLY PERMITTED IN Ph RANGES OF 5 TO 9.

2. WHEN CORRUGATED STEEL PIPE IS ZINC COATED (GALVANIZED) THE GAGE SHALL BE ONE GAGE HEAVIER THAN SHOWN IN THE TABLES.

(3) 3" x 1" OR 5" x 1"

(4) SEE CUR. STD. DWG. RDI-011 FOR EXPLANATION OF COVER HEIGHTS LESS THAN 2 FEET.

5. CSPA AND CAPA ARE SHOWN IN GAGE.

6. MAXIMUM COVER HEIGHT FROM TOP OF PIPE TO SUBGRADE ELEVATION SHALL GOVERN GAGE OF PIPE TO BE USED FOR ENTIRE LENGTH OF PIPE INSTALLATION.

7. MAXIMUM COVER HEIGHT FOR NON-CIRCULAR PIPE IS 10 FEET. NON-CIRCULAR PIPE SHALL ONLY BE USED WHERE COVER LIMITATIONS EXIST.

8. NON-CIRCULAR CMP HAVING AN EQUIVALENT ROUND DIAMETER GREATER THAN 84" SHALL BE SUPPLIED AS STRUCTURAL PLATE.

9. SEE CUR. STD. DWG. RDI-016 FOR NON-CIRCULAR PIPE ALTERNATES.

10. SEE CUR. STD. DWG. RDI-035 FOR COATINGS, LININGS AND PAVINGS FOR NON-STRUCTURAL PIPE.

(11) SEE CUR. STD. DWGS. RDI-021 AND RDI-026 FOR RCHEP COVER HEIGHT AND BEDDING REQUIREMENTS.

LEGEND

CSPA: CORRUGATED STEEL PIPE ARCH (ANNULAR CORR.)

CAPA: CORRUGATED ALUMINUM ALLOY PIPE ARCH (ANNULAR CORR.)

CAPAASB: CORRUGATED ALUMINUM ALLOY PIPE ARCH WITH ALUMINUM OR STEEL BOLTS (ANNULAR CORR.)

RCHEP: REINFORCED CONCRETE HORIZONTAL ELLIPTICAL PIPE

USE WITH CUR. STD. DWGS.
RDI-011 RDI-016 RDI-021
RDI-026 RDI-035

NON-CIRCULAR
66" PIPE - 120" PIPE

KENTUCKY
DEPARTMENT OF HIGHWAYS

CULVERT AND STORM SEWER PIPE TYPES AND COVER HEIGHTS

STANDARD DRAWING NO. RDI-012-03

SUBMITTED William E. Ginkel — DIRECTOR DIVISION OF DESIGN — 12-01-15 DATE

APPROVED — STATE HIGHWAY ENGINEER — 12-01-15 DATE

EQUIVALENT CIRCULAR PIPE DIAMETER	2⅔" x ½" CSPA & CAPA		① CSPA AND 3" x 1" CAPA		6" x 2" CSPA		9"x2½" CAPAASB		RCHEP	
	SPAN (INCH)	RISE (INCH)	SPAN (INCH)	RISE (INCH)	SPAN	RISE	SPAN	RISE	SPAN (INCH)	RISE (INCH)
15"	17	13								
18"	21	15							23	14
21"	24	18								
24"	28	20							30	19
30"	35	24							38	24
36"	42	29							45	29
42"	49	33							53	34
48"	57	38							60	38
54"	64	43	60	46					68	43
60"	71	47	66	51					76	48
66"			73	55	6'-1"	4'-7"			83	53
72"			81	59	6'-9"	4'-11"			91	58
78"			87	63	7'-3"	5'-3"	6'-11"	5'-9"	98	63
84"			95	67	7'-11"	5'-7"	7'-9"	6'-0"	106	68
90"			103	71	8'-7"	5'-11"	8'-5"	6'-3"	113	72
96"			112	75	9'-4"	6'-3"	9'-3"	6'-5"	121	77
102"			117	79	9'-9"	6'-7"	9'-11"	6'-8"	128	82
108"			128	83	10'-8"	6'-11"	10'-9"	6'-10"	136	87
114"			137	87	11'-5"	7'-3"	11'-5"	7'-1"	143	92
120"			142	91	11'-10"	7'-7"	12'-3"	7'-3"	151	97

CHART KEY

2⅔" X ½" CSPA: CORRUGATED STEEL PIPE ARCH
3"x1" OR 5"x1" CSPA: CORRUGATED STEEL PIPE ARCH
6"x2" CSPA: CORRUGATED STEEL PIPE ARCH
2⅔ " X ½" CAPA: CORRUGATED ALUMINUM ALLOY PIPE ARCH
3"x1" CAPA: CORRUGATED ALUMINUM ALLOY PIPE ARCH
9" X 2½" CAPAASB: CORRUGATED ALUMINUM ALLOY PIPE ARCH WITH ALUMINUM OR STEEL BOLTS
RCHEP: REINFORCED CONCRETE HORIZONTAL ELLIPTICAL PIPE

~ NOTES ~

① 3"x1" OR 5"x1"

KENTUCKY
DEPARTMENT OF HIGHWAYS

NON-CIRCULAR PIPE ALTERNATES

STANDARD DRAWING NO. RDI-016-03

SUBMITTED _____ DIRECTOR, DIVISION OF DESIGN — 12-01-15 DATE

APPROVED _____ STATE HIGHWAY ENGINEER — 12-01-15 DATE

STEP 1

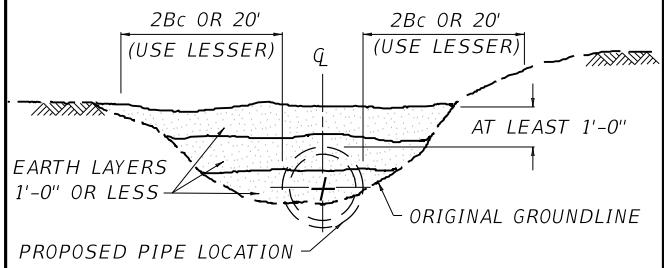

a. IF THE ORIGINAL GROUNDLINE IS AT LEAST 1'-0" ABOVE TOP OF PROPOSED PIPE FOR WIDTH OF 2Bc OR 20' (WHICHEVER IS LESS) ON EACH SIDE OF THE PIPE, GO DIRECTLY TO "STEP 2".

b. IF ORIGINAL GROUNDLINE IS NOT AT LEAST 1'-0" ABOVE TOP OF PROPOSED PIPE, COMPACT EMBANKMENT IN LAYERS OF 1'-0" OR LESS TO ELEVATION AND WIDTH SHOWN. ☐ MEET DENSITY REQUIREMENTS FOR PROPOSED EMBANKMENT .

STEP 2

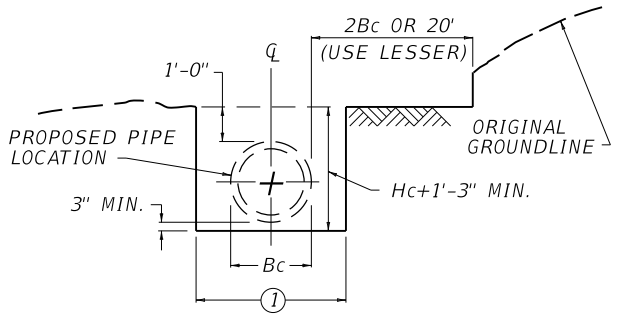

a. EXCAVATE TO WITHIN 1'-0" ABOVE TOP OF PROPOSED PIPE A WIDTH OF 2Bc OR 20' (USE LESSER) ON EACH SIDE OF PIPE.

b. EXCAVATE TRENCH TO WIDTH AND DEPTH SHOWN.

1 Bc + 24" FOR PIPE 36" DIA. OR LESS.
Bc + 48" FOR PIPE GREATER THAN 36" DIA.

STEP 3

ROCK FOUNDATION DETAILS

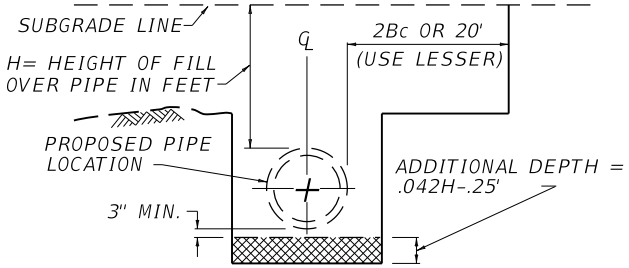

a. IF ROCK FOUNDATION IS NOT ENCOUNTERED, GO DIRECTLY TO "STEP 4".

b. IF ROCK FOUNDATION IS ENCOUNTERED, EXCAVATE TRENCH ADDITIONAL DEPTH USING FORMULA GIVEN. THIS ADDITIONAL DEPTH ▩ SHALL BE A MIN. OF 4" AND SHALL NOT EXCEED 24"

c. BACKFILL ADDITIONAL EXCAVATION AREA WITH COMPACTED BEDDING MATERIAL IN LAYERS 6" OR LESS.

STEP 4

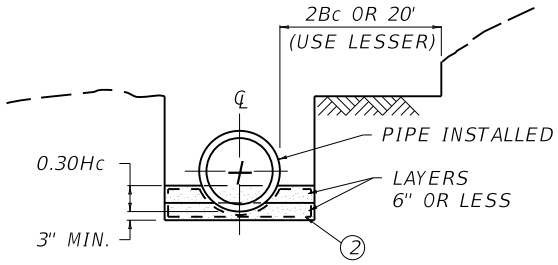

a. COMPACT BEDDING IN TRENCH IN LAYERS OF 6" OR LESS TO WIDTH AND ELEVATION SHOWN. ☐

b. EXCAVATE A GROOVE IN THE COMPACTED BEDDING TO CONFORM TO THE OUTSIDE OF THE PIPE. AFTER EXCAVATION OF THE GROOVE, APPROXIMATELY 3" OF BEDDING SHOULD REMAIN BELOW THE OUTSIDE INVERT OF THE PIPE. THE CRADLE SHALL BE GAGED FOR SHAPE AND SLOPE BY STRIKING OR DRAWING A TEMPLATE THROUGH THE GROOVE IMMEDIATELY BEFORE PLACING EACH SECTION OF PIPE.

c. INSTALL PIPE AT CORRECT ALIGNMENT AND ELEVATION. RECOMPACT ANY LOOSE BEDDING DISTURBED DURING INSTALLATION.

2 WRAP BEDDING MATERIAL IN GEOTEXTILE FABRIC WHEN THE STANDARD SPECIFICATIONS SPECIFIES.

STEP 5

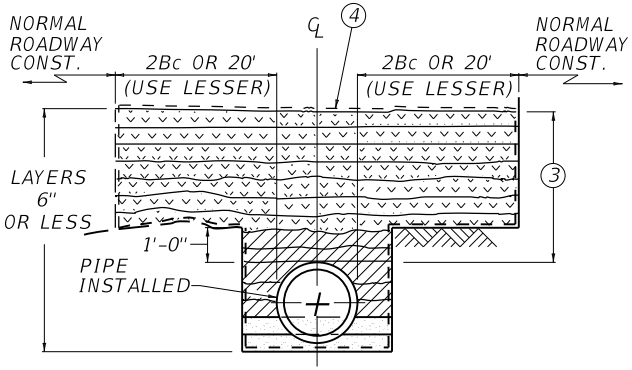

3 4'-0" REQUIRED FOR CONSTRUCTION LOADING IF COVER HEIGHT PERMITS.

a. COMPACT REQUIRED BACKFILL MATERIAL IN LAYERS OF 6" OR LESS TO 1'-0" ABOVE TOP OF PIPE. ▨

b. COMPACT REQUIRED BACKFILL MATERIAL TO ELEV. 3 ABOVE TOP OF PIPE IN LAYERS OF 6" OR LESS. ▩

c. PROCEED WITH NORMAL ROADWAY CONSTRUCTION.

4 WRAP BEDDING MATERIAL IN GEOTEXTILE FABRIC WHEN THE STANDARD SPECIFICATIONS SPECIFIES.

~ PIPE SHAPES ~

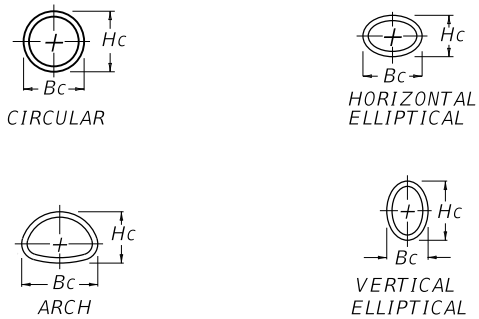

FOR TRENCH CONDITIONS

USE WITH CUR. STD. DWG. RDI-025

KENTUCKY
DEPARTMENT OF HIGHWAYS

PIPE BEDDING FOR CULVERTS, ENTRANCE AND STORM SEWER PIPE

STANDARD DRAWING NO. RDI-020-10

SUBMITTED _____ DIRECTOR DIVISION OF DESIGN — DATE 02-26-20

APPROVED _____ STATE HIGHWAY ENGINEER — DATE 02-26-20

STEP 1

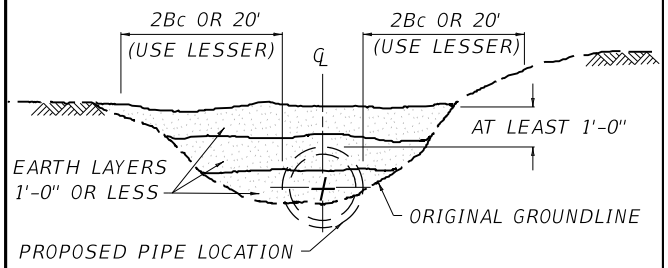

a. IF THE ORIGINAL GROUNDLINE IS AT LEAST 1'-0" ABOVE TOP OF PROPOSED PIPE FOR A WIDTH OF 2Bc OR 20' (WHICHEVER IS LESS) ON EACH SIDE OF THE PIPE GO DIRECTLY TO "STEP 2".

b. IF ORIGINAL GROUNDLINE IS NOT AT LEAST 1'-0" ABOVE TOP OF PROPOSED PIPE, COMPACT EMBANKMENT IN LAYERS 1'-0" OR LESS TO ELEVATION AND WIDTH SHOWN. MEET DENSITY REQUIREMENTS FOR PROPOSED EMBANKMENT .

STEP 2

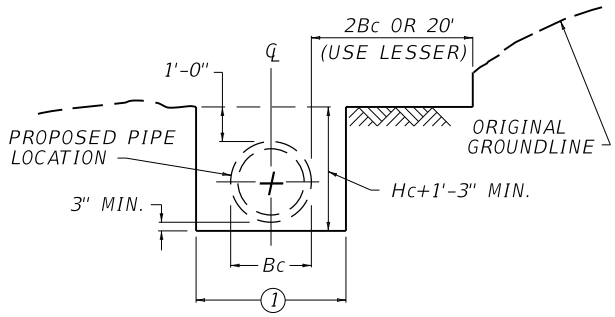

a. EXCAVATE TO WITHIN 1'-0" ABOVE TOP OF PROPOSED PIPE A WIDTH OF 2Bc OR 20' (USE LESSER) ON EACH SIDE OF PIPE.

b. EXCAVATE TRENCH TO THE WIDTH AND DEPTH SHOWN.

1 Bc + 24" FOR PIPE 36" DIA. OR LESS.
Bc + 48" FOR PIPE GREATER THAN 36" DIA.

STEP 3

ROCK FOUNDATION DETAILS

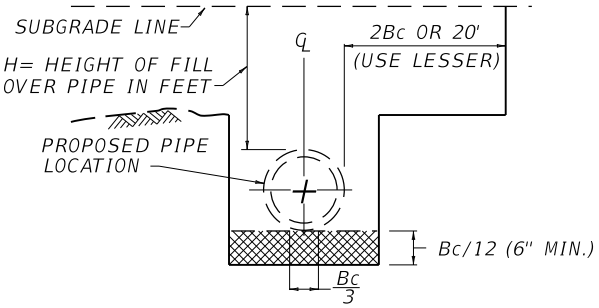

a. IF ROCK FOUNDATION IS NOT ENCOUNTERED, GO DIRECTLY TO "STEP 4".

b. IF ROCK FOUNDATION IS ENCOUNTERED, EXCAVATE TRENCH DEPTH USING FORMULA GIVEN. THIS DEPTH SHALL BE A MIN. OF 6" AND SHALL NOT EXCEED 24".

c. BACKFILL WITH COMPACTED BEDDING MATERIAL IN LAYERS OF 6" OR LESS LEAVING Bc/3 UNCOMPACTED IN THE FINAL LAYER.

STEP 4

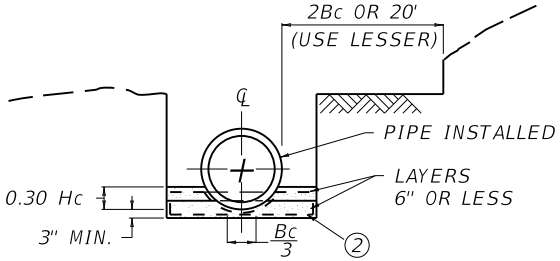

a. UNCOMPACTED 4" BEDDING IN SUBTRENCH. FOR TYPE 1 INSTALLATION COMPACT BEDDING IN LAYERS 6" OR LESS TO AN ELEVATION 0.30 Hc.
LEAVE CENTER THIRD OF OUTSIDE PIPE DIA. (Bc/3) BEDDING UNCOMPACTED.

b. EXCAVATE A GROOVE IN THE COMPACTED BEDDING TO CONFORM TO THE OUTSIDE OF THE PIPE. AFTER EXCAVATION OF THE GROOVE, A MINIMUM 3" OF BEDDING SHOULD REMAIN BELOW THE OUTSIDE INVERT OF THE PIPE. THE CRADLE SHALL BE GAGED FOR SHAPE AND SLOPE BY STRIKING OR DRAWING A TEMPLATE THROUGH THE GROOVE IMMEDIATELY BEFORE PLACING EACH SECTION OF PIPE.

c. INSTALL PIPE AT CORRECT ALIGNMENT AND ELEVATION. RECOMPACT ANY LOOSE BEDDING DISTURBED DURING INSTALLATION.

2 WRAP BEDDING MATERIAL IN GEOTEXTILE FABRIC WHEN THE STANDARD SPECIFICATIONS SPECIFIES.

STEP 5

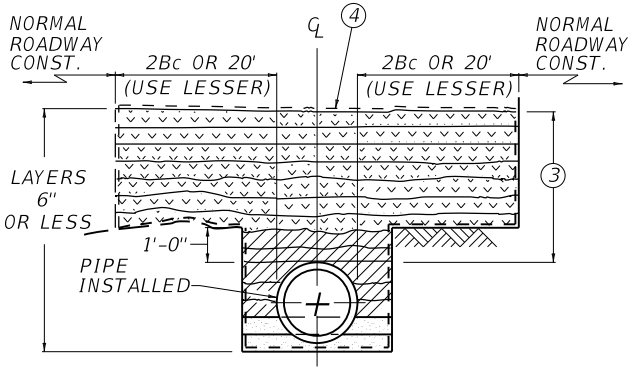

3 4'-0" REQUIRED FOR CONSTRUCTION LOADING.

a. COMPACT REQUIRED BACKFILL MATERIAL IN LAYERS 6" OR LESS TO 1'-0" ABOVE TOP OF PIPE.

b. COMPACT REQUIRED BACKFILL MATERIAL TO ELEV. 3 ABOVE TOP OF PIPE IN LAYERS OF 6" OR LESS.

c. PROCEED WITH NORMAL ROADWAY CONSTRUCTION.

4 WRAP BEDDING MATERIAL IN GEOTEXTILE FABRIC WHEN THE STANDARD SPECIFICATIONS SPECIFIES.

MAX. COVER HEIGHT		
CLASS	TYPE 1	TYPE 4
III	25'	9'
IV	38'	15'
V	57'	23'

2' OF COVER OR LESS	
CLASS	PIPE DIA.
V	12"-15"-18"
IV	21"-24"
III	27" & LARGER

~ NOTES ~

1. 10' MAXIMUM COVER HEIGHT FOR HORIZONTAL ELLIPTICAL CLASS HE III PIPE.
2. COVER HEIGHTS EXCEEDING THOSE SHOWN IN TABLES REQUIRE SPECIAL DESIGNS.
3. FOR TYPE 4 INSTALLATION PLACE EMBANKMENT MATERIAL ACCORDING TO SECTION 701.03.06A OF THE CURRENT SPEC. BOOK.
4. FOR TYPE 1 INSTALLATION, WHEN THE TOP OF PIPE IS NOT WITHIN ONE PIPE DIAMETER OF THE SUBGRADE, INSTALL ACCORDING TO SECTION 701.03.06A OF THE CURRENT SPEC. BOOK.

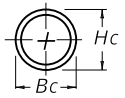

CIRCULAR

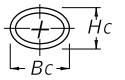

HORIZONTAL ELLIPTICAL

~ PIPE SHAPES ~

FOR TRENCH CONDITIONS

USE WITH CUR. STD. DWG. RDI-026

KENTUCKY
DEPARTMENT OF HIGHWAYS

PIPE BEDDING FOR CULVERTS, ENTRANCE, AND STORM SEWER REINFORCED CONC. PIPE

STANDARD DRAWING NO. RDI-021-01

SUBMITTED William E. Ballard — DIRECTOR DIVISION OF DESIGN — 12-01-15 DATE

APPROVED — STATE HIGHWAY ENGINEER — 12-01-15 DATE

STEP 1

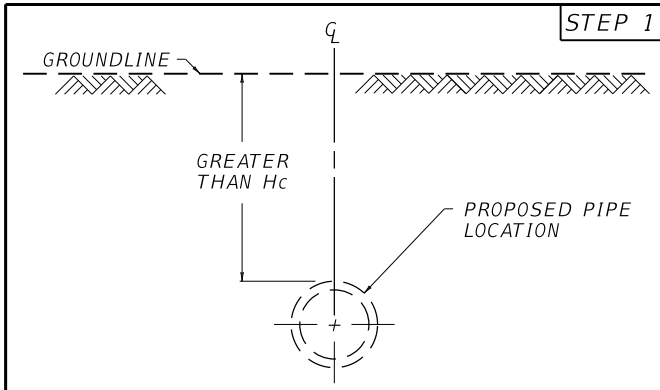

a. TRENCH CONDITION IS WHEN GROUNDLINE ELEVATION IS GREATER THAN Hc ABOVE TOP OF PROPOSED PIPE.

b. GROUNDLINE MAY BE (a) EXISTING OR ORIGINAL (b) EXCAVATED SURFACE OR (c) EMBANKMENT SURFACE.

STEP 2

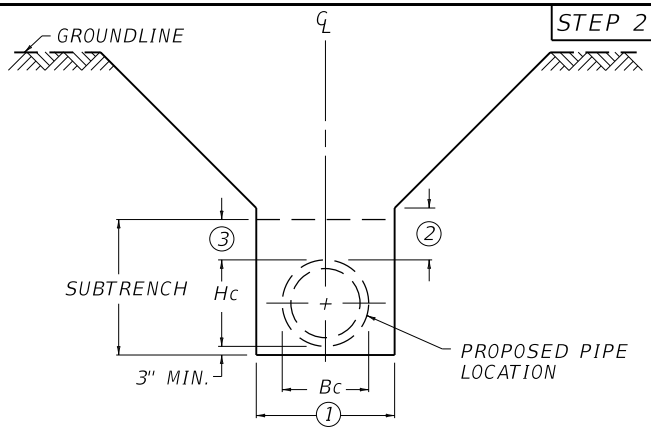

a. EXCAVATE SUBTRENCH TO WIDTH AND DEPTH SHOWN.

b. TRENCH WALLS MAY BE CONSTRUCTED VERTICAL. FOR ILLUSTRATION PURPOSES THE DETAIL DEPICTS A SLOPING WALL TRENCH. WHICHEVER METHOD IS USED, THE TRENCH WALLS SHALL REMAIN SYMMETRICAL ABOUT THE CENTERLINE OF THE PIPE.

(1) Bc + 24" FOR PIPE 36" DIA. OR LESS.
Bc + 48" FOR PIPE GREATER THAN 36" DIA.

(2) SLOPING OF TRENCH WALLS MAY BEGIN AT ANY ELEVATION GREATER THAN 1'-0" ABOVE TOP OF PIPE. THE SUBTRENCH SHALL ALWAYS BE REQUIRED.

(3) 1'-0" MINIMUM TO Hc MAXIMUM.

ROCK FOUNDATION DETAILS — STEP 3

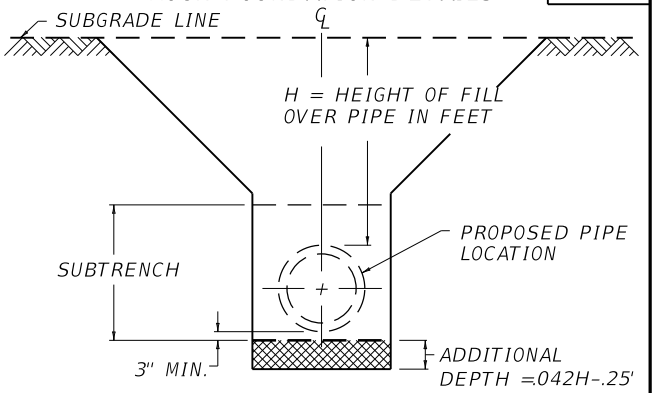

a. IF ROCK FOUNDATION IS NOT ENCOUNTERED, GO DIRECTLY TO "STEP 4".

b. IF ROCK FOUNDATION IS ENCOUNTERED, EXCAVATE TRENCH ADDITIONAL DEPTH USING FORMULA GIVEN. THIS ADDITIONAL DEPTH SHALL BE A MIN. OF 4" AND SHALL NOT EXCEED 24"

c. BACKFILL ADDITIONAL EXCAVATION AREA WITH COMPACTED BEDDING MATERIAL IN LAYERS 6" OR LESS.

STEP 4

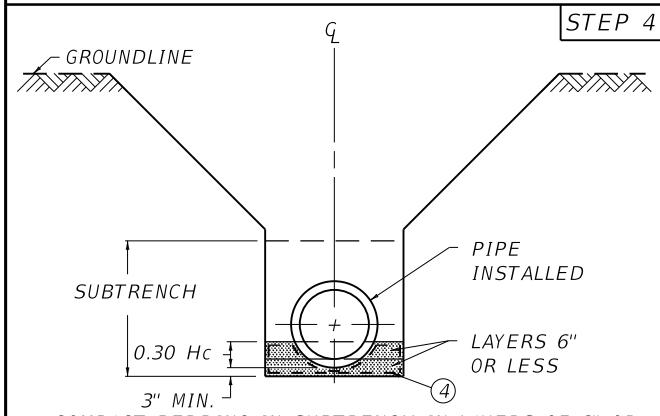

a. COMPACT BEDDING IN SUBTRENCH IN LAYERS OF 6" OR LESS TO WIDTH AND ELEVATION SHOWN.

b. EXCAVATE A GROOVE IN THE COMPACTED BEDDING TO CONFORM TO THE OUTSIDE OF THE PIPE. AFTER EXCAVATION OF THE GROOVE, APPROXIMATELY 3" OF BEDDING SHOULD REMAIN BELOW THE OUTSIDE INVERT OF THE PIPE. THE CRADLE SHALL BE GAGED FOR SHAPE AND SLOPE BY STRIKING OR DRAWING A TEMPLATE THROUGH THE GROOVE IMMEDIATELY BEFORE PLACING EACH SECTION OF PIPE.

c. INSTALL PIPE AT CORRECT ALIGNMENT AND ELEVATION. RECOMPACT ANY LOOSE BEDDING DISTURBED DURING INSTALLATION.

(4) WRAP BEDDING MATERIAL IN GEOTEXTILE FABRIC WHEN THE STANDARD SPECIFICATIONS SPECIFIES.

STEP 5

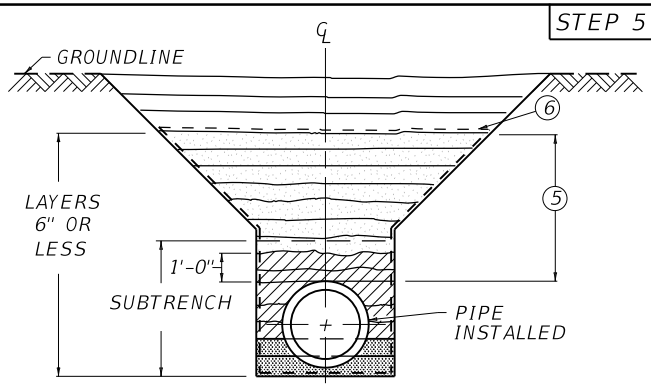

(5) 4'-0" REQUIRED FOR CONSTRUCTION LOADING IF COVER HEIGHT PERMITS.

a. COMPACT REQUIRED BACKFILL MATERIAL IN LAYERS OF 6" OR LESS TO 1'-0" ABOVE TOP OF PIPE.

b. IN A UNIFORM SYMMETRICAL MANNER COMPACT REQUIRED BACKFILL MATERIAL TO ELEVATION (5) ABOVE TOP OF PIPE IN LAYERS OF 6" OR LESS.

c. PROCEED WITH TRENCH BACKFILL IN A SYMMETRICAL MANNER IN LAYERS OF 1'-0" OR LESS TO THE ORIGINAL GROUND AS DEFINED IN STEP 1.

(6) WRAP BEDDING MATERIAL IN GEOTEXTILE FABRIC WHEN THE STANDARD SPECIFICATIONS SPECIFIES.

~ PIPE SHAPES ~

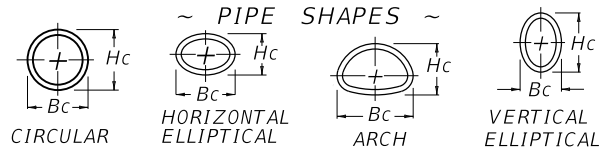

~ NOTE ~

1. FOR CLASSES AND GAGES OF PIPE SEE CUR. STD. DWGS. RDI-001 THROUGH RDI-008 AND RDI-011 AND RDI-012.

USE WITH CUR. STD. DWGS.
RDI-001 RDI-008 RDI-011
RDI-012 RDI-020

KENTUCKY
DEPARTMENT OF HIGHWAYS

PIPE BEDDING
TRENCH
CONDITION

STANDARD DRAWING NO. RDI-025-06

SUBMITTED _____ DIRECTOR DIVISION OF DESIGN — 02-26-20 DATE

APPROVED _____ STATE HIGHWAY ENGINEER — 02-26-20 DATE

STEP 1

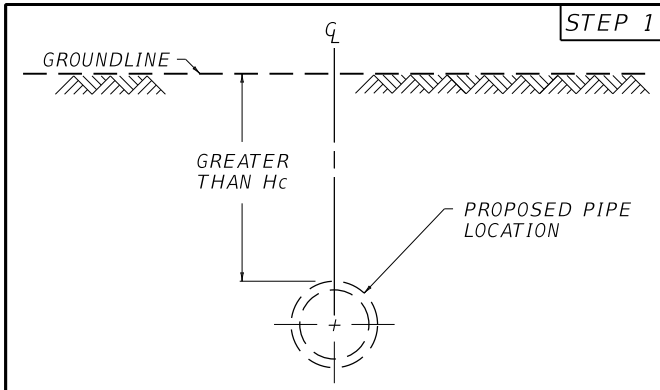

a. TRENCH CONDITION IS WHEN GROUNDLINE ELEVATION IS GREATER THAN Hc ABOVE TOP OF PROPOSED PIPE.

b. GROUNDLINE MAY BE (a) EXISTING OR ORIGINAL (b) EXCAVATED SURFACE OR (c) EMBANKMENT SURFACE.

STEP 2

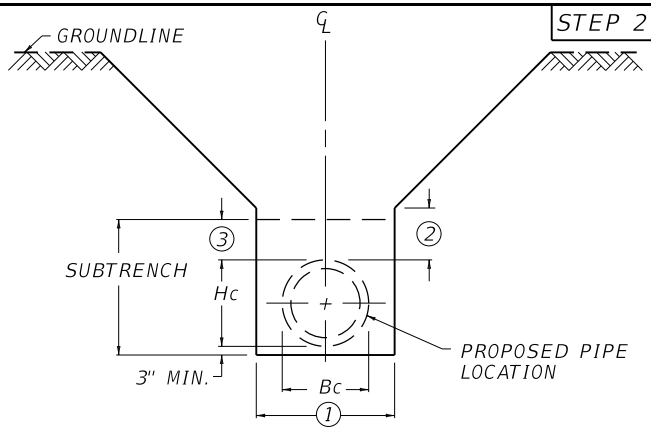

a. EXCAVATE SUBTRENCH TO WIDTH AND DEPTH SHOWN.

b. TRENCH WALLS MAY BE CONSTRUCTED VERTICAL. FOR ILLUSTRATION PURPOSES THE DETAIL DEPICTS A SLOPING WALL TRENCH. WHICHEVER METHOD IS USED, THE TRENCH WALLS SHALL REMAIN SYMMETRICAL ABOUT THE CENTERLINE OF THE PIPE.

(1) Bc + 24" FOR PIPE 36" DIA. OR LESS.
Bc + 48" FOR PIPE GREATER THAN 36" DIA.

(2) SLOPING OF TRENCH WALLS MAY BEGIN AT ANY ELEVATION GREATER THAN 1'-0" ABOVE TOP OF PIPE. THE SUBTRENCH SHALL ALWAYS BE REQUIRED.

(3) 1'-0" MINIMUM TO Hc MAXIMUM.

STEP 3

ROCK FOUNDATION DETAILS

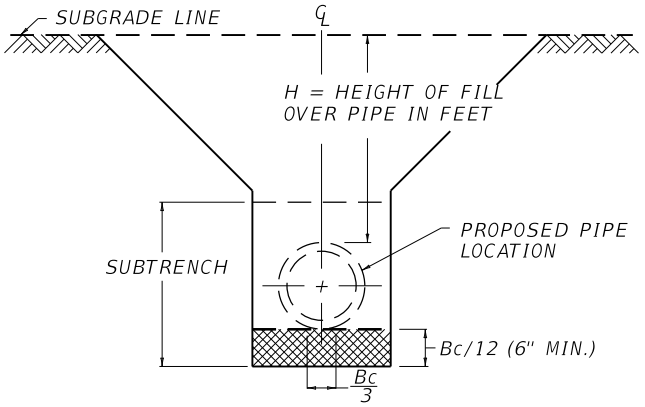

a. IF ROCK FOUNDATION IS NOT ENCOUNTERED, GO DIRECTLY TO "STEP 4".

b. IF ROCK FOUNDATION IS ENCOUNTERED, EXCAVATE TRENCH DEPTH USING FORMULA GIVEN. THIS DEPTH ▨ SHALL BE A MIN. OF 6" AND SHALL NOT EXCEED 24".

c. BACKFILL WITH COMPACTED BEDDING MATERIAL IN LAYERS OF 6" OR LESS LEAVING Bc/3 UNCOMPACTED IN THE FINAL LAYER.

STEP 4

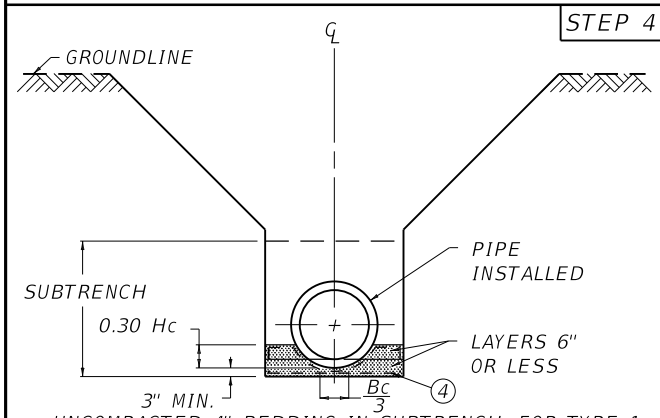

a. UNCOMPACTED 4" BEDDING IN SUBTRENCH. FOR TYPE 1 INSTALLATION COMPACT BEDDING IN LAYERS 6" OR LESS TO AN ELEVATION 0.30 Hc. ▨
LEAVE CENTER THIRD OF OUTSIDE PIPE DIA. (Bc/3) BEDDING UNCOMPACTED.

b. EXCAVATE A GROOVE IN THE BEDDING TO CONFORM TO THE OUTSIDE OF THE PIPE. AFTER EXCAVATION OF THE GROOVE, A MINIMUM 3" OF BEDDING SHOULD REMAIN BELOW THE OUTSIDE INVERT OF THE PIPE. THE CRADLE SHALL BE GAGED FOR SHAPE AND SLOPE BY STRIKING OR DRAWING A TEMPLATE THROUGH THE GROOVE IMMEDIATELY BEFORE PLACING EACH SECTION OF PIPE.

c. INSTALL PIPE AT CORRECT ALIGNMENT AND ELEVATION. RECOMPACT ANY LOOSE BEDDING DISTURBED DURING INSTALLATION.

(4) WRAP BEDDING MATERIAL IN GEOTEXTILE FABRIC WHEN THE STANDARD SPECIFICATIONS SPECIFIES.

STEP 5

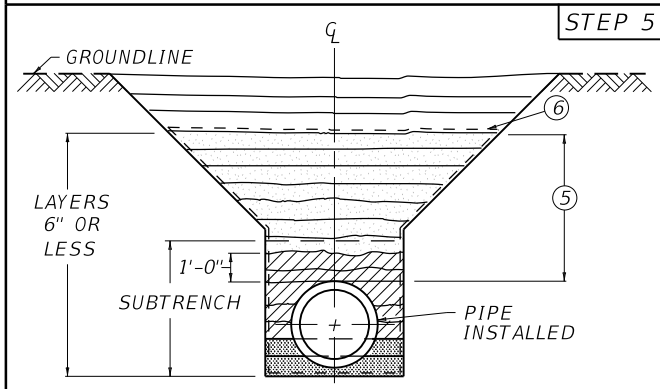

(5) 4'-0" REQUIRED FOR CONSTRUCTION LOADING.

a. COMPACT REQUIRED BACKFILL MATERIAL IN LAYERS OF 6" OR LESS TO 1'-0" ABOVE TOP OF PIPE. ▨

b. IN A UNIFORM SYMMETRICAL MANNER COMPACT REQUIRED BACKFILL MATERIAL TO ELEVATION (5) ABOVE TOP OF PIPE IN LAYERS OF 6" OR LESS. ▭

c. PROCEED WITH TRENCH BACKFILL IN A SYMMETRICAL MANNER IN LAYERS OF 1'-0" OR LESS TO THE ORIGINAL GROUND AS DEFINED IN STEP 1.

(6) WRAP BEDDING MATERIAL IN GEOTEXTILE FABRIC WHEN THE STANDARD SPECIFICATIONS SPECIFIES.

MAX. COVER HEIGHT		
CLASS	TYPE 1	TYPE 4
III	25'	9'
IV	38'	15'
V	57'	23'

2' OF COVER OR LESS	
CLASS	PIPE DIA.
V	12"-15"-18"
IV	21"-24"
III	27" & LARGER

~ NOTES ~

1. 10' MAXIMUM COVER HEIGHT FOR HORIZONTAL ELLIPTICAL CLASS HE III PIPE.
2. COVER HEIGHTS EXCEEDING THOSE SHOWN IN TABLES REQUIRE SPECIAL DESIGNS.
3. FOR TYPE 4 INSTALLATION PLACE EMBANKMENT MATERIAL ACCORDING TO SECTION 701.03.06A OF CURRENT SPEC. BOOK.
4. FOR TYPE 1 INSTALLATION, WHEN THE TOP OF THE PIPE IS NOT WITHIN ONE PIPE DIAMETER OF THE SUBGRADE, INSTALL ACCORDING TO SECTION 701.03.06A OF THE CURRENT SPEC. BOOK.

USE WITH CUR. STD. DWG. RDI-021

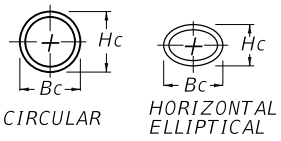

CIRCULAR HORIZONTAL ELLIPTICAL

~ PIPE SHAPES ~

KENTUCKY DEPARTMENT OF HIGHWAYS

PIPE BEDDING
TRENCH CONDITION
REINFORCED CONC. PIPE

STANDARD DRAWING NO. RDI-026-01

SUBMITTED William S. Sahd — DIRECTOR DIVISION OF DESIGN — 12-01-15 DATE

APPROVED — STATE HIGHWAY ENGINEER — 12-01-15 DATE

PIPE MATERIAL	pH RANGE ③					
	(ACID) L (< 5)		M (5 - 9) ④		(BASE) H (> 9)	
	COATING	PAVING	COATING	PAVING	COATING	PAVING
STEEL GALVANIZED	P	I	BP	I	P	I
ALUMINUM-COATED TYPE 2 STEEL	-	-	HB	I	-	-
ALUMINUM ALLOY	B	I	HB	I	B	I
REINFORCED CONCRETE	-	EP	-	-	-	EP
PLASTIC	-	-	-	-	-	-

HB - HALF ASPHALT COATED
B - FULLY ASPHALT COATED
BP - FULLY ASPHALT COATED OR POLYMERIC COATED
P - POLYMERIC COATED (PRECOATED GALVANIZED)
EP - EXTRA PROTECTION
I - PAVED INVERT

~ NOTES ~

1. EXCEPTIONS FOR STORM SEWERS:
   a. ANNULAR CORRUGATED PIPE SHALL BE FULLY LINED.
   b. HELICAL CORRUGATED PIPE > 24" DIA. SHALL BE FULLY LINED.
   c. HELICAL CORRUGATED PIPE < 24" DIA. SHALL NOT REQUIRE COATING, PAVING, OR LINING.
   d. SPIRAL RIB PIPE SHALL NOT REQUIRE COATING, PAVED INVERT, OR LINING.
2. EXCEPTIONS FOR ENTRANCE PIPE:
   a. COATINGS REQUIRED FOR LOW pH LEVELS.
   b. PAVED INVERTS SHALL NOT BE REQUIRED FOR ENTRANCE PIPE.
   c. ENTRANCE PIPE GREATER THAN 30" DIA. SHALL BE CULVERT PIPE.

③ L = LOW pH RANGE (ACID)
M = MEDIUM pH RANGE
H = HIGH pH RANGE (BASE)

④ ALUMINUM COATED TYPE 2 STEEL IS ONLY PERMITTED IN Ph RANGES OF 5 TO 9.

KENTUCKY
DEPARTMENT OF HIGHWAYS

COATINGS, LININGS AND PAVINGS FOR NON-STRUCTURAL PLATE PIPE

STANDARD DRAWING NO. RDI-035-02

SUBMITTED _____ DIRECTOR DIVISION OF DESIGN — 12-01-15 DATE

APPROVED _____ STATE HIGHWAY ENGINEER — 12-01-15 DATE

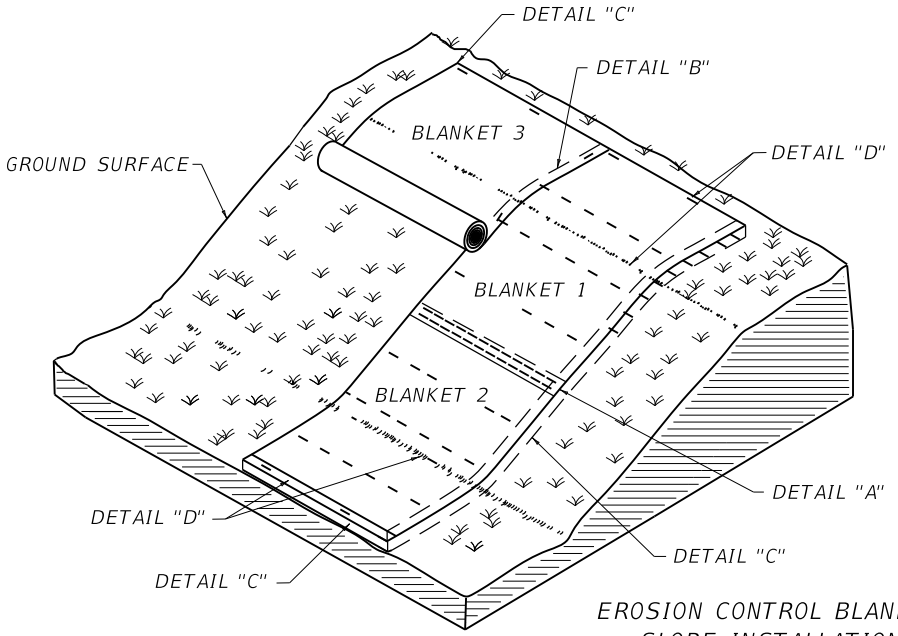

EROSION CONTROL BLANKET
SLOPE INSTALLATION

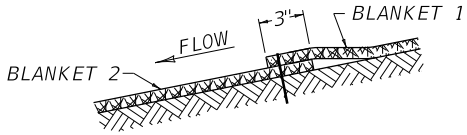

PROFILE VIEW
DETAIL "A"

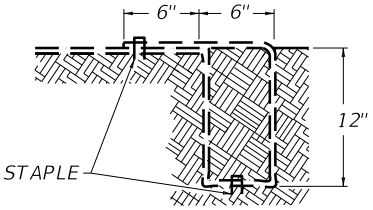

PROFILE VIEW
DETAIL "C"

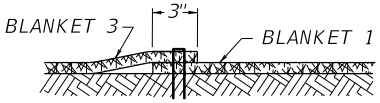

CROSS SECTION VIEW
DETAIL "B"

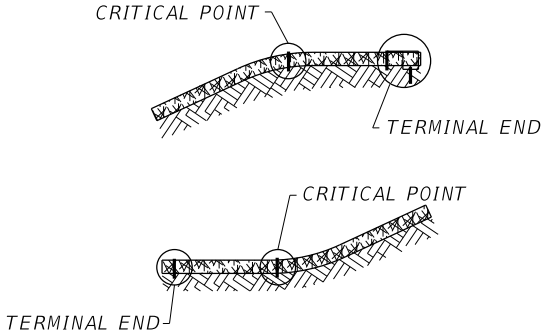

CRITICAL POINTS
DETAIL "D"

~ NOTES ~

BID ITEMS AND UNIT TO BID	
EROSION CONTROL BLANKET	SQYD
SEEDING AND PROTECTION	SQYD

1. CONSTRUCT A 6" X 12" ANCHOR TRENCH AT THE BEGINNING OF THE SLOPE. LINE THE ANCHOR TRENCH WITH EROSION CONTROL BLANKET (ECB) LEAVING 12" EXTENDING PAST THE ANCHOR TRENCH. FASTEN THE ECB MATERIAL INTO THE ANCHOR TRENCH ON 12" CENTERS BACKFILL THE TRENCH WITH TOPSOIL AND COMPACT. COVER THE AREA WITH THE REMAINING 12" OF THE ECB'S TERMINAL END LEAVING 6" TO OVERLAP THE EROSION CONTROL BLANKET. SECURE THE 6" OVERLAP WITH STAPLES ON 12" CENTERS.
2. UNROLL THE ECB PARALLEL TO THE PRIMARY DIRECTION OF WATER FLOW AND PLACE IN DIRECT CONTACT WITH THE SOIL SURFACE. DO NOT STRETCH OR ALLOW THE MATERIAL TO BRIDGE OVER SURFACE INCONSISTENCIES.
3. SECURELY FASTEN THE ECB TO THE SOIL BY INSTALLING STAPLES AT A MINIMUM RATE OF 1.5 PER SQ. YD. ANCHORS SHALL BE SELECTED SO THAT THEY HAVE SUFFICIENT GROUND PENETRATION TO RESIST PULLOUT. INCREASE ANCHORING FREQUENCY FOR SITE CONDITIONS (LOOSE, SANDY, OR WET SOILS) AS DIRECTED BY THE ENGINEER AND MANUFACTURER'S REPRESENTATIVE.
4. OVERLAP EDGES OF PARALLEL AND PERPENDICULAR BLANKETS ALONG THE SLOPE A MINIMUM OF 3" AND SECURE WITH STAPLES AT A MAXIMUM SPACING OF 1'.
5. CONSTRUCT A 6"X 12" ANCHOR TRENCH AT THE TOE OF THE SLOPE FOLLOWING SIMILAR PROCEDURE DENOTED FOR THE TOP OF THE SLOPE ANCHOR TRENCH.
6. ENSURE THAT THE ECB IS IN DIRECT CONTACT WITH THE SOIL SURFACE WITH NO PROJECTIONS OR PROTRUSIONS.
7. APPLY SEEDING AND PROTECTION ACCORDING TO SECTION 212.03.03 USING SEED MIX TYPE I. DIRECTLY AFTER APPLYING SEEDING AND TREATMENTS IN 212.03.03, BUT BEFORE APPLYING MULCHING OR HYDROMULCHING: INFILL THE VOID SPACES IN THE ECB WITH ½" OF TOPSOIL. TOPSOIL IS THE SOIL PROFILE DEFINED TECHNICALLY AS "A" HORIZON BY THE SOIL SCIENCE SOCIETY OF AMERICA. USE LOOSE, FRIABLE TOPSOIL THAT IS FREE OF STONES 1" OR GREATER IN OVERALL DIMENSIONS, ADMIXTURE OF SUBSOIL, REFUSE, STUMPS, ROOTS, BRUSH, WEEDS AND OTHER MATERIALS THAT PREVENT THE FORMATION OF A SUITABLE SEED BED. DO NOT USE TOPSOIL FROM SITES HAVING JOHNSON GRASS, CANADA THISTLE, QUACK GRASS, NODDING THISTLE OR EXCESSIVE AMOUNTS OF WEEDS OR THEIR RHIZOMES.

KENTUCKY
DEPARTMENT OF HIGHWAYS

EROSION CONTROL
BLANKET SLOPE
INSTALLATION

STANDARD DRAWING NO. RDI-040-01

SUBMITTED William E. Ginkel — DIRECTOR DIVISION OF DESIGN — 12-01-15 DATE

APPROVED — STATE HIGHWAY ENGINEER — 12-01-15 DATE

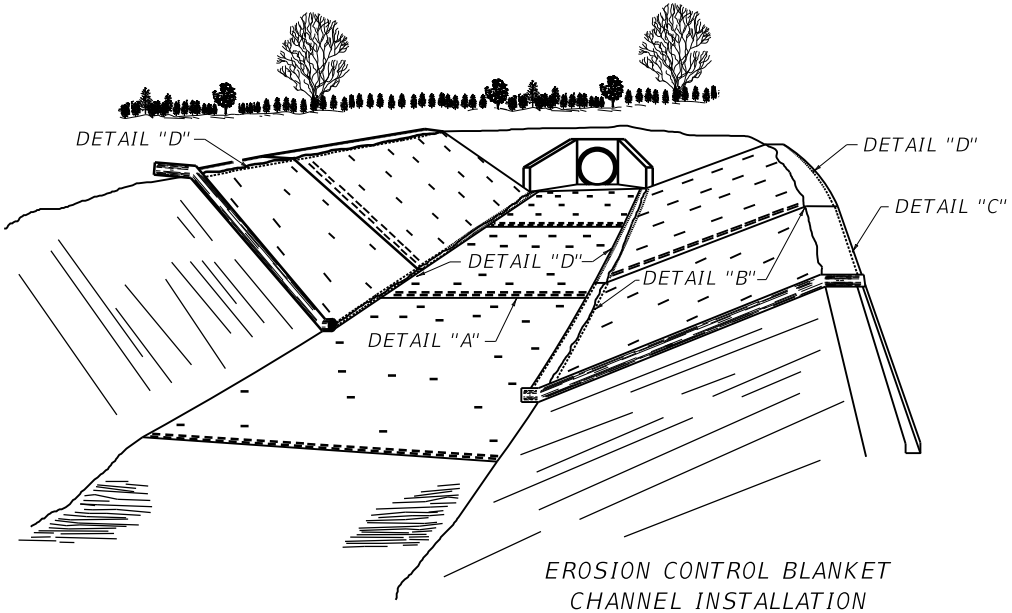

EROSION CONTROL BLANKET
CHANNEL INSTALLATION

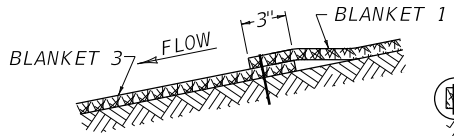

PROFILE VIEW
DETAIL "A"

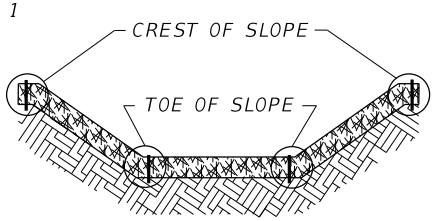

CRITICAL POINTS
DETAIL "D"

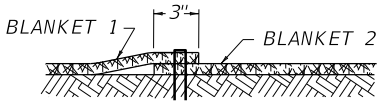

CROSS SECTION VIEW
DETAIL "B"

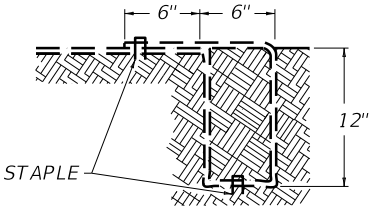

PROFILE VIEW
DETAIL "C"

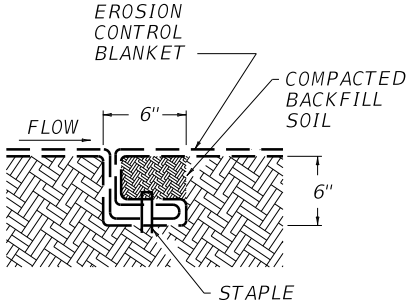

CHANNEL CHECK SLOT ③

~ NOTES ~

BID ITEMS AND UNIT TO BID	
EROSION CONTROL BLANKET	SQYD
SEEDING AND PROTECTION	SQYD

1. CONSTRUCT A 6" X 12" ANCHOR TRENCH AT THE BEGINNING OF THE CHANNEL. LINE THE ANCHOR TRENCH WITH EROSION CONTROL BLANKET (ECB) LEAVING 12" EXTENDING PAST THE ANCHOR TRENCH. FASTEN THE ECB MATERIAL INTO THE ANCHOR TRENCH ON 12" CENTERS BACKFILL THE TRENCH WITH TOPSOIL AND COMPACT. COVER THE AREA WITH THE REMAINING 12" OF THE ECB'S TERMINAL END LEAVING 6" TO OVERLAP THE EROSION CONTROL BLANKET. SECURE THE 6" OVERLAP WITH STAPLES ON 12" CENTERS.
2. UNROLL THE ECB PARALLEL TO THE PRIMARY DIRECTION OF WATER FLOW AND PLACE IN DIRECT CONTACT WITH THE SOIL SURFACE. DO NOT STRETCH OR ALLOW THE MATERIAL TO BRIDGE OVER SURFACE INCONSISTENCIES.

③ EXCAVATE 6" X 6" CHECK SLOTS EVERY 25' ALONG THE LENGTH OF THE CHANNEL. LINE THE SIDE AND BOTTOM OF THE SLOT WITH THE ECB AND THEN PULL BACK OVER. FASTEN WITH STAPLES ON 12" CENTERS. FILL THE CHECK SLOT WITH TOPSOIL, COMPACT, AND CONTINUE UNROLLING ECB DOWN THE CHANNEL.

4. CONTINUE UNROLLING THE ECB DOWNSTREAM OVER THE COMPACTED SLOT TO THE NEXT CHECK SLOT OR TERMINAL ANCHOR TRENCH. IF MORE THAN ONE SECTION OF ECB IS USED OVERLAP UPSTREAM ECB OVER TOP OF THE DOWNSTREAM ECB 3" AND SECURE STAPLES ON 12" CENTERS.
5. SECURE ECB WHILE UNROLLING ON SIDESLOPES AND CHANNEL BOTTOMS WITH STAPLES AT A FREQUENCY THE TABLE INDICATES. USE STAPLES HAVING SUFFICIENT GROUND PENETRATION TO RESIST PULLOUT. INCREASE ANCHORING FREQUENCY AS DIRECTED BY THE ENGINEER AND MANUFACTURER'S REPRESENTATIVE.
6. APPLY SEEDING AND PROTECTION ACCORDING TO SECTION 212.03.03 USING SEED MIX TYPE I. DIRECTLY AFTER APPLYING SEEDING AND TREATMENTS IN 212.03.03, BUT BEFORE APPLYING MULCHING OR HYDROMULCHING: INFILL THE VOID SPACES IN THE ECB WITH ½" OF TOPSOIL. TOPSOIL IS THE SOIL PROFILE DEFINED TECHNICALLY AS "A" HORIZON BY THE SOIL SCIENCE SOCIETY OF AMERICA. USE LOOSE, FRIABLE TOPSOIL THAT IS FREE OF STONES 1" OR GREATER IN OVERALL DIMENSIONS, ADMIXTURE OF SUBSOIL, REFUSE, STUMPS, ROOTS, BRUSH, WEEDS AND OTHER MATERIALS THAT PREVENT THE FORMATION OF A SUITABLE SEED BED. DO NOT USE TOPSOIL FROM SITES HAVING JOHNSON GRASS, CANADA THISTLE, QUACK GRASS, NODDING THISTLE OR EXCESSIVE AMOUNTS OF WEEDS OR THEIR RHIZOMES.

SLOPE GRADE	ANCHORING FREQUENCY
UP TO 2H:1V	1.5 ANCHORS/SQYD
2H:1V TO 1H:1V	2.0 ANCHORS/SQYD
STEEPER THAN 1H:1V AND CHANNEL BOTTOMS	3.0 ANCHORS/SQYD

KENTUCKY
DEPARTMENT OF HIGHWAYS

EROSION CONTROL
BLANKET CHANNEL
INSTALLATION

STANDARD DRAWING NO. RDI-041-01

SUBMITTED William E. Ginkel — DIRECTOR DIVISION OF DESIGN — 12-01-15 DATE

APPROVED — STATE HIGHWAY ENGINEER — 12-01-15 DATE

~ NOTES ~

1. JUNCTION BOX IS PERMITTED, HOWEVER, IT SHALL BE INCIDENTAL TO THE WORK IF USED (SEE CUR. STD. DWG. RDX-001).

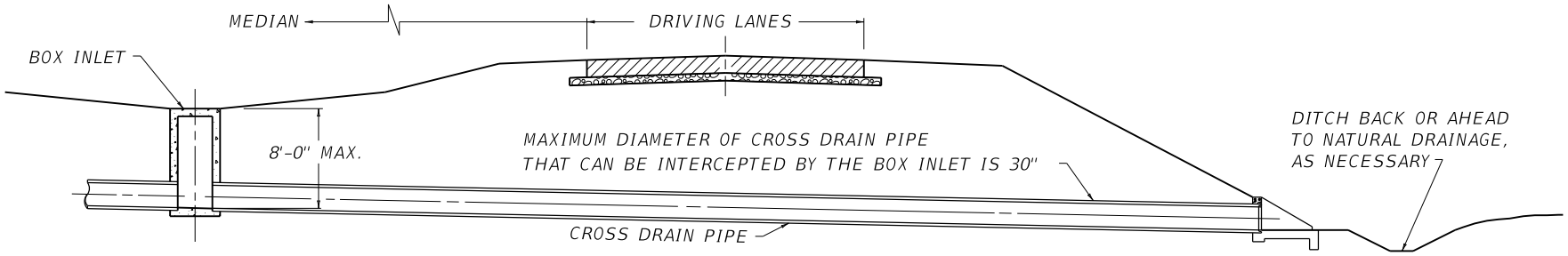

TYPICAL WHEN CROSS DRAINAGE PIPE IS 30" OR LESS
IN DIAMETER AND FILL IS 8'-0" OR LESS IN DEPTH

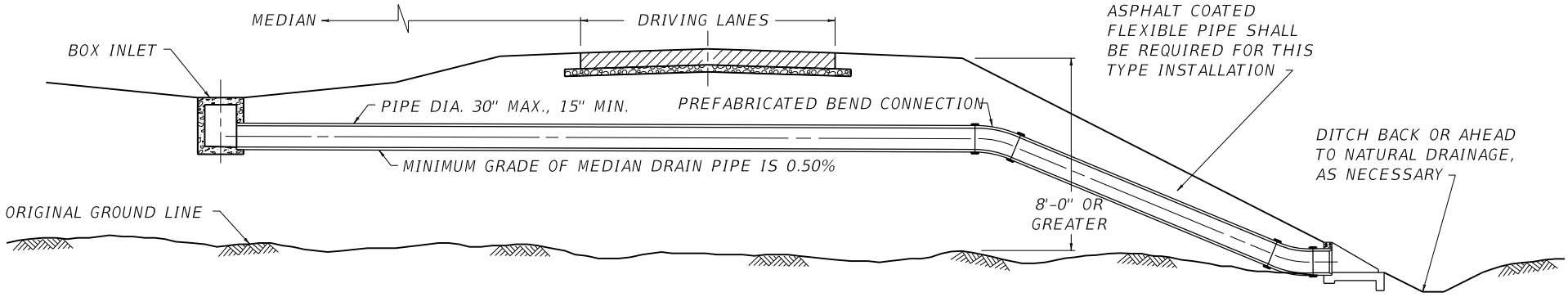

TYPICAL WHEN CROSS DRAINAGE PIPE IS 30" OR LESS
IN DIAMETER AND FILL IS MORE THAN 8'-0" IN DEPTH

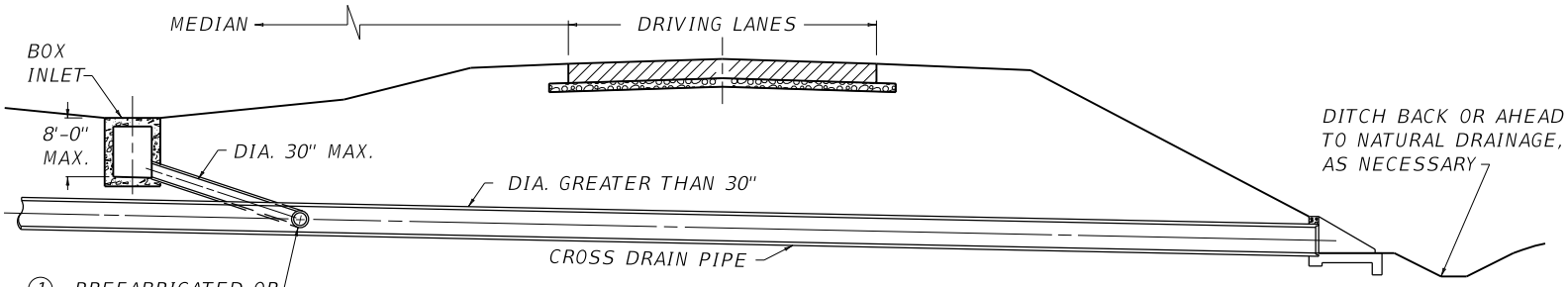

TYPICAL WHEN CROSS DRAINAGE PIPE IS
GREATER THAN 30" IN DIAMETER

USE WITH CUR. STD. DWG.
RDX-001

KENTUCKY
DEPARTMENT OF HIGHWAYS

TYPICAL MEDIAN
DRAIN INSTALLATIONS

STANDARD DRAWING NO. RDI-045-02

SUBMITTED William E. Ginkel — DIRECTOR, DIVISION OF DESIGN — 12-01-15 DATE

APPROVED — STATE HIGHWAY ENGINEER — 12-01-15 DATE

BOX SIZES	① TABLE 1 MAXIMUM FILL HEIGHT (FEET)											
	2	3	4	5	6	8	10	12	14	16	18	20
3 X 2												
3 X 3												
4 X 2												
4 X 3												
4 X 4												
5 X 3												
5 X 4												
5 X 5												
6 X 3												
6 X 4												
6 X 5												
6 X 6												
7 X 4												
7 X 5												
7 X 6												
7 X 7												
8 X 4												
8 X 5												
8 X 6												
8 X 7												
8 X 8												
9 X 5												
9 X 6												
9 X 7												
9 X 8												
9 X 9												
10 X 5												
10 X 6												
10 X 7												
10 X 8												
10 X 9												
10 X 10												
11 X 4												
11 X 6												
11 X 8												
11 X 10												
11 X 11												
12 X 4												
12 X 6												
12 X 8												
12 X 10												
12 X 12												

BOX SIZES	② TABLE 2 MAXIMUM FILL HEIGHT (FEET)											
	2	3	4	5	6	8	10	12	14	16	18	20
3 X 2												
3 X 3												
4 X 2												
4 X 3												
4 X 4												
5 X 3												
5 X 4												
5 X 5												
6 X 3												
6 X 4												
6 X 5												
6 X 6												
7 X 4												
7 X 5												
7 X 6												
7 X 7												
8 X 4												
8 X 5												
8 X 6												
8 X 7												
8 X 8												
9 X 5												
9 X 6												
9 X 7												
9 X 8												
9 X 9												
10 X 5												
10 X 6												
10 X 7												
10 X 8												
10 X 9												
10 X 10												
11 X 4												
11 X 6												
11 X 8												
11 X 10												
11 X 11												
12 X 4												
12 X 6												
12 X 8												
12 X 10												
12 X 12												

BOX SIZES	③ TABLE 3 MAXIMUM FILL HEIGHT (FEET)												
	0	2	3	4	5	6	8	10	12	14	16	18	20	22
3 X 2														
3 X 3														
4 X 2														
4 X 3														
4 X 4														
5 X 3														
5 X 4														
5 X 5														
6 X 3														
6 X 4														
6 X 5														
6 X 6														
7 X 4														
7 X 5														
7 X 6														
7 X 7														
8 X 4														
8 X 5														
8 X 6														
8 X 7														
8 X 8														
9 X 5														
9 X 6														
9 X 7														
9 X 8														
9 X 9														
10 X 5														
10 X 6														
10 X 7														
10 X 8														
10 X 9														
10 X 10														
11 X 4														
11 X 6														
11 X 8														
11 X 10														
11 X 11														
12 X 4														
12 X 6														
12 X 8														
12 X 10														
12 X 12														

BOX SIZES	TABLE 1 ④ LESS THAN 2' FILL	TABLE 2 ⑤ LESS THAN 2' FILL
3 X 2		
3 X 3		
4 X 2		
4 X 3		
4 X 4		
5 X 3		
5 X 4		
5 X 5		
6 X 3		
6 X 4		
6 X 5		
6 X 6		
7 X 4		
7 X 5		
7 X 6		
7 X 7		
8 X 4		
8 X 5		
8 X 6		
8 X 7		
8 X 8		
9 X 5		
9 X 6		
9 X 7		
9 X 8		
9 X 9		
10 X 5		
10 X 6		
10 X 7		
10 X 8		
10 X 9		
10 X 10		
11 X 4		
11 X 6		
11 X 8		
11 X 10		
11 X 11		
12 X 4		
12 X 6		
12 X 8		
12 X 10		
12 X 12		

~ NOTES ~

① HS 25 LIVE LOAD + EARTH DEAD LOAD, AASHTO M259 OR ASTM C789.
② INTERSTATE LIVE LOAD + EARTH DEAD LOAD, AASHTO M259 OR ASTM C789.
③ EARTH DEAD LOAD, AASHTO M259 OR ASTM C789.
④ HS 20 LOADING, AASHTO M273 OR ASTM C850.
⑤ INTERSTATE LOADING, AASHTO M273 OR ASTM C850.

KENTUCKY
DEPARTMENT OF HIGHWAYS

FILL HEIGHTS FOR PRECAST REINF. CONC. BOX CULVERTS

STANDARD DRAWING NO. RDI-100-05

SUBMITTED _____ DIRECTOR DIVISION OF DESIGN — DATE 12-01-15

APPROVED _____ STATE HIGHWAY ENGINEER — DATE 12-01-15

POSITIVE PROJECTION

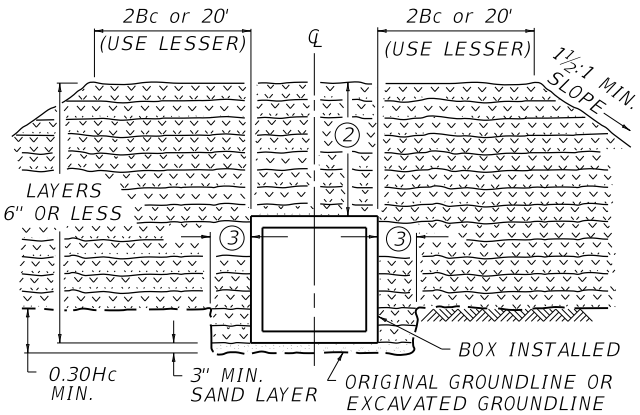

a. IF ROCK FOUNDATION IS ENCOUNTERED, GO TO PARTS b. AND c. OF STEP 3 ZERO PROJECTION AND THEN PROCEED WITH PARTS b. AND c. OF THIS STEP.

b. UNIFORMLY COMPACT SAND IN TRENCH WITH APPROXIMATELY 3" OF SAND BELOW BOTTOM OF BOX. LEVEL COMPACTED SAND WITH A TEMPLATE TO INSURE UNIFORM SUPPORT THROUGHOUT ENTIRE WIDTH AND LENGTH.

c. COMPACT SELECTED FINE SOIL TO ELEVATION ② IN LAYERS 6" OR LESS TO MEET SAME DENSITY REQUIREMENTS SPECIFIED FOR ADJACENT EMBANKMENT.

② 48" REQUIRED, IF FILL HEIGHT PERMITS.

③ 0.3 Bc OR 1'-0" (USE MAX.)

STEP 1 ZERO PROJECTION

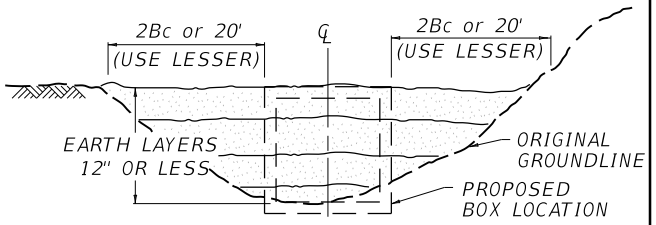

a. IF THE ORIGINAL GROUNDLINE IS AT OR ABOVE THE TOP OF THE PROPOSED BOX FOR WIDTH OF 2Bc OR 20' (WHICH-EVER IS LESS) ON EACH SIDE OF THE BOX, GO DIRECTLY TO STEP 2.

b. IF ORIGINAL GROUNDLINE IS BELOW THE TOP OF PROPOSED BOX, COMPACT EMBANKMENT IN LAYERS 12" OR LESS TO ELEVATION AND WIDTH SHOWN. MEET DENSITY REQUIREMENTS FOR ADJACENT EMBANKMENT.

STEP 2 ZERO PROJECTION

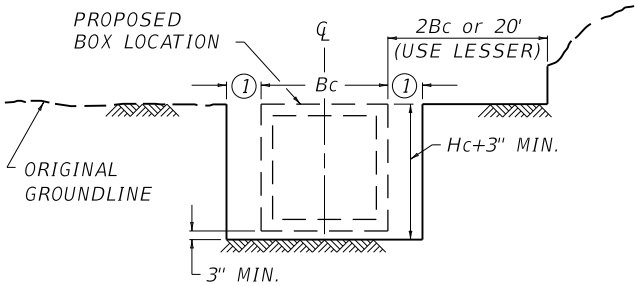

a. EXCAVATE TO TOP OF PROPOSED BOX A WIDTH OF 2Bc OR 20' (USE LESSER) ON EACH SIDE OF BOX.

b. EXCAVATE TRENCH TO WIDTH AND DEPTH SHOWN.

① AT LEAST 12", BUT NOT MORE THAN 15".

STEP 4 ZERO PROJECTION

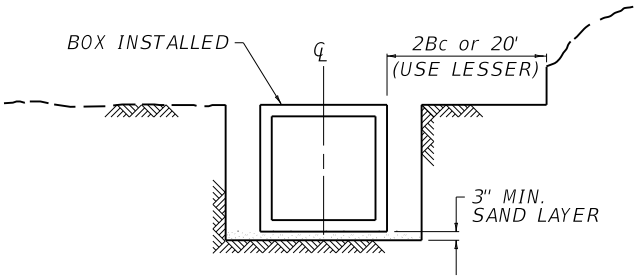

a. UNIFORMLY COMPACT SAND IN TRENCH WITH APPROXIMATELY 3" OF SAND BELOW BOTTOM OF BOX. LEVEL COMPACTED SAND WITH A TEMPLATE TO INSURE UNIFORM SUPPORT THROUGHOUT ENTIRE WIDTH AND LENGTH.

b. INSTALL BOX AT CORRECT ALIGNMENT AND ELEVATION. RECOMPACT ANY LOOSE SAND DISTURBED DURING INSTALLATION.

STEP 5 ZERO PROJECTION

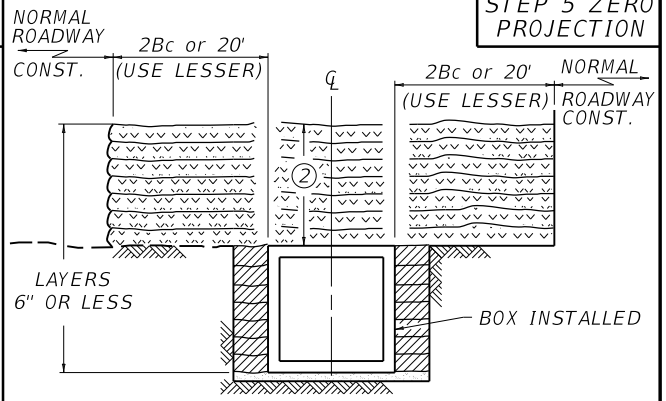

a. COMPACT SELECTED FINE SOIL, NATURAL SAND, OR NO. 10 COARSE AGGREGATE IN LAYERS OF 6" OR LESS TO TOP OF THE BOX. THEN COMPACT SELECTED FINE SOIL TO ELEVATION ② ABOVE TOP OF BOX. MEET DENSITY REQUIREMENTS FOR ADJACENT EMBANKMENT.

b. PROCEED WITH NORMAL ROADWAY CONSTRUCTION.

② 48" REQUIRED, IF FILL HEIGHT PERMITS.

ROCK FOUNDATION DETAILS

STEP 3 ZERO PROJECTION

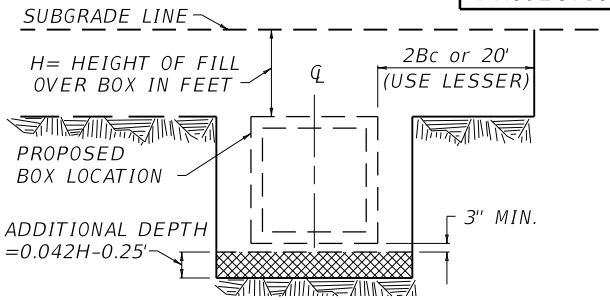

a. IF ROCK FOUNDATION IS NOT ENCOUNTERED, GO DIRECTLY TO STEP 4.

b. IF ROCK FOUNDATION IS ENCOUNTERED, EXCAVATE ADDITIONAL TRENCH DEPTH USING FORMULA GIVEN. THIS ADDITIONAL DEPTH SHALL ALWAYS BE AT LEAST 0.75' AND WILL NOT BE REQUIRED TO BE MORE THAN 0.75HC-0.25', REGARDLESS OF ABOVE FORMULA RESULT.

c. BACKFILL ADDITIONAL EXCAVATED AREA WITH EARTH CUSHION OF FIRMLY COMPACTED FINE SOILS IN LAYERS OF 6" OR LESS.

~ NOTE ~

THE CONTRACTOR HAS THE OPTION TO, EITHER BED AND BACKFILL THE PRECAST BOX IN POSITIVE PROJECTION AS DESCRIBED ABOVE, OR MAY BED AND BACKFILL TO ZERO PROJECTION AS DETAILED AND DESCRIBED IN STEPS 1 THRU 5. IN EITHER CASE PARTS b. AND c. OF STEP 3 ZERO PROJECTION MUST BE PERFORMED IN THE EVENT A ROCK FOUNDATION IS ENCOUNTERED.

BOX SHAPES

KENTUCKY
DEPARTMENT OF HIGHWAYS

BEDDING FOR PRECAST BOX CULVERTS, SEWERS, STORM DRAINS, AND THEIR COMBINATIONS

STANDARD DRAWING NO. RDI-120-04

SUBMITTED William E. Ginkel — DIRECTOR DIVISION OF DESIGN — 12-01-15 DATE

APPROVED — STATE HIGHWAY ENGINEER — 12-01-15 DATE

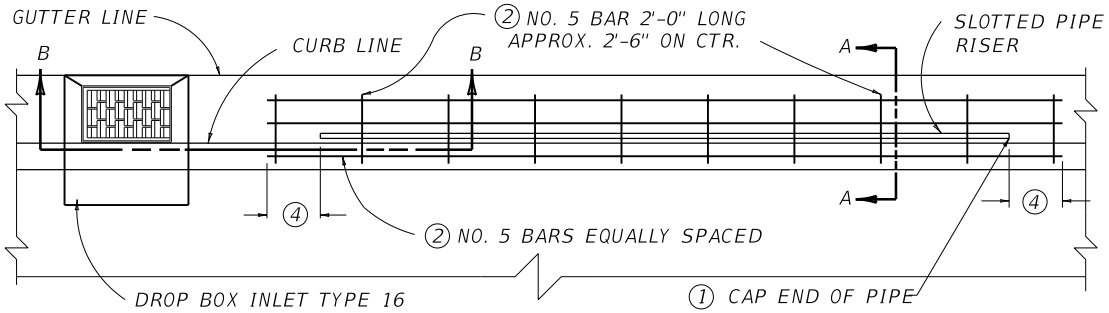

PLAN VIEW

~ NOTES ~

BID ITEMS AND UNIT TO BID

SLOTTED DRAIN PIPE	LF
DROP BOX INLET TYPE 10	EACH
VALLEY GUTTER	LF

① THE CAP SHALL BE A STANDARD MANUFACTURED ITEM FURNISHED BY THE PIPE SUPPLIER.

② ALL REINFORCING STEEL SHALL BE INCLUDED IN THE CONTRACT UNIT PRICE PER LINEAR FOOT OF SLOTTED DRAIN PIPE. ALL REINFORCING STEEL SHALL BE EPOXY COATED IN ACCORDANCE WITH THE DEPARTMENTS STANDARD SPECIFICATIONS.

③ USE DROP BOX INLET TYPE 10 WITH VALLEY GUTTER (LIMITED TO 24" METAL PIPE SIZE).

④ EXTEND LONGITUDINAL BAR APPROXIMATELY 1'-6" PAST END OF SLOTTED DRAIN PIPE.

5. MINIMUM THROAT DEPTH FOR SLOTTED DRAIN PIPE SHALL BE 10".

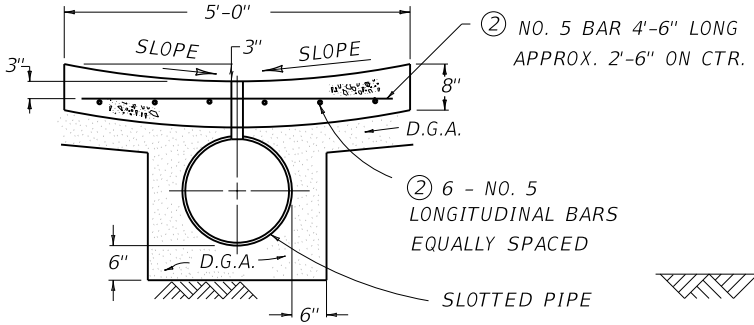

VALLEY GUTTER SECTION ③

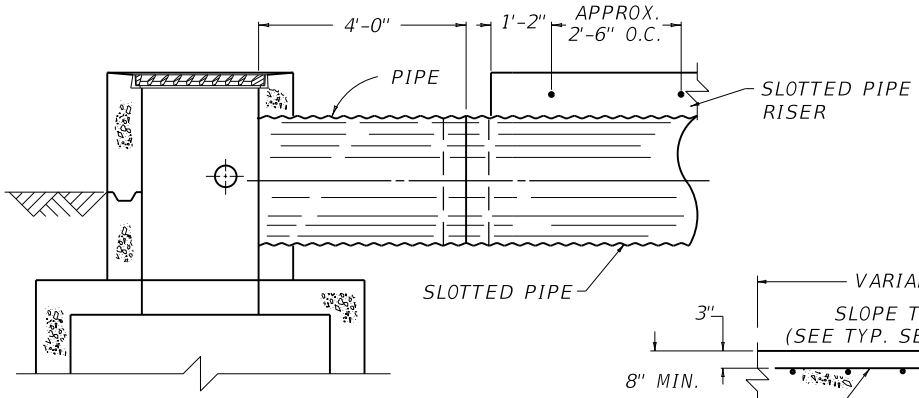

SECTION B-B

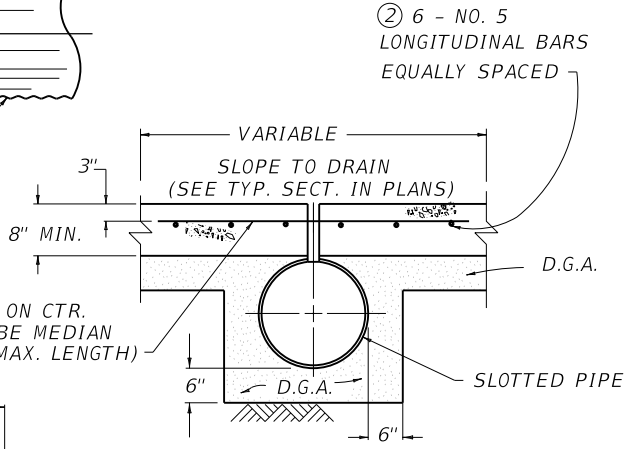

FLUSH MEDIAN SECTION

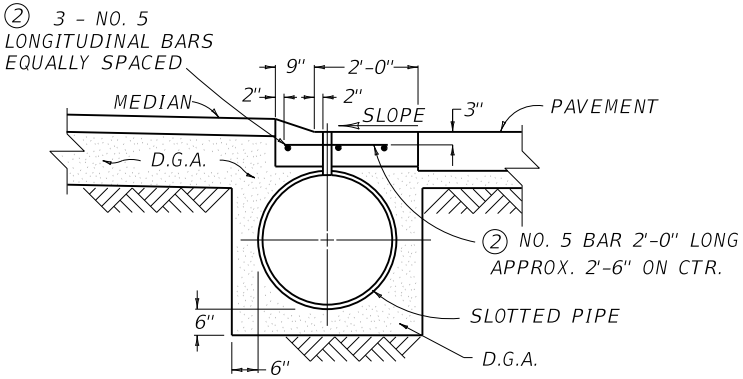

SECTION A-A
LIP CURB SECTION

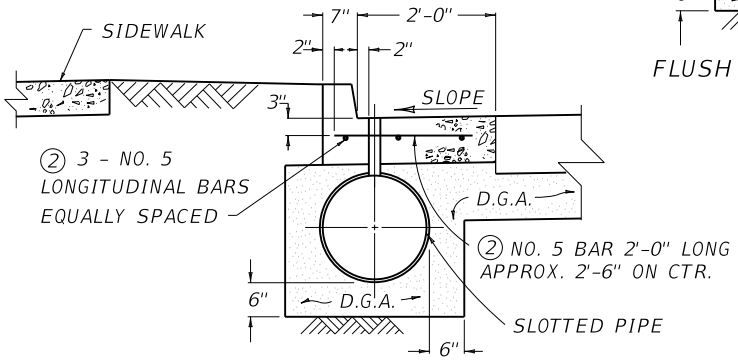

STD. CURB SECTION

USE WITH CUR. STD. DWGS.:
RDB-014 RDB-030 RDB-031
RDB-032 RDB-033 RDB-034
RDB-035

KENTUCKY
DEPARTMENT OF HIGHWAYS

SLOTTED DRAIN PIPE
(DETAIL SHEET)

STANDARD DRAWING NO. RDI-200-05

SUBMITTED William S. Sahd — DIRECTOR, DIVISION OF DESIGN — 12-01-15 DATE

APPROVED — STATE HIGHWAY ENGINEER — 12-01-15 DATE

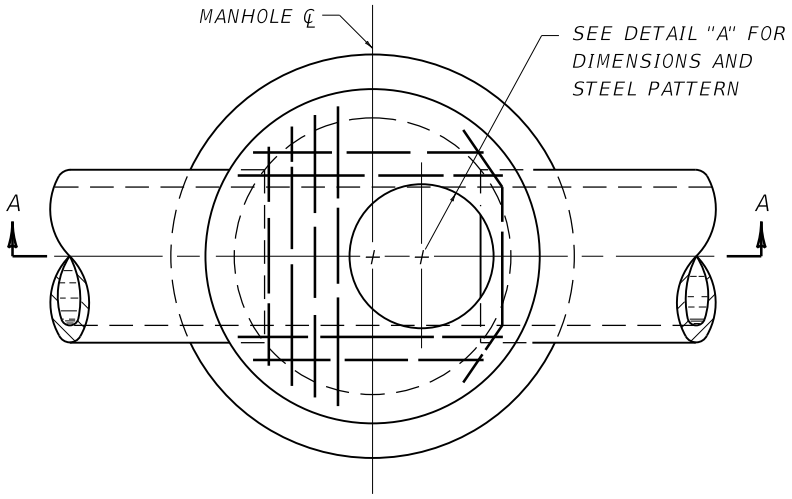

PLAN VIEW

~ NOTES ~

BID ITEM AND UNIT TO BID
MANHOLE TYPE A EACH

1. SEE CUR. STD. DWG. RDM-105 FOR CASTINGS TO BE USED IN TRAFFIC AREAS AND CUR. STD. DWG. RDM-100 FOR CASTINGS TO BE USED IN NON-TRAFFIC AREAS.
2. THE RISER SECTION MAY BE PRECAST CONCRETE PIPE OR CAST-IN-PLACE CONCRETE. A CONCENTRIC CAST-IN-PLACE CONE OR PRECAST CONCRETE CONE MAY BE PERMITTED, PROVIDED HEIGHT LIMITATIONS WOULD PERMIT.
3. THE MAXIMUM SIZE OF INTERCEPTED PIPE SHALL BE 27".
4. COVER OVER HIGHEST PIPE, EXCLUSIVE OF PAVEMENT, SHALL BE 2'-0".
5. CAST-IN-PLACE CONCRETE MANHOLES SHALL HAVE 8" THICK WALLS.
6. SEE PROPOSAL NOTES OR STANDARD SPECIFICATIONS FOR ADDITIONAL REQUIREMENTS.
7. SEE CUR. STD. DWG. RDM-055 FOR STEP TYPE, SPACING AND DETAIL.

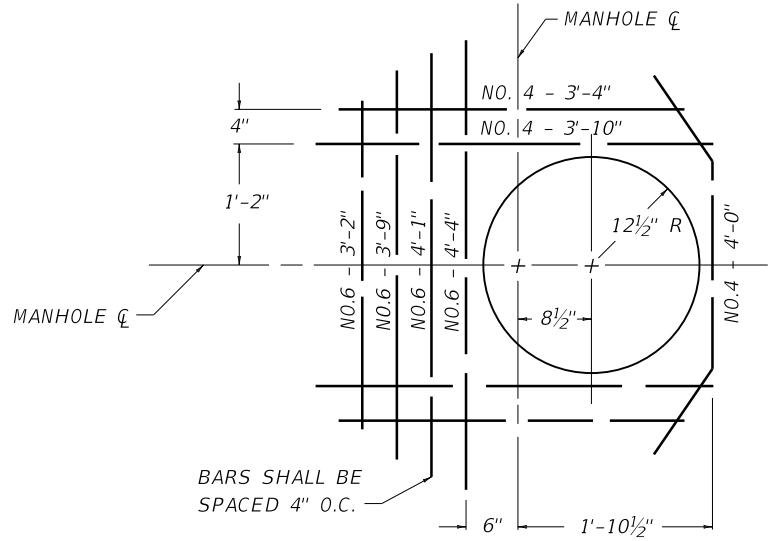

DETAIL "A"
DIMENSIONS AND
STEEL PATTERN

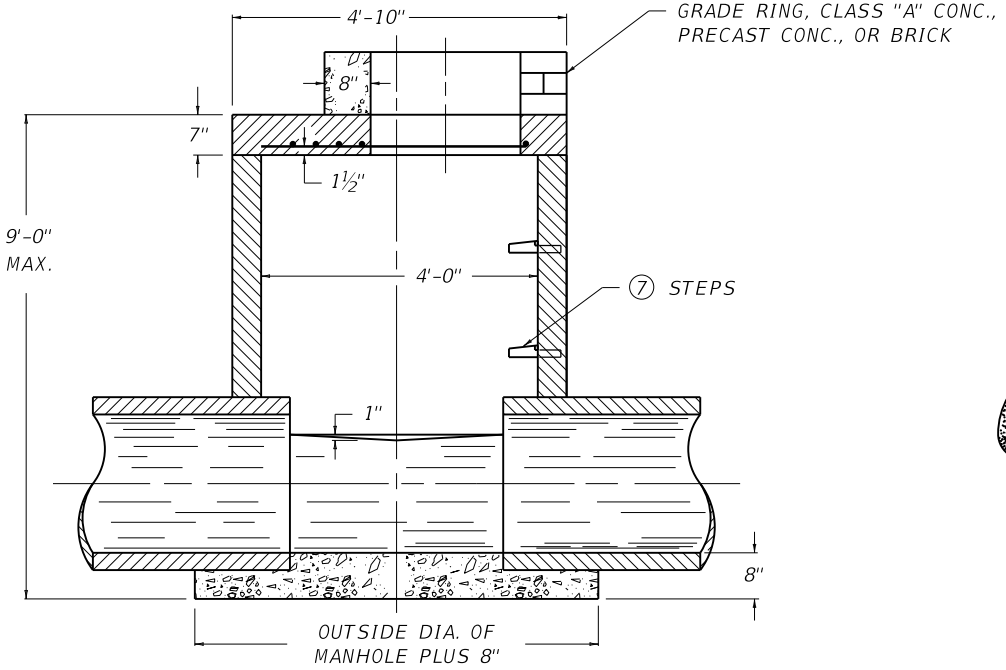

SECTION A-A

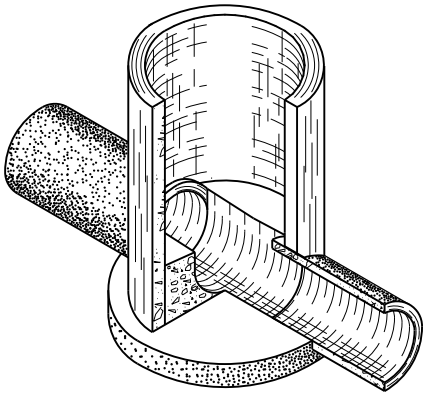

ISOMETRIC OF BASE

USE WITH CUR. STD. DWGS.
RDM-055 RDM-100 RDM-105

KENTUCKY
DEPARTMENT OF HIGHWAYS

MANHOLE
TYPE A

STANDARD DRAWING NO. RDM-001-07

SUBMITTED William E. Ginkel — DIRECTOR DIVISION OF DESIGN — 12-01-15 DATE

APPROVED — STATE HIGHWAY ENGINEER — 12-01-15 DATE

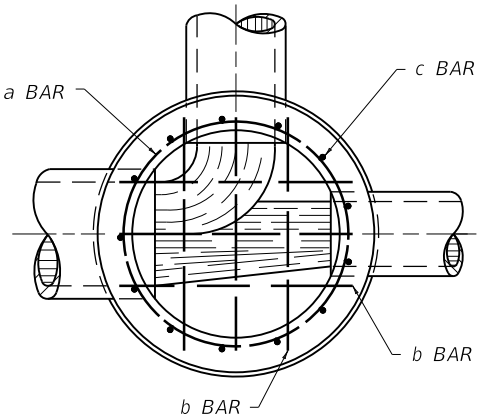

SECTION A-A

~ NOTES ~

BID ITEM AND UNIT TO BID
MANHOLE TYPE B — EACH

1. SEE CUR. STD. DWG. RDM-105 FOR CASTINGS TO BE USED IN TRAFFIC AREAS AND CUR. STD. DWG. RDM-100 FOR CASTINGS TO BE USED IN NON-TRAFFIC AREAS. THE MANHOLE MAY BE PRECAST CONCRETE PIPE SECTIONS OR CAST-IN-PLACE CONCRETE (6).
2. WHEN THE MANHOLE HEIGHT IS 25'-1" OR GREATER A CAST-IN-PLACE BASE WILL BE REQUIRED AS DETAILED. ▩ THIS PORTION OF CAST-IN-PLACE BASE ALWAYS REQUIRED. REINFORCEMENT BARS ARE NOT REQUIRED WHEN MANHOLE HEIGHT IS LESS THAN 12'-0".
3. THE NUMBER OF BARS DEPEND UPON HEIGHT OF BASE.
4. LENGTH OF BARS DEPEND UPON HEIGHT. BAR LOCATIONS SHALL BE BENT AND/OR SHIFTED TO MISS PIPE.
5. SEE PROPOSAL NOTES OR STANDARD SPECIFICATIONS FOR ADDITIONAL REQUIREMENTS.
6. CAST-IN-PLACE MANHOLE LIMITATIONS: FROM 9'-1" TO 16'-0" USE 8" WALL THICKNESS, FROM 16'-1" TO 25'-0" USE 12" THICK WALLS.
7. THE MAXIMUM SIZE OF INTERCEPTED PIPE SHALL BE 27".
8. SEE CUR. STD. DWG. RDM-055 FOR STEP TYPE, SPACING AND DETAILS.

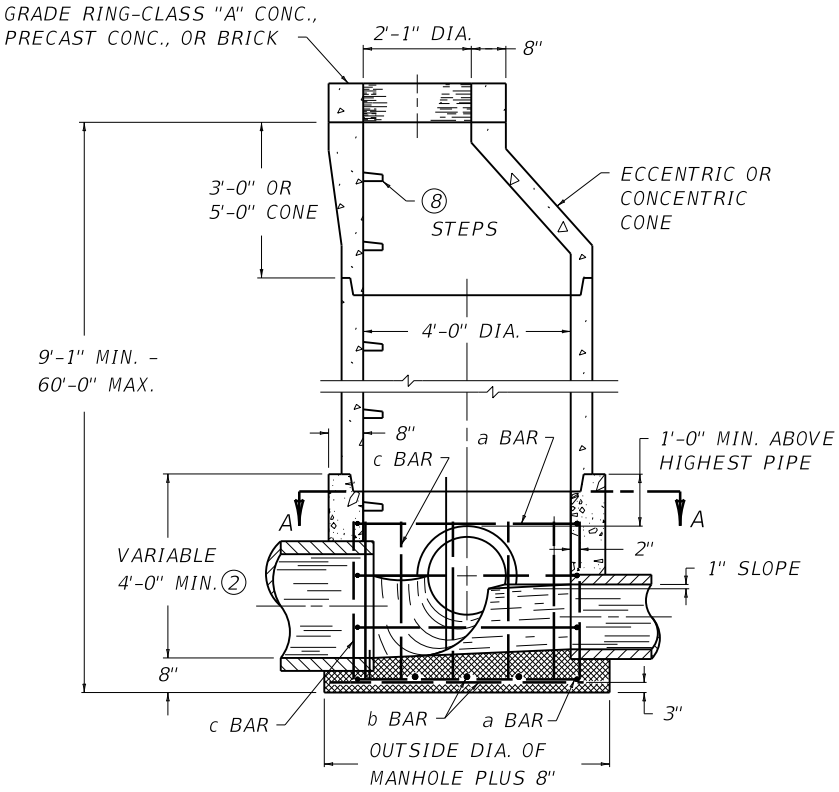

SECTIONAL ELEVATION

STEEL REINFORCEMENT

NO. 4 BAR	QTY.	LENGTH	SPACING	TYPE
a	(3)	13'-8"	APPROX. 1'-0" O.C.	CIR. 4'-4" DIA.
b	6	4'-6"		STR.
c	13	(4)		STR.

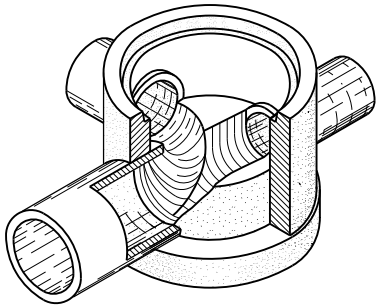

ISOMETRIC OF BASE

USE WITH CUR. STD. DWGS.
RDM-055 RDM-100 RDM-105

KENTUCKY
DEPARTMENT OF HIGHWAYS

MANHOLE
TYPE B

STANDARD DRAWING NO. RDM-005-06

SUBMITTED William E. Ginkel — DIRECTOR DIVISION OF DESIGN — 12-01-15 DATE

APPROVED — STATE HIGHWAY ENGINEER — 12-01-15 DATE

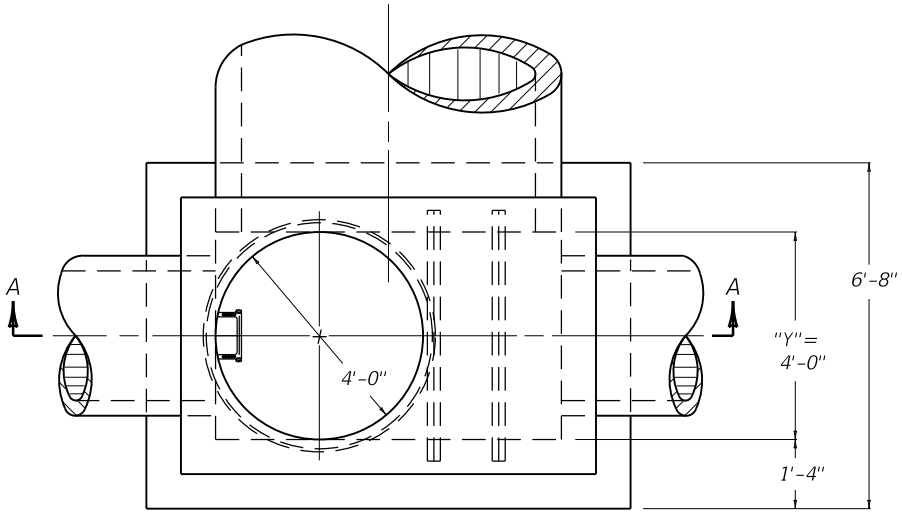

PLAN VIEW

~ NOTES ~

BID ITEM AND UNIT TO BID	
MANHOLE TYPE C	EACH

1. SEE CUR. STD. DWG. RDM-105 FOR CASTINGS TO BE USED IN TRAFFIC AREAS AND CUR. STD. DWG. RDM-100 FOR CASTINGS TO BE USED IN NON-TRAFFIC AREAS.
2. THE CHAMBER SHALL BE CONSTRUCTED OF CLASS "A" CONCRETE. USE CLASS "A" OR CLASS "B" TOWER AS HEIGHT DICTATES. THE CLASS "A" TOWER MAY BE CONSTRUCTED OF PRECAST CONCRETE PIPE SECTIONS OR CAST-IN -PLACE CONCRETE.
3. REINFORCEMENT USED IN THE CHAMBER SHALL BE REQUIRED WHEN THE MANHOLE HEIGHT EXCEEDS 8'-0".
4. ALL CHAMBER WALLS AND SLABS ARE 8" THICK, EXCEPT WHERE OTHERWISE SHOWN.
5. THE CHAMBER SHALL BE CONSTRUCTED AT RIGHT ANGLES TO THE CENTERLINE OF THE LARGEST INTERCEPTED PIPE.
6. THE CONTRACT UNIT PRICE BID FOR MANHOLE TYPE C SHALL INCLUDE ALL CONCRETE, STEEL REINFORCEMENT, STRUCTURAL STEEL, FRAME AND LID, TOWER, STEPS AND ALL INCIDENTALS NECESSARY TO COMPLETE THE STRUCTURE.
7. FOR CIRCULAR AND ELLIPTICAL PIPE SIZES OF 30" TO 72".
8. SEE CUR. STD. DWG. RDM-055 FOR STEP TYPE, SPACING AND DETAILS.

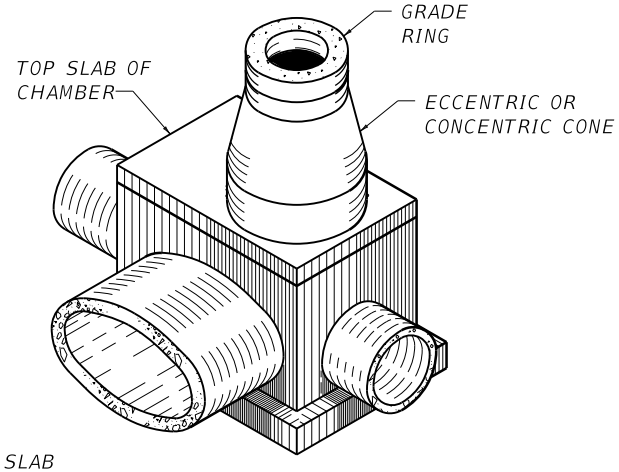

CLASS "A" TOWER
ISOMETRIC VIEW

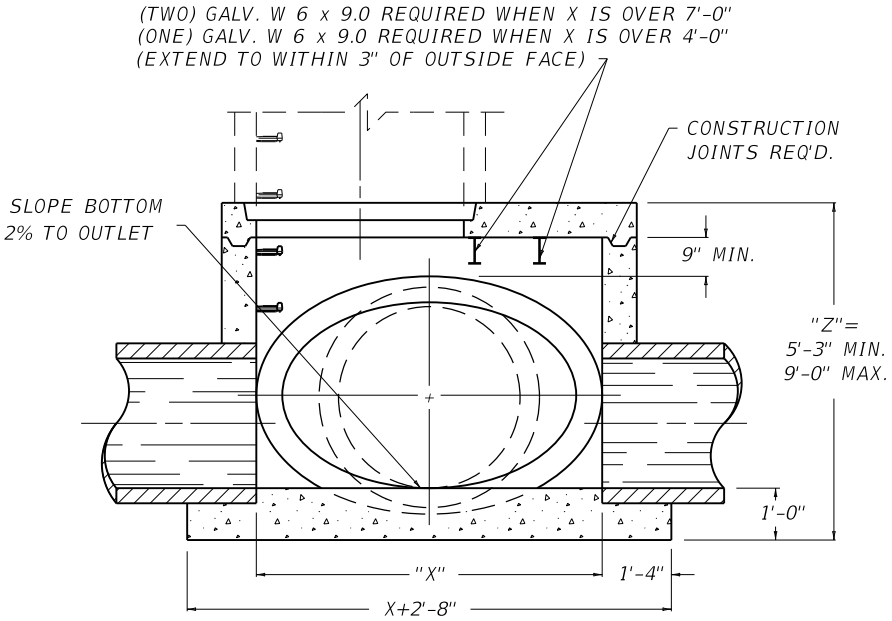

SECTION A-A

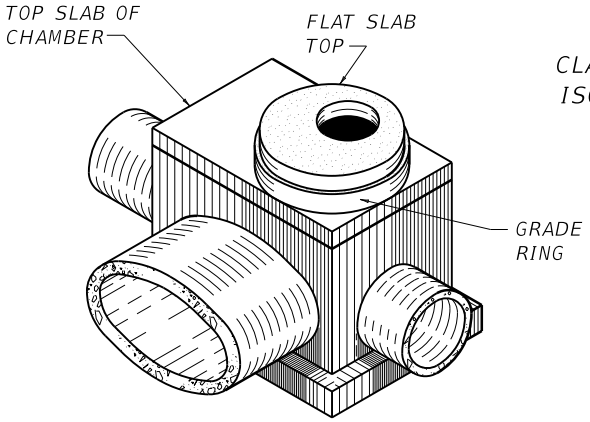

CLASS "B" TOWER
ISOMETRIC VIEW

USE WITH CUR. STD. DWGS.
RDM-011 RDM-012 RDM-013
RDM-055 RDM-100 RDM-105

KENTUCKY
DEPARTMENT OF HIGHWAYS

MANHOLE TYPE C
(CHAMBER LAYOUT)

STANDARD DRAWING NO. RDM-010-06

SUBMITTED William E. Ginkel — DIRECTOR DIVISION OF DESIGN — 12-01-15 DATE

APPROVED — STATE HIGHWAY ENGINEER — 12-01-15 DATE

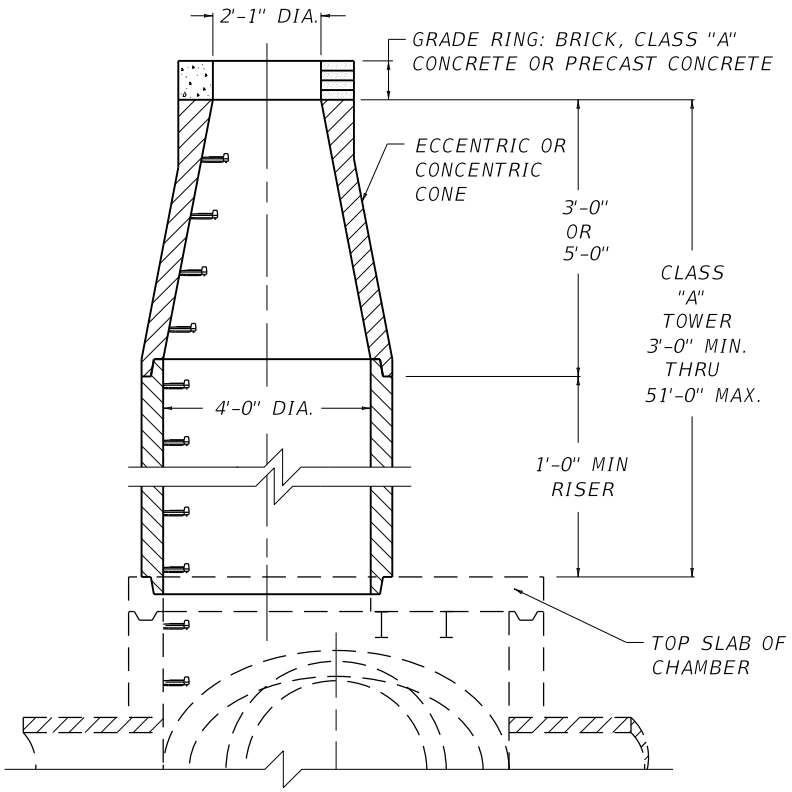

CLASS "A" TOWER DETAIL

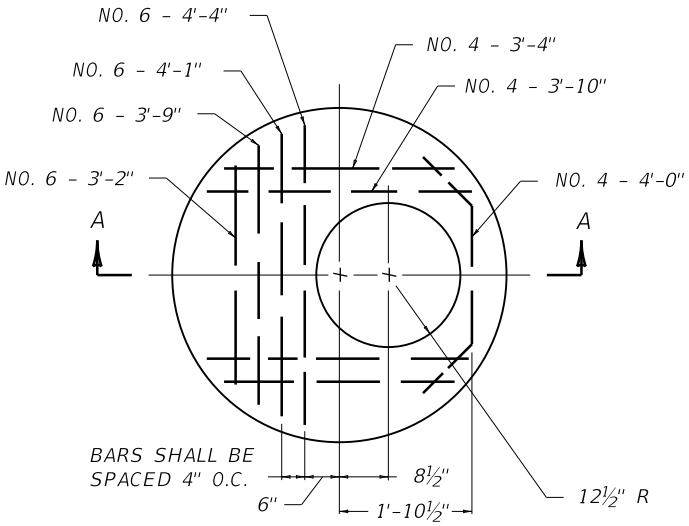

PLAN VIEW
FLAT SLAB TOP DETAIL

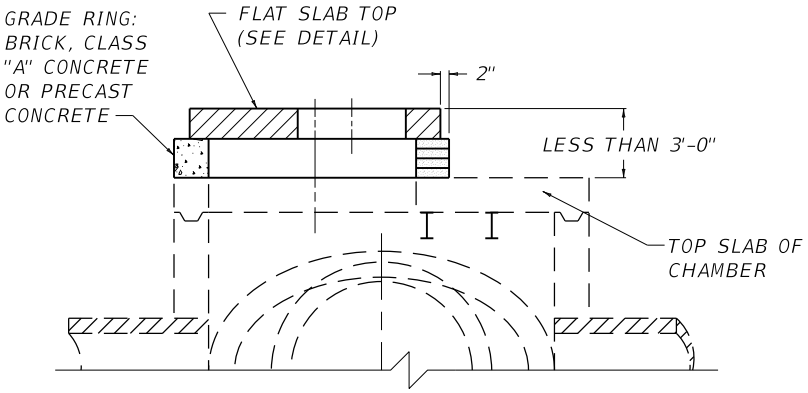

CLASS "B" TOWER DETAIL

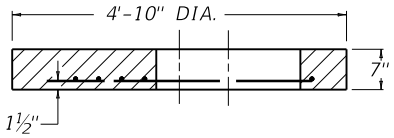

SECTION A-A
FLAT SLAB TOP DETAIL

USE WITH CUR. STD. DWGS.
RDM-010 RDM-012 RDM-013

KENTUCKY
DEPARTMENT OF HIGHWAYS

MANHOLE TYPE C
(TOWER APPLICATIONS)

STANDARD DRAWING NO. RDM-011-05

SUBMITTED William E. Ginkel — DIRECTOR DIVISION OF DESIGN — 12-01-15 DATE

APPROVED — STATE HIGHWAY ENGINEER — 12-01-15 DATE

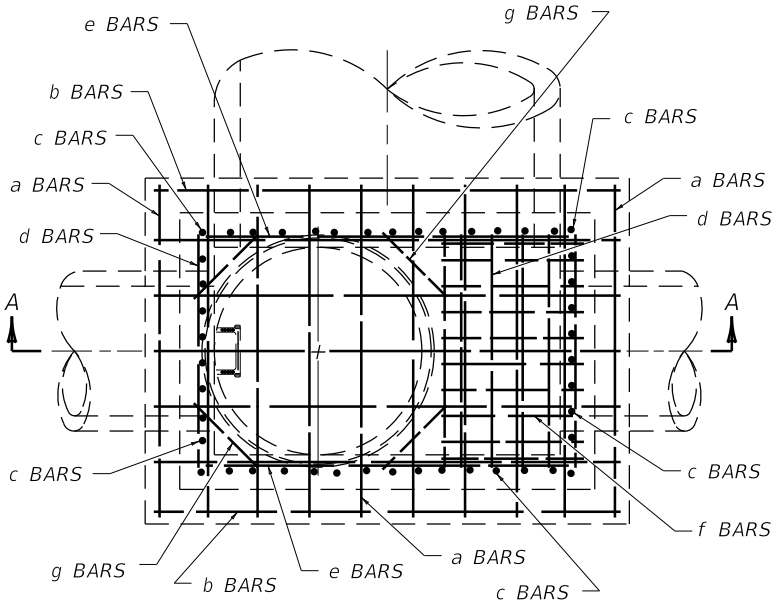

PLAN VIEW

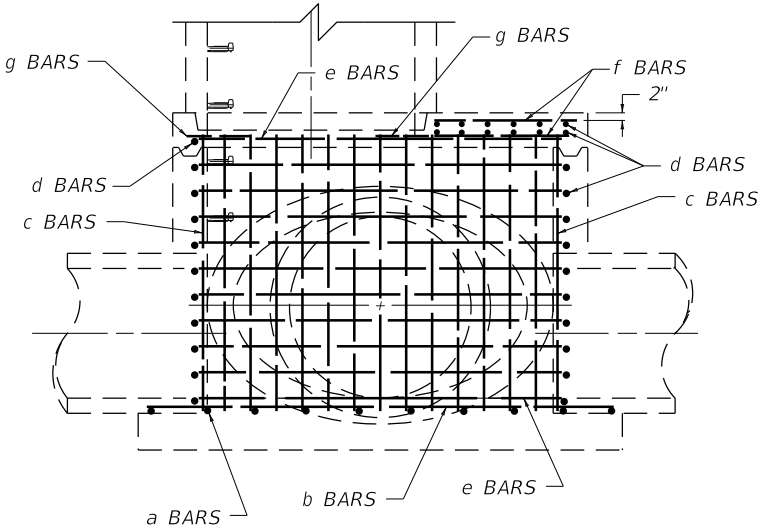

SECTION A-A

~ NOTES ~

1. PLACE ALL STEEL REINFORCEMENT 2" FROM INSIDE OF CHAMBER WALL EXCEPT WHERE OTHERWISE SPECIFIED.
2. ALL a AND b BARS SPACED 1'-0" ON CENTER.
3. ALL c, d, e, AND f BARS SPACED 6" ON CENTER.

USE WITH CUR. STD. DWGS.
RDM-010 RDM-011 RDM-013

KENTUCKY
DEPARTMENT OF HIGHWAYS

MANHOLE TYPE C
(STEEL PATTERN)

STANDARD DRAWING NO. RDM-012-03

SUBMITTED _____ DIRECTOR, DIVISION OF DESIGN — 12-01-15 DATE

APPROVED _____ STATE HIGHWAY ENGINEER — 12-01-15 DATE

DIMENSIONS AND ESTIMATE OF QUANTITIES

SIZE ①		PIPE		Z ①	CONCRETE CU.YDS.		④ REINFORCEMENT												LBS.	⑤
							BAR a		BAR b		BAR c		BAR d		BAR e		BAR f			
X	Y	SIZE	LOCATION		②	③	QTY.	LIN. FT.	QTY.	LIN. FT.	QTY.	LIN. FT.	QTY.	LIN. FT.	QTY.	LIN. FT.	QTY.	LIN. FT.		
FOR CIRCULAR PIPE																				
4'-0"	4'-0"	30"	X OR Y	5'-3"	3.7	0.5	7	6'-5"	7	6'-4"	36	4'-1"	17	4'-6"	16	4'-4"	0	—	406	74
		36"		5'-9"	3.9							4'-7"	19		18				444	
4'-3"		42"	X	6'-4"	4.3					6'-7"	38	5'-2"	23		20	4'-7"	20	0'-3"	515	78
4'-10"		48"		6'-10"	4.9		8			7'-2"	40	5'-8"	27		22	5'-2"		0'-10"	612	81
5'-5"		54"		7'-5"	5.6					7'-9"	42	6'-3"	31		24	5'-9"		1'-5"	710	84
6'-0"		60"		7'-11"	6.3	0.6	9			8'-3"	44	6'-9"	35		26	6'-3"		2'-0"	813	91
6'-7"		66"		8'-6"	7.0		10			8'-10"	46	7'-4"	39		28	6'-10"		2'-7"	927	95
7'-2"		72"		9'-0"	7.8					9'-5"	48	7'-10"	41		30	7'-5"		3'-2"	1025	100
FOR ELLIPTICAL PIPE																				
4'-0"	4'-0"	24"x38"	X OR Y	4'-9"	3.5	0.5	7	6'-5"	7	6'-4"	36	3'-7"	15	4'-6"	14	4'-4"	0	—	367	74
4'-6"		29"x45"	X	5'-3"	4.0		8			6'-10"	38	4'-1"	21		16	4'-10"	20	0'-7"	464	79
5'-3"		34"x53"		5'-8"	4.6					7'-7"	40	4'-6"	25		18	5'-7"		1'-4"	554	84
5'-11"		38"x60"		6'-1"	5.2	0.6	9			8'-3"	44	4'-11"	29		20	6'-3"		2'-0"	661	91
6'-8"		43"x68"		6'-6"	5.9		10			9'-0"	46	5'-4"	33		22	7'-0"		2'-9"	767	96
7'-5"		48"x76"		7'-0"	6.7		11			9'-9"	50	5'-10"	39		24	7'-9"		3'-6"	906	103
8'-1"		53"x83"		7'-5"	7.4	0.7				10'-5"	52	6'-3"	43		26	8'-5"		4'-2"	1013	108
8'-10"		58"x91"		7'-11"	8.2		12			11'-2"	56	6'-9"	49		28	9'-2"		4'-11"	1105	115

~ NOTES ~

① SEE CUR. STD. DWG. RDM-010 FOR LOCATION OF "X", "Y" AND "Z" DIMENSIONS.
② CONCRETE REQUIRED FOR ONE MANHOLE CHAMBER. NO DEDUCTIONS FOR PIPE HAVE BEEN MADE.
③ CU. YDS. PER FT. INCREASE IN "Z".
④ ALL REINFORCEMENT SHALL BE NO. 5 BARS. 4 - g BARS 1'-9", REQUIRED IN TOP SLAB.
⑤ LBS. PER FT. INCREASE IN "Z".

CONCRETE DISPLACED BY ONE CONCRETE PIPE

SIZE		CONC. CU.YDS.
CIR.	ELLIP.	
30"	24"x38"	0.2
36"	29"x45"	0.3
42"	34"x53"	0.4
48"	38"x60"	0.5
54"	43"x68"	0.6
60"	48"x76"	0.7
66"	—	0.8
—	53"x83"	0.9
72"	58"x91"	1.0

USE WITH CUR. STD. DWGS.
RDM-010 RDM-011 RDM-012

KENTUCKY
DEPARTMENT OF HIGHWAYS

MANHOLE TYPE C
(TABLE OF QUANTITIES)

STANDARD DRAWING NO. RDM-013-04

SUBMITTED William E. Ginkel 12-01-15
DIRECTOR DIVISION OF DESIGN DATE

APPROVED 12-01-15
STATE HIGHWAY ENGINEER DATE

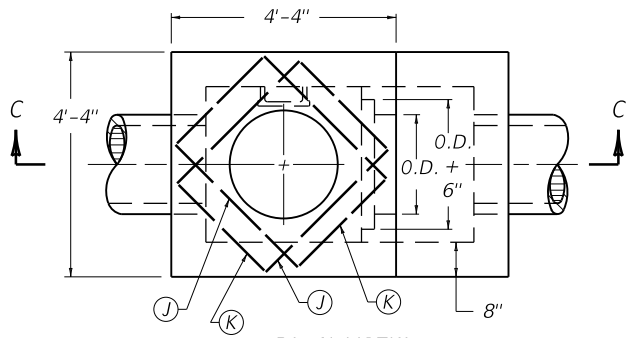

PLAN VIEW

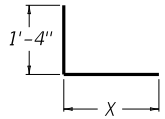

A AND M BARS

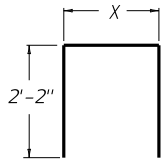

B AND F BARS

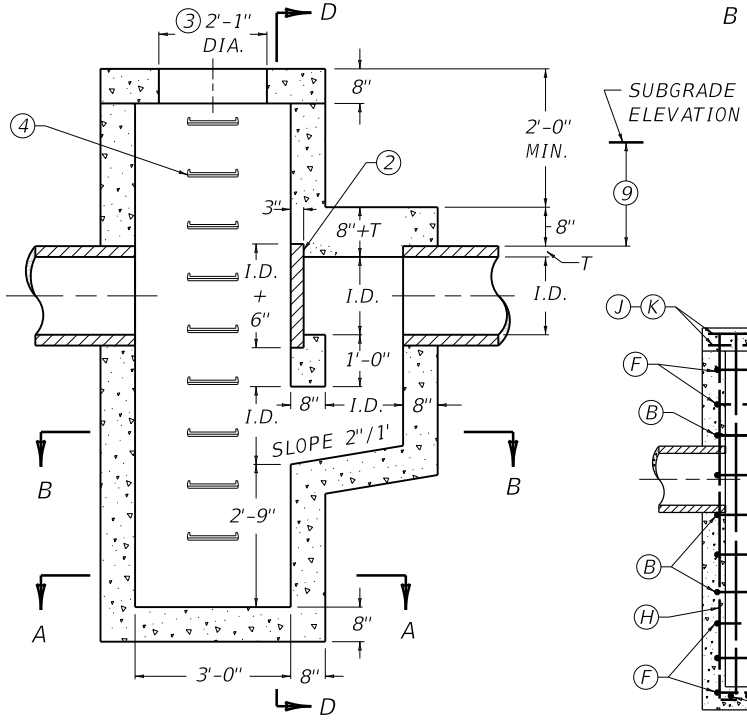

SECTION C-C

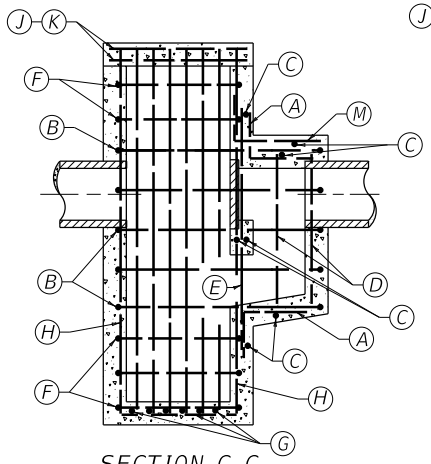

SECTION C-C

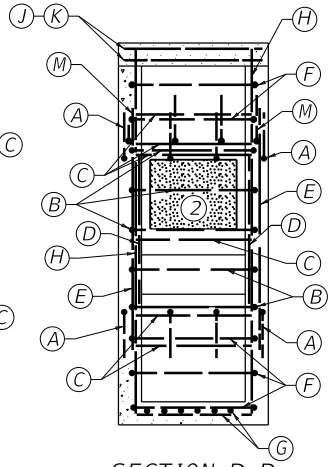

SECTION D-D

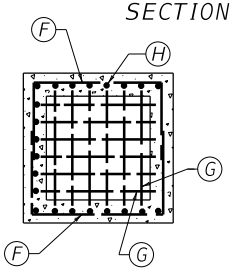

SECTION A-A

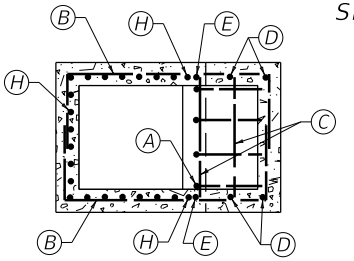

SECTION B-B

10 BILL OF REINFORCEMENT (NO. 5 BARS)

PIPE	15"			18"			21"			24"		
NO. 5 BARS	QTY.	TOTAL LG.	X DIM.	QTY.	TOTAL LG.	X DIM.	QTY.	TOTAL LG.	X DIM.	QTY.	TOTAL LG.	X DIM.
A	8	2'-11"	1'-7"	8	3'-2"	1'-10"	8	3'-5"	2'-1"	8	3'-8"	2'-4"
B	10	9'-6"	5'-3"	10	9'-9"	5'-6"	12	10'-0"	5'-9"	12	10'-4"	6'-0"
C	7	3'-4"	-	7	3'-4"	-	7	3'-4"	-	9	3'-4"	-
D	4	3'-11"	-	4	4'-4"	-	4	4'-10"	-	6	5'-4"	-
E	2	6'-6"	-	2	7'-0"	-	2	7'-6"	-	2	8'-0"	-
F	10	7'-7"	3'-4"	10	7'-7"	3'-4"	10	7'-7"	3'-4"	10	7'-7"	3'-4"
G	12	3'-4"	-	12	3'-4"	-	12	3'-4"	-	12	3'-4"	-
H	22	9'-1"	-	22	9'-8"	-	22	10'-2"	-	22	10'-8"	-
J	8	3'-4"	-	8	3'-4"	-	8	3'-4"	-	8	3'-4"	-
K	8	2'-4"	-	8	2'-4"	-	8	2'-4"	-	8	2'-4"	-
M	4	3'-7"	2'-3"	4	3'-10"	2'-6"	4	4'-1"	2'-9"	4	4'-4"	3'-0"
569 LBS.				591 LBS.			632 LBS.			672 LBS.		

CU. YDS. CLASS "A" CONC.

4.73	5.07	5.43	5.79
0.36 1			

4 SEE CUR. STD. DWG. RDM-055 FOR STEP TYPE, SPACING AND DETAIL.

5. G & H BARS SPACED APPROXIMATELY 6" O.C. ALL OTHER BARS SPACED APPROXIMATELY 1'-0" O.C.

6. CONSTRUCTION JOINT NOT PERMITTED BELOW FLOW LINE ELEVATION.

7. ENCIRCLED LETTERS INDICATE STEEL BAR LOCATIONS.

8. T= PIPE THICKNESS, I.D.= INSIDE DIA. OF PIPE, O.D.= OUTSIDE DIA. OF PIPE.

9 2'-0" DESIRED COVER, 1'-0" MINIMUM COVER OVER PIPE.

10 THE H BAR SHALL BE INCREASED INCH FOR INCH WHEN BOX EXCEEDS MINIMUM HEIGHT. ADD TWO F BARS FOR EACH 1'-0" INCREASE ABOVE MINIMUM HEIGHT.

11. DIMENSIONS FROM FACE OF CONCRETE TO STEEL SHALL BE 2" CLEAR DISTANCE.

USE WITH CUR. STD. DWGS.
RDM-055 RDM-100 RDM-105

~ NOTES ~

BID ITEM AND UNIT TO BID
MANHOLE-TRAPPED EACH

1 CU. YD. PER FT. INCREASE OR DECREASE WHEN MANHOLE HEIGHT VARIES FROM 7'-1" + 2 I.D. + T.

2 REMOVABLE STOPPER-MASONRY, CAST IRON OR OTHER TYPES OF STOPPERS WILL BE PERMITTED IF APPROVED BY THE ENGINEER.

3 SEE CUR. STD. DWG. RDM-100 FOR CASTINGS TO BE USED IN NON-TRAFFIC AREAS AND CUR. STD. DWG. RDM-105 FOR CASTINGS TO BE USED IN TRAFFIC AREAS.

KENTUCKY
DEPARTMENT OF HIGHWAYS

TRAPPED MANHOLE

STANDARD DRAWING NO. RDM-050-07

SUBMITTED William S. Sickel DIRECTOR DIVISION OF DESIGN 12-01-15 DATE

APPROVED STATE HIGHWAY ENGINEER 12-01-15 DATE

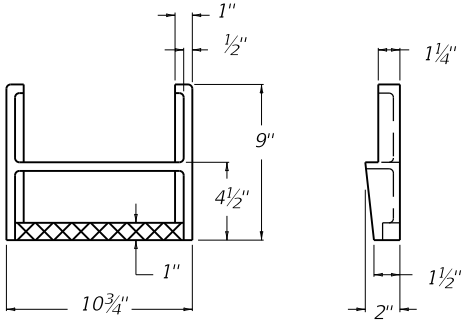

STEP TYPE NO. 1

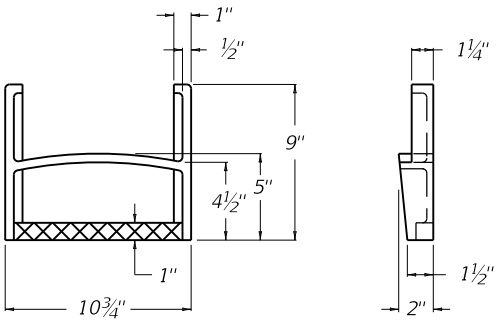

STEP TYPE NO. 2

~ NOTES ~

1. STEPS SHALL BE ASPHALT COATED CAST IRON OR POLYPROPYLENE PLASTIC COATED STEEL ROD OR OF A TYPE AND SIZE APPROVED BY THE ENGINEER.
2. STEPS SHALL BE SPACED APPROXIMATELY 12" TO 16" O.C. VERTICALLY SO AS TO FORM A CONTINUOUS LADDER.
3. STEPS SHALL BE REQUIRED IN MANHOLES WHEN THE STRUCTURE IS 4 FEET AND GREATER IN DEPTH. (MEASURE FROM FLOW LINE OF LOWEST PIPE TO TOP OF STRUCTURE).
4. THE TREADS OF ALL STEPS SHALL HAVE ANTI-SKID PROPERTIES FOR HAND AND FOOT GRIPS.
5. MANHOLE: USE STEP TYPE 1 OR TYPE 3 FOR MANHOLE PIPE CHAMBER AND STEP TYPE 2 OR TYPE 4 FOR MANHOLE TOWER.

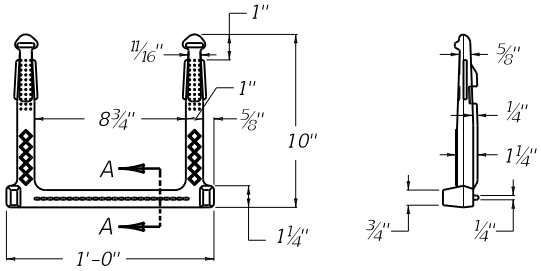

STEP TYPE NO. 3

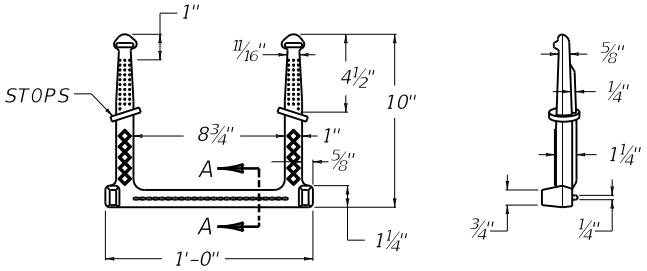

STEP TYPE NO. 4

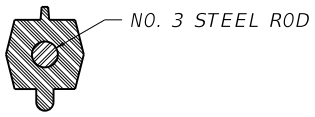

SECTION A-A

USE WITH CUR. STD. DWGS.
RDM-001 RDM-005 RDM-010
RDM-050

KENTUCKY
DEPARTMENT OF HIGHWAYS

MANHOLE
STEPS

STANDARD DRAWING NO. RDM-055

SUBMITTED _____ DIRECTOR, DIVISION OF DESIGN — 12-01-15 DATE

APPROVED _____ STATE HIGHWAY ENGINEER — 12-01-15 DATE

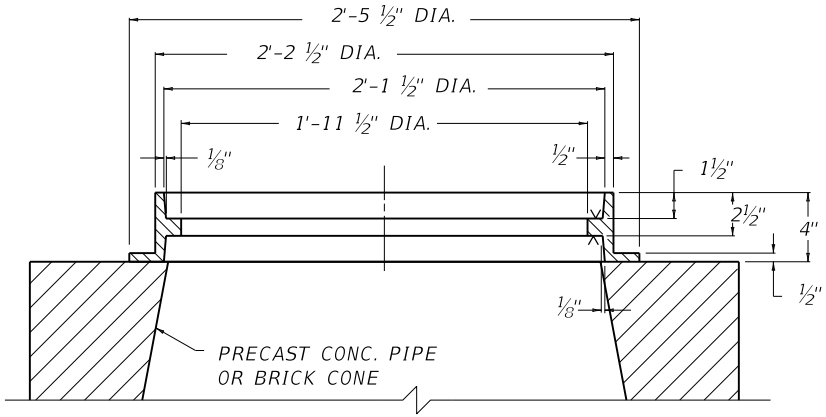

SECTION OF FRAME
WHEN USED WITH MANHOLES

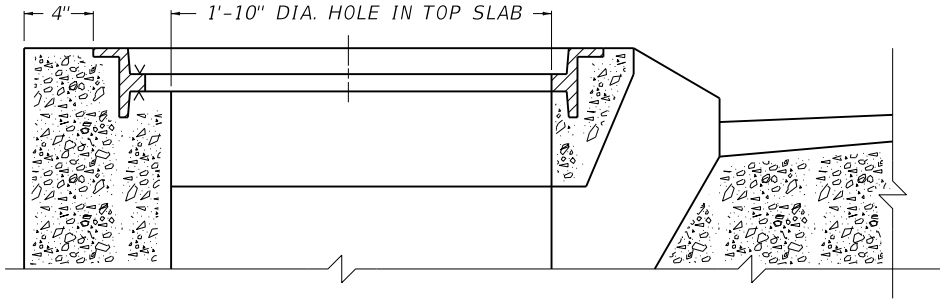

SECTION OF FRAME WHEN
USED WITH CURB BOX INLET

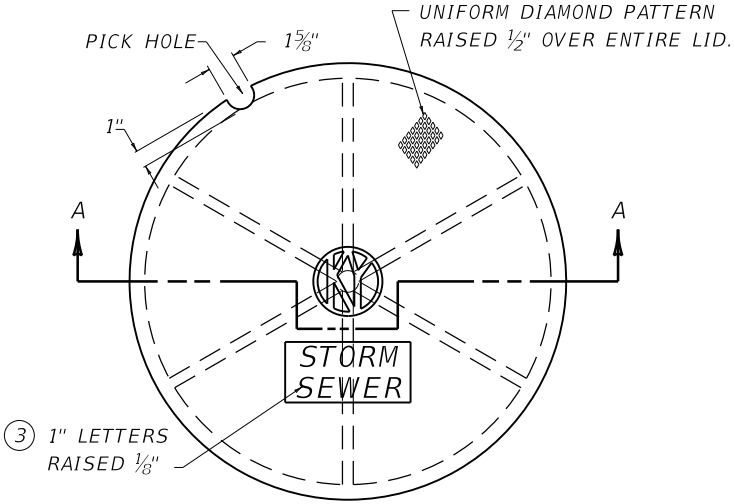

PLAN VIEW

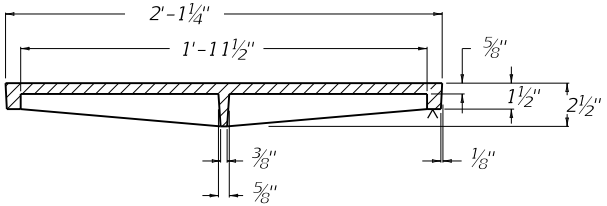

SECTION A-A

~ NOTES ~

BID ITEM AND UNIT TO BID
FRAME AND LID TY 1 EACH

1. THE FRAME IS REVERSIBLE AND IS TO BE USED ON MANHOLES IN NON-VEHICULAR TRAFFIC AREAS, AND ON BOX INLETS AS SPECIFIED.
2. APPLICATIONS SHOWN ARE FOR ILLUSTRATION PURPOSES ONLY.
3. VARIATION IN LID LETTERING (SEE PIPE SUMMARY) DENOTES SEWER TYPES:
   (A) STORM SEWER
   (B) SANITARY SEWER
   (C) SANITARY AND STORM SEWER
4. THE "KY" SYMBOL SHALL APPEAR ON ALL LIDS.

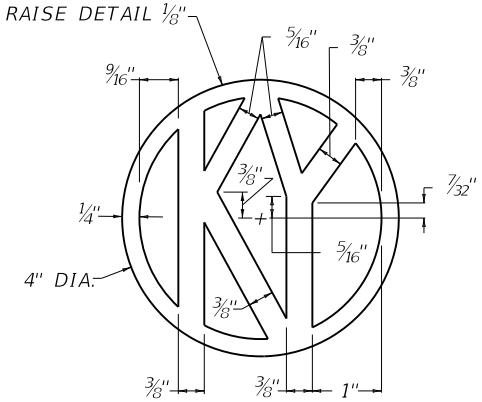

DETAIL OF "KY"

APPROX. WEIGHT	
FRAME	90 LBS.
LID	116 LBS.

KENTUCKY
DEPARTMENT OF HIGHWAYS

FRAME AND LID
TYPE 1

STANDARD DRAWING NO. RDM-100-03

SUBMITTED William E. Ginkel — DIRECTOR, DIVISION OF DESIGN — 12-01-15 DATE

APPROVED — STATE HIGHWAY ENGINEER — 12-01-15 DATE

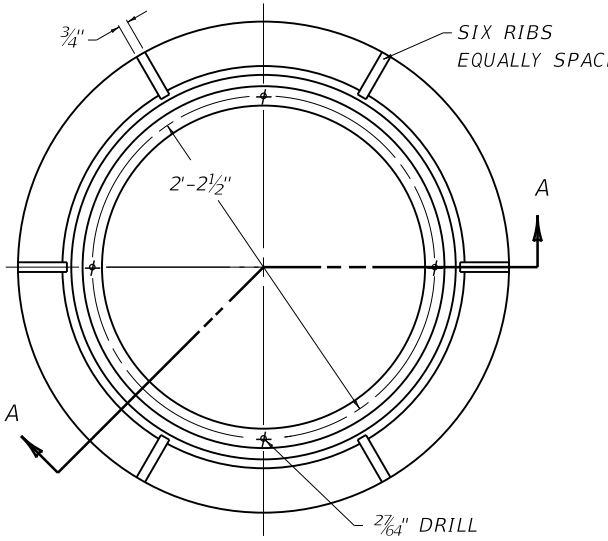

PLAN VIEW

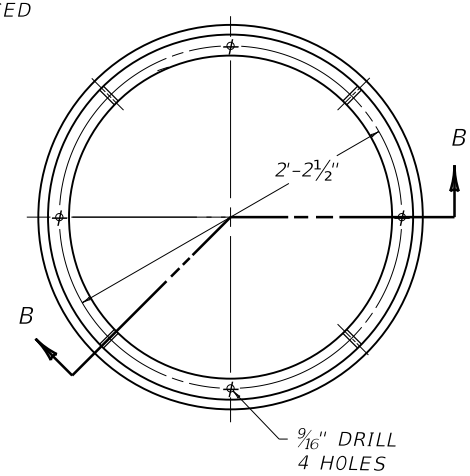

PLAN VIEW

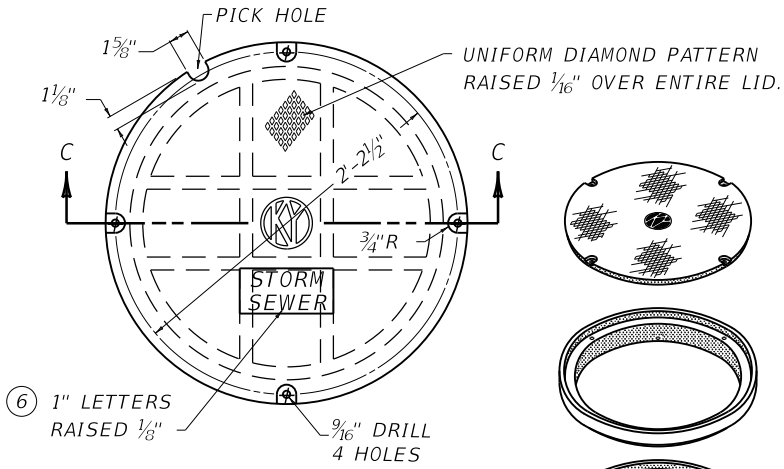

PLAN VIEW

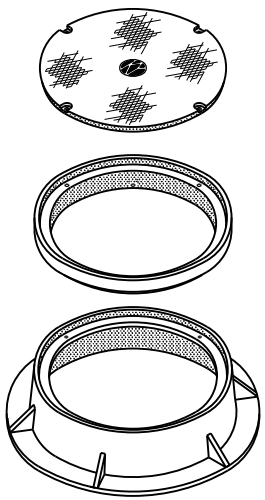

ISOMETRIC
EXPLODED VIEW

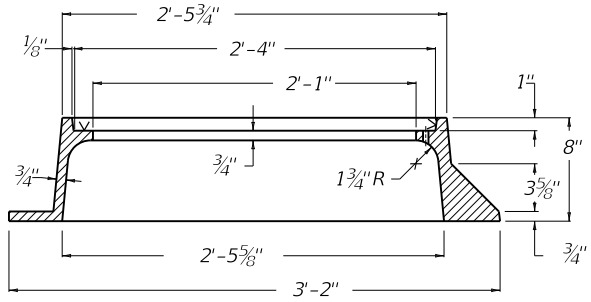

FRAME
SECTION A-A

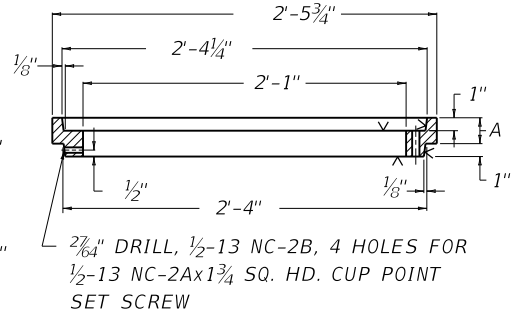

ADJUSTING RING
SECTION B-B

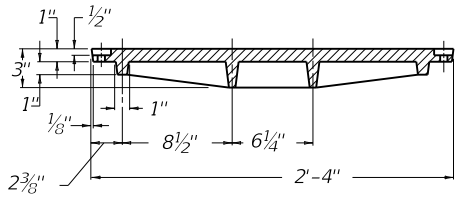

LID
SECTION C-C

DIMENSION A 8
1 1/2"
2"
2 1/2"
3"

APPROX. WEIGHT	
FRAME	270 LBS.
LID	240 LBS.

~ NOTES ~

BID ITEM AND UNIT TO BID
FRAME AND LID TY 2 EACH

1. THE LID SHALL BE FASTENED WITH 1/2-13 NC-2Ax2 HEXAGON CAP SCREW. WHEN THE ADJUSTING RING IS USED ADD DIMENSION (A) SHOWN IN SECTION B-B TO THE LENGTH OF THE CAP SCREW.
2. THE CAP SCREWS AND SET SCREWS SHALL BE STAINLESS STEEL, TYPES 302, 304, AND 430 CONFORMING TO ASTM A276.
3. MANUFACTURER'S TOLERANCES WILL BE ACCEPTED ON ALL DIMENSIONS.
4. ADJUSTING RINGS WHEN REQUIRED SHALL BE PAID FOR AT THE CONTRACT UNIT PRICE EACH AND SHALL INCLUDE THE NECESSARY HEX HEAD BOLTS AND SET SCREWS.
5. THE " v " DENOTES MACHINED SURFACE.
6. VARIATION IN LID LETTERING (SEE PIPE SUMMARY) DENOTES SEWER TYPE:
   (A) STORM SEWER
   (B) SANITARY SEWER
   (C) SANITARY AND STORM SEWER
7. THE "KY" SYMBOL SHALL APPEAR ON ALL LIDS.
8. NET HEIGHT OF ADJUSTING RING (AS SPECIFIED IN CONTRACT).
9. FRAME AND LID TYPE 2 SHALL BE USED IN VEHICULAR TRAFFIC AREAS.

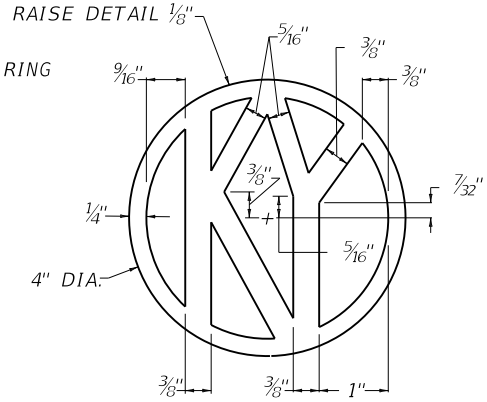

DETAIL OF "KY" SYMBOL

KENTUCKY
DEPARTMENT OF HIGHWAYS

FRAME AND LID
TYPE 2

STANDARD DRAWING NO. RDM-105-03

SUBMITTED William S. Stafford — DIRECTOR, DIVISION OF DESIGN — 12-01-15 DATE

APPROVED — STATE HIGHWAY ENGINEER — 12-01-15 DATE

MAXIMUM COVER HEIGHTS FOR VARIOUS TYPES OF PERFORATED PIPE

SIZE OF PIPE	STANDARD STRENGTH CLAY	EXTRA STRENGTH CLAY	18 GAGE STEEL PIPE (3)	16 GAGE STEEL PIPE (3)	ALUMINUM PIPE (3)	POLYETHYLENE
4"	14'	17'	---	---	---	43'
6"	9'	15'	55'	---	50'	43'
8"	7'	10'	---	63'	50'	43'
10"	6'	9'	---	60'	40'	---
12"	5'	8'	---	55'	35'	---
15"	5'	8'	---	50'	30'	---
18"	5'	8'	---	40'	25'	---
21"	5'	8'	---	35'	20'	---
24"	5'	8'	---	---	---	---

~ NOTES ~

1. 2'-0" SHALL BE THE MINIMUM COVER HEIGHT OVER TOP OF PIPE, MEASURED FROM TOP OF PIPE TO SUBGRADE ELEVATION, EXCEPT 1'-0" COVER HEIGHT WILL BE PERMITTED ONLY WHERE THE 2'-0" COVER HEIGHT WOULD NOT PERMIT PROPER DRAINAGE OF THE PIPE.
2. THE COMBINING OF MORE THAN ONE TYPE OF PIPE ON CONSTRUCTION OF A CONTINUOUS LINE OF PIPE AT ANY ONE INSTALLATION WILL NOT BE PERMITTED.

(3) SEE CUR. STD. DRAWING RDI-035 FOR PIPE COATINGS.

USE WITH CUR. STD. DWG.
RDI-035

KENTUCKY
DEPARTMENT OF HIGHWAYS

PERFORATED PIPE TYPES
AND COVER HEIGHTS

STANDARD DRAWING NO. RDP-001-06

SUBMITTED _____ DIRECTOR, DIVISION OF DESIGN — 12-01-15 DATE

APPROVED _____ STATE HIGHWAY ENGINEER — 12-01-15 DATE

TYPICAL SUBGRADE DRAINAGE LOCATIONS

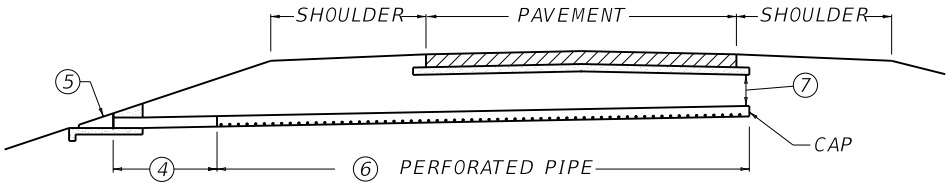

TANGENT SECTION - TWO LANE

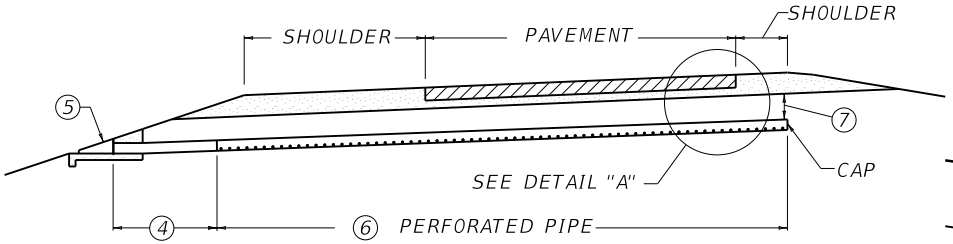

TANGENT SECTION - MULTI LANE

~ NOTES ~

BID ITEM AND UNIT TO BID

PERFORATED PIPE- △ IN LF

NON-PERFORATED PIPE- △ IN LF

△ = PIPE DIA. IN INCHES

1. SUBGRADE DRAINAGE, AS DEPICTED, IS INTENDED FOR USE WITH THE SURFACING PHASE OF CONSTRUCTION, AND SHALL BE INSTALLED ONLY AFTER THE SUBGRADE HAS BEEN COMPLETED, AND PRIOR TO CONSTRUCTING PAVING MATERIALS.
2. SUBGRADE DRAINAGE WILL NOT BE REQUIRED WHEN:
   a. ROCK SUBGRADE OR NATURAL BANK GRAVEL IS SPECIFIED.
   b. POROUS OR FREE DRAINING SUBGRADES ARE EVIDENT.
   c. DIRECTED BY THE ENGINEER.
3. THE CAP SHALL BE A STANDARD MANUFACTURED ITEM FURNISHED BY PIPE SUPPLIER.

(4) APPROXIMATELY 8 TO 12 FEET OF PIPE AT THE OUTLET SHALL BE NON-PERFORATED PIPE MEETING THE REQUIREMENTS OF THE PERFORATED PIPE, EXCEPT FOR PERFORATIONS.

(5) PERFORATED PIPE HEADWALL REQUIRED AT OUTLET. SEE CUR. STD. DWG. RDP-010.

(6) SEE CUR. STD. DWG. RDP-001 FOR ALTERNATES.

(7) PIPE COVER: 2'-0" DESIREABLE MINIMUM, 1'-0" ABSOLUTE MINIMUM. FLOW SHALL BE DIRECTED TOWARD THE FILL SIDE OF THE ROADWAY WHEN POSSIBLE.

(8) SUBGRADE ELEVATION.

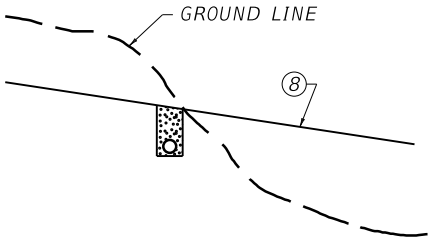

CUT TO FILL

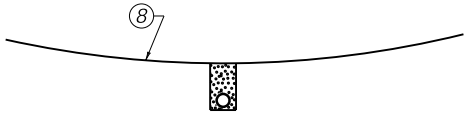

SAG VERTICAL CURVES

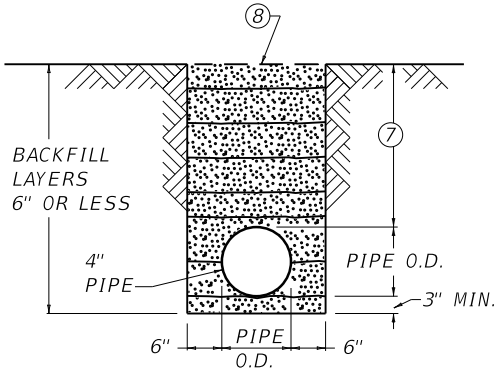

TRENCH DETAIL

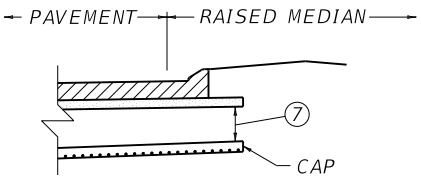

RAISED MEDIAN
DETAIL "A"

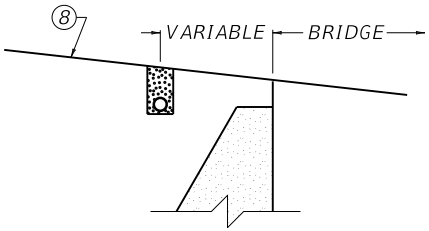

SUBGRADE DRAINAGE SHALL BE INSTALLED AT UPGRADE END OF BRIDGE ONLY.

BRIDGES

USE WITH CUR. STD. DWGS.
RDP-001 RDP-010

KENTUCKY
DEPARTMENT OF HIGHWAYS

PERFORATED PIPE FOR SUBGRADE DRAINAGE ON TWO-LANE (CLASS 2) AND MULTI-LANE ROADS

STANDARD DRAWING NO. RDP-005-05

SUBMITTED William E. Ginkel DIRECTOR, DIVISION OF DESIGN 12-01-15 DATE

APPROVED STATE HIGHWAY ENGINEER 12-01-15 DATE

DETAIL FOR LONGITUDINAL UNDERDRAINS

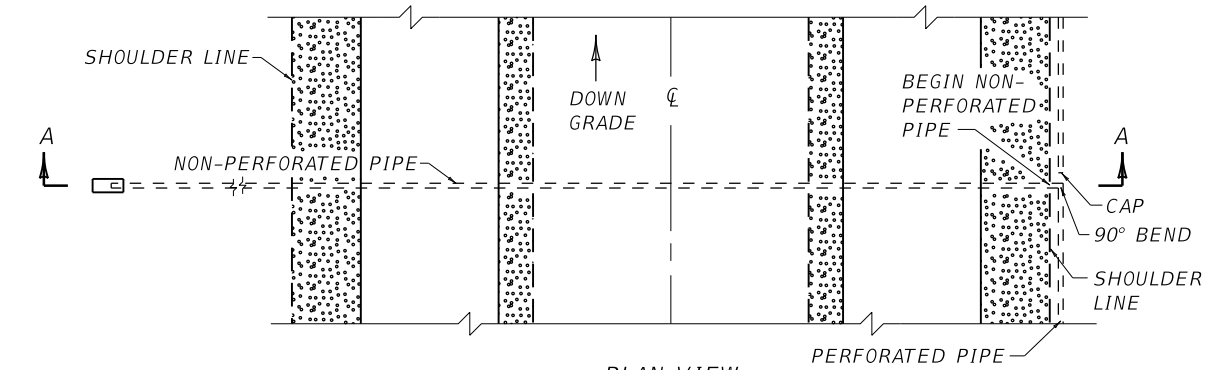

PLAN VIEW

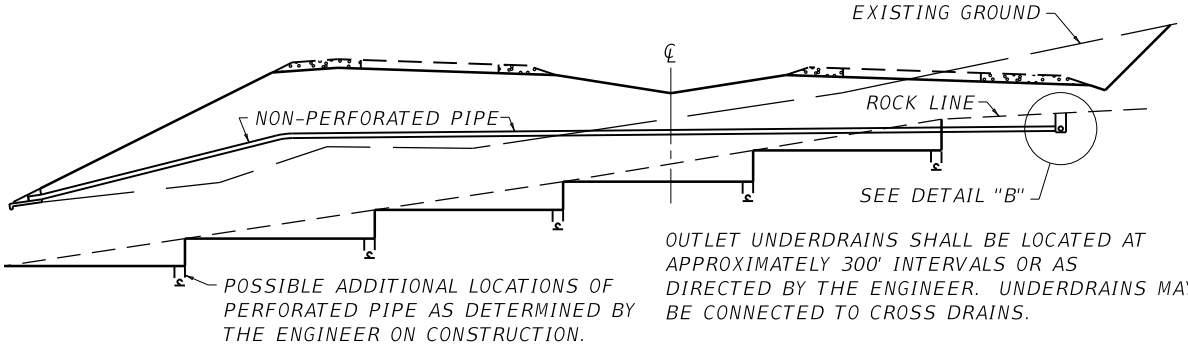

OUTLET UNDERDRAINS SHALL BE LOCATED AT APPROXIMATELY 300' INTERVALS OR AS DIRECTED BY THE ENGINEER. UNDERDRAINS MAY BE CONNECTED TO CROSS DRAINS.

SECTION A-A

DETAIL FOR TRANSVERSE UNDERDRAIN CUT TO FILL CONDITION

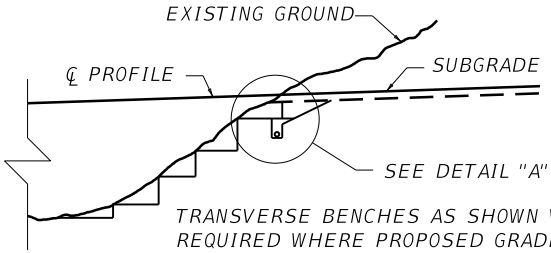

TRANSVERSE BENCHES AS SHOWN WILL BE REQUIRED WHERE PROPOSED GRADE INTERSECTS THE EXISTING GROUND.

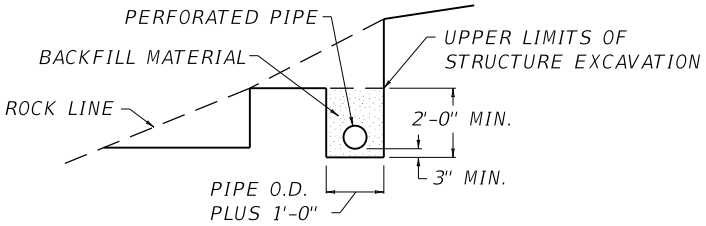

DETAIL "B"

~ NOTES ~

BID ITEMS AND UNIT TO BID	
ROADWAY EXCAVATION	CUYD
PERFORATED PIPE- △ IN	LF
NON-PERFORATED PIPE- △ IN	LF

△ = PIPE DIA. IN INCHES

1. LIMITS OF FIRST BENCH.
2. UPPER LIMITS OF STRUCTURE EXCAVATION.
3. ALL PERFORATED PIPE SHALL COMPLY WITH THE STANDARD SPECIFICATIONS.
4. ALL NON-PERFORATED PIPE SHALL BE THE SAME TYPE AS THE PERFORATED PIPE, EXCEPT WITHOUT PERFORATIONS.
5. THE EXCAVATION NECESSARY TO FORM THE BENCHES SHALL BE PAID FOR AT THE CONTRACT UNIT PRICE BID FOR ROADWAY EXCAVATION.
6. UNDERDRAINS WILL BE REQUIRED ON UPGRADE BENCH. THIS PERFORATED PIPE UNDERDRAIN SHOULD BE PLACED IN ROCK OR SHALE FORMATIONS IF POSSIBLE. PLAN LOCATIONS ARE FOR ESTIMATING PURPOSES ONLY. EXACT LOCATIONS TO BE DETERMINED BY THE ENGINEER ON CONSTRUCTION. THE FOOTAGE THUS INSTALLED SHALL BE PAID FOR AT THE CONTRACT UNIT PRICE PER LINEAR FOOT FOR PERFORATED PIPE WHICH SHALL CONSTITUTE FULL COMPENSATION FOR FURNISHING AND INSTALLING PIPE INCLUDING ALL CONNECTIONS, FITTINGS, FURNISHING AND PLACING AGGREGATE, PLACING BACKFILL, AND FURNISHING ALL LABOR AND TOOLS NECESSARY TO COMPLETE THE WORK.
7. EXCAVATION FOR BOTH THE PERFORATED AND NON-PERFORATED PIPE SHALL BE MEASURED AND PAID FOR AT THE UNIT PRICE AS SET FORTH IN THE STANDARD SPECIFICATIONS.
8. BENCHING SHALL BE REQUIRED AT ALL TRANSITIONS FROM ROCK CUTS TO FILL WHETHER OR NOT UNDERDRAIN IS REQUIRED.

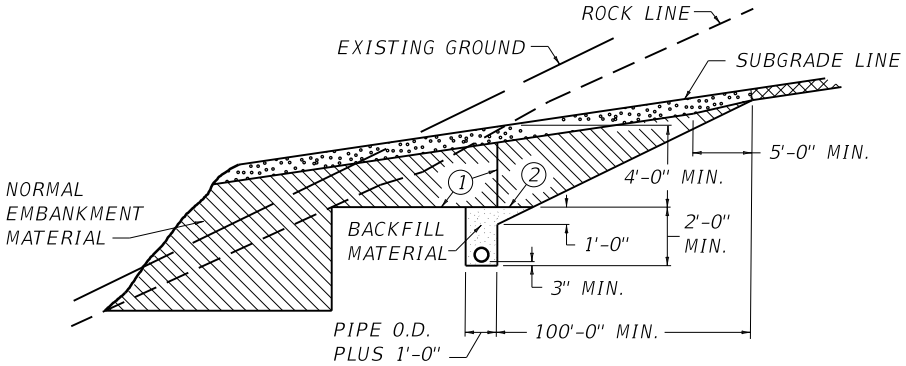

DETAIL "A"

USE WITH CUR. STD. DWG. RDP-001

KENTUCKY DEPARTMENT OF HIGHWAYS

PERFORATED PIPE UNDERDRAINS (LONGITUDINAL AND TRANSVERSE)

STANDARD DRAWING NO. RDP-006-04

SUBMITTED William E. Ginkel — DIRECTOR DIVISION OF DESIGN — 12-01-15 DATE

APPROVED — STATE HIGHWAY ENGINEER — 12-01-15 DATE

SECTIONS IN SOLID ROCK CUTS

DEPRESSED MEDIAN 36 FEET AND OVER

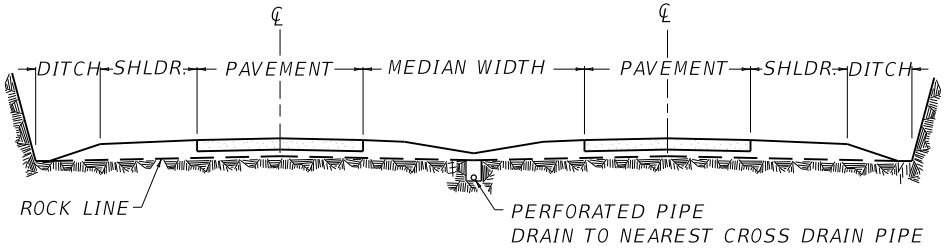

NORMAL SECTION

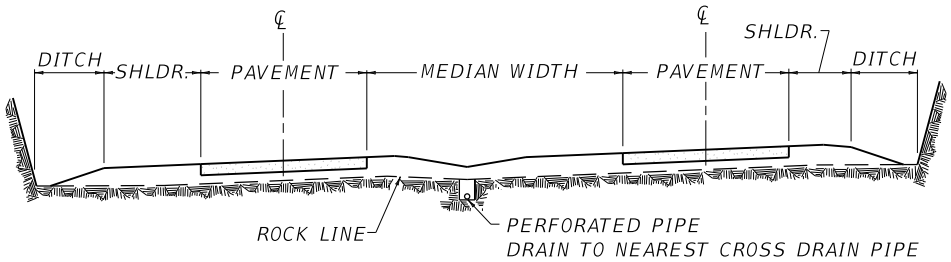

SUPERELEVATED SECTION

RAISED MEDIAN UNDER 36 FEET

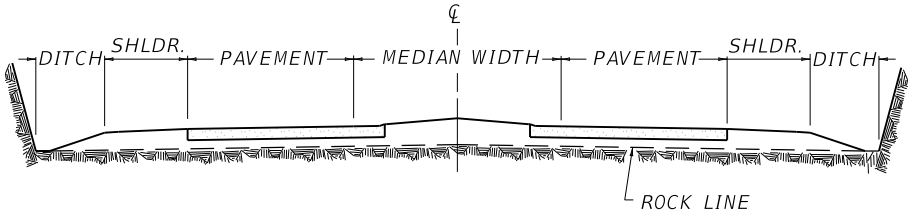

NORMAL SECTION

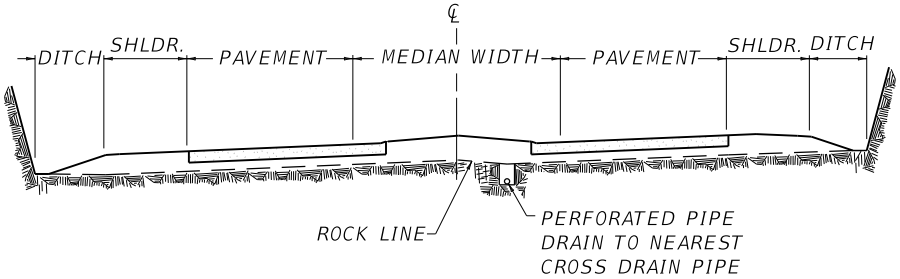

SUPERELEVATED SECTION

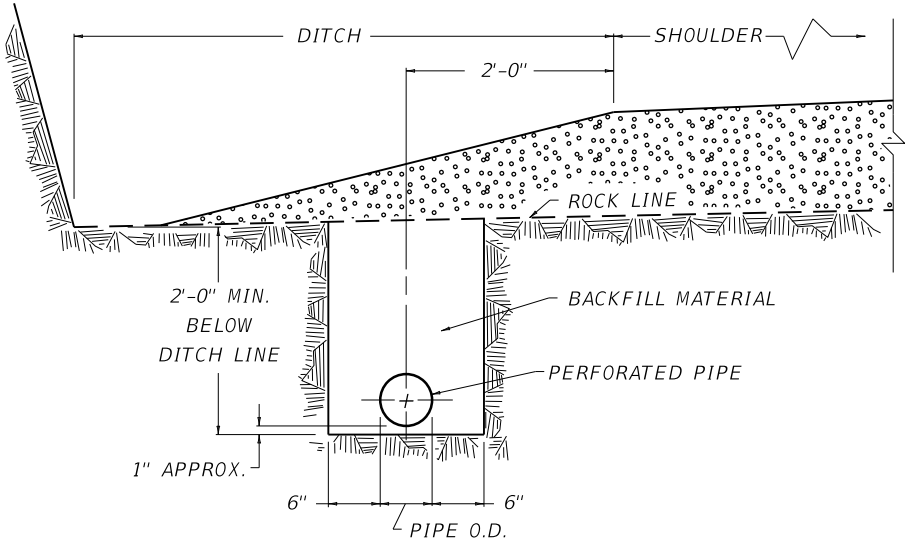

PERFORATED PIPE AT DITCH-SHOULDER LOCATION

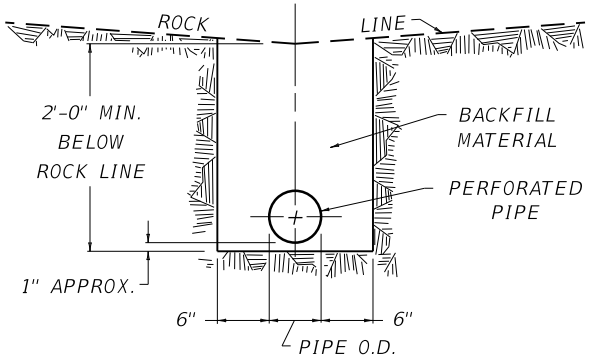

DETAIL OF PERFORATED PIPE AT LOCATIONS AS SHOWN ON THE SECTIONS

~ NOTES ~

BID ITEM AND UNIT TO BID

PERFORATED PIPE- △ IN LF

△ = PIPE DIA. IN INCHES

1. PERFORATED PIPE TO BE CONSTRUCTED AS DETAILED ONLY WHEN SPECIFICALLY CALLED FOR ON THE SOIL PROFILE, PLAN SHT. OR BOTH.

USE WITH CUR. STD. DWG. RDP-001

KENTUCKY
DEPARTMENT OF HIGHWAYS

PERFORATED
PIPE DETAILS
(SOLID ROCK)

STANDARD DRAWING NO. RDP-007-04

SUBMITTED William E. Ginkel DIRECTOR, DIVISION OF DESIGN 12-01-15 DATE

APPROVED STATE HIGHWAY ENGINEER 12-01-15 DATE

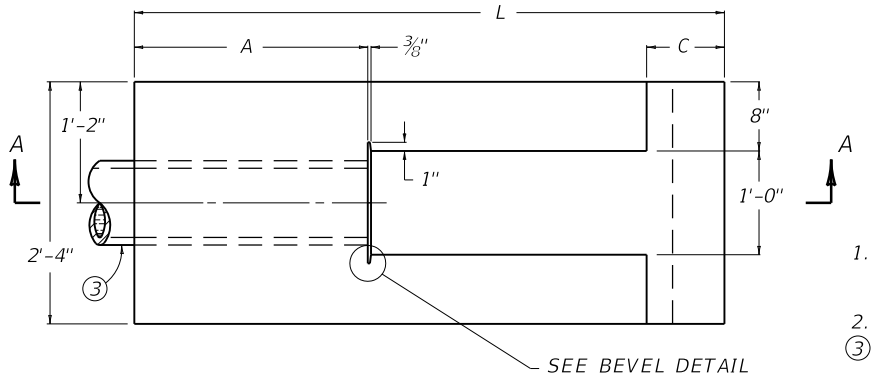

PLAN VIEW

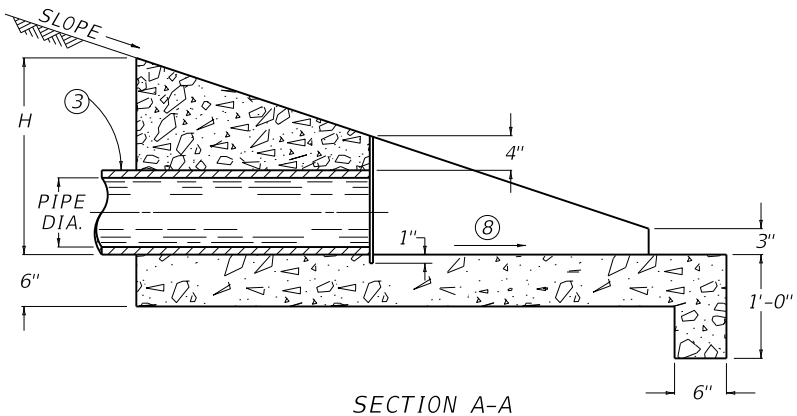

SECTION A-A

PIPE DIA.	SLOPE	DIMENSIONS				CLASS "A" CONCRETE
		L	H	A	C	CU. YDS.
4" AND 6"	2 : 1	3'-4 7/8"	1'-8 7/16"	1'-6"	6"	0.38
	3 : 1	5'-1 5/16"		2'-3"	9"	0.56
	4 : 1	6'-9 3/4"		3'-0"	1'-0"	0.74
	6 : 1	7'-2 5/8"	1'-2 7/16"	1'-6"	1'-6"	0.62
8"	2 : 1	3'-9 1/2"	1'-10 3/4"	1'-6"	6"	0.43
	3 : 1	5'-8 1/4"		2'-3"	9"	0.63
	4 : 1	7'-7"		3'-0"	1'-0"	0.83
	6 : 1	8'-4 1/2"	1'-4 3/4"	1'-6"	1'-6"	0.73
10"	2 : 1	4'-2"	2'-1"	1'-6"	6"	0.47
	3 : 1	6'-3"		2'-3"	9"	0.69
	4 : 1	8'-4"		3'-0"	1'-0"	0.91
	6 : 1	9'-6"	1'-7"	1'-6"	1'-6"	0.83

~NOTES~

BID ITEMS AND UNIT TO BID

CRUSHED AGGREGATE SIZE NO 2	TON
PERF PIPE HEADWALL TY ⊗ - △ IN	EACH

⊗ 1 = 2:1 SLOPE
2 = 3:1 SLOPE
3 = 4:1 SLOPE
4 = 6:1 SLOPE

△ = PIPE DIA. IN INCHES

BID ITEM EXAMPLE: PERF PIPE HWALL TY 2 - 6 INCH

1. THE CONTRACT UNIT PRICE FOR PERF. PIPE HEADWALLS INCLUDES ALL LABOR, EXCAVATION, FORMS, CLASS "A" CONCRETE AND INCIDENTALS NECESSARY TO COMPLETE ONE INSTALLATION.
2. THIS HEADWALL IS TO BE USED AT THE OUTLET END OF PERFORATED PIPE INSTALLATIONS.

(3) APPROXIMATELY 8'-0" TO 12'-0" OF PIPE AT THE OUTLET SHALL BE NON-PERFORATED PIPE MEETING THE REQUIREMENTS OF THE PERFORATED PIPE, EXCEPT FOR PERFORATIONS. IF VITRIFIED CLAY PIPE IS USED, ALL JOINTS WHICH LIE WITHIN THE ABOVE LIMITS AND NOT ENCASED IN CONCRETE (SEE NOTE 4) SHALL BE IN ACCORDANCE WITH THE CURRENT ASTM C-443.

4. ANY PIPE WHICH HAS LESS THAN 1'-0" OF COVER OVER ITS TOP SHALL BE INCASED IN 6" OF CONCRETE ON ALL SIDES.

(5) RODENT SCREEN OF 2x2 MESH 16 GAUGE (0.063 IN. DIA.) STEEL HEAVY (MAX.) HOT DIP GALVANIZED WOVEN WIRE CLOTH. THE MESH SHALL EXTEND A MINIMUM OF 1" ABOVE THE O.D. OF THE PIPE.

6. THE SLOT IS TO BE CONSTRUCTED SO THAT THE MESH CAN BE REMOVED FOR CLEANOUT PURPOSES.

(7) BEVEL PERMITTED FOR EASY FORM REMOVAL.

(8) INSTALL OR CONSTRUCT HEADWALL TO SLOPE 4% TO INSURE POSITIVE OUTLET FLOW.

(9) CRUSHED AGGREGATE SIZE NO. 2 PLACED A MIN. DEPTH OF 4". (APPROX. 1 TON PER HEADWALL)

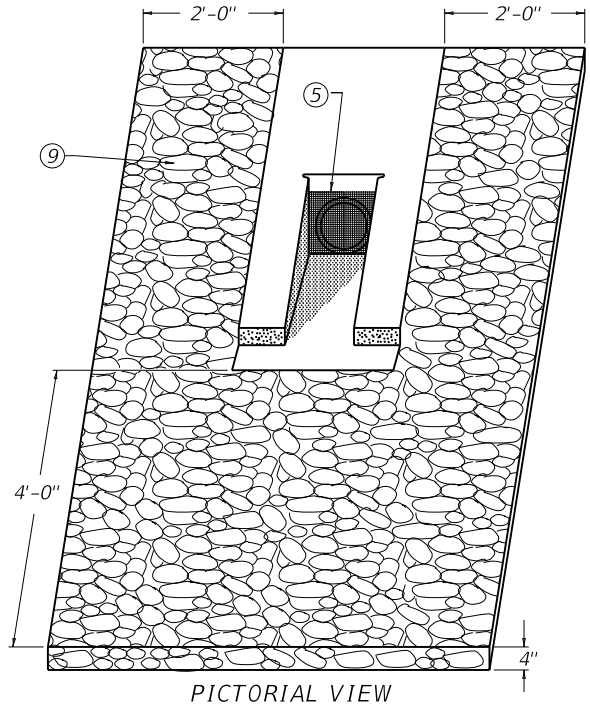

PICTORIAL VIEW

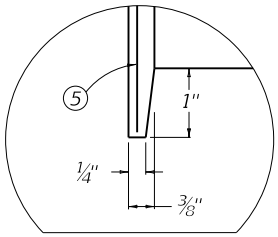

(7) BEVEL DETAIL

USE WITH CUR. STD. DWG.
RDP-005

KENTUCKY
DEPARTMENT OF HIGHWAYS

PERFORATED PIPE HEADWALLS

STANDARD DRAWING NO. RDP-010-09

SUBMITTED William E. Ginkel — DIRECTOR DIVISION OF DESIGN — 12-01-15 DATE

APPROVED — STATE HIGHWAY ENGINEER — 12-01-15 DATE

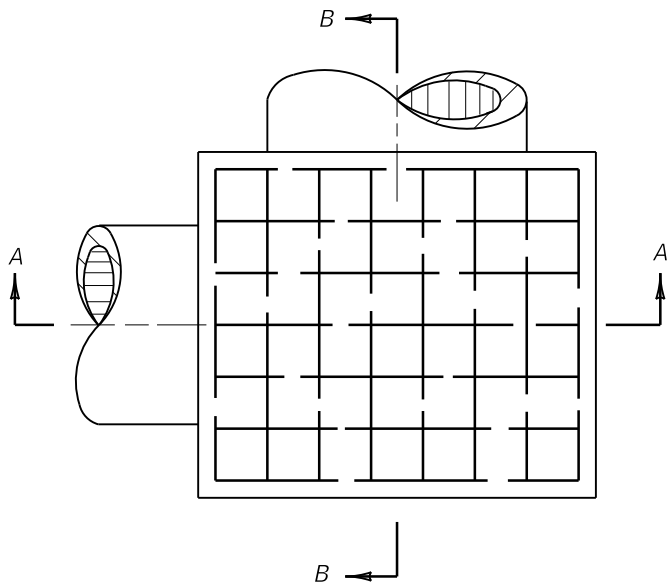

PLAN VIEW

~ NOTES ~

BID ITEM AND UNIT TO BID
JUNCTION BOX EACH

1. THE CONTRACT UNIT PRICE EACH SHALL INCLUDE PAYMENT IN FULL FOR ALL MATERIALS, EXCAVATION, LABOR AND INCIDENTALS NECESSARY TO COMPLETE THE WORK.
2. H = D + t + 1'-0" FOR THE LARGEST PIPE INVOLVED.
3. STEEL REINFORCEMENT SHALL BE NO. 4 BARS PLACED 6" O.C.
4. THE MAXIMUM DEPTH OF THE BOX FROM THE FINAL GRADE TO FLOW LINE OF PIPE SHALL BE 8'-0". ANY BOXES DEEPER THAN 8'-0" SHALL BE SPECIFICALLY DESIGNED.
5. SEE CUR. STD. DWG. RDX-002 FOR DIMENSIONS AND QUANTITIES.
6. FOR THIS APPLICATION THE "X" DIMENSION IS ASSUMED TO BE EQUAL TO OR GREATER THAN THE "Y" DIMENSION.
7. THE BOX SIZE NUMBER IS TO BE SHOWN ON THE PLANS AND SHALL BE DETERMINED BY THE LARGEST PIPE IN THE "X" OR "Y" DIMENSION.
8. TO ELIMINATE FORM REMOVAL, THE TOP SHALL BE PRECAST.

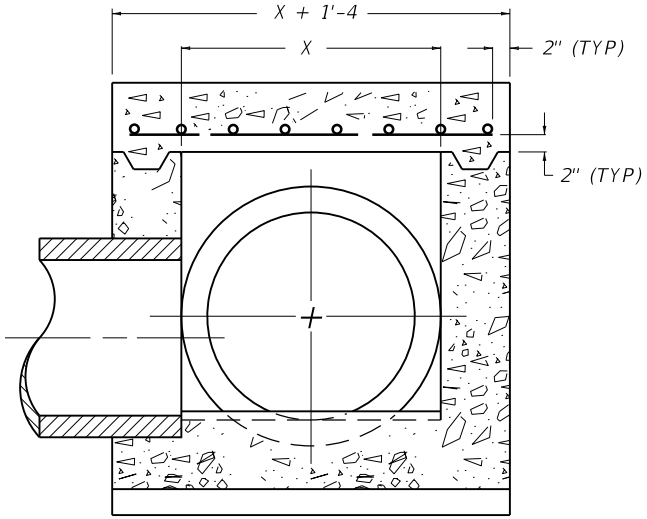

SECTION A-A

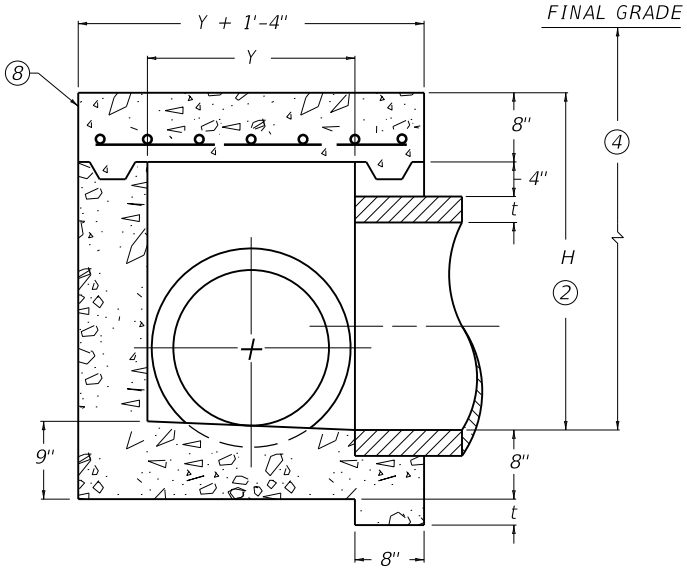

SECTION B-B

USE WITH CUR. STD. DWG.
RDX-002

KENTUCKY
DEPARTMENT OF HIGHWAYS

JUNCTION BOX

STANDARD DRAWING NO. RDX-001-06

SUBMITTED William S. Gabbard — DIRECTOR, DIVISION OF DESIGN — 12-01-15 DATE

APPROVED — STATE HIGHWAY ENGINEER — 12-01-15 DATE

DIMENSIONS AND ESTIMATE OF QUANTITIES

INLET SIZE			PIPE	(1)	CONCRETE		REINF. STEEL
NO.	X	Y	MAX. DIA.	H	CU. YDS.	(2) Q	LBS.
1	2'-0"	2'-0"	12"	2'-2"	0.99	0.3	28
2			15"	2'-5"	1.06		
3			18"	2'-9"	1.13		
4	2'-6"		21"	3'-0"	1.35		32
5		2'-6"			1.51		37
6		2'-0"	24"	3'-3"	1.44		32
7		2'-6"			1.60		37
8	3'-0"	2'-0"	27"	3'-6"	1.68		
9		2'-6"			1.86		42
10		3'-0"			2.04	0.4	48
11	3'-6"	2'-0"	30"	3'-10"	1.93	0.3	41
12		2'-6"			2.13	0.4	47
13		3'-0"			2.34		54
14		3'-6"			2.54		60
15		2'-0"	33"	4'-1"	2.02	0.3	41
16		2'-6"			2.24	0.4	47
17		3'-0"			2.45		54
18		3'-6"			2.66		60
19	4'-0"	2'-0"	36"	4'-4"	2.30		45
20		2'-6"			2.53		52
21		3'-0"			2.76		59
22		3'-6"			2.99		66
23		4'-0"			3.22	0.5	73
24	4'-6"	2'-0"	42"	4'-11"	2.70	0.4	50
25		2'-6"			2.95		57
26		3'-0"			3.21		65
27		3'-6"			3.47	0.5	73
28		4'-0"			3.73		80
29		4'-6"			3.98		88
30	5'-0"	2'-0"	48"	5'-5"	3.12	0.4	54
31		2'-6"			3.41		62
32		3'-0"			3.69	0.5	71
33		3'-6"			3.97		79
34		4'-0"			4.26		88
35		4'-6"			4.54		96
36		5'-0"			4.83	0.6	104
37	5'-6"	2'-0"	54"	6'-0"	3.58	0.4	58
38		2'-6"			3.89	0.5	67
39		3'-0"			4.20		76
40		3'-6"			4.51		86
41		4'-0"			4.82		95
42		4'-6"			5.13	0.6	104
43		5'-0"			5.44		113
44		5'-6"			5.75		122
45	6'-0"	2'-0"	60"	6'-6"	4.06	0.5	63
46		2'-6"			4.39		72
47		3'-0"			4.73		82
48		3'-6"			5.07		92

INLET SIZE			PIPE	(1)	CONCRETE		REINF. STEEL
NO.	X	Y	MAX. DIA.	H	CU. YDS.	(2) Q	LBS.
49	6'-0"	4'-0"	60"	6'-6"	5.40	0.6	102
50		4'-6"			5.74		111
51		5'-0"			6.08		121
52		5'-6"			6.42		131
53		6'-0"			6.75	0.7	140
54	7'-0"	2'-0"	66"	7'-1"	4.81	0.5	71
55		2'-6"			5.19		83
56		3'-0"			5.57	0.6	94
57		3'-6"			5.94		105
58		4'-0"			6.32		116
59		4'-6"			6.70		127
60		5'-0"			7.07	0.7	138
61		5'-6"			7.45		149
62		6'-0"			7.83		160
63		7'-0"			8.58	0.8	182
64	7'-6"	2'-0"	72"	7'-7"	5.37	0.5	76
65		2'-6"			5.77	0.6	88
66		3'-0"			6.17		99
67		3'-6"			6.57		111
68		4'-0"			6.98		123
69		4'-6"			7.38	0.7	134
70		5'-0"			7.78		146
71		5'-6"			8.19		158
72		6'-0"			8.59		169
73		7'-0"			9.39	0.8	193
74		7'-6"			9.80		204

REFERENCE CHART

DIA. OF PIPE	JUNCTION BOX		CONCRETE TO DEDUCT FOR EACH PIPE
	PIPE ON "X" SIDE OF BOX	PIPE ON "Y" SIDE OF BOX	CU. YDS.
0	2'-0"	2'-0"	---
12"			0.1
15"-18"			
21"-24"	2'-6"	2'-6"	
27"	3'-0"	3'-0"	0.2
30"-33"	3'-6"	3'-6"	
36"	4'-0"	4'-0"	0.3
42"	4'-6"	4'-6"	0.4
48"	5'-0"	5'-0"	0.5
54"	5'-6"	5'-6"	0.6
60"	6'-0"	6'-0"	0.7
66"	7'-0"	7'-0"	0.8
72"	7'-6"	7'-6"	1.0

~ NOTES ~

(1) BASED ON "H" AS EQUAL TO D+t+1'-0".

(2) "Q" = CU. YDS. OF CONCRETE PER FOOT INCREASE OR DECREASE WHEN "H" VARIES FROM D+t+1'-0".

3. NO DEDUCTIONS HAVE BEEN MADE FOR PIPE, SEE REFERENCE CHART FOR QUANTITIES TO DEDUCT.

4. THE DIMENSIONS AND QUANTITIES HAVE BEEN CALCULATED FOR ROUND CONCRETE PIPE. WHEN NON-CIRCULAR PIPE IS USED THE BOX SIZE SHALL BE DETERMINED BY THE CONTROLLING DIMENSIONS OF THE PIPE.

USE WITH CUR. STD. DWG. RDX-001

KENTUCKY DEPARTMENT OF HIGHWAYS

JUNCTION BOX

(DIMENSIONS & QUANTITIES)

STANDARD DRAWING NO. RDX-002-04

SUBMITTED _____ DIRECTOR DIVISION OF DESIGN — DATE 12-01-15

APPROVED _____ STATE HIGHWAY ENGINEER — DATE 12-01-15

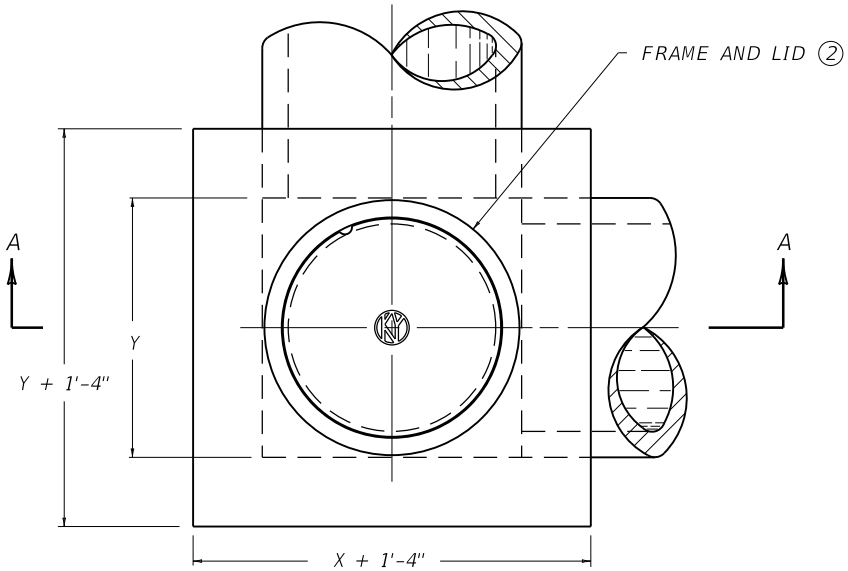

PLAN VIEW

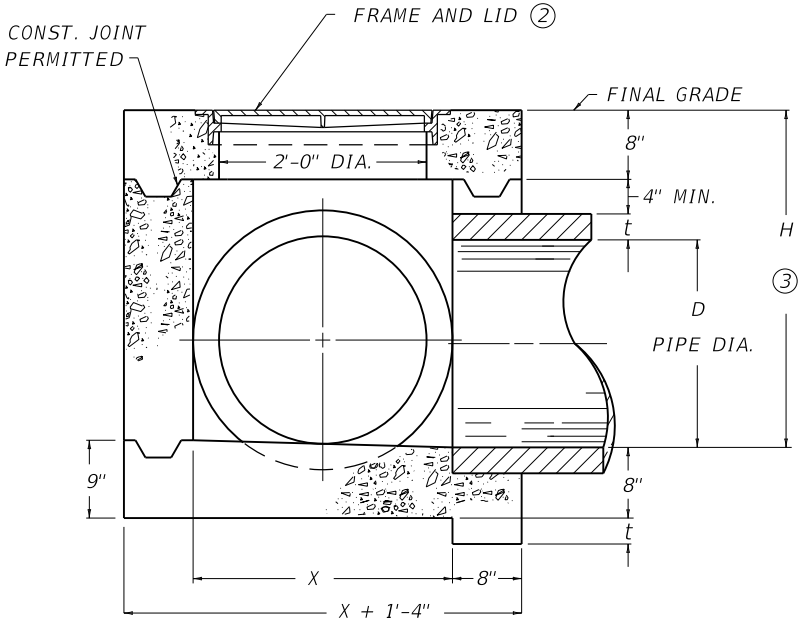

SECTION A-A

~ NOTES ~

BID ITEM AND UNIT TO BID
JUNCTION BOX TYPE B (☆) EACH
(☆) = "1" (FRAME AND LID TYPE 1)
(☆) = "2" (FRAME AND LID TYPE 2)

1. THE CONTRACT UNIT PRICE EACH SHALL INCLUDE PAYMENT IN FULL FOR EXCAVATION, LABOR, FRAME AND LID, CONCRETE, AND ALL OTHER INCIDENTALS NECESSARY TO COMPLETE THE WORK.

② WHEN THIS BOX IS TO BE USED IN NON-VEHICULAR TRAFFIC AREAS SEE CUR. STD. DWG. RDM-100 "FRAME AND LID TYPE 1".
WHEN THIS BOX IS TO BE USED IN VEHICULAR TRAFFIC AREAS SEE CUR. STD. DWG. RDM-105 "FRAME AND LID TYPE 2".

③ THE MAXIMUM DEPTH OF THE BOX FROM FINAL GRADE TO FLOW LINE OF PIPE SHALL BE 8'-0". ANY BOXES DEEPER THAN 8'-0" SHALL BE SPECIFICALLY DESIGNED.

④ BASED ON "H" AS EQUAL TO D + t + 1'-0".

⑤ "Q" = CUBIC YARDS OF CONCRETE PER FOOT INCREASE OR DECREASE WHEN "H" VARIES FROM D + t + 1'-0".

6. NO DEDUCTIONS HAVE BEEN MADE FOR PIPE, SEE REFERENCE CHART FOR QUANTITIES TO DEDUCT.
7. THE DIMENSIONS AND QUANTITIES HAVE BEEN CALCULATED FOR ROUND CONCRETE PIPE. WHEN NON-CIRCULAR PIPE IS USED THE BOX SIZE SHALL BE DETERMINED BY THE CONTROLLING DIMENSIONS OF THE PIPE.
8. FOR THIS APPLICATION THE "X" DIMENSION IS ASSUMED TO BE EQUAL TO OR GREATER THAN THE "Y" DIMENSION.
9. THE BOX SIZE NUMBER IS TO BE SHOWN ON THE PLANS AND SHALL BE DETERMINED BY THE LARGEST PIPE IN THE "X" AND "Y" DIMENSION.

DIMENSIONS & ESTIMATE OF QUANTITIES

INLET SIZE			PIPE	④	CONCRETE	
NO.	X	Y	MAX. DIA.	H	CU. YDS.	⑤ Q
1	2'-0"	2'-0"	12"	2'-2"	0.91	0.3
2			15"	2'-5"	0.98	
3			18"	2'-9"	1.05	
4	2'-6"		21"	3'-0"	1.27	
5		2'-6"			1.43	
6		2'-0"	24"	3'-3"	1.36	
7		2'-6"			1.52	

REFERENCE CHART			
DIA. OF PIPE	JUNCTION BOX		CONCRETE TO DEDUCT FOR EACH PIPE
	PIPE ON "X" SIDE OF BOX	PIPE ON "Y" SIDE OF BOX	CU. YDS.
0	2'-0"	2'-0"	---
12"			0.1
15"-18"			
21"-24"	2'-6"	2'-6"	

USE WITH CUR. STD. DWGS.
RDM-100 RDM-105

KENTUCKY
DEPARTMENT OF HIGHWAYS

JUNCTION BOX
TYPE B☆

STANDARD DRAWING NO. RDX-005-03

SUBMITTED William E. Ginkel 12-01-15
DIRECTOR, DIVISION OF DESIGN DATE

APPROVED 12-01-15
STATE HIGHWAY ENGINEER DATE

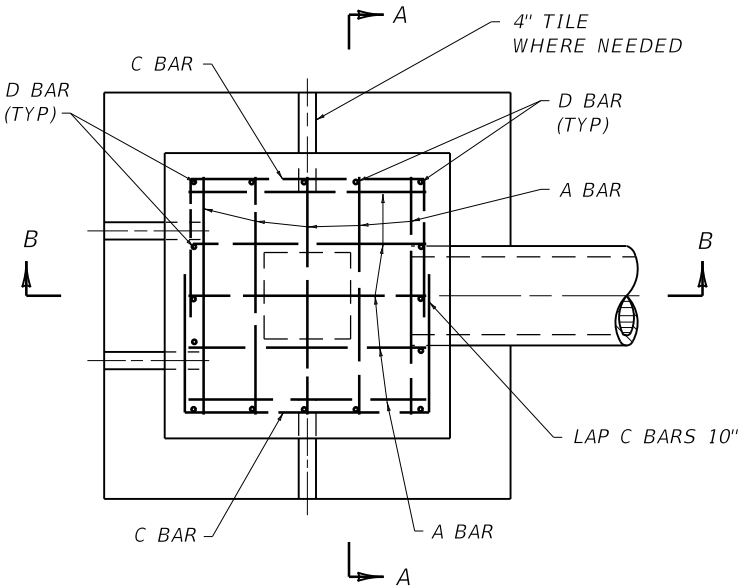

PLAN VIEW

~ NOTES ~

BID ITEM AND UNIT TO BID
SPRING BOX INLET TYPE A EACH

1. LOCATION OF OPENING MAY BE DETERMINED IN THE FIELD FOR A SIDE OR BOTTOM SPRING INLET.
2. SPRING INLET TYPE "A" SHALL BE USED WHEN FILL OVER TOP IS 10' OR MORE.

STEEL REINFORCEMENT

NO. 4 STEEL BARS			TOTAL LBS.
BAR	QTY.	LIN. FT.	
A	10	4'-7"	105
C	6	9'-9"	
D	16	3'-4"	

CLASS "A" CONCRETE

PIPE DIA.	CU. YDS. CONCRETE
12"	4.61
15"	4.59
18"	4.58

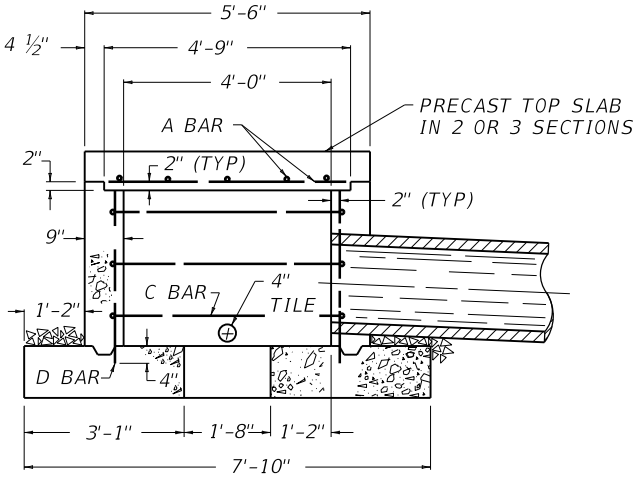

SECTION B-B

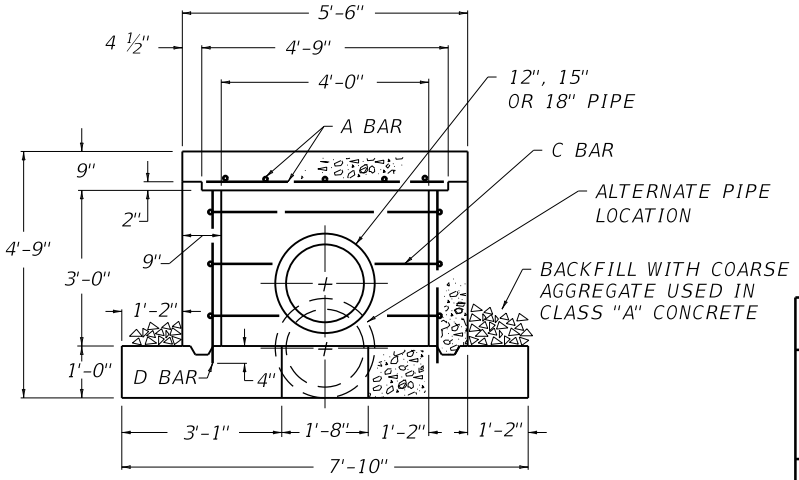

SECTION A-A

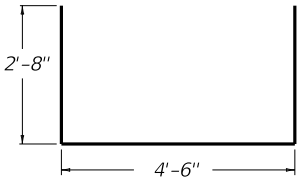

C BAR DETAIL

KENTUCKY
DEPARTMENT OF HIGHWAYS

SPRING BOX
INLET
TYPE A

STANDARD DRAWING NO. RDX-010-05

SUBMITTED William E. Ginkel — DIRECTOR DIVISION OF DESIGN — 12-01-15 DATE

APPROVED — STATE HIGHWAY ENGINEER — 12-01-15 DATE

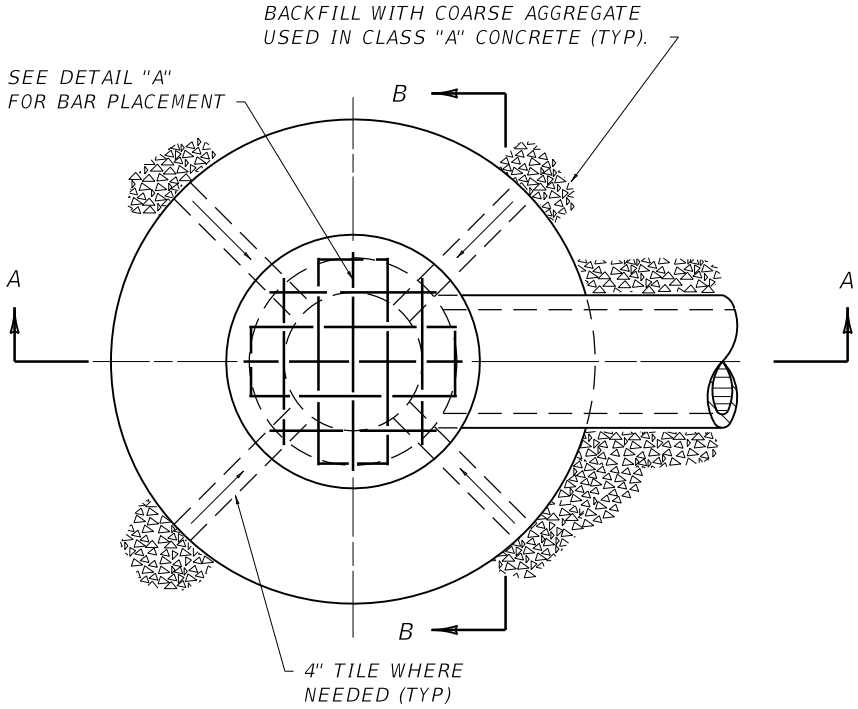

PLAN VIEW

~ NOTES ~

BID ITEM AND UNIT TO BID
SPRING BOX INLET TYPE B EACH

1. 12", 15", OR 18" DIAMETER PIPE OUTLET (SEE PIPE SECTIONS FOR SIZE AND TYPE). MORTAR AROUND PIPE TO PREVENT SEEPAGE.
2. SPRING BOX INLET TYPE "B" MAY BE USED WHEN FILL OVER TOP IS LESS THAN 10'-0".
3. STEEL REINFORCEMENT PLACED 6" ON CENTERS.
4. "t" IS CONCRETE PIPE WALL THICKNESS OR METAL PIPE CORRUGATION DEPTH.

STEEL REINFORCEMENT
FOR CONCRETE COVER

NO. 3 STEEL BARS			TOTAL LBS.
BAR	QTY.	LENGTH	
A	4	1'-0"	13
B	4	2'-5"	
C	4	3'-0"	
D	2	3'-2"	

CLASS "A" CONCRETE

PIPE DIA.	CU. YDS. CONCRETE
12"	1.54
15"	
18"	

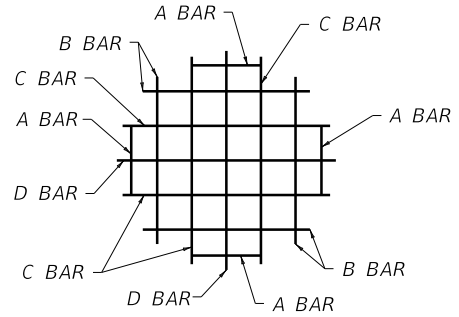

DETAIL "A"

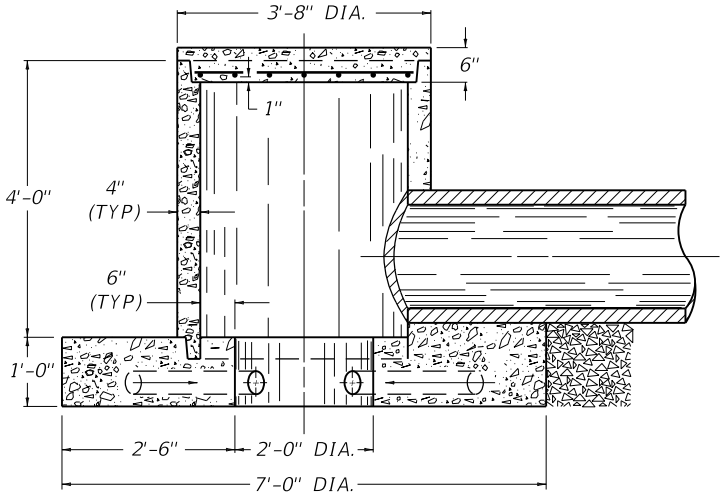

SECTION A-A

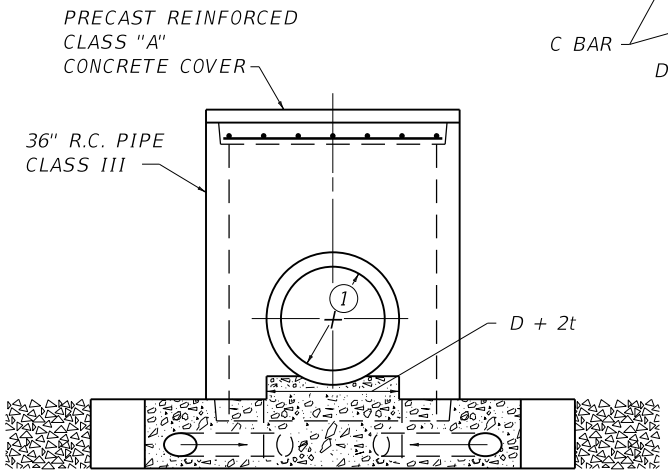

SECTION B-B

KENTUCKY
DEPARTMENT OF HIGHWAYS

SPRING BOX INLET
TYPE B

STANDARD DRAWING NO. RDX-011-05

SUBMITTED _____ DIRECTOR DIVISION OF DESIGN 12-01-15 DATE

APPROVED _____ STATE HIGHWAY ENGINEER 12-01-15 DATE

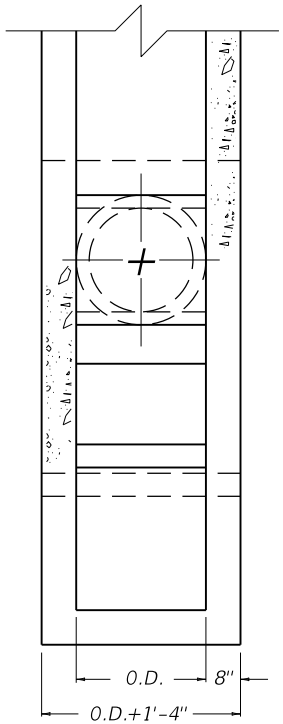

FRONT ELEVATION

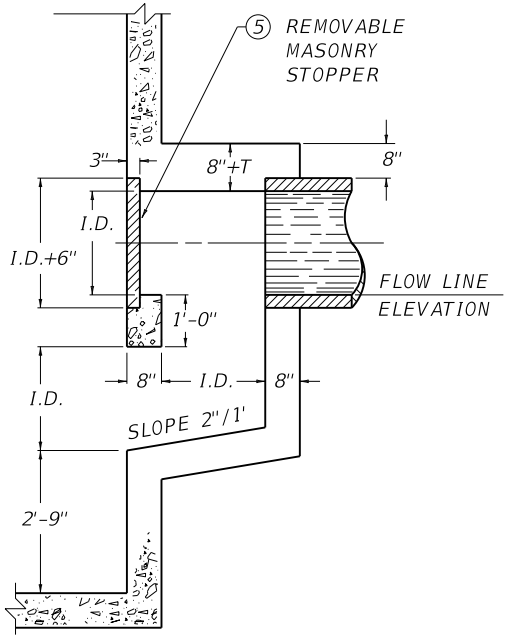

RIGHT SECTIONAL ELEVATION

PIPE SIZE	NO. 5 REINFORCEMENT BARS QUANTITY - LENGTH AND WEIGHT											CLASS A CONC.
	a		b		c		d		e		LBS.	
	QTY.	LENGTH	QTY.	LENGTH	QTY.	LENGTH	QTY.	LENGTH	QTY.	LENGTH		CU.YDS.
12"	6	2'-10"	8	1'-4"	11	1'-8"	4	3'-4"	4	6'-4"	88	0.52
15"	6	3'-1"	10	1'-7"	12	2'-0"	4	3'-10"	4	6'-10"	105	0.69
18"	8	3'-4"	10	1'-10"	13	2'-3"	6	4'-4"	4	7'-4"	135	0.87
21"	8	3'-7"	12	2'-1"	14	2'-7"	6	4'-10"	4	7'-10"	157	1.09
24"	8	3'-10"	12	2'-4"	15	2'-10"	6	5'-4"	4	8'-4"	174	1.32
30"	10	4'-4"	14	2'-10"	17	3'-5"	8	6'-4"	4	9'-4"	239	1.87
36"	10	4'-10"	16	3'-4"	19	4'-0"	8	7'-4"	4	10'-4"	290	2.52
42"	12	5'-4"	18	3'-10"	21	4'-7"	10	8'-4"	4	11'-4"	373	3.28
48"	12	5'-10"	20	4'-4"	23	5'-2"	10	9'-4"	4	12'-4"	436	4.15

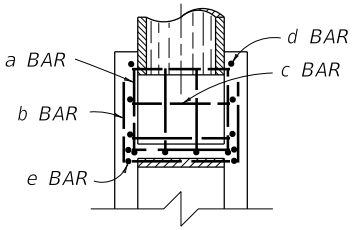

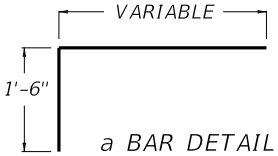

a BAR DETAIL

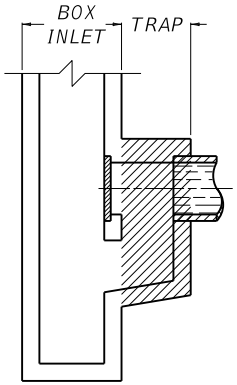

TYPICAL TRAPPED BOX INLET

~ NOTES ~

BID ITEMS AND UNIT TO BID
CURB BOX INLET TYPE A TRAPPED — EACH
OR
CURB BOX INLET TYPE B TRAPPED — EACH

1. QUANTITIES SHOWN FOR STEEL AND CONCRETE ARE FOR INFORMATIONAL PURPOSES ONLY, AND ARE INCLUDED IN THE BID ITEM.
2. STEEL BARS SPACED APPROXIMATELY 12" O.C. THE MINIMUM REQUIREMENT FOR REINFORCING STEEL SHALL BE GRADE 40.
3. NO CONSTRUCTION JOINTS PERMITTED BELOW FLOW LINE ELEVATION.
4. THIS INLET TRAP MAY BE APPLIED TO ANY BOX INLET WITH A FLAT VERTICAL FACE.

(5) CAST IRON OR OTHER TYPES OF STOPPERS WILL BE PERMITTED IF APPROVED BY THE ENGINEER.

6. DRAWING IS FOR TRAP PORTION OF INLET ONLY AND MUST BE CONSTRUCTED AS AN INTEGRAL PART OF THE BOX INLET.

T = PIPE THICKNESS.
I.D. = INSIDE DIAMETER OF PIPE.
O.D. = OUTSIDE DIAMETER OF PIPE.

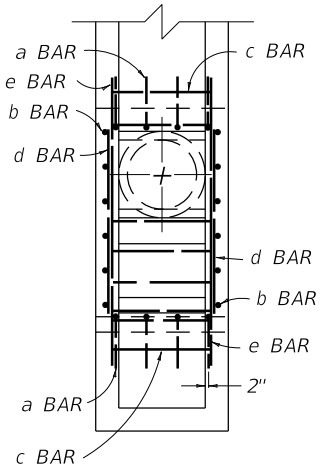

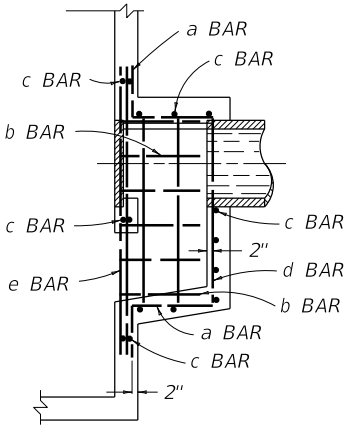

STEEL PATTERN

KENTUCKY
DEPARTMENT OF HIGHWAYS

TRAP FOR
BOX INLETS

STANDARD DRAWING NO. RDX-020-05

SUBMITTED William S. Ghaled — DIRECTOR DIVISION OF DESIGN — 12-01-15 DATE

APPROVED — STATE HIGHWAY ENGINEER — 12-01-15 DATE

TYPICAL LATERAL SHOULDER DRAINS

FOUR LANE DIVIDED

DEPRESSED MEDIAN

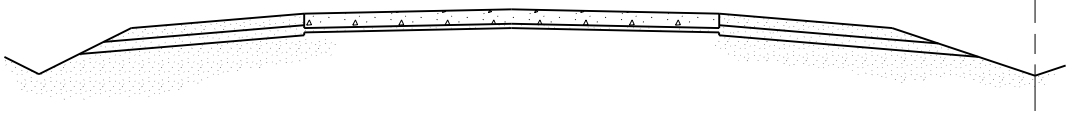

RAISED MEDIAN

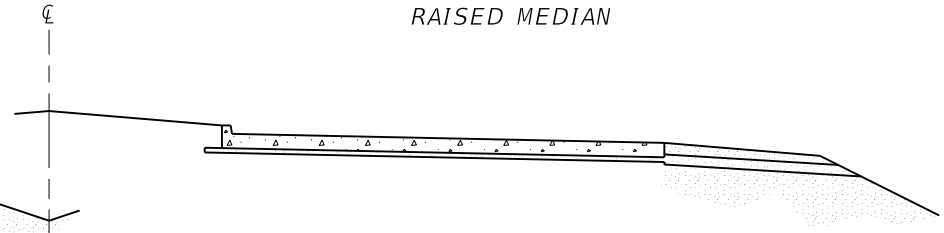

NORMAL SECTION

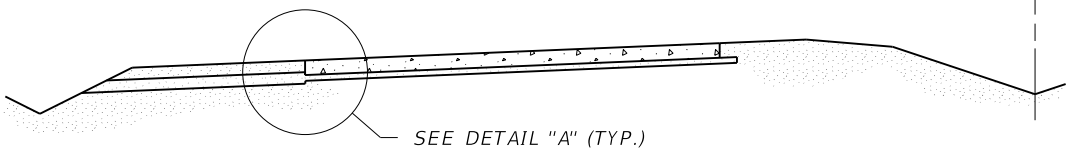

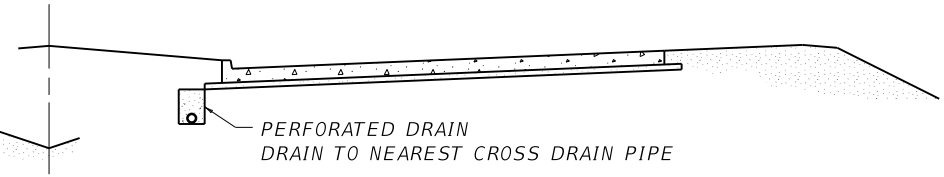

SUPERELEVATED SECTION

MUNICIPAL TYPE

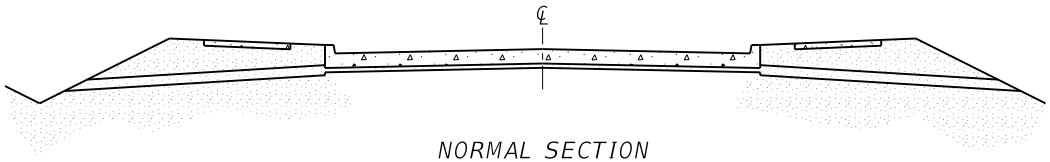

NORMAL SECTION

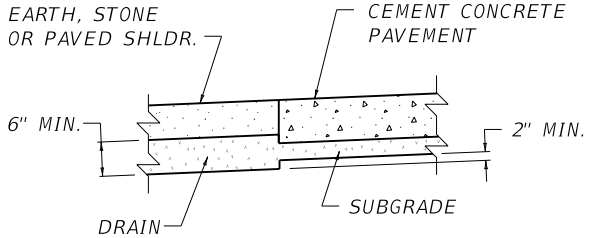

DETAIL "A"

~ NOTES ~

1. SHOULDER DRAINS SHALL BE:
   - REQUIRED FOR EARTH SHOULDERS OR WHERE THE SHOULDER AGGREGATE IS LESS THAN PAVEMENT THICKNESS.
   - REQUIRED FOR TWO-LANE, MULTI-LANE AND BIFURCATED FACILITES.
   - SPACED OPPOSITE TRANSVERSE JOINTS EXCEPT AT BRIDGE ENDS, AND ON LOW SIDE OF SUPERELEVATED CURVES AT MID-POINT OF 50 FOOT TRANSVERSE JOINT SPACING.
   - CONSTRUCTED, MEASURED, AND PAID FOR IN ACCORDANCE WITH STANDARD SPECIFICATIONS.
   - ELIMINATED IF APPROVED IN WRITING BY THE ENGINEER, PROVIDED POROUS ROCK OR POROUS BANK GRAVEL IS USED IN SHOULDERS.

KENTUCKY
DEPARTMENT OF HIGHWAYS

SUBGRADE DRAINAGE
CONCRETE PAVEMENT

STANDARD DRAWING NO. RDX-050-05

SUBMITTED William E. Ginkel — DIRECTOR DIVISION OF DESIGN — 12-01-15 DATE

APPROVED — STATE HIGHWAY ENGINEER — 12-01-15 DATE

INTERMEDIATE ANCHOR FOR PIPE (CLASS "A" CONCRETE)

		DIAMETER OF PIPE IN INCHES															
	% GRADE	12"	15"	18"	21"	24"	27"	30"	36"	42"	48"	54"	60"	66"	72"	78"	84"
VOLUME IN CU. YDS. OF CLASS "A" CONC. FOR ONE ANCHOR	0	0.68	0.86	1.07	1.31	1.59	1.90	2.25	3.06	5.91	7.41	9.30	11.28	14.99	18.34	22.15	25.64
	10	0.72	0.91	1.13	1.38	1.68	2.01	2.38	3.24	6.23	7.83	9.70	11.79	15.77	19.27	23.24	26.88
	20	0.75	0.96	1.19	1.44	1.78	2.14	2.52	3.43	6.59	8.28	10.07	12.24	16.48	20.11	24.22	27.98
	30	0.79	1.01	1.26	1.53	1.88	2.27	2.67	3.65	6.97	8.78	10.40	12.64	17.12	20.87	25.10	28.95
	40	0.84	1.07	1.33	1.62	1.99	2.41	2.83	3.88	7.39	9.31	10.69	12.99	17.70	21.53	25.88	29.79
	50	0.88	1.13	1.41	1.72	2.11	2.56	3.01	4.12	7.83	9.87	10.95	13.30	18.22	22.13	26.55	30.51
	60	0.93	1.19	1.49	1.82	2.24	2.71	3.19	4.38	8.29	10.47	11.12	13.57	18.69	22.66	27.15	31.15
	70	0.98	1.25	1.57	1.94	2.37	2.87	3.38	4.65	8.77	11.10	11.40	13.81	19.12	23.14	27.69	31.70
	80	1.03	1.32	1.66	2.08	2.50	3.07	3.58	4.93	9.28	11.58	11.74	14.02	19.51	23.57	28.16	32.17
	90	1.08	1.39	1.75	2.19	2.64	3.25	3.79	5.22	9.79	11.75	12.41	14.21	19.79	23.87	28.46	32.42
	100	1.13	1.46	1.84	2.31	2.78	3.43	4.00	5.52	10.32	11.91	13.10	14.38	20.20	24.31	28.95	32.92
DIMENSIONS	L	3'-4"	3'-7½"	3'-11"	4'-2½"	4'-6"	4'-9½"	5'-1"	5'-8"	6'-11"	7'-6"	8'-1"	8'-8"	9'-7"	10'-2"	10'-9"	11'-4"
	W	2'-4"	2'-7½"	2'-11"	3'-2½"	3'-6"	3'-9½"	4'-1"	4'-8"	5'-7"	6'-2"	6'-9"	7'-4"	8'-1"	8'-8"	9'-3"	9'-10"
	H	1'-8"	1'-11¼"	2'-2½"	2'-5¾"	2'-9"	3'-0¼"	3'-3½"	3'-10"	4'-6½"	5'-1"	5'-7½"	6'-2"	6'-9½"	7'-4"	7'-10½"	8'-5"
	D	1'-0"	1'-0"	1'-0"	1'-0"	1'-0"	1'-0"	1'-0"	1'-0"	1'-6"	1'-6"	1'-6"	1'-8"	1'-8"	1'-8"	2'-0"	2'-0"
	T	6"	6"	6"	6"	6"	6"	6"	6"	8"	8"	8"	8"	9"	9"	9"	9"

END ANCHOR FOR PIPE OUTLET (CLASS "A" CONCRETE)

DIMENSIONS	L	2'-4"	2'-8"	2'-9"	3'-3"	3'-6"	3'-10"	4'-1"	4'-0"	5'-3"	5'-10"	6'-5"	7'-0"	7'-7"	8'-2"	8'-9"	9'-4"
	H ON EARTH	1'-6"	1'-6"	1'-6"	1'-6"	1'-6"	1'-6"	1'-6"	1'-6"	2'-0"	2'-0"	2'-0"	2'-0"	2'-0"	2'-0"	2'-0"	2'-0"
	H ON ROCK	1'-0"	1'-0"	1'-0"	1'-0"	1'-0"	1'-0"	1'-0"	1'-0"	1'-0"	1'-0"	1'-0"	1'-0"	1'-0"	1'-0"	1'-0"	1'-0"
VOLUME CU. YDS.	ON EARTH	0.13	0.15	0.16	0.18	0.19	0.21	0.23	0.26	0.39	0.43	0.48	0.52	0.56	0.61	0.65	0.69
	ON ROCK	0.09	0.10	0.10	0.12	0.13	0.14	0.15	0.17	0.19	0.22	0.24	0.26	0.28	0.31	0.33	0.35

~ NOTES ~

BID ITEM AND UNIT TO BID
CONCRETE-CLASS "A" CUYD

1. CIRCULAR PIPE INCLUDES SLIGHTLY ELLIPTICAL CONCRETE PIPE WITH CIRCULAR REINFORCEMENT.
2. THE VOLUME DISPLACED BY BARREL OF PIPE HAS BEEN COMPUTED USING INSIDE DIMENSION OF PIPE.
3. THE UNIT PRICE BID PER CU. YD. FOR CLASS "A" CONCRETE SHALL INCLUDE ALL FORMS, MATERIAL, LABOR, ETC. INCIDENTAL TO CONSTRUCTION.
4. FOR GRADE BREAKS IN PIPE, USE AVERAGE GRADE TO CALCULATE VOLUMES.

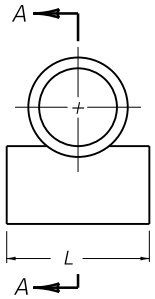

END ELEVATION

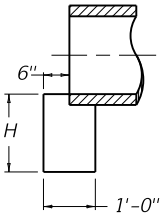

SECTION A-A

END ANCHOR FOR PIPE OUTLET

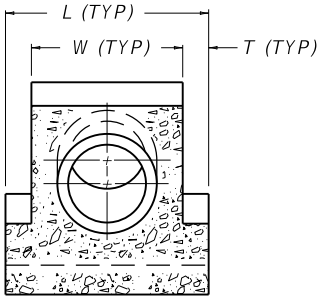

SECTION X-X

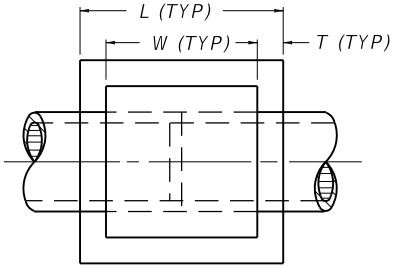

PLAN VIEW

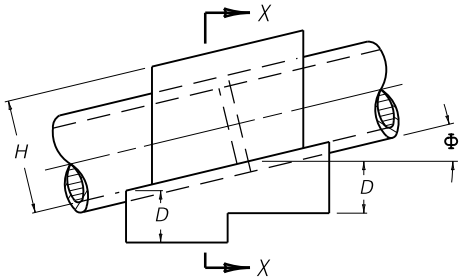

ELEVATION VIEW

INTERMEDIATE ANCHOR

KENTUCKY
DEPARTMENT OF HIGHWAYS

INTERMEDIATE
AND END ANCHORS
FOR CIRCULAR PIPE

STANDARD DRAWING NO. RDX-060-04

SUBMITTED William E. Ginkel — DIRECTOR DIVISION OF DESIGN — 12-01-15 DATE

APPROVED — STATE HIGHWAY ENGINEER — 12-01-15 DATE

~INTERMEDIATE ANCHOR~

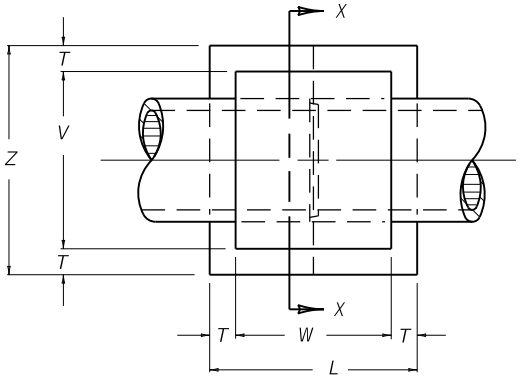

PLAN VIEW

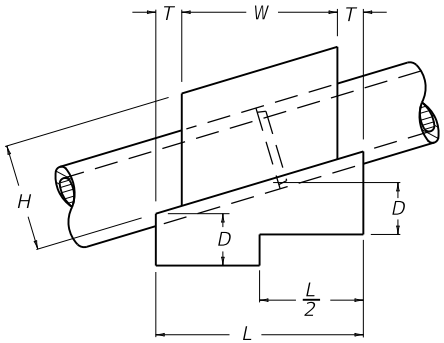

ELEVATION

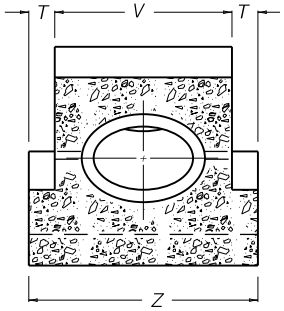

SECTION X-X

~END ANCHOR~

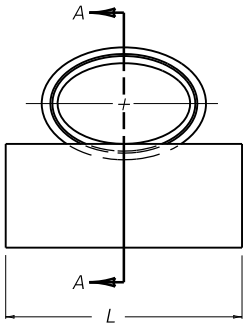

END ELEVATION

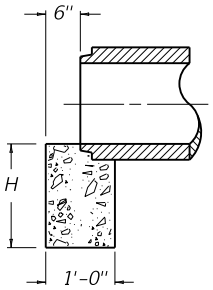

SECTION A-A

~ NOTES ~

BID ITEM AND UNIT TO BID
CONCRETE-CLASS "A" CUYD

1. THE UNIT PRICE BID PER CU. YD. FOR CLASS "A" CONCRETE SHALL INCLUDE ALL FORMS, MATERIALS, LABOR, AND ALL OTHER INCIDENTALS NECESSARY TO COMPLETE THE WORK.
2. THE VOLUME DISPLACED BY BARREL OF PIPE HAS BEEN COMPUTED USING DIMENSION OF PIPE.
3. FOR GRADE BREAKS IN PIPE, USE AVERAGE GRADE TO CALCULATE VOLUMES.

INTERMEDIATE ANCHOR FOR PIPE

NON-CIRCULAR PIPE: EQUIVALENT ROUND SIZES

	% GRADE	15"	18"	24"	27"	30"	33"	36"	39"	42"	48"	54"	60"
VOLUME IN CU. YDS. OF CLASS "A" CONCRETE FOR ONE ANCHOR	0	.98	1.22	1.80	2.18	2.57	2.98	3.54	4.60	6.65	8.04	10.66	8.23
	10	1.08	1.27	1.88	2.28	2.69	3.12	3.70	4.83	6.86	8.42	11.20	9.20
	20	1.16	1.32	1.95	2.36	2.80	3.25	3.85	5.04	7.13	8.77	11.70	10.00
	30	1.24	1.36	2.02	2.44	2.90	3.37	3.99	5.23	7.39	9.10	12.16	10.72
	40	1.32	1.40	2.08	2.53	2.99	3.47	4.12	5.41	7.69	9.39	12.59	11.37
	50	1.40	1.45	2.14	2.60	3.08	3.58	4.23	5.57	7.84	9.67	12.97	11.94
	60	1.42	1.49	2.20	2.67	3.14	3.67	4.34	5.72	8.05	9.92	13.33	12.47
	70	1.47	1.53	2.26	2.72	3.24	3.76	4.44	5.86	8.24	10.16	13.67	12.94
	80	1.51	1.57	2.31	2.76	3.31	3.84	4.53	5.99	8.41	10.38	13.98	13.37
	90	1.54	1.60	2.37	2.83	3.39	3.92	4.62	6.12	8.58	10.58	14.27	13.75
	100	1.58	1.64	2.42	2.92	3.45	4.00	4.70	6.23	8.74	10.78	14.54	14.11
DIMENSIONS	L	3'-9"	4'-0"	4'-7"	4'-11"	5'-3"	5'-6"	5'-10"	6'-6"	7'-2"	7'-8"	9'-2"	9'-10"
	W	2'-9"	3'-0"	3'-7"	3'-11"	4'-3"	4'-6"	4'-10"	5'-4"	5'-10"	6'-4"	7'-8"	7'-6"
	H	1'-9"	2'-2"	2'-7"	2'-10"	3'-2"	3'-3"	3'-6"	3'-9"	4'-2"	4'-4"	4'-9"	5'-4"
	D	1'-0"								1'-6"			
	V	3'-0"	3'-5"	4'-1"	4'-5"	4'-10"	5'-2"	5'-6"	6'-1"	6'-7"	7'-3"	8'-2"	7'-6"
	T	6"							7"	8"		9"	8"
	Z	4'-0"	4'-5"	5'-1"	5'-5"	5'-10"	6'-2"	6'-6"	7'-3"	7'-11"	8'-7"	9'-8"	8'-10"

END ANCHOR FOR PIPE OUTLET

(CLASS "A" CONCRETE)

DIMENSIONS	L	3'-0"	3'-5"	4'-1"	4'-5"	4'-10"	5'-2"	5'-6"	6'-0"	6'-6"	7'-2"	7'-10"	7'-10"
	H ON EARTH	1'-6"								2'-0"			
	H ON ROCK	1'-0"											
VOLUME CU. YDS. (ONE ANCHOR)	EARTH	0.17	0.19	0.23	0.25	0.27	0.29	0.31	0.33	0.48	0.53	0.58	0.58
	ROCK	0.11	0.13	0.15	0.16	0.18	0.19	0.20	0.22	0.24	0.27	0.29	0.29

KENTUCKY
DEPARTMENT OF HIGHWAYS

INTERMEDIATE AND
END ANCHORS FOR
NON-CIRCULAR PIPE

STANDARD DRAWING NO. RDX-065-04

SUBMITTED William E. Ginkel — DIRECTOR DIVISION OF DESIGN — 12-01-15 DATE

APPROVED — STATE HIGHWAY ENGINEER — 12-01-15 DATE

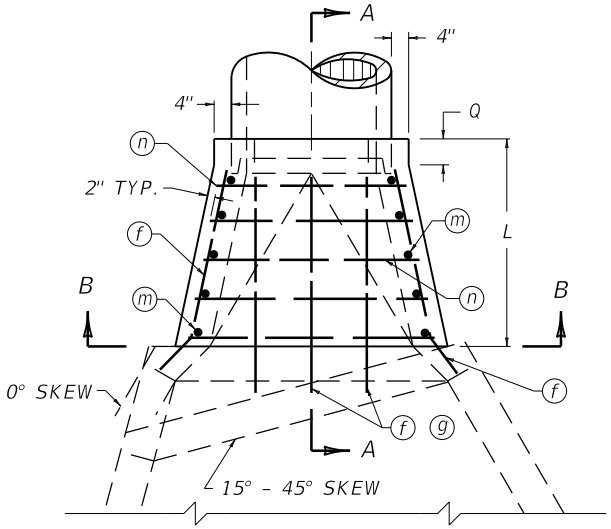

PLAN VIEW

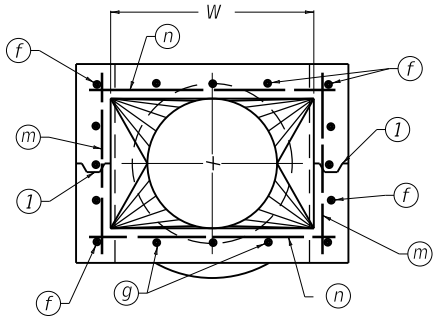

SECTION B-B

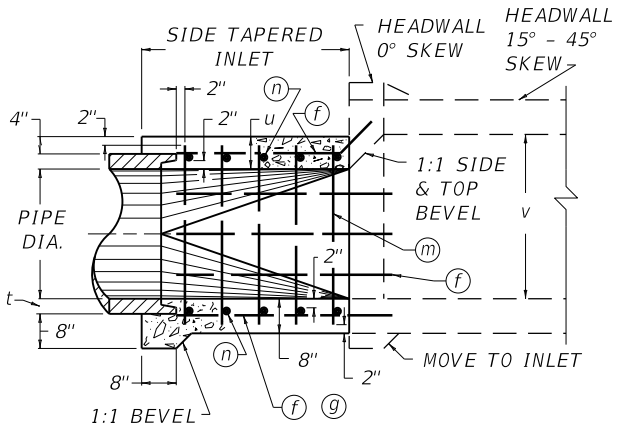

SECTION A-A

DIMENSIONS AND QUANTITIES												
PIPE DIA.	30"		36"		42"		48"		54"		60"	
ELLIPT. EQUIV. HDWL. TO USE	42"		48"		54"		60"		66"		72"	
NO. 5 BARS	QTY.	LENGTH	QTY.	LENGTH	QTY.	LENGTH	QTY.	LENGTH	QTY.	LENGTH	QTY.	LENGTH
f	13	4'-2"	14	4'-2"	16	5'-2"	17	5'-2"	19	5'-2"	22	6'-2"
g	3	4'-2"	4	4'-2"	4	5'-2"	5	5'-2"	5	5'-2"	6	6'-2"
m	10	3'-6"	10	4'-0"	12	4'-6"	12	5'-0"	12	5'-8"	14	6'-2"
n1	2	3'-8"	2	4'-2"	2	4'-8"	2	5'-2"	2	5'-8"	2	6'-0"
n2	2	3'-11"	2	4'-6"	2	5'-0"	2	5'-6"	2	6'-0"	2	6'-4"
n3	2	4'-2"	2	4'-10"	2	5'-4"	2	5'-10"	2	6'-4"	2	6'-8"
n4	2	4'-6"	2	5'-2"	2	5'-8"	2	6'-2"	2	6'-8"	2	7'-0"
n5	2	4'-9"	2	5'-6"	2	6'-0"	2	6'-6"	2	7'-0"	2	7'-4"
n6	-	-	-	-	2	6'-4"	2	6'-10"	2	7'-4"	2	7'-8"
n7	-	-	-	-	-	-	-	-	-	-	2	8'-0"
LBS. STEEL	150		170		233		256		282		372	
CU. YD. CONC.	1.38		1.66		2.48		2.87		3.28		4.47	
L	4'-0"		4'-0"		5'-0"		5'-0"		5'-0"		6'-0"	
W	3'-11"		4'-7"		5'-4"		6'-1"		6'-9"		7'-6"	
Q	0'-6"		0'-8"		0'-10"		1'-0"		1'-2"		1'-6"	
u	0'-7½"		0'-8"		0'-8½"		0'-9"		0'-9½"		0'-10"	
v	3'-2"		3'-8"		4'-2"		4'-8"		5'-2"		5'-8"	
t	0'-3½"		0'-4"		0'-4½"		0'-5"		0'-5½"		0'-6"	

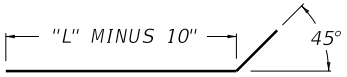

f BAR DETAIL

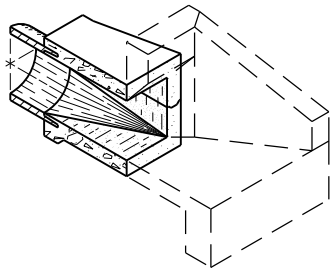

ISOMETRIC OF SECTION A-A
(0° SKEW HEADWALL SHOWN)

~ NOTES ~

1. CONSTRUCTION JOINT PERMITTED.
2. THIS INLET SHALL BE CONSTRUCTED IN ACCORDANCE WITH THE CURRENT STANDARD SPECIFICATIONS.
3. SHOULD INLET DIMENSIONS CONFLICT WITH THOSE OF THE HEADWALL, THE INLET SHALL GOVERN.
4. INLET QUANTITIES SHALL BE COMBINED WITH HEADWALL QUANTITIES. NOTES SHALL APPEAR ON THE PIPE DRAINAGE SUMMARY INDICATING THIS INCLUSION.
5. THE INLET INTERIOR SHALL TAPER FROM A RECTANGULAR OPENING AT THE HEADWALL JUNCTION TO A CIRCULAR CONFIGURATION AT THE PIPE. (NOTE THE 1:1 TOP AND SIDE BEVELS TO BE CONSTRUCTED ON THE HEADWALL PORTION.)
6. MINOR MODIFICATIONS IN THIS DESIGN, SUCH AS TRANSITIONING FROM ELLIPTICAL TO CIRCULAR, MAY BE MADE IF APPROVED IN WRITING BY THE ENGINEER.
7. ENCIRCLED LETTERS INDICATE STEEL REINFORCING BAR LOCATIONS.
8. FIVE PERCENT (5%) VERTICAL ELONGATION OF METAL PIPE SHALL BE ELIMINATED AND MADE ROUND FOR 48", 54", AND 60" PIPE WHERE IT JOINS THE INLET.

KENTUCKY
DEPARTMENT OF HIGHWAYS

SIDE TAPERED INLETS
30" TO 60" DIA.
ALL SLOPES - ALL SKEWS

STANDARD DRAWING NO. RDX-150-06

SUBMITTED William E. Ginkel — DIRECTOR DIVISION OF DESIGN — 12-01-15 DATE

APPROVED — STATE HIGHWAY ENGINEER — 12-01-15 DATE

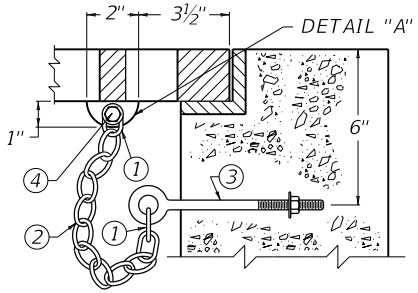

GRATE CONNECTED TO WALL

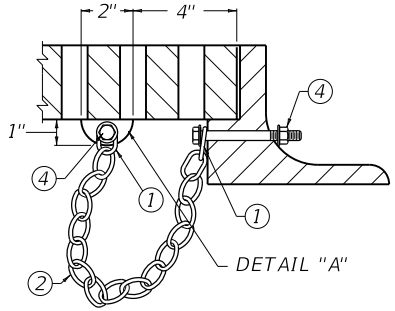

GRATE CONNECTED TO FRAME

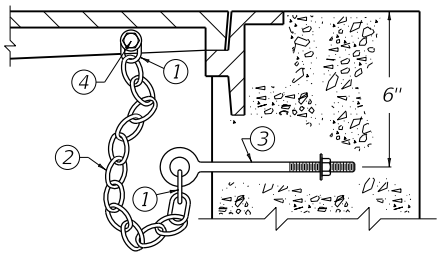

LID CONNECTED TO WALL

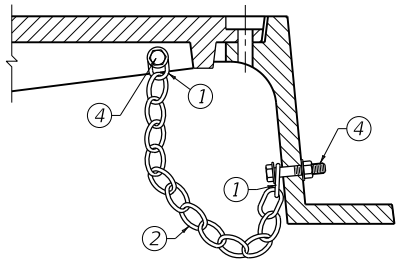

LID CONNECTED TO FRAME

TYPICAL ILLUSTRATIONS FOR CASTINGS

~ NOTES ~

1. CHAIN SHACKLE, OR COLD SHUT OF AN APPROVED TYPE.
2. 3/16" PROOF COIL CHAIN OF SUFFICIENT LENGTH TO ALLOW REMOVAL AND DISPLACEMENT OF GRATE OR LID.
3. 3/8" x 6" EYE BOLT, NUT, AND WASHER.
4. 3/8" HEX HEAD CAP SCREW (GRADE 2), NUT AND WASHERS. LENGTH DETERMINED BY THICKNESS OF FRAME OR GRATE. 7/16" DIA. HOLE FOR CAP SCREW. BATTER THREADS ON CAP SCREW TO PREVENT REMOVAL OF NUT.
5. 3/8" EYE BOLT (LENGTH DETERMINED BY THE FRAME DIMENSION).
6. ALL EYE BOLTS SHALL HAVE A CONTINUOUS OR SOLID EYE.
7. ALL HARDWARE SHALL BE GALVANIZED AND OF COMMERICAL QUALITY AND SHALL BE APPROVED BY THE ENGINEER.
8. THE COST OF THE COMPLETE SECURITY DEVICE, INSTALLED, SHALL BE INCIDENTAL TO THE COST OF THE STRUCTURE.
9. THE DESIGNS SHOWN ARE ACCEPTABLE; HOWEVER ARE SUBJECT TO CHANGE IF APPROVED IN WRITING BY THE ENGINEER.

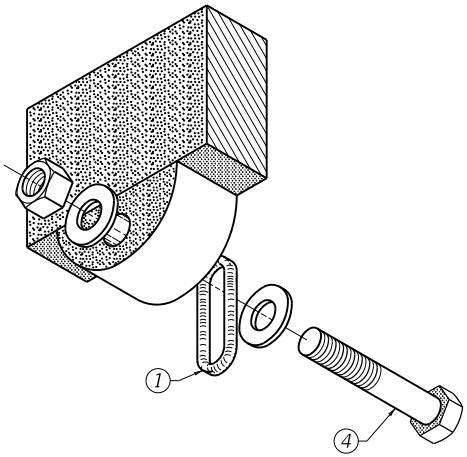

DETAIL Ⓐ
LUG ON CENTER CROSS MEMBER
AND BOLT ASSEMBLY
(AXONOMETRIC VIEW)

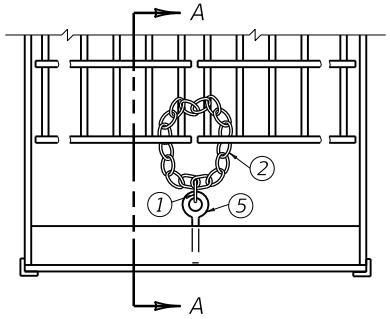

PLAN VIEW

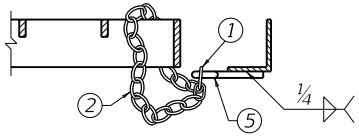

SECTION A-A
GRATE CONNECTED TO FRAME

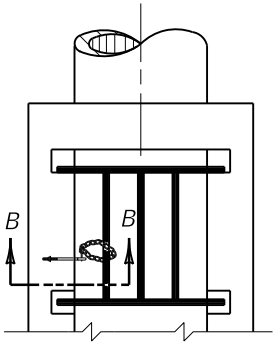

PLAN VIEW

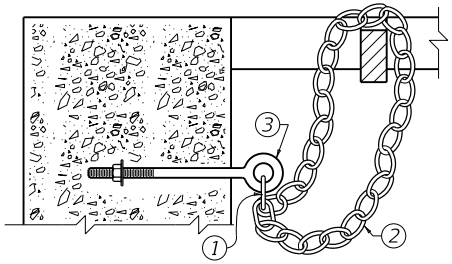

SECTION B-B

GRATE CONNECTED TO WALL

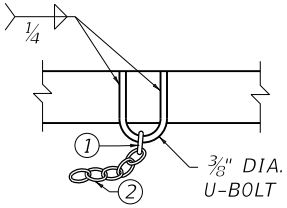

ALTERNATE FOR
STRUCTURAL STEEL
MEMBERS

TYPICAL ILLUSTRATIONS FOR STRUCTURAL STEEL UNITS

KENTUCKY
DEPARTMENT OF HIGHWAYS

SECURITY DEVICES FOR
FRAMES, GRATES
AND LIDS

STANDARD DRAWING NO. RDX-160-06

SUBMITTED William E. Ginkel — DIRECTOR DIVISION OF DESIGN — 12-01-15 DATE

APPROVED — STATE HIGHWAY ENGINEER — 12-01-15 DATE

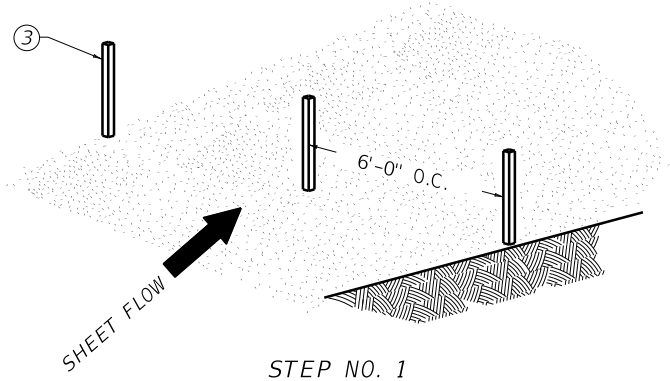

STEP NO. 1

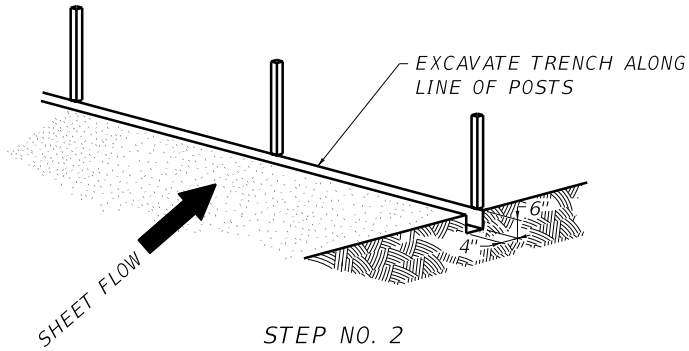

STEP NO. 2

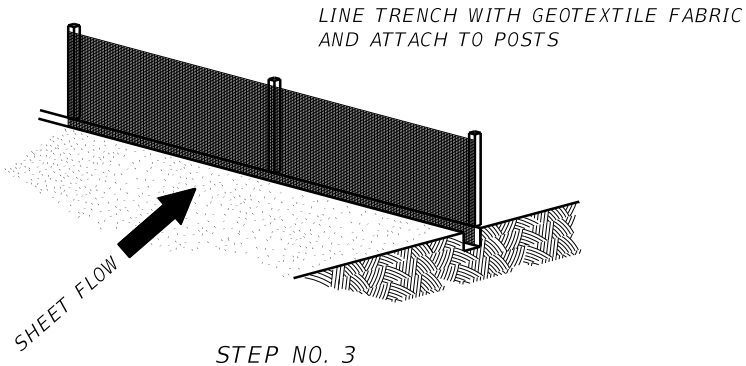

STEP NO. 3

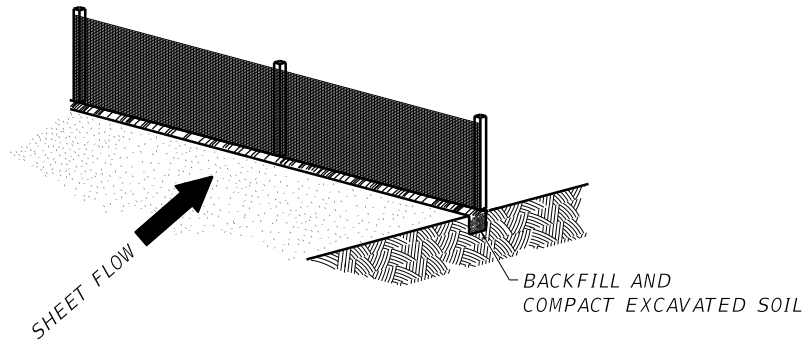

STEP NO. 4

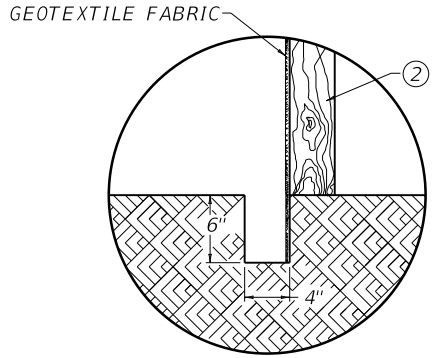

SECTIONAL DETAIL

~ NOTES ~

BID ITEM AND UNIT TO BID
TEMP SILT FENCE LF

1. SEE STANDARD SPECIFICATIONS FOR POST SIZE, GEOTEXTILE FABRIC, WIRE STAPLES AND ALL OTHER PERTINENT INFORMATION.

(2) POSTS MAY BE WOODEN OR METAL T-SECTION.

(3) POSTS SHALL BE SET 1'-4" DEEP.

KENTUCKY
DEPARTMENT OF HIGHWAYS

TEMPORARY
SILT FENCE

STANDARD DRAWING NO. RDX-210-03

SUBMITTED William E. Ginkel — DIRECTOR DIVISION OF DESIGN — 12-01-15 DATE

APPROVED — STATE HIGHWAY ENGINEER — 12-01-15 DATE

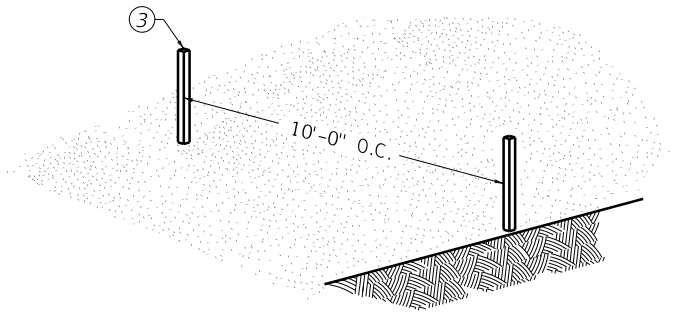

STEP NO. 1

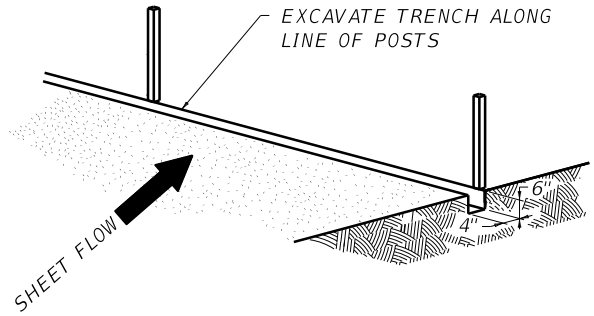

STEP NO. 2

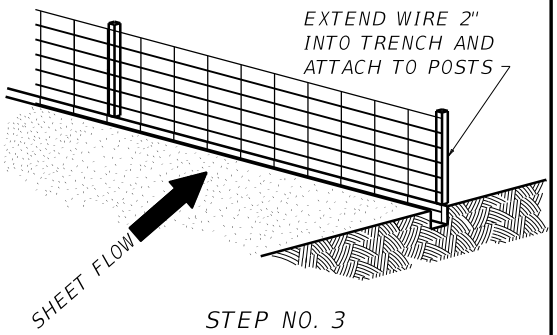

STEP NO. 3

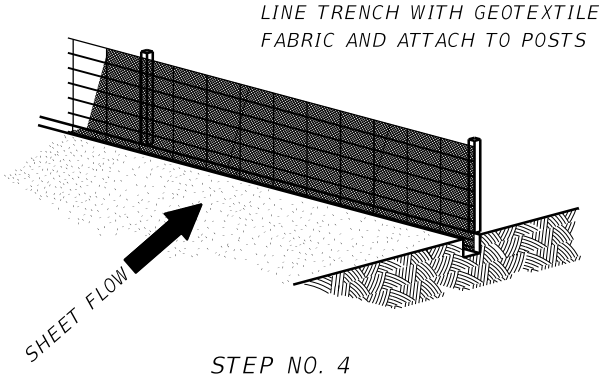

STEP NO. 4

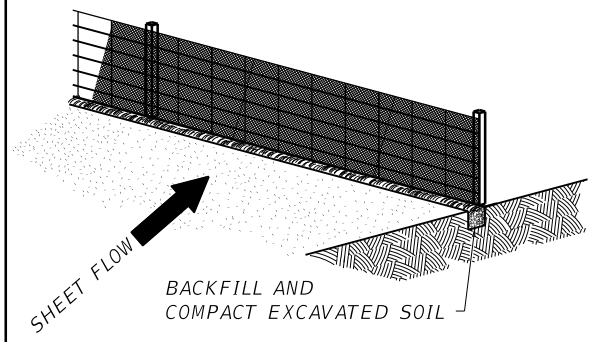

STEP NO. 5

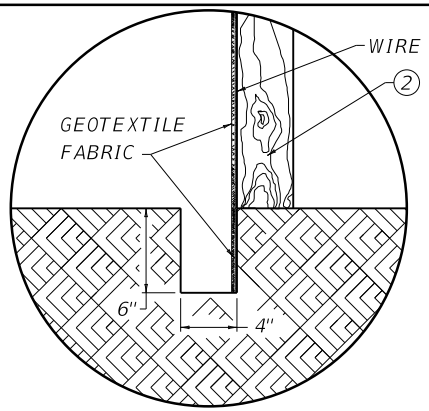

SECTIONAL DETAIL

~ NOTES ~

BID ITEM AND UNIT TO BID
TEMP SILT FENCE LF

1. SEE STANDARD SPECIFICATIONS FOR POST SIZE, WOVEN WIRE FENCE FABRIC, GEOTEXTILE FABRIC, WIRE STAPLE AND ALL OTHER PERTINENT INFORMATION.

(2) POSTS MAY BE WOODEN OR METAL T-SECTION.

(3) POSTS SHALL BE SET 1'-4" DEEP.

KENTUCKY
DEPARTMENT OF HIGHWAYS

TEMPORARY SILT FENCE
WITH
WOVEN WIRE FENCE FABRIC

STANDARD DRAWING NO. RDX-215-01

SUBMITTED William E. Ginkel — DIRECTOR DIVISION OF DESIGN — 12-01-15 DATE

APPROVED — STATE HIGHWAY ENGINEER — 12-01-15 DATE

ALTERNATE NO. 1

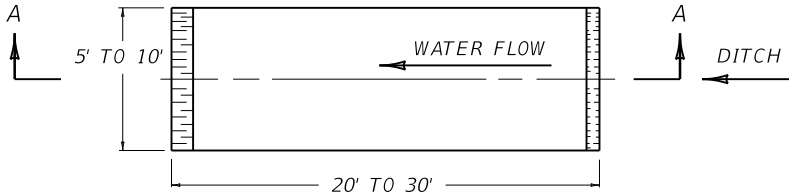

PLAN VIEW

SECTION A-A

ALTERNATE NO. 2

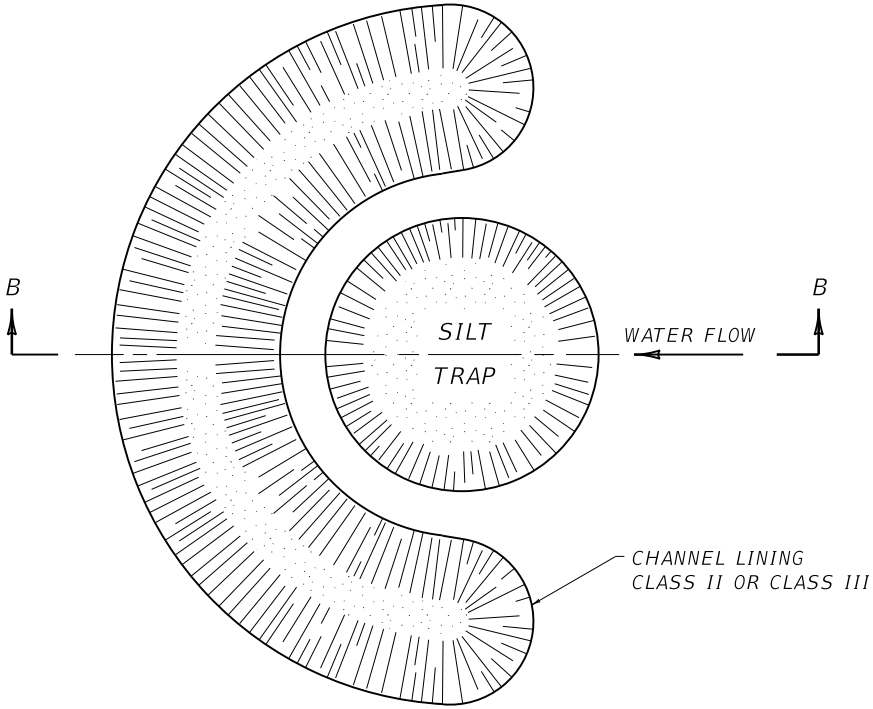

PLAN VIEW

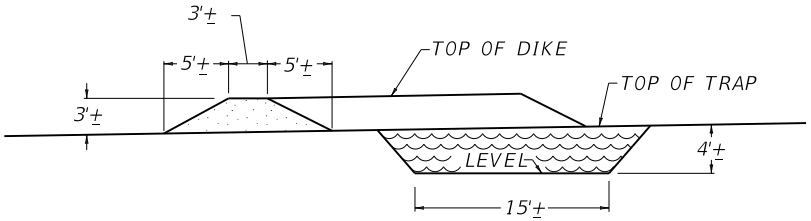

SECTION B-B

~ NOTES ~

BID ITEMS AND UNIT TO BID

SILT TRAP TYPE A	EACH
CLEAN SILT TRAP TYPE A	EACH

1. THE SIZE, SHAPE AND LOCATION OF A TRAP MAY BE ADJUSTED FROM THAT SHOWN IN THE PLANS, AS DIRECTED BY THE ENGINEER.
2. THE SILT TRAP SHALL BE CONSTRUCTED AS DIRECTED BY THE ENGINEER TO MEET VOLUME REQUIREMENTS INDICATED ON THE PLANS.
3. MATERIAL REMOVED IN THE PROCESS OF CONSTRUCTING SILT TRAP TYPE A SHALL BE WASTED ON SITE AT NO ADDITIONAL COST.

KENTUCKY
DEPARTMENT OF HIGHWAYS

SILT TRAP
TYPE A

STANDARD DRAWING NO. RDX-220-05

SUBMITTED William E. Ginkel — DIRECTOR DIVISION OF DESIGN — 12-01-15 DATE

APPROVED — STATE HIGHWAY ENGINEER — 12-01-15 DATE

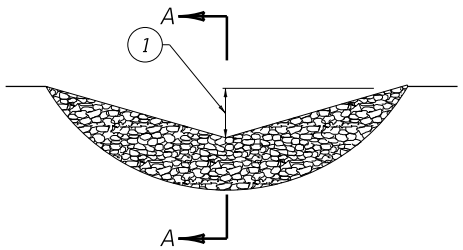

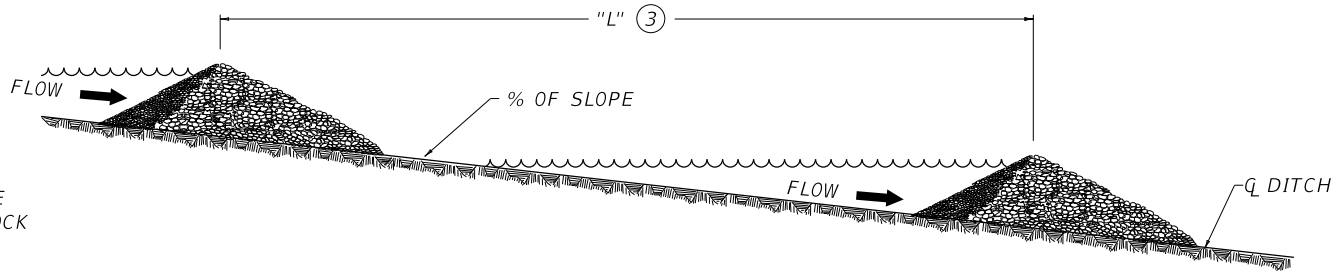

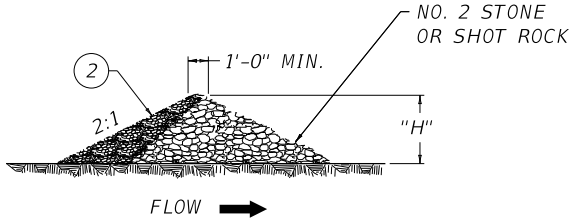

SECTION "A~A"

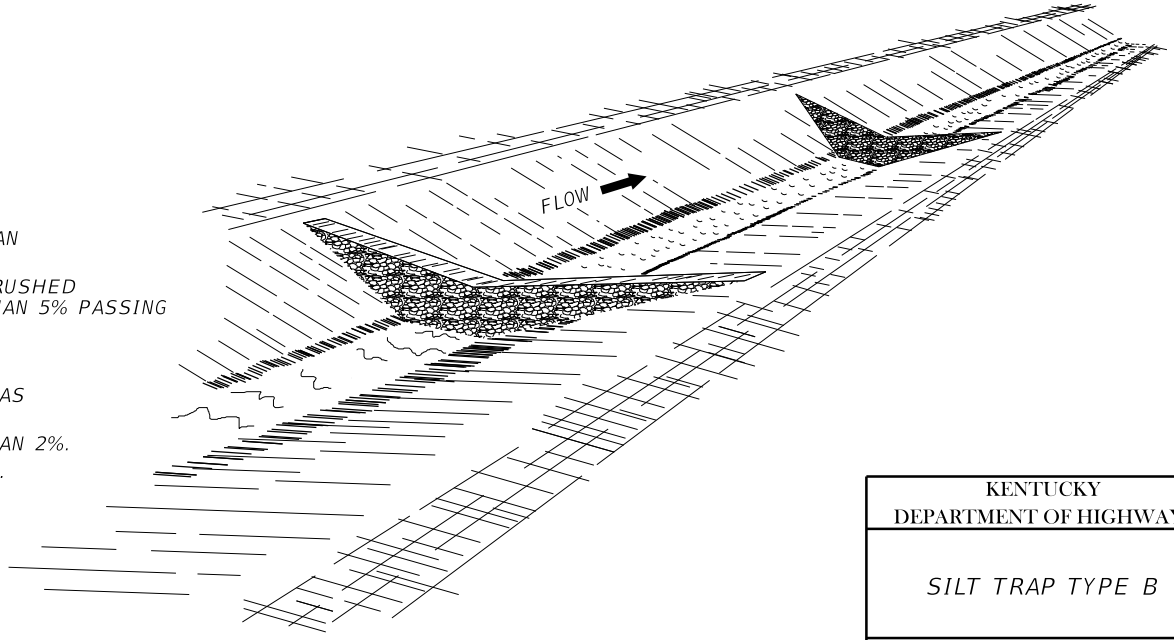

~ NOTES ~

BID ITEMS AND UNIT TO BID

SILT TRAP TYPE B	EACH
CLEAN SILT TRAP TYPE B	EACH

1. MIDDLE OF SILT TRAP SHALL BE A MINIMUM OF 1'-0" LOWER THAN SIDES SO FLOW WILL NOT BYPASS TRAP OR ERODE BANKS.
2. UPSTREAM FACE OF SILT TRAP SHALL BE A 4" MIN. LAYER OF CRUSHED AGGREGATE HAVING 100% PASSING A 3" SIEVE AND NO MORE THAN 5% PASSING A NO. 8 SIEVE (SEE SECTION "A-A").
3. $L = \frac{H}{\text{SLOPE OF DITCH}}$
4. SPACE SILT TRAPS AT LOCATIONS AS SHOWN ON THE PLANS OR AS DIRECTED BY THE ENGINEER.
5. SILT TRAP TYPE B SHALL BE USED ON ALL SLOPES GREATER THAN 2%.
6. SILT TRAP TYPE B MAY BE USED ON ALL SLOPES LESS THAN 2%.

KENTUCKY
DEPARTMENT OF HIGHWAYS

SILT TRAP TYPE B

STANDARD DRAWING NO. RDX-225-01

SUBMITTED William E. Ginkel — DIRECTOR, DIVISION OF DESIGN — 12-01-15 DATE

APPROVED — STATE HIGHWAY ENGINEER — 12-01-15 DATE

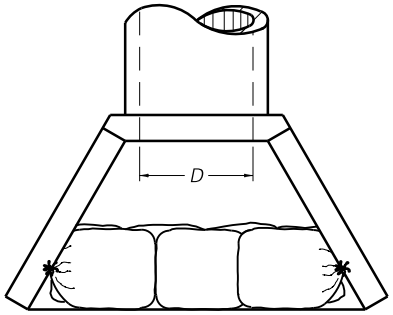

PLAN VIEW

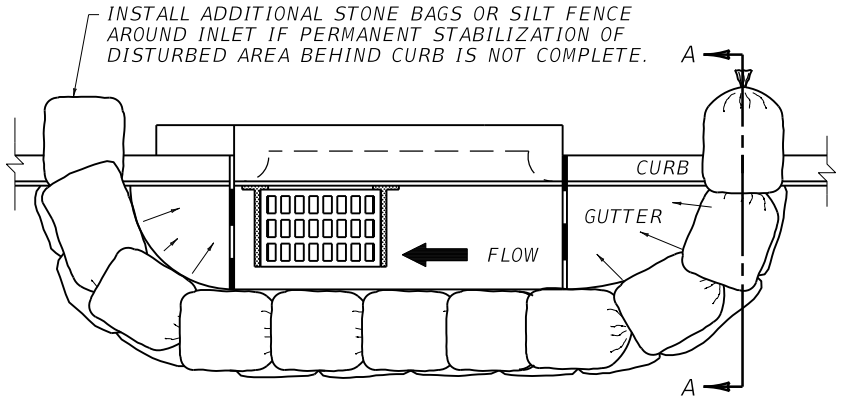

PLAN VIEW

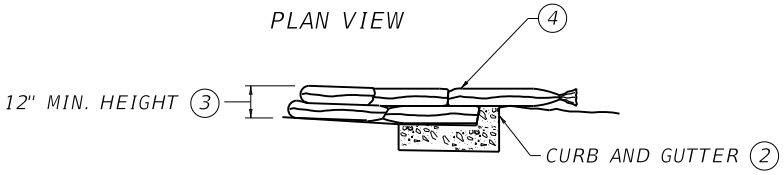

SECTION A~A

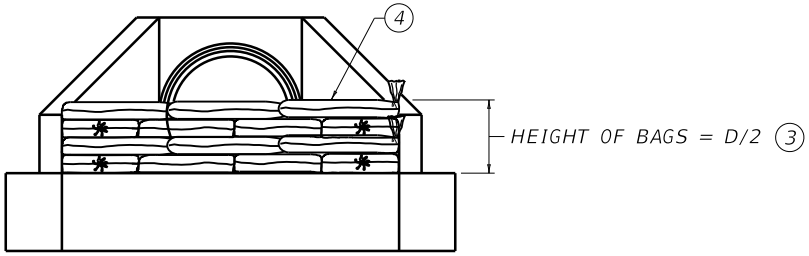

FRONT ELEVATION

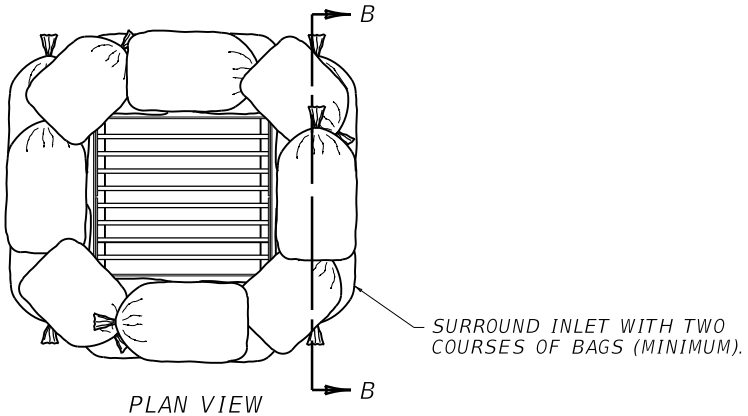

PLAN VIEW

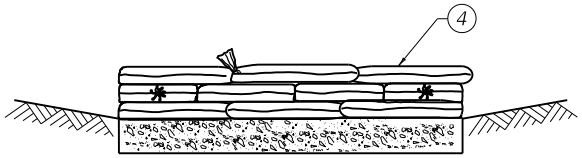

SECTION B~B

~ NOTES ~

BID ITEMS AND UNIT TO BID:

SILT TRAP TYPE C	EACH
CLEAN SILT TRAP TYPE C	EACH

1. SILT TRAP TYPE C SHALL INCLUDE GEOTEXTILE FABRIC BAGS, NO. 57 STONE, LABOR AND ALL INCIDENTALS NECESSARY FOR ONE COMPLETE INSTALLATION.

2. INLET PROTECTION IS SUITABLE FOR USE IN BOTH PAVED AND UNPAVED AREAS.

3. THE HEIGHT REQUIREMENT IS WAIVED IN CASES WHERE IT WILL CREATE AN UNACCEPTABLE PONDING SITUTATION ON THE PAVEMENT OR ON AN ADJACENT PROPERTY.

4. INTERWEAVE BAG ENDS TO FILL GAPS BETWEEN BAGS.

5. CONSTRUCT 18" X 30" BAGS OF NON-WOVEN TYPE II GEOTEXTILE FABRIC CONFORMING TO SECTION 843 OF THE STANDARD SPECIFICATIONS. DOUBLE STITCH BAG SEAMS WITH 1 LB. POLYESTER THREAD. ATTACH ONE (1) TIE STRING TO EACH BAG. BAG OPENING SHALL BE ON 18" SIDE.

6. FILL BAGS WITH NO. 57 STONE BETWEEN ½ TO ⅔ FULL (50 LB TO 60 LB).

7. SILT TRAP TYPE C SHALL NOT BE USED IN BLUE LINE STREAMS.

KENTUCKY
DEPARTMENT OF HIGHWAYS

SILT TRAP TYPE C

STANDARD DRAWING NO. RDX-230-01

SUBMITTED William E. Ginkel — DIRECTOR DIVISION OF DESIGN — 12-01-15 DATE

APPROVED — STATE HIGHWAY ENGINEER — 12-01-15 DATE

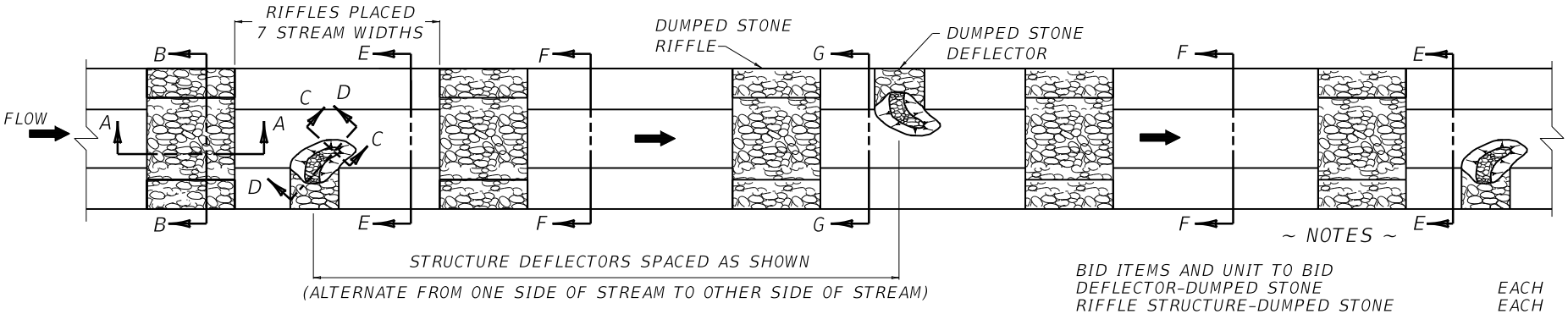

PLAN VIEW

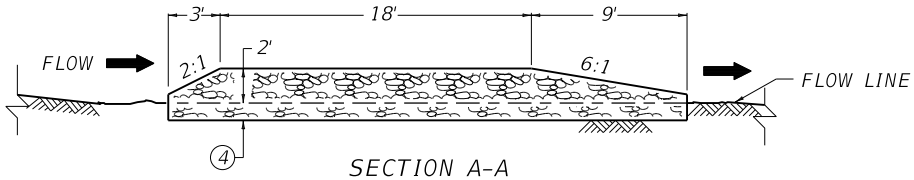

SECTION A-A

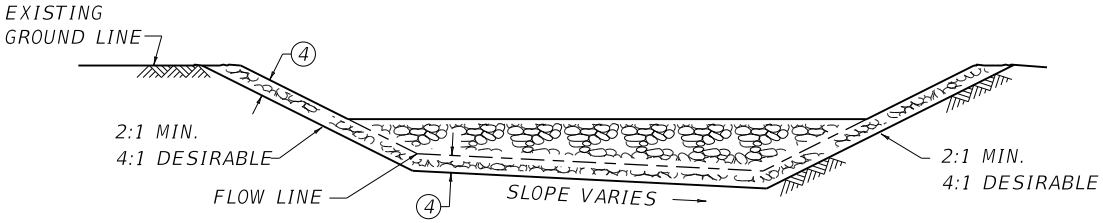

SECTION B-B

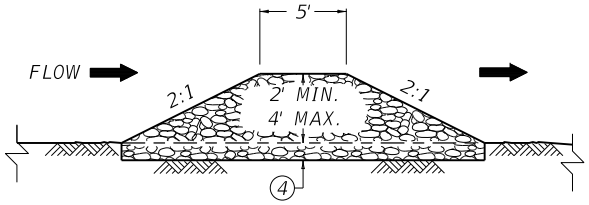

SECTION C-C

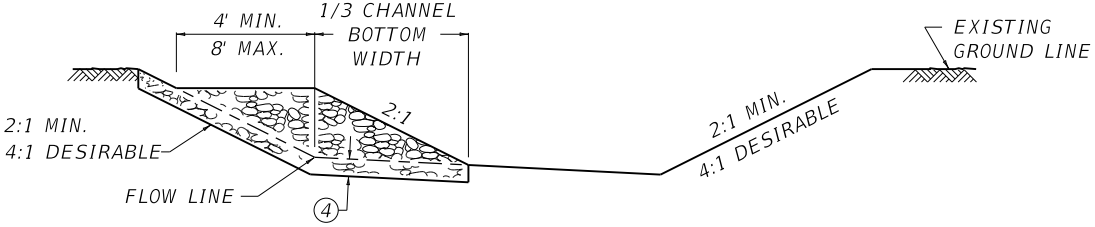

SECTION D-D

~ NOTES ~

BID ITEMS AND UNIT TO BID

DEFLECTOR-DUMPED STONE	EACH
RIFFLE STRUCTURE-DUMPED STONE	EACH

1. DUMPED STONE DEFLECTORS AND DUMPED STONE RIFFLE STRUCTURES SHALL BE MEASURED AND PAID FOR AT THE CONTRACT UNIT PRICE EACH, AND SHALL INCLUDE ROCK, LABOR AND ALL INCIDENTALS NECESSARY FOR ONE COMPLETE INSTALLATION.
2. LOCATION OF STRUCTURES ARE AS NOTED IN THE PLANS. MINOR ADJUSTMENTS ARE PERMITTED UPON APPROVAL BY THE ENGINEER.
3. ROCK USED TO CONSTRUCT RIFFLE STRUCTURES AND DUMP STONE DEFLECTORS SHALL CONSIST OF 80% IN THE RANGE OF FOUR (4) TO EIGHT (8) CUBIC FEET AND 20% SMALLER STONE TO FILL VOIDS.

(4) ROCK SHALL BE KEYED ONE (1) TO TWO (2) FEET BELOW THE PROPOSED CHANNEL FLOW LINE AND/OR CHANNEL BANK.

5. DUMPED STONE DEFLECTORS AND DUMPED STONE RIFFLE STRUCTURES SHALL BE REQUIRED ON BLUELINE STREAM CHANNEL CHANGES WHEN THE CHANNEL CHANGE FLOW LINE IS EQUAL TO OR LESS THAN 3%, AND THE CHANNEL CHANGE IS 200 LINEAR FEET OR GREATER.
6. SEE PLANS FOR CHANNEL MITIGATION LOCATIONS.
7. WHEN PIPES ARE INVOLVED IN CHANNEL CHANGES CUT THE CHANNEL TO CONFORM WITH SECTION F-F, A DISTANCE OF 20 FEET FROM THE INLET AND OUTLET ENDS OF PIPE.

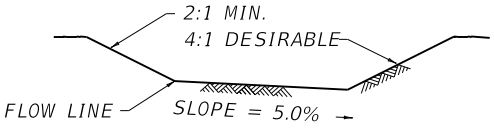

SECTION E-E

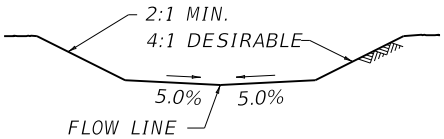

SECTION F-F

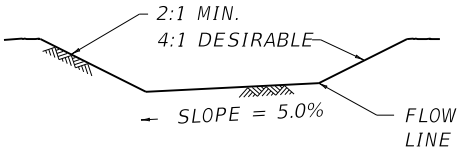

SECTION G-G

DRAWING NOT TO SCALE

KENTUCKY
DEPARTMENT OF HIGHWAYS

CHANNEL HABITAT
IMPROVEMENT STRUCTURES
(DUMPED STONE)

STANDARD DRAWING NO. RDX-240-04

SUBMITTED William E. Ginkel — DIRECTOR, DIVISION OF DESIGN — 12-01-15 DATE

APPROVED — STATE HIGHWAY ENGINEER — 12-01-15 DATE

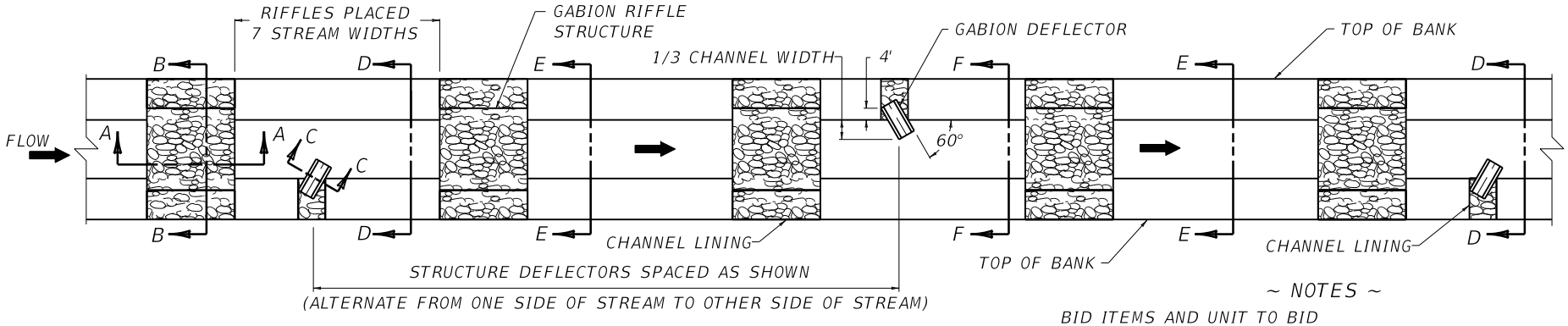

PLAN VIEW

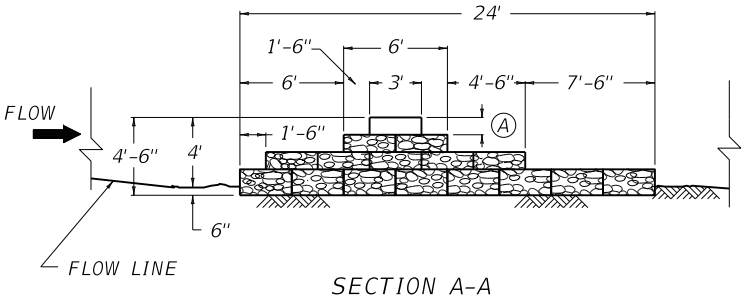

SECTION A-A

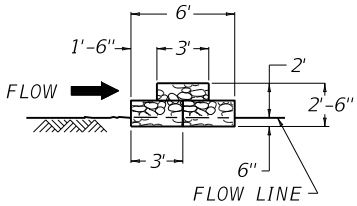

SECTION C-C

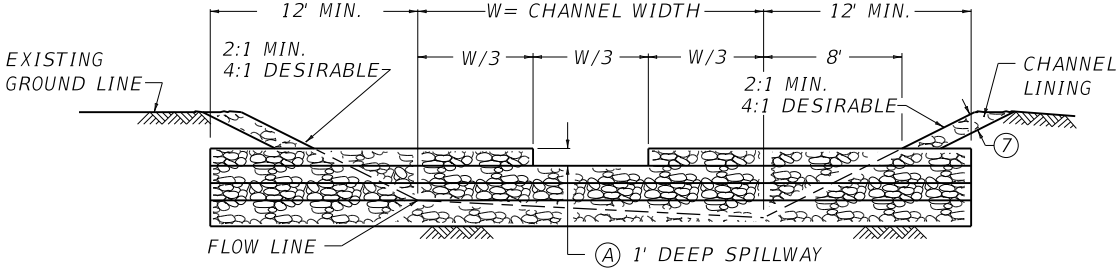

SECTION B-B

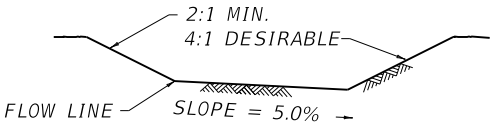

SECTION D-D

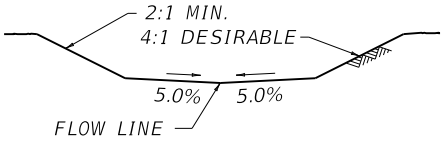

SECTION E-E

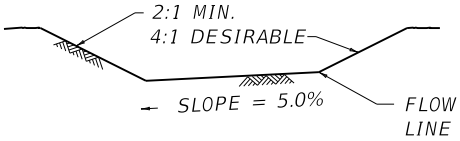

SECTION F-F

~ NOTES ~

BID ITEMS AND UNIT TO BID	
DEFLECTOR-GABION	EACH
RIFFLE STRUCTURE-GABION	EACH
CHANNEL LINING CLASS III	TON

1. GABION DEFLECTORS AND GABION RIFFLE STRUCTURES SHALL BE MEASURED AND PAID FOR AT THE CONTRACT UNIT PRICE EACH, AND SHALL INCLUDE GABION BASKETS, AGGREGATE, LABOR AND ALL INCIDENTALS NECESSARY FOR ONE COMPLETE INSTALLATION.
2. LOCATION OF STRUCTURES ARE AS NOTED IN THE PLANS. MINOR ADJUSTMENTS ARE PERMITTED UPON APPROVAL BY THE ENGINEER.
3. AGGREGATE USED TO FILL THE GABION BASKETS SHALL MEET THE REQUIREMENTS OF SECTION 805.13.06 OF THE CURRENT "STANDARD SPECIFICATIONS FOR ROAD AND BRIDGE CONSTRUCTION".
4. GABION BASKETS SHALL BE CONSTRUCTED IN ACCORDANCE WITH SECTION 618.03.05 OF THE CURRENT "STANDARD SPECIFICATIONS FOR ROAD AND BRIDGE CONSTRUCTION".
5. GABION DEFLECTORS AND GABION RIFFLE STRUCTURES SHALL BE REQUIRED ON BLUELINE STREAM CHANNEL CHANGES WHEN THE CHANNEL CHANGE FLOW LINE IS EQUAL TO OR LESS THAN 3%, AND THE CHANNEL CHANGE IS 200 LINEAR FEET OR GREATER.
6. GABIONS BASKETS SHALL COMPLY WITH SECTION 813.14 OF THE CURRENT "STANDARD SPECIFICATIONS FOR ROAD AND BRIDGE CONSTRUCTION".

(7) ROCK SHALL BE KEYED ONE (1) TO TWO (2) FEET BELOW THE PROPOSED CHANNEL FLOW LINE AND/OR CHANNEL BANK.

8. SEE PLANS FOR CHANNEL MITIGATION LOCATIONS.
9. WHEN PIPES ARE INVOLVED IN CHANNEL CHANGES CUT THE CHANNEL TO CONFORM WITH SECTION E-E, A DISTANCE OF 20 FEET FROM THE INLET AND OUTLET ENDS OF PIPE.

DRAWING NOT TO SCALE

KENTUCKY
DEPARTMENT OF HIGHWAYS

CHANNEL HABITAT
IMPROVEMENT STRUCTURES
(GABIONS)

STANDARD DRAWING NO. RDX-245-04

SUBMITTED William E. Ginkel — DIRECTOR, DIVISION OF DESIGN — 12-01-15 DATE

APPROVED — STATE HIGHWAY ENGINEER — 12-01-15 DATE

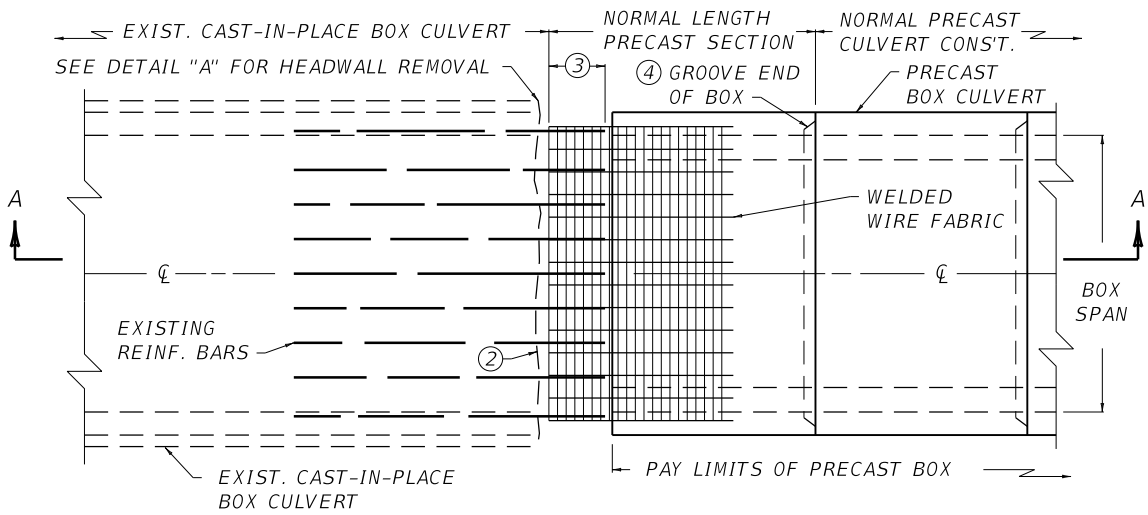

PLAN VIEW

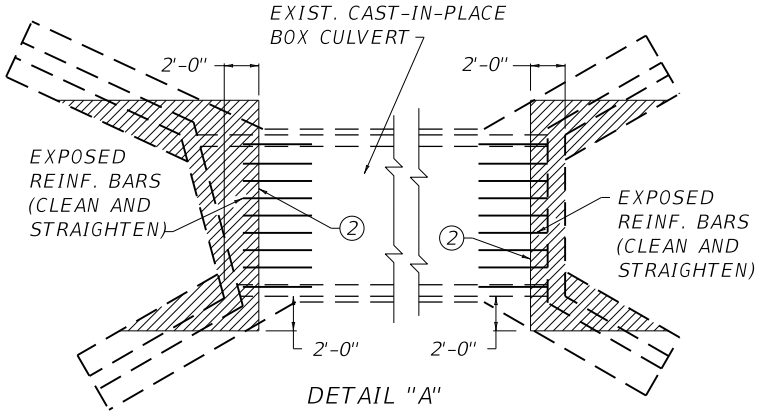

DETAIL "A"

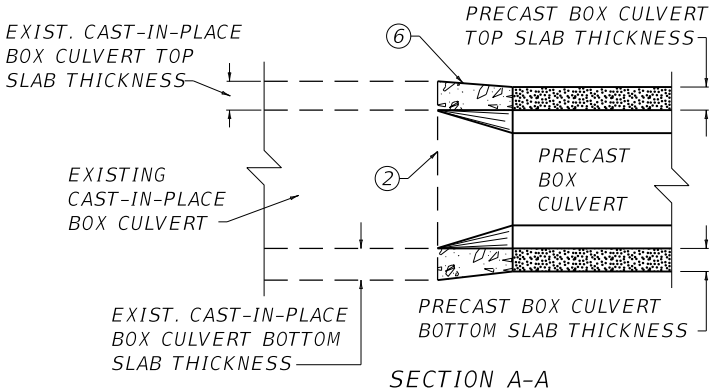

SECTION A-A
(SHOWING CAST-IN-PLACE SECTION)

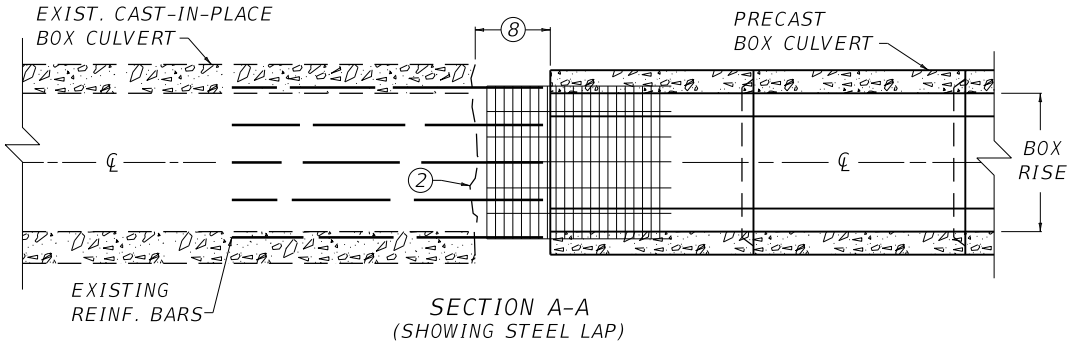

SECTION A-A
(SHOWING STEEL LAP)

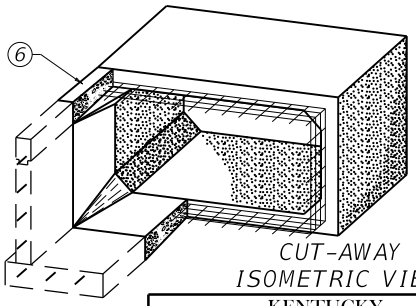

CUT-AWAY
ISOMETRIC VIEW

~ NOTES ~

BID ITEMS AND UNIT TO BID	
PRECAST CONC BOX SECT (SIZE)	LF
CONCRETE-CLASS D	CUYD
REMOVE CONCRETE MASONRY	CUYD

1. ▨ CONCRETE TO BE REMOVED BEFORE ATTACHING CULVERT EXTENSION.
2. BEFORE REMOVING ANY EXISTING CONCRETE, SAW AROUND THE PERIMETER OF REMOVAL AREA ON THE INTERIOR AND EXTERIOR OF THE CULVERT BARREL A DEPTH OF 1".
3. EXPOSED LONGITUDINAL STEEL IN THE EXISTING CULVERT LAPPED 1'-8" MIN. WITH EXPOSED MESH IN PRE-CAST BOX CULVERT. EXPOSED STEEL SHALL NOT BE KINKED OR BENT BY REMOVAL OPERATIONS. ANY STEEL THAT IS DAMAGED SHALL BE REPAIRED.
4. REINFORCING MESH IN THE PRE-CAST BOX CULVERT SHALL BE EXPOSED ON THE TONGUE END OF THE BOX. CONTRARY TO CURRENT SPECIFICATIONS THE GROOVE END OF THE BOX MAY BE LAID UPSTREAM OR DOWNSTREAM AS NECESSARY TO COMPLETE THE INSTALLATION.
5. EXISTING REMOVED CONCRETE SHALL BE PAID PER CU. YD. "REMOVE CONCRETE MASONRY".
6. CLASS D MODIFIED CONCRETE (MAX. SLUMP OF 3½") IN THE SPLICE SHALL BE PAID PER CU. YD. OF "CONCRETE-CLASS D MOD".
7. EXPOSED LONGITUDINAL STEEL IN EXISTING CULVERT AND EXPOSED MESH IN PRE-CAST BOX CULVERT SHALL BE INCIDENTAL TO THE UNIT PRICE BID FOR "CONCRETE-CLASS D MOD".
8. THE PRE-CAST BOX CULVERT EXTENSION SHALL BE PAID PER LINEAR FOOT OF "PRECAST CONC BOX SECT (SIZE)", WHICH SHALL NOT INCLUDE THE SPLICE.

KENTUCKY
DEPARTMENT OF HIGHWAYS

PRECAST BOX
CULVERT EXTENSION

STANDARD DRAWING NO. RDX-300-04

SUBMITTED William E. Ginkel — DIRECTOR DIVISION OF DESIGN — 12-01-15 DATE

APPROVED — STATE HIGHWAY ENGINEER — 12-01-15 DATE

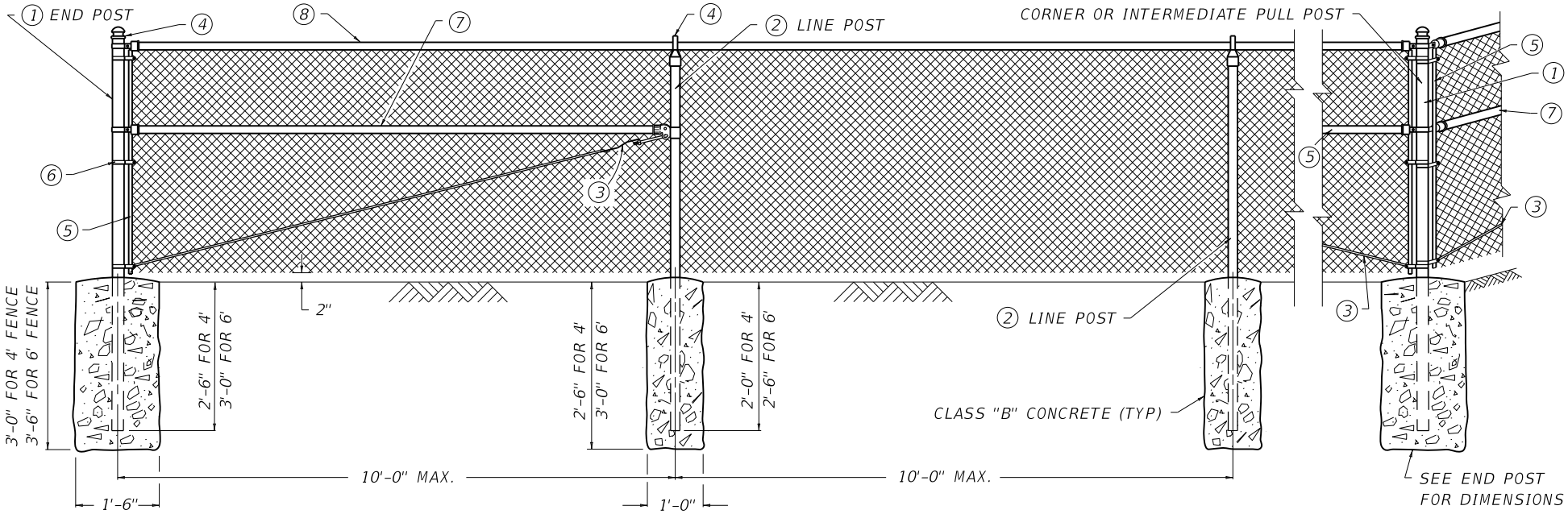

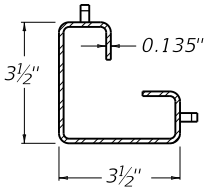

ROLL FORMED
TERMINAL POST &
CORNER POST

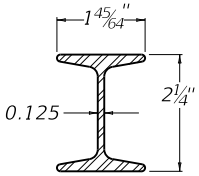

HOT ROLLED
LINE POST
H - COLUMN

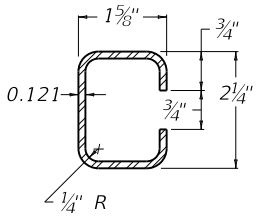

LINE POST
HEAVY "C" ROLL FORMED

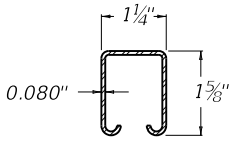

HOT ROLLED
TOP & BRACE
RAIL

~ NOTES ~

9. TENSION WIRE COMPLYING WITH ASTM A 824 SHALL BE SUBSTITUTED FOR THE TOP RAIL WHEN THE FENCE IS TO BE INSTALLED IN THE PATH OF AN ERRANT VEHICLE.
10. ALL POSTS SHALL BE SET IN CONCRETE TO THE DIMENSIONS INDICATED ON THIS DRAWING.
11. 4' HIGH FENCE SHALL HAVE 4' FABRIC HEIGHT. 6' HIGH FENCE SHALL HAVE 6' FABRIC HEIGHT.
12. ALL FENCE FITTINGS SHALL COMPLY WITH ASTM F626.
13. POST CAPS AND SOCKET TYPE BRACE END CONNECTIONS SHALL BE GALVANIZED PRESSED STEEL, CAST IRON OR OTHER TYPE AS APPROVED BY THE ENGINEER. THEY SHALL BE DESIGNED IN A MANNER TO EXCLUDE MOISTURE FROM INSIDE POSTS AND RAILS.
14. NPS = NOMINAL PIPE SIZE - ASTM F1083 AND F1043 (HEAVY INDUSTRIAL FENCE) SHALL GOVERN.
15. INDISCRIMINATE MIXING OF POSTS WILL NOT BE PERMITTED.

BID ITEMS AND UNIT TO BID

CHAIN LINK FENCE	LF
CONCRETE-CLASS B	CUYD

LEGEND / (ALTERNATES)

	TUBULAR	ROLL FORMED
1	2½" NPS END POST	3½" X 3½" END POST
2	2" NPS LINE POST	2¼" H-COL. LINE POST - OR - 2¼" C-COL. LINE POST
3	⅜" DIA.TRUSS ROD AND TIGHTNER	⅜" DIA. TRUSS ROD AND TIGHTNER
4	APPROVED CAPS	NOT REQUIRED
5	FLAT TENSION BAR	NOT REQUIRED
6	BRACE BAND AND TENSION BAND	NOT REQUIRED
7	1¼" NPS BRACE	1¼" X 1⅝" TOP RAIL & BRACE
8	1¼" NPS TOP RAIL (SEE NOTE 9)	

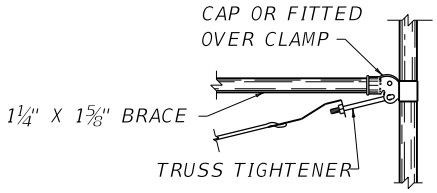

BRACE AND TRUSS
CONNECTOR

KENTUCKY
DEPARTMENT OF HIGHWAYS

CHAIN LINK FENCE
4' TO 6' HIGH

STANDARD DRAWING NO. RFC-001-08

SUBMITTED William E. Ginkel — DIRECTOR DIVISION OF DESIGN — 12-01-15 DATE

APPROVED — STATE HIGHWAY ENGINEER — 12-01-15 DATE

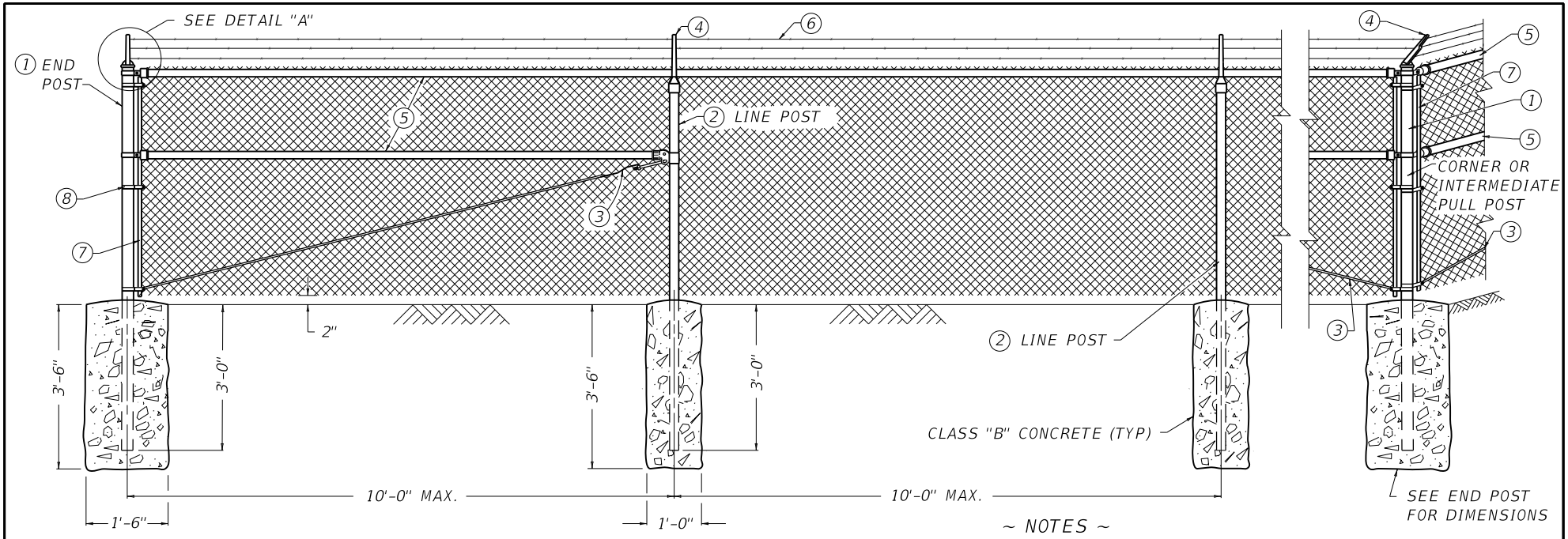

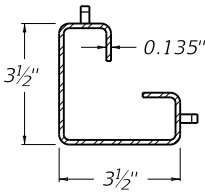

ROLL FORMED TERMINAL POST & CORNER POST

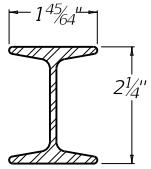

HOT ROLLED LINE POST H - COLUMN

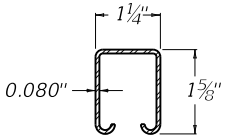

ROLL FORMED TOP & BRACE RAIL

~ NOTES ~

9. ALL POSTS SHALL BE SET IN CONCRETE TO THE DIMENSIONS SHOWN ON THIS DRAWING.
10. A 1¼" NPS OR A 1¼" x 1⅝" ROLL FORMED SECTION, BOTTOM RAIL SHALL BE REQUIRED AROUND ALL UTILITY INSTALLATIONS AND AT OTHER LOCATIONS DESIGNATED BY THE ENGINEER.
11. 8' HIGH FENCE SHALL HAVE 7' FABRIC HEIGHT. 9' HIGH FENCE SHALL HAVE 8' FABRIC HEIGHT. 10' HIGH FENCE SHALL HAVE 9' FABRIC HEIGHT. 11' HIGH FENCE SHALL HAVE 10' FABRIC HEIGHT. 12' HIGH FENCE SHALL HAVE 11' FABRIC HEIGHT.
12. ALL FENCE FITTINGS SHALL COMPLY WITH ASTM F626.
13. POST CAPS AND SOCKET TYPE BRACE END CONNECTIONS SHALL BE GALVANIZED PRESSED STEEL, CAST IRON OR OTHER TYPE AS APPROVED BY THE ENGINEER. THEY SHALL BE DESIGNED IN A MANNER TO EXCLUDE MOISTURE FROM INSIDE THE POSTS AND RAILS.
14. NPS = NOMINAL PIPE SIZE - ASTM F1083 AND F1043 (HEAVY INDUSTRIAL FENCE) SHALL GOVERN.

BID ITEMS AND UNIT TO BID

CHAIN LINK FENCE	LF
CONCRETE-CLASS B	CUYD

LEGEND / (ALTERNATES)

	TUBULAR	ROLL FORMED
1	2½" NPS END POST	3½" X 3½" END POST
2	2" NPS LINE POST	2¼" H-COL. LINE POST
3	⅜" DIA. TRUSS ROD AND TIGHTNER	⅜" DIA. TRUSS ROD AND TIGHTNER
4	BARBED WIRE ARMS	BARBED WIRE ARMS
5	1¼" NPS TOP RAIL & BRACE	1¼" x 1⅝" TOP RAIL & BRACE
6	BARBED WIRE	BARBED WIRE
7	FLAT TENSION BAR	NOT REQUIRED
8	BRACE BAND AND TENSION BAND	NOT REQUIRED

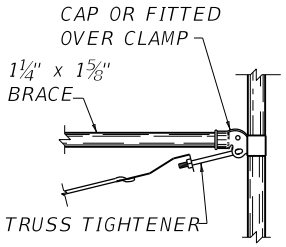

BRACE AND TRUSS CONNECTOR

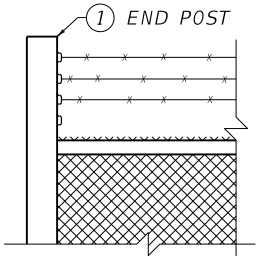

DETAIL "A" ROLL FORMED

KENTUCKY DEPARTMENT OF HIGHWAYS

CHAIN LINK FENCE 8' TO 12' HIGH

STANDARD DRAWING NO. RFC-002-05

SUBMITTED _____ DIRECTOR DIVISION OF DESIGN — 12-01-15 DATE

APPROVED _____ STATE HIGHWAY ENGINEER — 12-01-15 DATE

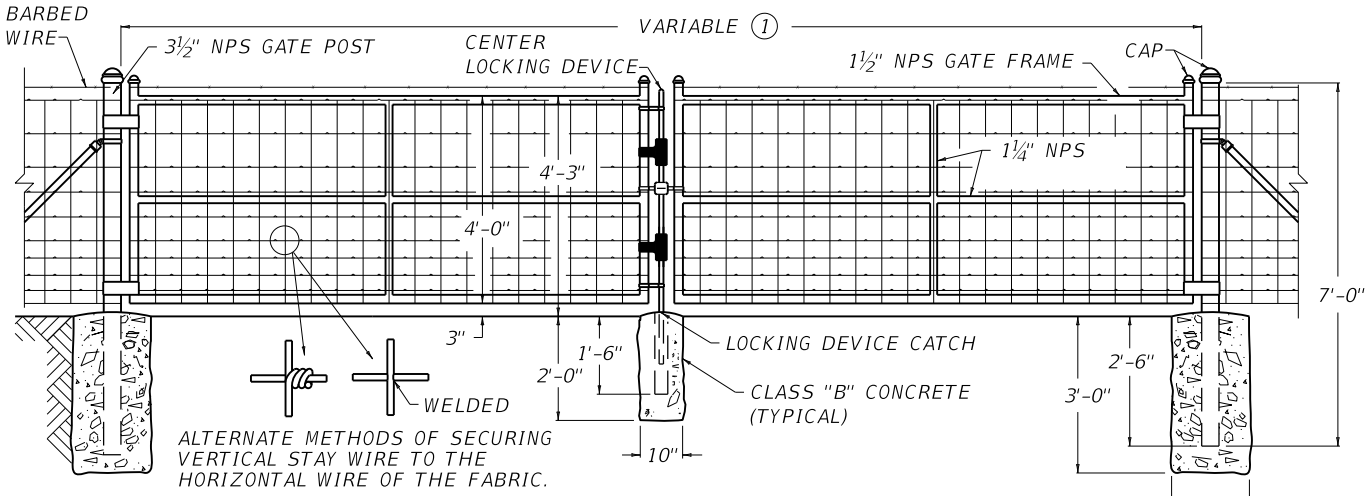

VEHICULAR GATE
CONNECTED TO METAL POSTS

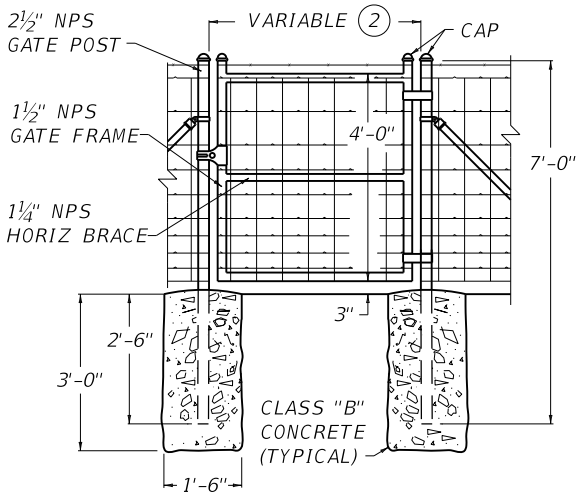

PEDESTRIAN GATE
CONNECTED TO METAL POSTS

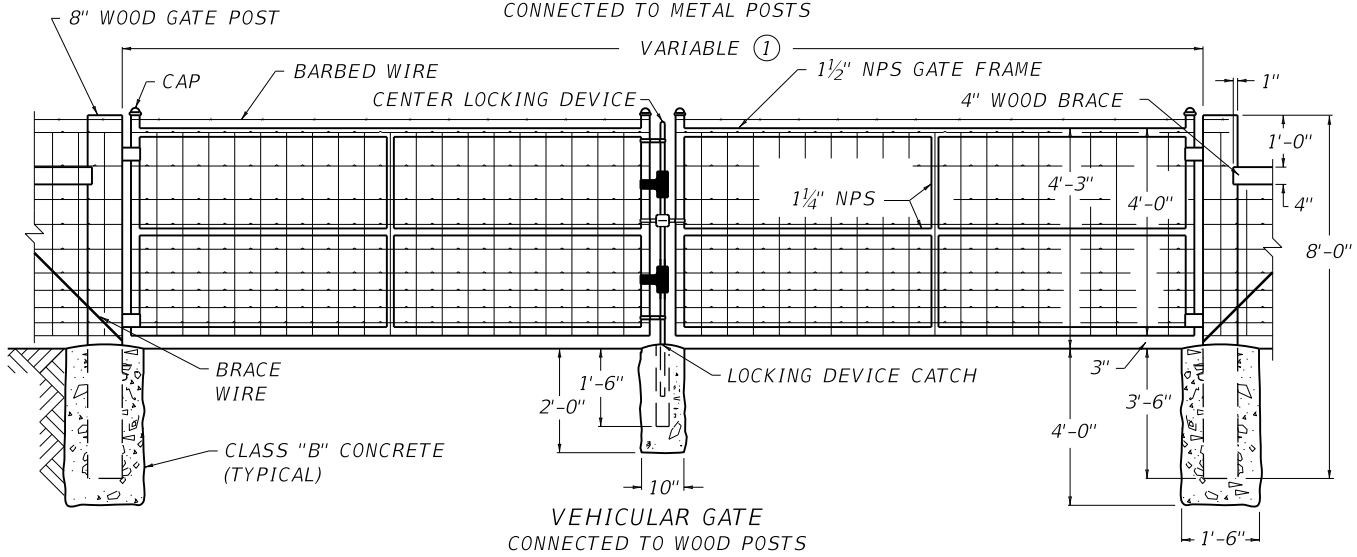

VEHICULAR GATE
CONNECTED TO WOOD POSTS

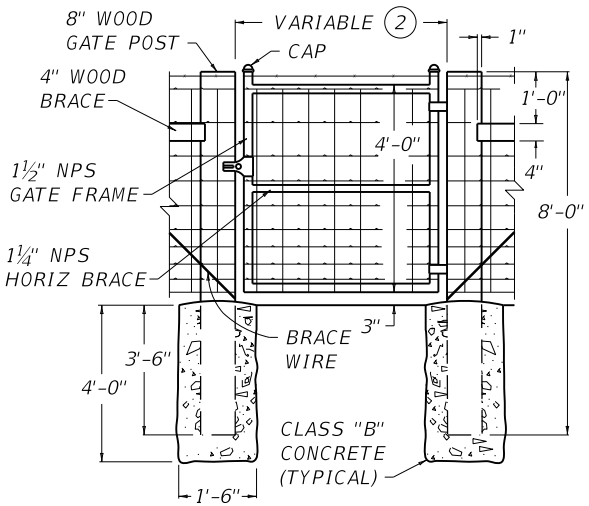

PEDESTRIAN GATE
CONNECTED TO WOOD POSTS

~ NOTES ~

BID ITEMS AND UNIT TO BID	
SINGLE VEHICULAR WOVEN WIRE GATE	EACH
OR	
DOUBLE VEHICULAR WOVEN WIRE GATE	EACH
OR	
PEDESTRIAN WOVEN WIRE GATE	EACH
CONCRETE-CLASS B	CUYD

(1) 6' TO 13' WIDTH FOR SINGLE GATE AND 12' TO 26' WIDTH FOR DOUBLE GATE.

(2) 4' TO 6' WIDTH

3. FABRIC TIE WIRES SHALL BE SPACED 1'-0" ON CENTERS.

4. THE CONTRACTOR IS NOT TO ORDER GATES UNTIL THEIR NECESSITY AND LOCATION HAVE BEEN CERTIFIED BY THE ENGINEER.

5. WOVEN-WIRE FABRIC USED IN THE GATES SHALL EITHER BE ALUMINUM-COATED STEEL NO. 1047-6-9 OR ZINC-COATED STEEL NO. 1047-6-9.

6. NPS = NOMINAL PIPE SIZE - ASTM F1083 AND F1043 (HEAVY INDUSTRIAL FENCE) SHALL GOVERN.

7. GATES SHALL HAVE HEAVY PRESSED STEEL CORNERS SECURELY RIVETED OR SHALL BE MACHINE NOTCHED AND ELECTRICALLY WELDED SO AS TO BE RIGID AND WATER TIGHT. ALL WELDED JOINTS SHALL BE CLEANED AND PAINTED WITH TWO (2) COATS OF AMINUM PAINT.

KENTUCKY
DEPARTMENT OF HIGHWAYS

WOVEN WIRE
GATES

STANDARD DRAWING NO. RFG-001-07

SUBMITTED William S. Sahd — DIRECTOR DIVISION OF DESIGN — 12-01-15 DATE

APPROVED — STATE HIGHWAY ENGINEER — 12-01-15 DATE

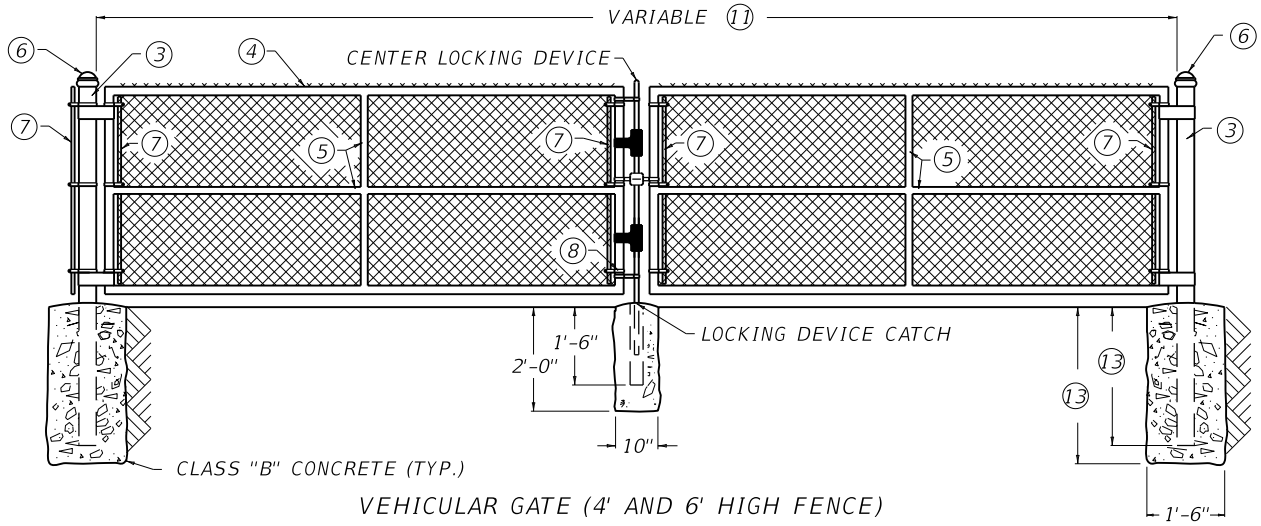

VEHICULAR GATE (4' AND 6' HIGH FENCE)

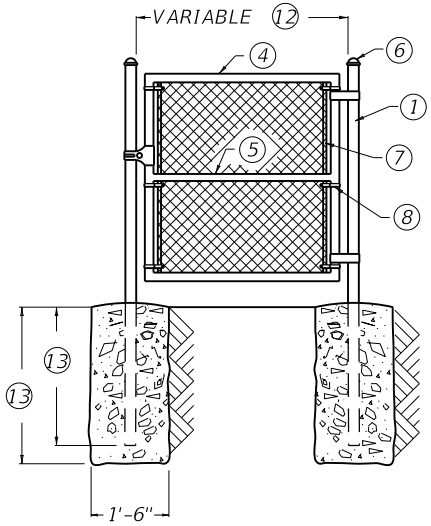

PEDESTRIAN GATE
(4' AND 6' HIGH FENCE)

~ NOTES ~

(11) 6' TO 13' WIDTH FOR SINGLE GATE OR 12' TO 26' WIDTH FOR DOUBLE GATE. SEE ELSEWHERE IN PLANS FOR GATE HEIGHT.

(12) 4' TO 6' WIDTH. SEE ELSEWHERE IN PLANS FOR GATE HEIGHT.

(13) 3'-0" FOR 4' FENCE OR 3'-6" FOR 6' FENCE. 2'-6" FOR 4' FENCE OR 3'-0" FOR 6' FENCE.

14. ALL POST SHALL BE SET IN CONCRETE TO THE DIMENSIONS AS INDICATED ON THIS DRAWING.

15. VEHICULAR AND PEDESTRIAN GATES SHALL HAVE HEAVY PRESSED STEEL CORNERS SECURELY RIVETED OR SHALL BE MACHINE NOTCHED, AND ELECTRICALLY WELDED SO AS TO BE RIGID AND WATER TIGHT; AND EQUIPPED WITH A PADLOCKING DEVICE AND GROUND STOP.

16. ALL WELDED JOINTS SHALL BE CLEANED AND PAINTED WITH TWO (2) COATS OF ALUMINUM PAINT.

17. 4' HIGH GATES SHALL HAVE 4' FABRIC HEIGHT. 6' HIGH GATES SHALL HAVE 6' FABRIC HEIGHT. 8' HIGH GATES SHALL HAVE 7' FABRIC HEIGHT. 9' HIGH GATES SHALL HAVE 8' FABRIC HEIGHT. 10' HIGH GATES SHALL HAVE 9' FABRIC HEIGHT. 11' HIGH GATES SHALL HAVE 10' FABRIC HEIGHT. 12' HIGH GATES SHALL HAVE 11' FABRIC HEIGHT.

18. BARBED WIRE IS REQUIRED ON 8' TO 12' HIGH GATES. SEE DETAILS A AND B FOR INSTALLATION.

19. THE CONTRACTOR IS NOT TO ORDER GATES UNTIL THEIR NECESSITY AND LOCATION HAVE BEEN CERTIFIED BY THE ENGINEER.

20. ALL FENCE FITTINGS SHALL COMPLY WITH ASTM F626.

21. NPS = NOMINAL PIPE SIZE - ASTM F1083 AND ASTM F1043 (HEAVY INDUSTRIAL FENCE) SHALL GOVERN.

BID ITEMS AND UNIT TO BID

SINGLE VEHICULAR CHAIN LINK GATE	EACH
OR	
DOUBLE VEHICULAR CHAIN LINK GATE	EACH
OR	
PEDESTRIAN CHAIN LINK GATE	EACH
CONCRETE-CLASS B	CUYD

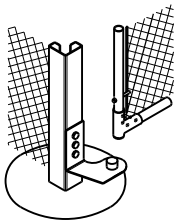

ROLL FORMED
HINGE DETAIL

LEGEND / (ALTERNATES)

	TUBULAR	ROLL FORMED
(1)	END POST 2½" NPS	3½" X 3½"
(2)	END POST 2½" NPS	3½" X 3½"
(3)	GATE POST 3½' NPS	NO ALTERNATE
(4)	GATE FRAME 1½" NPS	NO ALTERNATE
(5)	1¼" NPS	NO ALTERNATE
(6)	APPROVED CAPS	NOT REQUIRED
(7)	FLAT TENSION BAR	NOT REQUIRED
(8)	BRACE BAND AND TENSION BAND	NOT REQUIRED
(9)	BARBED WIRE	BARBED WIRE
(10)	BARBED WIRE ARMS	BARBED WIRE ARMS

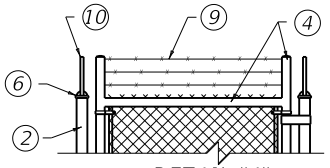

DETAIL "A"
(8' TO 12' HIGH FENCE)

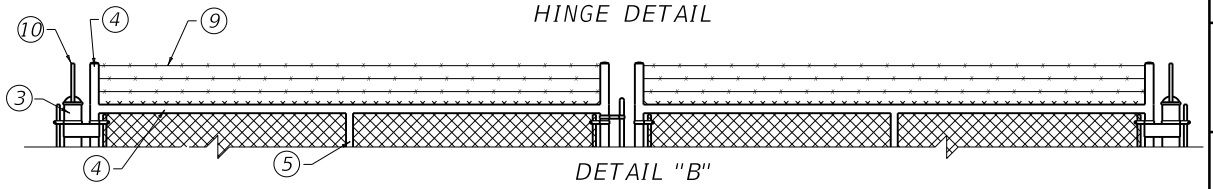

DETAIL "B"
(8' TO 12' HIGH FENCE)

KENTUCKY
DEPARTMENT OF HIGHWAYS

4' TO 12' HIGH
CHAIN LINK GATE

STANDARD DRAWING NO. RFG-005-06

SUBMITTED William S. Gabbard — DIRECTOR DIVISION OF DESIGN — 12-01-15 DATE

APPROVED — STATE HIGHWAY ENGINEER — 12-01-15 DATE

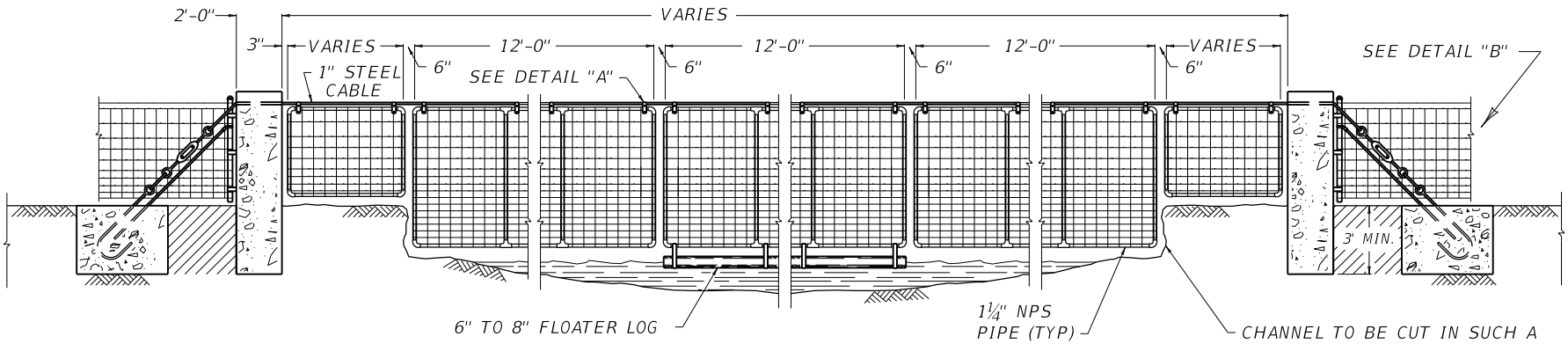

TYPICAL WATER GATE

CHANNEL TO BE CUT IN SUCH A MANNER AS TO ALLOW GATES TO SWING AND BE RIPRAPPED IF SO DIRECTED ON CONSTRUCTION BY THE ENGINEER.

~ NOTES ~

1. THIS ILLUSTRATION DEPICTS WATER GATE TYPE 1 USING WOVEN WIRE FABRIC.
2. FABRIC TIE WIRES SHALL BE SPACED 1'-0" ON CENTERS. THE CONTRACTOR IS NOT TO ORDER GATES OF ANY TYPE UNTIL THEIR NECESSITY AND LOCATION ARE CERTIFIED BY THE ENGINEER.
3. ALL FENCE FITTINGS SHALL COMPLY WITH ASTM F626.
4. WOVEN-WIRE FABRIC USED ON WATER GATE TYPE 1 SHALL BE EITHER ALUMINUM-COATED STEEL NO. 1047-6-9 OR ZINC COATED STEEL NO. 1047-6-9.
5. WATER GATES SHALL HAVE HEAVY PRESSED STEEL CORNERS SECURELY RIVETED OR SHALL BE MACHINE NOTCHED AND ELECTRICALLY WELDED SO AS TO BE RIGID AND WATER TIGHT. ALL WELDED JOINTS SHALL BE CLEANED AND PAINTED WITH TWO (2) COATS OF ALUMINUM PAINT.
6. NPS = NOMINAL PIPE SIZE - ASTM F1083 AND F1043 (HEAVY INDUSTRIAL FENCE) SHALL GOVERN.

BID ITEMS AND UNIT TO BID	
WATER GATE TYPE 1	EACH
CONCRETE-CLASS A	CUYD
CONCRETE-CLASS B	CUYD
STEEL REINFORCEMENT	LB

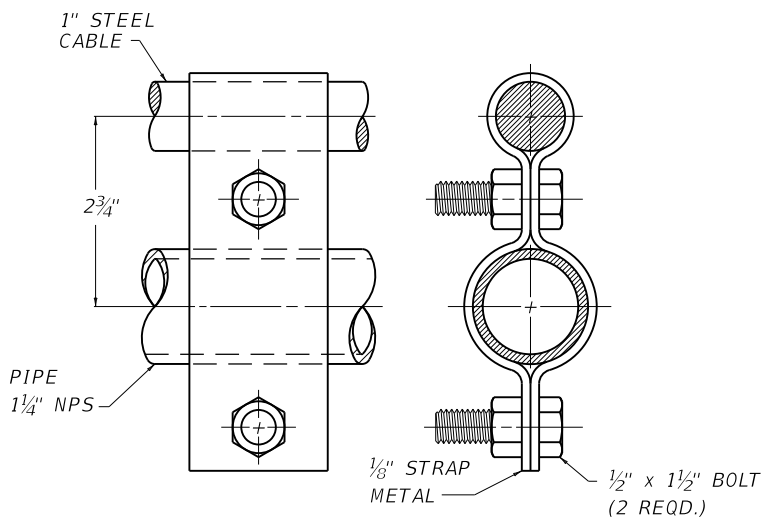

DETAIL "A"

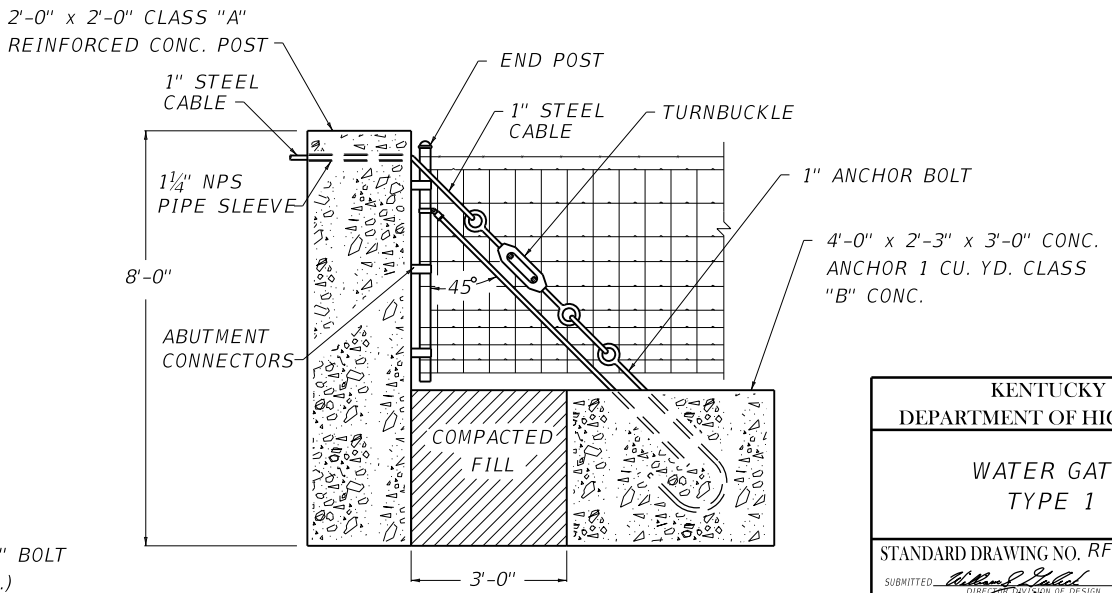

DETAIL "B"

KENTUCKY
DEPARTMENT OF HIGHWAYS

WATER GATE
TYPE 1

STANDARD DRAWING NO. RFG-010-05

SUBMITTED William E. Ginkel DIRECTOR DIVISION OF DESIGN 12-01-15 DATE

APPROVED STATE HIGHWAY ENGINEER 12-01-15 DATE

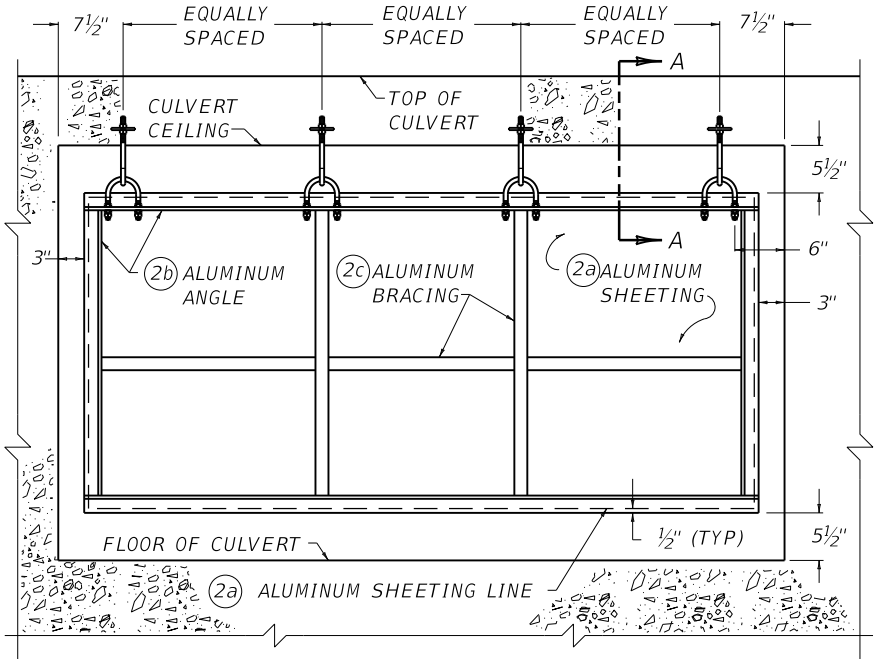

TYPICAL WATER GATE INSTALLATION

~ NOTES ~

BID ITEM AND UNIT TO BID
WATER GATE TYPE 3 — EACH

1. THE CONTRACT UNIT PRICE SHALL INCLUDE LABOR, MATERIALS, INSTALLATION, AND ALL NECESSARY INCIDENTALS TO COMPLETRE THE INSTALLATION. TWO OR MORE SECTIONS PER CULVERT OPENING EQUALS ONE WATER GATE TYPE 3.
2. COMMERCIAL GRADE ALUMINUM
   - (2a) SHEETING – 0.090" THICK, MILL FINISH.
   - (2b) ANGLES – 2" x 2" x ⅜" @ 1.60 LBS./LIN. FT.
   - (2c) BRACING – 1½" x 1½" X ⅛" SQUARE TUBING @ 0.826 LB./LIN. FT.
3. (3) EYEBOLT "A" – GALVANIZED, WELDLESS, ½" DIA., 6" SHANK, 1" EYE I.D., 3" THREAD.
4. (4) EYEBOLT "B" – GALVANIZED, WELDLESS, ½" DIA., 2½" SHANK, 1" EYE I.D., 1" THREAD.
5. (5) U-BOLTS – CADMIUM PLATED STEEL, 3" BETWEEN LEGS, 4½" INSIDE LENGTH, 5" OUTSIDE LENGTH, 2," THREAD, ½" DIA.
6. (6) HEX FULL NUTS AND JAM NUTS – ½" DIA., 13 THREADS/IN., FINISHED, DOUBLE CHAMFERED.
7. (7) STEEL WASHER – ⅝" I.D., 2¾" O.D.
8. (8) EXPANSION ANCHORS – 6000 LBS. MINIMUM HOLDING POWER.
9. WELD ANGLE AND BRACE CONNECTIONS FULLY ON ALL EXPOSED SIDES.
10. WELD SHEETING ON BOTH SIDES TO ANGLES AND BRACING AS SHOWN.
11. CULVERT OPENINGS GREATER THAN 10' IN WIDTH – USE MINIMUM OF TWO EQUAL WIDTH SECTIONS PER OPENING WITH 3" GAP BETWEEN SECTIONS (SEE DETAIL "A"). NO SECTION SHALL EXCEED 10' IN WIDTH.
12. USE OF ONE CONTINUOUS ALUMINUM SHEET IS DESIRABLE; HOWEVER IF MORE THAN ONE SHEET IS USED AND THE SEAMS DO NOT FIT THE MINIMUM REQUIRED BRACING DIAGRAM, ADDITIONAL SYMMETRICALLY PLACED BRACING SHALL BE REQUIRED. NO SEAMS SHALL BE VISIBLE FROM THE BRACING SIDE OF THE GATE.

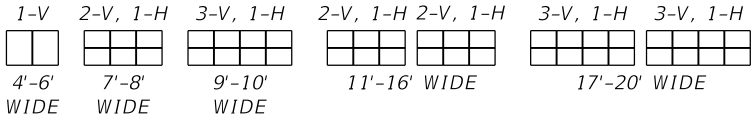

MINIMUM HOR. AND VER. BRACING SYSTEMS FOR VARIOUS WIDTH CULVERT OPENINGS.

ONE (1) ADDITIONAL HOR. BRACE REQUIRED FOR CULVERT OVER 10' IN HEIGHT.

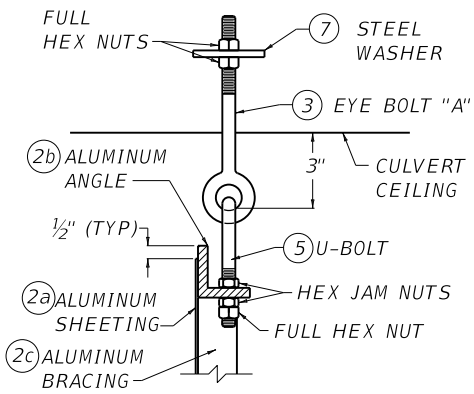

SECTION A-A
NEW CONSTRUCTION
HANGER SYSTEM

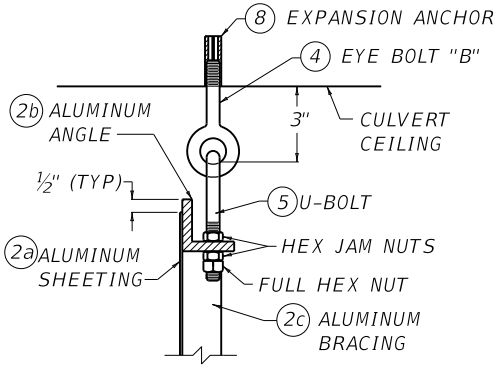

SECTION A-A
EXISTING CONSTRUCTION
HANGER SYSTEM

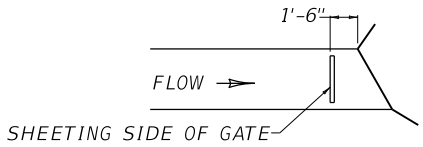

WATER GATE LOCATION
IN SKEWED CULVERT

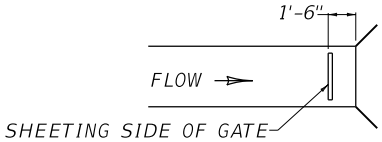

WATER GATE LOCATION
IN CULVERTS AT 90°

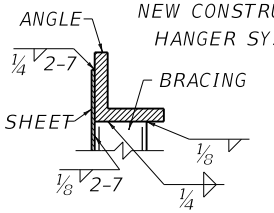

BRACING, ANGLE
AND SHEET WELDS

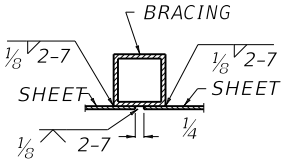

BRACING AND SHEET
SEAM WELDS

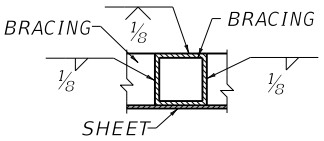

BRACING AND
BRACING WELDS

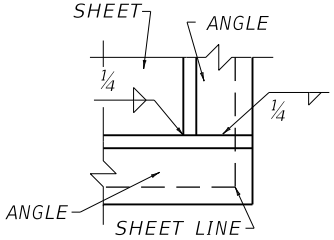

CORNER JOINT
WELDS

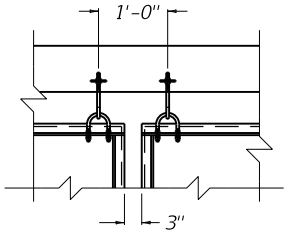

DETAIL "A"
(2 OR MORE SECTIONS)

KENTUCKY
DEPARTMENT OF HIGHWAYS

WATER GATE
TYPE 3

STANDARD DRAWING NO. RFG-011-06

SUBMITTED — DIRECTOR, DIVISION OF DESIGN — 12-01-15 DATE

APPROVED — STATE HIGHWAY ENGINEER — 12-01-15 DATE

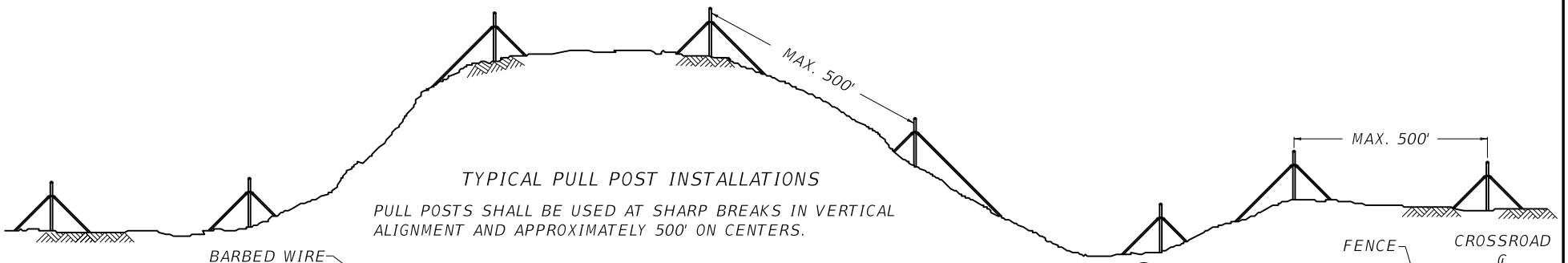

TYPICAL PULL POST INSTALLATIONS

PULL POSTS SHALL BE USED AT SHARP BREAKS IN VERTICAL ALIGNMENT AND APPROXIMATELY 500' ON CENTERS.

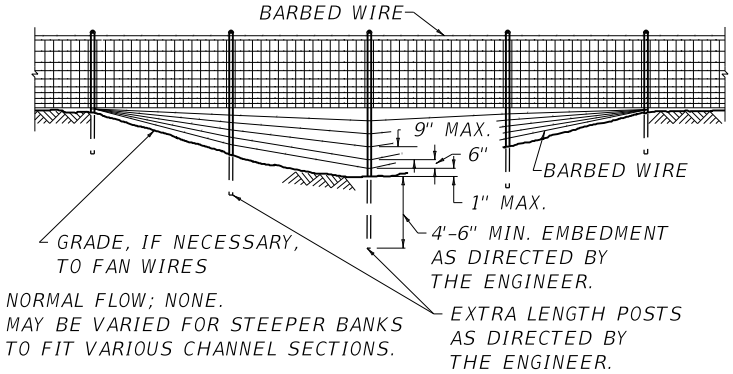

TYPE A CROSSING

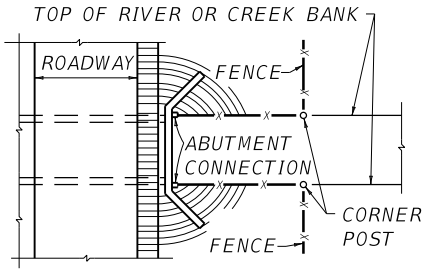

TYPICAL FENCE INSTALLATION FOR BOX CULVERT USED AS CATTLE CROSSING

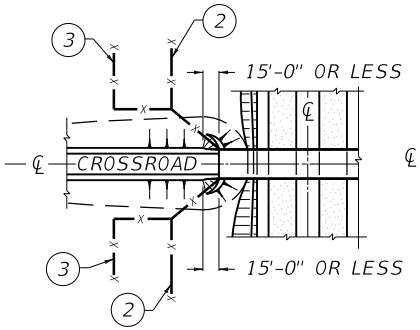

HIGHWAY UNDER CROSSROAD

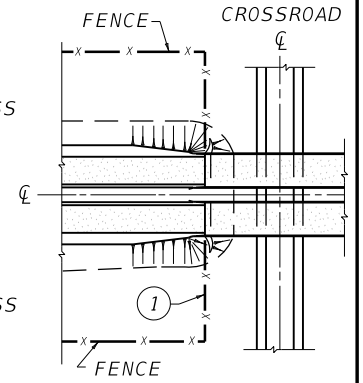

HIGHWAY OVER CROSSROAD

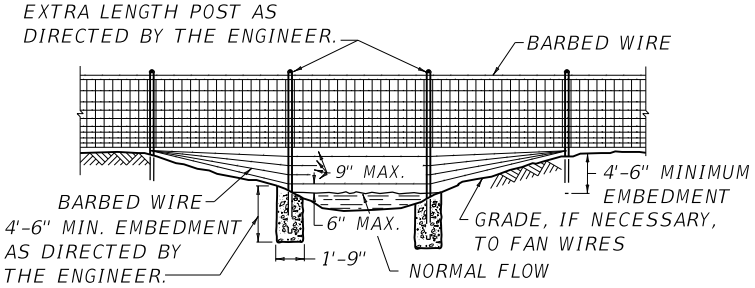

TYPE B CROSSING

~ NOTES ~

1. NORMAL WAY OF HANDLING FENCE WHEN THE HIGHWAY IS OVER THE CROSSROAD AS SHOWN.
2. WHEN HIGHWAY RIGHT-OF-WAY IS 15'-0" OR LESS FROM THE FACE OF BACKWALL PROJECTED, ANGLE FENCE INTO ABUTMENT FROM TOE OF SLOPE AS SHOWN.
3. WHEN HIGHWAY RIGHT-OF-WAY IS GREATER THAN 15'-0" FROM THE FACE OF BACKWALL PROJECTED, ANGLE FENCE PARALLEL TO THE CENTERLINE OF CROSSROAD AND INTERSECT DETAIL 2 AS SHOWN.
4. ½"x2" SELF-DRILL ANCHOR AND EYEBOLT ASSEMBLY.
5. ALL MATERIAL FOR ABUTMENT CONNECTION SHALL BE GALVANIZED.

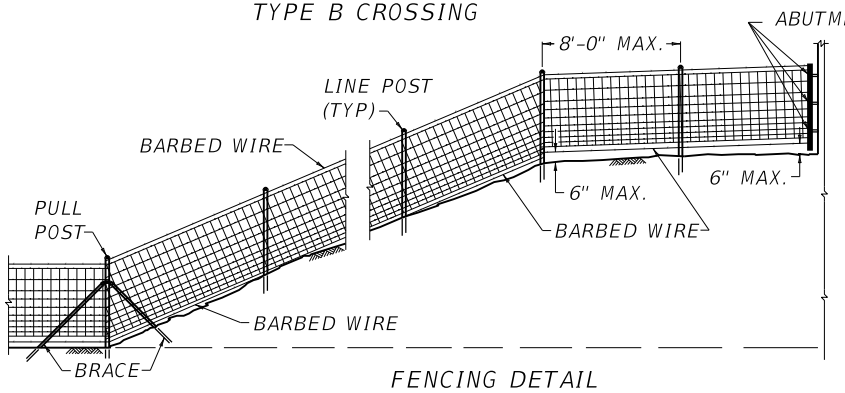

FENCING DETAIL

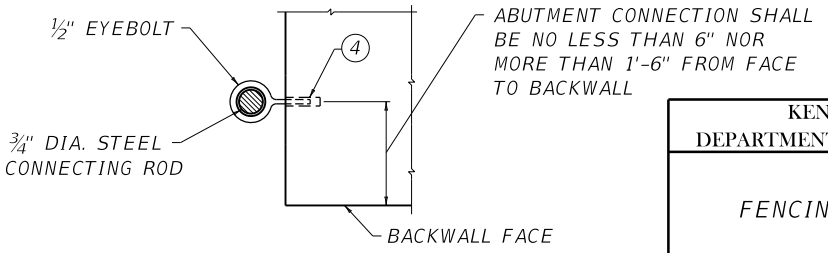

ABUTMENT CONNECTION

KENTUCKY
DEPARTMENT OF HIGHWAYS

FENCING DETAILS

STANDARD DRAWING NO. RFW-001-06

SUBMITTED William E. Ginkel — DIRECTOR DIVISION OF DESIGN — 12-01-15 DATE

APPROVED — STATE HIGHWAY ENGINEER — 12-01-15 DATE

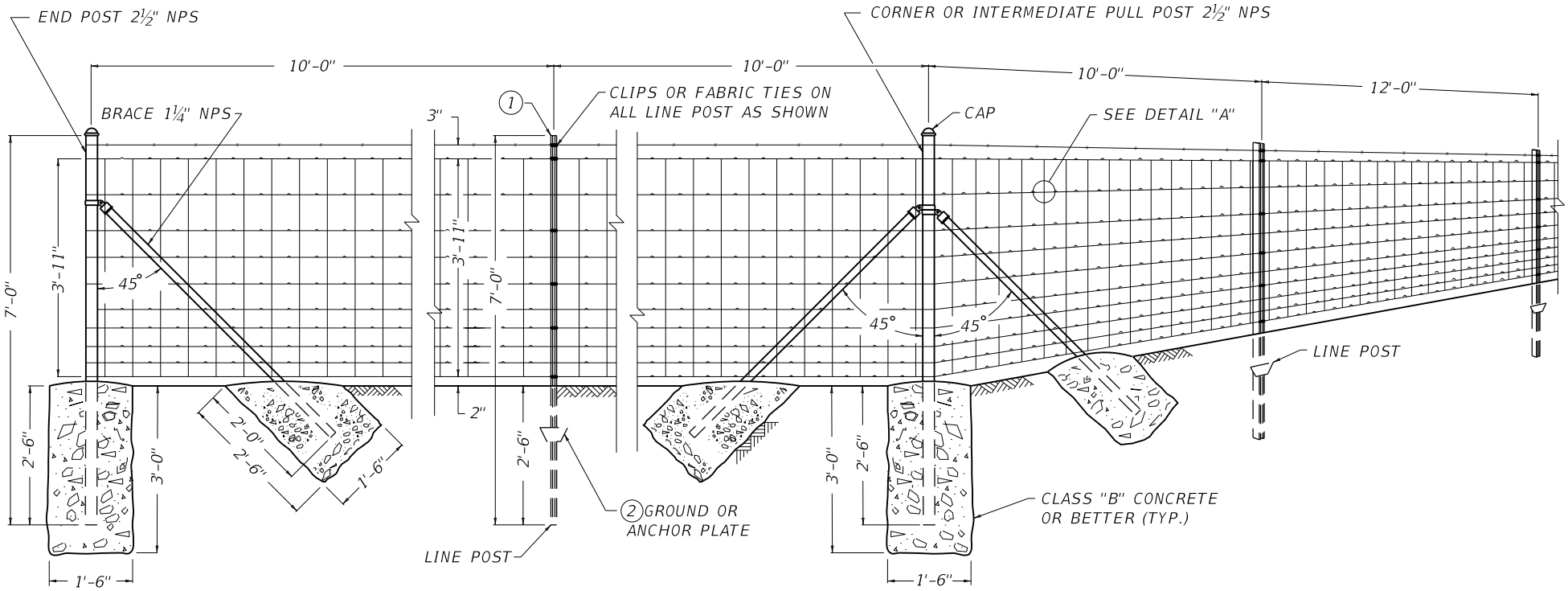

~ NOTES ~

BID ITEMS AND UNIT TO BID	
FENCE-WOVEN WIRE TYPE 1	LF
CONCRETE-CLASS B	CUYD

1. STUDDED "T" POST CONFORMING TO ASTM A702 AT 1.33 LBS. PER FOOT
   - OR -
   ROLL FORM POST AT 1.40 LBS. PER FOOT (SEE DETAIL)
2. NOT REQUIRED FOR ROLL FORM POST.
3. WOVEN-WIRE FABRIC SHALL BE EITHER ALUMINUM-COATED STEEL NO. 1047-6-9 OR ZINC-COATED STEEL NO. 1047-6-9.
4. ALL FENCE FITTINGS SHALL COMPLY WITH ASTM F626.
5. NPS = NOMINAL PIPE SIZE - ASTM F1083 AND F1043 (HEAVY INDUSTRIAL FENCE) SHALL GOVERN.

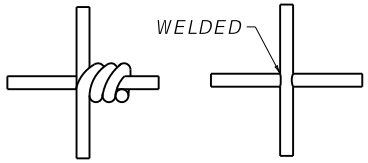

ALTERNATE METHODS OF SECURING VERTICAL STAY WIRE TO THE HORIZONTAL WIRE OF THE FABRIC.

DETAIL "A"

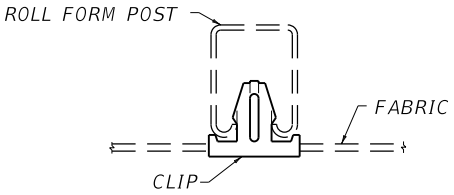

PLAN VIEW OF CLIP INSTALLED IN ROLL FORM POST

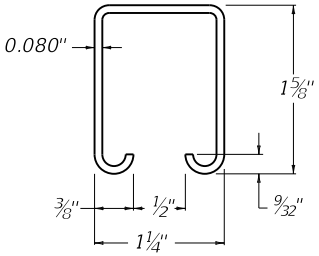

PLAN VIEW OF ROLL FORM POST

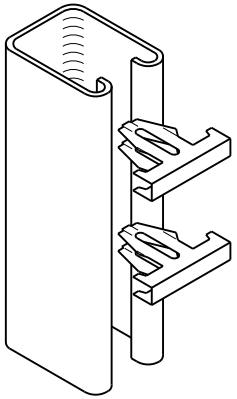

ISOMETRIC EXPLODED VIEW OF ROLL FORM POST AND CLIPS

CLIPS SHALL BE SPRING STEEL ALUMINUM - FINISHED

KENTUCKY
DEPARTMENT OF HIGHWAYS

WOVEN WIRE FENCE
TYPE 1

STANDARD DRAWING NO. RFW-005-08

SUBMITTED William E. Ginkel — DIRECTOR DIVISION OF DESIGN — 12-01-15 DATE

APPROVED — STATE HIGHWAY ENGINEER — 12-01-15 DATE

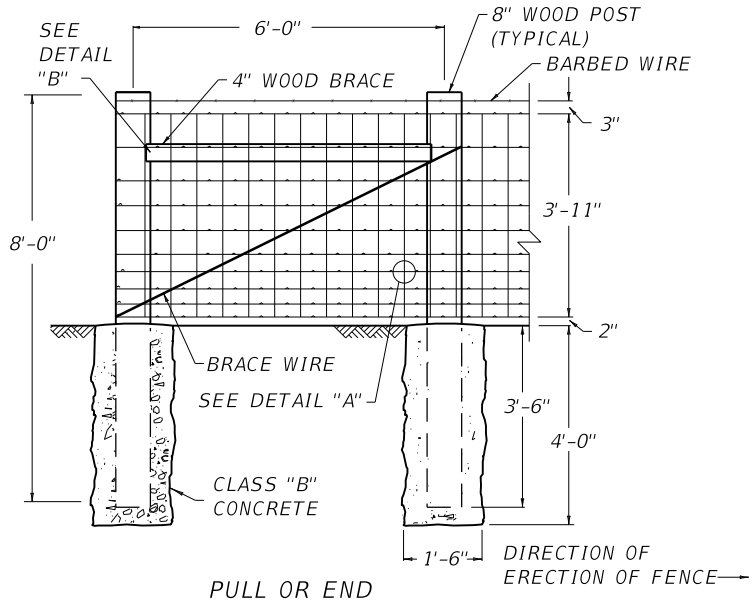

PULL OR END POST ASSEMBLY

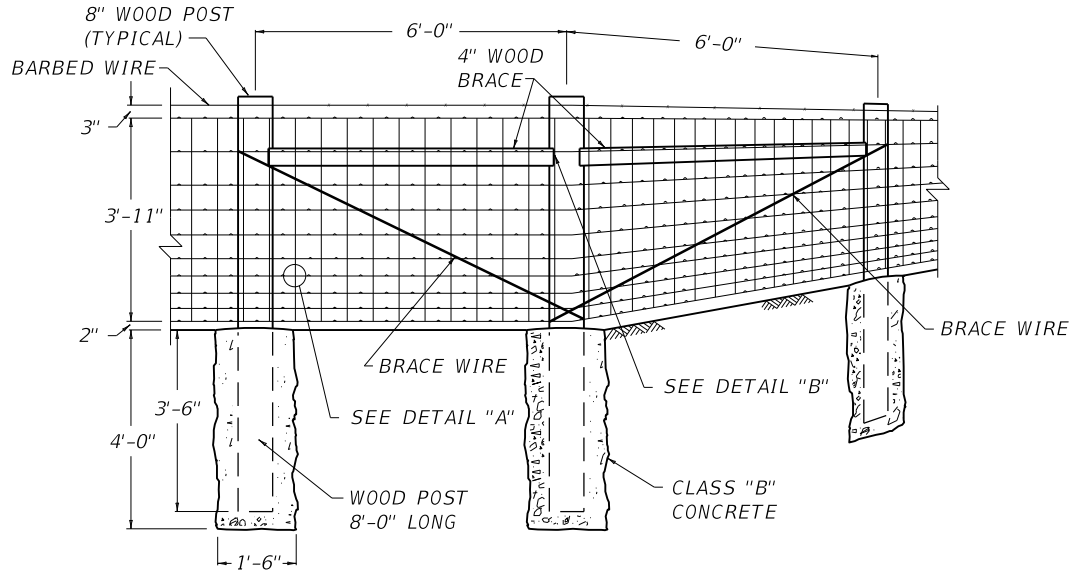

CORNER POST ASSEMBLY

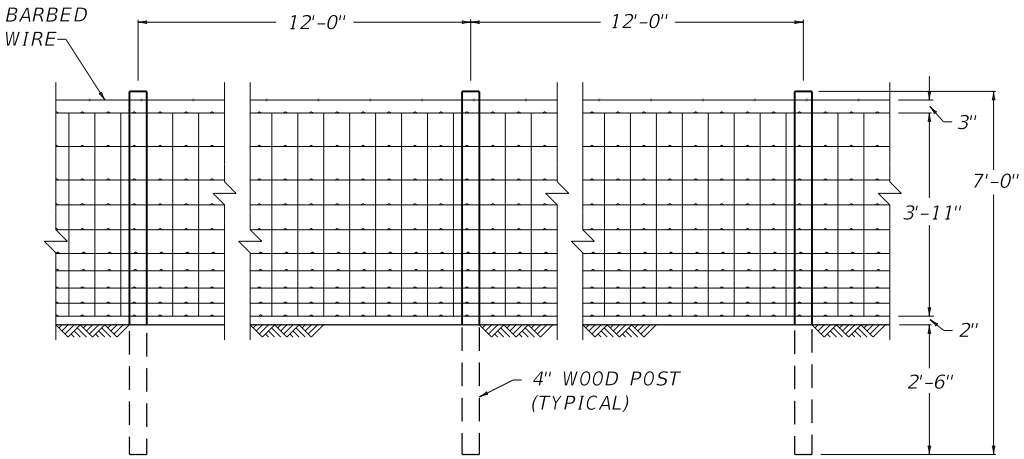

LINE POST

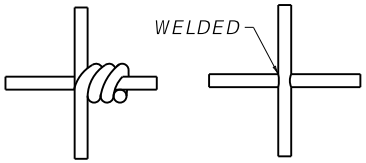

ALTERNATE METHODS OF SECURING VERTICAL STAY WIRE TO THE HORIZONTAL WIRE OF THE FABRIC.

DETAIL "A"

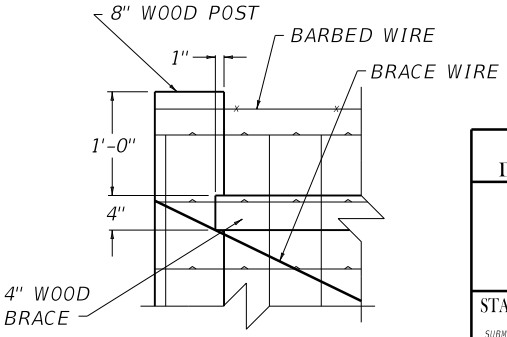

DETAIL "B"

~ NOTES ~

BID ITEM AND UNIT TO BID	
FENCE-WOVEN WIRE TYPE 2	LF
CONCRETE-CLASS B	CUYD

1. ON INTERMEDIATE PULL POST ASSEMBLIES, BRACE WIRES SHALL BE REQUIRED FOR BOTH DIRECTIONS.
2. WOVEN-WIRE FABRIC SHALL BE EITHER ALUMINUM-COATED STEEL NO. 1047-6-9 OR ZINC-COATED STEEL NO. 1047-6-9.

KENTUCKY
DEPARTMENT OF HIGHWAYS

WOVEN WIRE
FENCE TYPE 2

STANDARD DRAWING NO. RFW-006-07

SUBMITTED William E. Ginkel — DIRECTOR DIVISION OF DESIGN — 12-01-15 DATE

APPROVED — STATE HIGHWAY ENGINEER — 12-01-15 DATE

~ SECTIONS ~

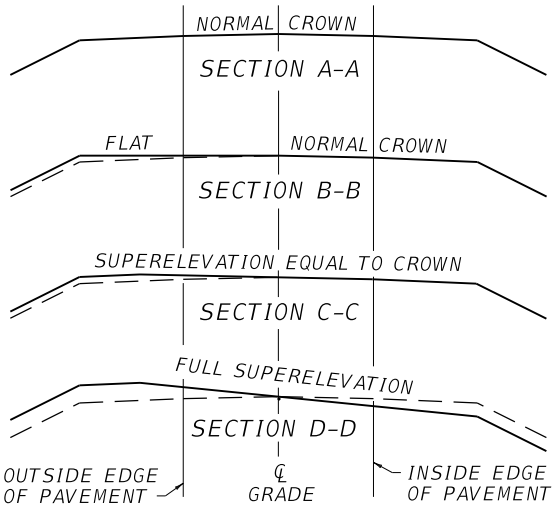

CURVE WIDENING FOR SPIRAL TRANSITION CURVES

(WIDENING DIVIDED EQUALLY ON EACH SIDE)

NOTE: IF DIRECTED, SPIRAL TRANSITION CURVES SHALL BE WIDENED ON INSIDE ONLY.

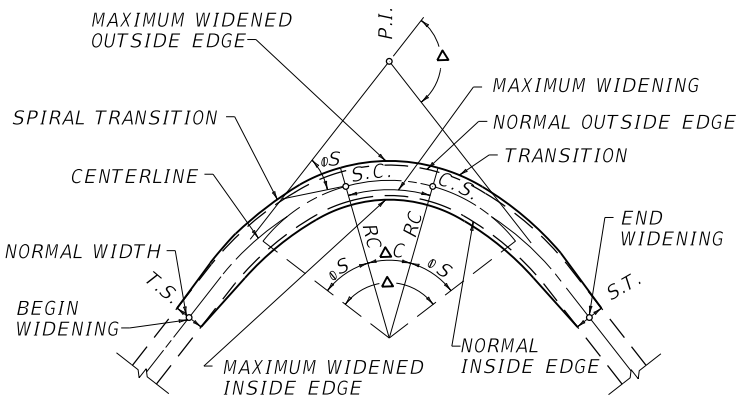

NOTE: MINIMUM WIDENING = 2'-0" ⑥

CURVE WIDENING FOR SIMPLE CURVES

(WIDENED ON INSIDE ONLY)

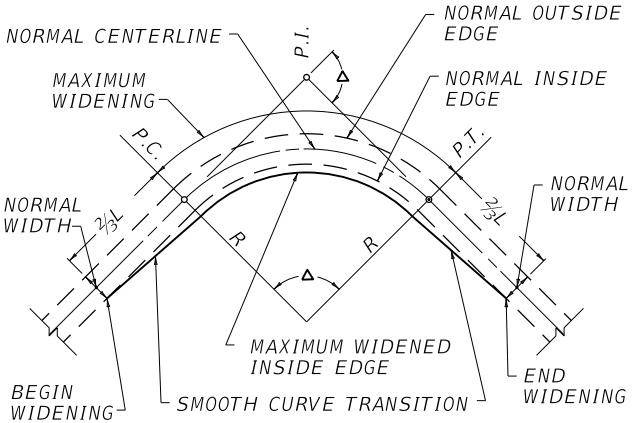

NOTE: MINIMUM WIDENING = 2'-0"
L = MINIMUM LENGTH OF RUNOFF.

SUPERELEVATION TRANSITION FOR CURVES SINGLE LANE PAVEMENT

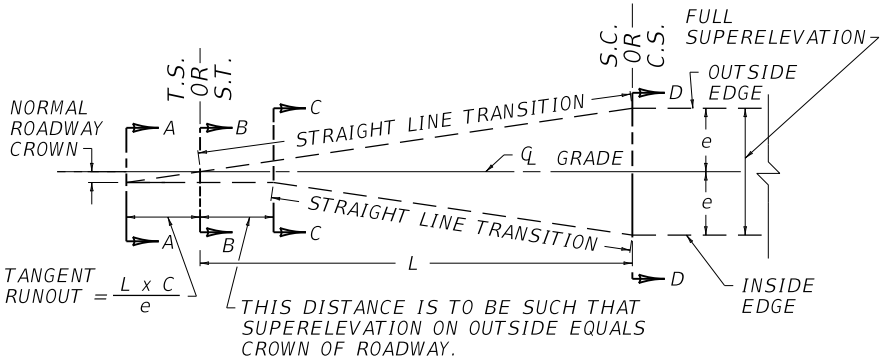

(SPIRAL CURVES)

L = MINIMUM LENGTH OF RUNOFF
C = RATE OF NORMAL CROWN
e = RATE FULL SUPER

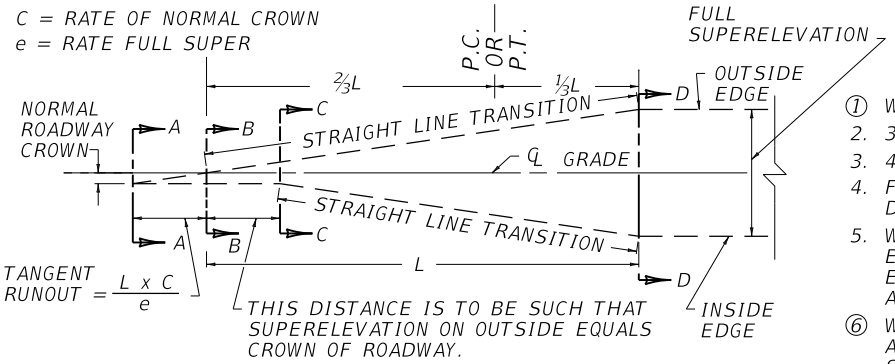

(SIMPLE CURVES)

CURVE WIDENING IN FEET FOR TWO-LANE PAVEMENTS ⑥

① PVMT. WIDTH	24 FEET			22 FEET					20 FEET			
RADIUS OF CURVE	DESIGN SPEED (MPH)											
	30	40	50	30	40	50	60	70	30	40	50	60
5000'												2.0
2500'									2.0	2.0	2.0	2.5
2000'								2.0	2.0	2.0	2.5	2.5
1500'							2.0	2.0	2.0	2.5	2.5	3.0
1200'						2.0	2.0		2.5	2.5	2.5	3.0
1000'					2.0	2.0	2.5		2.5	3.0	3.0	3.5
825'					2.0	2.5			2.5	3.0	3.5	
700'				2.0	2.0	2.5			3.0	3.0	3.5	
600'			2.0	2.0	2.5	3.0			3.0	3.5	4.0	
550'				2.0	2.5				3.0	3.5		
425'		2.0		2.5	3.0				3.5	4.0		
350'	2.0			3.0					4.0			
300'	2.5			3.5					4.5			
250'	3.0			4.0					5.0			
225'	3.5			4.5					5.5			

~ NOTES ~

① WIDTH OF PAVEMENT ON TANGENT.

2. 3-LANE PAVEMENTS: MULTIPLY ABOVE VALUES BY 1.5.
3. 4-LANE PAVEMENTS: MULTIPLY ABOVE VALUES BY 2.
4. FOR INTERMEDIATE DESIGN SPEEDS, USE THE NEXT HIGHER DESIGN SPEED VALUE.
5. WHEN REQUIRED ON CONSTRUCTION, CURVES SHALL BE SUPER-ELEVATED BY REVOLVING SECTION AROUND INSIDE OR OUTSIDE EDGE AS DIRECTED. SHORT VERTICAL CURVES TO BE INSERTED AT "D" AND "A" WHERE DIRECTED ON CONSTRUCTION.

⑥ WHEN SEMI-TRAILER VOLUMES ARE SIGNIFICANT, REFER TO THE AASHTO " A POLICY ON GEOMETRIC DESIGN OF HIGHWAYS AND STREETS" MANUAL.

KENTUCKY
DEPARTMENT OF HIGHWAYS

CURVE WIDENING AND SUPERELEVATION TRANSITIONS

STANDARD DRAWING NO. RGS-001-07

SUBMITTED William E. Ginkel — DIRECTOR, DIVISION OF DESIGN — 12-01-15 DATE

APPROVED — STATE HIGHWAY ENGINEER — 12-01-15 DATE

DEPRESSED MEDIAN

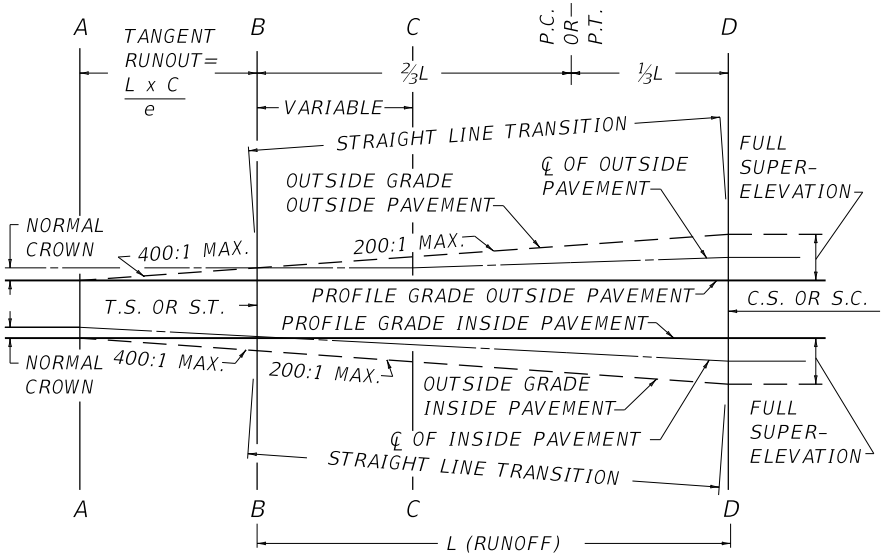

PROFILE OF PAVEMENT EDGES

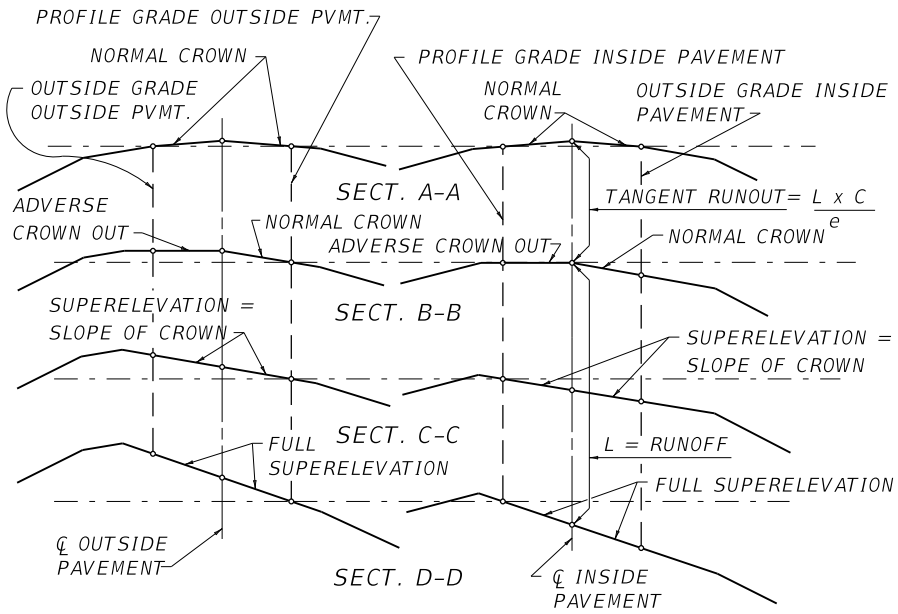

PROFILE GRADE AT MEDIAN EDGE

RAISED MEDIAN

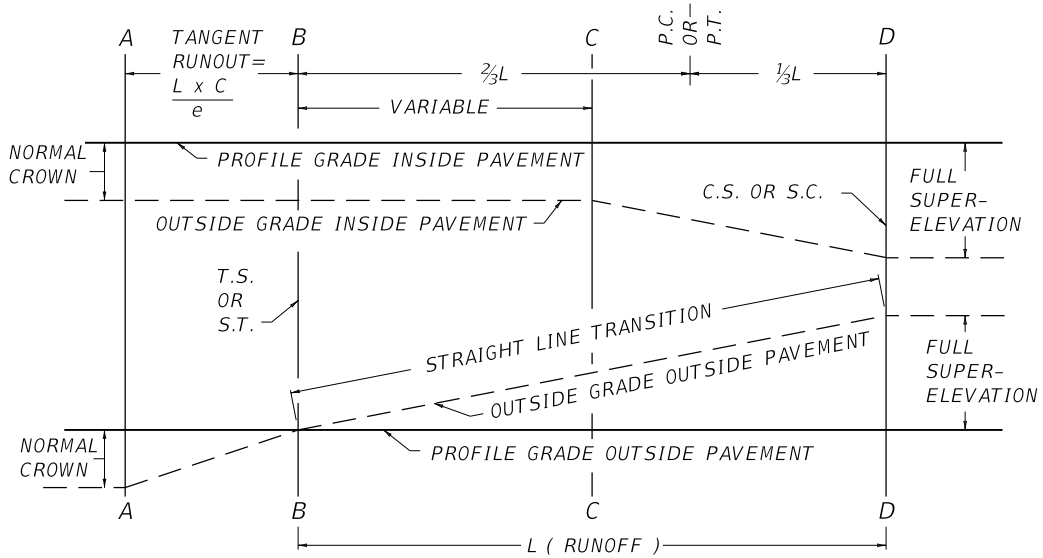

PROFILE OF PAVEMENT EDGES

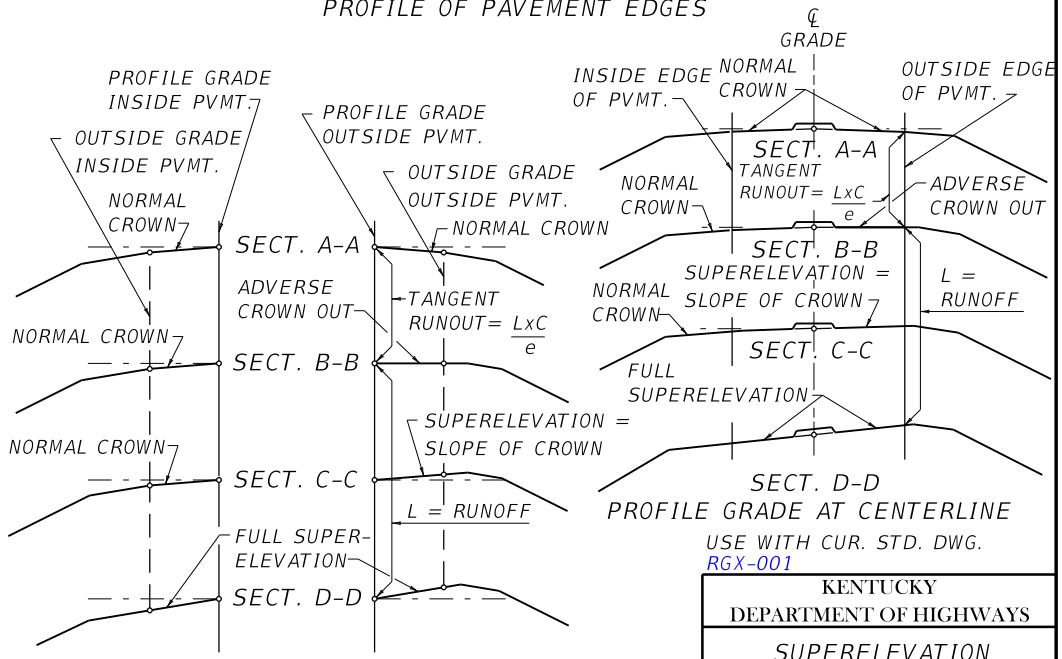

PROFILE GRADE AT MEDIAN EDGE

PROFILE GRADE AT CENTERLINE

USE WITH CUR. STD. DWG. RGX-001

KENTUCKY DEPARTMENT OF HIGHWAYS

SUPERELEVATION FOR MULTILANE PAVEMENT

STANDARD DRAWING NO. RGS-002-06

SUBMITTED William E. Ginkel — DIRECTOR DIVISION OF DESIGN — 12-01-15 DATE

APPROVED — STATE HIGHWAY ENGINEER — 12-01-15 DATE

~ NOTES ~

1. SPECIAL CARE MUST BE EXERCISED IN THE DRAINING OF DITCH SUMPS INDUCED BY THE SUPERELEVATION.
2. "L" = MINIMUM LENGTH OF RUNOFF.
3. FOR HINGE POINT ROUNDING BETWEEN SUPERABLE AND NON-SUPERABLE SHOULDER SEE CUR. STD. DWG. RGX-001 .

TYPICAL SECTION SHOWING ROUNDING OF SLOPES

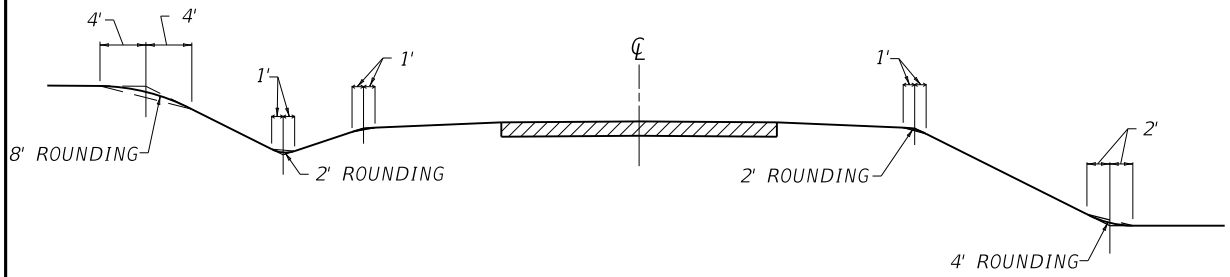

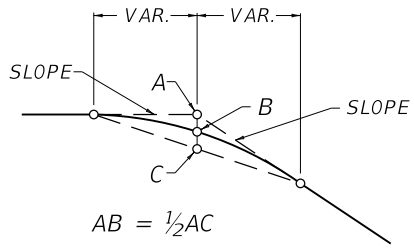

DETAIL FOR ROUNDING OF SLOPES

EARTH DIKE IN DEPRESSED MEDIAN AT THE END OF TWIN BRIDGES

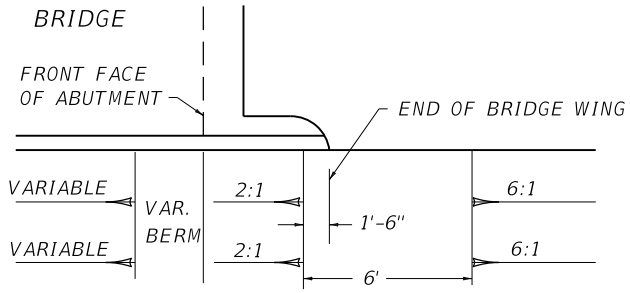

PLAN VIEW

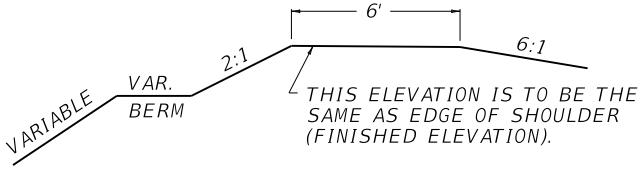

TO BE CONSTRUCTED ON GRADE AND DRAIN CONTRACT.

PROFILE OF EARTH DIKE

BRIDGE APPROACH FOR USE IN CONJUNCTION WITH ASPHALT CONCRETE PAVEMENT

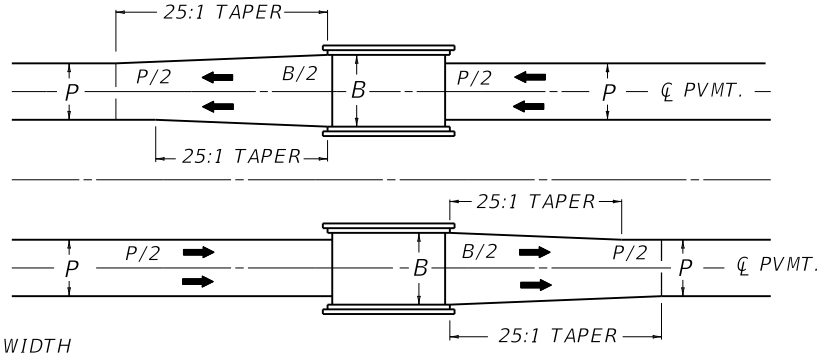

TWIN BRIDGES

P = NORMAL PAVEMENT WIDTH

B = BRIDGE ROADWAY

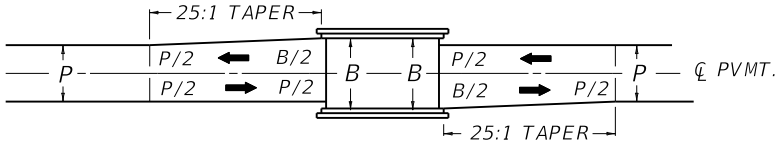

NORMAL PAVEMENT SHALL BE TRANSITIONED TO MEET BRIDGE ROADWAY AS INDICATED ABOVE.

SINGLE BRIDGE

PAVEMENT AND SHOULDER CROWN ROUNDED

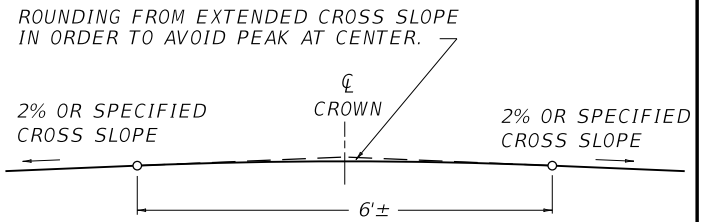

IN A HORIZONTAL CURVE, ROUNDING SHOULD BE USED AT HINGE POINT BETWEEN SUPERABLE AND NON-SUPERABLE SHOULDERS.

KENTUCKY
DEPARTMENT OF HIGHWAYS

MISCELLANEOUS STANDARDS

STANDARD DRAWING NO. RGX-001-06

SUBMITTED _____ DIRECTOR, DIVISION OF DESIGN — 12-01-15 DATE

APPROVED _____ STATE HIGHWAY ENGINEER — 12-01-15 DATE

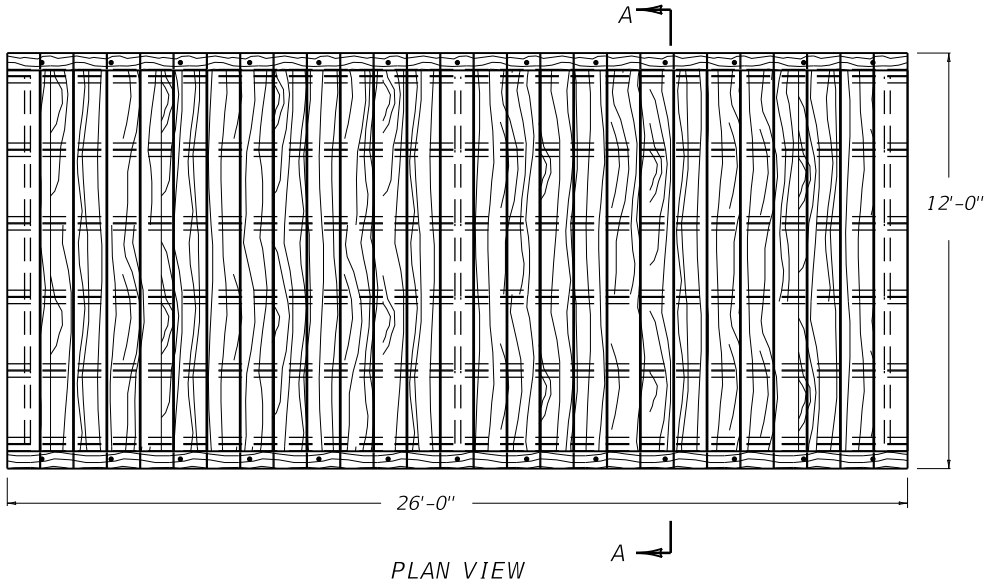

PLAN VIEW

~ NOTES ~

BID ITEM AND UNIT TO BID
TEMPORARY BRIDGE EACH

1. TYPES OF TEMPORARY BRIDGES AND PAVEMENT CROSSOVERS, OTHER THAN THE I-BEAM BRIDGE SHOWN HERE, WILL BE ACCEPTABLE UPON APPROVAL BY THE DEPARTMENT.
2. UNLESS OTHERWISE SPECIFIED THE STRUCTURE SHALL BE DESIGNED FOR AN HS20-44 LOADING.
3. STRUCTURE TO REMAIN THE PROPERTY OF THE CONTRACTOR.

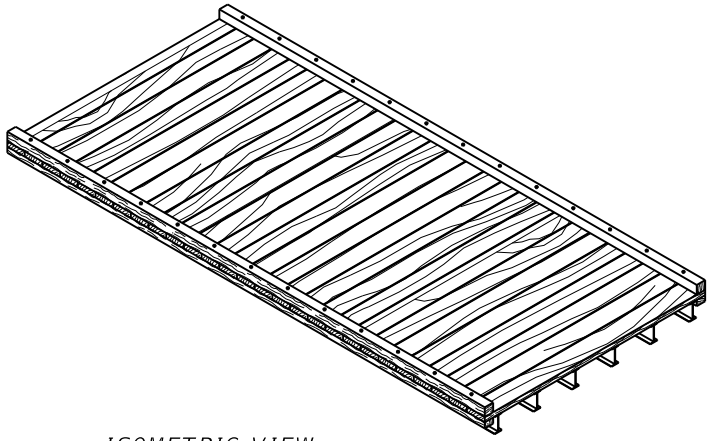

ISOMETRIC VIEW

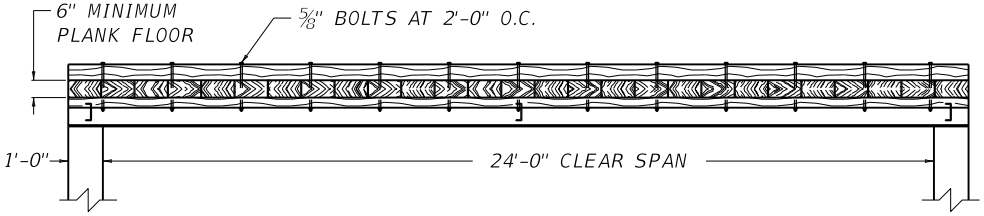

ELEVATION VIEW

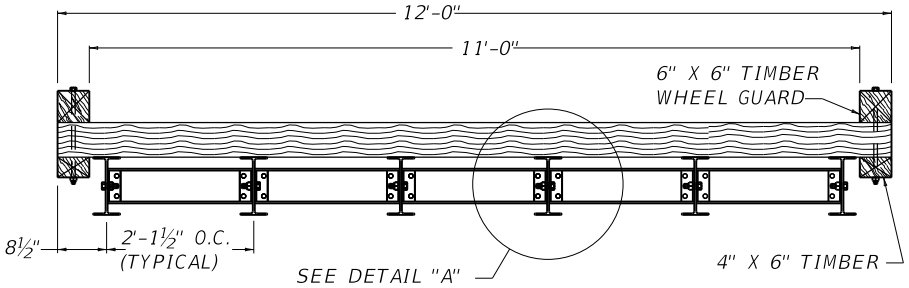

SECTION A-A

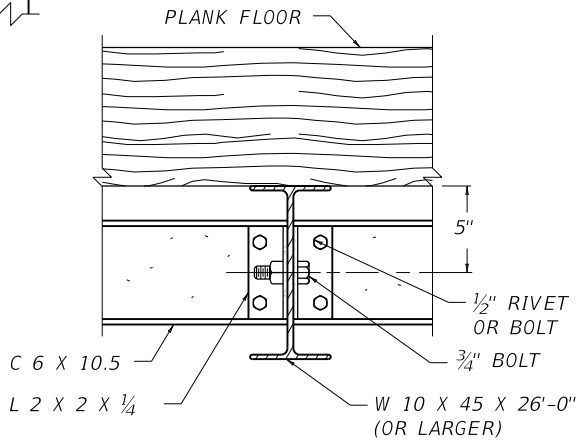

DETAIL "A"

KENTUCKY
DEPARTMENT OF HIGHWAYS

TEMPORARY BRIDGE
OR
PAVEMENT CROSSOVER

STANDARD DRAWING NO. RGX-003-03

SUBMITTED _____ DIRECTOR, DIVISION OF DESIGN — 12-01-15 DATE

APPROVED _____ STATE HIGHWAY ENGINEER — 12-01-15 DATE

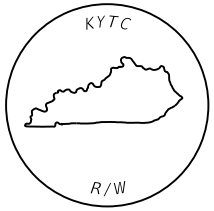

R/W MONUMENT
TYPE 1 OR 1A

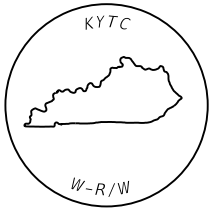

WITNESS R/W
MONUMENT
TYPE 2

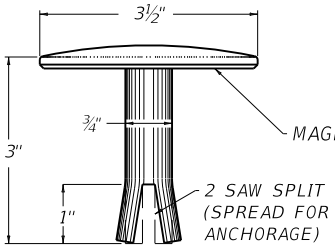

ELEVATION VIEW
R/W MONUMENT
TYPE 1A AND 3A

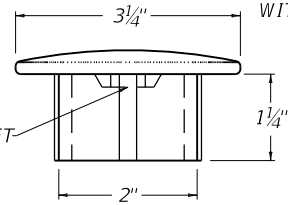

ELEVATION VIEW
R/W MONUMENT
TYPE 1 AND 3

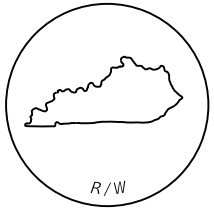

R/W MONUMENT
TYPE 3 OR 3A

WITNESS R/W
MONUMENT
TYPE 4

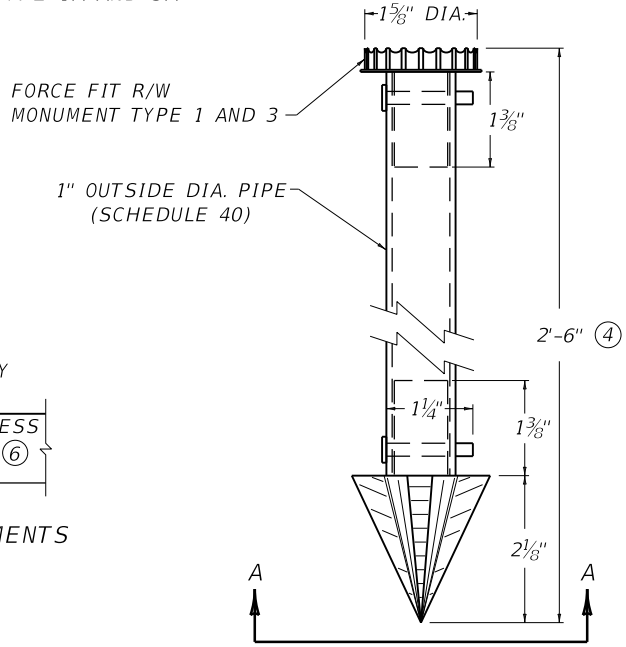

ELEVATION VIEW
R/W MONUMENT
TYPE 1 AND 3

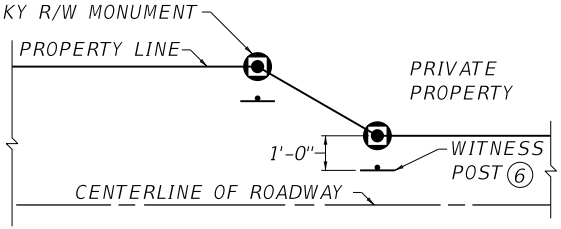

LAYOUT OF RURAL RIGHT-OF-WAY MONUMENTS

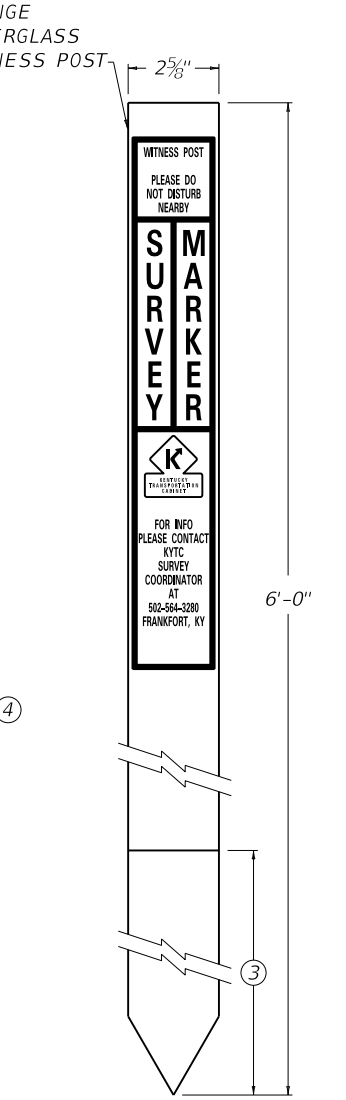

ELEVATION WITNESS POST

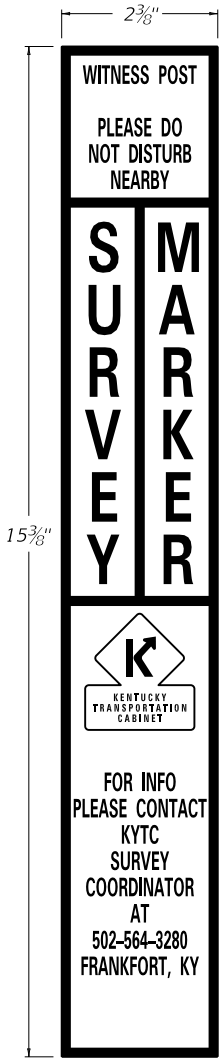

WITNESS POST DECAL

~ NOTES ~

BID ITEMS AND UNIT TO BID	
RIGHT-OF-WAY MONUMENT TYPE △	EACH
WITNESS RIGHT-OF-WAY MONUMENT TYPE ✱	EACH
WITNESS POST	EACH

△ EITHER TYPE 1, 1A, 3 OR 3A

✱ EITHER TYPE 3 OR 4

1. MANUFACTURE RIGHT-OF-WAY MONUMENTS FROM ALUMINUM ALLOY.
2. TYPE 1A AND 3A MONUMENTS SHALL BE MOUNTED FLUSH IN EXISTING PAVEMENT, DRAINAGE BOXES, ETC. DRILL A 1 1/16" DIAMETER HOLE AND EPOXY (COMMERCIAL GRADE) INTO EXISTING CONCRETE.

(3) WITNESS POST SHALL BE BURIED 1'-6" TO 2'-0" IN GROUND.

(4) WHEN ROCK IS ENCOUNTERED LENGTH MAY BE REDUCED.

5. SET ALL RIGHT-OF-WAY MONUMENTS FLUSH WITH GROUND OR ADJOINING SURFACE.

(6) THE LAND SURVEYOR IN CHARGE OF MONUMENTATION IS ENCOURAGED TO PLACE A WITNESS POST FOR THE RIGHT-OF-WAY MONUMENTS WHERE PRACTICAL AND FEASIBLE. IF POSSIBLE, A MINIMUM OF THREE WITNESS POSTS PER PROJECT SHOULD BE PLACED.

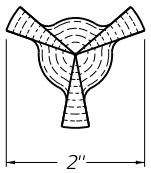

SECTION A-A

KENTUCKY
DEPARTMENT OF HIGHWAYS

RIGHT-OF-WAY
MONUMENTS

STANDARD DRAWING NO. RGX-005-06

SUBMITTED William E. Ginkel — DIRECTOR DIVISION OF DESIGN — 12-01-15 DATE

APPROVED — STATE HIGHWAY ENGINEER — 12-01-15 DATE

~ NOTES ~

1. THIS TREATMENT FOR EMBANKMENT FOUNDATION BENCHES, AS INDICATED ON THIS SHEET, SHALL BE ACCEPTED AS GUIDES FOR HIGHWAY DESIGN, HOWEVER, ALL THE CONDITIONS THAT WILL BE ENCOUNTERED CANNOT BE SHOWN, SO THE DESIGNER MUST GIVE CONSIDERABLE THOUGHT TO THE LOCATIONS AND DIMENSIONS OF THESE BENCHES.
2. DEFINITE DESIGN INFORMATION CANNOT BE ESTABLISHED AS TO THE SIZE OF THESE BENCHES, DUE TO THE IRREGULARITIES AND THE DIFFERENT RATES OF INCLINE OF THE EXISTING CROSS SECTION, HOWEVER, IT IS GENERALLY BELIEVED THAT A 6' TO 12' RISE AND A 20' TO 35' HORIZONTAL RUN IS FAIRLY TYPICAL WITH A 15' HORIZONTAL RUN BEING THE MINIMUM.
3. WHEN THE INCLINE OF THE CROSS SECTION IS 15% OR GREATER THESE EMBANKMENT FOUNDATION BENCHES SHALL BE CONSTRUCTED IN THE ORIGINAL SLOPE AS THE EMBANKMENT IS CONSTRUCTED IN COMPACTED LAYERS OR LIFTS.
4. WHEN EMBANKMENT FOUNDATION BENCHES ARE SHOWN ON THE CROSS SECTION, THE VOLUME SHALL BE COMPUTED AS ROADWAY EXCAVATION OR EMBANKMENT IN PLACE AS APPLICABLE AND SHOWN IN THE SHEET TOTALS AND BROUGHT FORWARD TO BE INCLUDED IN THE TOTAL EARTHWORK WITH THE NOTE "TOTAL INCLUDES "X" NUMBER OF CUBIC YARDS FROM EMBANKMENT FOUNDATION BENCHES."
5. THE EXCAVATION FROM THESE BENCHES WILL NOT BE SHOWN IN THE DISTRIBUTION OF QUANTITIES BUT THEY WILL DEFINITELY BE A PAY QUANTITY BY VIRTUE OF THE FACT THAT THEY ARE INCLUDED IN THE TOTAL OF ROADWAY EXCAVATION QUANTITIES.
6. NO QUANTITIES WILL BE ALLOWED FOR THE REFILLING OF THESE BENCHES, SINCE SUPPOSEDLY, THE MATERIAL THAT WAS EXCAVATED WILL BE PROCESSED AND PLACED BACK IN THESE BENCHES.
7. IF THE CROSS SECTION IS AN EARTH ONE, THAT IS IF NO ROCK IS SHOWN, THEN THE FOUNDATION BENCHES SHALL BE INDICATED ON THE CROSS SECTION AND CONSTRUCTED AS SHOWN BY THE DRAWING AND THE VOLUME OF EXCAVATION BECOMES A PAY ITEM AS ROADWAY EXCAVATION OR EMBANKMENT IN PLACE AS APPLICABLE, IN OTHER WORDS, SUPPORT BENCHING OF EARTH SECTIONS SHALL BE GIVEN SAME TREATMENT AS ROCK OR NEAR ROCK SECTION.
8. SHOULD IT BE EVIDENT, AT THE TIME OF CONSTRUCTION, THAT THE ENGINEER FINDS AND SO DIRECTS THAT THE EMBANKMENT FOUNDATION BENCHING IS NECESSARY AND IT IS NOT SO INDICATED ON THE DESIGN CROSS SECTIONS THE BASIS OF PAYMENT SHALL BE AS HEREIN BEFORE STATED.

BID ITEMS AND UNIT TO BID

ROADWAY EXCAVATION	CUYD
OR	
EMBANKMENT IN PLACE	CUYD

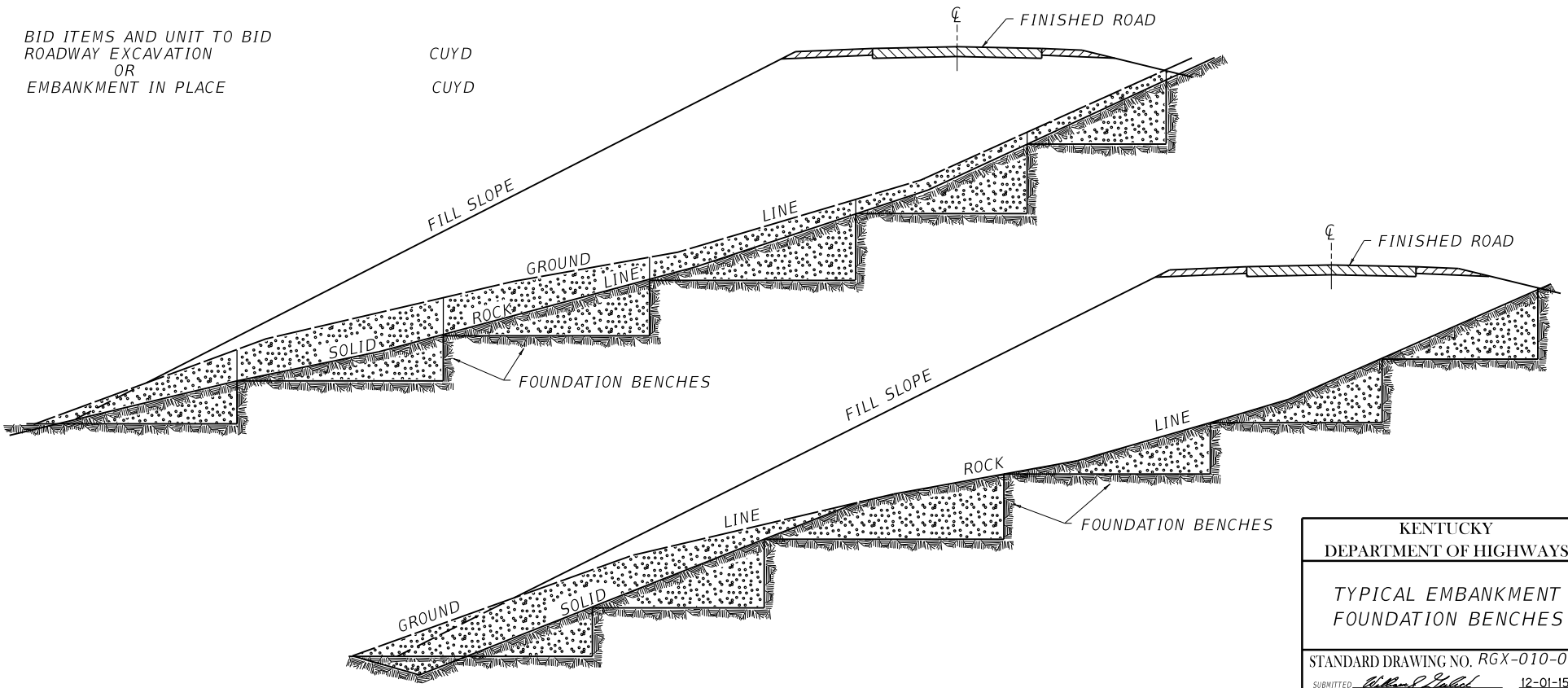

KENTUCKY
DEPARTMENT OF HIGHWAYS

TYPICAL EMBANKMENT
FOUNDATION BENCHES

STANDARD DRAWING NO. RGX-010-04

SUBMITTED William E. Ginkel — DIRECTOR DIVISION OF DESIGN — 12-01-15 DATE

APPROVED — STATE HIGHWAY ENGINEER — 12-01-15 DATE

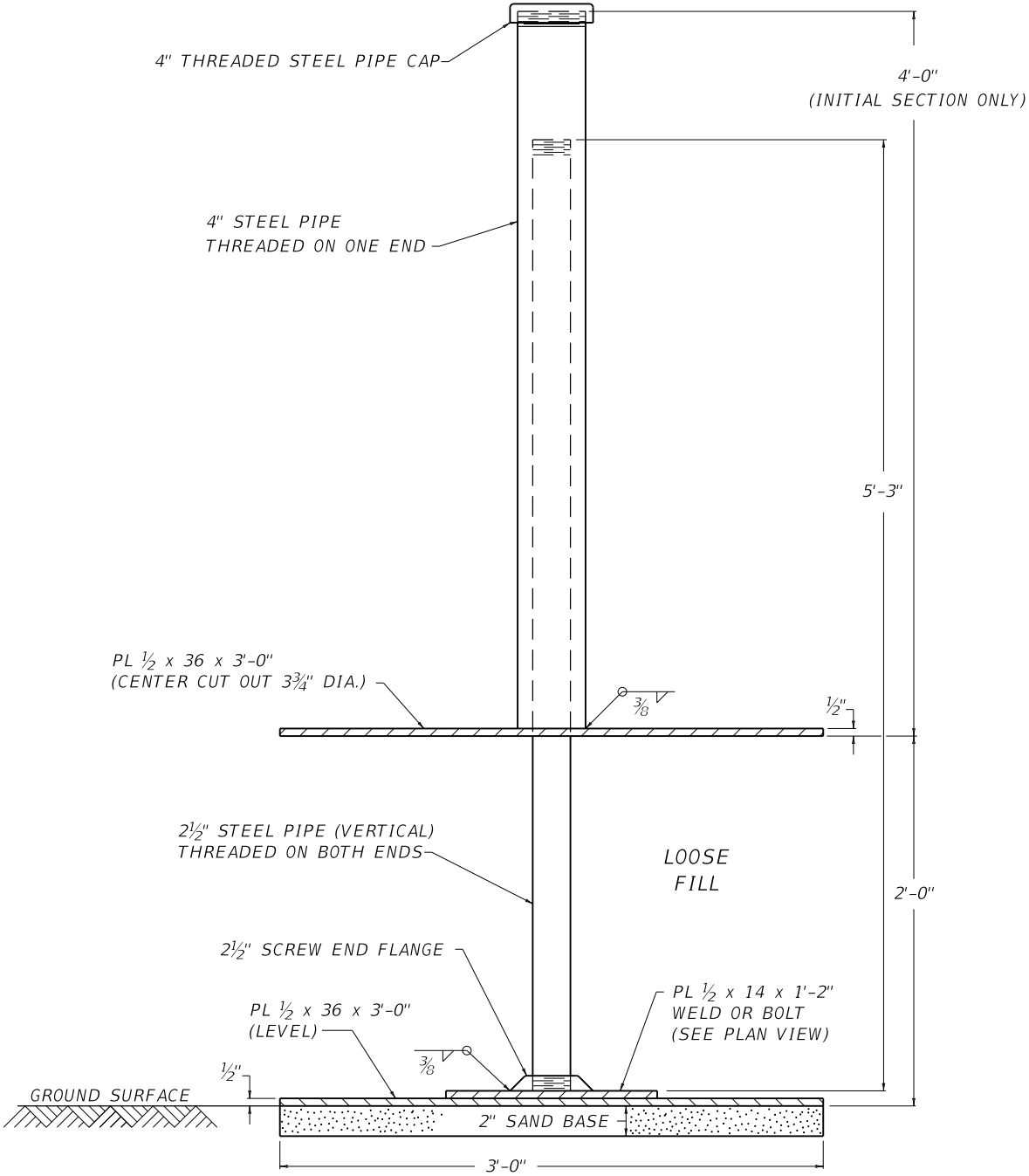

ELEVATION VIEW

~ NOTES ~

1. ADDITIONAL PIPE SHALL BE FURNISHED IN 5'-3" SECTIONS (DUE TO COMMERICAL PIPE LENGTHS OF 21'-0") THREADED ON BOTH ENDS, PAID FOR PER LF AND SHALL MEET THE REQUIREMENTS OF SECTION 810.05.03 OF THE CURRENT STANDARD SPECIFICATIONS.
2. PIPE SIZES ARE GIVEN IN NOMINAL DIAMETERS.

BID ITEMS AND UNIT TO BID	
SETTLEMENT PLATFORM	EACH
STEEL PIPE-2½ IN	LF
STEEL PIPE-4 IN	LF

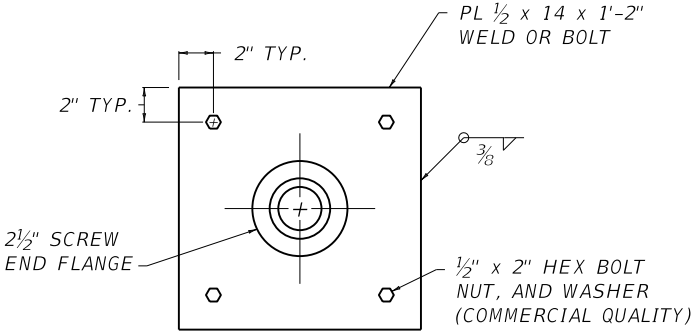

PLAN VIEW

KENTUCKY
DEPARTMENT OF HIGHWAYS

SETTLEMENT
PLATFORM

STANDARD DRAWING NO. RGX-015-03

SUBMITTED William E. Ginkel — DIRECTOR DIVISION OF DESIGN — 12-01-15 DATE

APPROVED — STATE HIGHWAY ENGINEER — 12-01-15 DATE

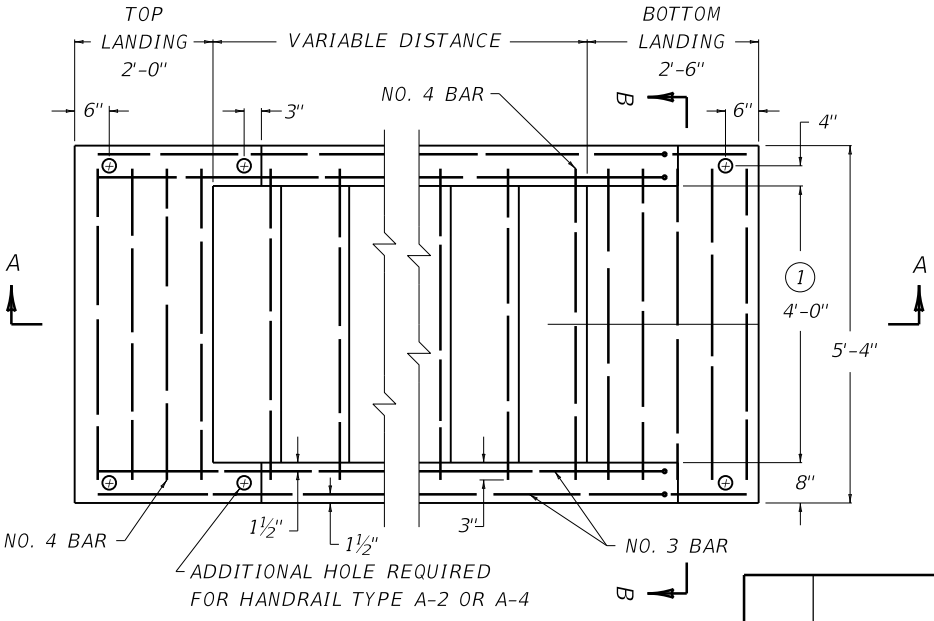

PLAN VIEW

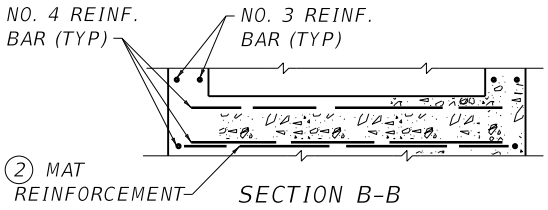

SECTION B-B

~ NOTES ~

BID ITEM AND UNIT TO BID
CONCRETE-CLASS A FOR STEPS — CUYD

1. APPROXIMATE QUANTITY TO ADD FOR EACH ADDITIONAL FOOT OF WIDTH OVER 4'-0".
2. MAT REINFORCEMENT IN BOTTOM OF THE STEPS SHALL BE WIRE FABRIC OR BAR MAT REINFORCEMENT.
3. MAT REINFORCEMENT:
   (A) NO. 4 REINFORCEMENT BARS, LONGITUDINAL BARS 6" O.C. AND TRANSVERSE BARS 12" O.C. MIN. GRADE 40; OR WELDED WIRE FABRIC - 6x6 - W4xW4 58 LBS./100 SQ. FT.
   (B) NO. 4 REINFORCEMENT BARS ADDITIONALLY AS SHOWN.
   (C) NO. 3 REINFORCEMENT BARS ADDITIONALLY AS SHOWN.
4. ROUND ALL EXPOSED EDGES AND CORNERS ¼" R.
5. HANDRAIL SHALL BE REQUIRED WITH THREE OR MORE STEPS.
6. REINFORCING STEEL SHALL BE PLACED SO NOT TO INTERFERE WITH HANDRAIL POSTS.

TABLE OF QUANTITIES

SLOPE	LOCATION	ADDITIONAL NO. 4 BAR REINF. (LBS.)		MAT REINFORCEMENT				CU. YDS. CLASS "A" CONCRETE	
				WIRE FABRIC (SQ. FT.)		BAR MAT (LBS.)			
		4' WIDTH	1	4' WIDTH	1	4' WIDTH	1	4' WIDTH	1
2:1	BOTTOM LANDING	23.547	3.340	11.776	2.375	27.388	5.177	0.337	0.059
	INTERMEDIATE STEP	10.855	1.336	5.991	1.208	12.191	2.283	0.16	0.025
	TOP LANDING	22.483	3.340	9.504	1.917	20.708	3.897	0.265	0.051
1½:1	BOTTOM LANDING	23.603	3.340	12.602	2.542	28.613	5.400	0.36	0.062
	INTERMEDIATE STEP	10.271	1.336	5.268	1.063	11.119	2.088	0.16	0.025
	TOP LANDING	22.545	3.340	9.710	1.958	21.014	3.952	0.281	0.054

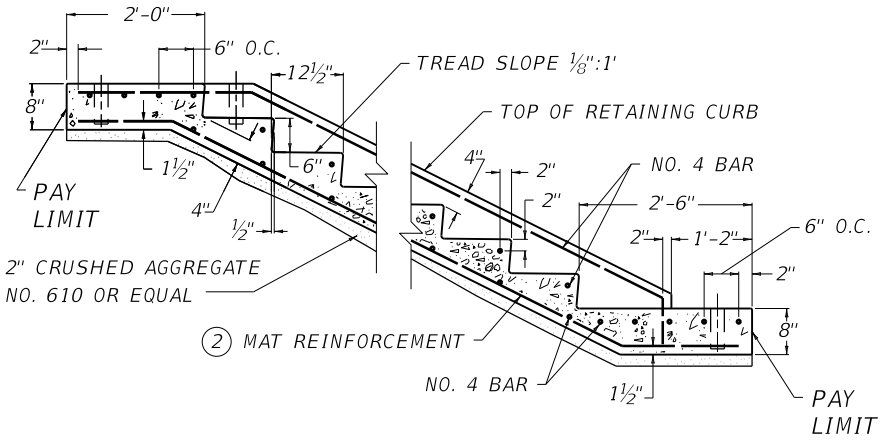

SECTION A-A 2:1 SLOPE

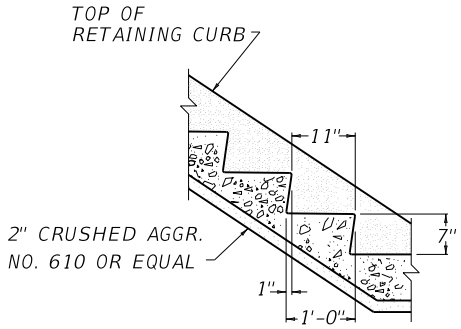

STEP DETAIL FOR 1 ½ : 1 SLOPE

USE WITH CUR. STD. DWG. RGX-030

KENTUCKY DEPARTMENT OF HIGHWAYS

CONCRETE STEPS

STANDARD DRAWING NO. RGX-020-13

SUBMITTED William S. Gilbert — DIRECTOR DIVISION OF DESIGN — 12-01-15 DATE

APPROVED — STATE HIGHWAY ENGINEER — 12-01-15 DATE

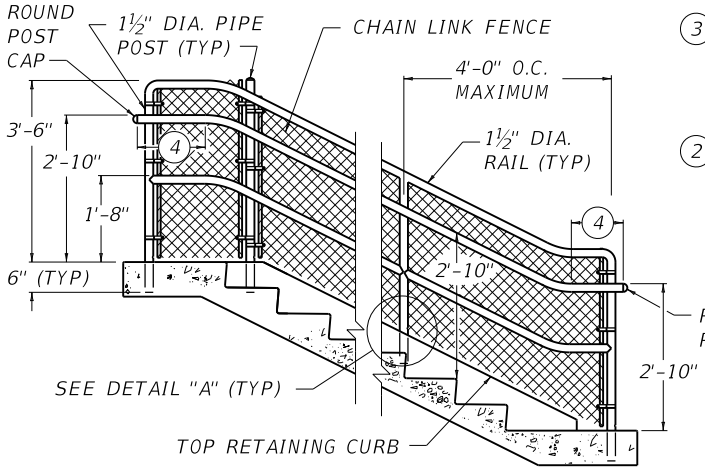

ELEVATION OF HANDRAIL TYPE A-4

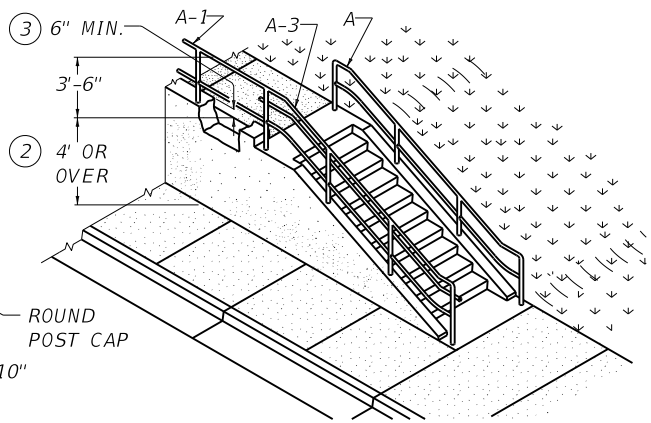

ISOMETRIC OF HANDRAIL TYPE A, A-1 AND A-2

HANDRAIL TYPE DESCRIPTION TABLE

☆

TYPE	HEIGHT REQ'D.	FENCE REQ'D.	MAX. POST SPACING	NO. OF RAILS
A	2'-10"	NO	4'-0"	2
A-1	3'-6"	NO	4'-0"	2
A-2	3'-6"	YES	4'-0"	2
A-3	3'-6"	NO	4'-0"	3
A-4	3'-6"	YES	4'-0"	3

~ NOTES ~

BID ITEM AND UNIT TO BID

HANDRAIL TYPE ☆ LF

1. HANDRAIL SHALL BE REQUIRED WITH THREE OR MORE STEPS. HANDRAIL IS OPTIONAL WITH LESS THAN THREE STEPS.
2. HANDRAIL USED AS A TOP HANDRAIL ON STEPS AND HANDRAIL USED ON A RETAINING WALL SHALL BE REQUIRED WHEN THE ADJACENT FLOOR, GROUND LEVEL, ROAD, WALK, ETC. IS 4' OR MORE BELOW THE TOP OF THE RETAINING WALL.
3. THE TOP OF THE RETAINING WALL OR CURB SHALL BE A MIN. OF 6" ABOVE THE ADJOINING SIDEWALK.
4. A DISTANCE OF 1'-0" MIN. SHALL BE PARALLEL TO THE STEP RUNNER.
5. HANDRAIL WITH INTERNAL CONNECTIONS: HANDRAIL SHALL BE CONSTRUCTED OF 1½" SCHEDULE 40 ALUMINUM PIPE IN ACCORDANCE WITH ASTM B221 ALLOY 6063-T52 FOR RAIL AND ASTM B210 ALLOY 6063-T832 FOR POSTS. ~OR~ HANDRAIL WITH WELDED CONNECTIONS: HANDRAIL SHALL BE CONSTRUCTED OF 1½" SCHEDULE 40 ALUMINUM PIPE IN ACCORDANCE WITH ASTM B221 OR B210 ALLOY 6061-T6.
6. ANCHOR POST IN FORMED HOLES (SEE DETAIL "A"). FOR INSTALLATION PROCEDURES OF THE CHAIN LINK FENCE AS APPLICABLE SEE CUR. STD. DWG. RFC-001.
7. ALL INTERNAL CONNECTIONS SHALL BE MADE WITH AN EPOXY ADHESIVE (RECOMMENDED BY THE MANUFACTURE), STAINLESS STEEL MACHINE SCREWS WITH LOCK WASHERS, AND THREADED TUBULAR RIVETS IN ORDER TO PROVIDE A SMOOTH INSTALLATION. EXPANSION JOINTS SHALL BE PROVIDED APPROX. 20'-0" O.C.
8. SIDEWALK SLABS SHALL BE THICKENED TO 8"x8"x8" AT POST LOCATIONS.

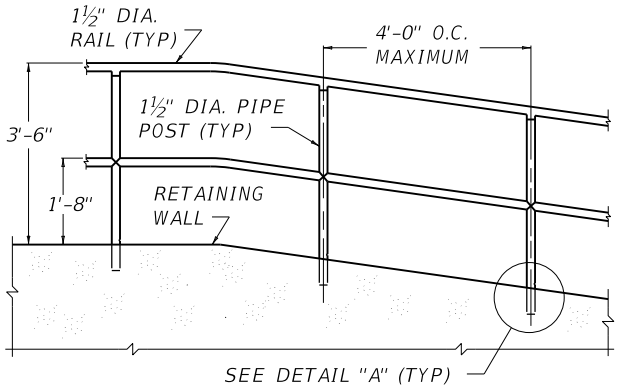

ELEVATION OF HANDRAIL TYPE A-1

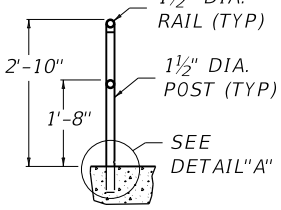

SECTION OF HANDRAIL TYPE A

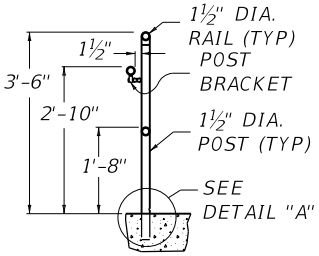

SECTION OF HANDRAIL TYPE A-3

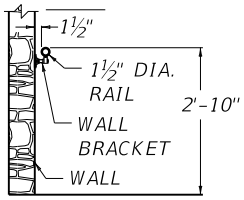

SECT. FOR WALL MOUNTED HANDRAIL

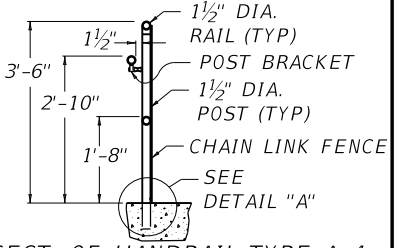

SECT. OF HANDRAIL TYPE A-4

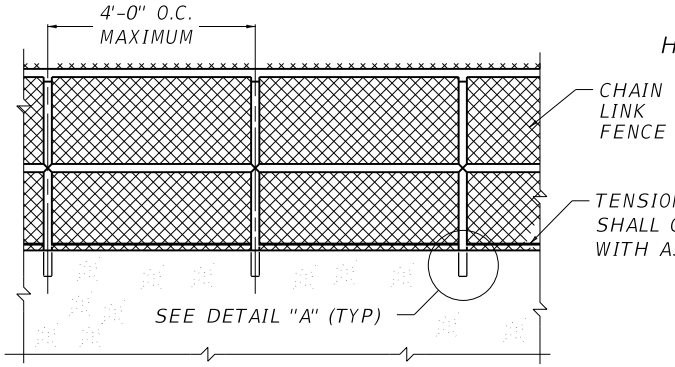

ELEVATION OF HANDRAIL TYPE A-2

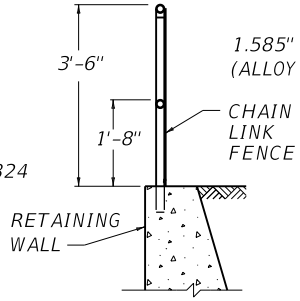

SECTION OF HANDRAIL TYPE A-2

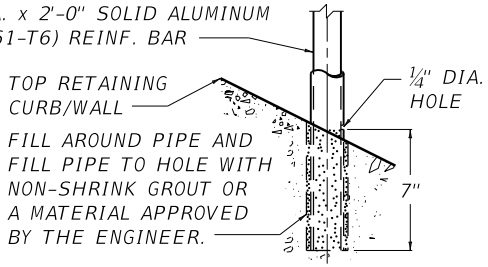

DETAIL "A"

USE WITH CUR. STD. DWG. RFC-001

KENTUCKY DEPARTMENT OF HIGHWAYS

HANDRAIL TYPE A, A-1, A-2, A-3, A-4

STANDARD DRAWING NO. RGX-030-07

SUBMITTED William E. Ginkel DIRECTOR, DIVISION OF DESIGN 12-01-15 DATE

APPROVED STATE HIGHWAY ENGINEER 12-01-15 DATE

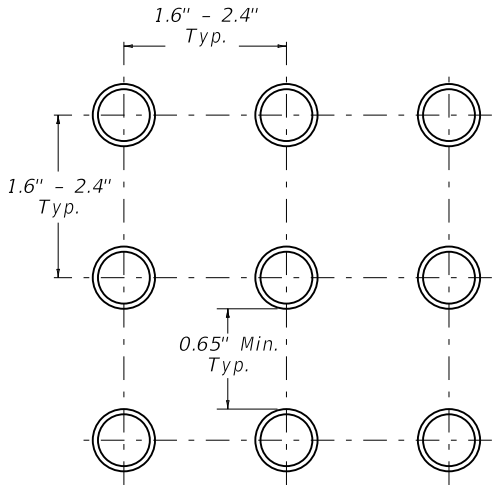

SQUARE PATTERN

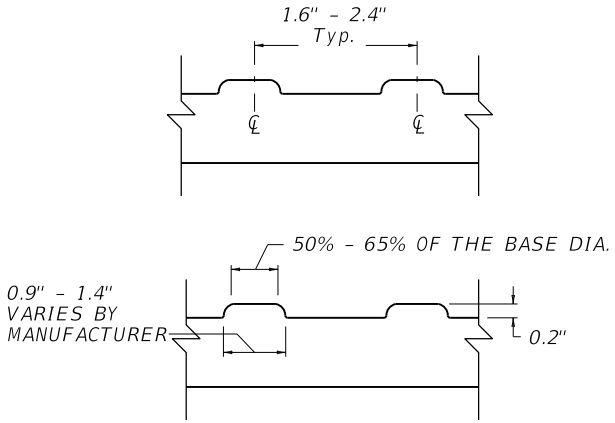

CONCRETE PAVER PROFILE

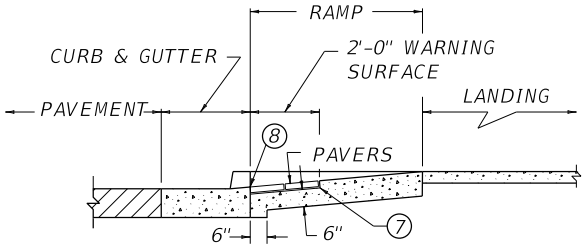

TYPICAL CONCRETE
PAVER DETECTABLE
WARNING INSTALLATION

~ NOTES ~

BID ITEM AND UNIT TO BID.
DETECTABLE WARNINGS SF

1. LANDINGS WILL PROVIDE A LEVEL AREA (MAX. 2% GRADE OR CROSS SLOPE) AT APPROXIMATE STREET ELEVATION. A 4' SQUARE LEVEL LANDING IS THE REQUIRED MINIMUM. SEE NOTE 9 ON CUR. STD. DWG. RPM-170.
2. DETECTABLE WARNINGS SHALL BE INSTALLED USING CONCRETE PAVERS IN ACCORDANCE WITH THE CURRENT EDITION OF THE STANDARD SPECIFICATIONS FOR ROAD AND BRIDGE CONSTRUCTION.
3. JOINTS AROUND PAVERS SHALL BE FILLED WITH DRY MORTAR. MORTAR SHALL BE BRUSHED IN WITH A COURSE BROOM. SAND WILL NOT BE ALLOWED.
4. COMMERCIAL DRIVEWAYS WITH TRAFFIC CONTROL DEVICES REQUIRE ADA SIDEWALK TREATMENTS WITH DETECTABLE WARNINGS.
5. CONCRETE PAVERS SHALL BE CONCRETE WITH A MINIMUM THICKNESS OF 2".
6. CONCRETE PAVERS SHALL BE A COLOR HOMOGENOUS THROUGHOUT THE PAVER, THAT COLOR SHALL CONTRAST VISUALLY WITH THE ADJOINING SURFACES, EITHER LIGHT-ON-DARK OR DARK-ON-LIGHT. THE DEPARTMENT WILL ALLOW EITHER YELLOW OR RED AS COLORS.

(7) CONCRETE PAVERS SHALL BE SET IN MORTAR.

(8) DETECTABLE WARNING SURFACE BEGINS AT BACK OF CURB.

USE WITH CUR. STD. DWGS.
RPM-170 RPM-172

KENTUCKY
DEPARTMENT OF HIGHWAYS

DETECTABLE
WARNINGS

STANDARD DRAWING NO. RGX-040-03

SUBMITTED William E. Ginkel — DIRECTOR, DIVISION OF DESIGN — 12-01-15 DATE

APPROVED — STATE HIGHWAY ENGINEER — 12-01-15 DATE

~ NOTES ~

BID ITEMS AND UNIT TO BID

RETAINING WALL-GABION	CUYD
STRUCTURE EXCAVATION	CUYD

SEE THE CURRENT STANDARD SPECIFICATIONS FOR ROAD AND BRIDGE CONSTRUCTION.

(1) THE GABION RETAINING WALL DEPICTED ON THIS DRAWING SHALL BE USED WHEN THE HEIGHT ("H" DIMENSION) OF THE WALL IS 12'-0" OR LESS AND THE BACKFILL SLOPE IS 2:1 OR LESS.

(2) LENGTH OF GABIONS MAY BE 6'-0", 9'-0" OR 12'-0" LONG WITH PARTITIONS 3'-0" ON CENTER.

(3) 3'-0" MINIMUM EMBEDMENT.

(4) SPECIAL DESIGNS SHALL BE REQUIRED WHEN THE FOLLOWING CONDITIONS EXIST:

- (A) WALL HEIGHT IS GREATER THAN 12'-0".
- (B) WALL IS SURCHARGED WITH DEAD LOAD FILL SLOPES STEEPER THAN 2:1 .
- (C) WALL IS SURCHARGED WITH A LIVE LOAD WITHIN THE LIMITS OF A 1:1 SLOPE EXTENDING FROM THE BASE OF THE WALL.

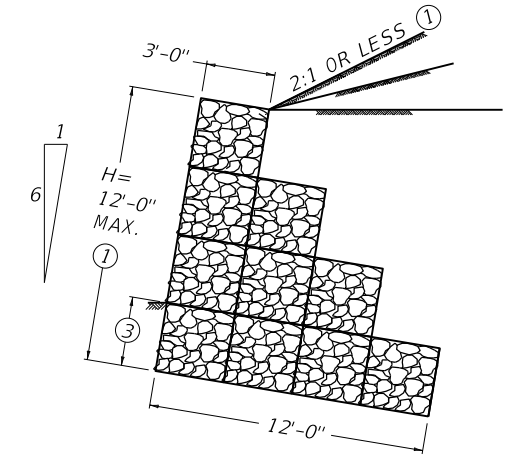

FRONT FACE 6:1 BATTER

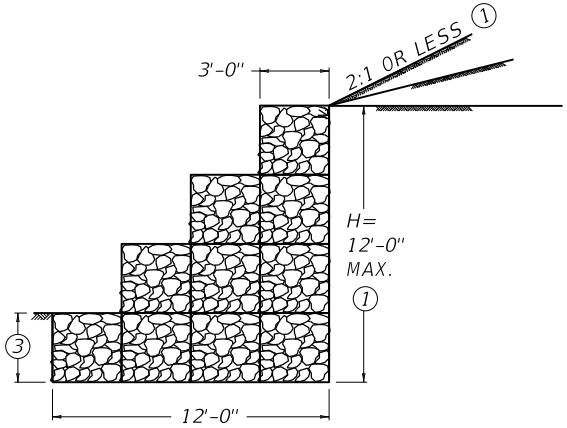

FRONT FACE STEPPED

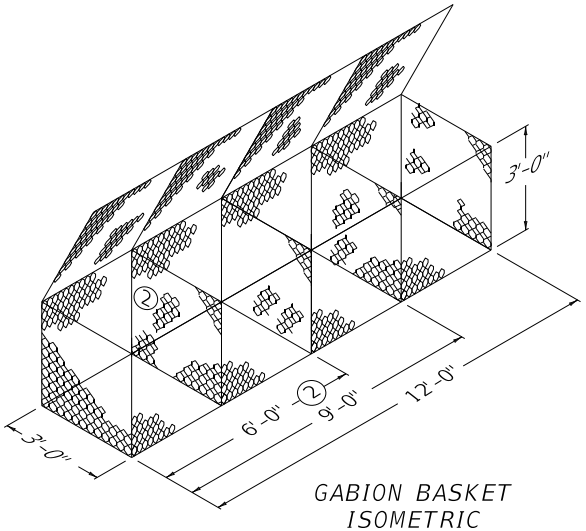

GABION BASKET
ISOMETRIC
VIEW

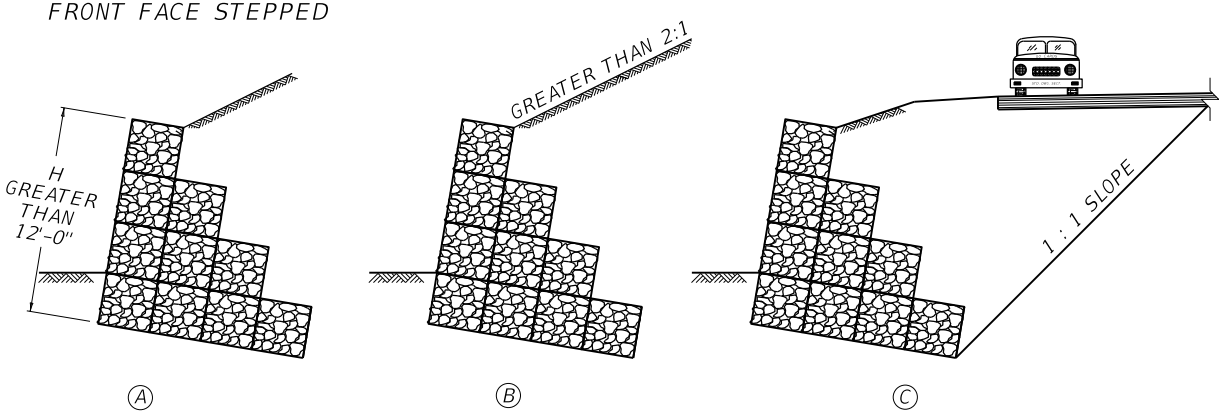

SPECIAL DESIGNS REQUIRED (4)

KENTUCKY
DEPARTMENT OF HIGHWAYS

GABION
RETAINING WALLS

STANDARD DRAWING NO. RGX-050-02

SUBMITTED _____ DIRECTOR DIVISION OF DESIGN — 12-01-15 DATE

APPROVED _____ STATE HIGHWAY ENGINEER — 12-01-15 DATE

~ NOTES ~

1. BREAKAWAY SIGN SUPPORT SYSTEM FOR TYPE C BEAM SHALL BE SELECTED FROM THE KENTUCKY DEPARTMENT OF HIGHWAYS APPROVED LIST FOR BREAKAWAY SIGN SUPPORT SYSTEMS OR AN APPROVED EQUAL. ACCEPTABLE ALTERNATE BREAKAWAY SIGN SUPPORT SYSTEMS SHALL BE APPROVED BY THE DIVISION OF HIGHWAY DESIGN AND FHWA PRIOR TO INSTALLATION.
2. SELECTION OF THE PROPER BRACKET NUMBER SHALL BE IN ACCORDANCE WITH MANUFACTURER'S RECOMMENDATIONS.
3. ALL HARDWARE ITEMS SUPPLIED ARE AMERICAN STANDARD SIZES AND SHALL BE GALVANIZED AND CONFORM TO ASTM A153 OR ASTM B695.
4. FASTENERS, EXCEPT FOR SPECIAL BOLT AND COUPLINGS, ARE INSTALLED WITH LOCKWASHERS, AND DO NOT HAVE SPECIFIC TORQUE REQUIREMENTS. FASTENERS SHALL BE SECURED AS TIGHT AS POSSIBLE WITH CONVENTIONAL WRENCHES, UNLESS NOTED OTHERWISE.
5. SQUARE UP AND LEVEL INDIVIDUAL COMPONENTS, PARTICULARLY ANCHORS TO MINIMIZE THE NEED FOR SHIMMING BETWEEN THE COUPLINGS AND ANCHORS.
6. NO MORE THAN TWO SHIMS SHALL BE PLACED UNDER ANY ONE COUPLING. NO MORE THAN THREE SHIMS UNDERNEATH ANY PAIR OF COUPLINGS.
7. THE CONTRACTOR SHALL FURNISH TWO (2) COMPLETE SETS OF SHOP PLANS FOR APPROVAL BY THE ENGINEER A MINIMUM OF TWO WEEKS PRIOR TO INSTALLATION.

(8) THE HINGE SHOULD BE AT LEAST 7'-0" ABOVE THE GROUND.

9. A SINGLE POST IF 7'-0" OR MORE FROM ANOTHER POST, SHALL HAVE A WEIGHT LESS THAN 45 LB./FT. TOTAL WEIGHT BELOW THE HINGE, BUT ABOVE THE SHEAR PLATE OF THE BREAKAWAY BASE, SHOULD NOT EXCEED 600 LB.
10. FOR TWO POSTS SPACED LESS THAN 7'-0" APART, EACH POST SHOULD HAVE A WEIGHT LESS THAN 18 LB./FT.
11. COUPLINGS SHALL NOT BE USED IN SIGN STRUCTURES WITH THREE SUPPORTS OR MORE IF POSTS ARE CLOSER THAN 7'-0" APART.
12. REFER TO CUR. STD. DWG. RGX-061 FOR FOOTING DETAILS.

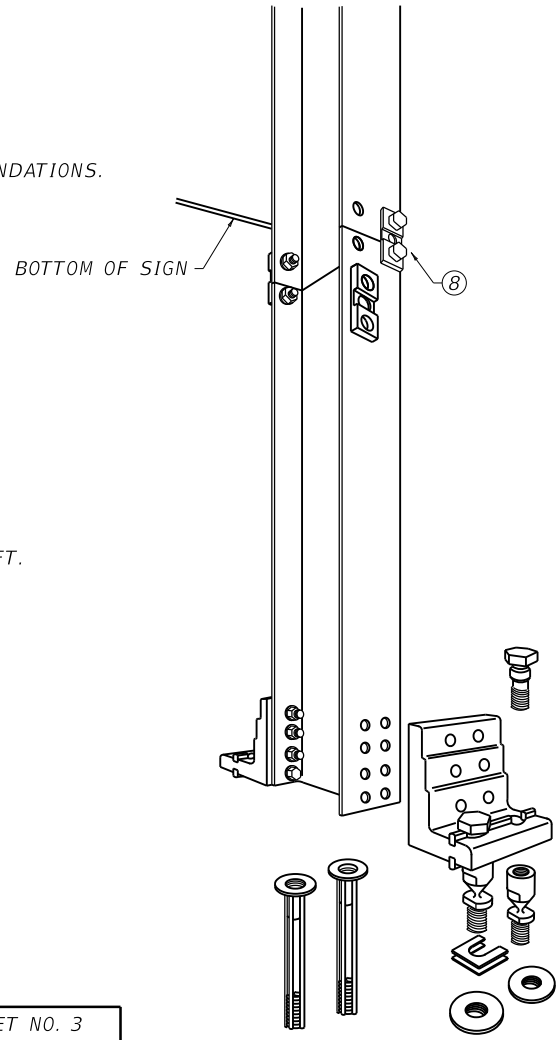

~ PICTORIAL VIEW ~

$L = L_T - H/2$

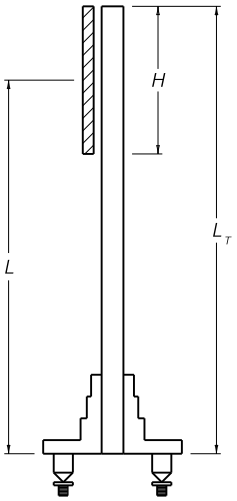

~ ELEVATION VIEW ~

BRACKET SELECTION TABLE

I-BEAM POST SIZE	BRACKET NO. 1		BRACKET NO. 2		BRACKET NO. 3	
	MIN. "L"	MAX. "L"	MIN. "L"	MAX. "L"	MIN. "L"	MAX. "L"
6"	12'-0"	29'-0"	9'-0"	12'-0"	0	9'-0"
8"	14'-0"	29'-0"	10'-0"	14'-0"	0	10'-0"
10"	16'-0"	29'-0"	11'-0"	16'-0"	0	11'-0"
12"	18'-0"	29'-0"	13'-0"	18'-0"	0	13'-0"
14"	19'-0"	29'-0"	14'-0"	19'-0"	0	14'-0"
16"	21'-0"	29'-0"	15'-0"	21'-0"	0	15'-0"
18"	23'-0"	29'-0"	16'-0"	23'-0"	0	16'-0"
21"	25'-0"	29'-0"	18'-0"	25'-0"	0	18'-0"

USE WITH CUR. STD. DWG. RGX-061

KENTUCKY
DEPARTMENT OF HIGHWAYS

BREAKAWAY SIGN SUPPORT SYSTEM FOR TYPE C BEAM

STANDARD DRAWING NO. RGX-060-01

SUBMITTED _____ DIRECTOR, DIVISION OF DESIGN — 12-01-15 DATE

APPROVED _____ STATE HIGHWAY ENGINEER — 12-01-15 DATE

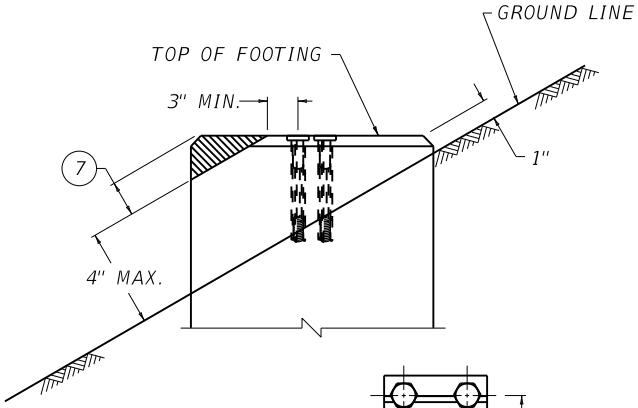

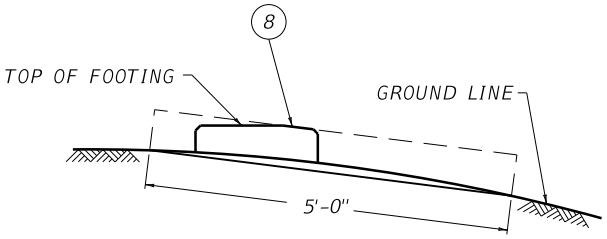

FOOTING SELECTION TABLE

POST SIZE	L_1 DIA.	D_1 DEPTH	STEEL F_1 BARS QTY	STEEL F_1 BARS SIZE	REINF. LBS.	CONC. CU. YDS.
W6	2'-0"	5'-0"	5	#4	57	0.58
W8	2'-6"	7'-0"	7	#4	88	1.27
W10	3'-0"	8'-0"	8	#4	110	2.09
W12	3'-0"	8'-0"	8	#4	110	2.09
W14	3'-0"	9'-0"	9	#4	124	2.36
W16	3'-6"	9'-0"	9	#4	133	3.21
W18	3'-6"	9'-0"	9	#4	133	3.21
W21	4'-0"	9'-0"	9	#4	143	4.19

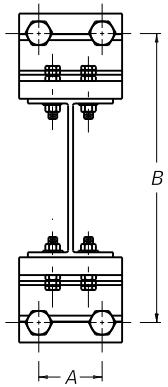

PLAN VIEW

~ NOTES ~

1. ENTER THE FOOTING SELECTION TABLE WITH THE REQUIRED POST SIZE AND FIND THE REQUIRED FOOTING VALUES AS SHOWN IN DETAILS.
2. THE ANCHOR SHALL BE 304 STAINLESS STEEL WITH 1053 STEEL ROD AND COIL.
3. FORM TOP 1'-0" OF THE FOOTING.
4. USE CLASS "A" CONCRETE IN ALL FOOTINGS.
5. ACTUAL DIMENSIONS "A" & "B" SHOULD BE OBTAINED FROM THE MANUFACTURER OR MEASURED FROM THE ASSEMBLED BRACKETS PRIOR TO THE PLACEMENT OF ANCHORS.
6. TO INSURE PROPER SPACING AND ALIGNMENT OF ANCHORS, IT IS RECOMMENDED THAT ALL ANCHORS BE HELD IN PLACE BY A RIGID TEMPLATE WHILE THE CONCRETE IS PLACED AND CURED.
7. FOOTING PROJECTIONS ABOVE GROUND LINE SHALL BE MINIMIZED. THE MAXIMUM PERMISSIBLE FOOTING PROJECTION SHALL BE 4" ON THE LOWER SLOPE SIDE. WHERE NECESSARY, THE SHADED AREA OF THE FOOTING SHALL BE REMOVED AND REINFORCEMENT SHALL BE BENT TO FIT.
8. THE TOP OF THE FOOTING SHALL NOT PROJECT MORE THAN 4" ABOVE ANY 5'-0" CHORD ALIGNED PERPENDICULARY TO THE EDGE OF THE ROADWAY BETWEEN A POINT ON THE GROUND SURFACE ON ONE SIDE OF THE SUPPORT TO A POINT ON THE GROUND SURFACE ON THE OTHER SIDE OF THE SUPPORT.

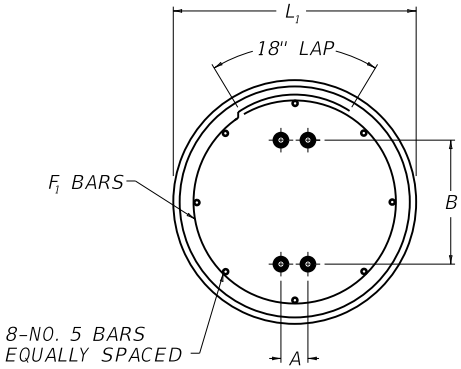

TOP VIEW

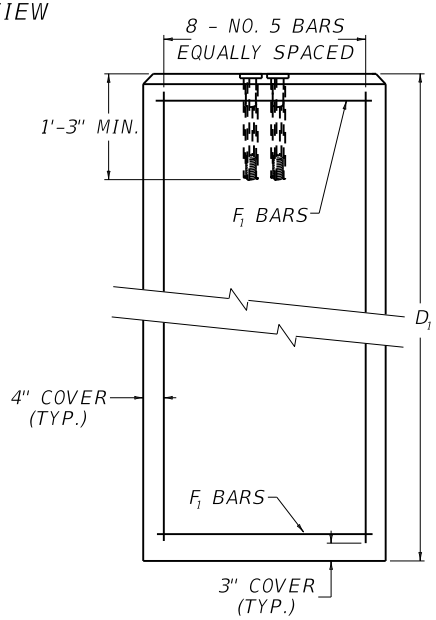

SIDE VIEW

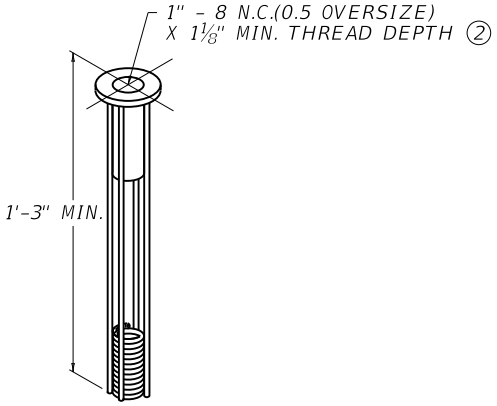

ANCHOR PICTORIAL VIEW

USE WITH CUR. STD. DWG.
RGX-060

KENTUCKY
DEPARTMENT OF HIGHWAYS

FOOTING DETAILS
FOR
TYPE C BEAM

STANDARD DRAWING NO. RGX-061-01

SUBMITTED William S. Sahd — DIRECTOR DIVISION OF DESIGN — 12-01-15 DATE

APPROVED — STATE HIGHWAY ENGINEER — 12-01-15 DATE

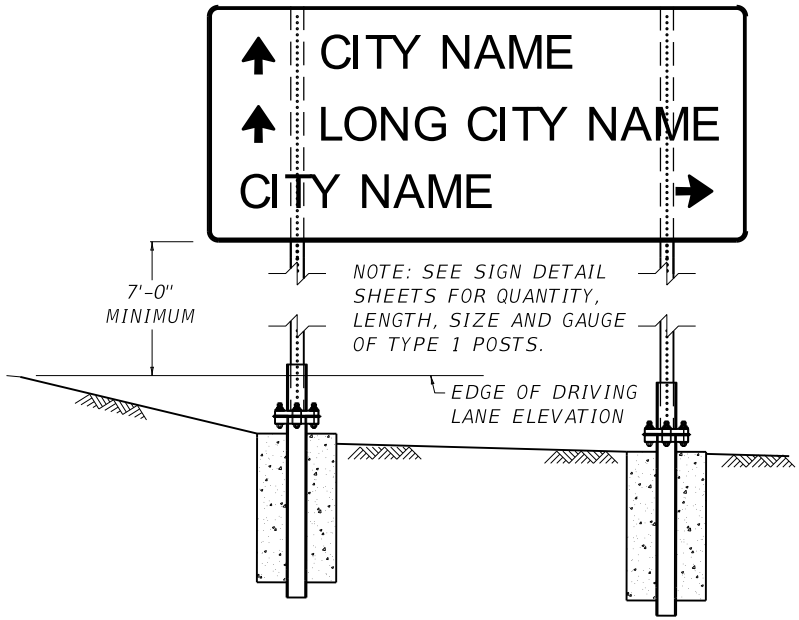

TYPICAL SHEETING SIGN BREAKAWAY SUPPORT INSTALLATION

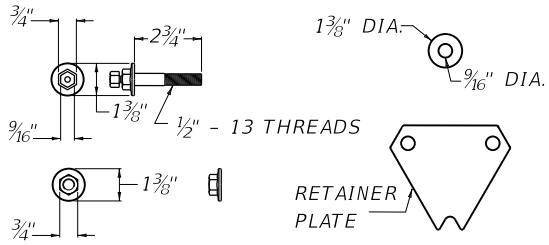

RETAINER PLATE HARDWARE

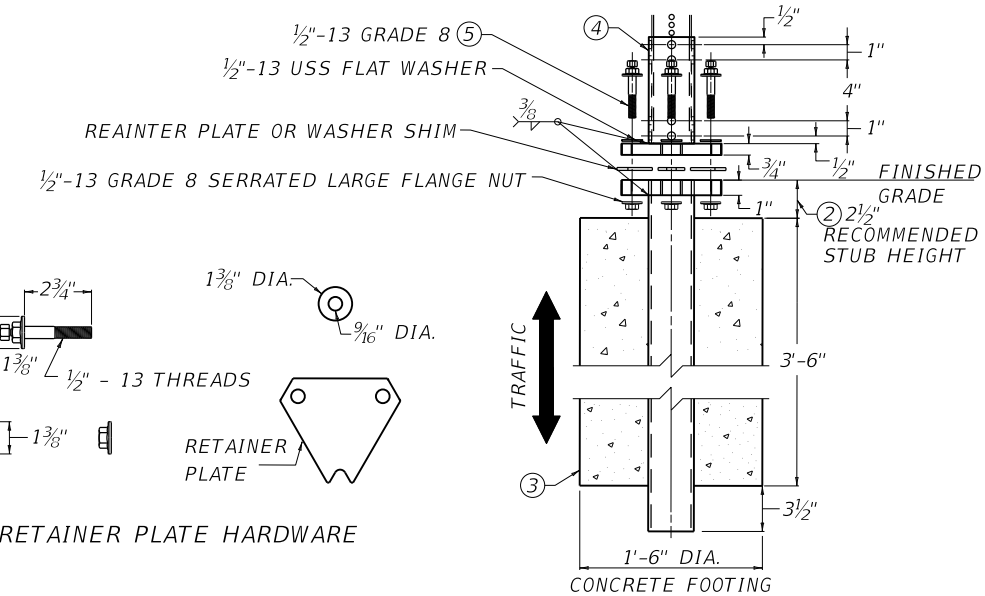

TYPE "D" SUPPORT
OMNI-DIRECTIONAL BREAK-A-WAY
FOR TYPE 1 POSTS

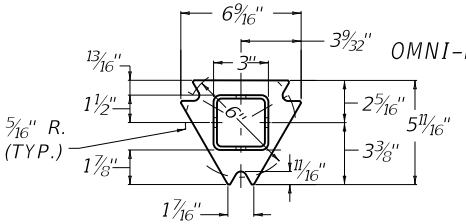

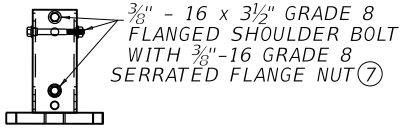

MATERIALS: TUBE RECEIVER - 3" x 3" x 7 GA. ASTM A500 OR A536 DOUBLE IRON CASTING
ASTM A500 GRADE B TUBE PLATE - ASTM A572 GRADE 50

TOP POST RECEIVER / FOR 2 1/2" SQUARE POST

2 1/4" x 12 GA. MAYBE INSERTED INTO
2 1/2" X 12 GA. FOR ADDITIONAL WINDLOAD

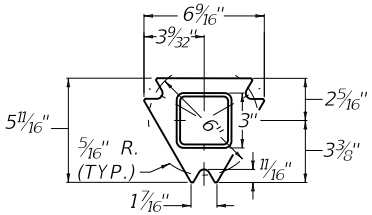

BOTTOM BASE CONCRETE STUB

MATERIALS: TUBE - 3"X 3" X 7 GA. ASTM A500
GRADE B TUBE PLATE - ASTM A572 GRADE 50

~ NOTES ~

1. FOLLOW MANUFACTURERS INSTALLATION INSTRUCTIONS.
2. DEPTH OF IMBEDMENT TO LEAVE 2 1/2" FROM THE GRADE TO THE TOP OF THE BASE.
3. ALLOW CONCRETE TO CURE AT LEAST 5 DAYS BEFORE ERECTING SIGN.
4. PLACE TOP POST RECIEVER SO THAT THE SIGN POST IS IN THE CORRECT POSITION FOR SIGN VISIBILITY, ON TO THE BASE AND WASHER SHIMS OR RETAINER PLATE.
5. TORQUE BOLTS AS PER MANUFACTURERS INSTRUCTIONS.
6. INSERT SIGN SUPPORT INTO THE TUBULAR PORTION OF THE TOP POST RECIEVER AND SECURE WITH 3 EACH 3/8"- 16 x 3 1/2" GRADE 8 FLANGED SHOULDER BOLTS AND FLANGED NUTS.
   A. WHERE HIGHER WINDLOAD IS DESIRED, INSERT THE NEXT SIZE SMALLER SQUARE POST INSIDE BOTTOM OF MAIN UPRIGHT POST.
   B. ON MULTI-LEG INSTALLATIONS, BE SURE THAT ALL ANCHORS ARE SQUARED AND LINED UP WITH EACH OTHER.
7. TYPE D BREAKAWAY SIGN SUPPORT SYSTEMS FOR THE TYPE I POSTS SHALL BE SELECTED FROM THE KENTUCKY DEPARTMENT OF HIGHWAYS APPROVED MATERIALS LIST. OR AN APPROVED EQUAL. ACCEPTABLE ALTERNATES SHALL BE APPROVED BY THE DIVISION OF HIGHWAY DESIGN AND FHWA, PRIOR TO INSTALLATION.

KENTUCKY
DEPARTMENT OF HIGHWAYS

TYPE D BREAKAWAY
SIGN SUPPORT

STANDARD DRAWING NO. RGX-065-03

SUBMITTED _____ DIRECTOR DIVISION OF DESIGN — 02-26-20 DATE

APPROVED _____ STATE HIGHWAY ENGINEER — 02-26-20 DATE

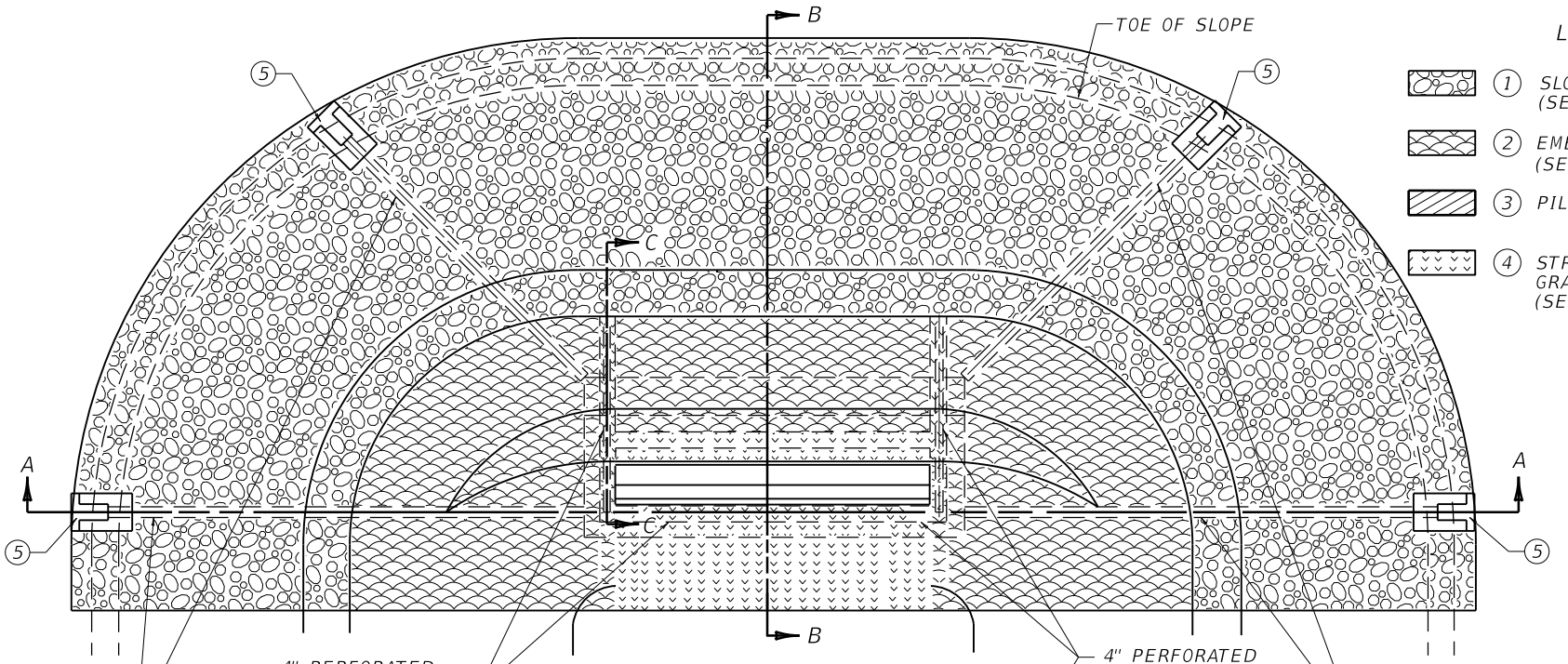

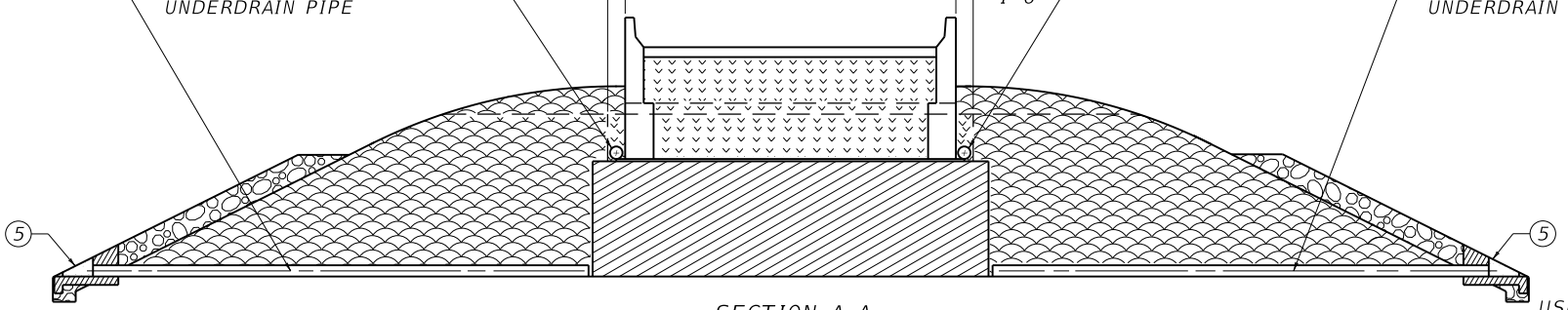

SECTION A-A

LEGEND

1. SLOPE PROTECTION (SEE BRIDGE PLANS)
2. EMBANKMENT (SEE ROADWAY PLANS)
3. PILE CORE
4. STRUCTURE GRANULAR BACKFILL (SEE BRIDGE PLANS)

USE WITH CUR. STD. DWG. RDP-010 RGX-105

~ NOTES ~

THE PURPOSE OF THIS DRAWING AND CUR. RGX-105 IS TO DEFINE THE LIMITS OF THE FOUR MATERIALS SHOWN. FOR SIMPLICITY PURPOSES, AN END-BENT ON A ZERO DEGREE SKEW IS SHOWN. THE SAME PRINCIPLES WOULD APPLY FOR MORE VARIED STRUCTURES.

1. SLOPE PROTECTION REQUIRED WHEN AND AS NOTED ON THE PLANS.
2. GRANULAR OR ROCK EMBANKMENT REQUIRED WHEN AND AS NOTED ON THE PLANS.
3. PILE CORE IN ACCORDANCE WITH SPECIAL PROVISION NO. 69.
4. STRUCTURE GRANULAR BACKFILL REQUIRED AT ALL TIMES.
5. FOR HEADWALL CONSTRUCTION SEE CUR. STD. DWG RDP-010 (SEE ROADWAY PLANS)

KENTUCKY
DEPARTMENT OF HIGHWAYS

TREATMENT OF EMBANKMENTS AT END-BENTS

STANDARD DRAWING NO. RGX-100-07

SUBMITTED _____ DIRECTOR DIVISION OF DESIGN _____ 02-26-20 DATE

APPROVED _____ STATE HIGHWAY ENGINEER _____ 02-26-20 DATE

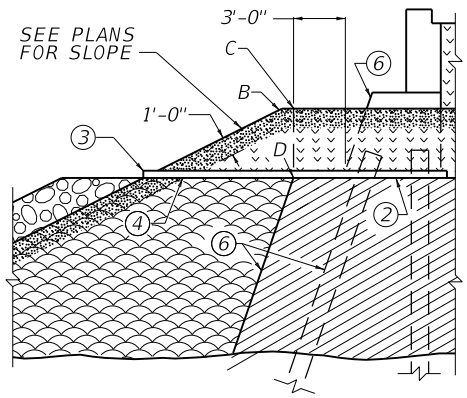

SECTION C-C

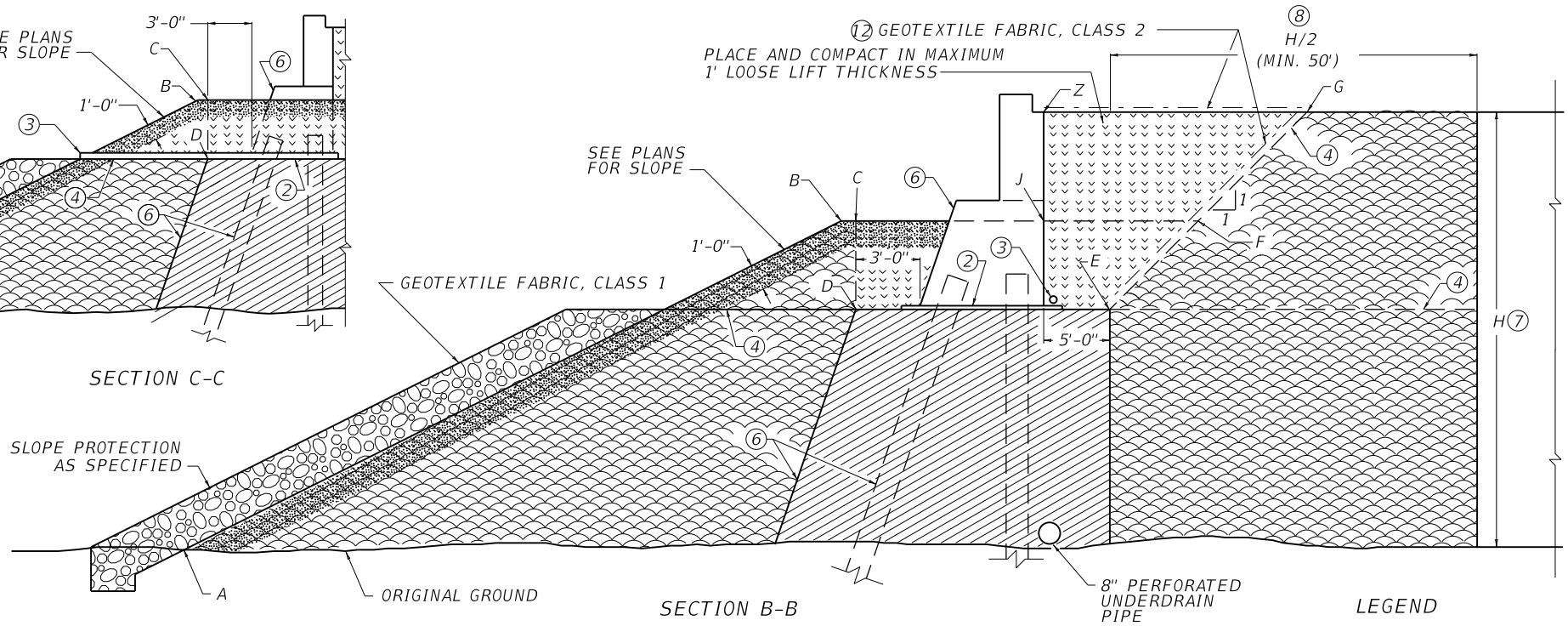

SECTION B-B

LEGEND

- SLOPE PROTECTION (SEE BRIDGE PLANS)
- PILE CORE
- STRUCTURE GRANULAR BACKFILL
- EMBANKMENT

BID ITEMS AND UNIT TO BID

GRANULAR EMBANKMENT	CUYD
STRUCTURE GRANULAR BACKFILL	CUYD

CONSTRUCTION SEQUENCE "A"

1. CONSTRUCT EMBANKMENT TO SLOPES A, B, F, AND G SUCH THAT NO UNCOMPACTED OR LOOSE MATERIAL SHALL REMAIN.
2. EXCAVATE FOR END-BENT TO C, D, E, AND F.
3. INSTALL PILES (OR OTHER FOUNDATION).
4. PLACE 2" MORTAR BED OR ANY CLASS CONCRETE.
5. CONSTRUCT CONCRETE END-BENT.
6. INSTALL 4" PERFORATED UNDERDRAIN PIPE AND BACKFILL.
7. BACKFILL TO C, D, E, F, G, Z, AND J WITH COMPACTED STRUCTURE GRANULAR BACKFILL.

1 CONSTRUCTION SEQUENCE "B"

1. CONSTRUCT EMBANKMENT TO TEMPORARY SLOPE 4.
2. INSTALL PILES (OR OTHER FOUNDATION).
3. PLACE 2" MORTAR BED OR ANY CLASS CONCRETE.
4. CONSTRUCT CONCRETE END-BENT.
5. INSTALL 4" PERFORATED UNDERDRAIN PIPE AND BACKFILL.
6. BACKFILL TO FINISHED GRADE IN ACCORDANCE WITH SPECIAL PROVISION NO. 69.

~ NOTES ~

1. CONSTRUCTION SEQUENCE "B" IS A PERMITTED ALTERNATE ONLY WHEN GRANULAR OR ROCK EMBANKMENT IS UTILIZED.
2. 2" MORTAR BED OR ANY CLASS CONCRETE.
3. 4" PERFORATED UNDERDRAIN PIPE WRAPPED WITH GEOTEXTILE FABRIC FOR DRAINING THE EXCAVATED TRENCH AND STRUCTURE GRANULAR BACKFILL.
4. ACCEPTABLE ALTERNATES FOR TEMPORARY SLOPE (CONSTRUCTION SEQUENCE "B").
5. SHADED PORTIONS AND REPRESENT LIMITS OF NON-ERODIBLE GRANULAR EMBANKMENT IN ACCORDANCE WITH SPECIAL PROVISION NO. 69.
6. SLOPES ARE EQUAL.
7. "H" = EMBANKMENT HEIGHT MEASURED FROM SUBGRADE ELEVATION AT POINT Z TO THE LOWEST ELEVATION AT THE TOE OF THE SLOPE.
8. LIMITS OF EMBANKMENT CONSTRUCTION (H/2 OR 50' MIN.) REQUIRING 2' MAXIMUM LIFT THICKNESS FOR GRANULAR OR ROCK EMBANKMENTS.
9. SEE CURRENT SPECIAL PROVISION NO. 69 FOR CONSTRUCTION AND MATERIAL REQUIREMENTS, METHOD OF MEASUREMENT AND BASIS OF PAYMENT.
10. STRUCTURE GRANULAR BACKFILL PLACED AS A COMPLETE SEPARATE OPERATION AFTER CONSTRUCTION OF ALL OTHER EMBANKMENT.
11. NO INDIVIDUAL FRAGMENTS LARGER THAN 4 INCHES IN ANY DIMENSION PERMITTED WITHIN 3'-0" OF THE STRUCTURE.
12. PLACE GEOTEXTILE FABRIC, CLASS 2 PRIOR TO PLACING STRUCTURE GRANULAR BACKFILL AND AGGREGATE BASE COURSE.

USE WITH CUR. STD. DWG. RGX-100

KENTUCKY DEPARTMENT OF HIGHWAYS

TREATMENT OF EMBANKMENTS AT END-BENTS - DETAILS

STANDARD DRAWING NO. RGX-105-09

SUBMITTED _____ DIRECTOR DIVISION OF DESIGN — DATE 02-26-20

APPROVED _____ STATE HIGHWAY ENGINEER — DATE 02-26-20

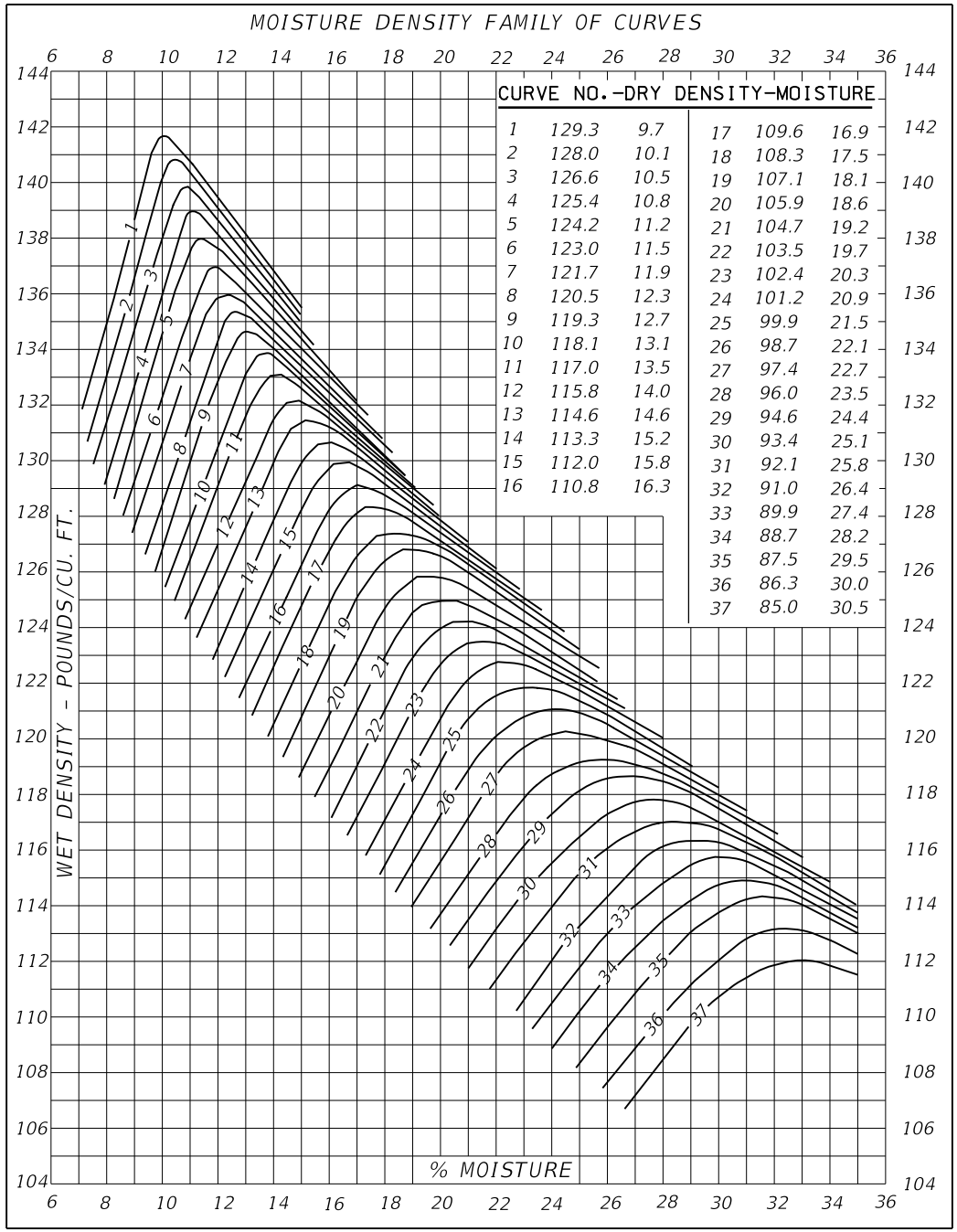

CURVE NO.	DRY DENSITY	MOISTURE	CURVE NO.	DRY DENSITY	MOISTURE
1	129.3	9.7	17	109.6	16.9
2	128.0	10.1	18	108.3	17.5
3	126.6	10.5	19	107.1	18.1
4	125.4	10.8	20	105.9	18.6
5	124.2	11.2	21	104.7	19.2
6	123.0	11.5	22	103.5	19.7
7	121.7	11.9	23	102.4	20.3
8	120.5	12.3	24	101.2	20.9
9	119.3	12.7	25	99.9	21.5
10	118.1	13.1	26	98.7	22.1
11	117.0	13.5	27	97.4	22.7
12	115.8	14.0	28	96.0	23.5
13	114.6	14.6	29	94.6	24.4
14	113.3	15.2	30	93.4	25.1
15	112.0	15.8	31	92.1	25.8
16	110.8	16.3	32	91.0	26.4
			33	89.9	27.4
			34	88.7	28.2
			35	87.5	29.5
			36	86.3	30.0
			37	85.0	30.5

KENTUCKY
DEPARTMENT OF HIGHWAYS

ONE POINT PROCTER
FAMILY OF CURVES

STANDARD DRAWING NO. RGX-200-01

SUBMITTED William E. Ginkel — DIRECTOR DIVISION OF DESIGN — 12-01-15 DATE

APPROVED — STATE HIGHWAY ENGINEER — 12-01-15 DATE

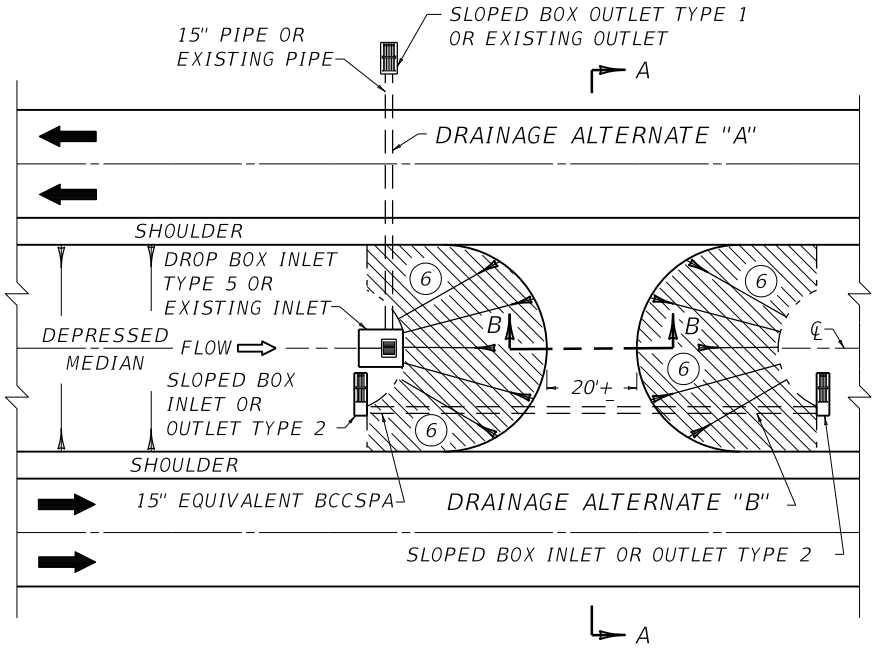

PLAN VIEW

~ NOTES ~

THE ITEMS BELOW SHALL BE INCLUDED IN THE GENERAL, PAVING, AND DRAINAGE SUMMARIES AS APPLICABLE:

1. EARTHWORK - EXCAVATION OR BORROW.
2. PAVING - SAME AS MAINLINE SHOULDER DESIGN.
3. DRAINAGE ALTERNATE "A" - USE WHEN MEDIAN OPENING CAN BE LOCATED NEAR PROPOSED OR EXISTING DRAINAGE. MODIFY EXISTING INLET AND OUTLET IF NECESSARY.
4. DRAINAGE ALTERNATE "B" - USE WHEN ALTERNATE "A" IS NOT POSSIBLE, ESPECIALLY TO PREVENT TUNNELING OR CUTTING EXISTING MAINLINE PAVEMENT. ESTABLISH FLOW LINE AT CORRESPONDING MEDIAN DITCH ELEVATION AND WRAP SLOPES TO FIT BOXES.

(5) 4% MINIMUM

(6) 12:1 SLOPES OR FLATTER

(7) PAVEMENT CROSS SLOPE = 2%

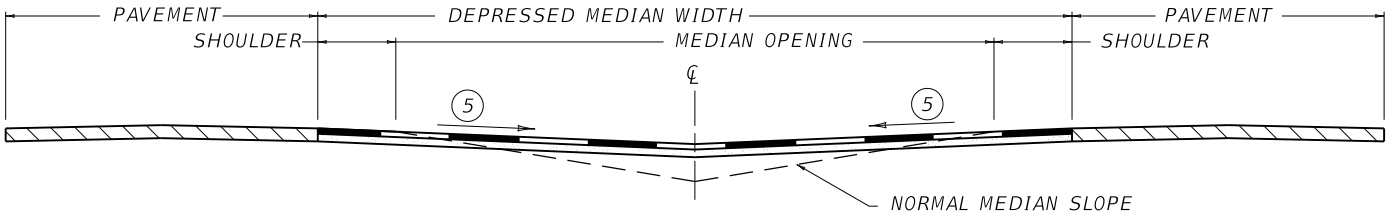

SECTION A-A

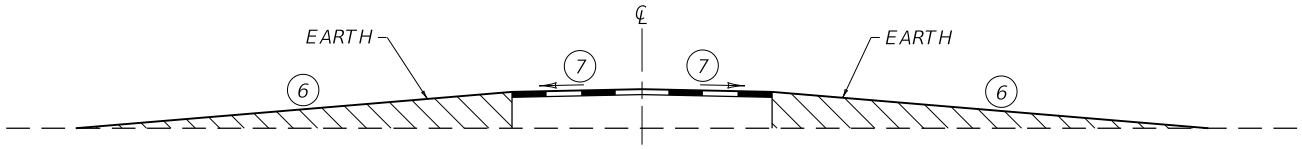

SECTION B-B

THIS DRAWING TO BE USED ONLY FOR FULL CONTROL OF ACCESS PROJECTS WITH DEPRESSED MEDIANS.

KENTUCKY
DEPARTMENT OF HIGHWAYS

PERMANENT
U-TURN
MEDIAN OPENING

STANDARD DRAWING NO. RPM-001-04

SUBMITTED _____ DIRECTOR DIVISION OF DESIGN — 12-01-15 DATE

APPROVED _____ STATE HIGHWAY ENGINEER — 12-01-15 DATE

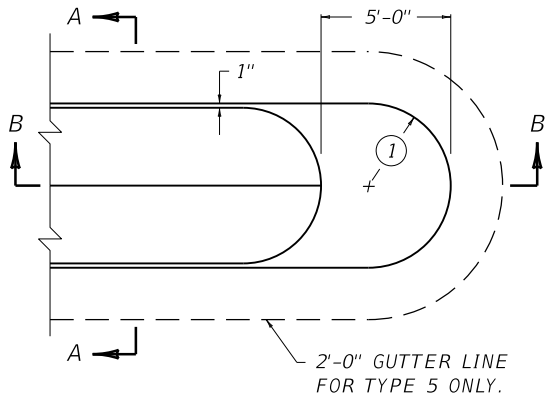

PLAN VIEW
BARRIER MEDIAN

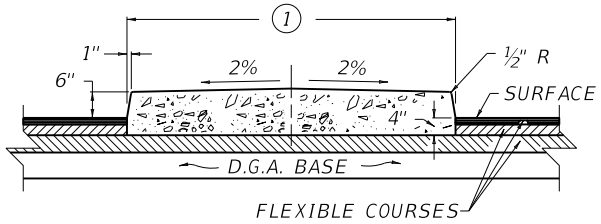

SECTION A-A

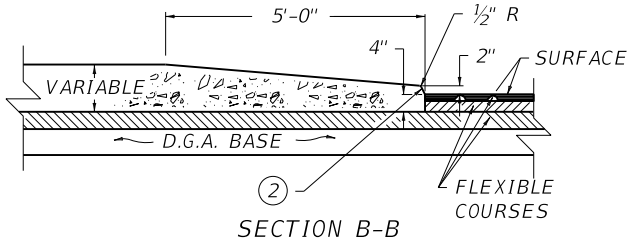

SECTION B-B
BARRIER MEDIAN
WITH FLEXIBLE PAVEMENT
(TYPE 2)

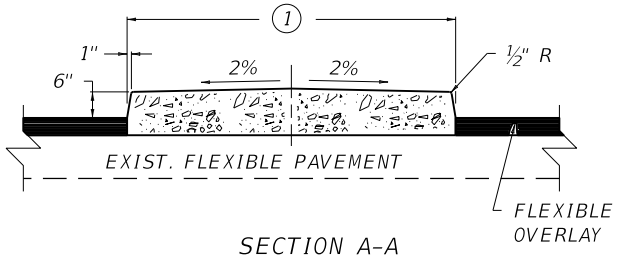

SECTION A-A

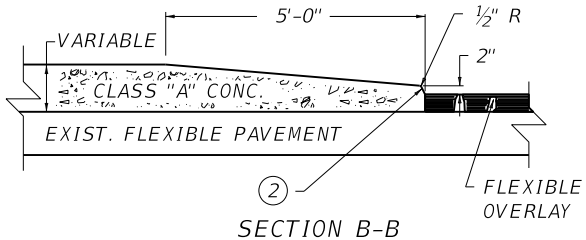

SECTION B-B
BARRIER MEDIAN
ON EXISTING FLEXIBLE PAVEMENT
(TYPE 4)

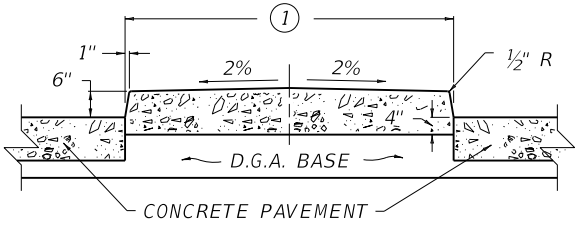

SECTION A-A

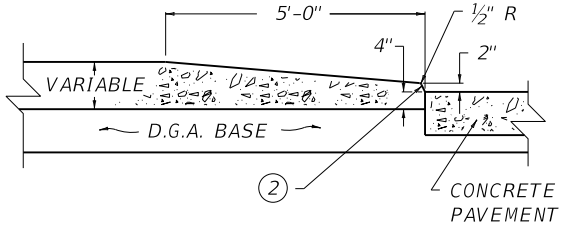

SECTION B-B
BARRIER MEDIAN
WITH RIGID PAVEMENT
(TYPE 1)

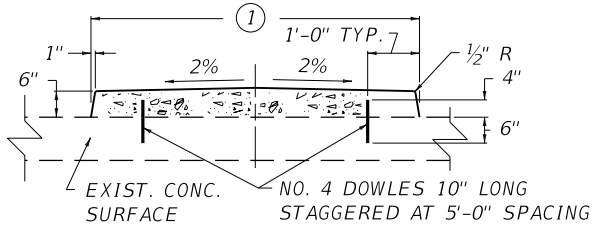

SECTION A-A

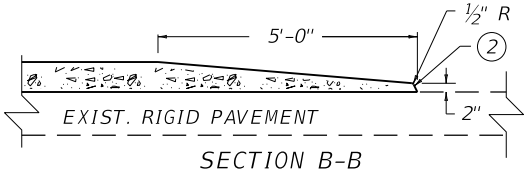

SECTION B-B
BARRIER MEDIAN
ON EXISTING RIGID PAVEMENT
(TYPE 3)

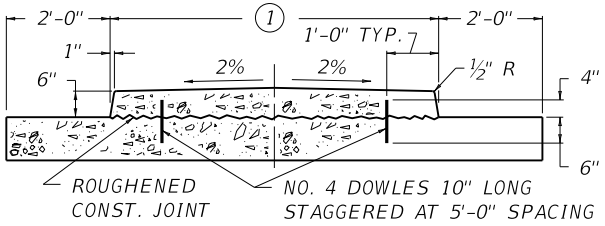

SECTION A-A

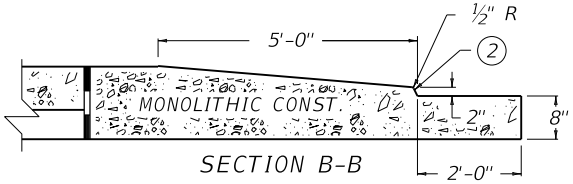

SECTION B-B
BARRIER MEDIAN
WITH FLEXIBLE PAVEMENT
(TYPE 5)

~ NOTES ~

1. SEE PLANS FOR CONSTANT OR VARIABLE WIDTH DIMENSIONS.
2. SLOPE TO CONFORM TO SIDE SLOPES.
3. ALL BARRIER MEDIANS SHALL BE CONSTRUCTED OF CLASS "A" CONCRETE.

BID ITEM AND UNIT TO BID
STANDARD BARRIER MEDIAN TYPE ☆ SQYD
☆ = 1 OR 2 OR 3 OR 4 OR 5.

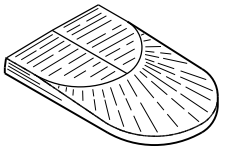

ISOMETRIC VIEW
(NOSE)

KENTUCKY
DEPARTMENT OF HIGHWAYS

STANDARD
BARRIER MEDIAN

STANDARD DRAWING NO. RPM-010-06

SUBMITTED William E. Ginkel — DIRECTOR DIVISION OF DESIGN — 12-01-15 DATE

APPROVED — STATE HIGHWAY ENGINEER — 12-01-15 DATE

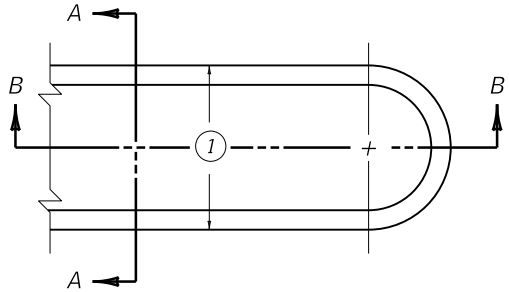

PLAN VIEW
MOUNTABLE MEDIAN

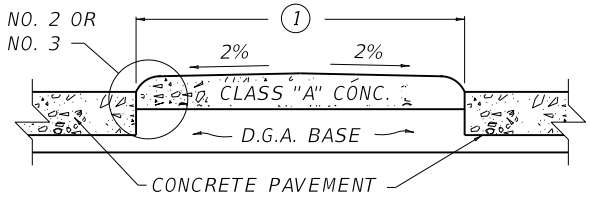

SECTION A-A

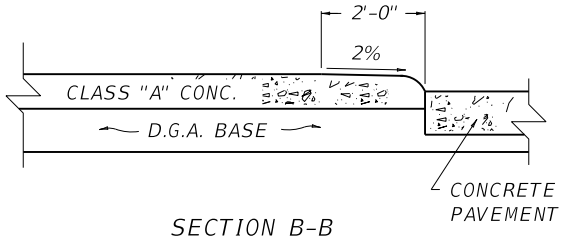

SECTION B-B
MOUNTABLE MEDIAN
WITH RIGID PAVEMENT
(TYPE 1 & TYPE 1A)

~ NOTES ~

1. SEE PLANS FOR CONSTANT OR VARIABLE WIDTH DIMENSIONS.
2. DEPTH OF CONCRETE SHALL BE SHOWN ELSEWHERE ON THE PLANS, (MIN. OF 6").

BID ITEM AND UNIT TO BID

MOUNTABLE MEDIAN TYPE ☆ SQYD

☆ = 1 OR 1A OR 2 OR 2A OR 3 OR 3A OR 4 OR 5.
(THE LETTER "A" DENOTES LIP CURB, NO. 3)

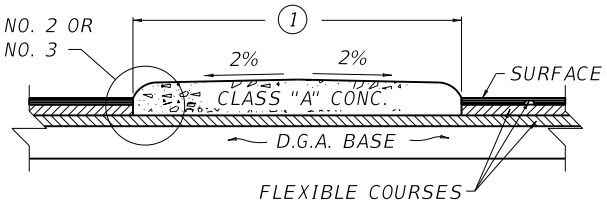

SECTION A-A

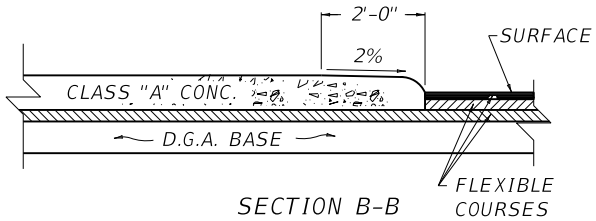

SECTION B-B
MOUNTABLE MEDIAN
WITH FLEXIBLE PAVEMENT
(TYPE 2 & TYPE 2A)

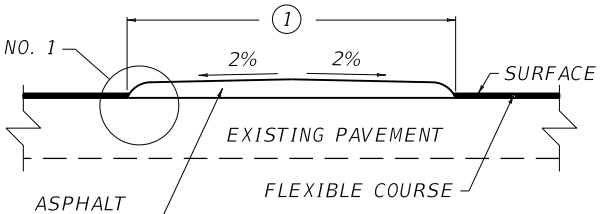

SECTION A-A

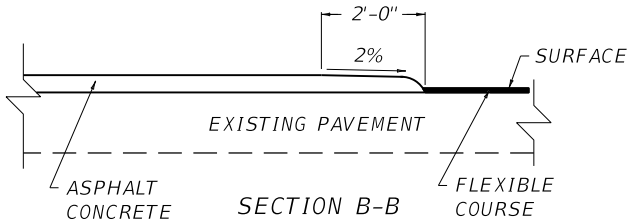

SECTION B-B
MOUNTABLE MEDIAN
ON EXISTING PAVEMENT
(TYPE 4)

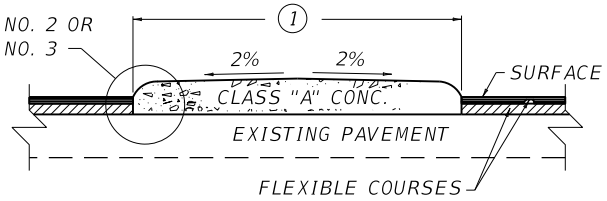

SECTION A-A

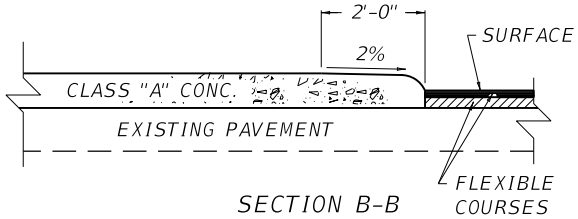

SECTION B-B
MOUNTABLE MEDIAN
ON EXISTING PAVEMENT
(TYPE 3 & TYPE 3A)

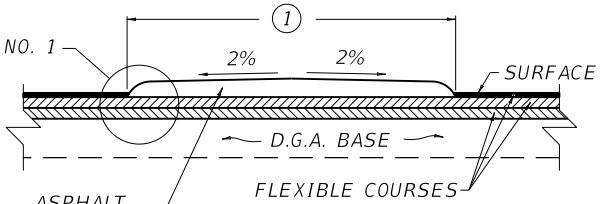

SECTION A-A

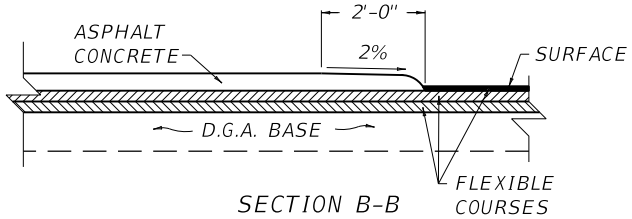

SECTION B-B
MOUNTABLE MEDIAN
WITH FLEXIBLE PAVEMENT
(TYPE 5)

NO. 1

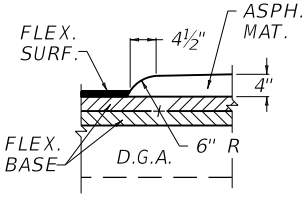

NO. 2

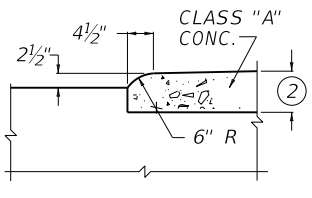

NO. 3

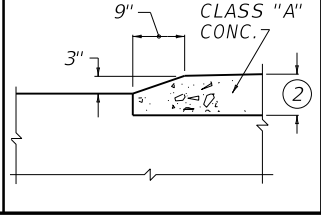

KENTUCKY
DEPARTMENT OF HIGHWAYS

MOUNTABLE
MEDIAN

STANDARD DRAWING NO. RPM-011-06

SUBMITTED William E. Ginkel DIRECTOR DIVISION OF DESIGN 12-01-15 DATE

APPROVED STATE HIGHWAY ENGINEER 12-01-15 DATE

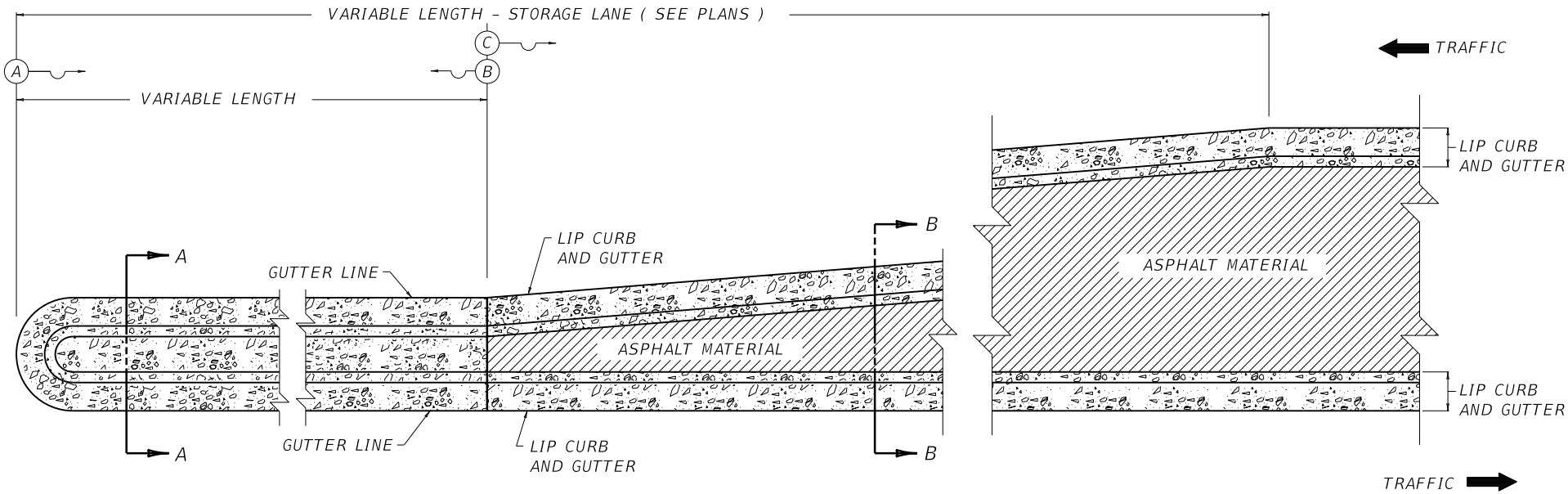

PLAN VIEW

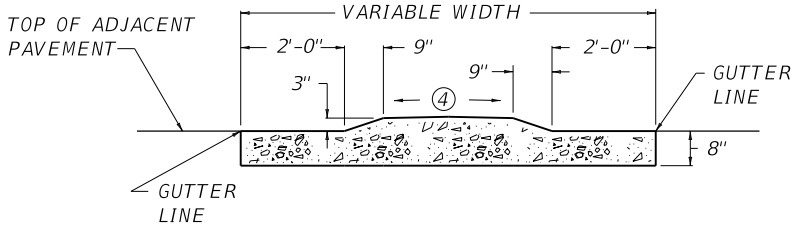

SECTION A-A

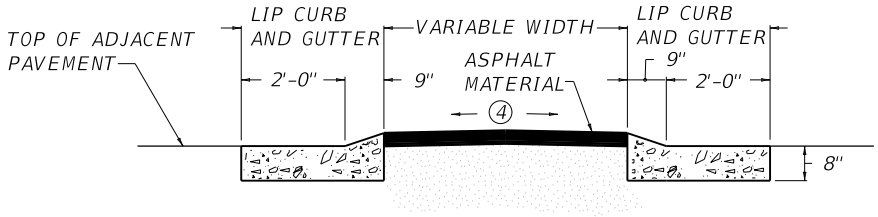

SECTION B-B

~ NOTES ~

BID ITEMS AND UNIT TO BID
MOUNTABLE MEDIAN TYPE 6A — SQYD
LIP CURB AND GUTTER — LF

1. THE BID ITEM PER SQ. YD. BETWEEN POINTS (A) AND (B) SHALL BE "MOUNTABLE MEDIAN TYPE 6A".
2. THE VARIABLE LENGTH MOUNTABLE MEDIAN BETWEEN POINTS (A) AND (B) SHALL MEET THE CURRENT REQUIRMENTS OF STANDARD SPECIFICATIONS FOR ROAD AND BRIDGE CONSTRUCTION, CURRENT EDITION.
3. CURB AND GUTTER TERMINATES AT POINT (C) (SEE PLANS).

(4) CROSS SLOPE OF 2% ON TANGENTS AND PARALLEL PAVEMENT CROSS SLOPE ON SUPERELEVATED SECTIONS.

USE WITH CUR. STD. DWG.
RPM-100

KENTUCKY
DEPARTMENT OF HIGHWAYS

MOUNTABLE MEDIAN
TYPE 6A

STANDARD DRAWING NO. RPM-012-04

SUBMITTED William E. Ginkel — DIRECTOR, DIVISION OF DESIGN — 12-01-15 DATE

APPROVED — STATE HIGHWAY ENGINEER — 12-01-15 DATE

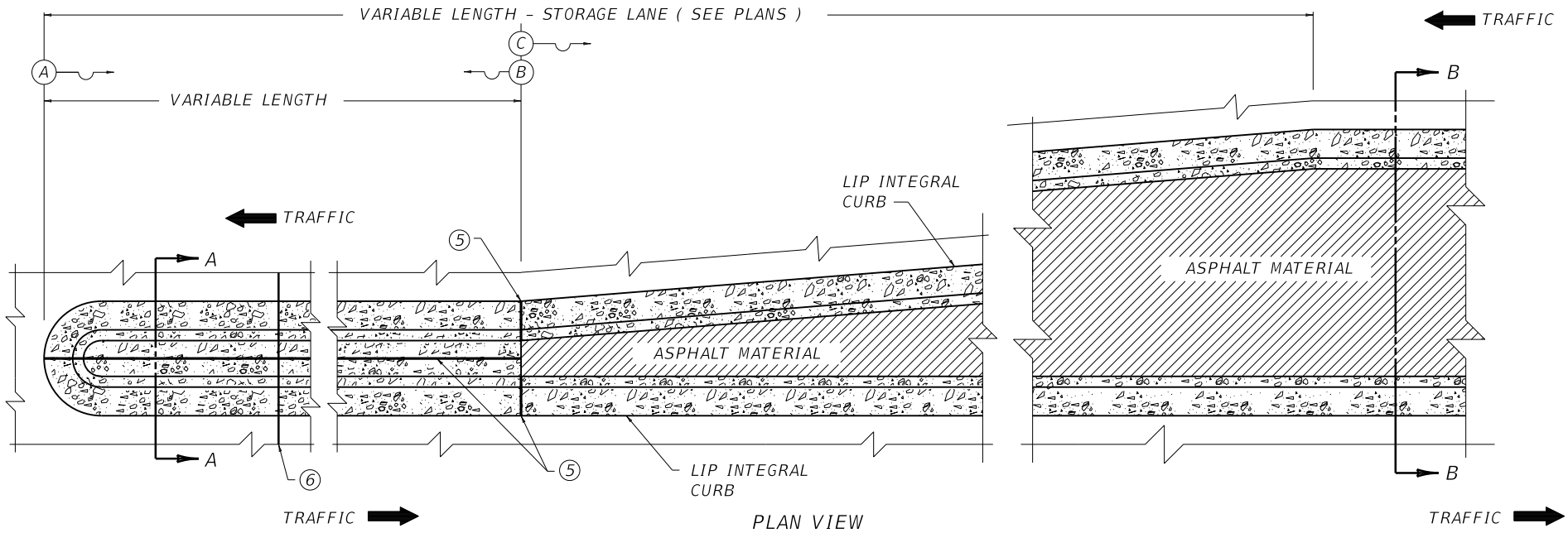

PLAN VIEW

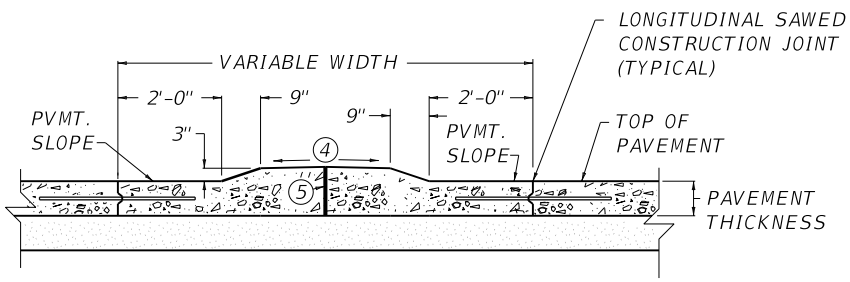

SECTION A-A

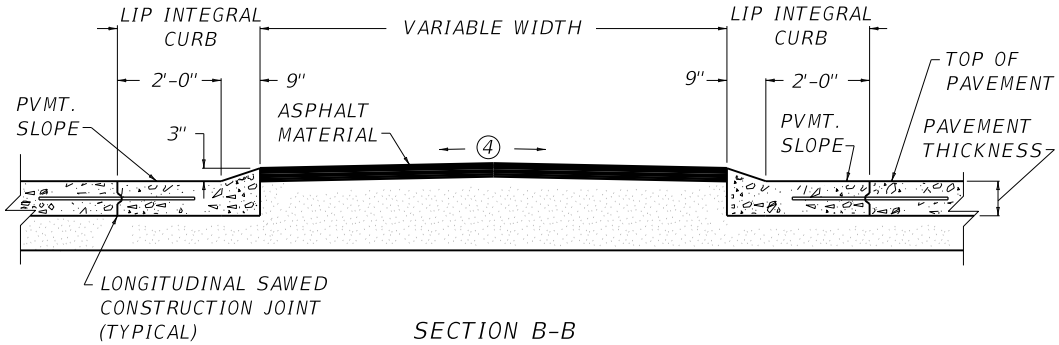

SECTION B-B

~ NOTES ~

BID ITEMS AND UNIT TO BID
MOUNTABLE MEDIAN TYPE 7A — SQYD
LIP INTEGRAL CURB — LF

1. THE BID ITEM PER SQ. YD. BETWEEN POINTS (A) AND (B) SHALL BE "MOUNTABLE MEDIAN TYPE 7A".
2. THE VARIABLE LENGTH MOUNTABLE MEDIAN BETWEEN POINTS (A) AND (B) SHALL MEET THE CURRENT REQUIRMENTS OF STANDARD SPECIFICATIONS FOR ROAD AND BRIDGE CONSTRUCTION, CURRENT EDITION.
3. LIP INTEGRAL CURB TERMINATES AT POINT (C) (SEE PLANS).

(4) CROSS SLOPE OF 2% ON TANGENTS AND PARALLEL PAVEMENT CROSS SLOPE ON SUPERELEVATED SECTIONS.

(5) ½" PREMOLDED EXPANSION JOINT MATERIAL.

(6) TRANSVERSE JOINTS IN THE MOUNTABLE MEDIAN BETWEEN POINTS (A) AND (B) SHALL BE CONSTRUCTED AND SEALED IN THE SAME MANNER AS THE JOINTS IN THE ADJOINING CONCRETE PAVEMENT.

INTENDED USE:
WITH RIGID PAVEMENT

USE WITH CUR. STD. DWG.
RPM-100

KENTUCKY
DEPARTMENT OF HIGHWAYS

MOUNTABLE MEDIAN
TYPE 7A

STANDARD DRAWING NO. RPM-015-04

SUBMITTED William S. Sahd — DIRECTOR DIVISION OF DESIGN — 12-01-15 DATE

APPROVED — STATE HIGHWAY ENGINEER — 12-01-15 DATE

STANDARD CURB & GUTTER

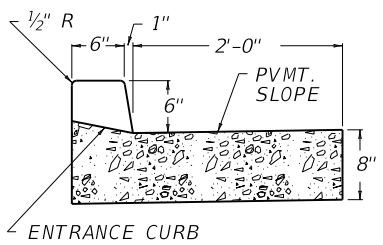

BARRIER CURB & GUTTER

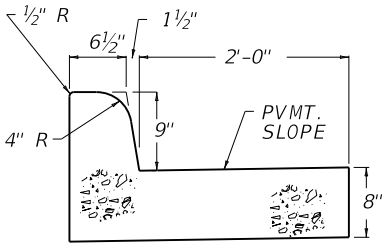

LIP CURB & GUTTER

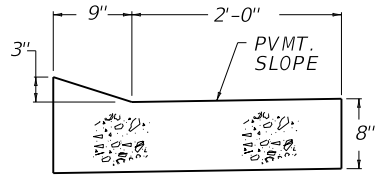

ISLAND CURB & GUTTER

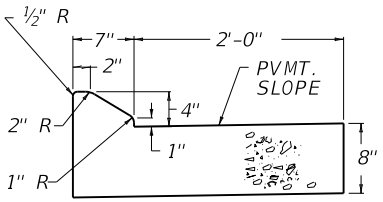

① STANDARD INTEGRAL CURB

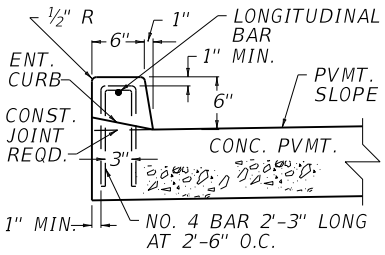

BARRIER INTEGRAL CURB

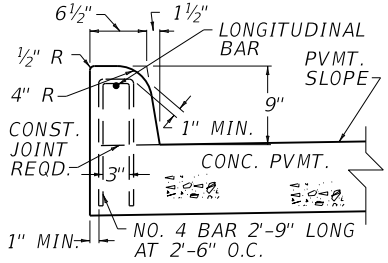

LIP INTEGRAL CURB

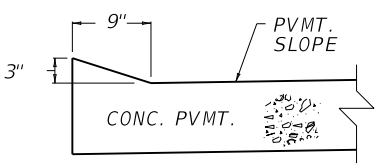

CONST. JOINT NOT PERMITTED

ISLAND INTEGRAL CURB

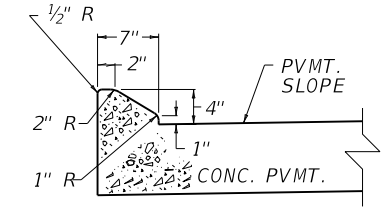

CONST. JOINT NOT PERMITTED

STANDARD HEADER CURB & GUTTER

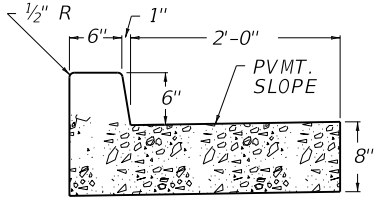

STANDARD HEADER CURB TYPE 1
EXISTING PAVEMENT

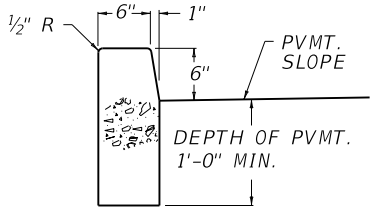

BARRIER HEADER CURB

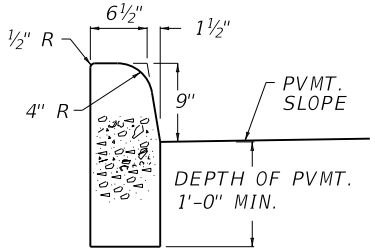

LIP HEADER CURB

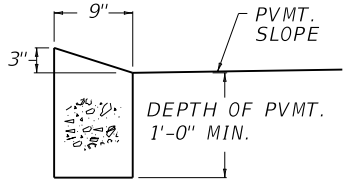

ISLAND HEADER CURB TYPE 1
EXISTING PAVEMENT

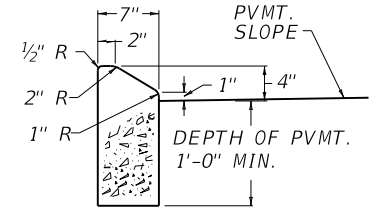

ISLAND HEADER CURB TYPE 2
NEW CONSTRUCTION

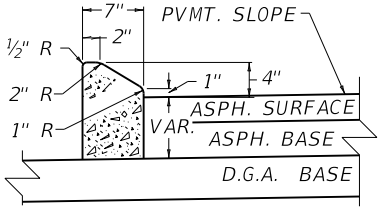

② STANDARD INTEGRAL CURB

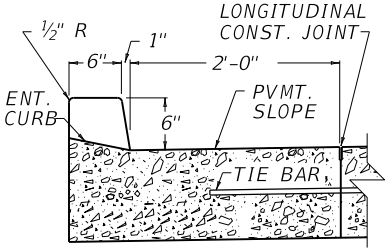

BID ITEM AND UNIT TO BID (CURB TYPE) LF

STANDARD HEADER CURB TYPE 2
NEW CONSTRUCTION

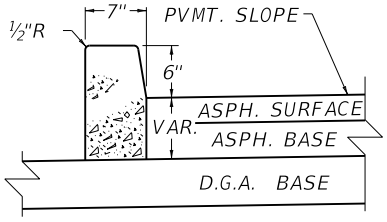

VALLEY GUTTER

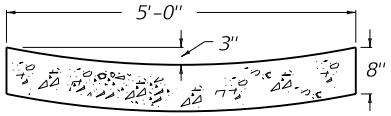

ASPHALT WEDGE CURB

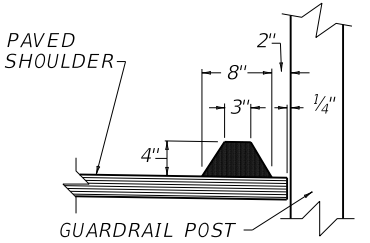

~ NOTES ~

1. ALL INTEGRAL CURBS SHOWING REINFORCING STEEL SHALL BE CAST SEPARATELY FROM THE PAVEMENT AND THE REINFORCEMENT SHALL CONSIST SOLELY OF NO. 4 BARS AS DETAILED ON THIS DRAWING. ON CONSTRUCTION CARE SHOULD BE TAKEN SO THAT NO REINFORCEMENT BARS ARE CLOSER THAN 3" TO THE CENTER OF THE SAWED TRANSVERSE JOINT.
2. THE CONTRACTOR HAS THE OPTION OF CONSTRUCTING THE STANDARD INTEGRAL CURB AS DETAILED IN EITHER ① OR ②. IF ② IS CHOSEN A LONGITUDINAL CONSTRUCTION JOINT SHALL BE REQUIRED AND THE REMAINING PAVEMENT AND CURB SHALL BE CONSTRUCTED MONOLITHIC WITHOUT A HORIZONTAL CONSTRUCTION JOINT AND ACCOMPANYING REINFORCING STEEL.

KENTUCKY
DEPARTMENT OF HIGHWAYS

CURB AND GUTTER
CURBS AND
VALLEY GUTTER

STANDARD DRAWING NO. RPM-100-11

SUBMITTED _____ DIRECTOR DIVISION OF DESIGN 02-26-20 DATE

APPROVED _____ STATE HIGHWAY ENGINEER 02-26-20 DATE

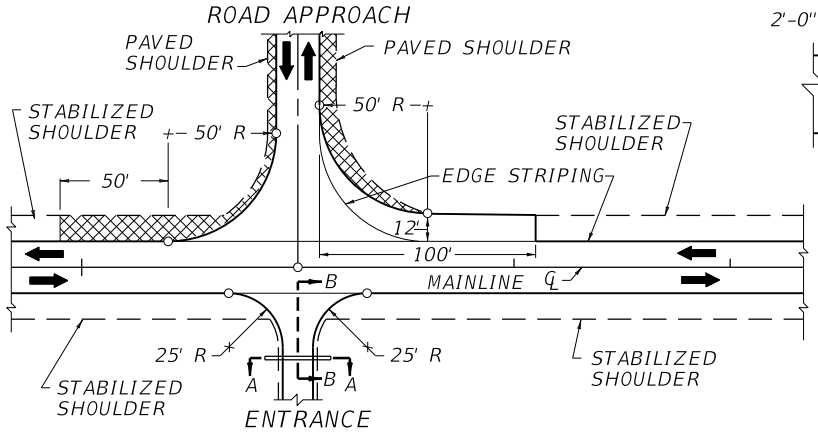

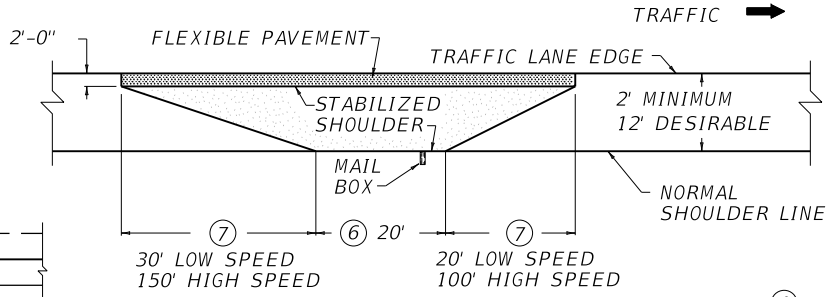

MAIL BOX TURNOUT

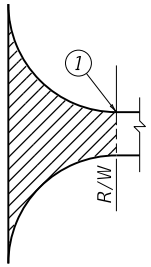

1 PAVE TO R/W LINE OR END OF RADIUS, WHICHEVER IS FURTHER FROM THE EDGE OF TRAFFIC LANE.

ROAD AND STREET APPROACHES

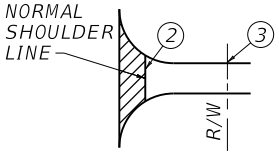

2 PAVED TO SHOULDER LINE

3 SURFACE TO R/W LINE OR TOUCHDOWN WITH TRAFFIC BOUND BASE.

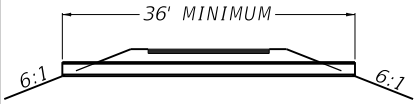

SECTION A-A

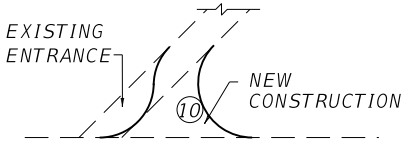

PLAN VIEW

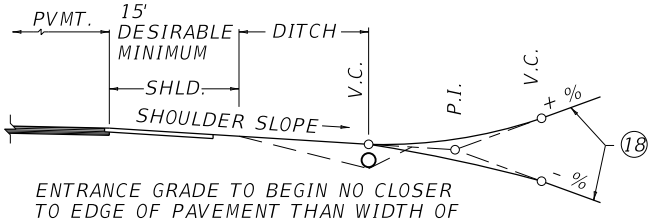

ENTRANCE GRADE TO BEGIN NO CLOSER TO EDGE OF PAVEMENT THAN WIDTH OF SHOULDER PLUS DITCH.

SECTION B-B

~ NOTES ~

MAIL BOX TURNOUT

6 ADD 2'-0" FOR EACH ADDITIONAL MAIL BOX.

7 HIGH SPEED EQUALS 50 MPH OR GREATER. LOW SPEED EQUALS LESS THAN 50 MPH.

8. THE 2'-0" WIDE FLEXIBLE PAVEMENT FOR THE LENGTH AS SHOWN, OR AS DETERMINED BY THE ENGINEER, SHALL BE APPLIED TO ALL MAIL BOX TURNOUTS. THE PAVEMENT DESIGN SHALL BE AS SHOWN ON THE PLANS OR AS APPROVED BY THE ENGINEER

9. FOR STABILIZED SHOULDERS, THIS AREA SHALL RECEIVE THE SAME TREATMENT AS THAT FOR ADJOINING STABILIZED SHOULDERS. FOR EARTH SHOULDERS THIS AREA SHALL RECEIVE 3" TO 5" OF COMPACTED DENSE GRADED AGGREGATE BASE, BANK GRAVEL, OR TRAFFIC BOUND BASE.

APPROACHES AND ENTRANCES

10 IF FEASIBLE, ALL APPROACHES AND ENTRANCES SHALL INTERSECT SHOULDER LINE AT RIGHT ANGLES. IF NOT AT RIGHT ANGLES, PIPE LENGTH SHALL BE INCREASED TO PROVIDE ACCURATE RADIUS.

11. ROAD APPROACH ILLUSTRATION IS FOR MAINLINE ROAD, ADT 400 OR GREATER. PAVED SHOULDER PORTION SHOWN SHALL ONLY BE APPLICABLE WHERE THE MAINLINE SPECIFIES STABILIZED OR PAVED SHOULDERS. IF THE MAINLINE SHOULDER IS PAVED, THIS SHOULDER PORTION SHALL ALSO BE PAVED.

12. WHEN THE MAINLINE ADT IS UNDER 400, USE A 25' RADIUS WITH NO DECELERATION WIDTH PROVIDED.

13. THE PAVEMENT ON ENTRANCES AND APPROACHES THAT IS DISTURBED DURING NEW CONSTRUCTION OPERATIONS SHALL BE REPLACED WITH A PAVEMENT EQUIVALENT TO THE EXISTING PAVEMENT, REGARDLESS OF THE SURFACE MATERIAL USED ELSEWHERE. THE PAVEMENT DESIGN SHALL BE AS SHOWN ON THE PLANS OR AS APPROVED BY THE ENGINEER.

14. THE RADII ON COUNTY OR SECONDARY ROADS SHALL NOT BE LESS THAN 25' MEASURED TO THE INSIDE EDGE OF THE SURFACE. EACH ADDITIONAL FOOT OF SURFACE WIDTH WILL REQUIRE AN ADDITIONAL FOOT OF PIPE.

15. PIPE ILLUSTRATION IS BASED ON THE USE OF 15" PIPE. LARGER SIZES MAY BE INSTALLED WITH APPROPRIATE MODIFICATIONS. PIPES SMALLER THAN 15" DIAMETER ARE NOT TO BE USED EXCEPT IN SPECIAL CASES, WHEN SPECIFICALLY AUTHORIZED.

16. IN CUT SECTION, SIGHT DISTANCE SHALL BE PROVIDED ON ENTRANCES AND APPROACHES BY DAYLIGHTING THE CUT FROM THE POINTS WHERE THE RADII BEGINS, TO POINTS NOT LESS THAN 100' ON EACH OF THE INTERSECTING ROADWAY.

17. MINIMUM PAVED AREAS FOR ENTRANCES AND APPROACHES. THESE PAVED AREAS MAY BE EXTENDED TO TOUCHDOWN OR TIE-DOWN POINT PROVIDED THE EXISTING IS PAVED.

18 MAXIMUM GRADE FOR ENTRANCES 50' OR GREATER IN LENGTH: MOUNTAINOUS TERRAIN - 20%, ROLLING TERRAIN - 16% AND FLAT TERRAIN - 12%.

ENTRANCE
(RESIDENTIAL AND COMMERICAL)

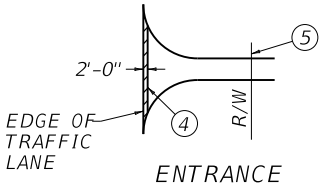

ENTRANCE
(FARM FIELD)

4 PAVE AS SHOWN WITH FLEXIBLE PAVEMENT.

5 SURFACE TO R/W LINE WITH TRAFFIC BOUND BASE.

KENTUCKY
DEPARTMENT OF HIGHWAYS

APPROACHES, ENTRANCES AND MAIL BOX TURNOUT

STANDARD DRAWING NO. RPM-110-07

SUBMITTED William E. Ginkel — DIRECTOR, DIVISION OF DESIGN — 12-01-15 DATE

APPROVED — STATE HIGHWAY ENGINEER — 12-01-15 DATE

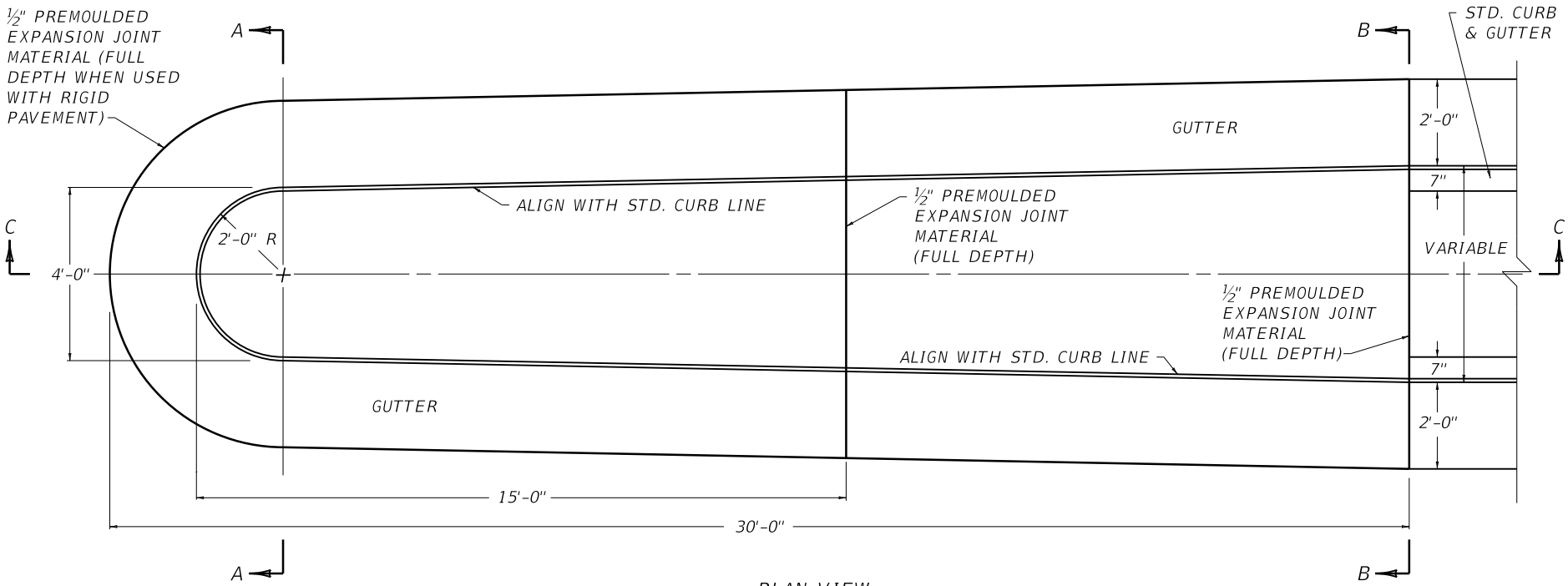

PLAN VIEW

SECTION C-C

~ NOTES ~

1. THE CONTRACT UNIT PRICE BID EACH FOR CONCRETE TERMINAL SECTION TYPE 1 SHALL INCLUDE ALL MATERIALS, LABOR, TOOLS, AND OTHER INCIDENTALS NECESSARY TO COMPLETE THE WORK IN PLACE, AND SHALL RECEIVE A WOOD FLOAT FINISH.

(2) 8" WHEN USED WITH FLEXIBLE PAVEMENT AND PAVEMENT THICKNESS WITH RIGID PAVEMENT.

BID ITEM AND UNIT TO BID	
CONCRETE TERMINAL SECTION TYPE 1	EACH

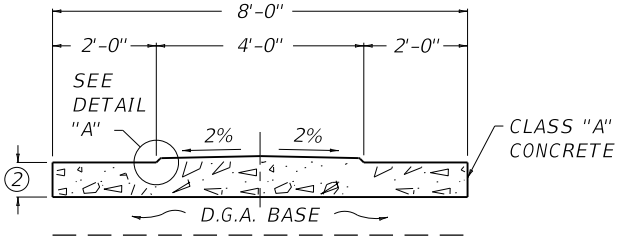

SECTION A-A

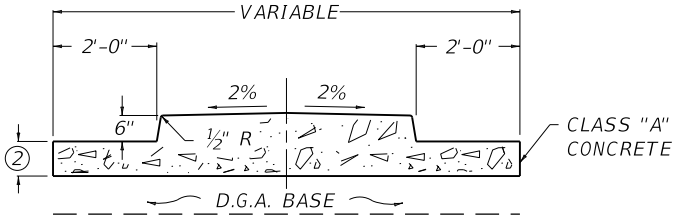

SECTION B-B

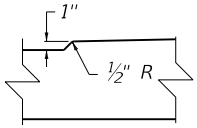

DETAIL "A"

KENTUCKY
DEPARTMENT OF HIGHWAYS

CONCRETE TERMINAL
SECTION TYPE 1

STANDARD DRAWING NO. RPM-115-05

SUBMITTED _____ DIRECTOR, DIVISION OF DESIGN — 12-01-15 DATE

APPROVED _____ STATE HIGHWAY ENGINEER — 12-01-15 DATE

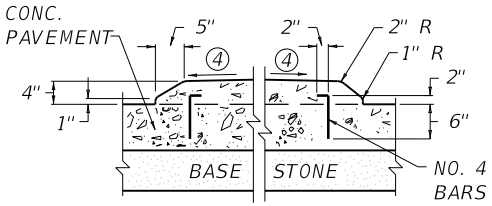

SECTION 1-1

NO. 4 BARS TO BE PLACED 6" FROM EDGE ON 12" CENTERS AROUND ENTIRE ISLAND. BARS ARE TO BE 10" LONG AND BENT AS DETAILED ABOVE.

BASE - FULL DEPTH PAVEMENT

SMALL (UP TO 150 SQ. FT.)
CONCRETE ISLAND

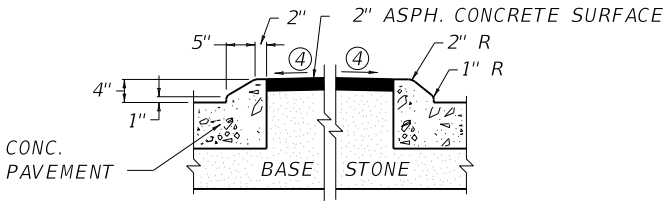

SECTION 2-2

AREA IN ISLAND FILLED WITH BASE STONE AND CAPPED WITH 2" ASPHALT CONCRETE SURFACE.

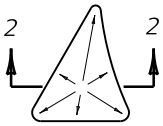

INTERMEDIATE (150 TO 1000 SQ. FT.)
ISLAND INTEGRAL CURB

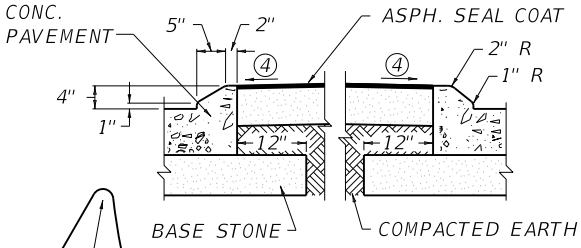

SECTION 3-3

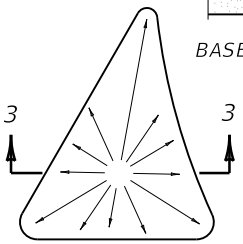

AREA IN ISLAND FILLED WITH WITH COMPACTED EARTH, 7" BASE STONE AND ASPHALT SEAL COAT.

LARGE (1000 SQ. FT. AND ABOVE)
ISLAND INTEGRAL CURB

~ RIGID PAVEMENT ~

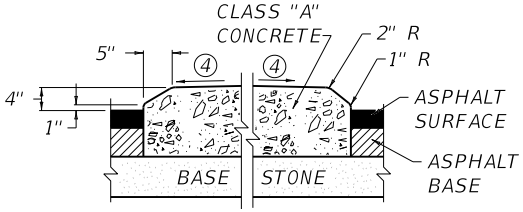

SECTION 4-4

BASE - FULL DEPTH BASE STONE

SMALL (UP TO 150 SQ. FT.)
CONCRETE ISLAND

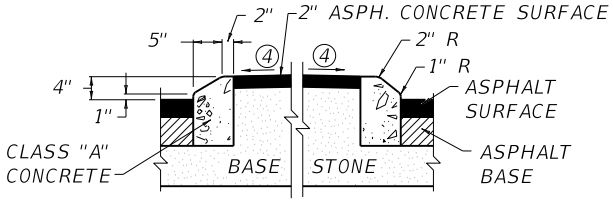

SECTION 5-5

AREA IN ISLAND FILLED WITH BASE STONE AND CAPPED WITH 2" ASPHALT CONCRETE SURFACE.

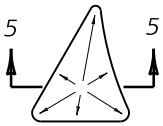

INTERMEDIATE (150 TO 1000 SQ. FT.)
CONCRETE ISLAND HEADER CURB

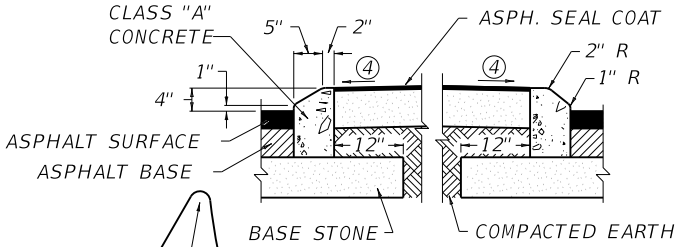

SECTION 6-6

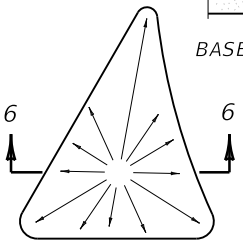

AREA IN ISLAND FILLED WITH WITH COMPACTED EARTH, 7" BASE STONE AND ASPHALT SEAL COAT.

LARGE (1000 SQ. FT. AND ABOVE)
CONCRETE ISLAND HEADER CURB

~ FLEXIBLE PAVEMENT ~

~ NOTES ~

BID ITEM AND UNIT TO BID	
CONCRETE ISLAND	SQYD

1. CONCRETE ISLAND SHALL BE PAID FOR ON A SQ. YD. BASIS AND SHALL INCLUDE ALL MATERIALS AND LABOR NECESSARY FOR A COMPLETE INSTALLATION. FINISHING AND CURING SHALL BE THE SAME AS REQUIRED FOR CONCRETE SIDEWALK.
2. THE AREA IN THE LARGE RAISED ISLANDS SHALL BE GRADED AND SURFACED SO AS NOT TO OBSTRUCT SIGHT DISTANCE.
3. SEE SURFACING SCHEDULE FOR BASE STONE AND SURFACING OF ISLANDS IN EXCESS OF 1000 SQ. FT.
4. PAVED AREA SHALL BE SLOPED SO AS TO OBTAIN PROPER DRAINAGE AS DIRECTED BY THE ENGINEER ON CONSTRUCTION.
5. WHEN THE GRADES DO NOT PERMIT THE ISLAND SURFACE TO DRAIN, THEY SHALL BE CROWNED AS SHOWN WITH A MAXIMUM CROSS SLOPE OF 4%.
6. DIMENSIONS AND RADII SHOWN ARE TYPICAL FOR BOTH SIDES OF ISLAND.

USE WITH CUR. STD. DWG. RPM-100

KENTUCKY
DEPARTMENT OF HIGHWAYS

CONCRETE ISLAND CURB
CONSTRUCTION DETAILS
(RIGID & FLEXIBLE PAVEMENT)

STANDARD DRAWING NO. RPM-120-07

SUBMITTED William E. Ginkel — DIRECTOR, DIVISION OF DESIGN — 12-01-15 DATE

APPROVED — STATE HIGHWAY ENGINEER — 12-01-15 DATE

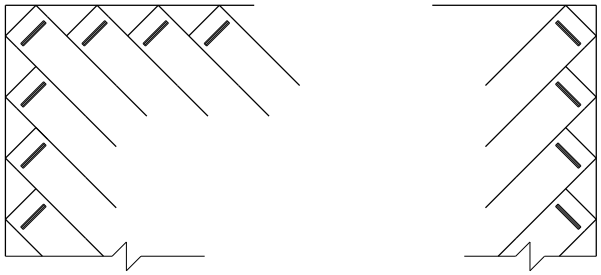

ANGLED PARKING

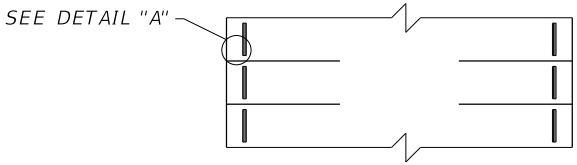

PERPENDICULAR PARKING

TYPICAL VEHICLE STOP INSTALLATION

~ NOTES ~

BID ITEM AND UNIT TO BID
PRECAST VEHICLE STOP LF

1. THE UNIT PRICE BID PER LINEAR FOOT FOR "PRECAST VEHICLE STOP" SHALL INCLUDE ALL CLASS "A" CONCRETE, STEEL REINFORCEMENT, STEEL DOWELS, LABOR AND ALL INCIDENTALS NECESSARY FOR A COMPLETE INSTALLATION.
2. THE PLANS SHALL SPECIFY THE LENGTHS OF THE INDEPENDENT UNITS. 2'-0", 4'-0", 6'-0" AND 8'-0" ARE STANDARD LENGTHS. 3'-0", 5'-0" AND 7'-0" LENGTHS MAY BE USED WHEN REQUIRED.
3. NO. 5 BARS - 1'-6" MIN. LENGTH. FILL VOID WITH BUTYL RUBBER CAULKING (COMMERCIAL GRADE) OR OTHER APPROVED MATERIAL.
4. NO. 3 DEFORMED BARS (OR LARGER) 3 REQUIRED.
5. THE MINIMUM REQUIREMENT FOR REINFORCING STEEL SHALL BE GRADE 40.
6. THE UNIT WEIGHS APPROXIMATELY 38 LBS./FT.
7. OTHER TYPES OF STOPS MAY BE PERMITTED IF APPROVED IN WRITING BY THE ENGINEER.

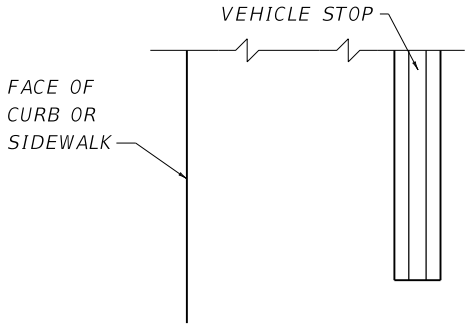

PLAN VIEW

END ELEVATION

DETAIL "A"

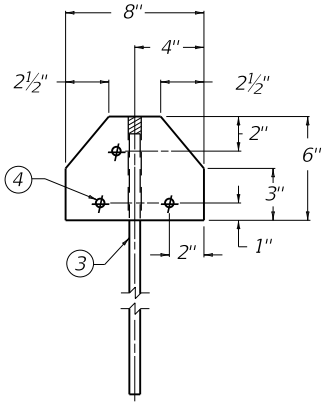

END VIEW

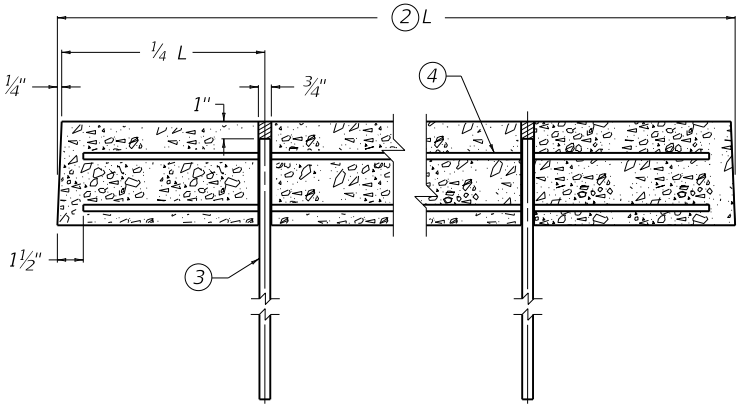

SECTIONAL ELEVATION VIEW

KENTUCKY
DEPARTMENT OF HIGHWAYS

PRECAST
VEHICLE STOP

STANDARD DRAWING NO. RPM-130-04

SUBMITTED William E. Ginkel — DIRECTOR DIVISION OF DESIGN — 12-01-15 DATE

APPROVED — STATE HIGHWAY ENGINEER — 12-01-15 DATE

JOINTED PLAIN CONCRETE PAVED SHOULDER OR MEDIAN (DOWELLED) WITH JOINTED PLAIN CONCRETE MAINLINE PAVEMENT

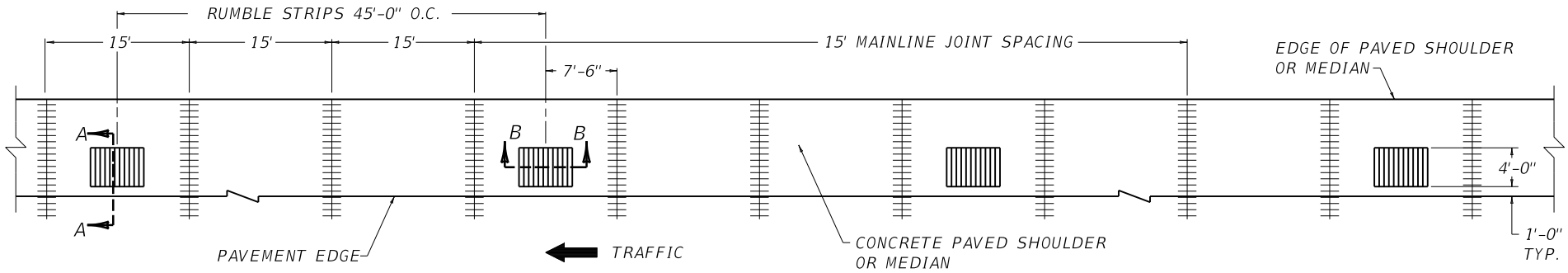

PLAN VIEW

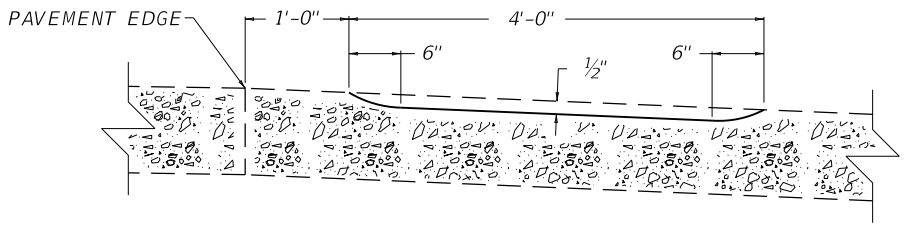

SECTION A-A

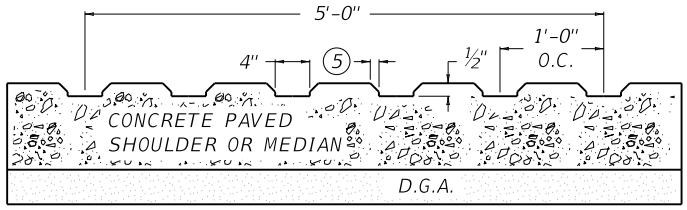

SECTION B-B

~ NOTES ~

BID ITEM AND UNIT TO BID
RUMBLE STRIPS TYPE 3 LF

1. THE CONTRACT UNIT PRICE PER LINEAR FOOT FOR A SIX (6) STRIP UNIT SHALL INCLUDE ALL LABOR, MATERIALS AND INCIDENTALS NECESSARY TO COMPLETE ONE INSTALLATION.
2. THE GROOVED RUMBLE STRIPS SHALL BE CUT INTO THE CURED CONCRETE SHOULDER AS DETAILED ON THIS DRAWING.
3. THE GROOVE SHALL BE TAPERED OUT, SO AS TO PROVIDE POSITIVE DRAINAGE.
4. WHEN THE SHOULDER IS USED TO MAINTAIN TRAFFIC DURING CONSTRUCTION, THE RUMBLE STRIPS SHALL NOT BE CUT UNTIL THE MAINLINE IS OPENED TO TRAFFIC.

(5) ¼" BEVEL

KENTUCKY
DEPARTMENT OF HIGHWAYS

RUMBLE STRIPS
TYPE 3

STANDARD DRAWING NO. RPM-145-04

SUBMITTED William E. Ginkel — DIRECTOR, DIVISION OF DESIGN — 12-01-15 DATE

APPROVED — STATE HIGHWAY ENGINEER — 12-01-15 DATE

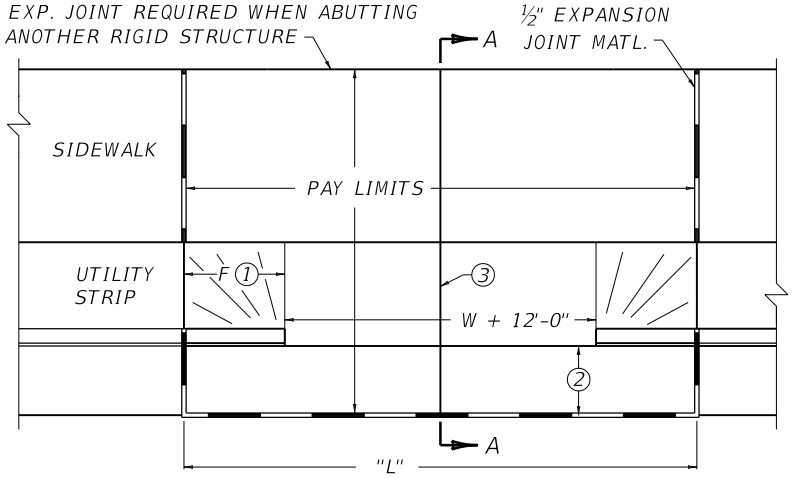

PLAN VIEW

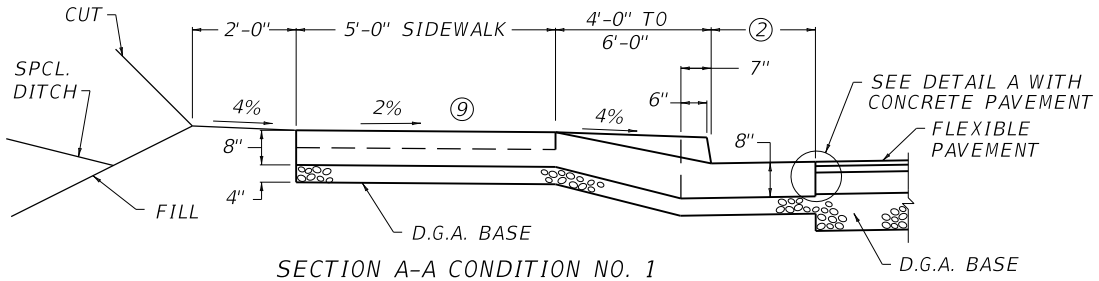

SECTION A-A CONDITION NO. 1

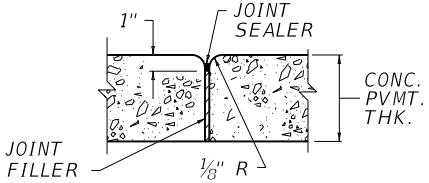

DETAIL A

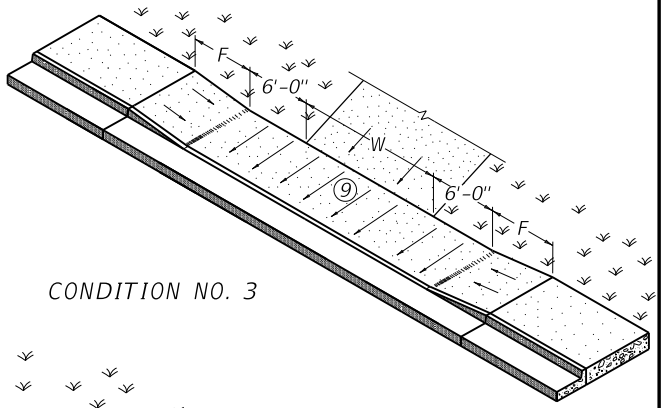

CONDITION NO. 3

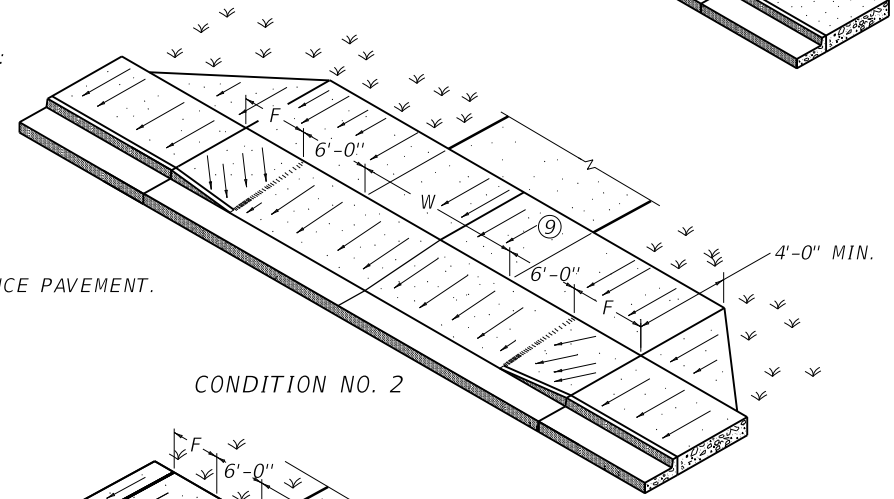

CONDITION NO. 2

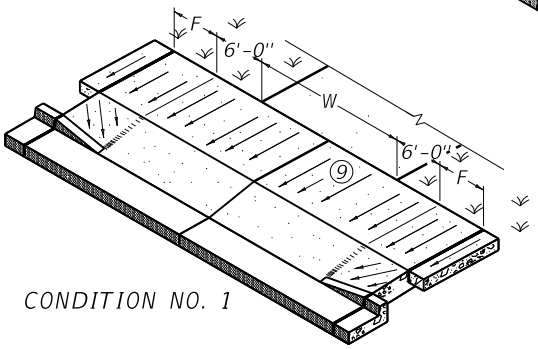

CONDITION NO. 1

~ NOTES ~

1. FOR WIDTH "W" AND "F":
   RESIDENTIAL - MINIMUM W = 12'-0", MAXIMUM W = 24'-0" ; MINIMUM F = 2'-6", MAXIMUM F = 10'-0"
   COMMERCIAL - MINIMUM W = 24'-0", MAXIMUM W = 36'-0"; F = 10'-0"
   WHEN MORE THAN TWO LANES ARE REQUIRED, 36'-0" WIDTH MAY BE INCREASED TO RELIEVE INTERFERENCE BETWEEN ENTERING AND EXITING TRAFFIC. AT THE ENGINEER'S DISCRETION RADIAL RETURNS MAY BE USED ON ENTRANCES. SOME APPLICABLE CASES ARE THE FOLLOWING:
   a. ON ENTRANCES EXPECTED TO CARRY HIGH VOLUMES OF TRAFFIC.
   b. WHEN ENTRANCE WIDTH IS GREATER THAN 36'.
   c. WHEN THE HIGHWAY HAS A POSTED OR OPERATING SPEED OVER 40 MPH.
   d. ON A RURAL SECTION WHERE A FLUSH SHOULDER EXISTS.
   e. WHERE AN EXCLUSIVE RIGHT TURN LANE IS USED.
2. 1'-0" OR 2'-0" WITH CONCRETE PAVEMENT, 2'-0" WITH FLEXIBLE PAVEMENT
3. WHEN "L" DIMENSION IS GREATER THAN 15'-0" A SAWED AND SEALED JOINT, 1½" DEEP AND ¼" WIDE SHALL BE PLACED AT THE CENTER OF THE "L" DIMENSION. WIDE ENTRANCES REQUIRE ADDITIONAL JOINTS, SPACING SHALL NOT EXCEED 15'-0" O.C.
4. CLASS "A" CONCRETE OR JOINTED PLAIN CONCRETE PAVEMENT SHALL BE USED IN THE ENTRANCE PAVEMENT.
5. THE ENTRANCE PAVEMENT SHALL RECEIVE A BROOM FINISH AND SHALL BE CURED THE SAME AS THE MAINLINE PAVEMENT AND/OR SIDEWALK.
6. THE CONTRACT UNIT PRICE BID PER SQUARE YARD FOR "CEM CONC ENT PAVEMENT-8 IN" SHALL INCLUDE CLASS "A" CONCRETE AND ALL INCIDENTALS NECESSARY TO COMPLETE THE WORK. D.G.A. AND DETECTABLE WARNINGS ARE SEPARATE BID ITEMS.
7. USE CONDITION NO. 2 OR NO. 3 WHEN LITTLE OR NO UTILITY STRIP IS PROVIDED, AND INCORPORATE FEATURES OF OTHER DESIGNS SHOWN WHERE NOT IN CONFLICT.
8. PROVIDED THAT ADA GUIDELINES SHOWN IN NOTES 9 AND 10 ARE FOLLOWED, THE ENGINEER MAY MODIFY THE DESIGN TO BETTER FIT EXISTING CONDITIONS.
9. 2% CROSS SLOPE MAXIMUM ON SIDEWALK. IF CONDITIONS WARRANT, SIDEWALK MAY BE SLOPED 2% AWAY FROM ROADWAY.
10. SIDEWALKS SHOULD BE DESIGNED WITH A MAX. GRADE OF 5%. WHERE A SIDEWALK RUNS ALONG A STEEP ROADWAY, THE SIDEWALK GRADE MAY EXCEED 5% IF IT FOLLOWS THE GRADE OF THE ROADWAY. WHERE THE GRADE EXCEEDS 5%, A LEVEL LANDING SHALL BE REQUIRED EVERY 200'.
11. COMMERCIAL DRIVEWAYS WITH TRAFFIC CONTROL DEVICES REQUIRE ADA SIDEWALK TREATMENTS WITH DETECTABLE WARNINGS.

BID ITEMS AND UNIT TO BID

CEM CONC ENT PAVEMENT-8 IN	SQYD
DGA BASE	TON
DETECTABLE WARNINGS	SQFT

USE WITH CUR. STD. DWG. RGX-040

KENTUCKY DEPARTMENT OF HIGHWAYS

CONCRETE ENTRANCE PAVEMENT AND SIDEWALK

STANDARD DRAWING NO. RPM-150-08

SUBMITTED William E. Ginkel — DIRECTOR DIVISION OF DESIGN — 12-01-15 DATE

APPROVED — STATE HIGHWAY ENGINEER — 12-01-15 DATE

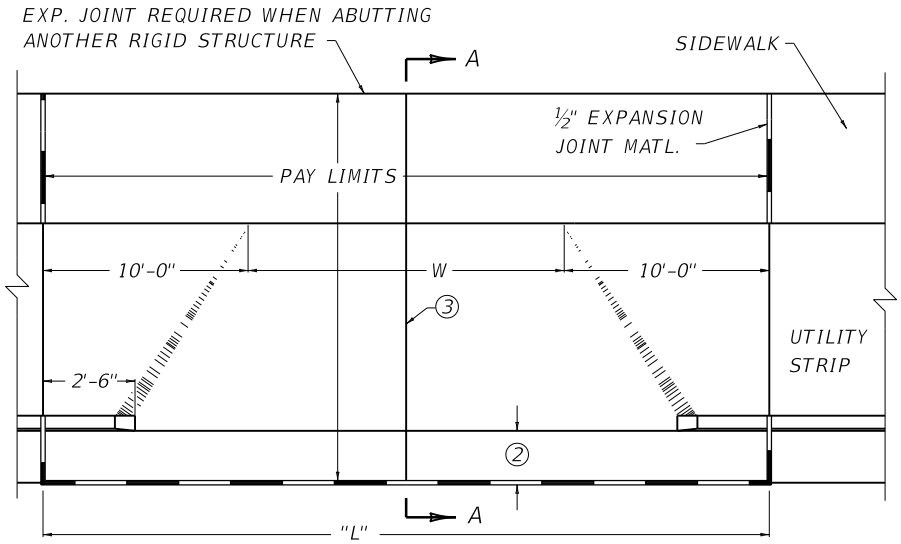

PLAN VIEW

~ NOTES ~

BID ITEMS AND UNIT TO BID	
CEM CONC ENT PAVEMENT-8 IN	SQYD
DGA BASE	TON
DETECTABLE WARNINGS	SQFT

① FOR WIDTH "W":
COMMERCIAL - MINIMUM W = 24'-0", MAXIMUM W = 36'-0"
WHEN MORE THAN TWO LANES ARE REQUIRED, 36' WIDTH MAY BE INCREASED TO RELIEVE INTERFERENCE BETWEEN ENTERING AND EXITING TRAFFIC. AT THE ENGINEER'S DISCRETION RADIAL RETURNS MAY BE USED ON ENTRANCES. SOME APPLICABLE CASES ARE THE FOLLOWING:
a. ON ENTRANCES EXPECTED TO CARRY HIGH VOLUMES OF TRAFFIC.
b. WHEN ENTRANCE WIDTH IS GREATER THAN 36'.
c. WHEN THE HIGHWAY HAS A POSTED OR OPERATING SPEED OVER 40 MPH.
d. ON A RURAL SECTION WHERE A FLUSH SHOULDER EXISTS.
e. WHERE AN EXCLUSIVE RIGHT TURN LANE IS USED.

② 1'-0" OR 2'-0" WITH CONCRETE PAVEMENT, 2'-0" WITH FLEXIBLE PAVEMENT.

③ WHEN "L" DIMENSION IS GREATER THAN 15'-0" A SAWED AND SEALED JOINT, 1½" DEEP AND ¼" WIDE SHALL BE PLACED AT THE CENTER OF THE "L" DIMENSION. WIDE ENTRANCES REQUIRE ADDITIONAL JOINTS, SPACING SHALL NOT EXCEED 15'-0" O.C.

4. CLASS "A" CONCRETE OR JOINTED PLAIN CONCRETE PAVEMENT SHALL BE USED IN THE ENTRANCE PAVEMENT.

5. THE ENTRANCE PAVEMENT SHALL RECEIVE A BROOM FINISH AND SHALL BE CURED THE SAME AS THE MAINLINE PAVEMENT AND/OR SIDEWALK.

6. THE CONTRACT UNIT PRICE BID PER SQUARE YARD FOR "CEM CONC ENT PAVEMENT-8 IN" SHALL INCLUDE CLASS "A" CONCRETE AND ALL INCIDENTALS NECESSARY TO COMPLETE THE WORK. D.G.A. AND DETECTABLE WARNINGSARE SEPARATE BID ITEMS.

7. PROVIDING THAT ADA GUIDELINES SHOWN IN NOTE ⑧ AND 9 ARE FOLLOWED, THE ENGINEER MAY MODIFY THE DESIGN TO BETTER FIT EXISTING CONDITIONS.

⑧ 2% CROSS SLOPE MAXIMUM ON SIDEWALK.

9. SIDEWALKS SHOULD BE DESIGNED WITH A MAX. GRADE OF 5%. WHERE A SIDEWALK RUNS ALONG A STEEP ROADWAY, THE SIDEWALK GRADE MAY EXCEED 5% IF IT FOLLOWS THE GRADE OF THE ROADWAY.

⑩ COMMERCIAL DRIVEWAYS WITH TRAFFIC CONTROL DEVICES REQUIRE ADA SIDEWALK TREATMENTS WITH DETECTABLE WARNINGS.

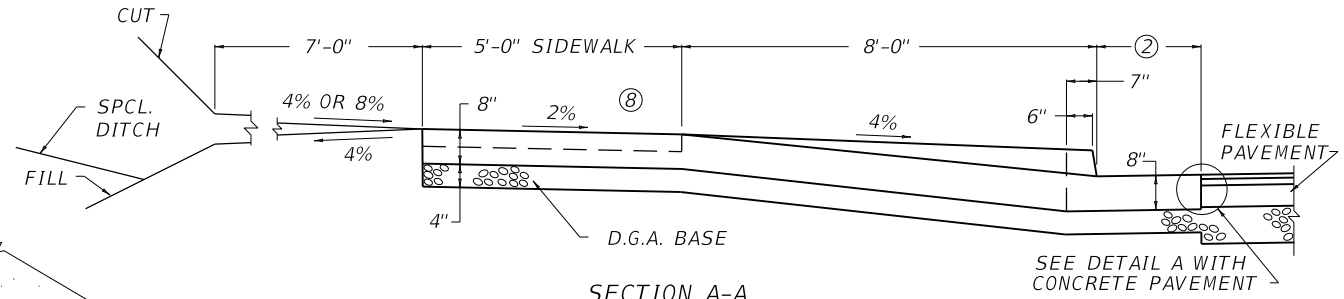

SECTION A-A

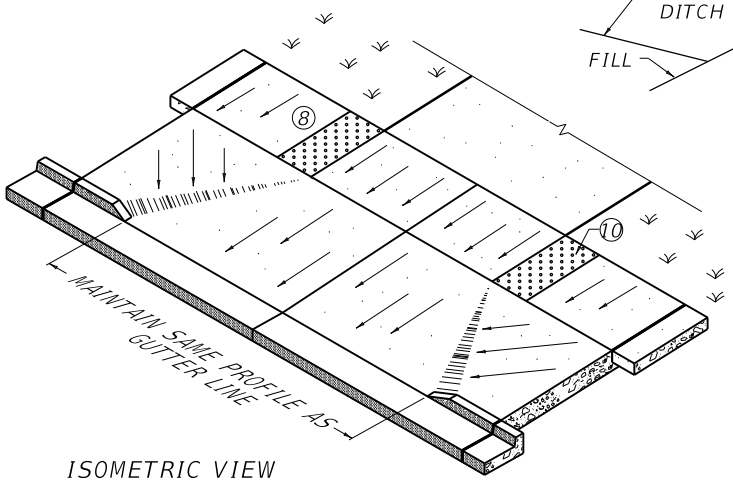

ISOMETRIC VIEW

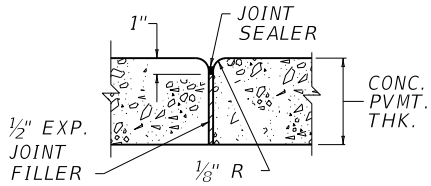

DETAIL A

USE WITH CUR. STD. DWG. RGX-040

KENTUCKY DEPARTMENT OF HIGHWAYS

CONCRETE ENTRANCE PAVEMENT AND SIDEWALK

STANDARD DRAWING NO. RPM-152-08

SUBMITTED [signature] DIRECTOR DIVISION OF DESIGN 12-01-15 DATE

APPROVED [signature] STATE HIGHWAY ENGINEER 12-01-15 DATE

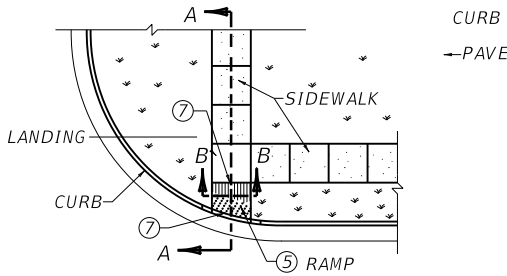

PLAN VIEW

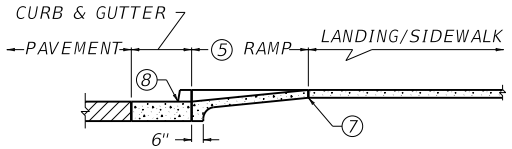

SECTION A-A

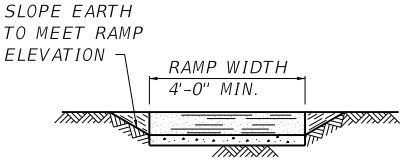

SECTION B-B

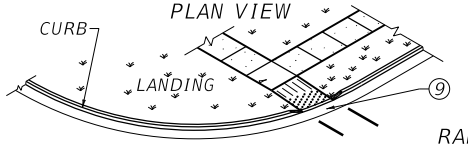

RAMP TYPE 1

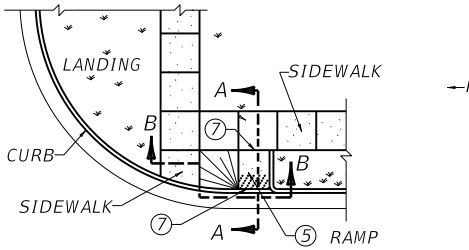

PLAN VIEW

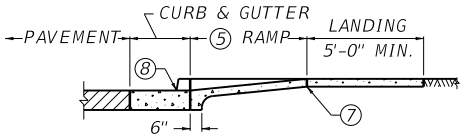

SECTION A-A

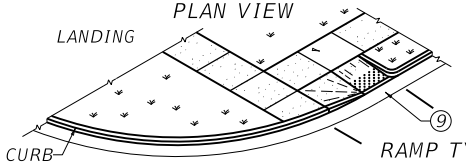

RAMP TYPE 2

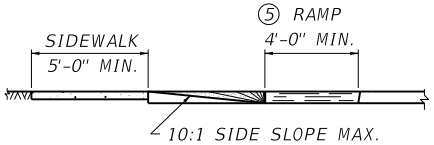

SECTION B-B

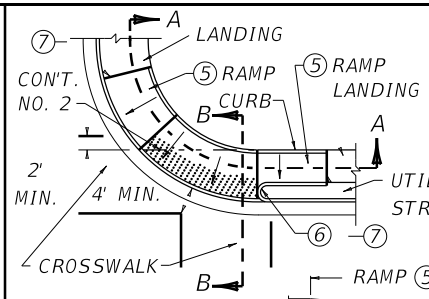

PLAN VIEW

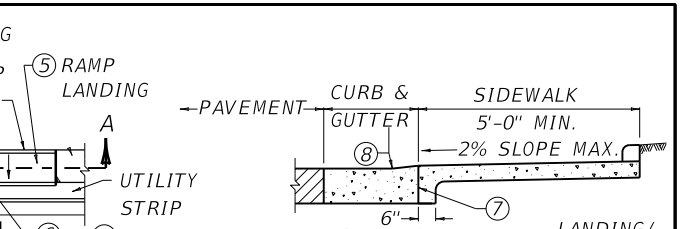

SECTION B-B

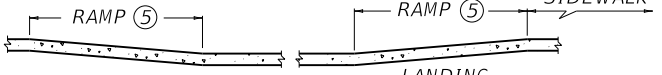

SECTION A-A

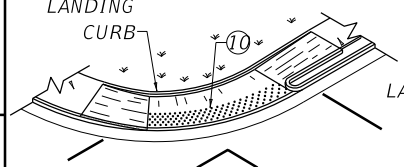

CONDITION NO. 1

RAMP TYPE 3

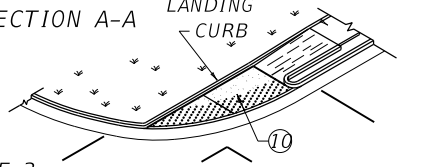

CONDITION NO. 2

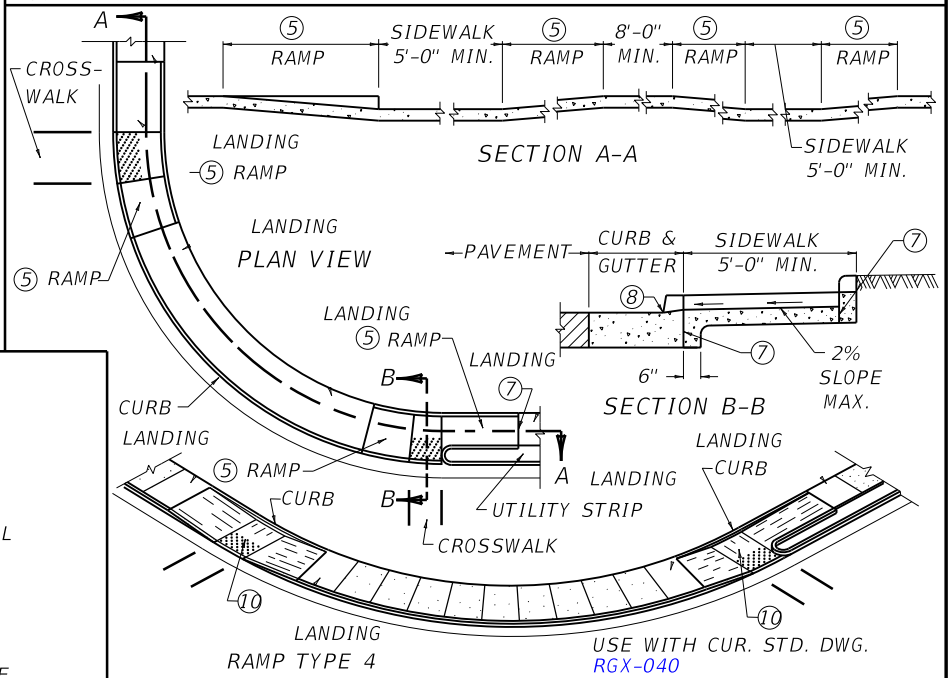

RAMP TYPE 4

USE WITH CUR. STD. DWG.
RGX-040

~ NOTES ~

BID ITEMS AND UNIT TO BID

SIDEWALK-4 IN CONCRETE	SQYD
DETECTABLE WARNINGS	SQFT

1. THE RAMP SHALL BE CONSTRUCTED OF CLASS "A" CONCRETE. A BROOM FINISH OR EQUAL NON-SKID FINISH IS REQUIRED. DETECTABLE WARNINGS SHALL BE A SEPARATE BID ITEM.
2. RAMPS SHALL BE PAID PER SQ. YD. OF 4" CONCRETE SIDEWALK AND THE UNIT PRICE SHALL INCLUDE ALL MATERIALS, FORMS, CURB BEHIND RAMP AND LANDING, AND INCIDENTALS NECESSARY FOR CONSTRUCTION.
3. THE NORMAL GUTTER LINE SHALL BE MAINTAINED THROUGH THE AREA OF THE RAMP.
4. RAMP TYPE 3 SHOULD BE USED PRIMARILY IN A RETROFIT TYPE CONDITION.

(5) CURB RAMP GRADE SHALL NOT EXCEED 12:1, CROSS SLOPE SHALL NOT EXCEED 2%. ON RETROFIT CURB RAMPS, GRADES OF 12.5% for 2'-0" OR 10% FOR 5'-0" ARE PERMISSABLE.

(6) CURB RETURN REQUIRED WHEN UTILITY STRIP IS 4' OR GREATER. FOR UTILITY STRIPS LESS THAN 4', THE AREA IS TO BE SURFACED WITH SIDEWALK WITHIN THE RAMP.

(7) ½" EXPANSION JOINT AT BACK OF CURB LINE AND AT SIDEWALK LINE.

(8) NO BUMP PERMITTED. SAME SLOPE AS RAMP AND NOT TO EXCEED 1" IN HEIGHT. RAMPS SHALL BE CONSTRUCTED SO THAT WATER WILL NOT ACCUMULATE ON WALKING SURFACES.

(9) LANDINGS WILL PROVIDE A LEVEL AREA (MAX. 5% GRADE OR CROSS SLOPE) AT APPROXIMATE STREET ELEVATION. A 4' SQUARE LEVEL LANDING IS THE REQUIRED MINIMUM.

(10) LANDINGS WILL PROVIDE A LEVEL AREA (MAX. 2% GRADE OR CROSS SLOPE) AT APPROXIMATE STREET ELEVATION. A 4' SQUARE LEVEL LANDING IS THE REQUIRED MINIMUM.

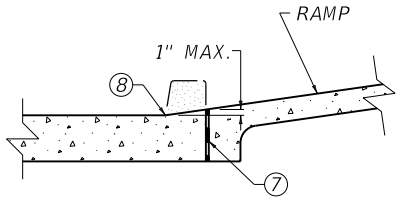

DROP CURB FOR RAMP

KENTUCKY
DEPARTMENT OF HIGHWAYS

SIDEWALK
RAMPS

STANDARD DRAWING NO. RPM-170-09

SUBMITTED William E. Ginkel — DIRECTOR, DIVISION OF DESIGN — 12-01-15 DATE

APPROVED — STATE HIGHWAY ENGINEER — 12-01-15 DATE

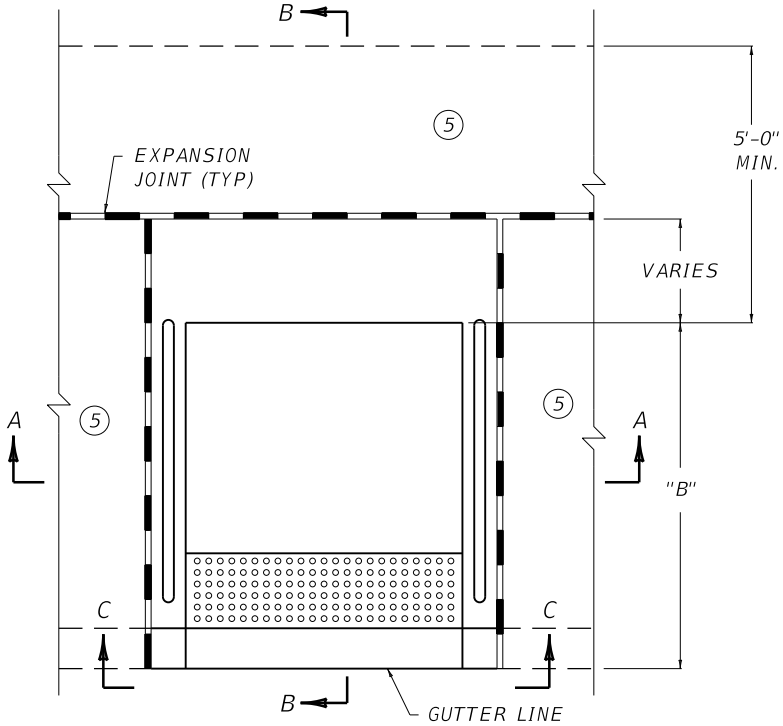

PLAN VIEW
SIDEWALK RAMP TYPE 5

~ NOTES ~

BID ITEMS AND UNIT TO BID	
SIDEWALK-4 IN CONCRETE	SQYD
HANDRAIL-TYPE A-1	LF

1. EXISTING SIDEWALK AND CURB SHALL BE REMOVED TO THE LIMITS AS DESIGNATED BY THE ENGINEER.
2. WHERE EXISTING JOINTS ARE LOCATED MORE THAN 2'-0" FROM THE RAMP LIMITS SHOWN, THE CONTRACTOR SHALL SAW CUT THE SIDEWALK AND CURB PRIOR TO REMOVAL.
3. A BROOM FINISH OR EQUAL NON-SKID FINISH IS REQUIRED.

(4) CUT GROOVE TO CONFORM TO THE ADJACENT CURB.

(5) EXISTING SIDEWALK.

(6) THE LENGTHS SHOWN ARE MINIMUMS. IF ADEQUATE SPACE IS AVAILABLE A MINIMUM SLOPE OF 12:1 IS DESIRABLE.

(7) HANDRAIL TYPE A-1 MAY BE ELIMINATED PROVIDED ADEQUATE SPACE IS AVAILABLE TO CONSTRUCT 10:1 RAMP SIDE SLOPES AS SHOWN IN SECTION C-C.

8. ALL SIDEWALK RAMPS REQUIRE DETECTABLE WARNINGS.

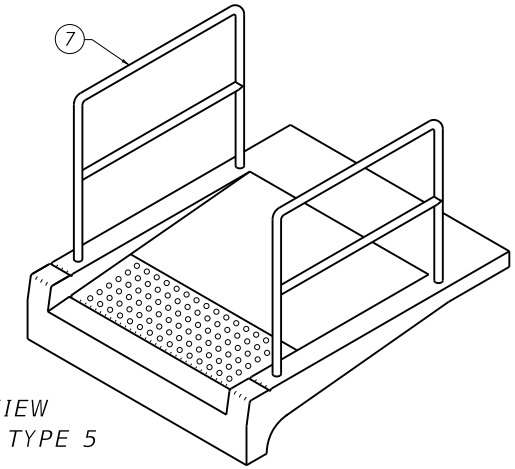

ISOMETRIC VIEW
SIDEWALK RAMP TYPE 5

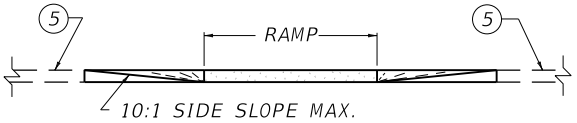

SECTION C-C (8)
(ALTERNATE TO HANDRAIL TYPE B)

RAMP HEIGHT "A"	(6) RAMP LENGTH "B"
≤3"	2'-0"
>3"≤6"	5'-0"

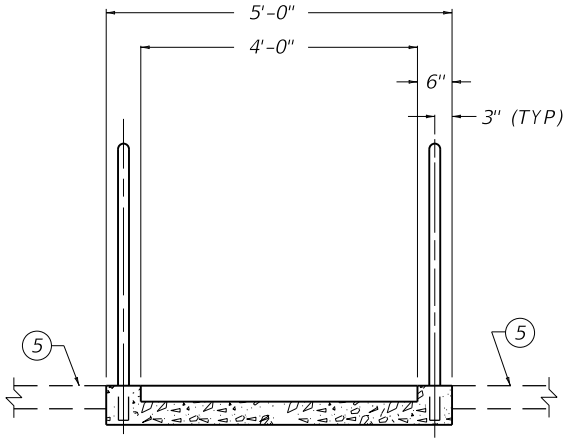

SECTION A-A

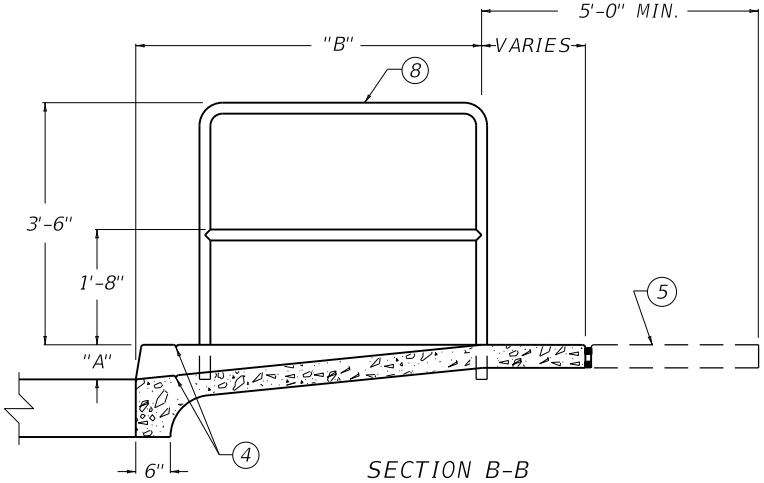

SECTION B-B

USE WITH CURRENT STD. DWG
RGX-030, RGX-040

KENTUCKY
DEPARTMENT OF HIGHWAYS

SIDEWALK RAMP
WITH HANDRAIL

STANDARD DRAWING NO. RPM-172-07

SUBMITTED William E. Ginkel — DIRECTOR, DIVISION OF DESIGN — 12-01-15 DATE

APPROVED — STATE HIGHWAY ENGINEER — 12-01-15 DATE

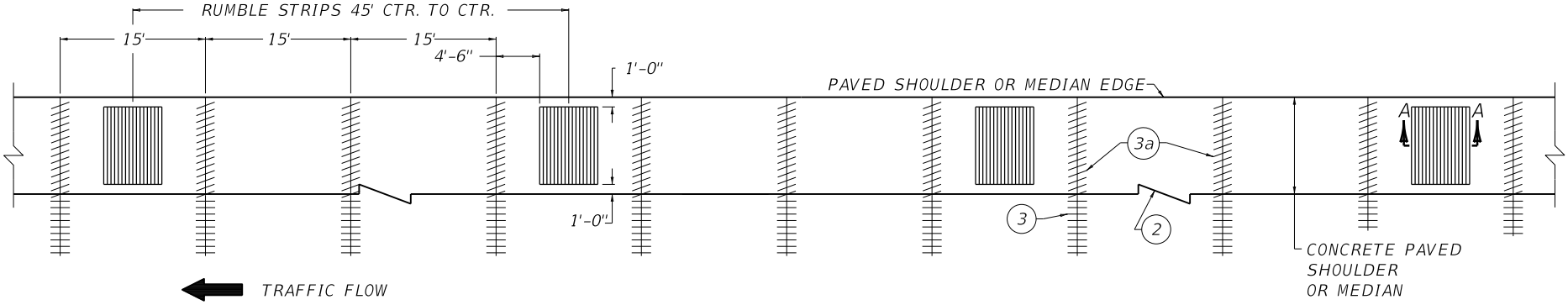

6 JOINTED PLAIN CONCRETE PAVED SHOULDER OR MEDIAN (UNDOWELLED) WITH JOINTED PLAIN CONCRETE MAINLINE PAVEMENT

~ NOTES ~

1. THE COST OF CONSTRUCTING RUMBLE STRIPS SHALL BE INCLUDED IN THE UNIT BID PRICE FOR JOINTED PLAIN CONCRETE PAVEMENT.
2. SEE CUR. STD. DWG. RPS-010 FOR JOINT SYMBOLS AND DETAILS.
3. AFTER FINAL FINISHING OF THE PAVEMENT, CORRUGATIONS FOR RUMBLE STRIPS SHALL BE FORMED AT THE INTERVALS SHOWN INTO THE PLASTIC CONCRETE.
4. THE CORRUGATIONS SHALL BE ROUNDED RATHER THAN PEAKED, WITH THE TOP FLUSH WITH THE SHOULDER OR MEDIAN SLOPE.
5. THE TROUGH SHALL BE TAILED OUT, SO AS TO PROVIDE POSITIVE DRAINAGE.
6. JOINTED PLAIN CONCRETE SHOULDER OR MEDIAN (UNDOWELLED) IS DETAILED. WHEN JOINTED PLAIN CONCRETE SHOULDER OR MEDIAN (DOWELLED) IS REQUIRED REFER TO CUR. STD. DWG. RPM-145 FOR DETAIL.

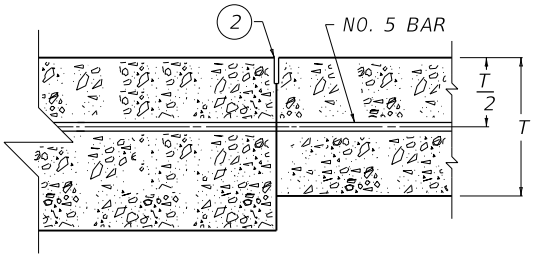

JOINT DETAIL

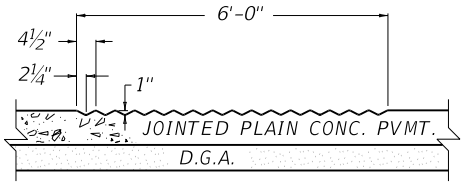

SECTION A-A

USE WITH CUR. STD. DWGS.
RPM-145 RPS-010

KENTUCKY
DEPARTMENT OF HIGHWAYS

JOINTED PLAIN
CONCRETE PAVEMENT
FOR
SHOULDERS & MEDIANS

STANDARD DRAWING NO. RPN-001-07

SUBMITTED William E. Ellis — DIRECTOR, DIVISION OF DESIGN — 12-01-15 DATE

APPROVED — STATE HIGHWAY ENGINEER — 12-01-15 DATE

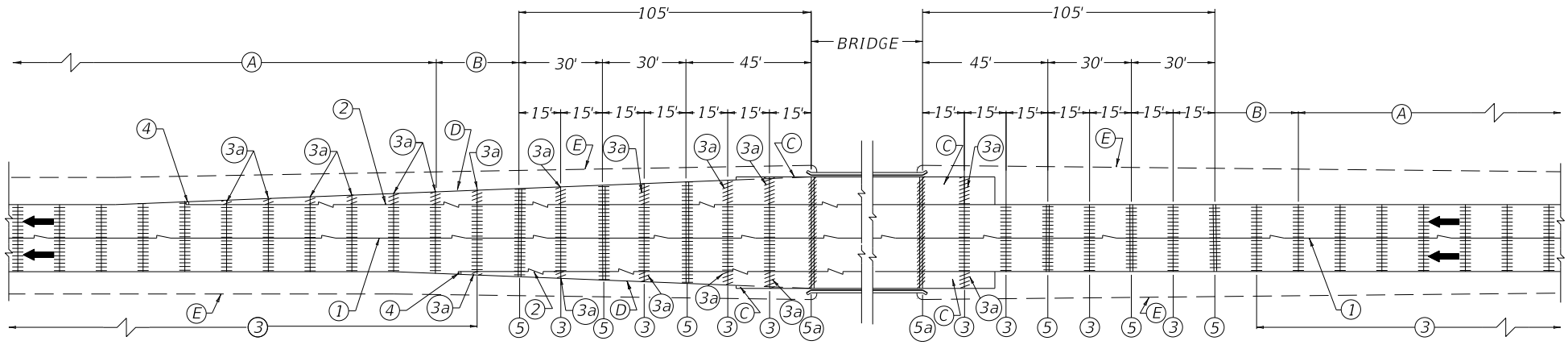

SINGLE BRIDGE OR TWIN BRIDGES WITH ONE DIRECTION TRAFFIC

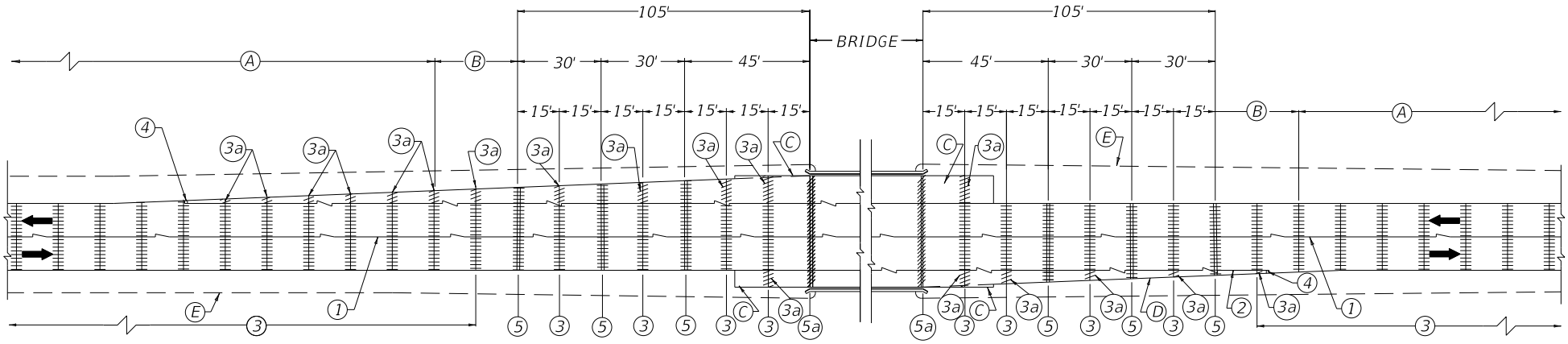

SINGLE BRIDGE WITH TWO DIRECTION TRAFFIC

~ NOTES ~

(A) NORMAL SPACING OF TRANSVERSE CONTRACTION JOINTS ARE 15'-0" ON CENTER TAKEN ALONG ℄ OF PAVEMENT.

(B) THIS DISTANCE IS TO BE EQUALLY DIVIDED WHEN IT IS LESS THAN THE SUM OF THE SPACING OF THE NEXT TWO TRANSVERSE CONTRACTION JOINTS EXCEEDS A MAXIMUM OF 15'-0".

(C) THIS SLAB REQUIRED ONLY WHEN NEEDED FOR BRIDGE END DRAINAGE.

(D) PAVEMENT TRANSITION 25':1', NOT PERMITTED WHEN CONSTRUCTED IN CONJUNCTION WITH P.C.C. SHOULDERS.

(E) SHOULDER TRANSITION 100':1'.

F. SEE CUR. STD. DWG. RPS-010 FOR JOINT SYMBOLS AND DETAILS.

G. IF WORK IS INTERRUPTED IN EXCESS OF 30 MINUTES, OR AT THE END OF A DAYS PAVING, A TRANSVERSE CONSTRUCTION JOINT SHALL BE INSTALLED; HOWEVER, IT SHALL NOT BE PERMITTED WITHIN 5' OF A TRANSVERSE CONTRACTION JOINT.

USE WITH CUR. STD. DWG. RPS-010

KENTUCKY
DEPARTMENT OF HIGHWAYS

PAVEMENT TRANSITIONS & JOINT DETAILS FOR JOINTED PLAIN CONCRETE PAVEMENT AT BRIDGE ENDS

STANDARD DRAWING NO. RPN-010-07

SUBMITTED William E. Ginkel — DIRECTOR, DIVISION OF DESIGN — 12-01-15 DATE

APPROVED — STATE HIGHWAY ENGINEER — 12-01-15 DATE

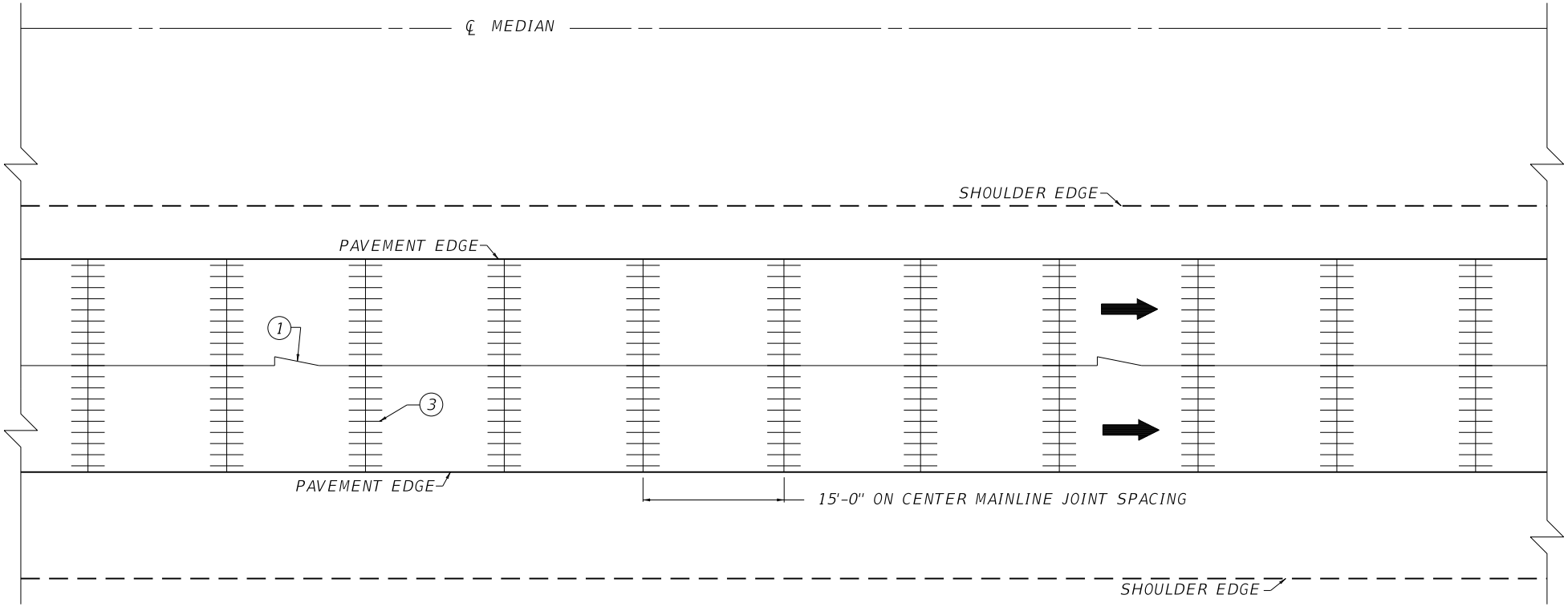

PLAN VIEW

~ NOTES ~

1. TRANSVERSE CONTRACTION JOINTS SHALL BE SPACED 15'-0" ON CENTER AND SAWED TO A MINIMUM DEPTH OF ONE THIRD OF THE PAVEMENT THICKNESS (T/3) OR 4" WHICHEVER IS LESS. ALL TRANSVERSE CONTRACTION AND TRANSVERSE EXPANSION JOINTS SHALL REQUIRE LOAD TRANSFER ASSEMBLIES AS DETAILED ON THE PLANS OR STANDARD DRAWINGS.
2. JOINT SPACING AND TYPE, AT BRIDGE ENDS, SHALL BE REQUIRED AS SHOWN ON THE PLANS OR CUR. STD. DWG. RPS-010.
3. TRANSVERSE CONSTRUCTION JOINTS SHALL BE CONSTRUCTED IN ACCORDANCE WITH SECTION 501.03.17 OF THE STANDARD SPECIFICATIONS FOR ROAD AND BRIDGE CONSTRUCTION, CURRENT EDITION.
4. SEE CUR. STD. DWG. RPS-010 FOR JOINT SYMBOLS AND DETAILS.

USE WITH CUR. STD. DWG. RPS-010

KENTUCKY
DEPARTMENT OF HIGHWAYS

JOINTED PLAIN
CONCRETE PAVEMENT

STANDARD DRAWING NO. RPN-015-05

SUBMITTED _____ DIRECTOR DIVISION OF DESIGN — 12-01-15 DATE

APPROVED _____ STATE HIGHWAY ENGINEER — 12-01-15 DATE

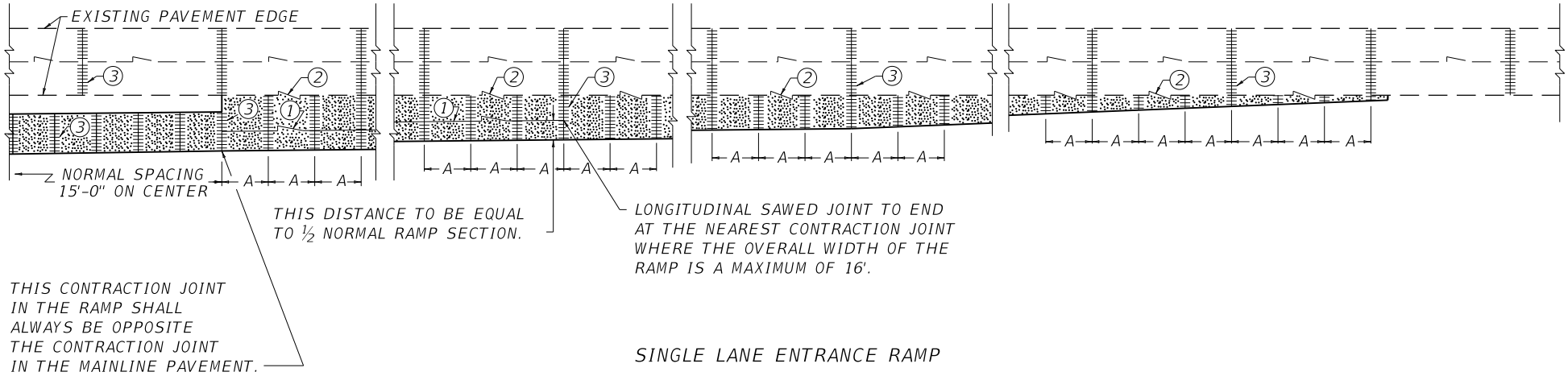

SINGLE LANE ENTRANCE RAMP

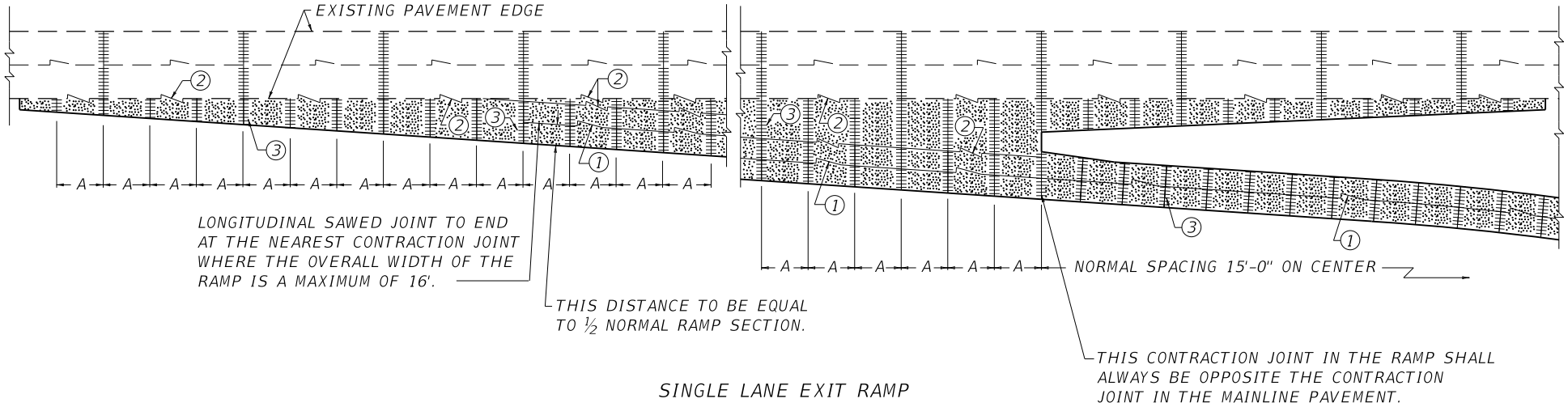

SINGLE LANE EXIT RAMP

~ NOTES ~

1. (A) WHEN JOINTED PLAIN CONCRETE PAVEMENT IS SPECIFIED FOR AN ACCELERATION LANE, DECELERATION LANE, AN ADDITIONAL LANE, OR TAPER, AND IS TO BE CONSTRUCTED ADJACENT TO AN EXISTING JOINTED REINFORCED CONCRETE PAVEMENT, THE SPACING OF THE TRANSVERSE CONTRACTION JOINTS IN THE JOINTED PLAIN CONCRETE PAVEMENT SHALL BE AS FOLLOWS:
   (a) WHEN THE SPACING OF THE TRANSVERSE CONTRACTION JOINTS IN THE EXISTING PAVEMENT IS 50', THE SPACING OF THE TRANSVERSE CONTRACTION JOINTS IN THE JOINTED PLAIN CONCRETE PAVEMENT SHALL BE $16\frac{2}{3}$'.
   (b) WHEN THE SPACING OF THE TRANSVERSE CONTRACTION JOINTS IN THE EXISTING PAVEMENT IS 25', THE SPACING OF THE TRANSVERSE CONTRACTION JOINTS IN THE JOINTED PLAIN CONCRETE PAVEMENT SHALL BE $12\frac{1}{2}$'.
2. SEE CUR. STD. DWG. RPS-010 FOR JOINT SYMBOLS AND DETAILS.
3. LONGITUDINAL SAWED JOINTS AT CENTER LINE SHALL BE REQUIRED FOR ALL RAMPS AND LOOPS GREATER THAN 16' IN WIDTH.
4. ALL CONTRACTION JOINTS IN THE RAMP IMMEDIATELY OPPOSITE TO THE MAIN LINE PAVEMENT SHALL BE A CONTINUATION OF THE JOINTS IN THE MAINLINE PAVEMENT.
5. ▒ PROPOSED JOINTED PLAIN CONRETE PAVEMENT.

USE WITH CUR. STD. DWG.
RPS-010

KENTUCKY
DEPARTMENT OF HIGHWAYS

CONCRETE
PAVEMENT JOINTS
TYPES & SPACING

STANDARD DRAWING NO. RPN-020-04

SUBMITTED William E. Ginkel — DIRECTOR DIVISION OF DESIGN — 12-01-15 DATE

APPROVED — STATE HIGHWAY ENGINEER — 12-01-15 DATE

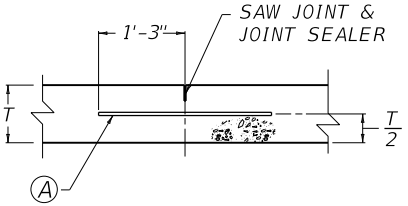

1 LONGITUDINAL SAWED JOINT

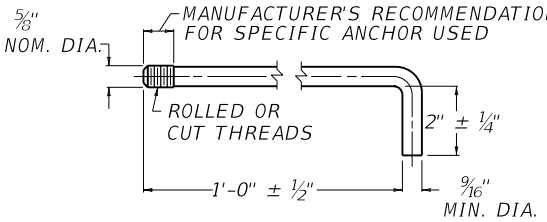

B HOOK BOLT FOR USE WITH EXPANSION ANCHOR
(SEE STANDARD SPECIFICATIONS FOR BASIS OF PAYMENT)

~ NOTES ~

1. LONGITUDINAL JOINTS SHALL BE USED WHEN SHOWN ON THE TYPICAL SECTION, AND STANDARD DRAWINGS AND SHALL BE CONSTRUCTED AS SHOWN ON THIS DRAWING.
2. LONGITUDINAL CONSTRUCTION JOINTS BETWEEN ADJOINING SLABS, AND PAVED IN SEPARATE OPERATIONS SHALL USE HOOK-BOLTS OR TIE BARS AND BE CONSTRUCTED AS SHOWN ON THIS DRAWING.
3. IN LIEU OF THE DEFORMED TIE BARS THE CONTRACTOR SHALL BE PERMITTED TO USE EITHER ALT. 1 OR ALT. 2 HOOK BOLT AS DETAILED.

4 DEFORMED TIE BARS USED IN TRANSVERSE CONSTRUCTION JOINTS SHALL BE NO CLOSER THAN 6" TO THE PAVEMENT EDGE OR ANY LONGITUDINAL JOINT.

A NO. 5 DEFORMED TIE BAR 2'-6" LONG PLACED 1'-8" ON CENTER AND PLACED 1'-8" MINIMUM FROM ANY TRANSVERSE JOINT.

B EXPANSION ANCHOR FOR BOLT SIZE INDICATED SHALL BE BETHLEHEM MINE ROOF EXPANSION TYPE WITH K-1 SHELL , PHILLIPS RED HEAD ANCHOR, CHICAGO EXPANSION BOLT CO. - SPECIAL FLUSH SELF DRILLING ANCHOR , OR APPROVED TYPE. INSTALLATION SHALL CONFORM TO MANUFACTURER'S RECOMMENDATION. HOOK BOLTS WITH EXPANSION ANCHORS ATTACHED SHALL NOT BE LESS THAN 14" IN LENGTH. HOOK BOLTS WITH EXPANSION ANCHORS SHALL BE SPACED 5'-0" O.C.

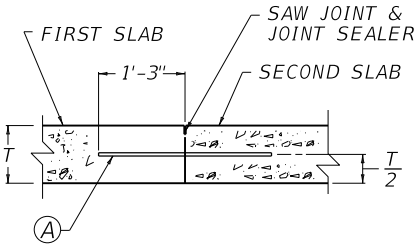

2 LONGITUDINAL SAWED CONSTRUCTION JOINT

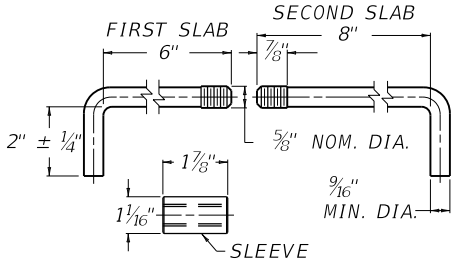

ALTERNATE 1
HOOK BOLTS FOR CONSTRUCTION JOINTS

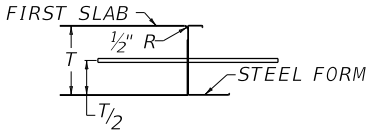

TYPE A

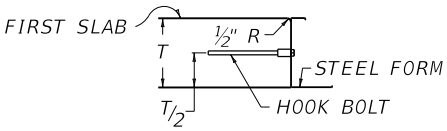

TYPE B

METHODS OF FORMING CONSTRUCTION JOINTS WHEN FORMS ARE USED

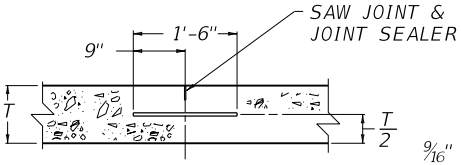

3 TRANSVERSE SAWED CONTRACTION JOINT

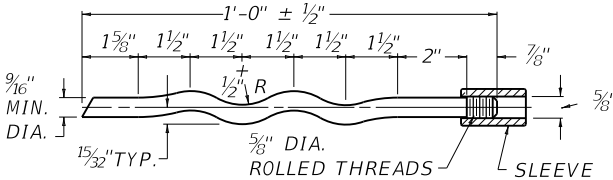

ALTERNATE 2 (FIRST SLAB)
DEFORMED ANCHOR BOLT
(TO BE USED WITH 8" HOOK BOLT)

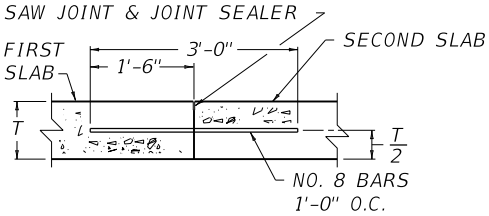

4 TRANSVERSE SAWED CONSTRUCTION JOINT

5/8" PLASTIC INSERT

JOINT SYMBOLS

1 LONGITUDINAL SAWED JOINT

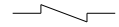
2 LONGITUDINAL SAWED CONSTRUCTION JOINT

3 TRANSVERSE SAWED CONTRACTION JOINT

4 TRANSVERSE SAWED CONSTRUCTION JOINT (1'-0" MIN.)

5 TRANSVERSE EXPANSION JOINT

1a LONGITUDINAL SAWED JOINT (WITHOUT TIE BARS)

2a LONGITUDINAL SAWED CONSTRUCTION JOINT (WITHOUT TIE BARS)

3a TRANSVERSE SAWED CONTRACTION JOINT (WITHOUT LOAD TRANSFER ASSEMBLY)

4a TRANSVERSE SAWED CONSTRUCTION JOINT (WITHOUT TIE BARS)

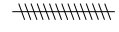
5a 1/2" TRANSVERSE EXPANSION JOINT (WITHOUT LOAD TRANSFER ASSEMBLY)

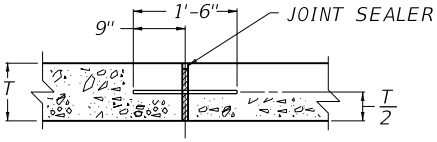

5 TRANSVERSE EXPANSION JOINT

USE WITH CUR. STD. DWGS.
RPN-001 RPN-010 RPN-015
RPN-020 RPS-030 RPS-031
RPS-032 RPS-033 RPS-034
RPS-035 RPS-036 RPS-037
RPS-038 RPS-039 RPX-010
RPX-015 RPX-020

KENTUCKY
DEPARTMENT OF HIGHWAYS

CONCRETE PAVEMENT
JOINT DETAILS

STANDARD DRAWING NO. RPS-010-11

SUBMITTED William E. Ginkel — DIRECTOR DIVISION OF DESIGN — 12-01-15 DATE

APPROVED — STATE HIGHWAY ENGINEER — 12-01-15 DATE

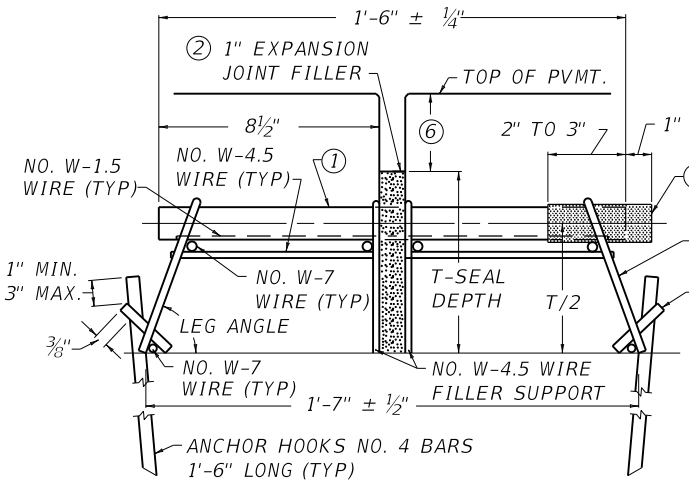

END ELEVATION

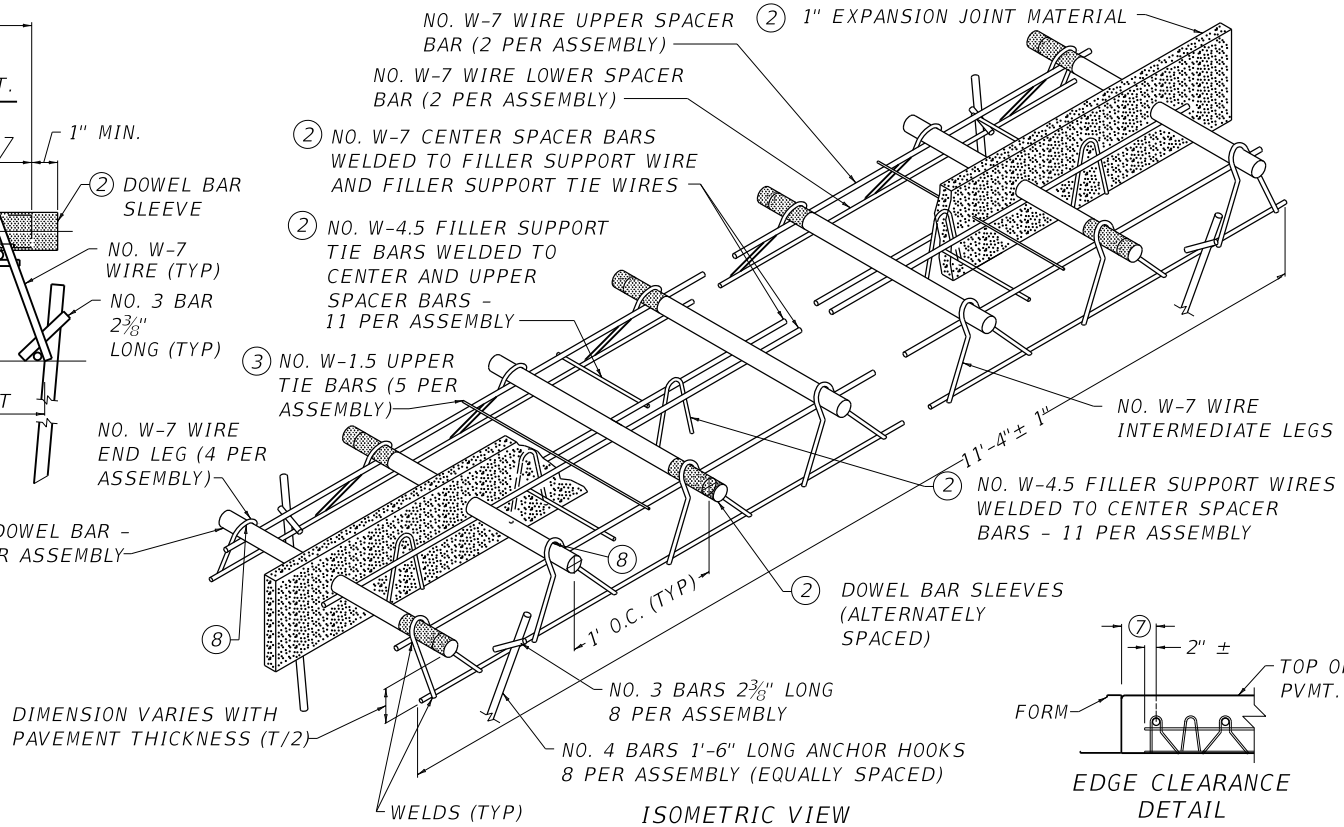

ISOMETRIC VIEW

EDGE CLEARANCE DETAIL

~ NOTES ~

(1) DOWEL BAR SIZES

PAVEMENT THICKNESS						
8"	9"	10"	11"	12"	13"	14"
BAR DIAMETER						
1¼"			1½"		1¾"	
LEG ANGLES +/- 3 DEGREES						
63	63	63	70	70	70	70

(2) EXPANSION ASSEMBLY IS ILLUSTRATED: FOR CONTRACTION ASSEMBLY OMIT CUTTING OF UPPER TIE BARS, 1" EXPANSION JOINT MATERIAL, NO. W-7 CENTER SPACER BARS, NO. W-4.5 FILLER SUPPORT WIRES, FILLER TIE BARS, AND DOWEL BAR SLEEVES.

(3) FOR EXPANSION JOINT LOAD TRANSFER ASSEMBLIES THE NO. W-1.5 UPPER TIE BARS, WELDED TO UPPER SPACER BARS, SHALL BE CUT AFTER INTIAL CONCRETE PLACEMENT.

(4) FOR END LEGS, BEND WIRE AS SHOWN BY PHANTOM LINES IN INTERMEDIATE LEG DETAIL.

(5) REFERENCE POINTS SHALL BE REQUIRED ON EACH SIDE OF THE LOAD TRANSFER ASSEMBLY, IN ORDER TO LOCATE THE INTENDED SAWED JOINT AFTER PAVING. ALL SAWING SHALL BE ACCURATELY CONTROLLED TO THE CENTERLINE OF THE LOAD TRANSFER ASSEMBLIES. LONGITUDINAL ORIENTATION OF DOWEL BARS SHALL BE SUCH THAT ALL DOWEL BARS ARE PARALLEL WITH THE CENTERLINE OF EACH PAVING LANE.

(6) SEE APPLICABLE CUR. STD. DWG. RPX-010 OR RPX-020 FOR SEAL DEPTH.

(7) 4½" MIN. AND 10½" MAX. FOR VARIABLE SLAB WIDTH. 6" FOR UNIFORM OR STD. SLAB WIDTH. LOCATION AND SPACING SEE APPLICABLE PAVEMENT STANDARD DRAWINGS.

(8) WELD EITHER NO. W-7 UPPER SPACER BAR OR LEG SUPPORT TO ALTERNATE ENDS OF DOWEL BARS AS TYPICALLY SHOWN.

9. DOWEL ENDS SHALL NOT VARY MORE THAN ¼" FROM A STRAIGHT LINE.

10. DOWELS SHALL BE PARALLEL WITH BASE, WITH A TOLERANCE OF ¼".

11. EPOXY SHALL BE CLEANED OFF TO BARE METAL BEFORE WELDING DOWEL TO WIRE.

12. "U" LEG OR "A" LEG ARE ACCEPTABLE ALTERNATES PROVIDING MATCHED LEGS ARE SUPPLIED.

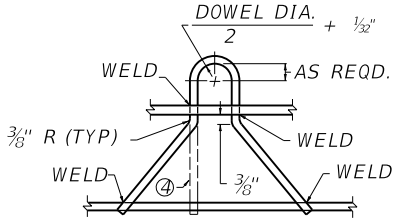

INTERMEDIATE OPTIONAL "A" LEG DETAIL

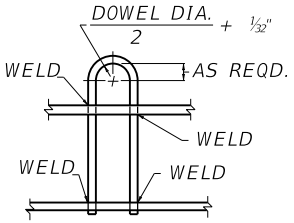

INTERMEDIATE OPTIONAL "U" LEG DETAIL

USE WITH CUR. STD. DWGS.
RPX-015 RPX-020

KENTUCKY
DEPARTMENT OF HIGHWAYS

EXPANSION AND CONTRACTION JOINT LOAD TRANSFER ASSEMBLIES

STANDARD DRAWING NO. RPS-020-14

SUBMITTED William E. Ginkel — DIRECTOR DIVISION OF DESIGN — 12-01-15 DATE

APPROVED — STATE HIGHWAY ENGINEER — 12-01-15 DATE

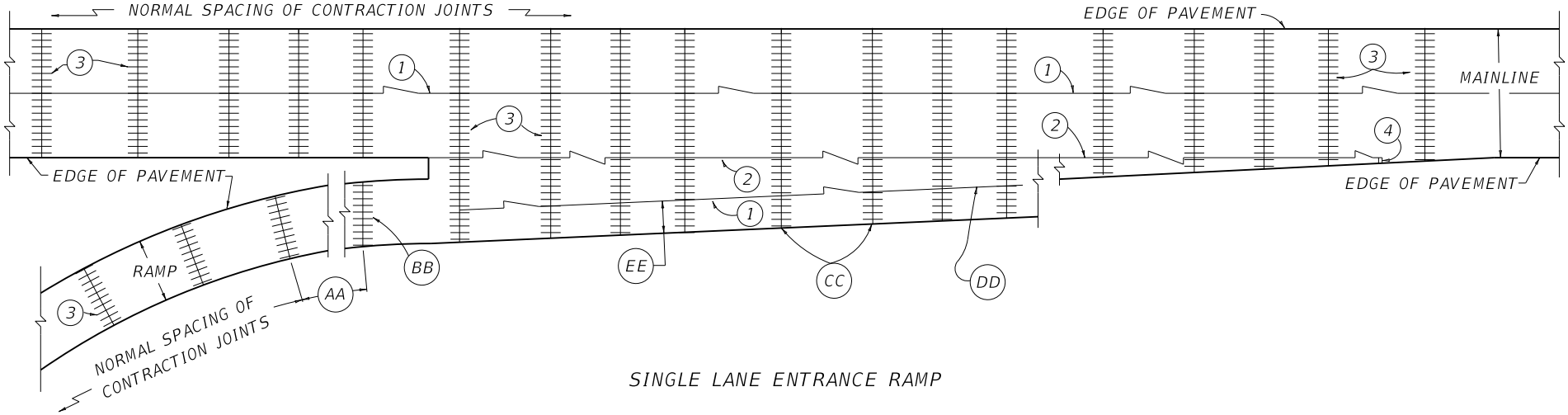

SINGLE LANE ENTRANCE RAMP

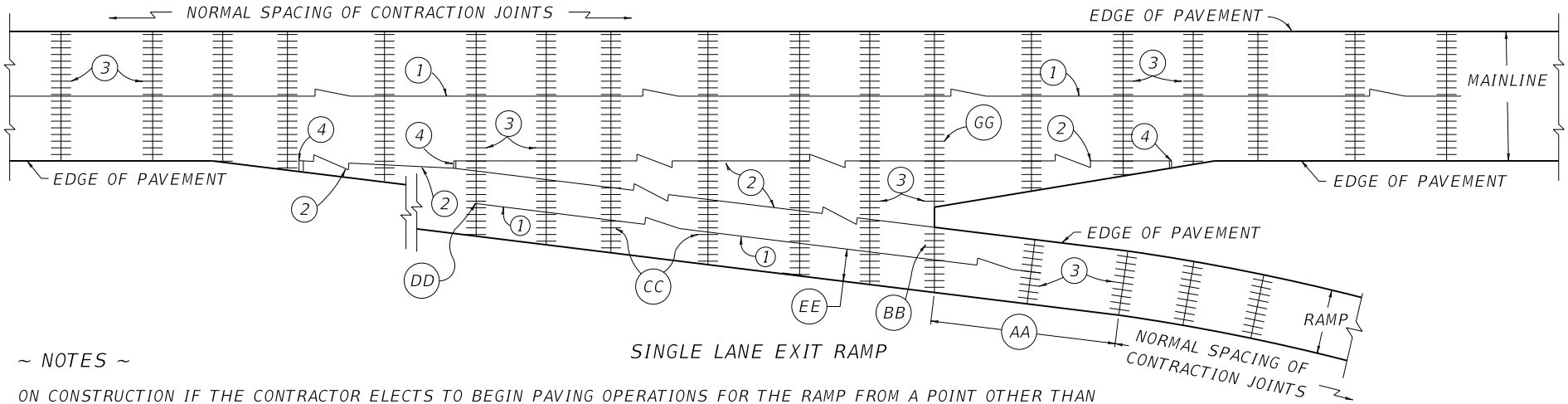

SINGLE LANE EXIT RAMP

~ NOTES ~

(AA) ON CONSTRUCTION IF THE CONTRACTOR ELECTS TO BEGIN PAVING OPERATIONS FOR THE RAMP FROM A POINT OTHER THAN THAT WHICH IS IMMEDIATELY OPPOSITE THE MAINLINE PAVEMENT THEN THIS DISTANCE SHALL BE EQUALLY DIVIDED WHEN IT BECOMES GREATER THAN 20' AND LESS THAN 40'.

(BB) THIS CONTRACTION JOINT IN THE RAMP SHALL ALWAYS BE OPPOSITE THE CONTRACTION JOINT IN THE MAINLINE PAVEMENT.

(CC) ALL CONTRACTION JOINTS IN THE RAMP IMMEDIATELY OPPOSITE THE MAINLINE PAVEMENT SHALL BE A CONTINUATION OF THE JOINTS IN THE MAINLINE PAVEMENT.

(DD) LONGITUDINAL SAWED JOINT SHALL END AT THE NEAREST CONTRACTION JOINT, WHERE THE OVERALL WIDTH OF THE RAMP IS A MAXIMUM OF 16'.

(EE) THIS DISTANCE SHALL BE EQUAL TO ½ THE NORMAL RAMP SECTION.

FF. LONGITUDINAL SAWED JOINTS AT CENTERLINE SHALL BE REQUIRED FOR ALL RAMPS AND LOOP WIDTHS GREATER THAN 16'.

(GG) THIS CONTRACTION JOINT SHALL ALWAYS BE PLACED OPPOSITE THE NOSE OF THE RAMP. THE TWO CONTRACTION JOINTS IMMEDIATELY PRECEEDING THIS JOINT, DEPENDING ON THE DIRECTION OF PAVING OPERATIONS, SHALL BE EQUALLY DIVIDED, PROVIDED THE SPACING DOES NOT EXCEED THE NORMAL SPACING. SHOULD SPACING BE GREATER THAN NORMAL, AN EXTRA JOINT SHALL BE ADDED AND THE DISTANCE EQUALLY DIVIDED. THE JOINT IMMEDIATELY FOLLOWING THE JOINT THAT IS PLACED OPPOSITE THE RAMP NOSE SHALL BE NORMALLY SPACED.

HH. SEE CUR. STD. DWG. RPS-010 FOR JOINT SYMBOLS AND DETAILS.

II. NORMAL SPACING OF CONTRACTION JOINTS INDICATED ON THIS DRAWING ARE TO BE IN ACCORDANCE WITH SPACING INDICATED ON CUR. STD. DWG. RPN-015.

USE WITH CUR. STD. DWGS.
RPN-015 RPS-010

KENTUCKY
DEPARTMENT OF HIGHWAYS

CONCRETE
PAVEMENT JOINTS
TYPES AND SPACING

STANDARD DRAWING NO. RPS-030-06

SUBMITTED William E. Ginkel — DIRECTOR DIVISION OF DESIGN — 12-01-15 DATE

APPROVED — STATE HIGHWAY ENGINEER — 12-01-15 DATE

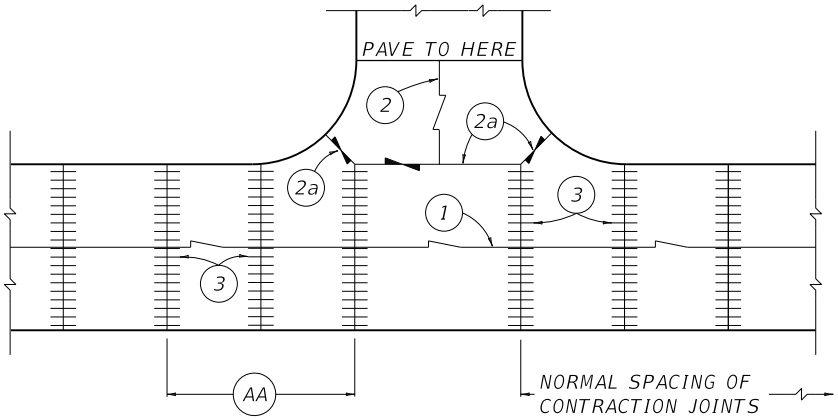

SINGLE INTERSECTIONS

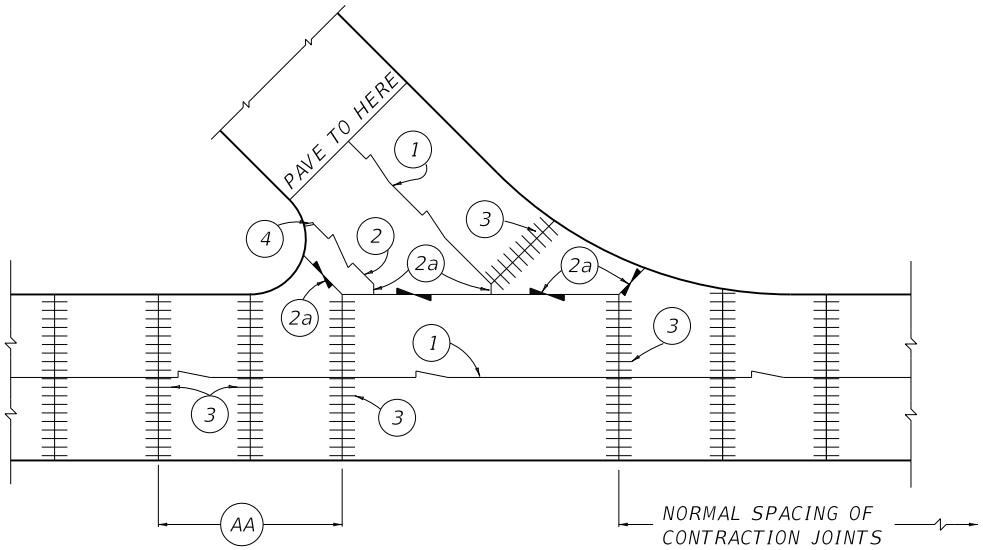

ANGLE INTERSECTION

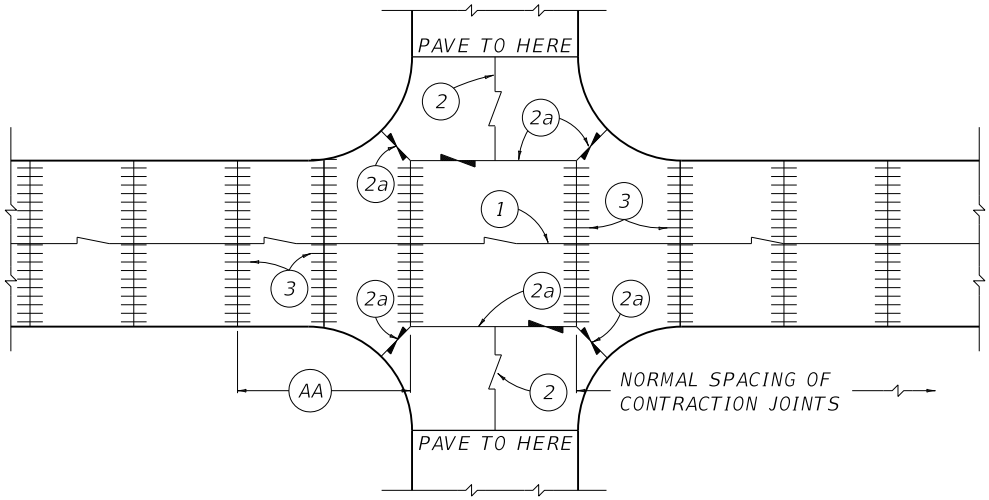

DOUBLE INTERSECTIONS

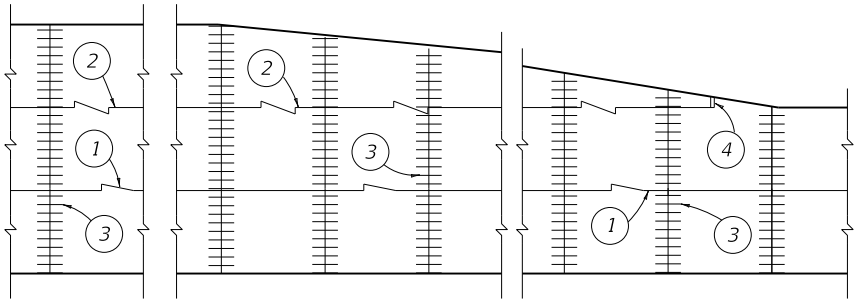

DECELERATING LANE

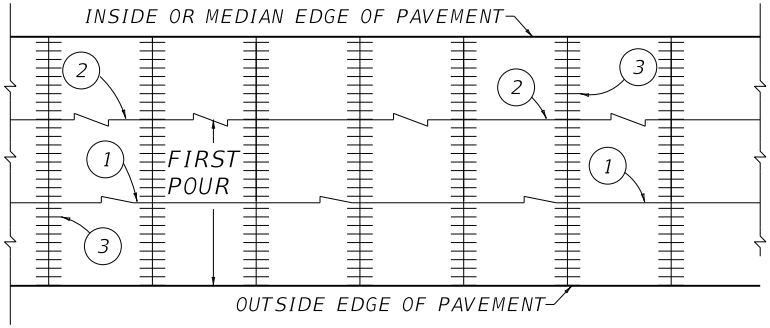

NORMAL THREE LANE PAVEMENT

~ NOTES ~

SEE CUR. STD. DWG. RPS-010 FOR JOINT SYMBOLS AND DETAILS.

DRAWINGS ON THIS SHEET ARE DETAILED ON THE PREMISE THAT PAVEMENT CONSTRUCTION WILL BE FROM LEFT TO RIGHT. IF PAVEMENT CONSTRUCTION IS IN THE OPPOSITE DIRECTION, TRANSVERSE JOINT SPACING DETAILS SHALL BE REVERSED END FOR END.

(AA) THIS DISTANCE TO BE EQUALLY DIVIDED WHEN GREATER THAN 20' AND LESS THAN 40'.

USE WITH CUR. STD. DWG. RPS-010

KENTUCKY
DEPARTMENT OF HIGHWAYS

CONCRETE
PAVEMENT JOINTS
TYPES AND SPACING

STANDARD DRAWING NO. RPS-031-06

SUBMITTED William E. Ginkel — DIRECTOR, DIVISION OF DESIGN — 12-01-15 DATE

APPROVED — STATE HIGHWAY ENGINEER — 12-01-15 DATE

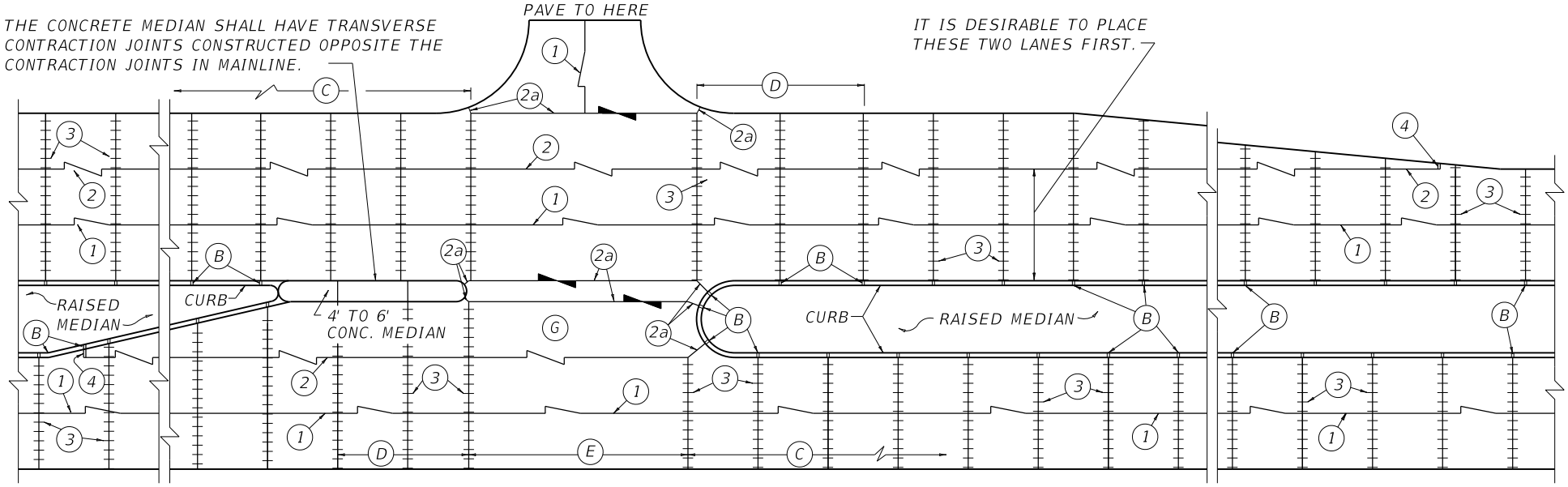

TYPICAL STORAGE LANE, CROSS-OVER SINGLE INTERSECTION, ACCELERATING AND DECELERATING LANE

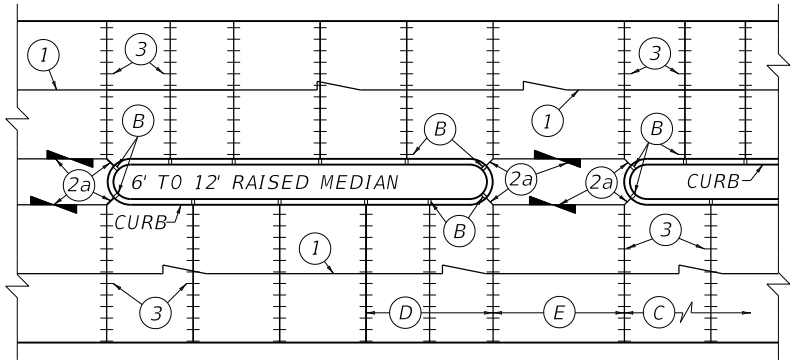

TYPICAL DIVIDED PAVEMENT WITH NARROW RAISED MEDIAN AND CROSS-OVER

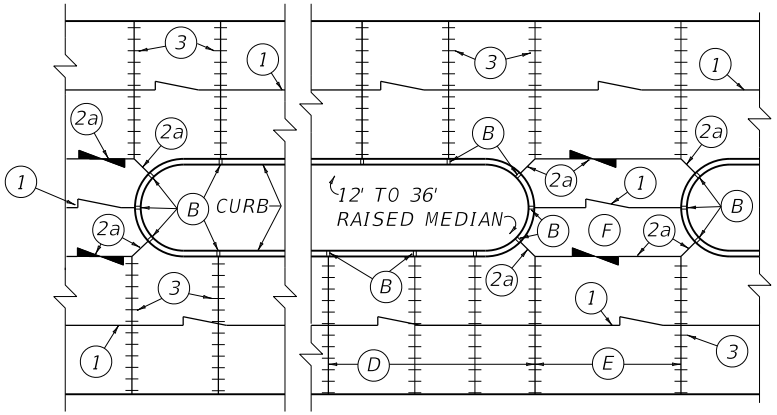

TYPICAL DIVIDED PAVEMENT WITH WIDE RAISED MEDIAN AND CROSS-OVER

~ NOTES ~

(B) ½" EXPANSION JOINT FILLER.

(C) NORMAL SPACING OF CONTRACTION JOINTS 15'-0" ON CENTER.

(D) THIS DISTANCE TO BE EQUALLY DIVIDED WHEN GREATER THAN 20' AND LESS THAN 40'.

(E) NO CONTRACTION JOINT REQUIRED WHEN DISTANCE LESS THAN NORMAL SPACING OF JOINTS. EQUALLY DIVIDED WHEN DISTANCE IS GREATER THAN 20' AND LESS THAN 40'.

(F) A LONGITUDINAL SAWED JOINT SHALL BE CONSTRUCTED IN THE CROSS-OVER WHEN THE WIDTH OF CROSS-OVER BECOMES GREATER THAN 16' AND LESS THAN 24'. WHEN WIDTH BECOMES GREATER THAN 24' A LONGITUDINAL SAWED AND LONGITUDINAL CONSTRUCTION JOINT SHALL BE CONSTRUCTED IN THE CROSS-OVER.

(G) SHOULD THE CROSSOVER LENGTH BECOME GREATER THAN NORMAL SPACING OF CONTRACTION JOINTS A TRANSVERSE CONTRACTION JOINT SHALL BE PLACED IN THE CROSS-OVER OPPOSITE THE CONTRACTION JOINTS IN THE MAINLINE.

H. SEE CUR. STD. DWG. RPS-010 FOR JOINT SYMBOLS AND DETAIL.

I. ALL INTEGRAL CURBS CONSTRUCTED WITH CONCRETE BASE OR PAVEMENT SHALL HAVE JOINTS COINCIDING WITH THE TRANSVERSE JOINTS AND OTHER JOINTS SHOWN ON THIS STANDARD DRAWING. THE JOINTS SHALL BE FILLED WITH ½" PREMOLDED EXPANSION JOINT FILLER, CUT TO THE REQUIRED SECTION.

USE WITH CUR. STD. DWG. RPS-010

KENTUCKY DEPARTMENT OF HIGHWAYS

CONCRETE PAVEMENT JOINTS TYPES AND SPACING

STANDARD DRAWING NO. RPS-032-06

SUBMITTED William E. Ellard — DIRECTOR DIVISION OF DESIGN — 12-01-15 DATE

APPROVED — STATE HIGHWAY ENGINEER — 12-01-15 DATE

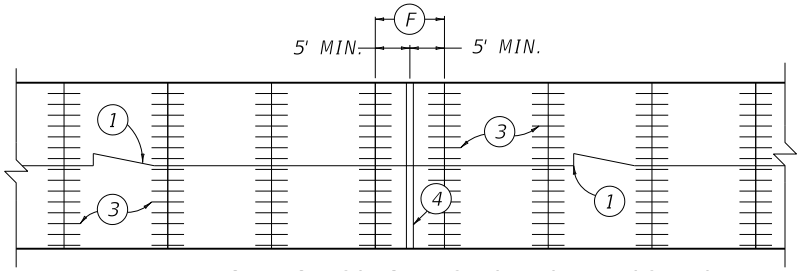

TRANSVERSE CONSTRUCTION JOINT LOCATION

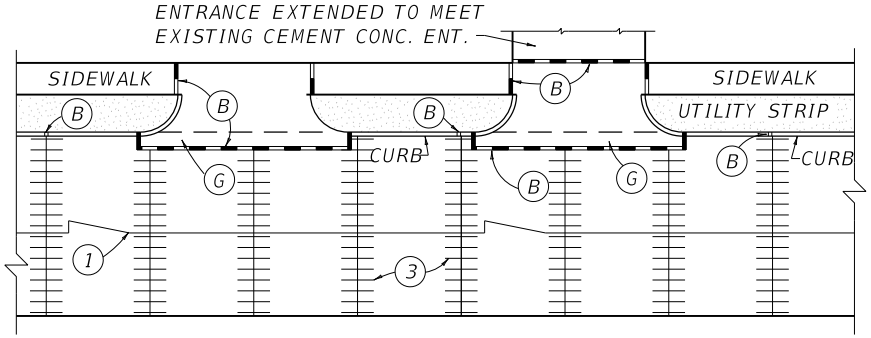

MUNICIPAL TYPE RESIDENTIAL ENTRANCES

~ NOTES ~

1. SEE CUR. STD. DWG. RPS-010 FOR JOINT SYMBOLS AND DETAILS.
2. THE INSTALLATION OF LONGITUDINAL SAWED AND CONSTRUCTION JOINTS IN TURNOUTS SHALL DEPEND ON THE WIDTH OF THE TURNOUT WITH THE RULE THAT 16' SHALL BE THE MAXIMUM POUR WITHOUT CONSTRUCTION OF A LONGITUDINAL JOINT.
3. ALL INTEGRAL CURBS CONSTRUCTED WITH CONCRETE BASE OR PAVEMENT SHALL HAVE JOINTS COINCIDING WITH THE TRANSVERSE JOINTS AND OTHER JOINTS SHOWN ON THIS STANDARD DRAWING. THE JOINTS SHALL BE FILLED WITH ½" PREMOLDED EXPANSION JOINT FILLER, CUT TO REQUIRED SECTION.

(A) THIS DISTANCE TO BE EQUALLY DIVIDED WHEN GREATER THAN 20' AND LESS THAN 40'.

(B) ½" EXPANSION JOINT FILLER.

(C) THIS DISTANCE TO BE EQUALLY DIVIDED WHEN GREATER THAN 20' AND LESS THAN 40'. NO TRANSVERSE JOINT WILL BE REQUIRED IF THE DISTANCE IS LESS THAN NORMAL SPACING OF JOINTS.

(D) NORMAL SPACING OF CONTRACTION JOINTS.

(E) EQUALLY DIVIDE AND CONSTRUCT LONGITUDINAL SAWED JOINT WHEN WIDTH OF CROSSOVER BECOMES GREATER THAN 16' AND LESS THAN 24'. WHEN WIDTH BECOMES GREATER THAN 24', A LONGITUDINAL SAWED AND LONGITUDINAL CONSTRUCTION JOINT SHALL BE CONSTRUCTED IN THE CROSSOVER.

(F) NORMAL SPACING OF TRANSVERSE CONTRACTION JOINTS.

(G) SEE CUR. STD. DWG. RPM-150 OR RPM-152, AS APPLICABLE FOR MORE DETAIL.

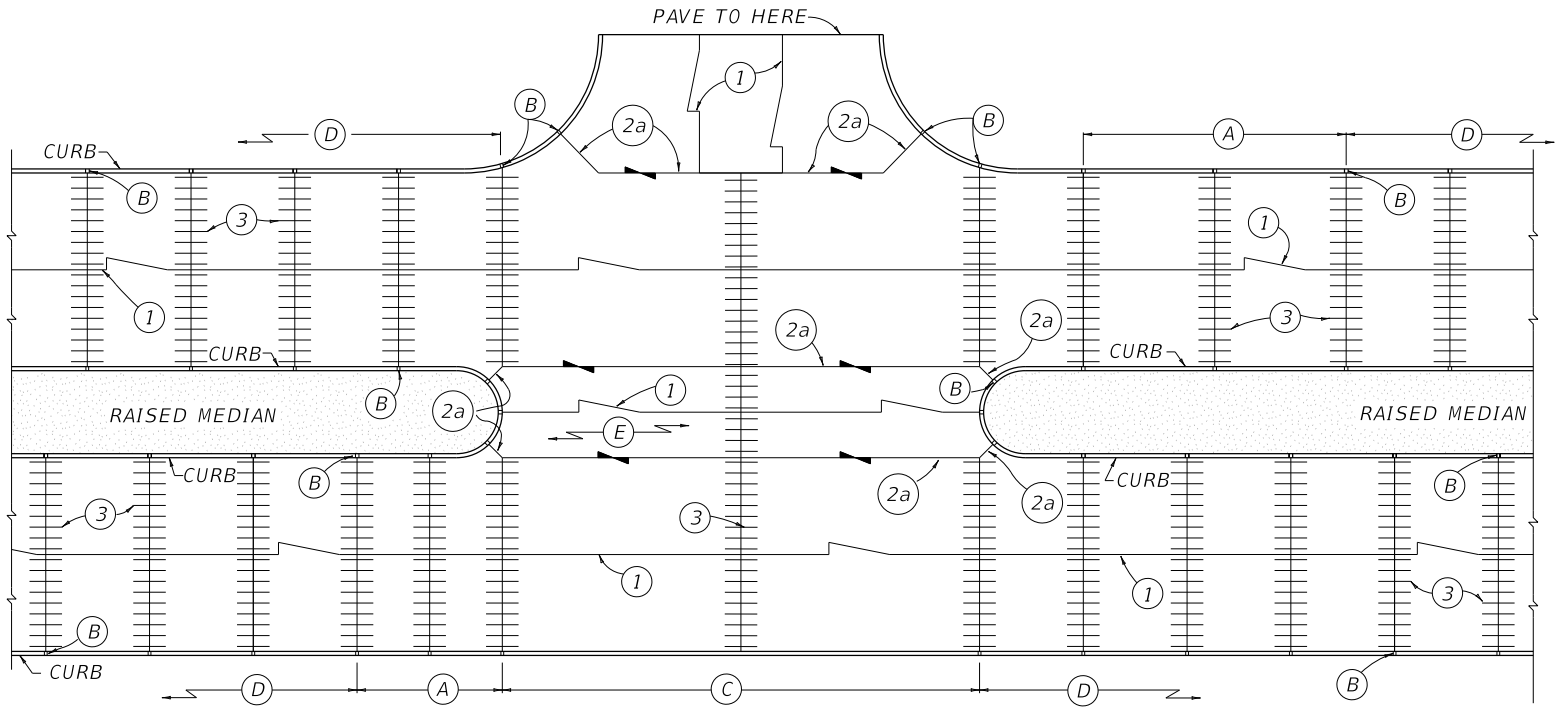

TYPICAL DIVIDED LANE WITH CROSSOVER AND CURB

USE WITH CUR. STD. DWG.
RPM-150 RPM-152 RPS-010

KENTUCKY
DEPARTMENT OF HIGHWAYS

CONCRETE
PAVEMENT JOINTS
TYPES AND SPACING

STANDARD DRAWING NO. RPS-033-07

SUBMITTED William E. Ginkel — DIRECTOR DIVISION OF DESIGN — 12-01-15 DATE

APPROVED — STATE HIGHWAY ENGINEER — 12-01-15 DATE

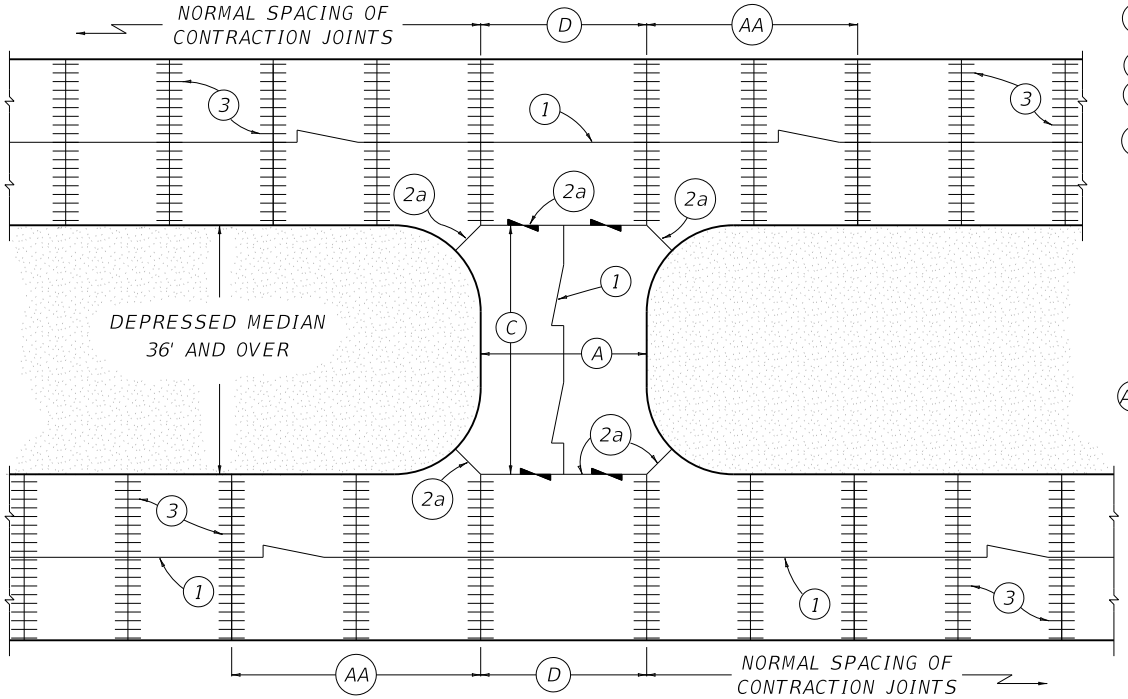

TYPICAL DIVIDED PAVEMENT WITH DEPRESSED MEDIAN AND CROSSOVER

~ NOTES ~

(A) EQUALLY DIVIDE AND CONSTRUCT LONGITUDINAL SAWED JOINT WHEN DISTANCE BECOMES GREATER THAN 16'.

(B) ½" EXPANSION JOINT FILLER.

(C) TRANSVERSE CONTRACTION JOINT REQUIRED ONLY WHEN DISTANCE IN EXCESS OF NORMAL SPACING OF CONTRACTION JOINTS.

(D) NO CONTRACTION JOINTS REQUIRED BETWEEN THESE TWO CONTRACTION JOINTS WHEN DISTANCE IS LESS THAN NORMAL SPACING OF JOINTS. EQUALLY DIVIDE WHEN DISTANCE IS GREATER THAN 20' AND LESS THAN 40'.

E. ALL INTEGRAL CURBS CONSTRUCTED WITH CONCRETE BASE OR PAVEMENT SHALL HAVE JOINTS COINCIDING WITH THE TRANSVERSE JOINTS AND OTHER JOINTS SHOWN ON THIS STANDARD DRAWING.

F. THE JOINTS SHALL BE FILLED WITH ½" PREMOLDED EXPANSION JOINT FILLER, CUT TO THE REQUIRED SECTION.

G. SEE CUR. STD. DWG. RPS-010 FOR JOINT SYMBOLS AND DETAILS.

(AA) THIS DISTANCE TO BE EQUALLY DIVIDED WHEN GREATER THAN 20' AND LESS THAN 40'.

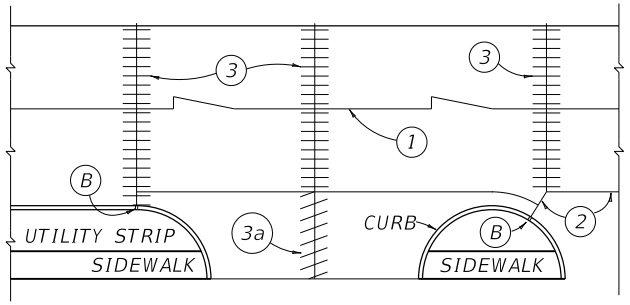

COMMERCIAL ENTRANCE

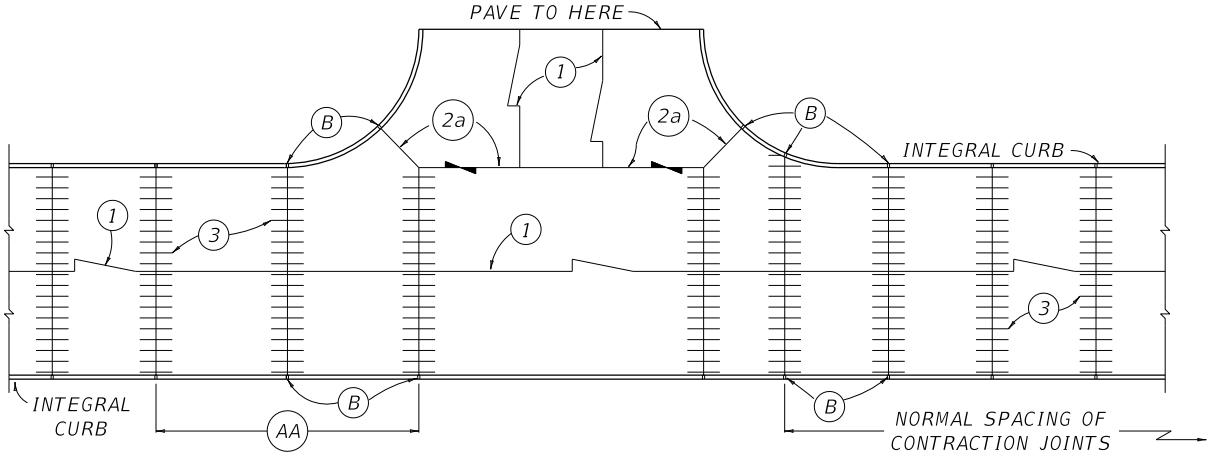

CEMENT CONCRETE BASE WITH INTEGRAL CURB

USE WITH CUR. STD. DWG. RPS-010

KENTUCKY
DEPARTMENT OF HIGHWAYS

CONCRETE
PAVEMENT JOINTS
TYPES AND SPACING

STANDARD DRAWING NO. RPS-034-07

SUBMITTED _____ DIRECTOR, DIVISION OF DESIGN — 12-01-15 DATE

APPROVED _____ STATE HIGHWAY ENGINEER — 12-01-15 DATE

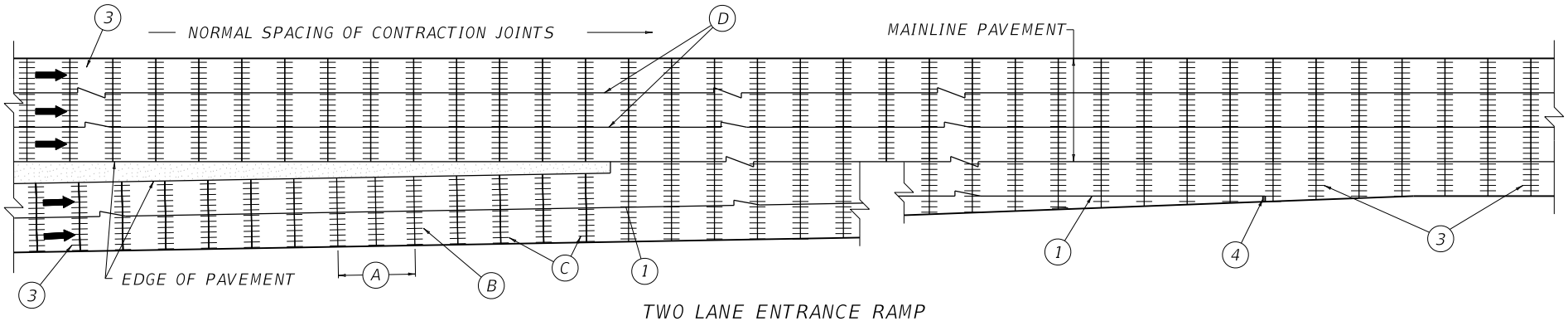

TWO LANE ENTRANCE RAMP

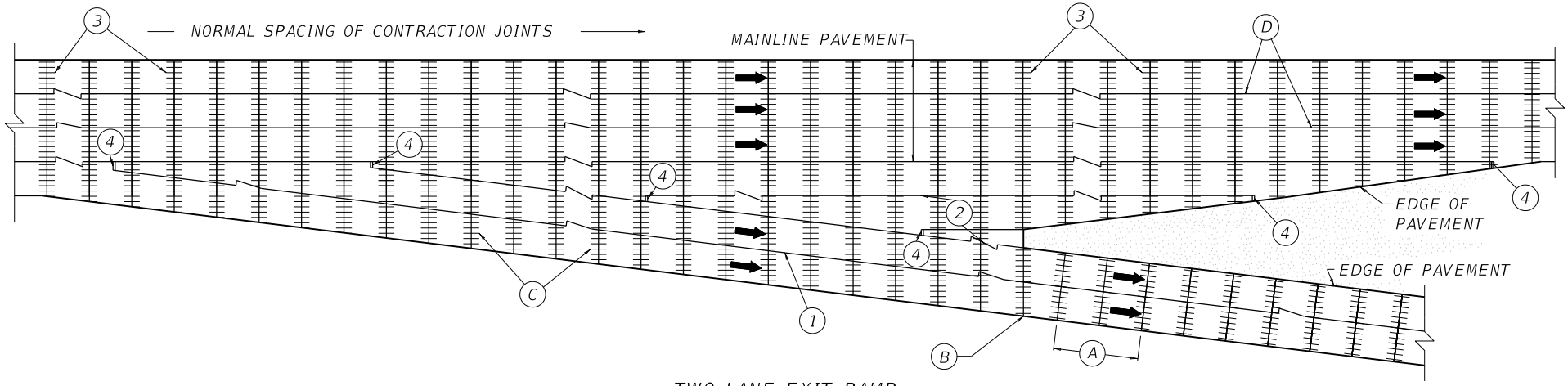

TWO LANE EXIT RAMP

~ NOTES ~

(A) ON CONSTRUCTION IF THE CONTRACTOR ELECTS TO BEGIN PAVING OPERATIONS FOR THE RAMP FROM A POINT OTHER THAN WHICH IS IMMEDIATELY OPPOSITE THE MAINLINE PAVEMENT, THIS DISTANCE SHALL BE EQUALLY DIVIDED WHEN IT BECOMES GREATER THAN 20' AND LESS THAN 40'.

(B) THIS CONTRACTION JOINT IN THE RAMP SHALL ALWAYS BE OPPOSITE THE CONTRACTION JOINT IN THE MAINLINE PAVEMENT.

(C) ALL CONTRACTION JOINTS IN THE RAMP IMMEDIATELY OPPOSITE THE MAINLINE PAVEMENT SHALL BE A CONTINUATION OF THE JOINTS IN THE MAINLINE PAVEMENT.

(D) SEE TYPICAL SECTIONS FOR SPECIFIC TYPE OF LONGITUDINAL JOINT.

E. SEE CUR. STD. DWG. RPS-010 FOR JOINT SYMBOL AND DETAIL.

F. NORMAL SPACING OF CONTRACTION JOINTS INDICATED ON THIS DRAWING ARE TO BE IN ACCORDANCE WITH SPACING INDICATED ON CUR. STD. DWG. RPN-015 .

USE WITH CUR. STD. DWGS.
RPN-015 RPS-010

KENTUCKY
DEPARTMENT OF HIGHWAYS

CONCRETE
PAVEMENT JOINTS
TYPES AND SPACING

STANDARD DRAWING NO. RPS-035-06

SUBMITTED William E. Ginkel — DIRECTOR DIVISION OF DESIGN — 12-01-15 DATE

APPROVED — STATE HIGHWAY ENGINEER — 12-01-15 DATE

~ NOTES ~

1. A LONGITUDINAL SAWED JOINT AT THE CENTER OF A RAMP SHALL BE REQUIRED ONLY WHEN THE RAMP EXCEEDS 16' IN WIDTH.
2. SEE CUR. STD. DWG. RPS-010 FOR JOINT SYMBOLS AND DETAIL.

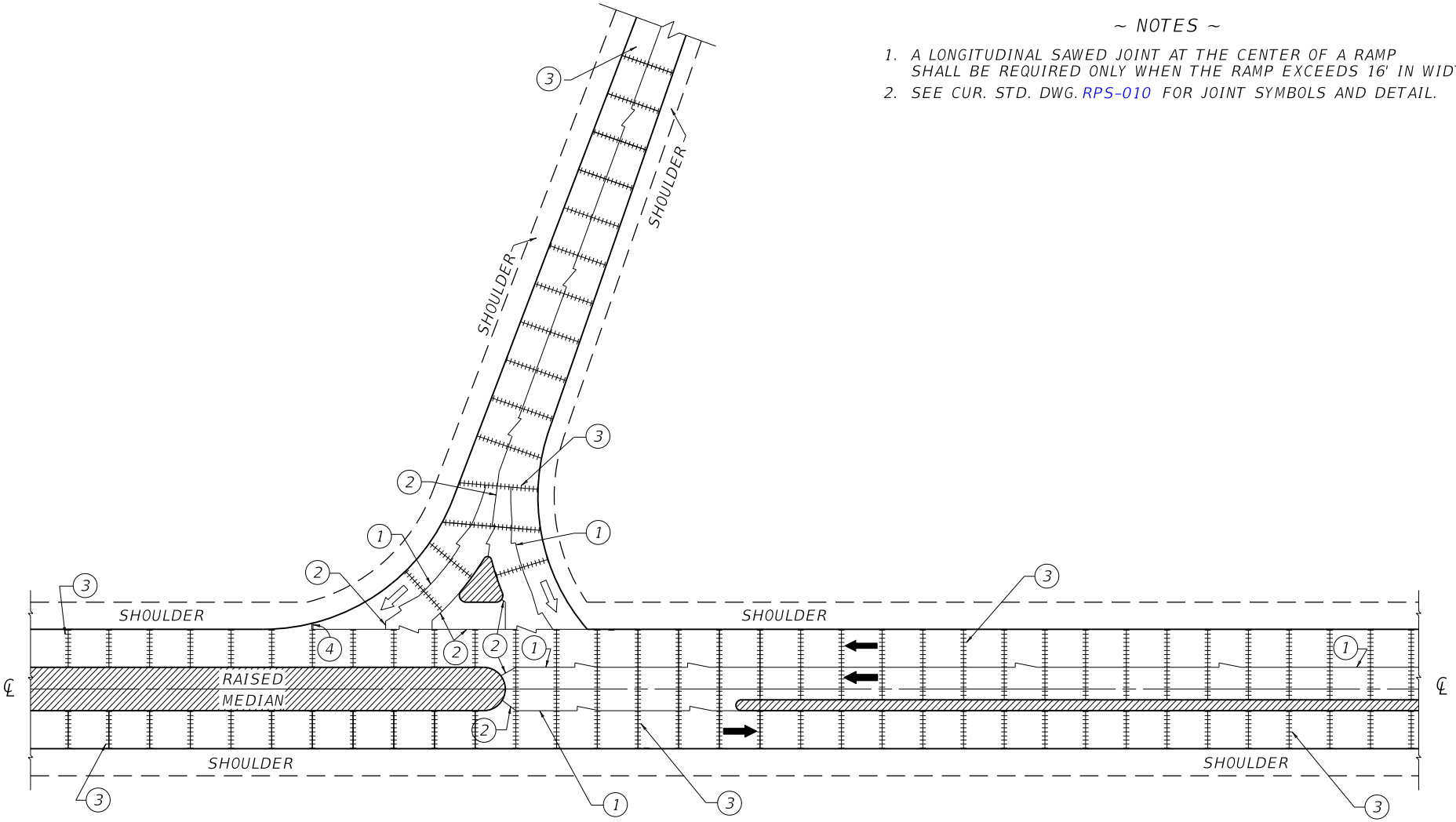

INTERCHANGE RAMP DETAIL
ENTRANCE TO MINOR TWO LANE ROAD

USE WITH CUR. STD. DWG. RPS-010

KENTUCKY
DEPARTMENT OF HIGHWAYS

CONCRETE
PAVEMENT JOINTS
TYPES AND SPACING

STANDARD DRAWING NO. RPS-036-06

SUBMITTED _____ DIRECTOR, DIVISION OF DESIGN — 12-01-15 DATE

APPROVED _____ STATE HIGHWAY ENGINEER — 12-01-15 DATE

~ NOTES ~

1. SEE CUR. STD. DWG. RPS-010 FOR JOINT SYMBOLS AND DETAIL.
2. A LONGITUDINAL SAWED JOINT AT THE CENTER OF A RAMP SHALL BE REQUIRED ONLY WHEN THE RAMP WIDTH EXCEEDS 16'.

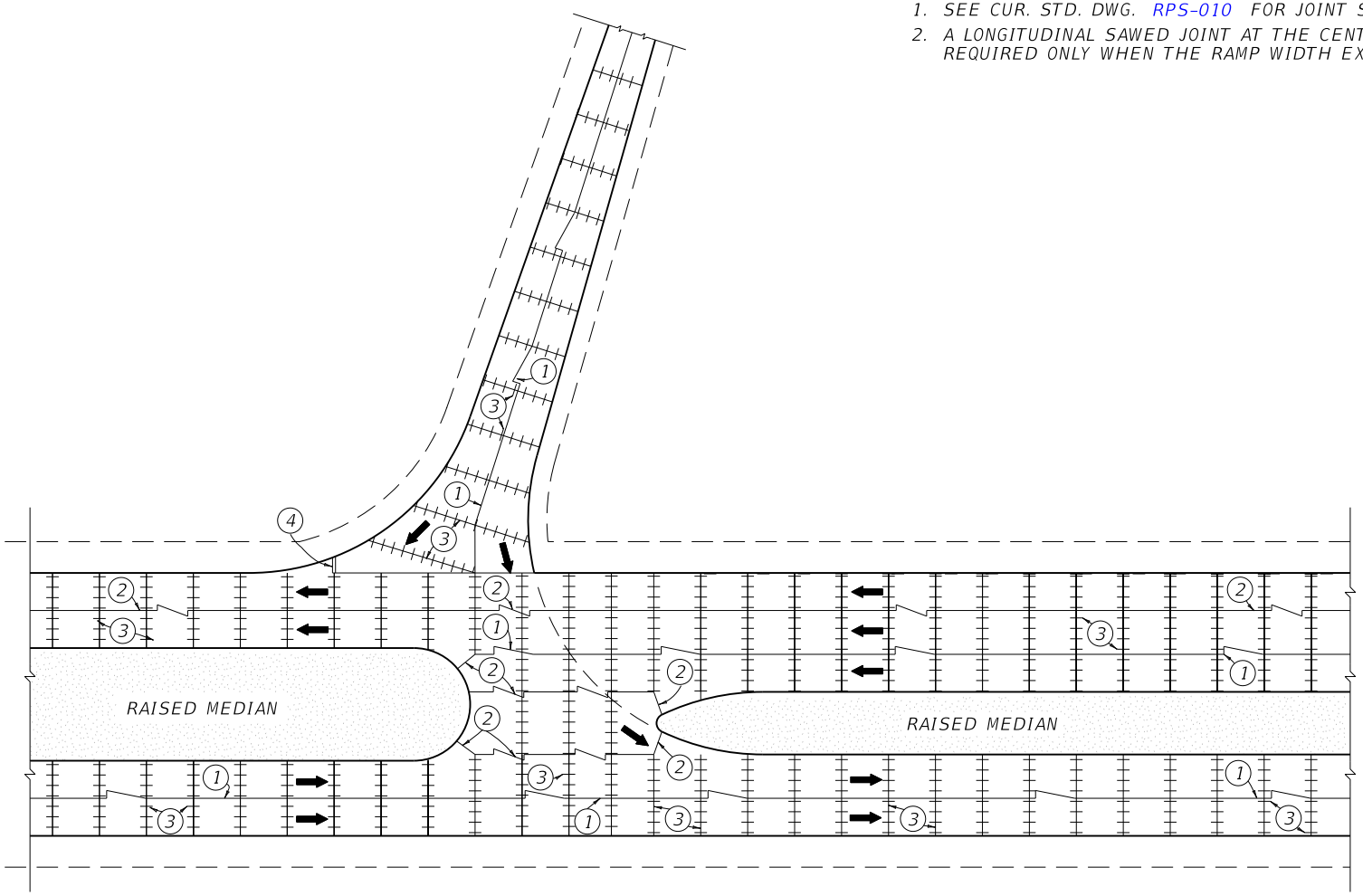

INTERCHANGE RAMP DETAIL
ENTRANCE TO MINOR FOUR LANE ROAD

USE WITH CUR. STD. DWG. RPS-010

KENTUCKY
DEPARTMENT OF HIGHWAYS

CONCRETE
PAVEMENT JOINTS
TYPES AND SPACING

STANDARD DRAWING NO. RPS-037-06

SUBMITTED _____ DIRECTOR DIVISION OF DESIGN 12-01-15 DATE

APPROVED _____ STATE HIGHWAY ENGINEER 12-01-15 DATE

~ NOTES ~

1. A LONGITUDINAL SAWED JOINT AT THE CENTER OF A RAMP SHALL BE REQUIRED ONLY WHEN THE RAMP EXCEEDS 16' IN WIDTH.
2. SEE CUR. STD. DWG. RPS-010 FOR JOINT SYMBOLS AND DETAIL.

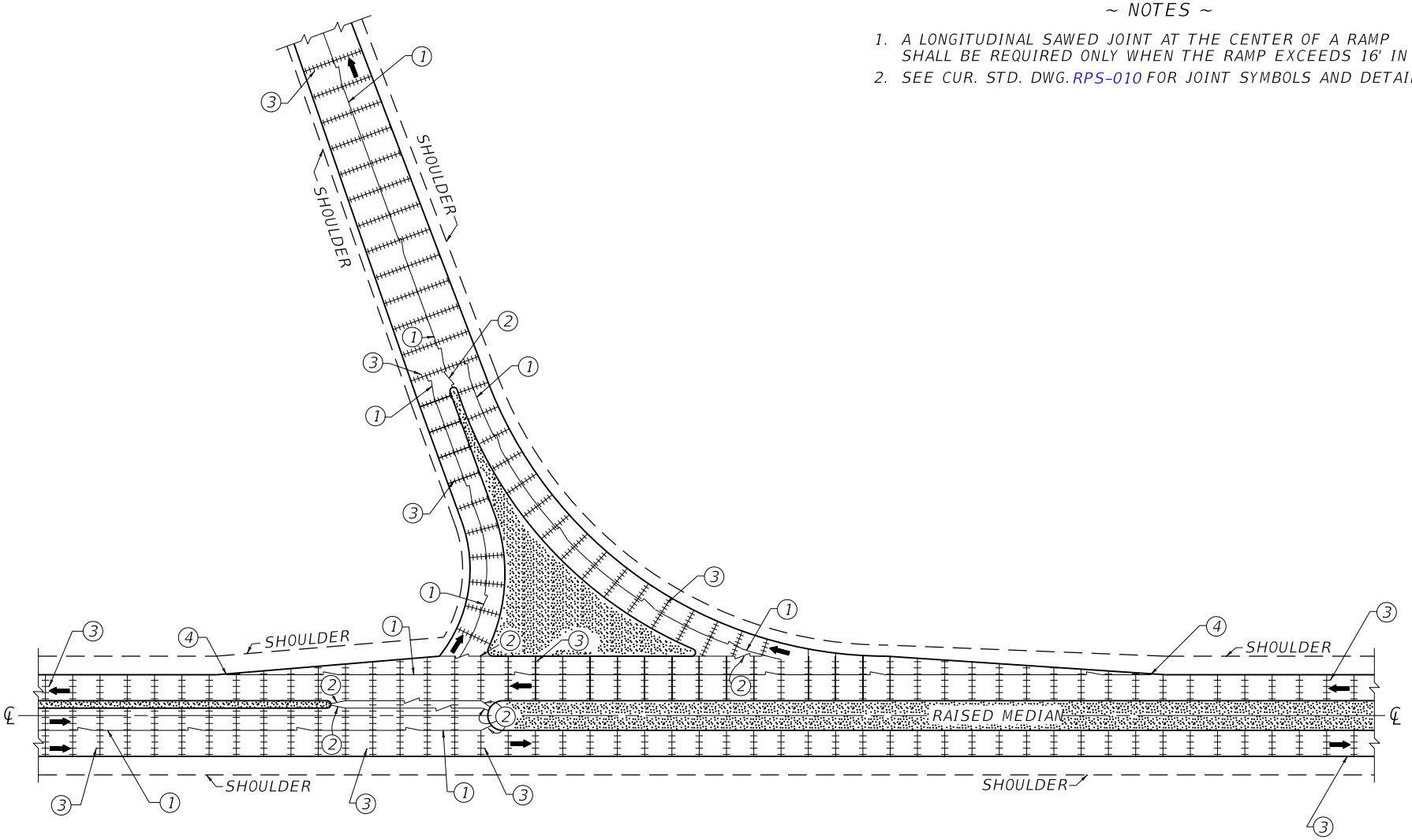

INTERCHANGE RAMP DETAIL
EXIT FROM MINOR TWO LANE ROAD

USE WITH CUR. STD. DWG. RPS-010

KENTUCKY
DEPARTMENT OF HIGHWAYS

CONCRETE
PAVEMENT JOINTS
TYPES AND SPACING

STANDARD DRAWING NO. RPS-038-06

SUBMITTED _____ DIRECTOR DIVISION OF DESIGN — 12-01-15 DATE

APPROVED _____ STATE HIGHWAY ENGINEER — 12-01-15 DATE

~ NOTES ~

1. A LONGITUDINAL SAWED JOINT AT THE CENTER OF A RAMP SHALL BE REQUIRED ONLY WHEN THE RAMP EXCEEDS 16' IN WIDTH.
2. SEE CUR. STD. DWG. RPS-010 FOR JOINT SYMBOLS AND DETAIL.

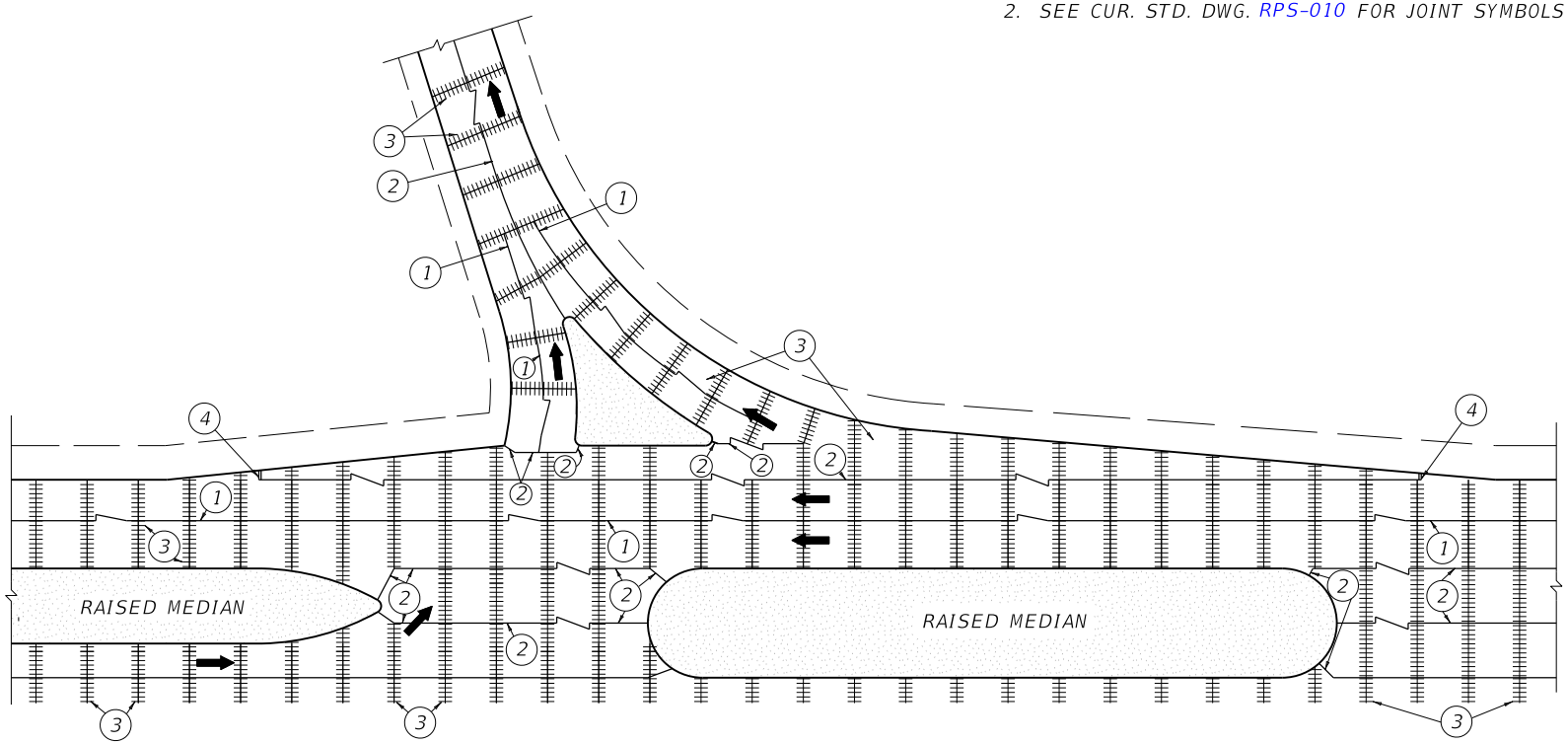

INTERCHANGE RAMP DETAIL
EXIT FROM MINOR FOUR LANE ROAD

USE WITH CUR. STD. DWG. RPS-010

KENTUCKY
DEPARTMENT OF HIGHWAYS

CONCRETE
PAVEMENT JOINTS
TYPES AND SPACING

STANDARD DRAWING NO. RPS-039-06

SUBMITTED _____ DIRECTOR, DIVISION OF DESIGN — 12-01-15 DATE

APPROVED _____ STATE HIGHWAY ENGINEER — 12-01-15 DATE

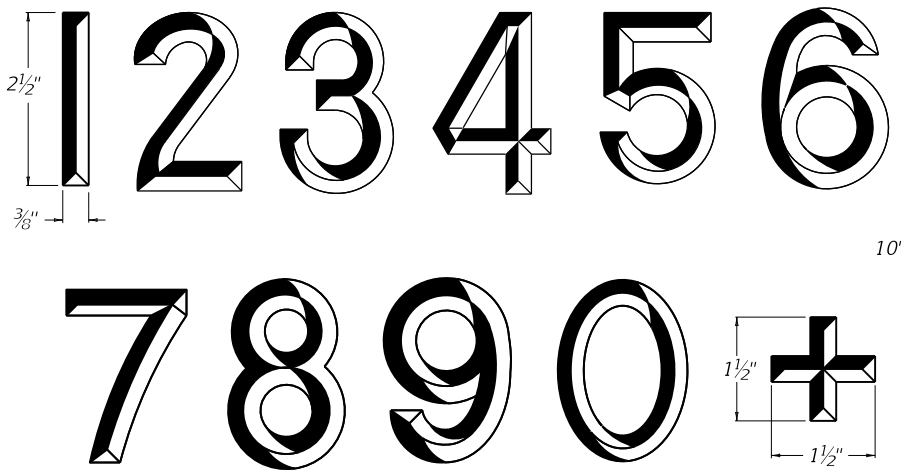

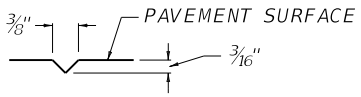

SECTION A-A

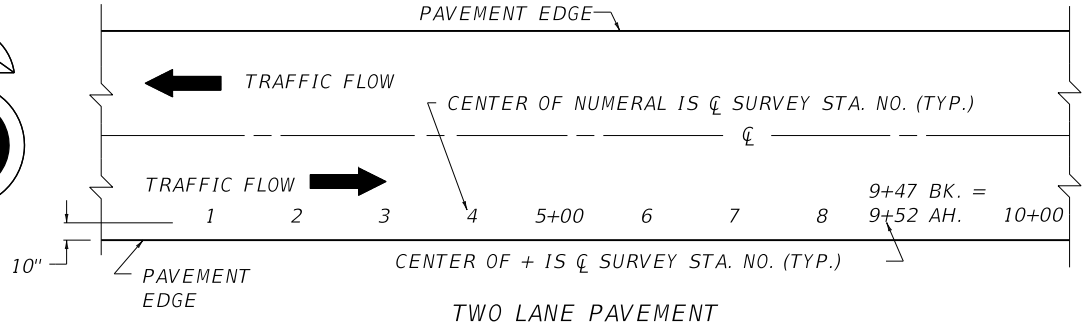

TWO LANE PAVEMENT

(WITHOUT CURB)

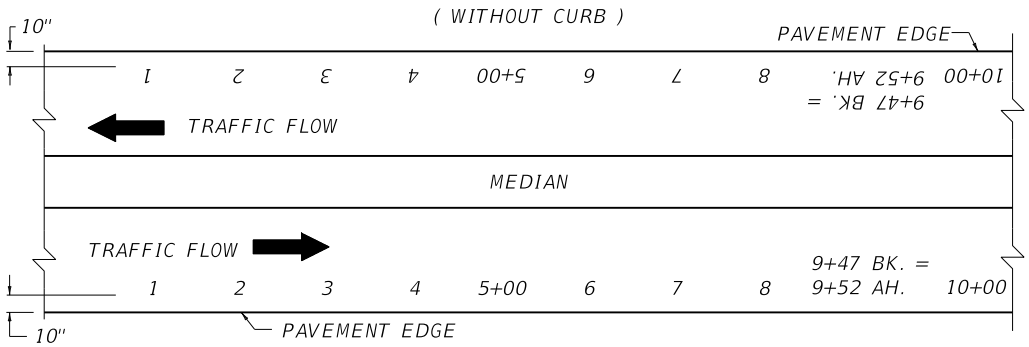

MULTI-LANE (4-6 ETC.) DIVIDED PAVEMENT

(WITHOUT CURB)

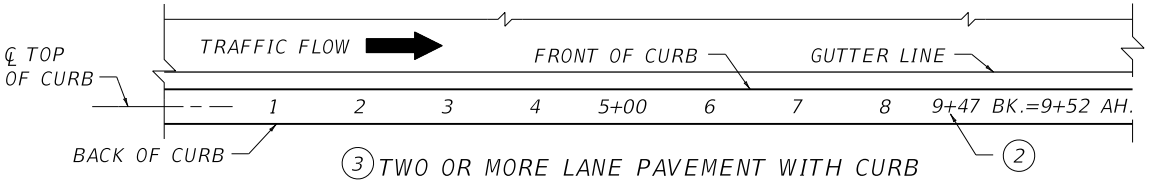

3 TWO OR MORE LANE PAVEMENT WITH CURB

~ NOTES ~

1. THE MARKING SHALL BE ACCOMPLISHED BY THE USE OF RAISED LETTERS IMPRESSED IN THE CONCRETE. THE SIZE, STYLE, PROPORTION, AND OTHER DETAILS SHALL BE AS INDICATED ON THIS SHEET.

2. EQUATIONS SHALL BE SHOWN IN FULL. WHERE AN EQUATION FALLS WITHIN 50' OF A STATION MARKING, THE STATION MARKING SHALL BE ELIMINATED AND THE EQUATION SHOWN IN A STRAIGHT LINE WITH THE + MARK OF THE BACK STATION BEING THE ℄ SURVEY STATION NUMBER.

4. THE PAVEMENT SHALL BE MARKED BEFORE THE CONCRETE HAS TAKEN ITS INITIAL SET, AND ALL DISPLACED AGGREGATE REMOVED SO THAT THE PAVEMENT SURFACE IS LEFT IN A SMOOTH CONDITION WITH LETTERS FULLY AND NEATLY FORMED.

5. THE UNIT PRICE BID PER SQ. YD. FOR CONCRETE PAVEMENT SHALL INCLUDE PAYMENT IN FULL FOR ALL LABOR, MATERIALS, TOOLS AND INCIDENTALS NECESSARY TO COMPLETE THE WORK.

TWO LANE PAVEMENTS

6. STATION NUMBERS AND EQUATIONS SHALL BE MARKED ALONG THE RIGHT EDGE OF PAVEMENT IN THE DIRECTION OF SURVEY IN SUCH A POSITION AS TO BE READ RIGHT SIDE UP FROM THE DRIVER'S SEAT OF A CAR TRAVELING ON THE SHOULDER.

MULTI-LANE (4-6 ETC.) DIVIDED PAVEMENTS

7. STATION NUMBERS AND EQUATIONS SHALL BE MARKED ALONG THE OUTSIDE EDGES OF BOTH LANES IN SUCH A POSITION AS TO BE READ RIGHT SIDE UP FROM THE DRIVER'S SEAT OF A CAR TRAVELING ON THE SHOULDER OF EACH TWO LANE COMPONENT.

RAMPS

8. STATION NUMBERS AND EQUATIONS SHALL BE MARKED ON THE RIGHT SIDE OF THE PAVEMENT EDGE IN THE DIRECTION OF THE FLOW OF TRAFFIC SUCH THAT THEY CAN BE READ RIGHT SIDE UP FROM THE DRIVER'S SEAT OF A CAR TRAVELING ON THE RIGHT SHOULDER.

3 ON TWO LANE ROADWAYS WHEN CURB IS TO BE CONSTRUCTED ON THE OUTSIDE EDGE OF THE TRAVELING LANES, THE STATION MARKING SHALL BE PLACED IN THE CURB ON THE RIGHT SIDE ONLY, IN THE DIRECTION OF SURVEY.

ON DIVIDED HIGHWAYS, WHEN CURBS ARE TO BE PLACED ON OUTSIDE EDGE OF EACH LANE OF TRAFFIC, THE STATION MARKINGS SHALL BE PLACED ON EACH OUTSIDE CURB. SEE DETAIL FOR PROPER LOCATION.

KENTUCKY
DEPARTMENT OF HIGHWAYS

STATION MARKINGS
CONCRETE PAVEMENT

STANDARD DRAWING NO. RPX-001-04

SUBMITTED William E. Ellard — DIRECTOR, DIVISION OF DESIGN — 12-01-15 DATE

APPROVED — STATE HIGHWAY ENGINEER — 12-01-15 DATE

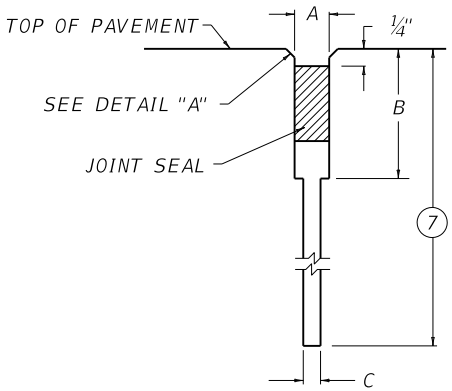

JOINT SHAPE FOR
TRANSVERSE SAWED CONTRACTION JOINT

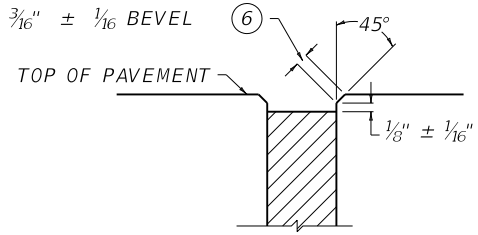

DETAIL "A"

JOINT SPACING	DIMENSIONS			SEAL WIDTH UNCOMPRESSED
	A	B	C	
15'-0"	3/8"	2"	1/8" TO 3/8"	11/16"
25'-0"	1/2"	2"	1/8" TO 1/2"	1"
50'-0"	5/8"	2"	1/8" TO 5/8"	1 1/4"

~ NOTES ~

1. PAYMENT FOR ALL WORK SHALL BE INCIDENTAL TO THE UNIT PRICE BID PER SQ. YD. OF PAVEMENT.
2. TOLERANCES ON ALL JOINT WIDTH DIMENSIONS PLUS OR MINUS 1/2".
3. INSTALLATION OF PREFORMED POLYCHLOROPRENE SEALS (NEOPRENE) SHALL BE IN ACCORDANCE WITH SECTION 501.03.18 OF THE CURRENT STANDARD SPECIFICATIONS FOR ROAD AND BRIDGE CONSTRUCTION, CURRENT EDITION, EXCEPT TRANSVERSE EXPANSION JOINTS SHALL RECEIVE PREFORMED SEALS IN ACCORDANCE WITH THIS DRAWING.

(4) THE REMAINING JOINT SHALL BE IN ACCORDANCE WITH CUR. STD. DWGS. RPS-010 AND RPS-020

(5) ALL LONGITUDINAL AND TRANSVERSE SAWED CONSTRUCTION JOINTS SHALL BE CUT TO THE DEPTH SHOWN AND SHALL BE SEALED WITH HOT POURED ELASTIC JOINT SEAL.

(6) THESE EDGES SHALL BE BEVELED USING A CUTTING OR GRINDING DEVICE.

(7) JOINT DEPTH IS T/3 OR 4", WHICHEVER IS LESS.

T = PAVEMENT THICKNESS

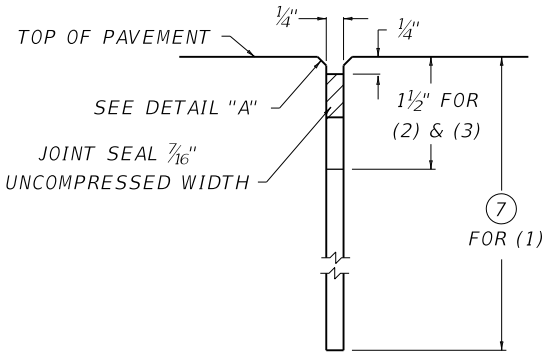

JOINT SHAPE FOR

(1) LONGITUDINAL SAWED JOINT (TIED)

(2) LONGITUDINAL SAWED CONSTRUCTION JOINT (TIED) (5)

(3) TRANSVERSE SAWED CONSTRUCTION JOINT (TIED) (5)

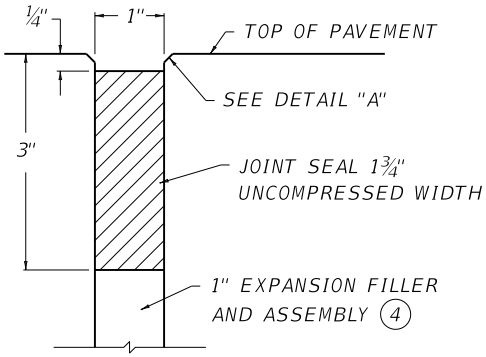

JOINT SHAPE FOR
TRANSVERSE EXPANSION JOINT

USE WITH CUR. STD. DWGS.
RPS-010 RPS-020

KENTUCKY
DEPARTMENT OF HIGHWAYS

PREFORMED COMPRESSION
JOINT SEAL FOR
CONCRETE PAVEMENT

STANDARD DRAWING NO. RPX-010-05

SUBMITTED William S. Ratliff DIRECTOR, DIVISION OF DESIGN 12-01-15 DATE

APPROVED STATE HIGHWAY ENGINEER 12-01-15 DATE

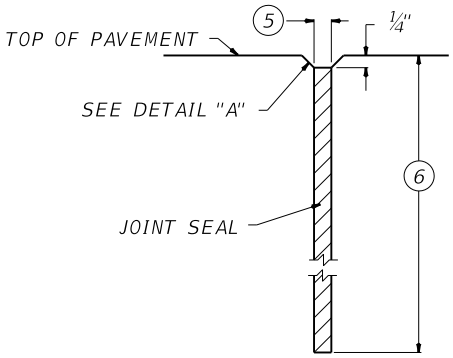

JOINT SHAPE FOR
TRANSVERSE SAWED CONTRACTION JOINT

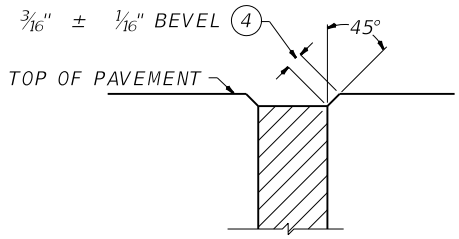

DETAIL "A"

~ NOTES ~

1. PAYMENT FOR ALL WORK SHALL BE INCIDENTAL TO THE UNIT PRICE BID PER SQ. YD. OF PAVEMENT.
2. THE REMAINING JOINT SHALL BE IN ACCORDANCE WITH CUR. STD. DWGS. RPS-010 AND RPS-020
3. ALL LONGITUDINAL AND TRANSVERSE SAWED JOINTS SHALL BE CUT TO THE DEPTH SHOWN AND SHALL BE SEALED WITH HOT POURED ELASTIC JOINT SEAL.
4. THESE EDGES SHALL BE BEVELED USING A CUTTING OR GRINDING DEVICE .
5. ⅛" MIN. - ¼" MAX.
6. JOINT DEPTH IS T/3 OR 4", WHICHEVER IS LESS.

T = PAVEMENT THICKNESS

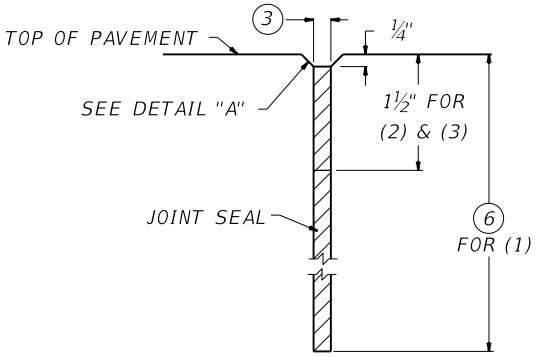

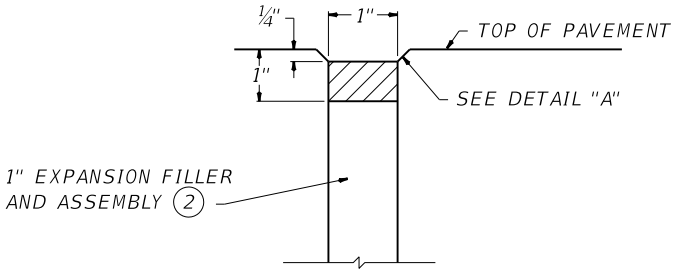

JOINT SHAPE FOR
TRANSVERSE EXPANSION JOINT

(1) LONGITUDINAL SAWED JOINT (TIED)

(2) LONGITUDINAL SAWED CONSTRUCTION JOINT (TIED)

(3) TRANSVERSE SAWED CONSTRUCTION JOINT (TIED)

USE WITH CUR. STD. DWGS.
RPS-010 RPS-020

KENTUCKY
DEPARTMENT OF HIGHWAYS

HOT-POURED ELASTIC
JOINT SEALS FOR
CONCRETE PAVEMENT

STANDARD DRAWING NO. RPX-015-04

SUBMITTED William E. Ed 12-01-15
DIRECTOR, DIVISION OF DESIGN DATE

APPROVED 12-01-15
STATE HIGHWAY ENGINEER DATE

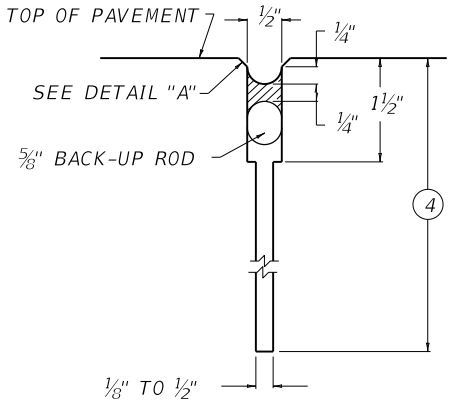

JOINT SHAPE FOR
TRANSVERSE SAWED CONTRACTION JOINT
(WHEN SLAB LENGTH DOES NOT EXCEED 25'-0")

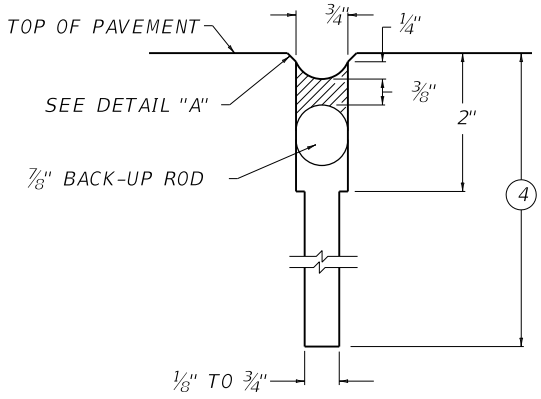

JOINT SHAPE FOR
TRANSVERSE SAWED CONTRACTION JOINT
(WHEN SLAB LENGTH EXCEEDS 25'-0")

~ NOTES ~

1. PAYMENT FOR WORK SHALL BE INCIDENTAL TO THE UNIT PRICE PER SQ. YD. OF PAVEMENT.

(2) THE REMAINING JOINT SHALL BE IN ACCORDANCE WITH CUR. STD. DWGS. RPS-020 AND RPS-010

(3) THESE EDGES SHALL BE BEVELED USING A CUTTING OR GRINDING DEVICE.

JOINT TOLERANCES : SAW CUT DEPTH -0" TO + ½"

SAW CUT WIDTH -0" TO + 1/16"

SEAL BEAD THICKNESS -0" TO + ⅛"

(4) JOINT DEPTH IS T/3 OR 4", WHICHEVER IS LESS.

T = PAVEMENT THICKNESS.

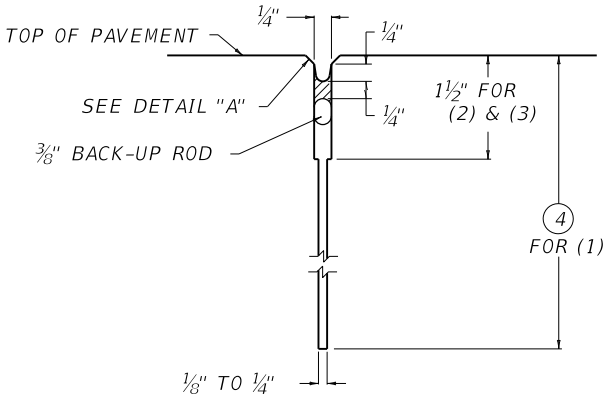

JOINT SHAPE FOR

(1) LONGITUDINAL SAWED JOINT (TIED)

(2) LONGITUDINAL SAWED CONSTRUCTION JOINT (TIED)

(3) TRANSVERSE SAWED CONSTRUCTION JOINT (TIED)

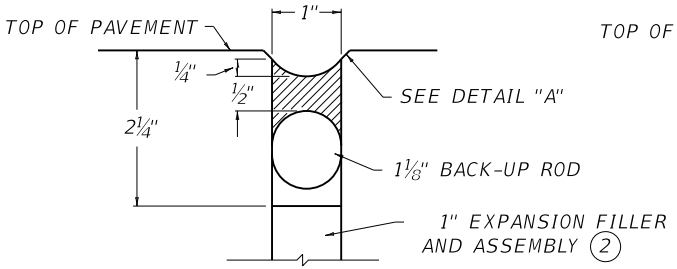

JOINT SHAPE FOR
TRANSVERSE EXPANSION JOINT

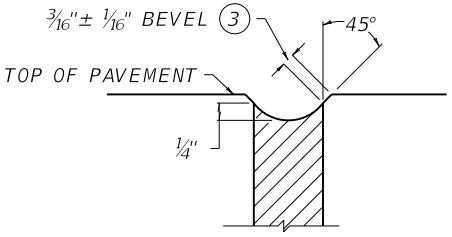

DETAIL "A"

USE WITH CUR. STD. DWGS.
RPS-010 RPS-020

KENTUCKY
DEPARTMENT OF HIGHWAYS

SILICONE RUBBER SEALS
FOR
CONCRETE PAVEMENT

STANDARD DRAWING NO. RPX-020-06

SUBMITTED William S. Sahd — DIRECTOR DIVISION OF DESIGN — 12-01-15 DATE

APPROVED — STATE HIGHWAY ENGINEER — 12-01-15 DATE

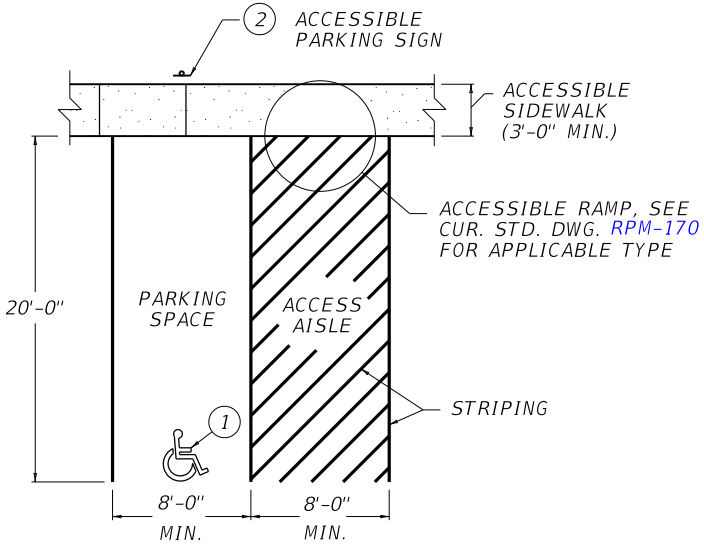

PLAN VIEW OF ONE ACCESSIBLE PARKING SPACE

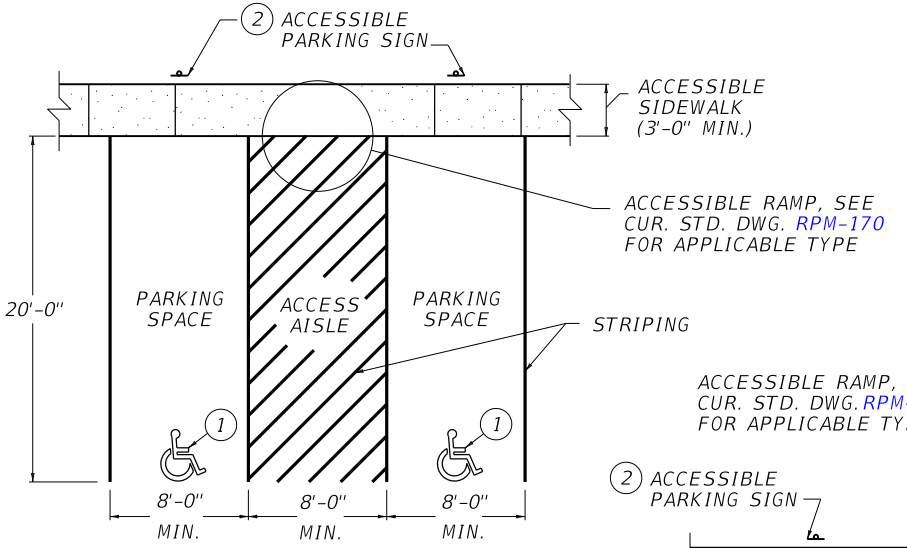

PLAN VIEW OF TWO ACCESSIBLE PARKING SPACES

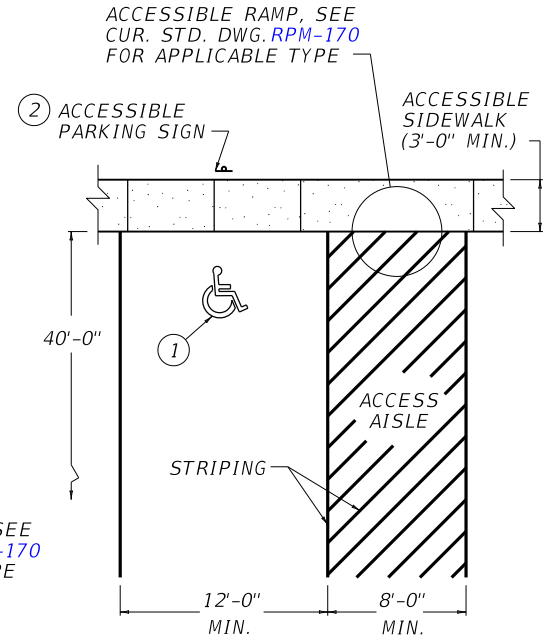

PLAN VIEW OF BUS ACCESSIBLE PARKING SPACE

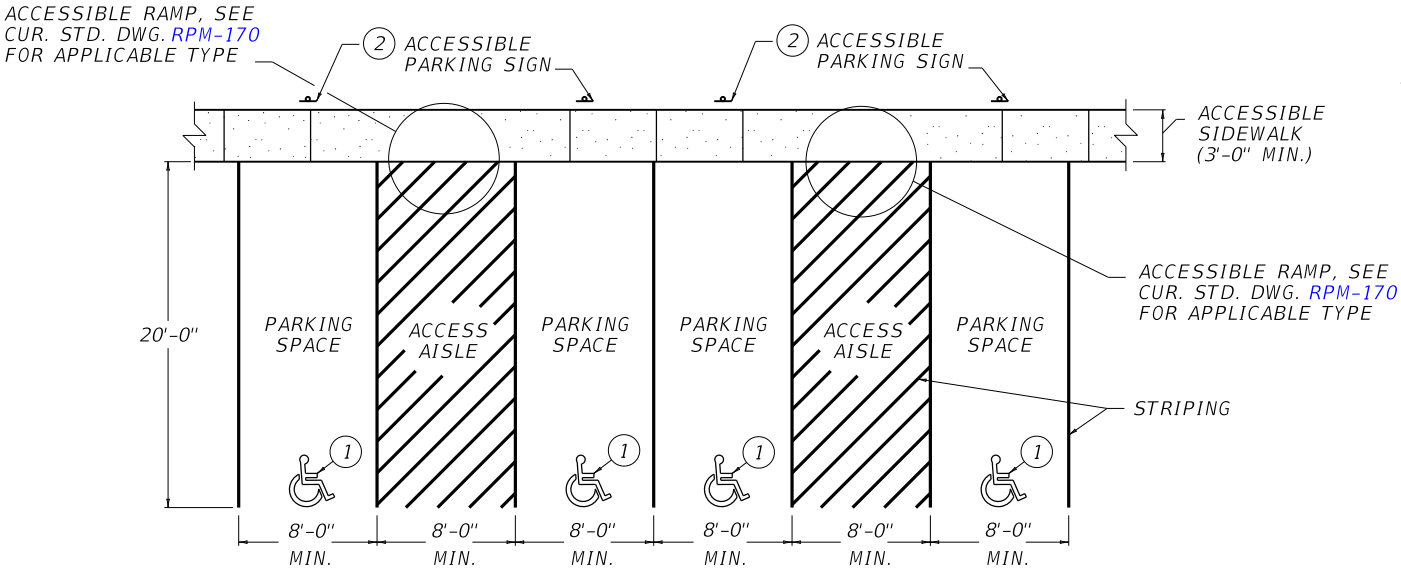

PLAN VIEW OF MULTIPLE ACCESSIBLE PARKING SPACES

USE WITH CUR. STD. DWG. RPM-170

~ NOTES ~

1. INTERNATIONAL SYMBOL OF ACCESSIBILITY.
2. INTERNATIONAL SYMBOL OF ACCESSIBILITY WITH "VAN ACCESSIBLE" SIGN MOUNTED BELOW.
3. SEE ELSEWHERE IN THE PLANS FOR APPLICABLE ACCESSIBLE SIGNING DETAILS.
4. SEE ELSEWHERE IN THE PLANS FOR STRIPING DETAILS.

KENTUCKY DEPARTMENT OF HIGHWAYS

ACCESSIBLE PARKING SPACE DETAILS

STANDARD DRAWING NO. RPX-100-03

SUBMITTED William S. Sahd DIRECTOR DIVISION OF DESIGN 12-01-15 DATE

APPROVED STATE HIGHWAY ENGINEER 12-01-15 DATE

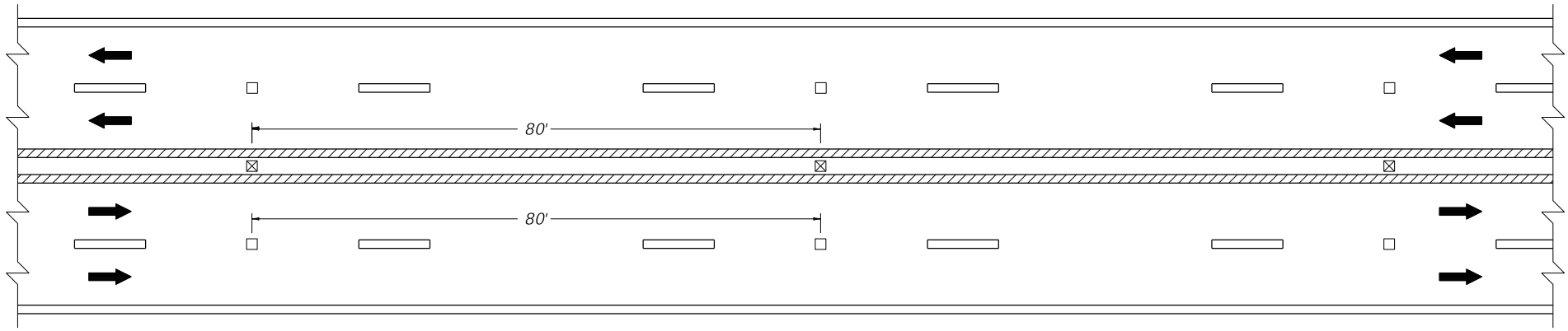

ARRANGEMENT "A" (UNDIVIDED HIGHWAY)

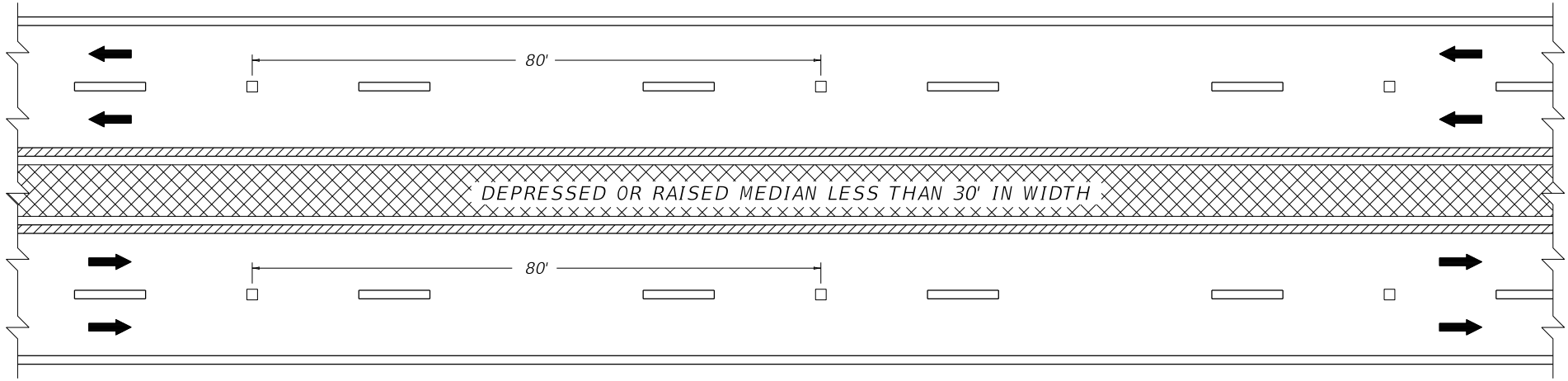

ARRANGEMENT "B" (DIVIDED HIGHWAY WITH DEPRESSED OR RAISED MEDIAN LESS THAN 30' IN WIDTH)

~ NOTES ~

1. MARKERS INSTALLED WITH DOUBLE YELLOW CENTERLINES SHOULD BE PLACED BETWEEN THE TWO LINES.
2. MARKERS INSTALLED ALONG LANE LINES SHOULD BE PLACED BETWEEN AND IN LINE WITH THE SKIPS.
3. MARKERS SHALL NOT BE INSTALLED ON TOP OF THE PAVEMENT JOINT. OFFSET MARKERS A MINIMUM OF 2" FROM THE PAVEMENT JOINT. ENSURE THAT THE FINISHED LINE OF MARKERS IS STRAIGHT WITH MINIMAL LATERAL DEVIATION. MARKERS MAY BE ELIMINATED OR PLACEMENT ADJUSTED AT THE DISCRETION OF THE ENGINEER.
4. MARKERS SHALL BE INSTALLED AT 40' SPACING ALONG SOLID WHITE AUXILIARY LANES. MARKER COLOR SHALL MATCH THE MARKERS INSTALLED ALONG THE WHITE LANE LINES.

BID ITEMS AND UNIT TO BID:

PAVEMENT MARKER TYPE V (B-W/R, B-Y/R, BY, MW, MY)	EACH
INLAID PAVEMENT MARKER	EACH

LEGEND

- BI-DIRECTIONAL (YELLOW)
- MONO-DIRECTIONAL (WHITE)
- MARKINGS (YELLOW)
- MARKINGS (WHITE)
- DEPRESSED OR RAISED MEDIAN

DRAWING NOT TO SCALE

KENTUCKY
DEPARTMENT OF HIGHWAYS

PAVEMENT MARKER
ARRANGEMENTS
MULTI-LANE ROADWAYS

STANDARD DRAWING NO. TPM-100-03

SUBMITTED R. Allen Wolfe 02-26-20
DIRECTOR DIV. OF TRAFFIC OPERATIONS DATE

APPROVED 02-26-20
STATE HIGHWAY ENGINEER DATE

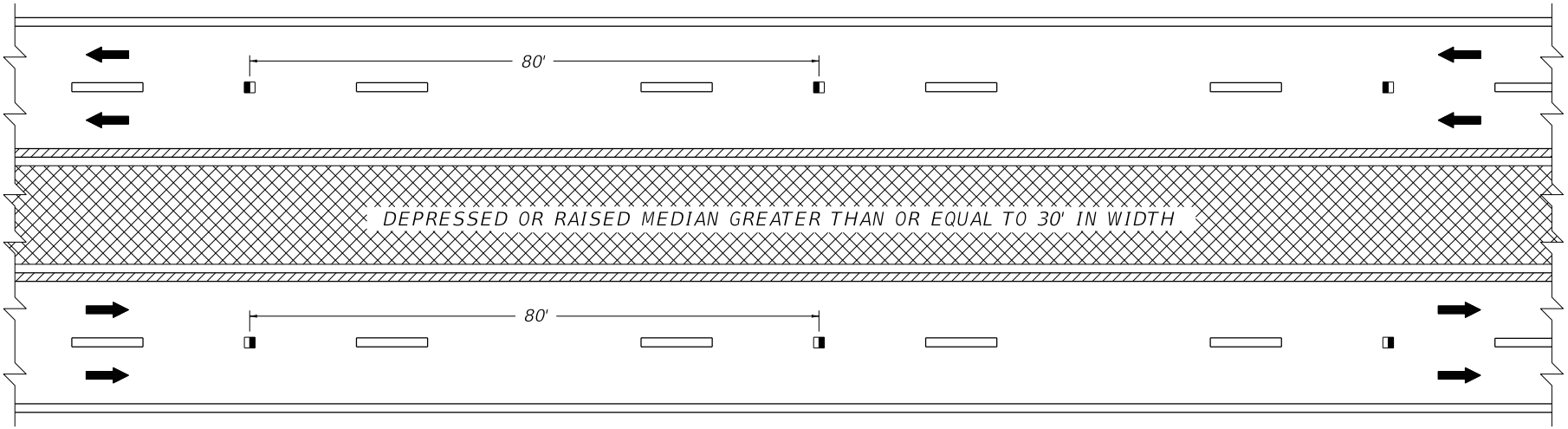

ARRANGEMENT "C" (DIVIDED HIGHWAY WITH DEPRESSED OR RAISED MEDIAN GREATER THAN OR EQUAL TO 30' IN WIDTH)

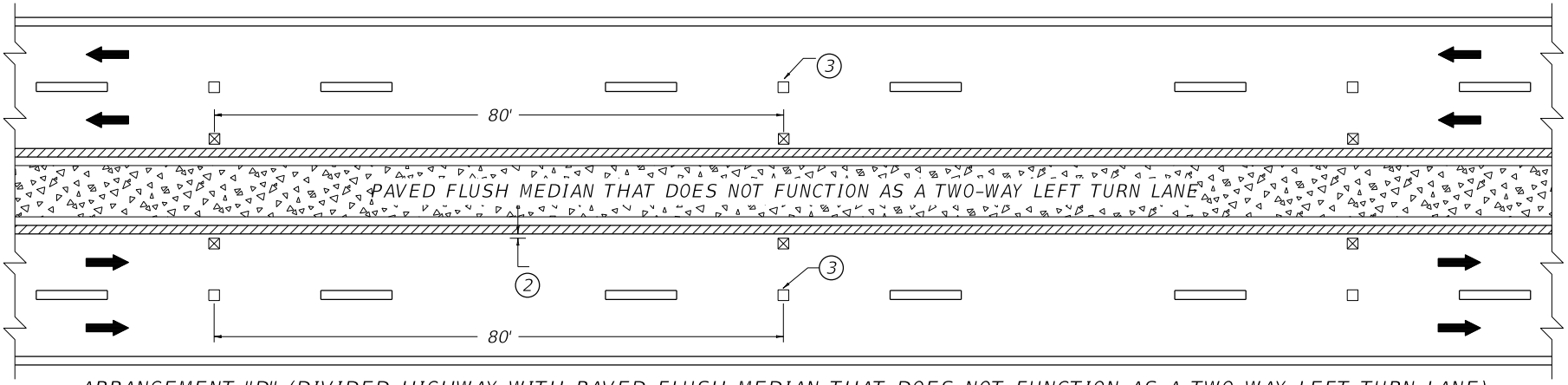

ARRANGEMENT "D" (DIVIDED HIGHWAY WITH PAVED FLUSH MEDIAN THAT DOES NOT FUNCTION AS A TWO-WAY LEFT TURN LANE)

~ NOTES ~

1. MARKERS INSTALLED ALONG LANE LINES SHOULD BE PLACED BETWEEN AND IN LINE WITH THE SKIPS.

(2) MARKERS INSTALLED ALONG EDGE LINES SHOULD BE PLACED SO THAT THE NEAR EDGE OF THE CASTING/GROOVE IS NO MORE THAN 1" FROM THE NEAR EDGE OF THE LINE.

(3) IF WIDTH OF PAVED FLUSH MEDIAN IS GREATER THAN OR EQUAL TO 30', BI-DIRECTIONAL (WHITE-RED) MARKERS SHALL BE USED ALONG THE LANE LINES IN LIEU OF MONO-DIRECTIONAL (WHITE) MARKERS.

4. MARKERS SHALL NOT BE INSTALLED ON TOP OF THE PAVEMENT JOINT. OFFSET MARKERS A MINIMUM OF 2" FROM THE PAVEMENT JOINT. ENSURE THAT THE FINISHED LINE OF MARKERS IS STRAIGHT WITH MINIMAL LATERAL DEVIATION. MARKERS MAY BE ELIMINATED OR PLACEMENT ADJUSTED AT THE DISCRETION OF THE ENGINEER.

5. MARKERS SHALL BE INSTALLED AT 40' SPACING ALONG SOLID WHITE AUXILIARY LANES. MARKER COLOR SHALL MATCH THE MARKERS INSTALLED ALONG THE WHITE LANE LINES.

BID ITEMS AND UNIT TO BID

PAVEMENT MARKER TYPE V (B-W/R, B-Y/R, BY, MW, MY)	EACH
INLAID PAVEMENT MARKER	EACH

LEGEND

- BI-DIRECTIONAL (YELLOW)
- BI-DIRECTIONAL (WHITE-RED)
- MONO-DIRECTIONAL (WHITE)
- MARKINGS (YELLOW)
- MARKINGS (WHITE)
- FLUSH MEDIAN
- DEPRESSED OR RAISED MEDIAN

DRAWING NOT TO SCALE

KENTUCKY
DEPARTMENT OF HIGHWAYS

PAVEMENT MARKER
ARRANGEMENTS
MULTI-LANE ROADWAYS

STANDARD DRAWING NO. TPM-105-03

SUBMITTED R. Allen Wolfe 12-01-15
DIRECTOR DIVISION OF TRAFFIC OPERATIONS DATE

APPROVED 12-01-15
STATE HIGHWAY ENGINEER DATE

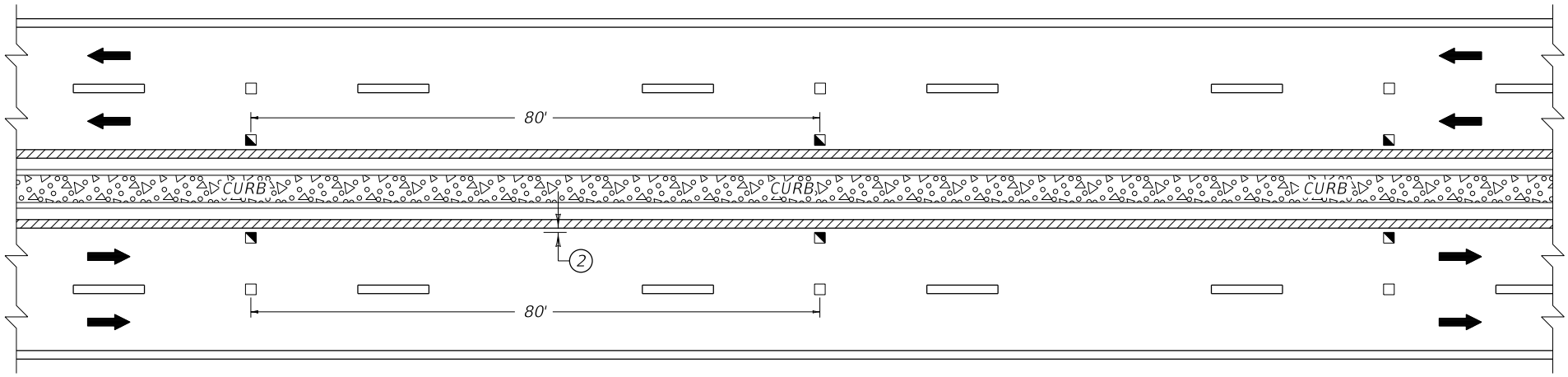

ARRANGEMENT "E" (DIVIDED HIGHWAY WITH CURB WITHIN 8' OF DRIVING LANE)

~ NOTES ~

1. MARKERS INSTALLED ALONG LANE LINES SHALL BE PLACED BETWEEN AND IN LINE WITH THE SKIPS.
2. MARKERS INSTALLED ALONG EDGE LINES SHALL BE PLACED SO THAT THE NEAR EDGE OF THE CASTING/GROOVE IS NO MORE THAN 1" FROM THE NEAR EDGE OF THE LINE.
3. MARKERS SHALL NOT BE INSTALLED ON TOP OF THE PAVEMENT JOINT. OFFSET MARKERS A MINIMUM OF 2" FROM THE PAVEMENT JOINT. ENSURE THAT THE FINISHED LINE OF MARKERS IS STRAIGHT WITH MINIMAL LATERAL DEVIATION. MARKERS MAY BE ELIMINATED OR PLACEMENT ADJUSTED AT THE DISCRETION OF THE ENGINEER.
4. MARKERS SHALL BE INSTALLED AT 40' SPACING ALONG SOLID WHITE AUXILIARY LANES. MARKER COLOR SHALL MATCH THE MARKERS INSTALLED ALONG THE WHITE LANE LINES.

BID ITEMS AND UNIT TO BID:

PAVEMENT MARKER TYPE V (B-W/R, B-Y/R, BY, MW, MY)	EACH
INLAID PAVEMENT MARKER	EACH

LEGEND

- MONO-DIRECTIONAL (YELLOW)
- MONO-DIRECTIONAL (WHITE)
- MARKINGS (YELLOW)
- MARKINGS (WHITE)

DRAWING NOT TO SCALE

KENTUCKY
DEPARTMENT OF HIGHWAYS

PAVEMENT MARKER
ARRANGEMENTS
MULTI-LANE ROADWAYS

STANDARD DRAWING NO. TPM-110-03

SUBMITTED R. Allen Wolfe 12-01-15
DIRECTOR DIVISION OF TRAFFIC OPERATIONS DATE

APPROVED 12-01-15
STATE HIGHWAY ENGINEER DATE

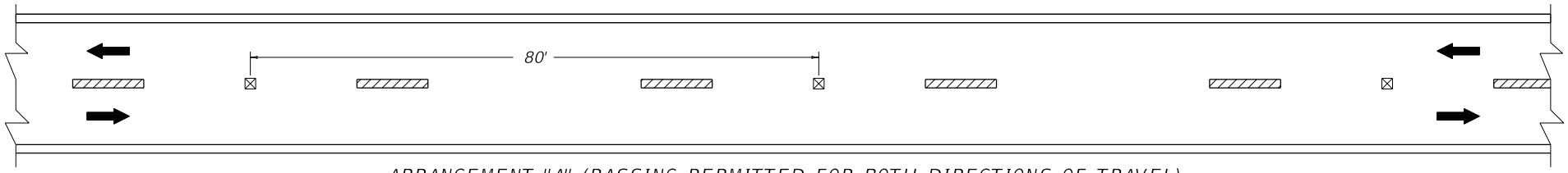

ARRANGEMENT "A" (PASSING PERMITTED FOR BOTH DIRECTIONS OF TRAVEL)

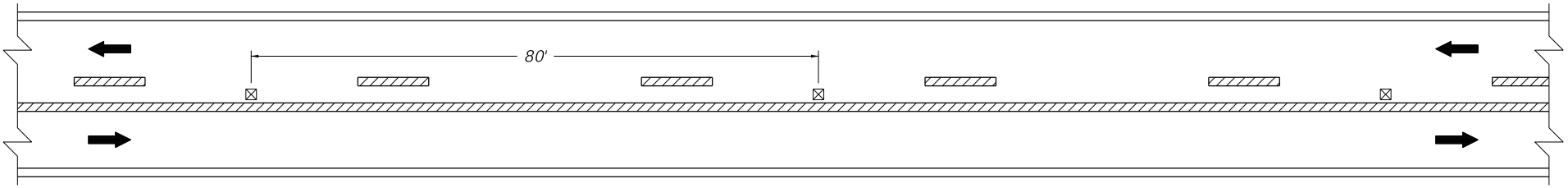

ARRANGEMENT "B" (PASSING PERMITTED FOR ONE DIRECTION OF TRAVEL)

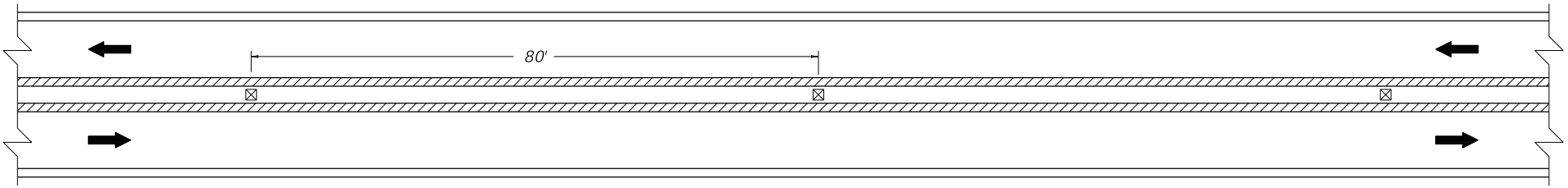

ARRANGEMENT "C" (PASSING PROHIBITED FOR BOTH DIRECTIONS OF TRAVEL)

~ NOTES ~

1. MARKERS INSTALLED ALONG DASHED YELLOW CENTERLINES SHALL BE PLACED BETWEEN AND IN LINE WITH THE DASHES.
2. MARKERS INSTALLED WITH DOUBLE YELLOW CENTERLINES SHALL BE PLACED BETWEEN THE TWO LINES.
3. MARKERS SHALL NOT BE INSTALLED ON TOP OF THE PAVEMENT JOINT. OFFSET MARKERS A MINIMUM OF 2" FROM THE PAVEMENT JOINT. ENSURE THAT THE FINISHED LINE OF MARKERS IS STRAIGHT WITH MINIMAL LATERAL DEVIATION. MARKERS MAY BE ELIMINATED OR PLACEMENT ADJUSTED AT THE DISCRETION OF THE ENGINEER.

BID ITEMS AND UNIT TO BID

PAVEMENT MARKER TYPE V (B-W/R, B-Y/R, BY, MW, MY)	EACH
INLAID PAVEMENT MARKER	EACH

LEGEND

- BI-DIRECTIONAL (YELLOW)
- MARKINGS (YELLOW)
- MARKINGS (WHITE)

DRAWING NOT TO SCALE

USE WITH CUR. STD. DWGS.
TPM-150 TPM-155 TPM-160

KENTUCKY
DEPARTMENT OF HIGHWAYS

PAVEMENT MARKER ARRANGEMENTS TWO-LANE, TWO-WAY ROADWAYS

STANDARD DRAWING NO. TPM-115-03

SUBMITTED R. Allen Wolfe DIRECTOR DIVISION OF TRAFFIC OPERATIONS 12-01-15 DATE

APPROVED STATE HIGHWAY ENGINEER 12-01-15 DATE

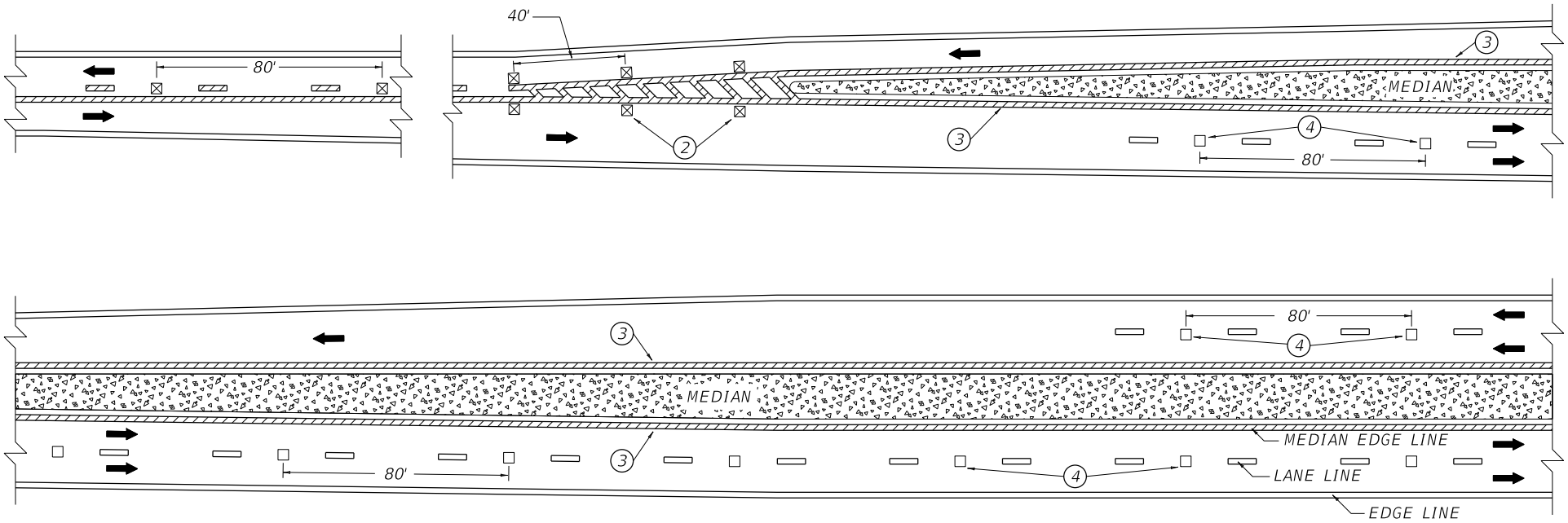

TWO LANE TO FOUR LANE PAVEMENT TRANSITIONS

LEGEND

- ⊠ BI-DIRECTIONAL (YELLOW)
- □ MONO-DIRECTIONAL (WHITE) (4)
- MARKINGS (YELLOW)
- MARKINGS (WHITE)

~ NOTES ~

1. MARKERS INSTALLED ALONG LANE LINES OR DASHED YELLOW CENTERLINES SHALL BE PLACED BETWEEN AND IN LINE WITH THE DASHES.
2. (2) MARKERS INSTALLED ALONG EDGE LINES SHALL BE PLACED SO THAT THE NEAR EDGE OF THE CASTING IS NO MORE THAN 1" FROM THE NEAR EDGE OF THE LINE.
3. (3) MARKERS MAY BE REQUIRED ALONG THE MEDIAN EDGE LINES DEPENDING ON TYPE AND WIDTH OF MEDIAN. SEE TPM-100, TPM-105, AND TPM-110 FOR GUIDANCE.
4. (4) IF MEDIAN WIDTH IS GREATER THAN OR EQUAL TO 30', BI-DIRECTIONAL (WHITE-RED) MARKERS SHALL BE USED ALONG THE LANE LINES IN LIEU OF MONO-DIRECTIONAL (WHITE) MARKERS.
5. MARKERS SHALL NOT BE INSTALLED ON TOP OF THE PAVEMENT JOINT. OFFSET MARKERS A MINIMUM OF 2" FROM THE PAVEMENT JOINT. ENSURE THAT THE FINISHED LINE OF MARKERS IS STRAIGHT WITH MINIMAL LATERAL DEVIATION. MARKERS MAY BE ELIMINATED AT THE DISCRETION OF THE ENGINEER.

BID ITEMS AND UNIT TO BID

PAVEMENT MARKER TYPE V (B-W/R, B-Y/R, BY, MW, OR MY)	EACH
INLAID PAVEMENT MARKER	EACH

DRAWING NOT TO SCALE

USE WITH CUR. STD. DWGS.
TPM-100 TPM-105 TPM-110

KENTUCKY
DEPARTMENT OF HIGHWAYS

PAVEMENT MARKER ARRANGEMENT
TWO-LANE TO FOUR-LANE TRANSITIONS

STANDARD DRAWING NO. TPM-120-03

SUBMITTED R. Allen Wolfe — DIRECTOR DIVISION OF TRAFFIC OPERATIONS — 12-01-15 DATE

APPROVED — STATE HIGHWAY ENGINEER — 12-01-15 DATE

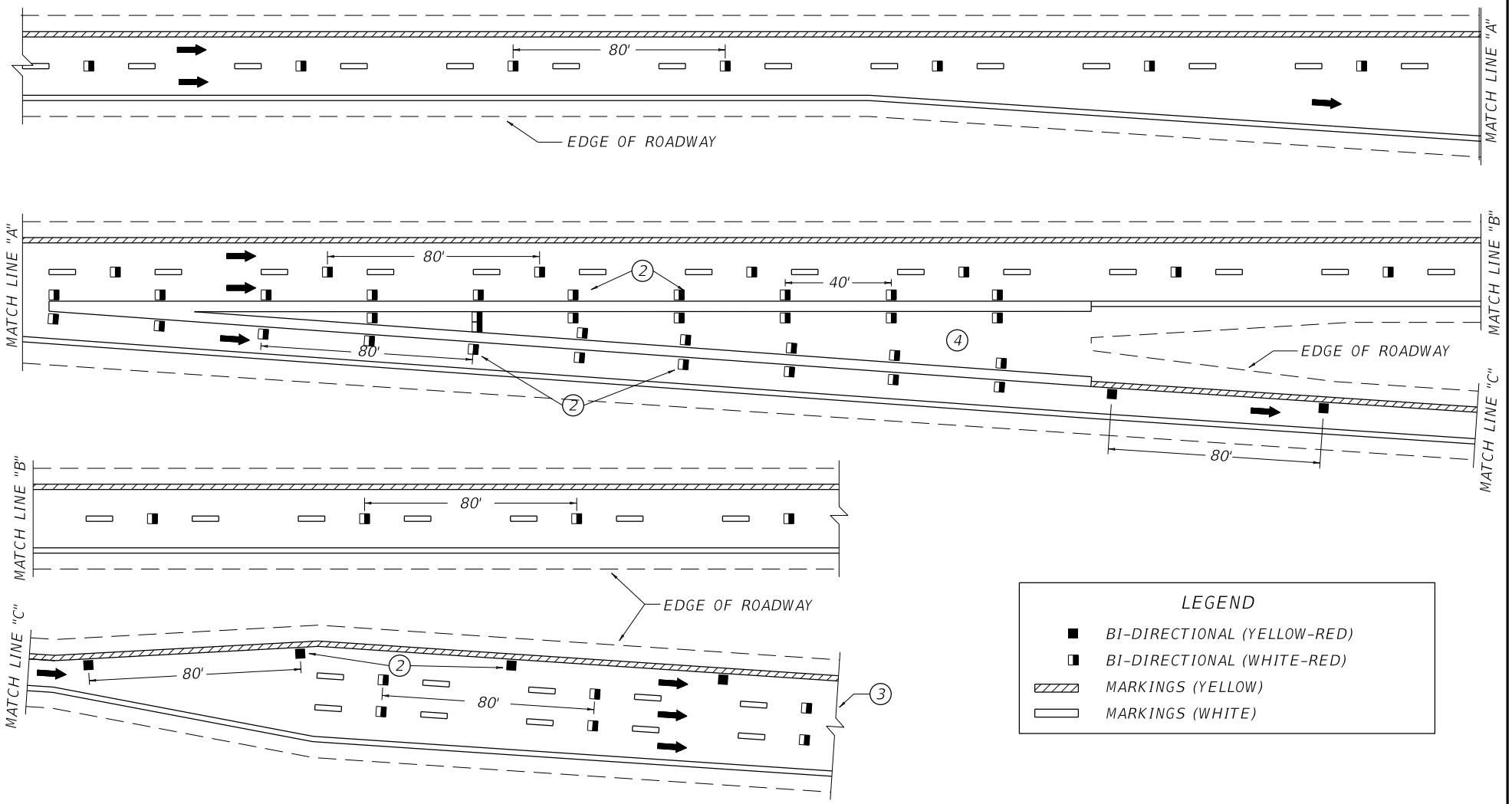

~ NOTES ~

1. MARKERS INSTALLED ALONG LANE LINES SHALL BE PLACED BETWEEN AND IN LINE WITH THE SKIPS.
2. MARKERS INSTALLED ALONG EDGE LINES SHALL BE PLACED SO THAT THE NEAR EDGE OF THE CASTING/GROOVE IS NO MORE THAN 1" FROM THE NEAR EDGE OF THE LINE.
3. MARKERS SHALL BE CONTINUED ALONG THE ENTIRE LENGTH OF THE RAMP UNTIL THE INTERSECTION WITH THE CROSS-STREET.
4. ON TWO-LANE, TWO-WAY HIGHWAYS, MARKERS INSTALLED ALONG GORE MARKINGS SHALL BE MONO-DIRECTIONAL (WHITE).
5. MARKERS SHALL NOT BE INSTALLED ON TOP OF THE PAVEMENT JOINT. OFFSET MARKERS A MINIMUM OF 2" FROM THE PAVEMENT JOINT. ENSURE THAT THE FINISHED LINE OF MARKERS IS STRAIGHT WITH MINIMAL LATERAL DEVIATION. MARKERS MAY BE ELIMINATED OR PLACEMENT ADJUSTED AT THE DISCRETION OF THE ENGINEER.

BID ITEMS AND UNIT TO BID

PAVEMENT MARKER TYPE V (B-W/R, B-Y/R, BY, MW, MY)	EACH
INLAID PAVEMENT MARKER	EACH

DRAWING NOT TO SCALE

KENTUCKY
DEPARTMENT OF HIGHWAYS

PAVEMENT MARKER
ARRANGEMENT
EXIT GORE AND OFF-RAMP

STANDARD DRAWING NO. TPM-125-03

SUBMITTED R. Allen Wolfe 12-01-15
DIRECTOR DIVISION OF TRAFFIC OPERATIONS DATE

APPROVED 12-01-15
STATE HIGHWAY ENGINEER DATE

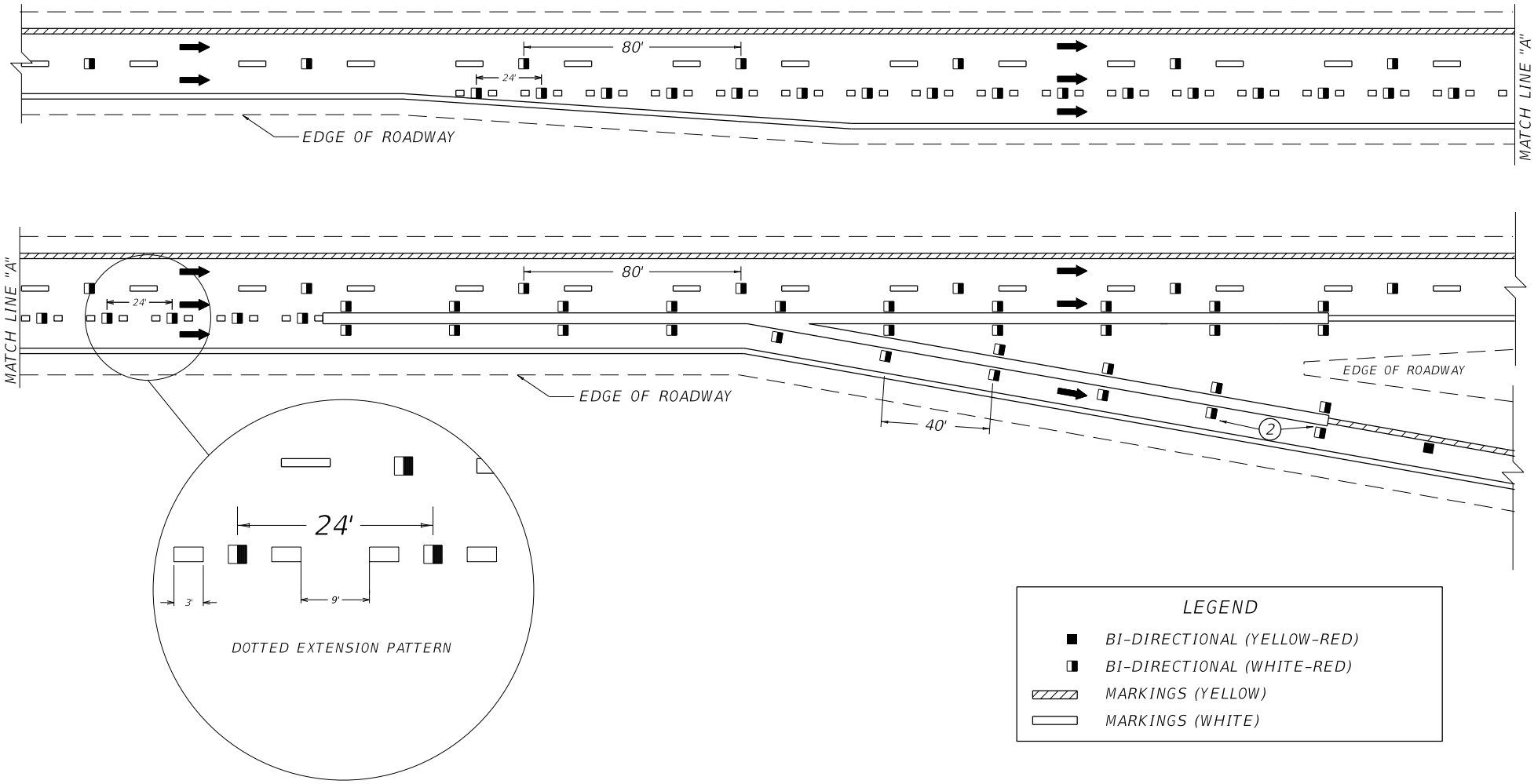

~ NOTES ~

1. MARKERS INSTALLED ALONG LANE LINES SHALL BE PLACED BETWEEN AND IN LINE WITH THE SKIPS.
2. MARKERS INSTALLED ALONG EDGE LINES SHALL BE PLACED SO THAT THE NEAR EDGE OF THE CASTING IS NO MORE THAN 1" FROM THE NEAR EDGE OF THE LINE.
3. MARKERS SHALL BE CONTINUED ALONG THE ENTIRE LENGTH OF THE RAMP UNTIL THE INTERSECTION WITH THE CROSS-STREET.
4. ON TWO-LANE, TWO-WAY HIGHWAYS, MARKERS INSTALLED ALONG GORE MARKINGS SHALL BE MONO-DIRECTIONAL (WHITE).
5. MARKERS SHALL NOT BE INSTALLED ON TOP OF THE PAVEMENT JOINT. OFFSET MARKERS A MINIMUM OF 2" FROM THE PAVEMENT JOINT. ENSURE THAT THE FINISHED LINE OF MARKERS IS STRAIGHT WITH MINIMAL LATERAL DEVIATION. MARKERS MAY BE ELIMINATED AT THE DISCRETION OF THE ENGINEER.
6. MARKERS INSTALLED ALONG THE RAMP EDGELINE SHALL BE SPACED AT 80' INTERVALS.

BID ITEMS AND UNIT TO BID

PAVEMENT MARKER TYPE V (B-W/R, B-Y/R, BY, MW, OR MY)	EACH
INLAID PAVEMENT MARKER	EACH

DRAWING NOT TO SCALE

KENTUCKY
DEPARTMENT OF HIGHWAYS

PAVEMENT MARKER
ARRANGEMENT
FOR PARALLEL
DECELERATION LANE

STANDARD DRAWING NO. TPM-126

SUBMITTED R. Allen Wolfe 12-01-15
DIRECTOR DIVISION OF TRAFFIC OPERATIONS DATE

APPROVED 12-01-15
STATE HIGHWAY ENGINEER DATE

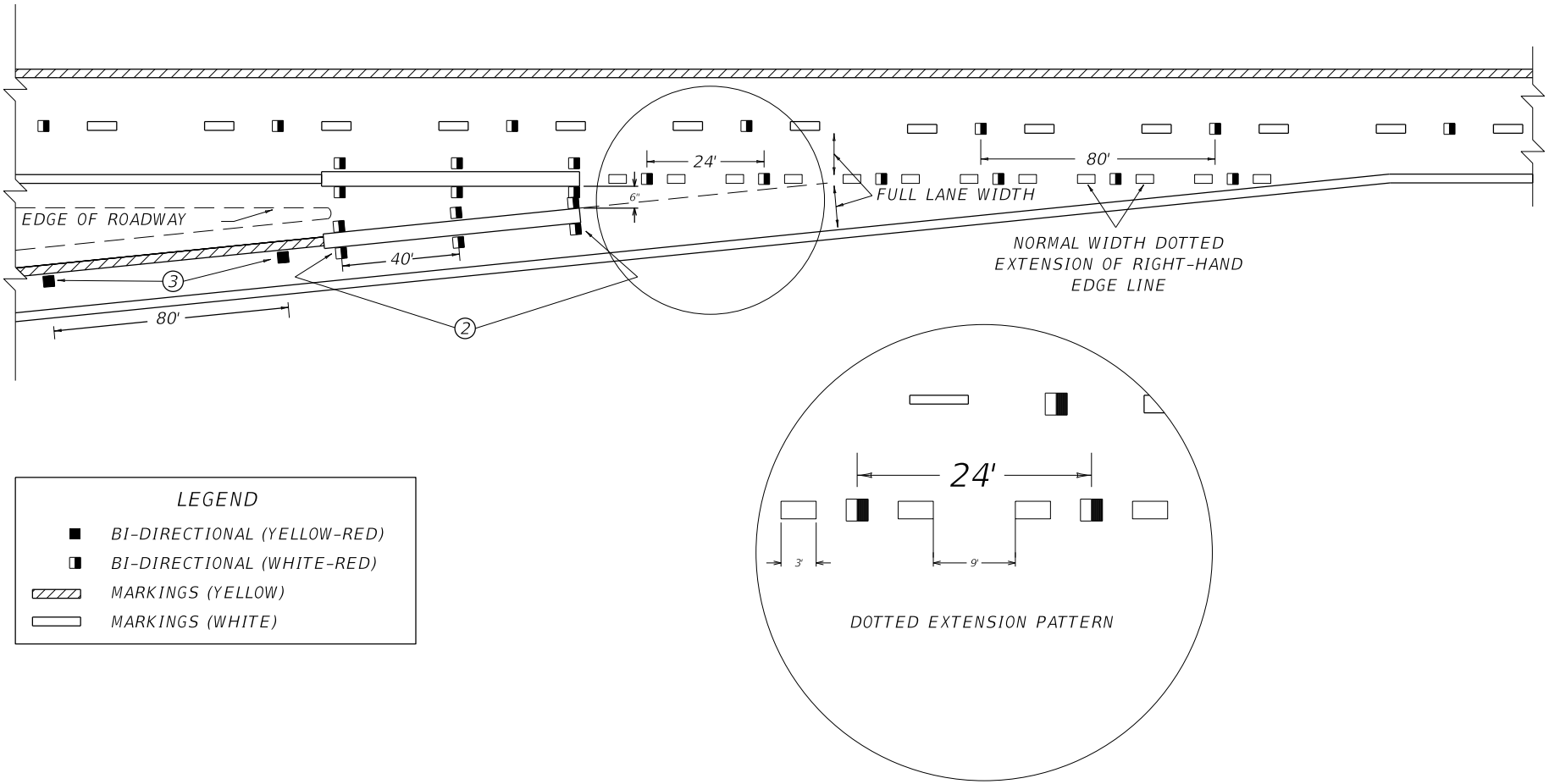

LEGEND

- BI-DIRECTIONAL (YELLOW-RED)
- BI-DIRECTIONAL (WHITE-RED)
- MARKINGS (YELLOW)
- MARKINGS (WHITE)

~ NOTES ~

1. MARKERS INSTALLED ALONG LANE LINES SHALL BE PLACED BETWEEN AND IN LINE WITH THE SKIPS.
2. MARKERS INSTALLED ALONG EDGE LINES SHALL BE PLACED SO THAT THE NEAR EDGE OF THE CASTING/GROOVE IS NO MORE THAN 1" FROM THE NEAR EDGE OF THE LINE.
3. BI-DIRECTIONAL (YELLOW-RED) MARKERS ARE TO BE PLACED ALONG THE ENTIRE LENGTH OF THE YELLOW EDGE LINE FROM THE INTERSECTION OF THE CROSS-STREET TO THE BEGINNING OF THE GORE AREA.
4. ON TWO-LANE, TWO-WAY HIGHWAYS, MARKERS INSTALLED ALONG GORE MARKINGS SHALL BE MONO-DIRECTIONAL (WHITE).
5. MARKERS SHALL NOT BE INSTALLED ON TOP OF THE PAVEMENT JOINT. OFFSET MARKERS A MINIMUM OF 2" FROM THE PAVEMENT JOINT. ENSURE THAT THE FINISHED LINE OF MARKERS IS STRAIGHT WITH MINIMAL LATERAL DEVIATION. MARKERS MAY BE ELIMINATED OR PLACEMENT ADJUSTED AT THE DISCRETION OF THE ENGINEER.

BID ITEMS AND UNIT TO BID

PAVEMENT MARKER TYPE V (B-W/R, B-Y/R, BY, MW, OR MY)	EACH
INLAID PAVEMENT MARKER	EACH

DRAWING NOT TO SCALE

KENTUCKY
DEPARTMENT OF HIGHWAYS

PAVEMENT MARKER
ARRANGEMENT
ON-RAMP WITH TAPERED
ACCELERATION LANE

STANDARD DRAWING NO. TPM-130-03

SUBMITTED R. Allen Wolfe — DIRECTOR OF DIVISION OF TRAFFIC OPERATIONS — 12-01-15 DATE

APPROVED — STATE HIGHWAY ENGINEER — 12-01-15 DATE

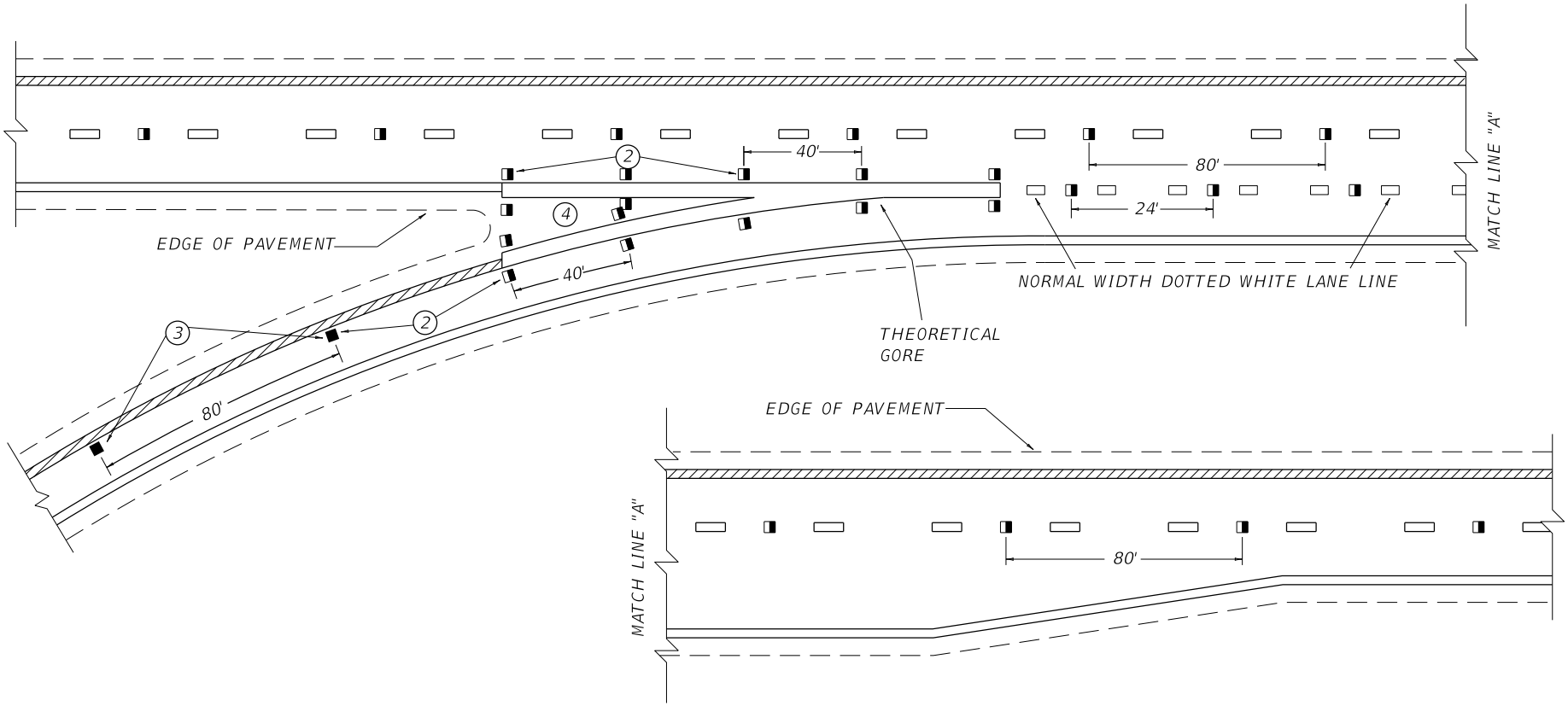

LEGEND

- BI-DIRECTIONAL (YELLOW-RED)
- BI-DIRECTIONAL (WHITE-RED)
- MARKINGS (YELLOW)
- MARKINGS (WHITE)

~ NOTES ~

1. MARKERS INSTALLED ALONG LANE LINES SHALL BE PLACED BETWEEN AND IN LINE WITH THE SKIPS.
2. MARKERS INSTALLED ALONG EDGE LINES SHALL BE PLACED SO THAT THE NEAR EDGE OF THE CASTING IS NO MORE THAN 1" FROM THE NEAR EDGE OF THE LINE.
3. BI-DIRECTIONAL (YELLOW-RED) MARKERS ARE TO BE PLACED ALONG THE ENTIRE LENGTH OF THE YELLOW EDGE LINE FROM THE INTERSECTION OF THE CROSS-STREET TO THE BEGINNING OF THE GORE AREA.
4. ON TWO-LANE, TWO-WAY HIGHWAYS, MARKERS INSTALLED ALONG GORE MARKINGS SHALL BE MONO-DIRECTIONAL (WHITE).
5. MARKERS SHALL NOT BE INSTALLED ON TOP OF THE PAVEMENT JOINT. OFFSET MARKERS A MINIMUM OF 2" FROM THE PAVEMENT JOINT. ENSURE THAT THE FINISHED LINE OF MARKERS IS STRAIGHT WITH MINIMAL LATERAL DEVIATION. MARKERS MAY BE ELIMINATED OR PLACEMENT ADJUSTED AT THE DISCRETION OF THE ENGINEER.
6. THE NORMAL WIDTH DOTTED WHITE LANE LINE SHALL EXTEND FOR AT LEAST HALF THE LENGTH OF THE FULL-WIDTH ACCELERATION LANE PLUS TAPER MEASURED FROM THE THEORETICAL GORE.

BID ITEMS AND UNIT TO BID

PAVEMENT MARKER TYPE V (B-W/R, B-Y/R, BY, MW, MY)	EACH
INLAID PAVEMENT MARKER	EACH

DRAWING NOT TO SCALE

KENTUCKY
DEPARTMENT OF HIGHWAYS

PAVEMENT MARKER ARRANGEMENT
ON-RAMP WITH PARALLEL ACCELERATION LANE

STANDARD DRAWING NO. TPM-135-03

SUBMITTED R. Allen Wolfe — DIRECTOR DIVISION OF TRAFFIC OPERATIONS — 12-01-15 DATE

APPROVED — STATE HIGHWAY ENGINEER — 12-01-15 DATE

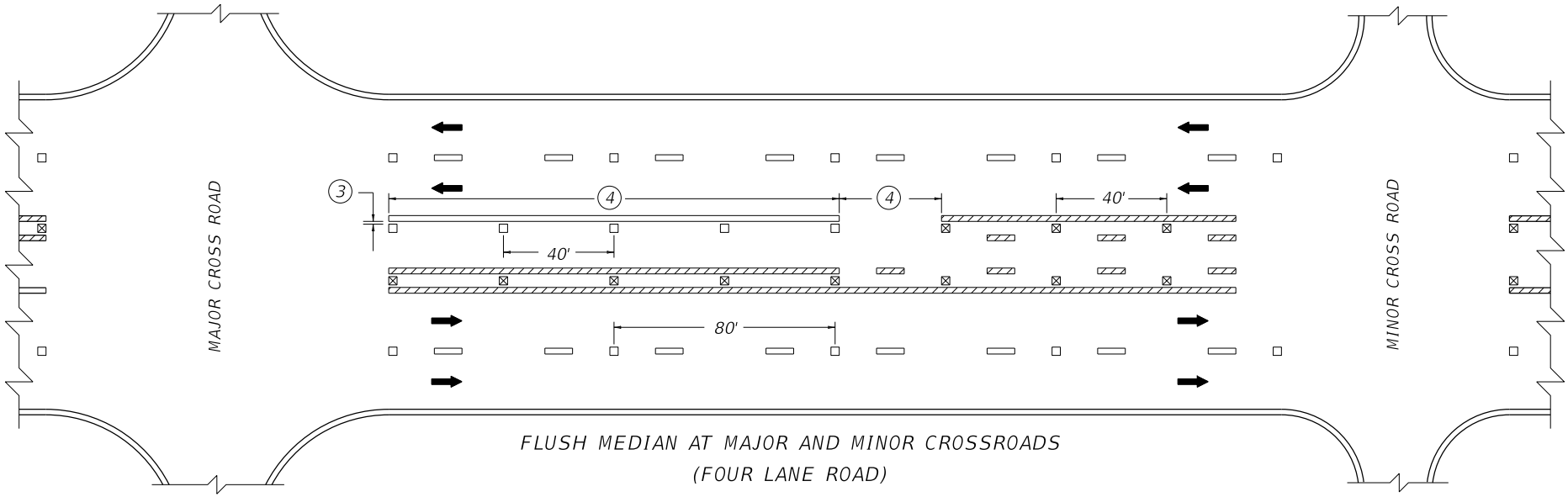

FLUSH MEDIAN AT MAJOR AND MINOR CROSSROADS
(FOUR LANE ROAD)

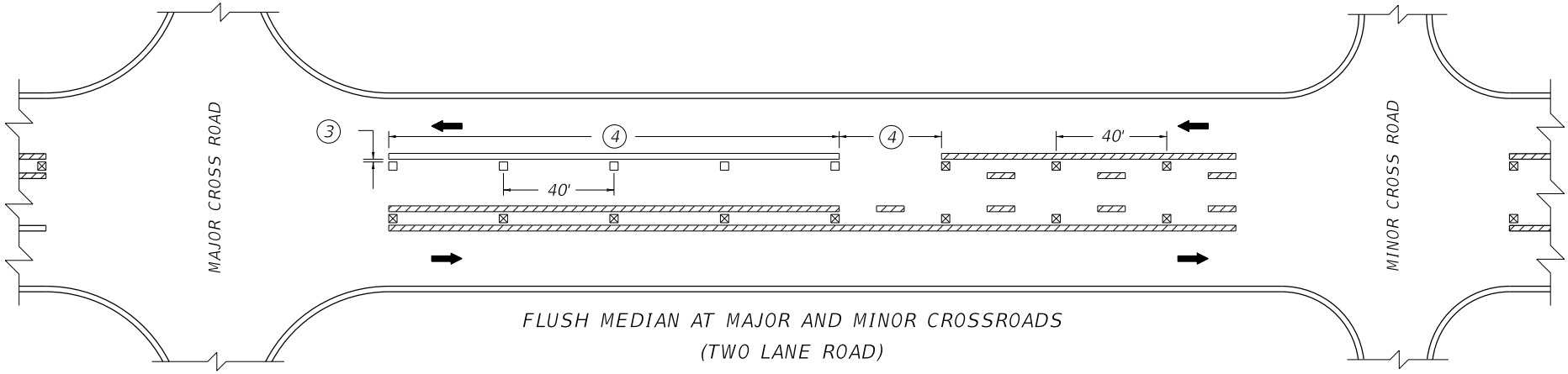

FLUSH MEDIAN AT MAJOR AND MINOR CROSSROADS
(TWO LANE ROAD)

~ NOTES ~

1. MARKERS INSTALLED AT DOUBLE YELLOW CENTERLINES SHALL BE PLACED BETWEEN THE TWO LINES.
2. MARKERS INSTALLED ALONG LANE LINES OR DASHED YELLOW CENTERLINES SHALL BE PLACED BETWEEN AND IN LINE WITH THE SKIPS.
3. MARKERS INSTALLED ALONG EDGE LINES SHALL BE PLACED SO THAT THE NEAR EDGE OF THE CASTING/GROOVE IS NO MORE THAN 1" FROM THE NEAR EDGE OF THE LINE.
4. LENGTH TO BE DETERMINED ON A PROJECT BY PROJECT BASIS.
5. MARKERS SHALL NOT BE INSTALLED ON TOP OF THE PAVEMENT JOINT. OFFSET MARKERS A MINIMUM OF 2" FROM THE PAVEMENT JOINT. ENSURE THAT THE FINISHED LINE OF MARKERS IS STRAIGHT WITH MINIMAL LATERAL DEVIATION. MARKERS MAY BE ELIMINATED OR PLACEMENT ADJUSTED AT THE DISCRETION OF THE ENGINEER.

BID ITEMS AND UNIT TO BID

PAVEMENT MARKER TYPE V (B-W/R, B-Y/R, BY, MW, MY)	EACH
INLAID PAVEMENT MARKER	EACH

LEGEND

- BI-DIRECTIONAL (YELLOW)
- MONO-DIRECTIONAL (WHITE)
- MARKINGS (YELLOW)
- MARKINGS (WHITE)

DRAWING NOT TO SCALE

KENTUCKY
DEPARTMENT OF HIGHWAYS

PAVEMENT MARKER
ARRANGEMENTS
TWO-WAY, LEFT TURN LANE

STANDARD DRAWING NO. TPM-140-04

SUBMITTED R. Allen Wolfe DIRECTOR DIVISION OF TRAFFIC OPERATIONS 02-26-20 DATE

APPROVED STATE HIGHWAY ENGINEER 02-26-20 DATE

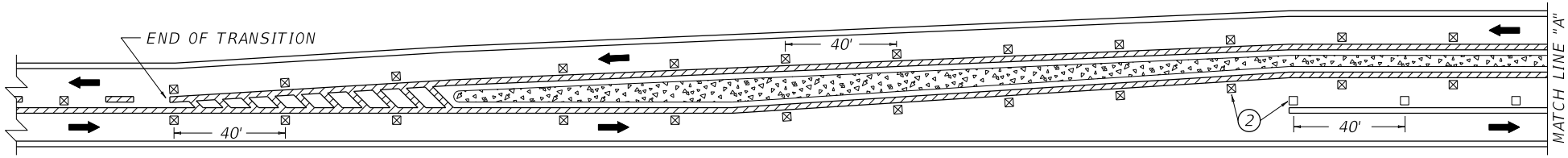

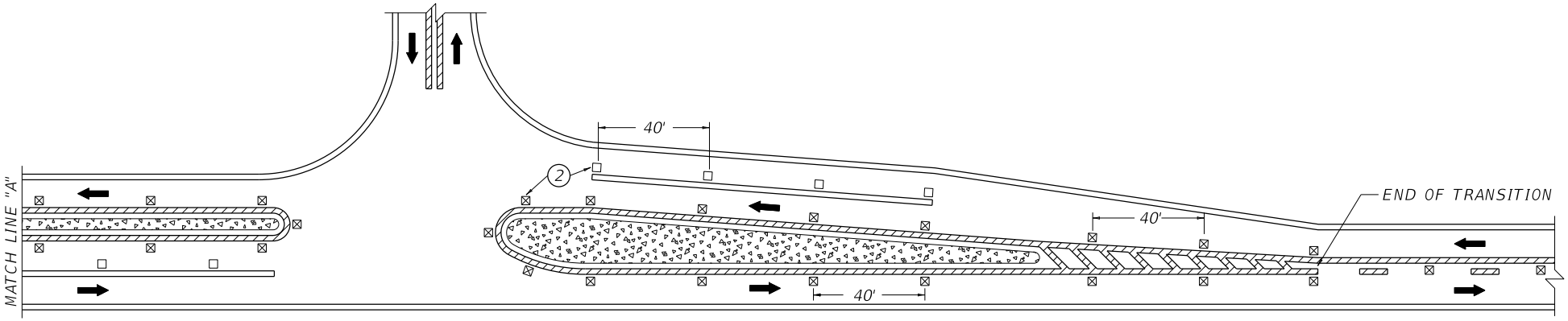

CHANNELIZED INTERSECTION ON A TWO DIRECTIONAL TWO LANE FACILITY

LEGEND

- BI-DIRECTIONAL (YELLOW)
- MONO-DIRECTIONAL (WHITE)
- CURBED OR FLUSH MEDIAN
- MARKINGS (YELLOW)
- MARKINGS (WHITE)

~ NOTES ~

1. MARKERS INSTALLED ALONG DASHED YELLOW CENTERLINES SHALL BE PLACED BETWEEN AND IN LINE WITH THE SKIPS.
2. MARKERS INSTALLED ALONG EDGE LINES OR CHANNELIZING LINES SHALL BE PLACED SO THAT THE NEAR EDGE OF THE CASTING/GROOVE IS NO MORE THAN 1" FROM THE NEAR EDGE OF THE LINE.
3. MARKERS SHALL NOT BE INSTALLED ON TOP OF THE PAVEMENT JOINT. OFFSET MARKERS A MINIMUM OF 2" FROM THE PAVEMENT JOINT. ENSURE THAT THE FINISHED LINE OF MARKERS IS STRAIGHT WITH MINIMAL LATERAL DEVIATION. MARKERS MAY BE ELIMINATED OR PLACEMENT ADJUSTED AT THE DISCRETION OF THE ENGINEER.

BID ITEMS AND UNIT TO BID

PAVEMENT MARKER TYPE V (B-W/R, B-Y/R, BY, MW, MY)	EACH
INLAID PAVEMENT MARKER	EACH

DRAWING NOT TO SCALE

KENTUCKY
DEPARTMENT OF HIGHWAYS

PAVEMENT MARKER
ARRANGEMENT
CHANNELIZED
INTERSECTION

STANDARD DRAWING NO. TPM-145-03

SUBMITTED R. Allen Wolfe 12-01-15
DIRECTOR DIVISION OF TRAFFIC OPERATIONS DATE

APPROVED 12-01-15
STATE HIGHWAY ENGINEER DATE

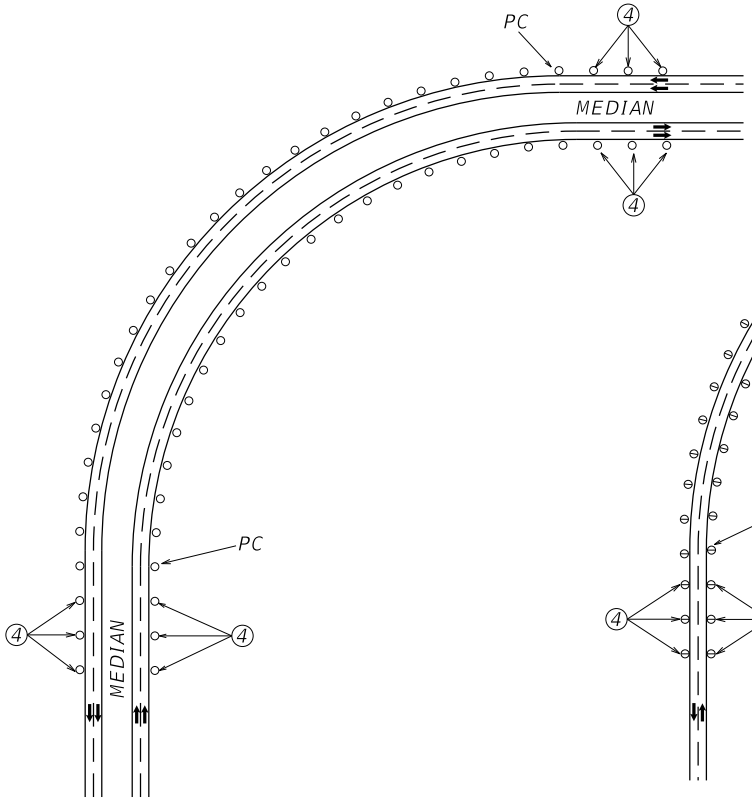

DELINEATION FOR HORIZONTAL CURVES
ON MULTI-LANE EXPRESSWAYS/FREEWAYS

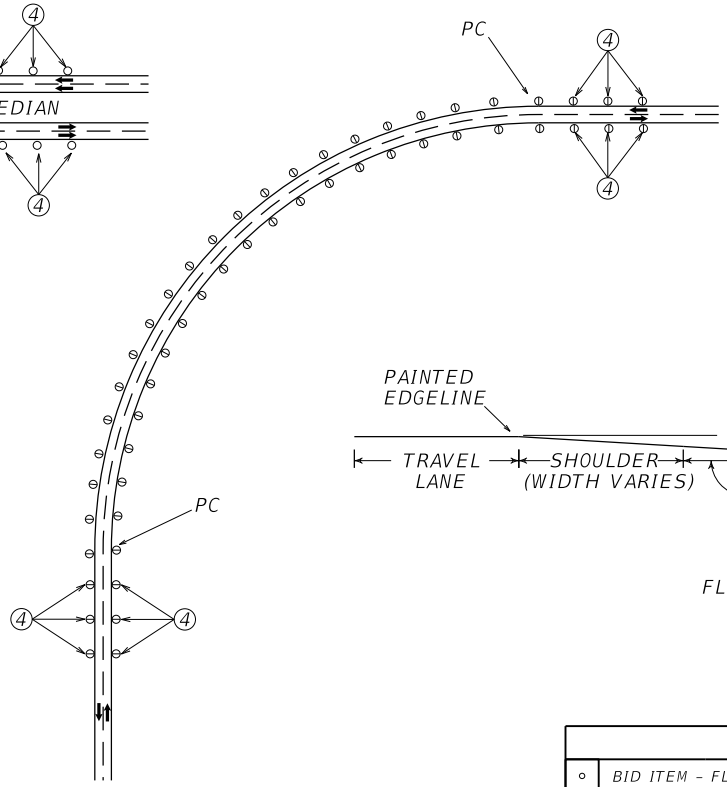

DELINEATION FOR HORIZONTAL CURVES
ON TWO-LANE EXPRESSWAYS/FREEWAYS

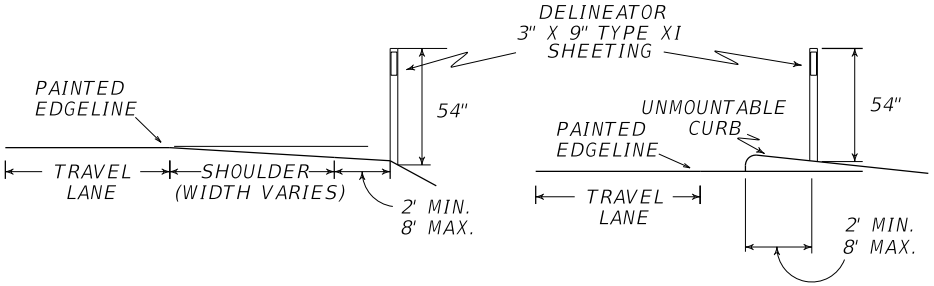

FLEXIBLE DELINEATOR POST
MOUNTING DETAILS

LEGEND	
○	BID ITEM - FLEXIBLE DELINEATOR POST - M/W (MONO-WHITE)
⊖	BID ITEM - FLEXIBLE DELINEATOR POST - B/W (BI-WHITE)
APPROX. SPACING = 50 FEET	
UNIT BID = EACH	

~ NOTES ~

1. DELINEATORS SHALL BE FROM THE LIST OF APPROVED MATERIALS AND SHALL BE IN ACCORDANCE WITH SECTION 838 OF THE STANDARD SPECIFICATIONS FOR ROAD AND BRIDGE CONSTRUCTION, CURRENT EDITION.
2. DELINEATORS SHALL BE INSTALLED IN ACCORDANCE WITH THE MANUFACTURER'S RECOMMENDATIONS.
3. THE DELINEATOR POST AND RETROREFLECTIVE SHEETING SHALL BE THE SAME COLOR AND SHALL MATCH THE COLOR OF THE EDGELINES THEY SUPPLEMENT.
4. THREE DELINEATORS SHALL BE INSTALLED IN ADVANCE OF THE BEGINNING AND PROCEEDING AWAY FROM THE END OF THE CURVE AT A SPACING OF APPROXIMATELY 50 FEET.
5. DELINEATORS SHALL BE PROVIDED ON THE RIGHT-HAND SIDE OF HORIZONTAL CURVES ON EXPRESSWAYS AND FREEWAYS. DELINEATORS ARE NOT REQUIRED ON TANGENT SECTIONS OF EXPRESSWAYS AND FREEWAYS.
6. A FREEWAY IS DEFINED AS A DIVIDED HIGHWAY WITH FULL CONTROL OF ACCESS. AN EXPRESSWAY IS DEFINED AS A DIVIDED HIGHWAY WITH PARTIAL CONTROL OF ACCESS.
7. DELINEATORS SHOULD BE PLACED AT A CONSTANT DISTANCE FROM THE ROADWAY EDGE. WHEN AN OBSTRUCTION EXISTS NEAR THE PAVEMENT EDGE, THE LINE OF DELINEATORS SHOULD BE TRANSITIONED TO THE INSIDE OF THE OBSTRUCTION OR TO THE BARRIER DELINEATION IF THE OBSTRUCTION IS GUARDRAIL OR BARRIER WALL. SUCH TRANSITIONS SHOULD BEGIN APPROXIMATELY 200 FT IN ADVANCE OF THE OBSTRUCTION/BARRIER.
8. DELINEATORS SHOULD BE INSTALLED AT AN APPROXIMATE RIGHT ANGLE TO APPROACHING TRAFFIC.
9. DELINEATORS MAY BE DISCONTINUED ALONG SECTIONS WITH BARRIER WALL OR GUARDRAIL DELINEATION.
10. SPACING SHOULD BE ADJUSTED IN CURVES SO THAT SEVERAL DELINEATORS ARE ALWAYS SIMULTANEOUSLY VISIBLE TO THE ROAD USER.

DRAWING NOT TO SCALE

KENTUCKY
DEPARTMENT OF HIGHWAYS

FLEXIBLE DELINEATOR
POST ARRANGEMENTS
FOR
HORIZONTAL CURVES

STANDARD DRAWING NO. TPM-170-01

SUBMITTED R. Allen Wolfe 02-26-20
DIRECTOR DIVISION OF TRAFFIC OPERATIONS DATE

APPROVED 02-26-20
STATE HIGHWAY ENGINEER DATE

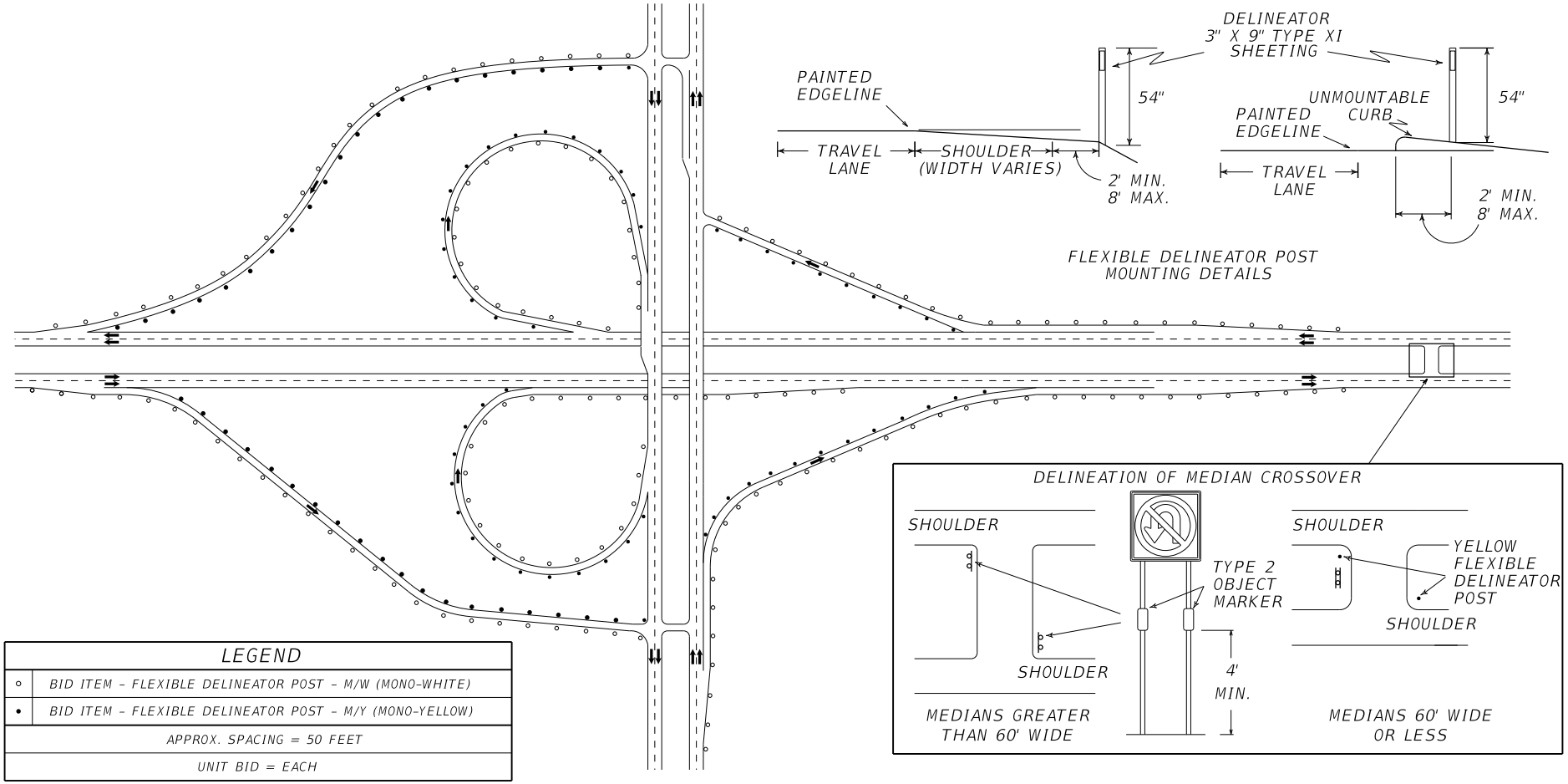

LEGEND	
○	BID ITEM - FLEXIBLE DELINEATOR POST - M/W (MONO-WHITE)
•	BID ITEM - FLEXIBLE DELINEATOR POST - M/Y (MONO-YELLOW)
APPROX. SPACING = 50 FEET	
UNIT BID = EACH	

~ NOTES ~

1. DELINEATORS SHALL BE FROM THE LIST OF APPROVED MATERIALS AND SHALL BE IN ACCORDANCE WITH SECTION 838 OF THE STANDARD SPECIFICATIONS FOR ROAD AND BRIDGE CONSTRUCTION, CURRENT EDITION.
2. DELINEATORS SHALL BE INSTALLED IN ACCORDANCE WITH THE MANUFACTURER'S RECOMMENDATIONS.
3. THE DELINEATOR POST AND RETROREFLECTIVE SHEETING SHALL BE THE SAME COLOR AND SHALL MATCH THE COLOR OF THE EDGELINES THEY SUPPLEMENT.
4. DELINEATORS SHALL BE PROVIDED ON BOTH SIDES OF INTERCHANGE RAMPS. DELINEATORS SHOULD BE ERECTED AT APPROXIMATELY 50 FOOT INTERVALS ALONG RAMPS AND ACCELERATION AND DECELERATION LANES ON THE MAINLINE AND CROSSROAD.
5. DELINEATORS SHOULD BE PLACED AT A CONSTANT DISTANCE FROM THE ROADWAY EDGE. WHEN AN OBSTRUCTION EXISTS NEAR THE PAVEMENT EDGE, THE LINE OF DELINEATORS SHOULD BE TRANSITIONED TO THE INSIDE OF THE OBSTRUCTION OR TO THE BARRIER DELINEATION IF THE OBSTRUCTION IS GUARDRAIL OR BARRIER WALL. SUCH TRANSITIONS SHOULD BEGIN APPROXIMATELY 200 FEET IN ADVANCE OF THE OBSTRUCTION/BARRIER.
6. DELINEATORS SHOULD BE INSTALLED AT AN APPROXIMATE RIGHT ANGLE TO APPROACHING TRAFFIC.
7. DELINEATORS MAY BE DISCONTINUED ALONG SECTIONS WITH BARRIER WALL OR GUARDRAIL DELINEATION.
8. SPACING SHOULD BE ADJUSTED IN CURVES SO THAT SEVERAL DELINEATORS ARE ALWAYS SIMULTANEOUSLY VISIBLE TO THE ROAD USER.

DRAWING NOT TO SCALE

KENTUCKY
DEPARTMENT OF HIGHWAYS

FLEXIBLE DELINEATOR
POST ARRANGEMENTS FOR
INTERCHANGE RAMPS
AND CROSSOVERS

STANDARD DRAWING NO. TPM-171-01

SUBMITTED R. Allen Wolfe 02-26-20
DIRECTOR DIVISION OF TRAFFIC OPERATIONS DATE

APPROVED 02-26-20
STATE HIGHWAY ENGINEER DATE

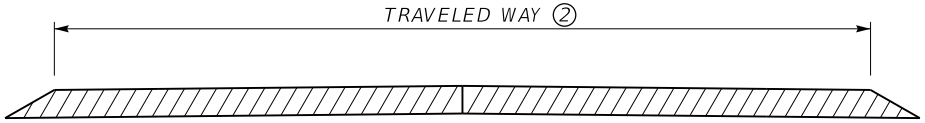

TWO LANE ROADWAY PAVEMENT CROSS-SECTION

TRAVELED WAY ②	TYPE OF PAVEMENT STRIPING	NON-STATE PRIMARY ROUTES				STATE PRIMARY ROUTES	
		< 1000 ADT		>= 1000 ADT		ANY ADT	
		WIDTH	MATERIAL	WIDTH	MATERIAL	WIDTH	MATERIAL
< 16' ④	EDGELINE STRIPES ONLY	4"	PAINT	4"	PAINT	6"	DURABLE
16' TO < 20'	EDGELINE STRIPES ONLY OR CENTERLINE STRIPE ONLY	4"	PAINT	4"	PAINT	6"	DURABLE
>=20' ③	CENTERLINE AND EDGELINE STRIPES	4" ⑤	PAINT	6"	PAINT	6"	DURABLE

~ NOTES ~

1. INSTALL PAVEMENT STRIPING ON TWO LANE, TWO WAY ROADWAYS AS DETAILED IN THE ABOVE TABLE AND IN ACCORDANCE WITH THE PAVEMENT MARKINGS AND DELINEATION CHAPTER OF THE TRAFFIC OPERATIONS GUIDANCE MANUAL. CONTACT THE DIVISION OF TRAFFIC OPERATIONS FOR ADDITIONAL GUIDANCE IF NECESSARY.

② THE TRAVELED WAY IS THE PORTION OF ROADWAY FOR THE MOVEMENT OF VEHICLES, EXCLUSIVE OF THE SHOULDERS.

③ ON TWO LANE, TWO WAY ROADWAYS THAT HAVE A TOTAL PAVEMENT WIDTH (W) THAT IS 20 FT OR GREATER, BUT LESS THAN 22 FT, EDGELINE RUMBLE STRIPS ARE NOT A STANDARD APPLICATION, BUT THEY MAY BE INSTALLED. THE DIVISION OF TRAFFIC OPERATIONS IS AVAILABLE TO ASSIST WITH THE DETERMINATION OF WHETHER OR NOT TO INSTALL EDGELINE RUMBLE STRIPS ON PAVEMENT WIDTHS LESS THAN 22 FT, AS WELL AS THE DIMENSION AND PLACEMENT DETAILS OF THE RUMBLE STRIPS AND PAVEMENT STRIPING.

ON TWO LANE, TWO WAY ROADWAYS THAT HAVE A TOTAL PAVEMENT WIDTH (W) THAT IS 22 FT OR GREATER, BUT LESS THAN 34 FT, INSTALL PAVEMENT STRIPING AS DETAILED IN THE ABOVE TABLE AND IN CONJUNCTION WITH CENTERLINE AND EDGELINE RUMBLE STRIPS AS DETAILED ON TPR-120 .

ON TWO LANE, TWO WAY ROADWAYS THAT HAVE A TOTAL PAVEMENT WIDTH (W) THAT IS 34 FT OR GREATER, INSTALL PAVEMENT STRIPING AS DETAILED IN THE ABOVE TABLE AND IN CONJUCTION WITH CENTERLINE AND SHOULDER RUMBLE STRIPS AS DETAILED ON TPR-125.

④ EDGELINES MAY BE OMITTED FROM ROADWAYS WITH A TRAVELED WAY WIDTH LESS THAN 16 FEET WITH THE APPROVAL OF THE DIVISION OF TRAFFIC OPERATIONS.

⑤ EDGELINES MAY BE OMITTED ON NON-STATE PRIMARY ROUTES WITH A TRAVELED WAY WIDTH GREATER THAN OR EQUAL TO 20 FEET AND AN ADT LESS THAN 1,000.

6. EDGELINES MAY BE OMITTED, BASED ON ENGINEERING JUDGMENT, IN AREAS WHERE THE PAVEMENT EDGE IS DELINEATED BY PHYSICAL OBJECTS SUCH AS CURBS, PARKING SPACES, OR OTHER MARKINGS. EDGELINES SHOULD BE INSTALLED ON ROADWAYS WITH CURB AND GUTTER IF THE POSTED SPEED LIMIT IS 45 MPH OR GREATER.

DRAWING NOT TO SCALE

USE WITH CUR. STD. DWGS.
TPR-120 & TPR-125

KENTUCKY
DEPARTMENT OF HIGHWAYS

PAVEMENT STRIPING DETAILS FOR TWO LANE TWO WAY ROADWAYS

STANDARD DRAWING NO. TPM-175

SUBMITTED R. Allen Wolfe 02-26-20
DIRECTOR DIVISION OF TRAFFIC OPERATIONS DATE

APPROVED 02-26-20
STATE HIGHWAY ENGINEER DATE

PARALLEL ACCELERATION LANE

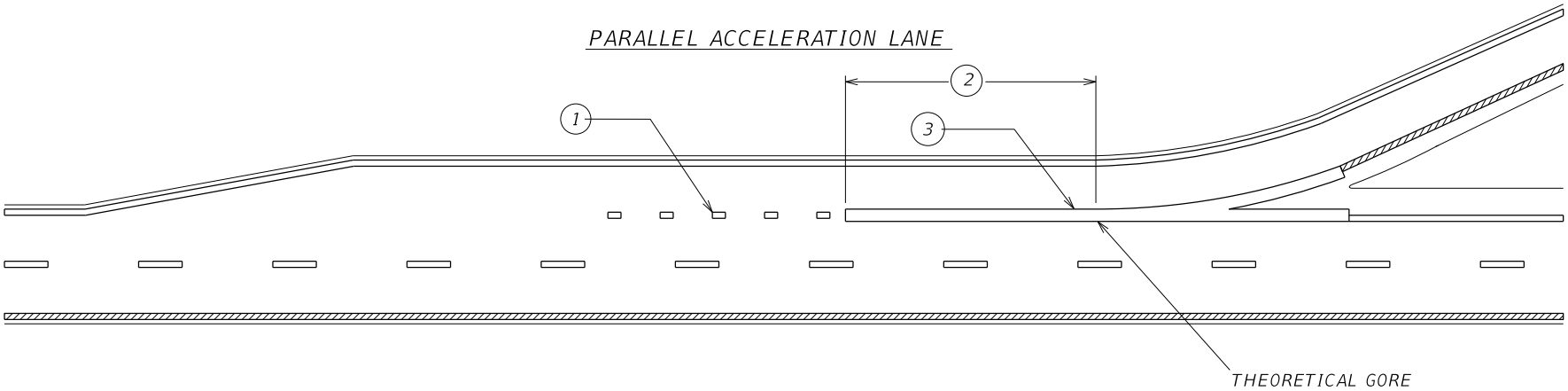

DOTTED LANE LINE DIMENSIONS:

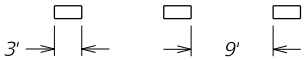

Dotted lane lines shall be normal width.

TAPERED ACCELERATION LANE

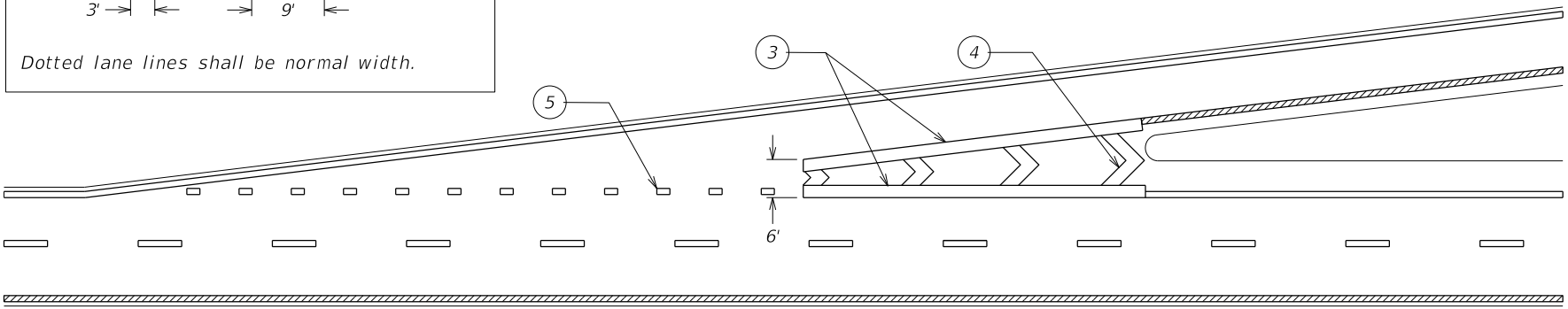

1. IN A PARALLEL ACCELERATION LANE, DOTTED LANE LINES SHALL BE INSTALLED FOR AT LEAST HALF THE LENGTH OF THE FULL-WIDTH ACCELERATION LANE PLUS TAPER MEASURED FROM THE THEORETICAL GORE. DOTTED EXTENSIONS MAY BE INSTALLED THROUGH THE TAPER IF DESIRED.
2. WIDE SOLID LINE SHALL EXTEND DOWNSTREAM FROM THE THEORETICAL GORE FOR AT LEAST 1/4 THE LENGTH OF THE FULL-WIDTH ACCELERATION LANE PLUS TAPER.
3. 12" WIDE SOLID WHITE CHANNELIZATION LINES.
4. GORE AREA CHEVRON MARKINGS ARE OPTIONAL ON ENTRANCE RAMPS. SEE TPM-204 FOR DETAILS ON CHEVRON MARKINGS.
5. IN A TAPERED ACCELERATION LANE, DOTTED EXTENSIONS MAY BE INSTALLED AS SHOWN.

DRAWING NOT TO SCALE

LEGEND

MARKINGS

WHITE

YELLOW

KENTUCKY
DEPARTMENT OF HIGHWAYS

TYPICAL ENTRANCE RAMP MARKINGS FOR INTERSTATES AND PARKWAYS

STANDARD DRAWING NO. TPM-200

SUBMITTED R. Allen Wolfe DIRECTOR, DIVISION OF TRAFFIC OPERATIONS 02-26-20 DATE

APPROVED STATE HIGHWAY ENGINEER 02-26-20 DATE

PARALLEL DECELERATION LANE

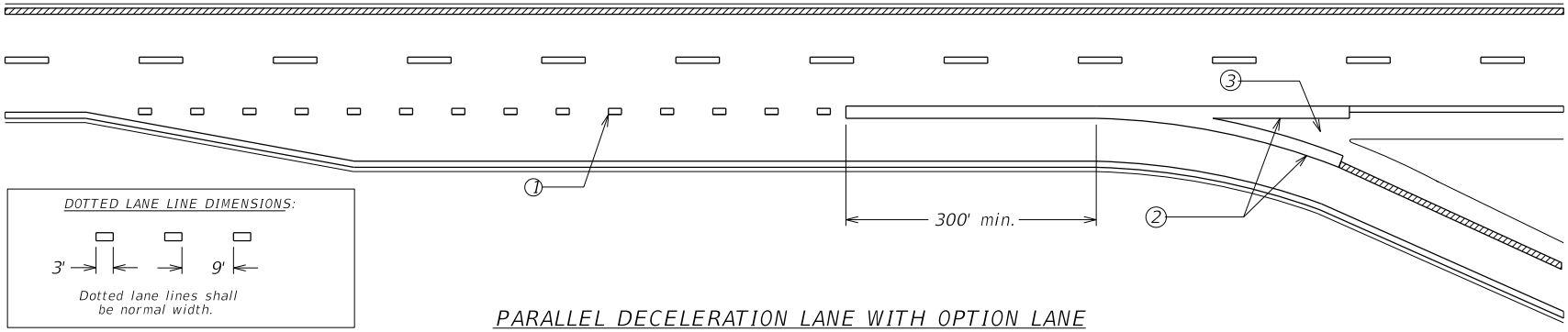

PARALLEL DECELERATION LANE WITH OPTION LANE

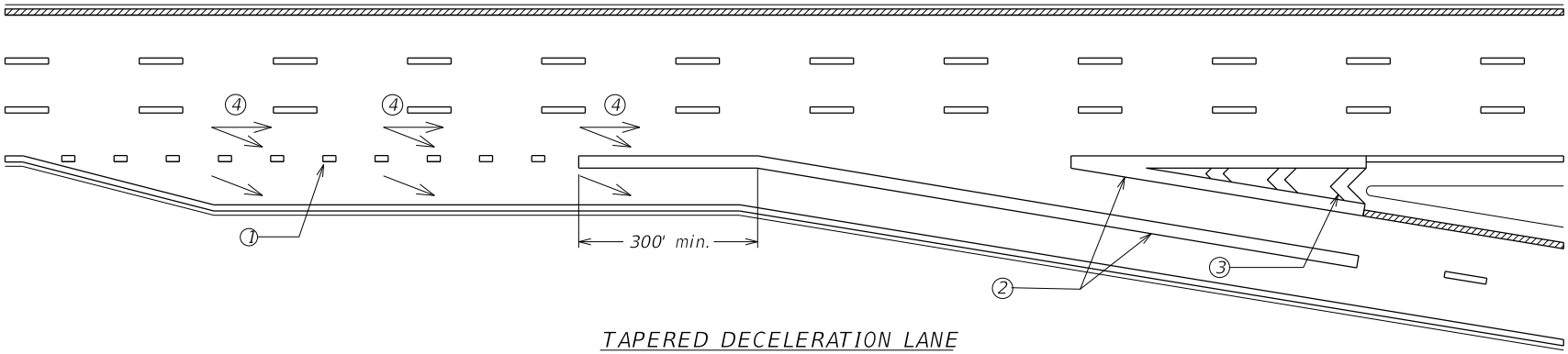

TAPERED DECELERATION LANE

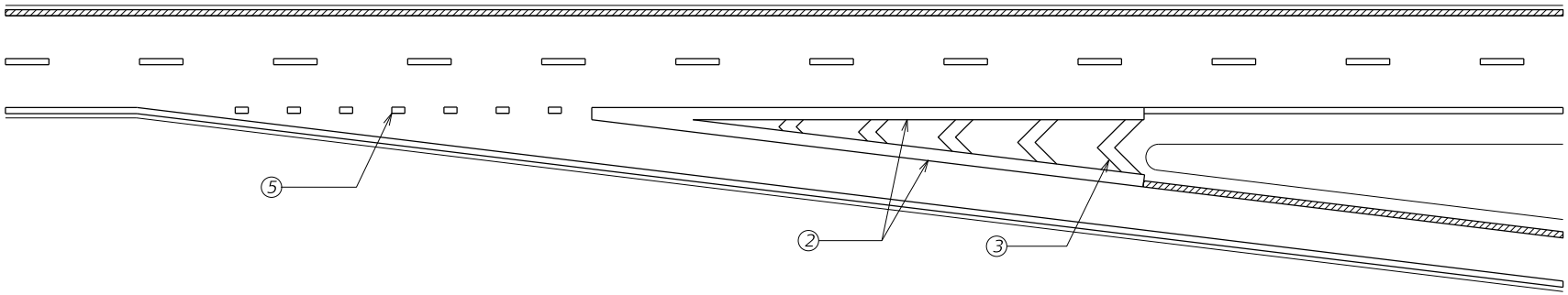

1. NORMAL WIDTH DOTTED LANE LINES SHALL BE USED ALONG THE TAPER AND FULL-WIDTH SECTION OF A PARALLEL DECELERATION LANE.
2. 12" WIDE SOLID CHANNELIZATION LINE.
3. GORE AREA CHEVRON MARKINGS SHOULD BE USED IN ACCORDANCE WITH TPM-204.
4. LANE USE ARROWS MAY BE USED WHEN THERE IS AN OPTION LANE. IF USED, A MINIMUM OF THREE ARROWS PER LANE SHOULD BE PLACED AS SHOWN AND SPACED AT APPROXIMATELY ¼ MILE.
5. FOR TAPERED DECELERATION LANES, NORMAL WIDTH DOTTED EXTENSIONS SHALL BE INSTALLED AS SHOWN.

DRAWING NOT TO SCALE

LEGEND

MARKINGS

WHITE

YELLOW

KENTUCKY
DEPARTMENT OF HIGHWAYS

TYPICAL EXIT RAMP MARKINGS FOR INTERSTATES AND PARKWAYS

STANDARD DRAWING NO. TPM-201

SUBMITTED R. Allen Wolfe DIRECTOR DIV. OF TRAFFIC OPERATIONS 02-26-20 DATE

APPROVED STATE HIGHWAY ENGINEER 02-26-20 DATE

SINGLE-LANE LANE DROP

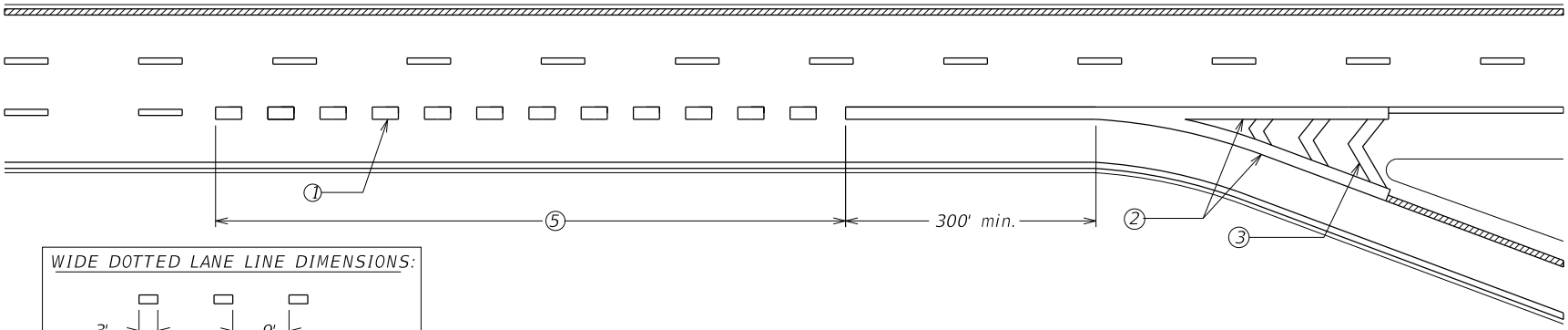

WIDE DOTTED LANE LINE DIMENSIONS:

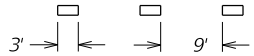

Dotted lane lines shall be twice the normal width in lane drop scenarios.

LANE DROP WITH AN OPTION LANE

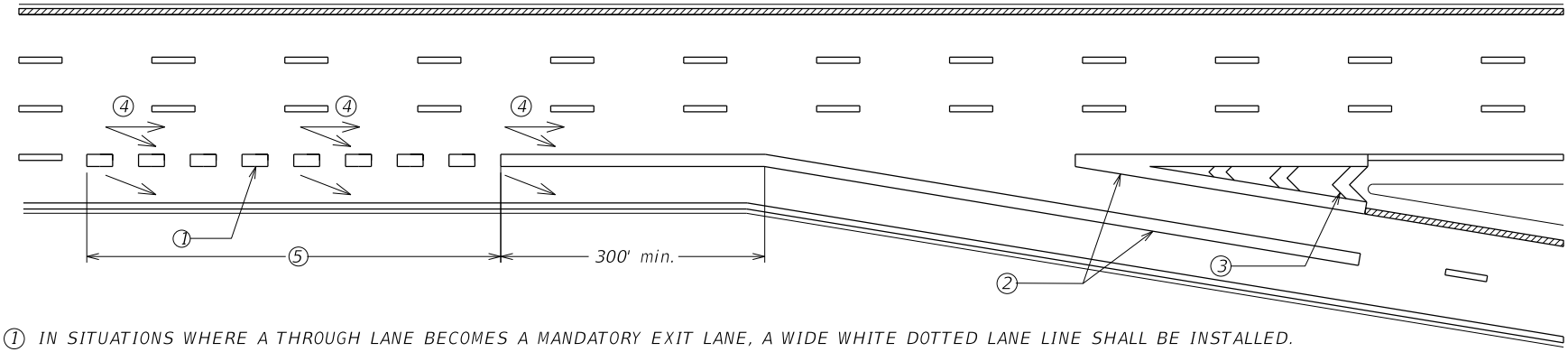

1. IN SITUATIONS WHERE A THROUGH LANE BECOMES A MANDATORY EXIT LANE, A WIDE WHITE DOTTED LANE LINE SHALL BE INSTALLED.
2. 12" WIDE SOLID CHANNELIZATION LINE.
3. GORE AREA CHEVRON MARKINGS SHALL BE USED IN LANE DROP SCENARIOS AND WHERE AN INTERSTATE OR PARKWAY SPLITS. SEE TPM-204 FOR DETAILS ON GORE AREA CHEVRON MARKINGS.
4. LANE USE ARROWS MAY BE USED WHEN THERE IS AN OPTION LANE. A MINIMUM OF THREE ARROWS PER LANE SHOULD BE PLACED AS SHOWN AND SPACED AT APPROXIMATELY ¼ MILE.
5. DOTTED LANE LINES SHOULD EXTEND BACK AN APPROXIMATE DISTANCE OF ½ MILE FROM THE THEORETICAL GORE.

ARROW DETAILS

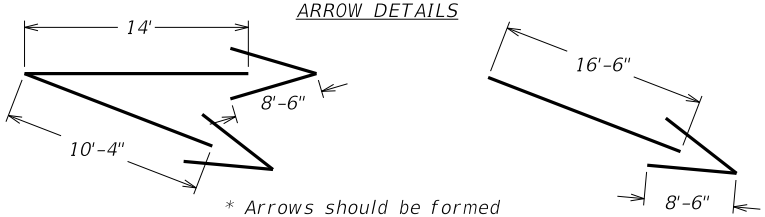

* Arrows should be formed from 12" white thermoplastic.

Page 2 of 2

DRAWING NOT TO SCALE

LEGEND

MARKINGS

WHITE

YELLOW

KENTUCKY DEPARTMENT OF HIGHWAYS

TYPICAL EXIT RAMP MARKINGS FOR INTERSTATES AND PARKWAYS

STANDARD DRAWING NO. TPM-202

SUBMITTED R. Allen Wolfe DIRECTOR, DIVISION OF TRAFFIC OPERATIONS 02-26-20 DATE

APPROVED STATE HIGHWAY ENGINEER 02-26-20 DATE

STOP LINE NOTES

1. STOP LINES SHALL BE 24" WHITE AND SHALL EXTEND ACROSS ALL APPROACH LANES.
2. STOP LINES SHOULD BE PLACED A MINIMUM OF 4' IN ADVANCE OF THE NEAREST EDGE OF A MARKED CROSSWALK. IN THE ABSENCE OF A MARKED CROSSWALK, STOP LINES SHOULD BE PLACED NO MORE THAN 30' OR NO LESS THAN 4' FROM THE NEAREST EDGE OF THE INTERSECTING ROADWAY.
3. STOP LINES IN LEFT TURN LANES MAY BE PULLED BACK SO AS NOT TO INTERFERE WITH THE WHEEL PATH OF TURNING VEHICLES.

CROSSWALK DETAIL

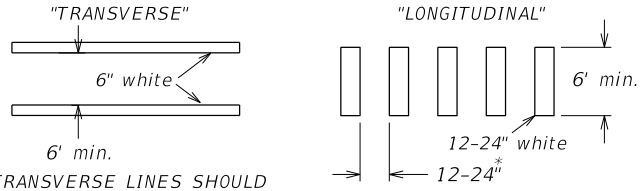

TRANSVERSE LINES SHOULD EXTEND ACROSS THE FULL WIDTH OF THE APPROACH PAVEMENT.

TRANSVERSE LINES MAY BE COMBINED WITH LONGITUDINAL LINES TO FORM A "LADDER-STYLE" CROSSWALK.

CROSSWALK BARS SHALL BE INSTALLED PARALLEL WITH ONCOMING TRAFFIC.

*SPACING OF BARS SHOULD BE MODIFIED SO AS TO AVOID TIRE PATHS OF APPROACHING VEHICLES.

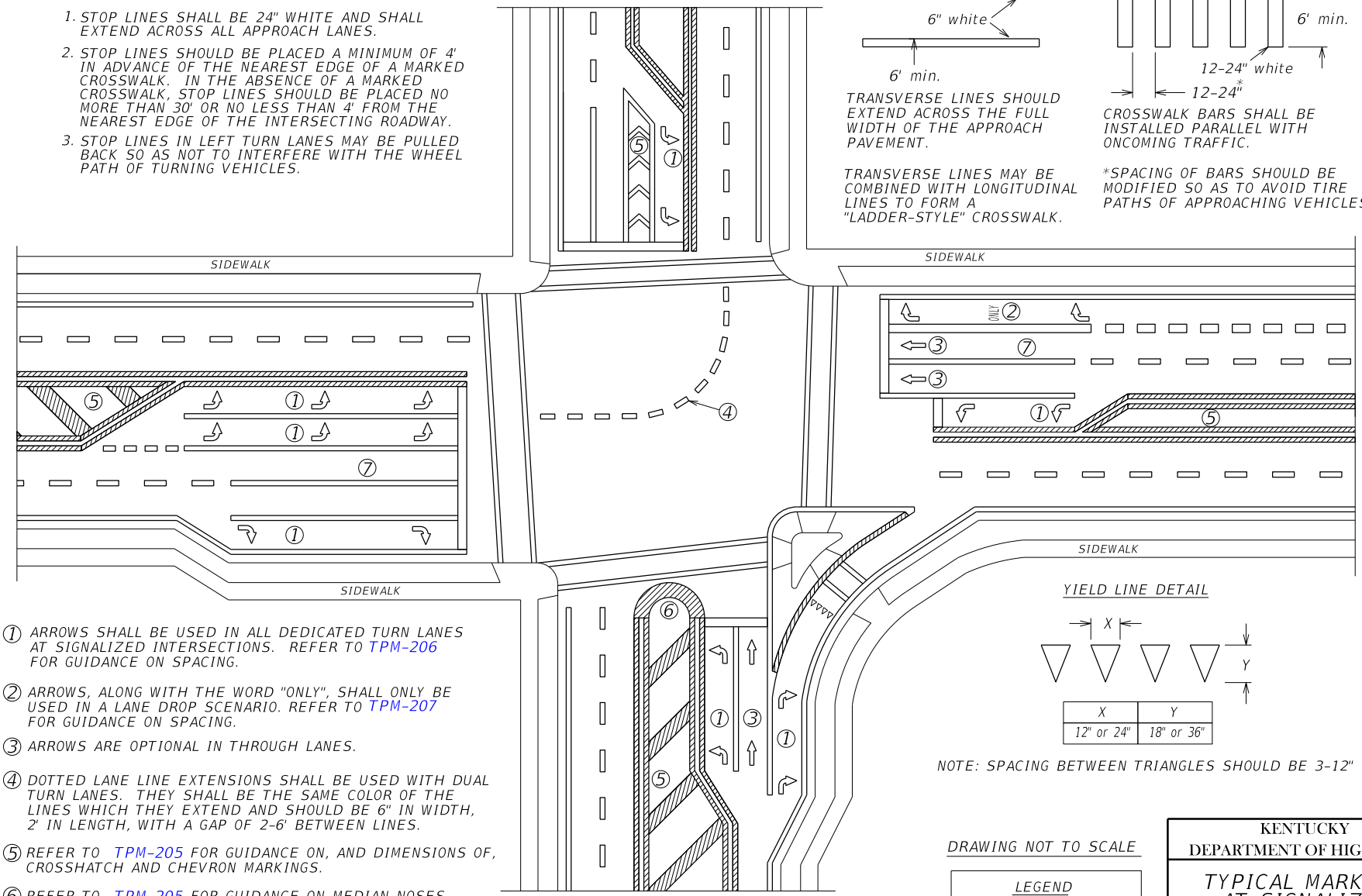

1. ARROWS SHALL BE USED IN ALL DEDICATED TURN LANES AT SIGNALIZED INTERSECTIONS. REFER TO TPM-206 FOR GUIDANCE ON SPACING.
2. ARROWS, ALONG WITH THE WORD "ONLY", SHALL ONLY BE USED IN A LANE DROP SCENARIO. REFER TO TPM-207 FOR GUIDANCE ON SPACING.
3. ARROWS ARE OPTIONAL IN THROUGH LANES.
4. DOTTED LANE LINE EXTENSIONS SHALL BE USED WITH DUAL TURN LANES. THEY SHALL BE THE SAME COLOR OF THE LINES WHICH THEY EXTEND AND SHOULD BE 6" IN WIDTH, 2' IN LENGTH, WITH A GAP OF 2-6' BETWEEN LINES.
5. REFER TO TPM-205 FOR GUIDANCE ON, AND DIMENSIONS OF, CROSSHATCH AND CHEVRON MARKINGS.
6. REFER TO TPM-205 FOR GUIDANCE ON MEDIAN NOSES.
7. SOLID LINE SEPARATING THROUGH LANES SHOULD EXTEND BACK A MINIMUM OF 50' FROM THE STOP BAR.

*NOTE: OTHER THAN LONGITUDINAL STRIPING, ALL MARKINGS SHOWN ON THIS DRAWING SHOULD BE THERMOPLASTIC.

YIELD LINE DETAIL

X	Y
12" or 24"	18" or 36"

NOTE: SPACING BETWEEN TRIANGLES SHOULD BE 3-12"

DRAWING NOT TO SCALE

LEGEND

MARKINGS

WHITE

YELLOW

KENTUCKY DEPARTMENT OF HIGHWAYS

TYPICAL MARKINGS AT SIGNALIZED INTERSECTIONS

STANDARD DRAWING NO. TPM-203

SUBMITTED R. Allen Wolfe DIRECTOR, DIVISION OF TRAFFIC OPERATIONS 02-26-20 DATE

APPROVED STATE HIGHWAY ENGINEER 02-26-20 DATE

TYPICAL EXIT RAMP GORE MARKINGS

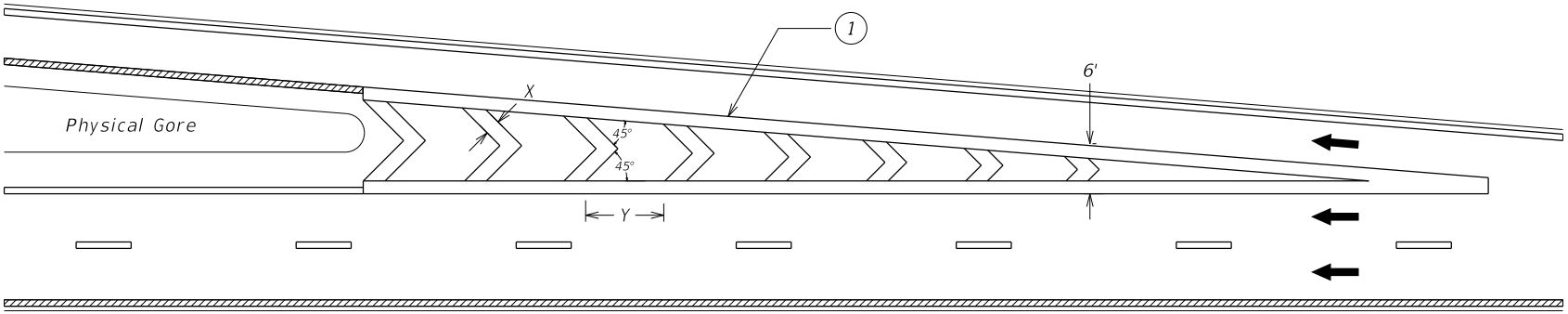

TYPICAL ENTRANCE RAMP GORE MARKINGS

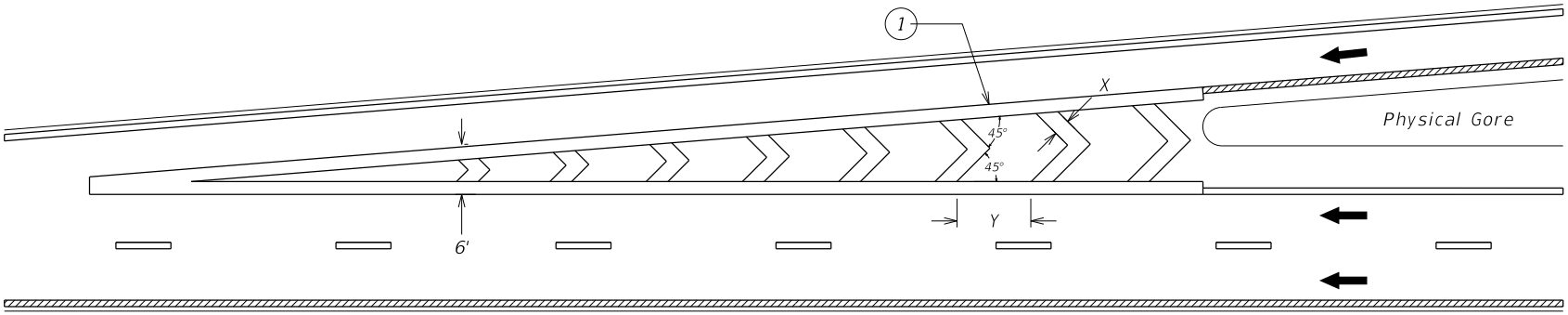

1. 12" SOLID WHITE LINE TO BE INSTALLED AS SHOWN. THIS LINE SHOULD TERMINATE AT THE PHYSICAL GORE.
2. CHEVRON MARKINGS SHOULD BEGIN WHEN THE 12" WHITE CHANNELIZING LINES ARE APPROXIMATELY 6' APART.
3. A MINIMUM OF THREE CHEVRON MARKINGS SHOULD BE USED. IF AT LEAST THREE MARKINGS WILL NOT FIT INTO THE GORE AREA, NO CHEVRON MARKINGS SHOULD BE PLACED.
4. THE MINIMUM CHEVRON MARKING WIDTH (X) SHOULD BE 2'. THE MINIMUM SPACING BETWEEN CHEVRON MARKINGS (Y) SHOULD BE 20'. THESE DIMENSIONS MAY BE INCREASED. FOR EACH ADDITIONAL 1' OF WIDTH (X), INCREASE THE SPACING (Y) BY 10'.
5. GORE AREA CHEVRON MARKINGS SHALL BE THERMOPLASTIC.

DRAWING NOT TO SCALE

LEGEND

MARKINGS

WHITE

YELLOW

KENTUCKY
DEPARTMENT OF HIGHWAYS

TYPICAL MARKINGS
FOR GORE AREAS

STANDARD DRAWING NO. TPM-204

SUBMITTED R. Allen Wolfe 02-26-20
DIRECTOR, DIVISION OF TRAFFIC OPERATIONS DATE

APPROVED 02-26-20
STATE HIGHWAY ENGINEER DATE

TYPICAL RIGHT-TURN CHANNELIZING ISLAND MARKINGS

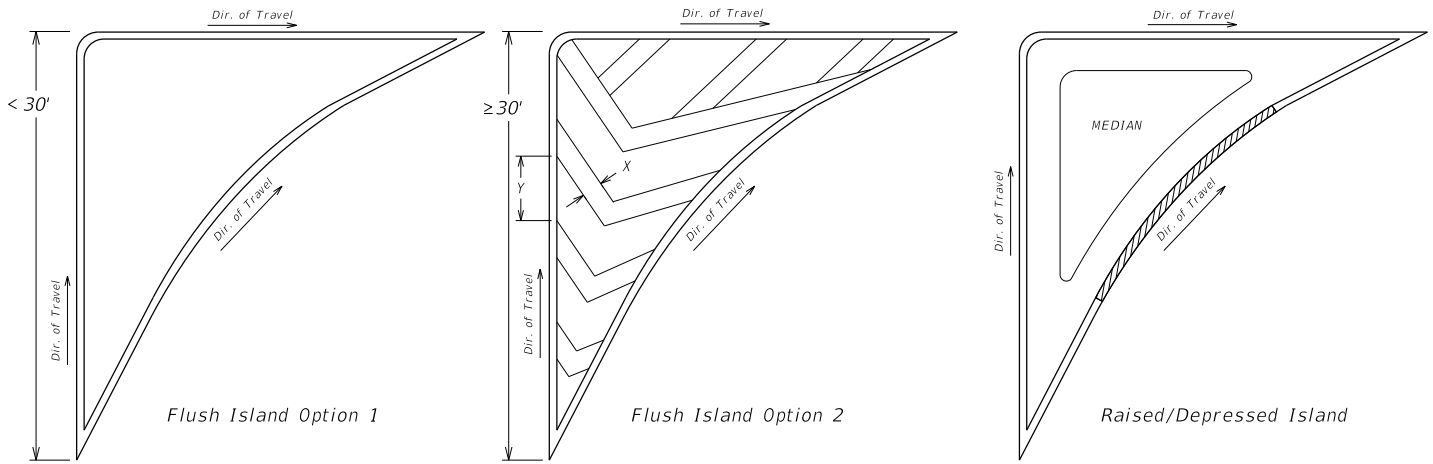

GENERAL NOTES

THE MINIMUM WIDTH (X) OF CROSSHATCH MARKINGS IS 12" FOR LOW SPEED ROADS (< 45 MPH) AND 24" FOR HIGH SPEED ROADS (≥ 45 MPH).

THE SPACE BETWEEN ADJACENT CROSSHATCH MARKINGS (Y) SHOULD BE SET AT 10 TIMES THE WIDTH (X) OF THE CROSSHATCH MARKINGS.

CROSSHATCH MARKINGS SHOULD NOT BE PLACED IN A MEDIAN LESS THAN 6' IN WIDTH.

CROSSHATCH MARKINGS SHOULD NOT BE PLACED IN AND ISLAND IF ANY SIDE OF AN ISLAND IS LESS THAN 30' IN LENGTH.

THE OUTLINE OF AN ISLAND SHOULD BE EITHER 8" OR 12".

MEDIAN NOSES MAY BE EITHER A SINGLE 12" LINE OR A SOLID SEMI-CIRCLE.

CROSSHATCH AND CHEVRON MARKINGS SHOULD BE THERMOPLASTIC.

TYPICAL LEFT-TURN LANE / FLUSH MEDIAN CROSSHATCH MARKINGS

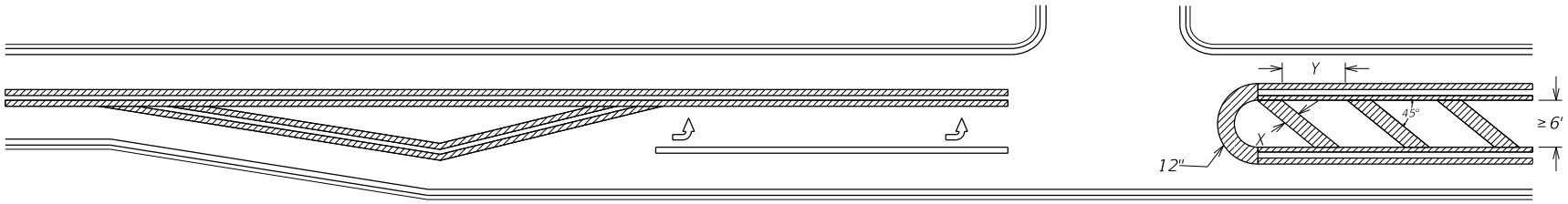

TYPICAL TWO-WAY LEFT-TURN LANE (TWLTL) TRANSITION MARKINGS

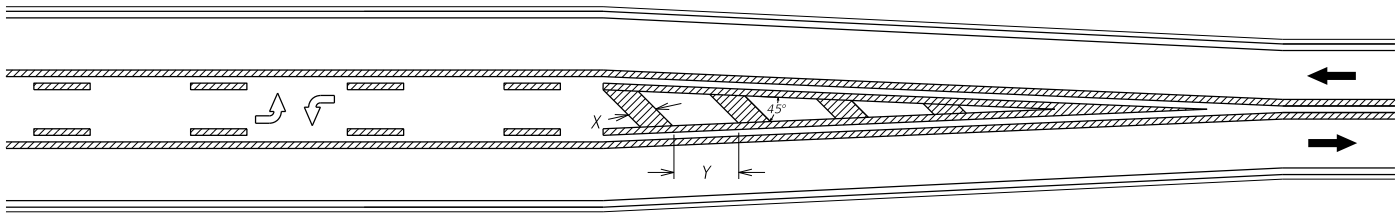

Note: Crosshatch markings shall be placed in the transition area of a TWLTL.

DRAWING NOT TO SCALE

LEGEND

MARKINGS

WHITE

YELLOW

KENTUCKY DEPARTMENT OF HIGHWAYS

TYPICAL MARKINGS FOR ISLANDS AND MEDIANS

STANDARD DRAWING NO. TPM-205

SUBMITTED _____ DIRECTOR, DIVISION OF TRAFFIC OPERATIONS — 02-26-20 DATE

APPROVED _____ STATE HIGHWAY ENGINEER — 02-26-20 DATE

SINGLE TURN LANE

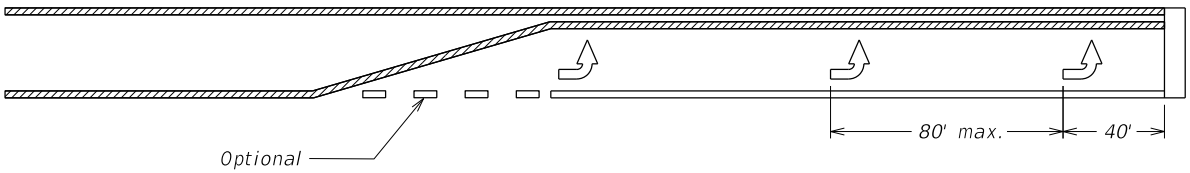

DUAL TURN LANE

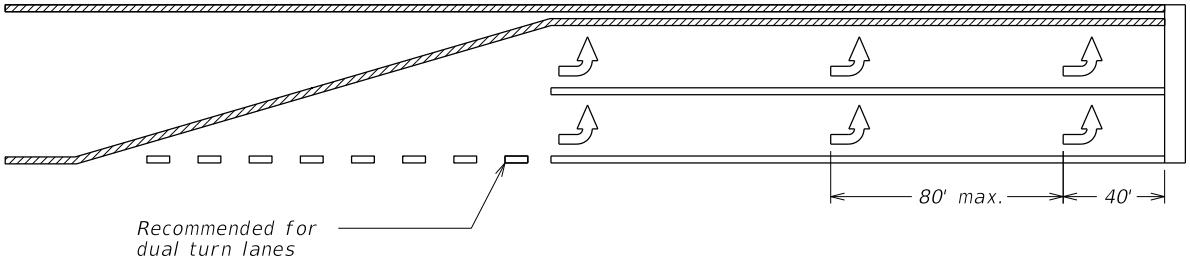

OFFSET TURN LANE

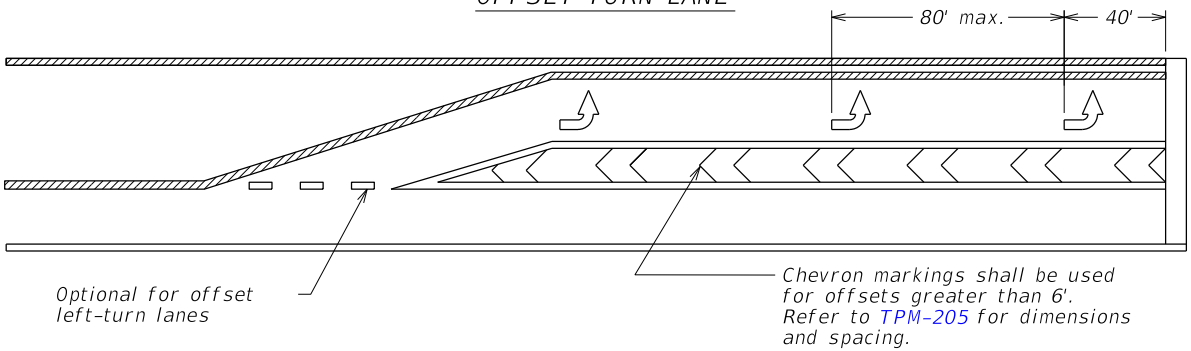

STRIPING NOTES:

- ARROWS SHALL BE USED IN ANY EXCLUSIVE TURN LANES.
- IN A SINGLE TURN LANE, DOTTED WHITE LANE LINE EXTENSIONS MAY BE USED THROUGH THE TAPER OF THE TURN LANE.
- IF USED, DOTTED WHITE LANE LINE EXTENSIONS SHALL BE NORMAL WIDTH, AND SHOULD BE 2' LONG, WITH A GAP OF 2-6' BETWEEN EACH LINE.
- IN DUAL TURN LANES, DOTTED WHITE LANE LINE EXTENSIONS SHOULD BE USED THROUGH THE TAPER OF THE TURN LANE. BOTH SOLID LINES FORMING THE TURN LANES SHALL BEGIN AT THE DOWNSTREAM END OF THE TAPER.

ARROW SPACING NOTES:

IN SINGLE-DIRECTION TURN LANES, ARROWS SHOULD BE SPACED AS FOLLOWS:

- AT LEAST TWO ARROWS SHOULD BE USED IN EACH TURN LANE. HOWEVER, IF A TURN LANE IS LESS THAN 80' IN LENGTH, THE DOWNSTREAM ARROW MAY BE ELIMINATED.
- THE FIRST UPSTREAM ARROW SHALL BE PLACED AT THE BEGINNING OF THE SOLID LINE FOR THE TURN LANE.
- THE LAST DOWNSTREAM ARROW SHOULD BE PLACED 40' FROM THE STOP BAR.
- ANY ADDITIONAL ARROWS SHOULD BE EVENLY SPACED. SPACING SHOULD NOT EXCEED 80'.
- ARROW SPACING AND NUMBER OF ARROWS MAY VARY BASED ON SITE CONDITIONS.

DOTTED EXTENSION DIMENSIONS:

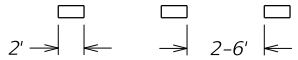

Dotted extensions shall be normal width.

DRAWING NOT TO SCALE

LEGEND

MARKINGS

WHITE

YELLOW

KENTUCKY
DEPARTMENT OF HIGHWAYS

TYPICAL MARKINGS FOR TURN LANES

STANDARD DRAWING NO. TPM-206

SUBMITTED R. Allen Wolfe DIRECTOR, DIVISION OF TRAFFIC OPERATIONS 02-26-20 DATE

APPROVED STATE HIGHWAY ENGINEER 02-26-20 DATE

LANE DROP SCENARIO

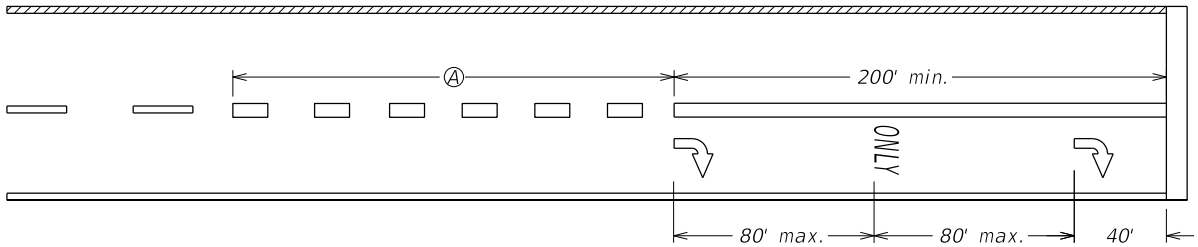

WIDE DOTTED LANE LINE DIMENSIONS:

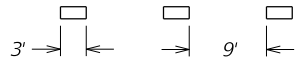

Dotted lane lines shall be twice the normal width in lane drop scenarios.

Speed Limit	Ⓐ
25	min. 125'
35	min. 245'
45	min. 540'
55	min. 660'
65	min. 780'

TWO-WAY LEFT-TURN LANE

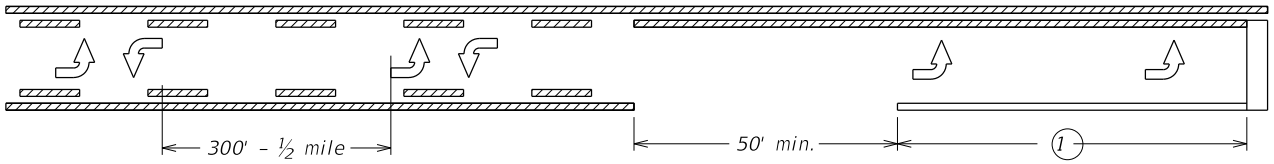

TWLTL ARROW DETAILS:

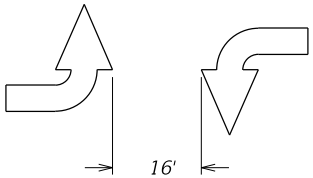

LANE DROP MARKINGS NOTES:

IN SITUATIONS WHERE A THROUGH LANE BECOMES A MANDATORY TURN LANE, THE FOLLOWING GUIDELINES APPLY:

- A WIDE SOLID LINE SHOULD EXTEND BACK A MINIMUM OF 200' FROM THE STOP BAR.
- A WIDE, DOTTED LINE SHALL EXTEND FROM THE END OF THE SOLID LINE BACK A MINIMUM OF THE DISTANCE SHOWN IN THE CHART (A). THESE LINES SHALL BE 3' LONG, WITH A SPACE OF 9' BETWEEN LINES.
- ALTERNATING ARROWS AND "ONLY" WORD MESSAGES SHALL BE USED, WITH THE FIRST AND LAST MARKING BEING AN ARROW.
- ALTERNATING ARROWS AND "ONLY" WORD MESSAGES SHOULD BE SPACED EVENLY, FOLLOWING GUIDELINES FOR ARROW SPACING. THESE SYMBOLS SHALL EXTEND BACK AT LEAST TO THE END OF THE SOLID STRIPE, BUT MAY BE EXTENDED BACK FARTHER IF ADDITIONAL GUIDANCE IS NEEDED.

TWO-WAY LEFT-TURN LANE NOTES:

IN A TWO-WAY LEFT-TURN LANE, THE FOLLOWING GUIDELINES APPLY:

1. CONTACT TRAFFIC ENGINEER FOR RECOMMENDED DISTANCE FOR LEFT TURN STORAGE AT INTERSECTIONS.
   - ONE SET OF ARROWS SHOULD BE PLACED AT OR NEAR THE BEGINNING OF THE TWO-WAY LEFT-TURN LANE.
   - ADDITIONAL SETS OF ARROWS SHOULD BE PLACED THROUGHOUT THE TWO-WAY LEFT-TURN LANE IF LEFT TURN MOVEMENTS ARE EXPECTED. THEY SHOULD BE SPACED NO LESS THAN 300' AND NO MORE THAN 1/2 MILE.
   - THE SPACING BETWEEN EACH ARROW IN A SINGLE ARROW SET SHOULD BE 16 FEET.
   - TWO-WAY LEFT-TURN LANES SHALL TERMINATE IN A DEDICATED LEFT-TURN LANE AT A SIGNALIZED INTERSECTION. THEY MAY TERMINATE IN A DEDICATED LEFT-TURN LANE AT OTHER LOCATIONS IF DEEMED NECESSARY.
   - REFER TO THE TRAFFIC OPERATIONS GUIDANCE MANUAL SECTION TO-504 FOR MORE GUIDANCE ON TWO-WAY LEFT-TURN LANES.

DRAWING NOT TO SCALE

LEGEND

MARKINGS

WHITE

YELLOW

KENTUCKY DEPARTMENT OF HIGHWAYS

TYPICAL MARKINGS FOR TURN LANES

STANDARD DRAWING NO. TPM-207

SUBMITTED R. Allen Wolfe DIRECTOR, DIVISION OF TRAFFIC OPERATIONS 02-26-20 DATE

APPROVED STATE HIGHWAY ENGINEER 02-26-20 DATE

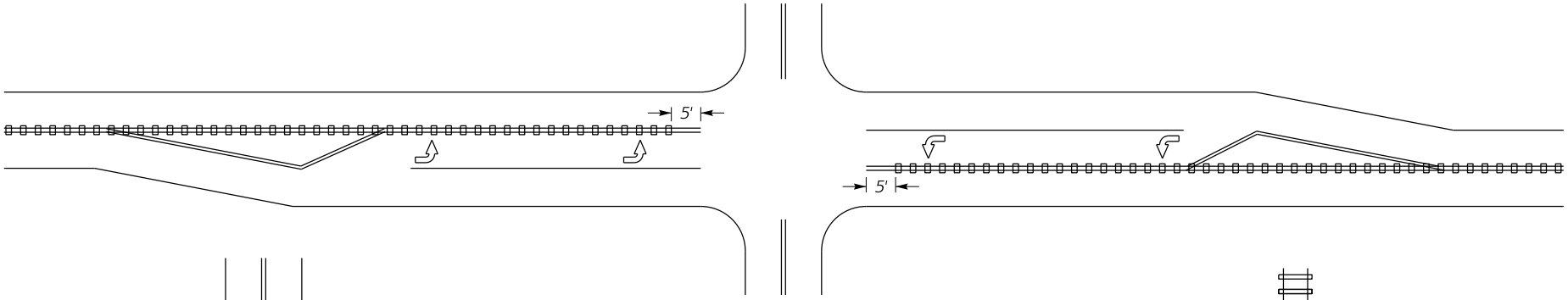

INTERSECTIONS WITH LEFT-TURN LANES (1)

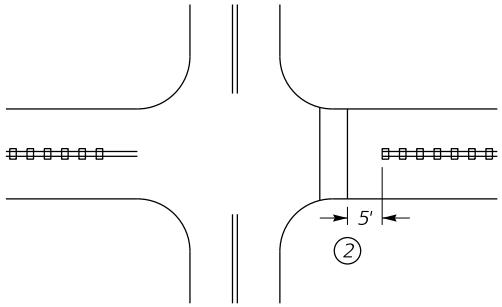

INTERSECTIONS WITHOUT LEFT-TURN LANES (1)

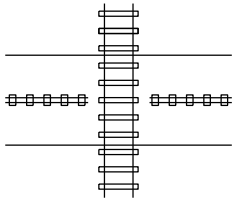

HIGHWAY-RAIL GRADE CROSSINGS (3)

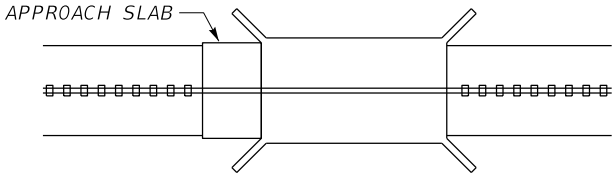

BRIDGE DECK/APPROACH SLAB (4)

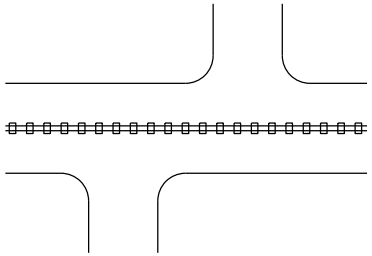

DRIVEWAYS/MINOR
COMMERCIAL ENTRANCES (5)

~ NOTES ~

(1) CENTERLINE RUMBLE STRIPS SHALL BE OMITTED THROUGH MAJOR INTERSECTIONS WITH, OR WITHOUT, LEFT-TURN LANES. OMIT THE CENTERLINE RUMBLE STRIPS APPROXIMATELY 5' IN ADVANCE OF THE AREA WHERE THE CENTERLINE PAVEMENT MARKINGS HAVE BEEN OMITTED (NORMALLY WHERE SIDE STREET RADIUS INTERSECTS MAINLINE).

(2) CENTERLINE RUMBLE STRIPS SHALL NOT BE INSTALLED THROUGH MARKED CROSSWALKS. OMIT THE CENTERLINE RUMBLE STRIPS APPROXIMATELY 5' IN ADVANCE OF MARKED CROSSWALKS.

(3) CENTERLINE RUMBLE STRIPS SHALL NOT BE INSTALLED ACROSS HIGHWAY-RAIL GRADE CROSSINGS.

(4) CENTERLINE RUMBLE STRIPS SHALL NOT BE INSTALLED ON BRIDGE DECKS OR APPROACH SLABS.

(5) CENTERLINE RUMBLE STRIPS SHALL BE INSTALLED THROUGH DRIVEWAYS & MINOR COMMERCIAL ENTRANCES.

6. CENTERLINE RUMBLE STRIPS SHOULD BE OMITTED WHERE THE POSTED SPEED LIMIT IS 45 MPH OR LESS, OR WHERE LANE WIDTHS ARE LESS THAN 11 FT.

BID ITEM AND UNIT TO BID
CENTERLINE RUMBLE STRIPS LF

DRAWING NOT TO SCALE

USE WITH CUR. STD. DWGS.
TPR-105, TPR-110, TPR-120,
AND TPR-125

KENTUCKY
DEPARTMENT OF HIGHWAYS

CENTERLINE
RUMBLE STRIPS
PLACEMENT DETAILS

STANDARD DRAWING NO. TPR-100

SUBMITTED R. Allen Wolfe 02-26-20
DIRECTOR, DIVISION OF TRAFFIC OPERATIONS DATE

APPROVED 02-26-20
STATE HIGHWAY ENGINEER DATE

PLAN VIEW

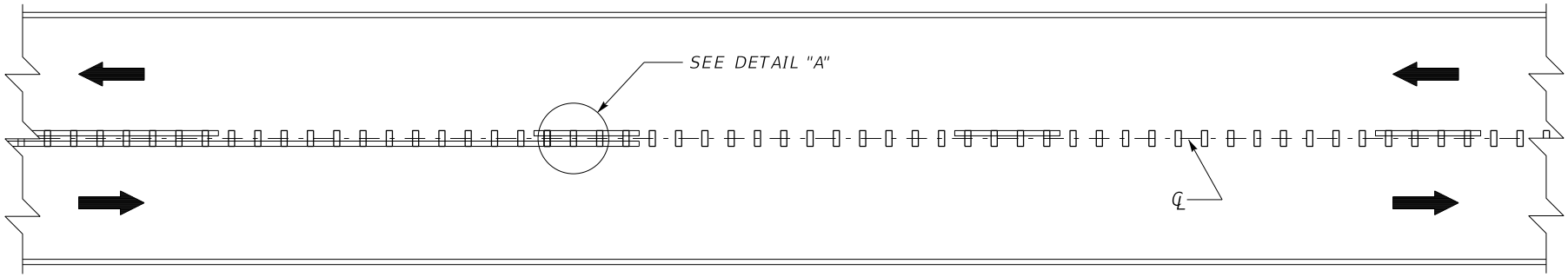

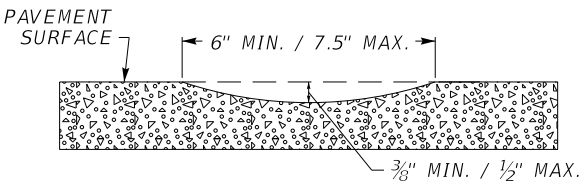

SECTION A-A

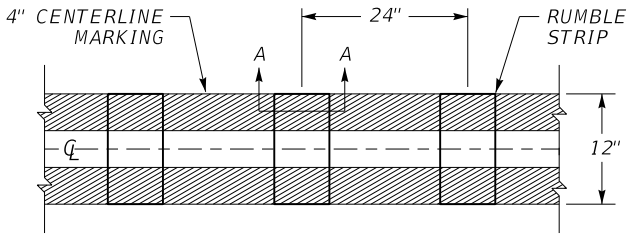

DETAIL "A"

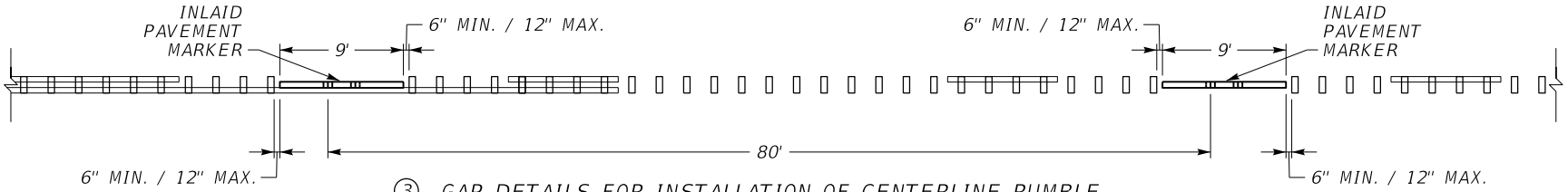

(3) GAP DETAILS FOR INSTALLATION OF CENTERLINE RUMBLE STRIPS IN CONJUNCTION WITH INLAID PAVEMENT MARKERS

DRAWING NOT TO SCALE

USE WITH CUR. STD. DWGS. TPR-100, TPR-120, AND TPR-125

~ NOTES ~

1. DISTANCES SHOWN ARE APPROXIMATE. MAINTAIN RUMBLE STRIP DIMENSIONS AND SPACING AS MUCH AS POSSIBLE.
2. CENTERLINE RUMBLE STRIPS SHALL BE INSTALLED IN LINE WITH THE CENTER OF THE ROADWAY AS MUCH AS POSSIBLE.
3. (3) FOR ROADWAYS WHERE BOTH INLAID PAVEMENT MARKERS AND CENTERLINE RUMBLE STRIPS ARE TO BE INSTALLED, DISCONTINUE THE CENTERLINE RUMBLE STRIPS 6" MIN. / 12" MAX. BEFORE AND AFTER THE GROOVE FOR EACH INLAID PAVEMENT MARKER. INSTALL AS MANY RUMBLE STRIPS AS POSSIBLE BETWEEN ADJACENT PAVEMENT MARKERS WHILE MAINTAINING THE 24" CYCLE.
4. DO NOT INSTALL CENTERLINE RUMBLE STRIPS IN AREAS INDICATED ON TPR-100.
5. CENTERLINE RUMBLE STRIPS SHOULD BE OMITTED WHERE THE POSTED SPEED LIMIT IS 45 MPH OR LESS, OR WHERE LANE WIDTHS ARE LESS THAN 11 FT.

BID ITEM AND UNIT TO BID
CENTERLINE RUMBLE STRIPS LF

KENTUCKY
DEPARTMENT OF HIGHWAYS

CENTERLINE
RUMBLE STRIPS
4 INCH STRIPING

STANDARD DRAWING NO. TPR-105

SUBMITTED R. Allen Wolfe 02-26-20
DIRECTOR, DIVISION OF TRAFFIC OPERATIONS DATE

APPROVED 02-26-20
STATE HIGHWAY ENGINEER DATE

PLAN VIEW

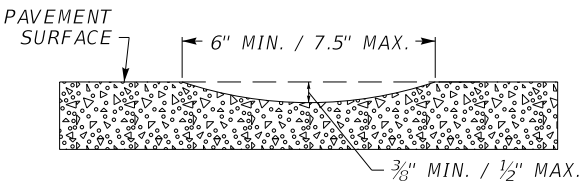

SECTION A-A

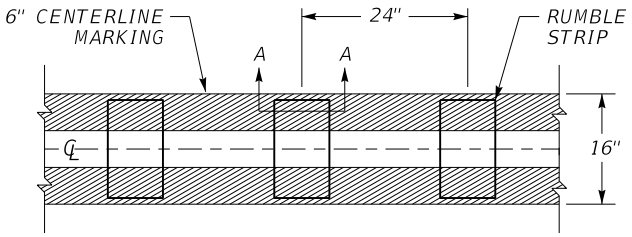

DETAIL "A"

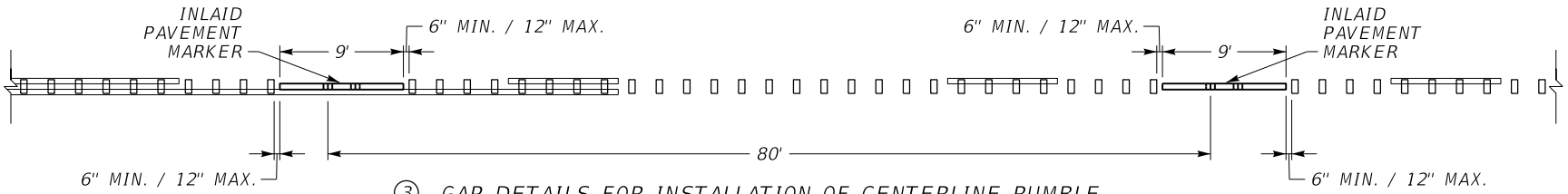

(3) GAP DETAILS FOR INSTALLATION OF CENTERLINE RUMBLE STRIPS IN CONJUNCTION WITH INLAID PAVEMENT MARKERS

DRAWING NOT TO SCALE

USE WITH CUR. STD. DWGS. TPR-100, TPR-120, AND TPR-125

~ NOTES ~

1. DISTANCES SHOWN ARE APPROXIMATE. MAINTAIN RUMBLE STRIP DIMENSIONS AND SPACING AS MUCH AS POSSIBLE.
2. CENTERLINE RUMBLE STRIPS SHALL BE INSTALLED IN LINE WITH THE CENTER OF THE ROADWAY AS MUCH AS POSSIBLE.
3. (3) FOR ROADWAYS WHERE BOTH INLAID PAVEMENT MARKERS AND CENTERLINE RUMBLE STRIPS ARE TO BE INSTALLED, DISCONTINUE THE CENTERLINE RUMBLE STRIPS 6" MIN. / 12" MAX. BEFORE AND AFTER THE GROOVE FOR EACH INLAID PAVEMENT MARKER. INSTALL AS MANY RUMBLE STRIPS AS POSSIBLE BETWEEN ADJACENT PAVEMENT MARKERS WHILE MAINTAINING THE 24" CYCLE.
4. DO NOT INSTALL CENTERLINE RUMBLE STRIPS IN AREAS INDICATED ON TPR-100.
5. CENTERLINE RUMBLE STRIPS SHOULD BE OMITTED WHERE THE POSTED SPEED LIMIT IS 45 MPH OR LESS, OR WHERE LANE WIDTHS ARE LESS THAN 11 FT.

BID ITEM AND UNIT TO BID
CENTERLINE RUMBLE STRIPS LF

KENTUCKY
DEPARTMENT OF HIGHWAYS

CENTERLINE
RUMBLE STRIPS
6 INCH STRIPING

STANDARD DRAWING NO. TPR-110

SUBMITTED R. Allen Wolfe DIRECTOR, DIVISION OF TRAFFIC OPERATIONS 02-26-20 DATE

APPROVED STATE HIGHWAY ENGINEER 02-26-20 DATE

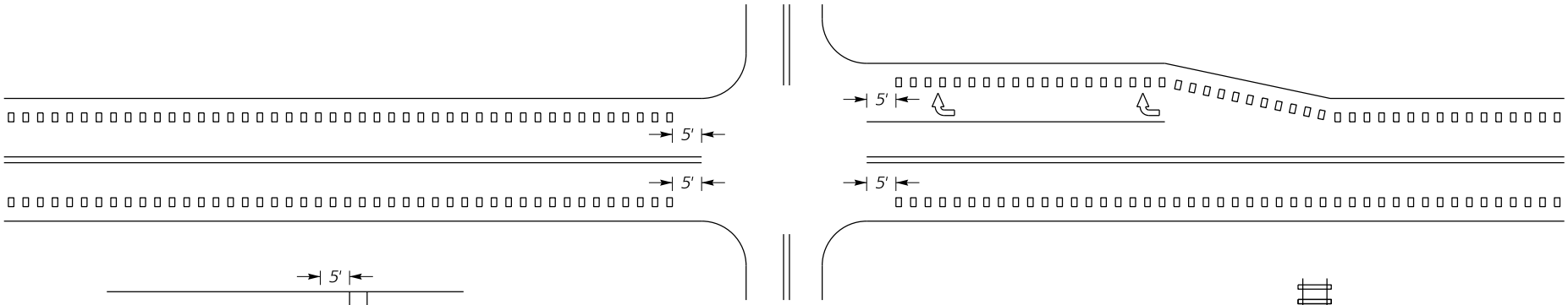

INTERSECTIONS WITH OR WITHOUT (1)
RIGHT TURN LANES

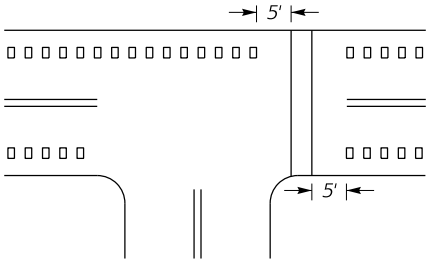

MARKED CROSSWALK (2)

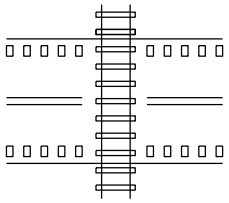

HIGHWAY-RAIL GRADE CROSSINGS (3)

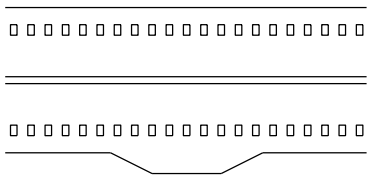

MAILBOX TURNOUTS (6)

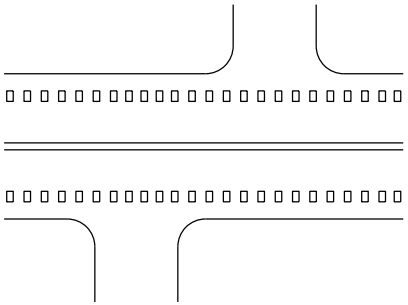

DRIVEWAYS/MINOR
COMMERCIAL ENTRANCES (5)

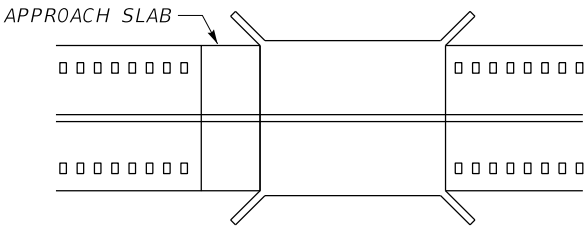

BRIDGE DECK/APPROACH SLAB (4)

~ NOTES ~

(1) RUMBLE STRIPS SHALL BE OMITTED THROUGH MAJOR INTERSECTIONS WITH, OR WITHOUT, RIGHT-TURN LANES. OMIT RUMBLE STRIPS APPROXIMATELY 5' IN ADVANCE OF THE AREA WHERE EDGELINE PAVEMENT MARKINGS HAVE BEEN OMITTED (NORMALLY WHERE SIDE STREET RADIUS INTERSECTS MAINLINE).

(2) RUMBLE STRIPS SHALL NOT BE INSTALLED THROUGH MARKED CROSSWALKS. OMIT RUMBLE STRIPS APPROXIMATELY 5' IN ADVANCE OF MARKED CROSSWALKS.

(3) RUMBLE STRIPS SHALL NOT BE INSTALLED ACROSS HIGHWAY-RAIL GRADE CROSSINGS.

(4) RUMBLE STRIPS SHALL NOT BE INSTALLED ON BRIDGE DECKS OR APPROACH SLABS.

(5) RUMBLE STRIPS SHALL BE INSTALLED THROUGH DRIVEWAYS & MINOR COMMERCIAL ENTRANCES.

(6) RUMBLE STRIPS SHALL BE INSTALLED THROUGH MAILBOX TURNOUTS.

7. RUMBLE STRIPS SHOULD BE OMITTED WHERE THE POSTED SPEED LIMIT IS 45 MPH OR LESS.

BID ITEMS AND UNIT TO BID

EDGELINE RUMBLE STRIPS	LF
SHOULDER RUMBLE STRIPS	LF

DRAWING NOT TO SCALE

USE WITH CUR. STD. DWGS.
TPR-120, TPR-125, AND
TPR-130

KENTUCKY
DEPARTMENT OF HIGHWAYS

SHOULDER & EDGELINE
RUMBLE STRIP
PLACEMENT DETAILS

STANDARD DRAWING NO. TPR-115

SUBMITTED R. Allen Wolfe 02-26-20
DIRECTOR, DIVISION OF TRAFFIC OPERATIONS DATE

APPROVED 02-26-20
STATE HIGHWAY ENGINEER DATE

PAVEMENT WIDTH (W) ②	TYPES OF RUMBLE STRIPS TO INSTALL ⑦	LANE WIDTH (Y) ③	SHOULDER WIDTH (Z) ④	LENGTH OF EDGELINE RUMBLE (X) ⑥
22'	INSTALL ONLY EDGELINE RUMBLE STRIPS	10'	1'	8"
23'		10'	1.5'	8"
24'		10.5'	1.5'	8"
25'	INSTALL BOTH EDGELINE AND CENTERLINE RUMBLE STRIPS	11'	1.5'	8"
26'		11'	2'	8"
27'		11.5'	2'	8"
28'		12'	2'	8"
29'		12'	2.5'	8"
30'		12'	3'	8"
31'		12'	3.5'	8"
32'		12'	4'	8"
33'		12'	4.5'	8"
>33'	REFER TO TPR-125			

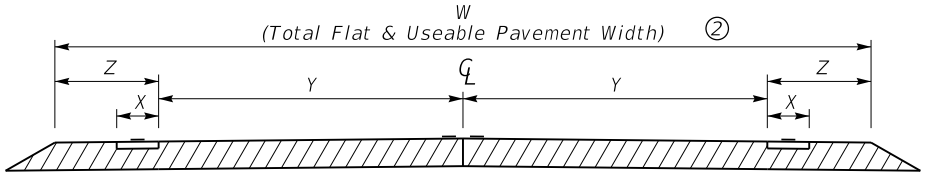

PAVEMENT CROSS-SECTION

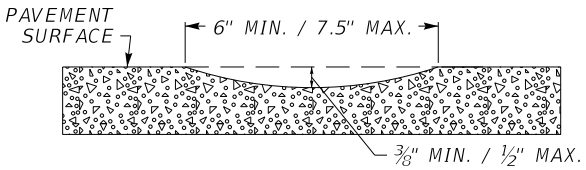

SECTION A-A

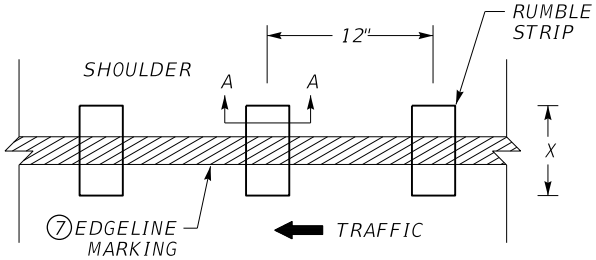

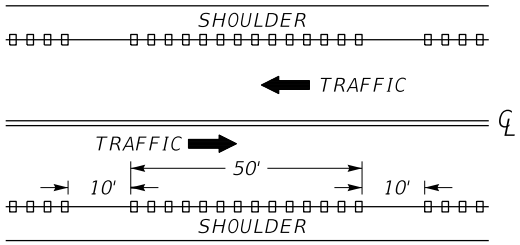

BICYCLE GAPS ⑧

~ NOTES ~

APPLICATION OF THE TABLE ABOVE: THE TOTAL PAVEMENT WIDTH (W) IS THE STARTING POINT IN USING THE TABLE. THE TOTAL PAVEMENT WIDTH IS TO BE USED TO DETERMINE THE TYPE(S) OF RUMBLE STRIPS TO INSTALL AND THE RECOMMENDED LANE WIDTH (Y) AND SHOULDER WIDTH (Z).

1. EDGELINE RUMBLE STRIPS, AND CENTERLINE RUMBLE STRIPS WHEN APPLICABLE, SHOULD BE INSTALLED TO CREATE THE LANE AND SHOULDER WIDTHS SHOWN ABOVE, UNLESS THERE IS A REASON THAT SUPPORTS A CHANGE IN DIMENSION. FOR EXAMPLE, IF THE EXISTING LANE WIDTH IS NARROWER THAN THE LANE WIDTH PROPOSED IN THIS DRAWING AND THE EXISTING SHOULDER PAVEMENT DEPTH IS NOT SUITABLE TO BE CONVERTED INTO A PORTION OF THE PROPOSED LANE WIDTH, THEN THE EXISTING LANE AND SHOULDER WIDTHS SHOULD BE USED INSTEAD OF THE LANE AND SHOULDER WIDTHS PROPOSED IN THIS DRAWING.

② PAVEMENT WIDTH (W) IS THE TOTAL WIDTH OF PAVEMENT THAT IS FLAT AND USEABLE FOR DRIVING. WHEN MEASURING THE PAVEMENT WIDTH (W), DO NOT INCLUDE THE WIDTH OF ANY PAVEMENT THAT IS NOT FLAT AND USEABLE, SUCH AS PAVEMENT WEDGES.

③ LANE WIDTH (Y) TO BE MEASURED FROM CENTER OF ROAD TO LANE SIDE EDGE OF THE EDGELINE RUMBLE STRIP.

④ PAVED SHOULDER WIDTH (Z) TO BE MEASURED FROM LANE SIDE EDGE OF THE EDGELINE RUMBLE STRIP TO OUTSIDE EDGE OF FLAT & USEABLE PAVEMENT.

5. DIMENSIONS SHOWN ARE APPROXIMATE. MAINTAIN RUMBLE STRIP DIMENSIONS AND SPACING AS MUCH AS POSSIBLE. IF THE TYPICAL SECTION SHOWS A LANE WIDTH (Y) AND/OR SHOULDER WIDTH (Z) THAT DIFFERS FROM THE WIDTHS LISTED IN THIS DRAWING, THE ENGINEER SHALL DETERMINE THE LANE WIDTH (Y) AND/OR SHOULDER WIDTH (Z) AT THE TIME OF CONSTRUCTION.
NOTE: CENTERLINE RUMBLE STRIPS SHOULD BE OMITTED IF THE DECISION IS TO INSTALL A LANE WIDTH (Y) THAT IS LESS THAN 11 FT.

⑥ RUMBLE LENGTH (X) MAY BE MODIFIED AS THE ENGINEER DIRECTS, IF THE SHOULDER WIDTH (Z) IS EQUAL TO OR LESS THAN THE PROPOSED RUMBLE LENGTH (X).

⑦ PLACE THE EDGELINE MARKING IN THE CENTER OF THE RUMBLE STRIP. ON NON-STATE PRIMARY ROUTES WITH LESS THAN 1000 ADT, THE EDGELINE MARKING MAY BE OMITTED, LEAVING THE RUMBLE STRIP AS THE ONLY COMPONENT INSTALLED.

⑧ ALL EDGELINE RUMBLE STRIPS ALONG SHOULDERS THAT ARE 3' OR WIDER SHOULD INCLUDE BICYCLE GAPS AS DETAILED.

9. RUMBLE STRIPS SHOULD BE OMITTED WHERE THE POSTED SPEED LIMIT IS 45 MPH OR LESS.

BID ITEM AND UNIT TO BID
EDGELINE RUMBLE STRIPS LF

DRAWING NOT TO SCALE

USE WITH CUR. STD. DWGS. TPR-100, TPR-105, TPR-110, AND TPR-115

KENTUCKY
DEPARTMENT OF HIGHWAYS

EDGELINE RUMBLE STRIP DETAILS
TWO LANE ROADWAYS

STANDARD DRAWING NO. TPR-120

SUBMITTED R. Allen Wolfe 02-26-20
DIRECTOR DIVISION OF TRAFFIC OPERATIONS DATE

APPROVED 02-26-20
STATE HIGHWAY ENGINEER DATE

PAVEMENT WIDTH (W) ②	TYPES OF RUMBLE STRIPS TO INSTALL	LANE WIDTH (Y) ③	SHOULDER WIDTH (Z) ④	SHOULDER RUMBLE LENGTH (X) ⑥	SHOULDER RUMBLE OFFSET ⑥
<34'	REFER TO TPR-120				
34'	INSTALL BOTH SHOULDER AND CENTERLINE RUMBLE STRIPS	12'	5'	8"	6"
35'		12'	5.5'	8"	6"
36'		12'	6'	8"	6"
37'		12'	6.5'	12"	12"
38'		12'	7'	12"	12"
39'		12'	7.5'	12"	12"
>=40'		12'	>=8'	16"	12"

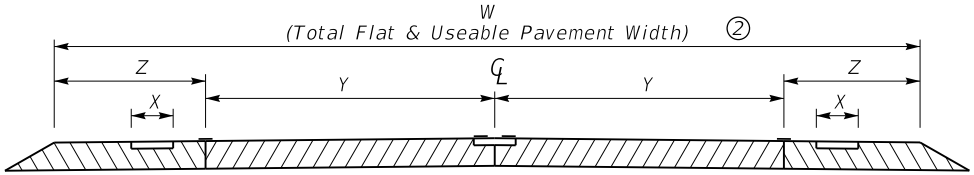

PAVEMENT CROSS-SECTION

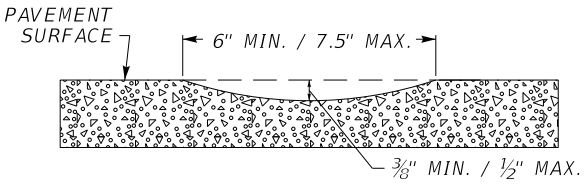

SECTION A-A

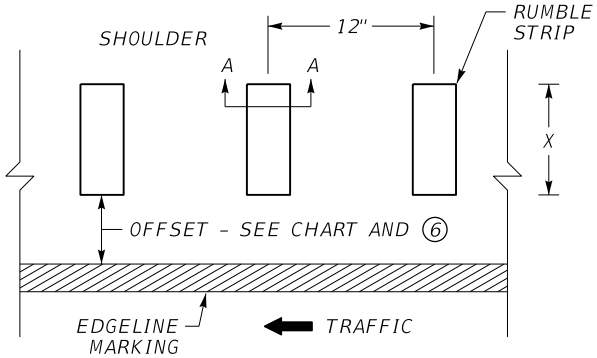

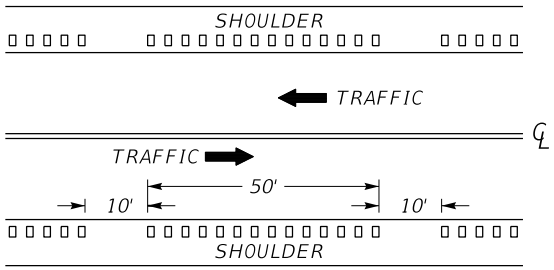

BICYCLE GAPS ⑦

~ NOTES ~

APPLICATION OF THE TABLE ABOVE: THE TOTAL PAVEMENT WIDTH (W) IS THE STARTING POINT IN USING THE TABLE. THE TOTAL PAVEMENT WIDTH IS TO BE USED TO DETERMINE THE TYPE(S) OF RUMBLE STRIPS TO INSTALL AND THE RECOMMENDED LANE WIDTH (Y) AND SHOULDER WIDTH (Z).

1. SHOULDER AND CENTERLINE RUMBLE STRIPS SHOULD BE INSTALLED TO CREATE THE LANE AND SHOULDER WIDTHS SHOWN ABOVE, UNLESS THERE IS A REASON THAT SUPPORTS A CHANGE IN DIMENSION. FOR EXAMPLE, IF THE EXISTING LANE WIDTH IS NARROWER THAN THE LANE WIDTH PROPOSED IN THIS DRAWING AND THE EXISTING SHOULDER PAVEMENT DEPTH IS NOT SUITABLE TO BE CONVERTED INTO A PORTION OF THE PROPOSED LANE WIDTH, THEN THE EXISTING LANE AND SHOULDER WIDTHS SHOULD BE USED INSTEAD OF THE LANE AND SHOULDER WIDTHS PROPOSED IN THIS DRAWING.

② PAVEMENT WIDTH (W) IS THE TOTAL WIDTH OF PAVEMENT THAT IS FLAT AND USEABLE FOR DRIVING. WHEN MEASURING THE PAVEMENT WIDTH (W) DO NOT INCLUDE THE WIDTH OF ANY PAVEMENT THAT IS NOT FLAT AND USEABLE, SUCH AS PAVEMENT WEDGES.

③ LANE WIDTH (Y) TO BE MEASURED FROM CENTER OF ROAD TO CENTER OF EDGELINE STRIPE.

④ PAVED SHOULDER WIDTH (Z) TO BE MEASURED FROM CENTER OF EDGELINE STRIPE TO OUTSIDE EDGE OF FLAT & USEABLE PAVEMENT.

5. DIMENSIONS SHOWN ARE APPROXIMATE. MAINTAIN RUMBLE STRIP DIMENSIONS AND SPACING AS MUCH AS POSSIBLE. IF THE TYPICAL SECTION SHOWS A LANE WIDTH (Y) AND/OR SHOULDER WIDTH (Z) THAT DIFFERS FROM THE WIDTHS LISTED IN THIS DRAWING, THE ENGINEER SHALL DETERMINE THE LANE WIDTH (Y) AND/OR SHOULDER WIDTH (Z) AT THE TIME OF CONSTRUCTION.
NOTE: CENTERLINE RUMBLE STRIPS SHOULD BE OMITTED IF THE DECISION IS TO INSTALL A LANE WIDTH (Y) THAT IS LESS THAN 11 FT.

⑥ RUMBLE LENGTH (X) AND/OR OFFSET DISTANCE MAY BE MODIFIED AS THE ENGINEER DIRECTS.

⑦ ALL SHOULDER RUMBLE STRIPS SHOULD INCLUDE BICYCLE GAPS AS DETAILED.

8. RUMBLE STRIPS SHOULD BE OMITTED WHERE THE POSTED SPEED LIMIT IS 45 MPH OR LESS.

BID ITEM AND UNIT TO BID
SHOULDER RUMBLE STRIPS LF

DRAWING NOT TO SCALE

USE WITH CUR. STD. DWGS. TPR-100, TPR-105, TPR-110, AND TPR-115

KENTUCKY
DEPARTMENT OF HIGHWAYS

SHOULDER RUMBLE STRIP DETAILS
TWO LANE ROADWAYS

STANDARD DRAWING NO. TPR-125

SUBMITTED R. Allen Wolfe 02-26-20
DIRECTOR DIVISION OF TRAFFIC OPERATIONS DATE

APPROVED 02-26-20
STATE HIGHWAY ENGINEER DATE

PAVEMENT CROSS-SECTION
(WHEN ELRS ARE SPECIFIED)

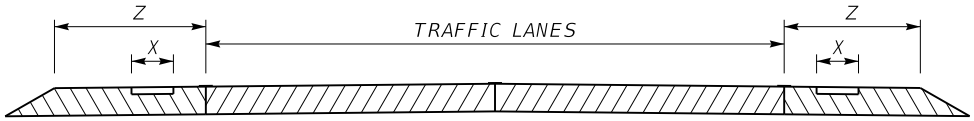

PAVEMENT CROSS-SECTION
(WHEN SRS ARE SPECIFIED)

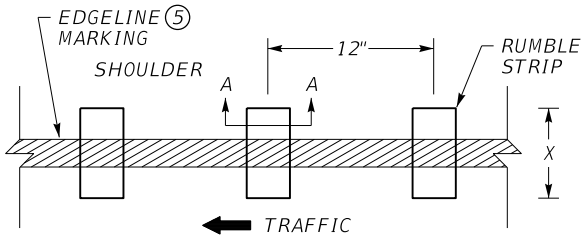

ELRS DETAILS

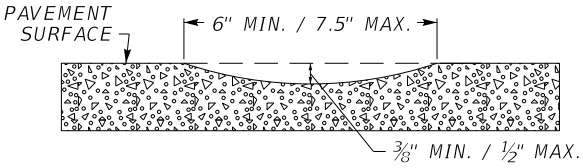

SECTION A-A

SHOULDER WIDTH (Z) 2	RUMBLE TYPE 1	RUMBLE LENGTH (X) 3	OFFSET 3
>=1'	ELRS	8"	N/A
2'	ELRS or SRS	8"	ELRS-N/A SRS-6"
3'	ELRS or SRS 6	8"	ELRS-N/A SRS-6"
4'	ELRS or SRS 6	8"	ELRS-N/A SRS-6"
5'	SRS 6	8"	6"
6'	SRS 6	8"	6"
7'	SRS 6	12"	12"
>=8'	SRS 6	16"	12"

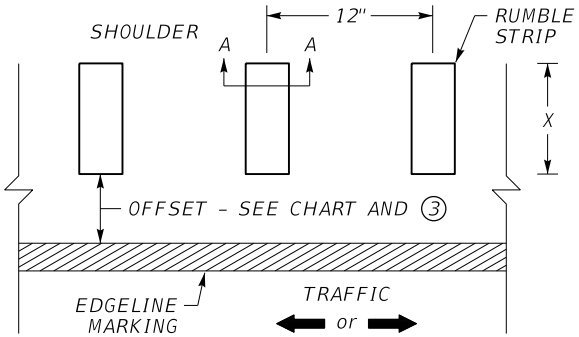

SRS DETAILS

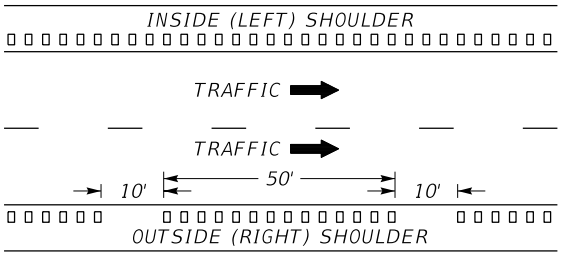

BICYCLE GAPS 6

~ NOTES ~

1. FOR MULTI-LANE ROADWAYS, THE RUMBLE TYPE TO BE INSTALLED IS BASED ON SHOULER WIDTH (Z). FOR SHOULDER WIDTHS OF 2', 3', AND 4' THE RUMBLE TYPE MAY BE SPECIFIED AS EITHER EDGELINE RUMBLE STRIPS (ELRS) OR SHOULDER RUMBLE STRIPS (SRS). IN THESE SITUATIONS, THE RUMBLE TYPE TO BE INSTALLED WILL BE SPECIFIED IN THE PLANS, PROPOSAL, AND/OR BID ITEMS, OR AS DIRECTED BY THE ENGINEER.
2. WHEN ELRS ARE SPECIFIED, SHOULDER WIDTH (Z) IS FROM LANE SIDE EDGE OF THE EDGELINE RUMBLE STRIP TO OUTSIDE EDGE OF TRAVERSABLE PAVEMENT. WHEN SRS ARE SPECIFIED, SHOULDER WIDTH (Z) IS FROM CENTER OF EDGELINE STRIPE TO OUTSIDE EDGE OF TRAVERSABLE PAVEMENT.
3. RUMBLE LENGTH (X) AND/OR OFFSET DISTANCE MAY BE MODIFIED AS THE ENGINEER DIRECTS.
4. DISTANCES SHOWN ARE APPROXIMATE. MAINTAIN RUMBLE STRIP DIMENSIONS AND SPACING AS MUCH AS POSSIBLE.
5. WHEN ELRS ARE SPECIFIED, THE EDGELINE MARKING SHALL BE PLACED IN THE CENTER OF THE RUMBLE STRIP.
6. SHOULDER RUMBLE STRIPS (SRS) ALONG OUTSIDE (RIGHT) SHOULDERS THAT ARE 3' OR WIDER SHOULD INCLUDE BICYCLE GAPS AS DETAILED. BICYCLE GAPS ARE NOT REQUIRED ON INSIDE (LEFT) SHOULDERS. BICYCLE GAPS SHALL NOT BE USED ON INTERSTATES AND PARKWAYS.
7. RUMBLE STRIPS SHOULD BE OMITTED WHERE THE POSTED SPEED LIMIT IS 45 MPH OR LESS, OR WHEN THE SHOULDER WIDTH IS LESS THAN 1 FT.

BID ITEMS AND UNIT TO BID

SHOULDER RUMBLE STRIPS	LF
EDGELINE RUMBLE STRIPS	LF

DRAWING NOT TO SCALE

USE WITH CUR. STD. DWG. TPR-125

KENTUCKY
DEPARTMENT OF HIGHWAYS

RUMBLE STRIP DETAILS
MULTI-LANE ROADWAYS
AND RAMPS

STANDARD DRAWING NO. TPR-130

SUBMITTED R. Allen Wolfe 02-26-20
DIRECTOR, DIVISION OF TRAFFIC OPERATIONS DATE

APPROVED 02-26-20
STATE HIGHWAY ENGINEER DATE

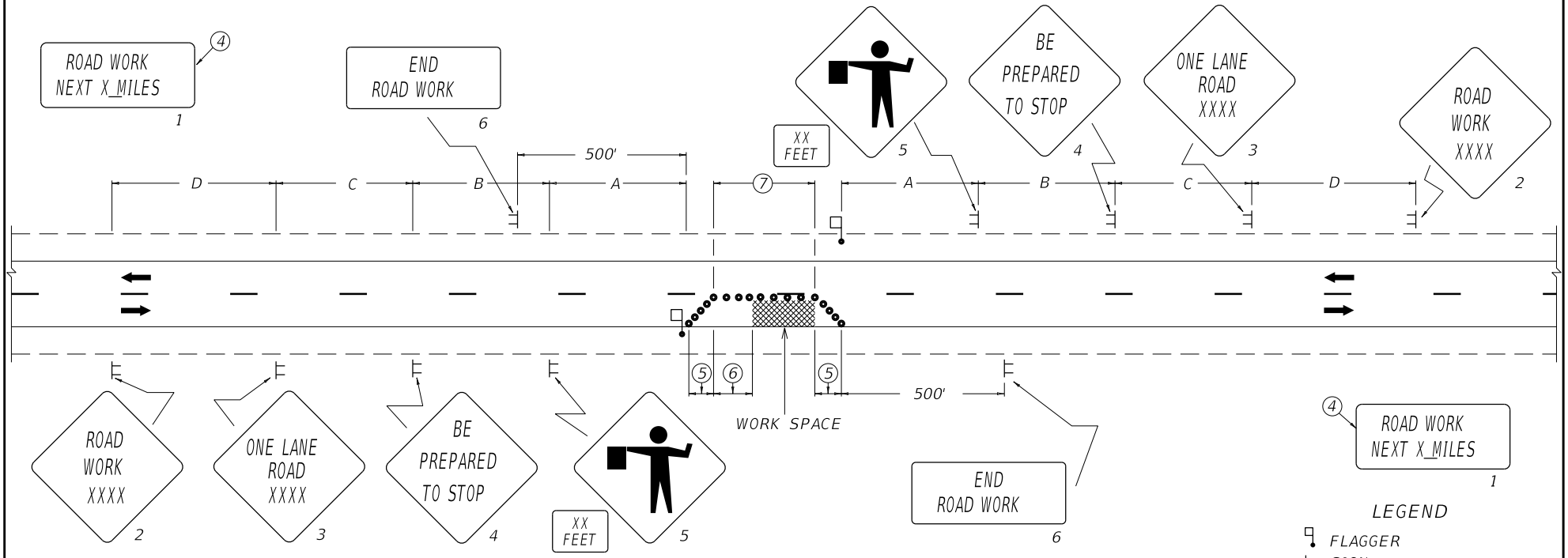

LEGEND

- FLAGGER
- SIGN
- CHANNELIZING DEVICES
  - CONES
  - DRUMS

~ NOTES ~

1. THE SIZE OF SIGNS 2 THRU 5 SHALL BE 48" X 48" WITH 30" X 24" SUPPLEMENTAL PLAQUES FOR EXPRESSWAYS/FREEWAYS. THE MINIMUM SIZE OF SIGNS 2 THRU 5 SHALL BE 36" X 36" WITH 24" X 18" SUPPLEMENTAL PLAQUES FOR OTHER ROADWAYS. SIGN NOS. 1 AND 6 SHALL BE 48" X 24" FOR EXPRESSWAYS/FREEWAYS AND 36" X 18" FOR OTHER ROADWAYS. A FREEWAY IS DEFINED AS A DIVIDED HIGHWAY WITH FULL CONTROL OF ACCESS. AN EXPRESSWAY IS DEFINED AS A DIVIDED HIGHWAY WITH PARTIAL CONTROL OF ACCESS.
2. THE FLAGGERS SHALL BE IN SIGHT OF EACH OTHER OR IN DIRECT COMMUNICATION AT ALL TIMES. FLAGGER STATIONS SHALL BE LOCATED FAR ENOUGH IN ADVANCE OF THE ACTIVITY AREA SO THAT APPROACHING ROAD USERS WILL HAVE SUFFICIENT DISTANCE TO STOP BEFORE ENTERING THE WORK SPACE. ILLUMINATION SHALL BE PROVIDED TO MARK FLAGGER STATIONS AT NIGHT.
3. DRUMS SHALL BE USED IN LIEU OF CONES IF CLOSURE EXTENDS INTO NIGHTTIME HOURS. GRABBER CONES MAY BE USED IN LIEU OF DRUMS IF THE USE OF DRUMS WOULD RESULT IN LANES THAT ARE TOO NARROW OR AN UNACCEPTABLE SITUATION BASED ON ENGINEERING JUDGMENT.

(4) SIGN NO. 1 SHOULD BE INSTALLED AT THE LIMITS OF THE PROJECT WHEN THE CONSTRUCTION ZONE IS LONGER THAN TWO MILES IN LENGTH. THE DISTANCE SHOWN SHALL BE STATED TO THE NEAREST WHOLE MILE.

(5) TAPERS SHALL BE 50' (MIN) TO 100' (MAX) IN LENGTH. SPACING OF CHANNELIZING DEVICES SHOULD BE 20' THRU THE TAPER AREAS.

(6) BUFFER SPACE (OPTIONAL). IF USED, THE BUFFER SPACE SHOULD BE EXTENDED SO THAT THE TWO-WAY TRAFFIC TAPER IS PLACED BEFORE A HORIZONTAL OR CREST VERTICAL CURVE TO PROVIDE ADEQUATE SIGHT DISTANCE FOR THE FLAGGER AND A QUEUE OF STOPPED VEHICLES. REFER TO TABLE 6C-2 OF THE MUTCD FOR GUIDANCE ON BUFFER SPACE LENGTH.

(7) SPACING OF CHANNELIZING DEVICES THRU THE ACTIVITY AREA SHOULD BE 80'. ON ROADWAYS WITH WIDTHS LESS THAN 20 FEET, CHANNELIZING DEVICES MAY BE OMITTED THRU THE ACTIVITY AREA BASED ON ENGINEERING JUDGMENT.

BID ITEMS AND UNIT TO BID
LANE CLOSURE EACH
REFER TO SECTION 112 OF STANDARD SPECIFICATIONS FOR ROAD AND BRIDGE CONSTRUCTION, CURRENT EDITION.

SIGNING AND SPACING TABLE				
ROAD TYPE	A	B	C	D
EXPRESSWAY/ FREEWAY	1000'	500'	1100'	2600'
SP. LT. ≥ 45 MPH*	500'	500'	500'	1100'
SP. LT. ≤ 40 MPH*	250'	250'	250'	250'

*NOTE: USE NORMAL POSTED SPEED LIMIT

DRAWING NOT TO SCALE

KENTUCKY DEPARTMENT OF HIGHWAYS

LANE CLOSURE
TWO-LANE HIGHWAY

STANDARD DRAWING NO. TTC-100-05

SUBMITTED R. Allen Wolfe 02-26-20
DIRECTOR DIVISION OF TRAFFIC OPERATIONS DATE

APPROVED 02-26-20
STATE HIGHWAY ENGINEER DATE

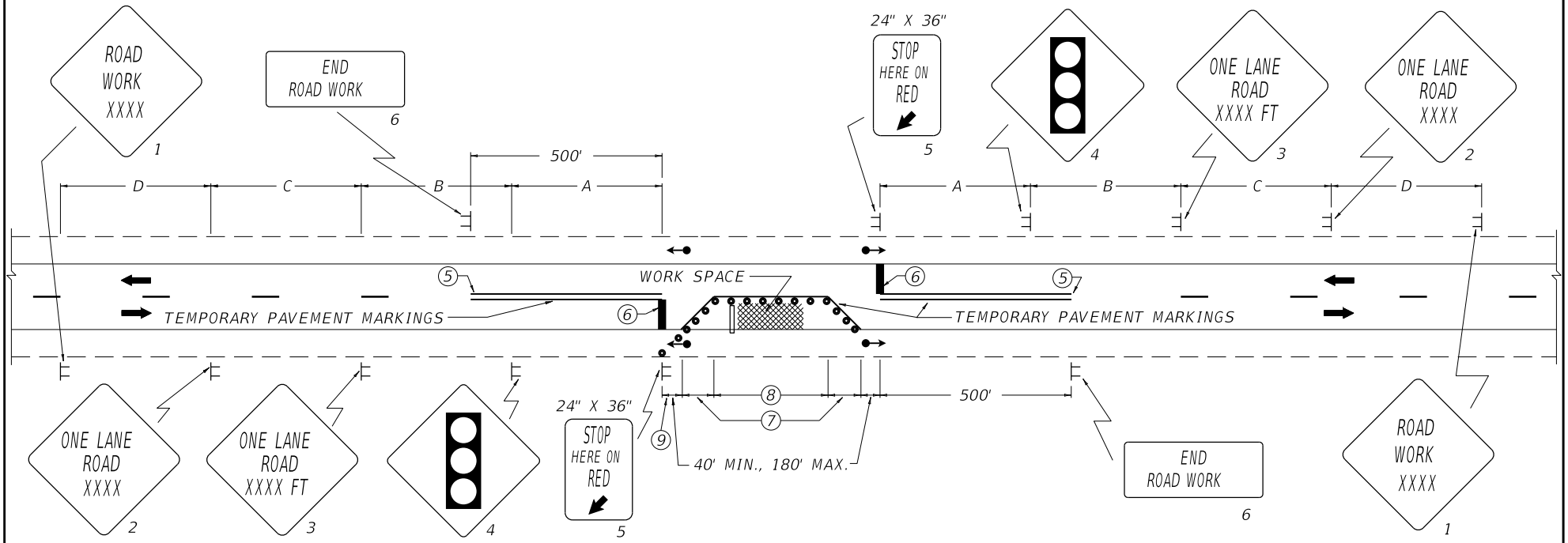

~ NOTES ~

1. THE SIZE OF SIGNS 2 THRU 5 SHALL BE 48" X 48" FOR EXPRESSWAYS/FREEWAYS. THE MINIMUM SIZE OF SIGNS 2 THRU 5 SHALL BE 36" X 36" FOR OTHER ROADWAYS. SIGN NOS. 1 AND 6 SHALL BE 48" X 24" FOR EXPRESSWAYS/FREEWAYS AND 36" X 18" FOR OTHER ROADWAYS. A FREEWAY IS DEFINED AS A DIVIDED HIGHWAY WITH FULL CONTROL OF ACCESS. AN EXPRESSWAY IS DEFINED AS A DIVIDED HIGHWAY WITH PARTIAL CONTROL OF ACCESS.
2. TEMPORARY TRAFFIC SIGNALS SHALL BE INSTALLED AND OPERATED IN ACCORDANCE WITH THE PROVISIONS OF PART 4 OF THE MUTCD.
3. ALL SHOULDER MOUNTED SIGNAL HEADS SHALL BE A MINIMUM HEIGHT OF 12 FEET. ANY SIGNAL HEADS OR OTHER DEVICES MOUNTED OVER THE ROADWAY SHALL HAVE A MINIMUM UNDERCLEARANCE OF 17 FEET.
4. ALL CONFLICTING PAVEMENT MARKINGS BETWEEN THE STOP BARS SHALL BE OBLITERATED BY AN APPROVED METHOD.

(5) "NO PASSING" ZONES (500' MIN.) SHALL BE INSTALLED ON THE APPROACHES TO THE CLOSURE.

(6) STOP BARS SHALL HAVE A WIDTH OF 24".

(7) TAPERS SHALL BE 50' (MIN) TO 100' (MAX) IN LENGTH. SPACING OF CHANNELIZING DEVICES SHOULD BE 20' THRU THE TAPER AREAS.

(8) SPACING OF CHANNELIZING DEVICES THROUGH THE ACTIVITY AREA SHOULD BE 80'.

(9) SPACING OF CHANNELIZING DEVICES THROUGH SHOULDER TAPER SHOULD BE 20'.

10. GRABBER CONES MAY BE USED IN LIEU OF DRUMS IF THE USE OF DRUMS WOULD RESULT IN LANES THAT ARE TOO NARROW OR AN UNACCEPTABLE SITUATION BASED ON ENGINEERING JUDGMENT.
11. TEMPORARY TRAFFIC CONTROL SIGNAL TIMING, INCLUDING CLEARANCE INTERVALS, SHALL BE VERIFIED BY DISTRICT TRAFFIC.

BID ITEMS AND UNIT TO BID

LANE CLOSURE	EACH
TEMP SIGNAL	EACH
BARRICADE TYPE-III	EACH

REFER TO SECTION 112 OF STANDARD SPECIFICATIONS FOR ROAD AND BRIDGE CONSTRUCTION, CURRENT EDITION.

LEGEND

- TYPE III BARRICADE
- SIGN
- TRAFFIC SIGNAL
- CHANNELIZING DEVICES DRUMS

SIGNING AND SPACING TABLE

ROAD TYPE	A	B	C	D
EXPRESSWAY/ FREEWAY	1000'	500'	1100'	2600'
SP. LT. ≥ 45 MPH*	500'	500'	500'	1100'
SP. LT. ≤ 40 MPH*	250'	250'	500'	500'

*NOTE: USE NORMAL POSTED SPEED LIMIT

DRAWING NOT TO SCALE

KENTUCKY DEPARTMENT OF HIGHWAYS

LANE CLOSURE USING TRAFFIC SIGNALS

STANDARD DRAWING NO. TTC-110-04

SUBMITTED R. Allen Wolfe DIRECTOR DIVISION OF TRAFFIC OPERATIONS 02-26-20 DATE

APPROVED STATE HIGHWAY ENGINEER 02-26-20 DATE

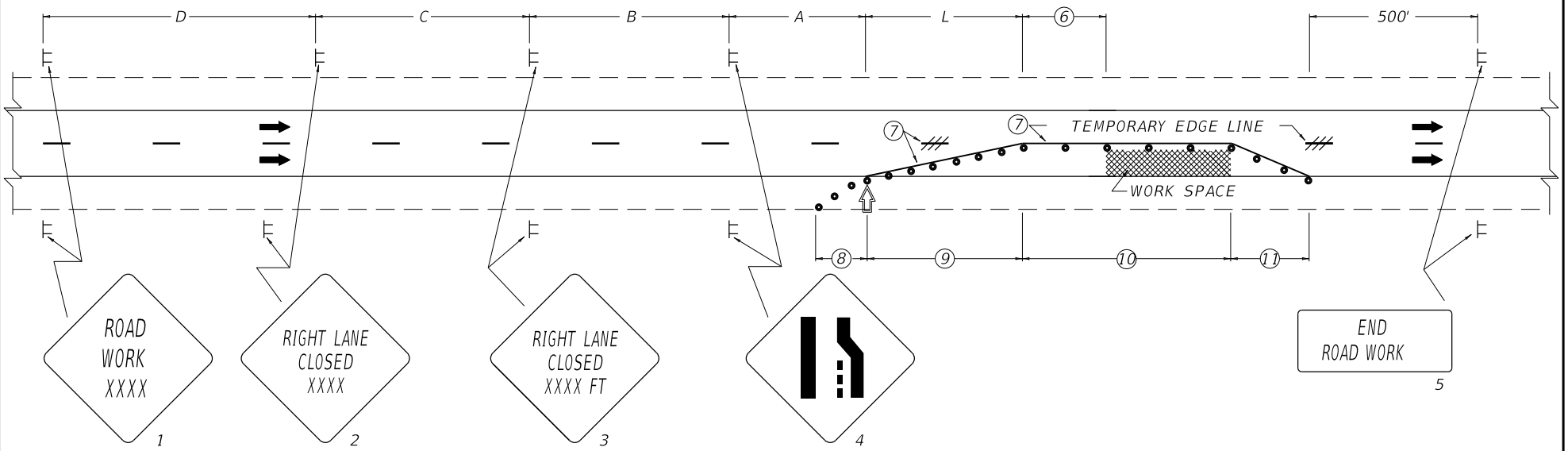

~ NOTES ~

1. IF MEDIAN IS NOT WIDE ENOUGH TO MAINTAIN LATERAL CLEARANCES SHOWN IN MUTCD, SIGNS 1 THRU 5 SHALL NOT BE DUAL MOUNTED.
2. THE SIZE OF SIGNS 1 THRU 4 SHALL BE 48" X 48" FOR EXPRESSWAYS/FREEWAYS. THE MINIMUM SIZE OF SIGNS 1 THRU 4 SHALL BE 36" X 36" FOR OTHER ROADWAYS. SIGN NO. 5 SHALL BE 48" X 24" FOR EXPRESSWAYS/FREEWAYS AND 36" X 18" FOR OTHER ROADWAYS. A FREEWAY IS DEFINED AS A DIVIDED HIGHWAY WITH FULL CONTROL OF ACCESS. AN EXPRESSWAY IS DEFINED AS A DIVIDED HIGHWAY WITH PARTIAL CONTROL OF ACCESS.
3. AN ARROW PANEL SHALL BE LOCATED ON THE SHOULDER AT THE BEGINNING OF THE MERGING TAPER OR LOCATED IN THE CLOSED LANE WHEN THE SHOULDER IS NARROW.
4. ALL VEHICLES, EQUIPMENT, WORKERS, AND THEIR ACTIVITIES SHALL BE RESTRICTED TO ONE SIDE OF THE PAVEMENT UNLESS OTHERWISE AUTHORIZED BY THE ENGINEER.
5. DRUMS SHALL BE USED IN LIEU OF CONES IF CLOSURE EXTENDS INTO NIGHTTIME HOURS. GRABBER CONES MAY BE USED IN LIEU OF DRUMS IF THE USE OF DRUMS WOULD RESULT IN LANES THAT ARE TOO NARROW OR AN UNACCEPTABLE SITUATION BASED ON ENGINEERING JUDGMENT.

(6) BUFFER SPACE (OPTIONAL). REFER TO TABLE 6C-2 OF THE MUTCD FOR GUIDANCE ON BUFFER SPACE LENGTH.

(7) IF DURATION OF LANE CLOSURE EXCEEDS THREE DAYS, TEMPORARY EDGE LINE SHALL BE REQUIRED AND SKIP LINES SHALL BE OBLITERATED BY APPROVED METHOD THRU LENGTH OF TAPER. ANY OTHER CONFLICTING PAVEMENT MARKINGS SHALL BE OBLITERATED.

(8) IF AN ARROW PANEL IS INSTALLED ON THE SHOULDER OR WITHIN THE CLEAR ZONE, A SHOULDER TAPER SHALL BE REQUIRED. WHEN PAVED SHOULDERS HAVING A WIDTH OF 8' OR MORE ARE CLOSED, A SHOULDER TAPER SHALL BE REQUIRED. TAPER LENGTH SHALL BE 0.33 L. SPACING OF CHANNELIZING DEVICES THRU THE SHOULDER TAPER SHOULD BE 40'.

(9) SPACING OF CHANNELIZING DEVICES THRU THE MERGING TAPER SHOULD BE 40'.

(10) SPACING OF CHANNELIZING DEVICES THRU THE ACTIVITY AREA SHOULD BE 80'.

(11) DOWNSTREAM TAPER SHALL HAVE A MINIMUM LENGTH OF 50' AND A MAXIMUM LENGTH OF 100'. SPACING OF CHANNELIZING DEVICES THRU THE DOWNSTREAM TAPER SHOULD BE 20'.

BID ITEM AND UNIT TO BID

LANE CLOSURE	EACH
ARROW PANEL	EACH

REFER TO SECTION 112 OF STANDARD SPECIFICATIONS FOR ROAD AND BRIDGE CONSTRUCTION, CURRENT EDITION.

LEGEND

- ARROW PANEL
- SIGN
- CHANNELIZING DEVICES
  - CONES
  - DRUMS

SIGNING AND SPACING TABLE

ROAD TYPE	A	B	C	D	L
EXPRESSWAY/ FREEWAY	1000'	500'	1100'	2600'	840'
SP. LT. ≥ 45 MPH*	500'	500'	500'	1100'	680'
SP. LT. ≤ 40 MPH*	250'	250'	500'	500'	320'

*NOTE: USE NORMAL POSTED SPEED LIMIT

DRAWING NOT TO SCALE

USE WITH CUR. STD. DWG. TTC-160

KENTUCKY DEPARTMENT OF HIGHWAYS

LANE CLOSURE
MULTI-LANE HIGHWAY
CASE I

STANDARD DRAWING NO. TTC-115-04

SUBMITTED R. Allen Wolfe DIRECTOR DIVISION OF TRAFFIC OPERATIONS 02-26-20 DATE

APPROVED STATE HIGHWAY ENGINEER 02-26-20 DATE

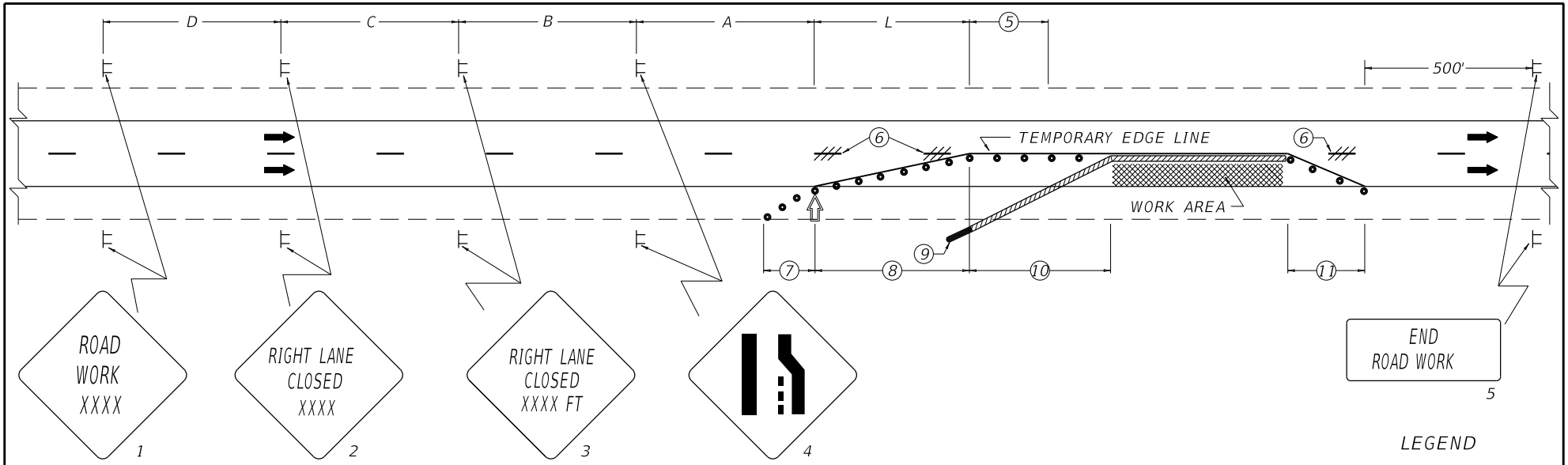

LEGEND

- TEMPORARY TRAFFIC BARRIER
- ARROW PANEL
- SIGN
- CRASH CUSHION
- CHANNELIZING DEVICES DRUMS

APPLICATION

THIS DRAWING APPLIES TO LANE CLOSURES OF LEFT OR RIGHT LANES USING TEMPORARY TRAFFIC BARRIER ON TWO-DIRECTION, MULTI-LANE HIGHWAYS. IF TEMPORARY TRAFFIC BARRIER IS NOT USED, REFER TO CURRENT STANDARD DRAWING TTC-115.

~ NOTES ~

1. IF MEDIAN IS NOT WIDE ENOUGH TO MAINTAIN LATERAL CLEARANCES SHOWN IN THE MUTCD, SIGNS 1 THRU 5 SHALL NOT BE DUAL MOUNTED.
2. THE SIZE OF SIGNS 1 THRU 4 SHALL BE 48" X 48" FOR EXPRESSWAYS/FREEWAYS. THE MINIMUM SIZE OF SIGNS 1 THRU 4 SHALL BE 36" X 36" FOR OTHER ROADWAYS. SIGN NO. 5 SHALL BE 48" X 24" FOR EXPRESSWAYS/FREEWAYS AND 36" X 18" FOR OTHER ROADWAYS. A FREEWAY IS DEFINED AS A DIVIDED HIGHWAY WITH FULL CONTROL OF ACCESS. AN EXPRESSWAY IS DEFINED AS A DIVIDED HIGHWAY WITH PARTIAL CONTROL OF ACCESS.
3. AN ARROW PANEL SHALL BE REQUIRED. IT SHALL BE LOCATED ON THE SHOULDER AT THE BEGINNING OF THE MERGING TAPER OR LOCATED IN THE CLOSED LANE WHEN THE SHOULDER IS NARROW.
4. THE BARRIER SHALL NOT BE PLACED ALONG THE MERGING TAPER. THE LANE SHALL FIRST BE CLOSED USING CHANNELIZING DEVICES AND PAVEMENT MARKINGS.

(5) BUFFER SPACE (OPTIONAL). REFER TO TABLE 6C-2 OF THE MUTCD FOR GUIDANCE ON BUFFER SPACE LENGTH.

(6) SKIP LINES SHALL BE OBLITERATED BY AN APPROVED METHOD THRU LENGTH OF TAPERS. OTHER CONFLICTING PAVEMENT MARKINGS SHALL BE OBLITERATED.

(7) IF AN ARROW PANEL IS INSTALLED ON THE SHOULDER OR WITHIN THE CLEAR ZONE, A SHOULDER TAPER SHALL BE REQUIRED. WHEN PAVED SHOULDERS HAVING A WIDTH OF 8' OR MORE ARE CLOSED, A SHOULDER TAPER SHALL BE REQUIRED. TAPER LENGTH SHALL BE 0.33 L. SPACING OF CHANNELIZING DEVICES THRU THE SHOULDER TAPER SHOULD BE 40'.

(8) SPACING OF CHANNELIZING DEVICES THRU THE MERGING TAPER SHOULD BE 40'.

(9) IN ORDER TO MITIGATE THE EFFECT OF STRIKING THE END OF A TEMPORARY TRAFFIC BARRIER, THE END SHALL BE INSTALLED IN ACCORDANCE WITH THE ROADSIDE DESIGN GUIDE BY FLARING (SEE TABLE) UNTIL THE END IS OUTSIDE THE ACCEPTABLE CLEAR ZONE OR BY PROVIDING CRASHWORTHY END TREATMENTS. FLATTER FLARE RATES MAY BE USED.

(10) SPACING OF CHANNELIZING DEVICES THRU THIS AREA SHOULD BE 80'.

(11) DOWNSTREAM TAPER SHALL HAVE A MINIMUM LENGTH OF 50' AND A MAXIMUM LENGTH OF 100'. SPACING OF CHANNELIZING DEVICES THRU THE DOWNSTREAM TAPER SHOULD BE 20'.

12. GRABBER CONES MAY BE USED IN LIEU OF DRUMS IF THE USE OF DRUMS WOULD RESULT IN LANES THAT ARE TOO NARROW OR AN UNACCEPTABLE SITUATION BASED ON ENGINEERING JUDGMENT.
13. THE COLOR OF BARRIER WALL DELINEATORS SHALL MATCH THE COLOR OF THE EDGE LINE THAT THEY SUPPLEMENT.

BID ITEMS AND UNIT TO BID
ARROW PANEL - EACH; LANE CLOSURE - EACH
REFER TO SECTION 112 OF STANDARD SPECIFICATIONS FOR ROAD AND BRIDGE CONSTRUCTION, CURRENT EDITION.

MAXIMUM FLARE RATES FOR TEMPORARY TRAFFIC BARRIER			
DESIGN SPEED	70 MPH	60 MPH	50 MPH
FLARE RATE	15:1	14:1	11:1

SIGNING AND SPACING TABLE					
ROAD TYPE	A	B	C	D	L
EXPRESSWAY/ FREEWAY	1000'	500'	1100'	2600'	840'
SP. LT. ≥ 45 MPH*	500'	500'	500'	1100'	680'
SP. LT. ≤ 40 MPH*	250'	250'	500'	500'	320'

*NOTE: USE NORMAL POSTED SPEED LIMIT

DRAWING NOT TO SCALE

USE WITH CUR. STD. DWGS. RBM-020 AND TTC-160

KENTUCKY DEPARTMENT OF HIGHWAYS

LANE CLOSURE
MULTI-LANE HIGHWAY
CASE II

STANDARD DRAWING NO. TTC-120-04

SUBMITTED R. Allen Wolfe DIRECTOR DIVISION OF TRAFFIC OPERATIONS 02-26-20 DATE

APPROVED STATE HIGHWAY ENGINEER 02-26-20 DATE

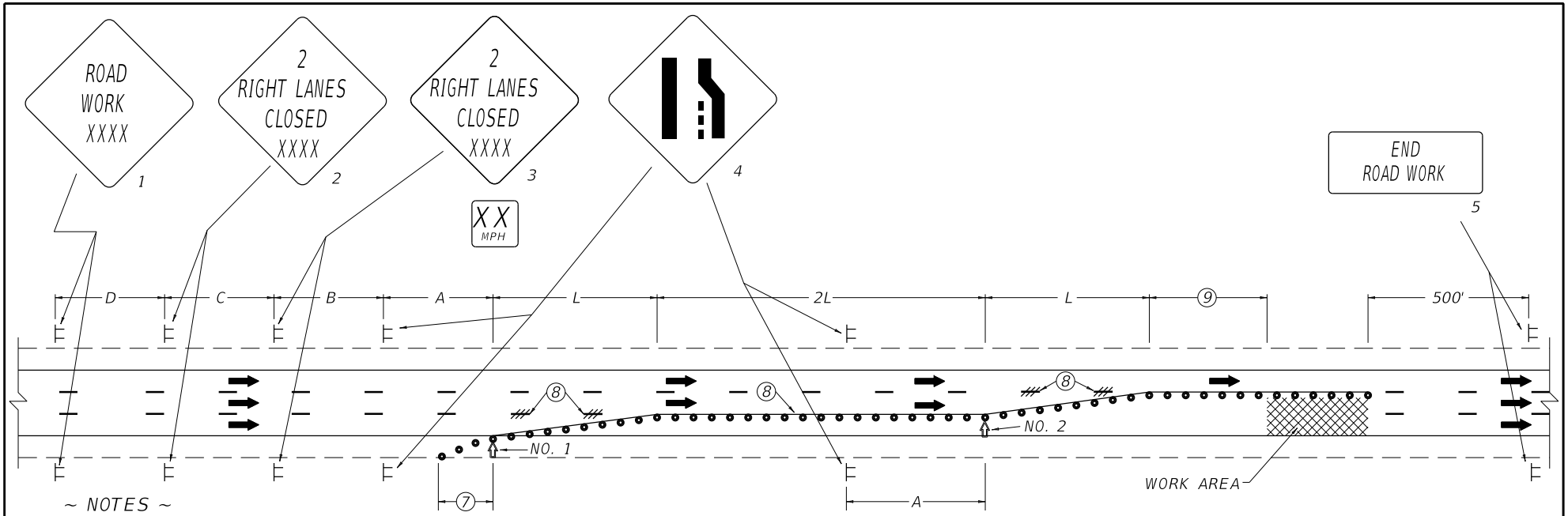

~ NOTES ~

1. THE SIZE OF SIGNS 1 THRU 4 SHALL BE 48" X 48" WITH 30" X 24" SUPPLEMENTAL PLAQUES FOR EXPRESSWAYS/FREEWAYS. THE MINIMUM SIZE OF SIGNS 1 THRU 4 SHALL BE 36" X 36" WITH 24" X 18" SUPPLEMENTAL PLAQUES FOR OTHER ROADWAYS. SIGN NO. 5 SHALL BE 48" X 24" FOR EXPRESSWAYS/FREEWAYS AND 36" X 18" FOR OTHER ROADWAYS. A FREEWAY IS DEFINED AS A DIVIDED HIGHWAY WITH FULL CONTROL OF ACCESS. AN EXPRESSWAY IS DEFINED AS A DIVIDED HIGHWAY WITH PARTIAL CONTROL OF ACCESS.
2. WHEN MORE THAN TWO LANES ARE TO BE CLOSED, SIGNS 2 AND 3 SHALL AGREE WITH THE NUMBER OF LANES CLOSED. ADDITIONAL TRANSITION SIGNS AND ACCOMPANYING ARROW PANELS SHALL BE USED ACCORDINGLY. ADDITIONAL TAPERS AND TANGENTS FOR CHANNELIZING DEVICES SHALL BE THE SAME AS THOSE SHOWN.
3. THE ADVISORY SPEED LIMIT ON SIGN 3 SHALL BE 10 MPH LESS THAN THE NORMAL SPEED LIMIT UNLESS OTHERWISE DIRECTED BY THE ENGINEER.
4. DRUMS SHALL BE USED IN LIEU OF CONES IF CLOSURE EXTENDS INTO NIGHTTIME HOURS. GRABBER CONES MAY BE USED IN LIEU OF DRUMS IF THE USE OF DRUMS WOULD RESULT IN LANES THAT ARE TOO NARROW OR AN UNACCEPTABLE SITUATION BASED ON ENGINEERING JUDGMENT.
5. SPACING OF THE CHANNELIZING DEVICES THRU THE MERGING TAPERS SHOULD BE 40'. SPACING OF THE CHANNELIZING DEVICES THRU THE REMAINDER OF THE CLOSURE SHOULD BE 80'.
6. ARROW PANEL NO. 1 SHALL BE LOCATED ON THE SHOULDER AT THE BEGINNING OF THE FIRST MERGING TAPER. IF THE SHOULDER IS NARROW, ARROW PANEL NO. 1 SHALL BE LOCATED IN THE FIRST CLOSED LANE. ARROW PANEL NO. 2 SHALL BE PLACED IN THE FIRST CLOSED LANE AT THE BEGINNING OF THE SECOND MERGING TAPER. IF ARROW PANEL NO. 1 IS INSTALLED IN THE FIRST CLOSED LANE, ARROW PANEL NO. 2 SHALL BE PLACED IN THE SECOND CLOSED LANE AT THE DOWNSTREAM END OF THE SECOND MERGING TAPER.

(7) IF ARROW PANEL NO. 1 IS INSTALLED ON THE SHOULDER OR WITHIN THE CLEAR ZONE, A SHOULDER TAPER SHALL BE REQUIRED. TAPER LENGTH SHALL BE 0.33 L. SPACING OF CHANNELIZING DEVICES THRU THE SHOULDER TAPER SHOULD BE 40'.

(8) IF DURATION OF LANE CLOSURE EXCEEDS THREE DAYS, TEMPORARY EDGE LINE SHALL BE REQUIRED AND SKIP LINES SHALL BE OBLITERATED BY APPROVED METHOD THRU THE LENGTH OF TAPERS. OTHER CONFLICTING PAVEMENT MARKINGS SHALL BE OBLITERATED.

(9) BUFFER SPACE (OPTIONAL). REFER TO TABLE 6C-2 OF THE MUTCD FOR GUIDANCE ON BUFFER SPACE LENGTH.

BID ITEMS AND UNIT TO BID
LANE CLOSURE EACH
ARROW PANEL EACH
REFER TO SECTION 112 OF STANDARD SPECIFICATIONS FOR ROAD AND BRIDGE CONSTRUCTION, CURRENT EDITION.

APPLICATION

THIS DRAWING DEPICTS THE MIDDLE AND OUTSIDE LANES CLOSED ON A MULTI-LANE HIGHWAY. THE SAME PRINCIPLES APPLY WHEN THE MIDDLE AND INSIDE LANES ARE CLOSED. WHEN MORE THAN TWO LANES ARE CLOSED, REFER TO NOTE 2.

SIGNING AND SPACING TABLE

ROAD TYPE	A	B	C	D	L
EXPRESSWAY/ FREEWAY	1000'	500'	1100'	2600'	840'
SP. LT. ≥ 45 MPH*	500'	500'	500'	1100'	680'
SP. LT. ≤ 40 MPH*	250'	250'	500'	500'	320'

*NOTE: USE NORMAL POSTED SPEED LIMIT

LEGEND

ARROW PANEL
SIGN
CHANNELIZING DEVICES
CONES
DRUMS

DRAWING NOT TO SCALE

USE WITH CUR. STD. DWGS. TTC-160 AND TTD-110

KENTUCKY DEPARTMENT OF HIGHWAYS

DOUBLE LANE CLOSURE

STANDARD DRAWING NO. TTC-125-04

SUBMITTED R. Allen Wolfe DIRECTOR DIVISION OF TRAFFIC OPERATIONS 02-26-20 DATE

APPROVED STATE HIGHWAY ENGINEER 02-26-20 DATE

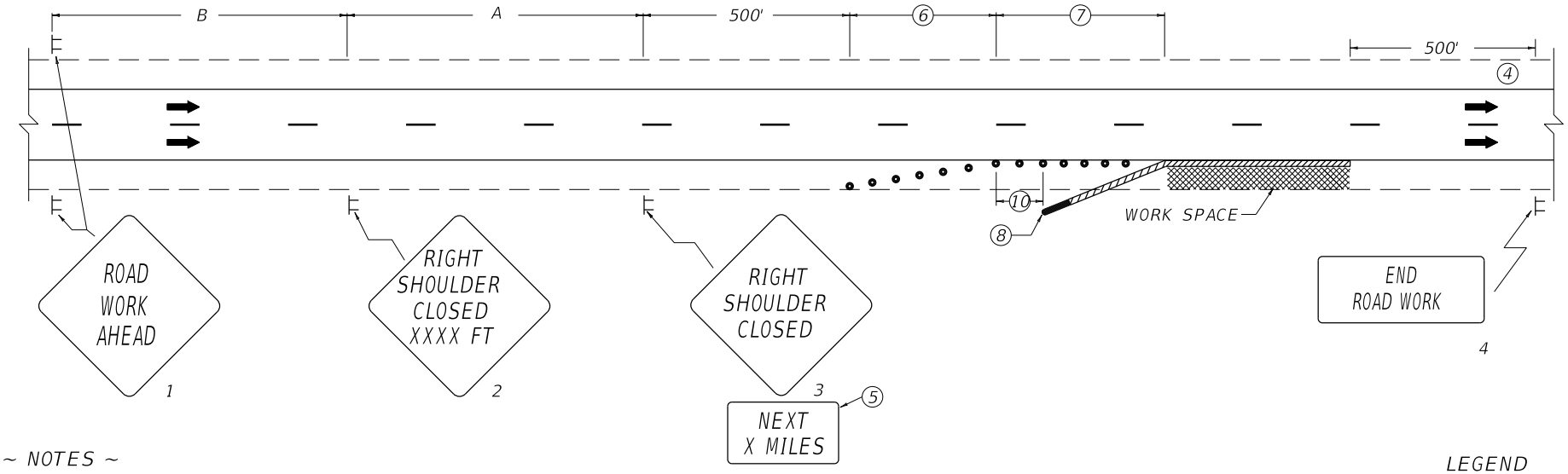

~ NOTES ~

1. THE SIZE OF SIGNS 1 THRU 3 SHALL BE 48" X 48" WITH 30" X 24" SUPPLEMENTAL PLAQUES FOR EXPRESSWAYS/FREEWAYS. THE MINIMUM SIZE OF SIGNS 1 THRU 3 SHALL BE 36" X 36" WITH 24" X 18" SUPPLEMENTAL PLAQUES FOR OTHER ROADWAYS. SIGN NO. 4 SHALL BE 48" X 24" FOR EXPRESSWAYS/FREEWAYS AND 36" X 18" FOR OTHER ROADWAYS. A FREEWAY IS AS A DIVIDED HIGHWAY WITH FULL CONTROL OF ACCESS. AN EXPRESSWAY IS DEFINED AS A DIVIDED HIGHWAY WITH PARTIAL CONTROL OF ACCESS.
2. SIGN 1 SHALL NOT BE DUAL-MOUNTED ON TWO-LANE, TWO-DIRECTION HIGHWAYS OR ON MULTI-LANE HIGHWAYS WHERE MEDIAN IS NOT WIDE ENOUGH TO MAINTAIN LATERAL CLEARANCES SHOWN IN THE MUTCD. SIGNS 2 AND 3 SHALL BE INSTALLED ONLY ON THE SIDE OF THE AFFECTED SHOULDER.
3. DRUMS SHALL BE USED IN LIEU OF CONES IF CLOSURE EXTENDS INTO NIGHTTIME HOURS. GRABBER CONES MAY BE USED IN LIEU OF DRUMS IF THE USE OF DRUMS WOULD RESULT IN LANES THAT ARE TOO NARROW OR AN UNACCEPTABLE SITUATION BASED ON ENGINEERING JUDGMENT.

(4) ON TWO-LANE TWO-DIRECTION HIGHWAYS, SIGNS 1 THRU 3 SHALL BE INSTALLED ON THE APPROACH WITH THE RIGHT SHOULDER CLOSED. A "ROAD WORK AHEAD" AND "SHOULDER WORK" SIGN SHALL BE INSTALLED ON THE OPPOSITE APPROACH. THE "SHOULDER WORK" SIGN SHALL BE MOUNTED IN ADVANCE OF THE CLOSURE AT A SPACING OF "A" (SEE SIGNING AND SPACING TABLE). AN ADDITIONAL "ROAD WORK AHEAD" SIGN SHALL BE INSTALLED IN ADVANCE OF THE "SHOULDER WORK" SIGN AT A SPACING OF "B".

(5) WHEN THE END OF THE CLOSURE CANNOT BE SEEN BY ROAD USERS, A "NEXT X MILES" PLAQUE SHALL BE INSTALLED BELOW THE "SHOULDER CLOSED" SIGN. THE PLAQUE SHALL BE 36" X 30" FOR EXPRESSWAYS/FREEWAYS AND 24" X 18" FOR OTHER ROADWAYS.

(6) TAPER LENGTH SHALL BE 0.33 L. SPACING OF CHANNELIZING DEVICES THROUGH THE SHOULDER TAPER SHOULD BE 40'.

(7) SPACING OF CHANNELIZING DEVICES THROUGH THE REMAINDER OF THE CLOSURE SHOULD BE 80'.

(8) TEMPORARY TRAFFIC BARRIER SHALL BE REQUIRED ONLY IF DESIGNATED ELSEWHERE IN THE PLANS. IN ORDER TO MITIGATE THE EFFECT OF STRIKING THE END OF A TEMPORARY TRAFFIC BARRIER, THE END SHALL BE INSTALLED IN ACCORDANCE WITH THE ROADSIDE DESIGN GUIDE BY FLARING (SEE TABLE) UNTIL THE END IS OUTSIDE THE ACCEPTABLE CLEAR ZONE OR BY PROVIDING CRASHWORTHY END TREATMENTS. FLATTER FLARE RATES MAY BE USED.

9. THE COLOR OF BARRIER WALL DELINEATORS SHALL MATCH THE COLOR OF THE EDGE LINE THAT THEY SUPPLEMENT.
10. BUFFER SPACE (OPTIONAL). REFER TO TABLE 6C-2 OF THE MUTCD FOR GUIDANCE ON BUFFER SPACE LENGTH.

BID ITEMS AND UNIT TO BID
REFER TO SECTION 112 OF STANDARD SPECIFICATIONS FOR ROAD AND BRIDGE CONSTRUCTION, CURRENT EDITION.

LEGEND

- TEMPORARY TRAFFIC BARRIER
- SIGN
- CHANNELIZING DEVICES
  - CONES
  - DRUMS
- CRASH CUSHION

MAXIMUM FLARE RATES FOR TEMPORARY TRAFFIC BARRIER			
DESIGN SPEED	70 MPH	60 MPH	50 MPH
FLARE RATE	15:1	14:1	11:1

SIGNING AND SPACING TABLE			
ROAD TYPE	A	B	L
EXPRESSWAY/ FREEWAY	1000'	1600'	840'
SP. LT. ≧ 45 MPH*	500'	500'	680'
SP. LT. ≦ 40 MPH*	500'	500'	320'

*NOTE: USE NORMAL POSTED SPEED LIMIT

DRAWING NOT TO SCALE

KENTUCKY DEPARTMENT OF HIGHWAYS

SHOULDER CLOSURE

STANDARD DRAWING NO. TTC-135-03

SUBMITTED R. Allen Wolfe DIRECTOR DIVISION OF TRAFFIC OPERATIONS 02-26-20 DATE

APPROVED STATE HIGHWAY ENGINEER 02-26-20 DATE

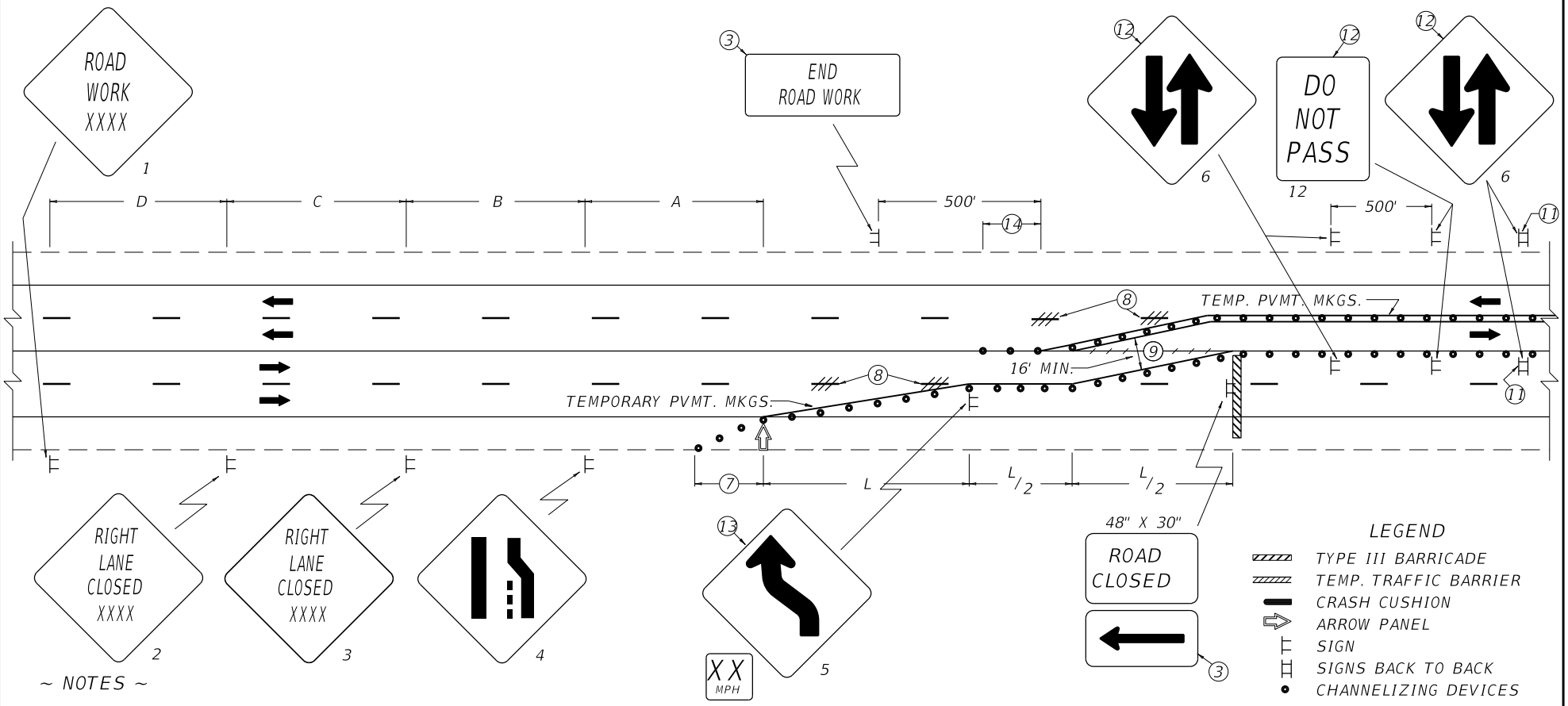

~ NOTES ~

1. THE SIZE OF SIGNS 1 THRU 11 SHALL BE 48" X 48" WITH 30" X 24" SUPPLEMENTAL PLAQUES FOR EXPRESSWAYS/FREEWAYS. THE MINIMUM SIZE OF SIGNS 1 THRU 11 SHALL BE 36" X 36" WITH 24" X 18" SUPPLEMENTAL PLAQUES FOR OTHER ROADWAYS. SIGN NOS. 12 AND 13 SHALL BE 36" X 48" FOR EXPRESSWAYS/FREEWAYS AND 24" X 30" FOR OTHER ROADWAYS. A FREEWAY IS DEFINED AS A DIVIDED HIGHWAY WITH FULL CONTROL OF ACCESS. AN EXPRESSWAY IS DEFINED AS A DIVIDED HIGHWAY WITH PARTIAL CONTROL OF ACCESS.
2. THE ADVISORY SPEED LIMIT ON SIGNS 5 AND 7 SHALL BE DETERMINED BY THE ENGINEER. THE SIZE OF SIGN PLAQUE SHALL BE 30" X 30" IF THE NORMAL POSTED SPEED LIMIT IS 45 MPH OR GREATER. OTHERWISE, 24" X 24" MAY BE USED.
3. THE ONE DIRECTION LARGE ARROW SIGN SHALL BE 60" X 30" FOR EXPRESSWAYS/FREEWAYS AND 48" X 24" FOR OTHER ROADWAYS. THE "END ROAD WORK" SIGN SHALL BE 48" X 24" FOR EXPRESSWAYS/FREEWAYS AND 36" X 18" FOR OTHER ROADWAYS.
4. SPACING OF CHANNELIZING DEVICES THRU THE TAPER AREAS SHOULD BE 40'. SPACING OF DEVICES THRU THE REMAINDER OF THE CLOSURE SHOULD BE 80'.
5. ARROW PANELS SHALL BE LOCATED ON SHOULDERS AT THE BEGINNING OF MERGING TAPERS OR LOCATED IN CLOSED LANES BEHIND CHANNELIZING DEVICES WHEN THE SHOULDER IS NARROW.
6. TEMPORARY PAVEMENT MARKINGS SHALL BE APPLIED AND MAINTAINED ON THE ROADWAY THROUGHOUT THE LIMITS OF THE CROSSOVER.

(NOTES CONTINUED ON CURRENT STD. DWG. TTC-141)

APPLICATION

THIS DRAWING APPLIES TO A MEDIAN CROSSOVER ON MULTI-LANE HIGHWAYS WITH A MEDIAN WIDTH OF 10' OR LESS.

SIGNING AND SPACING TABLE

ROAD TYPE	A	B	C	D	L
EXPRESSWAY/ FREEWAY	1000'	500'	1100'	2600'	840'
SP. LT. ≧ 45 MPH*	500'	500'	500'	1100'	680'
SP. LT. ≦ 40 MPH*	250'	250'	500'	500'	320'

*NOTE: USE NORMAL POSTED SPEED LIMIT

DRAWING NOT TO SCALE

USE WITH CUR. STD. DWGS. TTC-141 AND TTC-160

KENTUCKY DEPARTMENT OF HIGHWAYS

MEDIAN CROSSOVER CASE I

STANDARD DRAWING NO. TTC-140-04

SUBMITTED R. Allen Wolfe DIRECTOR DIVISION OF TRAFFIC OPERATIONS 02-26-20 DATE

APPROVED STATE HIGHWAY ENGINEER 02-26-20 DATE

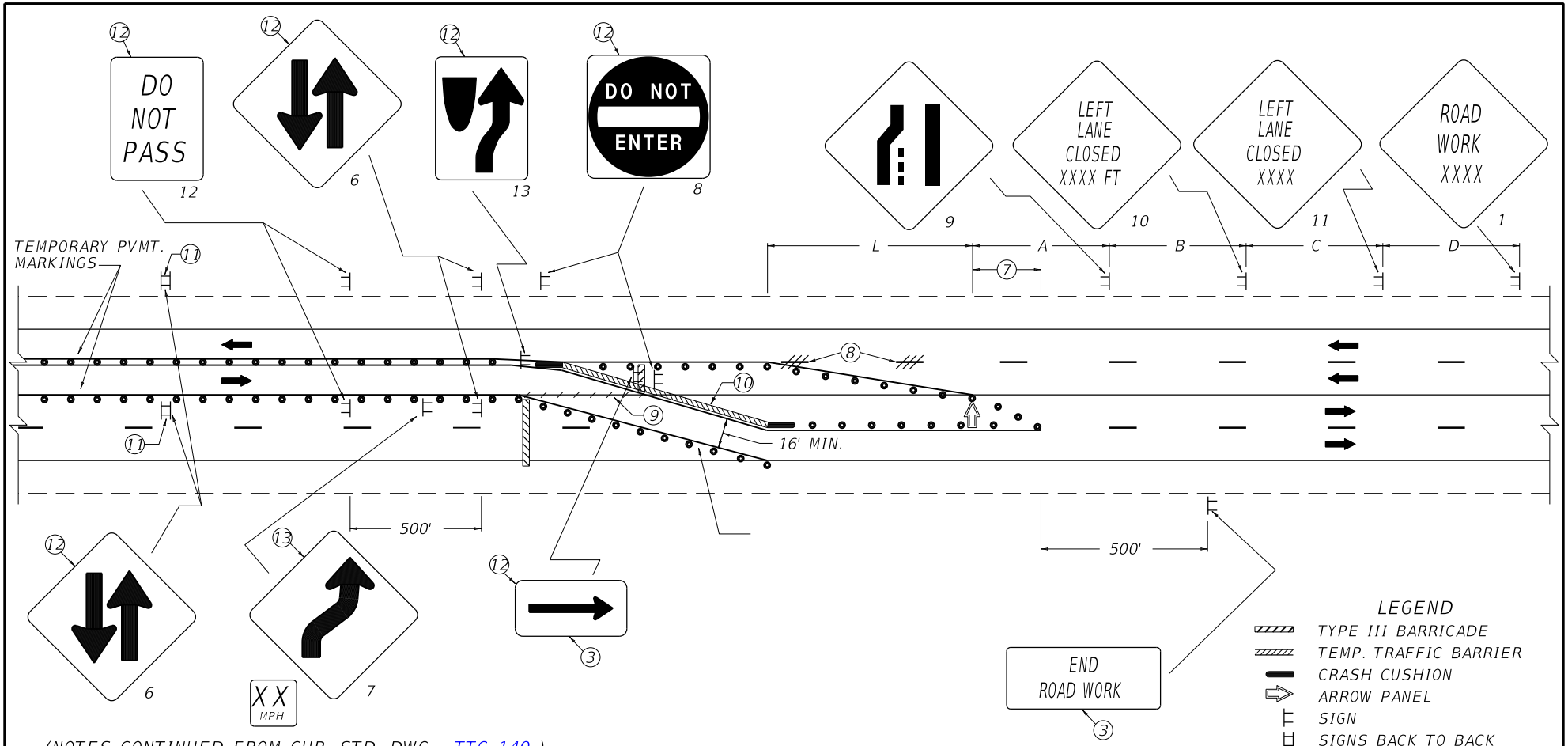

LEGEND

- TYPE III BARRICADE
- TEMP. TRAFFIC BARRIER
- CRASH CUSHION
- ARROW PANEL
- SIGN
- SIGNS BACK TO BACK
- CHANNELIZING DEVICES
  - TEMP. TRAFFIC BARRIER
  - DRUMS
  - TUBULAR MARKERS

DRAWING NOT TO SCALE

(NOTES CONTINUED FROM CUR. STD. DWG. TTC-140)

(7) IF AN ARROW PANEL IS INSTALLED ON THE SHOULDER OR WITHIN THE CLEAR ZONE, A SHOULDER TAPER SHALL BE REQUIRED. TAPER LENGTH SHALL BE 0.33 L. SPACING OF CHANNELIZING DEVICES THRU THE SHOULDER TAPER SHOULD BE 40'.

(8) OBLITERATE SKIP LINES THRU THE LENGTH OF TAPERS BY APPROVED METHOD.

(9) OBLITERATE EXISTING CENTER LINE BY AN APPROVED METHOD. OTHER CONFLICTING PAVEMENT MARKINGS SHALL BE OBLITERATED.

(10) TEMPORARY TRAFFIC BARRIER SHALL BE USED ON TAPER IF CROSSOVER REMAINS IN PLACE OVERNIGHT. IN URBAN AREAS WITH LOW OPERATING SPEEDS WHERE THE USE OF THE BARRIER RESULTS IN REDUCED LANE WIDTHS OR WHERE THE BARRIER INTERFERES WITH ACCESS TO ADJOINING PROPERTY, DRUMS OR TUBULAR MARKERS MAY BE USED IN LIEU OF TEMPORARY TRAFFIC BARRIER.

(11) WHEN CHANNELIZING DEVICES ARE USED TO SEPARATE OPPOSING TRAFFIC, TWO-WAY TRAFFIC SIGN(S) SHALL BE REPEATED EVERY MILE.

(12) WHEN TEMPORARY TRAFFIC BARRIER IS CONTINUOUS THROUGHOUT THE CLOSURE ZONE, THESE SIGNS SHALL BE ELIMINATED.

(13) REVERSE TURN SIGN (W1-3) SHALL BE USED IN LIEU OF REVERSE CURVE SIGN WHEN THE ADVISORY SPEED IS 30 MPH OR LESS.

(14) CHANNELIZING DEVICES SHALL BE EXTENDED BEYOND THE TRANSITION AREA FOR A DISTANCE EQUAL TO TWO TIMES THE NORMAL POSTED SPEED LIMIT.

15. GRABBER CONES MAY BE USED IN LIEU OF DRUMS IF THE USE OF DRUMS WOULD RESULT IN LANES THAT ARE TOO NARROW OR AN UNACCEPTABLE SITUATION BASED ON ENGINEERING JUDGMENT.

16. THE COLOR OF BARRIER WALL DELINEATORS SHALL MATCH THE COLOR OF THE EDGE LINE THAT THEY SUPPLEMENT.

BID ITEMS AND UNIT TO BID

BARRICADE TYPE-III	EACH
ARROW PANEL	EACH
CROSSOVER	LUMP SUM

REFER TO SECTION 112 OF STANDARD SPECIFICATIONS FOR ROAD AND BRIDGE CONSTRUCTION, CURRENT EDITION.

USE WITH CUR. STD. DWGS.
RBM-020, TTC-140, TTC-160

KENTUCKY
DEPARTMENT OF HIGHWAYS

MEDIAN CROSSOVER
CASE I

STANDARD DRAWING NO. TTC-141-04

SUBMITTED R. Allen Wolfe 02-26-20
DIRECTOR DIVISION OF TRAFFIC OPERATIONS DATE

APPROVED 02-26-20
STATE HIGHWAY ENGINEER DATE

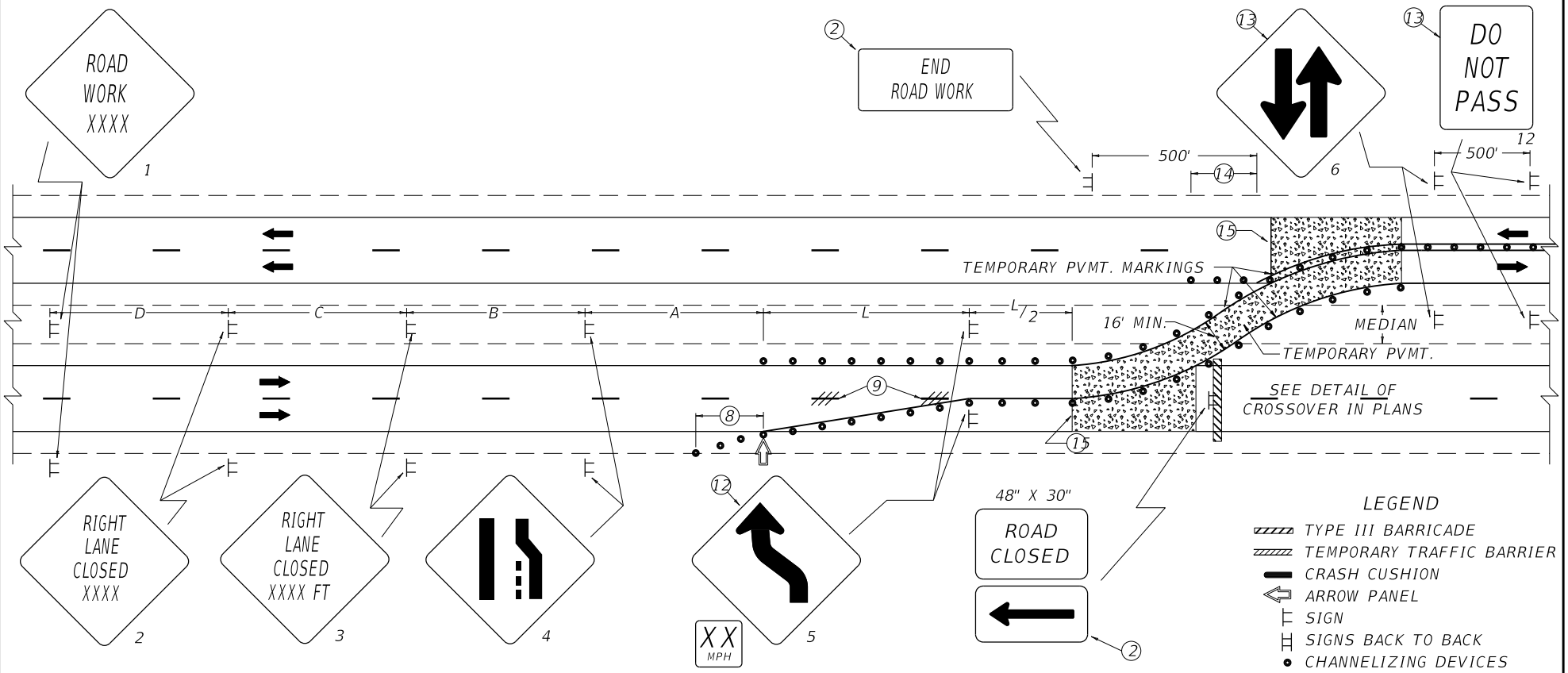

LEGEND

- TYPE III BARRICADE
- TEMPORARY TRAFFIC BARRIER
- CRASH CUSHION
- ARROW PANEL
- SIGN
- SIGNS BACK TO BACK
- CHANNELIZING DEVICES
  - TEMP. TRAFFIC BARRIER DRUMS
  - TUBULAR MARKERS

~ NOTES ~

1. THE SIZE OF SIGNS 1 THRU 11 SHALL BE 48" X 48" WITH 30" X 24" SUPPLEMENTAL PLAQUES FOR EXPRESSWAYS/FREEWAYS. THE MINIMUM SIZE OF SIGNS 1 THRU 11 SHALL BE 36" X 36" WITH 24" X 18" SUPPLEMENTAL PLAQUES FOR OTHER ROADWAYS. SIGN NOS. 12 AND 13 SHALL BE 36" X 48" FOR EXPRESSWAYS/FREEWAYS AND 24" X 30" FOR OTHER ROADWAYS. A FREEWAY IS DEFINED AS A DIVIDED HIGHWAY WITH FULL CONTROL OF ACCESS. AN EXPRESSWAY IS DEFINED AS A DIVIDED HIGHWAY WITH PARTIAL CONTROL OF ACCESS.

2. THE ONE DIRECTION LARGE ARROW SIGN SHALL BE 60" X 30" FOR EXPRESSWAYS/FREEWAYS AND 48" X 24" FOR OTHER ROADWAYS. THE "END ROAD WORK" SIGN SHALL BE 48" X 24" FOR EXPRESSWAYS/FREEWAYS AND 36" X 18" FOR OTHER ROADWAYS.

3. THE ADVISORY SPEED LIMIT ON SIGNS 5 AND 7 SHALL BE DETERMINED BY THE ENGINEER. THE SIZE OF SIGN PLAQUE SHALL BE 30" X 30" FOR EXPRESSWAYS/FREEWAYS AND 24" X 24" FOR OTHER ROADWAYS.

4. SPACING OF CHANNELIZING DEVICES THRU THE TAPER AREAS SHOULD BE 40'. SPACING OF DEVICES THRU THE REMAINDER OF THE CLOSURE SHOULD BE 80'.

5. ARROW PANELS SHALL BE LOCATED ON THE SHOULDERS AT THE BEGINNING OF THE MERGING TAPERS OR LOCATED IN THE CLOSED LANE BEHIND CHANNELIZING DEVICES WHEN SHOULDERS ARE NARROW.

6. TEMPORARY PAVEMENT MARKINGS SHALL BE APPLIED AND MAINTAINED ON THE ROADWAY THROUGHOUT THE LIMITS OF THE CROSSOVER.

(NOTES CONTINUED ON CURRENT STD. DWG. TTC-146)

APPLICATION

THIS DRAWING APPLIES TO A MEDIAN CROSSOVER ON MULTI-LANE HIGHWAYS WITH A MEDIAN WIDTH GREATER THAN 10 FEET.

SIGNING AND SPACING TABLE

ROAD TYPE	A	B	C	D	L
EXPRESSWAY/ FREEWAY	1000'	500'	1100'	2600'	840'
SP. LT. ≥ 45 MPH*	500'	500'	500'	1100'	680'
SP. LT. ≤ 40 MPH*	250'	250'	500'	500'	320'

*NOTE: USE NORMAL POSTED SPEED LIMIT

DRAWING NOT TO SCALE

USE WITH CUR. STD. DWGS. TTC-146 AND TTC-160

KENTUCKY DEPARTMENT OF HIGHWAYS

MEDIAN CROSSOVER

CASE II

STANDARD DRAWING NO. TTC-145-04

SUBMITTED R. Allen Wolfe DIRECTOR DIVISION OF TRAFFIC OPERATIONS 02-26-20 DATE

APPROVED STATE HIGHWAY ENGINEER 02-26-20 DATE

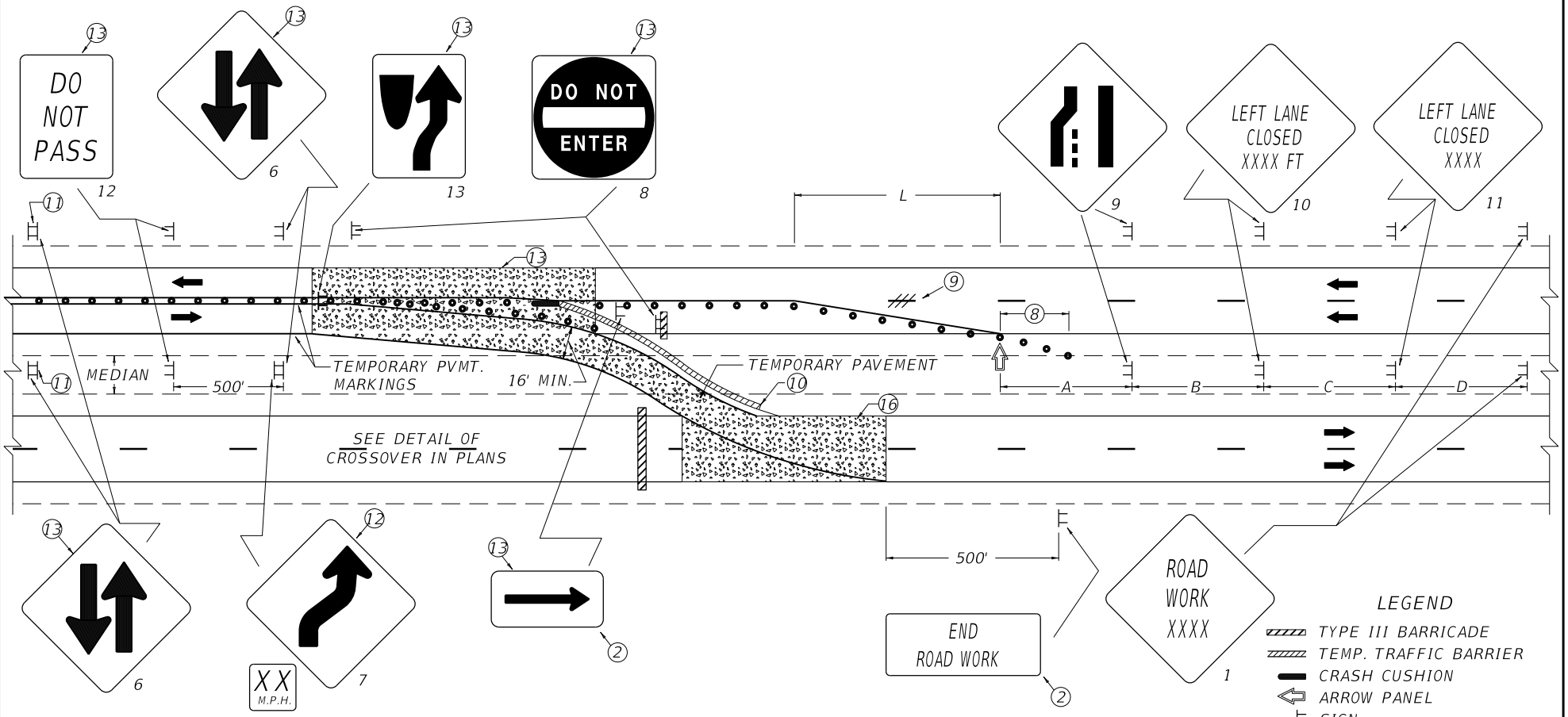

LEGEND

- TYPE III BARRICADE
- TEMP. TRAFFIC BARRIER
- CRASH CUSHION
- ARROW PANEL
- SIGN
- SIGNS BACK TO BACK
- CHANNELIZING DEVICES
  - TEMP. TRAFFIC BARRIER
  - DRUMS
  - TUBULAR MARKERS

DRAWING NOT TO SCALE

USE WITH CUR. STD. DWG. RBM-020

(NOTES CONTINUED FROM CUR. STD. DWG. TTC-145)

7. CRASH CUSHION SHALL BE INSTALLED PARALLEL TO THE APPROACH LANE OF TRAFFIC.
8. IF AN ARROW PANEL IS INSTALLED ON THE SHOULDER OR WITHIN THE CLEAR ZONE, A SHOULDER TAPER SHALL BE REQUIRED. TAPER LENGTH SHALL BE 0.33 L. SPACING OF CHANNELIZING DEVICES THRU THE SHOULDER TAPER SHOULD BE 40'.
9. OBLITERATE SKIP LINES THRU THE LENGTH OF TAPERS BY APPROVED METHOD. OTHER CONFLICTING PAVEMENT MARKINGS SHALL BE OBLITERATED.
10. CRASH CUSHION SHALL BE REQUIRED WHEN THE END OF THE BARRIER WALL IS WITHIN CLEAR ZONE (REFER TO ROADSIDE DESIGN GUIDE).
11. WHEN CHANNELIZING DEVICES ARE USED TO SEPARATE OPPOSING TRAFFIC, TWO-WAY TRAFFIC SIGN(S) SHALL BE REPEATED EVERY MILE.
12. REVERSE TURN SIGN (W1-3) SHALL BE USED IN LIEU OF REVERSE CURVE SIGN WHEN THE ADVISORY SPEED IS 30 MPH OR LESS.
13. WHEN TEMPORARY TRAFFIC BARRIER IS CONTINUOUS THROUGHOUT THE CLOSURE ZONE, THESE SIGNS SHALL BE ELIMINATED.
14. CHANNELIZING DEVICES SHALL BE EXTENDED BEYOND THE TRANSITION AREA FOR A DISTANCE EQUAL TO TWO TIMES THE NORMAL POSTED SPEED LIMIT.
15. GRABBER CONES MAY BE USED IN LIEU OF DRUMS IF THE USE OF DRUMS WOULD RESULT IN LANES THAT ARE TOO NARROW OR AN UNACCEPTABLE SITUATION BASED ON ENGINEERING JUDGMENT.
16. THIN ASPHALT OVERLAY TO BE USED AS DIRECTED BY THE ENGINEER.
17. THE COLOR OF BARRIER WALL DELINEATORS SHALL MATCH THE COLOR OF THE EDGE LINE THAT THEY SUPPLEMENT.

BID ITEMS AND UNIT TO BID

BARRICADE TYPE-III	EACH
ARROW PANEL	EACH
CROSSOVER	LUMP SUM

REFER TO SECTION 112 OF STANDARD SPECIFICATIONS FOR ROAD AND BRIDGE CONSTRUCTION, CURRENT EDITION.

KENTUCKY
DEPARTMENT OF HIGHWAYS

MEDIAN CROSSOVER
CASE II

STANDARD DRAWING NO. TTC-146-04

SUBMITTED R. Allen Wolfe 02-26-20
DIRECTOR DIVISION OF TRAFFIC OPERATIONS DATE

APPROVED 02-26-20
STATE HIGHWAY ENGINEER DATE

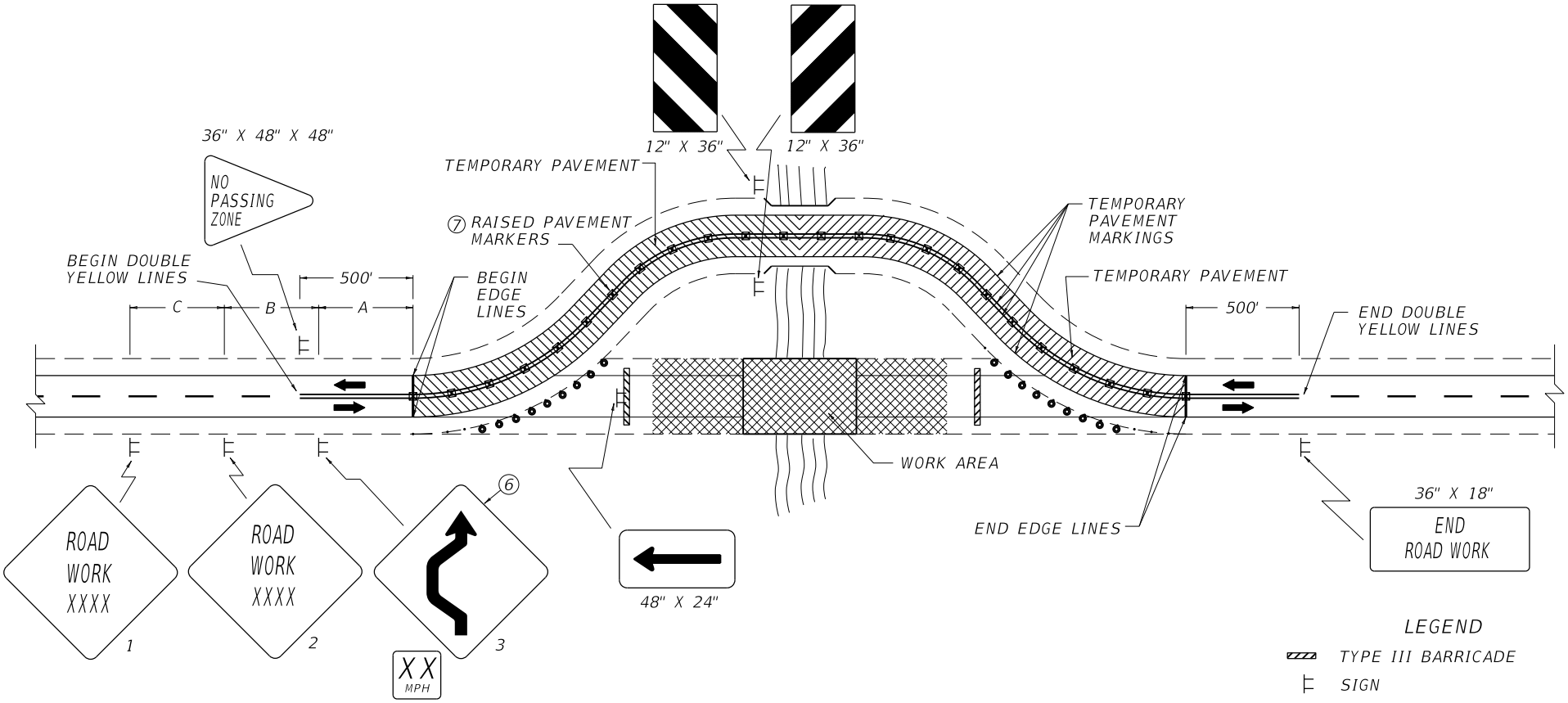

LEGEND

- TYPE III BARRICADE
- SIGN
- CHANNELIZING DEVICES DRUMS
- PAVEMENT MARKERS TYPE IVA (BI-DIRECTIONAL YELLOW)

~ NOTES ~

1. DEVICES SIMILAR TO THOSE DEPICTED SHALL BE PLACED FOR OPPOSITE DIRECTION OF TRAVEL.
2. THE SIZE OF SIGNS 1 THRU 3 SHALL BE 48" X 48" IF THE SPEED LIMIT IS 45 MPH OR GREATER. OTHERWISE, 36" X 36" SIGNS MAY BE USED.
3. THE ADVISORY SPEED LIMIT ON SIGN 3 SHALL BE DETERMINED BY THE ENGINEER.
4. PAVEMENT MARKINGS WHICH ARE NO LONGER APPLICABLE SHALL BE OBLITERATED BY AN APPROVED METHOD.
5. SPACING OF CHANNELIZING DEVICES SHOULD NOT EXCEED 20'.

⑥ IF THE TANGENT DISTANCE ALONG THE TEMPORARY DIVERSION IS MORE THAN 600 FEET, A REVERSE CURVE SIGN, LEFT FIRST, SHOULD BE USED INSTEAD OF THE DOUBLE REVERSE CURVE SIGN, AND A SECOND REVERSE CURVE SIGN, RIGHT FIRST, SHOULD BE PLACED IN ADVANCE OF THE SECOND REVERSE CURVE BACK TO THE ORIGINAL ALIGNMENT. WHEN THE TANGENT SECTION OF THE DIVERSION IS MORE THAN 600 FEET, AND THE DIVERSION HAS SHARP CURVES WITH RECOMMENDED SPEEDS OF 30 MPH OR LESS, REVERSE TURN SIGNS SHOULD BE USED.

⑦ RAISED PAVEMENT MARKERS ARE REQUIRED ONLY FOR HARD SURFACE ROADWAYS. TYPE IVA MARKERS SHALL BE MAINTAINED THROUGHOUT THE ENTIRE LIMITS OF THE DIVERSION AT A SPACING OF 20'.

BID ITEMS AND UNIT TO BID

BARRICADE TYPE-III	EACH
DIVERSION	LUMP SUM

REFER TO SECTION 112 OF STANDARD SPECIFICATIONS FOR ROAD AND BRIDGE CONSTRUCTION, CURRENT EDITION.

SIGNING AND SPACING TABLE			
ROAD TYPE	A	B	C
EXPRESSWAY/ FREEWAY	1000'	1600'	2600'
SP. LT. ≧ 45 MPH*	500'	500'	500'
SP. LT. ≦ 40 MPH*	250'	250'	500'

*NOTE: USE NORMAL POSTED SPEED LIMIT

DRAWING NOT TO SCALE

KENTUCKY DEPARTMENT OF HIGHWAYS

ROAD CLOSURE WITH DIVERSION

STANDARD DRAWING NO. TTC-150-04

SUBMITTED R. Allen Wolfe DIRECTOR DIVISION OF TRAFFIC OPERATIONS 02-26-20 DATE

APPROVED STATE HIGHWAY ENGINEER 02-26-20 DATE

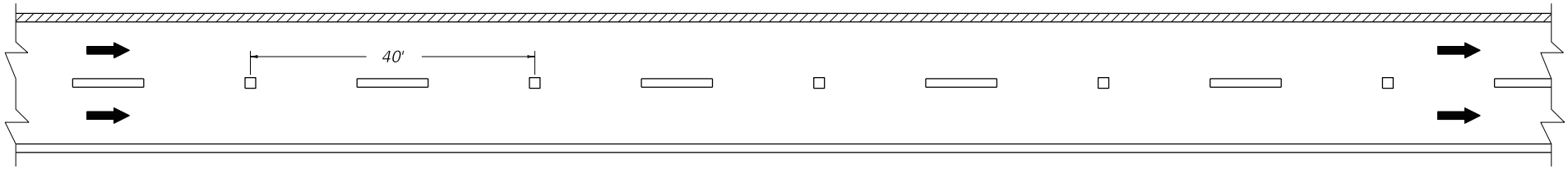

ARRANGEMENT "A" (WHITE LANE LINES)

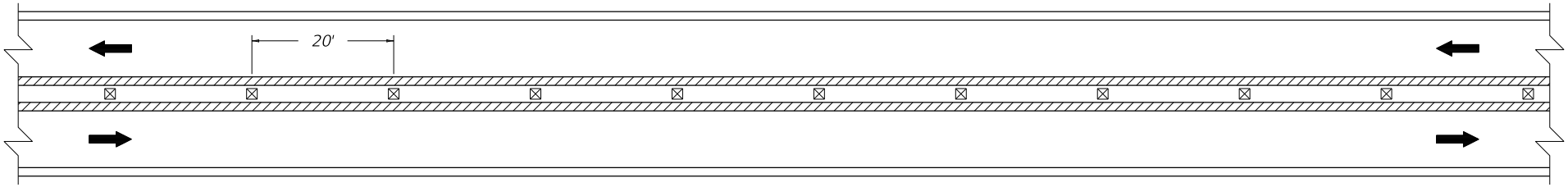

ARRANGEMENT "B" (DOUBLE YELLOW CENTER LINES)

LEGEND

- ⊠ BI-DIRECTIONAL (YELLOW)
- □ MONO-DIRECTIONAL (WHITE)
- MARKINGS (YELLOW)
- MARKINGS (WHITE)

~ NOTES ~

1. TEMPORARY PAVEMENT MARKERS SHALL BE APPLIED AS DIRECTED BY THE ENGINEER.
2. BI-DIRECTIONAL MARKERS, (WHITE-RED) OR (YELLOW-RED), MAY BE USED IN LIEU OF MONO-DIRECTIONAL MARKERS IF RED FACE WILL NOT BE VISIBLE TO OPPOSING TRAFFIC IN THEIR NORMAL TRAVEL LANE.
3. MARKERS INSTALLED AT DOUBLE YELLOW CENTERLINES SHALL BE PLACED BETWEEN THE TWO LINES.
4. MARKERS INSTALLED ALONG LANE LINES SHALL BE PLACED BETWEEN AND IN LINE WITH THE SKIPS.
5. MARKERS INSTALLED ALONG EDGE LINES SHALL BE PLACED SO THAT THE NEAR EDGE OF THE MARKER IS NO MORE THAN 1" FROM THE NEAR EDGE OF THE LINE.

BID ITEMS AND UNIT TO BID
PAVEMENT MARKER TY IVA (BW, BY, MW, MY) TEMP — EACH

DRAWING NOT TO SCALE

KENTUCKY
DEPARTMENT OF HIGHWAYS

TEMPORARY PAVEMENT MARKER ARRANGEMENTS FOR CONSTRUCTION ZONES

STANDARD DRAWING NO. TTC-155-02

SUBMITTED R. Allen Wolfe — DIRECTOR DIVISION OF TRAFFIC OPERATIONS — 12-01-15 DATE

APPROVED — STATE HIGHWAY ENGINEER — 12-01-15 DATE

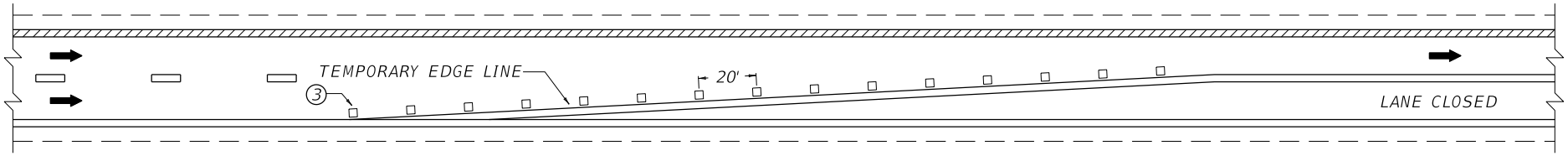

ARRANGEMENT "A" 1

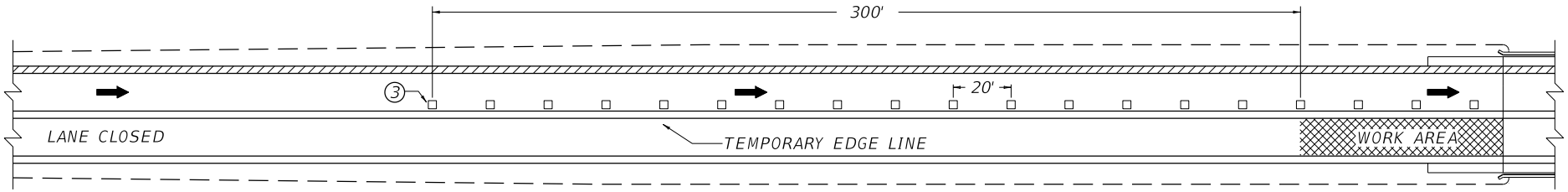

ARRANGEMENT "B" 2

APPLICATION

THIS DRAWING APPLIES TO LANE CLOSURE TRANSITIONS OR CASES WHERE DELINEATION IS DESIRABLE WITHIN LANE CLOSURES ON MULTI-LANE HIGHWAYS. THE DRAWINGS DEPICT LANE CLOSURES IN THE OUTSIDE LANE. WHEN THE INSIDE LANE IS CLOSED, THE SAME PRINCIPLES APPLY, EXCEPT MONO-DIRECTIONAL (YELLOW) MARKERS SHALL BE USED. BI-DIRECTIONAL MARKERS, (WHITE-RED) OR (YELLOW-RED), MAY BE USED IN LIEU OF MONO-DIRECTIONAL MARKERS IF RED FACE WILL NOT BE VISIBLE TO OPPOSING TRAFFIC IN THEIR NORMAL TRAVEL LANE.

THIS STANDARD DRAWING SHALL BE USED IN CONJUNCTION WITH THE APPROPRIATE STANDARD DRAWING FOR THE LANE CLOSURE.

LEGEND

- MONO-DIRECTIONAL (WHITE)
- MARKINGS (YELLOW)
- MARKINGS (WHITE)

~ NOTES ~

1. ARRANGEMENT "A" SHALL BE APPLIED WHEN THE LANE CLOSURE IS TO BE IN EFFECT AT THE SAME LOCATION FOR FOUR (4) DAYS OR GREATER AND THE EXISTING ADT IS 5,000 OR GREATER.
2. ARRANGEMENT "B" SHALL BE APPLIED WHEN THE EXISTING PAVEMENT HAS BEEN REMOVED ADJACENT TO TRAFFIC (INCLUDING BRIDGE ENDS AND OTHER SPOT IMPROVEMENTS).
3. MARKERS INSTALLED ALONG EDGE LINES SHALL BE PLACED SO THAT THE NEAR EDGE OF THE CASTING IS NO MORE THAN 1" FROM THE NEAR EDGE OF THE LINE.

BID ITEMS AND UNIT TO BID
PAVEMENT MARKER TY IVA (BW, BY, MW, MY) TEMP — EACH

DRAWING NOT TO SCALE

KENTUCKY
DEPARTMENT OF HIGHWAYS

TEMPORARY PAVEMENT MARKER ARRANGEMENTS FOR LANE CLOSURES

STANDARD DRAWING NO. TTC-160-02

SUBMITTED R. Allen Wolfe — DIRECTOR DIVISION OF TRAFFIC OPERATIONS — 12-01-15 DATE

APPROVED — STATE HIGHWAY ENGINEER — 12-01-15 DATE

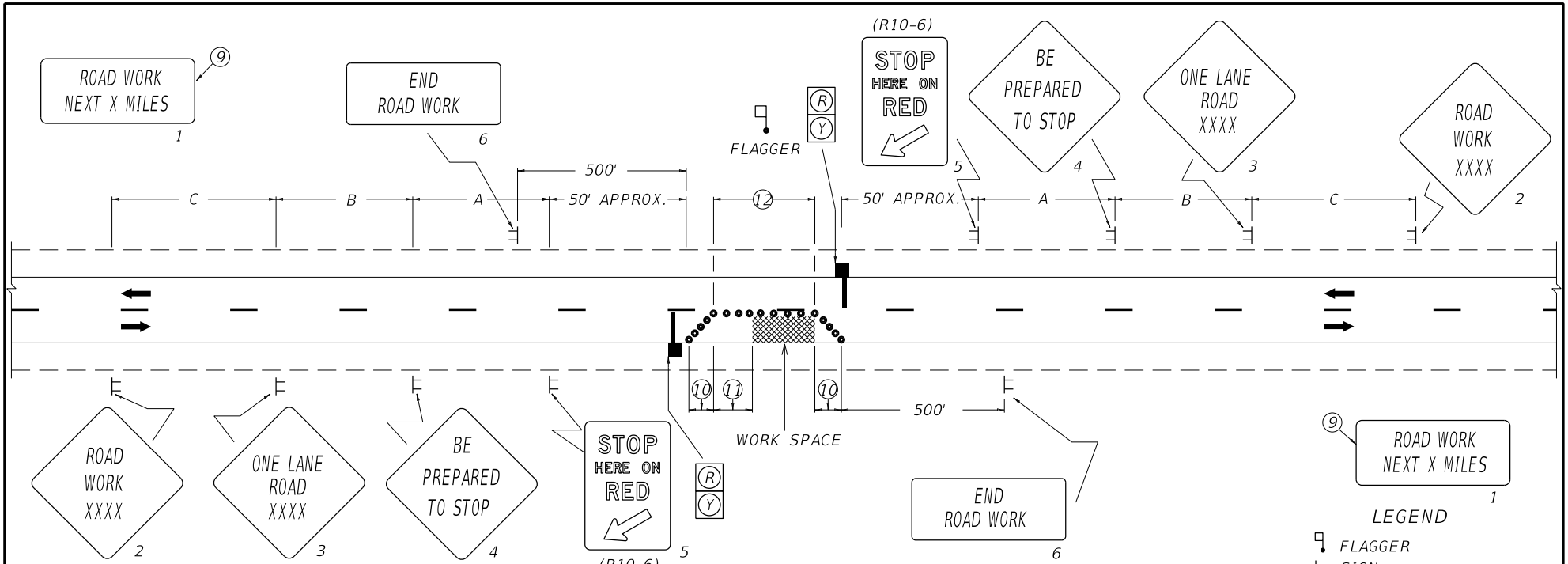

LEGEND

- FLAGGER
- SIGN
- DRUMS/CONES
- AFAD WITH RECOMMENDED GATE AND TWO-SECTION SIGNAL FACE

~ NOTES ~

1. AUTOMATED FLAGGER ASSISTANCE DEVICES (AFADS) SHALL CONFORM TO CHAPTER 6E OF THE MUTCD.
2. AFADS SHALL BE OPERATED BY A SINGLE FLAGGER IF THE FLAGGER HAS AN UNOBSTRUCTED VIEW OF BOTH AFADS AND APPROACHING TRAFFIC IN BOTH DIRECTIONS OR BY SEPARATE FLAGGERS NEAR EACH DEVICE'S LOCATION. FLAGGER(S) OPERATING AFADS SHALL NOT LEAVE THEM UNATTENDED AT ANY TIME WHILE AFADS ARE BEING USED.
3. WHEN AFADS ARE USED AT NIGHT, THEIR LOCATION SHALL BE ILLUMINATED IN ACCORDANCE WITH SECTION 6E.08 OF THE MUTCD.
4. WHEN THE AFAD IS NOT IN USE, THE SIGNS ASSOCIATED WITH THE AFAD, BOTH AT THE AFAD LOCATION AND IN ADVANCE, SHALL BE REMOVED OR COVERED.
5. FOR AFADS THAT ARE POST-MOUNTED, THE BOTTOM OF THE SIGNAL HOUSING SHALL BE AT LEAST 7 FEET ABOVE THE PAVEMENT. FOR OVERHEAD INSTALLATIONS, THE BOTTOM OF THE SIGNAL HOUSING SHALL BE AT LEAST 15 FEET ABOVE THE PAVEMENT.
6. WHEN THE ARM OF THE AFAD IS IN THE DOWN POSITION BLOCKING THE APPROACH LANE, THE ARM SHALL REACH AT LEAST TO THE CENTER OF THE LANE BEING CONTROLLED.
7. THE STEADY CIRCULAR YELLOW CHANGE INTERVAL SHOULD HAVE A DURATION OF AT LEAST 5 SECONDS.
8. DRUMS SHALL BE USED IN LIEU OF CONES IF CLOSURE EXTENDS INTO NIGHTTIME HOURS. GRABBER CONES MAY BE USED IN LIEU OF DRUMS IF THE USE OF DRUMS WOULD RESULT IN LANES THAT ARE TOO NARROW OR AN UNACCEPTABLE SITUATION BASED ON ENGINEERING JUDGMENT.

(9) SIGN NO. 1 SHOULD BE INSTALLED AT THE LIMITS OF THE PROJECT WHEN THE CONSTRUCTION ZONE IS LONGER THAN TWO MILES IN LENGTH. THE DISTANCE SHOWN SHALL BE STATED TO THE NEAREST WHOLE MILE.

(10) TAPERS SHALL BE 50' (MIN) TO 100' (MAX) IN LENGTH. SPACING OF CHANNELIZING DEVICES SHOULD BE 20' THRU THE TAPER AREAS.

(11) BUFFER SPACE (OPTIONAL). IF USED, THE BUFFER SPACE SHOULD BE EXTENDED SO THAT THE TWO-WAY TRAFFIC TAPER IS PLACED BEFORE A HORIZONTAL OR CREST VERTICAL CURVE TO PROVIDE ADEQUATE SIGHT DISTANCE FOR THE AFAD AND A QUEUE OF STOPPED VEHICLES. REFER TO TABLE 6C-2 OF THE MUTCD FOR GUIDANCE ON BUFFER SPACE LENGTH.

(12) SPACING OF CHANNELIZING DEVICES THRU THE ACTIVITY AREA SHOULD BE 80'. ON ROADWAYS WITH WIDTHS LESS THAN 20 FEET, CHANNELIZING DEVICES MAY BE OMITTED THRU THE ACTIVITY AREA BASED ON ENGINEERING JUDGMENT.

BID ITEMS AND UNIT TO BID

AFAD	EACH
LANE CLOSURE	EACH

REFER TO SECTION 112 OF STANDARD SPECIFICATIONS FOR ROAD AND BRIDGE CONSTRUCTION, CURRENT EDITION.

SIGNING AND SPACING TABLE			
ROAD TYPE	A	B	C
SP. LT. ≥ 45 MPH*	500'	500'	500'
SP. LT. ≤ 40 MPH*	250'	250'	250'

*NOTE: USE NORMAL POSTED SPEED LIMIT

SIGN SIZES		
SIGN	CONVENTIONAL	EXPRESSWAY/ FREEWAY
2, 3, AND 4	36" X 36"	48" X 48"
1 AND 6	36" X 18"	48" X 24"
5	24" X 36"	36" X 48"

DRAWING NOT TO SCALE

KENTUCKY DEPARTMENT OF HIGHWAYS

AUTOMATED FLAGGING ASSISTANCE DEVICES RED/YELLOW LENS

STANDARD DRAWING NO. TTC-165

SUBMITTED R. Allen Wolfe DIRECTOR DIVISION OF TRAFFIC OPERATIONS 02-26-20 DATE

APPROVED STATE HIGHWAY ENGINEER 02-26-20 DATE

R2-10

R2-11

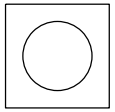

12" FY

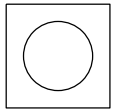

12" FY

S4-4P

APPLICATION

IN ACCORDANCE WITH KRS 189.2327, IN ORDER FOR FINES TO BE DOUBLED IN A HIGHWAY WORK ZONE, WORK ZONE SIGNS AND DOUBLE FINE SIGNS MUST BE DISPLAYED AND AT LEAST ONE (1) BONA FIDE WORKER MUST BE PRESENT.

~ NOTES ~

1. THE BEGIN AND END DOUBLE FINES SIGNS SHALL BE 48" X 60" FOR FREEWAYS, 36" X 48" FOR EXPRESSWAYS, AND 24" X 30" FOR OTHER ROADWAYS. "WHEN FLASHING" PLAQUES SHALL BE 48" X 18" FOR FREEWAYS, 36" X 18" FOR EXPRESSWAYS, AND 24" X 10" FOR ALL OTHER ROADWAYS.
2. SIGNS SHALL HAVE A WHITE BACKGROUND AND SHALL BE MOUNTED AT ELEVATIONS AND OFFSETS PRESCRIBED IN THE MUTCD.
3. USE ENGINEERING JUDGMENT WHEN DETERMINING THE LIMITS OF DOUBLE FINE ZONES. FOR SHORT LENGTH PROJECTS WHERE WORK WILL OCCUR THROUGHOUT THE PROJECT LIMITS, LOCATE "BEGIN DOUBLE FINES ZONE" SIGN ASSEMBLY BETWEEN THE LAST ADVANCE WARNING SIGN AND THE BEGINNING OF THE ACTIVITY AREA AND LOCATE THE "END DOUBLE FINES ZONE" SIGN 250' IN ADVANCE OF THE "END ROAD WORK" SIGN. FOR LONG LENGTH PROJECTS WHERE WORK WILL NOT OCCUR THROUGHOUT THE PROJECT LIMITS, CONSIDER PLACING SIGNS ONLY IN AREAS WITH ACTIVE CONSTRUCTION.
4. SIGNS SHALL BE DUAL-MOUNTED ON MULTI-LANE HIGHWAYS WHERE MEDIAN IS WIDE ENOUGH TO MAINTAIN LATERAL CLEARANCES AS PRESCRIBED IN THE MUTCD. WHERE CONSTRUCTION ONLY AFFECTS ONE DIRECTION OF A DIVIDED HIGHWAY WITH A BARRIER OR WIDE MEDIAN, SIGNS SHALL NOT BE ERECTED FOR OPPOSING DIRECTION.
5. ADDITIONAL SIGNS MAY BE REQUIRED FOR LONG CONSTRUCTION ZONES OR WHERE RAMPS OR INTERSECTING STREETS JUNCTION WITHIN THE PROJECT LIMITS.
6. BEGIN DOUBLE FINE SIGN ASSEMBLIES MAY INCLUDE A "WHEN FLASHING" PLAQUE AND FLASHING BEACONS. BEACONS SHALL BE YELLOW AND TWELVE (12") INCHES IN DIAMETER, BE MOUNTED HORIZONTALLY NEAR THE TOP OF THE SIGN ASSEMBLY, AND SHALL FLASH ALTERNATELY. BEACONS SHALL CONFORM TO PART 4L OF THE MUTCD.
7. "BEGIN DOUBLE FINES ZONES" SIGNS SHOULD BE COVERED IF A BONA FIDE WORKER WILL NOT BE PRESENT FOR A SIGNIFICANT PERIOD OF TIME. IN SUCH CASES, ASSEMBLIES WITH FLASHING BEACONS SHALL BE TURNED OFF.

BID ITEM	UNIT TO BID
SIGNS	SQFT

KENTUCKY
DEPARTMENT OF HIGHWAYS

DOUBLE FINES
ZONE SIGNS

STANDARD DRAWING NO. TTD-120-03

SUBMITTED R. Allen Wolfe 02-26-20
DIRECTOR DIVISION OF TRAFFIC OPERATIONS DATE

APPROVED 02-26-20
STATE HIGHWAY ENGINEER DATE

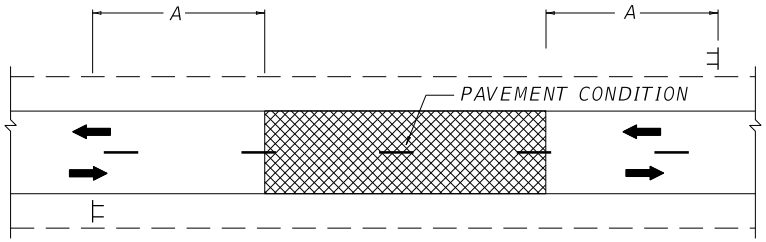

SIGN SPACING TABLE	
ROAD TYPE	A
EXPRESSWAY/ FREEWAY	750'
RURAL/URBAN SP. LT. ≥ 45 MPH*	500'
URBAN SP. LT. ≤ 40 MPH*	250'

*NOTE: USE NORMAL POSTED SPEED LIMIT

W21-2

W8-8

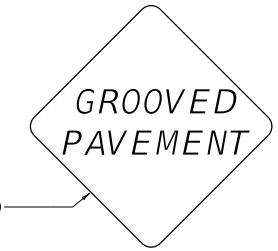

W8-15

10

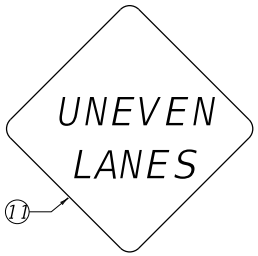

W8-11

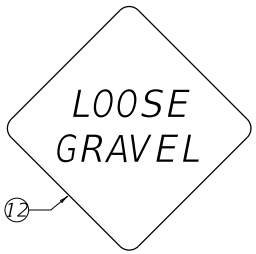

W8-7

W8-24

14

W8-15P

APPLICATION

PAVEMENT CONDITION SIGNS GIVE MOTORISTS ADVANCE WARNING OF TEMPORARY IMPACTS TO PAVEMENT CONDITIONS WITHIN WORK ZONES. SUCH ADVANCE WARNING IS PARTICULARLY CRITICAL FOR MOTORCYCLISTS. THIS DRAWING IS INTENDED TO BE USED IN CONJUNCTION WITH OTHER APPLICABLE TEMPORARY TRAFFIC CONTROL STANDARD DRAWINGS.

~ NOTES ~

1. SIGNS SHALL HAVE A BLACK LEGEND ON A FLUORESCENT ORANGE BACKGROUND.
2. THE SIZE OF ABOVE SIGNS SHALL BE 48" X 48" FOR EXPRESSWAYS/FREEWAYS AND 36" X 36" FOR OTHER ROADWAYS. A FREEWAY SHALL BE DEFINED AS A DIVIDED HIGHWAY WITH FULL CONTROL OF ACCESS. AN EXPRESSWAY SHALL BE DEFINED AS A DIVIDED HIGHWAY WITH PARTIAL CONTROL OF ACCESS.
3. SIGNS SHALL BE MOUNTED AT ELEVATIONS AND OFFSETS PRESCRIBED IN THE MUTCD.
4. SIGNS SHALL BE DUAL-MOUNTED ON MULTI-LANE HIGHWAYS WHERE MEDIAN IS WIDE ENOUGH TO MAINTAIN LATERAL CLEARANCES AS PRESCRIBED IN THE MUTCD.
5. ADDITIONAL SIGNS MAY BE REQUIRED FOR LONG CONSTRUCTION ZONES OR WHERE RAMPS OR INTERSECTING STREETS JUNCTION WITHIN THE PROJECT LIMITS.
6. SIGNS SHOULD BE INSTALLED IN ACCORDANCE WITH SPACING IN SIGN SPACING TABLE AND NO CLOSER THAN 250' TO ANY OTHER REQUIRED WORK ZONE SIGNING.
7. IF A PAVEMENT CONDITION EXISTS OVER A LONG STRETCH OF ROADWAY, PAVEMENT CONDITION WARNING SIGNS MAY BE USED IN COMBINATION WITH A SUPPLEMENTARY DISTANCE PLAQUE (W7-3A).

8 "WET PAVEMENT" SIGNS SHOULD BE INSTALLED IN ADVANCE OF LOCATIONS WHERE WATER IS APPLIED TO THE PAVEMENT TO CONTROL DUST IN A WORK ZONE.

9 "FRESH OIL" SIGNS SHOULD BE INSTALLED WHERE PAVING OPERATIONS RESULT IN A SLIPPERY PAVEMENT SURFACE AND/OR WHERE SPLASHING MAY OCCUR.

10 "ROUGH ROAD" OR "GROOVED PAVEMENT" SIGNS SHOULD BE INSTALLED IN ADVANCE OF ANY TEMPORARILY TEXTURED/MILLED PAVEMENT SURFACES. PERMANENT SIGNS MAY BE INSTALLED IF ENGINEERING JUDGMENT DETERMINES THAT WARNING FOR A NON-TEMPORARY TEXTURED SURFACE (I.E. DIAMOND GRINDED PAVEMENT) IS NECESSARY.

11 "UNEVEN LANES" SIGNS SHOULD BE INSTALLED IN ADVANCE OF LOCATIONS WHERE THERE IS A SUBSTANTIAL DIFFERENCE IN ELEVATION BETWEEN ADJACENT LANES THAT ARE OPEN TO TRAVEL.

12 "LOOSE GRAVEL" SIGNS SHOULD BE INSTALLED WHERE WORK ZONE OPERATIONS FREQUENTLY RESULT IN ROCK DEBRIS IN THE ROADWAY.

13 "STEEL PLATE AHEAD" SIGNS WITH SUPPLEMENTAL "STEEL PLATE" PLAQUES SHOULD BE INSTALLED IN ADVANCE OF LOCATIONS WHERE STEEL PLATES ARE USED TO BRIDGE OPEN CUTS IN THE ROADWAY.

14 A MOTORCYCLE (W8-15P) PLAQUE MAY BE MOUNTED BELOW OR ABOVE ANY OF THE PRESCRIBED SIGNS IN THIS DRAWING IF THE WARNING IS INTENDED TO BE DIRECTED PRIMARILY TO MOTORCYCLISTS.

BID ITEMS AND UNIT TO BID
REFER TO SECTION 112 OF STANDARD SPECIFICATIONS FOR ROAD AND BRIDGE CONSTRUCTION, CURRENT EDITION.

KENTUCKY
DEPARTMENT OF HIGHWAYS

PAVEMENT CONDITION
WARNING SIGNS

STANDARD DRAWING NO. TTD-125-03

SUBMITTED R. Jeffrey Wolfe 02-26-20
DIRECTOR DIVISION OF TRAFFIC OPERATIONS DATE

APPROVED 02-26-20
STATE HIGHWAY ENGINEER DATE

W3-5

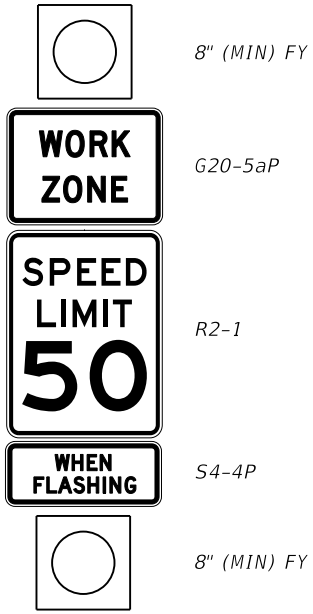

Option A

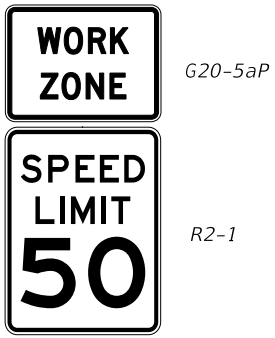

Option B

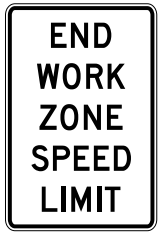

R2-12

	COLORS	SIZES	
SIGN	BACKGROUND COLOR	CONVENTIONAL	EXPRESSWAY/ FREEWAY
W3-5	FLUORESCENT ORANGE	48" x 48"	48" x 48"
G20-5aP	FLUORESCENT ORANGE	36" x 24"	36" x 24"
R2-1	WHITE	36" x 48"	36" x 48"
R2-12	WHITE	24" x 36"	36" x 54"
S4-4P	WHITE	36" x 18"	36" x 18"

~ NOTES ~

1. REDUCED SPEED ZONES SHOULD BE USED ONLY IN SPECIFIC PORTIONS OF THE WORK ZONE WHERE CONDITIONS OR RESTRICTIVE FEATURES ARE PRESENT. LOWERING THE REGULATORY SPEED LIMIT SHOULD BE AVOIDED AS MUCH AS PRACTICAL BECAUSE DRIVERS REDUCE THEIR SPEEDS ONLY IF THEY CLEARLY PERCEIVE A NEED TO DO SO.
2. SPEED LIMIT MAY BE REDUCED BY 15 MPH WITHOUT A TRAFFIC ENGINEERING INVESTIGATION ON HIGHWAYS WHERE THE NORMAL POSTED SPEED LIMIT IS 70 MPH. THE SPEED LIMIT MAY BE REDUCED BY 10 MPH WITHOUT A TRAFFIC ENGINEERING INVESTIGATION ON OTHER HIGHWAYS. LARGER SPEED REDUCTIONS REQUIRE A TRAFFIC ENGINEERING INVESTIGATION AND APPROVAL OF THE SECRETARY OF TRANSPORTATION.
3. A SPEED REDUCTION (W3-5) SIGN SHALL BE INSTALLED IN ADVANCE OF A WORK ZONE WITH A TEMPORARY WORK ZONE SPEED LIMIT. SIGNS SHALL BE DUAL-MOUNTED ON MULTI-LANE HIGHWAYS WHERE MEDIAN IS WIDE ENOUGH TO MAINTAIN LATERAL CLEARANCES AS PRESCRIBED IN THE MUTCD. THE SPEED LIMIT DISPLAYED ON THE SIGN SHALL MATCH THE DESIRED SPEED LIMIT THROUGH THE WORK ZONE.
4. IF THE END OF THE REDUCED SPEED ZONE DOES NOT COINCIDE WITH THE "END ROAD WORK" SIGN, AN "END WORK ZONE SPEED LIMIT" (R2-12) OR A "SPEED LIMIT" (R2-1) SIGN DISPLAYING THE NORMAL POSTED SPEED LIMIT SHOULD BE INSTALLED AT THE END OF THE REDUCED SPEED ZONE.
5. SPEED LIMIT ASSEMBLIES MAY INCLUDE A "WHEN FLASHING" PLAQUE AND FLASHING BEACONS. BEACONS SHALL BE YELLOW, AT LEAST EIGHT (8) INCHES IN DIAMETER, AND MOUNTED VERTICALLY. BEACONS SHALL FLASH ALTERNATELY AND CONFORM TO PART 4L OF THE MUTCD.
6. IF A SPEED LIMIT IS TO APPLY TO THE ENTIRE LENGTH OF THE WORK ZONE, THE SPEED REDUCTION (W3-5) SIGN SHOULD BE INSTALLED BETWEEN THE FIRST AND SECOND ADVANCE WARNING SIGN, AND THE SPEED LIMIT (R2-1) SIGN OR FLASHER ASSEMBLY SHOULD BE INSTALLED BETWEEN THE SECOND AND THIRD ADVANCE WARNING SIGN. IF A SPEED LIMIT ONLY APPLIES TO A SHORT SECTION OF A LONGER WORK ZONE, THE W3-5 SIGN SHOULD BE MOUNTED APPROXIMATELY 500 FEET IN ADVANCE OF THE SPEED LIMIT SIGN ASSEMBLY AND NO CLOSER THAN 250 FEET TO ANY OTHER SIGNS.

BID ITEM	UNIT TO BID
SIGNS	SQFT

KENTUCKY
DEPARTMENT OF HIGHWAYS

SPEED ZONE SIGNING
FOR WORK ZONES

STANDARD DRAWING NO. TTD-130

SUBMITTED B. Allen Wolfe 02-26-20
DIRECTOR OF DIVISION OF TRAFFIC OPERATIONS DATE

APPROVED 02-26-20
STATE HIGHWAY ENGINEER DATE

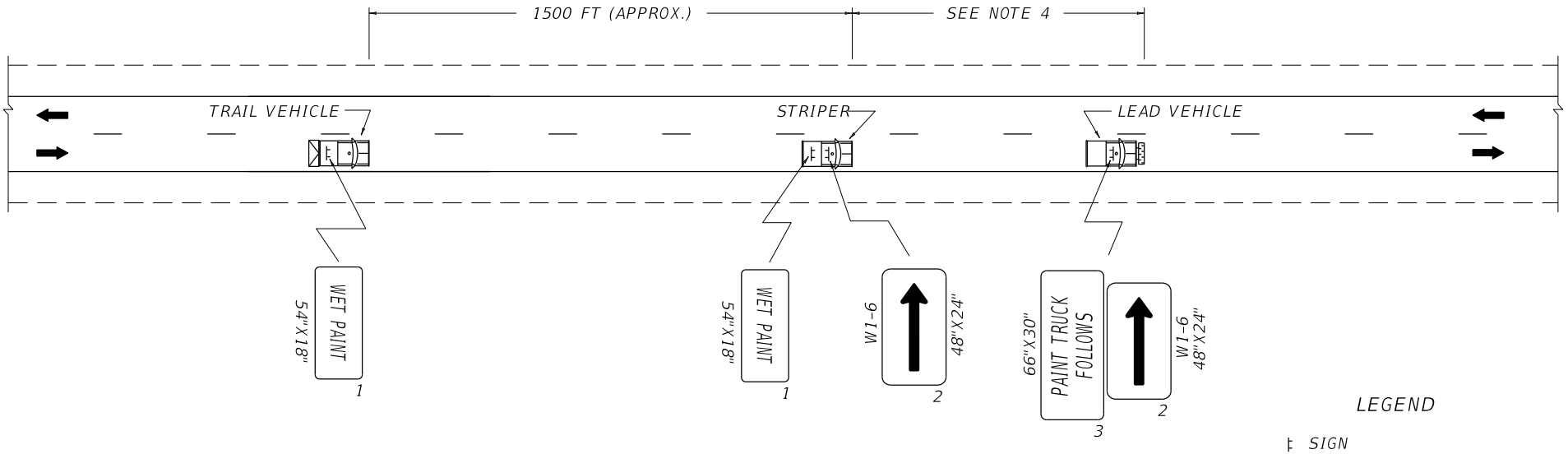

LEGEND

- SIGN
- TRUCK MOUNTED ATTENUATOR
- SWEEPER/BLOWER

~ NOTES ~

1. SIGNS 1 THRU 3 SHALL HAVE A BLACK BORDER AND LEGEND ON A BACKGROUND OF FLOURESCENT ORANGE SHEETING.
2. ALL VEHICLES IN THE STRIPING TRAIN SHALL BE EQUIPPED WITH HIGH-INTENSITY ROTATING, FLASHING, OSCILLATING, OR STROBE LIGHTS ON THE CAB.
3. THE LAST TRAIL VEHICLE IN THE STRIPING TRAIN SHALL BE EQUIPPED WITH A TRUCK MOUNTED ATTENUATOR (T.M.A.) IF LANES ARE 10' WIDE OR GREATER.
4. THE LEAD VEHICLE SHALL MAINTAIN VISUAL CONTACT WITH THE STRIPER WHENEVER POSSIBLE TO COORDINATE ON AND OFF THE ROAD MANEUVERS. THE STRIPING TRAIN SHALL BE REQUIRED TO PULL OFF THE ROADWAY PERIODICALLY TO ALLEVIATE TRAFFIC CONGESTION.
5. TWO-WAY RADIO COMMUNICATION SHALL BE MAINTAINED BETWEEN ALL VEHICLES IN THE STRIPING TRAIN.
6. ADDITIONAL VEHICLES MAY BE ADDED TO THE STRIPING TRAIN AS NEEDED TO PROTECT THE FRESHLY PAINTED LINE.
7. THE SPACING BETWEEN VEHICLES IN THE WORK TRAIN SHOULD BE ADJUSTED, AS NEEDED, TO PROVIDE ADEQUATE SIGHT DISTANCE TO APPROACHING VEHICLES AND TO PROTECT THE FRESHLY APPLIED LINE.
8. VEHICLE-MOUNTED SIGNS SHALL BE MOUNTED IN A MANNER SUCH THAT THEY ARE NOT OBSCURED BY EQUIPMENT OR SUPPLIES. SIGN LEGENDS ON VEHICLE-MOUNTED SIGNS SHALL BE COVERED OR TURNED FROM VIEW WHEN WORK IS NOT IN PROGRESS. IF AN ARROW PANEL IS USED, IT SHALL BE USED IN THE CAUTION MODE.

BID ITEMS AND UNIT TO BID
REFER TO SECTION 112 OF STANDARD SPECIFICATIONS FOR ROAD AND BRIDGE CONSTRUCTION, CURRENT EDITION.

DRAWING NOT TO SCALE

APPLICATION

THIS DRAWING APPLIES TO STRIPING OPERATIONS ON TWO-LANE, TWO-WAY ROADWAYS INVOLVING THE PLACEMENT OF EDGE LINES ONLY.

KENTUCKY
DEPARTMENT OF HIGHWAYS

MOBILE OPERATION
FOR PAINT STRIPING
CASE I

STANDARD DRAWING NO. TTS-100-02

SUBMITTED R. Allen Wolfe 12-01-15
DIRECTOR DIVISION OF TRAFFIC OPERATIONS DATE

APPROVED 12-01-15
STATE HIGHWAY ENGINEER DATE

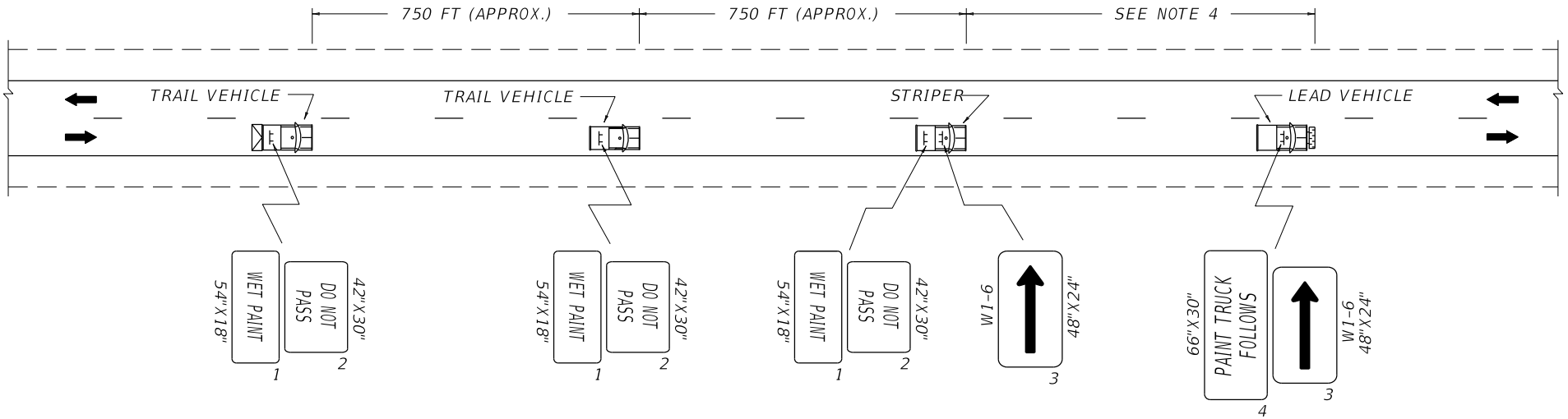

LEGEND

- SIGN
- TRUCK MOUNTED ATTENUATOR
- SWEEPER/BLOWER

~ NOTES ~

1. SIGNS 1 ,3, AND 4 SHALL HAVE A BLACK BORDER AND LEGEND ON A BACKGROUND OF FLUORESCENT ORANGE SHEETING. SIGN 2 SHALL HAVE A BLACK BORDER AND LEGEND ON A BACKGROUND OF REFLECTIVE WHITE SHEETING.
2. ALL VEHICLES IN THE STRIPING TRAIN SHALL BE EQUIPPED WITH HIGH-INTENSITY ROTATING, FLASHING, OSCILLATING, OR STROBE LIGHTS ON THE CAB.
3. THE LAST TRAIL VEHICLE IN THE STRIPING TRAIN SHALL BE EQUIPPED WITH A TRUCK MOUNTED ATTENUATOR (T.M.A.) IF LANES ARE 10' WIDE OR GREATER.
4. THE LEAD VEHICLE SHALL MAINTAIN VISUAL CONTACT WITH THE STRIPER WHENEVER POSSIBLE TO COORDINATE ON AND OFF THE ROAD MANEUVERS. THE STRIPING TRAIN SHALL BE REQUIRED TO PULL OFF THE ROADWAY PERIODICALLY TO ALLEVIATE TRAFFIC CONGESTION.
5. TWO-WAY RADIO COMMUNICATION SHALL BE MAINTAINED BETWEEN ALL VEHICLES IN THE STRIPING TRAIN.
6. ADDITIONAL VEHICLES MAY BE ADDED TO THE STRIPING TRAIN AS NEEDED TO PROTECT THE FRESHLY PAINTED LINE.
7. THE SPACING BETWEEN VEHICLES IN THE WORK TRAIN SHOULD BE ADJUSTED, AS NEEDED, TO PROVIDE ADEQUATE SIGHT DISTANCE TO APPROACHING VEHICLES AND TO PROTECT THE FRESHLY APPLIED LINE.
8. VEHICLE-MOUNTED SIGNS SHALL BE MOUNTED IN A MANNER SUCH THAT THEY ARE NOT OBSCURED BY EQUIPMENT OR SUPPLIES. SIGN LEGENDS ON VEHICLE-MOUNTED SIGNS SHALL BE COVERED OR TURNED FROM VIEW WHEN WORK IS NOT IN PROGRESS. IF AN ARROW PANEL IS USED, IT SHALL BE USED IN THE CAUTION MODE.

BID ITEMS AND UNIT TO BID
REFER TO SECTION 112 OF STANDARD SPECIFICATIONS FOR ROAD AND BRIDGE CONSTRUCTION, CURRENT EDITION.

DRAWING NOT TO SCALE

APPLICATION

THIS DRAWING APPLIES TO STRIPING OPERATIONS ON TWO-LANE, TWO-WAY ROADWAYS INVOLVING THE PLACEMENT OF EITHER THE CENTERLINE ONLY OR A COMBINATION OF THE CENTERLINE AND EDGE LINE.

KENTUCKY
DEPARTMENT OF HIGHWAYS

MOBILE OPERATION
FOR PAINT STRIPING
CASE II

STANDARD DRAWING NO. TTS-105-02

SUBMITTED R. Allen Wolfe 12-01-15
DIRECTOR DIVISION OF TRAFFIC OPERATIONS DATE

APPROVED 12-01-15
STATE HIGHWAY ENGINEER DATE

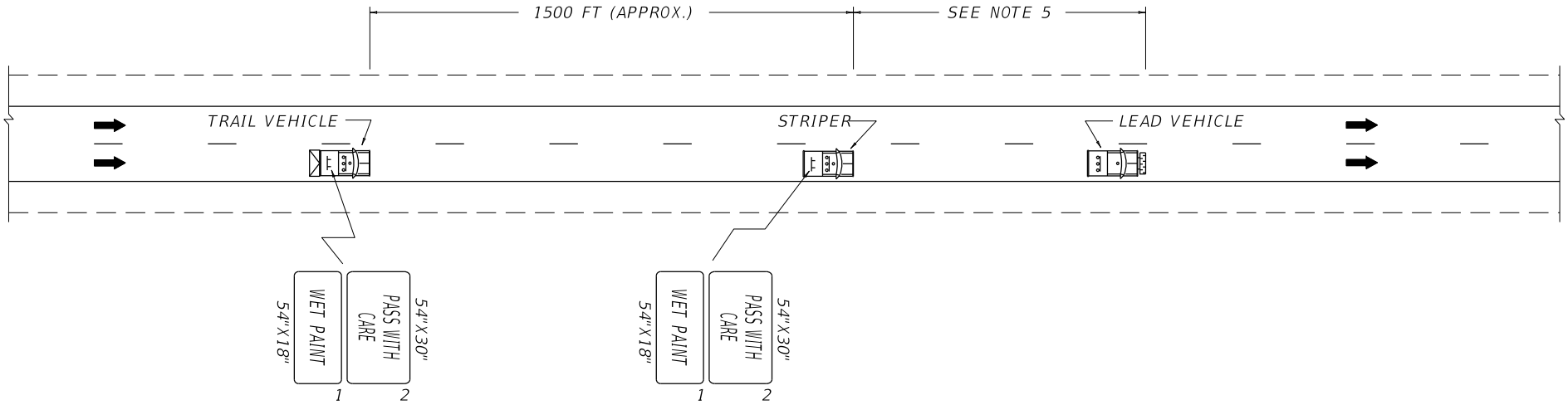

LEGEND

- FLASHING ARROW PANELS
- SIGN
- TRUCK MOUNTED ATTENUATOR
- SWEEPER/BLOWER

~ NOTES ~

1. FLASH ARROW PANELS TO DIRECT TRAFFIC RIGHT OR LEFT AS APPROPRIATE. FLASHING ARROW PANELS SHALL BE TYPE B (60"X30") OR LARGER.
2. SIGN 1 SHALL HAVE A BLACK BORDER AND LEGEND ON A BACKGROUND OF FLOURESCENT ORANGE SHEETING. SIGN 2 SHALL HAVE A BLACK BORDER AND LEGEND ON A BACKGROUND OF REFLECTIVE WHITE SHEETING.
3. ALL VEHICLES IN THE STRIPING TRAIN SHALL BE EQUIPPED WITH HIGH-INTENSITY ROTATING, FLASHING, OSCILLATING, OR STROBE LIGHTS ON THE CAB.
4. THE LAST TRAIL VEHICLE IN THE STRIPING TRAIN SHALL BE EQUIPPED WITH A TRUCK MOUNTED ATTENUATOR (T.M.A.) IF LANES ARE 10' WIDE OR GREATER.
5. THE LEAD VEHICLE SHALL MAINTAIN VISUAL CONTACT WITH THE STRIPER.
6. TWO-WAY RADIO COMMUNICATION SHALL BE MAINTAINED BETWEEN ALL VEHICLES IN THE STRIPING TRAIN.
7. ADDITIONAL VEHICLES MAY BE ADDED TO THE STRIPING TRAIN AS NEEDED TO PROTECT THE FRESHLY PAINTED LINE.
8. THE SPACING BETWEEN VEHICLES IN THE WORK TRAIN SHOULD BE ADJUSTED, AS NEEDED, TO PROVIDE ADEQUATE SIGHT DISTANCE TO APPROACHING VEHICLES AND TO PROTECT THE FRESHLY APPLIED LINE.
9. VEHICLE-MOUNTED SIGNS SHALL BE MOUNTED IN A MANNER SUCH THAT THEY ARE NOT OBSCURED BY EQUIPMENT OR SUPPLIES. SIGN LEGENDS ON VEHICLE-MOUNTED SIGNS SHALL BE COVERED OR TURNED FROM VIEW WHEN WORK IS NOT IN PROGRESS.

BID ITEMS AND UNIT TO BID
REFER TO SECTION 112 OF STANDARD SPECIFICATIONS FOR ROAD AND BRIDGE CONSTRUCTION, CURRENT EDITION.

DRAWING NOT TO SCALE

APPLICATION

THIS DRAWING APPLIES TO PAINT STRIPING OPERATIONS ON MULTI-LANE ROADWAYS INVOLVING THE PLACEMENT OF EDGE LINES ONLY.

KENTUCKY
DEPARTMENT OF HIGHWAYS

MOBILE OPERATION
FOR PAINT STRIPING
CASE III

STANDARD DRAWING NO. TTS-110-02

SUBMITTED R. Allen Wolfe — DIRECTOR DIVISION OF TRAFFIC OPERATIONS — 12-01-15 DATE

APPROVED — STATE HIGHWAY ENGINEER — 12-01-15 DATE

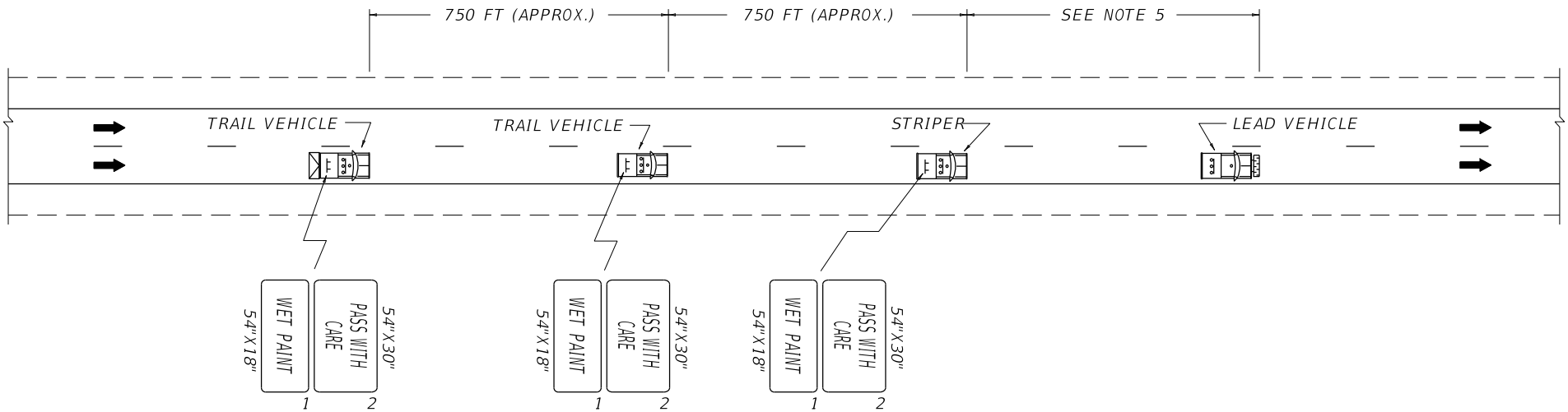

LEGEND

- FLASHING ARROW PANELS
- SIGN
- TRUCK MOUNTED ATTENUATOR
- SWEEPER/BLOWER

~ NOTES ~

1. FLASH ARROW PANELS TO DIRECT TRAFFIC RIGHT OR LEFT AS APPROPRIATE. FLASHING ARROW PANELS SHALL BE TYPE B (60"X30") OR LARGER.
2. SIGN 1 SHALL HAVE A BLACK BORDER AND LEGEND ON A BACKGROUND OF FLUORESCENT ORANGE SHEETING. SIGN 2 SHALL HAVE A BLACK BORDER AND LEGEND ON A BACKGROUND OF REFLECTIVE WHITE SHEETING.
3. ALL VEHICLES IN THE STRIPING TRAIN SHALL BE EQUIPPED WITH HIGH-INTENSITY ROTATING, FLASHING, OSCILLATING, OR STROBE LIGHTS ON THE CAB.
4. THE LAST TRAIL VEHICLE IN THE STRIPING TRAIN SHALL BE EQUIPPED WITH A TRUCK MOUNTED ATTENUATOR (T.M.A.) IF LANES ARE 10' WIDE OR GREATER.
5. THE LEAD VEHICLE SHALL MAINTAIN VISUAL CONTACT WITH THE STRIPER.
6. TWO-WAY RADIO COMMUNICATION SHALL BE MAINTAINED BETWEEN ALL VEHICLES IN THE STRIPING TRAIN.
7. ADDITIONAL VEHICLES MAY BE ADDED TO THE STRIPING TRAIN AS NEEDED TO PROTECT THE FRESHLY PAINTED LINE.
8. THE SPACING BETWEEN VEHICLES IN THE WORK TRAIN SHOULD BE ADJUSTED, AS NEEDED, TO PROVIDE ADEQUATE SIGHT DISTANCE TO APPROACHING VEHICLES AND TO PROTECT THE FRESHLY APPLIED LINE.
9. VEHICLE-MOUNTED SIGNS SHALL BE MOUNTED IN A MANNER SUCH THAT THEY ARE NOT OBSCURED BY EQUIPMENT OR SUPPLIES. SIGN LEGENDS ON VEHICLE-MOUNTED SIGNS SHALL BE COVERED OR TURNED FROM VIEW WHEN WORK IS NOT IN PROGRESS.

BID ITEMS AND UNIT TO BID
REFER TO SECTION 112 OF STANDARD SPECIFICATIONS FOR ROAD AND BRIDGE CONSTRUCTION, CURRENT EDITION.

DRAWING NOT TO SCALE

APPLICATION

THIS DRAWING APPLIES TO PAINT STRIPING OPERATIONS ON MULTI-LANE ROADWAYS INVOLVING EITHER THE PLACEMENT OF LANE LINES ONLY OR A COMBINATION OF LANE LINES AND EDGE LINES.

KENTUCKY
DEPARTMENT OF HIGHWAYS

MOBILE OPERATION
FOR PAINT STRIPING
CASE IV

STANDARD DRAWING NO. TTS-115-02

SUBMITTED R. Allen Wolfe — DIRECTOR DIVISION OF TRAFFIC OPERATIONS — 12-01-15 DATE

APPROVED — STATE HIGHWAY ENGINEER — 12-01-15 DATE

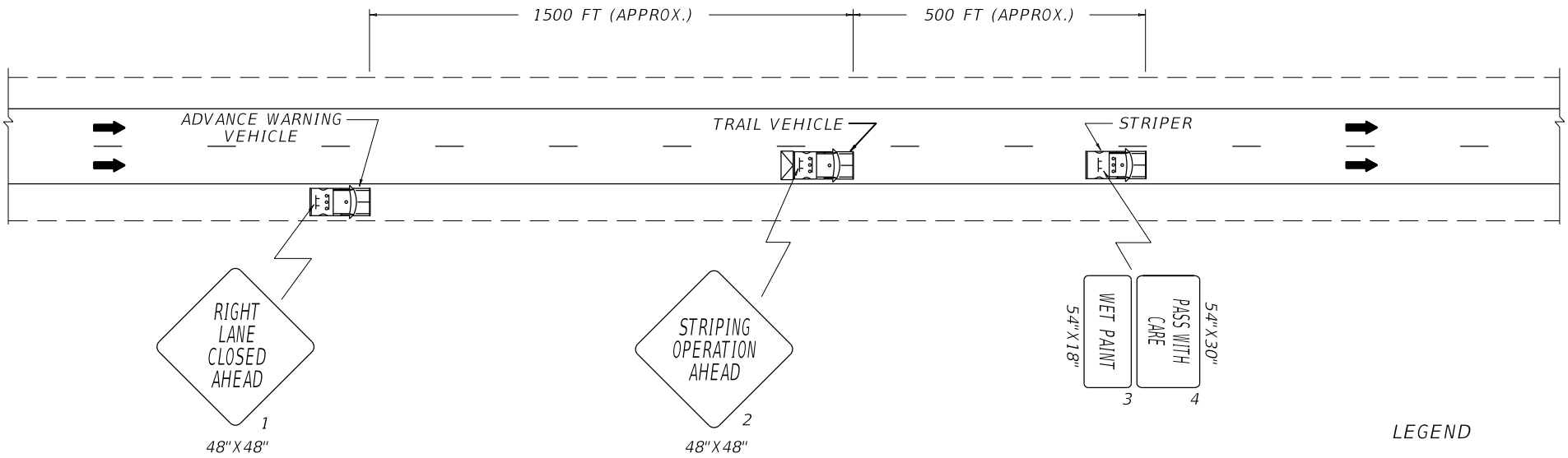

LEGEND

- FLASHING ARROW PANEL
- SIGN
- TRUCK MOUNTED ATTENUATOR

~ NOTES ~

1. FLASH ARROW PANELS TO DIRECT TRAFFIC RIGHT OR LEFT AS APPROPRIATE. FLASHING ARROW PANELS SHALL BE TYPE B (60"X30") OR LARGER.
2. SIGNS 1 THRU 3 SHALL HAVE A BLACK BORDER AND LEGEND ON A BACKGROUND OF FLUORESCENT ORANGE SHEETING. SIGN 4 SHALL HAVE A BLACK BORDER AND LEGEND ON A BACKGROUND OF REFLECTIVE WHITE SHEETING.
3. ALL VEHICLES IN THE STRIPING TRAIN SHALL BE EQUIPPED WITH HIGH-INTENSITY ROTATING, FLASHING, OSCILLATING, OR STROBE LIGHTS ON THE CAB.
4. THE LAST TRAIL VEHICLE IN THE WORK TRAIN SHALL BE EQUIPPED WITH A TRUCK MOUNTED ATTENUATOR (T.M.A.) IF LANES ARE 10' WIDE OR GREATER.
5. TWO-WAY RADIO COMMUNICATION SHALL BE MAINTAINED BETWEEN ALL VEHICLES IN THE WORK TRAIN.
6. THE SPACING BETWEEN VEHICLES IN THE WORK TRAIN SHOULD BE ADJUSTED, AS NEEDED, TO PROVIDE ADEQUATE SIGHT DISTANCE TO APPROACHING VEHICLES AND TO PROTECT THE FRESHLY APPLIED LINE.
7. VEHICLE-MOUNTED SIGNS SHALL BE MOUNTED IN A MANNER SUCH THAT THEY ARE NOT OBSCURED BY EQUIPMENT OR SUPPLIES. SIGN LEGENDS ON VEHICLE-MOUNTED SIGNS SHALL BE COVERED OR TURNED FROM VIEW WHEN WORK IS NOT IN PROGRESS.

BID ITEMS AND UNIT TO BID
REFER TO SECTION 112 OF STANDARD SPECIFICATIONS FOR ROAD AND BRIDGE CONSTRUCTION, CURRENT EDITION.

DRAWING NOT TO SCALE

APPLICATION

THIS DRAWING APPLIES TO DURABLE STRIPING OPERATIONS ON MULTI-LANE ROADWAYS INVOLVING THE CLOSURE OF ONE LANE ONLY.

KENTUCKY
DEPARTMENT OF HIGHWAYS

MOBILE OPERATION
FOR DURABLE STRIPING
CASE I

STANDARD DRAWING NO. TTS-120-02

SUBMITTED R. Allen Wolfe 12-01-15
DIRECTOR DIVISION OF TRAFFIC OPERATIONS DATE

APPROVED 12-01-15
STATE HIGHWAY ENGINEER DATE

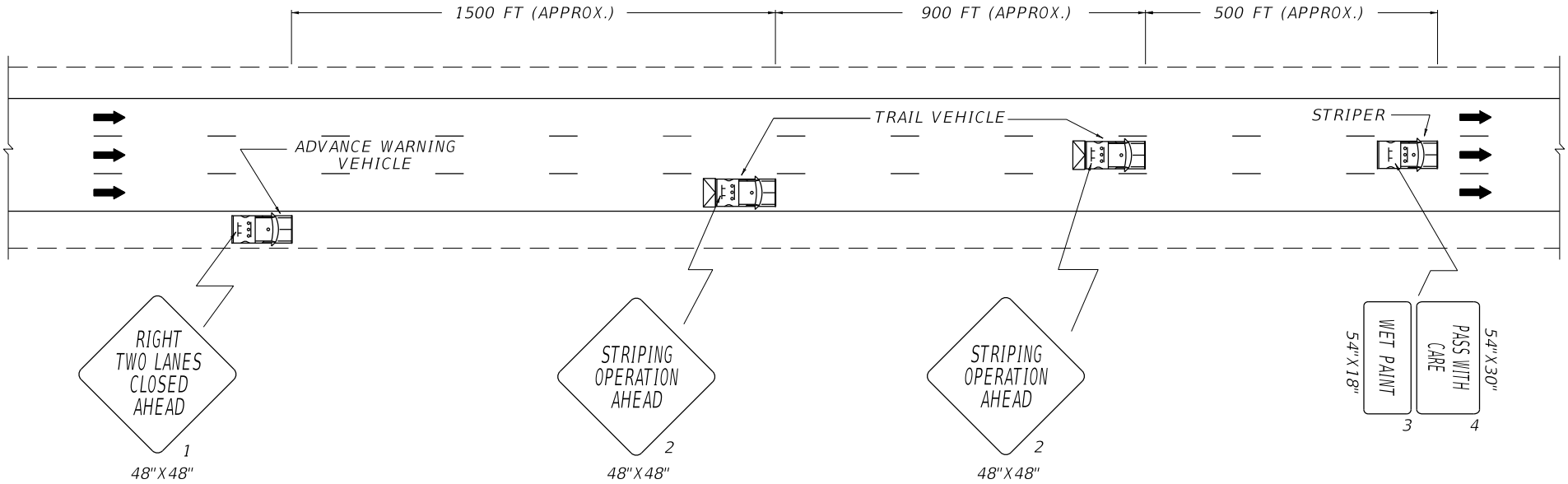

~ NOTES ~

1. FLASH ARROW PANELS TO DIRECT TRAFFIC RIGHT OR LEFT AS APPROPRIATE. FLASHING ARROW PANELS SHALL BE TYPE B (60"X30") OR LARGER.
2. SIGNS 1 THRU 3 SHALL HAVE A BLACK BORDER AND LEGEND ON A BACKGROUND OF FLUORESCENT ORANGE SHEETING. SIGN 4 SHALL HAVE A BLACK BORDER AND LEGEND ON A BACKGROUND OF REFLECTIVE WHITE SHEETING.
3. ALL VEHICLES IN THE STRIPING TRAIN SHALL BE EQUIPPED WITH HIGH-INTENSITY ROTATING, FLASHING, OSCILLATING, OR STROBE LIGHTS ON THE CAB.
4. THE LAST TRAIL VEHICLE IN THE WORK TRAIN SHALL BE EQUIPPED WITH A TRUCK MOUNTED ATTENUATOR (T.M.A.) IF LANES ARE 10' WIDE OR GREATER.
5. WHEN MORE THAN TWO LANES ARE TO BE CLOSED, SIGN 1 SHALL AGREE WITH THE NUMBER OF LANES CLOSED AND ADDITIONAL TRAIL VEHICLES SHALL BE USED.
6. TWO-WAY RADIO COMMUNICATION SHALL BE MAINTAINED BETWEEN ALL VEHICLES IN THE WORK TRAIN.
7. THE SPACING BETWEEN VEHICLES IN THE WORK TRAIN SHOULD BE ADJUSTED, AS NEEDED, TO PROVIDE ADEQUATE SIGHT DISTANCE TO APPROACHING VEHICLES AND TO PROTECT THE FRESHLY APPLIED LINE.
8. VEHICLE-MOUNTED SIGNS SHALL BE MOUNTED IN A MANNER SUCH THAT THEY ARE NOT OBSCURED BY EQUIPMENT OR SUPPLIES. SIGN LEGENDS ON VEHICLE-MOUNTED SIGNS SHALL BE COVERED OR TURNED FROM VIEW WHEN WORK IS NOT IN PROGRESS.

BID ITEMS AND UNIT TO BID
REFER TO SECTION 112 OF STANDARD SPECIFICATIONS FOR ROAD AND BRIDGE CONSTRUCTION, CURRENT EDITION.

LEGEND

- FLASHING ARROW PANEL
- SIGN
- TRUCK MOUNTED ATTENUATOR

DRAWING NOT TO SCALE

APPLICATION

THIS DRAWING APPLIES TO DURABLE STRIPING OPERATIONS INVOLVING MULTIPLE LANE CLOSURES ON MULTI-LANE ROADWAYS.

KENTUCKY
DEPARTMENT OF HIGHWAYS

MOBILE OPERATION
FOR DURABLE STRIPING
CASE II

STANDARD DRAWING NO. TTS-125-02

SUBMITTED R. Allen Wolfe 12-01-15
DIRECTOR DIVISION OF TRAFFIC OPERATIONS DATE

APPROVED 12-01-15
STATE HIGHWAY ENGINEER DATE

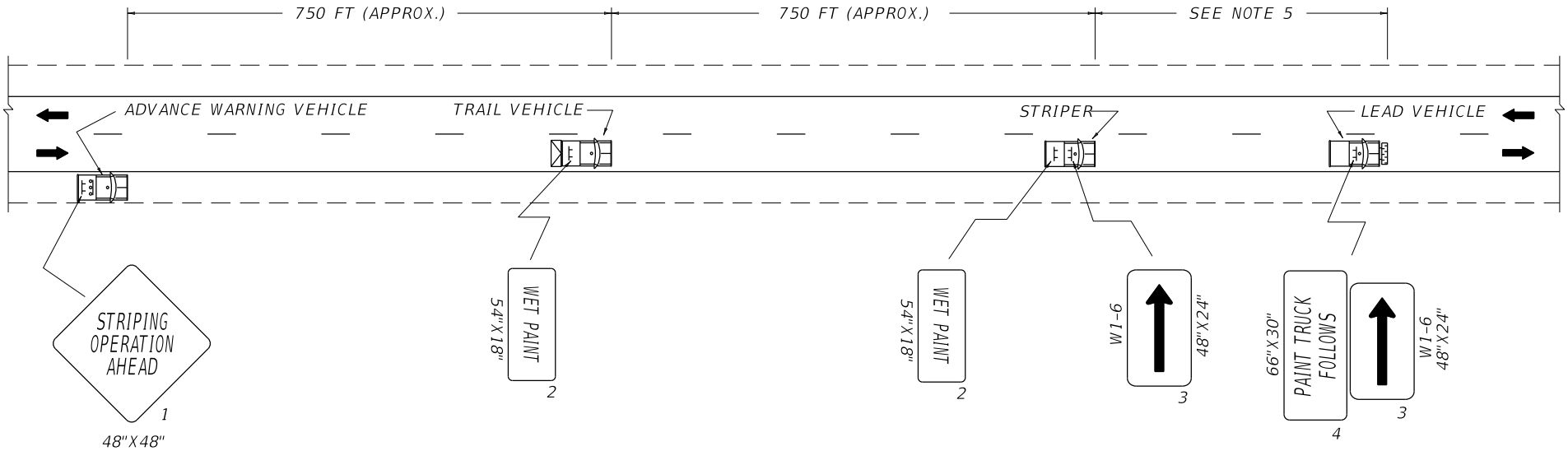

LEGEND

- SIGN
- TRUCK MOUNTED ATTENUATOR
- SWEEPER/BLOWER
- FLASHING ARROW PANEL

~ NOTES ~

1. OPERATE FLASHING ARROW PANEL IN CAUTION MODE. THE ARROW PANEL SHALL BE TYPE B (60"X30") OR LARGER.
2. SIGNS 1 THRU 4 SHALL HAVE A BLACK BORDER AND LEGEND ON A BACKGROUND OF FLUORESCENT ORANGE SHEETING.
3. ALL VEHICLES IN THE STRIPING TRAIN SHALL BE EQUIPPED WITH HIGH-INTENSITY ROTATING, FLASHING, OSCILLATING, OR STROBE LIGHTS ON THE CAB.
4. THE LAST TRAIL VEHICLE IN THE WORK TRAIN SHALL BE EQUIPPED WITH A TRUCK MOUNTED ATTENUATOR (T.M.A.) IF LANES ARE 10' WIDE OR GREATER.
5. THE LEAD VEHICLE SHALL MAINTAIN VISUAL CONTACT WITH THE STRIPER WHENEVER POSSIBLE TO COORDINATE ON AND OFF THE ROAD MANEUVERS. THE WORK TRAIN SHALL BE REQUIRED TO PULL OFF THE ROADWAY PERIODICALLY TO ALLEVIATE TRAFFIC CONGESTION.
6. TWO-WAY RADIO COMMUNICATION SHALL BE MAINTAINED BETWEEN ALL VEHICLES IN THE WORK TRAIN.
7. THE SPACING BETWEEN VEHICLES IN THE WORK TRAIN SHOULD BE ADJUSTED, AS NEEDED, TO PROVIDE ADEQUATE SIGHT DISTANCE TO APPROACHING VEHICLES AND TO PROTECT THE FRESHLY APPLIED LINE.
8. VEHICLE-MOUNTED SIGNS SHALL BE MOUNTED IN A MANNER SUCH THAT THEY ARE NOT OBSCURED BY EQUIPMENT OR SUPPLIES. SIGN LEGENDS ON VEHICLE-MOUNTED SIGNS SHALL BE COVERED OR TURNED FROM VIEW WHEN WORK IS NOT IN PROGRESS.

BID ITEMS AND UNIT TO BID
REFER TO SECTION 112 OF STANDARD SPECIFICATIONS FOR ROAD AND BRIDGE CONSTRUCTION, CURRENT EDITION.

APPLICATION

THIS DRAWING APPLIES TO DURABLE STRIPING OPERATIONS ON TWO-LANE, TWO-WAY ROADWAYS INVOLVING THE PLACEMENT OF EDGE LINES ONLY.

DRAWING NOT TO SCALE

KENTUCKY
DEPARTMENT OF HIGHWAYS

MOBILE OPERATION
FOR DURABLE STRIPING
CASE III

STANDARD DRAWING NO. TTS-130-02

SUBMITTED R. Allen Wolfe 12-01-15
DIRECTOR DIVISION OF TRAFFIC OPERATIONS DATE

APPROVED 12-01-15
STATE HIGHWAY ENGINEER DATE

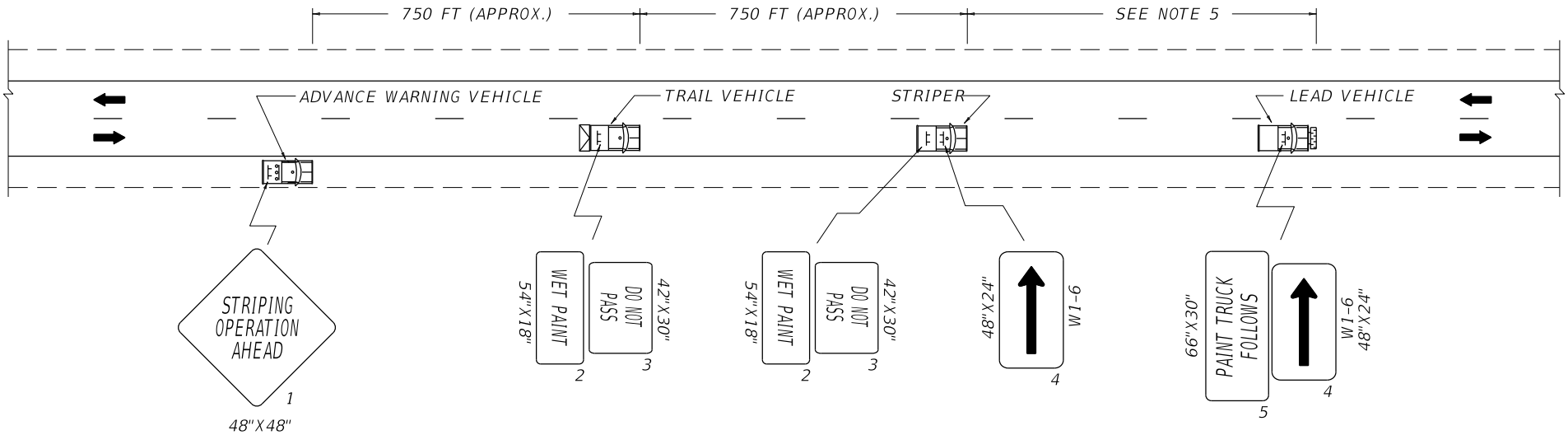

LEGEND

- SIGN
- TRUCK MOUNTED ATTENUATOR
- SWEEPER/BLOWER
- FLASHING ARROW PANEL

~ NOTES ~

1. OPERATE FLASHING ARROW PANEL IN CAUTION MODE. THE ARROW PANEL SHALL BE TYPE B (60"X30") OR LARGER.
2. SIGNS 1, 2, 4, AND 5 SHALL HAVE A BLACK BORDER AND LEGEND ON A BACKGROUND OF FLUORESCENT ORANGE SHEETING. SIGN 3 SHALL HAVE A BLACK BORDER AND LEGEND ON A BACKGROUND OF REFLECTIVE WHITE SHEETING.
3. ALL VEHICLES IN THE STRIPING TRAIN SHALL BE EQUIPPED WITH HIGH-INTENSITY ROTATING, FLASHING, OSCILLATING, OR STROBE LIGHTS ON THE CAB.
4. THE LAST TRAIL VEHICLE IN THE WORK TRAIN SHALL BE EQUIPPED WITH A TRUCK MOUNTED ATTENUATOR (T.M.A.) IF LANES ARE 10' WIDE OR GREATER.
5. THE LEAD VEHICLE SHALL MAINTAIN VISUAL CONTACT WITH THE STRIPER WHENEVER POSSIBLE TO COORDINATE ON AND OFF THE ROAD MANEUVERS. THE WORK TRAIN SHALL BE REQUIRED TO PULL OFF THE ROADWAY PERIODICALLY TO ALLEVIATE TRAFFIC CONGESTION.
6. TWO-WAY RADIO COMMUNICATION SHALL BE MAINTAINED BETWEEN ALL VEHICLES IN THE WORK TRAIN.
7. THE SPACING BETWEEN VEHICLES IN THE WORK TRAIN SHOULD BE ADJUSTED, AS NEEDED, TO PROVIDE ADEQUATE SIGHT DISTANCE TO APPROACHING VEHICLES AND TO PROTECT THE FRESHLY APPLIED LINE.
8. VEHICLE-MOUNTED SIGNS SHALL BE MOUNTED IN A MANNER SUCH THAT THEY ARE NOT OBSCURED BY EQUIPMENT OR SUPPLIES. SIGN LEGENDS ON VEHICLE-MOUNTED SIGNS SHALL BE COVERED OR TURNED FROM VIEW WHEN WORK IS NOT IN PROGRESS.

BID ITEMS AND UNIT TO BID
REFER TO SECTION 112 OF STANDARD SPECIFICATIONS FOR ROAD AND BRIDGE CONSTRUCTION, CURRENT EDITION.

APPLICATION

THIS DRAWING APPLIES TO DURABLE STRIPING OPERATIONS ON TWO-LANE, TWO-WAY ROADWAYS INVOLVING THE PLACEMENT OF EITHER THE CENTERLINE ONLY OR A COMBINATION OF THE CENTERLINE AND EDGE LINE.

DRAWING NOT TO SCALE

KENTUCKY
DEPARTMENT OF HIGHWAYS

MOBILE OPERATION
FOR DURABLE STRIPING
CASE IV

STANDARD DRAWING NO. TTS-135-02

SUBMITTED R. Allen Wolfe — DIRECTOR DIVISION OF TRAFFIC OPERATIONS — 12-01-15 DATE

APPROVED — STATE HIGHWAY ENGINEER — 12-01-15 DATE

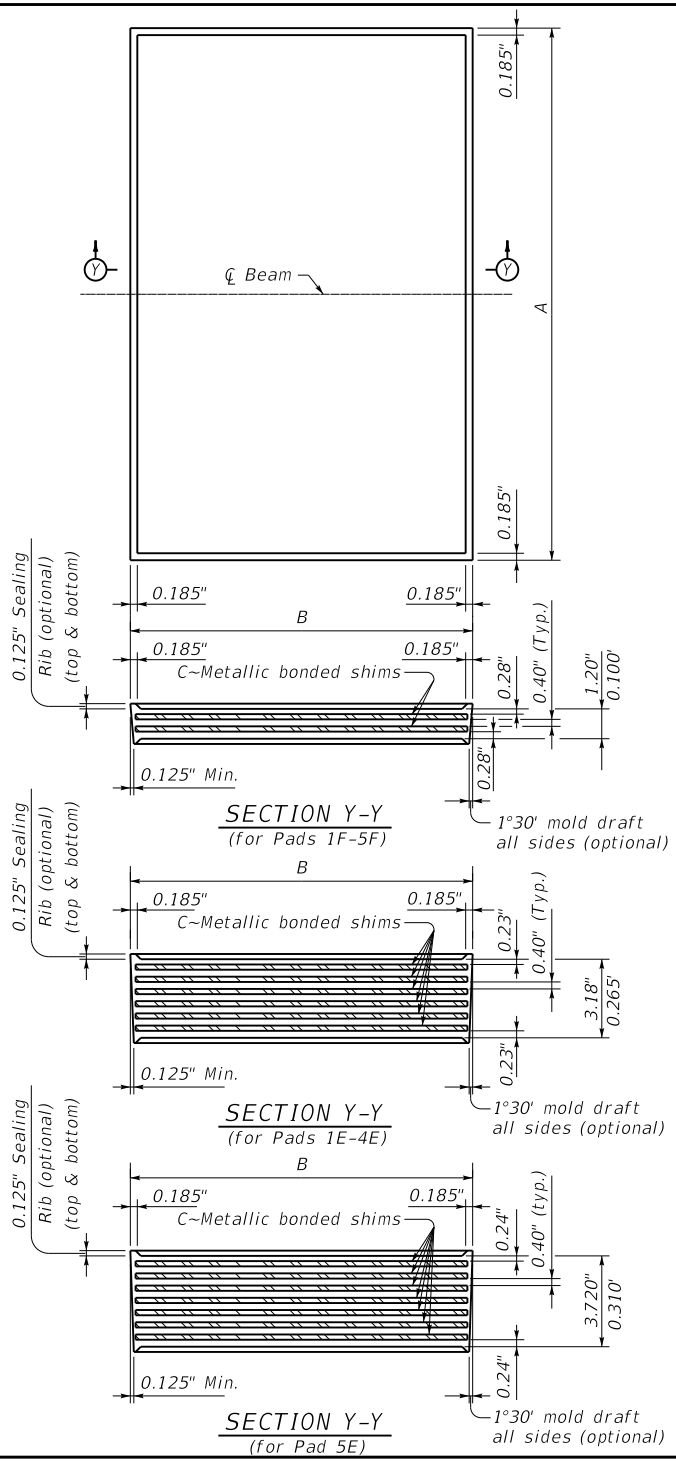

DIMENSIONS FOR I-BEAM PADS

PAD	A	B	C	*MAXIMUM REACTION	MAXIMUM MOVEMENT (One Direction)
1F	14"	10"	2~0.12" x 13.630" x 9.630"	121k	0.5"
2F	16"	10"	2~0.12" x 15.630" x 9.630"	146k	0.5"
3F	20"	10"	2~0.12" x 19.630" x 9.630"	197k	0.5"
4F	24"	10"	2~0.12" x 23.630" x 9.630"	251k	0.5"
5F	24"	11"	2~0.12" x 23.630" x 10.630"	265k	0.5"

* Use actual reactions to determine anchorage requirements for pads.

DIMENSIONS FOR I-BEAM PADS

PAD	A	B	C	*MAXIMUM REACTION	MAXIMUM MOVEMENT (One Direction)
1E	14"	10"	6~0.12" x 13.630" x 9.630"	121k	1.22"
2E	16"	10"	6~0.12" x 15.630" x 9.630"	146k	1.22"
3E	20"	10"	6~0.12" x 19.630" x 9.630"	197k	1.22"
4E	24"	10"	6~0.12" x 23.630" x 9.630"	251k	1.22"
5E	24"	11"	7~0.12" x 23.630" x 10.630"	265k	1.44"

* These reactions are based on service loads, use actual reactions to determine anchorage requirements for pads.

GENERAL NOTES

SPECIFICATIONS: Fabricate the Elastomeric Bearing Pads to the design and dimensions as shown on these drawings and to AASHTO LRFD Bridge Construction Specifications, Section 18.

Ensure bearings are low temperature Grade 3 with durometer hardness of 50 and subjected to the load testing requirements corresponding to Design Method A.

Include the price of bearing pads in the bid for the beams.

KENTUCKY
DEPARTMENT OF HIGHWAYS

ELASTOMERIC BEARING PADS FOR PRESTRESSED BEAMS

STANDARD DRAWING NO. BBP-001-12

SUBMITTED _____ DIRECTOR DIVISION OF STRUCTURAL DESIGN — DATE 02-26-20

APPROVED _____ STATE HIGHWAY ENGINEER — DATE 02-26-20

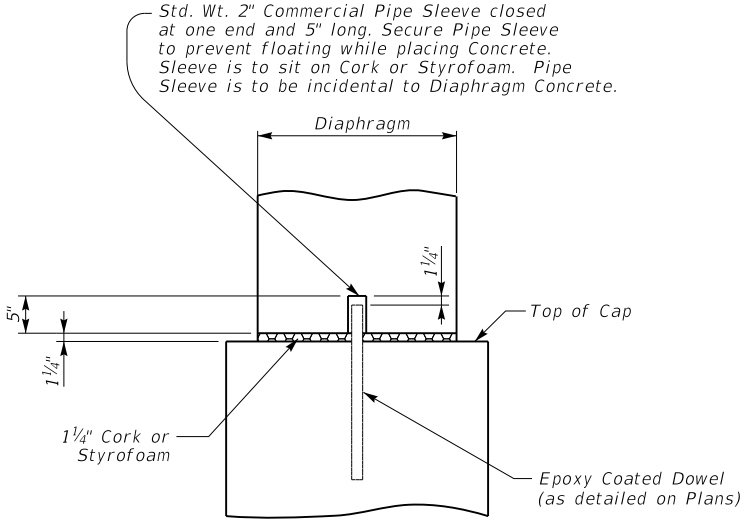

SECTION Z-Z

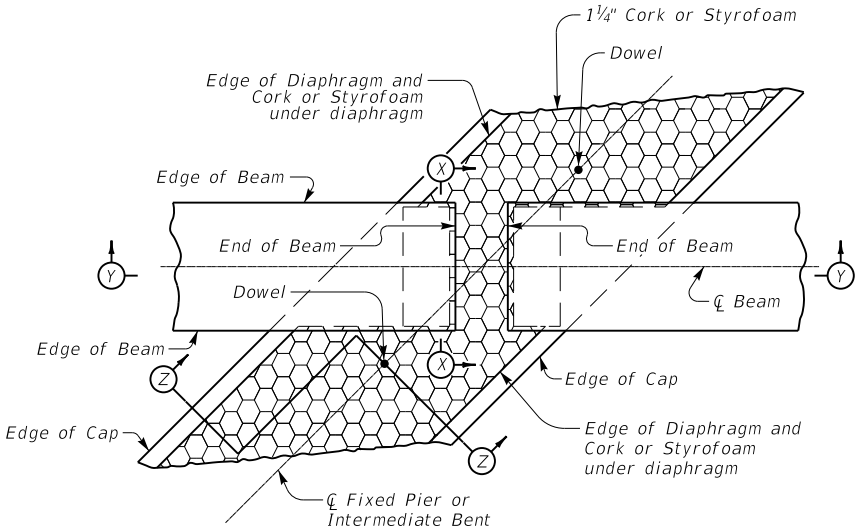

PLAN

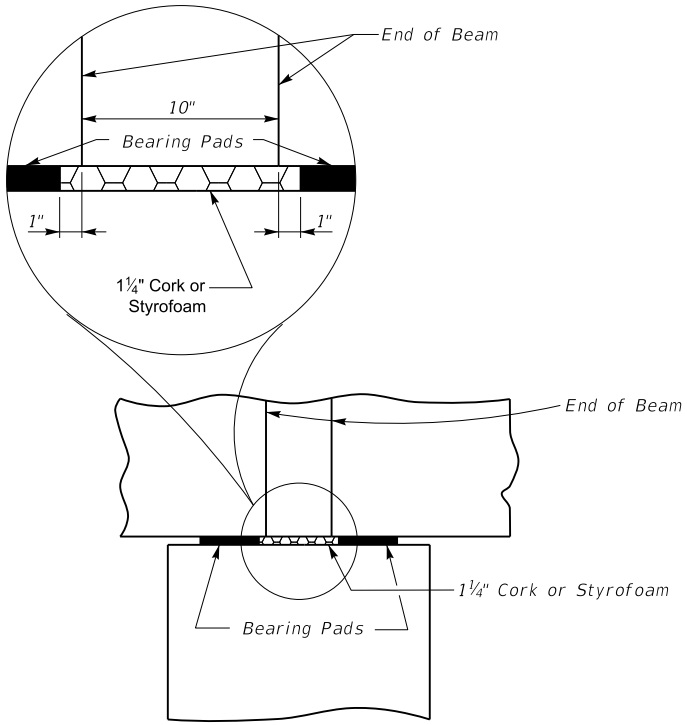

SECTION Y-Y

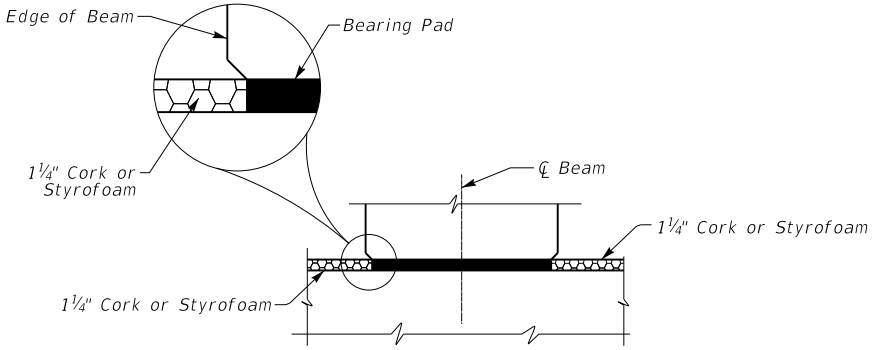

SECTION X-X

KENTUCKY
DEPARTMENT OF HIGHWAYS

BEARING DETAILS

STANDARD DRAWING NO. BBP-002-04

SUBMITTED _____ DIRECTOR DIVISION OF STRUCTURAL DESIGN — DATE 02-26-20

APPROVED _____ STATE HIGHWAY ENGINEER — DATE 02-26-20

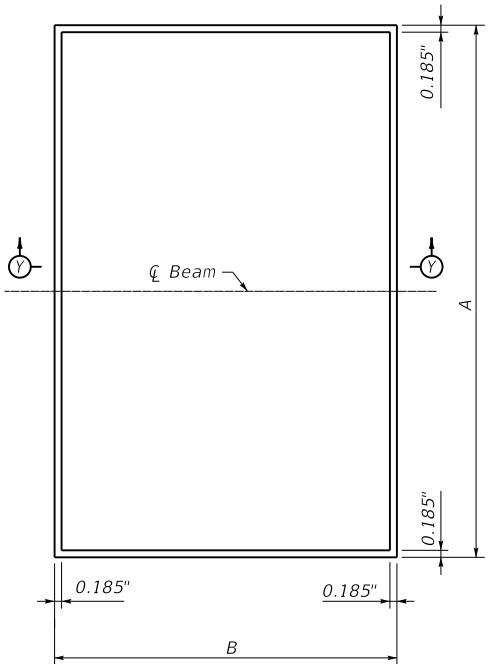

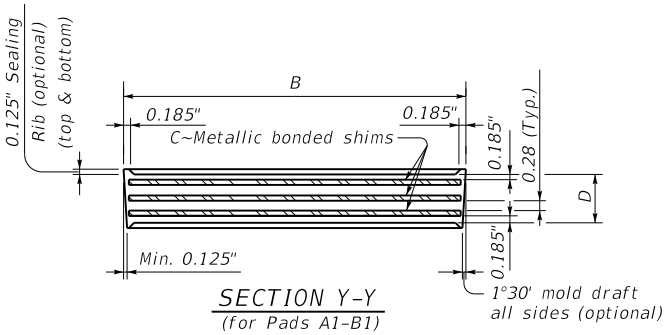

SECTION Y-Y
(for Pads A1-B1)

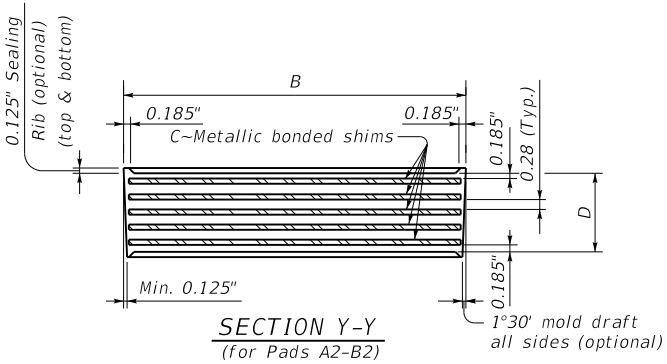

SECTION Y-Y
(for Pads A2-B2)

DIMENSIONS FOR BOX-BEAM PADS

PAD	A	B	C	D	*MAXIMUM REACTION	MAXIMUM MOVEMENT (One Direction)
A1	1'-10"	7"	3~0.12" x 21.630" x 6.630"	1.290"	173k	0.500"
A2	1'-10"	7"	5~0.12" x 21.630" x 6.630"	2.090"	173k	0.750"
B1	11"	7"	3~0.12" x 10.630" x 6.630"	1.290"	69k	0.500"
B2	11"	7"	5~0.12" x 10.630" x 6.630"	2.090"	69k	0.750"

* These reactions are based on service loads, use actual reactions to determine anchorage requirements for pads.

GENERAL NOTES

SPECIFICATIONS: Fabricate the Elastomeric Bearing Pads to the design and dimensions as shown on these drawings and to AASHTO LRFD Bridge Construction Specifications, Section 18.

Ensure bearings are low temperature Grade 3 with durometer hardness of 50 and subjected to the load testing requirements corresponding to Design Method A.

Include the price of bearing pads in the bid for the beams.

KENTUCKY
DEPARTMENT OF HIGHWAYS

ELASTOMERIC BEARING
PADS FOR
BOX BEAMS

STANDARD DRAWING NO. BBP-003-02

SUBMITTED _____ 02-26-20
DIRECTOR DIVISION OF STRUCTURAL DESIGN — DATE

APPROVED _____ 02-26-20
STATE HIGHWAY ENGINEER — DATE

PRECAST PRESTRESSED BOX BEAMS

General Notes

SPECIFICATIONS: All references to the standard Specifications are to the current edition of the Kentucky Department of Highways Standard Specifications for Road and Bridge Construction, with current supplemental specifications. All references to the AASHTO Specifications are to the current edition of the AASHTO LRFD Bridge Design Specifications, with interims.

DESIGN LOADS: Beam sections are designed for 1.25*HL93 (KYHL93) Live Load.

DESIGN LOAD DISTRIBUTION: Contrary to AASHTO LRFD Bridge Design Specifications, the design moment and shear distribution for all beams is 0.5 lanes.

FUTURE WEARING SURFACE: These beams are designed for a 15 PSF future wearing surface load.

SUBSTRUCTURE DESIGN LOADS: Unfactored design reaction forces per beam end.
DC (kips): Beam, Slab (if applicable), and Type II railing dead loads.
DW (kips): Future wearing surface.
LL (kips): Beam Live Load reaction per lane x Design load distribution.
LL+I (kips): LL with Dynamic load allowance.

DESIGN DEFLECTIONS:
Δd (in.): Sum of the downwards deflections caused by the design 5" deck, railing, and future wearing surface. (Positive Downwards)
Δc (in.): Upwards midspan camber of the beam caused by prestressing minus the downward deflection of the beam due to self weight. (Positive Upwards)

MATERIAL DESIGN SPECIFICATIONS:

for Steel Reinforcement	FY = 60000 PSI
for Prestressed Girder Concrete (Typ. U.N.O.)	F'C = 7000 PSI
	F'CI = 5500 PSI
for Class "AA" Concrete	F'C = 4000 PSI
for Prestressing Steel	F'S = 270000 PSI

DESIGN LENGTH: Beam lengths shown in the Standards represent total beam length. Use the next greater designed section for non-Standard lengths.

CONSTRUCTION METHOD: Transferring bond stress to the concrete will not be allowed, nor releasing of end anchors until the concrete has attained a minimum compressive strength of F'CI as shown by standard cylinders made and cured identically with the girders; attain F'C at or prior to 28 days. Apply an initial prestress force of 33817 lbs. per low relaxation strand. Beams with honeycomb of such extent as to affect the strength of resistance to deterioration will not be accepted. The allowance of .0005L (length) is made for shortening of beams due to shrinkage and elastic change. Furnish shop plans showing a detensioning plan by numbering, in sequence, the strand pattern.

PRESTRESSING STRANDS: Ensure prestressing strands to be ½" oversize (0.167 sq. in.) uncoated seven-wire stress relieved, low-relaxation strands conforming to AASHTO M 203, Grade 270. If an alternate strand arrangement or strand type is preferred by the Contractor, the designer that developed the original plans will provide the design and also revise the original plans to reflect the changes. These design and plan modifications will be done at the Contractor's expense.

CORROSION INHIBITOR: Provide a corrosion inhibitor for B-type (non-composite) beams from the list of approved materials.

BEVELED EDGES: Bevel all exposed edges ¾".

BEAM SEALER: For composite box beams (CB Beams), seal the full length of the exterior face of all exterior beams with the extent from the top of the beam to 1'-0" underneath the beam. For non-composite box beams (B beams), seal all faces of all beams, except take care to ensure the grout pockets are not sealed. Use an approved silane sealer as specified by the Division of Structural Design.

REINFORCEMENT: Dimensions shown from the face of concrete to reinforcement are clear distances. Spacing of reinforcement is from center to center of reinforcement. All steel reinforcement is to be epoxy coated in accordance with Section 811.10 of the Specifications. Consider bars marked "C" to be a stirrup for purposes of bend diameters. Non-epoxy reinforcement may be used for fabrication purposes, only, provided that the steel is not used in the top 5½" of the beam and the location of the steel is indicated on the shop drawings.

FABRICATION: Beams shall not be fabricated more than 120 days before the deck is to be poured.

GROUT: Provide non-shrink grout for anchor dowels, shear keys, and tensioning rod block-outs conforming with Section 601.03.03 of the Specifications. When side by side superstructure is utilized, grouting will be completed after lateral tension rods have been fully tightened and before leveling devices have been removed. Include the cost of furnishing and placing grout in the price of beam.

RAILING SYSTEM TYPE II: Furnish this material per these specifications.

ITEM	DESCRIPTION	MATERIAL SPECIFICATION	COATING SPECIFICATION
Post	W6x25	ASTM A36 or A572	A123
Channel	C7x9.8	ASTM A36 or A572	A123
Plate	½"x 7"	ASTM A36 or A572	A123
Tubing	8x4x0.1875	ASTM A500 or A501	A123
Bolts	⅝"	ASTM A307	A153
Nuts	for ⅝"	ASTM A563, Grade A or better	A153
Washers	for ⅝"	ASTM A563, Grade A or better	A153
Stud	1¼"	ASTM A108 (1045 C.D. Bar)	B633, Type II, Class 25
Ferrule	2½"x 5"	ASTM A108 (11L17 Steel)	B633, Type II, Class 25
Wire	⅜"	ASTM A510 (1018 Steel)	B633, Type II, Class 25
Nut	for 1¼" Bolt	ASTM A108 (12L14 Steel)	B633, Type II, Class 25
Nut	for 1¼" Stud	ASTM A325M	B633, Type II, Class 25
Washers	for 1¼" Stud	ASTM A325M	B633, Type II, Class 25

Use the current edition of the references listed below with these standards.

STANDARD DRAWINGS

BBP-003	Elastomeric Bearing Pads
BHS-007	Railing System Type II
BJE-001	Armored Edge & Neoprene Joints
RBR-001	Steel Beam Guardrail
RBR-005	Guardrail Components

SPECIAL NOTES

for Corrosion Inhibitors

KENTUCKY
DEPARTMENT OF HIGHWAYS

BOX BEAM
GENERAL NOTES
AND REFERENCES

STANDARD DRAWING NO. BDP-001-06

SUBMITTED _____ DIRECTOR DIVISION OF STRUCTURAL DESIGN — DATE 02-26-20

APPROVED _____ STATE HIGHWAY ENGINEER — DATE 02-26-20

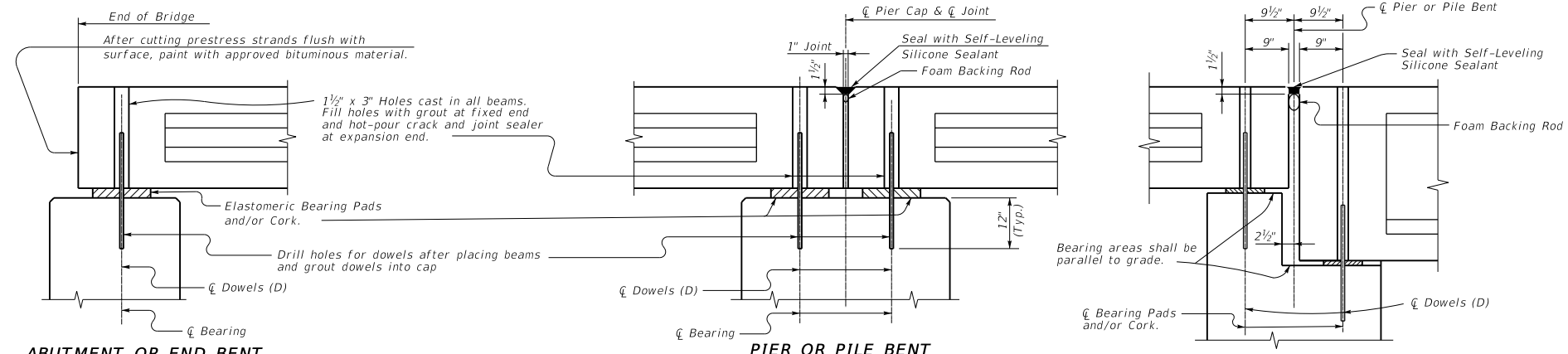

ABUTMENT OR END BENT

PIER OR PILE BENT

STEPPED PIER OR PILE BENT

(Showing Location & Placement of Box Beams)

TYPICAL BEARING DETAILS (NON-COMPOSITE)

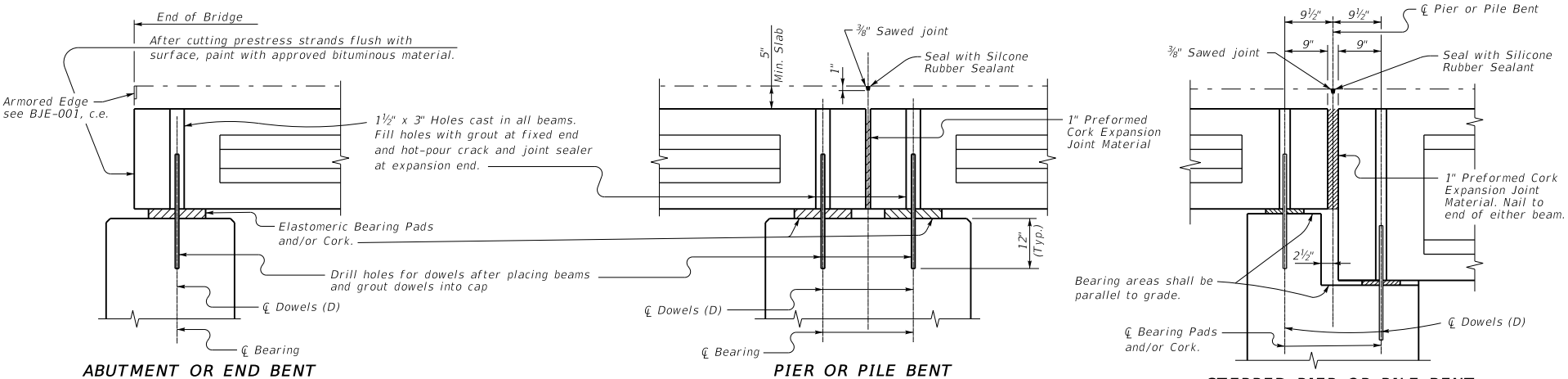

ABUTMENT OR END BENT

PIER OR PILE BENT

STEPPED PIER OR PILE BENT

(Showing Location & Placement of Box Beams)

TYPICAL BEARING DETAILS (COMPOSITE)

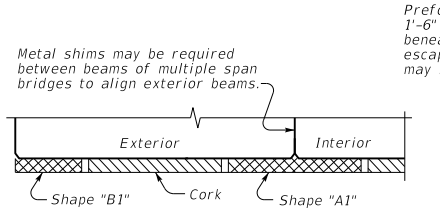

(0°Skew)

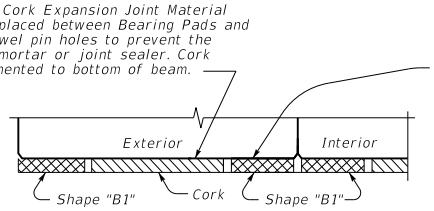

(Skewed Spans)

For Elastomeric Bearing Pad Details of Shapes A1 & B1, see Std. Dwg. BBP-003, c.e.

SHOWING PADS FOR BEAM TYPES B27-B42 & CB27-CB42

Use ½" x 1'-6" preformed cork for beam types B12-B21 & CB12-CB21 for bearing.

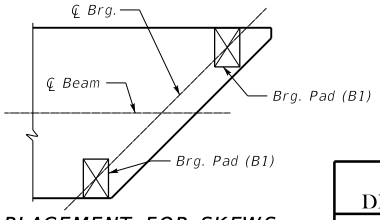

PAD PLACEMENT FOR SKEWS

Pads "B1" are to always be placed perpendicular to ℄ beam with center of pad over ℄ bearing.

GENERAL NOTES

Provide metal shims conforming to ASTM A36 and galvanize in accordance with ASTM A123. As alternates, cork, polymer, or elastomer shims may be used. Include the cost of furnishing and placing these shims in the price per beam.

KENTUCKY
DEPARTMENT OF HIGHWAYS

BOX BEAM
BEARING
DETAILS

STANDARD DRAWING NO. BDP-002-03

SUBMITTED _____ DIRECTOR DIVISION OF STRUCTURAL DESIGN — 02-26-20 DATE

APPROVED _____ STATE HIGHWAY ENGINEER — 02-26-20 DATE

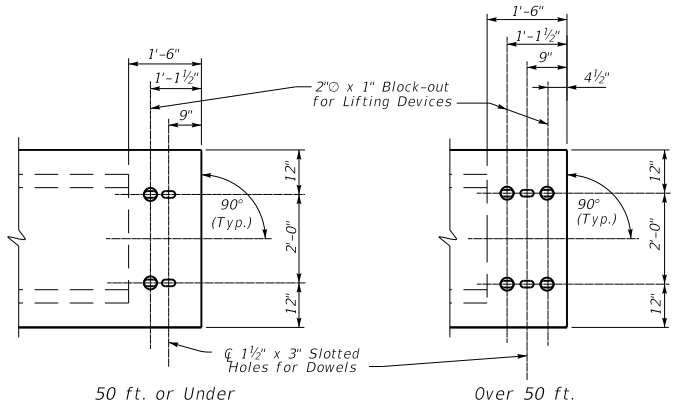

50 ft. or Under

Over 50 ft.

NOTE: Void omitted on 12" beams.

TYPICAL STRAIGHT END

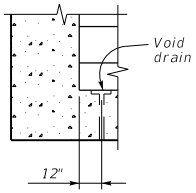

VOID DRAIN DETAIL

Locate two drains at each end of each void. Provide 1"∅ drains of a type approved by the Division of Materials.

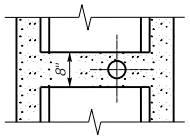

SECTION THRU BEAM

Diaphragms may be omitted if void is cut to allow drain to be encased with a minimum 2" of concrete.

Provide drains on both sides of bridge with normal crown and on low side only for superelevated bridges. Space drains at maximum 12'-6" on centers with a minimum of one placed each gutter line per span. Omit drains when span crosses over a highway or railroad. Include the cost of pipe and fittings in the price of beam.

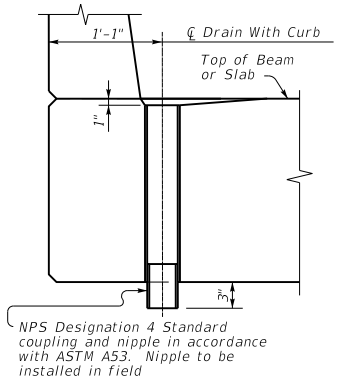

SECTION THRU DRAIN EXTERIOR BOX BEAM

(Showing coupling in barrier)

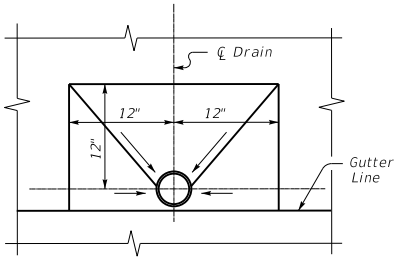

TOP VIEW OF DRAIN

DRAIN DETAILS

(For Spans With Curbs)

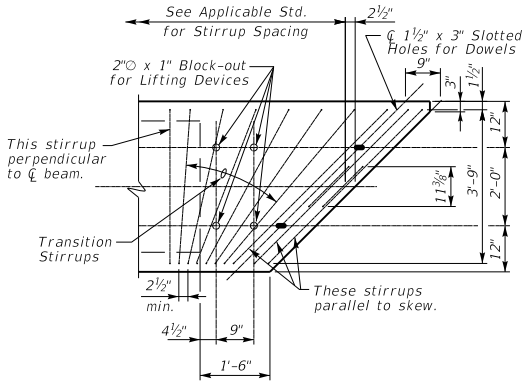

TYPICAL SKEWED END FOR BEAMS OVER 50 FEET

(Right Skew Shown, Left Opposite Hand)

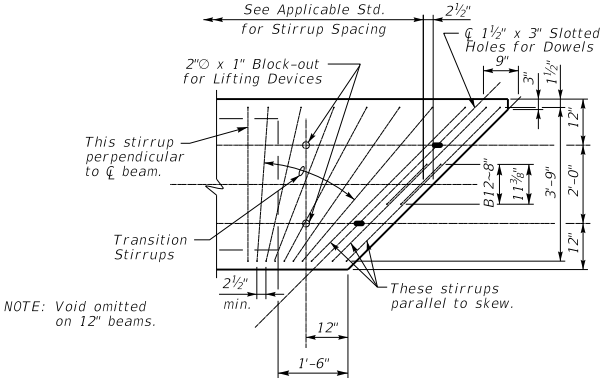

NOTE: Void omitted on 12" beams.

TYPICAL SKEWED END FOR BEAMS 50 FEET OR LESS

(Right Skew Shown, Left Opposite Hand)

NOTE: Inserts are to be plated or galvanized

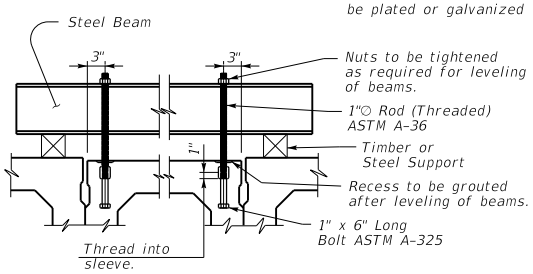

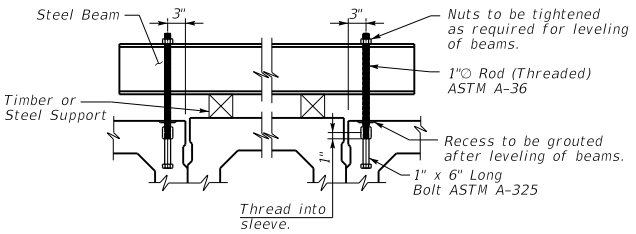

LEVELING DEVICE DETAILS

Locate inserts at the center of beams up to 50 ft. and at diaphragm locations of beams over 50 ft. Include the cost of materials and labor involved in leveling beams in the price for beams. Submit alternate leveling devices to the Division of Bridge Design for approval.

NOTE: Omit shear key on exterior face of exterior beam.

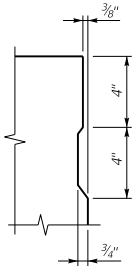

SHEAR KEY DETAIL

KENTUCKY
DEPARTMENT OF HIGHWAYS

BOX BEAM
MISCELLANEOUS
DETAILS

STANDARD DRAWING NO. BDP-003-03

SUBMITTED _____ DIRECTOR DIVISION OF STRUCTURAL DESIGN — DATE 02-26-20

APPROVED _____ STATE HIGHWAY ENGINEER — DATE 02-26-20

GENERAL NOTES

LATERAL TENSIONING RODS: After the deck units are in place, apply a preliminary tension to the lateral tensioning rods. Perform final tensioning that yields 20,000 psi as developed by a torque of 200 ft./lbs. Provide lateral tensioning rods and plates conforming to ASTM A36 with heavy hex nuts conforming to ASTM A307. All tension rods, plates, and nuts to be galvanized in accordance with ASTM A123 or A153 as applicable.

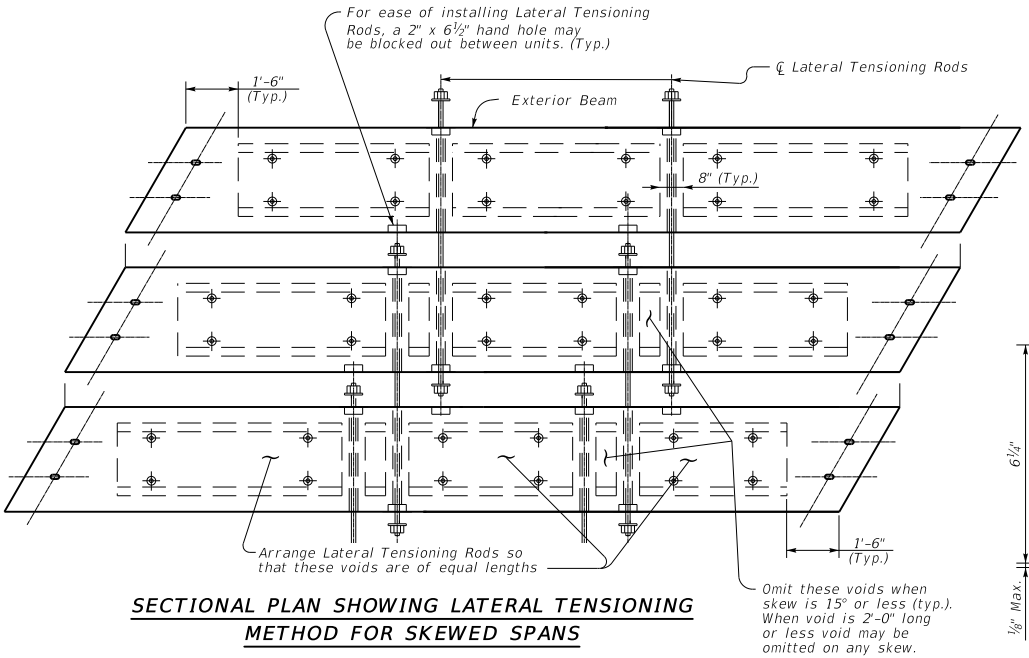

SECTIONAL PLAN SHOWING LATERAL TENSIONING METHOD FOR SKEWED SPANS

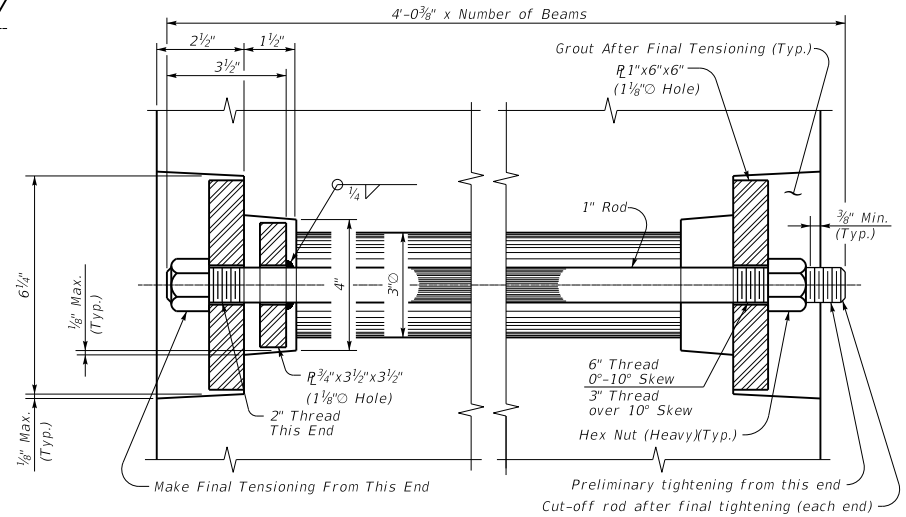

SECTION THRU LATERAL TENSIONING ROD

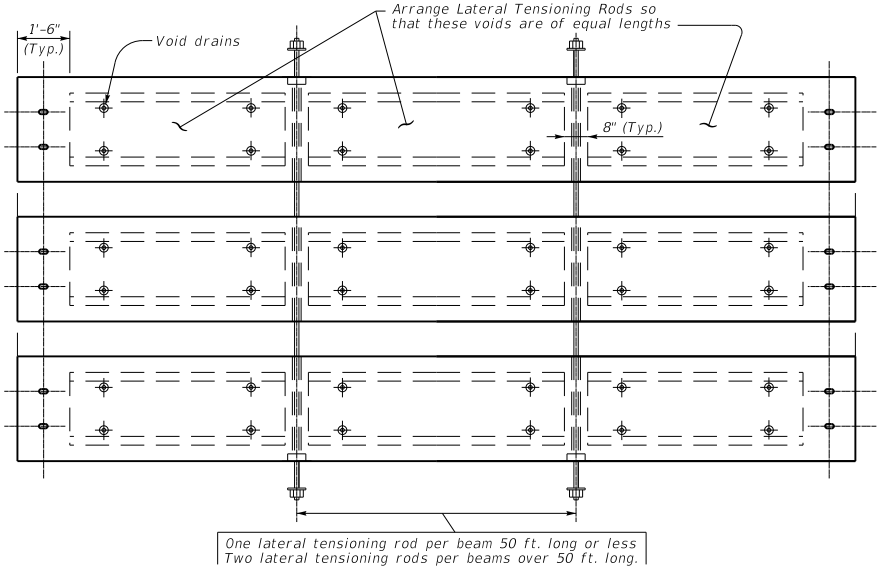

SECTIONAL PLAN SHOWING LATERAL TENSIONING METHOD FOR STRAIGHT SPANS

(The above arrangement is applicable from 0° skews to and Including 10° skews)

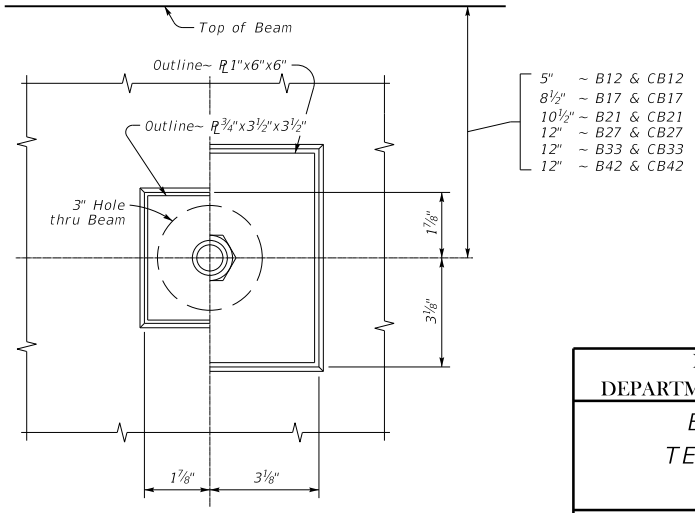

SECTIONAL END PLAN

(Lateral Tension Rod Details)

KENTUCKY
DEPARTMENT OF HIGHWAYS

BOX BEAM
TENSION ROD
DETAILS

STANDARD DRAWING NO. BDP-004-04

SUBMITTED _____ DIRECTOR DIVISION OF STRUCTURAL DESIGN — 02-26-20 DATE

APPROVED _____ STATE HIGHWAY ENGINEER — 02-26-20 DATE

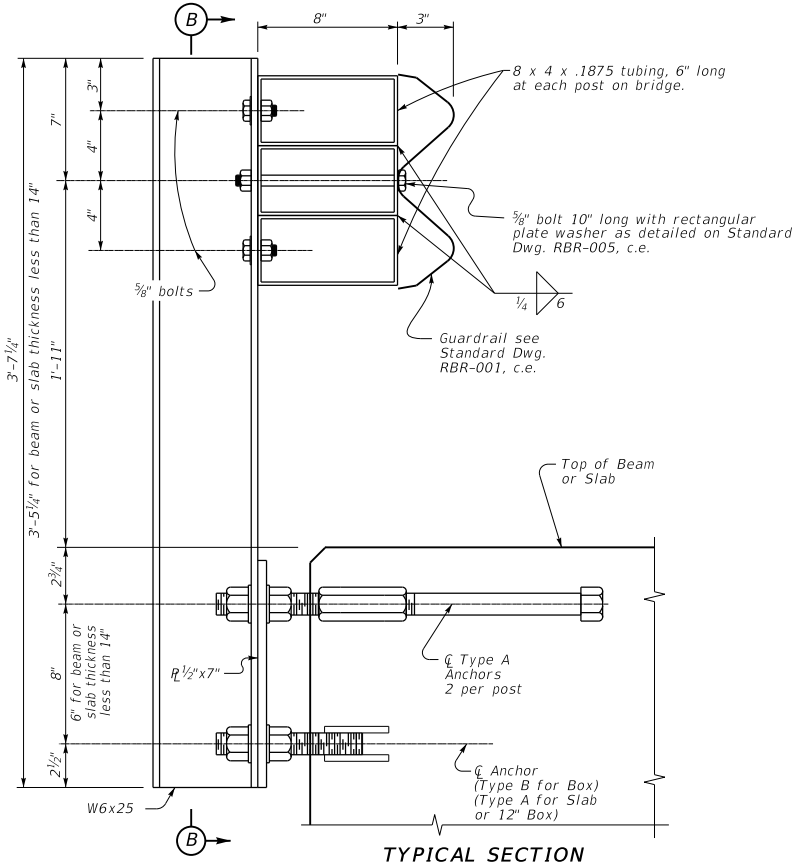

TYPICAL SECTION

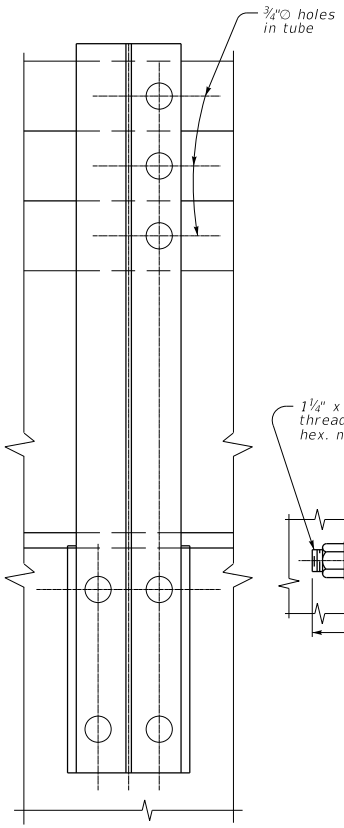

SECTION B-B

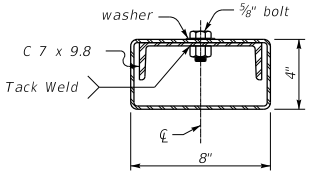

SECTION A-A

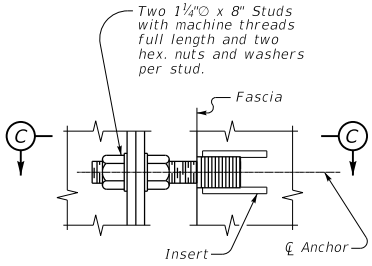

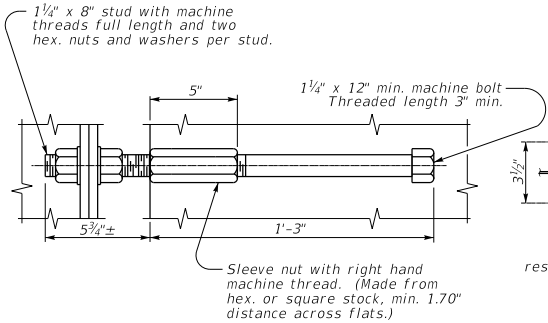

TYPE A ANCHOR DETAIL

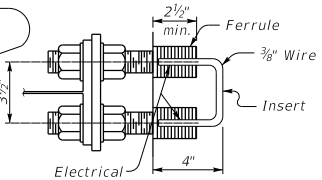

SECTION C-C

TYPE B ANCHOR DETAIL

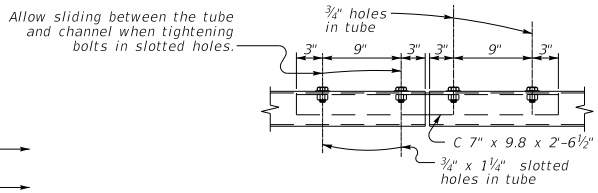

OPEN JOINT

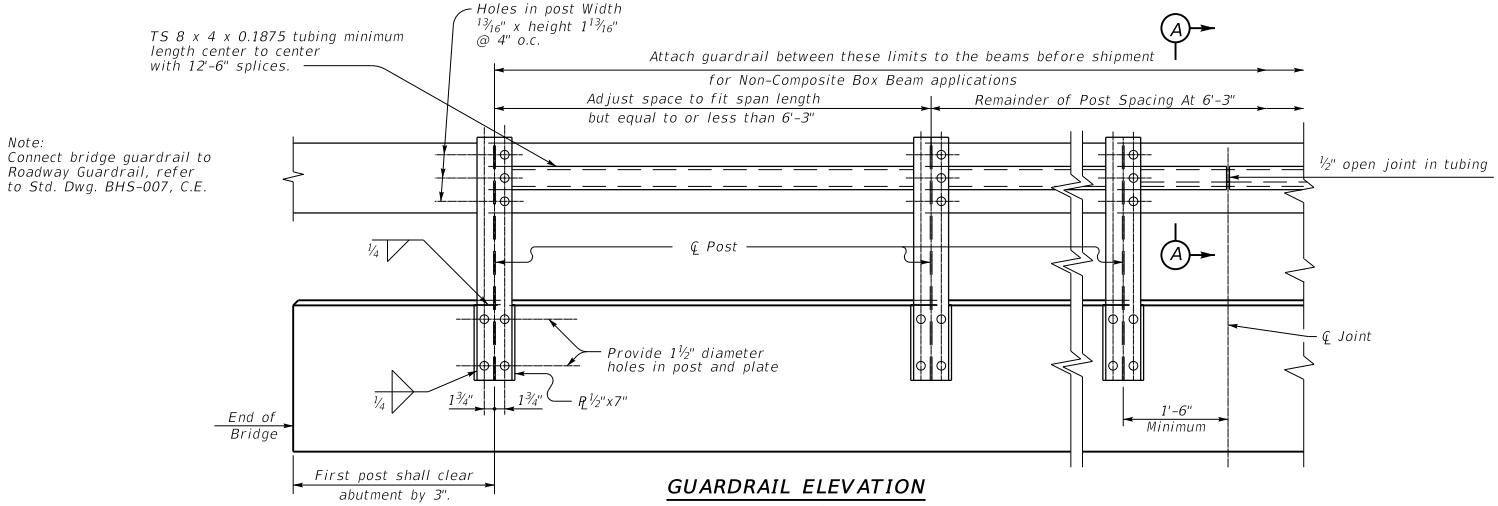

GUARDRAIL ELEVATION

Post Spacing

KENTUCKY
DEPARTMENT OF HIGHWAYS

RAILING
SYSTEM
TYPE II

STANDARD DRAWING NO. BDP-005-06

SUBMITTED _____ DIRECTOR DIVISION OF STRUCTURAL DESIGN — DATE 02-26-20

APPROVED _____ STATE HIGHWAY ENGINEER — DATE 02-26-20

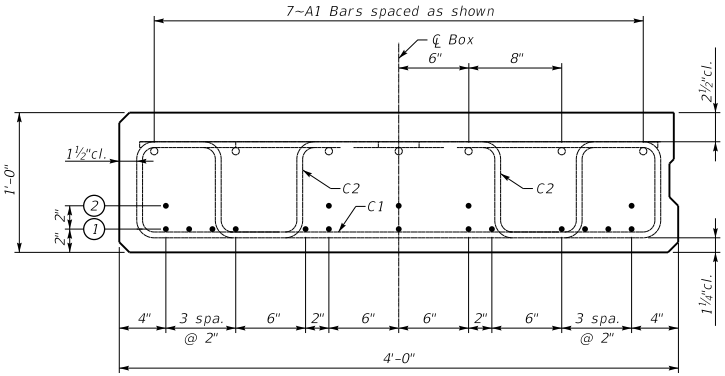

B12 BEAM

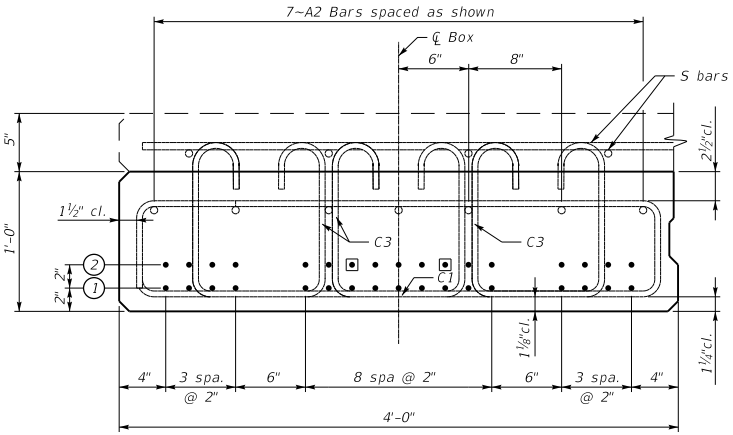

CB12 BEAM

☐ Debond these strands 4'-0" at each end of beam ~CB12-34 Only

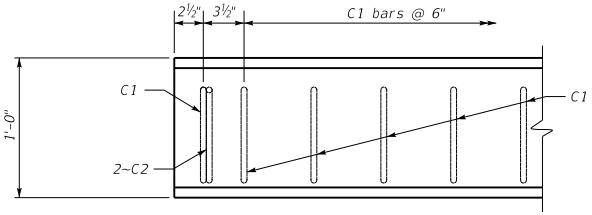

B12 ELEVATION OF 0° SKEW

(Refer to BDP-003,c.e. for skewed details)

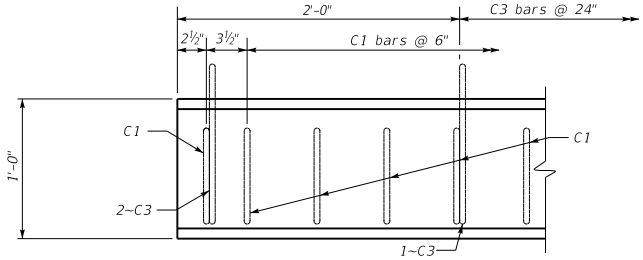

CB12 ELEVATION OF 0° SKEW

(Refer to BDP-003,c.e. for skewed details)

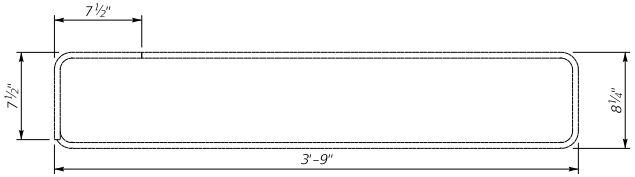

C1(e) Bar

#4 Stirrup

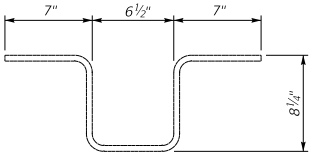

C2(e) Bar

#4 Stirrup

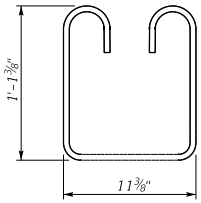

C3(e) Bar

#5 Stirrup

TABLE OF STRAND DATA

Beam Type	Beam Length (feet)	Number of Strands Required Row 1	Number of Strands Required Row 2	Concrete Strength F'CI (psi)	Concrete Strength F'C (psi)
B12	12	9	1		
	14	10	1		
	16	11	1		
	18	12	1		
	20	12	1		
	22	12	2		
	24	13	2		
	26	13	5		
CB12	12	7			
	14	8			
	16	8			
	18	9			
	20	10			
	22	10			
	24	10			
	26	12			
	28	13			
	30	14	9		
	32	14	13	6000	7100
	34	15	17	7000	8000

BAR QUANTITIES					DESIGN DATA					
Beam Type	Beam Length (feet)	C1	C2	C3	DC (Kips)	DW (Kips)	LL (Kips)	LL+I (Kips)	Δd (in.)	Δc (in.)
B12	12	25	2		3.9	0.4	27.8	36.3		
	14	29	2		4.6	0.4	29.1	37.8		
	16	33	2		5.2	0.5	30.1	39.1		
	18	37	2		5.8	0.5	31.0	40.1		
	20	41	2		6.5	0.6	31.8	41.0		
	22	45	2		7.1	0.6	32.5	41.9		
	24	49	2		7.8	0.7	33.2	42.6		
	26	53	2		8.4	0.7	33.8	43.4		
CB12	12	25		9	5.4	0.4	27.8	36.3	0.1	0.1
	14	29		10	6.3	0.4	29.1	37.8	0.1	0.1
	16	33		11	7.2	0.5	30.1	39.1	0.1	0.2
	18	37		12	8.1	0.5	31.0	40.1	0.1	0.2
	20	41		13	9.0	0.6	31.8	41.0	0.1	0.3
	22	45		14	9.9	0.6	32.5	41.9	0.1	0.3
	24	49		15	10.8	0.7	33.2	42.6	0.1	0.3
	26	53		16	11.6	0.8	33.8	43.4	0.1	0.5
	28	57		17	12.5	0.8	35.1	44.9	0.2	0.5
	30	61		18	13.4	0.9	36.4	46.4	0.2	0.9
	32	65		19	14.3	0.9	37.7	48.1	0.2	1.0
	34	69		20	15.2	1.0	38.9	49.6	0.3	1.3

Straight Reinforcement		
MARK	SIZE	LENGTH
A1(E)	#5	Beam Length Minus 3"
A2(E)	#4	Beam Length Minus 3"
D(E)	#8	2'-0"

KENTUCKY
DEPARTMENT OF HIGHWAYS

BOX BEAM
B12 & CB12
DETAILS

STANDARD DRAWING NO. BDP-006-05

SUBMITTED _____ DIRECTOR DIVISION OF STRUCTURAL DESIGN — DATE 02-26-20

APPROVED _____ STATE HIGHWAY ENGINEER — DATE 02-26-20

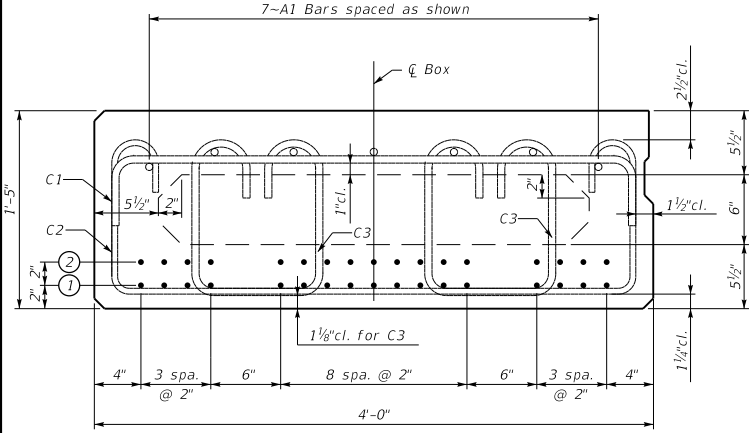

B17 BEAM

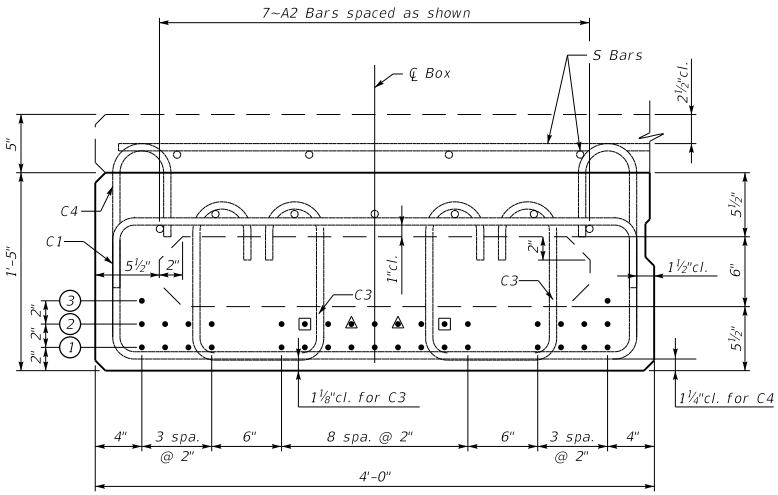

CB17 BEAM

□ Debond these strands 4' each end of beam
△ Debond these strands 6' each end of beam
CB17-48 Beam Only

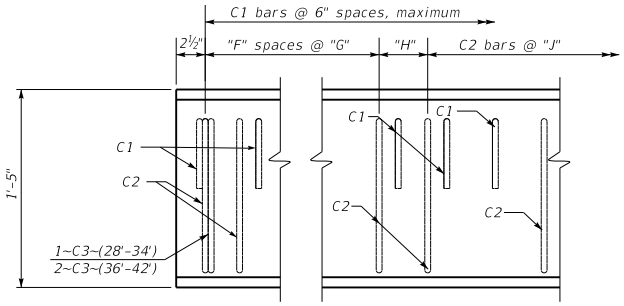

B17 ELEVATION OF 0° SKEW

(Refer to BDP-003,c.e. for skewed details)

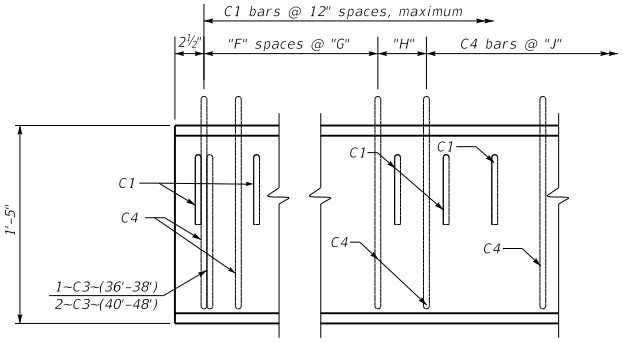

CB17 ELEVATION OF 0° SKEW

(Refer to BDP-003,c.e. for skewed details)

TABLE OF STRAND DATA

Beam Type	Beam Length (feet)	Number of Strands Required Row 1	Row 2	Row 3	Conc. Strength F'CI (psi)	F'C (psi)
B17	28	12				
	30	13				
	32	14				
	34	15				
	36	16				
	38	17	1			
	40	17	3			
	42	17	5			
CB17	36	14				
	38	15				
	40	16				
	42	17	1			
	44	17	2			
	46	17	9		6000	7000
	48	17	17	2	7000	8000

TABLE OF DIMENSION DATA

Beam Type	Beam Length (feet)	"F"	"G"	"H"	"J"				
B17	28	4	9"	8½"	11"				
	30	4	9"	9½"	11"				
	32	4	9"	10½"	11"				
	34	5	8"	7½"	11"				
	36	6	8"	6"	11"				
	38	7	7"	6½"	10"				
	40	7	7"	8½"	10"				
	42	7	7"	5½"	10"				
CB17	36	6	8"	11½"	14"				
	38	6	8"	9½"	14"				
	40	6	8"	7½"	14"				
	42	7	7"	8½"	12"				
	44	8	7"	7½"	12"				
	46	8	7"	7½"	12"				
	48	10	6"	9½"	12"				

TABLE OF BAR QUANTITIES / DESIGN DATA

Beam Type	Beam Length (feet)	C1	C2	C3	C4	DC (kips)	DW (kips)	LL (kips)	LL+I (kips)	Δd (in.)	Δc (in.)
B17	28	57	33	2		9.4	0.8	35.1	44.9		
	30	61	35	2		10.1	0.9	36.4	46.4		
	32	65	37	2		10.7	0.9	37.7	48.1		
	34	69	41	2		11.4	1.0	38.9	49.6		
	36	73	44	4		12.1	1.0	40.0	50.9		
	38	77	51	4		12.7	1.1	41.1	52.2		
	40	81	53	4		13.4	1.1	42.1	53.4		
	42	85	56	4		14.1	1.2	43.0	54.5		
CB17	36	37		2	37	16.6	1.0	40.0	50.9	0.2	0.6
	38	39		2	39	17.5	1.1	41.1	52.2	0.2	0.7
	40	41		4	41	18.4	1.1	42.1	53.4	0.2	0.8
	42	43		4	49	19.3	1.2	43.0	54.5	0.3	0.9
	44	45		4	52	20.2	1.3	43.9	55.5	0.3	1.0
	46	47		4	54	21.1	1.3	44.7	56.5	0.3	1.3
	48	49		4	56	22.0	1.4	45.5	57.4	0.4	1.8

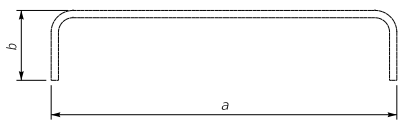

C1(e) Bar

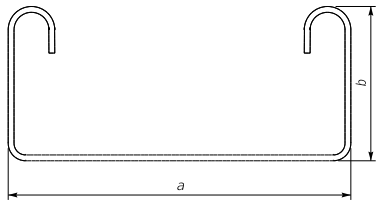

C2(e)-C4(e) Bars

Straight Reinforcement

Mark	Size	Length
A1(E)	#5	Beam Length Minus 3"
A2(E)	#4	Beam Length Minus 3"
D(E)	#8	2'-0"

Bent Reinforcement

Mark	Size	a	b	
C1(e)	#5	3'-9"	6"	
C2(e)	#4	3'-9"	1'-1¼"	
C3(e)	#5	11⅜"	1'-1⅜"	
C4(e)	#4	3'-9"	1'-6¼"	

KENTUCKY
DEPARTMENT OF HIGHWAYS

BOX BEAM
B17 & CB17
DETAILS

STANDARD DRAWING NO. BDP-007-05

SUBMITTED _____ DIRECTOR DIVISION OF STRUCTURAL DESIGN — DATE 02-26-20

APPROVED _____ STATE HIGHWAY ENGINEER — DATE 02-26-20

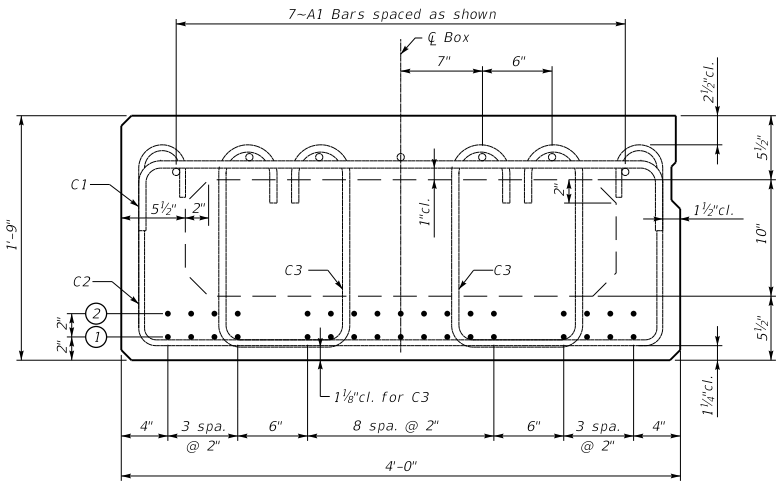

B21 BEAM

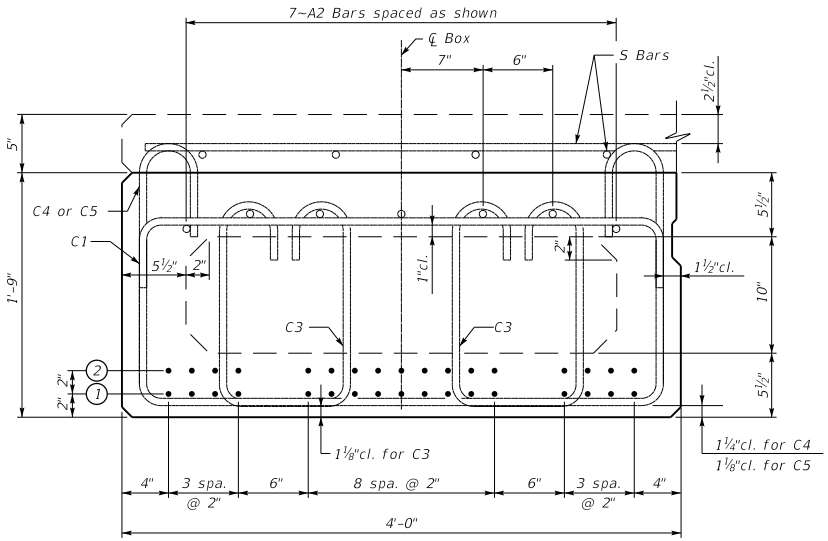

CB21 BEAM

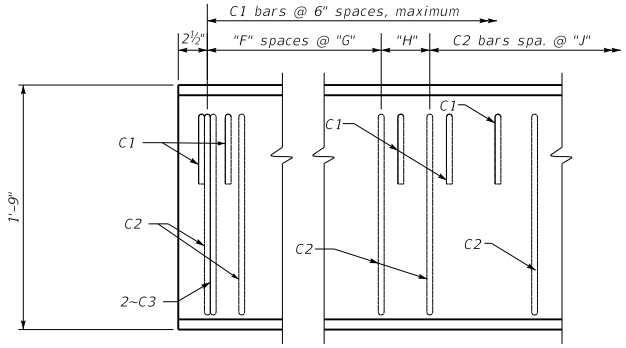

B21 ELEVATION OF 0° SKEW

(Refer to BDP-003,c.e. for skewed details)

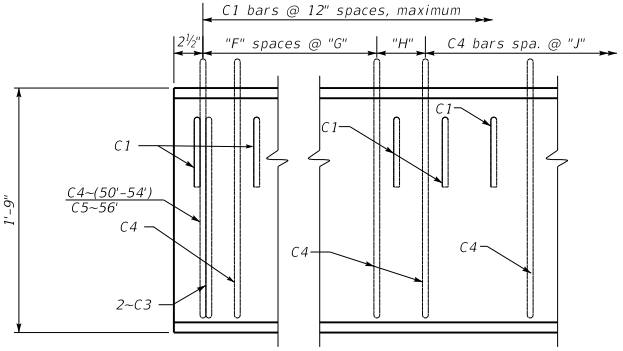

CB21 ELEVATION OF 0° SKEW

(Refer to BDP-003,c.e. for skewed details)

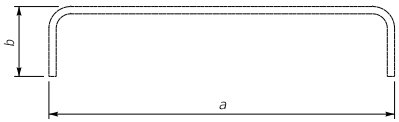

C1(e) Bar

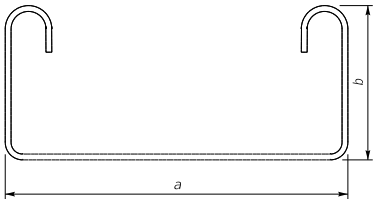

C2(e)-C5(e) Bars

TABLE OF STRAND DATA

Beam Type	Beam Length (feet)	Number of Strands Required Row 1	Number of Strands Required Row 2
B21	44	17	
	46	17	2
	48	17	4
	50	17	6
CB21	50	17	3
	52	17	4
	54	17	6
	56	17	8

TABLE OF DIMENSION DATA

Beam Type	Beam Length (feet)	"F"	"G"	"H"	"J"		
B21	44	6	10"	12½"	14"		
	46	6	9"	11½"	13"		
	48	7	9"	8"	13"		
	50	7	9"	7"	13"		
CB21	50	7	9"	10½"	16"		
	52	7	9"	14½"	16"		
	54	7	9"	10½"	16"		
	56	9	8"	13½"	16"		

TABLE OF BAR QUANTITIES

Beam Type	Beam Length (feet)	C1	C2	C3	C4	C5	
B21	44	89	42	4			
	46	93	47	4			
	48	97	50	4			
	50	101	52	4			
CB21	50	51		4	45		
	52	53		4	46		
	54	55		4	48		
	56	57		4	50	2	

DESIGN DATA

Beam Type	Beam Length (feet)	DC kips	DW kips	LL kips	LL+I kips	Δd (in.)	Δc (in.)
B21	44	15.7	1.3	43.9	55.5		
	46	16.4	1.3	44.7	56.5		
	48	17.1	1.4	45.5	57.4		
	50	17.9	1.4	46.3	58.3		
CB21	50	24.1	1.4	46.3	58.3	0.3	1.0
	52	25.0	1.5	47.0	59.1	0.3	1.1
	54	26.0	1.5	47.7	60.0	0.4	1.2
	56	27.0	1.6	48.4	60.7	0.4	1.4

Straight Reinforcement

Mark	Size	Length
A1(E)	#5	Beam Length Minus 3"
A2(E)	#4	Beam Length Minus 3"
D(E)	#8	2'-0"

Bent Reinforcement

Mark	Size	a	b	
C1(e)	#5	3'-9"	6"	
C2(e)	#4	3'-9"	1'-5¼"	
C3(e)	#5	11⅜"	1'-5⅜"	
C4(e)	#4	3'-9"	1'-10¼"	
C5(e)	#5	3'-9"	1'-10⅜"	

KENTUCKY
DEPARTMENT OF HIGHWAYS

BOX BEAM
B21 & CB21
DETAILS

STANDARD DRAWING NO. BDP-008-04

SUBMITTED _____ DIRECTOR DIVISION OF STRUCTURAL DESIGN — DATE 02-26-20

APPROVED _____ STATE HIGHWAY ENGINEER — DATE 02-26-20

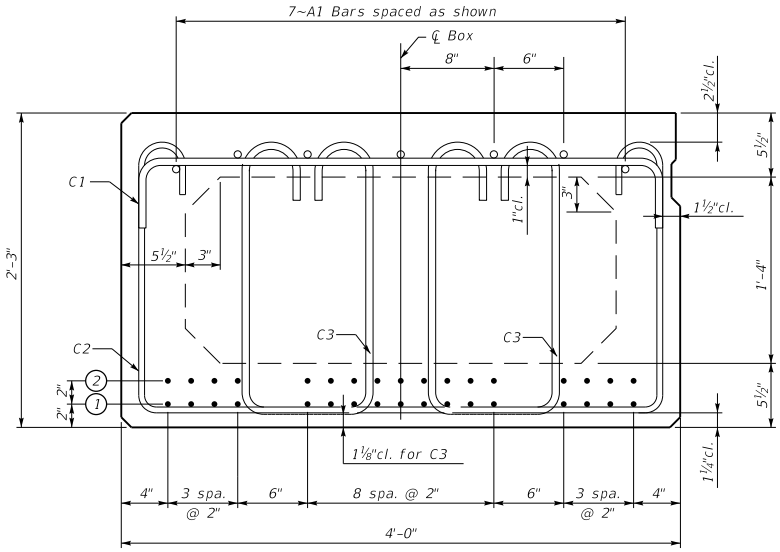

B27 BEAM

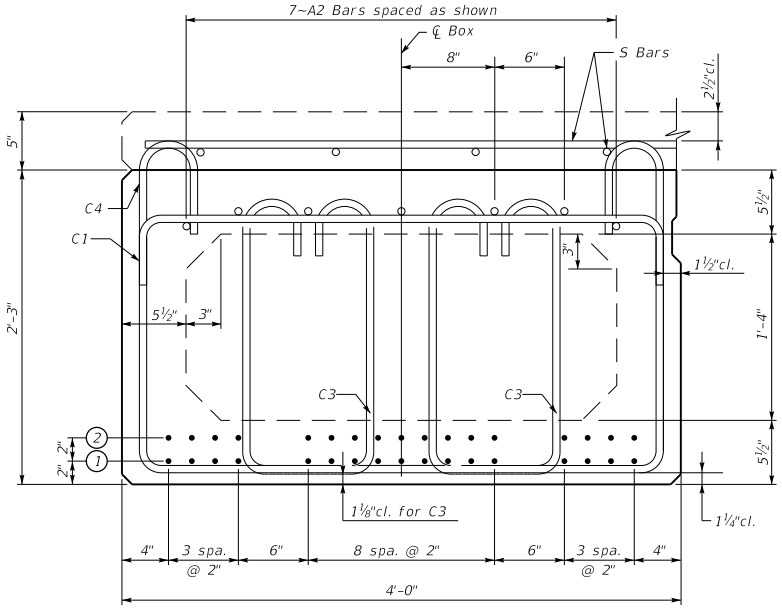

CB27 BEAM

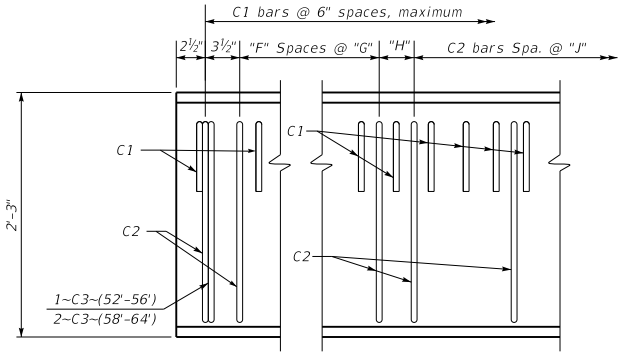

B27 ELEVATION OF 0° SKEW

(Refer to BDP-003,c.e. for skewed details)

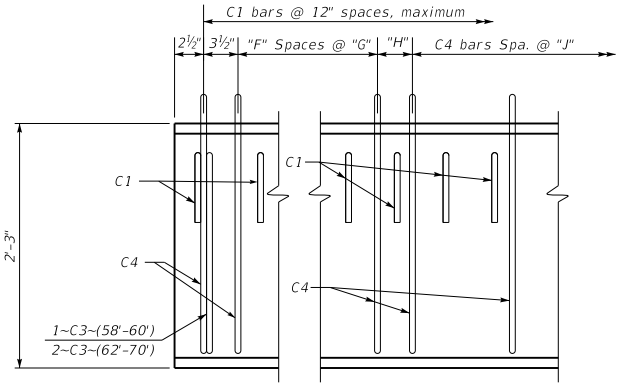

CB27 ELEVATION OF 0° SKEW

(Refer to BDP-003,c.e. for skewed details)

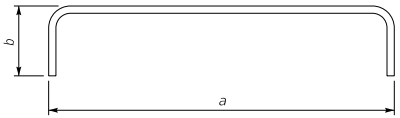

C1(e) Bar

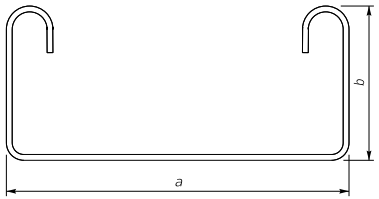

C2(e)-C4(e) Bars

TABLE OF STRAND DATA

Beam Type	Beam Length (feet)	Number of Strands Required Row 1	Row 2
B27	52	17	1
	54	17	2
	56	17	3
	58	17	5
	60	17	6
	62	17	8
	64	17	9
CB27	58	17	3
	60	17	4
	62	17	6
	64	17	7
	66	17	9
	68	17	10
	70	17	12

TABLE OF DIMENSION DATA

Beam Type	Beam Length (feet)	"F"	"G"	"H"	"J"		
B27	52	5	14"	11"	18"		
	54	5	13"	10"	18"		
	56	5	13"	13"	18"		
	58	5	13"	16"	18"		
	60	6	12"	12"	18"		
	62	6	12"	13½"	17"		
	64	6	12"	8½"	17"		
CB27	58	6	12"	18"	21"		
	60	6	12"	19½"	21"		
	62	6	12"	14"	20"		
	64	7	11"	11"	20"		
	66	7	11"	13"	20"		
	68	7	11"	15"	20"		
	70	8	10"	14"	20"		

BAR QUANTITIES TABLE / DESIGN DATA

Beam Type	Beam Length (feet)	C1	C2	C3	C4	DC kips	DW kips	LL kips	LL+I kips	Δd (in.)	Δc (in.)
B27	52	105	40	2		20.6	1.5	47.0	59.1		
	54	109	42	2		21.4	1.5	47.7	60.0		
	56	113	43	2		22.2	1.6	48.4	60.7		
	58	117	44	4		23.0	1.7	49.1	61.5		
	60	121	47	4		23.7	1.7	49.7	62.2		
	62	125	50	4		24.5	1.8	50.4	62.9		
	64	129	52	4		25.3	1.8	51.0	63.6		
CB27	58	59		2	41	30.2	1.7	49.1	61.5	0.3	0.9
	60	61		2	42	31.2	1.7	49.7	62.2	0.3	0.9
	62	63		4	45	32.3	1.8	50.4	62.9	0.3	1.1
	64	65		4	48	33.3	1.8	51.0	63.6	0.4	1.2
	66	67		4	49	34.3	1.9	51.6	64.3	0.4	1.3
	68	69		4	50	35.4	1.9	52.2	65.0	0.5	1.4
	70	71		4	53	36.4	2.0	52.8	65.6	0.5	1.6

Straight Reinforcement

Mark	Size	Length
A1(E)	#5	Beam Length Minus 3"
A2(E)	#4	Beam Length Minus 3"
D(E)	#8	2'-0"

NOTE: A1 and A2 bars are to be lapped 2'-2" when necessary.

Bent Reinforcement

Mark	Size	a	b
C1(e)	#5	3'-9"	6"
C2(e)	#4	3'-9"	1'-11¼"
C3(e)	#5	11⅜"	1'-11⅜"
C4(e)	#4	3'-9"	2'-4¼"

KENTUCKY
DEPARTMENT OF HIGHWAYS

BOX BEAM
B27 & CB27
DETAILS

STANDARD DRAWING NO. BDP-009-04

SUBMITTED _____ DIRECTOR DIVISION OF STRUCTURAL DESIGN — DATE 02-26-20

APPROVED _____ STATE HIGHWAY ENGINEER — DATE 02-26-20

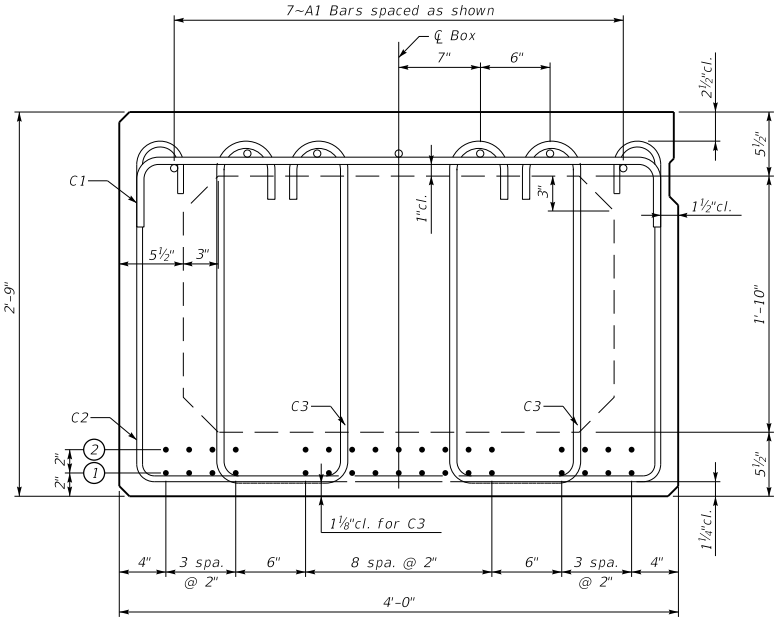

B33 BEAM

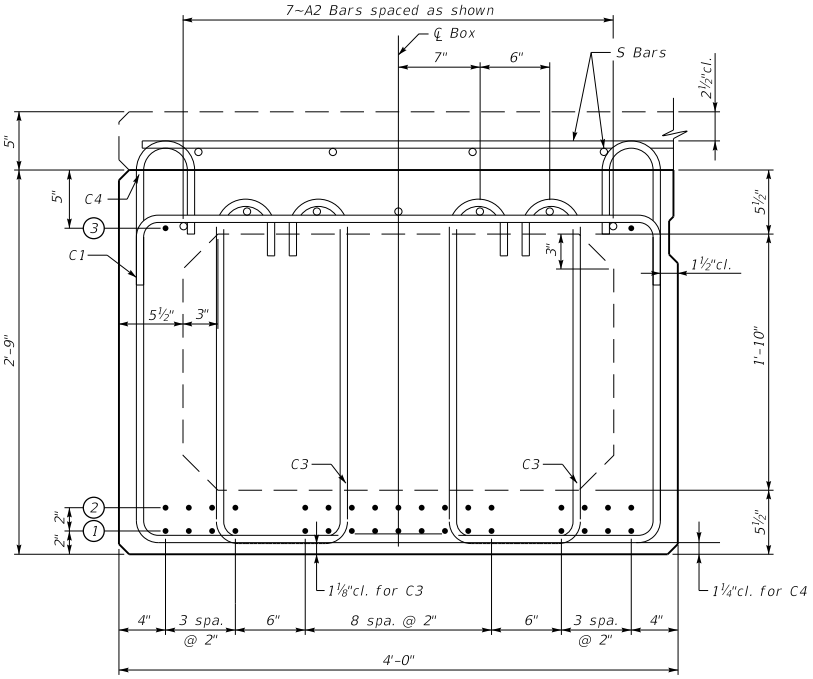

CB33 BEAM

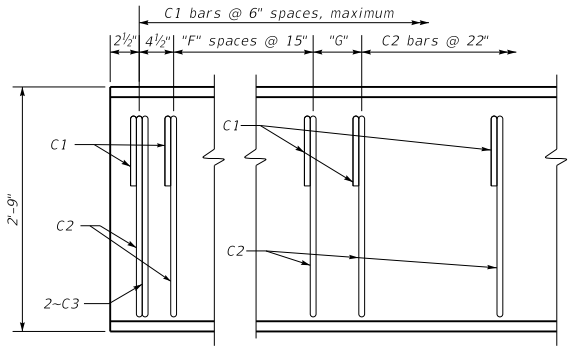

B33 ELEVATION OF 0° SKEW

(Refer to BDP-003,c.e. for skewed details)

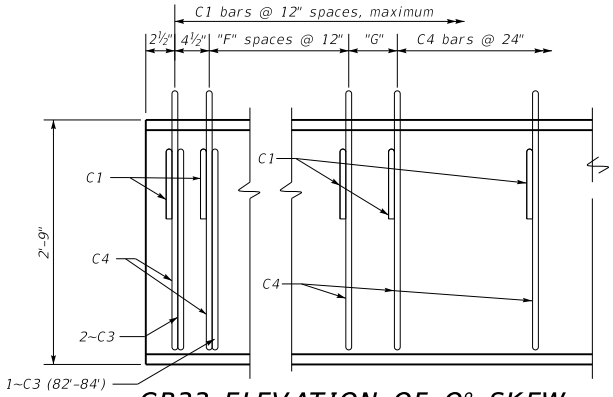

CB33 ELEVATION OF 0° SKEW

(Refer to BDP-003,c.e. for skewed details)

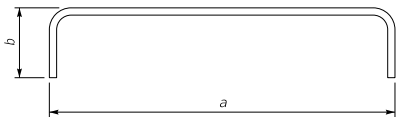

C1(e) Bar

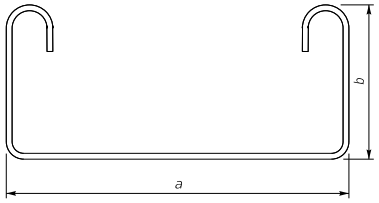

C2(e)-C4(e) Bars

TABLE OF STRAND DATA

Beam Type	Beam Length (feet)	Number of Strands Required: Row 1	Row 2	Row 3
B33	66	17	5	
	68	17	6	
	70	17	7	
	72	17	8	
	74	17	10	
	76	17	11	
	78	17	12	
CB33	72	17	7	
	74	17	9	
	76	17	10	
	78	17	11	
	80	17	13	
	82	17	14	2
	84	17	15	2

TABLE OF DIMENSION DATA

Beam Type	Beam Length (feet)	"F"	"G"				
B33	66	5	17"				
	68	5	18"				
	70	6	15"				
	72	6	16"				
	74	6	17"				
	76	6	18"				
	78	6	19"				
CB33	72	7	17"				
	74	7	17"				
	76	8	17"				
	78	8	17"				
	80	8	17"				
	82	8	17"				
	84	8	17"				

BAR QUANTITIES TABLE / DESIGN DATA

Beam Type	Beam Length (feet)	C1	C2	C3	C4	DC kips	DW kips	LL kips	LL+I kips	Δd (in.)	Δc (in.)
B33	66	133	42	4		28.4	1.9	51.6	64.3		
	68	137	43	4		29.3	1.9	52.2	65.0		
	70	141	45	4		30.2	2.0	52.8	65.6		
	72	145	46	4		31.0	2.0	53.3	66.2		
	74	149	47	4		31.9	2.1	53.9	66.8		
	76	153	48	4		32.7	2.2	54.4	67.5		
	78	157	49	4		33.6	2.2	55.0	68.0		
CB33	72	73		4	46	40.0	2.0	53.3	66.2	0.4	1.1
	74	75		4	47	41.1	2.1	53.9	66.8	0.4	1.2
	76	77		4	49	42.2	2.2	54.4	67.5	0.5	1.3
	78	79		4	50	43.3	2.2	55.0	68.0	0.5	1.4
	80	81		4	51	44.4	2.3	55.5	68.6	0.6	1.5
	82	83		6	52	45.5	2.3	56.1	69.2	0.6	1.4
	84	85		6	53	46.6	2.4	56.6	69.8	0.7	1.5

Straight Reinforcement

Mark	Size	Length
A1(E)	#5	Beam Length Minus 3"
A2(E)	#4	Beam Length Minus 3"
D(E)	#8	2'-0"

NOTE: A1 and A2 bars are to be lapped 2'-2" when necessary.

Bent Reinforcement

Mark	Size	a	b	
C1(e)	#5	3'-9"	6"	
C2(e)	#4	3'-9"	2'-5¼"	
C3(e)	#5	11⅜"	2'-5⅜"	
C4(e)	#4	3'-9"	2'-10¼"	

KENTUCKY
DEPARTMENT OF HIGHWAYS

BOX BEAM
B33 & CB33
DETAILS

STANDARD DRAWING NO. BDP-010-04

SUBMITTED: DIRECTOR DIVISION OF STRUCTURAL DESIGN — DATE 02-26-20

APPROVED: STATE HIGHWAY ENGINEER — DATE 02-26-20

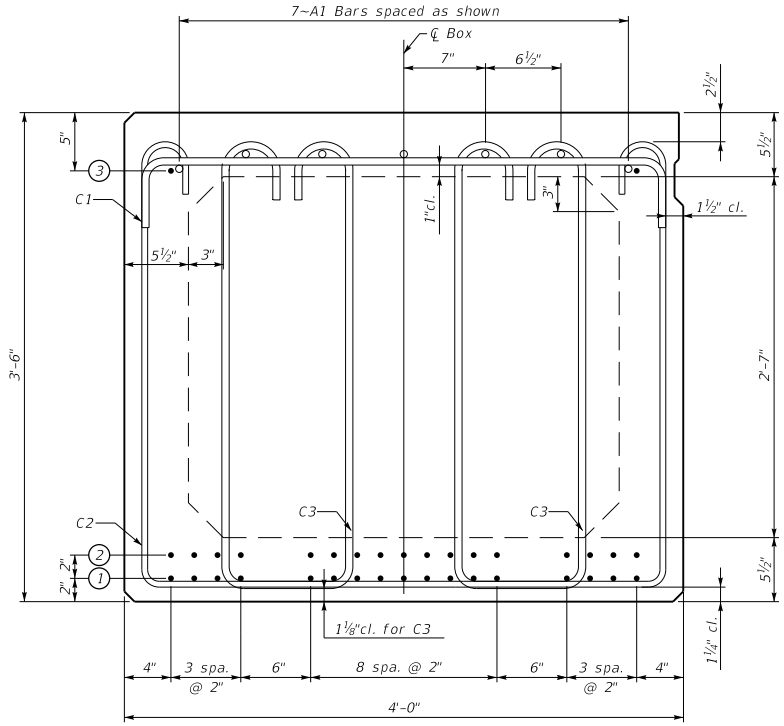

B42 BEAM

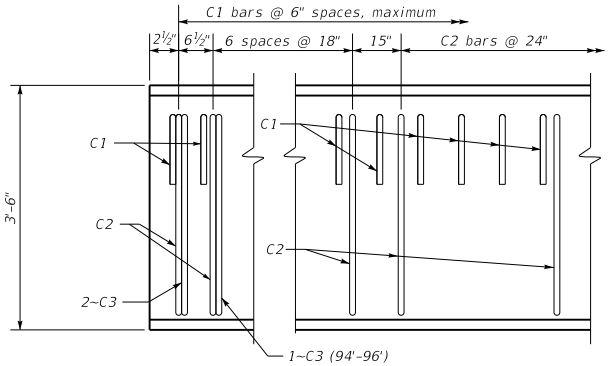

B42 ELEVATION OF 0° SKEW

(Refer to BDP-003,c.e. for skewed details)

TABLE OF STRAND DATA

Beam Type	Beam Length (feet)	Number of Strands Required		
		Row 1	Row 2	Row 3
B42	80	17	6	
	82	17	7	
	84	17	8	
	86	17	10	
	88	17	11	
	90	17	12	
	92	17	13	
	94	17	14	2
	96	17	15	2

BAR QUANTITIES TABLE

Beam Type	Beam Length (feet)	C1	C2	C3			
B42	80	161	46	4			
	82	165	47	4			
	84	169	48	4			
	86	173	49	4			
	88	177	50	4			
	90	181	51	4			
	92	185	52	4			
	94	189	53	6			
	96	193	54	6			

DESIGN DATA

Beam Type	Beam Length (feet)	DC kips	DW kips	LL kips	LL+I kips		
B42	80	38.5	2.3	55.5	68.6		
	82	39.5	2.3	56.1	69.2		
	84	40.4	2.4	56.6	69.8		
	86	41.4	2.4	57.1	70.3		
	88	42.4	2.5	57.6	70.9		
	90	43.3	2.6	58.1	71.4		
	92	44.3	2.6	58.6	72.0		
	94	45.3	2.7	59.1	72.5		
	96	46.2	2.7	59.6	73.0		

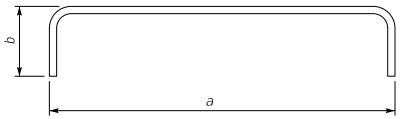

C1(e) Bar

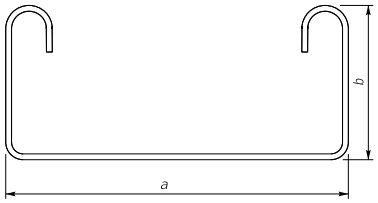

C2(e)-C3(e) Bars

Straight Reinforcement

Mark	Size	Length
A1(E)	#5	Beam Length Minus 3"
D(E)	#8	2'-0"

NOTE: A1 bars are to be lapped 2'-2" when necessary.

Bent Reinforcement

Mark	Size	a	b	
C1(e)	#5	3'-9"	6"	
C2(e)	#4	3'-9"	3'-2¼"	
C3(e)	#5	11⅜"	3'-2⅜"	

KENTUCKY
DEPARTMENT OF HIGHWAYS

BOX BEAM
B42
DETAILS

STANDARD DRAWING NO. BDP-011-04

SUBMITTED _____ DIRECTOR DIVISION OF STRUCTURAL DESIGN — DATE 02-26-20

APPROVED _____ STATE HIGHWAY ENGINEER — DATE 02-26-20

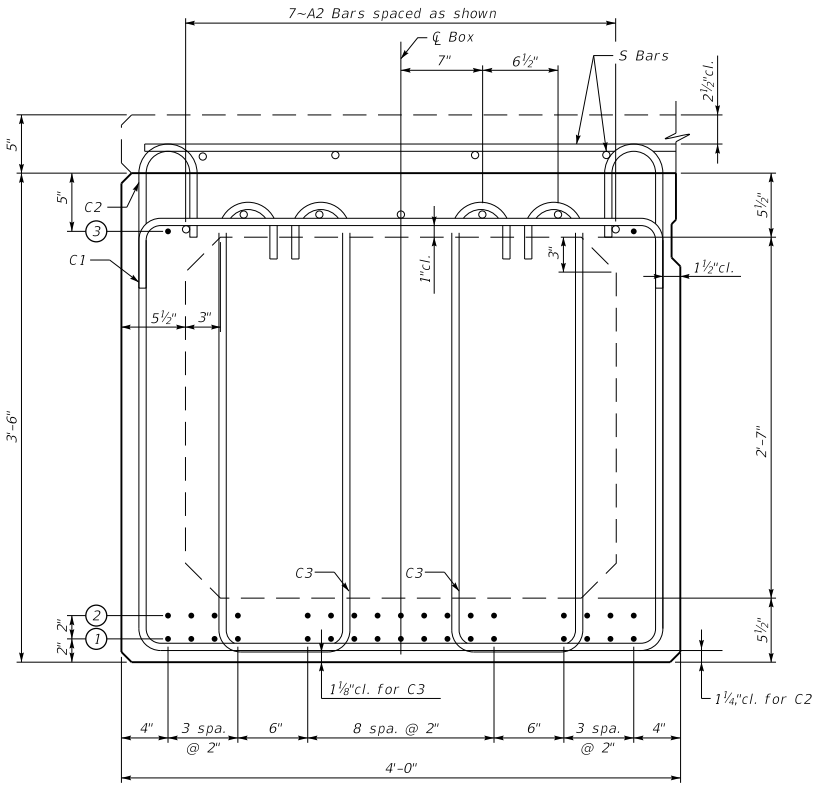

CB42 BEAM

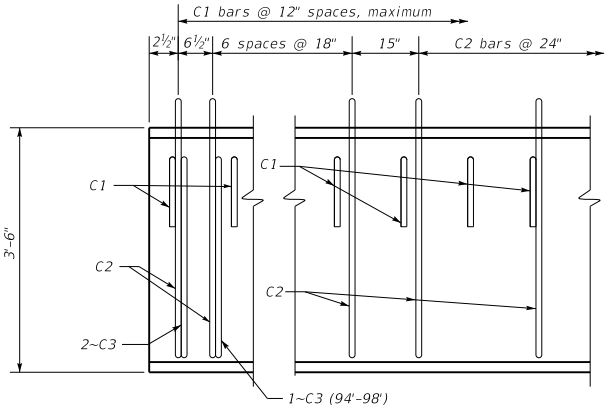

CB42 ELEVATION OF 0° SKEW

(Refer to BDP-003,c.e. for skewed details)

TABLE OF STRAND DATA

Beam Type	Beam Length (feet)	Number of Strands Required		
		Row 1	Row 2	Row 3
CB42	86	17	9	
	88	17	10	
	90	17	12	
	92	17	13	
	94	17	14	2
	96	17	15	2
	98	17	16	2

BAR QUANTITIES TABLE

Beam Type	Beam Length (feet)	C1	C2	C3			
CB42	86	87	49	4			
	88	89	50	4			
	90	91	51	4			
	92	93	52	4			
	94	95	53	6			
	96	97	54	6			
	98	99	55	6			

DESIGN DATA

Beam Type	Beam Length (feet)	DC kips	DW kips	LL kips	LL+I kips	Δd (in.)	Δc (in.)
CB42	86	52.1	2.4	57.1	70.3	0.4	1.0
	88	53.3	2.5	57.6	70.9	0.5	1.1
	90	54.6	2.6	58.1	71.4	0.5	1.2
	92	55.8	2.6	58.6	72.0	0.5	1.3
	94	57.0	2.7	59.1	72.5	0.6	1.2
	96	58.2	2.7	59.6	73.0	0.6	1.3
	98	59.4	2.8	60.1	73.5	0.7	1.3

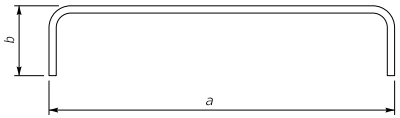

C1(e) Bar

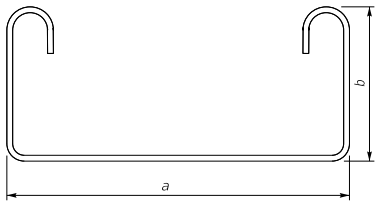

C2(e)-C3(e) Bars

Straight Reinforcement

Mark	Size	Length
A2(E)	#4	Beam Length Minus 3"
D(E)	#8	2'-0"

NOTE: A2 bars are to be lapped 2'-2" when necessary.

Bent Reinforcement

Mark	Size	a	b	
C1(e)	#5	3'-9"	6"	
C2(e)	#4	3'-9"	3'-7¼"	
C3(e)	#5	11⅜"	3'-2⅜"	

KENTUCKY
DEPARTMENT OF HIGHWAYS

BOX BEAM
CB42
DETAILS

STANDARD DRAWING NO. BDP-012-04

SUBMITTED _____ DIRECTOR DIVISION OF STRUCTURAL DESIGN — DATE 02-26-20

APPROVED _____ STATE HIGHWAY ENGINEER — DATE 02-26-20

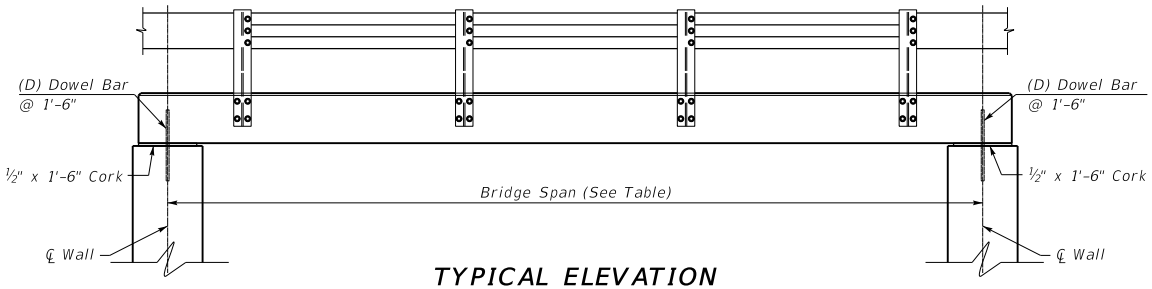

TYPICAL ELEVATION

SLAB BRIDGE SPAN DATA

BRIDGE SPAN (Max. Span)	SLAB THICK.	REINFORCEMENT				DEFLECTION IN INCHES	UNFACTORED BEAM END REACTION (PER UNSKEWED FT. OF BRIDGE WIDTH)		
	"TH"	"A"	"B"	"C"	"D"	SLAB + BARRIER DL DEFL.	DC (kips)	DW (kips)	LL+I (kips)
12'	1'-2"	#8	5"	#6	9"	0.01	1.78	0.10	9.75
14'	1'-4"	#9	5"	#6	8"	0.02	2.24	0.12	9.49
16'	1'-4"	#9	5"	#6	8"	0.03	2.53	0.13	9.25
18'	1'-4"	#9	5"	#6	9"	0.05	2.82	0.14	9.02
20'	1'-5"	#9	5"	#6	9"	0.06	3.24	0.16	8.99
22'	1'-5"	#10	5"	#6	8"	0.08	3.54	0.17	8.99
24'	1'-5"	#10	5"	#6	8"	0.12	3.84	0.19	8.98
26'	1'-6"	#10	5"	#6	8"	0.15	4.32	0.20	9.07
28'	1'-7"	#10	5"	#6	9"	0.17	4.81	0.22	11.76
30'	1'-7"	#11	5"	#6	7"	0.23	5.14	0.23	11.98
32'	1'-7"	#11	5"	#6	7"	0.29	5.47	0.25	12.16
34'	1'-8"	#11	5"	#6	8"	0.33	6.01	0.26	12.31
36'	1'-9"	#11	5"	#6	8"	0.37	6.59	0.28	12.43
38'	1'-10"	#11	5"	#6	8"	0.42	7.19	0.29	12.53
40'	2'-0"	#11	5"	#6	8"	0.42	8.07	0.31	12.61

General Notes

SLAB OPTION: The superstructure option shown on this Standard Drawing may be used in lieu of composite or non-composite adjacent box beams. Notify the Director of the Division of Structural Design when this option is used. Slabs are designed for a minimum out to out width of 12'.

CLASS "AA" REINFORCED CONCRETE: All falsework is to remain in place until the Class "AA" Concrete compressive strength is 4000 PSI. Class "AA" Concrete is to be used throughout the superstructure.

ELEVATIONS: Determine final elevations using the elevations, slopes, and grades shown on the detailed plans.

STEEL REINFORCEMENT: Ensure steel reinforcement is ASTM A 615 Grade 60 and epoxy coated. "A" bars to be hooked on each end.

SURFACE FINISH: The top of the slab surface may be finished with a floated surface finish in accordance with Section 601.03.18 and textured in accordance with Section 609.03.10.

FWS: Slabs are designed for 15 psf future wearing surface.

FORMWORK: All formwork shall be designed by a Professional Engineer licensed to practice in Kentucky. The Engineer shall be responsible for accounting for all deflections of the slab after formwork is removed and deflections in formwork to ensure proper grade is maintained across the bridge. Submit formwork design and calculated deflections to the Divsion of Construction for approval prior to beginning work.

BOTTOM OF SLAB: Bottom of Slab may be poured flat instead of sloped as shown. See structure plans and elevations.

DOWEL BAR (D): Dowel bar shall be an epoxy coated #8 bar, 2'-0" in length. Dowel bar may be deformed or smooth. Dowel bar shall be embedded into wall a minimum of 1'-0".

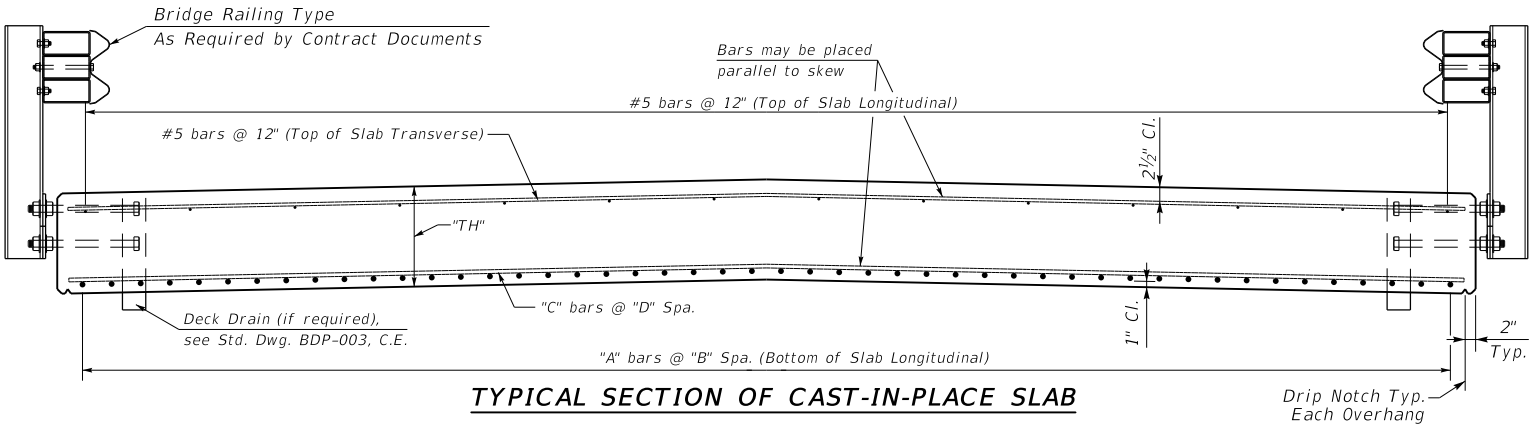

TYPICAL SECTION OF CAST-IN-PLACE SLAB

KENTUCKY
DEPARTMENT OF HIGHWAYS

SLAB BRIDGE
DETAILS

STANDARD DRAWING NO. BDP-013-04

SUBMITTED _____ DIRECTOR DIVISION OF STRUCTURAL DESIGN — DATE 02-26-20

APPROVED _____ STATE HIGHWAY ENGINEER — DATE 02-26-20

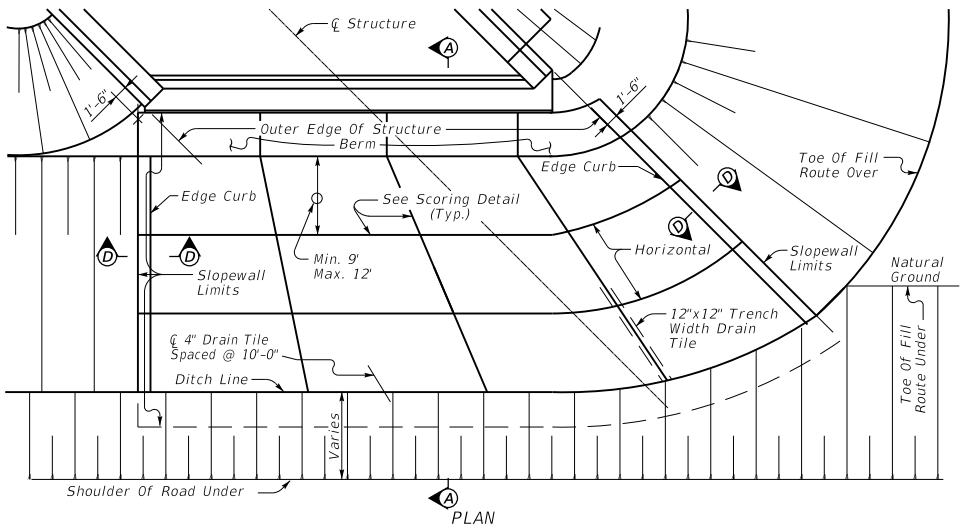

PLAN

ROUTE UNDER ON FILL WITH ROUTE OVER ON FILL
ROUTE UNDER AT GRADE WITH ROUTE OVER ON FILL

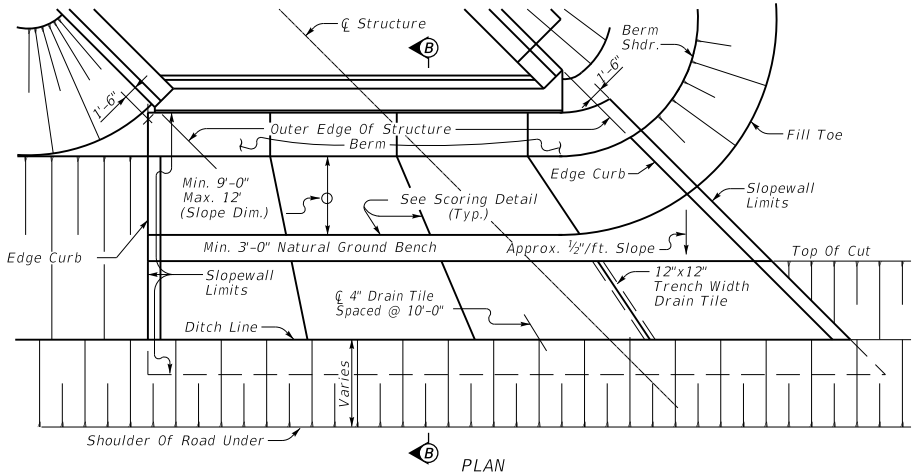

PLAN

ROUTE UNDER IN EARTH CUT
ROUTE OVER ON FILL

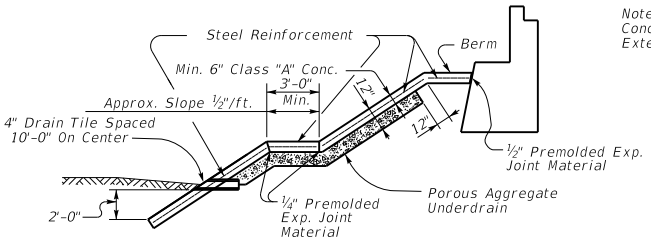

SECTION B-B

Note:
Concrete Slopewall Shall Be
Extended Through Berm

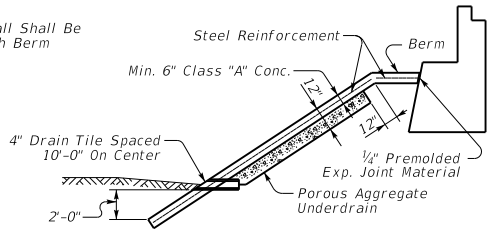

SECTION A-A

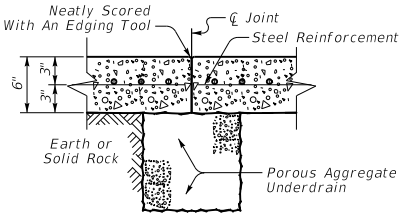

CONSTRUCTION JOINT DETAIL

CONSTRUCTION JOINTS REQUIRED AT 21'-0" CENTERS ALONG SLOPEWALL
CONSTRUCTION JOINTS PERMISSIVE AT SCORING DETAILS

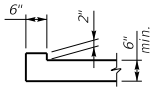

SECTION D-D

Edge Curb

GENERAL NOTES

SPECIFICATIONS: Slopewall is to be constructed according to details shown and to Section 703 of the Kentucky Department of Highways Standard Specifications for Road and Bridge Construction.

INCIDENTALS: Include the cost of steel reinforcement, drain tile, preformed expansion joint material, aggregate, excavation, and all labor and materials required to complete the work in accordance with the plans and Specifications in the price for 6" Concrete Slopewall.

SKEW: A 45° Skew is detailed on this sheet. Details for other skews are similar.

ROCK EXCAVATION: Excavate the rock to plan depth and slope as near as possible to reduce the quantity of Concrete, Class "A" required to maintain a minimum slopewall thickness. Include the cost of additional concrete required to fill voids in the rock and maintain the slopewall thickness in the bid for 6" Concrete Slopewall.

SLOPEWALL REINFORCEMENT: Use No. 4 bars at 18" centers in each direction or an equivalent area of welded deformed steel fabric to reinforce the slopewall.

Work This Drawing With Drawing No. BGX-005,c.e.

KENTUCKY
DEPARTMENT OF HIGHWAYS

CONCRETE SLOPEWALLS
FOR GRADE
SEPERATION BRIDGES

STANDARD DRAWING NO. BGX-004-09

SUBMITTED _____ DIRECTOR DIVISION OF STRUCTURAL DESIGN — DATE 02-26-20

APPROVED _____ STATE HIGHWAY ENGINEER — DATE 02-26-20

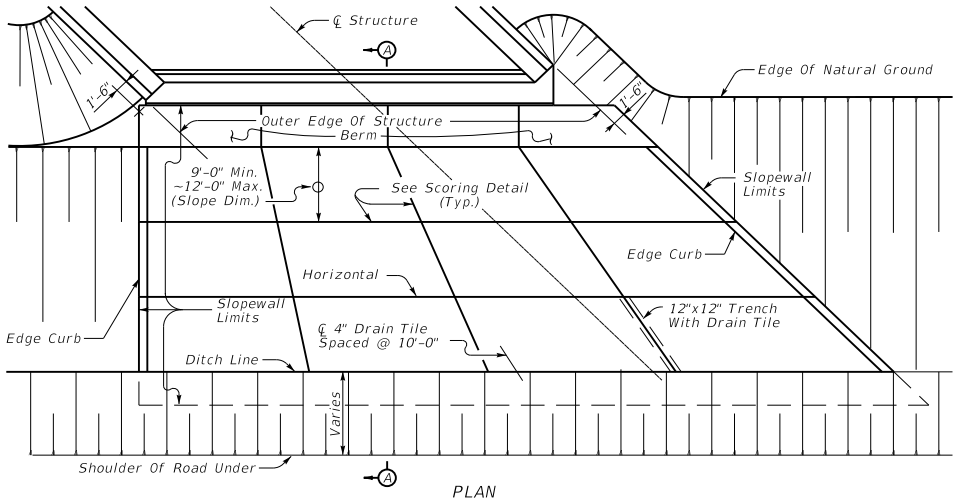

PLAN

ROUTE UNDER IN FULL EARTH CUT

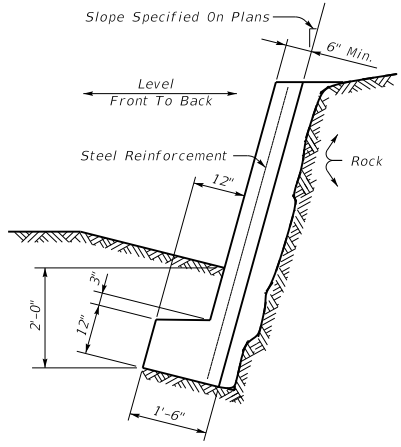

STEEP SLOPE SECTION
6" CONCRETE SLOPEWALL

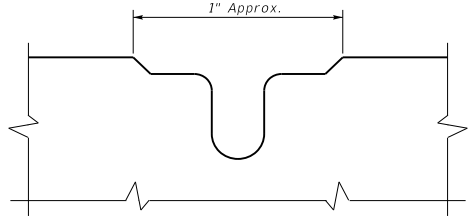

SCORING DETAIL
(Score With Approved Grooving Tool)

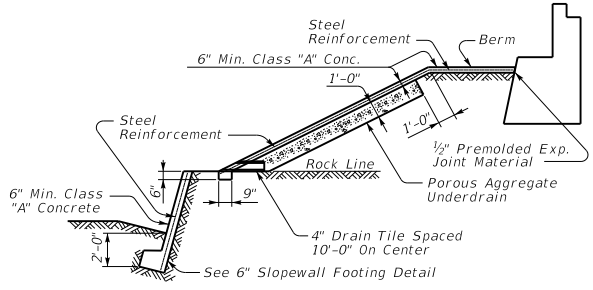

SECTION C-C

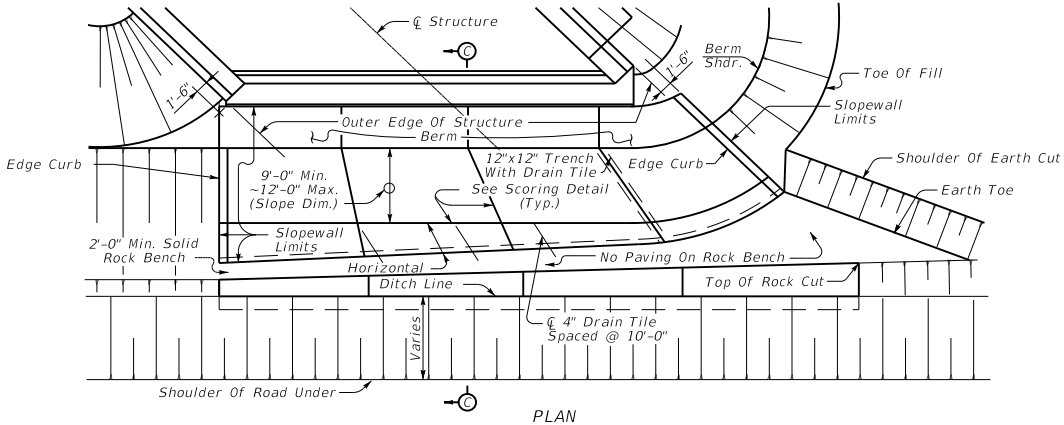

PLAN

ROUTE UNDER IN ROCK CUT AND EARTH CUT
ROUTE OVER ON FILL

Work This Drawing With Drawing No. BGX-004,c.e.

KENTUCKY
DEPARTMENT OF HIGHWAYS

CONCRETE SLOPEWALLS
FOR GRADE
SEPERATION BRIDGES

STANDARD DRAWING NO. BGX-005-09

SUBMITTED _____ DIRECTOR DIVISION OF STRUCTURAL DESIGN — DATE 02-26-20

APPROVED _____ STATE HIGHWAY ENGINEER — DATE 02-26-20

STENCIL FOR YEAR AND DESIGN LOADING

When year only is used place year in center of plate

STENCIL FOR DRAWING NUMBER

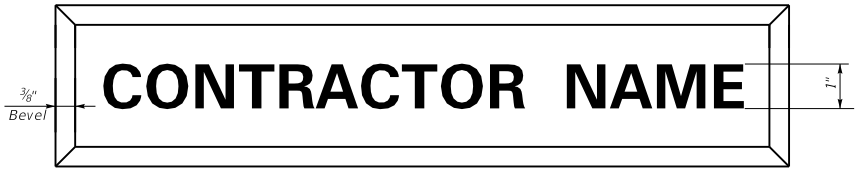

CONTRACTOR STENCIL

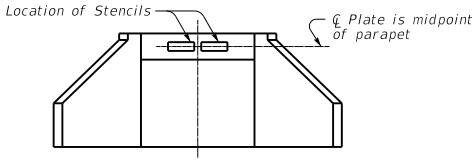

ELEVATION A-A

Single Culvert

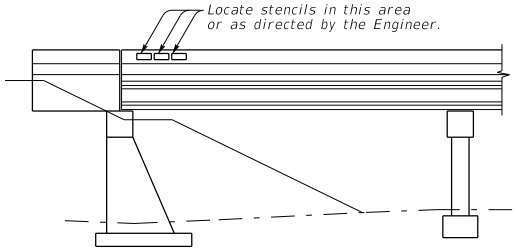

LOCATION OF STENCILS ON BRIDGES

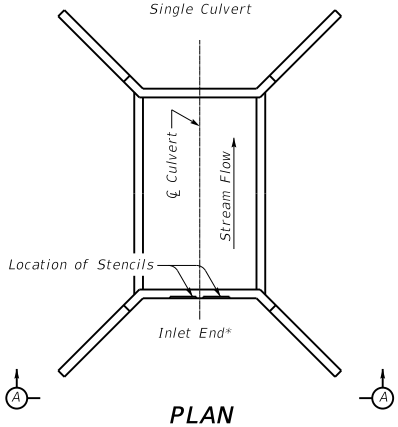

PLAN

Location of Stencils on all Culverts (Single or Multiple) and Arches

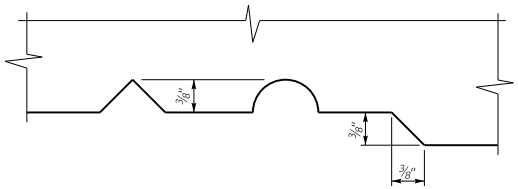

TYPE OF LETTERS

* Use the outlet end for outlet only extensions

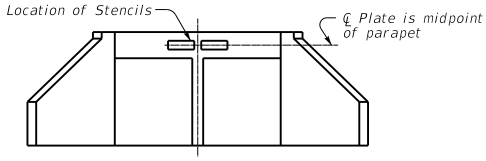

ELEVATION A-A

Multiple span Culvert

GENERAL NOTES

STENCILS: *Fabricate all stencils from recessed panels with beveled edges with raised letters and figures in accordance with Subsection 601.03.19 of the Specifications.*

YEAR AND DESIGN LOADING STENCIL: *Show the year that the contract is executed and the design load as shown on the contract plans. The design load is required on all structures classified as bridges by Subsection 101.03 of the Specifications and on other structures as referenced on plans.*

DRAWING NUMBER STENCIL: *Use this stencil on all structures. The number to be placed on the stencil shall be taken from the contract plans.*

CONTRACTOR STENCIL: *Place on all bridges, the name of the prime contractor and subcontractor(s), when applicable, in proximity to other stencils required.*

KENTUCKY
DEPARTMENT OF HIGHWAYS

STENCILS
FOR STRUCTURE

STANDARD DRAWING NO. BGX-006-10

SUBMITTED _____ DIRECTOR DIVISION OF STRUCTURAL DESIGN — DATE 02-26-20

APPROVED _____ STATE HIGHWAY ENGINEER — DATE 02-26-20

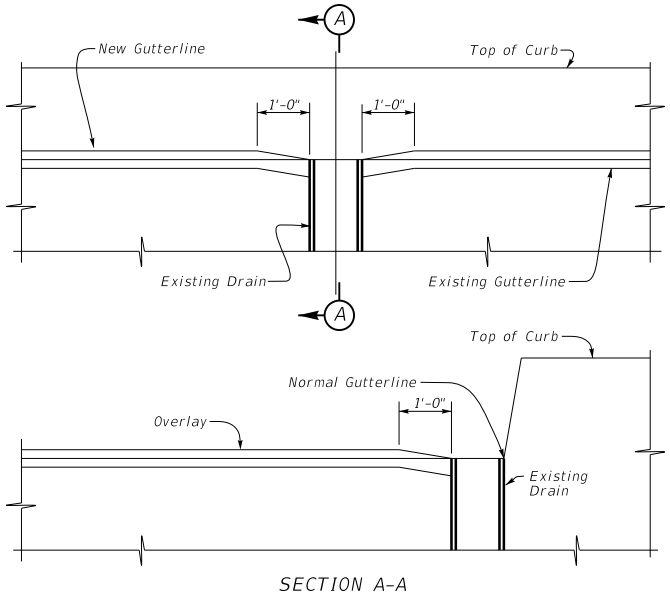

FIGURE NO. 1

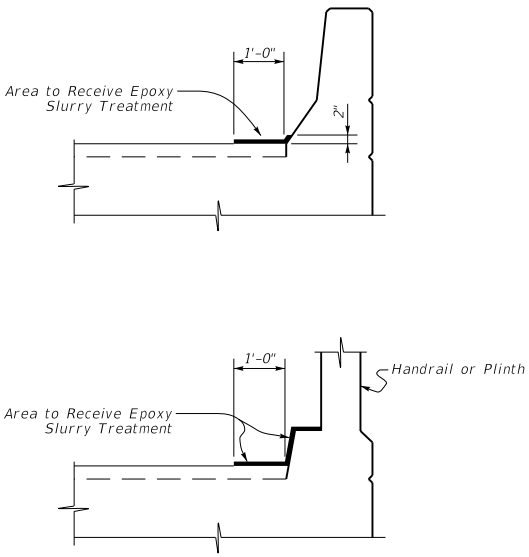

FIGURE NO. 2

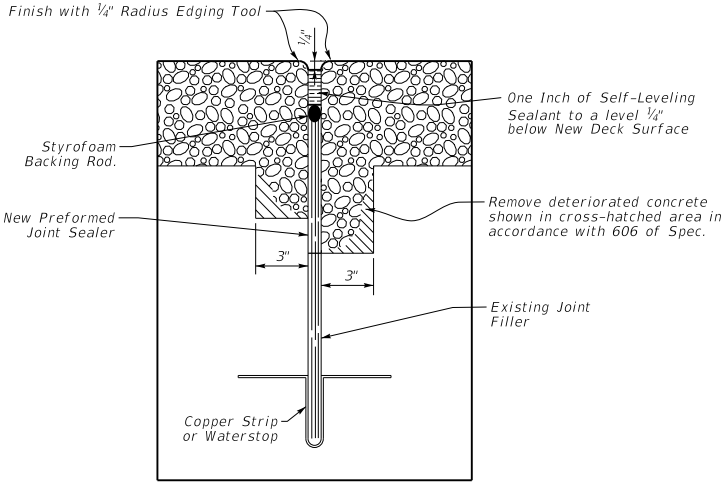

FIGURE NO. 3

TYPICAL EXPANSION DAM TREATMENT

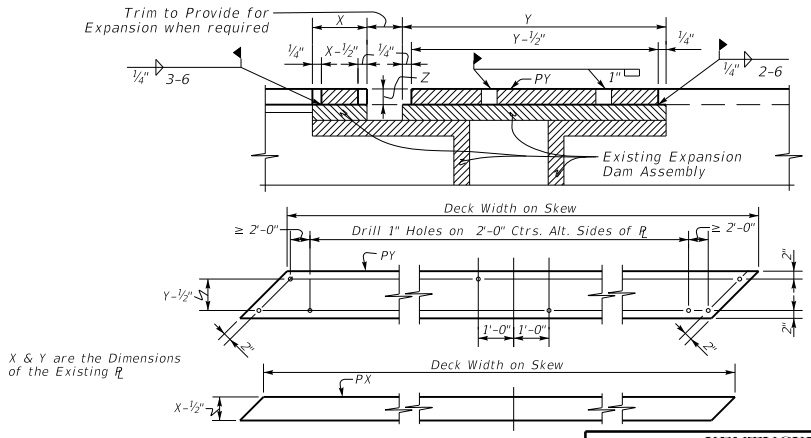

Structural Steel weights given are approximate and the Contractor is responsible for all measurements.

Determine dimension Z for thickness of the built-up plates as the minimum specified thickness of overlay minus ¼".

Steel is to be furnished in 3-foot minumum lengths welded together as directed by the Engineer.

FIGURE NO. 4

KENTUCKY
DEPARTMENT OF HIGHWAYS

BRIDGE RESTORATION AND WATERPROOFING WITH CONCRETE OVERLAYS

STANDARD DRAWING NO. BGX-009-04

SUBMITTED _____ DIRECTOR DIVISION OF STRUCTURAL DESIGN — DATE 02-26-20

APPROVED _____ STATE HIGHWAY ENGINEER — DATE 02-26-20

Description of Soil Compactness or Consistency

SOIL TYPE	COMPACTNESS OR CONSISTENCY	RANGE OF PENETRATION RESISTANCE	RANGE OF UNCONFINED COMPRESSIVE STRENGTH
Coarse grained soils (More than half of material is larger than No. 200 sieve size.)	Very loose Loose Medium compact Compact Very compact	Less than 4 blows per ft. 4 to 10 10 to 30 30 to 50 Greater than 50	Not applicable
Fine grained soils (More than half of material is smaller than No. 200 sieve size.)	Very soft Soft Medium stiff Stiff Very stiff Hard	Not applicable	Less than 0.25 tsf 0.25 to 0.50 0.50 to 1.0 1.0 to 2.0 2.0 to 4.0 Greater than 4.0

Unified Soil Classifications

MAJOR DIVISION		SYMBOL	NAME
COARSE GRAINED SOILS	GRAVEL AND GRAVELLY SOILS	GW	Well-graded gravels or gravel-sand mixtures, little or no fines.
		GP	Poorly graded gravels or gravel-sand mixtures, little or no fines.
		GM	Silty gravels, gravel-sand-silt mixtures.
		GC	Clayey gravels, gravel-sand-clay mixtures.
	SAND AND SANDY SOILS	SW	Well graded sands or gravelly sands, little or no fines.
		SP	Poorly graded sands or gravelly sands, little or no fines.
		SM	Silty sands, sand-silt mixtures.
		SC	Clayey sands, sand-clay mixtures.
FINE GRAINED SOILS	SILTS AND CLAYS LL IS LESS THAN 50	ML	Inorganic silts and very fine sands, rock flour, silty or clayey fine sands or clayey silts with slight plasticity.
		CL	Inorganic clays of low to medium plasticity, gravelly clays, sandy clays silty clays, lean clays.
	SILTS AND CLAYS LL IS GREATER THAN 50	MH	Inorganic silts, micaceous or diatomaceous fine sandy or silty soils, elastic silts.
		CH	Inorganic clays of high plasticity, fat clays.
UNCLASSIFIED MATERIAL		NONE	Non-classified material (i.e. overburden, pavement, slag, etc.) include visual desc.

AI	Activity Index
LI	Liquidity Index
N	Penetration Resistance
S+C(%)	Material finer than No. 200 sieve
○	Rockline Soundings
⊕	Disturbed Sample Boring
◎	Undisturbed Sample Boring
◎	Undisturbed Sample Boring & Rock Core
⊙	Rock Core
⌖	Slope Inclinometer Installation
	typical applications: ⌖ ⊕ ◎ ◎ ⌖
▷	Approximate Footing Elevation
OW	
▽	7-Day (or greater) Water Table & Date
□	Thin-walled Tube Sample
<	Standard Penetration Test Sample
UU (psi)	Unconsolidated, Undrained Triaxial Test
Qu (psi)	Unconfined Compressive Strength
w (%)	Moisture Content
RQD (%)	Rock Quality Designation
SDI (JS)	Slake Durability Index (Jar Slake Test)
Rec. (%)	Core Recovery
Ø	Angle of Internal Friction
$\bar{Ø}$	Effective Angle of Internal Friction
c (psi)	Cohesion
$\bar{c}$ (psi)	Effective Cohesion
γ	Total Unit Weight
RDZ	Rock Disintegration Zone
OB	Overburden Bench
IB	Intermediate Bench
R	Refusal
NR	Refusal Not Encountered
VS (psi)	Field Vane Shear Strength

LIMESTONE

SANDSTONE

COAL

NONDURABLE SHALE (SDI < 90)

DURABLE SHALE (SDI ≥ 90)

TALUS OR MINE WASTE OR FILL MATERIAL

ROADWAY FILL-GRANULAR EMBANKMENT

STRUCTURE GRANULAR BACKFILL

SLOPE PROTECTION

Relation of RQD and in situ Rock Quality

RDQ (%)	Rock Quality
90 - 100	Excellent
75 - 90	Good
50 - 75	Fair
25 - 50	Poor
0 - 25	Very Poor

KENTUCKY DEPARTMENT OF HIGHWAYS

GEOTECHNICAL LEGEND

STANDARD DRAWING NO. BGX-012-02

SUBMITTED _____ DIRECTOR DIVISION OF STRUCTURAL DESIGN 02-26-20 DATE

APPROVED _____ STATE HIGHWAY ENGINEER 02-26-20 DATE

NOTE: Reposition barrier stirrups in manner shown as to not interfere with drain opening.

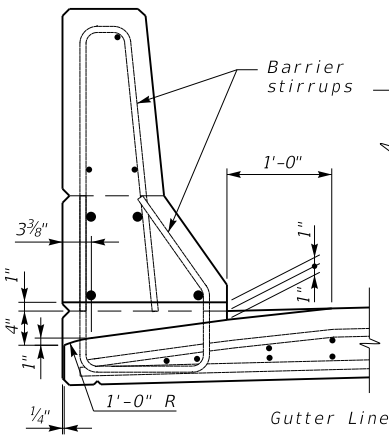

SECTION THROUGH DRAIN

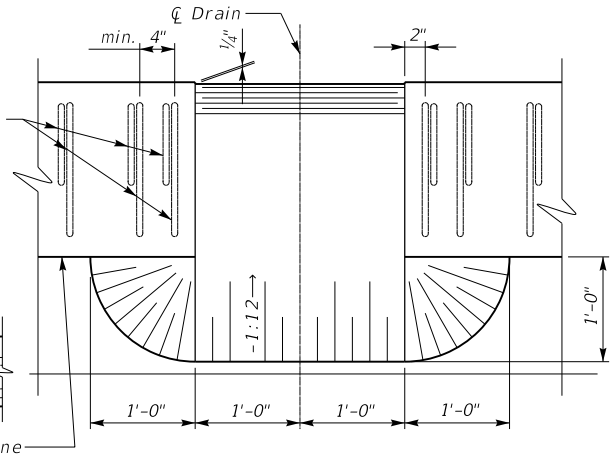

PLAN OF DRAIN (Barrier not in place)

NOTE: Field bend top transverse slab reinforcement in the area of the drain to maintain 2½" of concrete cover through the drain. Bend reinforcement approximately 1'-0" from the gutter line. Transverse slab reinforcement adjacent to the opening is not to be bent. Longitudinal reinforcement is not to be tied to the transverse reinforcement adjacent to the drain for a distance sufficient to allow the reinforcement to sag under the bent reinforcement in the drain area.

THROUGH BARRIER DRAIN DETAILS

NOTE: Reposition curb stirrups in manner shown as to not interfere with drain opening.

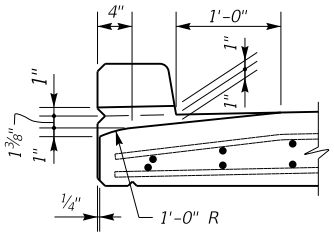

SECTION THROUGH DRAIN

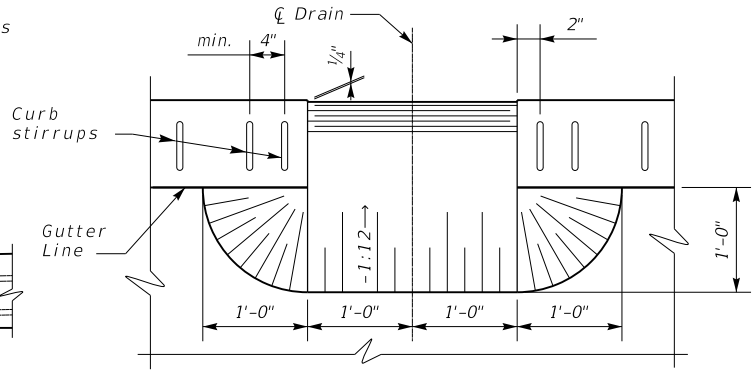

PLAN OF DRAIN (Curb not in place)

NOTE: Field bend top transverse slab reinforcement in the area of the drain to maintain 2½" of concrete cover through the drain. Bend reinforcement approximately 1'-0" from the gutter line. Transverse slab reinforcement adjacent to the opening is not to be bent. Longitudinal reinforcement is not to be tied to the transverse reinforcement adjacent to the drain for a distance sufficient to allow the reinforcement to sag under the bent reinforcement in the drain area.

THROUGH CURB DRAIN DETAILS

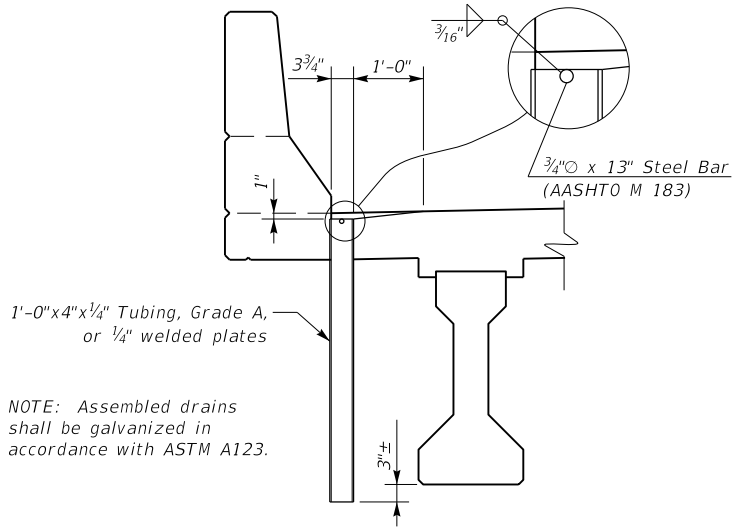

NOTE: Assembled drains shall be galvanized in accordance with ASTM A123.

SECTION THROUGH DRAIN

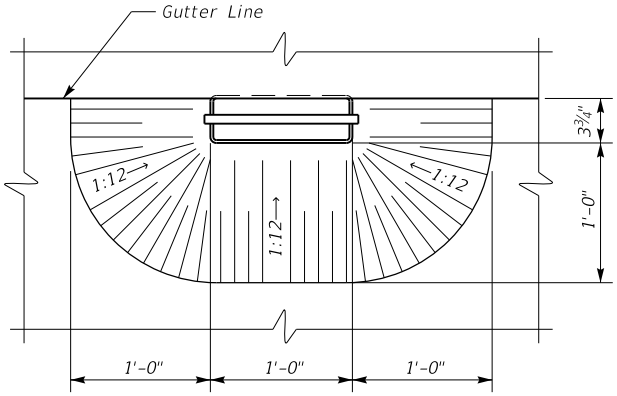

PLAN OF DRAIN

THROUGH DECK DRAIN DETAILS

KENTUCKY
DEPARTMENT OF HIGHWAYS

BRIDGE DRAINS

STANDARD DRAWING NO. BGX-015-04

SUBMITTED _____ DIRECTOR DIVISION OF STRUCTURAL DESIGN — DATE 02-26-20

APPROVED _____ STATE HIGHWAY ENGINEER — DATE 02-26-20

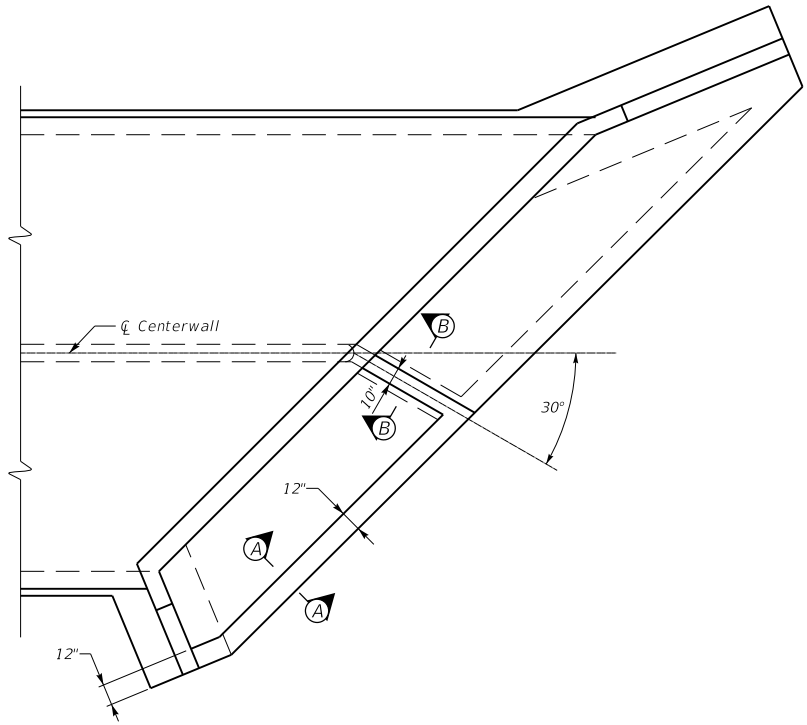

PLAN OF SKEWED INLET END

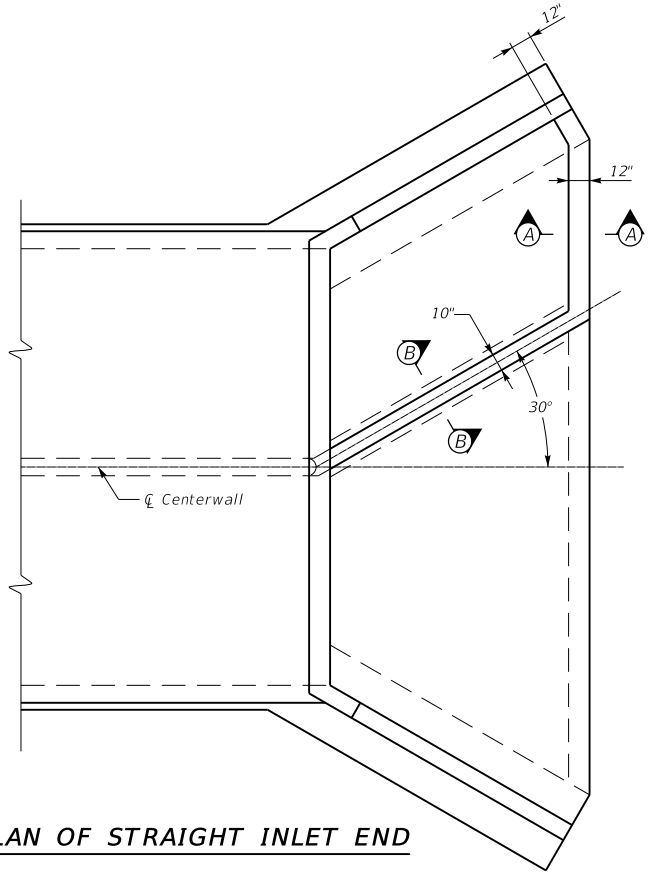

PLAN OF STRAIGHT INLET END

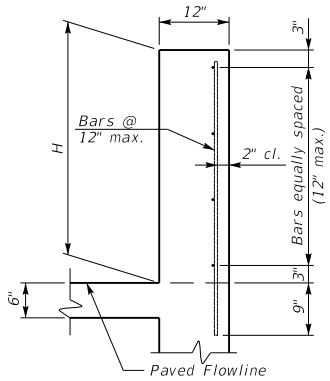

SECTION A-A

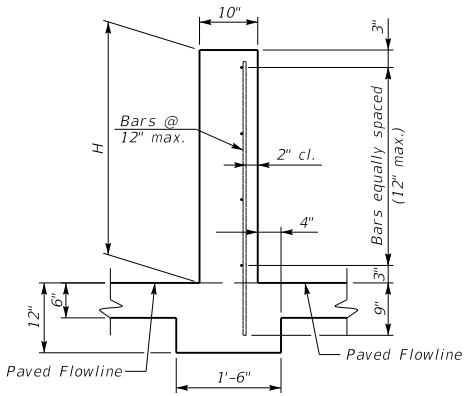

SECTION B-B

General Notes

LOW FLOW DIVERSION CURB: *Include all materials and labor required to construct the Low Flow Diversion Curb in the bid for Low Flow Diversion Curb.*

DIMENSION "H": *This dimension is the lesser of the wing tip elevation, one-half the barrel height opening, or as designated on the plans.*

METHOD OF MEASUREMENT: *The limits of the Low Flow Diversion Curb is the entire wall that is above the paved flowline, extending from the centerwall to the wing face as detailed on the Plan views, and the 6" x 1'-6" footing as shown in Section B-B.*

STEEL REINFORCEMENT: *All steel reinforcement is #4 bars in accordance with ASTM A 615, Grade 60.*

CONCRETE: *Class "A" Concrete is to be used.*

KENTUCKY
DEPARTMENT OF HIGHWAYS

LOW FLOW
DIVERSION
CURB

STANDARD DRAWING NO. BGX-016-01

SUBMITTED _____ 02-26-20
DIRECTOR DIVISION OF STRUCTURAL DESIGN — DATE

APPROVED _____ 02-26-20
STATE HIGHWAY ENGINEER — DATE

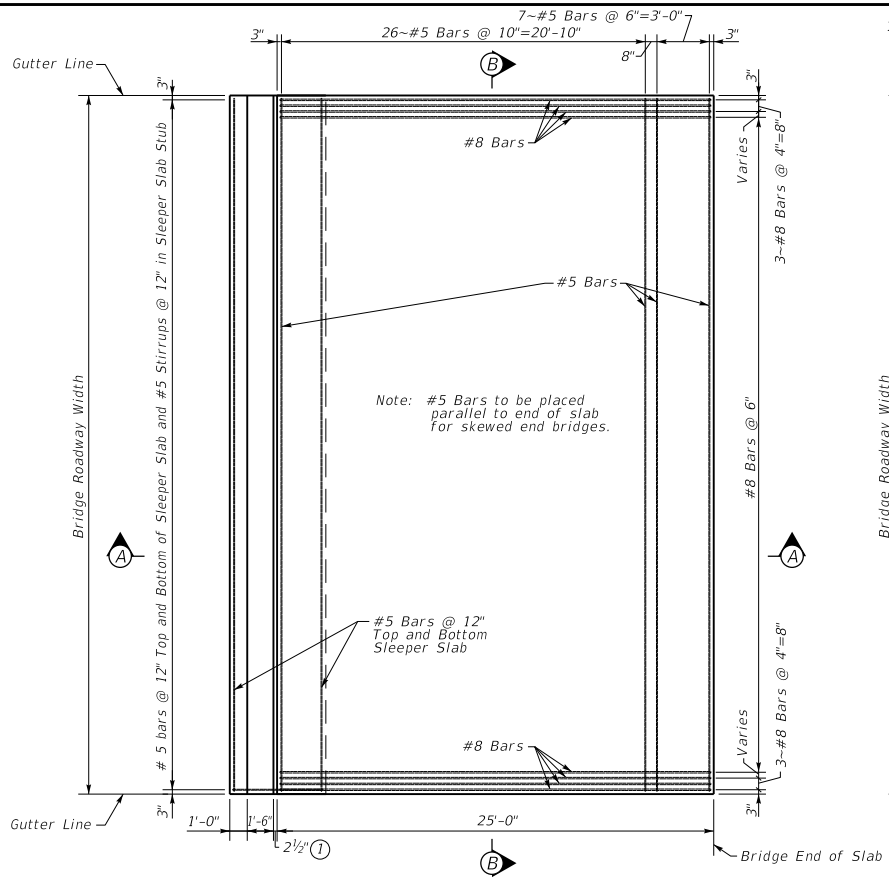

PLAN

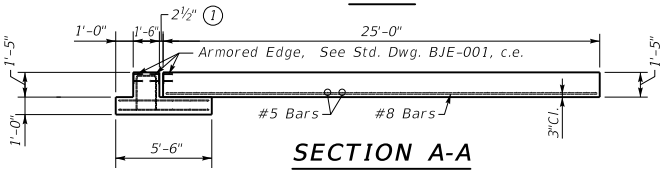

SECTION A-A

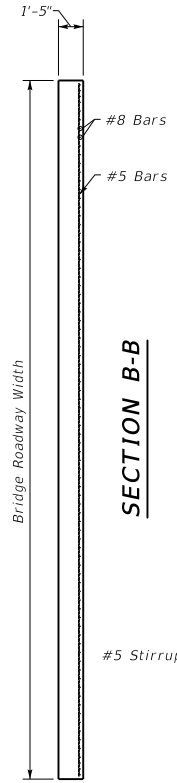

SECTION B-B

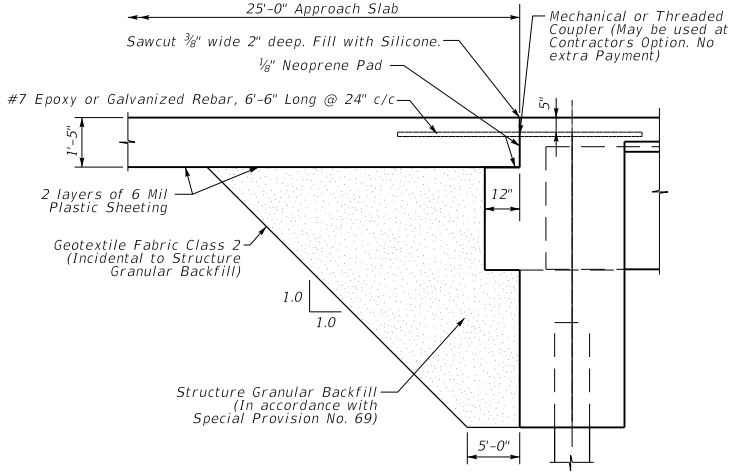

TYPICAL SECTION @ BRIDGE END

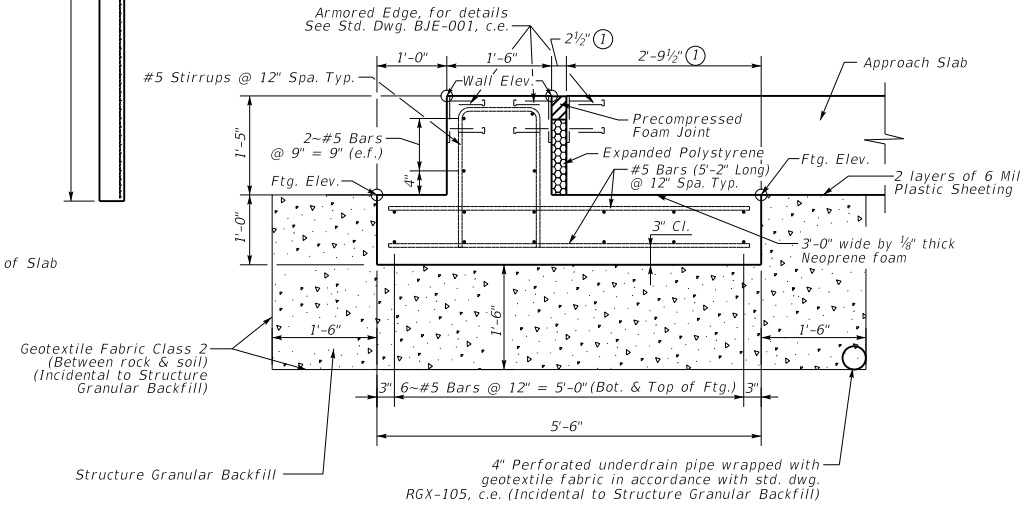

TYPICAL SECTION @ SLEEPER SLAB END

GENERAL NOTES

CROWN AND ELEVATIONS: *Crown shall conform to the rate of crown at the approach pavement and bridge deck. If the rate of crown at the bridge deck differs from that of approach pavement, a smooth transition shall be provided within the limits of the approach slab. Elevations shall be given in the plans for top of footing and top of wall as shown on the sleeper slab typical section. Grade elevations shall also be given along the approach slab to ensure it is built to proper grade. These elevations shall be provided at each gutter line and at the crown (if applicable) and at maximum spacings of 8'-0" along the approach slab. Approach slabs and sleeper slabs added to existing bridges will require the contractor to provide field surveys to obtain existing elevations. The contractor shall calculate all elevations noted above and submit to the Engineer for review. All costs to field survey and calculate elevations are incidental to unit price bid for Approach Slab.*

CONCRETE: *Concrete shall be Class "AA".*

REINFORCEMENT: *All steel reinforcement shall be Grade 60 and epoxy coated or galvanized.*

PAYMENT: *Include the cost of Class "AA" Concrete, epoxy-coated or galvanized steel reinforcement, precompressed foam joint seal, expanded polystyrene, plastic sheeting, and all labor and materials required to construct the approach slab in the bid item for Approach Slab. Payment for armored edges and structural granular backfill shall be made separately.*

1 *The joint opening width shall be 2.5 in for expansion lengths of 150 feet or less, regardless of the joint setting temperature. For expansion lengths greater than 150 feet, the joint opening width shall be constructed based on the actual ambient temperature at the time of construction, with the manufacturer's joint setting table. The expansion length must be shown in the plans.*

The precompressed foam joint shall be able to accomodate both the minimum and the maximum joint opening widths as shown below:

Concrete Bridge Expansion length less than 347 feet and Steel Bridge Expansion Length less than 275 feet.
W(min) = 1.0 inch
W(max) = 4.0 inches

This standard is not applicable for concrete bridge expansion lengths greater than 347 feet or Steel bridge expansion lengths must be done and placed within the plans using a joint capable of greater movements greater than 275 feet. For bridges exceeding these limits a special design must be done and placed within the plans using a joint capable of greater movements.

KENTUCKY
DEPARTMENT OF HIGHWAYS

APPROACH SLAB

STANDARD DRAWING NO. BGX-017-03

SUBMITTED _____ DIRECTOR DIVISION OF STRUCTURAL DESIGN — 02-26-20 DATE

APPROVED _____ STATE HIGHWAY ENGINEER — 02-26-20 DATE

CONDITION NO. 1: SOIL EMBANKMENT OVER DEEP OVERBURDEN WITH OPEN SINKHOLES

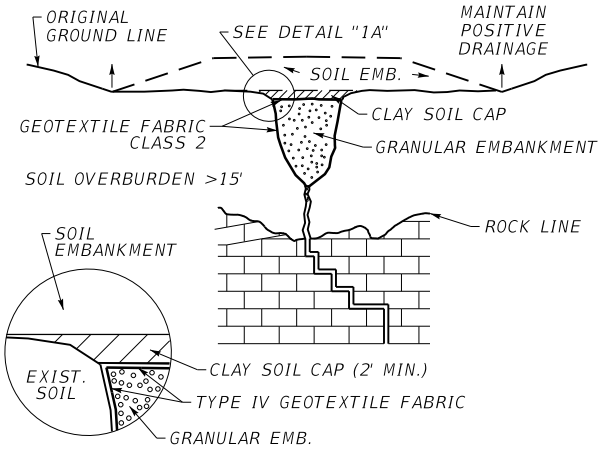

DETAIL "1A"

PROCEDURE:

a. REMOVE DEBRIS. DO NOT EXCAVATE SOIL OVERBURDEN.
b. LINE OPENING WITH TYPE IV GEOTEXTILE FABRIC.
c. REFILL WITH GRANULAR EMBANKMENT.
d. PLACE GEOTEXTILE FABRIC CLASS 2 ON TOP OF GRANULAR EMBANKMENT.
e. REFILL WITH (2' MINIMUM) CLAY SOIL CAP.

CONDITION NO. 2: SOIL EMBANKMENT OVER SHALLOW OVERBURDEN WITH SINKHOLE OPENING IN ROCK

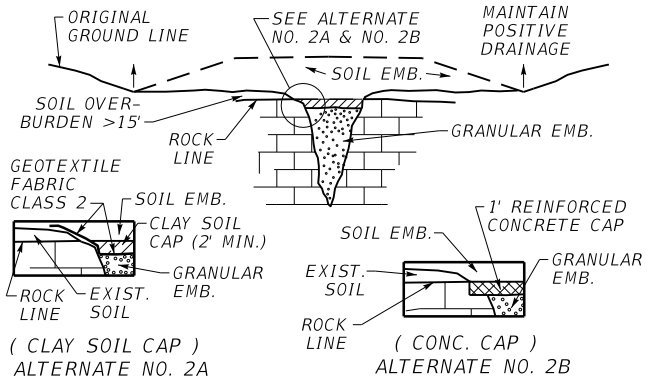

PROCEDURE FOR ALTERNATE NO. 2A

a. REMOVE DEBRIS AND SOIL OVERBURDEN.
b. REFILL OPENING WITH GRANULAR EMBANKMENT TO 2' MIN. BELOW ROCK LINE.
c. PLACE GEOTEXTILE FABRIC CLASS 2 ON TOP OF GRANULAR EMB. OVERLAPPING ORIGINAL GROUND LINE.
d. REFILL WITH (2' MIN.) CLAY SOIL CAP.

PROCEDURE FOR ALTERNATE NO. 2B

a. REMOVE DEBRIS AND SOIL OVERBURDEN.
b. REFILL OPENING WITH GRANULAR EMBANKMENT TO 1' MIN. BELOW ROCK LINE.
c. CONSTRUCT 1' REINFORCED CONCRETE CAP. CAP SHOULD BE INTERLOCKED WITH ROCK FOR SUPPORT.

CONDITION NO.3: ROCK EMBANKMENT OVER DEEP OVERBURDEN WITH OPEN SINKHOLES

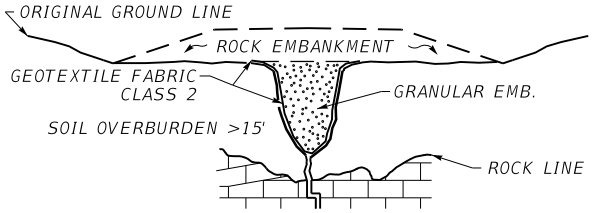

PROCEDURE:

a. REMOVE DEBRIS. DO NOT EXCAVATE SOIL OVERBURDEN.
b. LINE OPENING WITH GEOTEXTILE FABRIC CLASS 2.
c. REFILL OPENING WITH GRANULAR EMBANKMENT TO TOP OF DEPRESSION.

CONDITION NO. 6: CUT SECTIONS WITH SINKHOLE OPENINGS IN SOIL

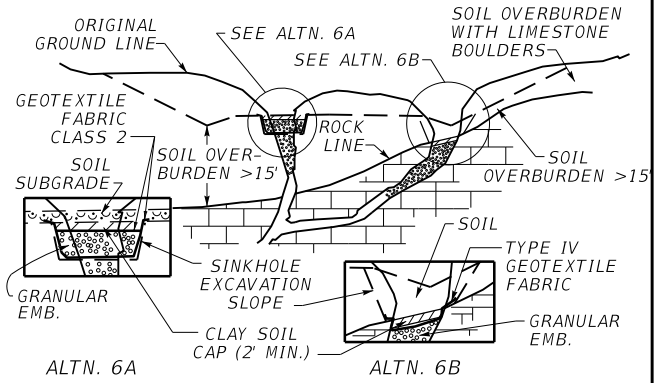

ALTERNATE NO. 6A SOIL OVERBURDEN GREATER THAN 15'

a. REMOVE DEBRIS. DO NOT EXCAVATE SOIL OVERBURDEN.
b. LINE OPENING WITH GEOTEXTILE FABRIC CLASS 2.
c. REFILL WITH GRANULAR EMBANKMENT.
d. PLACE GEOTEXTILE FABRIC CLASS 2 OVER GRANULAR EMBANKMENT OVERLAPPING ORIG. GROUND LINE.
e. REFILL WITH (2' MIN.) CLAY SOIL CAP. IF ROCK SUBGRADE IS USED OMIT SOIL CAP AND FABRIC UNDER-LYING SOIL CAP.

ALTERNATE NO. 6B SOIL OVERBURDEN LESS THAN 15'

a. REMOVE DEBRIS AND SOIL OVERBURDEN.
b. REFILL OPENING WITH GRANULAR EMBANKMENT TO 2' MIN. BELOW ROCK LINE.
c. PLACE GEOTEXTILE FABRIC CLASS 2 OVER GRANULAR EMBANKMENT OVERLAPPING ORIG. GROUND LINE.
d. REFILL WITH (2' MIN.) CLAY SOIL CAP. IF CONCRETE CAP IS USED THE FABRIC SHALL BE OMITTED AND CAP SHALL BE INTERLOCKED WITH THE BEDROCK FOR SUPPORT AS DETAILED IN COND. NO. 2 ALTERNATE NO. 2B.

CONDITION NO. 4: ROCK EMBANKMENT OVER SHALLOW OVERBURDEN WITH SINKHOLE OPENINGS IN ROCK

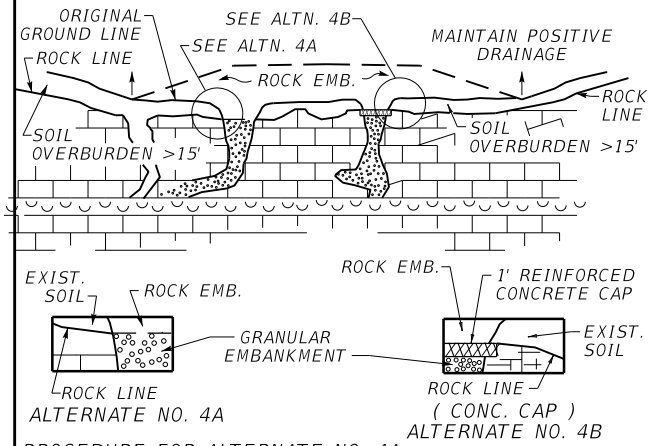

PROCEDURE FOR ALTERNATE NO. 4A

a. REMOVE DEBRIS AND SOIL OVERBURDEN.
b. REFILL OPENING TO ROCK LINE WITH GRANULAR EMBANKMENT.

PROCEDURE FOR ALTERNATE NO. 4B

a. REMOVE DEBRIS AND SOIL OVERBURDEN.
b. REFILL OPENING WITH GRANULAR EMBANKMENT TO 1' MIN. BELOW ROCK LINE.
c. CONST. 1' REINFORCED CONC. CAP. CAP SHOULD BE INTERLOCKED WITH ROCK FOR SUPPORT.

CONDITION NO. 5: CUT SECTIONS WITH SINKHOLE OPENINGS IN ROCK

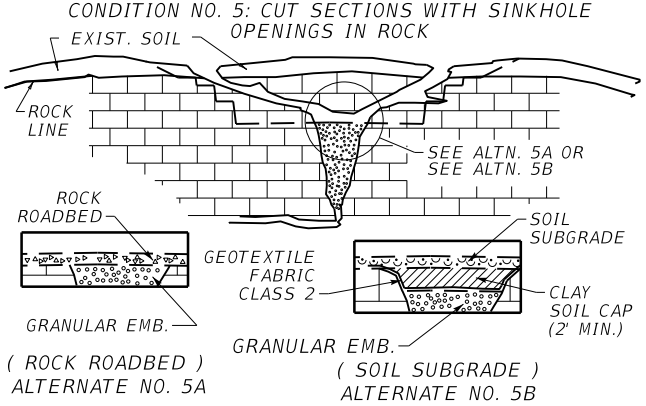

PROCEDURE FOR ALTERNATE NO. 5A

a. REFILL OPENING WITH GRANULAR EMBANKMENT. IF CONCRETE CAP IS USED IT SHALL BE INTERLOCKED WITH THE BEDROCK FOR SUPPORT AS DETAILED IN CONDITION NO. 2 ALTERNATE NO. 2B.

PROCEDURE FOR ALTERNATE NO. 5B

a. REFILL OPENING WITH GRANULAR EMBANKMENT. TO 2' MINIMUM BELOW SOIL SUBGRADE.
b. PLACE GEOTEXTILE FABRIC CLASS 2 OVER GRANULAR EMBANKMENT.
c. REFILL WITH (2' MIN.) CLAY SOIL CAP. IF CONCRETE CAP IS USED THE FABRIC SHALL BE OMITTED AND CAP SHALL BE INTERLOCKED WITH THE BEDROCK FOR SUPPORT AS DETAILED IN COND. NO. 2 ALTERNATE NO. 2B.

THE CONCRETE CAP SHALL BE CLASS "B" CONC. AND CONTAIN NO. 8 REINFORCING BARS PLACED AT 12" CTRS. IN BOTH DIRECTIONS AND LOCATED 3" FROM THE BOTTOM SURFACE OF THE CAP.

KENTUCKY
DEPARTMENT OF HIGHWAYS

TREATMENT
OF
OPEN SINKHOLES

STANDARD DRAWING NO. BGX-018

SUBMITTED: DIRECTOR DIVISION OF STRUCTURAL DESIGN — DATE 02-26-20

APPROVED: STATE HIGHWAY ENGINEER — DATE 02-26-20

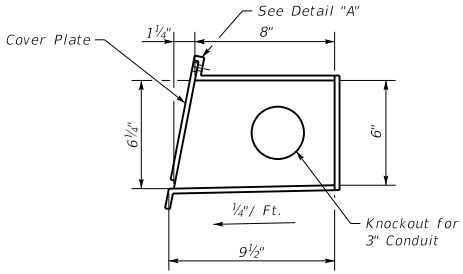

SIDE ELEVATION

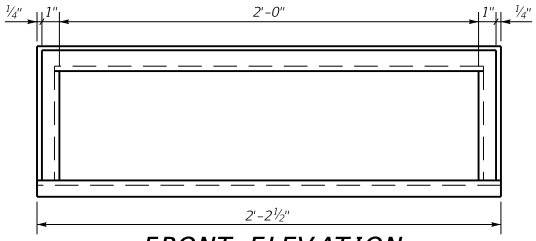

FRONT ELEVATION

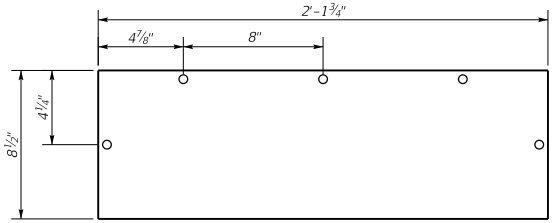

COVER PLATE

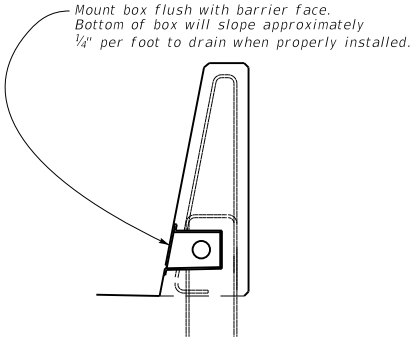

TYPICAL INSTALLATION IN SINGLE SLOPE BARRIER

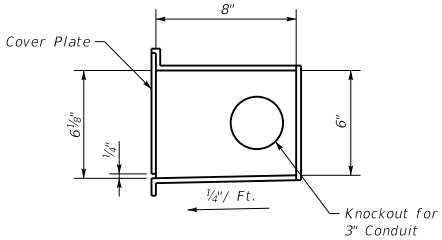

SIDE ELEVATION

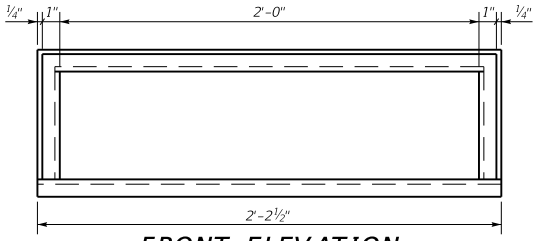

FRONT ELEVATION

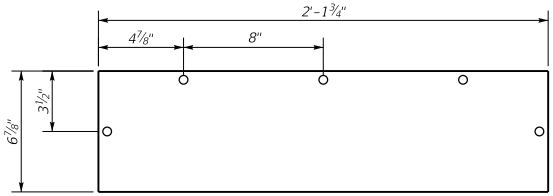

COVER PLATE

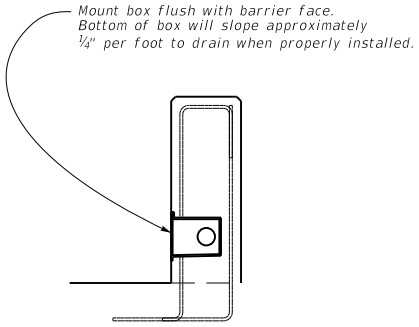

TYPICAL INSTALLATION IN VERTICAL BARRIER

General Notes

Construct junction boxes from ¼" A36 steel plate and the junction box cover from ⅛" A36 plate. Hot dip galvanize box and cover after fabrication and in accordance with ASTM A123 and the Standard Specifications. Cover plate shall include (5) Stainless Steel screw taps with wing nuts and a Rubber Gasket for all sides where screws are installed.

Fittings shall be UL listed and CSA-certified concrete tight on the outside of the Junction Box conduit connection. Use a sealing lock nut and a rigid PVC conduit bushing on the inside for all conduit penetrations.

Liberally coat the threads of the cover fasteners with anti-seize compound during construction and before final closure.

Protect cover of J.B. from damage/disfigurement from masonry coating application and other sources by taping or wrapping during construction. Remove protection prior to final electrical inspection and repair any damage or disfigurement to the satisfaction of the Engineer and at no cost to the Department.

When properly installed, box cover will be flush with barrier face and box bottom will slope to drain approximate ¼" / ft. in all cases.

The price bid for Junction Box - 24" shall include all costs to furnish and install the junction box in accordance with these plans and the Specifications.

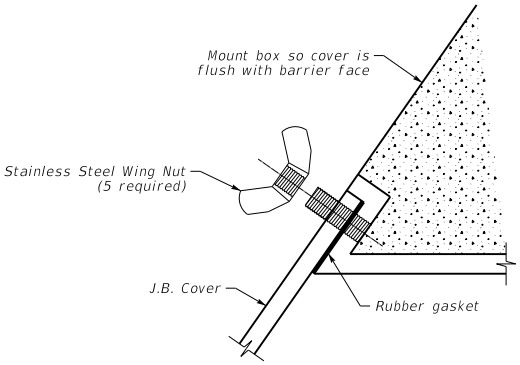

DETAIL "A"

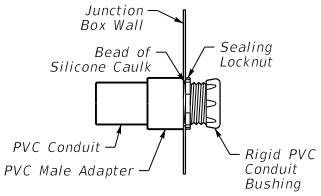

BUSHING DETAIL AT J.B. CONDUIT ENTRY

KENTUCKY
DEPARTMENT OF HIGHWAYS

24 INCH JUNCTION BOX
SINGLE SLOPE AND
VERTICAL BARRIER

STANDARD DRAWING NO. BGX-019

SUBMITTED _____ DIRECTOR DIVISION OF STRUCTURAL DESIGN — 02-26-20 DATE

APPROVED _____ STATE HIGHWAY ENGINEER — 02-26-20 DATE

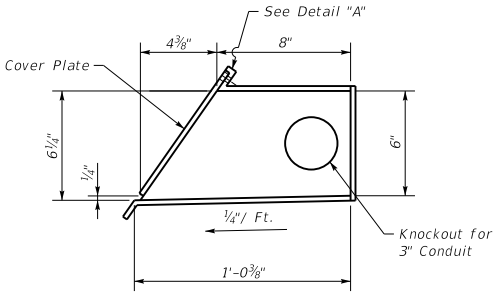

SIDE ELEVATION

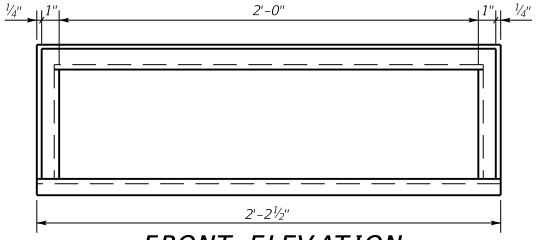

FRONT ELEVATION

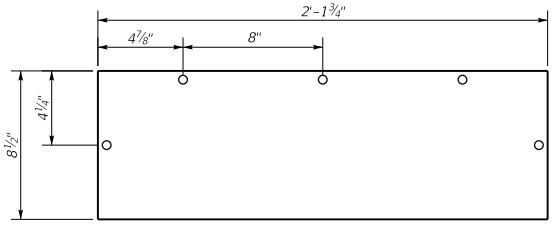

COVER PLATE

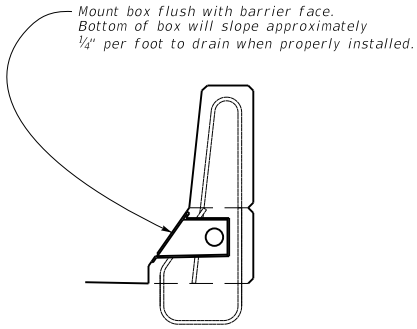

TYPICAL INSTALLATION IN TYPE 3 BARRIER

General Notes

Construct junction boxes from ¼" A36 steel plate and the junction box cover from ⅛" A36 plate. Hot dip galvanize box and cover after fabrication and in accordance with ASTM A123 and the Standard Specifications. Cover plate shall include (5) Stainless Steel screw taps with wing nuts and a Rubber Gasket for all sides where screws are installed.

Fittings shall be UL listed and CSA-certified concrete tight on the outside of the Junction Box conduit connection. Use a sealing lock nut and a rigid PVC conduit bushing on the inside for all conduit penetrations.

Liberally coat the threads of the cover fasteners with anti-seize compound during construction and before final closure.

Protect cover of J.B. from damage/disfigurement from masonry coating application and other sources by taping or wrapping during construction. Remove protection prior to final electrical inspection and repair any damage or disfigurement to the satisfaction of the Engineer and at no cost to the Department.

When properly installed, box cover will be flush with barrier face and box bottom will slope to drain approximate ¼" / ft. in all cases.

The price bid for Junction Box - 24" shall include all costs to furnish and install the junction box in accordance with these plans and the Specifications.

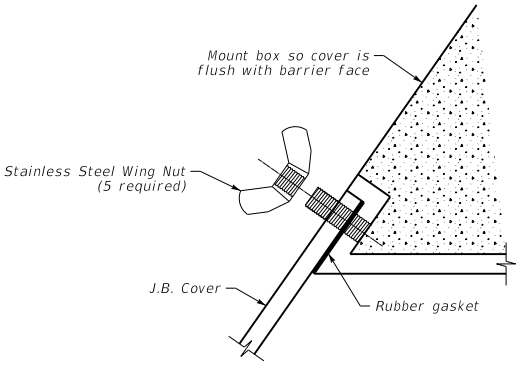

DETAIL "A"

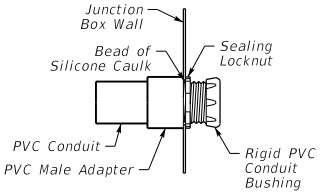

BUSHING DETAIL AT J.B. CONDUIT ENTRY

KENTUCKY
DEPARTMENT OF HIGHWAYS

24 INCH JUNCTION BOX
TYPE 3 BARRIER

STANDARD DRAWING NO. BGX-020

SUBMITTED _____ DIRECTOR DIVISION OF STRUCTURAL DESIGN — DATE 02-26-20

APPROVED _____ STATE HIGHWAY ENGINEER — DATE 02-26-20

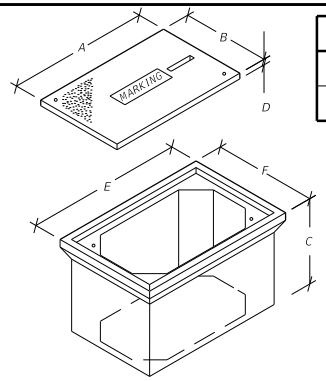

JUNCTION BOX DIMENSIONS (NOMINAL)					
A	B	C	D	E	F
23"	14"	27"	2"	25"	15"

Junction Box shall meet or exceed ANSI/SCTE 77-2002, Tier 15 and shall be installed flush with the finished grade as shown.

Junction box for traffic signal installations shall be marked "Traffic". Junction box for lighting installations shall be marked "Lighting". Covers shall be attached with a minimum of two ⅜" Stainless Steel hex bolts.

Where required, Junction box shall be oriented such that the dimensions comply with the national electric code.

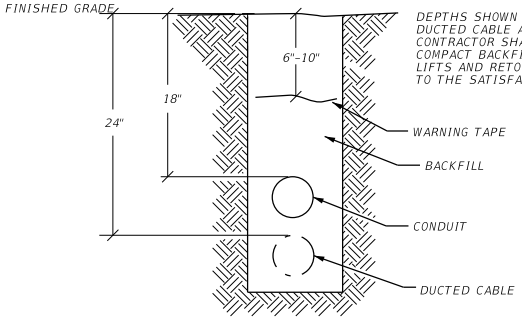

DEPTHS SHOWN FOR CONDUIT AND DUCTED CABLE ARE MINIMUMS. CONTRACTOR SHALL PLACE AND COMPACT BACKFILL IN 9" MAXIMUM LIFTS AND RETORE DISTURBED AREA TO THE SATISFACTION OF THE ENGINEER.

CONDUIT, DUCTED CABLE AND WARNING TAPE TRENCH

GENERAL NOTES

The bid for junction boxes shall include furnishing and installing specified junction box in accordance with the specifications. Junction box, Type A, shall include #57 aggregate as shown on this sheet, backfilling and restoration of disturbed areas to the satisfaction of the resident engineer, and concrete (if required).

Provide and install conduit caps and sleeve type expansion devices capable of sustaining + 1", 2" total movement at each integral end bent. All conduit shall have copper grounding bushings installed. The cost of the caps, expansion devices, and copper grounding bushings is incidental to the 3" conduit.

The 3" conduit in each barrier is to be schedule 80 PVC and is a separate pay item.

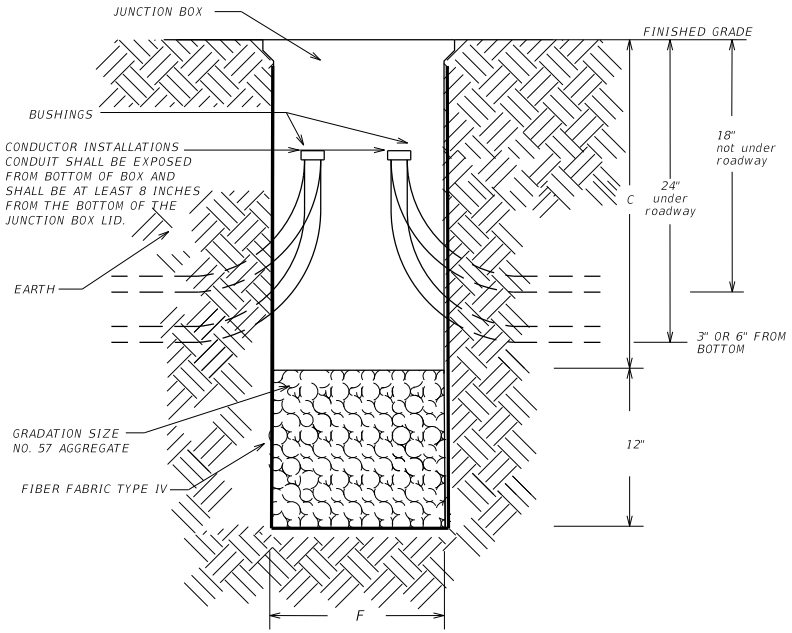

JUNCTION BOX INSTALLATION

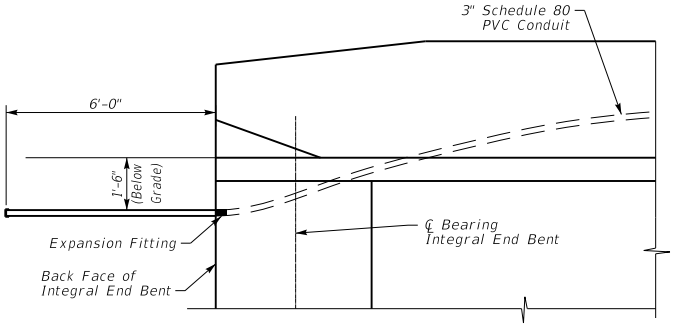

ELEVATION - EXPANSION AND CONDUIT DETAILS

BEFORE THE INSTALLATION OF THE #57 AGGREGATE AND JUNCTION BOX, THE CONTRACTOR SHALL INSTALL GEOTEXTILE FILTER FABRIC TYPE IV IN THE HOLE. THE FABRIC SHALL EXTEND TO JUST BELOW THE LIP OF THE JUNCTION BOX AND SHALL BE CONTINUOUSLY ADHERED TO THE EXTERIOR OF THE BOX WITH ADHESIVE. ANY LOCATIONS WHERE CONDUITS ENTER THE BOX, THE FABRIC SHALL BE "X CUT" ONLY AS MUCH AS NECESSARY TO ALLOW PASSAGE OF EACH INDIVIDUAL CONDUIT THROUGH THE FABRIC. THE FABRIC SHALL BE INCIDENTAL TO BID ITEMS 4811, 20391NS835, OR 20392NS835.

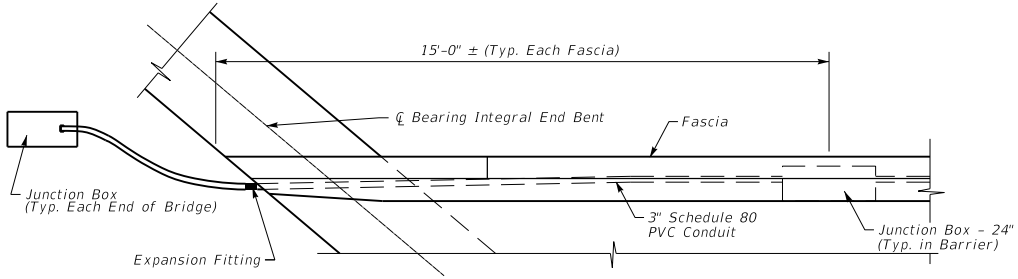

PLAN - EXPANSION AND CONDUIT DETAILS

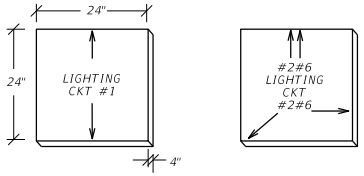

CONCRETE CABLE MARKERS

KENTUCKY
DEPARTMENT OF HIGHWAYS

JUNCTION BOX
TYPE - A

STANDARD DRAWING NO. BGX-021

SUBMITTED _____ DIRECTOR DIVISION OF STRUCTURAL DESIGN — 02-26-20 DATE

APPROVED _____ STATE HIGHWAY ENGINEER — 02-26-20 DATE

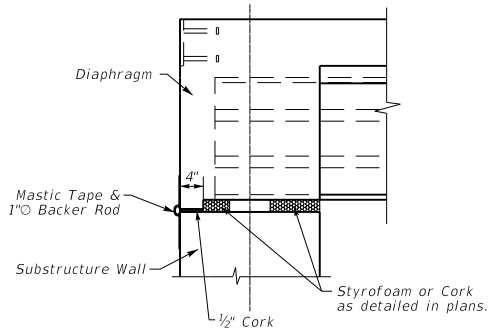

EXPANSION END
(Flush Diaphragm and Substructure)

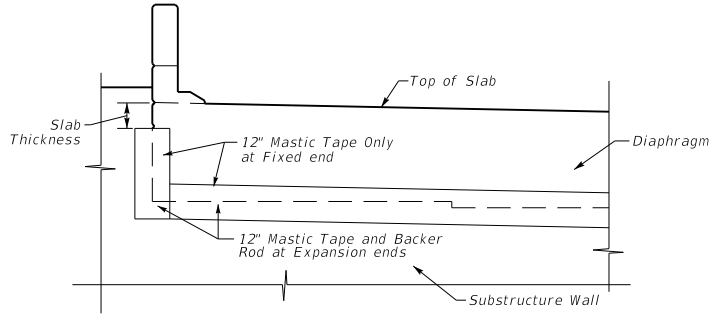

DIAPHRAGM ELEVATION
(Diaphragm Flush with Back Face of Substructure, center tape over joint)

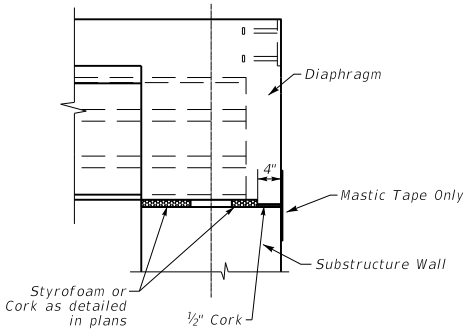

FIXED END
(Flush Diaphragm and Substructure)

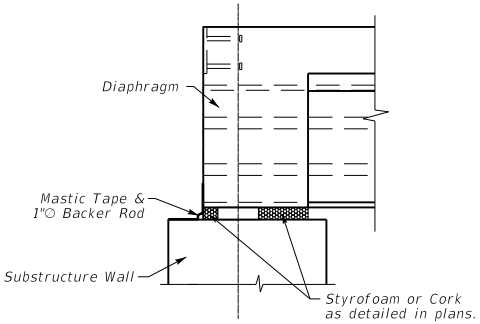

EXPANSION END
(Offset Diaphragm and Substructure)

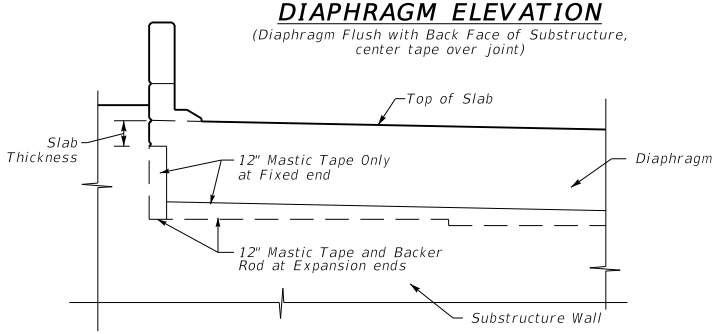

DIAPHRAGM ELEVATION
(Offset Diaphragm and Substructure)

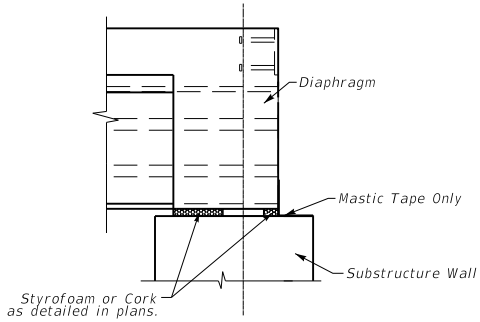

FIXED END
(Offset Diaphragm and Substructure)

MASTIC TAPE APPLICATION AT BRIDGE ENDS

The cost of labor, materials, and incidental items for furnishing and installing Mastic Tape shall be considered incidental to the unit price bid for Concrete Class 'AA' and no separate measurement or payment shall be made.

Note: Center Mastic Tape over joint.

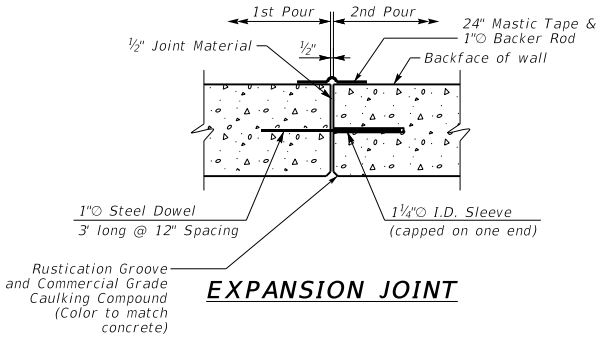

EXPANSION JOINT

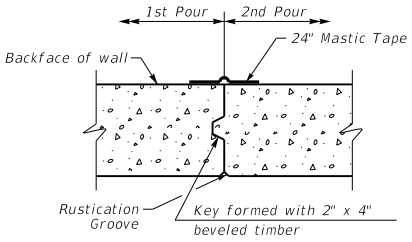

CONTRACTION JOINT

NOTE:
Maintain 2 inch clearance from ends of Longitudinal reinforcement to edge of expansion joint.

MASTIC TAPE APPLICATION AT RETAINING WALLS

GENERAL NOTES

MASTIC TAPE: Mastic Tape used to seal joints is to meet the requirements of ASTM C-877 Type I, II, or III. The joint is to be covered with 12-inch wide mastic tape. Prior to application, the joint surface shall be clean and free of dirt, debris, or deleterious material. Primer, if required by the tape mfgr., shall be applied for a minimum width of nine inches on each side of the joint.

Mastic Tape shall be either:

EZ-WRAP RUBBER by PRESS-SEAL GASKET CORPORATION,
SEAL WRAP by MAR MAC MANUFACTURING CO. INC. ,
CADILLOC by the UP RUBBER CO. INC.
or approved equal.

Mastic Tape shall cover the joint continuously unless otherwise shown in the plans. Mastic Tape shall be spliced by lapping a minimum of six inches and in accordance with the mfgrs. recommendations with the overlap running downhill.

All preformed expansion joint material, caulking, mastic tape, pipe sleeve and equipment and labor necessary to complete the joints are incidental to the square foot bid for Retaining Walls.

KENTUCKY
DEPARTMENT OF HIGHWAYS

JOINT
WATERPROOFING

STANDARD DRAWING NO. BGX-022

SUBMITTED _____ 02-26-20
DIRECTOR DIVISION OF STRUCTURAL DESIGN — DATE

APPROVED _____ 02-26-20
STATE HIGHWAY ENGINEER — DATE

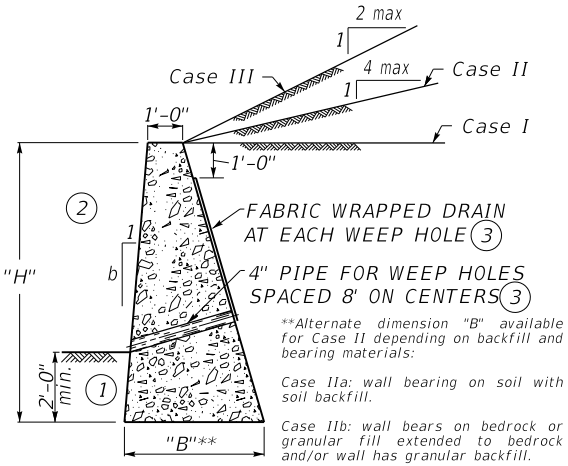

**Alternate dimension "B" available for Case II depending on backfill and bearing materials:

Case IIa: wall bearing on soil with soil backfill.

Case IIb: wall bears on bedrock or granular fill extended to bedrock and/or wall has granular backfill.

CASES I, II, AND III

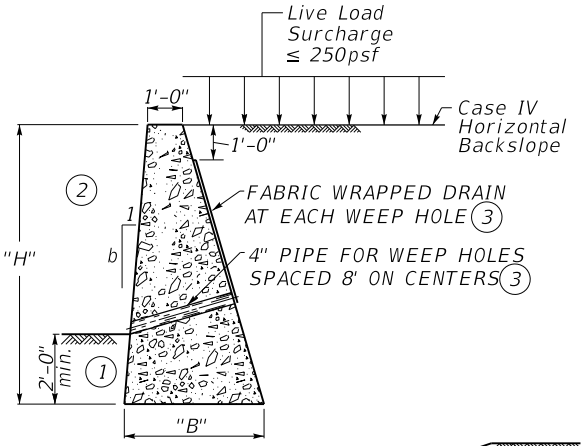

CASE IV

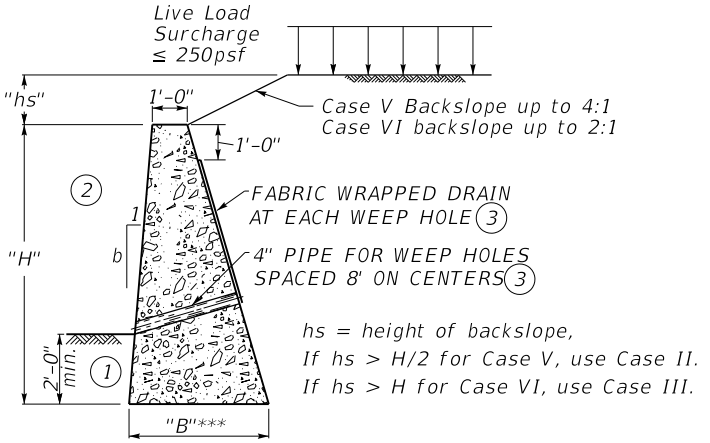

hs = height of backslope,
If hs > H/2 for Case V, use Case II.
If hs > H for Case VI, use Case III.

CASES V AND VI

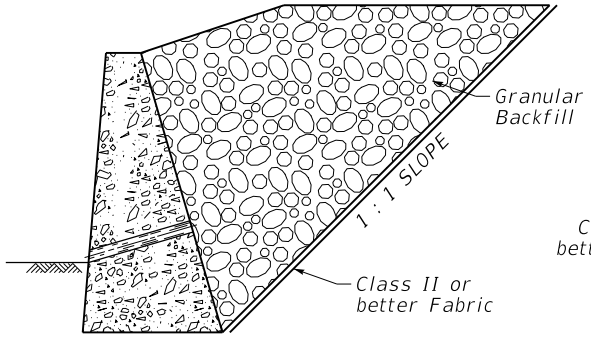

GRANULAR BACKFILL

(Required if wall is subject to standing or flowing water regardless of case.)

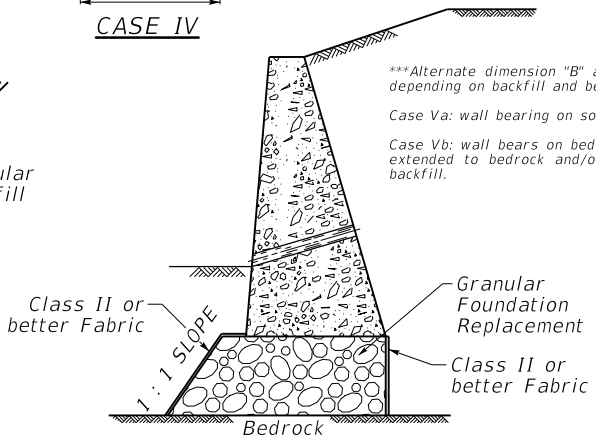

***Alternate dimension "B" available for Case V depending on backfill and bearing materials:

Case Va: wall bearing on soil with soil backfill.

Case Vb: wall bears on bedrock or granular fill extended to bedrock and/or wall has granular backfill.

GRANULAR FOUNDATION REPLACEMENT

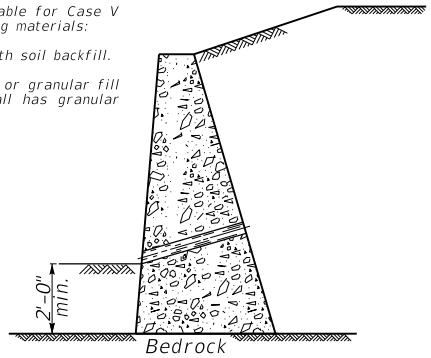

BEARING ON BEDROCK

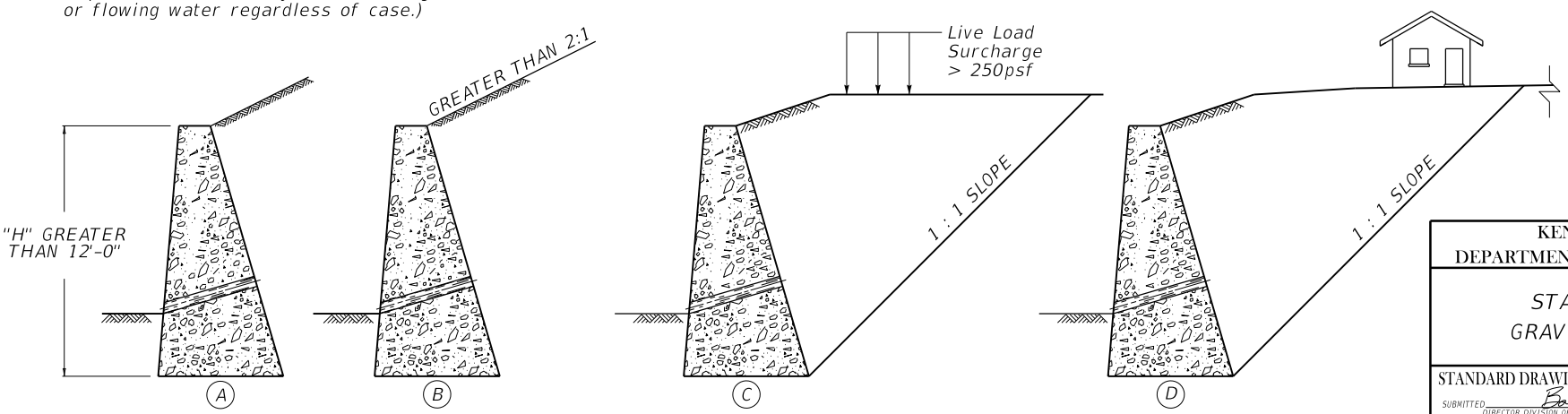

SPECIAL DESIGNS REQUIRED

KENTUCKY
DEPARTMENT OF HIGHWAYS

STANDARD
GRAVITY WALL

STANDARD DRAWING NO. BGX-023

SUBMITTED _____ DIRECTOR DIVISION OF STRUCTURAL DESIGN — DATE 02-26-20

APPROVED _____ STATE HIGHWAY ENGINEER — DATE 02-26-20

STANDARD GRAVITY WALL NOTES

The retaining walls depicted on these drawings shall be used when the height (H) of the wall is 12'-0" or less provided the following conditions are met:

CASE I - Wall backfill slopes down, is level, or slopes up from wall at 20H:1V or flatter slope. This low slope allows for backfills that would be level except for the slope required to facilitate proper drainage.
CASE II - Backfill slopes steeper than 20H:1V but no more than 4H:1V.
CASE III - Backfill slopes steeper than 4H:1V but no more than 2H:1V.
CASE IV - Backfill slopes down, is level, or slopes up from wall at 20H:1V or flatter slope (as needed to facilitate proper drainage) and has a maximum live load surcharge of 250 pounds per square foot applied behind the wall.
CASE V - Broken-back backfill slopes no more than 4H:1V to a level surface level (except for slope needed to facilitate proper drainage) and has a maximum live load surcharge of 250 pounds per square foot applied to the level portion of the backfill. If the height of the backfill to the slope break equals or exceeds one-half the height of the wall (hs ≧ H/2), use CASE II.
CASE VI - Broken-back backfill slopes up steeper than 4H:1V but no more than 2H:1V to a level surface (except for slope needed to facilitate proper drainage) and has a maximum live load surcharge of 250 pounds per square foot applied to the level portion of the backfill. If the height of the backfill to the slope break equals or exceeds the height of the wall (hs ≧ H), use Case III.

Special Designs shall be required when the following conditions exist:

(A) Wall height is greater than 12'-0".

(B) Backfill slopes are steeper than 2H:1V.

(C) The wall is surcharged with a live load exceeding 250 pounds per square foot within the limits of a 1:1 slope extending from the base of the wall.

(D) The wall is surcharged with a dead load (i.e., buildings, structures, or other permanent facilities) within the limits of a 1:1 slope extending from the base of the wall.

(1) Minimum embedment value is 2'-0" for all cases.

(2) Batter (b) shall be as follows:
Cases I, II a, and II b - For H < 10'-0" use 12V:1H. For H => 10'-0" use 6V:1H.
Case III - For H < 7'-0" use 12V:1H. For H=> 7'-0" use 6V:1H.
Cases IV, V a, V b, and VI - For H < 6'-0" use 12V:1H. For H=> 6'-0" use 6V:1H.

(3) Fabric wrapped drains and 4" pipe for weep holes shall be included in the unit price bid for gravity type retaining walls.

Granular backfill, granular foundation replacement to bedrock, or a wall bearing directly on competent un-weathered bedrock is required for the following cases:
Case II b for H > 9.5'
Case III - for H > 8'
Case V b for H > 10.5'
Case VI for H > 9'

Walls subject to standing or flowing water (adjacent to streams, ponds, lakes, rivers, detention basins, etc.) shall have granular backfill meeting the requirements below regardless of the Case.

Granular backfill or granular foundation replacement to bedrock (when required) shall meet the requirements of "Granular Embankment" in Section 805 of the Standard Specifications, current edition, except that the maximum size is 4 inches with a minus No. 200 content not exceeding 5.0 percent. Use material that classified as nonerodible, as defined in Section 805 of the Standard Specifications, current edition. Gravels or sands, crushed or uncrushed, shall not be allowed. Place Class II or better Geotextile Fabric in accordance with Sections 214 and 843 of the Standard Specifications, current edition, as shown below, where there is a soil-granular material interface.

Construct standard gravity retaining walls according to Section 613 of the Standard Specifications, current edition, with the exceptions that the wall shall be constructed according to this Standard Drawing and that the wall's base width shall exceed ½ vertical height when required by plan notes or this Standard Drawing. Gravity walls meeting the criteria for Standard Gravity Wall defined herein may still require a Geotechnical Investigation. Conditions warranting a site investigation and geotechnical exploration shall be as defined in this Standard Drawing and KYTC Geotechnical Policy Manual Section 400, current edition.

	Required base width, B(ft)									
	H(ft)	Case I	Case II a	Case II b	Case III	Case IV	Case V a	Case V b	Case VI	
	3.0	1.50	1.50	1.50	1.50	3.00	3.00	3.00	3.25	
	3.5	1.75	1.75	1.75	1.75	3.25	3.25	3.25	3.50	
	4.0	2.00	2.00	2.00	2.00	3.50	3.50	3.50	3.75	
	4.5	2.25	2.25	2.25	2.25	3.75	4.00	4.00	4.25	
	5.0	2.50	2.50	2.50	2.50	4.00	4.25	4.25	4.50	
	5.5	2.75	2.75	2.75	2.75	4.25	4.50	4.50	4.75	12:1 Batter
	6.0	3.00	3.00	3.00	3.00	4.50	4.75	4.75	5.00	6:1 Batter
	6.5	3.25	3.25	3.25	3.25	4.75	5.00	5.00	5.50	
	7.0	3.50	3.50	3.50	3.50	5.00	5.50	5.50	5.75	
	7.5	3.75	3.75	3.75	3.75	5.25	5.75	5.75	6.00	
	8.0	4.00	4.00	4.00	4.00	5.75	6.00	6.00	6.50	
	8.5	4.25	4.25	4.25	4.25*	6.00	6.25	6.25	6.75	
	9.0	4.50	4.50	4.50	4.50*	6.25	6.50	6.50	7.00	
12:1 Batter	9.5	4.75	4.75	4.75	4.75*	6.50	6.75	6.75	7.25*	
6:1 Batter	10.0	5.00	5.25	5.00*	5.00*	6.75	7.00	7.00	7.50*	
	10.5	5.25	5.50	5.25*	5.25*	7.00	7.25	7.25	7.75*	
	11.0	5.50	5.75	5.50*	5.50*	7.25	7.75	7.50*	8.25*	
	11.5	5.75	6.00	5.75*	5.75*	7.50	8.25	7.75*	8.50*	
	12.0	6.00	6.25	6.00*	6.00*	7.75	8.75	8.00*	9.00*	

* Requires Granular Backfill, Granular Foundation replacement to bedrock, or bearing directly on competent unweathered bedrock.

DESIGN PARAMETERS

Large block retaining walls without reinforced backfill are suitable alternatives to Standard Gravity Walls. Approved large block retaining wall suppliers can be found on the Structural Design web site. Contractors shall submit to the Engineer for review and approval a design for a large block wall alternative using the following design parameters unless site-specific geotechnical information is provided or required. The wall design shall be in accordance with the AASHTO Standard Specifications for Highway Bridges, current edition.

Soil Backfill	$c' = 0$ psf, $\Phi' = 28°$, $\gamma = 120$ pcf
Foundation	$c = 1200$ psf, $\Phi' = 0$, $\gamma = 120$ pcf
Granular backfill or foundation replacement	$c' = 0$, $\Phi' = 38°$, $\gamma = 115$ pcf

Pay Items:

Concrete, Class B	Cu. Yd.
Structure Excavation	Cu. Yd.
Granular Embankment (when required)	Cu. Yd.
Geotextile Fabric (when required)	Sq. Yd.

KENTUCKY
DEPARTMENT OF HIGHWAYS

STANDARD
GRAVITY WALL

STANDARD DRAWING NO. BGX-024

SUBMITTED _____ DIRECTOR DIVISION OF STRUCTURAL DESIGN — DATE 02-26-20

APPROVED _____ STATE HIGHWAY ENGINEER — DATE 02-26-20

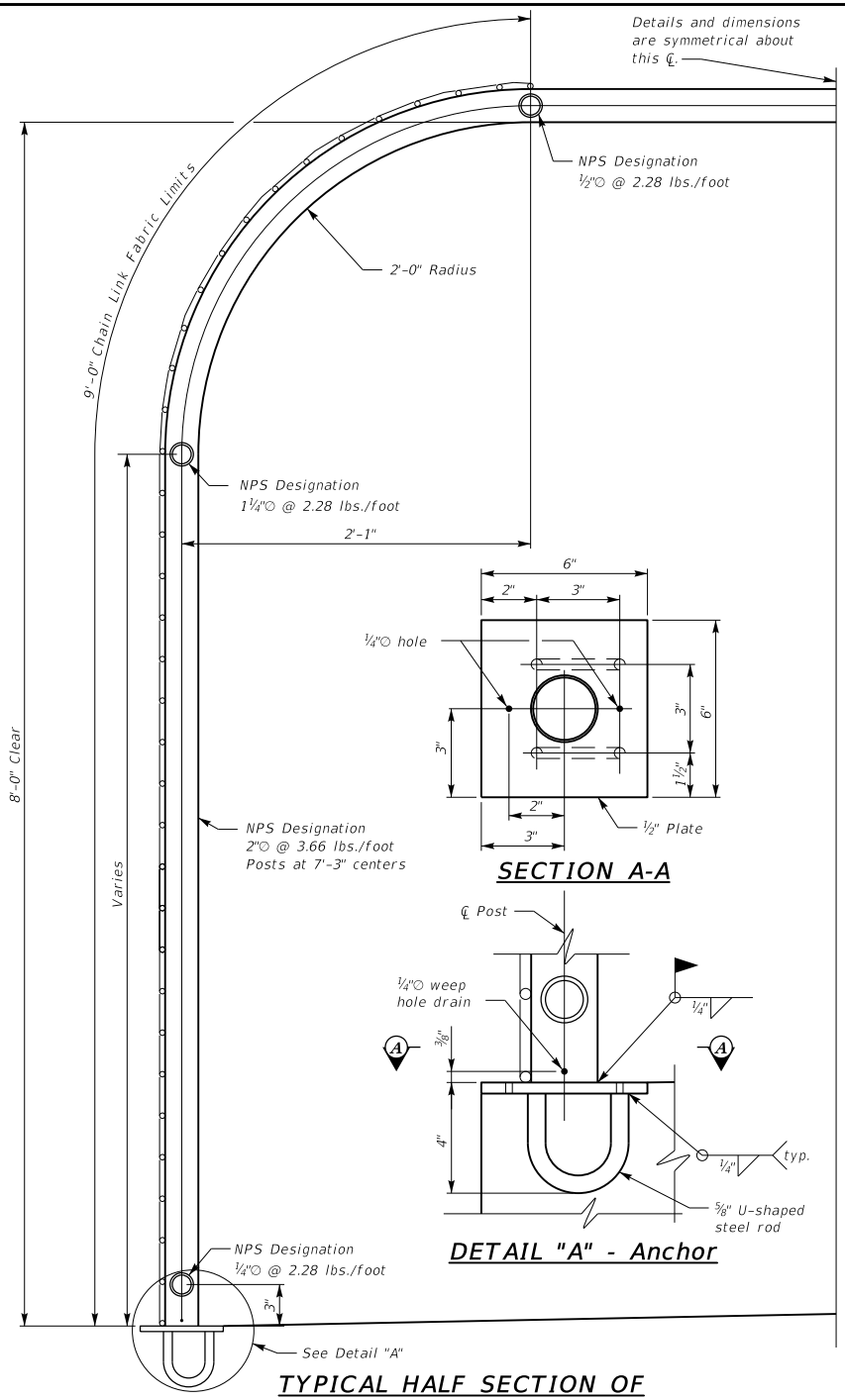

TYPICAL HALF SECTION OF PEDESTRIAN CAGE FOR OVERPASSES

SECTION A-A

DETAIL "A" - Anchor

GENERAL NOTES

SPECIFICATIONS: Unless otherwise noted, vinyl coat all materials used in the fabrication of the pedestrian cage, stair and ramp fence and handrail in accordance with AASHTO Standard Specification M 181, current edition.

POST: Ensure fence posts are NPS Designation 2"⌀ @ 3.66 lbs/ft., Grade 1.

RAILS AND HANDRAIL: Ensure rails are NPS Designation 1¼"⌀ @ 2.28 lbs/ft., Grade 1.

CHAIN LINK FABRIC: Use Polyvinyl Chloride (PVC) coated steel fence Type IV for this project with the color of coating to be Dark Green with the size of fence being in accordance with Section 817 of the Specifications. Tie the fabric to the posts and rails at 2 ft. centers (maximum).

ANCHOR PLATES: Place plates prior to pouring the concrete. Drilling of concrete to place anchor plates is not an option. Ensure anchor plates, handrail plates, and U-shaped rods conform to AASHTO M183 or SAE specification M 1020 and galvanized in accordance with ASTM A153. Apply a vinyl finish coat on all exposed surfaces of the anchor plates after the posts are in place.

DAMAGE COATING: After the installation of the chain link fabric, clean any damaged areas of any of the fence components by washing with mineral spirit solvent sufficient to remove any contaminants. After cleaning, apply a vinyl washing primer to the surfaces with dry film thickness of 0.3 mil to 0.5 mil before the final vinyl finish coat is applied.

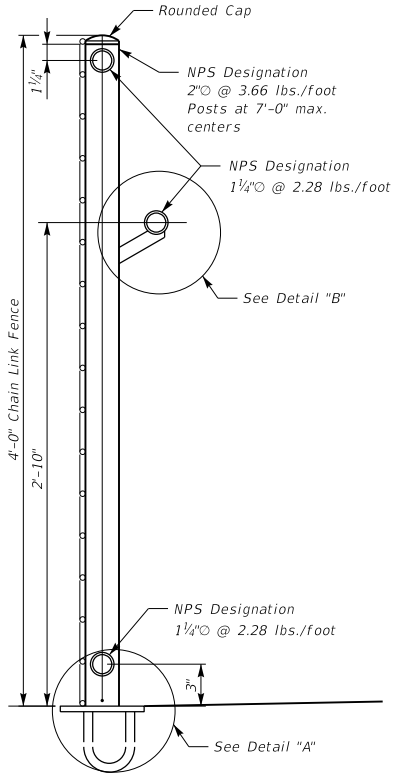

TYPICAL SECTION THROUGH RAMP OR STAIRS

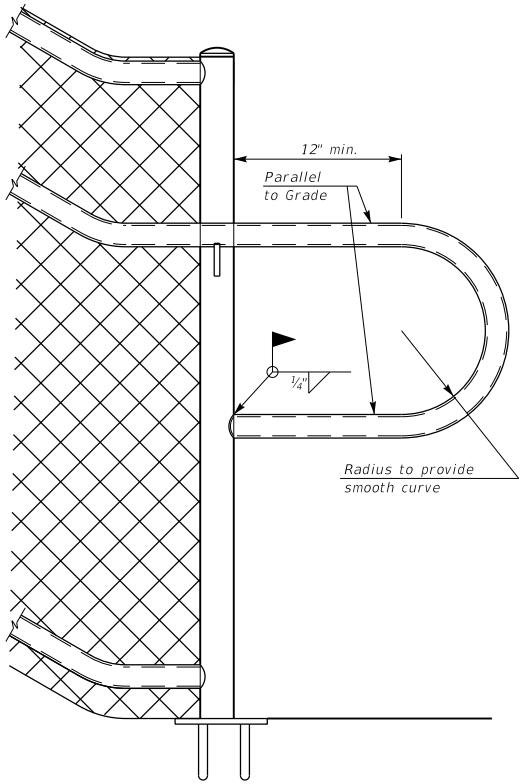

TYPICAL ENDPOST RAIL TREATMENT

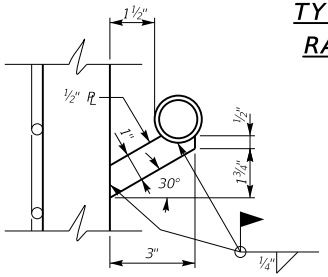

DETAIL "B" - Handrail

KENTUCKY
DEPARTMENT OF HIGHWAYS

CHAINLINK FENCE

STANDARD DRAWING NO. BGX-025

SUBMITTED _____ DIRECTOR DIVISION OF STRUCTURAL DESIGN — DATE 02-26-20

APPROVED _____ STATE HIGHWAY ENGINEER — DATE 02-26-20

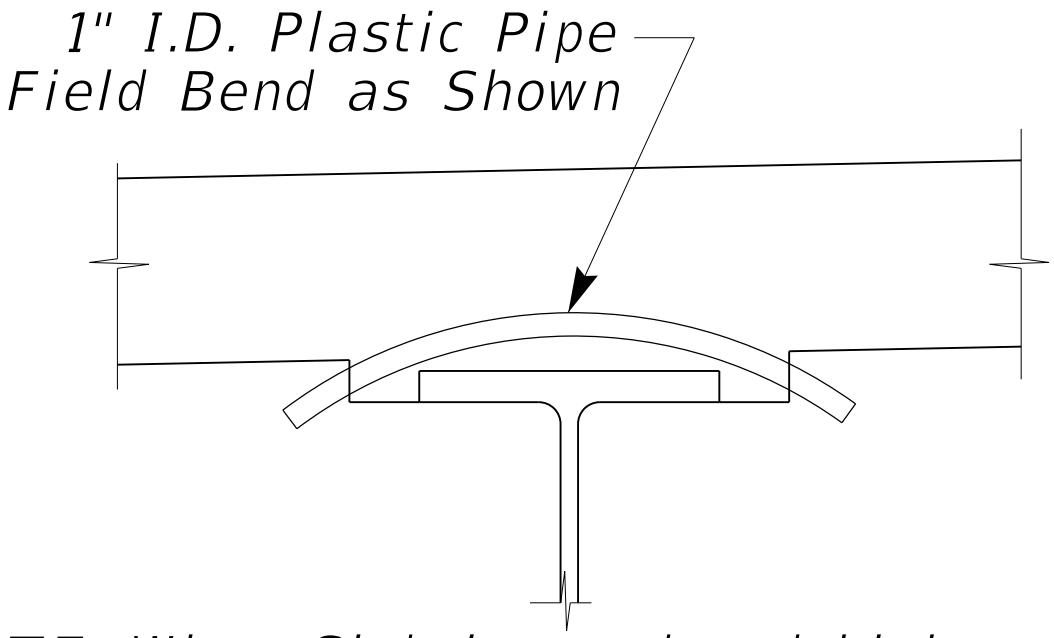

NOTE: When Slab is used and high water expected over bottom of beam elevation, place 1" plastic pipe above beams 4'-0" from each end. Work and material is incidental to superstructure concrete.

AIR VENT DETAIL

KENTUCKY
DEPARTMENT OF HIGHWAYS

AIR VENT
DETAILS

STANDARD DRAWING NO. BGX-026

SUBMITTED _____ DIRECTOR DIVISION OF STRUCTURAL DESIGN — 02-26-20 DATE

APPROVED _____ STATE HIGHWAY ENGINEER — 02-26-20 DATE

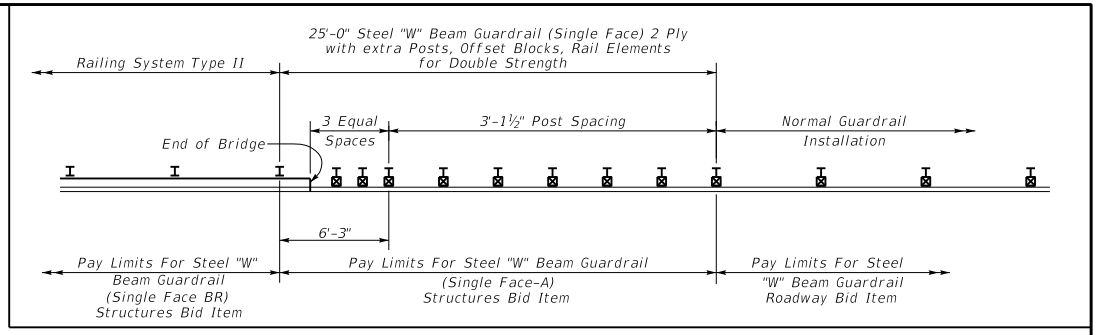

BID ITEM NOTES

GUARDRAIL-STEEL W BEAM (SINGLE FACE BR): The bid unit for this item is be linear feet. This item shall include the Railing System Type II that is to be installed on the bridge between the endmost posts attached to the bridge and all labor and incidentals necessary to properly install the railing system. For non-composite box beams, the railing system is attached to the beam prior to shipment.

GUARDRAIL-STEEL W BEAM (SINGLE FACE A): The bid unit for this item is be linear feet. This item includes the W-Beam guardrail (2 ply for extra strength), guardrail posts, offset blocks, hardware, and labor and incidentals necessary to properly install the approach guardrail within the 25'-0" limits at each corner of the structure. For guardrail components, refer to Standard Drawings RBR-001,c.e., RBR-005,c.e. and RBR-015,c.e.

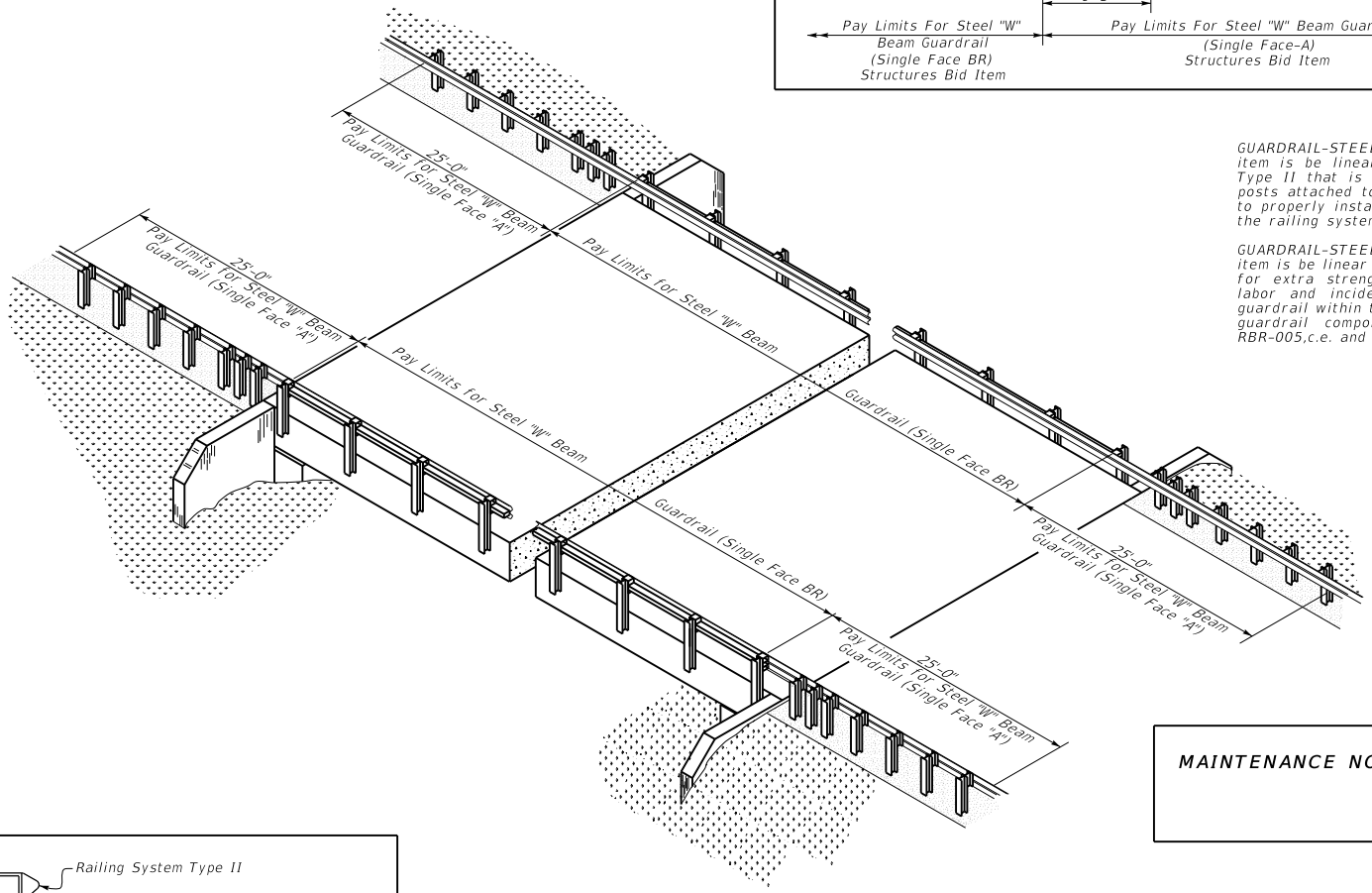

MAINTENANCE NOTES:

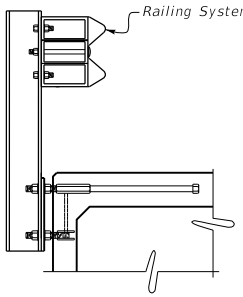

BRIDGE GUARDRAIL INSTALLATION

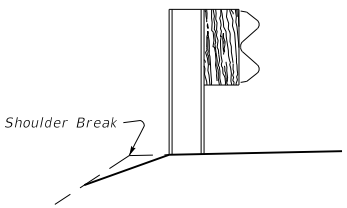

ROADWAY SHOULDER
G.R. INSTALLATION

KENTUCKY
DEPARTMENT OF HIGHWAYS

RAILING SYSTEM
TYPE II
GUARDRAIL TREATMENT

STANDARD DRAWING NO. BHS-007-08

SUBMITTED _____ DIRECTOR DIVISION OF STRUCTURAL DESIGN — 02-26-20 DATE

APPROVED _____ STATE HIGHWAY ENGINEER — 02-26-20 DATE

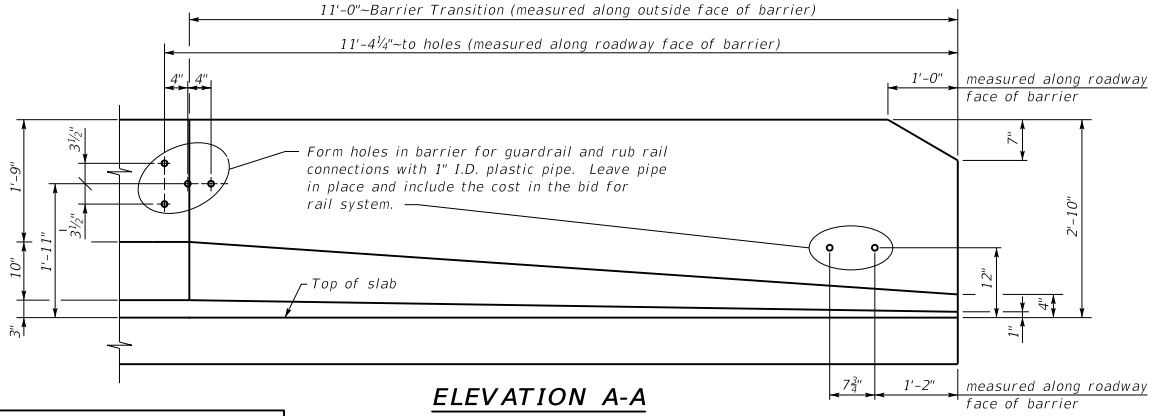

ELEVATION A-A

Note: Open joints are not required.

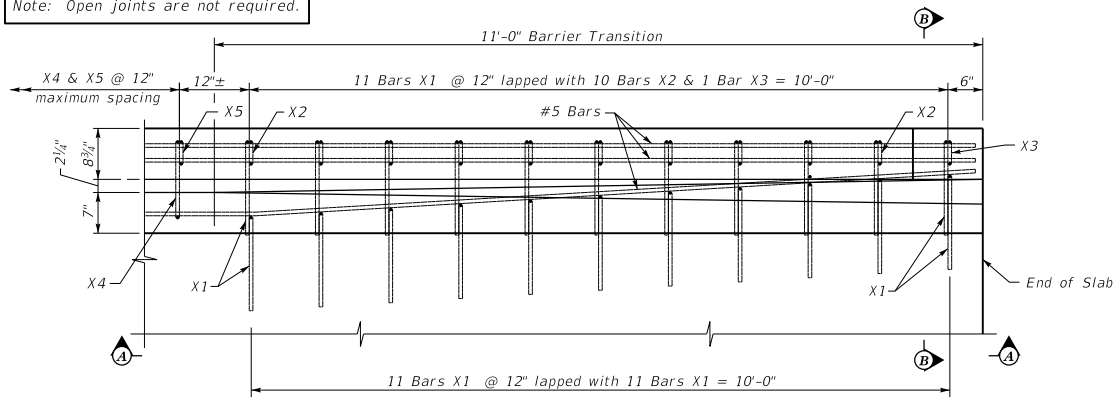

PLAN OF BARRIER TRANSITION

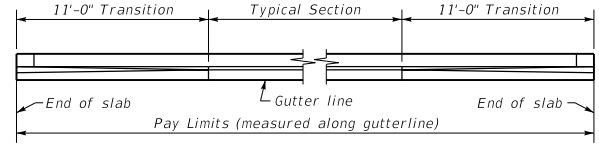

PLAN OF BARRIER

Note: X1 & X3 Bars at end of slab may be adjusted to maintain 2" minimum clearance on curved and skewed end bridges.

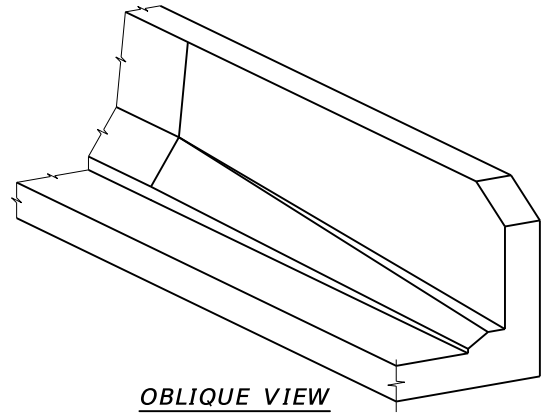

OBLIQUE VIEW

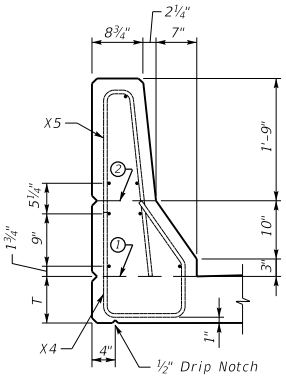

TYPICAL BARRIER SECTION

1. Mandatory roughened construction joint. Concrete above this joint is to be placed after slab has been properly cured and included in the bid for Rail System, Type 3.
2. Permissible construction joint. "V-Groove" rustication joint is required if construction joint is used. ¼" Open Joints are not required.

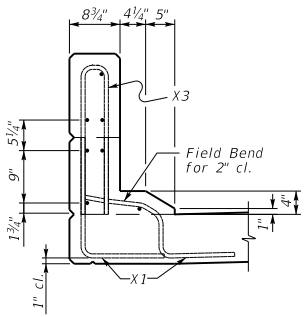

SECTION B-B

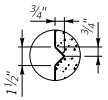

"V-Groove" Rustication

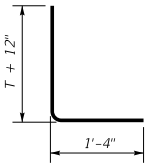

X1(e) Bars

#5 Bar

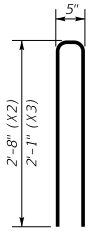

X2(e) & X3(e) Bars

#5 Bar

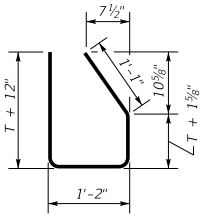

X4(e) Bars

#5 Bar

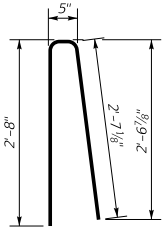

X5(e) Bars

#5 Bar

General Notes

CONCRETE: Use Class "AA" Concrete throughout.

OPTIONAL WELDED WIRE REINFORCEMENT:
At the contractor's option, deformed welded wire reinforcement (WWR) in accordance with ASTM A497 and epoxy coated in accordance with ASTM A884 may be used in place of stirrup bars X2, X3, and X5 as well as the straight or longitudinal reinforcement attached to these stirrups. Use size D31 wire for both stirrups and straight reinforcement. Locate and space the wire reinforcement the same as the conventional reinforcement except lower the top straight bar at least 2½" away from the bend in the stirrup. Use a minimum 2'-8" lap for the straight reinforcement between sheets of WWR.

MEASUREMENT: The linear foot bid for the barrier is measured along the roadway gutterline. Include all reinforcement shown and all concrete above the top of slab in the bid item for Rail Sytem Type 3.

REINFORCEMENT: All reinforcement shown on this sheet is to be epoxy coated. Use stirrup bend diameters for all bent bars. Straight reinforcement is to be Size #5 and lapped 2'-2" when necessary.

MAINTENANCE NOTES:

KENTUCKY
DEPARTMENT OF HIGHWAYS

RAIL SYSTEM TYPE 3

STANDARD DRAWING NO. BHS-008-03

SUBMITTED _____ DIRECTOR DIVISION OF STRUCTURAL DESIGN — DATE 02-26-20

APPROVED _____ STATE HIGHWAY ENGINEER — DATE 02-26-20

5 ~ 1" Dia holes and 2½" Dia x 2" deep recesses. Form or core holes and recesses. Percussion drilling is not permitted. Adjust placement of reinforcing steel as necessary to avoid bolt holes and recesses. Bolt recesses are only required when pedestrian sidewalks are adjacent to back of rail. Tighten the 5 Terminal Connection Bolts in a well distributed pattern so to prevent damage or distortion of the Thrie-Beam Connection and the guardrail Transition. Cut bolts off after installation so as to extend no more than ¾" beyond nut. Paint ends of cut-off bolts with Zinc-rich paint.

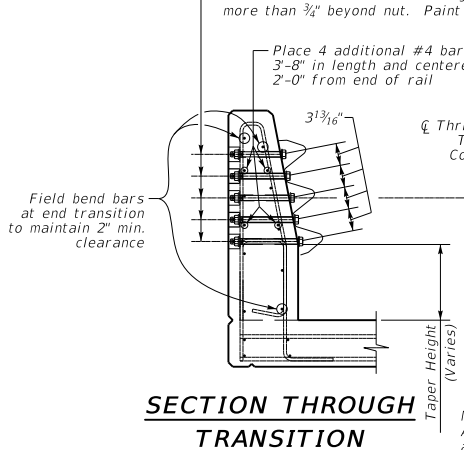

SECTION THROUGH TRANSITION

NOTE:
All guardrail transition fasteners and terminal connectors are included in the lump sum price bid for the guardrail transition.

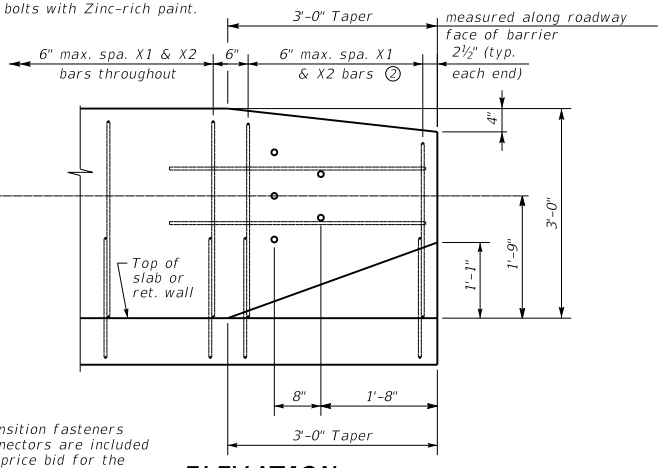

ELEVATION

General Notes

This rail system has been structurally evaluated to be equivalent or greater in strength to other single slope railings which have been crash tested to MASH TL-4 Criteria. This rail system can be used for speeds of 50 mph or greater when a TL-3 rated transition is used. When a TL-2 transition is used, this railing can only be used for 45 mph or less.

CONCRETE: Use Class "AA" Concrete throughout.

SHOP DRAWINGS: Are not required for this rail.

OPTIONAL WELDED WIRE REINFORCEMENT: At the contractor's option, deformed welded wire reinforcement (WWR) in accordance with ASTM A1064 and epoxy coated in accordance with ASTM A884 may be used in place of stirrup bars X1, X2, and X3 as well as the straight or longitudinal reinforcement attached to these stirrups. Use size D20 wire for both stirrups and straight reinforcement. Locate and space the wire reinforcement the same as the conventional reinforcement. Use a minimum 1'-11" lap for the straight reinforcement between sheets of WWR.

MEASUREMENT: The linear foot bid for the barrier is measured along the roadway gutter line. Include all reinforcement shown and all concrete above the top of slab in the bid item for Rail System, 36 Inch Single Slope.

REINFORCEMENT: All reinforcement shown on this sheet is to be epoxy coated Grade 60. Use stirrup bend diameters for all bent bars. Straight reinforcement is to be Size #4 and lapped 1'-11" when necessary.

Average weight of rail is 412 lb/ft.

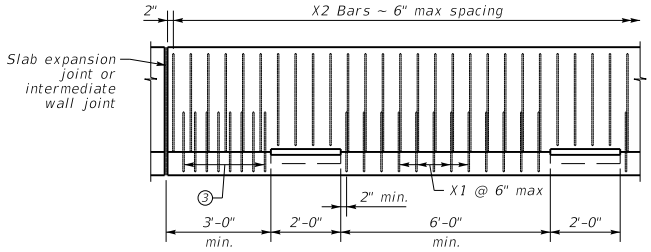

OPTIONAL SIDE SLOT DRAIN DETAIL

③ Space X1 @ 4" max. when end region of barrier is less than 6'-0" from joint to side slot. Space X1 @ 6" max. when end region is greater than 6'-0" from joint to edge of side slot.

Note: Open joints are not required.

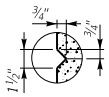

"V-Groove" Rustication

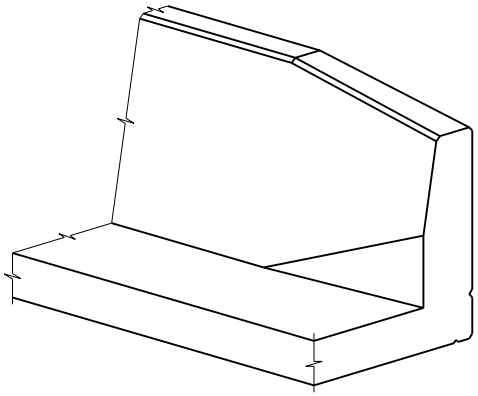

OBLIQUE VIEW

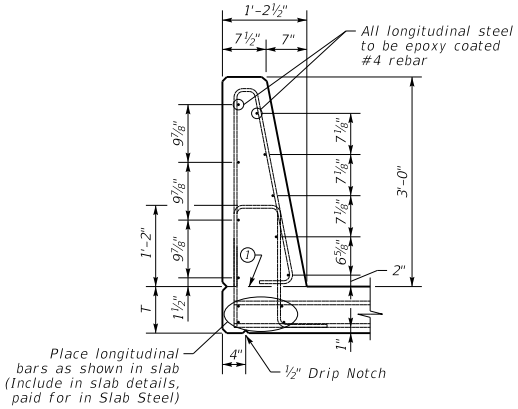

TYPICAL 36" BARRIER SECTION

① Mandatory roughened construction joint. Concrete above this joint is to be placed after slab has been properly cured and included in the bid for Rail System, 36 Inch Single Slope.

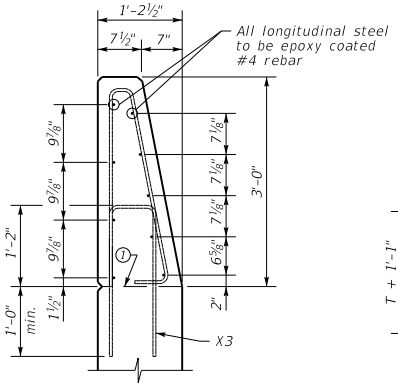

TYPICAL 36" BARRIER SECTION ON RETAINING WALL

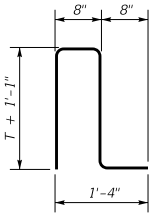

X1(e) Bars

#4 Bar

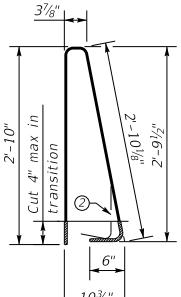

X2(e) Bars

#4 Bar

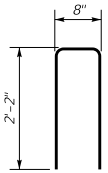

X3(e) Bars

#4 Bar

② Bend and field cut X2 bar as necessary to maintain 2" min. clearance to sides of taper and 2" to top of barrier.

KENTUCKY
DEPARTMENT OF HIGHWAYS

RAILING SYSTEM
36 INCH
SINGLE SLOPE

STANDARD DRAWING NO. BHS-009

SUBMITTED _____ DIRECTOR DIVISION OF STRUCTURAL DESIGN — 02-26-20 DATE

APPROVED _____ STATE HIGHWAY ENGINEER — 02-26-20 DATE

5 ~ 1" Dia holes and 2½" Dia x 2" deep recesses. Form or core holes and recesses. Percussion drilling is not permitted. Adjust placement of reinforcing steel as necessary to avoid bolt holes and recesses. Bolt recesses are only required when pedestrian sidewalks are adjacent to back of rail. Tighten the 5 Terminal Connection Bolts in a well distributed pattern so to prevent damage or distortion of the Thrie-Beam Connection and the guardrail Transition. Cut bolts off after installation so as to extend no more than ¾" beyond nut. Paint ends of cut-off bolts with Zinc-rich paint.

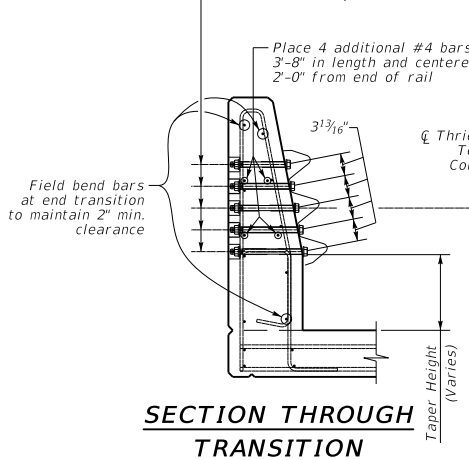

SECTION THROUGH TRANSITION

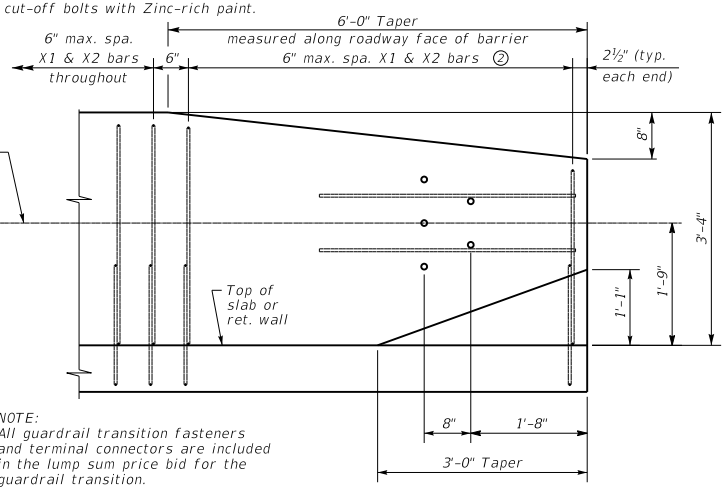

NOTE:
All guardrail transition fasteners and terminal connectors are included in the lump sum price bid for the guardrail transition.

ELEVATION

General Notes

This rail system has been structurally evaluated to be equivalent or greater in strength to other single slope railings which have been crash tested to MASH TL-4 Criteria. This rail system can be used for speeds of 50 mph or greater when a TL-3 rated transition is used. When a TL-2 transition is used, this railing can only be used for 45 mph or less.

CONCRETE: Use Class "AA" Concrete throughout.

SHOP DRAWINGS: Are not required for this rail.

OPTIONAL WELDED WIRE REINFORCEMENT: At the contractor's option, deformed welded wire reinforcement (WWR) in accordance with ASTM A1064 and epoxy coated in accordance with ASTM A884 may be used in place of stirrup bars X1, X2, and X3 as well as the straight or longitudinal reinforcement attached to these stirrups. Use size D20 wire for both stirrups and straight reinforcement. Locate and space the wire reinforcement the same as the conventional reinforcement. Use a minimum 1'-11" lap for the straight reinforcement between sheets of WWR.

MEASUREMENT: The linear foot bid for the barrier is measured along the roadway gutter line. Include all reinforcement shown and all concrete above the top of slab in the bid item for Rail System, 40 Inch Single Slope.

REINFORCEMENT: All reinforcement shown on this sheet is to be epoxy coated Grade 60. Use stirrup bend diameters for all bent bars. Straight reinforcement is to be Size #4 and lapped 1'-11" when necessary.

Average weight of rail is 474 lb/ft.

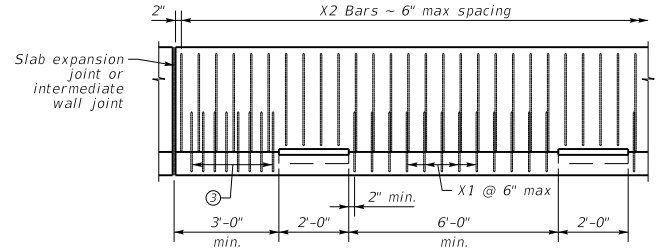

OPTIONAL SIDE SLOT DRAIN DETAIL

③ Space X1 @ 4" max. when end region of barrier is less than 6'-0" from joint to side slot. Space X1 @ 6" max. when end region is greater than 6'-0" from joint to edge of side slot.

Note: Open joints are not required.

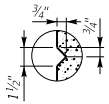

"V-Groove" Rustication

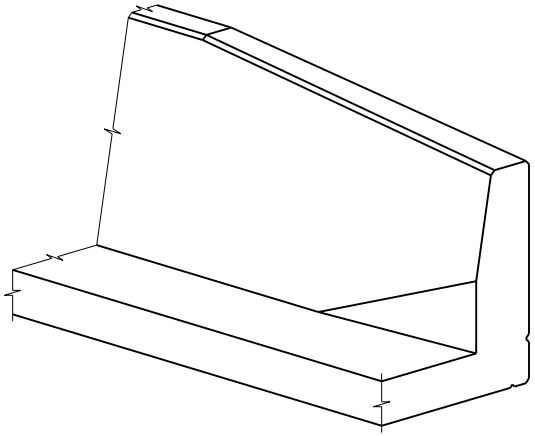

OBLIQUE VIEW

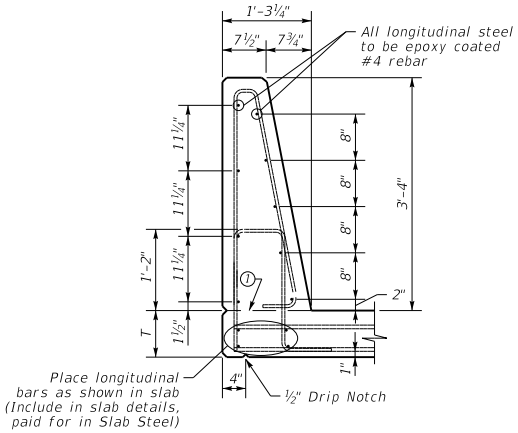

TYPICAL 40" BARRIER SECTION

① Mandatory roughened construction joint. Concrete above this joint is to be placed after slab has been properly cured and included in the bid or Rail System, 40 Inch Single Slope.

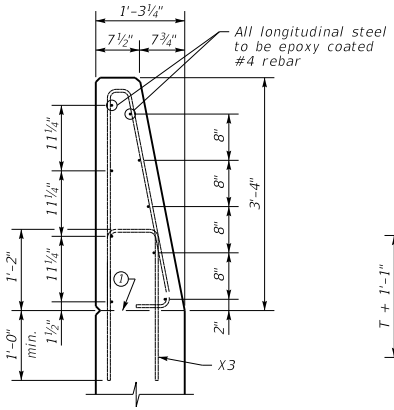

TYPICAL 40" BARRIER SECTION ON RETAINING WALL

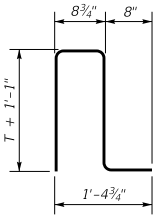

X1(e) Bars

#4 Bar

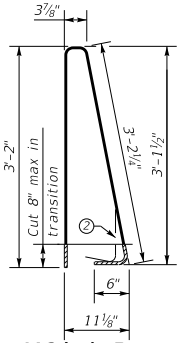

X2(e) Bars

#4 Bar

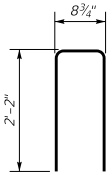

X3(e) Bars

#4 Bar

② Bend and field cut X2 bar as necessary to maintain 2" min. clearance to sides of taper and 2" to top of barrier.

KENTUCKY
DEPARTMENT OF HIGHWAYS

RAILING SYSTEM
40 INCH
SINGLE SLOPE

STANDARD DRAWING NO. BHS-010

SUBMITTED _____ DIRECTOR DIVISION OF STRUCTURAL DESIGN — 02-26-20 DATE

APPROVED _____ STATE HIGHWAY ENGINEER — 02-26-20 DATE

Contrary to Standard Drawings for Guardrail, place splices between posts off of bridge as shown.

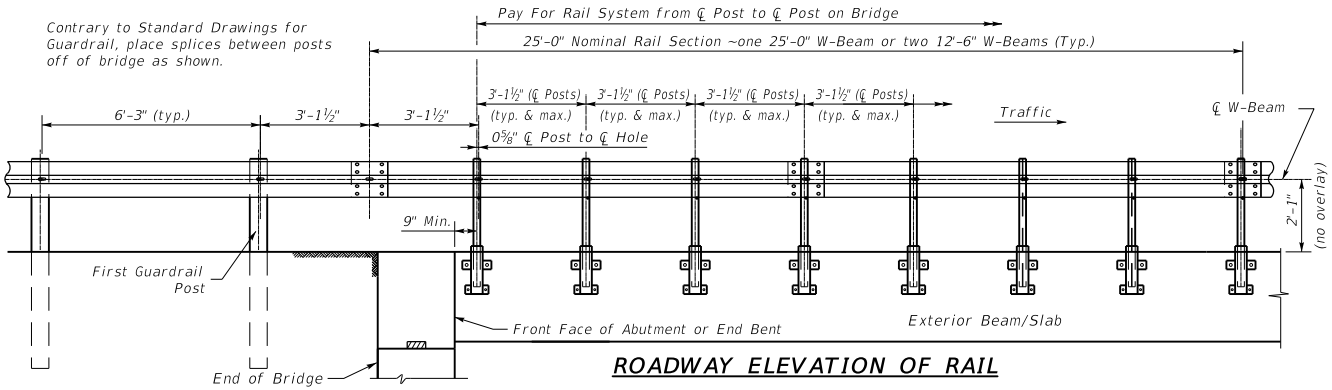

ROADWAY ELEVATION OF RAIL

TRANSITION AND END TREATMENT NOTES:
This traffic railing must be anchored by a minimum of 25 feet of guardrail. This 25 feet at each corner of the bridge is to be paid with the roadway plans. See roadway plans for layout.

CONSTRUCTION NOTES:
Face of rail post must be plumb unless otherwise approved by the Engineer. Post must be perpendicular to adjacent roadway grade. Fully anchored guardrail must be attached to each end of rail. Typical guardrail construction as indicated above and not bridge rail transition or bridge end connector. It is recommended that the bridge plans show rail post locations. Round or chamfer exposed edges of rail posts and backer Plate to approximately 1/16" by grinding. Shop drawings are not required. Threaded rod may be cast in the beam/slab or may be drilled and epoxy grouted. Epoxy grout must conform to Section 826 and must have a minimum bond strength of 1,305 psi. Follow all manufacturers recommendations for installation.

MATERIAL NOTES:
All components must be supplied galvanized including fasteners, anchor rods, threaded rods, etc. Galvanize all steel components after fabrication in accordance with ASTM A123. W-beam must meet the requirements of Std. Dwg. RBR-001, c.e. except as modified in these plans. The contractor may furnish rail elements of 25'-0" or 12'-6" (Nominal) lengths. W-beam must have slotted holes at 3'-1½".

GENERAL NOTES:
This railing has been successfully evaluated by full scale crash test to meet MASH TL-3 criteria. This railing can be used for speeds 45 mph and greater.
This rail is designed to deflect approximately 4'-0" - 4'-6" as it contains and redirects the errant vehicle. This rail may not be installed on top of or behind curbs that project above finished grade, on bridges with expansion joints providing more than 5" of movement, on retaining walls, or on grade separations and interchanges.
Repairs to impact-damaged post and mounting bracket unit are not permitted. Replace all impact-damaged posts with a new post. If mounting bracket is visibly damaged, replace the bracket with a new one as well.
Average weight of railing with no overlay: 19 plf total.

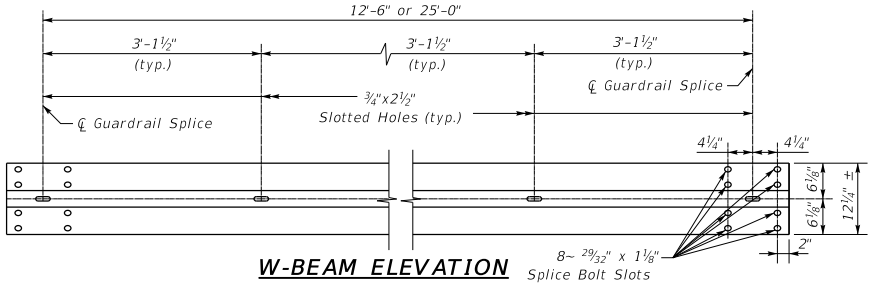

W-BEAM ELEVATION

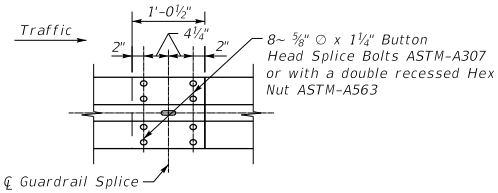

W-BEAM SPLICE ELEVATION

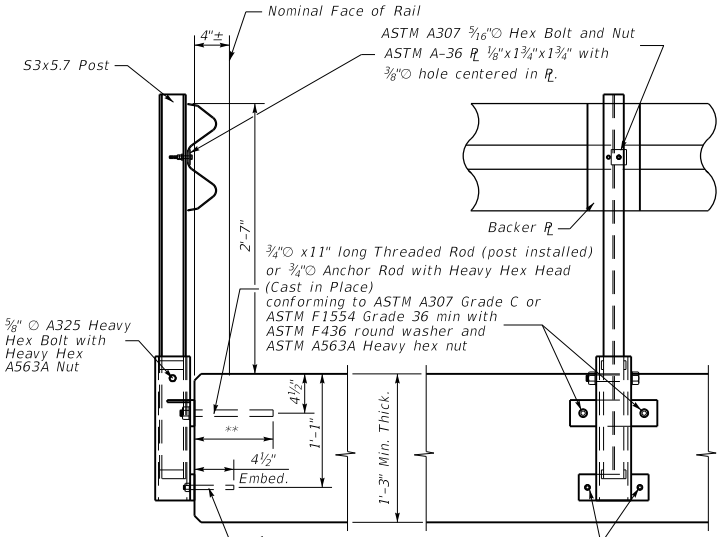

X-SECTION VIEW

BACK VIEW

** Use 9" Min. Embed for Threaded Rod post installed
Use 12" Min. Embed for Headed Anchors Cast in Place

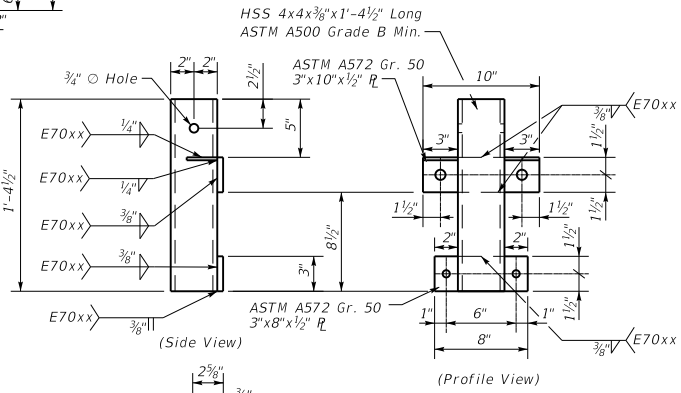

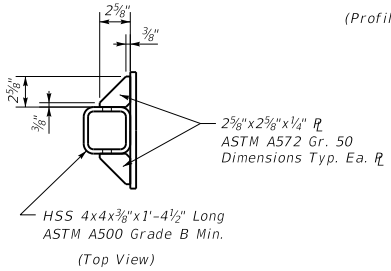

MOUNTING BRACKET

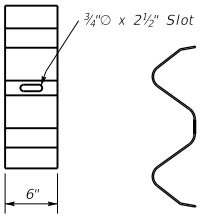

ELEVATION
(Backer Plate)

SIDE VIEW
(Backer Plate)

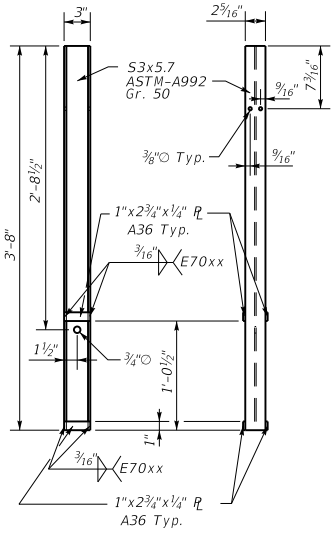

POST ELEVATION

Note: Fabricator may elect to provide a ¾"∅ ASTM A563A heavy hex sleeve nut with a minimum length of 2¼" and minimum 1¼" across the flats along with threaded rod and the Anchor Rod. Maintain 12" minimum embedment with the ¾" Anchor Rod behind the sleeve nut. The fabricator may elect to provide a ½" ferrule insert for the bottom anchors with a minimum length of 2¾" and a safe working load of 2000 lbs in tension and shear along with the threaded rod. Alternatively, the bottom anchors may also be supplied with a ½"∅ ASTM A563A heavy hex sleeve nut with a minimum length of 1½" and a minimum of ⅞" across the flats. Maintain 4½" embedment behind the sleeve nut. All costs for sleeve nuts, threaded rods, anchor rods, etc. are incidental to the price bid for the Railing System Side Mounted MGS.

KENTUCKY
DEPARTMENT OF HIGHWAYS

RAILING SYSTEM
SIDE MOUNTED MGS
DETAILS

STANDARD DRAWING NO. BHS-011

SUBMITTED _____ DIRECTOR DIVISION OF STRUCTURAL DESIGN — 02-26-20 DATE

APPROVED _____ STATE HIGHWAY ENGINEER — 02-26-20 DATE

Contrary to Standard Drawings for Guardrail, place splices between posts off of bridge as shown.

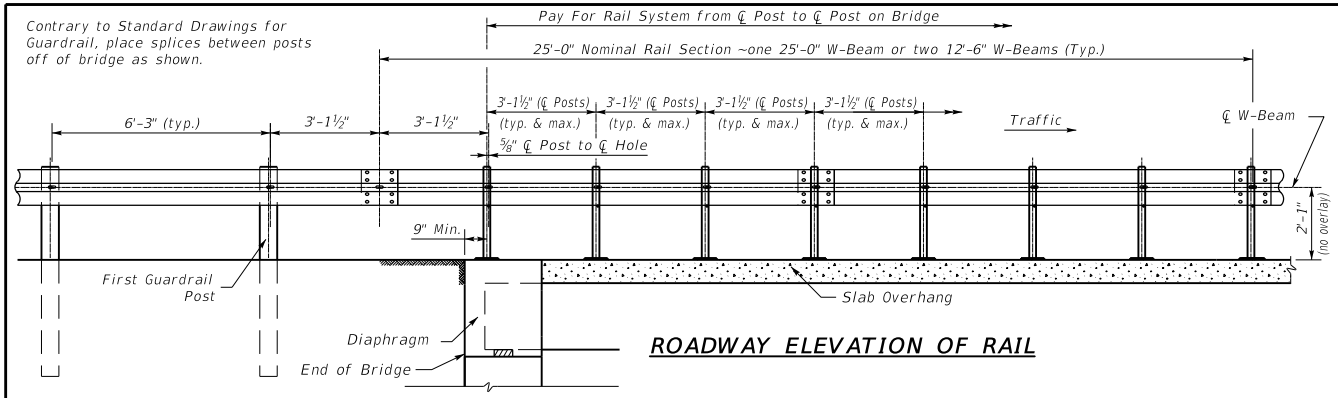

ROADWAY ELEVATION OF RAIL

TRANSITION AND END TREATMENT NOTES:
This traffic railing must be anchored by a minimum of 25 feet of guardrail. This 25 feet at each corner of the bridge is to be paid with the roadway plans. See roadway plans for layout.

CONSTRUCTION NOTES:
Face of rail post must be plumb unless otherwise approved by the Engineer. Post must be perpendicular to adjacent roadway grade. Use epoxy mortar with Type III binder conforming to Section 826 and ASTM C881 under post base plates if gaps larger than 1/16" exist. Fully anchored guardrail must be attached to each end of rail. Typical guardrail construction as indicated above and not bridge rail transition or bridge end connector. It is recommended that the bridge plans show rail post locations. Round or chamfer exposed edges of rail posts and backer Plate to approximately 1/16" by grinding. Shop drawings are not required.

MATERIAL NOTES:
Galvanize all steel components. Anchor bolts for base plate must be ⅝"∅ ASTM-A325 or A449 bolts with one hardened washer and one regular lock washer placed under each heavy hex nut. Nuts must conform to A563 requirements. W-beam must meet the requirements of Std. Dwg. RBR-001, c.e. except as modified in these plans. The contractor may furnish rail elements of 25'-0" or 12'-6" (Nominal) lengths. W-beam must have slotted holes at 3'-1½".

GENERAL NOTES:
This railing has been successfully evaluated by full scale crash test to meet MASH TL-3 criteria. This railing can be used for speeds 50 mph and greater.
This rail is designed to deflect approximately 4'-0" - 4'-6" as it contains and redirects the errant vehicle. This rail may not be installed on top of or behind curbs that project above finished grade, on bridges with expansion joints providing more than 5" of movement, on retaining walls, or on grade separations and interchanges.
Repairs to impact-damaged post and base plate unit are not permitted. Replace all impact-damaged posts with a new post and base plate unit.
Average weight of railing with no overlay: 19 plf total.

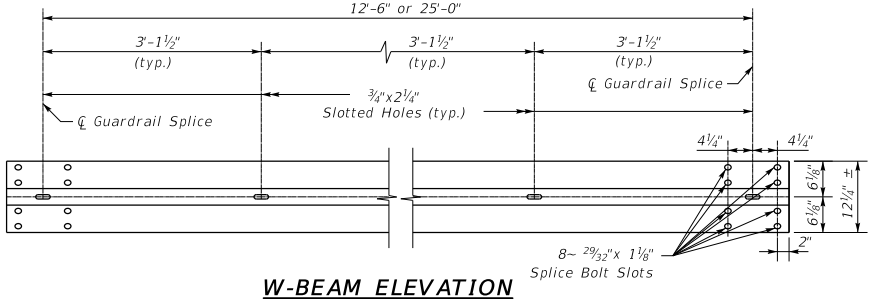

W-BEAM ELEVATION

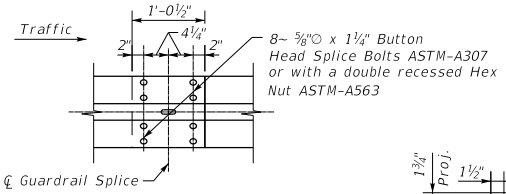

W-BEAM SPLICE ELEVATION

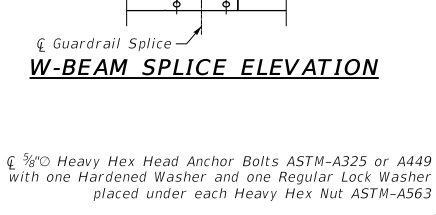

ALTERNATE ANCHORAGE

(For Concrete >11" Thick)

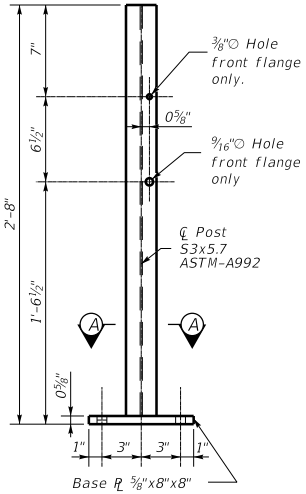

POST ELEVATION

℄ 5/16"∅ x2½" Hex Head Bolt ASTM-A307 with one Regular Washer and one Regular Lock Washer placed under two Hex Nuts. (Tighten the first hex nut by hand until the top and bot. edges of the W-beam engage the backer plate snug against the post. Then tighten hex nut one revolution with wrench and secure with the 2nd hex nut.)

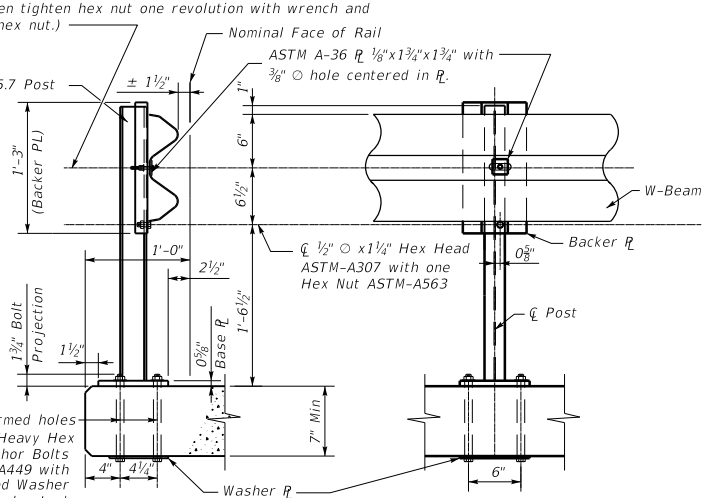

X-SECTION VIEW

TRAFFIC VIEW

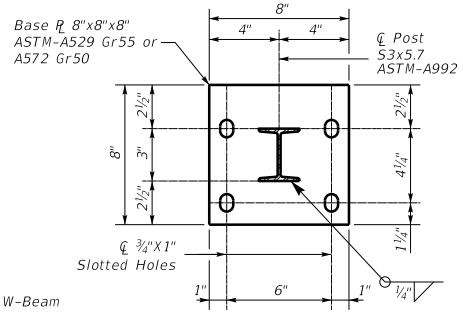

SECTION A-A

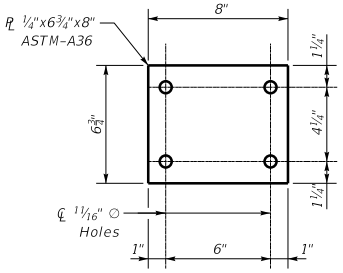

WASHER PLATE

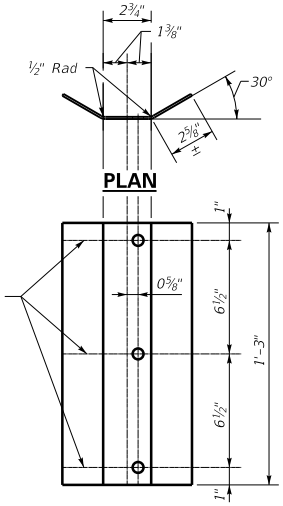

ELEVATION

(Bent Plate)
Backer ℙ ⅛"x8"x1'-3"
ASTM-A1011 CS or SS Gr 33, or A1008 CS or SS Gr 33
(11 Gage acceptable)

KENTUCKY
DEPARTMENT OF HIGHWAYS

RAILING SYSTEM
TYPE T631
DETAILS

STANDARD DRAWING NO. BHS-012

SUBMITTED _____ DIRECTOR DIVISION OF STRUCTURAL DESIGN — DATE 02-26-20

APPROVED _____ STATE HIGHWAY ENGINEER — DATE 02-26-20

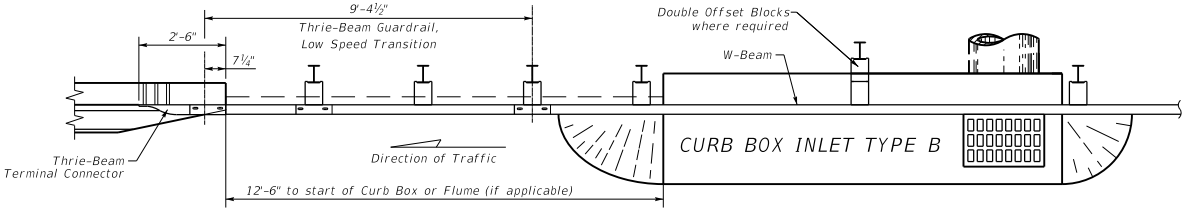

TYPICAL PLAN VIEW

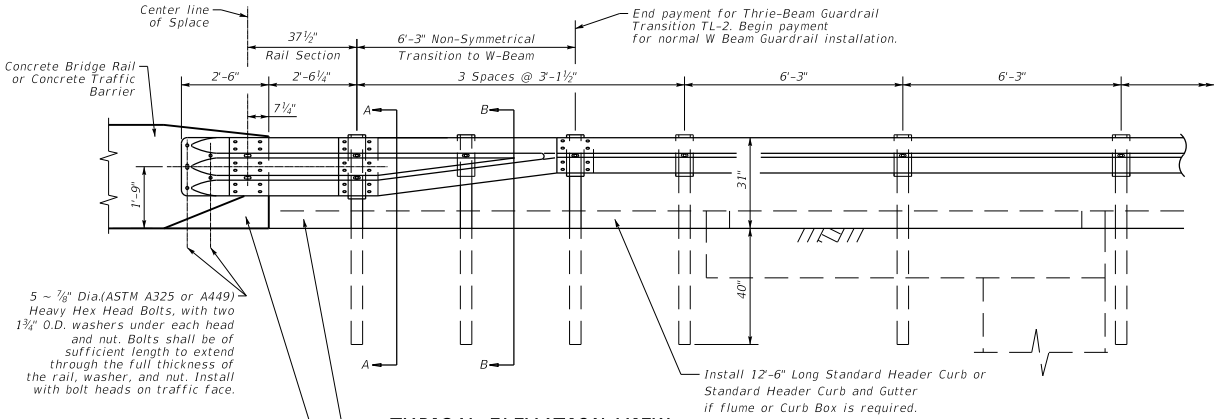

TYPICAL ELEVATION VIEW

GENERAL NOTES

1. Use steel posts unless otherwise indicated in the plans. The exact position of transitions shall be as shown in the plans or as directed by the Engineer.
2. Rail element shall meet the requirements of AASHTO M180 except as modified in the plans.
3. Button head "post" bolts (ASTM A307) shall be of sufficient length to extend through the full thickness of the nut and Type A 1¾" O.D. washer and not more than 1" beyond it. Button head "splice" bolts (ASTM A307) are ⅝" x 1¼" with ⅝" double recessed nuts (ASTM A563).
4. Bolts, nuts, and washers shall be galvanized in accordance with AASHTO M232, Hardware shall be incidental to Thrie-Beam Guardrail Transition TL-2.
5. If solid rock is encountered. See the standard specifications for the proper installation guidance.
6. Posts shall not be set in concrete, of any depth.
7. This railing has been successfully evaluated by full scale crash test to meet MASH TL-2 criteria. This railing transition is to be used when speeds are 45 mph or less.
8. Install 12'-6" of Standard Header Curb or Standard Header Curb and Gutter if a Curb Box Inlet Type B or Flume is required at end of bridge. See Std. Dwg. RPM-100, c.e. for curb details. All costs to install the curb shall be incidental to the lump sum price bid for Thrie-Beam Guardrail Transition, TL-2. No curb is required if a flume or Curb box is not installed at the end of the bridge.
9. Method of measurement and basis of payment.

   A. Thrie-Beam Guardrail Transition, TL-2 shall be paid at the contract unit price Each and includes the Thrie-beam terminal connection, Thrie-beam element, non symmetrical transition, curb or curb and gutter, posts, hardware and all other incidentals necessary to complete the installation. This transition must tie into W Beam Guardrail, which is not included in this transition bid item.

   B. Plastic pipe and cost of forming holes shall be included in the cost for the bridge railing.

TERMINAL CONNECTION NOTE

To ensure a stable connection. (12) Rectangular Washers (See Std. Dwg. RBR-005, c.e.) are required under the recessed nuts at the Terminal Connection splice.

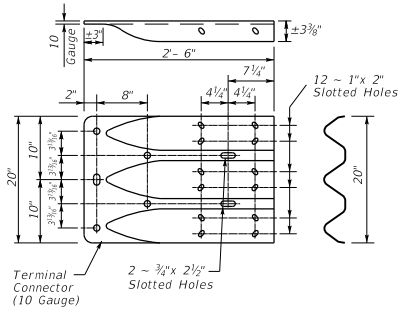

THRIE-BEAM TERMINAL CONNECTION

(See Terminal Connection Note)

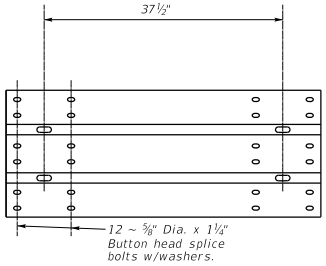

THRIE-BEAM (3'-1½") (10 GA.) ELEMENT SECTION

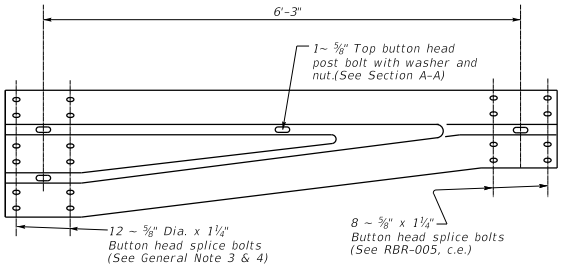

TRANSITION SECTION NON-SYMMETRICAL(10 GA.)

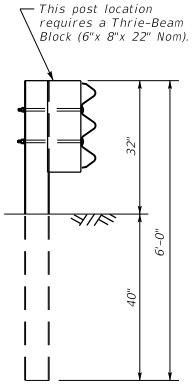

SECTION A-A

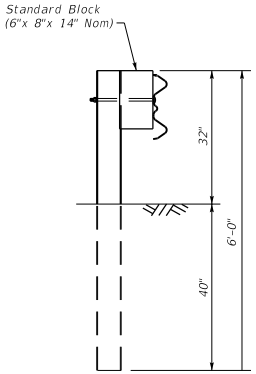

SECTION B-B

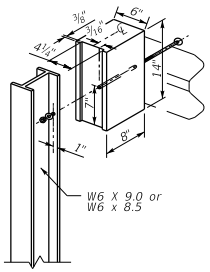

STEEL POST & BLOCK

(Showing Standard Block, see Thrie-Beam Guardrail Transition, TL-3 for Thrie-Beam Block & Post dimensions)

KENTUCKY DEPARTMENT OF HIGHWAYS

THRIE-BEAM GUARDRAIL TRANSITION (TL-2)

STANDARD DRAWING NO. BHS-013

SUBMITTED _____ DIRECTOR DIVISION OF STRUCTURAL DESIGN — 02-26-20 DATE

APPROVED _____ STATE HIGHWAY ENGINEER — 02-26-20 DATE

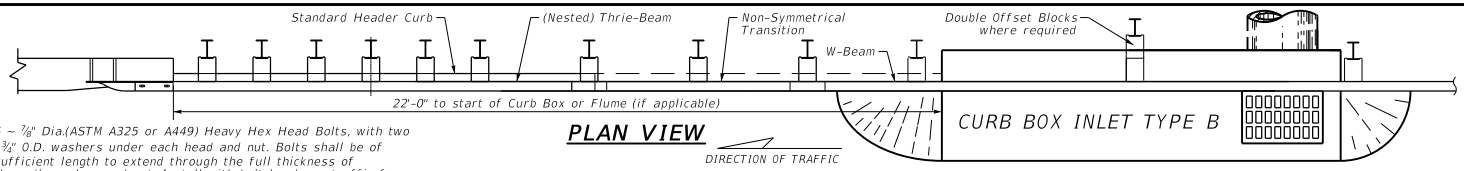

PLAN VIEW

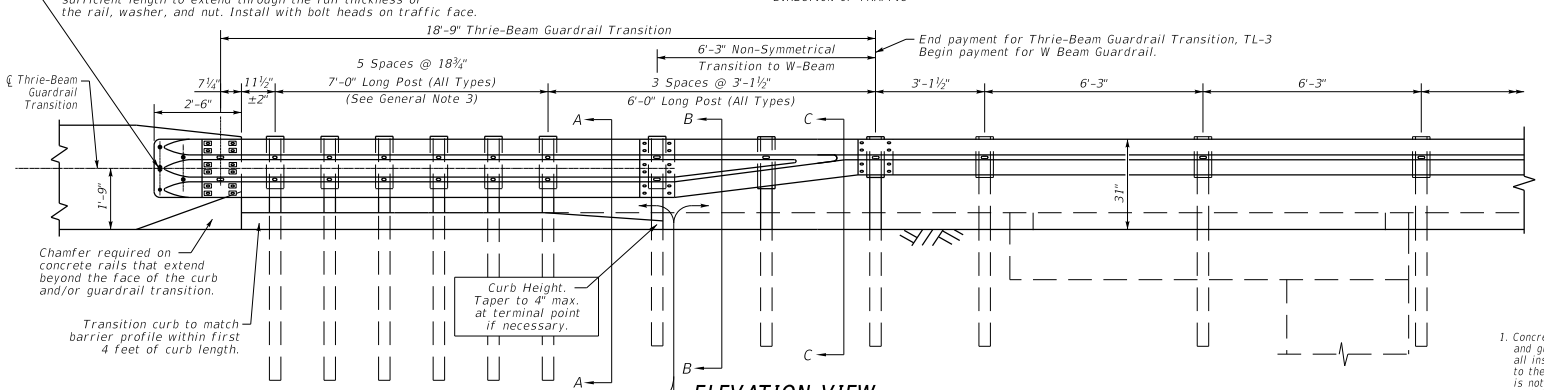

ELEVATION VIEW

Concrete standard header curb or standard header curb & gutter is incidental to "Thrie-Beam Guardrail Transition, TL-3". If no additional curb is indicated beyond the transition, then any curb height greater than 4" will be tapered down beginning at the last 7 ft. post to a maximum height of 4" at the first 6 ft post.

If curb box or a flume is required, extend curb 22'-0" to curb box or flume. All costs are incidental to Thrie-Beam Guardrail Transition, TL-3.

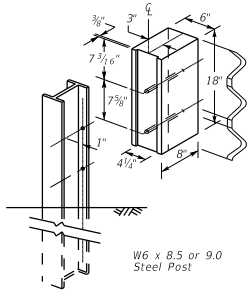

STEEL POST & BLOCK

(Showing Thrie-Beam Block)

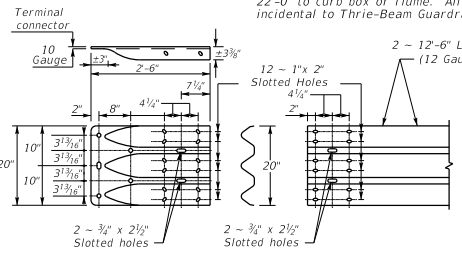

THRIE-BEAM TERMINAL CONNECTION

(See General Notes 6 & 7 for required hardware)

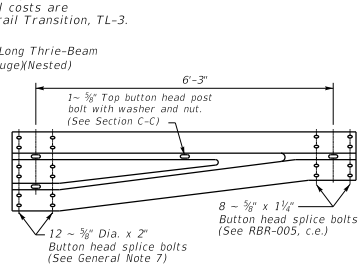

NON-SYMMETRICAL TRANSITION TO W-BEAM (10 Gauge)

ALTERNATE CONNECTION OPTION

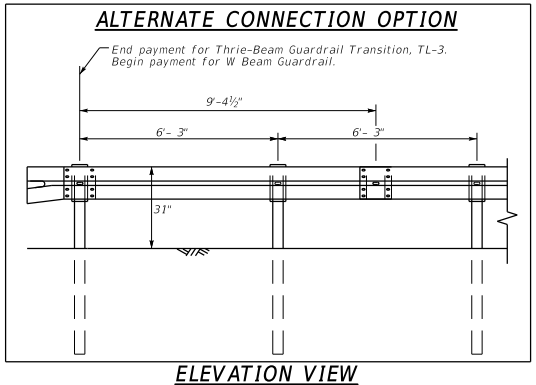

ELEVATION VIEW

GENERAL NOTES

1. Concrete curb shall be standard header curb or standard header curb and gutter as shown on Std. Dwg. RPM-100, c.e. and is required on all installations. At a minimum, concrete curb shall be continuous to the seventh post (first 6'-0" long post). Where a curb box or flume is not required, end curb at first 6'-0" long post as detailed. Where a curb box or flume is required extend the curb 22'-0" minimum to the curb box or flume. All costs are incidental to the lump sum price bid for Thrie-Beam Guardrail Transition, TL-3.
2. Use steel posts as shown unless indicated otherwise in the plans.
3. The post length shall be marked on all 7'- 0" long posts by the Manufacturer. The mark shall be located within the top 1 ft. region of the post, at least 3/8" in height, and visible after installation. Steel posts shall be marked with a stencil before galvanizing.
4. Rail element shall meet the requirements of AASHTO M180 except as modified on the plans. The thrie-beam terminal connector and the thrie-beam transition to w-beam shall be of the same material, but shall not be less than 10 gauge.

   Contractor shall verify that the locations of bolt holes match those in the thrie-beam terminal connector prior to ordering materials.
5. Unless otherwise shown in the plans, transitions shall be placed with the block face in front of or directly above the curb face.
6. Galvanized washers used with the 5/8" dia. post bolts shall be 1 3/4" O.D. washers. The (12) rectangular plate washers are required at the terminal connector splice.
7. Button head "post" bolts (ASTM A307) shall be of sufficient length to extend through the full thickness of the nut (ASTM A563) and washer and not more than 1" beyond it. Button head "splice" bolts (ASTM A307) 5/8" dia.x 2" (at triple rail splices) with 5/8" double recessed nuts.
8. Bolts, nuts, and washers shall be galvanized in accordance with AASHTO M232. Hardware shall be incidental to the bid item.
9. If solid rock is encountered, see the standard specifications for the proper installation guidance.
10. Posts shall not be set in concrete.
11. This railing has been successfully evaluated by full scale crash test to meet MASH TL-3 criteria. This railing transition is to be used when speeds are over 45 mph.
12. Method of measurement and basis of payment.

    A. Thrie-Beam Guardrail Transition, TL-3 shall be paid at the contract unit price Each and includes the Thrie-beam terminal connection, nested Thrie-Beam elements, non symmetrical transition, posts, concrete standard header curb or standard header curb and gutter, hardware and all other incidentals necessary to complete the installation. This transition must tie into W Beam Guardrail, which is not included in this transition bid item.

    B. Plastic pipe and cost of forming holes shall be included in the cost for the bridge railing.

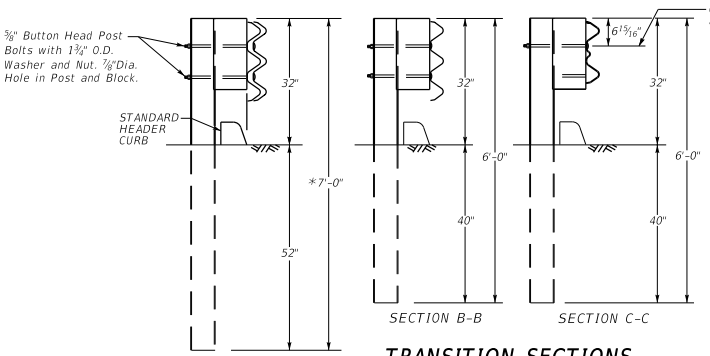

SECTION A-A

* Note: (All post types) (See General Note 3)

TRANSITION SECTIONS

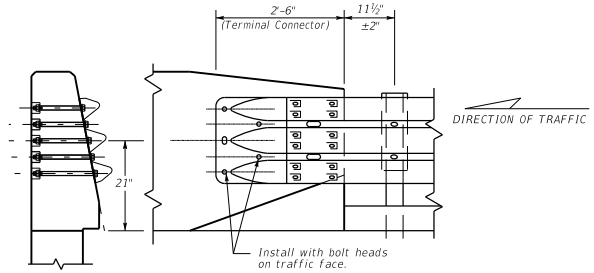

CONNECTION TO CONCRETE BRIDGE RAIL AND TRAFFIC BARRIERS

(12) Galvanized rectangular washers (See Std. Dwg. RBR-005, c.e.) are required under the recessed nut at the terminal connector splice to nested thrie-beam. (See General Notes 6 & 7).

KENTUCKY DEPARTMENT OF HIGHWAYS

THRIE-BEAM GUARDRAIL TRANSITION (TL-3)

STANDARD DRAWING NO. BHS-014

SUBMITTED _____ DIRECTOR DIVISION OF STRUCTURAL DESIGN — DATE 02-26-20

APPROVED _____ STATE HIGHWAY ENGINEER — DATE 02-26-20

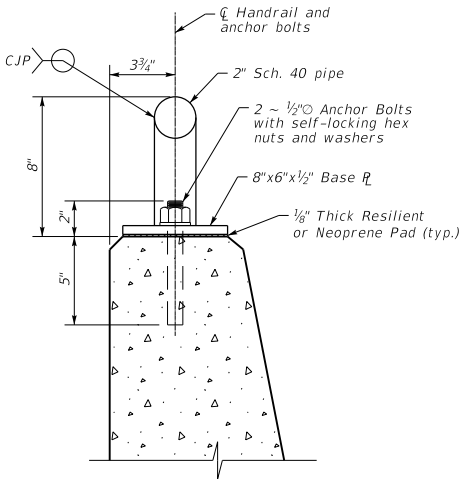

TYPICAL SECTION

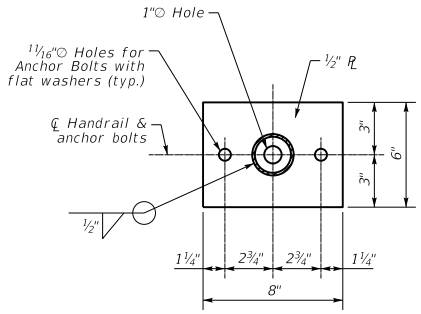

BASE PLATE DETAIL

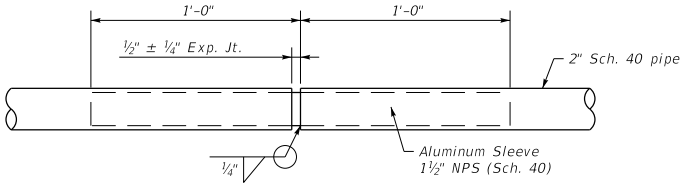

EXPANSION JOINT

*Note: Expansion Joints shall be placed at bridge expansion joint locations and shall match Bridge Expansion Joint Size. This handrail shall not be used where bridge expansion and contraction will leave less than 6 inch overlap in handrail joint.

General Notes

PIPE RAILING & POSTS: Structural Tube, Pipe and Bar shall be in accordance with ASTM B221 or ASTM B429, Alloy 6061-T6. For curved longitudinal alignments the top and bottom rails and handrails shall be shop bent to match the alignment radius.

BASE PLATES: Base Plates shall be in accordance with ASTM B209, Alloy 6061-T6.

COATINGS: The aluminum railing shall be mill finish unless otherwise noted in the Contract Documents. All nuts, anchor bolts, and washers shall be hot-dip galvanized in accordance with AASHTO M232.

ANCHOR BOLTS: Anchor bolts shall be in accordance with ASTM F1554 Grade 36. Headless anchor bolts for Adhesive Anchors shall be threaded full length. Cutting of reinforcing steel is permitted for drilled hole installation. All anchor bolts shall have single self-locking hex nuts. Tack welding of the nut to the anchor bolt may be used in lieu of self-locking nuts. All nuts shall be in accordance with ASTM A563 or ASTM A194. Flat Washers shall be in accordance with ASTM F436. After the nuts have been snug tightened, the anchor bolt threads shall be distorted to prevent removal of the nuts. Distorted threads and tack welds shall be coated with a zinc rich paint. Mechanical anchors may be allowed. Submit calculations by a professional engineer and manufacture data for proposed mechanical anchor to the engineer for approval along with the shop drawings.

RESILIENT AND NEOPRENE PADS: Resilient and Neoprene pads shall be in accordance with Specification Section 932, except that testing of the finished pads shall not be required. Neoprene pads shall be durometer hardness 60 or 70.

JOINTS: All fixed joints are to be welded all around and ground smooth. Expansion Joints shall be spaced at a maximum of 20'-0". Field splices similar to the expansion joint detail may be approved by the Engineer to facilitate shipping and handling, but rails must be continuous across a minimum of two posts.

WELDING: All welding shall be in accordance with the American Welding Society Structural Welding Code (Aluminum) ANSI/AWS D1.2 (current edition). Filler metal shall be either ER5183, ER5356 orER5556. Nondestructive testing of welds is not required.

SHOP DRAWINGS: Details addressing project specific geometry (line & grade) showing post and expansion joint locations must be submitted by the Contractor for the Engineer's approval prior to fabrication of the railing. Shop drawings shall be in accordance with the Specifications.

PAYMENT: Aluminum handrail shall be paid for under the contract unit price for Aluminum Handrail, LF. Payment for the handrail will be plan quantity measured as the length along the center line of the top rail, and includes rails, posts, rail splice assembly, base plates, anchor bolts, nuts, washers, resilient or neoprene pads and all incidental materials and labor required to complete installation of the handrail.

RAILING MEMBER DIMENSIONS TABLE

MEMBER	DESIGNATION	OUTSIDE DIMENSION	WALL THICKNESS
Posts and Rails	2" NPS (Sch. 40)	2.375"	0.154"
Rail Joint/Splice Sleeves	1½" NPS (Sch. 40)	1.900"	0.145"

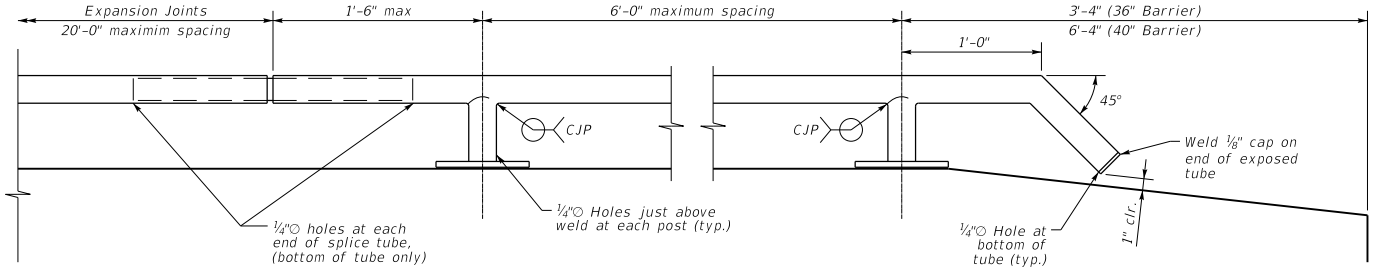

ELEVATION

KENTUCKY
DEPARTMENT OF HIGHWAYS

ALUMINUM
HANDRAIL

STANDARD DRAWING NO. BHS-015

SUBMITTED _____ DIRECTOR DIVISION OF STRUCTURAL DESIGN — DATE 02-26-20

APPROVED _____ STATE HIGHWAY ENGINEER — DATE 02-26-20

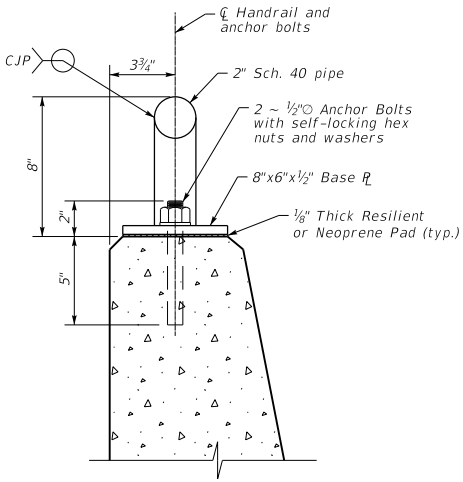

TYPICAL SECTION

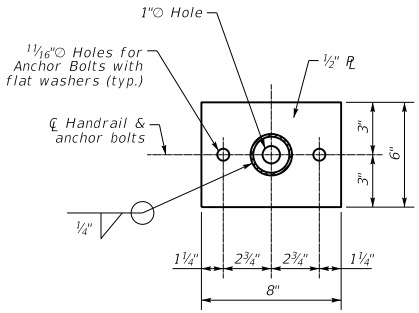

BASE PLATE DETAIL

General Notes

PIPE RAILING & POSTS: Pipe Rails and Posts shall be in accordance with ASTM A53 Grade B for standard weight pipe and ASTM A500 Grade B, C or D or ASTM A501 for structural tube. For curved longitudinal alignments the top and bottom rails and handrails shall be shop bent to match the alignment radius.

BASE PLATES: Base Plates shall be in accordance with ASTM A36 or ASTM A709 Grade 36.

COATINGS: The railing shall be hot-dip galvanized after fabrication in accordance with AASHTO M111. All nuts, anchor bolts, and washers shall be hot-dip galvanized in accordance with AASHTO M232.

ANCHOR BOLTS: Anchor bolts shall be in accordance with ASTM F1554 Grade 36. Headless anchor bolts for Adhesive Anchors shall be threaded full length. Cutting of reinforcing steel is permitted for drilled hole installation. All anchor bolts shall have single self-locking hex nuts. Tack welding of the nut to the anchor bolt may be used in lieu of self-locking nuts. All nuts shall be in accordance with ASTM A563 or ASTM A194. Flat Washers shall be in accordance with ASTM F436. After the nuts have been snug tightened, the anchor bolt threads shall be distorted to prevent removal of the nuts. Distorted threads and tack welds shall be coated with a zinc rich paint. Mechanical anchors may be allowed. Submit calculations by a professional engineer and manufacture data for proposed mechanical anchor to the engineer for approval along with the shop drawings.

RESILIENT AND NEOPRENE PADS: Resilient and Neoprene pads shall be in accordance with Specification Section 932, except that testing of the finished pads shall not be required. Neoprene pads shall be durometer hardness 60 or 70.

JOINTS: All fixed joints are to be welded all around and plug welds ground smooth. Remove burs and weld splatter, additionally remove any sharp edges on rails to prevent injury. Expansion Joints shall be spaced at a maximum of 20'-0". Field splices similar to the expansion joint detail may be approved by the Engineer to facilitate shipping and handling, but rails must be continuous across a minimum of two posts.

WELDING: All welding shall be in accordance with the American Welding Society Structural Welding Code (Steel) ANSI/AWS D1.1 (current edition). Weld metal shall be E60XX or E70XX. Nondestructive testing of welds is not required.

SHOP DRAWINGS: Details addressing project specific geometry (line & grade) showing post and expansion joint locations must be submitted by the Contractor for the Engineer's approval prior to fabrication of the railing. Shop drawings shall be in accordance with the Specifications.

PAYMENT: Steel handrail shall be paid for under the contract unit price for Steel Handrail, LF. Payment for the handrail will be plan quantity measured as the length along the center line of the top rail, and includes rails, posts, rail splice assembly, base plates, anchor bolts, nuts, washers, resilient or neoprene pads and all incidental materials and labor required to complete installation of the handrail.

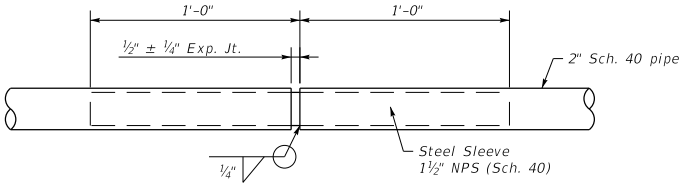

EXPANSION JOINT

*Note: Expansion Joints shall be placed at bridge expansion joint locations and shall match Bridge Expansion Joint Size. This handrail shall not be used where bridge expansion and contraction will leave less than 6 inch overlap in handrail joint.

RAILING MEMBER DIMENSIONS TABLE			
MEMBER	DESIGNATION	OUTSIDE DIMENSION	WALL THICKNESS
Posts and Rails	2" NPS (Sch. 40)	2.375"	0.154"
Rail Joint/Splice Sleeves	1½" NPS (Sch. 40)	1.900"	0.145"

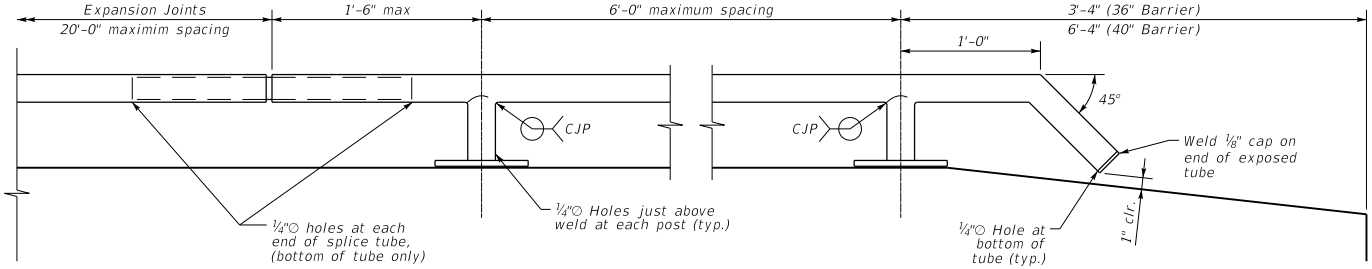

ELEVATION

KENTUCKY
DEPARTMENT OF HIGHWAYS

STEEL
HANDRAIL

STANDARD DRAWING NO. BHS-016

SUBMITTED _____ 02-26-20
DIRECTOR DIVISION OF STRUCTURAL DESIGN — DATE

APPROVED _____ 02-26-20
STATE HIGHWAY ENGINEER — DATE

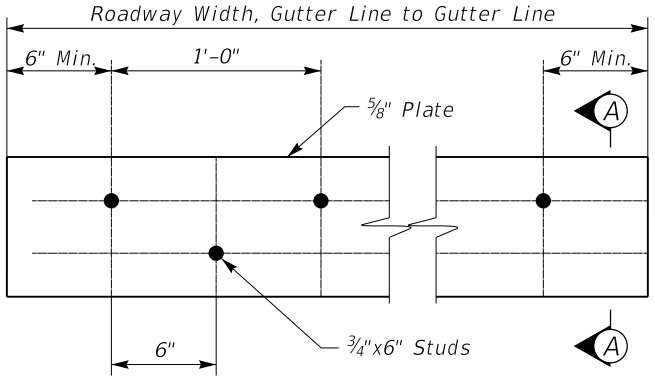

ARMORED EDGE

(For 1"-3" Expansion Dams and Bridge End)

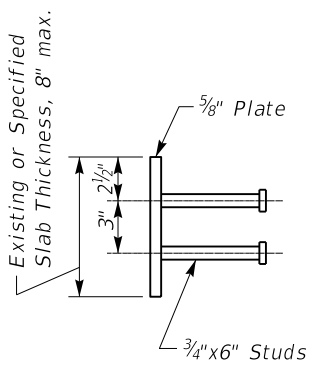

SECTION A-A

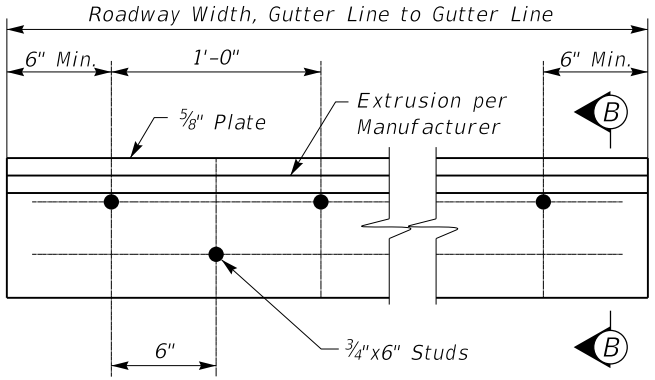

ARMORED EDGE

(For 4" & 5" Expansion Dams)

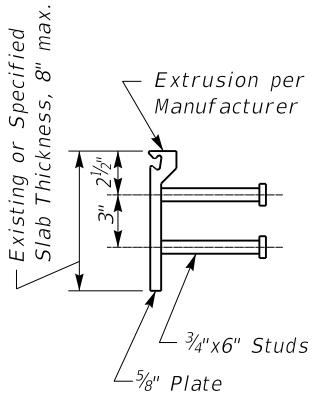

SECTION B-B

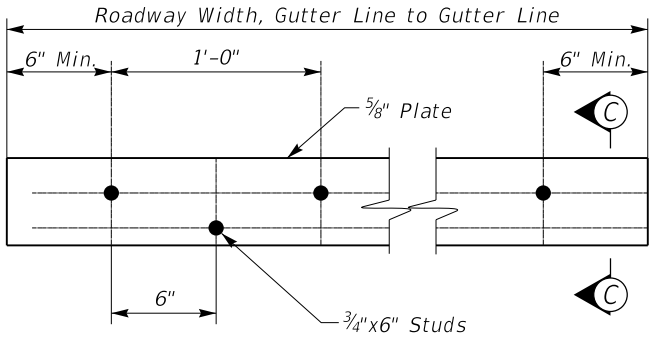

ARMORED EDGE

(For 5" Composite Box Beam Slab Ends)

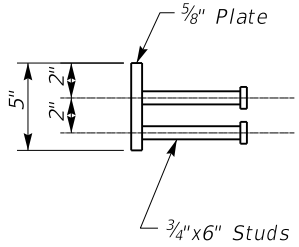

SECTION C-C

General Notes

SPECIFICATIONS: *All references to the Specifications are to the current edition of the Kentucky Department of Highways Standard Specifications for Road and Bridge Construction. All references to the AASHTO Specifications are to the current edition of the AASHTO LRFD Bridge Design Specifications.*

WELDING SPECIFICATIONS: *Ensure techniques and welding procedure comply with current joint specification ANSI/AASHTO/AWS D1.5 Bridge Welding Code.*

MATERIALS:

A. Structural Steel. Use new, commercial grade steel suitable for welding. The Engineer will base acceptance on visual inspection.

B. Stud Anchors. The armored edge stud anchors are 3/4" embedded stud shear connectors conforming to ASTM A108, Grade 1015.

LOCATION: *Locate armored edges and/or expansion dams in accordance with detail plans, proposals and applicable Standard Drawings.*

PAINT: *Clean and paint all structural steel in accordance with the with the requirement of Section 607, except that surfaces to come in contact wiht concrete are not to be painted and no field coating will be required.*

SHOP DRAWINGS: *Contrary to the Specifications, no shop plans are required.*

PLACEMENT: *Fabricate and place new armored edges to match original or new grade.*

STAGE CONSTRUCTION: *If installation of armored edges in two or more stages is necessary. Join the armored edges at or near the centerline of the roadway or lane line, field weld and grind smooth.*

BASIS OF PAYMENT:

A. ARMORED EDGE AT END OF BRIDGE: Payment at the contract unit price bid for Amored Edge for Concrete shall be full compensation for furnishing and installing the armored edge as specified. Measurement shall be in linear feet from gutter line to gutter line with concrete barrier or curb type railing or existing parapet applications and from fascia to fascia of slab for metal or guardrail type railing systems and no curb.

B. ARMORED EDGE AT EXPANSION JOINTS: Payment for armored edge at expansion joints shall be included in the unit price bid for the specified application and joint size.

KENTUCKY
DEPARTMENT OF HIGHWAYS

ARMORED EDGES

STANDARD DRAWING NO. BJE-001-14

SUBMITTED _____ DIRECTOR DIVISION OF STRUCTURAL DESIGN — DATE 02-26-20

APPROVED _____ STATE HIGHWAY ENGINEER — DATE 02-26-20

General Notes

SPECIFICATIONS: All references to the Specifications are to the current edition of the Kentucky Department of Highways Standard Specifications for Road and Bridge Construction. All references to the AASHTO Specifications are to the current edition of the AASHTO LRFD Bridge Design Specifications.

LOCATION: Locate armored edges and/or expansion dams in accordance with detail plans.

SHOP DRAWINGS: Contrary to the Specifications, no shop plans are required.

BASIS OF PAYMENT: Payment at the contract unit price bid for Expansion Joint (specified size) shall be full compensation for finishing and installing expansion joint as specified. Measurement shall be in lineal feet from gutter line to gutter line.

Note: For Details of Armored Edge
See STD DWG BJE-001 (C.E.)

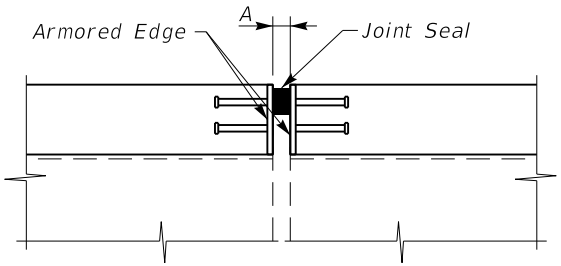

SECTION THROUGH JOINT

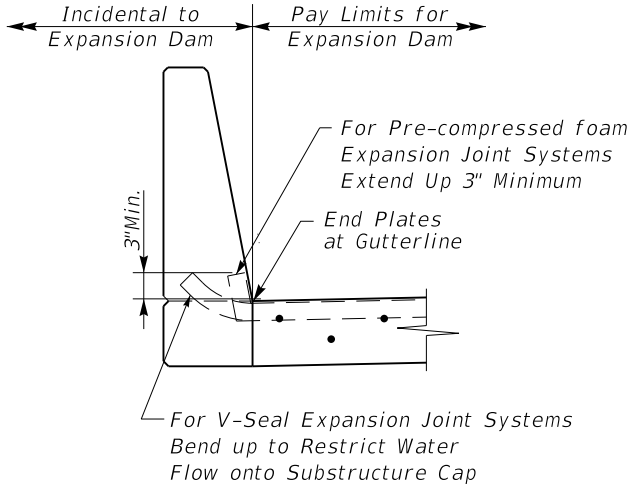

SECTION THROUGH BARRIER

EXPANSION JOINT 1"-3"

Joint Data
Dim. A Maximum Opening
1"
1½"
2"
2½"
3"
4"
5"

The joint seal supplied must accommodate the required movement shown. Set Dimension A with temperature change increment and as required by the manufacturer to obtain the required movement.

Temperature Change Increment per 10°F			
Concrete		Steel	
Expansion Length (ft)	Increment (in)	Expansion Length (ft)	Increment (in)
0 - 80	1/32	0 - 60	1/32
81 - 140	1/16	61 - 100	1/16
141 - 200	1/8	101 - 140	3/32
201 - 260	5/32	141 - 180	1/8
261 - 320	7/32	181 - 220	5/32
321 - 380	1/4	221 - 260	3/16
381 - 440	5/16	261 - 300	7/32
		301 - 340	1/4

Note: For Details of Armored Edge
See STD DWG BJE-001 (C.E.)

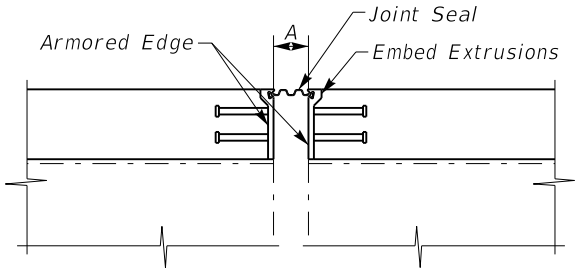

SECTION THROUGH JOINT

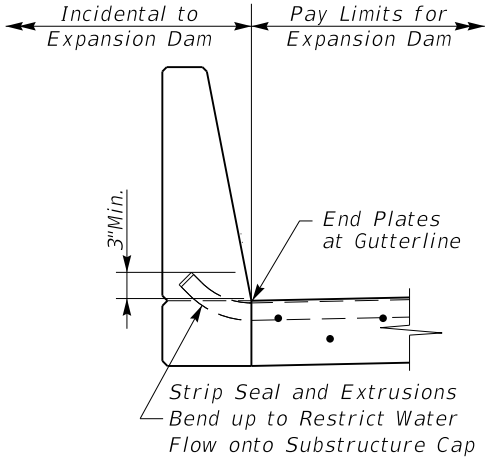

SECTION THROUGH BARRIER

EXPANSION JOINT 4" & 5"

KENTUCKY
DEPARTMENT OF HIGHWAYS

EXPANSION JOINTS

STANDARD DRAWING NO. BJE-002

SUBMITTED _____ DIRECTOR DIVISION OF STRUCTURAL DESIGN — DATE 02-26-20

APPROVED _____ STATE HIGHWAY ENGINEER — DATE 02-26-20

Note: Remove X-Hatched Areas of Concrete & Expansion Device.

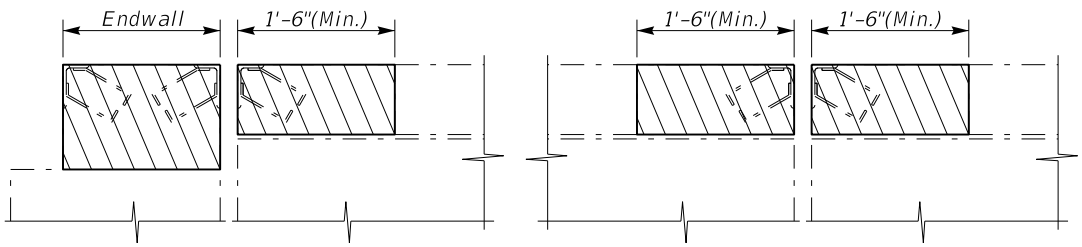

@ End Bents or Abutments

@ Piers or Bents

SECTION THROUGH JOINT

Existing

Joint Data	The joint seal supplied must accommodate the required movement shown. Set Dimension A with temperature change increment and as required by the manufacturer to obtain the required movement.
Dim. A Maximum Opening	
1"	
1½"	
2"	
2½"	
3"	

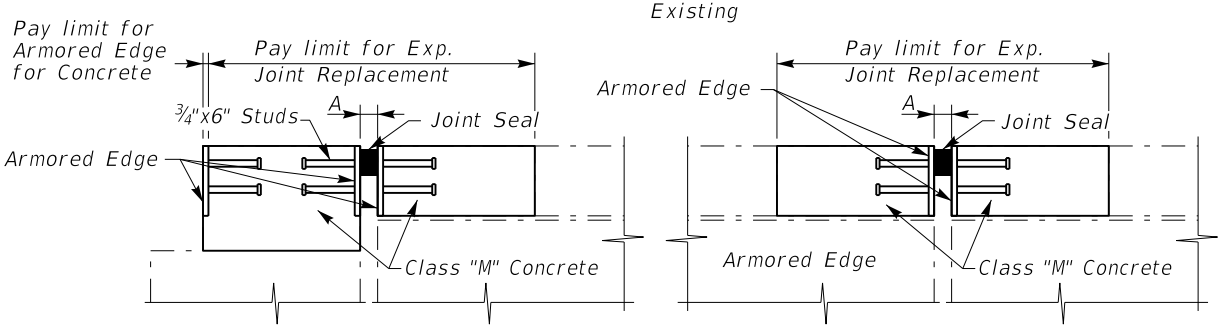

@ End Bents or Abutments

@ Piers or Bents

SECTION THROUGH JOINT

Proposed

Note: For Details of Armored Edge See STD DWG BJE-001 (C.E.)

Temperature Change Increment per 10°F			
Concrete		Steel	
Expansion Length (ft)	Increment (in)	Expansion Length (ft)	Increment (in)
0 - 80	1/32	0 - 60	1/32
81 - 140	1/16	61 - 100	1/16
141 - 200	1/8	101 - 140	3/32
201 - 260	5/32	141 - 180	1/8
261 - 320	7/32	181 - 220	5/32
321 - 380	1/4	221 - 260	3/16
381 - 440	5/16	261 - 300	7/32
		301 - 340	1/4

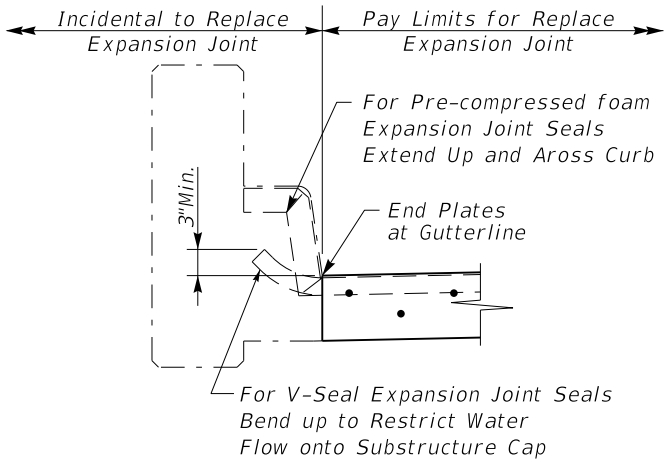

SECTION THROUGH PAPAPET

(Typ. for Plinth Walls)

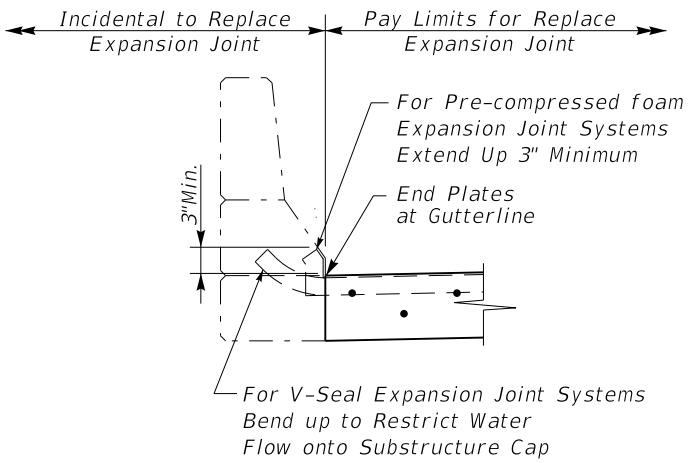

SECTION THROUGH PARAPET

(Typ. for Barrier Walls)

KENTUCKY
DEPARTMENT OF HIGHWAYS

EXPANSION JOINT
REPLACEMENT
1"-3"

STANDARD DRAWING NO. BJE-003

SUBMITTED _____ DIRECTOR DIVISION OF STRUCTURAL DESIGN — 02-26-20 DATE

APPROVED _____ STATE HIGHWAY ENGINEER — 02-26-20 DATE

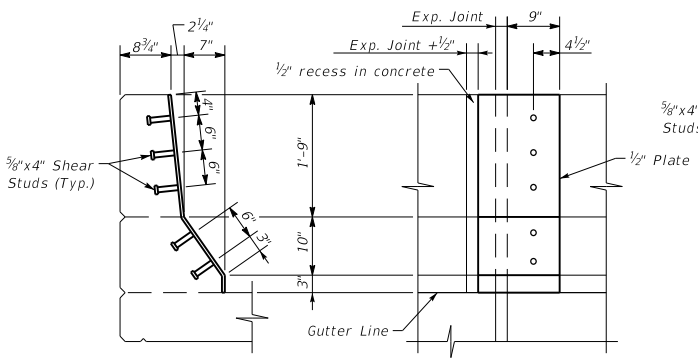

TYPE 3 SLIDE PLATE

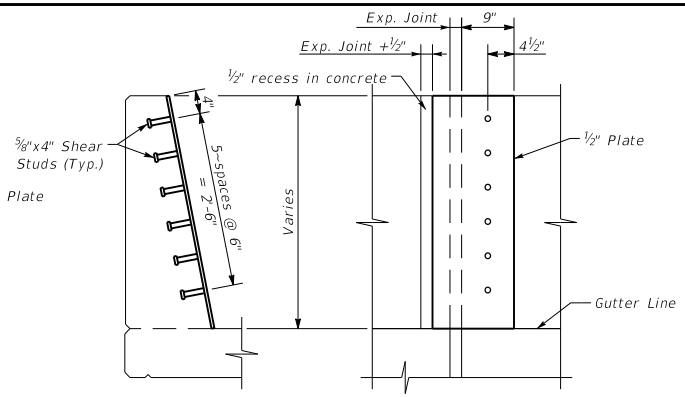

SINGLE SLOPE SLIDE PLATE

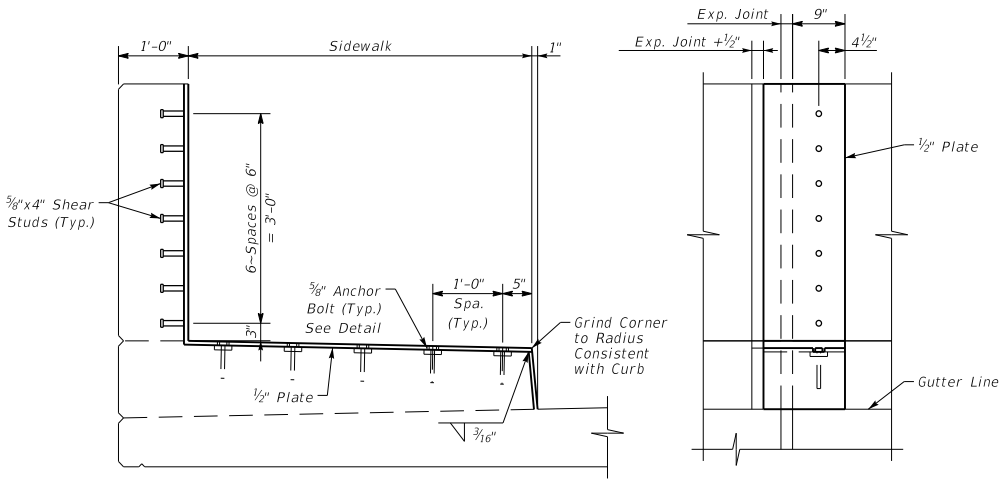

SIDEWALK SLIDE PLATE

General Notes

SPECIFICATIONS: *All references to the Specifications are to the current edition of the Kentucky Department of Highways Standard Specifications for Road and Bridge Construction. All references to the AASHTO Specifications are to the current edition of the AASHTO Standard Specifications for Highway Bridges.*

MATERIAL SPECIFICATIONS: *Steel material shall be new, M270 GR50 steel suitable for welding. Shop drawings will be required for the assembly. Anchor studconnectors shall conform to ASTM A108, Grade 1015. Acceptance will be based onvisual inspection by the Engineer. Joint sealing material, only, is in accordance with Section 807 of the Specifications. Ensure stud shear connectors conform toASTM A108, Grade 1015. All structural steel shall be galvanized in accordance with ASTM A123.*

WELDING SPECIFICATIONS: *Ensure techniques and welding procedure comply with current joint specification ANSI/AASHTO/AWS D1.5 Bridge Welding Code.*

BASIS OF PAYMENT: *The cost of furnishing and placing the Expansion Joint and all plates, hardware and materials as shown in these assembly details shall beincluded in the contract unit price per linear foot, measured along centerline of joint between the ends of the trough. Joint assembly shall conform to theroadway grade and cross slope or 2% with parabolic crown.*

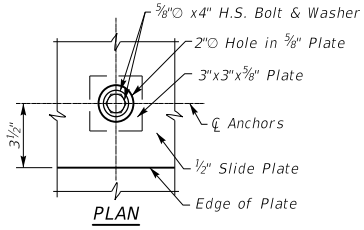

PLAN

After installation clean recess and fill with self leveling silcone sealant

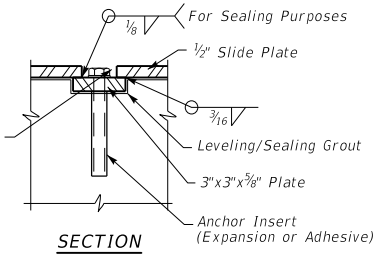

SECTION

ANCHOR BOLT DETAIL

KENTUCKY
DEPARTMENT OF HIGHWAYS

EXPANSION JOINT
COVER PLATE DETAILS

STANDARD DRAWING NO. BJE-004

SUBMITTED _____ DIRECTOR DIVISION OF STRUCTURAL DESIGN — DATE 02-26-20

APPROVED _____ STATE HIGHWAY ENGINEER — DATE 02-26-20

General Notes ~ Expansion Joint Replacement

SPECIFICATIONS: All references to the Specifications are to the current edition of the Kentucky Department of Highways Standard Specifications for Road and Bridge Construction. All references to the AASHTO Specifications are to the current edition of the AASHTO LRFD Bridge Design Specifications.

MATERIALS.

A. Class "M" Concrete. Use either "M1" or "M2". See Section 601.
B. Steel Reinforcement. Use Grade 60. See Section 602.
C. Epoxy Bond Coat. See Section 511.
D. Joint Seal System. Use a joint seal system for the specified width in accordance with section 807.

EQUIPMENT.

A. See Section 606.

CONSTRUCTION.

A. Remove Existing Materials. Remove existing Expansion Dam, Bridge End, Remove debris and/or expansion joint filler as directed by the Engineer. Clean and leave all existing steel reinforcement encountered in place. Damaged steel reinforcement will be repaired as directed by the Engineer at no additional cost to the Department. Dispose of all removed material entirely away from the job site.

B. Place New Concrete and Armored Edges. After all specified existing materials have been removed, place new armored edges to match the grade of the proposed overlay or to match the original grade. Place the new Class "M" concrete to the scarified grade and finish to receive the new overlay or place the new Class "M" concrete to the original grade and finish with broom strokes drawn transversely from curb to curb. All new structural steel shall be cleaned and painted in accordance with requirements of Section 607.03.23, except that surfaces to come in contact with concrete are not to be painted and no field coating will be required. Blast clean all areas of existing concrete and structural steel to come in contact with new concrete until free of all laitance and deleterious substances immediately prior to the placement of the Class "M" Concrete. The surface areas of existing concrete to come in contact with the new Class "M" Concrete are to be coated with an epoxy bond coat immediately prior to placing new concrete in accordance with Section 511. The interfaces of the new and old concrete shall be as nearly vertical and horizontal as possible.

C. Additional Epoxy Coated Steel Reinforcement. Furnish for replacement, as directed by the Engineer, 200 linear feet of #4 steel reinforcing bars in 20' lengths. Place these bars in areas deemed by the Engineer to require additional reinforcement. Field cutting and bending is permitted. Do not place any additional steel reinforcement above the height of the top row of studs on the armored edges. Ensure that all exposed steel reinforcement is tied in accordance with Section 602. prior to pouring the new Class "M" Concrete. Deliver unused bars as directed by the Engineer.

D. Stage Construction. Installation of concrete and armored edges in two (or more if specified) stages is necessary. Join the armored edges at or near the centerline of the roadway or lane line, field weld and grind smooth.

E. Pre-Compressed Foam Expansion Joint Systems. System shall be supplied in pre-compressed sticks for easy installation. System shall be installed in accordance with manufacture's recommendations concerning approved adhesives, welds between sticks, appurtenances, and adhesion to concrete or armored edges and section 609.

CONSTRUCTION. (Continued)

F. Preformed Neoprene Strip Seals and V Seals. Place the seals in one continuous, unbroken length. Place neoprene strip seals as recommended by the manufacturer and in accordance with Section 609.

G. Approach Pavement Repair. If no bridge overlay approach is specified the Contractor shall repair any and all damage to the approach pavement due to this construction. A new asphalt surface wedge up to three feet long and the width of the bridge deck shall be placed and compacted to the satisfaction of the Engineer prior to allowing traffic back onto the structure after each section of the joint is replaced. No additional payment will be allowed for this work, as it will be considered incidental to the pay item "Armored Edge for Concrete".

H. Verifying Field Conditions. The Contractor shall field verify all dimensions before ordering any material. New material that is unsuitable due to variation in existing structure shall be replaced at the Contractors expense.

I. Damage to the Structure. The Contractor shall bear all responsibility and expense for any and all damage to the structure during the repair work even to removal and replacement of a fallen span, should the fallen span result from the Contractor's actions.

J. Shop Plans. Shop plans will not be required. The Contractor is responsible for obtaining field measurements and supplying properly sized materials to complete the work.

MEASUREMENT.

A. Expansion Joint Replace - 1", ½", 2", 2½", 3", 4" & 5" The Department will measure the quantity in linear feet from gutter line to gutter line along the centerline of the joint.
B. Armored Edge for Concrete. The Department will measure the quantity in linear feet from gutter line to gutter line along the centerline of the joint.
C. Steel Reinforcement. The Department will measure the quantity in LBS.

PAYMENT:

A. Expansion Joint Replace - 1", 1½", 2" 2 ½", 3", 4" & 5". Payment at the contract unit price per linear foot shall be full compensation for removing specified existing materials, furnishing and installing the new armored edges, concrete, seal, and all incidental items necessary to complete the work within the specified pay limits.

B. Armored Edge for Concrete. Payment at the contract unit price per linear foot shall be full compensation for furnishing and installing new armored edges at each end of bridge.

C. Steel Reinforcement. See Section 602.

KENTUCKY
DEPARTMENT OF HIGHWAYS

EXPANSION JOINT
REPLACEMENT
GENERAL NOTES

STANDARD DRAWING NO. BJE-005

SUBMITTED _____ 02-26-20
DIRECTOR DIVISION OF STRUCTURAL DESIGN — DATE

APPROVED _____ 02-26-20
STATE HIGHWAY ENGINEER — DATE

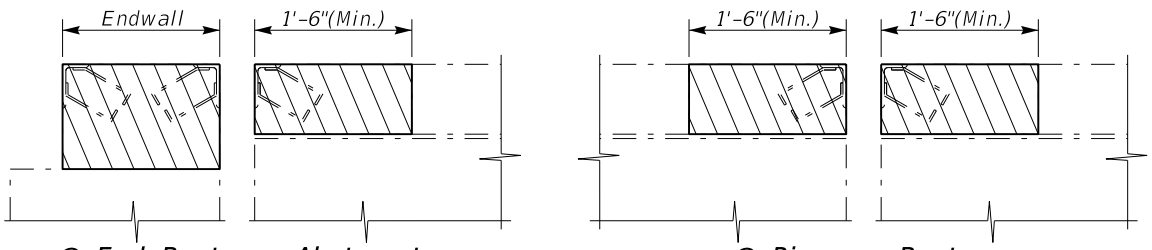

@ End Bents or Abutments

@ Piers or Bents

SECTION THROUGH JOINT

Existing

Note: Remove X-Hatched Areas of Concrete & Expansion Device.

Joint Data	The joint seal supplied must accommodate the required movement shown. Set Dimension A with temperature change increment and as required by the manufacturer to obtain the required movement.
Dim. A Maximum Opening	
4"	
5"	

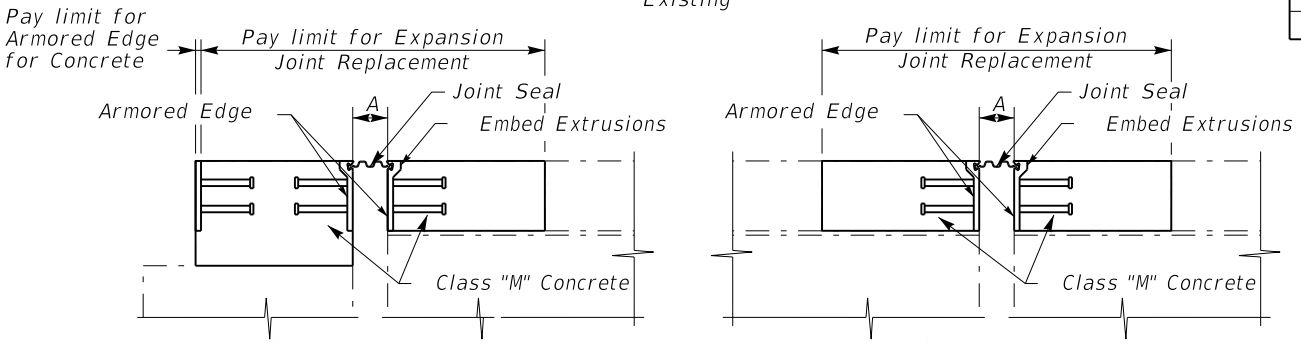

@ End Bents or Abutments

@ Piers or Bents

SECTION THROUGH JOINT

Proposed

Temperature Change Increment per 10°F			
Concrete		Steel	
Expansion Length (ft)	Increment (in)	Expansion Length (ft)	Increment (in)
0 - 80	1/32	0 - 60	1/32
81 - 140	1/16	61 - 100	1/16
141 - 200	1/8	101 - 140	3/32
201 - 260	5/32	141 - 180	1/8
261 - 320	7/32	181 - 220	5/32
321 - 380	1/4	221 - 260	3/16
381 - 440	5/16	261 - 300	7/32
		301 - 340	1/4

Note: For Details of Armored Edge See STD DWG BJE-001 (C.E.)

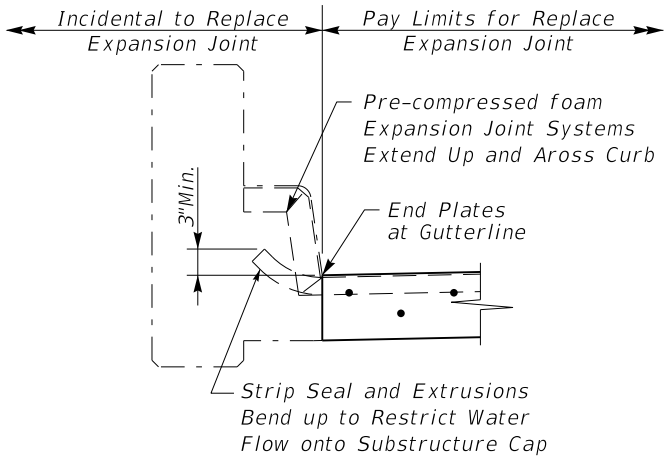

SECTION THROUGH PAPAPET

(Typ. for Plinth Walls)

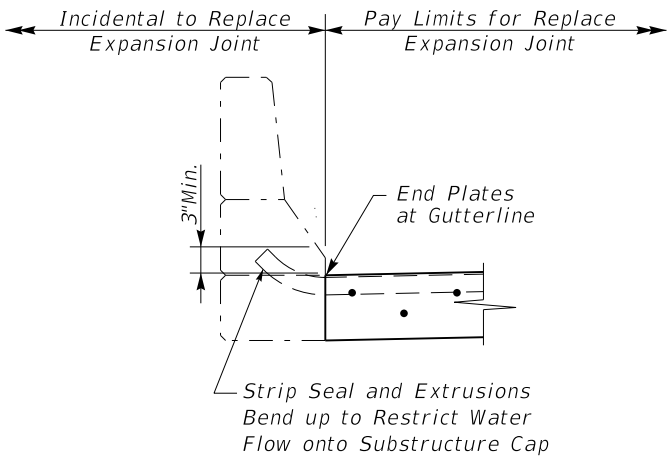

SECTION THROUGH PARAPET

(Typ. for Barrier Walls)

KENTUCKY
DEPARTMENT OF HIGHWAYS

EXPANSION JOINT
REPLACEMENT
4" & 5"

STANDARD DRAWING NO. BJE-006

SUBMITTED _____ DIRECTOR DIVISION OF STRUCTURAL DESIGN — DATE 02-26-20

APPROVED _____ STATE HIGHWAY ENGINEER — DATE 02-26-20

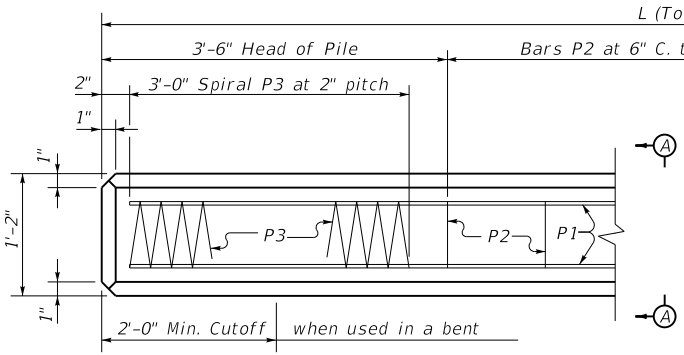

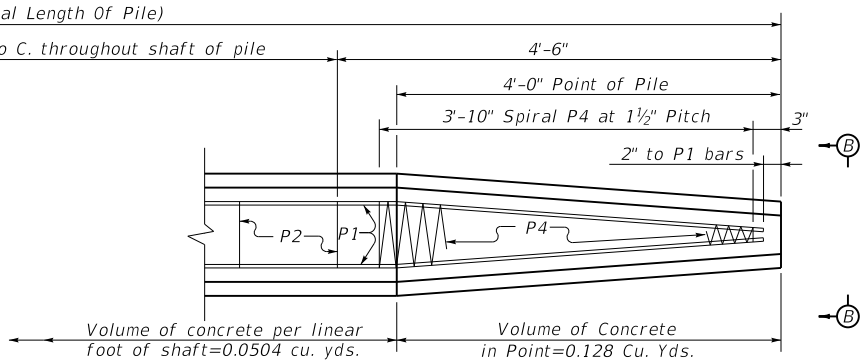

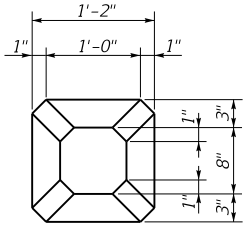

VIEW B-B

TABLE OF DIMENSIONS AND QUANTITIES (FOR ONE PILE ONLY)

BILL AND TYPES OF REINFORCEMENT (FOR ONE PILE ONLY)

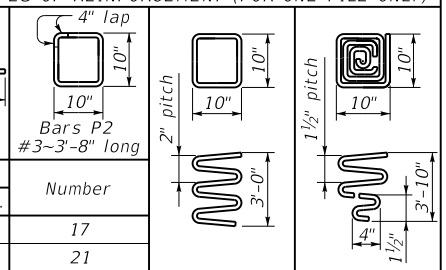

L	ESTIMATED CONCRETE CLASS "D"	Length		A		Number
Ft.	Cu. Yd.	Ft.	In.	Ft.	In.	
16	0.73	15	8	11	8	17
18	0.83	17	8	13	8	21
20	0.93	19	8	15	8	25
22	1.04	21	8	17	8	29
24	1.14	23	8	19	8	33
26	1.24	25	8	21	8	37
28	1.34	27	8	23	8	41
30	1.44	29	8	25	8	45
32	1.54	31	8	27	8	49
34	1.64	33	8	29	8	53
36	1.74	35	8	31	8	57
38	1.84	37	8	33	8	61
40	1.94	39	8	35	8	65
42	2.04	41	8	37	8	69
44	2.14	43	8	39	8	73
46	2.24	45	8	41	8	77
48	2.34	47	8	43	8	81
50	2.44	49	8	45	8	85
52	2.54	51	8	47	8	89
54	2.64	53	8	49	8	93
56	2.74	55	8	51	8	97
58	2.84	57	8	53	8	101
60	2.94	59	8	55	8	105

* ¼" Plain Round Bars may be used in place of Deformed Bars

One in Head of Each Pile

One in Point of Each Pile

Pile lengths beyond those shown in table will have their concrete quantities adjusted to the length required.

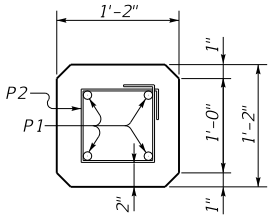

SECTION A-A

Table Showing Max. Length of Concrete Piles for Various Methods of Handing.

Pick-up Method	Max. Length for 4~#8	Max. Length for 4~#9
1~Point	41 ft.	43 ft.
2~Point	58 ft.	61 ft.
3~Point	87 ft.	92 ft.

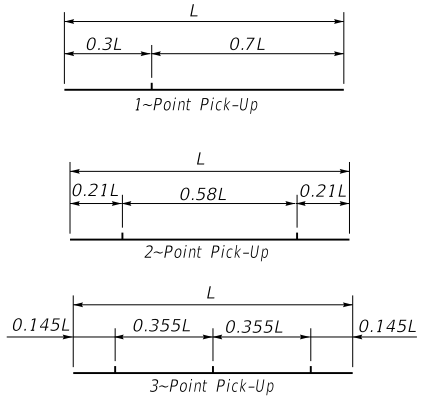

All lifting to be at pick-up points. Clearly mark all pick-up points.

GENERAL NOTES

SPECIFICATIONS: Kentucky Department of Highways Standard Specifications for Road and Bridge Construction, current edition.

CONCRETE: Use class "D" concrete throughout the piles.

REINFORCEMENT: Include the cost of reinforcement in the price bid per linear foot of piles. Concrete piles must not be damaged below cut-off elevation. Concrete and spiral bars above cut-off elevation are to be removed. Bars P1 and P2 are to remain and project into structure above. Field bend these bars if necessary to maintain clearance shown on Bridge details.

PILING: Minimum penetration of all piles is 20 feet unless solid rock is encountered.

TEST PILES: Drive test piles where designated on Bridge Plans to determine the length required. Locate all test piles so they will act as a part of the piling system.

PILE CUT-OFF: No payment will be made for pile cut-off.

SPIRAL REINFORCEMENT: May be plain or deformed and have a minimum yield strength of 40,000 psi and a minimum tensile strength of 70,000 psi.

KENTUCKY
DEPARTMENT OF HIGHWAYS

14" REINFORCED CONCRETE PILE

STANDARD DRAWING NO. BPC-002-08

SUBMITTED _____ DIRECTOR DIVISION OF STRUCTURAL DESIGN — DATE 02-26-20

APPROVED _____ STATE HIGHWAY ENGINEER — DATE 02-26-20

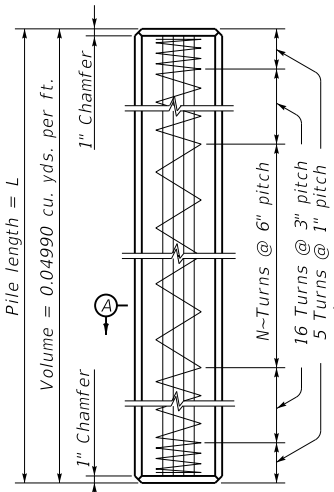

ELEVATION

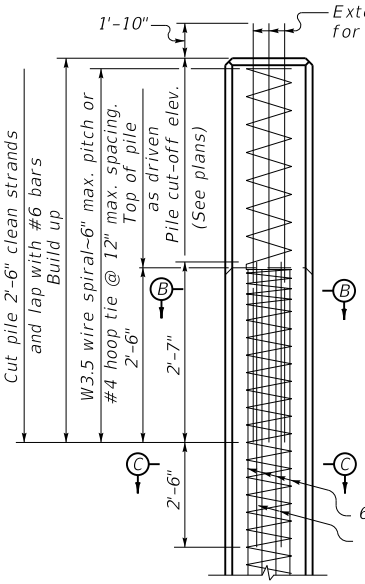

BUILD UP WITHOUT DRIVING

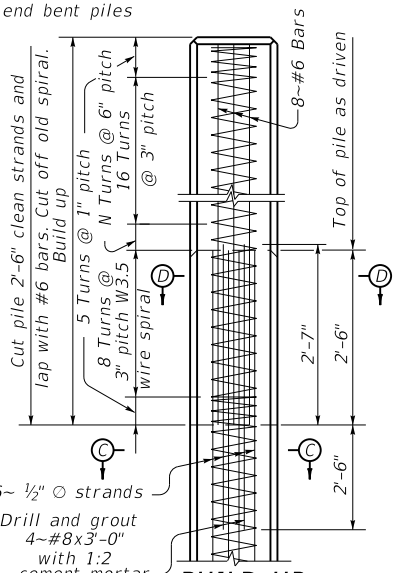

BUILD UP WITH DRIVING

GENERAL NOTES

SPECIFICATIONS: All references to the Standard Specifications are to the current edition of the Kentucky Department of Highways Standard Specifications for road and bridge construction.

CONCRETE: Use class "D" modified concrete in piles. Cylinder strength shall be 4000 psi at the time of release of the prestress strands and 5000 psi minimum at 28 days.

PRESTRESS STRANDS: Ensure prestressing reinforcement to be ½" inch nominal diameter uncoated seven-wire low lax strand conforming to the requirements of grade 270, AASHTO M203, current edition.

DESIGN STRESSES: Initial strand tension=30,982 pounds. f's=270,000 psi. (strands) f's=20,000 psi (mild reinforcement) f'c=5,000 psi. f'c at transfer=4000 psi. Spiral reinforcement wire W3.5 conforming to ASTM A82.

DRIVING PILES: Protect piles heads from direct hammer impact by using approved cushion blocks.

EDGES: Chamfer all edges one inch or rounded to approximately one inch radius.

BUILD-UP AND SPLICES: Build-ups and splices may be used, as detailed, if authorized by the Engineer.

FORMS: For forming the exterior of piles, the use of steel forms on concrete casting beds is required unless otherwise approved by the Engineer. Ensure concrete finish conforms to Subsection 601.03.18, Part A of the Specifications.

PAYMENT: Payment is to be made on the basis of the unit price bid per linear foot of piling. See Section 604.04 of the Specifications.

PILE TIP: Use pile tips when specified in the bridge plans and the pile is used as a point bearing pile. Include the cost of pile tip in the unit price bid per linear foot of piling.

Pick-up Method	Maximum Length
1~Point	54 ft.
2~Point	77 ft.
3~Point	111 ft.
4~Point	151 ft.

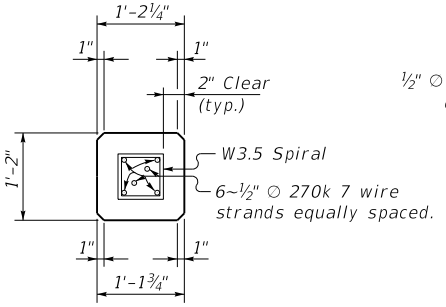

SECTION A-A

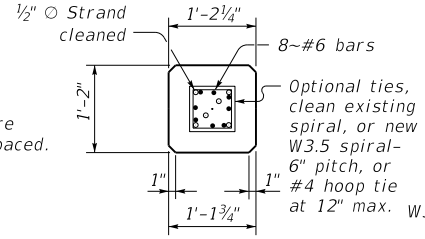

SECTION B-B

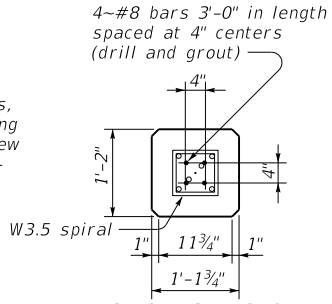

SECTION C-C

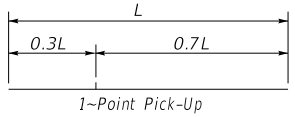

1~Point Pick-Up

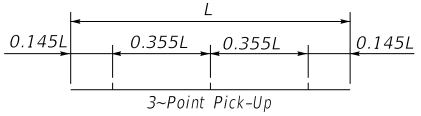

3~Point Pick-Up

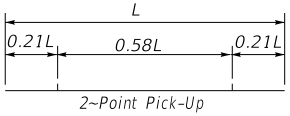

2~Point Pick-Up

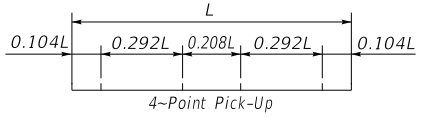

4~Point Pick-Up

All lifting to be at pick-up points. Clearly mark all pick-up points.

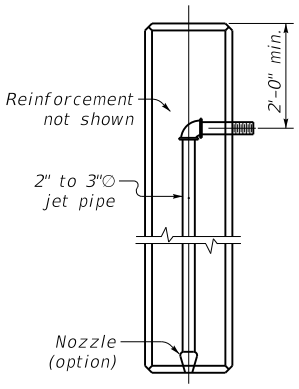

JET PIPE

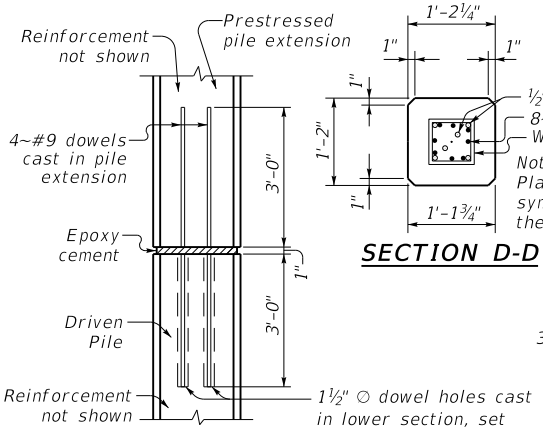

DOWELED SPLICE

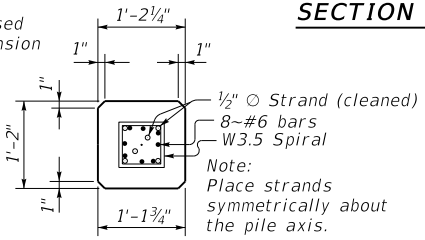

SECTION D-D

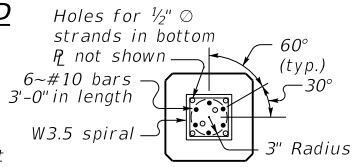

SECTION E-E

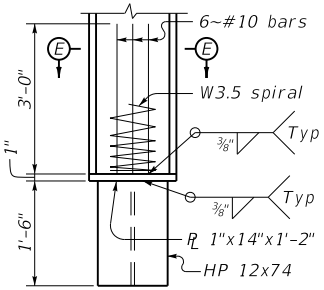

PILE TIP

KENTUCKY
DEPARTMENT OF HIGHWAYS

14" PRECAST PRESTRESSED CONCRETE PILE

STANDARD DRAWING NO. BPC-011-07

SUBMITTED _____ DIRECTOR DIVISION OF STRUCTURAL DESIGN — DATE 02-26-20

APPROVED _____ STATE HIGHWAY ENGINEER — DATE 02-26-20

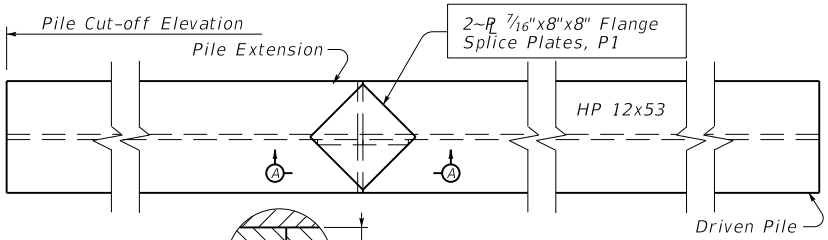

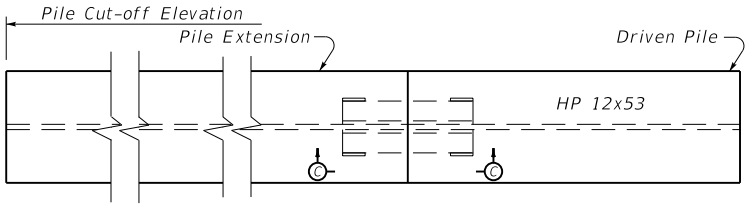

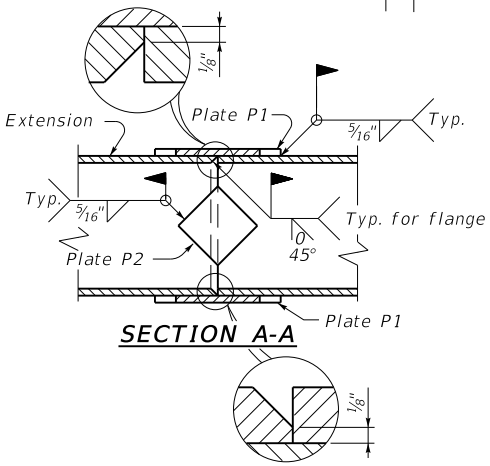

SECTION A-A

NOTE:
Bevel flanges and web of pile extension on 1:1 bevel as shown and employ conventional butt weld.

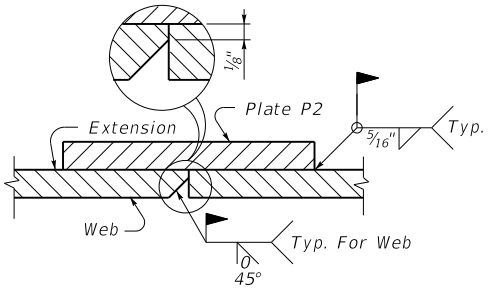

SECTION B-B

(Flange Not Shown)

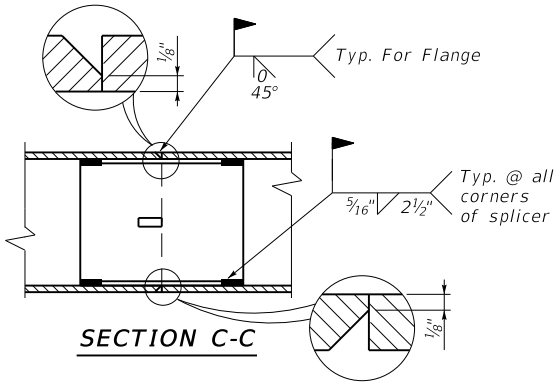

SECTION C-C

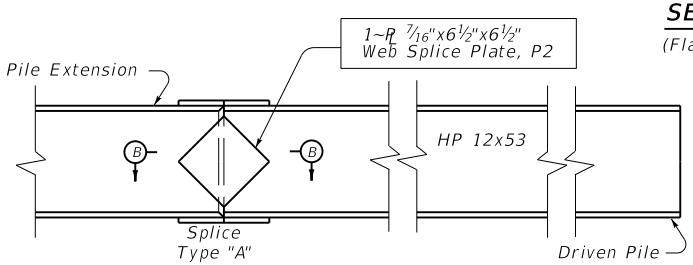

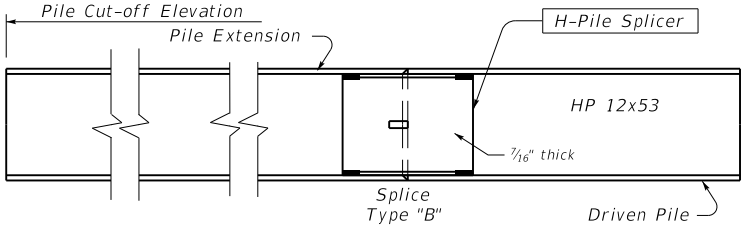

GENERAL NOTES

SPECIFICATIONS: Kentucky Department of Highways Standard Specifications for Road and Bridge Construction, current edition.

MATERIALS: Ensure structural steel piles conform to A.S.T.M. A709 Grade 50, current Specifications.

SPLICE PLATES: Ensure all pile splicing options conform to A.S.T.M. A709 Grade 50, current Specifications. In lieu of Splice Option "A" or Splice option "B", splice plates may be flame cut from HP12x53 sections. If flange sections are used, the portion cut at the web must be turned outside in order to obtain a tight fit. Grind the edges smooth prior to welding.

SPLICE OPTION "B": The pile splicer shown in the details for Splice Option "B" may be Champion H-Pile Splicer, Model HP 30000, or an approved equal. Ensure the splicer is in accordance to the manufacturer's recommendations and subject to the Engineer's approval.

FIELD WELDS: Ensure field welding material and workmanship for all piling conforms to the current Joint Specifications ANSI/AASHTO/AWS D1.5 Bridge Welding Code. Splice piles as indicated above only when driven below cut-off elevation.

PAYMENT: Payment for the piles in accordance with plans and specifications will be made at the contract price per linear foot.

PAINT: No painting is required on steel piles.

MILL TEST REPORTS: Furnish mill test reports in triplicate to the Department showing that all materials furnished conform to the Specifications.

KENTUCKY
DEPARTMENT OF HIGHWAYS

HP12x53
Steel Pile

STANDARD DRAWING NO. BPS-003-09

SUBMITTED _____ DIRECTOR DIVISION OF STRUCTURAL DESIGN — DATE 02-26-20

APPROVED _____ STATE HIGHWAY ENGINEER — DATE 02-26-20

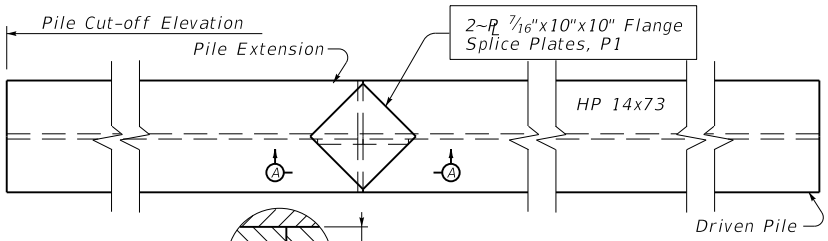

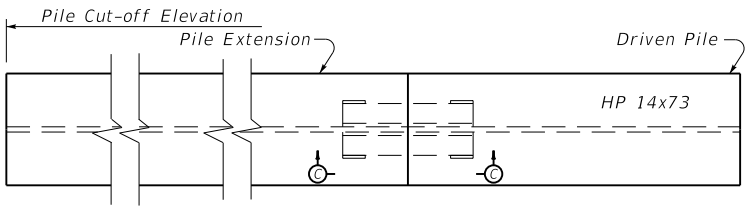

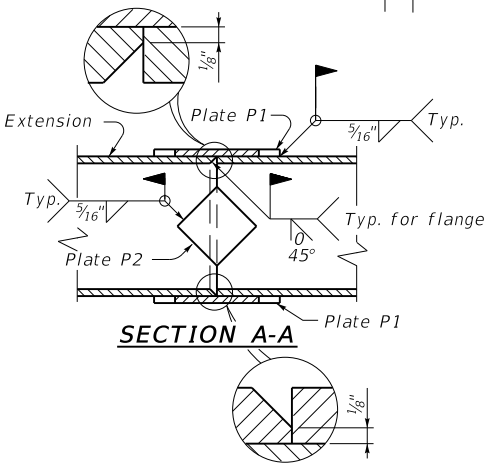

SECTION A-A

NOTE:
Bevel flanges and web of pile extension on 1:1 bevel as shown and employ conventional butt weld.

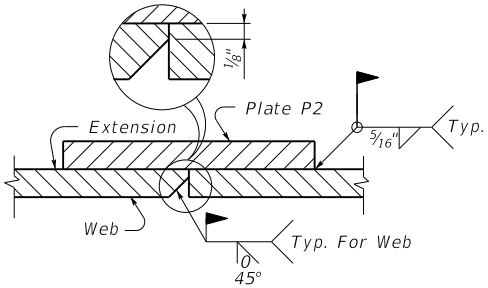

SECTION B-B

(Flange Not Shown)

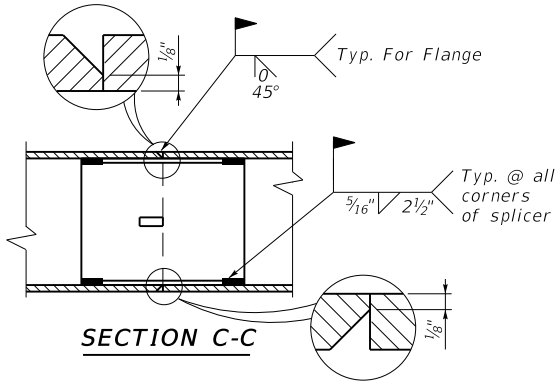

SECTION C-C

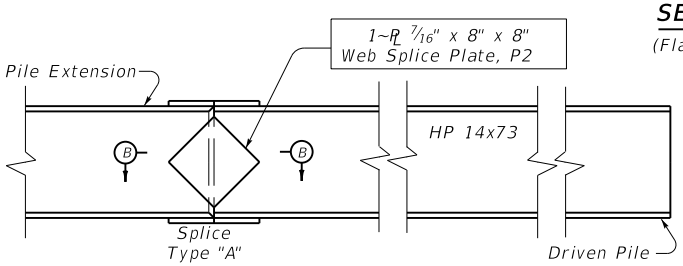

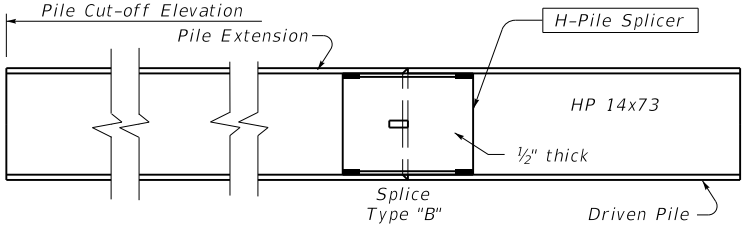

GENERAL NOTES

SPECIFICATIONS: Kentucky Department of Highways Standard Specifications for Road and Bridge Construction, current edition.

MATERIALS: Ensure structural steel piles conform to A.S.T.M. A709 Grade 50, current Specifications.

SPLICE PLATES: Ensure all pile splicing options conform to A.S.T.M. A709 Grade 50, current Specifications. In lieu of Splice Option "A" or Splice option "B", splice plates may be flame cut from HP14x73 sections. If flange sections are used, the portion cut at the web must be turned outside in order to obtain a tight fit. Grind the edges smooth prior to welding.

SPLICE OPTION "B": The pile splicer shown in the details for Splice Option "B" may be Champion H-Pile Splicer, Model HP 30000, or an approved equal. Ensure the splicer is in accordance to the manufacturer's recommendations and subject to the Engineer's approval.

FIELD WELDS: Ensure field welding material and workmanship for all piling conforms to the current Joint Specifications ANSI/AASHTO/AWS D1.5 Bridge Welding Code. Splice piles as indicated above only when driven below cut-off elevation.

PAYMENT: Payment for the piles in accordance with plans and specifications will be made at the contract price per linear foot.

PAINT: No painting is required on steel piles.

MILL TEST REPORTS: Furnish mill test reports in triplicate to the Department showing that all materials furnished conform to the Specifications.

KENTUCKY
DEPARTMENT OF HIGHWAYS

HP14x73
Steel Pile

STANDARD DRAWING NO. BPS-009-08

SUBMITTED _____ 02-26-20
DIRECTOR DIVISION OF STRUCTURAL DESIGN — DATE

APPROVED _____ 02-26-20
STATE HIGHWAY ENGINEER — DATE

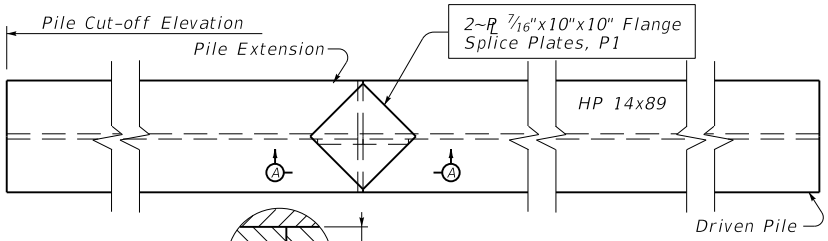

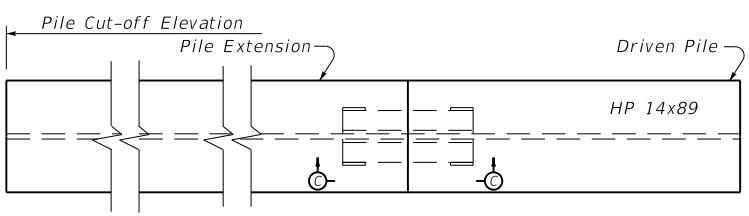

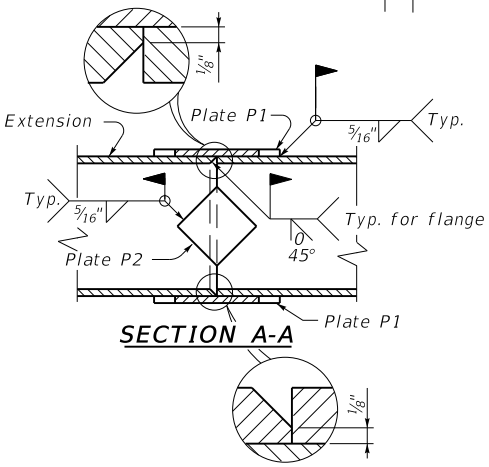

SECTION A-A

NOTE:
Bevel flanges and web of pile extension on 1:1 bevel as shown and employ conventional butt weld.

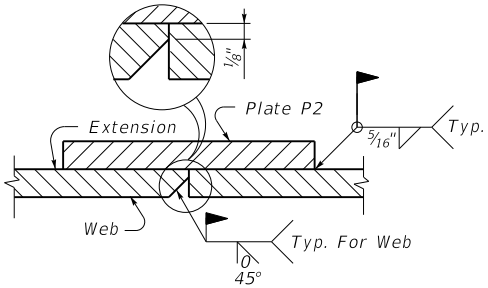

SECTION B-B

(Flange Not Shown)

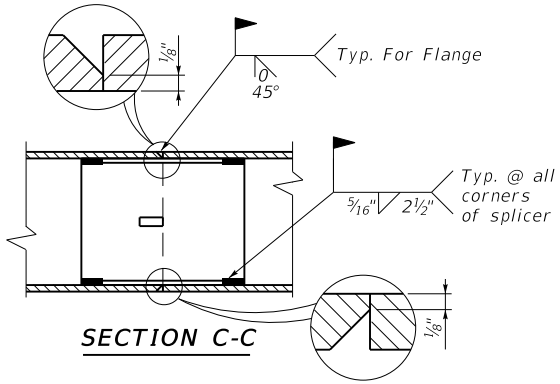

SECTION C-C

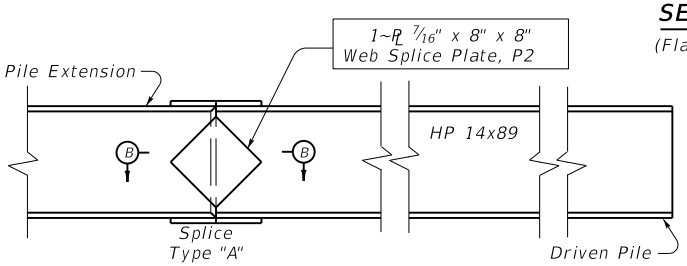

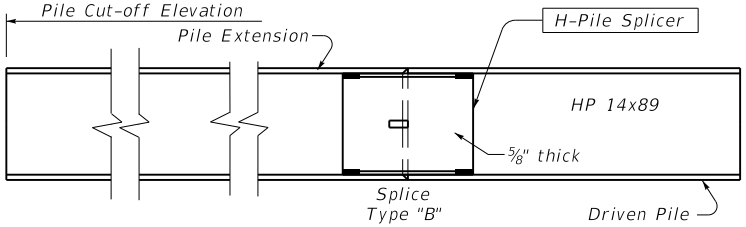

GENERAL NOTES

SPECIFICATIONS: Kentucky Department of Highways Standard Specifications for Road and Bridge Construction, current edition.

MATERIALS: Ensure structural steel piles conform to A.S.T.M. A709 Grade 50, current Specifications.

SPLICE PLATES: Ensure all pile splicing options conform to A.S.T.M. A709 Grade 50, current Specifications. In lieu of Splice Option "A" or Splice option "B", splice plates may be flame cut from HP14x89 sections. If flange sections are used, the portion cut at the web must be turned outside in order to obtain a tight fit. Grind the edges smooth prior to welding.

SPLICE OPTION "B": The pile splicer shown in the details for Splice Option "B" may be Champion H-Pile Splicer, Model HP 30000, or an approved equal. Ensure the splicer is in accordance to the manufacturer's recommendations and subject to the Engineer's approval.

FIELD WELDS: Ensure field welding material and workmanship for all piling conforms to the current Joint Specifications ANSI/AASHTO/AWS D1.5 Bridge Welding Code. Splice piles as indicated above only when driven below cut-off elevation.

PAYMENT: Payment for the piles in accordance with plans and specifications will be made at the contract price per linear foot.

PAINT: No painting is required on steel piles.

MILL TEST REPORTS: Furnish mill test reports in triplicate to the Department showing that all materials furnished conform to the Specifications.

KENTUCKY
DEPARTMENT OF HIGHWAYS

HP14x89
Steel Pile

STANDARD DRAWING NO. BPS-011-04

SUBMITTED _____ DIRECTOR DIVISION OF STRUCTURAL DESIGN — DATE 02-26-20

APPROVED _____ STATE HIGHWAY ENGINEER — DATE 02-26-20

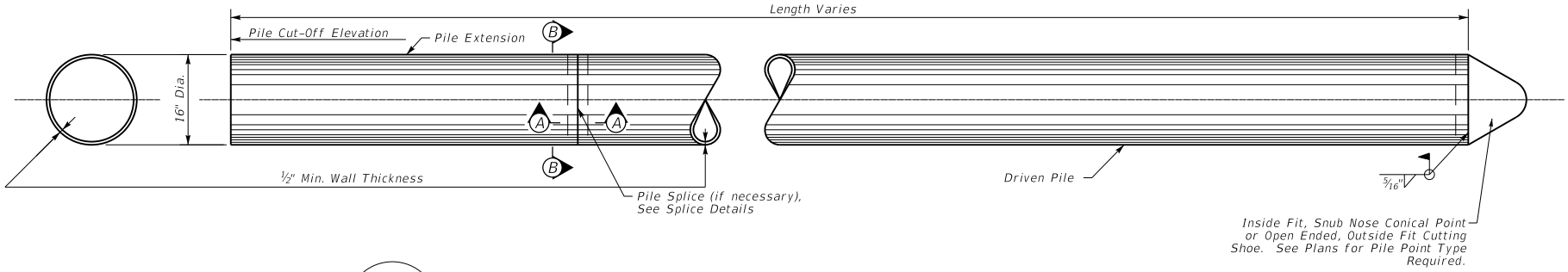

Note: Bevel pile extension on 1:1 bevel as shown and employ conventional butt weld.

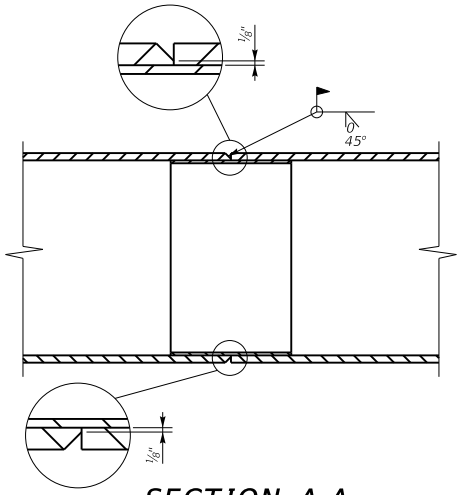

SECTION A-A

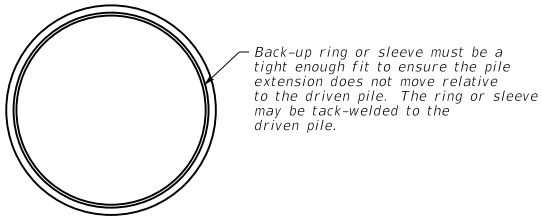

SECTION B-B

GENERAL NOTES

SPECIFICATIONS: Kentucky Department of Highways Standard Specifications for Road and Bridge Construction, current edition.

PIPE PILE MATERIAL: The steel for the pipe piling shall conform to the requirements of ASTM A252, Grade 3 (minimum yield strength of 45 ksi), for welded or seamless steel pipe piles.

PIPE FILL: The pipe piles shall be filled with sand or gravel to the bottom of cap or footing elevation unless the plans specify the pipes to be filled with concrete. If the plans specify that the pipes shall be filled with concrete, fill pipes with Class A concrete at the same time the footing or pile cap is poured. The cost of this material and labor is incidental to the price per linear foot pipe pile 16".

PAINT: No paint shall be required on the steel pile shell.

PILE POINTS: Inside Fit, Snub Nose Conical Points and Open Ended, Outside Fit Cutting Shoes, with a minimum thickness of 1", shall conform to ASTM A148 or AASHTO M103 Grade 65/35 minimum. Pile points shall be attached using a minimum 5/16" fillet weld around the circumference.

SPLICES: Splices shall be welded as detailed on this sheet, employing the use of a back-up ring or sleeve to align the pile sections. When splicing is necessary, use a length that will reasonably assure that capacity will be attained without additional splicing.

FIELD WELDS: Ensure field welding material and workmanship for all piling conforms to the current Joint Specifications ANSI/AASHTO/AWS D1.5 Bridge Welding Code. Splice piles as indicated above only when driven below cut-off elevation.

PAYMENT: Payment for the piles in accordance with the plans and specifications will be made at the contract price per linear foot.

PIPE PILE THICKNESS: Contractor shall select wall thickness sufficient to withstand driving without injury and resist harmful distortion and/or buckling due to soil pressures after driving. Selected wall thickness shall not be less than that indicated above.

MILL TEST REPORTS: Furnish notarized mill test reports in triplicate to the Department showing that all materials furnished conform to the Specifications.

KENTUCKY
DEPARTMENT OF HIGHWAYS

PIPE PILE
16 INCH

STANDARD DRAWING NO. BPS-012

SUBMITTED _____ 02-26-20
DIRECTOR DIVISION OF STRUCTURAL DESIGN — DATE

APPROVED _____ 02-26-20
STATE HIGHWAY ENGINEER — DATE

0° SKEW VARIABLE BRIDGE WIDTH 2:1 FILL SLOPES
45° SKEW FROM ROADWAY ON WINGS

ABUTMENT SKEW CORRECTION FACTOR (SCF) = 1.000

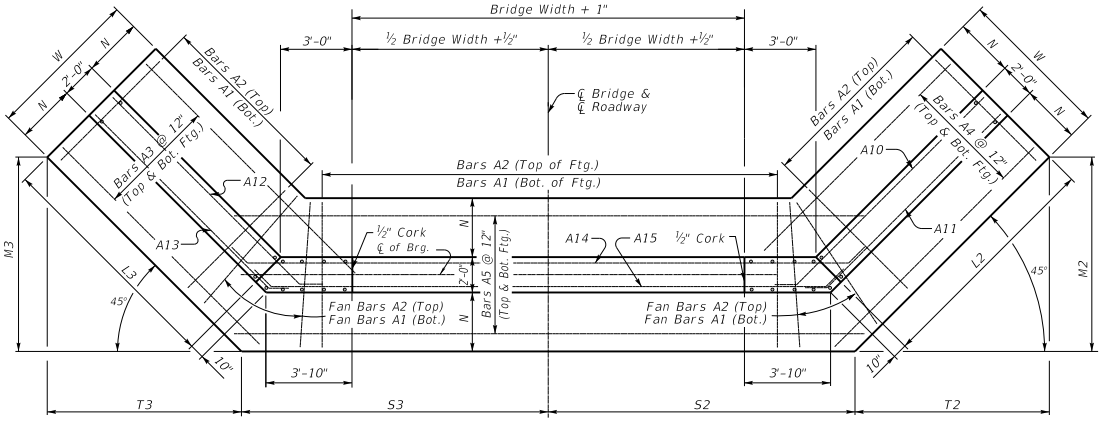

PLAN

Note: Trim A16 & A17 bars if necessary

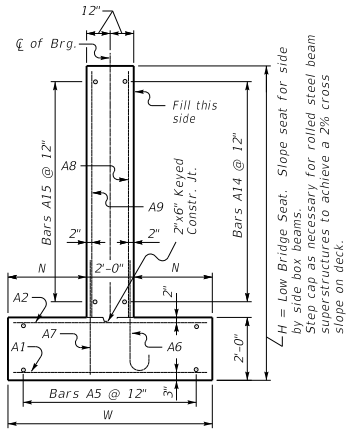

WALL SECTION

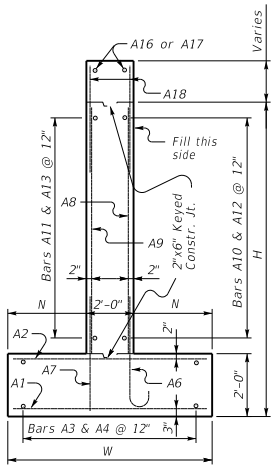

WING SECTION

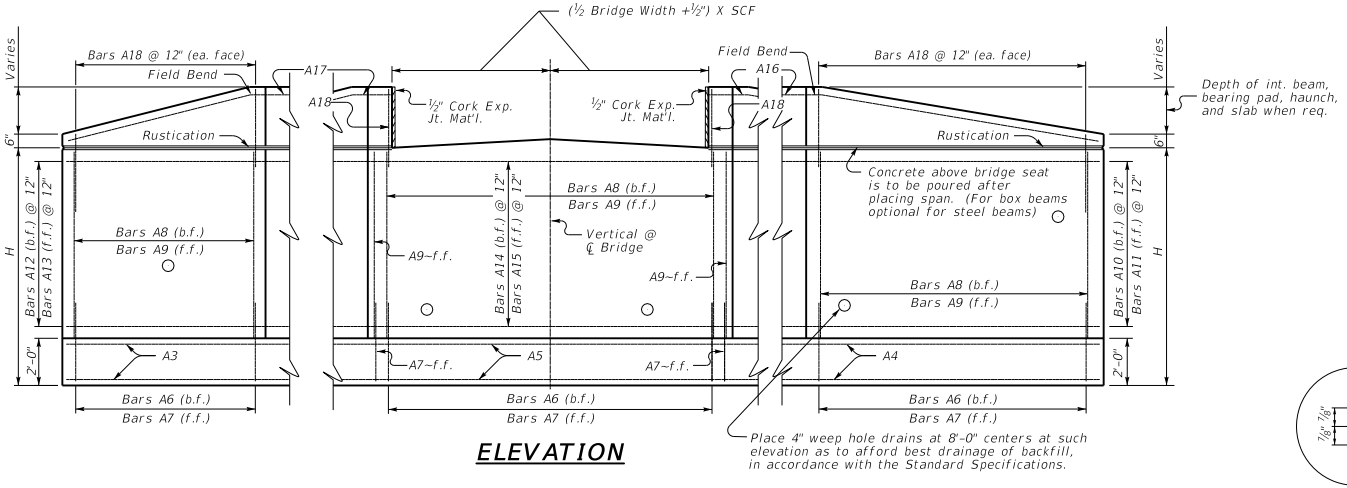

ELEVATION

PLAN OF SUPERSTRUCTURE SLAB

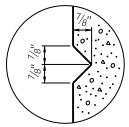

RUSTICATION GROOVE

KENTUCKY
DEPARTMENT OF HIGHWAYS

0° SKEW VARIABLE WIDTH ABUTMENT 50% SKEWED WINGS

STANDARD DRAWING NO. BSA-001

SUBMITTED _____ DIRECTOR DIVISION OF STRUCTURAL DESIGN — DATE 02-26-20

APPROVED _____ STATE HIGHWAY ENGINEER — DATE 02-26-20

0° SKEW VARIABLE BRIDGE WIDTH 2:1 FILL SLOPES
45° SKEW FROM ROADWAY ON WINGS

Bill of Reinforcement

MARK	A1					A2					A3		A4		A5					A6										A7					A8					A9					A10		A11		A12		A13		A14					A15					A16		A17		A18	
TYPE	Str.					Str.					Str.		Str.		Str.					4										Str.					Str.					Str.					8		8		8		8		7					7					Str.		Str.		Str.	
SIZE											#5		#5		#5																								#5																													
H	No.	Size	Length ft.	Length in.	Spacing	No.	Size	Length ft.	Length in.	Spacing	No.	Length ft.	No.	Length in.	No.	Length ft.	Length in.	+Lb=	Length ft.	Length in.	No.	Size	Length ft.	Length in.	Spacing	A ft.	A in.	B ft.	B in.	C ft.	C in.	D ft.	D in.	No.	Size	Length ft.	Length in.	Spacing	No.	Size	Length ft.	Length in.	Spacing	No.	Length ft.	Length in.	No.	Length ft.	Length in.	No.	Length ft.	Length in.	No.	Length ft.	Length in.	+Lb=	Length ft.	Length in.	No.	Length ft.	Length in.	+Lb=	Length ft.	Length in.	No.	Length ft.	No.	Length ft.	No.	Length ft.
15-16	60+Nb=	10	11	8	12	60+Nb=	7	11	8	12	24	24	0	24	24	0	24	12	4	+Lb=		49+Nb=	9	9	11	12	8	⅛	1	10	0	11¾	8	6	52+Nb=	5	4	11	12	49+Nb=	6	12	10	12	52+Nb=	12	10	12	14	24	0	14	22	7	14	24	0	14	22	7	14	12	5	+Lb=		14	9	6	+Lb=		2	25	7	2	25	7	104	5	9
13-14	53+Nb=	9	10	8	12	53+Nb=	7	10	8	12	22	20	9	22	20	9	22	11	11	+Lb=		43+Nb=	8	8	3	12	6	11	1	3	0	8	7	3	46+Nb=	5	4	11	12	43+Nb=	6	10	10	12	46+Nb=	10	10	12	12	21	0	12	19	7	12	21	0	12	19	7	12	12	5	+Lb=		12	9	6	+Lb=		2	22	7	2	22	7	92	5	9
11-12	49+Nb=	8	9	8	12	49+Nb=	6	9	8	12	20	18	7	20	18	7	20	11	6	+Lb=		39+Nb=	7	7	1	12	5	10½	1	2	0	7	6	2	42+Nb=	5	4	11	12	39+Nb=	5	8	10	12	42+Nb=	8	10	12	10	19	0	10	17	7	10	19	0	10	17	7	10	12	5	+Lb=		10	9	6	+Lb=		2	20	7	2	20	7	84	5	9
9-10	44+Nb=	7	8	8	12	44+Nb=	5	8	8	12	18	16	4	18	16	4	18	11	1	+Lb=		35+Nb=	6	6	1	12	5	1	1	0	0	6	5	4	38+Nb=	5	4	11	12	35+Nb=	5	6	10	12	38+Nb=	6	10	12	8	17	0	8	15	7	8	17	0	8	15	7	8	12	6	+Lb=		8	9	6	+Lb=		2	18	7	2	18	7	76	5	9
7-8	34+Nb=	6	7	2	12	34+Nb=	5	7	2	12	16	11	9	16	11	9	16	10	0	+Lb=		27+Nb=	5	5	7	12	4	8½	0	10	0	5	4	11	30+Nb=	5	4	11	12	27+Nb=	5	4	10	12	30+Nb=	4	10	12	6	13	0	6	11	7	6	13	0	6	11	7	6	12	6	+Lb=		6	9	6	+Lb=		2	14	7	2	14	7	60	5	9
5-6	30+Nb=	5	6	2	12	30+Nb=	5	6	2	12	14	9	7	14	9	7	14	9	7	+Lb=		23+Nb=	5	5	7	12	4	8½	0	10	0	5	4	11	26+Nb=	5	4	11	12	23+Nb=	5	2	10	12	26+Nb=	2	10	12	4	11	0	4	9	7	4	11	0	4	9	7	4	12	6	+Lb=		4	9	6	+Lb=		2	12	7	2	12	7	52	5	9

Table of Dimensions

H	W Length ft.	W Length in.	N Length ft.	N Length in.	M2 Length ft.	M2 Length in.	M3 Length ft.	M3 Length in.	T2 Length ft.	T2 Length in.	T3 Length ft.	T3 Length in.	L2 Length ft.	L3 Length ft.	S2 Length ft.	S2 Length in.	S2 + Lb/2 =	S2 Length ft.	S2 Length in.	S3 Length ft.	S3 Length in.	S3 + Lb/2 =	S3 Length ft.	S3 Length in.
15-16	12	0	5	0	16	10¾	16	10¾	16	10¾	16	10¾	21	21	5	11¼	+0.5Lb=			5	11¼	+0.5Lb=		
13-14	11	0	4	6	14	7⅝	14	7⅝	14	7⅝	14	7⅝	18	18	5	8¾	+0.5Lb=			5	8¾	+0.5Lb=		
11-12	10	0	4	0	13	⅞	13	⅞	13	⅞	13	⅞	16	16	5	6⅜	+0.5Lb=			5	6⅜	+0.5Lb=		
9-10	9	0	3	6	11	6⅛	11	6⅛	11	6⅛	11	6⅛	14	14	5	3⅞	+0.5Lb=			5	3⅞	+0.5Lb=		
7-8	7	6	2	9	8	5½	8	5½	8	5½	8	5½	10	10	5	⅛	+0.5Lb=			5	⅛	+0.5Lb=		
5-6	6	6	2	3	6	10⅞	6	10⅞	6	10⅞	6	10⅞	8	8	4	9⅝	+0.5Lb=			4	9⅝	+0.5Lb=		

Reinforcement Details

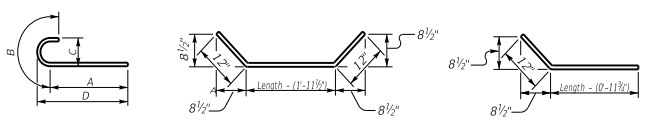

*Concrete quantities computed using 21" beam depth on ½" pad & Variable Bridge Width

Quantities

H	Concrete* C.Y.	Reinforcement LBS.
5	19.71+(0.71xLb) =	1851+(52.8xLb) =
6	21.47+(0.78xLb) =	1851+(52.8xLb) =
7	29.09+(0.93xLb) =	2651+(68.7xLb) =
8	31.15+(1.01xLb) =	2651+(68.7xLb) =
9	46.58+(1.19xLb) =	4307+(91xLb) =
10	49.23+(1.27xLb) =	4307+(91xLb) =
11	60.56+(1.41xLb) =	6117+(120.4xLb) =
12	63.5+(1.49xLb) =	6117+(120.4xLb) =
13	76.32+(1.64xLb) =	8656+(161xLb) =
14	79.56+(1.71xLb) =	8656+(161xLb) =
15	97.76+(1.86xLb) =	11857+(198.6xLb) =
16	101.44+(1.93xLb) =	11857+(198.6xLb) =

ABUTMENT SKEW CORRECTION FACTOR (SCF) = 1.0

NUMBER OF BARS TO ADD (Nb) = Bridge Width (feet) x SCF (round up to nearest whole number)

LENGTH OF ABUTMENT TO ADD (Lb) = Bridge Width (feet) x SCF (convert decimal to architectural)

GENERAL NOTES

SPECIFICATIONS: Construct abutments according to the current edition of the Kentucky Department of Highways Standard Specifications for Road and Bridge Construction. Abutments are designed for side by side box beams as detailed in Standard Drawings BDP-001 through BDP-012, current edition. Dimensions may be adjusted to allow for any out to out bridge width. Abutments are also adequate for Std. Dwg. slabs or steel beam superstructures.

FOUNDATION PRESSURE: Construct abutment footings on solid rock bearing material that can support a pressure of 8000 psf service or 10,800 psf strength factored as recommended by a geotechnical engineer.

WING LENGTHS: Calculated assuming 21" superstructure depth and stream bank elevation at top of footing.

FOOTING ELEVATION: Construct bottom of footing below the anticipated scour elevation. (This typically entails embedding the footings 1'-0" to 2'-0" into rock and pouring concrete directly against cut rock faces. as recommended by geotechnical engineer.)

NOTE: Distances to bars shown are clear dimensions unless otherwise noted.

MATERIAL SPECIFICATIONS:
Concrete, Class "A" = 3500 psi
Steel Reinforcement = Grade 60

PLAN OF SUPERSTRUCTURE SLAB

KENTUCKY
DEPARTMENT OF HIGHWAYS

0° SKEW VARIABLE
WIDTH ABUTMENT
50% SKEWED WINGS

STANDARD DRAWING NO. BSA-002

SUBMITTED _____ DIRECTOR DIVISION OF STRUCTURAL DESIGN — DATE 02-26-20

APPROVED _____ STATE HIGHWAY ENGINEER — DATE 02-26-20

5° SKEW VARIABLE BRIDGE WIDTH 2:1 FILL SLOPES WINGS SKEWED 50% FROM ROADWAY TO BREASTWALL

ABUTMENT SKEW CORRECTION FCTOR (SCF) = 1.004

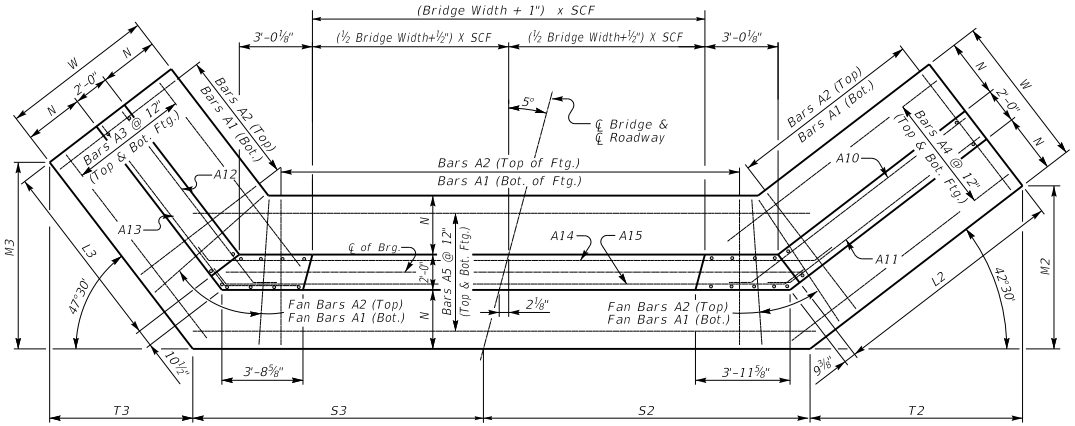

(Left Skew as shown;right skew opp. hand)

PLAN

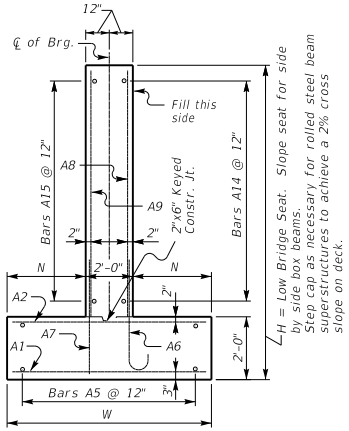

WALL SECTION

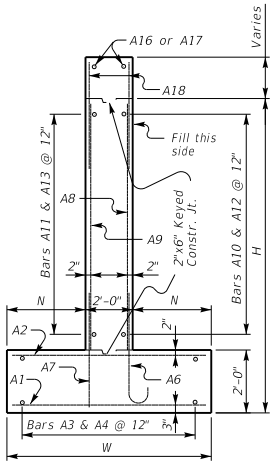

WING SECTION

Note: Trim A16 & A17 bars if necessary

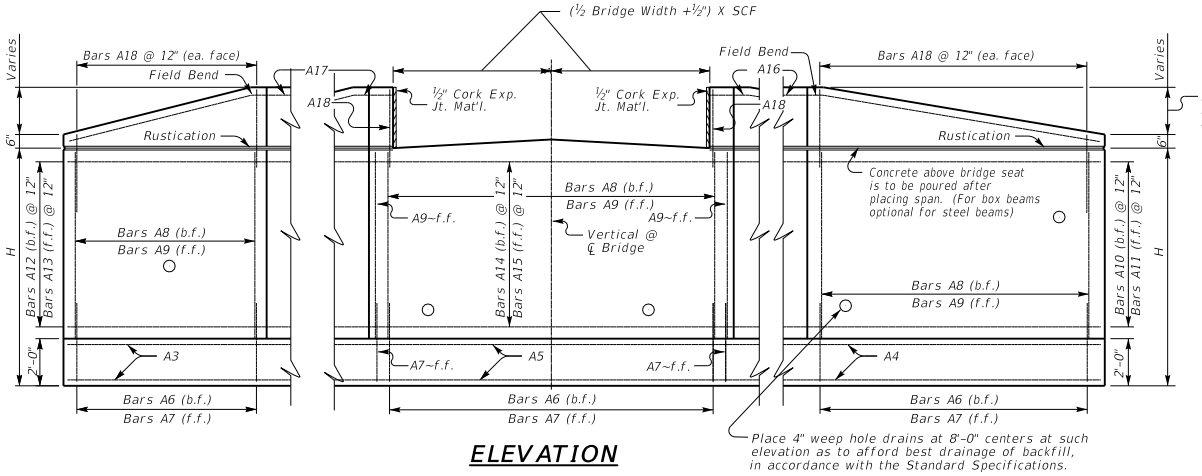

ELEVATION

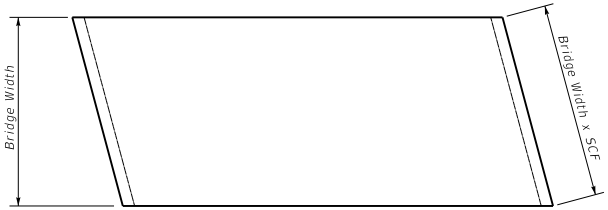

PLAN OF SUPERSTRUCTURE SLAB

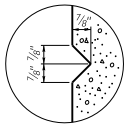

RUSTICATION GROOVE

KENTUCKY
DEPARTMENT OF HIGHWAYS

5° SKEW VARIABLE
WIDTH ABUTMENT
50% SKEWED WINGS

STANDARD DRAWING NO. BSA-003

SUBMITTED _____ 02-26-20
DIRECTOR DIVISION OF STRUCTURAL DESIGN — DATE

APPROVED _____ 02-26-20
STATE HIGHWAY ENGINEER — DATE

5° SKEW VARIABLE BRIDGE WIDTH 2:1 FILL SLOPES WINGS SKEWED 50% FROM ROADWAY TO BREASTWALL

Bill of Reinforcement

MARK	A1					A2					A3		A4		A5					A6										A7					A8					A9					A10		A11		A12		A13		A14					A15					A16		A17		A18	
TYPE	Str.					Str.					Str.		Str.		Str.					4										Str.					Str.					Str.					8		8		8		8		7					7					Str.		Str.		Str.	
SIZE											#5		#5		#5																								#5					#5		#5		#5		#5		#5					#5					#5		#5		#5	
H	No.	Size	Length ft.	Length in.	Spacing	No.	Size	Length ft.	Length in.	Spacing	No.	Length ft.	Length in.	No.	Length ft.	Length in.	No.	Length ft.	Length in.	No.	Size	Length ft.	Length in.	Spacing	A ft.	A in.	B ft.	B in.	C ft.	C in.	D ft.	D in.	No.	Size	Length ft.	Length in.	Spacing	No.	Size	Length ft.	Length in.	Spacing	No.	Length ft.	Length in.	No.	Length ft.	Length in.	No.	Length ft.	Length in.	No.	Length ft.	Length in.	= +Lb	Length ft.	Length in.	No.	Length ft.	Length in.	= +Lb	Length ft.	Length in.	No.	Length ft.	No.	Length ft.	No.	Length ft.
15-16	60+Nb=	10	11	8	12	60+Nb=	7	11	8	12	24	23	1	24	24	10	24	12	4	+Lb=			49+Nb=	9	9	11	12	8	1/8	1	10	0	11 3/4	8	6	52+Nb=	5	4	11	12	49+Nb=	6	12	10	12	52+Nb=	12	10	12	14	25	1	14	23	7	14	22	11	14	21	8	14	12	5	+Lb=			14	9	6	+Lb=			2	26	8	2	24	6	104	5	9
13-14	53+Nb=	9	10	8	12	53+Nb=	7	10	8	12	22	19	11	22	21	8	22	11	11	+Lb=			43+Nb=	8	8	3	12	6	11	1	3	0	8	7	3	46+Nb=	5	4	11	12	43+Nb=	6	10	10	12	46+Nb=	10	10	12	12	22	1	12	20	7	12	19	11	12	18	8	12	12	6	+Lb=			12	9	6	+Lb=			2	23	8	2	21	6	92	5	9
11-12	48+Nb=	8	9	8	12	48+Nb=	6	9	8	12	20	17	8	20	18	5	20	11	6	+Lb=			38+Nb=	7	7	1	12	5	10 1/2	1	2	0	7	6	2	41+Nb=	5	4	11	12	38+Nb=	5	8	10	12	41+Nb=	8	10	12	10	19	1	10	17	7	10	17	11	10	16	8	10	12	6	+Lb=			10	9	6	+Lb=			2	20	8	2	19	6	82	5	9
9-10	43+Nb=	7	8	8	12	43+Nb=	5	8	8	12	18	15	6	18	16	3	18	11	1	+Lb=			34+Nb=	6	6	1	12	5	1	1	0	0	6	5	4	37+Nb=	5	4	11	12	34+Nb=	5	6	10	12	37+Nb=	6	10	12	8	17	1	8	15	7	8	15	11	8	14	8	8	12	6	+Lb=			8	9	6	+Lb=			2	18	8	2	17	6	74	5	9
7-8	34+Nb=	6	7	2	12	34+Nb=	5	7	2	12	16	10	11	16	11	8	16	10	0	+Lb=			26+Nb=	5	5	7	12	4	8 1/2	0	10	0	5	4	11	29+Nb=	5	4	11	12	26+Nb=	5	4	10	12	29+Nb=	4	10	12	6	13	2	6	11	7	6	12	0	6	10	8	6	12	6	+Lb=			6	9	6	+Lb=			2	14	8	2	13	6	58	5	9
5-6	29+Nb=	5	6	2	12	29+Nb=	5	6	2	12	14	8	8	14	9	6	14	9	7	+Lb=			22+Nb=	5	5	7	12	4	8 1/2	0	10	0	5	4	11	25+Nb=	5	4	11	12	22+Nb=	5	2	10	12	25+Nb=	2	10	12	4	11	2	4	9	7	4	10	0	4	8	8	4	12	6	+Lb=			4	9	6	+Lb=			2	12	8	2	11	6	50	5	9

Table of Dimensions

H	W Length ft.	W Length in.	N Length ft.	N Length in.	M2 Length ft.	M2 Length in.	M3 Length ft.	M3 Length in.	T2 Length ft.	T2 Length in.	T3 Length ft.	T3 Length ft.	L2 Length ft.	L3 Length ft.	S2 Length ft.	S2 Length in.	+ Lb/2 =	S2 Length ft.	S2 Length in.	S3 Length ft.	S3 Length in.	+ Lb/2 =	S3 Length ft.	S3 Length in.
15-16	12	0	5	0	16	8 3/8	17	1/4	18	2 3/4	15	7 1/8	22	20	6	4 7/8	+0.5Lb=			5	6 1/4	+0.5Lb=		
13-14	11	0	4	6	14	6 1/2	14	7 3/4	15	10 1/2	13	5	19	17	6	1 3/4	+0.5Lb=			5	4 1/8	+0.5Lb=		
11-12	10	0	4	0	12	4 5/8	13	1/8	13	6 1/4	11	11	16	15	5	11	+0.5Lb=			5	2	+0.5Lb=		
9-10	9	0	3	6	10	10 7/8	11	4 3/8	11	10 3/4	10	5	14	13	5	8 1/8	+0.5Lb=			4	11 7/8	+0.5Lb=		
7-8	7	6	2	9	8	0	8	2 1/8	8	8 7/8	7	5 7/8	10	9	5	3 3/4	+0.5Lb=			4	8 3/4	+0.5Lb=		
5-6	6	6	2	3	6	6 1/4	6	6 1/2	7	1 3/8	5	11 7/8	8	7	5	7/8	+0.5Lb=			4	6 5/8	+0.5Lb=		

Reinforcement Details

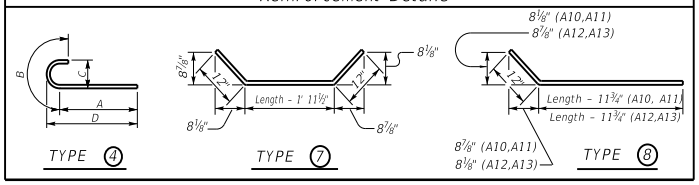

*Concrete quantities computed using 21" beam depth on 1/2" pad & Variable Bridge Width

Quantities

H	Concrete* C.Y.	Reinforcement LBS.
5	18.92+(0.71xLb) =	1785+(52.8xLb) =
6	20.61+(0.78xLb) =	1785+(52.8xLb) =
7	28.09+(0.93xLb) =	2590+(68.7xLb) =
8	30.07+(1.01xLb) =	2590+(68.7xLb) =
9	45.33+(1.19xLb) =	4204+(91xLb) =
10	47.9+(1.27xLb) =	4204+(91xLb) =
11	59.09+(1.41xLb) =	5983+(120.4xLb) =
12	61.96+(1.49xLb) =	5983+(120.4xLb) =
13	76.36+(1.64xLb) =	8660+(161xLb) =
14	79.6+(1.71xLb) =	8660+(161xLb) =
15	97.81+(1.86xLb) =	11856+(198.6xLb) =
16	101.5+(1.93xLb) =	11856+(198.6xLb) =

ABUTMENT SKEW CORRECTION FACTOR (SCF) = 1.004

NUMBER OF BARS TO ADD (Nb) = Bridge Width (feet) x SCF (round up to nearest whole number)

LENGTH OF ABUTMENT TO ADD (Lb) = Bridge Width (feet) x SCF (convert decimal to architectural)

GENERAL NOTES

SPECIFICATIONS: Construct abutments according to the current edition of the Kentucky Department of Highways Standard Specifications for Road and Bridge Construction. Abutments are designed for side by side box beams as detailed in Standard Drawings BDP-001 through BDP-012, current edition. Dimensions may be adjusted to allow for any out to out bridge width. Abutments are also adequate for Std. Dwg. slabs or steel beam superstructures.

FOUNDATION PRESSURE: Construct abutment footings on solid rock bearing material that can support a pressure of 8000 psf service or 10,800 psf strength factored as recommended by a geotechnical engineer.

WING LENGTHS: Calculated assuming 21" superstructure depth and stream bank elevation at top of footing.

FOOTING ELEVATION: Construct bottom of footing below the anticipated scour elevation. (This typically entails embedding the footings 1'-0" to 2'-0" into rock and pouring concrete directly against cut rock faces. as recommended by geotechnical engineer.)

NOTE: Distances to bars shown are clear dimensions unless otherwise noted.

MATERIAL SPECIFICATIONS:
Concrete, Class "A" = 3500 psi
Steel Reinforcement = Grade 60

PLAN OF SUPERSTRUCTURE SLAB

KENTUCKY
DEPARTMENT OF HIGHWAYS

5° SKEW VARIABLE
WIDTH ABUTMENT
50% SKEWED WINGS

STANDARD DRAWING NO. BSA-004

SUBMITTED _____ DIRECTOR DIVISION OF STRUCTURAL DESIGN — DATE 02-26-20

APPROVED _____ STATE HIGHWAY ENGINEER — DATE 02-26-20

10° SKEW VARIABLE BRIDGE WIDTH 2:1 FILL SLOPES WINGS SKEWED 50% FROM ROADWAY TO BREASTWALL

ABUTMENT SKEW CORRECTION FACTOR (SCF) = 1.015

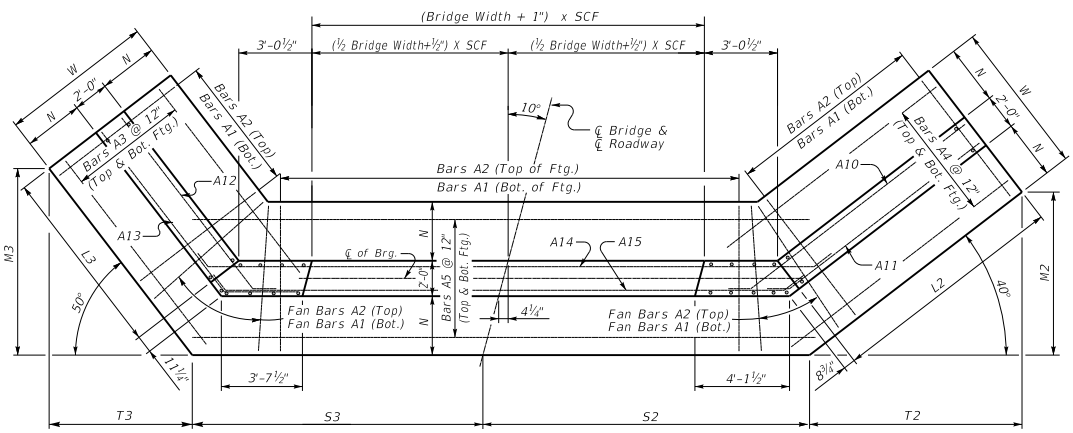

(Left Skew as shown;right skew opp. hand)

PLAN

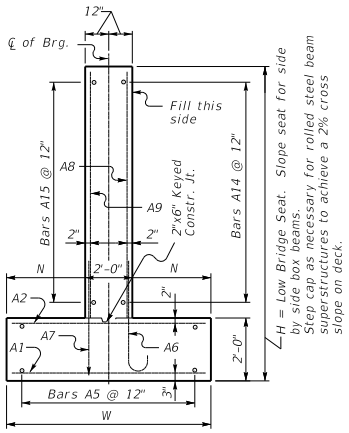

WALL SECTION

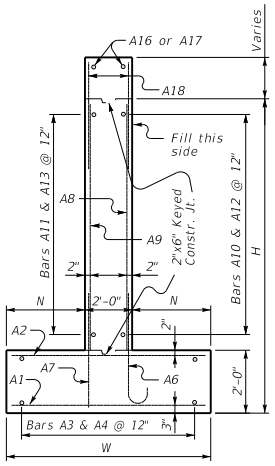

WING SECTION

Note: Trim A16 & A17 bars if necessary

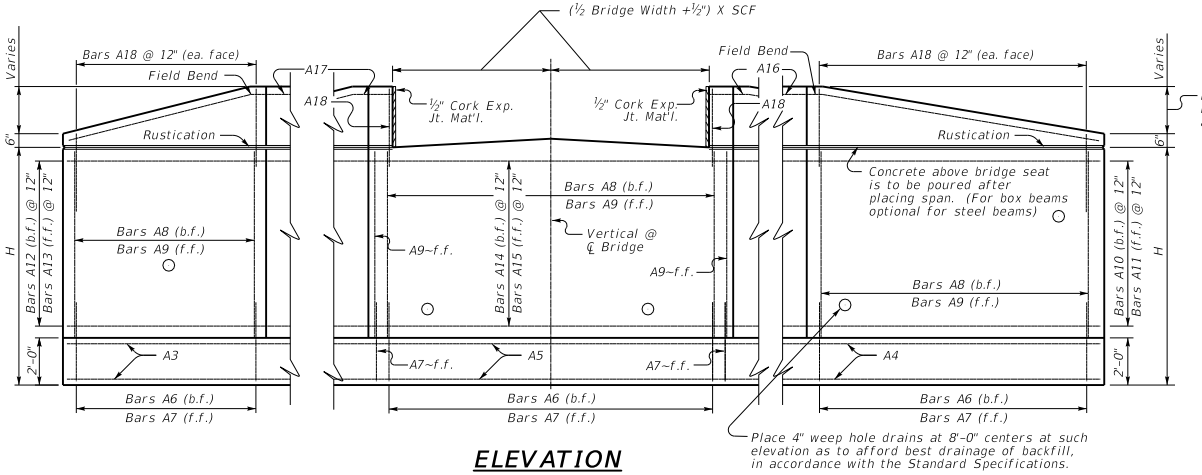

ELEVATION

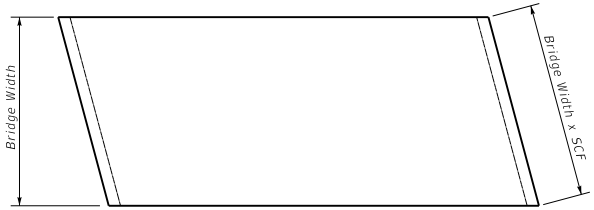

PLAN OF SUPERSTRUCTURE SLAB

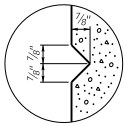

RUSTICATION GROOVE

KENTUCKY
DEPARTMENT OF HIGHWAYS

10° SKEW VARIABLE WIDTH ABUTMENT 50% SKEWED WINGS

STANDARD DRAWING NO. BSA-005

SUBMITTED _____ DIRECTOR DIVISION OF STRUCTURAL DESIGN — DATE 02-26-20

APPROVED _____ STATE HIGHWAY ENGINEER — DATE 02-26-20

10° SKEW VARIABLE BRIDGE WIDTH 2:1 FILL SLOPES WINGS SKEWED 50% FROM ROADWAY TO BREASTWALL

Bill of Reinforcement

MARK	A1					A2					A3			A4			A5					
TYPE	Str.					Str.					Str.			Str.			Str.					
SIZE											#5			#5			#5					
H	No.	Size	Length ft.	Length in.	Spacing	No.	Size	Length ft.	Length in.	Spacing	No.	Length ft.	Length in.	No.	Length ft.	Length in.	No.	Length ft.	Length in.	+Lb =	Length ft.	Length in.
15-16	61+Nb=	10	11	8	12	61+Nb=	7	11	8	12	24	22	3	24	25	8	24	12	4	+Lb=		
13-14	55+Nb=	9	10	8	12	55+Nb=	7	10	8	12	22	20	1	22	22	6	22	11	11	+Lb=		
11-12	48+Nb=	8	9	8	12	48+Nb=	6	9	8	12	20	16	10	20	19	4	20	11	6	+Lb=		
9-10	42+Nb=	7	8	8	12	42+Nb=	5	8	8	12	18	14	7	18	16	2	18	11	1	+Lb=		
7-8	35+Nb=	6	7	2	12	35+Nb=	5	7	2	12	16	11	0	16	12	7	16	10	1	+Lb=		
5-6	29+Nb=	5	6	2	12	29+Nb=	5	6	2	12	14	8	9	14	9	5	14	9	8	+Lb=		

MARK	A6														A7					A8				
TYPE	4														Str.					Str.				
SIZE																								
H	No.	Size	Length ft.	Length in.	Spacing	A ft.	A in.	B ft.	B in.	C ft.	C in.	D ft.	D in.		No.	Size	Length ft.	Length in.	Spacing	No.	Size	Length ft.	Length in.	Spacing
15-16	49+Nb=	9	9	11	12	8	1/8	1	10	0	11 3/4	8	6		52+Nb=	5	4	11	12	49+Nb=	6	12	10	12
13-14	44+Nb=	8	8	3	12	6	11	1	3	0	8	7	3		47+Nb=	5	4	11	12	44+Nb=	6	10	10	12
11-12	38+Nb=	7	7	1	12	5	10 1/2	1	2	0	7	6	2		41+Nb=	5	4	11	12	38+Nb=	5	8	10	12
9-10	33+Nb=	6	6	1	12	5	1	1	0	0	6	5	4		36+Nb=	5	4	11	12	33+Nb=	5	6	10	12
7-8	27+Nb=	5	5	7	12	4	8 1/2	0	10	0	5	4	11		30+Nb=	5	4	11	12	27+Nb=	5	4	10	12
5-6	22+Nb=	5	5	7	12	4	8 1/2	0	10	0	5	4	11		25+Nb=	5	4	11	12	22+Nb=	5	2	10	12

MARK	A9				A10			A11			A12			A13			A14						A15						A16			A17			A18		
TYPE	Str.				8			8			8			8			7						7						Str.			Str.			Str.		
SIZE	#5				#5			#5			#5			#5			#5						#5						#5			#5			#5		
H	No.	Length ft.	Length in.	Spacing	No.	Length ft.	Length in.	No.	Length ft.	Length in.	No.	Length ft.	Length in.	No.	Length ft.	Length in.	No.	Length ft.	Length in.	+Lb =	Length ft.	Length in.	No.	Length ft.	Length in.	+Lb =	Length ft.	Length in.	No.	Length ft.	Length in.	No.	Length ft.	Length in.	No.	Length ft.	Length in.
15-16	52+Nb=	12	10	12	14	26	2	14	24	6	14	21	10	14	20	9	14	12	7	+Lb=			14	9	7	+Lb=			2	27	9	2	23	6	104	5	9
13-14	47+Nb=	10	10	12	12	23	2	12	21	6	12	19	10	12	18	9	12	12	7	+Lb=			12	9	7	+Lb=			2	24	9	2	21	6	94	5	9
11-12	41+Nb=	8	10	12	10	20	3	10	18	6	10	16	10	10	15	9	10	12	7	+Lb=			10	9	7	+Lb=			2	21	9	2	18	6	82	5	9
9-10	36+Nb=	6	10	12	8	17	3	8	15	6	8	14	11	8	13	9	8	12	7	+Lb=			8	9	7	+Lb=			2	18	9	2	16	6	72	5	9
7-8	30+Nb=	4	10	12	6	14	3	6	12	6	6	11	11	6	10	9	6	12	8	+Lb=			6	9	7	+Lb=			2	15	9	2	13	6	60	5	9
5-6	25+Nb=	2	10	12	4	11	3	4	9	6	4	9	11	4	8	9	4	12	8	+Lb=			4	9	7	+Lb=			2	12	9	2	11	6	50	5	9

Table of Dimensions

H	W		N		M2		M3		T2		T3		L2	L3	S2					S3				
	Length ft.	Length in.	Length ft.	Length in.	Length ft.	Length in.	Length ft.	Length in.	Length ft.	Length in.	Length ft.	Length in.	Length ft.	Length ft.	Length ft.	Length in.	+ Lb/2 =	Length ft.	Length in.	Length ft.	Length in.	+ Lb/2 =	Length ft.	Length in.
15-16	12	0	5	0	16	5	17	5/8	19	6 7/8	14	3 3/4	23	19	6	10 1/2	+0.5Lb=			5	1 3/8	+0.5Lb=		
13-14	11	0	4	6	14	4 1/2	15	4 1/8	17	1 5/8	12	10 1/2	20	17	6	7 1/4	+0.5Lb=			4	11 5/8	+0.5Lb=		
11-12	10	0	4	0	12	4	12	10 3/8	14	8 3/8	10	9 5/8	17	14	6	4	+0.5Lb=			4	10	+0.5Lb=		
9-10	9	0	3	6	10	3 3/8	11	1 7/8	12	3 1/8	9	4 3/8	14	12	6	3/4	+0.5Lb=			4	8 1/4	+0.5Lb=		
7-8	7	6	2	9	8	2 1/8	8	7 1/8	9	9	7	2 1/2	11	9	5	7 7/8	+0.5Lb=			4	5 5/8	+0.5Lb=		
5-6	6	6	2	3	6	1 5/8	6	10 5/8	7	3 3/4	5	9 1/4	8	7	5	4 5/8	+0.5Lb=			4	3 7/8	+0.5Lb=		

Reinforcement Details

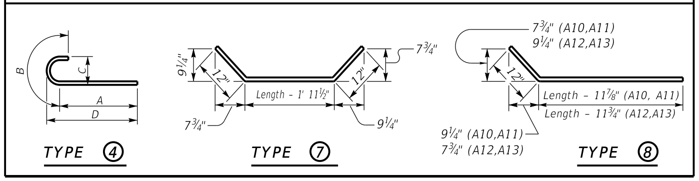

*Concrete quantities computed using 21" beam depth on 1/2" pad & Variable Bridge Width

Quantities

H	Concrete* C.Y.	Reinforcement LBS.
5	18.99+(0.71xLb) =	1788+(52.8xLb) =
6	20.68+(0.78xLb) =	1788+(52.8xLb) =
7	29.2+(0.93xLb) =	2676+(68.7xLb) =
8	31.26+(1.01xLb) =	2676+(68.7xLb) =
9	44.14+(1.19xLb) =	4102+(91xLb) =
10	46.65+(1.27xLb) =	4102+(91xLb) =
11	59.21+(1.41xLb) =	5987+(120.4xLb) =
12	62.08+(1.49xLb) =	5987+(120.4xLb) =
13	78.23+(1.64xLb) =	8896+(161xLb) =
14	81.55+(1.71xLb) =	8896+(161xLb) =
15	97.96+(1.86xLb) =	11932+(198.6xLb) =
16	101.65+(1.93xLb) =	11932+(198.6xLb) =

ABUTMENT SKEW CORRECTION FACTOR (SCF) = 1.015

NUMBER OF BARS TO ADD (Nb) = Bridge Width (feet) x SCF (round up to nearest whole number)

LENGTH OF ABUTMENT TO ADD (Lb) = Bridge Width (feet) x SCF (convert decimal to architectural)

GENERAL NOTES

SPECIFICATIONS: Construct abutments according to the current edition of the Kentucky Department of Highways Standard Specifications for Road and Bridge Construction. Abutments are designed for side by side box beams as detailed in Standard Drawings BDP-001 through BDP-012, current edition. Dimensions may be adjusted to allow for any out to out bridge width. Abutments are also adequate for Std. Dwg. slabs or steel beam superstructures.

FOUNDATION PRESSURE: Construct abutment footings on solid rock bearing material that can support a pressure of 8000 psf service or 10,800 psf strength factored as recommended by a geotechnical engineer.

WING LENGTHS: Calculated assuming 21" superstructure depth and stream bank elevation at top of footing.

FOOTING ELEVATION: Construct bottom of footing below the anticipated scour elevation. (This typically entails embedding the footings 1'-0" to 2'-0" into rock and pouring concrete directly against cut rock faces. as recommended by geotechnical engineer.)

NOTE: Distances to bars shown are clear dimensions unless otherwise noted.

MATERIAL SPECIFICATIONS:
Concrete, Class "A" = 3500 psi
Steel Reinforcement = Grade 60

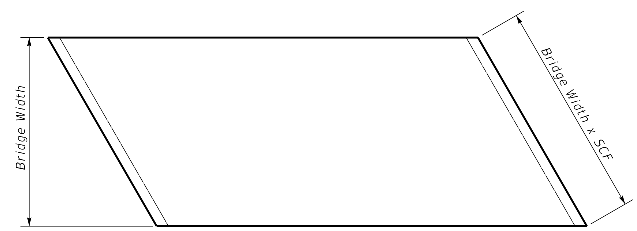

PLAN OF SUPERSTRUCTURE SLAB

KENTUCKY
DEPARTMENT OF HIGHWAYS

10° SKEW VARIABLE WIDTH ABUTMENT 50% SKEWED WINGS

STANDARD DRAWING NO. BSA-006

SUBMITTED [signature] DIRECTOR DIVISION OF STRUCTURAL DESIGN — 02-26-20 DATE

APPROVED [signature] STATE HIGHWAY ENGINEER — 02-26-20 DATE

15° SKEW VARIABLE BRIDGE WIDTH 2:1 FILL SLOPES WINGS SKEWED 50% FROM ROADWAY TO BREASTWALL

ABUTMENT SKEW CORRECTION FACTOR (SCF) = 1.035

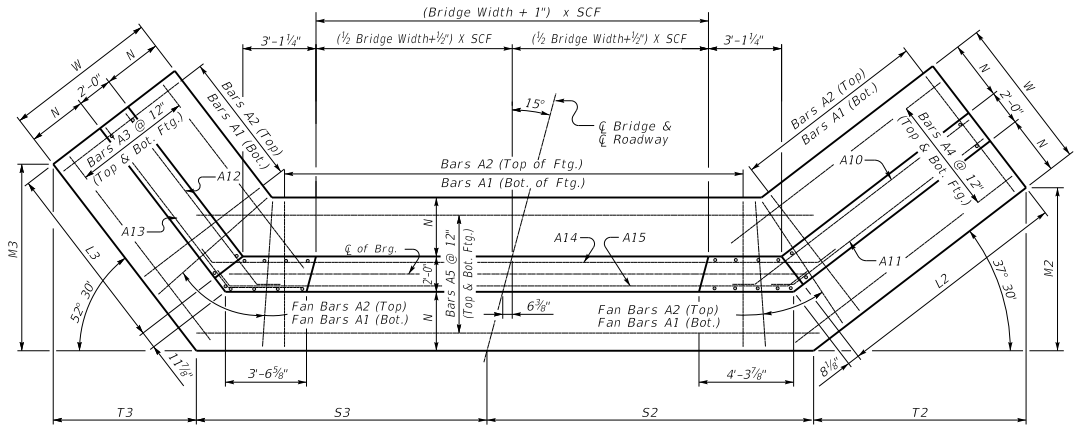

(Left Skew as shown;right skew opp. hand)

PLAN

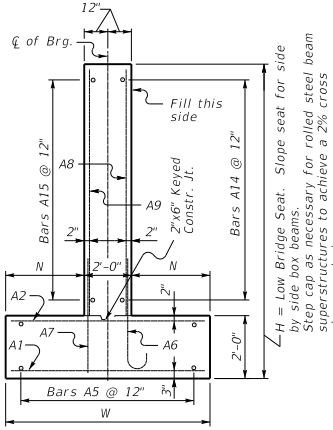

WALL SECTION

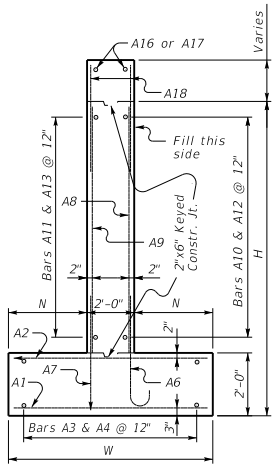

WING SECTION

Note: Trim A16 & A17 bars if necessary

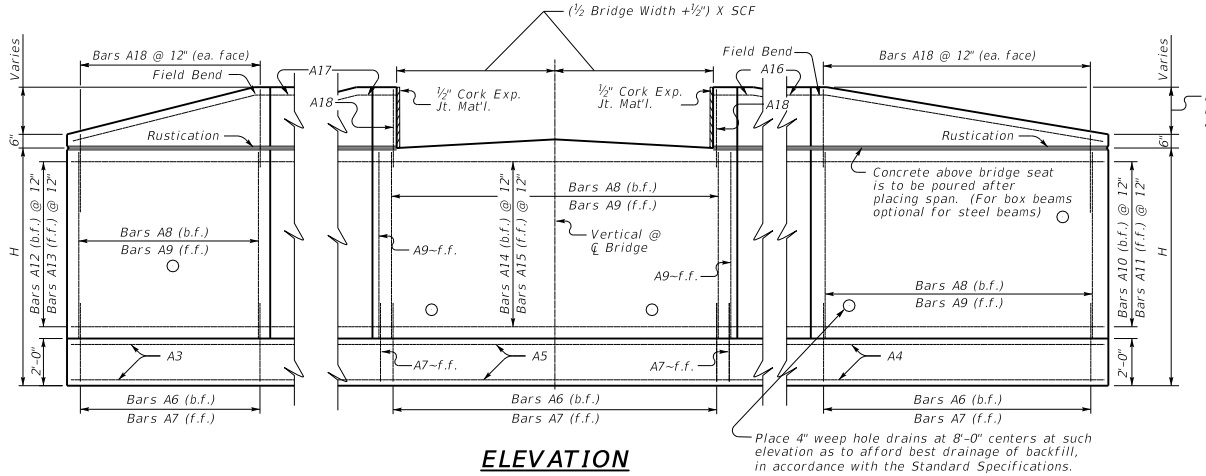

ELEVATION

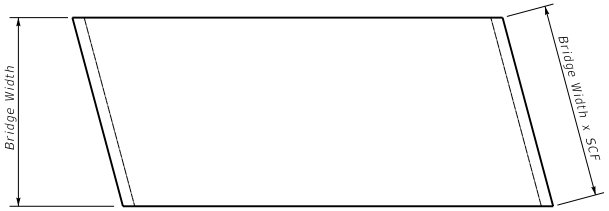

PLAN OF SUPERSTRUCTURE SLAB

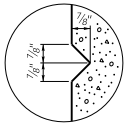

RUSTICATION GROOVE

KENTUCKY
DEPARTMENT OF HIGHWAYS

15° SKEW VARIABLE WIDTH ABUTMENT 50% SKEWED WINGS

STANDARD DRAWING NO. BSA-007

SUBMITTED _____ DIRECTOR DIVISION OF STRUCTURAL DESIGN — DATE 02-26-20

APPROVED _____ STATE HIGHWAY ENGINEER — DATE 02-26-20

15° SKEW VARIABLE BRIDGE WIDTH 2:1 FILL SLOPES WINGS SKEWED 50% FROM ROADWAY TO BREASTWALL

Bill of Reinforcement

MARK	A1					A2				
TYPE	Str.					Str.				
SIZE										
H	No.	Size	Length ft.	Length in.	Spacing	No.	Size	Length ft.	Length in.	Spacing
15-16	61+Nb=	10	11	8	12	61+Nb=	7	11	8	12
13-14	55+Nb=	9	10	8	12	55+Nb=	7	10	8	12
11-12	49+Nb=	8	9	8	12	49+Nb=	6	9	8	12
9-10	43+Nb=	7	8	8	12	43+Nb=	5	8	8	12
7-8	35+Nb=	6	7	2	12	35+Nb=	5	7	2	12
5-6	30+Nb=	5	6	2	12	30+Nb=	5	6	2	12

MARK	A3			A4			A5					
TYPE	Str.			Str.			Str.					
SIZE	#5			#5			#5					
H	No.	Length ft.	Length in.	No.	Length ft.	Length in.	No.	Length ft.	Length in.	+Lb =	Length ft.	Length in.
15-16	24	21	5	24	26	7	24	12	5	+Lb=		
13-14	22	19	2	22	23	5	22	12	0	+Lb=		
11-12	20	16	11	20	20	3	20	11	7	+Lb=		
9-10	18	13	8	18	17	1	18	11	2	+Lb=		
7-8	16	11	2	16	12	6	16	10	2	+Lb=		
5-6	14	8	11	14	10	4	14	9	9	+Lb=		

MARK	A6												
TYPE	4												
SIZE													
H	No.	Size	Length ft.	Length in.	Spacing	A ft.	A in.	B ft.	B in.	C ft.	C in.	D ft.	D in.
15-16	49+Nb=	9	9	11	12	8	⅛	1	10	0	11¾	8	6
13-14	44+Nb=	8	8	3	12	6	11	1	3	0	8	7	3
11-12	39+Nb=	7	7	1	12	5	10½	1	2	0	7	6	2
9-10	33+Nb=	6	6	1	12	5	1	1	0	0	6	5	4
7-8	27+Nb=	5	5	7	12	4	8½	0	10	0	5	4	11
5-6	23+Nb=	5	5	7	12	4	8½	0	10	0	5	4	11

MARK	A7					A8				
TYPE	Str.					Str.				
SIZE										
H	No.	Size	Length ft.	Length in.	Spacing	No.	Size	Length ft.	Length in.	Spacing
15-16	52+Nb=	5	4	11	12	49+Nb=	6	12	10	12
13-14	47+Nb=	5	4	11	12	44+Nb=	6	10	10	12
11-12	42+Nb=	5	4	11	12	39+Nb=	5	8	10	12
9-10	36+Nb=	5	4	11	12	33+Nb=	5	6	10	12
7-8	30+Nb=	5	4	11	12	27+Nb=	5	4	10	12
5-6	26+Nb=	5	4	11	12	23+Nb=	5	2	10	12

MARK	A9				A10			A11			A12			A13		
TYPE	Str.				8			8			8			8		
SIZE	#5				#5			#5			#5			#5		
H	No.	Length ft.	Length in.	Spacing	No.	Length ft.	Length in.	No.	Length ft.	Length in.	No.	Length ft.	Length in.	No.	Length ft.	Length in.
15-16	52+Nb=	12	10	12	14	27	4	14	25	6	14	20	10	14	19	9
13-14	47+Nb=	10	10	12	12	24	4	12	22	6	12	18	10	12	17	9
11-12	42+Nb=	8	10	12	10	21	4	10	19	6	10	16	10	10	15	9
9-10	36+Nb=	6	10	12	8	18	4	8	16	6	8	13	10	8	12	9
7-8	30+Nb=	4	10	12	6	14	4	6	12	6	6	11	10	6	10	9
5-6	26+Nb=	2	10	12	4	12	4	4	10	6	4	9	10	4	8	9

MARK	A14						A15						A16			A17			A18		
TYPE	7						7						Str.			Str.			Str.		
SIZE	#5						#5						#5			#5			#5		
H	No.	Length ft.	Length in.	+Lb =	Length ft.	Length in.	No.	Length ft.	Length in.	+Lb =	Length ft.	Length in.	No.	Length ft.	Length in.	No.	Length ft.	Length in.	No.	Length ft.	Length in.
15-16	14	12	9	+Lb=			14	9	8	+Lb=			2	28	11	2	22	6	105	5	9
13-14	12	12	9	+Lb=			12	9	8	+Lb=			2	25	11	2	20	6	95	5	9
11-12	10	12	9	+Lb=			10	9	8	+Lb=			2	22	11	2	18	6	85	5	9
9-10	8	12	10	+Lb=			8	9	8	+Lb=			2	19	11	2	15	6	73	5	9
7-8	6	12	10	+Lb=			6	9	8	+Lb=			2	15	11	2	13	6	61	5	9
5-6	4	12	10	+Lb=			4	9	8	+Lb=			2	13	11	2	11	6	53	5	9

Table of Dimensions

H	W		N		M2		M3		T2		T3		L2	L3	S2					S3				
	Length ft.	Length in.	Length ft.	Length in.	Length ft.	Length in.	Length ft.	Length in.	Length ft.	Length in.	Length ft.	Length in.	Length ft.	Length ft.	Length ft.	Length in.	+ Lb/2 =	Length ft.	Length in.	Length ft.	Length in.	+ Lb/2 =	Length ft.	Length in.
15-16	12	0	5	0	16	⅝	17	¼	20	11⅛	13	¾	24	18	7	4¾	+0.5Lb=			4	8¾	+0.5Lb=		
13-14	11	0	4	6	14	1½	15	2⅞	18	4⅞	11	8¼	21	16	7	1⅛	+0.5Lb=			4	7⅜	+0.5Lb=		
11-12	10	0	4	0	12	2⅜	13	5½	15	10¾	10	3⅞	18	14	6	9½	+0.5Lb=			4	6	+0.5Lb=		
9-10	9	0	3	6	10	3¼	10	10½	13	4⅝	8	4⅛	15	11	6	5⅞	+0.5Lb=			4	4⅝	+0.5Lb=		
7-8	7	6	2	9	7	8⅛	9	0	10	⅛	6	10⅞	11	9	6	⅜	+0.5Lb=			4	2⅝	+0.5Lb=		
5-6	6	6	2	3	6	4¼	7	2⅝	8	3⅜	5	6½	9	7	5	8¾	+0.5Lb=			4	1¼	+0.5Lb=		

Reinforcement Details

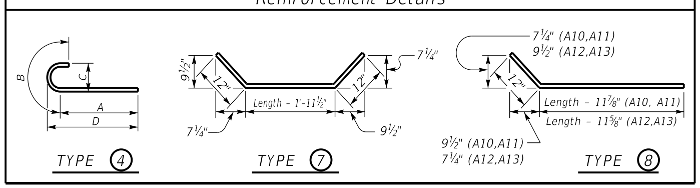

*Concrete quantities computed using 21" beam depth on ½" pad & Variable Bridge Width

Quantities

H	Concrete* C.Y.	Reinforcement LBS.
5	19.9+(0.71xLb) =	1864+(52.8xLb) =
6	21.68+(0.78xLb) =	1864+(52.8xLb) =
7	29.34+(0.93xLb) =	2687+(68.7xLb) =
8	31.41+(1.01xLb) =	2687+(68.7xLb) =
9	44.31+(1.19xLb) =	4139+(91xLb) =
10	46.83+(1.27xLb) =	4139+(91xLb) =
11	60.91+(1.41xLb) =	6133+(120.4xLb) =
12	63.87+(1.49xLb) =	6133+(120.4xLb) =
13	78.45+(1.64xLb) =	8909+(161xLb) =
14	81.78+(1.71xLb) =	8909+(161xLb) =
15	98.21+(1.86xLb) =	11949+(198.6xLb) =
16	101.91+(1.93xLb) =	11949+(198.6xLb) =

ABUTMENT SKEW CORRECTION FACTOR (SCF) = 1.035

NUMBER OF BARS TO ADD (Nb) = Bridge Width (feet) x SCF (round up to nearest whole number)

LENGTH OF ABUTMENT TO ADD (Lb) = Bridge Width (feet) x SCF (convert decimal to architectural)

GENERAL NOTES

SPECIFICATIONS: Construct abutments according to the current edition of the Kentucky Department of Highways Standard Specifications for Road and Bridge Construction. Abutments are designed for side by side box beams as detailed in Standard Drawings BDP-001 through BDP-012, current edition. Dimensions may be adjusted to allow for any out to out bridge width. Abutments are also adequate for Std. Dwg. slabs or steel beam superstructures.

FOUNDATION PRESSURE: Construct abutment footings on solid rock bearing material that can support a pressure of 8000 psf service or 10,800 psf strength factored as recommended by a geotechnical engineer.

WING LENGTHS: Calculated assuming 21" superstructure depth and stream bank elevation at top of footing.

FOOTING ELEVATION: Construct bottom of footing below the anticipated scour elevation. (This typically entails embedding the footings 1'-0" to 2'-0" into rock and pouring concrete directly against cut rock faces. as recommended by geotechnical engineer.)

NOTE: Distances to bars shown are clear dimensions unless otherwise noted.

MATERIAL SPECIFICATIONS:
Concrete, Class "A" = 3500 psi
Steel Reinforcement = Grade 60

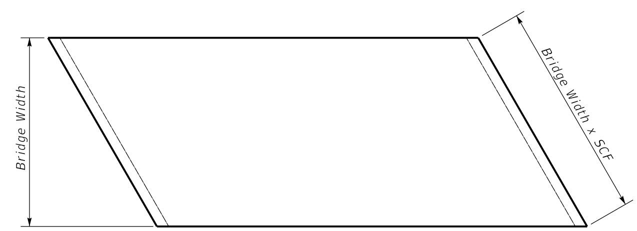

PLAN OF SUPERSTRUCTURE SLAB

KENTUCKY
DEPARTMENT OF HIGHWAYS

15° SKEW VARIABLE WIDTH ABUTMENT 50% SKEWED WINGS

STANDARD DRAWING NO. BSA-008

SUBMITTED ______ DIRECTOR DIVISION OF STRUCTURAL DESIGN 02-26-20 DATE

APPROVED ______ STATE HIGHWAY ENGINEER 02-26-20 DATE

20° SKEW VARIABLE BRIDGE WIDTH 2:1 FILL SLOPES WINGS SKEWED 50% FROM ROADWAY TO BREASTWALL

ABUTMENT SKEW CORRECTION FACTOR (SCF) = 1.064

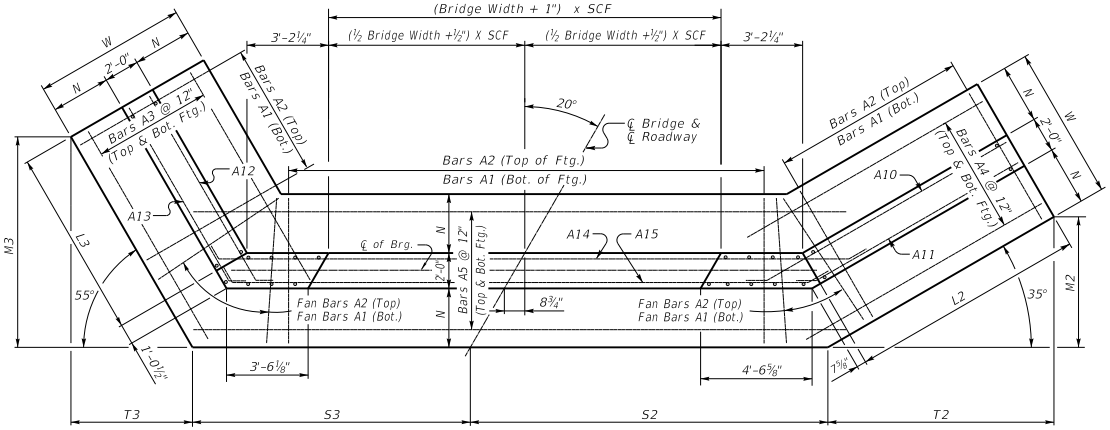

(Left Skew as shown;right skew opp. hand)

PLAN

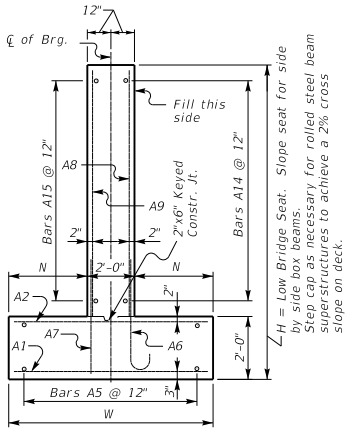

WALL SECTION

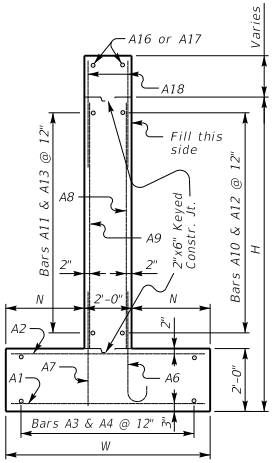

WING SECTION

NOTE: Trim A16 & A17 bars if necessary

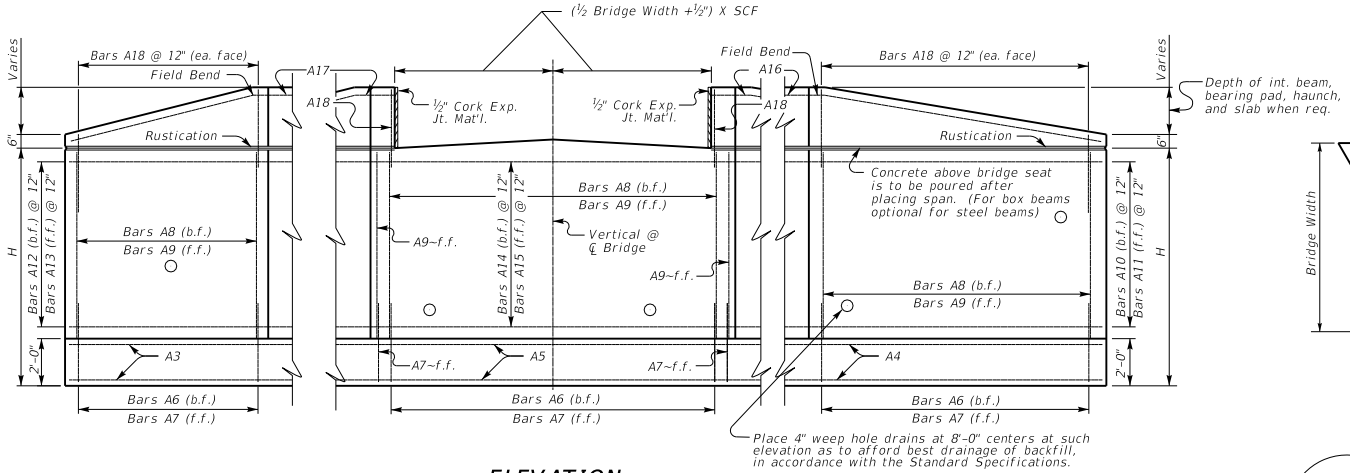

ELEVATION

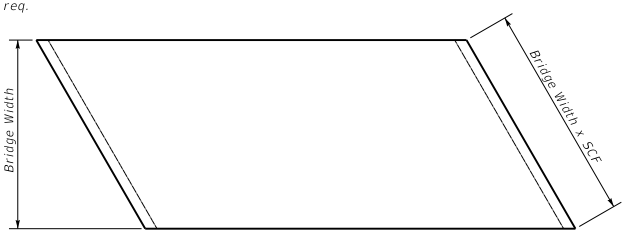

PLAN OF SUPERSTRUCTURE SLAB

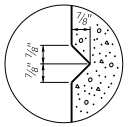

RUSTICATION GROOVE

KENTUCKY DEPARTMENT OF HIGHWAYS

20° SKEW VARIABLE WIDTH ABUTMENT 50% SKEWED WINGS

STANDARD DRAWING NO. BSA-009

SUBMITTED _____ DIRECTOR DIVISION OF STRUCTURAL DESIGN — DATE 02-26-20

APPROVED _____ STATE HIGHWAY ENGINEER — DATE 02-26-20

20° SKEW VARIABLE BRIDGE WIDTH 2:1 FILL SLOPES
WINGS SKEWED 50% FROM ROADWAY TO BREASTWALL

Bill of Reinforcement

MARK	A1					A2					A3			A4			A5					
TYPE	Str.					Str.					Str.			Str.			Str.					
SIZE											#5			#5			#5					
H	No.	Size	Length ft.	Length in.	Spacing	No.	Size	Length ft.	Length in.	Spacing	No.	Length ft.	Length in.	No.	Length ft.	Length in.	No.	Length ft.	Length in.	+Lb =	Length ft.	Length in.
15-16	63+Nb=	10	11	8	12	63+Nb=	7	11	8	12	24	21	7	24	28	5	24	12	7	+Lb=		
13-14	55+Nb=	9	10	8	12	55+Nb=	7	10	8	12	22	18	4	22	24	3	22	12	2	+Lb=		
11-12	49+Nb=	8	9	8	12	49+Nb=	6	9	8	12	20	16	1	20	21	1	20	11	9	+Lb=		
9-10	43+Nb=	7	8	8	12	43+Nb=	5	8	8	12	18	13	10	18	17	11	18	11	4	+Lb=		
7-8	35+Nb=	6	7	2	12	35+Nb=	5	7	2	12	16	10	3	16	13	4	16	10	4	+Lb=		
5-6	29+Nb=	5	6	2	12	29+Nb=	5	6	2	12	14	8	0	14	10	2	14	9	11	+Lb=		

MARK	A6													A7					A8				
TYPE	4													Str.					Str.				
SIZE																							
H	No.	Size	Length ft.	Length in.	Spacing	A ft.	A in.	B ft.	B in.	C ft.	C in.	D ft.	D in.	No.	Size	Length ft.	Length in.	Spacing	No.	Size	Length ft.	Length in.	Spacing
15-16	51+Nb=	9	9	11	12	8	⅛	1	10	0	11¾	8	6	54+Nb=	5	4	11	12	51+Nb=	6	12	10	12
13-14	44+Nb=	8	8	3	12	6	11	1	3	0	8	7	3	47+Nb=	5	4	11	12	44+Nb=	6	10	10	12
11-12	39+Nb=	7	7	1	12	5	10½	1	2	0	7	6	2	42+Nb=	5	4	11	12	39+Nb=	5	8	10	12
9-10	34+Nb=	6	6	1	12	5	1	1	0	0	6	5	4	37+Nb=	5	4	11	12	34+Nb=	5	6	10	12
7-8	27+Nb=	5	5	7	12	4	8½	0	10	0	5	4	11	30+Nb=	5	4	11	12	27+Nb=	5	4	10	12
5-6	22+Nb=	5	5	7	12	4	8½	0	10	0	5	4	11	25+Nb=	5	4	11	12	22+Nb=	5	2	10	12

MARK	A9				A10			A11			A12			A13			A14						A15						A16			A17			A18		
TYPE	Str.				8			8			8			8			7						7						Str.			Str.			Str.		
SIZE	#5				#5			#5			#5			#5			#5						#5						#5			#5			#5		
H	No.	Length ft.	Length in.	Spacing	No.	Length ft.	Length in.	No.	Length ft.	Length in.	No.	Length ft.	Length in.	No.	Length ft.	Length in.	No.	Length ft.	Length in.	+Lb =	Length ft.	Length in.	No.	Length ft.	Length in.	+Lb =	Length ft.	Length in.	No.	Length ft.	Length in.	No.	Length ft.	Length in.	No.	Length ft.	Length in.
15-16	54+Nb=	12	10	12	14	29	5	14	27	5	14	20	9	14	19	10	14	13	0	+Lb=			14	9	11	+Lb=			2	31	1	2	22	6	109	5	9
13-14	47+Nb=	10	10	12	12	25	6	12	23	5	12	17	9	12	16	10	12	13	0	+Lb=			12	9	11	+Lb=			2	27	1	2	19	6	95	5	9
11-12	42+Nb=	8	10	12	10	22	6	10	20	5	10	15	9	10	14	10	10	13	1	+Lb=			10	9	11	+Lb=			2	24	1	2	17	6	85	5	9
9-10	37+Nb=	6	10	12	8	19	6	8	17	5	8	13	9	8	12	10	8	13	1	+Lb=			8	9	11	+Lb=			2	21	1	2	15	6	75	5	9
7-8	30+Nb=	4	10	12	6	15	6	6	13	5	6	10	9	6	9	10	6	13	1	+Lb=			6	9	11	+Lb=			2	17	1	2	12	6	61	5	9
5-6	25+Nb=	2	10	12	4	12	6	4	10	5	4	8	9	4	7	10	4	13	1	+Lb=			4	9	11	+Lb=			2	14	1	2	10	6	51	5	9

Table of Dimensions

H	W Length ft.	W Length in.	N Length ft.	N Length in.	M2 Length ft.	M2 Length in.	M3 Length ft.	M3 Length in.	T2 Length ft.	T2 Length in.	T3 Length ft.	T3 Length in.	L2 Length ft.	L3 Length ft.	S2 Length ft.	S2 Length in.	S2 + Lb/2 =	S2 Length ft.	S2 Length in.	S3 Length ft.	S3 Length in.	S3 + Lb/2 =	S3 Length ft.	S3 Length in.
15-16	12	0	5	0	16	2⅛	17	8¾	23	1¼	12	5	26	18	7	11⅞	+0.5Lb=			4	4	+0.5Lb=		
13-14	11	0	4	6	13	9½	15	¾	19	8⅜	10	6½	22	15	7	7⅞	+0.5Lb=			4	3	+0.5Lb=		
11-12	10	0	4	0	11	11¾	13	2½	17	1⅜	9	3	19	13	7	3¾	+0.5Lb=			4	2⅛	+0.5Lb=		
9-10	9	0	3	6	10	2⅛	11	4¼	14	6⅜	7	11⅜	16	11	6	11⅝	+0.5Lb=			4	1⅛	+0.5Lb=		
7-8	7	6	2	9	7	8⅞	8	7	11	⅝	6	⅛	12	8	6	5½	+0.5Lb=			3	11¾	+0.5Lb=		
5-6	6	6	2	3	5	11⅛	6	8¾	8	5⅝	4	8½	9	6	6	1½	+0.5Lb=			3	10⅞	+0.5Lb=		

Reinforcement Details

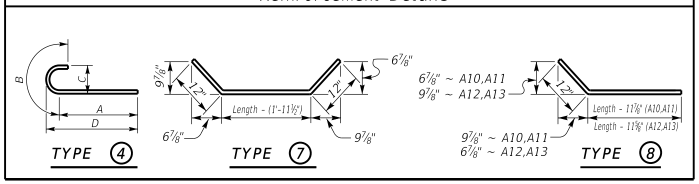

*Concrete quantities computed using 21" beam depth on ½" pad & Variable Bridge Width

Quantities

H	Concrete* C.Y.	Reinforcement LBS.
5	19.26+(0.71xLb) =	1802+(52.8xLb) =
6	20.97+(0.78xLb) =	1802+(52.8xLb) =
7	29.54+(0.93xLb) =	2692+(68.7xLb) =
8	31.63+(1.01xLb) =	2692+(68.7xLb) =
9	45.85+(1.19xLb) =	4226+(91xLb) =
10	48.45+(1.27xLb) =	4226+(91xLb) =
11	61.2+(1.41xLb) =	6144+(120.4xLb) =
12	64.18+(1.49xLb) =	6144+(120.4xLb) =
13	78.78+(1.64xLb) =	8921+(161xLb) =
14	82.13+(1.71xLb) =	8921+(161xLb) =
15	102.49+(1.86xLb) =	12387+(198.6xLb) =
16	106.35+(1.93xLb) =	12387+(198.6xLb) =

ABUTMENT SKEW CORRECTION FACTOR (SCF) = 1.064

NUMBER OF BARS TO ADD (Nb) = Bridge Width (feet) x SCF (round up to nearest whole number)

LENGTH OF ABUTMENT TO ADD (Lb) = Bridge Width (feet) x SCF (convert decimal to architectural)

GENERAL NOTES

SPECIFICATIONS: *Construct abutments according to the current edition of the Kentucky Department of Highways Standard Specifications for Road and Bridge Construction. Abutments are designed for side by side box beams as detailed in Standard Drawings BDP-001 through BDP-012, current edition. Dimensions may be adjusted to allow for any out to out bridge width. Abutments are also adequate for Std. Dwg. slabs or steel beam superstructures.*

FOUNDATION PRESSURE: *Construct abutment footings on solid rock bearing material that can support a pressure of 8000 psf service or 10,800 psf strength factored as recommended by a geotechnical engineer.*

WING LENGTHS: *Calculated assuming 21" superstructure depth and stream bank elevation at top of footing.*

FOOTING ELEVATION: *Construct bottom of footing below the anticipated scour elevation. (This typically entails embedding the footings 1'-0" to 2'-0" into rock and pouring concrete directly against cut rock faces. as recommended by geotechnical engineer.)*

NOTE: *Distances to bars shown are clear dimensions unless otherwise noted.*

MATERIAL SPECIFICATIONS:
Concrete, Class "A" = 3500 psi
Steel Reinforcement = Grade 60

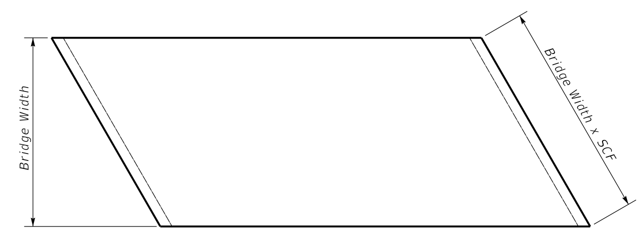

PLAN OF SUPERSTRUCTURE SLAB

KENTUCKY
DEPARTMENT OF HIGHWAYS

20° SKEW VARIABLE
WIDTH ABUTMENT
50% SKEWED WINGS

STANDARD DRAWING NO. BSA-010

SUBMITTED [signature] 02-26-20
DIRECTOR DIVISION OF STRUCTURAL DESIGN — DATE

APPROVED [signature] 02-26-20
STATE HIGHWAY ENGINEER — DATE

25° SKEW VARIABLE BRIDGE WIDTH 2:1 FILL SLOPES WINGS SKEWED 50% FROM ROADWAY TO BREASTWALL

ABUTMENT SKEW CORRECTION FACTOR (SCF) = 1.103

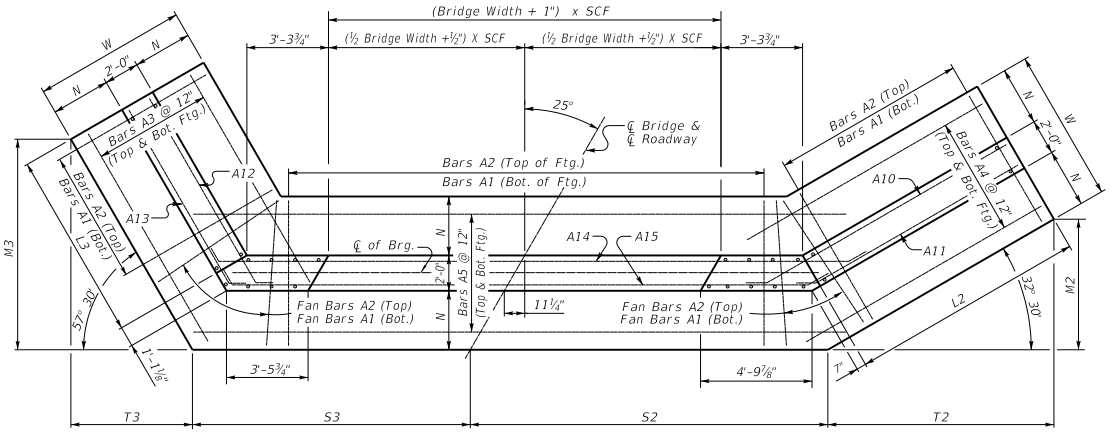

(Left Skew as shown;right skew opp. hand)

PLAN

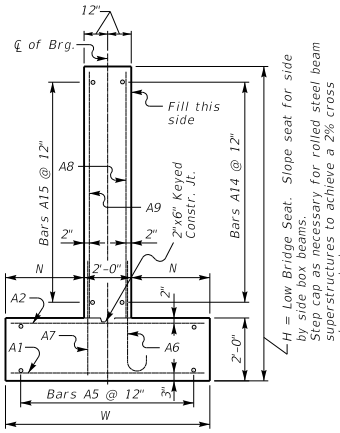

WALL SECTION

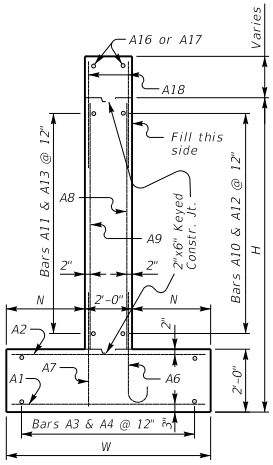

WING SECTION

NOTE: Trim A16 & A17 bars if necessary

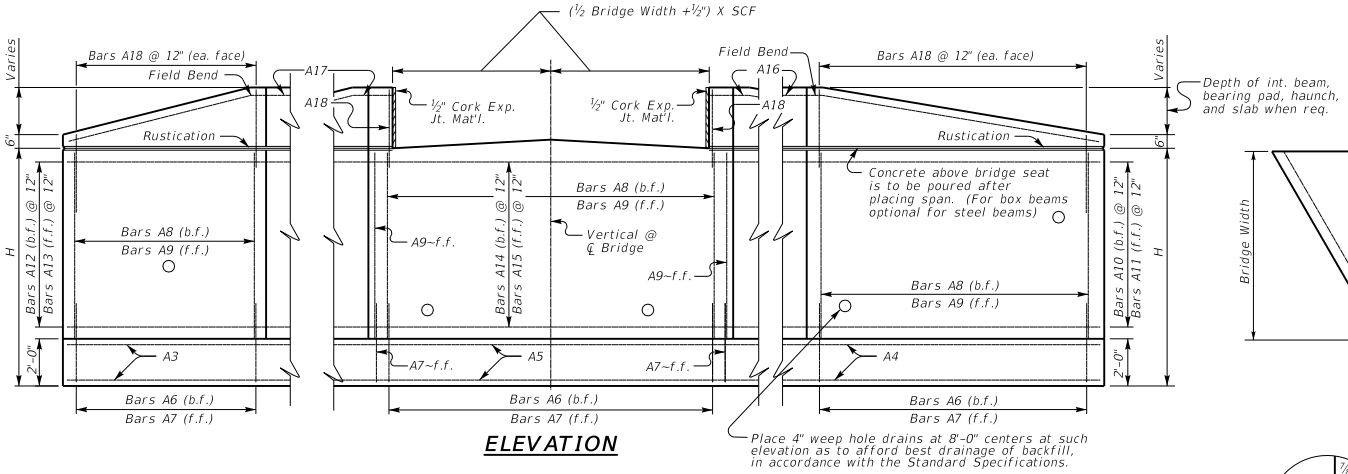

ELEVATION

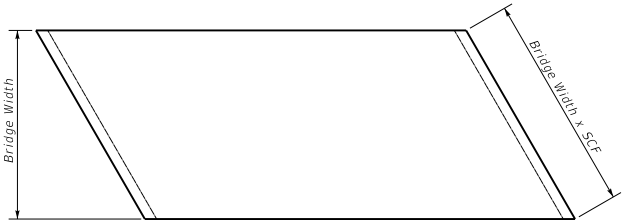

PLAN OF SUPERSTRUCTURE SLAB

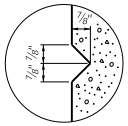

RUSTICATION GROOVE

KENTUCKY
DEPARTMENT OF HIGHWAYS

25° SKEW VARIABLE WIDTH ABUTMENT 50% SKEWED WINGS

STANDARD DRAWING NO. BSA-011

SUBMITTED _____ DIRECTOR DIVISION OF STRUCTURAL DESIGN — DATE 02-26-20

APPROVED _____ STATE HIGHWAY ENGINEER — DATE 02-26-20

25° SKEW VARIABLE BRIDGE WIDTH 2:1 FILL SLOPES WINGS SKEWED 50% FROM ROADWAY TO BREASTWALL

Bill of Reinforcement

MARK	A1	A2	A3	A4	A5	A6	A7	A8	A9	A10	A11	A12	A13	A14	A15	A16	A17	A18
TYPE	Str.	Str.	Str.	Str.	Str.	4	Str.	Str.	Str.	8	8	8	8	7	7	Str.	Str.	Str.
SIZE			#5	#5	#5				#5	#5	#5	#5	#5	#5	#5	#5	#5	#5
H	No.	No. Size Length ft. in. Spacing	No. Length ft. in.	No. Length ft. in.	No. Length ft. in. +Lb= Length ft. in.	No. Size Length ft. in. Spacing A ft. in. B ft. in. C ft. in. D ft. in.	No. Size Length ft. in. Spacing	No. Size Length ft. in. Spacing	No. Length ft. in.	No. Length ft. in.	No. Length ft. in.	No. Length ft. in.	No. Length ft. in.	No. Length ft. in. +Lb= Length ft. in.	No. Length ft. in. +Lb= Length ft. in.	No. Length ft. in.	No. Length ft. in.	No. Length ft. in.
15–16	64+Nb=	10 11 8 12	64+Nb=	7 11 8 12	24 20 9	24 29 4	24 12 10 +Lb=	51+Nb=	9 9 11 12 8 ⅛ 1 10 0 11¾ 8 6	55+Nb=	5 4 11 12	51+Nb=	6 12 10 12	55+Nb=	12 10 12 14 30 7	14 28 4	14 19 8	14 18 11	14 13 4 +Lb=	14 10 1 +Lb=	2 32 4	2 21 6	111 5 9
13–14	58+Nb=	9 10 8 12	58+Nb=	7 10 8 12	22 18 6	22 26 2	22 12 5 +Lb=	46+Nb=	8 8 3 12 6 11 1 3 0 8 7 3	50+Nb=	5 4 11 12	46+Nb=	6 10 10 12	50+Nb=	10 10 12 12 27 8	12 25 4	12 17 9	12 16 11	12 13 5 +Lb=	12 10 1 +Lb=	2 29 4	2 19 6	101 5 9
11–12	51+Nb=	8 9 8 12	51+Nb=	6 9 8 12	20 16 3	20 22 0	20 12 0 +Lb=	40+Nb=	7 7 1 12 5 10½ 1 2 0 7 6 2	44+Nb=	5 4 11 12	40+Nb=	5 8 10 12	44+Nb=	8 10 12 10 23 8	10 21 4	10 15 9	10 14 11	10 13 5 +Lb=	10 10 1 +Lb=	2 25 4	2 17 6	89 5 9
9–10	44+Nb=	7 8 8 12	44+Nb=	5 8 8 12	18 12 11	18 18 10	18 11 6 +Lb=	34+Nb=	6 6 1 12 5 1 1 0 0 6 5 4	38+Nb=	5 4 11 12	34+Nb=	5 6 10 12	38+Nb=	6 10 12 8 20 8	8 18 4	8 12 9	8 11 11	8 13 5 +Lb=	8 10 1 +Lb=	2 22 4	2 14 6	77 5 9
7–8	37+Nb=	6 7 2 12	37+Nb=	5 7 2 12	16 10 5	16 14 3	16 10 7 +Lb=	28+Nb=	5 5 7 12 4 8½ 0 10 0 5 4 11	32+Nb=	5 4 11 12	28+Nb=	5 4 10 12	32+Nb=	4 10 12 6 16 8	6 14 4	6 10 9	6 9 11	6 13 5 +Lb=	6 10 1 +Lb=	2 18 4	2 12 6	65 5 9
5–6	30+Nb=	5 6 2 12	30+Nb=	5 6 2 12	14 8 1	14 10 1	14 10 2 +Lb=	22+Nb=	5 5 7 12 4 8½ 0 10 0 5 4 11	26+Nb=	5 4 11 12	22+Nb=	5 2 10 12	26+Nb=	2 10 12 4 12 8	4 10 4	4 8 9	4 7 11	4 13 5 +Lb=	4 10 1 +Lb=	2 14 4	2 10 6	53 5 9

Table of Dimensions

H	W Length ft.	W Length in.	N Length ft.	N Length in.	M2 Length ft.	M2 Length in.	M3 Length ft.	M3 Length in.	T2 Length ft.	T2 Length in.	T3 Length ft.	T3 Length in.	L2 Length ft.	L3 Length ft.	S2 Length ft.	S2 Length in. + Lb/2 =	S2 Length ft.	S2 Length in.	S3 Length ft.	S3 Length in. + Lb/2 =	S3 Length ft.	S3 Length in.
15–16	12	0	5	0	15	7¼	17	6⅞	24	5⅞	11	2⅜	27	17	8	7⅞ +0.5Lb=			3	11⅛ +0.5Lb=		
13–14	11	0	4	6	13	11	15	7⅞	21	10⅛	9	11¾	24	15	8	3⅜ +0.5Lb=			3	10¾ +0.5Lb=		
11–12	10	0	4	0	11	8¼	13	8⅞	18	4⅛	8	9	20	13	7	10⅞ +0.5Lb=			3	10¼ +0.5Lb=		
9–10	9	0	3	6	10	0	10	11¾	15	8¼	6	11⅞	17	10	7	6¼ +0.5Lb=			3	9¾ +0.5Lb=		
7–8	7	6	2	9	7	8¾	8	11⅜	12	1⅝	5	8⅜	13	8	6	11½ +0.5Lb=			3	9 +0.5Lb=		
5–6	6	6	2	3	5	6	7	⅜	8	7⅝	4	5¾	9	6	6	6⅞ +0.5Lb=			3	8½ +0.5Lb=		

Reinforcement Details

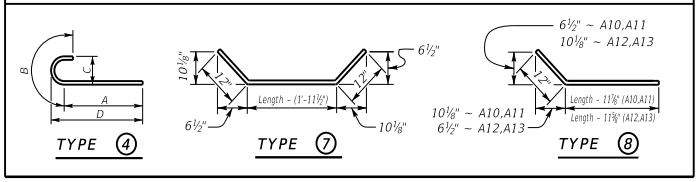

*Concrete quantities computed using 21" beam depth on ½" pad & Variable Bridge Width

Quantities

H	Concrete* C.Y.	Reinforcement LBS.
5	19.48+(0.71xLb) =	1842+(52.8xLb) =
6	21.21+(0.78xLb) =	1842+(52.8xLb) =
7	30.84+(0.93xLb) =	2826+(68.7xLb) =
8	33.02+(1.01xLb) =	2826+(68.7xLb) =
9	46.18+(1.19xLb) =	4287+(91xLb) =
10	48.81+(1.27xLb) =	4287+(91xLb) =
11	63.11+(1.41xLb) =	6360+(120.4xLb) =
12	66.17+(1.49xLb) =	6360+(120.4xLb) =
13	82.69+(1.64xLb) =	9375+(161xLb) =
14	86.2+(1.71xLb) =	9375+(161xLb) =
15	102.99+(1.86xLb) =	12507+(198.6xLb) =
16	106.87+(1.93xLb) =	12507+(198.6xLb) =

ABUTMENT SKEW CORRECTION FACTOR (SCF) = 1.103

NUMBER OF BARS TO ADD (Nb) = Bridge Width (feet) x SCF (round up to nearest whole number)

LENGTH OF ABUTMENT TO ADD (Lb) = Bridge Width (feet) x SCF (convert decimal to architectural)

GENERAL NOTES

SPECIFICATIONS: Construct abutments according to the current edition of the Kentucky Department of Highways Standard Specifications for Road and Bridge Construction. Abutments are designed for side by side box beams as detailed in Standard Drawings BDP-001 through BDP-012, current edition. Dimensions may be adjusted to allow for any out to out bridge width. Abutments are also adequate for Std. Dwg. slabs or steel beam superstructures.

FOUNDATION PRESSURE: Construct abutment footings on solid rock bearing material that can support a pressure of 8000 psf service or 10,800 psf strength factored as recommended by a geotechnical engineer.

WING LENGTHS: Calculated assuming 21" superstructure depth and stream bank elevation at top of footing.

FOOTING ELEVATION: Construct bottom of footing below the anticipated scour elevation. (This typically entails embedding the footings 1'-0" to 2'-0" into rock and pouring concrete directly against cut rock faces. as recommended by geotechnical engineer.)

NOTE: Distances to bars shown are clear dimensions unless otherwise noted.

MATERIAL SPECIFICATIONS:
Concrete, Class "A" = 3500 psi
Steel Reinforcement = Grade 60

PLAN OF SUPERSTRUCTURE SLAB

KENTUCKY
DEPARTMENT OF HIGHWAYS

25° SKEW VARIABLE WIDTH ABUTMENT 50% SKEWED WINGS

STANDARD DRAWING NO. BSA-012

SUBMITTED _____ DIRECTOR DIVISION OF STRUCTURAL DESIGN — DATE 02-26-20

APPROVED _____ STATE HIGHWAY ENGINEER — DATE 02-26-20

30° SKEW VARIABLE BRIDGE WIDTH 2:1 FILL SLOPES WINGS SKEWED 50% FROM ROADWAY TO BREASTWALL

ABUTMENT SKEW CORRECTION FACTOR (SCF) = 1.155

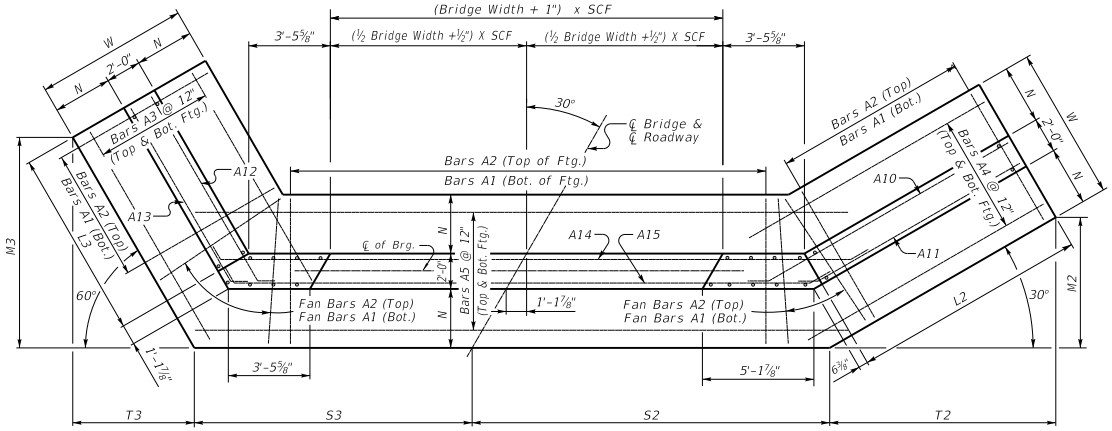

(Left Skew as shown;right skew opp. hand)

PLAN

NOTE: Trim A16 & A17 bars if necessary

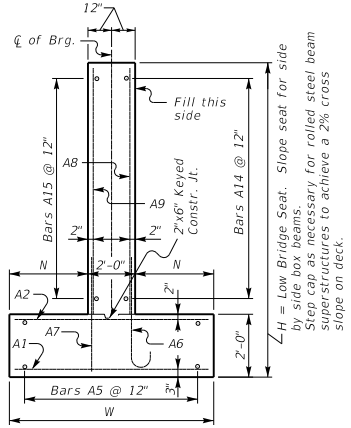

WALL SECTION

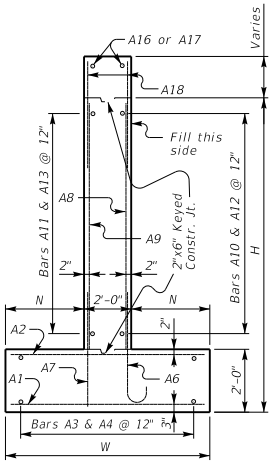

WING SECTION

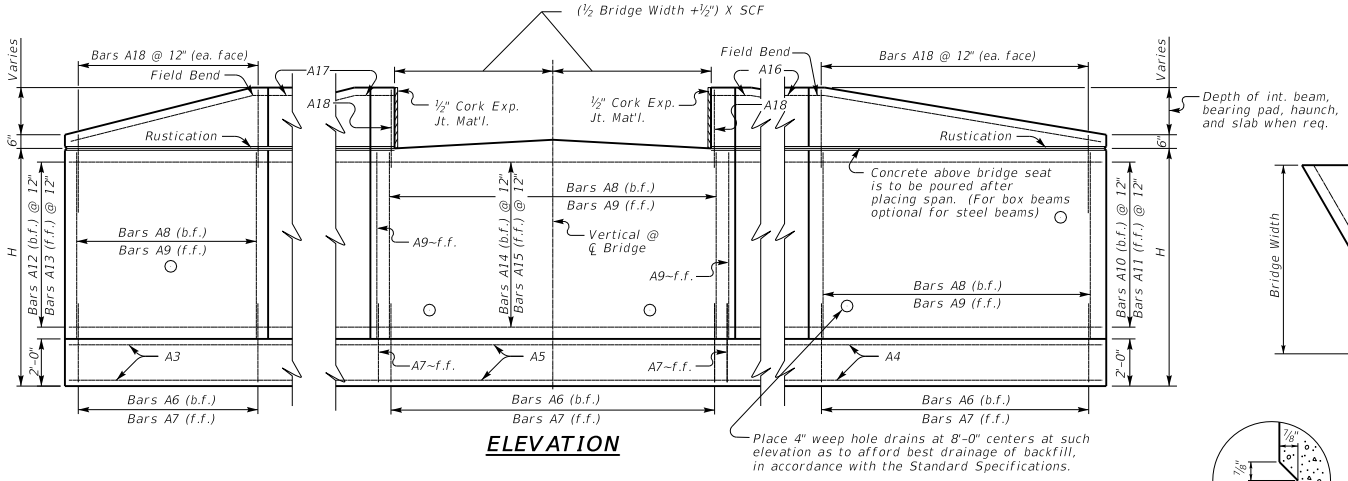

ELEVATION

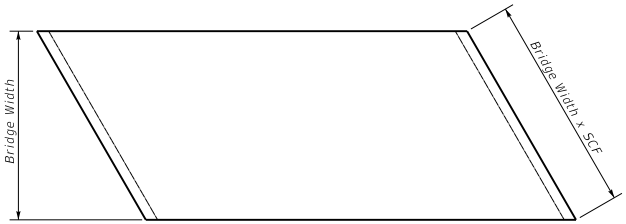

PLAN OF SUPERSTRUCTURE SLAB

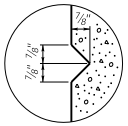

RUSTICATION GROOVE

KENTUCKY
DEPARTMENT OF HIGHWAYS

30° SKEW VARIABLE WIDTH ABUTMENT 50% SKEWED WINGS

STANDARD DRAWING NO. BSA-013

SUBMITTED _____ DIRECTOR DIVISION OF STRUCTURAL DESIGN — DATE 02-26-20

APPROVED _____ STATE HIGHWAY ENGINEER — DATE 02-26-20

30° SKEW VARIABLE BRIDGE WIDTH 2:1 FILL SLOPES
WINGS SKEWED 50% FROM ROADWAY TO BREASTWALL

Bill of Reinforcement

MARK	A1					A2					A3			A4			A5					
TYPE	Str.					Str.					Str.			Str.			Str.					
SIZE											#5			#5			#5					
H	No.	Size	Length ft.	Length in.	Spacing	No.	Size	Length ft.	Length in.	Spacing	No.	Length ft.	Length in.	No.	Length ft.	Length in.	No.	Length ft.	Length in.	+Lb =	Length ft.	Length in.
15-16	66+Nb=	10	11	8	12	66+Nb=	7	11	8	12	24	20	11	24	31	2	24	13	1	+Lb=		
13-14	58+Nb=	9	10	8	12	58+Nb=	7	10	8	12	22	17	8	22	27	1	22	12	8	+Lb=		
11-12	51+Nb=	8	9	8	12	51+Nb=	6	9	8	12	20	15	5	20	22	11	20	12	3	+Lb=		
9-10	45+Nb=	7	8	8	12	45+Nb=	5	8	8	12	18	13	1	18	19	10	18	11	10	+Lb=		
7-8	37+Nb=	6	7	2	12	37+Nb=	5	7	2	12	16	10	6	16	14	2	16	10	11	+Lb=		
5-6	31+Nb=	5	6	2	12	31+Nb=	5	6	2	12	14	8	3	14	11	0	14	10	6	+Lb=		

MARK	A6													A7					A8				
TYPE	4													Str.					Str.				
SIZE																							
H	No.	Size	Length ft.	Length in.	Spacing	A ft.	A in.	B ft.	B in.	C ft.	C in.	D ft.	D in.	No.	Size	Length ft.	Length in.	Spacing	No.	Size	Length ft.	Length in.	Spacing
15-16	54+Nb=	9	9	11	12	8	⅛	1	10	0	11¾	8	6	57+Nb=	5	4	11	12	54+Nb=	6	12	10	12
13-14	47+Nb=	8	8	3	12	6	11	1	3	0	8	7	3	50+Nb=	5	4	11	12	47+Nb=	6	10	10	12
11-12	41+Nb=	7	7	1	12	5	10½	1	2	0	7	6	2	44+Nb=	5	4	11	12	41+Nb=	5	8	10	12
9-10	36+Nb=	6	6	1	12	5	1	1	0	0	6	5	4	39+Nb=	5	4	11	12	36+Nb=	5	6	10	12
7-8	29+Nb=	5	5	7	12	4	8½	0	10	0	5	4	11	32+Nb=	5	4	11	12	29+Nb=	5	4	10	12
5-6	24+Nb=	5	5	7	12	4	8½	0	10	0	5	4	11	27+Nb=	5	4	11	12	24+Nb=	5	2	10	12

MARK	A9				A10			A11			A12			A13			A14						A15						A16			A17			A18		
TYPE	Str.				8			8			8			8			7						7						Str.			Str.			Str.		
SIZE	#5				#5			#5			#5			#5			#5						#5						#5			#5			#5		
H	No.	Length ft.	Length in.	Spacing	No.	Length ft.	Length in.	No.	Length ft.	Length in.	No.	Length ft.	Length in.	No.	Length ft.	Length in.	No.	Length ft.	Length in.	+Lb =	Length ft.	Length in.	No.	Length ft.	Length in.	+Lb =	Length ft.	Length in.	No.	Length ft.	Length in.	No.	Length ft.	Length in.	No.	Length ft.	Length in.
15-16	57+Nb=	12	10	12	14	32	10	14	30	4	14	19	8	14	18	11	14	13	10	+Lb=			14	10	5	+Lb=			2	34	7	2	21	6	115	5	9
13-14	50+Nb=	10	10	12	12	28	10	12	26	4	12	16	8	12	15	11	12	13	10	+Lb=			12	10	5	+Lb=			2	30	7	2	18	6	101	5	9
11-12	44+Nb=	8	10	12	10	24	10	10	22	4	10	14	8	10	13	11	10	13	11	+Lb=			10	10	5	+Lb=			2	26	7	2	16	6	89	5	9
9-10	39+Nb=	6	10	12	8	21	10	8	19	4	8	12	8	8	11	11	8	13	11	+Lb=			8	10	5	+Lb=			2	23	7	2	14	6	79	5	9
7-8	32+Nb=	4	10	12	6	16	11	6	14	4	6	10	8	6	9	11	6	13	11	+Lb=			6	10	5	+Lb=			2	18	7	2	12	6	65	5	9
5-6	27+Nb=	2	10	12	4	13	11	4	11	4	4	8	8	4	7	11	4	13	11	+Lb=			4	10	5	+Lb=			2	15	7	2	10	6	55	5	9

Table of Dimensions

H	W		N		M2		M3		T2		T3		L2	L3	S2					S3				
	Length ft.	Length in.	Length ft.	Length in.	Length ft.	Length in.	Length ft.	Length in.	Length ft.	Length in.	Length ft.	Length in.	Length ft.	Length ft.	Length ft.	Length in.	+ Lb/2 =	Length ft.	Length in.	Length ft.	Length in.	+ Lb/2 =	Length ft.	Length in.
15-16	12	0	5	0	15	5¼	18	2⅝	26	8⅞	10	6¼	29	17	9	5⅛	+0.5Lb=			3	6⅛	+0.5Lb=		
13-14	11	0	4	6	13	4½	15	4½	23	1⅞	8	10½	25	14	9	⅛	+0.5Lb=			3	6⅛	+0.5Lb=		
11-12	10	0	4	0	11	3⅝	13	4¾	19	7	7	8¾	21	12	8	7	+0.5Lb=			3	6⅛	+0.5Lb=		
9-10	9	0	3	6	9	8⅞	11	4⅞	16	10⅜	6	7	18	10	8	1⅞	+0.5Lb=			3	6⅛	+0.5Lb=		
7-8	7	6	2	9	7	1⅝	9	3⅝	12	4⅜	5	4½	13	8	7	6⅜	+0.5Lb=			3	6⅛	+0.5Lb=		
5-6	6	6	2	3	5	6⅞	7	3⅞	9	7¾	4	2¾	10	6	7	1¼	+0.5Lb=			3	6⅛	+0.5Lb=		

Reinforcement Details

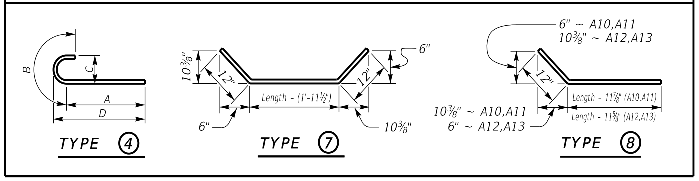

*Concrete quantities computed using 21" beam depth on ½" pad & Variable Bridge Width

Quantities

H	Concrete* C.Y.	Reinforcement LBS.
5	20.57+(0.71xLb) =	1928+(52.8xLb) =
6	22.4+(0.78xLb) =	1928+(52.8xLb) =
7	31.2+(0.93xLb) =	2849+(68.7xLb) =
8	33.4+(1.01xLb) =	2849+(68.7xLb) =
9	47.91+(1.19xLb) =	4426+(91xLb) =
10	50.63+(1.27xLb) =	4426+(91xLb) =
11	63.62+(1.41xLb) =	6401+(120.4xLb) =
12	66.71+(1.49xLb) =	6401+(120.4xLb) =
13	83.28+(1.64xLb) =	9432+(161xLb) =
14	86.81+(1.71xLb) =	9432+(161xLb) =
15	107.56+(1.86xLb) =	13008+(198.6xLb) =
16	111.61+(1.93xLb) =	13008+(198.6xLb) =

ABUTMENT SKEW CORRECTION FACTOR (SCF) = 1.155

NUMBER OF BARS TO ADD (Nb) = Bridge Width (feet) x SCF (round up to nearest whole number)

LENGTH OF ABUTMENT TO ADD (Lb) = Bridge Width (feet) x SCF (convert decimal to architectural)

GENERAL NOTES

SPECIFICATIONS: Construct abutments according to the current edition of the Kentucky Department of Highways Standard Specifications for Road and Bridge Construction. Abutments are designed for side by side box beams as detailed in Standard Drawings BDP-001 through BDP-012, current edition. Dimensions may be adjusted to allow for any out to out bridge width. Abutments are also adequate for Std. Dwg. slabs or steel beam superstructures.

FOUNDATION PRESSURE: Construct abutment footings on solid rock bearing material that can support a pressure of 8000 psf service or 10,800 psf strength factored as recommended by a geotechnical engineer.

WING LENGTHS: Calculated assuming 21" superstructure depth and stream bank elevation at top of footing.

FOOTING ELEVATION: Construct bottom of footing below the anticipated scour elevation. (This typically entails embedding the footings 1'-0" to 2'-0" into rock and pouring concrete directly against cut rock faces. as recommended by geotechnical engineer.)

NOTE: Distances to bars shown are clear dimensions unless otherwise noted.

MATERIAL SPECIFICATIONS:
Concrete, Class "A" = 3500 psi
Steel Reinforcement = Grade 60

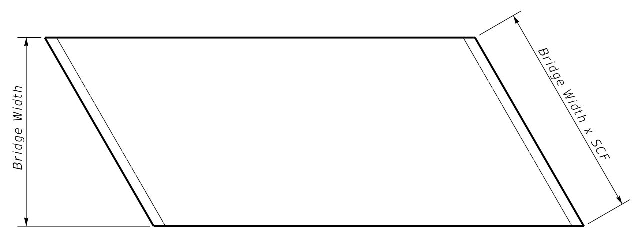

PLAN OF SUPERSTRUCTURE SLAB

KENTUCKY
DEPARTMENT OF HIGHWAYS

30° SKEW VARIABLE
WIDTH ABUTMENT
50% SKEWED WINGS

STANDARD DRAWING NO. BSA-014

SUBMITTED ____ DIRECTOR DIVISION OF STRUCTURAL DESIGN 02-26-20 DATE

APPROVED ____ STATE HIGHWAY ENGINEER 02-26-20 DATE

35° SKEW VARIABLE BRIDGE WIDTH 2:1 FILL SLOPES WINGS SKEWED 50% FROM ROADWAY TO BREASTWALL

ABUTMENT SKEW CORRECTION FACTOR (SCF) = 1.221

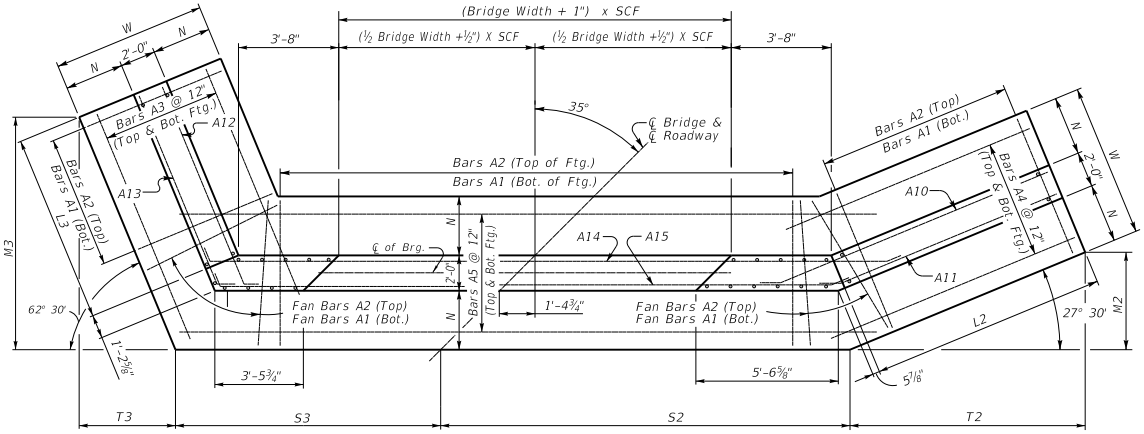

(Left Skew as shown;right skew opp. hand)

PLAN

NOTE: Trim A16 & A17 bars if necessary

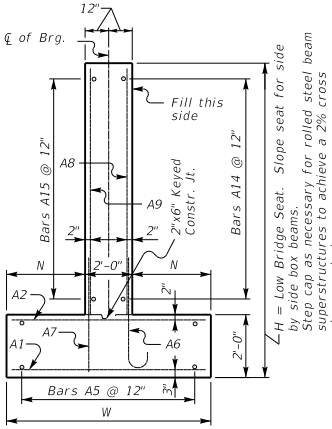

WALL SECTION

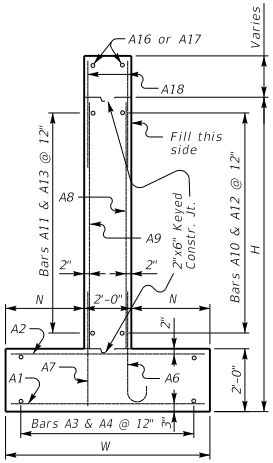

WING SECTION

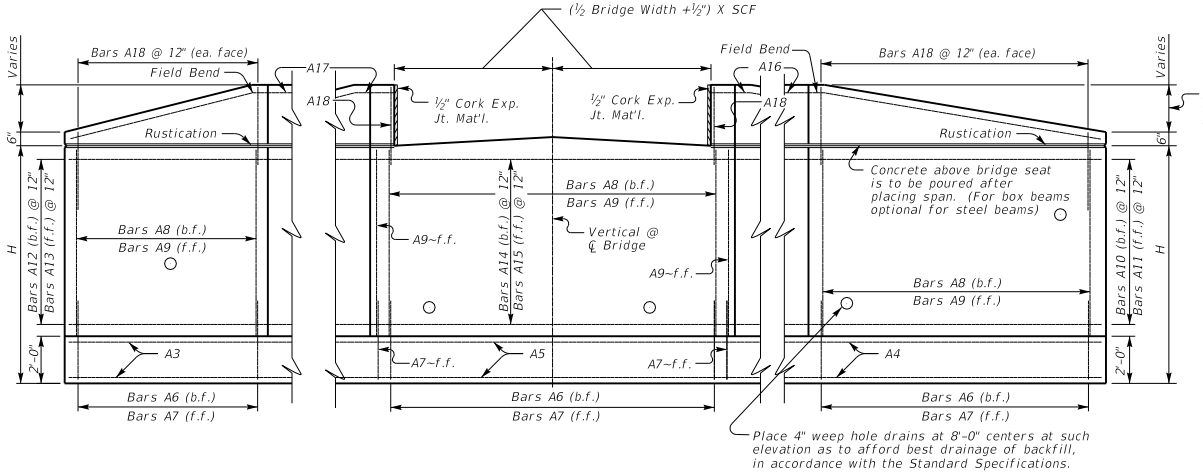

ELEVATION

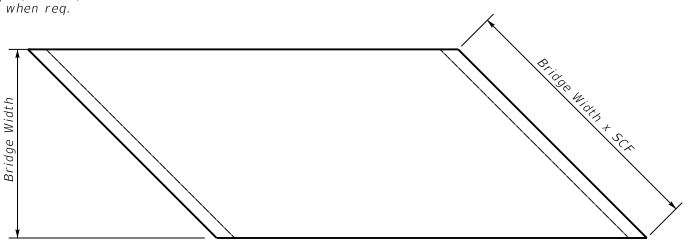

PLAN OF SUPERSTRUCTURE SLAB

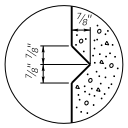

RUSTICATION GROOVE

KENTUCKY
DEPARTMENT OF HIGHWAYS

35° SKEW VARIABLE WIDTH ABUTMENT 50% SKEWED WINGS

STANDARD DRAWING NO. BSA-015

SUBMITTED _____ DIRECTOR DIVISION OF STRUCTURAL DESIGN — DATE 02-26-20

APPROVED _____ STATE HIGHWAY ENGINEER — DATE 02-26-20

35° SKEW VARIABLE BRIDGE WIDTH 2:1 FILL SLOPES WINGS SKEWED 50% FROM ROADWAY TO BREASTWALL

Bill of Reinforcement

MARK	A1					A2					A3			A4			A5					
TYPE	Str.					Str.					Str.			Str.			Str.					
SIZE											#5			#5			#5					
H	No.	Size	Length ft.	Length in.	Spacing	No.	Size	Length ft.	Length in.	Spacing	No.	Length ft.	Length in.	No.	Length ft.	Length in.	No.	Length ft.	Length in.	+Lb =	Length ft.	Length in.
15-16	68+Nb=	10	11	8	12	68+Nb=	7	11	8	12	24	20	2	24	34	1	24	13	6	+Lb=		
13-14	62+Nb=	9	10	8	12	62+Nb=	7	10	8	12	22	17	10	22	30	0	22	13	1	+Lb=		
11-12	54+Nb=	8	9	8	12	54+Nb=	6	9	8	12	20	15	6	20	24	10	20	12	8	+Lb=		
9-10	48+Nb=	7	8	8	12	48+Nb=	5	8	8	12	18	13	3	18	21	9	18	12	3	+Lb=		
7-8	40+Nb=	6	7	2	12	40+Nb=	5	7	2	12	16	10	8	16	16	1	16	11	4	+Lb=		
5-6	33+Nb=	5	6	2	12	33+Nb=	5	6	2	12	14	8	4	14	11	11	14	10	11	+Lb=		

MARK	A6													A7					A8				
TYPE	4													Str.					Str.				
SIZE																							
H	No.	Size	Length ft.	Length in.	Spacing	A ft.	A in.	B ft.	B in.	C ft.	C in.	D ft.	D in.	No.	Size	Length ft.	Length in.	Spacing	No.	Size	Length ft.	Length in.	Spacing
15-16	56+Nb=	9	9	11	12	8	⅛	1	10	0	11¾	8	6	59+Nb=	5	4	11	12	56+Nb=	6	12	10	12
13-14	50+Nb=	8	8	3	12	6	11	1	3	0	8	7	3	53+Nb=	5	4	11	12	50+Nb=	6	10	10	12
11-12	43+Nb=	7	7	1	12	5	10½	1	2	0	7	6	2	46+Nb=	5	4	11	12	43+Nb=	5	8	10	12
9-10	38+Nb=	6	6	1	12	5	1	1	0	0	6	5	4	41+Nb=	5	4	11	12	38+Nb=	5	6	10	12
7-8	31+Nb=	5	5	7	12	4	8½	0	10	0	5	4	11	34+Nb=	5	4	11	12	31+Nb=	5	4	10	12
5-6	25+Nb=	5	5	7	12	4	8½	0	10	0	5	4	11	28+Nb=	5	4	11	12	25+Nb=	5	2	10	12

MARK	A9				A10			A11			A12			A13			A14					
TYPE	Str.				8			8			8			8			7					
SIZE	#5				#5			#5			#5			#5			#5					
H	No.	Length ft.	Length in.	Spacing	No.	Length ft.	Length in.	No.	Length ft.	Length in.	No.	Length ft.	Length in.	No.	Length ft.	Length in.	No.	Length ft.	Length in.	+Lb =	Length ft.	Length in.
15-16	59+Nb=	12	10	12	14	36	1	14	33	3	14	18	8	14	18	0	14	14	5	+Lb=		
13-14	53+Nb=	10	10	12	12	32	1	12	29	3	12	16	8	12	16	0	12	14	6	+Lb=		
11-12	46+Nb=	8	10	12	10	27	1	10	24	3	10	14	8	10	14	0	10	14	6	+Lb=		
9-10	41+Nb=	6	10	12	8	24	1	8	21	3	8	12	8	8	12	0	8	14	6	+Lb=		
7-8	34+Nb=	4	10	12	6	19	2	6	16	3	6	10	8	6	10	0	6	14	6	+Lb=		
5-6	28+Nb=	2	10	12	4	15	2	4	12	3	4	8	8	4	8	0	4	14	6	+Lb=		

MARK	A15						A16			A17			A18		
TYPE	7						Str.			Str.			Str.		
SIZE	#5						#5			#5			#5		
H	No.	Length ft.	Length in.	+Lb =	Length ft.	Length in.	No.	Length ft.	Length in.	No.	Length ft.	Length in.	No.	Length ft.	Length in.
15-16	14	10	10	+Lb=			2	37	11	2	20	7	121	5	9
13-14	12	10	10	+Lb=			2	33	11	2	18	7	109	5	9
11-12	10	10	10	+Lb=			2	28	11	2	16	7	95	5	9
9-10	8	10	10	+Lb=			2	25	11	2	14	7	85	5	9
7-8	6	10	10	+Lb=			2	20	11	2	12	7	71	5	9
5-6	4	10	10	+Lb=			2	16	11	2	10	7	59	5	9

Table of Dimensions

H	W Length ft.	W Length in.	N Length ft.	N Length in.	M2 Length ft.	M2 Length in.	M3 Length ft.	M3 Length in.	T2 Length ft.	T2 Length in.	T3 Length ft.	T3 Length in.	L2 Length ft.	L3 Length ft.	S2 Length ft.	S2 Length in.	S2 + Lb/2 =	S2 Length ft.	S2 Length in.	S3 Length ft.	S3 Length in.	S3 + Lb/2 =	S3 Length ft.	S3 Length in.
15-16	12	0	5	0	15	6¾	17	11½	29	10⅞	9	4¼	32	16	10	3⅞	+0.5Lb=			3	¾	+0.5Lb=		
13-14	11	0	4	6	13	8	15	11	26	3	8	3⅜	28	14	9	10¼	+0.5Lb=			3	1¼	+0.5Lb=		
11-12	10	0	4	0	11	3⅝	13	10½	21	8½	7	2⅝	23	12	9	4⅝	+0.5Lb=			3	1⅞	+0.5Lb=		
9-10	9	0	3	6	9	10¼	11	10	18	11¼	6	1⅞	20	10	8	10⅞	+0.5Lb=			3	2⅜	+0.5Lb=		
7-8	7	6	2	9	7	5½	9	7⅞	14	4	5	¼	15	8	8	2⅜	+0.5Lb=			3	3¼	+0.5Lb=		
5-6	6	6	2	3	5	6¾	7	7⅜	10	8⅛	3	11½	11	6	7	8¾	+0.5Lb=			3	3¾	+0.5Lb=		

Reinforcement Details

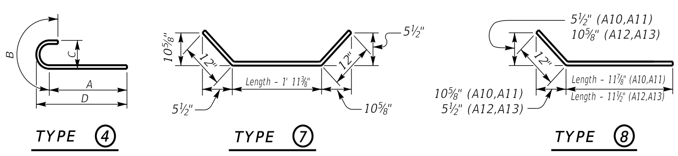

*Concrete quantities computed using 21" beam depth on ½" pad & Variable Bridge Width

Quantities

H	Concrete* C.Y.	Reinforcement LBS.
5	21.74+(0.71xLb) =	2032+(52.8xLb) =
6	23.67+(0.78xLb) =	2032+(52.8xLb) =
7	33.71+(0.93xLb) =	3062+(68.7xLb) =
8	36.09+(1.01xLb) =	3062+(68.7xLb) =
9	51.05+(1.19xLb) =	4695+(91xLb) =
10	53.95+(1.27xLb) =	4695+(91xLb) =
11	67.29+(1.41xLb) =	6745+(120.4xLb) =
12	70.56+(1.49xLb) =	6745+(120.4xLb) =
13	89.22+(1.64xLb) =	10057+(161xLb) =
14	93.01+(1.71xLb) =	10057+(161xLb) =
15	112.3+(1.86xLb) =	13480+(198.6xLb) =
16	116.54+(1.93xLb) =	13480+(198.6xLb) =

ABUTMENT SKEW CORRECTION FACTOR (SCF) = 1.221

NUMBER OF BARS TO ADD (Nb) = Bridge Width (feet) x SCF (round up to nearest whole number)

LENGTH OF ABUTMENT TO ADD (Lb) = Bridge Width (feet) x SCF (convert decimal to architectural)

GENERAL NOTES

SPECIFICATIONS: Construct abutments according to the current edition of the Kentucky Department of Highways Standard Specifications for Road and Bridge Construction. Abutments are designed for side by side box beams as detailed in Standard Drawings BDP-001 through BDP-012, current edition. Dimensions may be adjusted to allow for any out to out bridge width. Abutments are also adequate for Std. Dwg. slabs or steel beam superstructures.

FOUNDATION PRESSURE: Construct abutment footings on solid rock bearing material that can support a pressure of 8000 psf service or 10,800 psf strength factored as recommended by a geotechnical engineer.

WING LENGTHS: Calculated assuming 21" superstructure depth and stream bank elevation at top of footing.

FOOTING ELEVATION: Construct bottom of footing below the anticipated scour elevation. (This typically entails embedding the footings 1'-0" to 2'-0" into rock and pouring concrete directly against cut rock faces. as recommended by geotechnical engineer.)

NOTE: Distances to bars shown are clear dimensions unless otherwise noted.

MATERIAL SPECIFICATIONS:
Concrete, Class "A" = 3500 psi
Steel Reinforcement = Grade 60

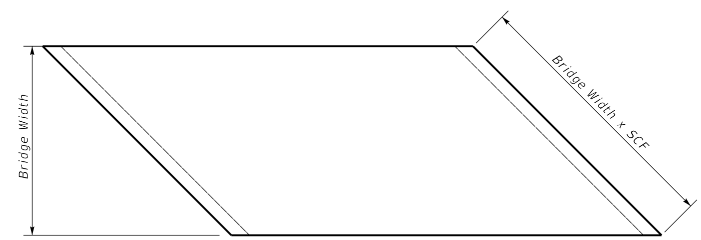

PLAN OF SUPERSTRUCTURE SLAB

KENTUCKY
DEPARTMENT OF HIGHWAYS

35° SKEW VARIABLE WIDTH ABUTMENT 50% SKEWED WINGS

STANDARD DRAWING NO. BSA-016

SUBMITTED [signature] DIRECTOR DIVISION OF STRUCTURAL DESIGN — 02-26-20 DATE

APPROVED [signature] STATE HIGHWAY ENGINEER — 02-26-20 DATE

40° SKEW VARIABLE BRIDGE WIDTH 2:1 FILL SLOPES WINGS SKEWED 50% FROM ROADWAY TO BREASTWALL

ABUTMENT SKEW CORRECTION FACTOR (SCF) = 1.305

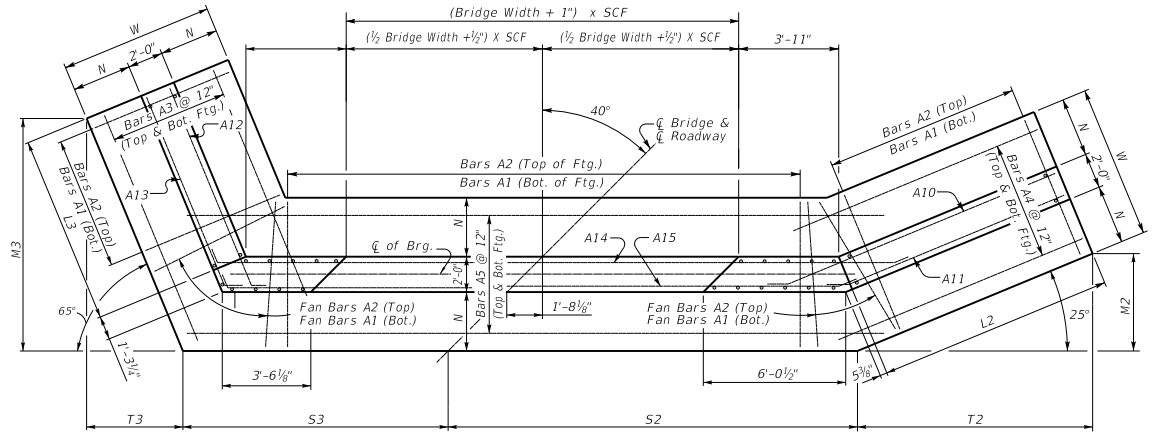

PLAN

NOTE: Trim A16 & A17 bars if necessary

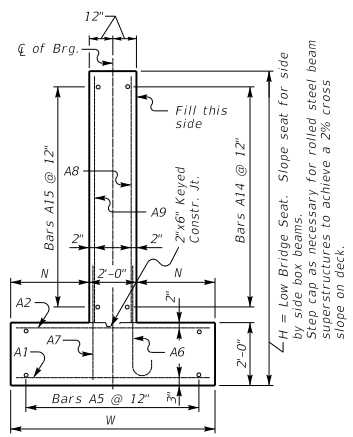

WALL SECTION

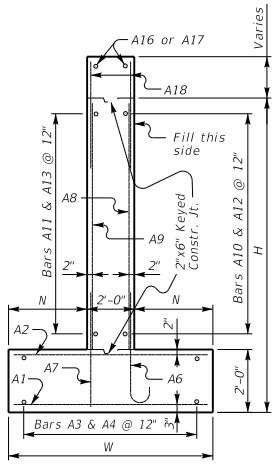

WING SECTION

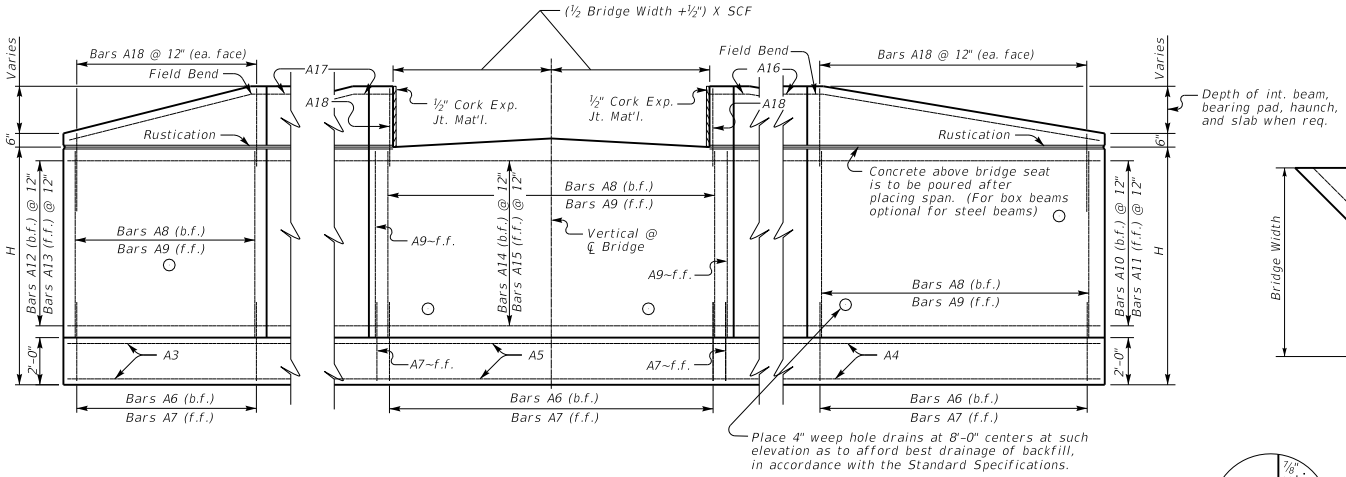

ELEVATION

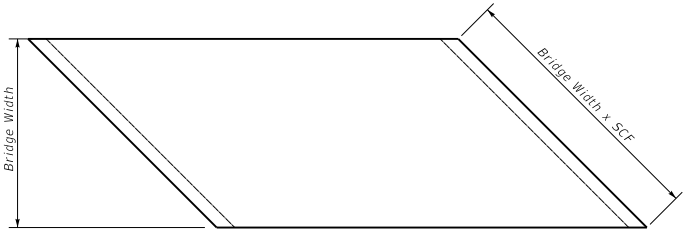

PLAN OF SUPERSTRUCTURE SLAB

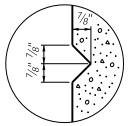

RUSTICATION GROOVE

KENTUCKY DEPARTMENT OF HIGHWAYS

40° SKEW VARIABLE WIDTH ABUTMENT 50% SKEWED WINGS

STANDARD DRAWING NO. BSA-017

SUBMITTED _____ DIRECTOR DIVISION OF STRUCTURAL DESIGN — DATE 02-26-20

APPROVED _____ STATE HIGHWAY ENGINEER — DATE 02-26-20

40° SKEW VARIABLE BRIDGE WIDTH 2:1 FILL SLOPES WINGS SKEWED 50% FROM ROADWAY TO BREASTWALL

Bill of Reinforcement

MARK	A1					A2					A3			A4			A5					
TYPE	Str.					Str.					Str.			Str.			Str.					
SIZE											#5			#5			#5					
H	No.	Size	Length ft.	Length in.	Spacing	No.	Size	Length ft.	Length in.	Spacing	No.	Length ft.	Length in.	No.	Length ft.	Length in.	No.	Length ft.	Length in.	+Lb =	Length ft.	Length in.
15-16	72+Nb=	10	11	8	12	72+Nb=	7	11	8	12	24	20	4	24	37	0	24	14	0	+Lb=		
13-14	64+Nb=	9	10	8	12	64+Nb=	7	10	8	12	22	18	0	22	31	11	22	13	7	+Lb=		
11-12	57+Nb=	8	9	8	12	57+Nb=	6	9	8	12	20	15	8	20	26	9	20	13	2	+Lb=		
9-10	51+Nb=	7	8	8	12	51+Nb=	5	8	8	12	18	13	4	18	23	8	18	12	9	+Lb=		
7-8	42+Nb=	6	7	2	12	42+Nb=	5	7	2	12	16	10	9	16	18	0	16	11	10	+Lb=		
5-6	35+Nb=	5	6	2	12	35+Nb=	5	6	2	12	14	8	6	14	12	10	14	11	5	+Lb=		

MARK	A6													A7					A8				
TYPE	4													Str.					Str.				
SIZE																							
H	No.	Size	Length ft.	Length in.	Spacing	A ft.	A in.	B ft.	B in.	C ft.	C in.	D ft.	D in.	No.	Size	Length ft.	Length in.	Spacing	No.	Size	Length ft.	Length in.	Spacing
15-16	59+Nb=	9	9	11	12	8	⅛	1	10	0	11¾	8	6	63+Nb=	5	4	11	12	59+Nb=	6	12	10	12
13-14	52+Nb=	8	8	3	12	6	11	1	3	0	8	7	3	56+Nb=	5	4	11	12	52+Nb=	6	10	10	12
11-12	45+Nb=	7	7	1	12	5	10½	1	2	0	7	6	2	49+Nb=	5	4	11	12	45+Nb=	5	8	10	12
9-10	40+Nb=	6	6	1	12	5	1	1	0	0	6	5	4	44+Nb=	5	4	11	12	40+Nb=	5	6	10	12
7-8	33+Nb=	5	5	7	12	4	8½	0	10	0	5	4	11	37+Nb=	5	4	11	12	33+Nb=	5	4	10	12
5-6	26+Nb=	5	5	7	12	4	8½	0	10	0	5	4	11	30+Nb=	5	4	11	12	26+Nb=	5	2	10	12

MARK	A9				A10			A11			A12			A13		
TYPE	Str.				8			8			8			8		
SIZE	#5				#5			#5			#5			#5		
H	No.	Length ft.	Length in.	Spacing	No.	Length ft.	Length in.	No.	Length ft.	Length in.	No.	Length ft.	Length in.	No.	Length ft.	Length in.
15-16	63+Nb=	12	10	12	14	39	4	14	36	3	14	18	6	14	18	0
13-14	56+Nb=	10	10	12	12	34	4	12	31	3	12	16	6	12	16	0
11-12	49+Nb=	8	10	12	10	29	5	10	26	3	10	14	6	10	14	0
9-10	44+Nb=	6	10	12	8	26	5	8	23	3	8	12	7	8	12	0
7-8	37+Nb=	4	10	12	6	21	5	6	18	3	6	10	7	6	10	0
5-6	30+Nb=	2	10	12	4	16	5	4	13	3	4	8	7	4	8	0

MARK	A14						A15						A16			A17			A18		
TYPE	7						7						Str.			Str.			Str.		
SIZE	#5						#5						#5			#5			#5		
H	No.	Length ft.	Length in.	+Lb =	Length ft.	Length in.	No.	Length ft.	Length in.	+Lb =	Length ft.	Length in.	No.	Length ft.	Length in.	No.	Length ft.	Length in.	No.	Length ft.	Length in.
15-16	14	15	3	+Lb=			14	11	5	+Lb=			2	41	5	2	20	8	128	5	9
13-14	12	15	3	+Lb=			12	11	5	+Lb=			2	36	5	2	18	8	114	5	9
11-12	10	15	3	+Lb=			10	11	5	+Lb=			2	31	5	2	16	8	100	5	9
9-10	8	15	4	+Lb=			8	11	5	+Lb=			2	28	5	2	14	8	90	5	9
7-8	6	15	4	+Lb=			6	11	5	+Lb=			2	23	5	2	12	8	76	5	9
5-6	4	15	4	+Lb=			4	11	5	+Lb=			2	18	5	2	10	8	62	5	9

Table of Dimensions

H	W Length ft.	W Length in.	N Length ft.	N Length in.	M2 Length ft.	M2 Length in.	M3 Length ft.	M3 Length in.	T2 Length ft.	T2 Length in.	T3 Length ft.	T3 Length in.	L2 Length ft.	L3 Length ft.	S2 Length ft.	S2 Length in.	S2 + Lb/2 =	S2 Length ft.	S2 Length in.	S3 Length ft.	S3 Length in.	S3 + Lb/2 =	S3 Length ft.	S3 Length in.
15-16	12	0	5	0	15	5⅜	18	6½	33	1½	8	7¾	35	16	11	4¾	+0.5Lb=			2	6⅝	+0.5Lb=		
13-14	11	0	4	6	13	3½	16	5¼	28	6	7	8	30	14	10	10⅜	+0.5Lb=			2	7⅞	+0.5Lb=		
11-12	10	0	4	0	11	1½	14	4⅛	23	10⅜	6	8¼	25	12	10	4	+0.5Lb=			2	9⅛	+0.5Lb=		
9-10	9	0	3	6	9	9¾	12	2⅞	21	½	5	8½	22	10	9	9⅝	+0.5Lb=			2	10⅜	+0.5Lb=		
7-8	7	6	2	9	7	7½	9	11⅞	16	4⅜	4	7⅞	17	8	9	⅛	+0.5Lb=			3	⅛	+0.5Lb=		
5-6	6	6	2	3	5	5⅝	7	10¾	11	8¾	3	8⅛	12	6	8	5¾	+0.5Lb=			3	1⅜	+0.5Lb=		

Reinforcement Details

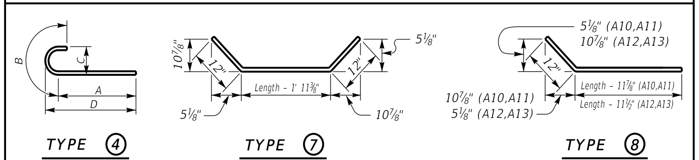

*Concrete quantities computed using 21" beam depth on ½" pad & Variable Bridge Width

Quantities

H	Concrete* C.Y.	Reinforcement LBS.
5	23.01+(0.71xLb) =	2143+(52.8xLb) =
6	25.06+(0.78xLb) =	2143+(52.8xLb) =
7	36.35+(0.93xLb) =	3263+(68.7xLb) =
8	38.92+(1.01xLb) =	3263+(68.7xLb) =
9	54.35+(1.19xLb) =	4975+(91xLb) =
10	57.43+(1.27xLb) =	4975+(91xLb) =
11	71.15+(1.41xLb) =	7104+(120.4xLb) =
12	74.61+(1.49xLb) =	7104+(120.4xLb) =
13	93.64+(1.64xLb) =	10462+(161xLb) =
14	97.62+(1.71xLb) =	10462+(161xLb) =
15	119.24+(1.86xLb) =	14253+(198.6xLb) =
16	123.73+(1.93xLb) =	14253+(198.6xLb) =

ABUTMENT SKEW CORRECTION FACTOR (SCF) = 1.305

NUMBER OF BARS TO ADD (Nb) = Bridge Width (feet) x SCF (round up to nearest whole number)

LENGTH OF ABUTMENT TO ADD (Lb) = Bridge Width (feet) x SCF (convert decimal to architectural)

GENERAL NOTES

SPECIFICATIONS: Construct abutments according to the current edition of the Kentucky Department of Highways Standard Specifications for Road and Bridge Construction. Abutments are designed for side by side box beams as detailed in Standard Drawings BDP-001 through BDP-012, current edition. Dimensions may be adjusted to allow for any out to out bridge width. Abutments are also adequate for Std. Dwg. slabs or steel beam superstructures.

FOUNDATION PRESSURE: Construct abutment footings on solid rock bearing material that can support a pressure of 8000 psf service or 10,800 psf strength factored as recommended by a geotechnical engineer.

WING LENGTHS: Calculated assuming 21" superstructure depth and stream bank elevation at top of footing.

FOOTING ELEVATION: Construct bottom of footing below the anticipated scour elevation. (This typically entails embedding the footings 1'-0" to 2'-0" into rock and pouring concrete directly against cut rock faces. as recommended by geotechnical engineer.)

NOTE: Distances to bars shown are clear dimensions unless otherwise noted.

MATERIAL SPECIFICATIONS:
Concrete, Class "A" = 3500 psi
Steel Reinforcement = Grade 60

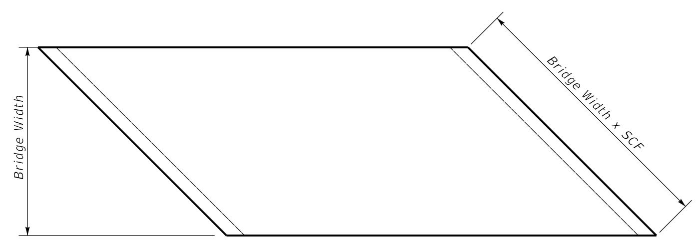

PLAN OF SUPERSTRUCTURE SLAB

KENTUCKY
DEPARTMENT OF HIGHWAYS

40° SKEW VARIABLE WIDTH ABUTMENT 50% SKEWED WINGS

STANDARD DRAWING NO. BSA-018

SUBMITTED ________ DIRECTOR DIVISION OF STRUCTURAL DESIGN — 02-26-20 DATE

APPROVED ________ STATE HIGHWAY ENGINEER — 02-26-20 DATE

45° SKEW VARIABLE BRIDGE WIDTH 2:1 FILL SLOPES WINGS SKEWED 50% FROM ROADWAY TO BREASTWALL

ABUTMENT SKEW CORRECTION FACTOR (SCF) = 1.414

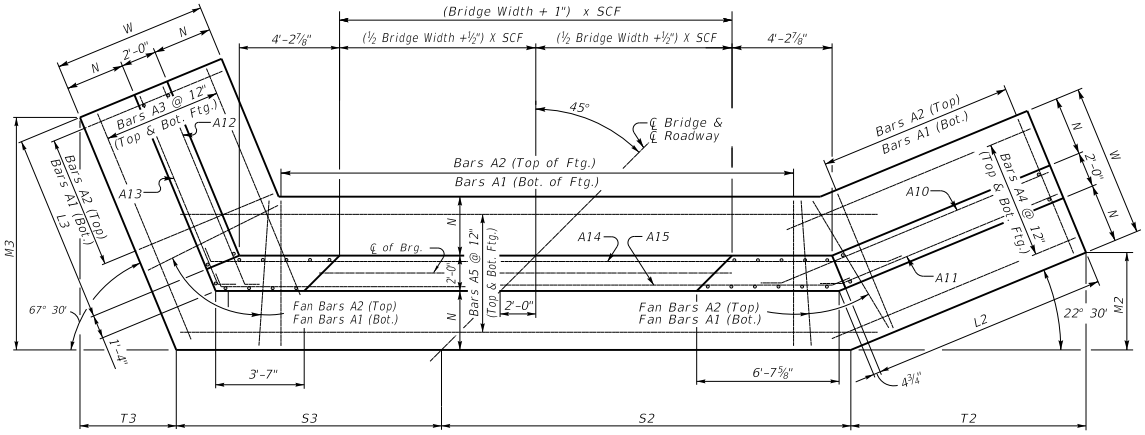

(Left Skew as shown;right skew opp. hand)

PLAN

NOTE: Trim A16 & A17 bars if necessary

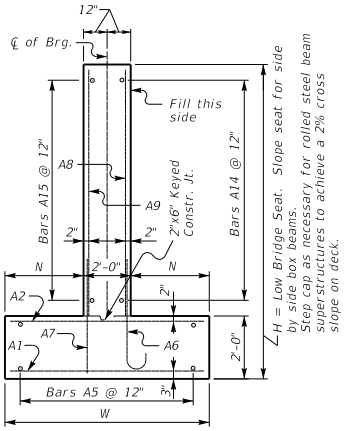

WALL SECTION

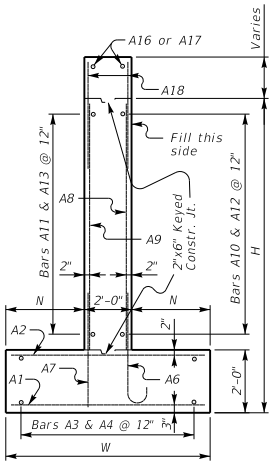

WING SECTION

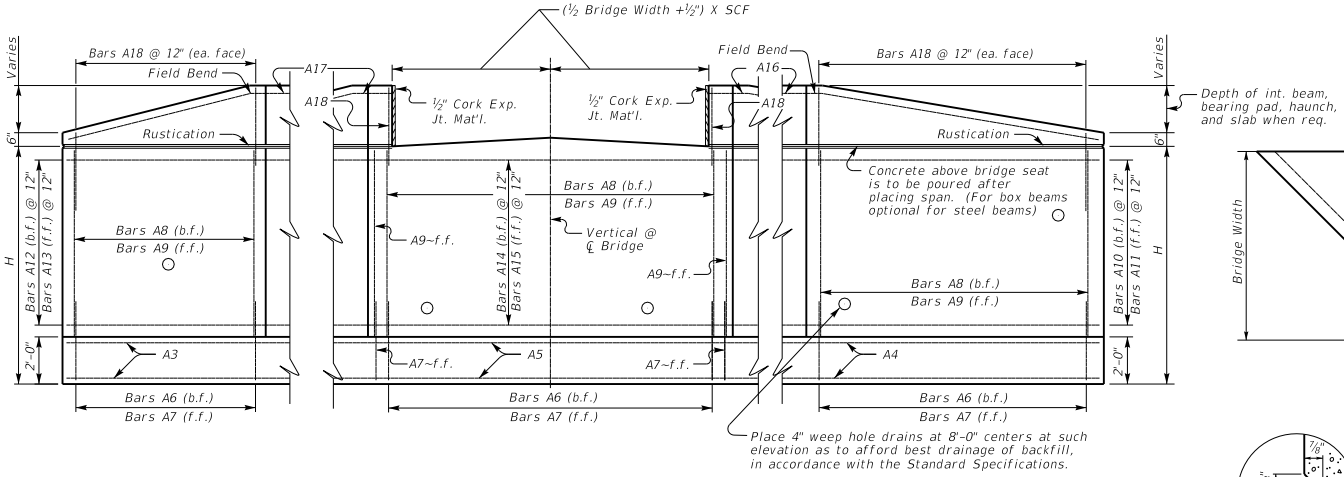

ELEVATION

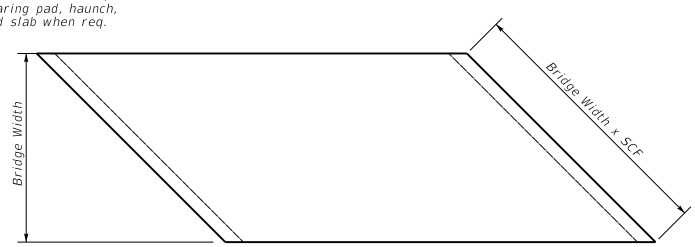

PLAN OF SUPERSTRUCTURE SLAB

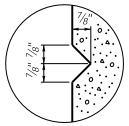

RUSTICATION GROOVE

KENTUCKY
DEPARTMENT OF HIGHWAYS

45° SKEW VARIABLE WIDTH ABUTMENT 50% SKEWED WINGS

STANDARD DRAWING NO. BSA-019

SUBMITTED _____ DIRECTOR DIVISION OF STRUCTURAL DESIGN — DATE 02-26-20

APPROVED _____ STATE HIGHWAY ENGINEER — DATE 02-26-20

45° SKEW VARIABLE BRIDGE WIDTH 2:1 FILL SLOPES WINGS SKEWED 50% FROM ROADWAY TO BREASTWALL

Bill of Reinforcement

MARK	A1	A2	A3	A4	A5	A6	A7	A8	A9	A10	A11	A12	A13	A14	A15	A16	A17	A18
TYPE	Str.	Str.	Str.	Str.	Str.	4	Str.	Str.	Str.	8	8	8	8	7	7	Str.	Str.	Str.
SIZE			#5	#5	#5				#5	#5	#5	#5	#5	#5	#5	#5	#5	#5
H	No.	No. Size Length ft. in. Spacing	No. Length ft. in.	No. Length ft. in.	No. Length ft. in. +Lb= Length ft. in.	No. Size Length ft. in. Spacing A ft. in. B ft. in. C ft. in. D ft. in.	No. Size Length ft. in. Spacing	No. Size Length ft. in. Spacing	No. Length ft. in.	No. Length ft. in.	No. Length ft. in.	No. Length ft. in.	No. Length ft. in.	No. Length ft. in. +Lb= Length ft. in.	No. Length ft. in. +Lb= Length ft. in.	No. Length ft. in.	No. Length ft. in.	No. Length ft. in.
15-16	75+Nb=	10 11 8 12	75+Nb=	7 11 8 12	24 20 6	24 38 11	24 14 8 +Lb=	62+Nb=	9 9 11 12 8 ⅛ 1 10 0 11¾ 8 6	66+Nb=	5 4 11 12	62+Nb=	6 12 10 12	66+Nb=	12 10 12	14 41 8	14 38 2	14 18 6	14 18 1	14 16 2 +Lb=	14 12 1 +Lb=	2 43 11	2 20 10	134 5 9
13-14	68+Nb=	9 10 8 12	68+Nb=	7 10 8 12	22 18 2	22 34 10	22 14 3 +Lb=	56+Nb=	8 8 3 12 6 11 1 3 0 8 7 3	60+Nb=	5 4 11 12	56+Nb=	6 10 10 12	60+Nb=	10 10 12	12 37 9	12 34 2	12 16 6	12 16 1	12 16 3 +Lb=	12 12 1 +Lb=	2 39 11	2 18 10	122 5 9
11-12	60+Nb=	8 9 8 12	60+Nb=	6 9 8 12	20 15 10	20 29 9	20 13 10 +Lb=	49+Nb=	7 7 1 12 5 10½ 1 2 0 7 6 2	53+Nb=	5 4 11 12	49+Nb=	5 8 10 12	53+Nb=	8 10 12	10 32 9	10 29 2	10 14 6	10 14 1	10 16 3 +Lb=	10 12 1 +Lb=	2 34 11	2 16 10	108 5 9
9-10	52+Nb=	7 8 8 12	52+Nb=	5 8 8 12	18 13 6	18 24 8	18 13 5 +Lb=	42+Nb=	6 6 1 12 5 1 1 0 0 6 5 4	46+Nb=	5 4 11 12	42+Nb=	5 6 10 12	46+Nb=	6 10 12	8 27 9	8 24 2	8 12 6	8 12 1	8 16 4 +Lb=	8 12 1 +Lb=	2 29 11	2 14 10	94 5 9
7-8	44+Nb=	6 7 2 12	44+Nb=	5 7 2 12	16 10 11	16 18 11	16 12 7 +Lb=	35+Nb=	5 5 7 12 4 8½ 0 10 0 5 4 11	39+Nb=	5 4 11 12	35+Nb=	5 4 10 12	39+Nb=	4 10 12	6 22 10	6 19 2	6 10 6	6 10 1	6 16 4 +Lb=	6 12 1 +Lb=	2 24 11	2 12 10	80 5 9
5-6	36+Nb=	5 6 2 12	36+Nb=	5 6 2 12	14 8 7	14 13 9	14 12 1 +Lb=	28+Nb=	5 5 7 12 4 8½ 0 10 0 5 4 11	32+Nb=	5 4 11 12	28+Nb=	5 2 10 12	32+Nb=	2 10 12	4 17 10	4 14 2	4 8 6	4 8 1	4 16 4 +Lb=	4 12 1 +Lb=	2 19 11	2 10 10	66 5 9

Table of Dimensions

H	W Length ft.	W Length in.	N Length ft.	N Length in.	M2 Length ft.	M2 Length in.	M3 Length ft.	M3 Length in.	T2 Length ft.	T2 Length in.	T3 Length ft.	T3 Length in.	L2 Length ft.	L3 Length ft.	S2 Length ft.	S2 Length in.	S2 + Lb/2 =	S2 Length ft.	S2 Length in.	S3 Length ft.	S3 Length in.	S3 + Lb/2 =	S3 Length ft.	S3 Length in.
15-16	12	0	5	0	14	8¼	19	1¼	35	5⅝	7	11	37	16	12	8⅜	+0.5Lb=			1	11¾	+0.5Lb=		
13-14	11	0	4	6	13	1½	16	11⅜	31	8¼	7	¼	33	14	12	1⅛	+0.5Lb=			2	1¾	+0.5Lb=		
11-12	10	0	4	0	11	2	14	9½	26	11⅝	6	1½	28	12	11	6	+0.5Lb=			2	3¾	+0.5Lb=		
9-10	9	0	3	6	9	2⅝	12	7⅝	22	3⅛	5	2¾	23	10	10	10¾	+0.5Lb=			2	5¾	+0.5Lb=		
7-8	7	6	2	9	7	3	10	3⅞	17	6	4	3⅜	18	8	10	0	+0.5Lb=			2	8¾	+0.5Lb=		
5-6	6	6	2	3	5	3⅝	8	2	12	9½	3	4⅝	13	6	9	4¾	+0.5Lb=			2	10¾	+0.5Lb=		

Reinforcement Details

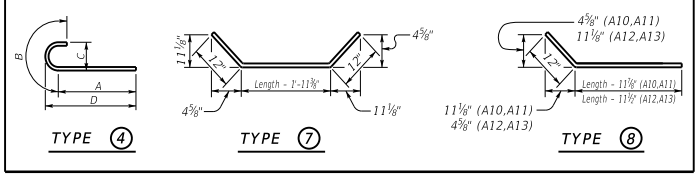

*Concrete quantities computed using 21" beam depth on ½" pad & Variable Bridge Width

Quantities

H	Concrete* C.Y.	Reinforcement LBS.
5	24.42+(0.71xLb) =	2258+(52.8xLb) =
6	26.59+(0.78xLb) =	2258+(52.8xLb) =
7	38.13+(0.93xLb) =	3425+(68.7xLb) =
8	40.82+(1.01xLb) =	3425+(68.7xLb) =
9	56.56+(1.19xLb) =	5154+(91xLb) =
10	59.77+(1.27xLb) =	5154+(91xLb) =
11	76.76+(1.41xLb) =	7598+(120.4xLb) =
12	80.49+(1.49xLb) =	7598+(120.4xLb) =
13	100.06+(1.64xLb) =	11157+(161xLb) =
14	104.31+(1.71xLb) =	11157+(161xLb) =
15	124.53+(1.86xLb) =	14883+(198.6xLb) =
16	129.22+(1.93xLb) =	14883+(198.6xLb) =

ABUTMENT SKEW CORRECTION FACTOR (SCF) = 1.414

NUMBER OF BARS TO ADD (Nb) = Bridge Width (feet) x SCF (round up to nearest whole number)

LENGTH OF ABUTMENT TO ADD (Lb) = Bridge Width (feet) x SCF (convert decimal to architectural)

GENERAL NOTES

SPECIFICATIONS: Construct abutments according to the current edition of the Kentucky Department of Highways Standard Specifications for Road and Bridge Construction. Abutments are designed for side by side box beams as detailed in Standard Drawings BDP-001 through BDP-012, current edition. Dimensions may be adjusted to allow for any out to out bridge width. Abutments are also adequate for Std. Dwg. slabs or steel beam superstructures.

FOUNDATION PRESSURE: Construct abutment footings on solid rock bearing material that can support a pressure of 8000 psf service or 10,800 psf strength factored as recommended by a geotechnical engineer.

WING LENGTHS: Calculated assuming 21" superstructure depth and stream bank elevation at top of footing.

FOOTING ELEVATION: Construct bottom of footing below the anticipated scour elevation. (This typically entails embedding the footings 1'-0" to 2'-0" into rock and pouring concrete directly against cut rock faces. as recommended by geotechnical engineer.)

NOTE: Distances to bars shown are clear dimensions unless otherwise noted.

MATERIAL SPECIFICATIONS:
Concrete, Class "A" = 3500 psi
Steel Reinforcement = Grade 60

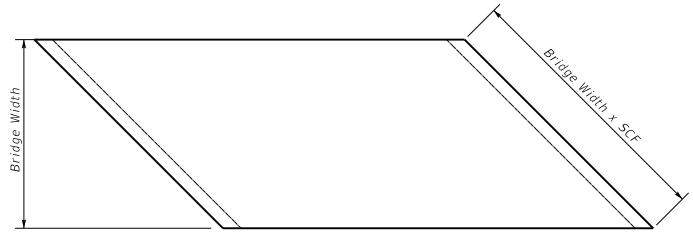

PLAN OF SUPERSTRUCTURE SLAB

KENTUCKY
DEPARTMENT OF HIGHWAYS

45° SKEW SUPPORT
VARIABLE WIDTH ABUTMENT
50% SKEWED WINGS

STANDARD DRAWING NO. BSA-020

SUBMITTED _____ DIRECTOR DIVISION OF STRUCTURAL DESIGN — DATE 02-26-20

APPROVED _____ STATE HIGHWAY ENGINEER — DATE 02-26-20

0° SKEW VARIABLE BRIDGE WIDTH 2:1 FILL SLOPES
22.5° SKEW FROM ROADWAY ON WINGS

ABUTMENT SKEW CORRECTION FACTOR (SCF) = 1.000

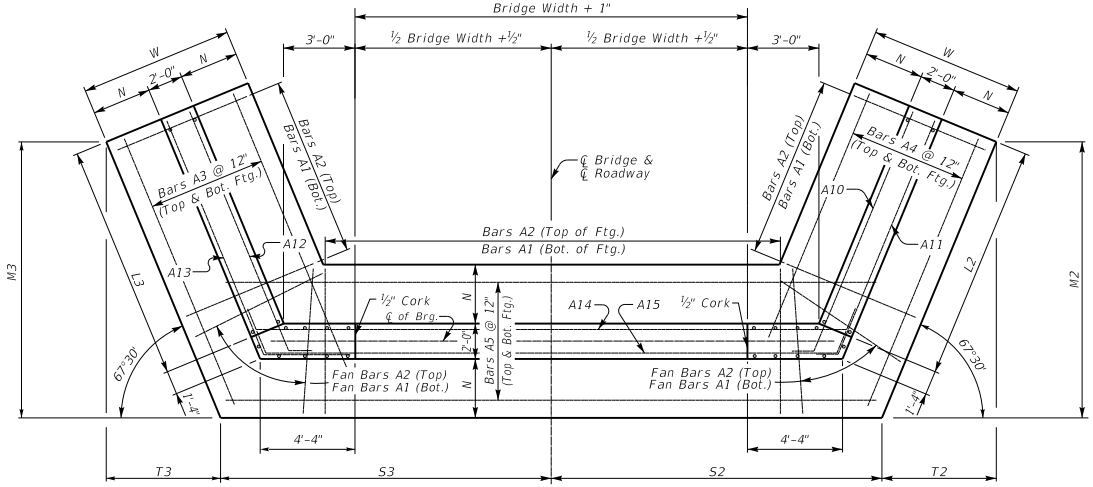

PLAN

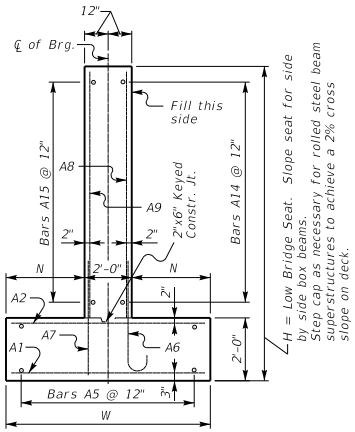

WALL SECTION

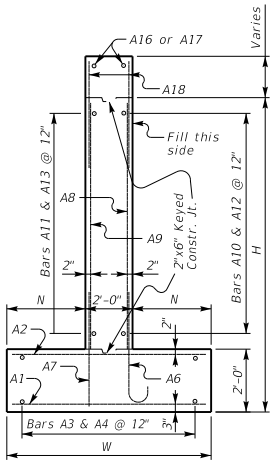

WING SECTION

Note: Trim A16 & A17 bars if necessary

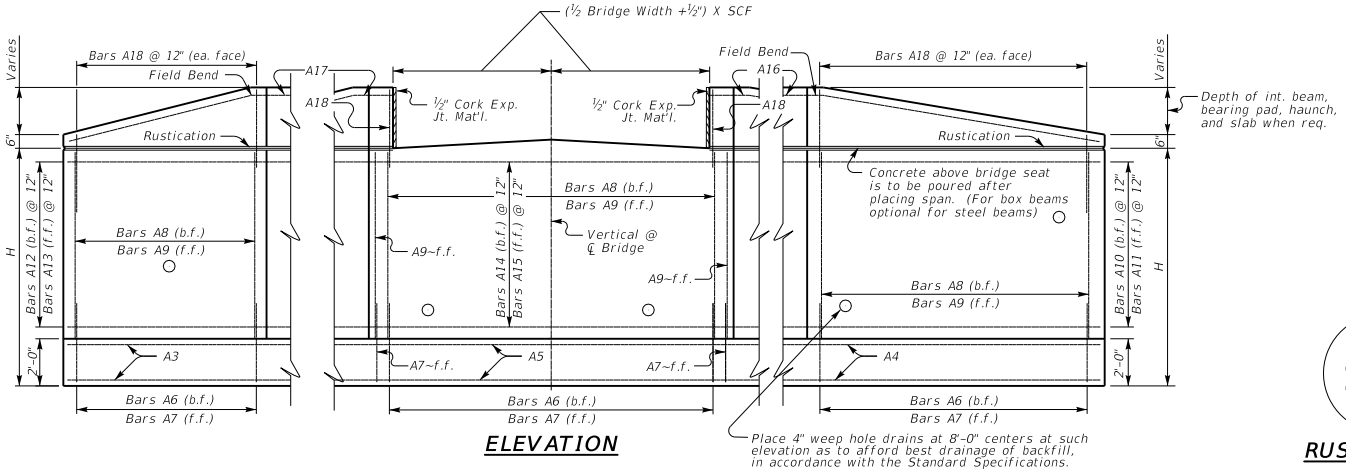

ELEVATION

PLAN OF SUPERSTRUCTURE SLAB

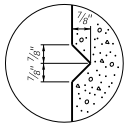

RUSTICATION GROOVE

KENTUCKY
DEPARTMENT OF HIGHWAYS

0° SKEW VARIABLE WIDTH ABUTMENT 25% SKEWED WINGS

STANDARD DRAWING NO. BSA-021

SUBMITTED _____ DIRECTOR DIVISION OF STRUCTURAL DESIGN — DATE 02-26-20

APPROVED _____ STATE HIGHWAY ENGINEER — DATE 02-26-20

0° SKEW VARIABLE BRIDGE WIDTH 2:1 FILL SLOPES
22.5° SKEW FROM ROADWAY ON WINGS

Bill of Reinforcement

MARK	A1					A2				
TYPE	Str.					Str.				
SIZE										
H	No.	Size	Length ft.	Length in.	Spacing	No.	Size	Length ft.	Length in.	Spacing
15-16	69+Nb=	10	11	8	12	69+Nb=	7	11	8	12
13-14	62+Nb=	9	10	8	12	62+Nb=	7	10	8	12
11-12	55+Nb=	8	9	8	12	55+Nb=	6	9	8	12
9-10	49+Nb=	7	8	8	12	49+Nb=	5	8	8	12
7-8	39+Nb=	6	7	2	12	39+Nb=	5	7	2	12
5-6	34+Nb=	5	6	2	12	34+Nb=	5	6	2	12

MARK	A3			A4			A5					
TYPE	Str.			Str.			Str.					
SIZE	#5			#5			#5					
H	No.	Length ft.	Length in.	No.	Length ft.	Length in.	No.	Length ft.	Length in.	+Lb =	Length ft.	Length in.
15-16	24	26	6	24	26	6	24	15	6	+Lb=		
13-14	22	23	2	22	23	2	22	14	10	+Lb=		
11-12	20	19	10	20	19	10	20	14	2	+Lb=		
9-10	18	17	6	18	17	6	18	13	6	+Lb=		
7-8	16	12	11	16	12	11	16	12	3	+Lb=		
5-6	14	10	7	14	10	7	14	11	7	+Lb=		

MARK	A6												
TYPE	4												
SIZE													
H	No.	Size	Length ft.	Length in.	Spacing	A ft.	A in.	B ft.	B in.	C ft.	C in.	D ft.	D in.
15-16	51+Nb=	9	9	11	12	8	⅛	1	10	0	11¾	8	6
13-14	45+Nb=	8	8	3	12	6	11	1	3	0	8	7	3
11-12	39+Nb=	7	7	1	12	5	10½	1	2	0	7	6	2
9-10	35+Nb=	6	6	1	12	5	1	1	0	0	6	5	4
7-8	27+Nb=	5	5	7	12	4	8½	0	10	0	5	4	11
5-6	23+Nb=	5	5	7	12	4	8½	0	10	0	5	4	11

MARK	A7					A8				
TYPE	Str.					Str.				
SIZE										
H	No.	Size	Length ft.	Length in.	Spacing	No.	Size	Length ft.	Length in.	Spacing
15-16	56+Nb=	5	4	11	12	51+Nb=	6	12	10	12
13-14	50+Nb=	5	4	11	12	45+Nb=	6	10	10	12
11-12	44+Nb=	5	4	11	12	39+Nb=	5	8	10	12
9-10	40+Nb=	5	4	11	12	35+Nb=	5	6	10	12
7-8	32+Nb=	5	4	11	12	27+Nb=	5	4	10	12
5-6	28+Nb=	5	4	11	12	23+Nb=	5	2	10	12

MARK	A9				A10			A11			A12			A13		
TYPE	Str.				8			8			8			8		
SIZE	#5				#5			#5			#5			#5		
H	No.	Length ft.	Length in.	Spacing	No.	Length ft.	Length in.	No.	Length ft.	Length in.	No.	Length ft.	Length in.	No.	Length ft.	Length in.
15-16	56+Nb=	12	10	12	14	24	6	14	24	1	14	24	6	14	24	1
13-14	50+Nb=	10	10	12	12	21	6	12	21	1	12	21	6	12	21	1
11-12	44+Nb=	8	10	12	10	18	6	10	18	1	10	18	6	10	18	1
9-10	40+Nb=	6	10	12	8	16	6	8	16	1	8	16	6	8	16	1
7-8	32+Nb=	4	10	12	6	12	6	6	12	1	6	12	6	6	12	1
5-6	28+Nb=	2	10	12	4	10	6	4	10	1	4	10	6	4	10	1

MARK	A14						A15					
TYPE	7						7					
SIZE	#5						#5					
H	No.	Length ft.	Length in.	+Lb =	Length ft.	Length in.	No.	Length ft.	Length in.	+Lb =	Length ft.	Length in.
15-16	14	11	7	+Lb=			14	10	4	+Lb=		
13-14	12	11	7	+Lb=			12	10	4	+Lb=		
11-12	10	11	7	+Lb=			10	10	4	+Lb=		
9-10	8	11	7	+Lb=			8	10	4	+Lb=		
7-8	6	11	7	+Lb=			6	10	4	+Lb=		
5-6	4	11	7	+Lb=			4	10	4	+Lb=		

MARK	A16			A17			A18		
TYPE	Str.			Str.			Str.		
SIZE	#5			#5			#5		
H	No.	Length ft.	Length in.	No.	Length ft.	Length in.	No.	Length ft.	Length in.
15-16	2	27	7	2	27	7	110	5	9
13-14	2	24	7	2	24	7	98	5	9
11-12	2	21	7	2	21	7	86	5	9
9-10	2	19	7	2	19	7	78	5	9
7-8	2	15	7	2	15	7	62	5	9
5-6	2	13	7	2	13	7	54	5	9

Table of Dimensions

H	W ft.	W in.	N ft.	N in.	M2 ft.	M2 in.	M3 ft.	M3 in.	T2 ft.	T2 in.	T3 ft.	T3 in.	L2 ft.	L3 ft.	S2 Length ft.	S2 Length in.	S2 + Lb/2 =	S2 Length ft.	S2 Length in.	S3 Length ft.	S3 Length in.	S3 + Lb/2 =	S3 Length ft.	S3 Length in.
15-16	12	0	5	0	24	7¾	24	7¾	10	2½	10	2½	22	22	7	8⅝	+0.5Lb=			7	8⅝	+0.5Lb=		
13-14	11	0	4	6	21	6¾	21	6¾	8	11¼	8	11¼	19	19	7	4⅝	+0.5Lb=			7	4⅝	+0.5Lb=		
11-12	10	0	4	0	18	5⅞	18	5⅞	7	7⅞	7	7⅞	16	16	7	⅝	+0.5Lb=			7	⅝	+0.5Lb=		
9-10	9	0	3	6	16	4	16	4	6	9⅛	6	9⅛	14	14	6	8⅝	+0.5Lb=			6	8⅝	+0.5Lb=		
7-8	7	6	2	9	12	2	12	2	5	½	5	½	10	10	6	2⅝	+0.5Lb=			6	2⅝	+0.5Lb=		
5-6	6	6	2	3	10	⅛	10	⅛	4	1¾	4	1¾	8	8	5	10⅝	+0.5Lb=			5	10⅝	+0.5Lb=		

Reinforcement Details

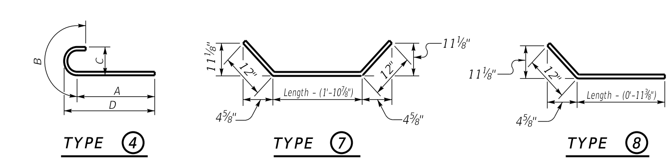

*Concrete quantities computed using 21" beam depth on ½" pad & Variable Bridge Width

Quantities

H	Concrete* C.Y.	Reinforcement LBS.
5	20.59+(0.71xLb) =	1993+(52.8xLb) =
6	22.42+(0.78xLb) =	1993+(52.8xLb) =
7	30.2+(0.93xLb) =	2856+(68.7xLb) =
8	32.33+(1.01xLb) =	2856+(68.7xLb) =
9	47.95+(1.19xLb) =	4571+(91xLb) =
10	50.68+(1.27xLb) =	4571+(91xLb) =
11	62.16+(1.41xLb) =	6513+(120.4xLb) =
12	65.18+(1.49xLb) =	6513+(120.4xLb) =
13	81.61+(1.64xLb) =	9594+(161xLb) =
14	85.07+(1.71xLb) =	9594+(161xLb) =
15	103.72+(1.86xLb) =	13000+(198.6xLb) =
16	107.63+(1.93xLb) =	13000+(198.6xLb) =

ABUTMENT SKEW CORRECTION FACTOR (SCF) = 1.0

NUMBER OF BARS TO ADD (Nb) = Bridge Width (feet) x SCF (round up to nearest whole number)

LENGTH OF ABUTMENT TO ADD (Lb) = Bridge Width (feet) x SCF (convert decimal to architectural)

GENERAL NOTES

SPECIFICATIONS: Construct abutments according to the current edition of the Kentucky Department of Highways Standard Specifications for Road and Bridge Construction. Abutments are designed for side by side box beams as detailed in Standard Drawings BDP-001 through BDP-012, current edition. Dimensions may be adjusted to allow for any out to out bridge width. Abutments are also adequate for Std. Dwg. slabs or steel beam superstructures.

FOUNDATION PRESSURE: Construct abutment footings on solid rock bearing material that can support a pressure of 8000 psf service or 10,800 psf strength factored as recommended by a geotechnical engineer.

WING LENGTHS: Calculated assuming 21" superstructure depth and stream bank elevation at top of footing.

FOOTING ELEVATION: Construct bottom of footing below the anticipated scour elevation. (This typically entails embedding the footings 1'-0" to 2'-0" into rock and pouring concrete directly against cut rock faces. as recommended by geotechnical engineer.)

NOTE: Distances to bars shown are clear dimensions unless otherwise noted.

MATERIAL SPECIFICATIONS:
Concrete, Class "A" = 3500 psi
Steel Reinforcement = Grade 60

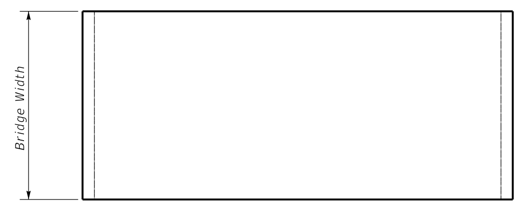

PLAN OF SUPERSTRUCTURE SLAB

KENTUCKY
DEPARTMENT OF HIGHWAYS

0° SKEW VARIABLE
WIDTH ABUTMENT
25% SKEWED WINGS

STANDARD DRAWING NO. BSA-022

SUBMITTED ____ DIRECTOR DIVISION OF STRUCTURAL DESIGN 02-26-20 DATE

APPROVED ____ STATE HIGHWAY ENGINEER 02-26-20 DATE

5° SKEW VARIABLE BRIDGE WIDTH 2:1 FILL SLOPES WINGS SKEWED 25% FROM ROADWAY TO BREASTWALL

ABUTMENT SKEW CORRECTION FACTOR (SCF) = 1.004

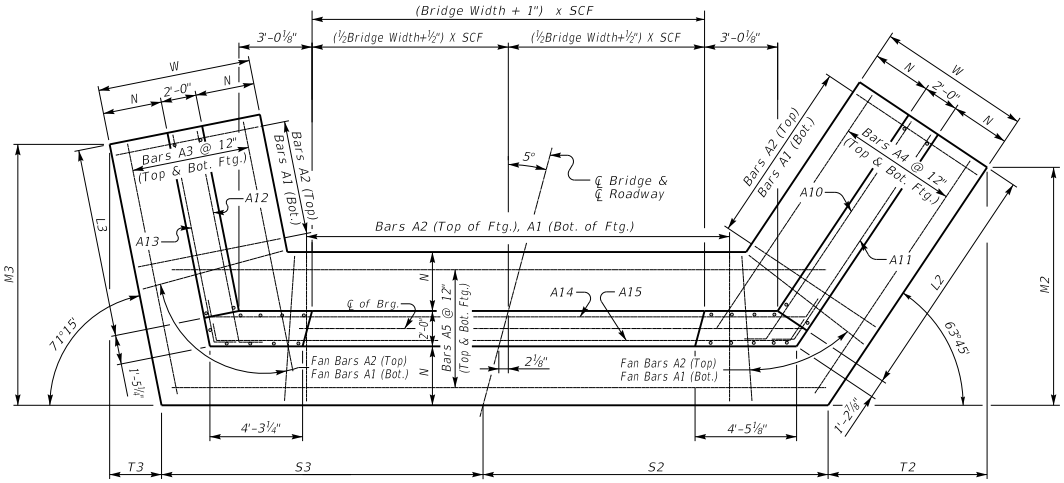

(Left Skew as shown;right skew opp. hand)

PLAN

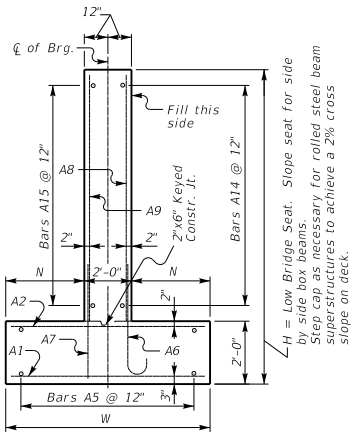

WALL SECTION

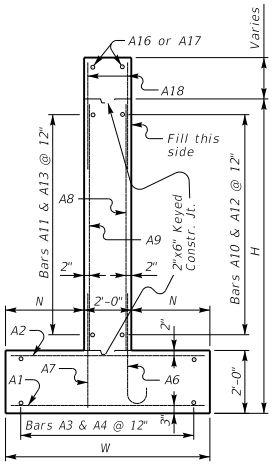

WING SECTION

NOTE: Trim A16 & A17 bars if necessary

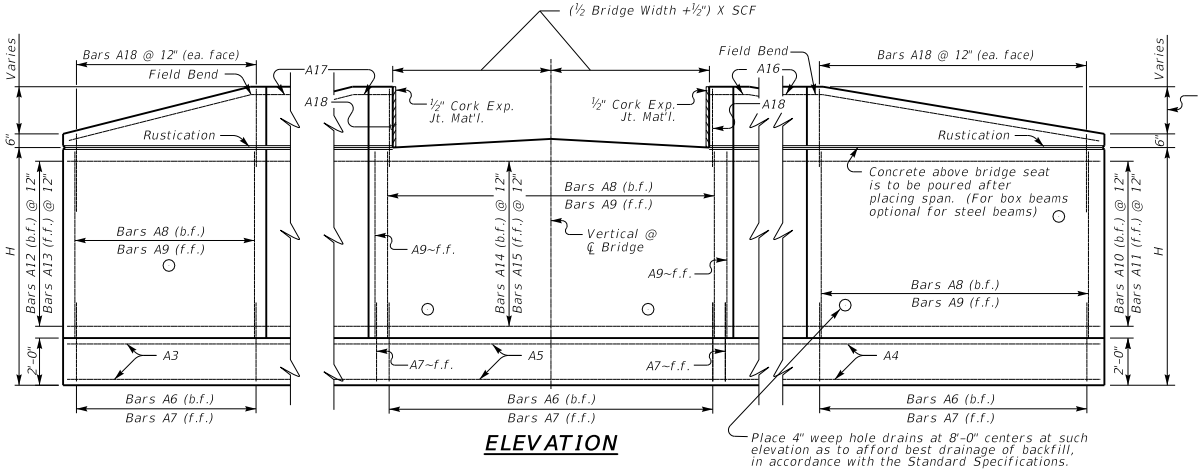

ELEVATION

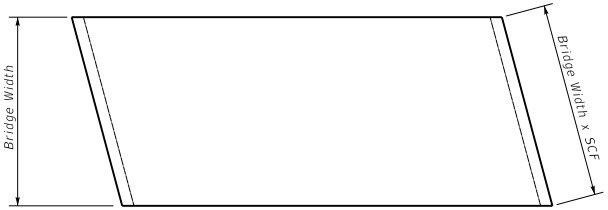

PLAN OF SUPERSTRUCTURE SLAB

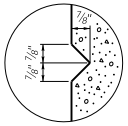

RUSTICATION GROOVE

KENTUCKY
DEPARTMENT OF HIGHWAYS

5° SKEW VARIABLE WIDTH ABUTMENT 25% SKEWED WINGS

STANDARD DRAWING NO. BSA-023

SUBMITTED _____ DIRECTOR DIVISION OF STRUCTURAL DESIGN — DATE 02-26-20

APPROVED _____ STATE HIGHWAY ENGINEER — DATE 02-26-20

5° SKEW VARIABLE BRIDGE WIDTH 2:1 FILL SLOPES WINGS SKEWED 25% FROM ROADWAY TO BREASTWALL

Bill of Reinforcement

MARK	A1					A2				
TYPE	Str.					Str.				
SIZE										
H	No.	Size	Length ft.	Length in.	Spacing	No.	Size	Length ft.	Length in.	Spacing
15-16	70+Nb=	10	11	8	12	70+Nb=	7	11	8	12
13-14	63+Nb=	9	10	8	12	63+Nb=	7	10	8	12
11-12	54+Nb=	8	9	8	12	54+Nb=	6	9	8	12
9-10	48+Nb=	7	8	8	12	48+Nb=	5	8	8	12
7-8	39+Nb=	6	7	2	12	39+Nb=	5	7	2	12
5-6	34+Nb=	5	6	2	12	34+Nb=	5	6	2	12

MARK	A3			A4			A5					
TYPE	Str.			Str.			Str.					
SIZE	#5			#5			#5					
H	No.	Length ft.	Length in.	No.	Length ft.	Length in.	No.	Length ft.	Length in.	+Lb =	Length ft.	Length in.
15-16	24	26	10	24	27	3	24	15	5	+Lb=		
13-14	22	23	6	22	23	11	22	14	9	+Lb=		
11-12	20	19	1	20	19	7	20	14	1	+Lb=		
9-10	18	16	9	18	17	4	18	13	5	+Lb=		
7-8	16	13	2	16	12	9	16	12	3	+Lb=		
5-6	14	10	9	14	10	5	14	11	7	+Lb=		

MARK	A6												
TYPE	4												
SIZE													
H	No.	Size	Length ft.	Length in.	Spacing	A ft.	A in.	B ft.	B in.	C ft.	C in.	D ft.	D in.
15-16	52+Nb=	9	9	11	12	8	⅛	1	10	0	11¾	8	6
13-14	46+Nb=	8	8	3	12	6	11	1	3	0	8	7	3
11-12	38+Nb=	7	7	1	12	5	10½	1	2	0	7	6	2
9-10	34+Nb=	6	6	1	12	5	1	1	0	0	6	5	4
7-8	27+Nb=	5	5	7	12	4	8½	0	10	0	5	4	11
5-6	23+Nb=	5	5	7	12	4	8½	0	10	0	5	4	11

MARK	A7					A8				
TYPE	Str.					Str.				
SIZE										
H	No.	Size	Length ft.	Length in.	Spacing	No.	Size	Length ft.	Length in.	Spacing
15-16	57+Nb=	5	4	11	12	52+Nb=	6	12	10	12
13-14	51+Nb=	5	4	11	12	46+Nb=	6	10	10	12
11-12	43+Nb=	5	4	11	12	38+Nb=	5	8	10	12
9-10	39+Nb=	5	4	11	12	34+Nb=	5	6	10	12
7-8	32+Nb=	5	4	11	12	27+Nb=	5	4	10	12
5-6	28+Nb=	5	4	11	12	23+Nb=	5	2	10	12

MARK	A9				A10			A11			A12			A13		
TYPE	Str.				8			8			8			8		
SIZE	#5				#5			#5			#5			#5		
H	No.	Length ft.	Length in.	Spacing	No.	Length ft.	Length in.	No.	Length ft.	Length in.	No.	Length ft.	Length in.	No.	Length ft.	Length in.
15-16	57+Nb=	12	10	12	14	25	6	14	24	11	14	24	6	14	24	2
13-14	51+Nb=	10	10	12	12	22	7	12	21	11	12	21	6	12	21	2
11-12	43+Nb=	8	10	12	10	18	7	10	17	11	10	17	6	10	17	2
9-10	39+Nb=	6	10	12	8	16	7	8	15	11	8	15	6	8	15	2
7-8	32+Nb=	4	10	12	6	12	7	6	11	11	6	12	6	6	12	2
5-6	28+Nb=	2	10	12	4	10	7	4	9	11	4	10	6	4	10	2

MARK	A14						A15						A16			A17			A18		
TYPE	7						7						Str.			Str.			Str.		
SIZE	#5						#5						#5			#5			#5		
H	No.	Length ft.	Length in.	+Lb =	Length ft.	Length in.	No.	Length ft.	Length in.	+Lb =	Length ft.	Length in.	No.	Length ft.	Length in.	No.	Length ft.	Length in.	No.	Length ft.	Length in.
15-16	14	11	7	+Lb=			14	10	4	+Lb=			2	28	7	2	27	7	112	5	9
13-14	12	11	7	+Lb=			12	10	4	+Lb=			2	25	7	2	24	7	100	5	9
11-12	10	11	7	+Lb=			10	10	4	+Lb=			2	21	7	2	20	7	84	5	9
9-10	8	11	7	+Lb=			8	10	4	+Lb=			2	19	7	2	18	7	76	5	9
7-8	6	11	7	+Lb=			6	10	4	+Lb=			2	15	7	2	15	7	62	5	9
5-6	4	11	7	+Lb=			4	10	4	+Lb=			2	13	7	2	13	7	54	5	9

Table of Dimensions

H	W Length ft.	W Length in.	N Length ft.	N Length in.	M2 Length ft.	M2 Length in.	M3 Length ft.	M3 Length in.	T2 Length ft.	T2 Length in.	T3 Length ft.	T3 Length in.	L2 Length ft.	L3 Length ft.	S2 Length ft.	S2 Length in.	S2 + Lb/2 =	S2 Length ft.	S2 Length in.	S3 Length ft.	S3 Length in.	S3 + Lb/2 =	S3 Length ft.	S3 Length in.
15-16	12	0	5	0	24	6⅜	25	7	12	1⅛	8	8¼	23	22	8	¼	+0.5Lb=			7	5½	+0.5Lb=		
13-14	11	0	4	6	21	6¾	22	4⅞	10	7⅝	7	7¼	20	19	7	8	+0.5Lb=			7	1¾	+0.5Lb=		
11-12	10	0	4	0	17	8⅜	18	3¼	8	8¾	6	2½	16	15	7	3¾	+0.5Lb=			6	9⅞	+0.5Lb=		
9-10	9	0	3	6	15	7½	16	½	7	8½	5	5⅜	14	13	6	11½	+0.5Lb=			6	6⅛	+0.5Lb=		
7-8	7	6	2	9	11	7⅜	12	8¼	5	8¾	4	3¾	10	10	6	5⅛	+0.5Lb=			6	½	+0.5Lb=		
5-6	6	6	2	3	9	6½	10	5½	4	8½	3	6⅝	8	8	6	⅞	+0.5Lb=			5	8¾	+0.5Lb=		

Reinforcement Details

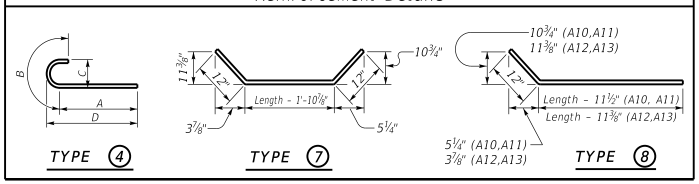

*Concrete quantities computed using 21" beam depth on ½" pad & Variable Bridge Width

Quantities

H	Concrete* C.Y.	Reinforcement LBS.
5	20.61+(0.71xLb) =	1993+(52.8xLb) =
6	22.45+(0.78xLb) =	1993+(52.8xLb) =
7	30.23+(0.93xLb) =	2857+(68.7xLb) =
8	32.37+(1.01xLb) =	2857+(68.7xLb) =
9	46.71+(1.19xLb) =	4466+(91xLb) =
10	49.36+(1.27xLb) =	4466+(91xLb) =
11	60.69+(1.41xLb) =	6377+(120.4xLb) =
12	63.64+(1.49xLb) =	6377+(120.4xLb) =
13	83.39+(1.64xLb) =	9769+(161xLb) =
14	86.93+(1.71xLb) =	9769+(161xLb) =
15	105.73+(1.86xLb) =	13211+(198.6xLb) =
16	109.71+(1.93xLb) =	13211+(198.6xLb) =

ABUTMENT SKEW CORRECTION FACTOR (SCF) = 1.004

NUMBER OF BARS TO ADD (Nb) = Bridge Width (feet) x SCF (round up to nearest whole number)

LENGTH OF ABUTMENT TO ADD (Lb) = Bridge Width (feet) x SCF (convert decimal to architectural)

GENERAL NOTES

SPECIFICATIONS: Construct abutments according to the current edition of the Kentucky Department of Highways Standard Specifications for Road and Bridge Construction. Abutments are designed for side by side box beams as detailed in Standard Drawings BDP-001 through BDP-012, current edition. Dimensions may be adjusted to allow for any out to out bridge width. Abutments are also adequate for Std. Dwg. slabs or steel beam superstructures.

FOUNDATION PRESSURE: Construct abutment footings on solid rock bearing material that can support a pressure of 8000 psf service or 10,800 psf strength factored as recommended by a geotechnical engineer.

WING LENGTHS: Calculated assuming 21" superstructure depth and stream bank elevation at top of footing.

FOOTING ELEVATION: Construct bottom of footing below the anticipated scour elevation. (This typically entails embedding the footings 1'-0" to 2'-0" into rock and pouring concrete directly against cut rock faces. as recommended by geotechnical engineer.)

NOTE: Distances to bars shown are clear dimensions unless otherwise noted.

MATERIAL SPECIFICATIONS:
Concrete, Class "A" = 3500 psi
Steel Reinforcement = Grade 60

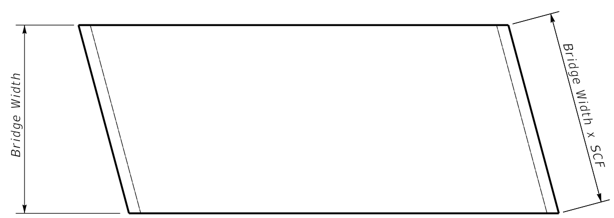

PLAN OF SUPERSTRUCTURE SLAB

KENTUCKY
DEPARTMENT OF HIGHWAYS

5° SKEW VARIABLE WIDTH ABUTMENT 25% SKEWED WINGS

STANDARD DRAWING NO. BSA-024

SUBMITTED ______ DIRECTOR DIVISION OF STRUCTURAL DESIGN 02-26-20 DATE

APPROVED ______ STATE HIGHWAY ENGINEER 02-26-20 DATE

10° SKEW VARIABLE BRIDGE WIDTH 2:1 FILL SLOPES WINGS SKEWED 25% FROM ROADWAY TO BREASTWALL

ABUTMENT SKEW CORRECTION FACTOR (SCF) = 1.015

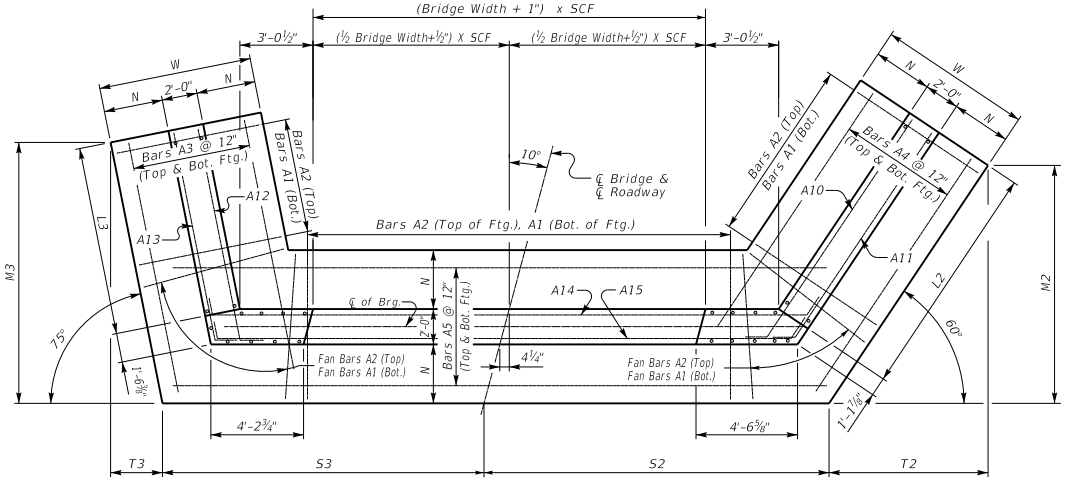

(Left Skew as shown;right skew opp. hand)

PLAN

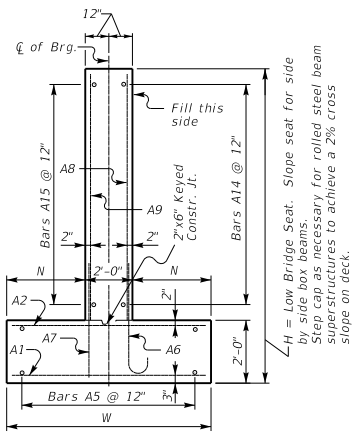

WALL SECTION

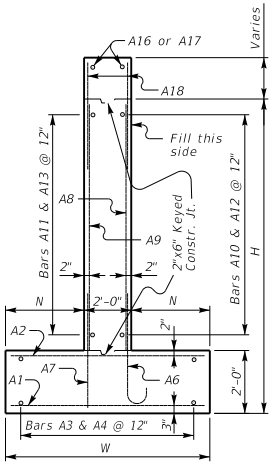

WING SECTION

NOTE: Trim A16 & A17 bars if necessary

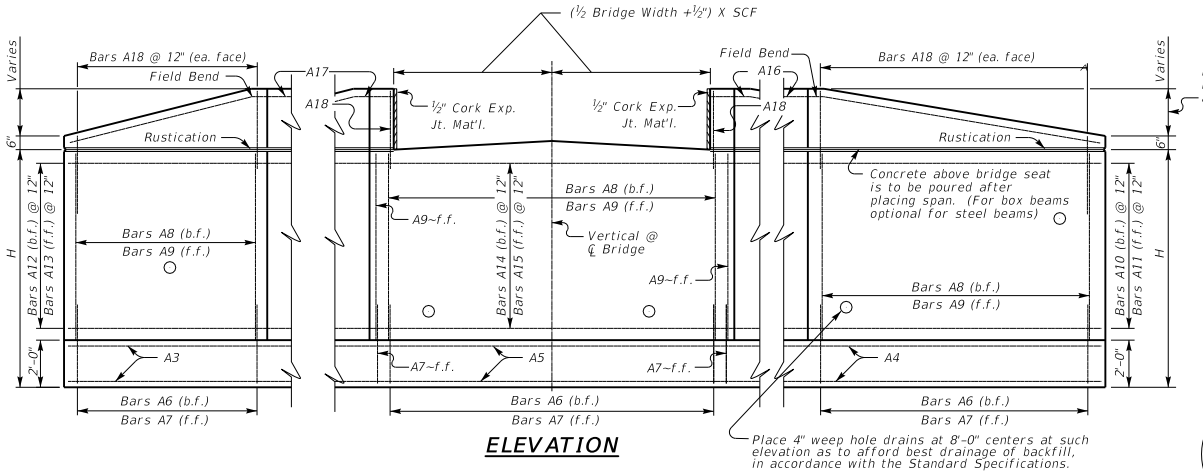

ELEVATION

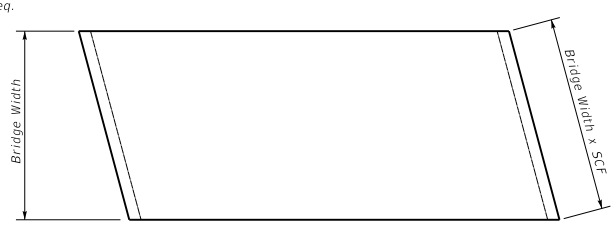

PLAN OF SUPERSTRUCTURE SLAB

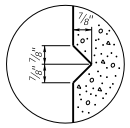

RUSTICATION GROOVE

KENTUCKY
DEPARTMENT OF HIGHWAYS

10° SKEW VARIABLE WIDTH ABUTMENT 25% SKEWED WINGS

STANDARD DRAWING NO. BSA-025

SUBMITTED _____ DIRECTOR DIVISION OF STRUCTURAL DESIGN — DATE 02-26-20

APPROVED _____ STATE HIGHWAY ENGINEER — DATE 02-26-20

10° SKEW VARIABLE BRIDGE WIDTH 2:1 FILL SLOPES WINGS SKEWED 25% FROM ROADWAY TO BREASTWALL

Bill of Reinforcement

MARK	A1					A2					A3			A4			A5					
TYPE	Str.					Str.					Str.			Str.			Str.					
SIZE											#5			#5			#5					
H	No.	Size	Length ft.	Length in.	Spacing	No.	Size	Length ft.	Length in.	Spacing	No.	Length ft.	Length in.	No.	Length ft.	Length in.	No.	Length ft.	Length in.	+Lb =	Length ft.	Length in.
15-16	71+Nb=	10	11	8	12	71+Nb=	7	11	8	12	24	26	2	24	27	11	24	15	6	+Lb=		
13-14	63+Nb=	9	10	8	12	63+Nb=	7	10	8	12	22	22	9	22	24	8	22	14	10	+Lb=		
11-12	55+Nb=	8	9	8	12	55+Nb=	6	9	8	12	20	19	5	20	20	5	20	14	2	+Lb=		
9-10	49+Nb=	7	8	8	12	49+Nb=	5	8	8	12	18	16	0	18	18	1	18	13	6	+Lb=		
7-8	40+Nb=	6	7	2	12	40+Nb=	5	7	2	12	16	12	4	16	13	6	16	12	4	+Lb=		
5-6	34+Nb=	5	6	2	12	34+Nb=	5	6	2	12	14	10	0	14	11	3	14	11	8	+Lb=		

MARK	A6													A7					A8				
TYPE	4													Str.					Str.				
SIZE																							
H	No.	Size	Length ft.	Length in.	Spacing	A ft.	A in.	B ft.	B in.	C ft.	C in.	D ft.	D in.	No.	Size	Length ft.	Length in.	Spacing	No.	Size	Length ft.	Length in.	Spacing
15-16	52+Nb=	9	9	11	12	8	$\frac{1}{8}$	1	10	0	11$\frac{3}{4}$	8	6	57+Nb=	5	4	11	12	52+Nb=	6	12	10	12
13-14	46+Nb=	8	8	3	12	6	11	1	3	0	8	7	3	51+Nb=	5	4	11	12	46+Nb=	6	10	10	12
11-12	39+Nb=	7	7	1	12	5	10$\frac{1}{2}$	1	2	0	7	6	2	44+Nb=	5	4	11	12	39+Nb=	5	8	10	12
9-10	34+Nb=	6	6	1	12	5	1	1	0	0	6	5	4	39+Nb=	5	4	11	12	34+Nb=	5	6	10	12
7-8	27+Nb=	5	5	7	12	4	8$\frac{1}{2}$	0	10	0	5	4	11	32+Nb=	5	4	11	12	27+Nb=	5	4	10	12
5-6	23+Nb=	5	5	7	12	4	8$\frac{1}{2}$	0	10	0	5	4	11	28+Nb=	5	4	11	12	23+Nb=	5	2	10	12

MARK	A9				A10			A11			A12			A13		
TYPE	Str.				8			8			8			8		
SIZE	#5				#5			#5			#5			#5		
H	No.	Length ft.	Length in.	Spacing	No.	Length ft.	Length in.	No.	Length ft.	Length in.	No.	Length ft.	Length in.	No.	Length ft.	Length in.
15-16	57+Nb=	12	10	12	14	26	8	14	25	11	14	23	6	14	23	3
13-14	51+Nb=	10	10	12	12	23	8	12	22	11	12	20	6	12	20	3
11-12	44+Nb=	8	10	12	10	19	8	10	18	11	10	17	6	10	17	3
9-10	39+Nb=	6	10	12	8	17	8	8	16	11	8	14	6	8	14	3
7-8	32+Nb=	4	10	12	6	13	8	6	12	11	6	11	6	6	11	3
5-6	28+Nb=	2	10	12	4	11	8	4	10	11	4	9	6	4	9	3

MARK	A14						A15						A16			A17			A18		
TYPE	7						7						Str.			Str.			Str.		
SIZE	#5						#5						#5			#5			#5		
H	No.	Length ft.	Length in.	+Lb =	Length ft.	Length in.	No.	Length ft.	Length in.	+Lb =	Length ft.	Length in.	No.	Length ft.	Length in.	No.	Length ft.	Length in.	No.	Length ft.	Length in.
15-16	14	11	8	+Lb=			14	10	5	+Lb=			2	29	8	2	26	8	112	5	9
13-14	12	11	8	+Lb=			12	10	5	+Lb=			2	26	8	2	23	8	100	5	9
11-12	10	11	8	+Lb=			10	10	5	+Lb=			2	22	8	2	20	8	86	5	9
9-10	8	11	8	+Lb=			8	10	5	+Lb=			2	20	8	2	17	8	76	5	9
7-8	6	11	8	+Lb=			6	10	5	+Lb=			2	16	8	2	14	8	62	5	9
5-6	4	11	8	+Lb=			4	10	5	+Lb=			2	14	8	2	12	8	54	5	9

Table of Dimensions

H	W Length ft.	W Length in.	N Length ft.	N Length in.	M2 Length ft.	M2 Length in.	M3 Length ft.	M3 Length in.	T2 Length ft.	T2 Length in.	T3 Length ft.	T3 Length in.	L2 Length ft.	L3 Length ft.	S2 Length ft.	S2 Length in.	S2 $+\frac{Lb}{2}=$	S2 Length ft.	S2 Length in.	S3 Length ft.	S3 Length in.	S3 $+\frac{Lb}{2}=$	S3 Length ft.	S3 Length in.
15-16	12	0	5	0	24	3$\frac{3}{8}$	25	5$\frac{5}{8}$	14	$\frac{1}{4}$	6	9$\frac{7}{8}$	24	21	8	4$\frac{3}{8}$	+0.5Lb=			7	2$\frac{3}{4}$	+0.5Lb=		
13-14	11	0	4	6	21	5$\frac{1}{4}$	22	2$\frac{1}{2}$	12	4$\frac{1}{2}$	5	11$\frac{3}{8}$	21	18	7	11$\frac{7}{8}$	+0.5Lb=			6	11$\frac{1}{8}$	+0.5Lb=		
11-12	10	0	4	0	17	8$\frac{5}{8}$	18	11$\frac{1}{4}$	10	2$\frac{3}{4}$	5	$\frac{7}{8}$	17	15	7	7$\frac{3}{8}$	+0.5Lb=			6	7$\frac{5}{8}$	+0.5Lb=		
9-10	9	0	3	6	15	8$\frac{7}{8}$	15	8	9	1	4	2$\frac{3}{8}$	15	12	7	2$\frac{3}{4}$	+0.5Lb=			6	4$\frac{1}{8}$	+0.5Lb=		
7-8	7	6	2	9	11	10$\frac{7}{8}$	12	2$\frac{5}{8}$	6	10$\frac{1}{2}$	3	3$\frac{1}{4}$	11	9	6	8	+0.5Lb=			5	10$\frac{3}{4}$	+0.5Lb=		
5-6	6	6	2	3	9	11	9	11	5	8$\frac{3}{4}$	2	7$\frac{7}{8}$	9	7	6	3$\frac{1}{2}$	+0.5Lb=			5	7$\frac{1}{4}$	+0.5Lb=		

Reinforcement Details

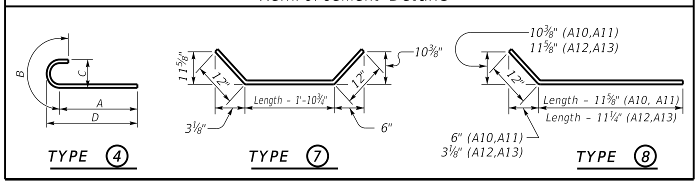

*Concrete quantities computed using 21" beam depth on ½" pad & Variable Bridge Width

Quantities

H	Concrete* C.Y.	Reinforcement LBS.
5	20.69+(0.71xLb) =	1998+(52.8xLb) =
6	22.53+(0.78xLb) =	1998+(52.8xLb) =
7	30.33+(0.93xLb) =	2878+(68.7xLb) =
8	32.46+(1.01xLb) =	2878+(68.7xLb) =
9	46.82+(1.19xLb) =	4497+(91xLb) =
10	49.48+(1.27xLb) =	4497+(91xLb) =
11	62.34+(1.41xLb) =	6520+(120.4xLb) =
12	65.36+(1.49xLb) =	6520+(120.4xLb) =
13	83.54+(1.64xLb) =	9776+(161xLb) =
14	87.08+(1.71xLb) =	9776+(161xLb) =
15	105.9+(1.86xLb) =	13292+(198.6xLb) =
16	109.89+(1.93xLb) =	13292+(198.6xLb) =

ABUTMENT SKEW CORRECTION FACTOR (SCF) = 1.015

NUMBER OF BARS TO ADD (Nb) = Bridge Width (feet) x SCF (round up to nearest whole number)

LENGTH OF ABUTMENT TO ADD (Lb) = Bridge Width (feet) x SCF (convert decimal to architectural)

GENERAL NOTES

SPECIFICATIONS: *Construct abutments according to the current edition of the Kentucky Department of Highways Standard Specifications for Road and Bridge Construction. Abutments are designed for side by side box beams as detailed in Standard Drawings BDP-001 through BDP-012, current edition. Dimensions may be adjusted to allow for any out to out bridge width. Abutments are also adequate for Std. Dwg. slabs or steel beam superstructures.*

FOUNDATION PRESSURE: *Construct abutment footings on solid rock bearing material that can support a pressure of 8000 psf service or 10,800 psf strength factored as recommended by a geotechnical engineer.*

WING LENGTHS: *Calculated assuming 21" superstructure depth and stream bank elevation at top of footing.*

FOOTING ELEVATION: *Construct bottom of footing below the anticipated scour elevation. (This typically entails embedding the footings 1'-0" to 2'-0" into rock and pouring concrete directly against cut rock faces. as recommended by geotechnical engineer.)*

NOTE: *Distances to bars shown are clear dimensions unless otherwise noted.*

MATERIAL SPECIFICATIONS:
Concrete, Class "A" = 3500 psi
Steel Reinforcement = Grade 60

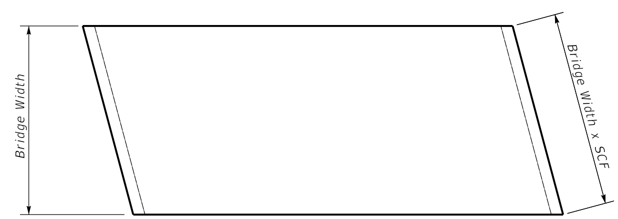

PLAN OF SUPERSTRUCTURE SLAB

KENTUCKY
DEPARTMENT OF HIGHWAYS

10° SKEW VARIABLE WIDTH ABUTMENT 25% SKEWED WINGS

STANDARD DRAWING NO. BSA-026

SUBMITTED ______ DIRECTOR DIVISION OF STRUCTURAL DESIGN 02-26-20 DATE

APPROVED ______ STATE HIGHWAY ENGINEER 02-26-20 DATE

15° SKEW VARIABLE BRIDGE WIDTH 2:1 FILL SLOPES WINGS SKEWED 25% FROM ROADWAY TO BREASTWALL

ABUTMENT SKEW CORRECTION FACTOR (SCF) = 1.035

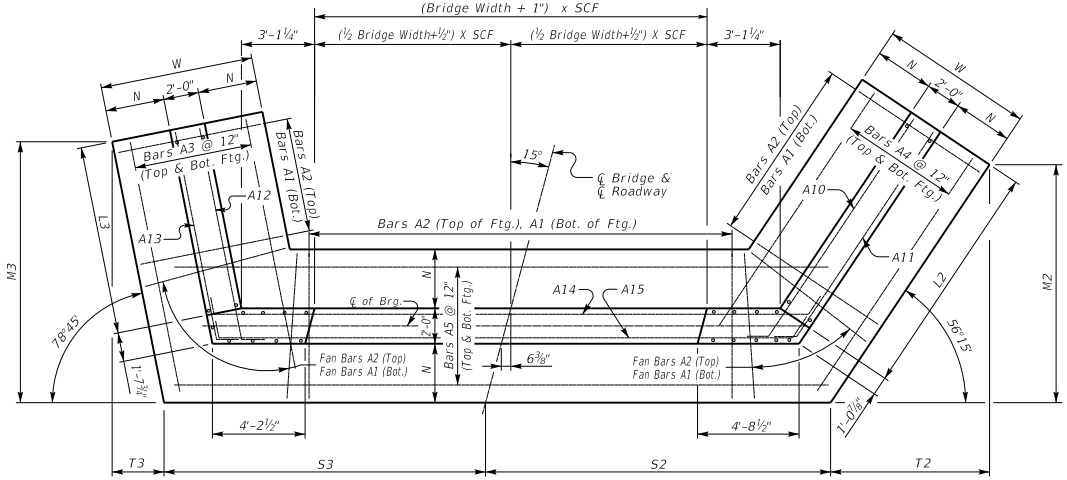

(Left Skew as shown;right skew opp. hand)

PLAN

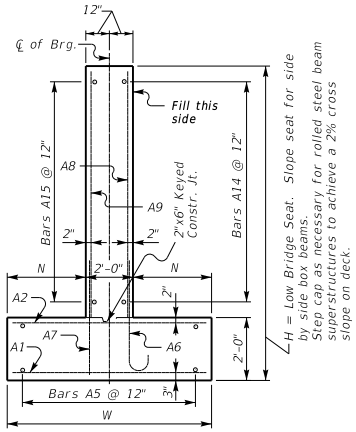

WALL SECTION

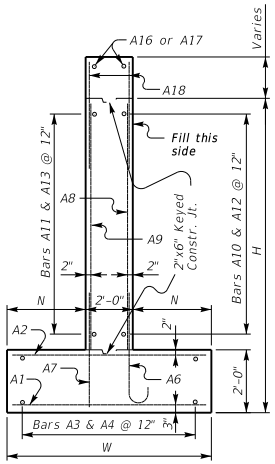

WING SECTION

NOTE: Trim A16 & A17 bars if necessary

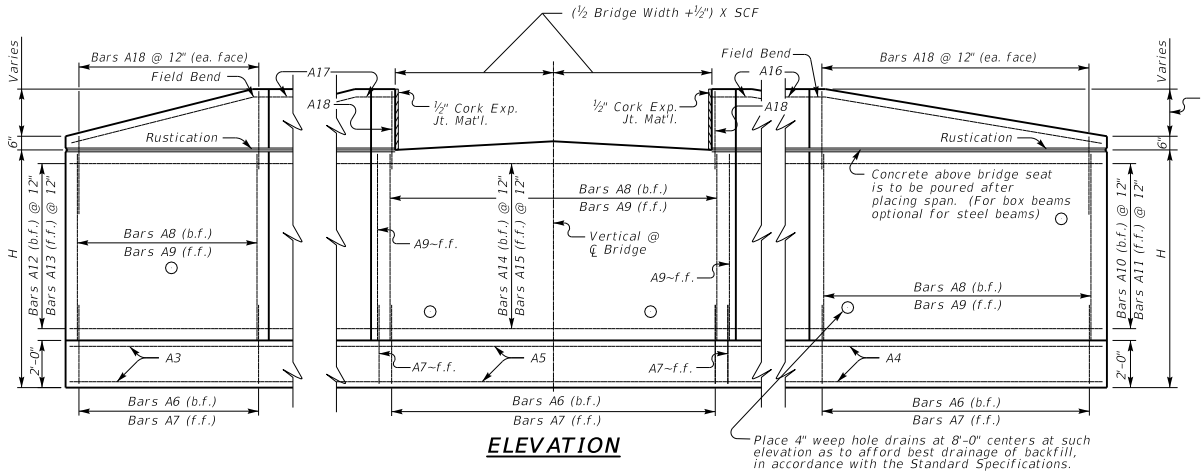

ELEVATION

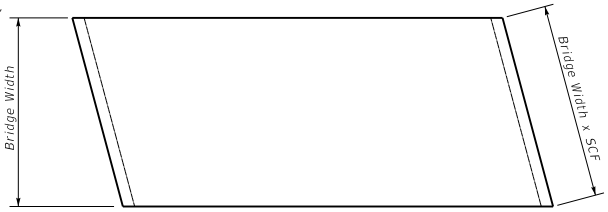

PLAN OF SUPERSTRUCTURE SLAB

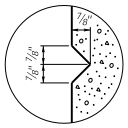

RUSTICATION GROOVE

KENTUCKY
DEPARTMENT OF HIGHWAYS

15° SKEW VARIABLE WIDTH ABUTMENT 25% SKEWED WINGS

STANDARD DRAWING NO. BSA-027

SUBMITTED _____ DIRECTOR DIVISION OF STRUCTURAL DESIGN — DATE 02-26-20

APPROVED _____ STATE HIGHWAY ENGINEER — DATE 02-26-20

15° SKEW VARIABLE BRIDGE WIDTH 2:1 FILL SLOPES WINGS SKEWED 25% FROM ROADWAY TO BREASTWALL

Bill of Reinforcement

MARK	A1	A2	A3	A4	A5	A6	A7	A8	A9	A10	A11	A12	A13	A14	A15	A16	A17	A18
TYPE	Str.	Str.	Str.	Str.	Str.	4	Str.	Str.	Str.	8	8	8	8	7	7	Str.	Str.	Str.
SIZE			#5	#5	#5				#5	#5	#5	#5	#5	#5	#5	#5	#5	#5
H	No.	No. Size Length ft. in. Spacing	No. Length ft. in.	No. Length ft. in.	No. Length ft. in.	No. Size Length ft. in. Spacing A ft. in. B ft. in. C ft. in. D ft. in.	No. Size Length ft. in. Spacing	No. Size Length ft. in. Spacing	No. Length ft. in.	No. Length ft. in.	No. Length ft. in.	No. Length ft. in.	No. Length ft. in.	No. Length ft. in. = +Lb Length ft. in.	No. Length ft. in. = +Lb Length ft. in.	No. Length ft. in.	No. Length ft. in.	No. Length ft. in.
15-16	71+Nb=	71+Nb= 7 11 8 12	24 25 6	24 28 8	24 15 8 +Lb=	52+Nb= 9 9 11 12 8 ⅛ 1 10 0 11¾ 8 6	57+Nb= 5 4 11 12	52+Nb= 6 12 10 12	57+Nb= 12 10 12	14 27 9	14 26 10	14 22 6	14 22 4	14 11 10 +Lb=	14 10 7 +Lb=	2 30 8	2 25 9	113 5 9
13-14	64+Nb=	64+Nb= 9 10 8 12	22 22 1	22 25 5	22 14 11 +Lb=	46+Nb= 8 8 3 12 6 11 1 3 0 8 7 3	51+Nb= 5 4 11 12	46+Nb= 6 10 10 12	51+Nb= 10 10 12	12 24 9	12 23 10	12 19 6	12 19 4	12 11 10 +Lb=	12 10 7 +Lb=	2 27 8	2 22 9	101 5 9
11-12	56+Nb=	56+Nb= 6 9 8 12	20 18 8	20 21 2	20 14 3 +Lb=	39+Nb= 7 7 1 12 5 10½ 1 2 0 7 6 2	44+Nb= 5 4 11 12	39+Nb= 5 8 10 12	44+Nb= 8 10 12	10 20 9	10 19 10	10 16 6	10 16 4	10 11 10 +Lb=	10 10 7 +Lb=	2 23 8	2 19 9	87 5 9
9-10	49+Nb=	49+Nb= 5 8 8 12	18 16 3	18 17 11	18 13 7 +Lb=	34+Nb= 6 6 1 12 5 1 1 0 0 6 5 4	39+Nb= 5 4 11 12	34+Nb= 5 6 10 12	39+Nb= 6 10 12	8 17 9	8 16 10	8 14 6	8 14 4	8 11 10 +Lb=	8 10 7 +Lb=	2 20 8	2 17 9	77 5 9
7-8	41+Nb=	41+Nb= 5 7 2 12	16 12 7	16 14 4	16 12 6 +Lb=	28+Nb= 5 5 7 12 4 8½ 0 10 0 5 4 11	33+Nb= 5 4 11 12	28+Nb= 5 4 10 12	33+Nb= 4 10 12	6 14 9	6 13 10	6 11 6	6 11 4	6 11 11 +Lb=	6 10 7 +Lb=	2 17 8	2 14 9	65 5 9
5-6	35+Nb=	35+Nb= 5 6 2 12	14 10 2	14 11 1	14 11 10 +Lb=	23+Nb= 5 5 7 12 4 8½ 0 10 0 5 4 11	28+Nb= 5 4 11 12	23+Nb= 5 2 10 12	28+Nb= 2 10 12	4 11 9	4 10 10	4 9 6	4 9 4	4 11 11 +Lb=	4 10 7 +Lb=	2 14 8	2 12 9	55 5 9

Table of Dimensions

H	W Length ft.	W Length in.	N Length ft.	N Length in.	M2 Length ft.	M2 Length in.	M3 Length ft.	M3 Length in.	T2 Length ft.	T2 Length in.	T3 Length ft.	T3 Length in.	L2 Length ft.	L3 Length ft.	S2 Length ft.	S2 Length in. + Lb/2 =	S2 Length ft.	S2 Length in.	S3 Length ft.	S3 Length in. + Lb/2 =	S3 Length ft.	S3 Length in.
15-16	12	0	5	0	23	10¾	25	3	15	11⅜	5	¼	25	20	8	9¼ +0.5Lb=			7	¼ +0.5Lb=		
13-14	11	0	4	6	21	2½	21	10⅞	14	1⅞	4	4¼	22	17	8	4⅜ +0.5Lb=			6	8⅞ +0.5Lb=		
11-12	10	0	4	0	17	7⅝	18	6¾	11	9⅜	3	8¼	18	14	7	11⅝ +0.5Lb=			6	5⅝ +0.5Lb=		
9-10	9	0	3	6	14	11	16	2⅜	9	11⅜	3	2⅝	15	12	7	6¾ +0.5Lb=			6	2¼ +0.5Lb=		
7-8	7	6	2	9	12	1⅛	12	7¾	8	⅞	2	6¼	12	9	6	11½ +0.5Lb=			5	9¼ +0.5Lb=		
5-6	6	6	2	3	9	4½	10	3⅜	6	3⅛	2	½	9	7	6	6¾ +0.5Lb=			5	6 +0.5Lb=		

Reinforcement Details

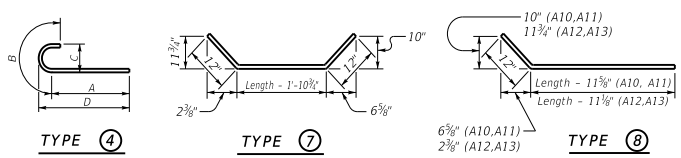

*Concrete quantities computed using 21" beam depth on ½" pad & Variable Bridge Width

Quantities

H	Concrete* C.Y.	Reinforcement LBS.
5	20.81+(0.71xLb) =	2021+(52.8xLb) =
6	22.67+(0.78xLb) =	2021+(52.8xLb) =
7	31.51+(0.93xLb) =	2974+(68.7xLb) =
8	33.73+(1.01xLb) =	2974+(68.7xLb) =
9	47.01+(1.19xLb) =	4510+(91xLb) =
10	49.68+(1.27xLb) =	4510+(91xLb) =
11	62.56+(1.41xLb) =	6573+(120.4xLb) =
12	65.6+(1.49xLb) =	6573+(120.4xLb) =
13	83.79+(1.64xLb) =	9849+(161xLb) =
14	87.35+(1.71xLb) =	9849+(161xLb) =
15	106.18+(1.86xLb) =	13311+(198.6xLb) =
16	110.18+(1.93xLb) =	13311+(198.6xLb) =

ABUTMENT SKEW CORRECTION FACTOR (SCF) = 1.035

NUMBER OF BARS TO ADD (Nb) = Bridge Width (feet) x SCF (round up to nearest whole number)

LENGTH OF ABUTMENT TO ADD (Lb) = Bridge Width (feet) x SCF (convert decimal to architectural)

GENERAL NOTES

SPECIFICATIONS: Construct abutments according to the current edition of the Kentucky Department of Highways Standard Specifications for Road and Bridge Construction. Abutments are designed for side by side box beams as detailed in Standard Drawings BDP-001 through BDP-012, current edition. Dimensions may be adjusted to allow for any out to out bridge width. Abutments are also adequate for Std. Dwg. slabs or steel beam superstructures.

FOUNDATION PRESSURE: Construct abutment footings on solid rock bearing material that can support a pressure of 8000 psf service or 10,800 psf strength factored as recommended by a geotechnical engineer.

WING LENGTHS: Calculated assuming 21" superstructure depth and stream bank elevation at top of footing.

FOOTING ELEVATION: Construct bottom of footing below the anticipated scour elevation. (This typically entails embedding the footings 1'-0" to 2'-0" into rock and pouring concrete directly against cut rock faces. as recommended by geotechnical engineer.)

NOTE: Distances to bars shown are clear dimensions unless otherwise noted.

MATERIAL SPECIFICATIONS:
Concrete, Class "A" = 3500 psi
Steel Reinforcement = Grade 60

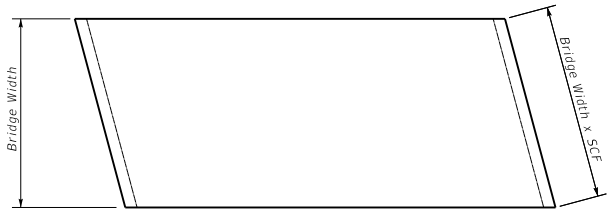

PLAN OF SUPERSTRUCTURE SLAB

KENTUCKY
DEPARTMENT OF HIGHWAYS

15° SKEW VARIABLE WIDTH ABUTMENT 25% SKEWED WINGS

STANDARD DRAWING NO. BSA-028

SUBMITTED _____ DIRECTOR DIVISION OF STRUCTURAL DESIGN — DATE 02-26-20

APPROVED _____ STATE HIGHWAY ENGINEER — DATE 02-26-20

20° SKEW VARIABLE BRIDGE WIDTH 2:1 FILL SLOPES WINGS SKEWED 25% FROM ROADWAY TO BREASTWALL

ABUTMENT SKEW CORRECTION FACTOR (SCF) = 1.064

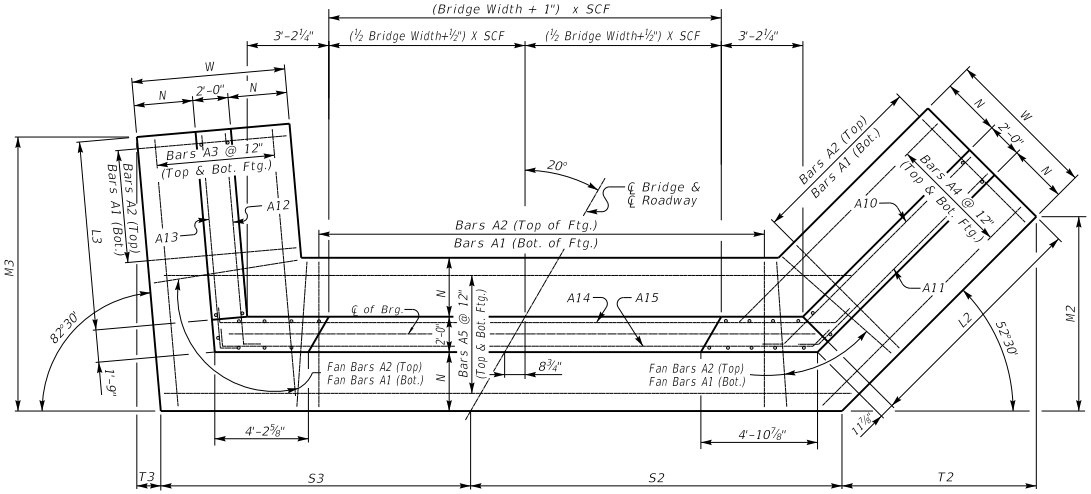

(Left Skew as shown;right skew opp. hand)

PLAN

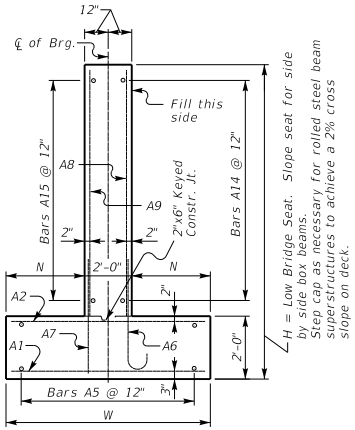

WALL SECTION

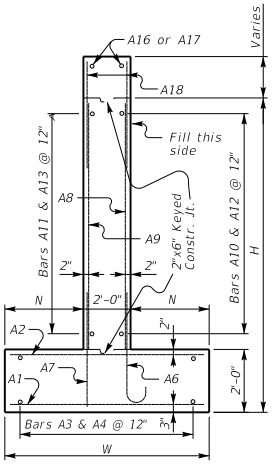

WING SECTION

NOTE: Trim A16 & A17 bars if necessary

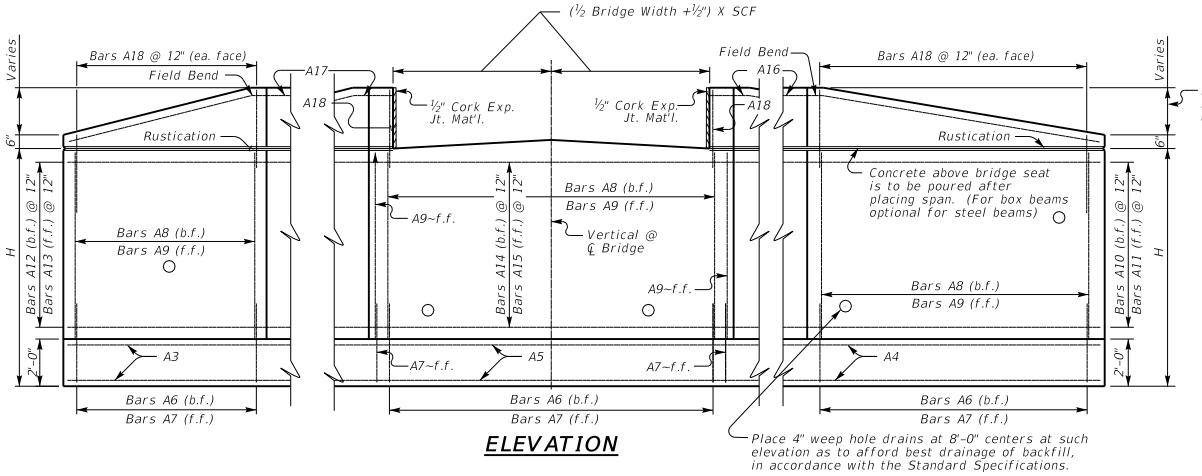

ELEVATION

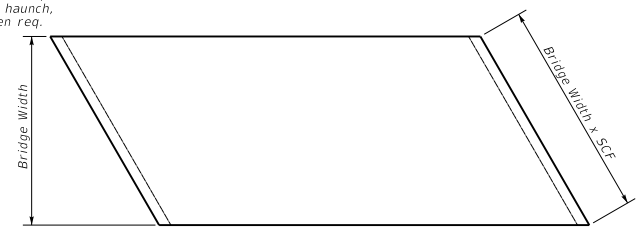

PLAN OF SUPERSTRUCTURE SLAB

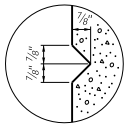

RUSTICATION GROOVE

KENTUCKY
DEPARTMENT OF HIGHWAYS

20° SKEW VARIABLE WIDTH ABUTMENT 25% SKEWED WINGS

STANDARD DRAWING NO. BSA-029

SUBMITTED _____ DIRECTOR DIVISION OF STRUCTURAL DESIGN — DATE 02-26-20

APPROVED _____ STATE HIGHWAY ENGINEER — DATE 02-26-20

20° SKEW VARIABLE BRIDGE WIDTH 2:1 FILL SLOPES WINGS SKEWED 25% FROM ROADWAY TO BREASTWALL

Bill of Reinforcement

MARK	A1				A2				A3		A4		A5				A6										A7				A8				A9				A10		A11		A12		A13		A14				A15				A16		A17		A18	
TYPE	Str.				Str.				Str.		Str.		Str.				4										Str.				Str.				Str.				8		8		8		8		7				7				Str.		Str.		Str.	
SIZE									#5		#5		#5																						#5				#5		#5		#5		#5		#5				#5				#5		#5		#5	
H	No.	Size	Length ft.	Length in.	No.	Size	Length ft.	Length in.	Spacing	No.	Length ft.	Length in.	No.	Length ft.	Length in.	= +Lb	Length ft.	Length in.	No.	Size	Length ft.	Length in.	Spacing	A ft.	A in.	B ft.	B in.	C ft.	C in.	D ft.	D in.	No.	Size	Length ft.	Length in.	Spacing	No.	Size	Length ft.	Length in.	Spacing	No.	Length ft.	Length in.	No.	Length ft.	Length in.	No.	Length ft.	Length in.	No.	Length ft.	Length in.	= +Lb	Length ft.	Length in.	No.	Length ft.	Length in.	No.	Length ft.	Length in.	No.	Length ft.	Length in.
15-16	72+Nb=	10	11	8	12	72+Nb=	7	11	8	12	24	25	10	24	29	5	24	15	10	+Lb=			53+Nb=	9	9	11	12	8	1/8	1	10	0	11 3/4	8	6	58+Nb=	5	4	11	12	53+Nb=	6	12	10	12	58+Nb=	12	10	12	14	28	10	14	27	9	14	22	6	14	22	6	14	12	1	+Lb=			14	10	9	+Lb=			2	31	10	2	25	11	116	5	9
13-14	65+Nb=	9	10	8	12	65+Nb=	7	10	8	12	22	22	5	22	26	2	22	15	2	+Lb=			47+Nb=	8	8	3	12	6	11	1	3	0	8	7	3	52+Nb=	5	4	11	12	47+Nb=	6	10	10	12	52+Nb=	10	10	12	12	25	10	12	24	9	12	19	6	12	19	6	12	12	1	+Lb=			12	10	9	+Lb=			2	28	10	2	22	11	104	5	9
11-12	56+Nb=	8	9	8	12	56+Nb=	6	9	8	12	20	19	0	20	21	11	20	14	6	+Lb=			40+Nb=	7	7	1	12	5	10 1/2	1	2	0	7	6	2	45+Nb=	5	4	11	12	40+Nb=	5	8	10	12	45+Nb=	8	10	12	10	21	10	10	20	9	10	16	6	10	16	6	10	12	1	+Lb=			10	10	9	+Lb=			2	24	10	2	19	11	90	5	9
9-10	50+Nb=	7	8	8	12	50+Nb=	5	8	8	12	18	16	7	18	18	8	18	13	10	+Lb=			35+Nb=	6	6	1	12	5	1	1	0	0	6	5	4	40+Nb=	5	4	11	12	35+Nb=	5	6	10	12	40+Nb=	6	10	12	8	18	10	8	17	9	8	14	6	8	14	6	8	12	1	+Lb=			8	10	9	+Lb=			2	21	10	2	17	11	80	5	9
7-8	42+Nb=	6	7	2	12	42+Nb=	5	7	2	12	16	12	10	16	15	2	16	12	8	+Lb=			29+Nb=	5	5	7	12	4	8 1/2	0	10	0	5	4	11	34+Nb=	5	4	11	12	29+Nb=	5	4	10	12	34+Nb=	4	10	12	6	15	10	6	14	9	6	11	6	6	11	6	6	12	1	+Lb=			6	10	9	+Lb=			2	18	10	2	14	11	68	5	9
5-6	36+Nb=	5	6	2	12	36+Nb=	5	6	2	12	14	10	5	14	11	11	14	12	0	+Lb=			24+Nb=	5	5	7	12	4	8 1/2	0	10	0	5	4	11	29+Nb=	5	4	11	12	24+Nb=	5	2	10	12	29+Nb=	2	10	12	4	12	10	4	11	9	4	9	6	4	9	6	4	12	1	+Lb=			4	10	9	+Lb=			2	15	10	2	12	11	58	5	9

Table of Dimensions

H	W Length ft.	W Length in.	N Length ft.	N Length in.	M2 Length ft.	M2 Length in.	M3 Length ft.	M3 Length in.	T2 Length ft.	T2 Length in.	T3 Length ft.	T3 Length in.	L2 Length ft.	L3 Length ft.	S2 Length ft.	S2 Length in.	$+\frac{Lb}{2}=$	Length ft.	Length in.	S3 Length ft.	S3 Length in.	$+\frac{Lb}{2}=$	Length ft.	Length in.
15-16	12	0	5	0	23	4 3/8	25	11	17	11 1/8	3	5	26	20	9	2 7/8	+0.5Lb=			6	9 7/8	+0.5Lb=		
13-14	11	0	4	6	20	9 1/2	22	6 1/8	15	11 3/8	2	11 1/2	23	17	8	9 3/4	+0.5Lb=			6	6 7/8	+0.5Lb=		
11-12	10	0	4	0	17	5	19	1 1/8	13	4 3/8	2	6 7/8	19	14	8	4 1/2	+0.5Lb=			6	3 3/4	+0.5Lb=		
9-10	9	0	3	6	14	10 1/8	16	8 1/8	11	4 3/4	2	2 3/8	16	12	7	11 3/8	+0.5Lb=			6	3/4	+0.5Lb=		
7-8	7	6	2	9	12	2 1/8	13	5/8	9	4 1/8	1	8 3/8	13	9	7	3 3/4	+0.5Lb=			5	8 1/8	+0.5Lb=		
5-6	6	6	2	3	9	7 1/8	10	7 5/8	7	4 3/8	1	4 3/8	10	7	6	10 1/2	+0.5Lb=			5	5	+0.5Lb=		

Reinforcement Details

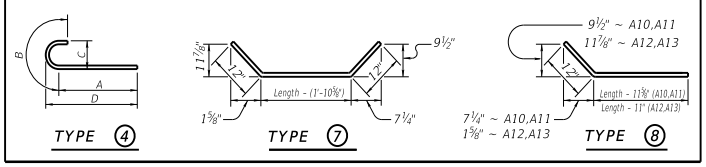

*Concrete quantities computed using 21" beam depth on 1/2" pad & Variable Bridge Width

Quantities

H	Concrete* C.Y.	Reinforcement LBS.
5	21.8+(0.71xLb) =	2101+(52.8xLb) =
6	23.74+(0.78xLb) =	2101+(52.8xLb) =
7	32.76+(0.93xLb) =	3071+(68.7xLb) =
8	35.08+(1.01xLb) =	3071+(68.7xLb) =
9	48.58+(1.19xLb) =	4633+(91xLb) =
10	51.34+(1.27xLb) =	4633+(91xLb) =
11	64.4+(1.41xLb) =	6687+(120.4xLb) =
12	67.52+(1.49xLb) =	6687+(120.4xLb) =
13	85.9+(1.64xLb) =	10046+(161xLb) =
14	89.54+(1.71xLb) =	10046+(161xLb) =
15	108.56+(1.86xLb) =	13545+(198.6xLb) =
16	112.65+(1.93xLb) =	13545+(198.6xLb) =

ABUTMENT SKEW CORRECTION FACTOR (SCF) = 1.064

NUMBER OF BARS TO ADD (Nb) = Bridge Width (feet) x SCF (round up to nearest whole number)

LENGTH OF ABUTMENT TO ADD (Lb) = Bridge Width (feet) x SCF (convert decimal to architectural)

GENERAL NOTES

SPECIFICATIONS: Construct abutments according to the current edition of the Kentucky Department of Highways Standard Specifications for Road and Bridge Construction. Abutments are designed for side by side box beams as detailed in Standard Drawings BDP-001 through BDP-012, current edition. Dimensions may be adjusted to allow for any out to out bridge width. Abutments are also adequate for Std. Dwg. slabs or steel beam superstructures.

FOUNDATION PRESSURE: Construct abutment footings on solid rock bearing material that can support a pressure of 8000 psf service or 10,800 psf strength factored as recommended by a geotechnical engineer.

WING LENGTHS: Calculated assuming 21" superstructure depth and stream bank elevation at top of footing.

FOOTING ELEVATION: Construct bottom of footing below the anticipated scour elevation. (This typically entails embedding the footings 1'-0" to 2'-0" into rock and pouring concrete directly against cut rock faces. as recommended by geotechnical engineer.)

NOTE: Distances to bars shown are clear dimensions unless otherwise noted.

MATERIAL SPECIFICATIONS:
Concrete, Class "A" = 3500 psi
Steel Reinforcement = Grade 60

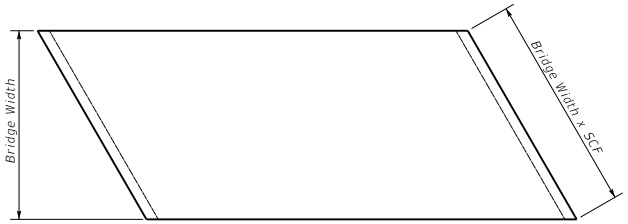

PLAN OF SUPERSTRUCTURE SLAB

KENTUCKY
DEPARTMENT OF HIGHWAYS

20° SKEW VARIABLE WIDTH ABUTMENT 25% SKEWED WINGS

STANDARD DRAWING NO. BSA-030

SUBMITTED _____ DIRECTOR DIVISION OF STRUCTURAL DESIGN — DATE 02-26-20

APPROVED _____ STATE HIGHWAY ENGINEER — DATE 02-26-20

25° SKEW VARIABLE BRIDGE WIDTH 2:1 FILL SLOPES WINGS SKEWED 25% FROM ROADWAY TO BREASTWALL

ABUTMENT SKEW CORRECTION FACTOR (SCF) = 1.103

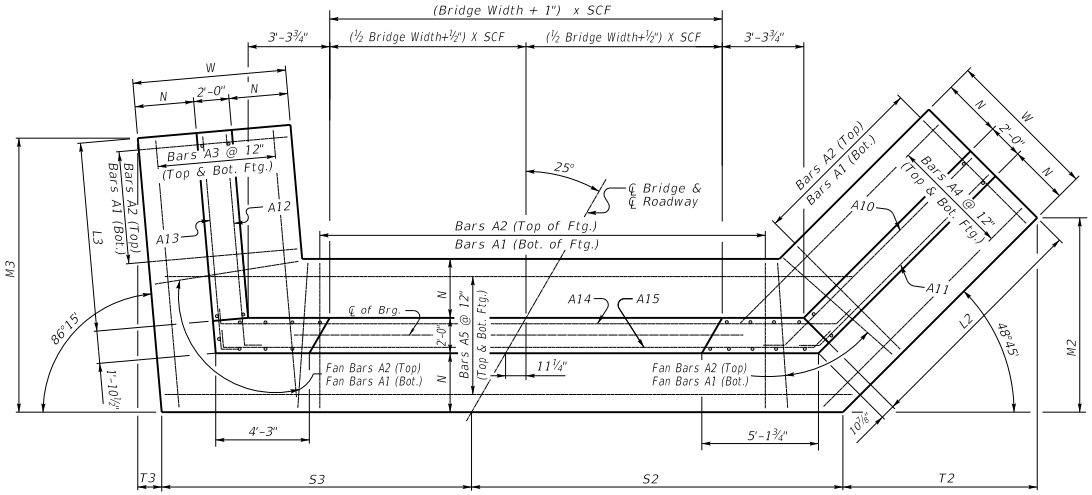

(Left Skew as shown;right skew opp. hand)

PLAN

NOTE: Trim A16 & A17 bars if necessary

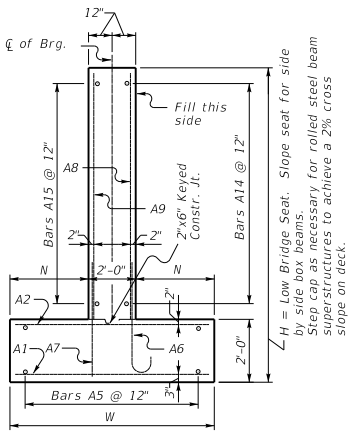

WALL SECTION

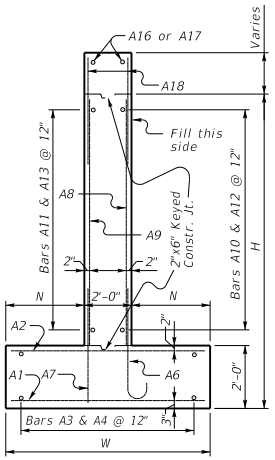

WING SECTION

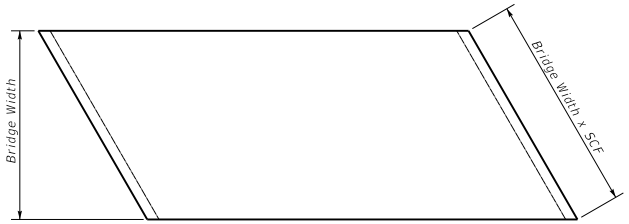

PLAN OF SUPERSTRUCTURE SLAB

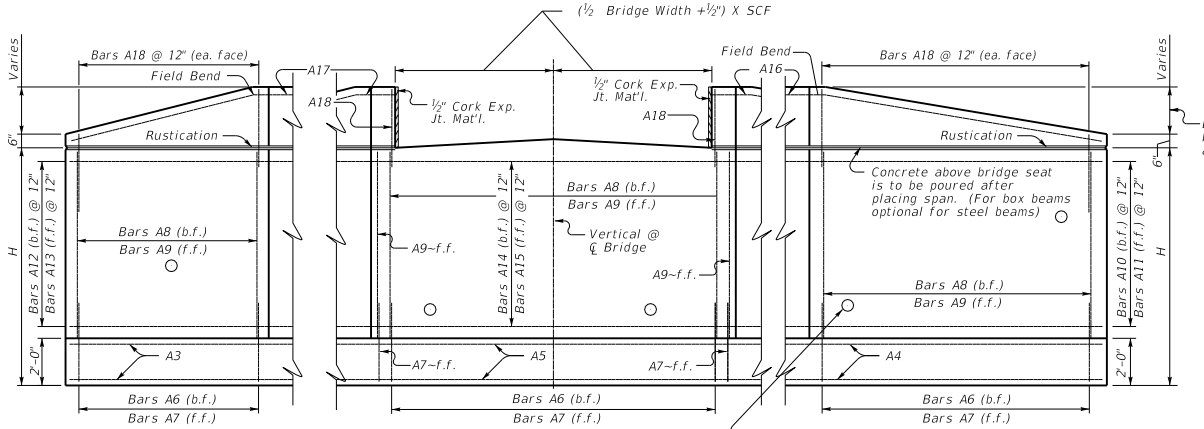

ELEVATION

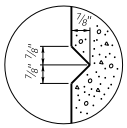

RUSTICATION GROOVE

KENTUCKY
DEPARTMENT OF HIGHWAYS

25° SKEW VARIABLE WIDTH ABUTMENT 25% SKEWED WINGS

STANDARD DRAWING NO. BSA-031

SUBMITTED _____ DIRECTOR DIVISION OF STRUCTURAL DESIGN — 02-26-20 DATE

APPROVED _____ STATE HIGHWAY ENGINEER — 02-26-20 DATE

25° SKEW VARIABLE BRIDGE WIDTH 2:1 FILL SLOPES
WINGS SKEWED 25% FROM ROADWAY TO BREASTWALL

Bill of Reinforcement

MARK	A1					A2					A3			A4			A5					
TYPE	Str.					Str.					Str.			Str.			Str.					
SIZE											#5			#5			#5					
H	No.	Size	Length ft.	Length in.	Spacing	No.	Size	Length ft.	Length in.	Spacing	No.	Length ft.	Length in.	No.	Length ft.	Length in.	No.	Length ft.	Length in.	+Lb =	Length ft.	Length in.
15-16	74+Nb=	10	11	8	12	74+Nb=	7	11	8	12	24	25	3	24	31	2	24	16	2	+Lb=		
13-14	67+Nb=	9	10	8	12	67+Nb=	7	10	8	12	22	21	9	22	28	0	22	15	6	+Lb=		
11-12	60+Nb=	8	9	8	12	60+Nb=	6	9	8	12	20	19	4	20	23	9	20	14	9	+Lb=		
9-10	52+Nb=	7	8	8	12	52+Nb=	5	8	8	12	18	15	10	18	20	6	18	14	1	+Lb=		
7-8	44+Nb=	6	7	2	12	44+Nb=	5	7	2	12	16	13	2	16	16	0	16	13	0	+Lb=		
5-6	37+Nb=	5	6	2	12	37+Nb=	5	6	2	12	14	9	8	14	12	9	14	12	4	+Lb=		

MARK	A6													A7					A8				
TYPE	4													Str.					Str.				
SIZE																							
H	No.	Size	Length ft.	Length in.	Spacing	A ft.	A in.	B ft.	B in.	C ft.	C in.	D ft.	D in.	No.	Size	Length ft.	Length in.	Spacing	No.	Size	Length ft.	Length in.	Spacing
15-16	54+Nb=	9	9	11	12	8	⅛	1	10	0	11¾	8	6	60+Nb=	5	4	11	12	54+Nb=	6	12	10	12
13-14	48+Nb=	8	8	3	12	6	11	1	3	0	8	7	3	54+Nb=	5	4	11	12	48+Nb=	6	10	10	12
11-12	42+Nb=	7	7	1	12	5	10½	1	2	0	7	6	2	48+Nb=	5	4	11	12	42+Nb=	5	8	10	12
9-10	36+Nb=	6	6	1	12	5	1	1	0	0	6	5	4	42+Nb=	5	4	11	12	36+Nb=	5	6	10	12
7-8	30+Nb=	5	5	7	12	4	8½	0	10	0	5	4	11	36+Nb=	5	4	11	12	30+Nb=	5	4	10	12
5-6	24+Nb=	5	5	7	12	4	8½	0	10	0	5	4	11	30+Nb=	5	4	11	12	24+Nb=	5	2	10	12

MARK	A9				A10			A11			A12			A13		
TYPE	Str.				8			8			8			8		
SIZE	#5				#5			#5			#5			#5		
H	No.	Length ft.	Length in.	Spacing	No.	Length ft.	Length in.	No.	Length ft.	Length in.	No.	Length ft.	Length in.	No.	Length ft.	Length in.
15-16	60+Nb=	12	10	12	14	30	11	14	29	8	14	21	6	14	21	7
13-14	54+Nb=	10	10	12	12	27	11	12	26	8	12	18	6	12	18	7
11-12	48+Nb=	8	10	12	10	23	11	10	22	8	10	16	6	10	16	7
9-10	42+Nb=	6	10	12	8	20	11	8	19	8	8	13	6	8	13	7
7-8	36+Nb=	4	10	12	6	16	11	6	15	8	6	11	6	6	11	7
5-6	30+Nb=	2	10	12	4	13	11	4	12	8	4	8	6	4	8	7

MARK	A14						A15						A16			A17			A18		
TYPE	7						7						Str.			Str.			Str.		
SIZE	#5						#5						#5			#5			#5		
H	No.	Length ft.	Length in.	+Lb =	Length ft.	Length in.	No.	Length ft.	Length in.	+Lb =	Length ft.	Length in.	No.	Length ft.	Length in.	No.	Length ft.	Length in.	No.	Length ft.	Length in.
15-16	14	12	5	+Lb=			14	11	0	+Lb=			2	34	0	2	25	0	118	5	9
13-14	12	12	5	+Lb=			12	11	0	+Lb=			2	31	0	2	22	0	106	5	9
11-12	10	12	5	+Lb=			10	11	0	+Lb=			2	27	0	2	20	0	94	5	9
9-10	8	12	5	+Lb=			8	11	0	+Lb=			2	24	0	2	17	0	82	5	9
7-8	6	12	5	+Lb=			6	11	0	+Lb=			2	20	0	2	15	0	70	5	9
5-6	4	12	5	+Lb=			4	11	0	+Lb=			2	17	0	2	12	0	58	5	9

Table of Dimensions

H	W Length ft.	W Length in.	N Length ft.	N Length in.	M2 Length ft.	M2 Length in.	M3 Length ft.	M3 Length in.	T2 Length ft.	T2 Length in.	T3 Length ft.	T3 Length in.	L2 Length ft.	L3 Length ft.	S2 Length ft.	S2 Length in.	S2 + Lb/2 =	S2 Length ft.	S2 Length in.	S3 Length ft.	S3 Length in.	S3 + Lb/2 =	S3 Length ft.	S3 Length in.
15-16	12	0	5	0	23	5¼	25	6	20	6⅝	1	8	28	19	9	9½	+0.5Lb=			6	7¾	+0.5Lb=		
13-14	11	0	4	6	21	⅛	22	½	18	5⅛	1	5⅜	25	16	9	4	+0.5Lb=			6	5	+0.5Lb=		
11-12	10	0	4	0	17	10	19	6⅞	15	7⅝	1	3⅜	21	14	8	10½	+0.5Lb=			6	2⅛	+0.5Lb=		
9-10	9	0	3	6	15	4⅞	16	1⅜	13	6⅛	1	⅝	18	11	8	5	+0.5Lb=			5	11⅜	+0.5Lb=		
7-8	7	6	2	9	12	1¾	13	5	10	7¾	0	10½	14	9	7	8⅝	+0.5Lb=			5	7⅛	+0.5Lb=		
5-6	6	6	2	3	9	8⅝	9	11½	8	6¼	0	7⅞	11	6	7	3⅛	+0.5Lb=			5	4¼	+0.5Lb=		

Reinforcement Details

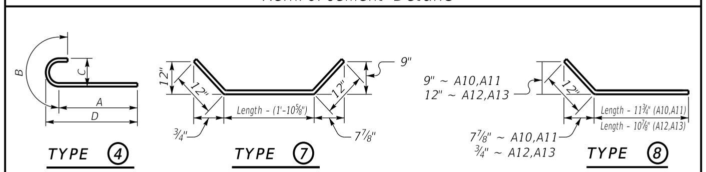

*Concrete quantities computed using 21" beam depth on ½" pad & Variable Bridge Width

Quantities

H	Concrete* C.Y.	Reinforcement LBS.
5	22.04+(0.71xLb) =	2131+(52.8xLb) =
6	24.01+(0.78xLb) =	2131+(52.8xLb) =
7	34.1+(0.93xLb) =	3195+(68.7xLb) =
8	36.51+(1.01xLb) =	3195+(68.7xLb) =
9	50.24+(1.19xLb) =	4790+(91xLb) =
10	53.1+(1.27xLb) =	4790+(91xLb) =
11	67.85+(1.41xLb) =	7067+(120.4xLb) =
12	71.15+(1.49xLb) =	7067+(120.4xLb) =
13	88.13+(1.64xLb) =	10316+(161xLb) =
14	91.87+(1.71xLb) =	10316+(161xLb) =
15	111.07+(1.86xLb) =	13872+(198.6xLb) =
16	115.26+(1.93xLb) =	13872+(198.6xLb) =

ABUTMENT SKEW CORRECTION FACTOR (SCF) = 1.103

NUMBER OF BARS TO ADD (Nb) = Bridge Width (feet) x SCF (round up to nearest whole number)

LENGTH OF ABUTMENT TO ADD (Lb) = Bridge Width (feet) x SCF (convert decimal to architectural)

GENERAL NOTES

SPECIFICATIONS: Construct abutments according to the current edition of the Kentucky Department of Highways Standard Specifications for Road and Bridge Construction. Abutments are designed for side by side box beams as detailed in Standard Drawings BDP-001 through BDP-012, current edition. Dimensions may be adjusted to allow for any out to out bridge width. Abutments are also adequate for Std. Dwg. slabs or steel beam superstructures.

FOUNDATION PRESSURE: Construct abutment footings on solid rock bearing material that can support a pressure of 8000 psf service or 10,800 psf strength factored as recommended by a geotechnical engineer.

WING LENGTHS: Calculated assuming 21" superstructure depth and stream bank elevation at top of footing.

FOOTING ELEVATION: Construct bottom of footing below the anticipated scour elevation. (This typically entails embedding the footings 1'-0" to 2'-0" into rock and pouring concrete directly against cut rock faces. as recommended by geotechnical engineer.)

NOTE: Distances to bars shown are clear dimensions unless otherwise noted.

MATERIAL SPECIFICATIONS:
Concrete, Class "A" = 3500 psi
Steel Reinforcement = Grade 60

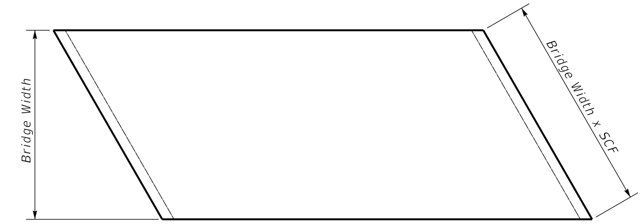

PLAN OF SUPERSTRUCTURE SLAB

KENTUCKY
DEPARTMENT OF HIGHWAYS

25° SKEW VARIABLE WIDTH ABUTMENT 25% SKEWED WINGS

STANDARD DRAWING NO. BSA-032

SUBMITTED ______ DIRECTOR DIVISION OF STRUCTURAL DESIGN 02-26-20 DATE

APPROVED ______ STATE HIGHWAY ENGINEER 02-26-20 DATE

30° SKEW VARIABLE BRIDGE WIDTH 2:1 FILL SLOPES WINGS SKEWED 25% FROM ROADWAY TO BREASTWALL

ABUTMENT SKEW CORRECTION FACTOR (SCF) = 1.155

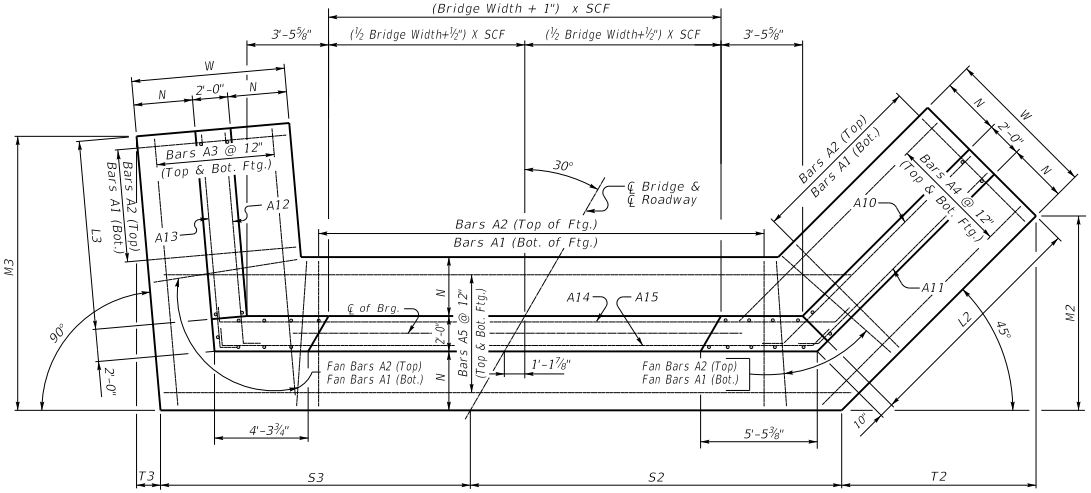

(Left Skew as shown;right skew opp. hand)

PLAN

NOTE: Trim A16 & A17 bars if necessary

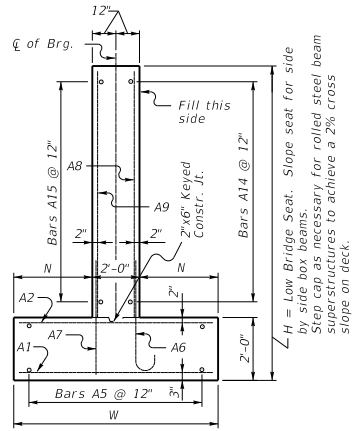

WALL SECTION

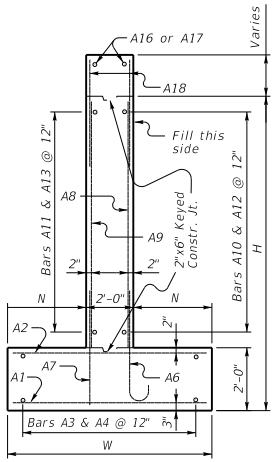

WING SECTION

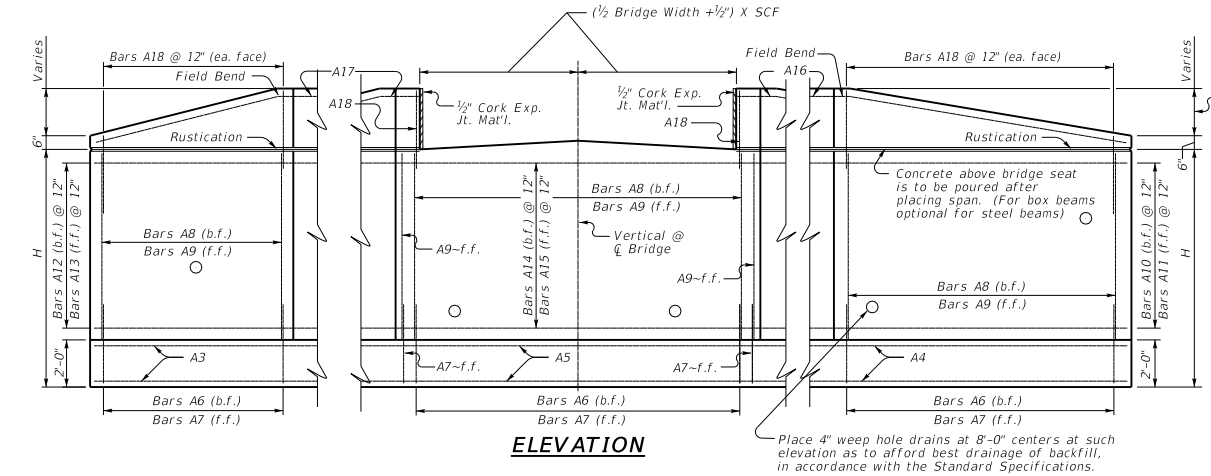

ELEVATION

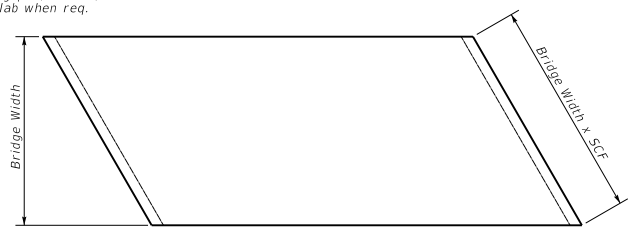

PLAN OF SUPERSTRUCTURE SLAB

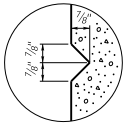

RUSTICATION GROOVE

KENTUCKY
DEPARTMENT OF HIGHWAYS

30° SKEW VARIABLE WIDTH ABUTMENT 25% SKEWED WINGS

STANDARD DRAWING NO. BSA-033

SUBMITTED _____ DIRECTOR DIVISION OF STRUCTURAL DESIGN — DATE 02-26-20

APPROVED _____ STATE HIGHWAY ENGINEER — DATE 02-26-20

30° SKEW VARIABLE BRIDGE WIDTH 2:1 FILL SLOPES WINGS SKEWED 25% FROM ROADWAY TO BREASTWALL

Bill of Reinforcement

MARK	A1					A2					A3			A4			A5					
TYPE	Str.					Str.					Str.			Str.			Str.					
SIZE											#5			#5			#5					
H	No.	Size	Length ft.	Length in.	Spacing	No.	Size	Length ft.	Length in.	Spacing	No.	Length ft.	Length in.	No.	Length ft.	Length in.	No.	Length ft.	Length in.	+Lb =	Length ft.	Length in.
15-16	77+Nb=	10	11	8	12	77+Nb=	7	11	8	12	24	25	8	24	33	0	24	16	7	+Lb=		
13-14	68+Nb=	9	10	8	12	68+Nb=	7	10	8	12	22	22	2	22	28	9	22	15	11	+Lb=		
11-12	61+Nb=	8	9	8	12	61+Nb=	6	9	8	12	20	19	8	20	24	7	20	15	2	+Lb=		
9-10	54+Nb=	7	8	8	12	54+Nb=	5	8	8	12	18	16	2	18	21	4	18	14	6	+Lb=		
7-8	44+Nb=	6	7	2	12	44+Nb=	5	7	2	12	16	13	5	16	15	9	16	13	5	+Lb=		
5-6	37+Nb=	5	6	2	12	37+Nb=	5	6	2	12	14	9	11	14	12	7	14	12	8	+Lb=		

MARK	A6												
TYPE	4												
SIZE													
H	No.	Size	Length ft.	Length in.	Spacing	A ft.	A in.	B ft.	B in.	C ft.	C in.	D ft.	D in.
15-16	57+Nb=	9	9	11	12	8	⅛	1	10	0	11¾	8	6
13-14	50+Nb=	8	8	3	12	6	11	1	3	0	8	7	3
11-12	44+Nb=	7	7	1	12	5	10½	1	2	0	7	6	2
9-10	38+Nb=	6	6	1	12	5	1	1	0	0	6	5	4
7-8	31+Nb=	5	5	7	12	4	8½	0	10	0	5	4	11
5-6	25+Nb=	5	5	7	12	4	8½	0	10	0	5	4	11

MARK	A7					A8					A9			
TYPE	Str.					Str.					Str.			
SIZE											#5			
H	No.	Size	Length ft.	Length in.	Spacing	No.	Size	Length ft.	Length in.	Spacing	No.	Length ft.	Length in.	Spacing
15-16	62+Nb=	5	4	11	12	57+Nb=	6	12	10	12	62+Nb=	12	10	12
13-14	55+Nb=	5	4	11	12	50+Nb=	6	10	10	12	55+Nb=	10	10	12
11-12	49+Nb=	5	4	11	12	44+Nb=	5	8	10	12	49+Nb=	8	10	12
9-10	43+Nb=	5	4	11	12	38+Nb=	5	6	10	12	43+Nb=	6	10	12
7-8	36+Nb=	5	4	11	12	31+Nb=	5	4	10	12	36+Nb=	4	10	12
5-6	30+Nb=	5	4	11	12	25+Nb=	5	2	10	12	30+Nb=	2	10	12

MARK	A10			A11			A12			A13			A14						A15						A16			A17			A18		
TYPE	8			8			8			8			7						7						Str.			Str.			Str.		
SIZE	#5			#5			#5			#5			#5						#5						#5			#5			#5		
H	No.	Length ft.	Length in.	No.	Length ft.	Length in.	No.	Length ft.	Length in.	No.	Length ft.	Length in.	No.	Length ft.	Length in.	+Lb =	Length ft.	Length in.	No.	Length ft.	Length in.	+Lb =	Length ft.	Length in.	No.	Length ft.	Length in.	No.	Length ft.	Length in.	No.	Length ft.	Length in.
15-16	14	33	0	14	31	7	14	21	6	14	21	8	14	12	10	+Lb=			14	11	4	+Lb=			2	36	2	2	25	3	124	5	9
13-14	12	29	0	12	27	7	12	18	6	12	18	8	12	12	10	+Lb=			12	11	4	+Lb=			2	32	2	2	22	3	110	5	9
11-12	10	25	0	10	23	7	10	16	6	10	16	8	10	12	10	+Lb=			10	11	4	+Lb=			2	28	2	2	20	3	98	5	9
9-10	8	22	0	8	20	7	8	13	6	8	13	8	8	12	10	+Lb=			8	11	4	+Lb=			2	25	2	2	17	3	86	5	9
7-8	6	17	0	6	15	7	6	11	6	6	11	8	6	12	11	+Lb=			6	11	4	+Lb=			2	20	2	2	15	3	72	5	9
5-6	4	14	0	4	12	7	4	8	6	4	8	8	4	12	11	+Lb=			4	11	4	+Lb=			2	17	2	2	12	3	60	5	9

Table of Dimensions

H	W Length ft.	W Length in.	N Length ft.	N Length in.	M2 Length ft.	M2 Length in.	M3 Length ft.	M3 Length in.	T2 Length ft.	T2 Length in.	T3 Length ft.	T3 Length in.	L2 Length ft.	L3 Length ft.	S2 Length ft.	S2 Length in.	S2 + Lb/2 =	S2 Length ft.	S2 Length in.	S3 Length ft.	S3 Length in.	S3 + Lb/2 =	S3 Length ft.	S3 Length in.
15-16	12	0	5	0	23	3⅛	26	0	23	3⅛	0	0	30	19	10	5½	+0.5Lb=			6	5⅝	+0.5Lb=		
13-14	11	0	4	6	20	3½	22	6	20	3½	0	0	26	16	9	11½	+0.5Lb=			6	3⅛	+0.5Lb=		
11-12	10	0	4	0	17	3¾	20	0	17	3¾	0	0	22	14	9	5½	+0.5Lb=			6	⅝	+0.5Lb=		
9-10	9	0	3	6	15	½	16	6	15	½	0	0	19	11	8	11⅝	+0.5Lb=			5	10	+0.5Lb=		
7-8	7	6	2	9	11	3½	13	9	11	3½	0	0	14	9	8	2⅝	+0.5Lb=			5	6¼	+0.5Lb=		
5-6	6	6	2	3	9	¼	10	3	9	¼	0	0	11	6	7	8¾	+0.5Lb=			5	3¾	+0.5Lb=		

Reinforcement Details

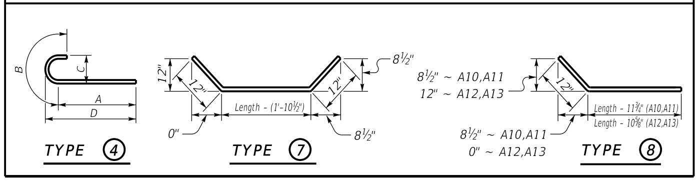

*Concrete quantities computed using 21" beam depth on ½" pad & Variable Bridge Width

Quantities

H	Concrete* C.Y.	Reinforcement LBS.
5	22.36+(0.71xLb) =	2163+(52.8xLb) =
6	24.35+(0.78xLb) =	2163+(52.8xLb) =
7	34.5+(0.93xLb) =	3232+(68.7xLb) =
8	36.93+(1.01xLb) =	3232+(68.7xLb) =
9	52.02+(1.19xLb) =	4969+(91xLb) =
10	54.98+(1.27xLb) =	4969+(91xLb) =
11	69.94+(1.41xLb) =	7260+(120.4xLb) =
12	73.33+(1.49xLb) =	7260+(120.4xLb) =
13	90.51+(1.64xLb) =	10566+(161xLb) =
14	94.36+(1.71xLb) =	10566+(161xLb) =
15	115.71+(1.86xLb) =	14465+(198.6xLb) =
16	120.07+(1.93xLb) =	14465+(198.6xLb) =

ABUTMENT SKEW CORRECTION FACTOR (SCF) = 1.155

NUMBER OF BARS TO ADD (Nb) = Bridge Width (feet) x SCF (round up to nearest whole number)

LENGTH OF ABUTMENT TO ADD (Lb) = Bridge Width (feet) x SCF (convert decimal to architectural)

GENERAL NOTES

SPECIFICATIONS: Construct abutments according to the current edition of the Kentucky Department of Highways Standard Specifications for Road and Bridge Construction. Abutments are designed for side by side box beams as detailed in Standard Drawings BDP-001 through BDP-012, current edition. Dimensions may be adjusted to allow for any out to out bridge width. Abutments are also adequate for Std. Dwg. slabs or steel beam superstructures.

FOUNDATION PRESSURE: Construct abutment footings on solid rock bearing material that can support a pressure of 8000 psf service or 10,800 psf strength factored as recommended by a geotechnical engineer.

WING LENGTHS: Calculated assuming 21" superstructure depth and stream bank elevation at top of footing.

FOOTING ELEVATION: Construct bottom of footing below the anticipated scour elevation. (This typically entails embedding the footings 1'-0" to 2'-0" into rock and pouring concrete directly against cut rock faces. as recommended by geotechnical engineer.)

NOTE: Distances to bars shown are clear dimensions unless otherwise noted.

MATERIAL SPECIFICATIONS:
Concrete, Class "A" = 3500 psi
Steel Reinforcement = Grade 60

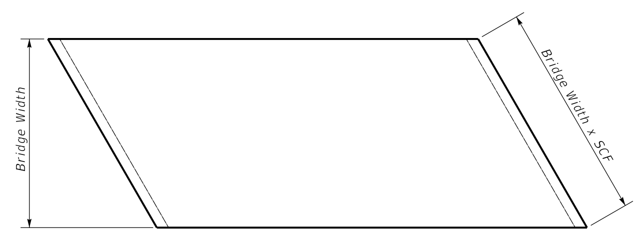

PLAN OF SUPERSTRUCTURE SLAB

KENTUCKY
DEPARTMENT OF HIGHWAYS

30° SKEW VARIABLE
WIDTH ABUTMENT
25% SKEWED WINGS

STANDARD DRAWING NO. BSA-034

SUBMITTED ____ DIRECTOR DIVISION OF STRUCTURAL DESIGN 02-26-20 DATE

APPROVED ____ STATE HIGHWAY ENGINEER 02-26-20 DATE

35° SKEW VARIABLE BRIDGE WIDTH 2:1 FILL SLOPES WINGS SKEWED 25% FROM ROADWAY TO BREASTWALL

ABUTMENT SKEW CORRECTION FACTOR (SCF) = 1.221

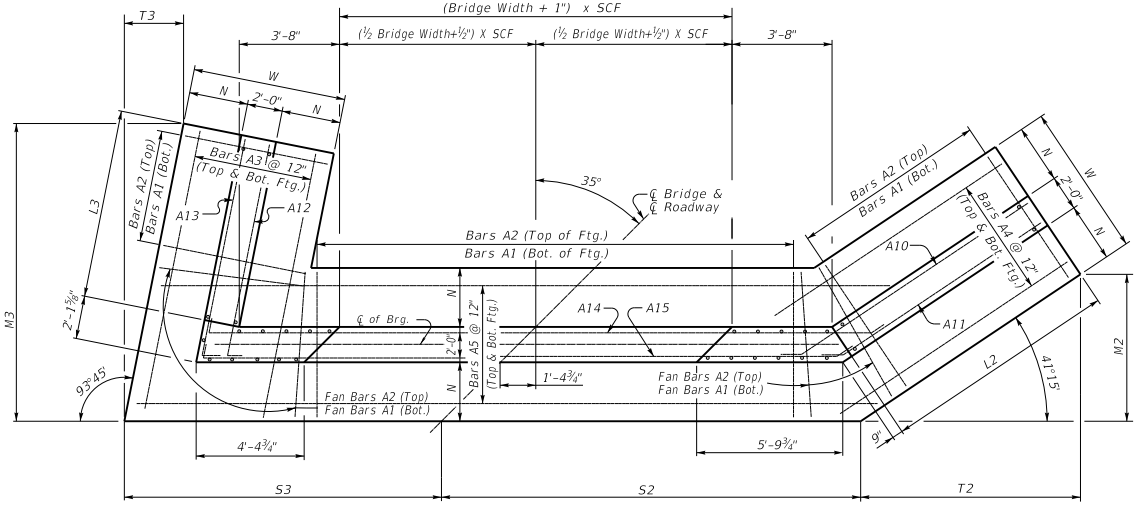

(Left Skew as shown;right skew opp. hand)

PLAN

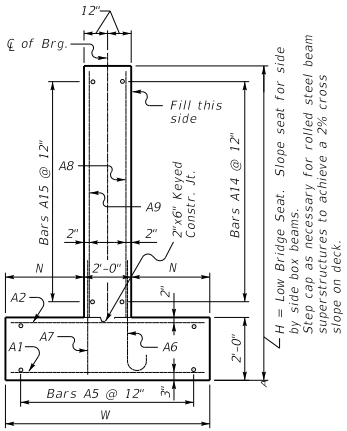

WALL SECTION

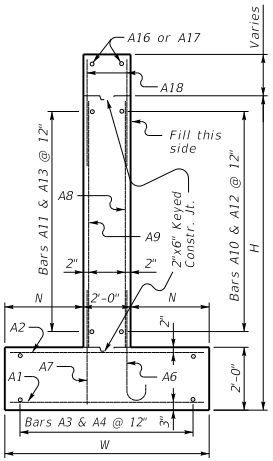

WING SECTION

NOTE: Trim A16 & A17 bars if necessary
Trim A3 bars as necessary

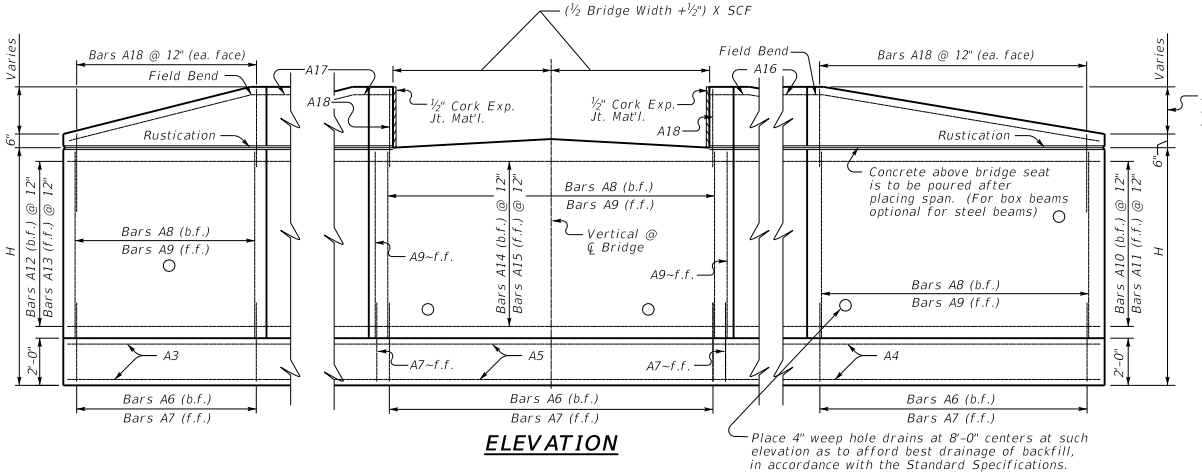

ELEVATION

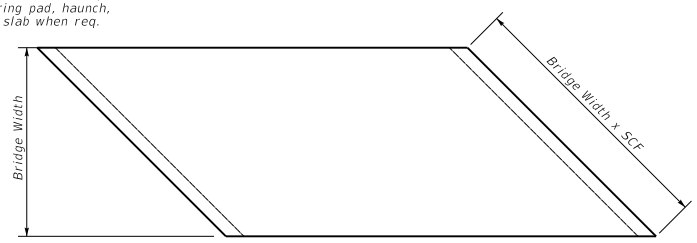

PLAN OF SUPERSTRUCTURE SLAB

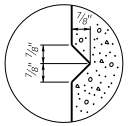

RUSTICATION GROOVE

KENTUCKY
DEPARTMENT OF HIGHWAYS

35° SKEW VARIABLE WIDTH ABUTMENT 25% SKEWED WINGS

STANDARD DRAWING NO. BSA-035

SUBMITTED _____ DIRECTOR DIVISION OF STRUCTURAL DESIGN — DATE 02-26-20

APPROVED _____ STATE HIGHWAY ENGINEER — DATE 02-26-20

35° SKEW VARIABLE BRIDGE WIDTH 2:1 FILL SLOPES WINGS SKEWED 25% FROM ROADWAY TO BREASTWALL

Bill of Reinforcement

MARK	A1					A2					A3			A4			A5					
TYPE	Str.					Str.					Str.			Str.			Str.					
SIZE											#5			#5			#5					
H	No.	Size	Length ft.	Length in.	Spacing	No.	Size	Length ft.	Length in.	Spacing	No.	Length ft.	Length in.	No.	Length ft.	Length in.	No.	Length ft.	Length in.	+Lb =	Length ft.	Length in.
15-16	81+Nb=	10	11	8	12	81+Nb=	7	11	8	12	24	26	1	24	35	9	24	17	2	+Lb=		
13-14	72+Nb=	9	10	8	12	72+Nb=	7	10	8	12	22	22	7	22	31	7	22	16	5	+Lb=		
11-12	64+Nb=	8	9	8	12	64+Nb=	6	9	8	12	20	20	0	20	26	5	20	15	8	+Lb=		
9-10	55+Nb=	7	8	8	12	55+Nb=	5	8	8	12	18	16	6	18	22	2	18	15	0	+Lb=		
7-8	46+Nb=	6	7	2	12	46+Nb=	5	7	2	12	16	13	9	16	16	7	16	13	11	+Lb=		
5-6	39+Nb=	5	6	2	12	39+Nb=	5	6	2	12	14	10	2	14	13	5	14	13	2	+Lb=		

MARK	A6												
TYPE	4												
SIZE													
H	No.	Size	Length ft.	Length in.	Spacing	A ft.	A in.	B ft.	B in.	C ft.	C in.	D ft.	D in.
15-16	60+Nb=	9	9	11	12	8	⅛	1	10	0	11¾	8	6
13-14	53+Nb=	8	8	3	12	6	11	1	3	0	8	7	3
11-12	46+Nb=	7	7	1	12	5	10½	1	2	0	7	6	2
9-10	39+Nb=	6	6	1	12	5	1	1	0	0	6	5	4
7-8	32+Nb=	5	5	7	12	4	8½	0	10	0	5	4	11
5-6	26+Nb=	5	5	7	12	4	8½	0	10	0	5	4	11

MARK	A7					A8					A9			
TYPE	Str.					Str.					Str.			
SIZE											#5			
H	No.	Size	Length ft.	Length in.	Spacing	No.	Size	Length ft.	Length in.	Spacing	No.	Length ft.	Length in.	Spacing
15-16	66+Nb=	5	4	11	12	60+Nb=	6	12	10	12	66+Nb=	12	10	12
13-14	59+Nb=	5	4	11	12	53+Nb=	6	10	10	12	59+Nb=	10	10	12
11-12	52+Nb=	5	4	11	12	46+Nb=	5	8	10	12	52+Nb=	8	10	12
9-10	45+Nb=	5	4	11	12	39+Nb=	5	6	10	12	45+Nb=	6	10	12
7-8	38+Nb=	5	4	11	12	32+Nb=	5	4	10	12	38+Nb=	4	10	12
5-6	32+Nb=	5	4	11	12	26+Nb=	5	2	10	12	32+Nb=	2	10	12

MARK	A10			A11			A12			A13			A14						A15						A16			A17			A18		
TYPE	8			8			8			8			7						7						Str.			Str.			Str.		
SIZE	#5			#5			#5			#5			#5						#5						#5			#5			#5		
H	No.	Length ft.	Length in.	No.	Length ft.	Length in.	No.	Length ft.	Length in.	No.	Length ft.	Length in.	No.	Length ft.	Length in.	+Lb =	Length ft.	Length in.	No.	Length ft.	Length in.	+Lb =	Length ft.	Length in.	No.	Length ft.	Length in.	No.	Length ft.	Length in.	No.	Length ft.	Length in.
15-16	14	36	2	14	34	7	14	21	5	14	21	9	14	13	5	+Lb=			14	11	10	+Lb=			2	39	6	2	25	5	130	5	9
13-14	12	32	2	12	30	7	12	18	5	12	18	9	12	13	5	+Lb=			12	11	10	+Lb=			2	35	6	2	22	5	116	5	9
11-12	10	27	2	10	25	7	10	16	5	10	16	9	10	13	5	+Lb=			10	11	10	+Lb=			2	30	6	2	20	5	102	5	9
9-10	8	23	2	8	21	7	8	13	5	8	13	9	8	13	5	+Lb=			8	11	10	+Lb=			2	26	6	2	17	5	88	5	9
7-8	6	18	2	6	16	7	6	11	5	6	11	9	6	13	5	+Lb=			6	11	10	+Lb=			2	21	6	2	15	5	74	5	9
5-6	4	15	2	4	13	7	4	8	5	4	8	9	4	13	5	+Lb=			4	11	10	+Lb=			2	18	6	2	12	5	62	5	9

Table of Dimensions

H	W Length ft.	W Length in.	N Length ft.	N Length in.	M2 Length ft.	M2 Length in.	M3 Length ft.	M3 Length in.	T2 Length ft.	T2 Length in.	T3 Length ft.	T3 Length in.	L2 Length ft.	L3 Length ft.	S2 Length ft.	S2 Length in.	S2 + Lb/2 =	S2 Length ft.	S2 Length in.	S3 Length ft.	S3 Length in.	S3 + Lb/2 =	S3 Length ft.	S3 Length in.
15-16	12	0	5	0	23	6	26	5	26	9½	1	8¾	33	19	11	3	+0.5Lb=			6	3⅜	+0.5Lb=		
13-14	11	0	4	6	20	8¾	22	10¾	23	7¾	1	6	29	16	10	8½	+0.5Lb=			6	1¼	+0.5Lb=		
11-12	10	0	4	0	17	3¾	20	4⅜	19	8⅞	1	4	24	14	10	2⅛	+0.5Lb=			5	11	+0.5Lb=		
9-10	9	0	3	6	14	6⅝	16	10	16	7⅛	1	1¼	20	11	9	7⅝	+0.5Lb=			5	8¾	+0.5Lb=		
7-8	7	6	2	9	11	⅞	14	½	12	7½	0	11	15	9	8	9⅞	+0.5Lb=			5	5½	+0.5Lb=		
5-6	6	6	2	3	8	11⅝	10	6⅛	10	2¾	0	8¼	12	6	8	3½	+0.5Lb=			5	3¼	+0.5Lb=		

Reinforcement Details

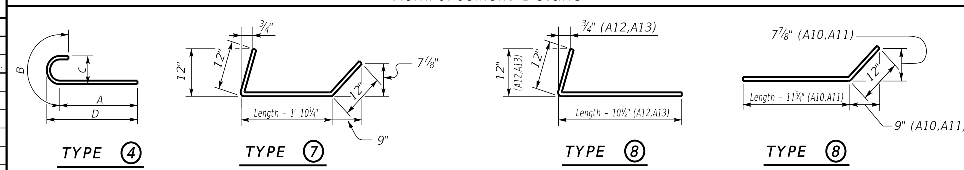

Quantities

H	Concrete* C.Y.	Reinforcement LBS.
5	23.58+(0.71xLb) =	2265+(52.8xLb) =
6	25.67+(0.78xLb) =	2265+(52.8xLb) =
7	36.04+(0.93xLb) =	3363+(68.7xLb) =
8	38.58+(1.01xLb) =	3363+(68.7xLb) =
9	53.94+(1.19xLb) =	5110+(91xLb) =
10	57+(1.27xLb) =	5110+(91xLb) =
11	73.69+(1.41xLb) =	7612+(120.4xLb) =
12	77.27+(1.49xLb) =	7612+(120.4xLb) =
13	96.54+(1.64xLb) =	11200+(161xLb) =
14	100.64+(1.71xLb) =	11200+(161xLb) =
15	122.51+(1.86xLb) =	15233+(198.6xLb) =
16	127.13+(1.93xLb) =	15233+(198.6xLb) =

*Concrete quantities computed using 21" beam depth on ½" pad & Variable Bridge Width

ABUTMENT SKEW CORRECTION FACTOR (SCF) = 1.221

NUMBER OF BARS TO ADD (Nb) = Bridge Width (feet) x SCF (round up to nearest whole number)

LENGTH OF ABUTMENT TO ADD (Lb) = Bridge Width (feet) x SCF (convert decimal to architectural)

GENERAL NOTES

SPECIFICATIONS: Construct abutments according to the current edition of the Kentucky Department of Highways Standard Specifications for Road and Bridge Construction. Abutments are designed for side by side box beams as detailed in Standard Drawings BDP-001 through BDP-012, current edition. Dimensions may be adjusted to allow for any out to out bridge width. Abutments are also adequate for Std. Dwg. slabs or steel beam superstructures.

FOUNDATION PRESSURE: Construct abutment footings on solid rock bearing material that can support a pressure of 8000 psf service or 10,800 psf strength factored as recommended by a geotechnical engineer.

WING LENGTHS: Calculated assuming 21" superstructure depth and stream bank elevation at top of footing.

FOOTING ELEVATION: Construct bottom of footing below the anticipated scour elevation. (This typically entails embedding the footings 1'-0" to 2'-0" into rock and pouring concrete directly against cut rock faces. as recommended by geotechnical engineer.)

NOTE: Distances to bars shown are clear dimensions unless otherwise noted.

MATERIAL SPECIFICATIONS:
Concrete, Class "A" = 3500 psi
Steel Reinforcement = Grade 60

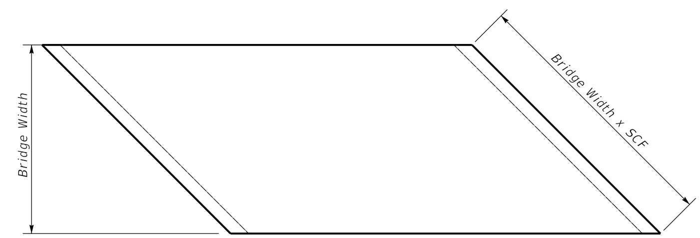

PLAN OF SUPERSTRUCTURE SLAB

KENTUCKY
DEPARTMENT OF HIGHWAYS

35° SKEW VARIABLE WIDTH ABUTMENT 25% SKEWED WINGS

STANDARD DRAWING NO. BSA-036

SUBMITTED [signature] DIRECTOR DIVISION OF STRUCTURAL DESIGN — 02-26-20 DATE

APPROVED [signature] STATE HIGHWAY ENGINEER — 02-26-20 DATE

40° SKEW VARIABLE BRIDGE WIDTH 2:1 FILL SLOPES WINGS SKEWED 25% FROM ROADWAY TO BREASTWALL

ABUTMENT SKEW CORRECTION FACTOR (SCF) = 1.305

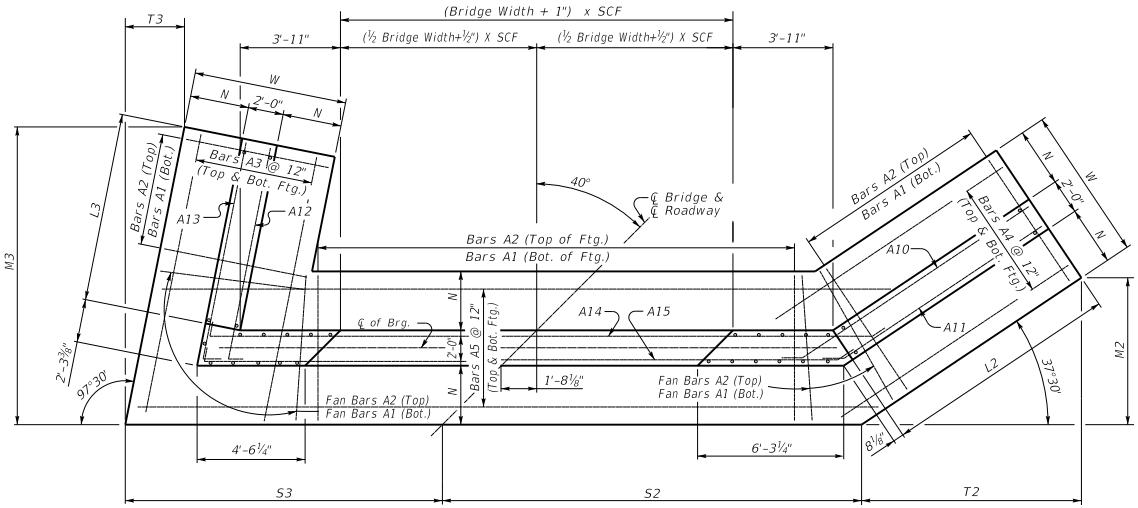

(Left Skew as shown;right skew opp. hand)

PLAN

NOTE: Trim A16 & A17 bars if necessary
Trim A3 bars as necessary

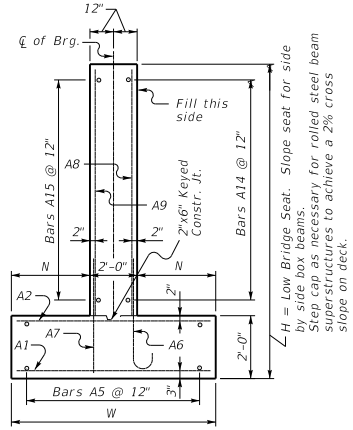

WALL SECTION

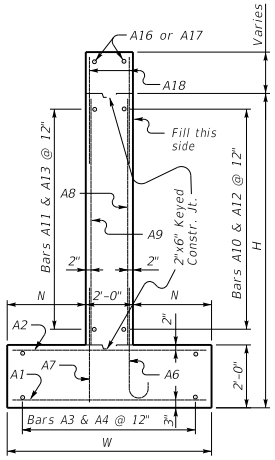

WING SECTION

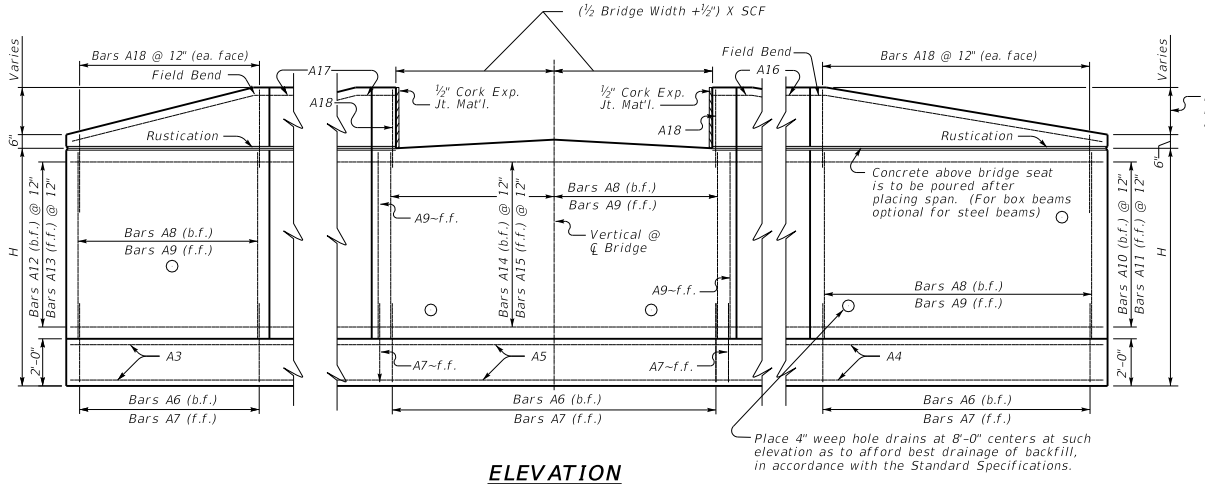

ELEVATION

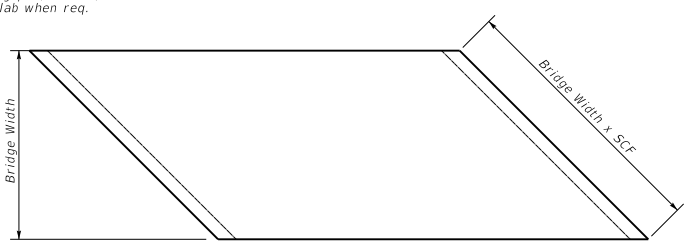

PLAN OF SUPERSTRUCTURE SLAB

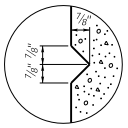

RUSTICATION GROOVE

KENTUCKY
DEPARTMENT OF HIGHWAYS

40° SKEW VARIABLE WIDTH ABUTMENT 25% SKEWED WINGS

STANDARD DRAWING NO. BSA-037

SUBMITTED _____ DIRECTOR DIVISION OF STRUCTURAL DESIGN — DATE 02-26-20

APPROVED _____ STATE HIGHWAY ENGINEER — DATE 02-26-20

40° SKEW VARIABLE BRIDGE WIDTH 2:1 FILL SLOPES
WINGS SKEWED 25% FROM ROADWAY TO BREASTWALL

Bill of Reinforcement

MARK	A1					A2					A3			A4			A5					
TYPE	Str.					Str.					Str.			Str.			Str.					
SIZE											#5			#5			#5					
H	No.	Size	Length ft.	Length in.	Spacing	No.	Size	Length ft.	Length in.	Spacing	No.	Length ft.	Length in.	No.	Length ft.	Length in.	No.	Length ft.	Length in.	+Lb =	Length ft.	Length in.
15-16	85+Nb=	10	11	8	12	85+Nb=	7	11	8	12	24	26	7	24	38	7	24	17	10	+Lb=		
13-14	76+Nb=	9	10	8	12	76+Nb=	7	10	8	12	22	23	0	22	33	5	22	17	1	+Lb=		
11-12	67+Nb=	8	9	8	12	67+Nb=	6	9	8	12	20	20	5	20	28	3	20	16	4	+Lb=		
9-10	59+Nb=	7	8	8	12	59+Nb=	5	8	8	12	18	16	10	18	24	1	18	15	7	+Lb=		
7-8	49+Nb=	6	7	2	12	49+Nb=	5	7	2	12	16	14	1	16	18	6	16	14	7	+Lb=		
5-6	41+Nb=	5	6	2	12	41+Nb=	5	6	2	12	14	10	6	14	14	4	14	13	10	+Lb=		

MARK	A6													A7					A8				
TYPE	4													Str.					Str.				
SIZE																							
H	No.	Size	Length ft.	Length in.	Spacing	A ft.	A in.	B ft.	B in.	C ft.	C in.	D ft.	D in.	No.	Size	Length ft.	Length in.	Spacing	No.	Size	Length ft.	Length in.	Spacing
15-16	63+Nb=	9	9	11	12	8	⅛	1	10	0	11¾	8	6	69+Nb=	5	4	11	12	63+Nb=	6	12	10	12
13-14	55+Nb=	8	8	3	12	6	11	1	3	0	8	7	3	61+Nb=	5	4	11	12	55+Nb=	6	10	10	12
11-12	48+Nb=	7	7	1	12	5	10½	1	2	0	7	6	2	54+Nb=	5	4	11	12	48+Nb=	5	8	10	12
9-10	41+Nb=	6	6	1	12	5	1	1	0	0	6	5	4	47+Nb=	5	4	11	12	41+Nb=	5	6	10	12
7-8	34+Nb=	5	5	7	12	4	8½	0	10	0	5	4	11	40+Nb=	5	4	11	12	34+Nb=	5	4	10	12
5-6	27+Nb=	5	5	7	12	4	8½	0	10	0	5	4	11	33+Nb=	5	4	11	12	27+Nb=	5	2	10	12

MARK	A9				A10			A11			A12			A13			A14						A15						A16			A17			A18		
TYPE	Str.				8			8			8			8			7						7						Str.			Str.			Str.		
SIZE	#5				#5			#5			#5			#5			#5						#5						#5			#5			#5		
H	No.	Length ft.	Length in.	Spacing	No.	Length ft.	Length in.	No.	Length ft.	Length in.	No.	Length ft.	Length in.	No.	Length ft.	Length in.	No.	Length ft.	Length in.	+Lb =	Length ft.	Length in.	No.	Length ft.	Length in.	+Lb =	Length ft.	Length in.	No.	Length ft.	Length in.	No.	Length ft.	Length in.	No.	Length ft.	Length in.
15-16	69+Nb=	12	10	12	14	39	4	14	37	6	14	21	6	14	21	11	14	14	1	+Lb=			14	12	5	+Lb=			2	42	10	2	25	9	138	5	9
13-14	61+Nb=	10	10	12	12	34	4	12	32	6	12	18	6	12	18	11	12	14	1	+Lb=			12	12	5	+Lb=			2	37	10	2	22	9	122	5	9
11-12	54+Nb=	8	10	12	10	29	4	10	27	6	10	16	6	10	16	11	10	14	1	+Lb=			10	12	5	+Lb=			2	32	10	2	20	9	108	5	9
9-10	47+Nb=	6	10	12	8	25	4	8	23	6	8	13	6	8	13	11	8	14	2	+Lb=			8	12	5	+Lb=			2	28	10	2	17	9	94	5	9
7-8	40+Nb=	4	10	12	6	20	4	6	18	6	6	11	5	6	11	11	6	14	2	+Lb=			6	12	5	+Lb=			2	23	10	2	15	9	80	5	9
5-6	33+Nb=	2	10	12	4	16	4	4	14	6	4	8	5	4	8	11	4	14	2	+Lb=			4	12	5	+Lb=			2	19	10	2	12	9	66	5	9

Table of Dimensions

H	W Length ft.	W Length in.	N Length ft.	N Length in.	M2 Length ft.	M2 Length in.	M3 Length ft.	M3 Length in.	T2 Length ft.	T2 Length in.	T3 Length ft.	T3 Length in.	L2 Length ft.	L3 Length ft.	S2 Length ft.	S2 Length in.	S2 + Lb/2 =	S2 Length ft.	S2 Length in.	S3 Length ft.	S3 Length in.	S3 + Lb/2 =	S3 Length ft.	S3 Length in.
15-16	12	0	5	0	23	4⅜	26	9	30	5⅜	3	6¼	36	19	12	2⅝	+0.5Lb=			6	1	+0.5Lb=		
13-14	11	0	4	6	20	2⅝	23	2½	26	4⅛	3	⅝	31	16	11	7⅝	+0.5Lb=			5	11⅛	+0.5Lb=		
11-12	10	0	4	0	17	¾	20	8	22	2⅞	2	8⅝	26	14	11	½	+0.5Lb=			5	9⅜	+0.5Lb=		
9-10	9	0	3	6	14	6⅜	17	1½	18	11¼	2	3	22	11	10	5⅜	+0.5Lb=			5	7½	+0.5Lb=		
7-8	7	6	2	9	11	4	14	3½	14	9¼	1	10⅝	17	9	9	6⅞	+0.5Lb=			5	4⅞	+0.5Lb=		
5-6	6	6	2	3	8	9½	10	9	11	5½	1	5	13	6	8	11¾	+0.5Lb=			5	3	+0.5Lb=		

Reinforcement Details

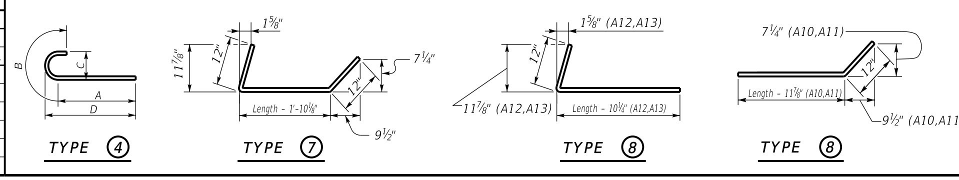

Quantities

H	Concrete* C.Y.	Reinforcement LBS.
5	24.9+(0.71xLb) =	2378+(52.8xLb) =
6	27.11+(0.78xLb) =	2378+(52.8xLb) =
7	38.74+(0.93xLb) =	3585+(68.7xLb) =
8	41.47+(1.01xLb) =	3585+(68.7xLb) =
9	57.31+(1.19xLb) =	5417+(91xLb) =
10	60.57+(1.27xLb) =	5417+(91xLb) =
11	77.63+(1.41xLb) =	7970+(120.4xLb) =
12	81.4+(1.49xLb) =	7970+(120.4xLb) =
13	101.07+(1.64xLb) =	11721+(161xLb) =
14	105.36+(1.71xLb) =	11721+(161xLb) =
15	129.56+(1.86xLb) =	16006+(198.6xLb) =
16	134.44+(1.93xLb) =	16006+(198.6xLb) =

*Concrete quantities computed using 21" beam depth on ½" pad & Variable Bridge Width

ABUTMENT SKEW CORRECTION FACTOR (SCF) = 1.305

NUMBER OF BARS TO ADD (Nb) = Bridge Width (feet) x SCF (round up to nearest whole number)

LENGTH OF ABUTMENT TO ADD (Lb) = Bridge Width (feet) x SCF (convert decimal to architectural)

GENERAL NOTES

SPECIFICATIONS: Construct abutments according to the current edition of the Kentucky Department of Highways Standard Specifications for Road and Bridge Construction. Abutments are designed for side by side box beams as detailed in Standard Drawings BDP-001 through BDP-012, current edition. Dimensions may be adjusted to allow for any out to out bridge width. Abutments are also adequate for Std. Dwg. slabs or steel beam superstructures.

FOUNDATION PRESSURE: Construct abutment footings on solid rock bearing material that can support a pressure of 8000 psf service or 10,800 psf strength factored as recommended by a geotechnical engineer.

WING LENGTHS: Calculated assuming 21" superstructure depth and stream bank elevation at top of footing.

FOOTING ELEVATION: Construct bottom of footing below the anticipated scour elevation. (This typically entails embedding the footings 1'-0" to 2'-0" into rock and pouring concrete directly against cut rock faces. as recommended by geotechnical engineer.)

NOTE: Distances to bars shown are clear dimensions unless otherwise noted.

MATERIAL SPECIFICATIONS:
Concrete, Class "A" = 3500 psi
Steel Reinforcement = Grade 60

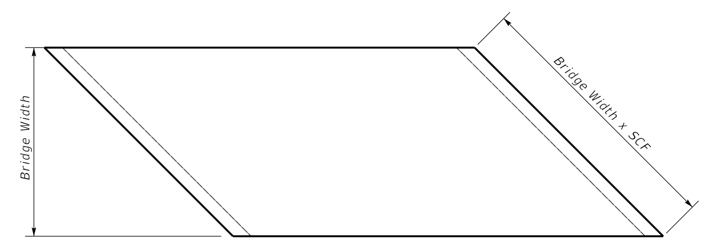

PLAN OF SUPERSTRUCTURE SLAB

KENTUCKY
DEPARTMENT OF HIGHWAYS

40° SKEW VARIABLE
WIDTH ABUTMENT
25% SKEWED WINGS

STANDARD DRAWING NO. BSA-038

SUBMITTED ______ DIRECTOR DIVISION OF STRUCTURAL DESIGN 02-26-20 DATE

APPROVED ______ STATE HIGHWAY ENGINEER 02-26-20 DATE

45° SKEW VARIABLE BRIDGE WIDTH 2:1 FILL SLOPES WINGS SKEWED 25% FROM ROADWAY TO BREASTWALL

ABUTMENT SKEW CORRECTION FACTOR (SCF) = 1.414

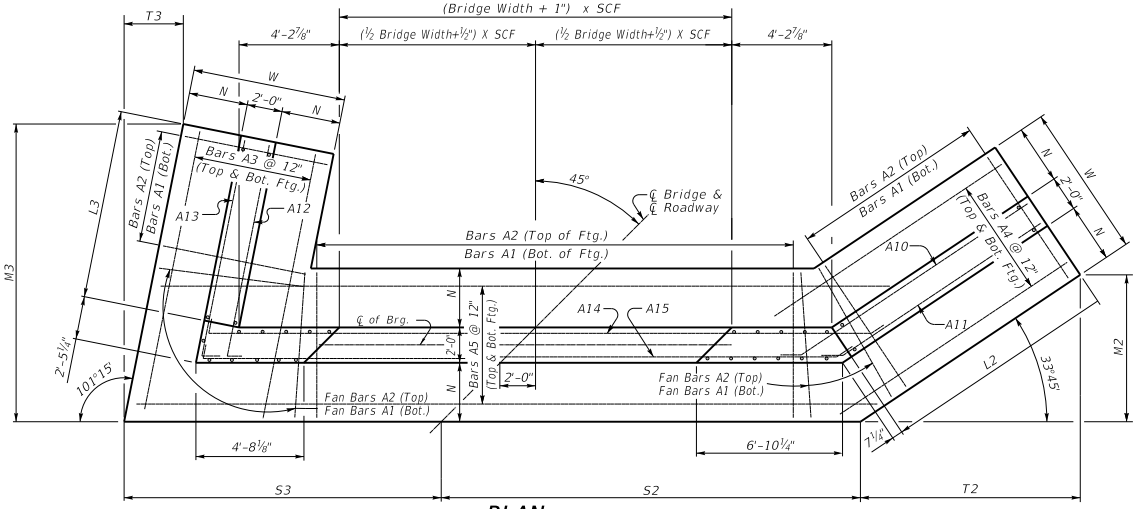

PLAN

(Left Skew as shown;right skew opp. hand)

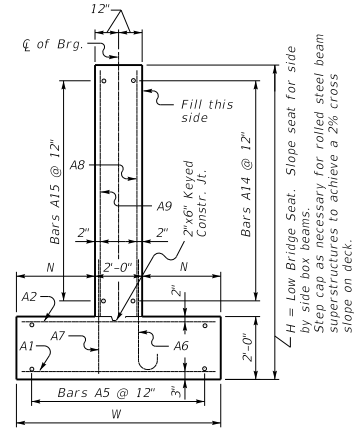

WALL SECTION

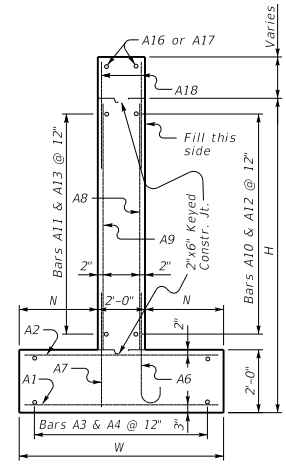

WING SECTION

NOTE: Trim A16 & A17 bars if necessary
Trim A3 bars as necessary

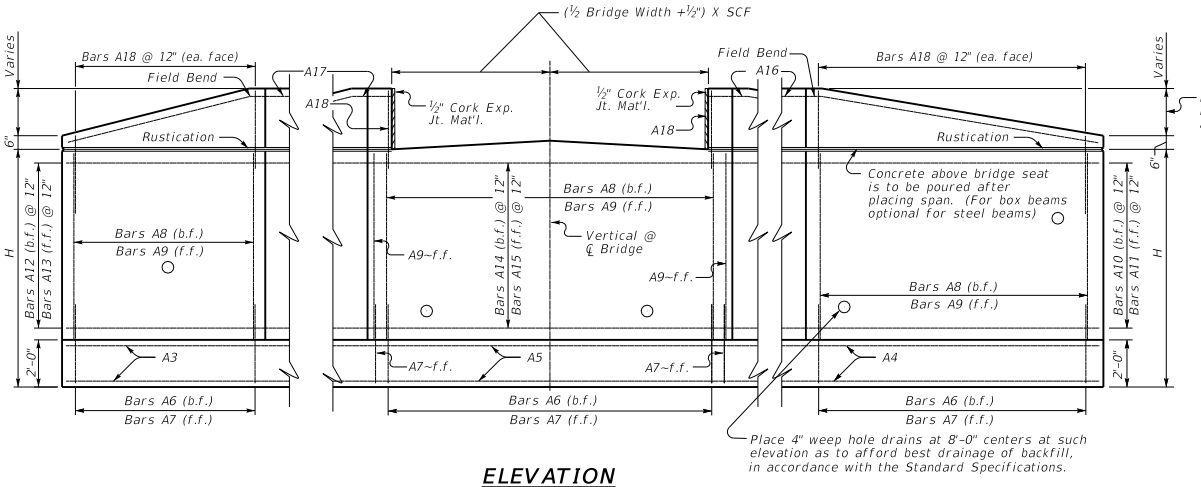

ELEVATION

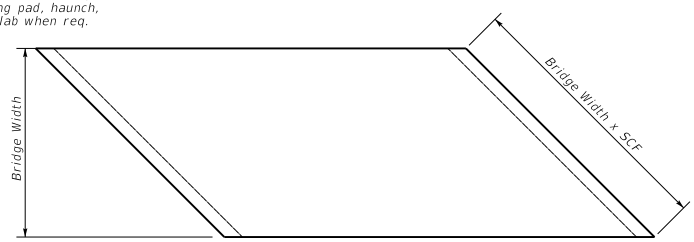

PLAN OF SUPERSTRUCTURE SLAB

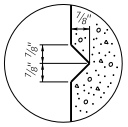

RUSTICATION GROOVE

KENTUCKY
DEPARTMENT OF HIGHWAYS

45° SKEW VARIABLE WIDTH ABUTMENT 25% SKEWED WINGS

STANDARD DRAWING NO. BSA-039

SUBMITTED _____ DIRECTOR DIVISION OF STRUCTURAL DESIGN — DATE 02-26-20

APPROVED _____ STATE HIGHWAY ENGINEER — DATE 02-26-20

45° SKEW VARIABLE BRIDGE WIDTH 2:1 FILL SLOPES WINGS SKEWED 25% FROM ROADWAY TO BREASTWALL

Bill of Reinforcement

MARK	A1					A2					A3			A4			A5					
TYPE	Str.					Str.					Str.			Str.			Str.					
SIZE											#5			#5			#5					
H	No.	Size	Length ft.	Length in.	Spacing	No.	Size	Length ft.	Length in.	Spacing	No.	Length ft.	Length in.	No.	Length ft.	Length in.	No.	Length ft.	Length in.	+Lb =	Length ft.	Length in.
15-16	88+Nb=	10	11	8	12	88+Nb=	7	11	8	12	24	26	1	24	41	4	24	18	9	+Lb=		
13-14	79+Nb=	9	10	8	12	79+Nb=	7	10	8	12	22	22	6	22	36	3	22	18	0	+Lb=		
11-12	70+Nb=	8	9	8	12	70+Nb=	6	9	8	12	20	19	11	20	31	1	20	17	2	+Lb=		
9-10	59+Nb=	7	8	8	12	59+Nb=	5	8	8	12	18	16	3	18	24	11	18	16	5	+Lb=		
7-8	50+Nb=	6	7	2	12	50+Nb=	5	7	2	12	16	13	5	16	19	4	16	15	5	+Lb=		
5-6	42+Nb=	5	6	2	12	42+Nb=	5	6	2	12	14	10	10	14	14	2	14	14	8	+Lb=		

MARK	A6												
TYPE	4												
SIZE													
H	No.	Size	Length ft.	Length in.	Spacing	A ft.	A in.	B ft.	B in.	C ft.	C in.	D ft.	D in.
15-16	66+Nb=	9	9	11	12	8	1/8	1	10	0	11 3/4	8	6
13-14	58+Nb=	8	8	3	12	6	11	1	3	0	8	7	3
11-12	51+Nb=	7	7	1	12	5	10 1/2	1	2	0	7	6	2
9-10	42+Nb=	6	6	1	12	5	1	1	0	0	6	5	4
7-8	35+Nb=	5	5	7	12	4	8 1/2	0	10	0	5	4	11
5-6	28+Nb=	5	5	7	12	4	8 1/2	0	10	0	5	4	11

MARK	A7					A8					A9			
TYPE	Str.					Str.					Str.			
SIZE											#5			
H	No.	Size	Length ft.	Length in.	Spacing	No.	Size	Length ft.	Length in.	Spacing	No.	Length ft.	Length in.	Spacing
15-16	72+Nb=	5	4	11	12	66+Nb=	6	12	10	12	72+Nb=	12	10	12
13-14	64+Nb=	5	4	11	12	58+Nb=	6	10	10	12	64+Nb=	10	10	12
11-12	57+Nb=	5	4	11	12	51+Nb=	5	8	10	12	57+Nb=	8	10	12
9-10	48+Nb=	5	4	11	12	42+Nb=	5	6	10	12	48+Nb=	6	10	12
7-8	41+Nb=	5	4	11	12	35+Nb=	5	4	10	12	41+Nb=	4	10	12
5-6	34+Nb=	5	4	11	12	28+Nb=	5	2	10	12	34+Nb=	2	10	12

MARK	A10			A11			A12			A13			A14						A15						A16			A17			A18		
TYPE	8			8			8			8			7						7						Str.			Str.			Str.		
SIZE	#5			#5			#5			#5			#5						#5						#5			#5			#5		
H	No.	Length ft.	Length in.	No.	Length ft.	Length in.	No.	Length ft.	Length in.	No.	Length ft.	Length in.	No.	Length ft.	Length in.	+Lb =	Length ft.	Length in.	No.	Length ft.	Length in.	+Lb =	Length ft.	Length in.	No.	Length ft.	Length in.	No.	Length ft.	Length in.	No.	Length ft.	Length in.
15-16	14	42	6	14	40	5	14	20	6	14	21	1	14	15	0	+Lb=			14	13	1	+Lb=			2	46	4	2	25	0	144	5	9
13-14	12	37	7	12	35	5	12	17	6	12	18	1	12	15	0	+Lb=			12	13	1	+Lb=			2	41	4	2	22	0	128	5	9
11-12	10	32	7	10	30	5	10	15	6	10	16	1	10	15	0	+Lb=			10	13	1	+Lb=			2	36	4	2	20	0	114	5	9
9-10	8	26	7	8	24	5	8	12	6	8	13	1	8	15	1	+Lb=			8	13	1	+Lb=			2	30	4	2	17	0	96	5	9
7-8	6	21	7	6	19	5	6	10	6	6	11	1	6	15	1	+Lb=			6	13	1	+Lb=			2	25	4	2	15	0	82	5	9
5-6	4	16	7	4	14	5	4	8	6	4	9	1	4	15	1	+Lb=			4	13	1	+Lb=			2	20	4	2	13	0	68	5	9

Table of Dimensions

H	W ft.	W in.	N ft.	N in.	M2 ft.	M2 in.	M3 ft.	M3 in.	T2 ft.	T2 in.	T3 ft.	T3 in.	L2 ft.	L3 ft.	S2 Length ft.	S2 Length in.	S2 + Lb/2 =	S2 Length ft.	S2 Length in.	S3 Length ft.	S3 Length in.	S3 + Lb/2 =	S3 Length ft.	S3 Length in.
15-16	12	0	5	0	22	10 1/8	26	1/4	34	2 3/8	5	2 1/8	39	18	13	5 1/8	+0.5Lb=			5	10	+0.5Lb=		
13-14	11	0	4	6	19	11 7/8	22	5 3/4	29	10 7/8	4	5 5/8	34	15	12	9 1/4	+0.5Lb=			5	8 5/8	+0.5Lb=		
11-12	10	0	4	0	17	1 1/2	19	11	25	7 1/2	3	11 1/2	29	13	12	1 1/2	+0.5Lb=			5	7 3/8	+0.5Lb=		
9-10	9	0	3	6	13	8 1/2	16	4 5/8	20	6 1/8	3	3 1/8	23	10	11	5 5/8	+0.5Lb=			5	6	+0.5Lb=		
7-8	7	6	2	9	10	9 5/8	13	6 1/4	16	2	2	8 1/4	18	8	10	5 7/8	+0.5Lb=			5	4 1/8	+0.5Lb=		
5-6	6	6	2	3	7	11 1/4	10	11 5/8	11	10 5/8	2	2 1/8	13	6	9	10 1/8	+0.5Lb=			5	2 3/4	+0.5Lb=		

Reinforcement Details

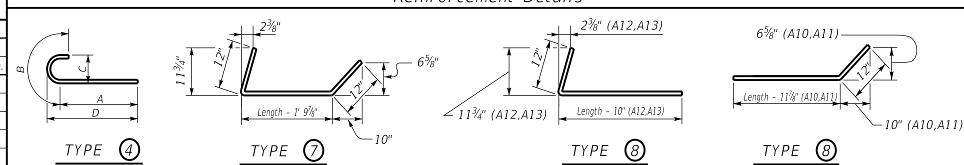

Quantities

H	Concrete* C.Y.	Reinforcement LBS.
5	25.56+(0.71xLb) =	2445+(52.8xLb) =
6	27.83+(0.78xLb) =	2445+(52.8xLb) =
7	39.56+(0.93xLb) =	3668+(68.7xLb) =
8	42.35+(1.01xLb) =	3668+(68.7xLb) =
9	58.33+(1.19xLb) =	5496+(91xLb) =
10	61.64+(1.27xLb) =	5496+(91xLb) =
11	81.84+(1.41xLb) =	8376+(120.4xLb) =
12	85.81+(1.49xLb) =	8376+(120.4xLb) =
13	105.88+(1.64xLb) =	12251+(161xLb) =
14	110.37+(1.71xLb) =	12251+(161xLb) =
15	134.98+(1.86xLb) =	16645+(198.6xLb) =
16	140.07+(1.93xLb) =	16645+(198.6xLb) =

*Concrete quantities computed using 21" beam depth on 1/2" pad & Variable Bridge Width

ABUTMENT SKEW CORRECTION FACTOR (SCF) = 1.414

NUMBER OF BARS TO ADD (Nb) = Bridge Width (feet) x SCF (round up to nearest whole number)

LENGTH OF ABUTMENT TO ADD (Lb) = Bridge Width (feet) x SCF (convert decimal to architectural)

GENERAL NOTES

SPECIFICATIONS: Construct abutments according to the current edition of the Kentucky Department of Highways Standard Specifications for Road and Bridge Construction. Abutments are designed for side by side box beams as detailed in Standard Drawings BDP-001 through BDP-012, current edition. Dimensions may be adjusted to allow for any out to out bridge width. Abutments are also adequate for Std. Dwg. slabs or steel beam superstructures.

FOUNDATION PRESSURE: Construct abutment footings on solid rock bearing material that can support a pressure of 8000 psf service or 10,800 psf strength factored as recommended by a geotechnical engineer.

WING LENGTHS: Calculated assuming 21" superstructure depth and stream bank elevation at top of footing.

FOOTING ELEVATION: Construct bottom of footing below the anticipated scour elevation. (This typically entails embedding the footings 1'-0" to 2'-0" into rock and pouring concrete directly against cut rock faces. as recommended by geotechnical engineer.)

NOTE: Distances to bars shown are clear dimensions unless otherwise noted.

MATERIAL SPECIFICATIONS:
Concrete, Class "A" = 3500 psi
Steel Reinforcement = Grade 60

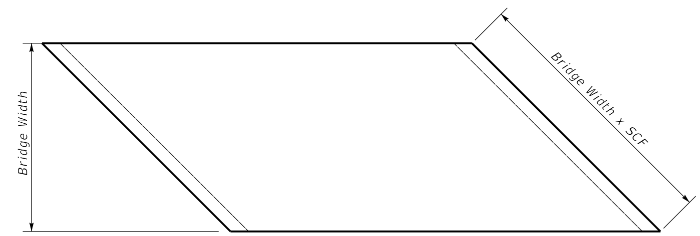

PLAN OF SUPERSTRUCTURE SLAB

KENTUCKY
DEPARTMENT OF HIGHWAYS

45° SKEW VARIABLE
WIDTH ABUTMENT
25% SKEWED WINGS

STANDARD DRAWING NO. BSA-040

SUBMITTED ______ DIRECTOR DIVISION OF STRUCTURAL DESIGN 02-26-20 DATE

APPROVED ______ STATE HIGHWAY ENGINEER 02-26-20 DATE

0° SKEW VARIABLE BRIDGE WIDTH 2:1 FILL SLOPES WINGS PARALLEL TO ROADWAY

ABUTMENT SKEW CORRECTION FACTOR (SCF) = 1.000

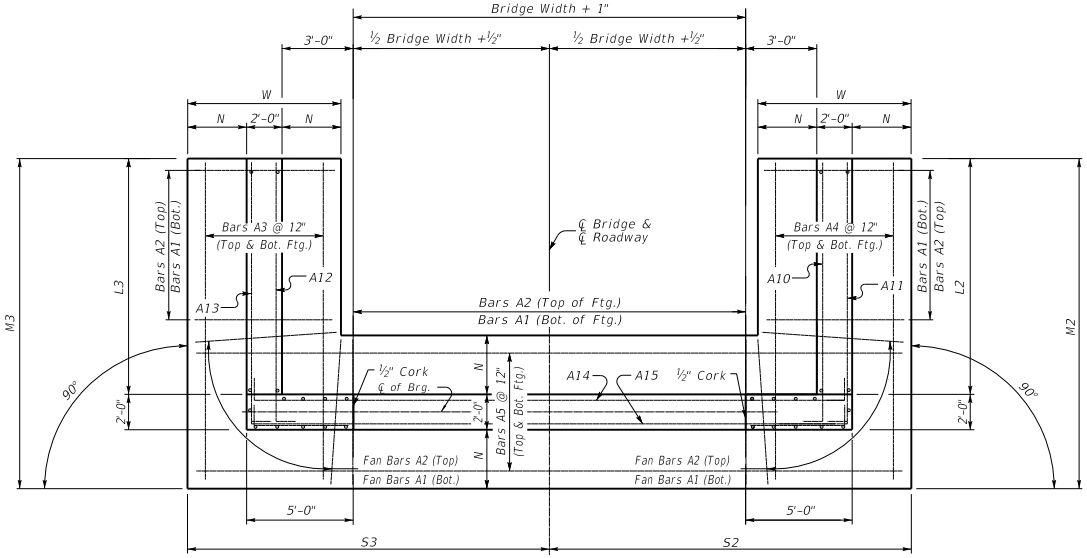

PLAN

NOTE: Trim A16 & A17 bars if necessary

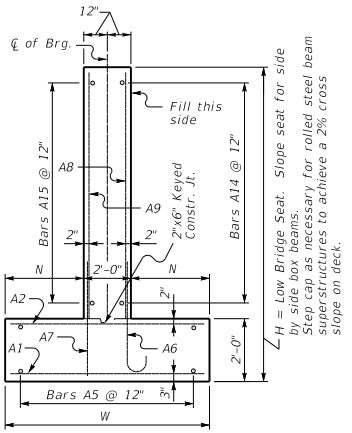

WALL SECTION

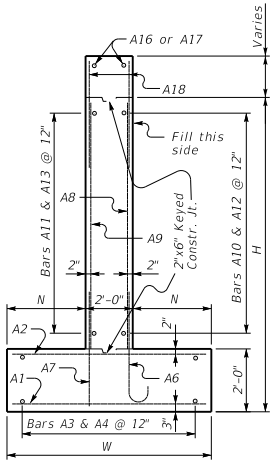

WING SECTION

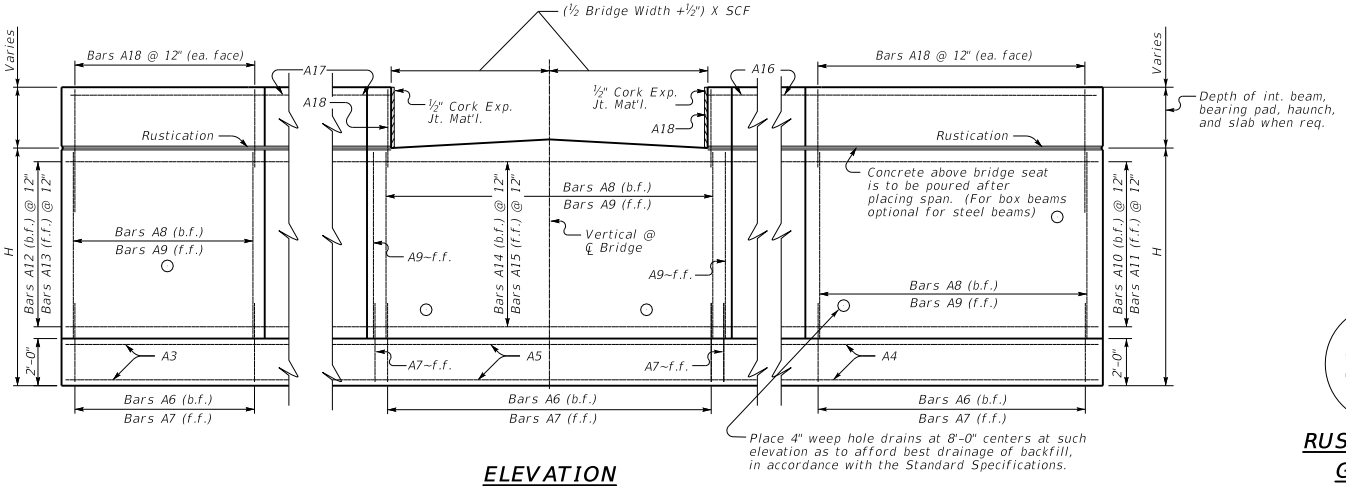

ELEVATION

PLAN OF SUPERSTRUCTURE SLAB

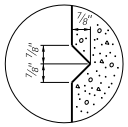

RUSTICATION GROOVE

KENTUCKY DEPARTMENT OF HIGHWAYS

0° SKEW VARIABLE WIDTH ABUTMENT PARALLEL WINGS

STANDARD DRAWING NO. BSA-041

SUBMITTED _____ DIRECTOR DIVISION OF STRUCTURAL DESIGN — DATE 02-26-20

APPROVED _____ STATE HIGHWAY ENGINEER — DATE 02-26-20

0° SKEW VARIABLE BRIDGE WIDTH 2:1 FILL SLOPES WINGS PARALLEL TO ROADWAY

Bill of Reinforcement

MARK	A1					A2					A3			A4			A5					
TYPE	Str.					Str.					Str.			Str.			Str.					
SIZE											#5			#5			#5					
H	No.	Size	Length ft.	Length in.	Spacing	No.	Size	Length ft.	Length in.	Spacing	No.	Length ft.	Length in.	No.	Length ft.	Length in.	No.	Length ft.	Length in.	+Lb =	Length ft.	Length in.
15-16	91+Nb=	10	11	8	12	91+Nb=	7	11	8	12	24	34	8	24	34	8	24	19	9	+Lb=		
13-14	83+Nb=	9	10	8	12	83+Nb=	7	10	8	12	22	31	2	22	31	2	22	18	9	+Lb=		
11-12	73+Nb=	8	9	8	12	73+Nb=	6	9	8	12	20	26	8	20	26	8	20	17	9	+Lb=		
9-10	63+Nb=	7	8	8	12	63+Nb=	5	8	8	12	18	22	2	18	22	2	18	16	9	+Lb=		
7-8	50+Nb=	6	7	2	12	50+Nb=	5	7	2	12	16	16	5	16	16	5	16	15	3	+Lb=		
5-6	42+Nb=	5	6	2	12	42+Nb=	5	6	2	12	14	12	11	14	12	11	14	14	3	+Lb=		

MARK	A6													A7					A8				
TYPE	4													Str.					Str.				
SIZE																							
H	No.	Size	Length ft.	Length in.	Spacing	A ft.	A in.	B ft.	B in.	C ft.	C in.	D ft.	D in.	No.	Size	Length ft.	Length in.	Spacing	No.	Size	Length ft.	Length in.	Spacing
15-16	63+Nb=	9	9	11	12	8	⅛	1	10	0	11¾	8	6	71+Nb=	5	4	11	12	63+Nb=	6	12	10	12
13-14	57+Nb=	8	8	3	12	6	11	1	3	0	8	7	3	65+Nb=	5	4	11	12	57+Nb=	6	10	10	12
11-12	49+Nb=	7	7	1	12	5	10½	1	2	0	7	6	2	57+Nb=	5	4	11	12	49+Nb=	5	8	10	12
9-10	41+Nb=	6	6	1	12	5	1	1	0	0	6	5	4	49+Nb=	5	4	11	12	41+Nb=	5	6	10	12
7-8	31+Nb=	5	5	7	12	4	8½	0	10	0	5	4	11	39+Nb=	5	4	11	12	31+Nb=	5	4	10	12
5-6	25+Nb=	5	5	7	12	4	8½	0	10	0	5	4	11	33+Nb=	5	4	11	12	25+Nb=	5	2	10	12

MARK	A9				A10			A11			A12			A13			A14						A15						A16			A17			A18		
TYPE	Str.				8			8			8			8			7						7						Str.			Str.			Str.		
SIZE	#5				#5			#5			#5			#5			#5						#5						#5			#5			#5		
H	No.	Length ft.	Length in.	Spacing	No.	Length ft.	Length in.	No.	Length ft.	Length in.	No.	Length ft.	Length in.	No.	Length ft.	Length in.	No.	Length ft.	Length in.	+Lb =	Length ft.	Length in.	No.	Length ft.	Length in.	+Lb =	Length ft.	Length in.	No.	Length ft.	Length in.	No.	Length ft.	Length in.	No.	Length ft.	Length in.
15-16	71+Nb=	12	10	12	14	30	6	14	30	8	14	30	6	14	30	8	14	11	5	+Lb=			14	11	5	+Lb=			2	34	11	2	34	11	137	5	9
13-14	65+Nb=	10	10	12	12	27	6	12	27	8	12	27	6	12	27	8	12	11	5	+Lb=			12	11	5	+Lb=			2	31	11	2	31	11	125	5	9
11-12	57+Nb=	8	10	12	10	23	6	10	23	8	10	23	6	10	23	8	10	11	5	+Lb=			10	11	5	+Lb=			2	27	11	2	27	11	110	5	9
9-10	49+Nb=	6	10	12	8	19	6	8	19	8	8	19	6	8	19	8	8	11	5	+Lb=			8	11	5	+Lb=			2	23	11	2	23	11	94	5	9
7-8	39+Nb=	4	10	12	6	14	6	6	14	8	6	14	6	6	14	8	6	11	5	+Lb=			6	11	5	+Lb=			2	18	11	2	18	11	74	5	9
5-6	33+Nb=	2	10	12	4	11	6	4	11	8	4	11	6	4	11	8	4	11	5	+Lb=			4	11	5	+Lb=			2	15	11	2	15	11	62	5	9

Table of Dimensions

H	W		N		M2		M3		T2		T3		L2	L3	S2					S3				
	Length ft.	Length in.	Length ft.	Length in.	Length ft.	Length in.	Length ft.	Length in.	Length ft.	Length in.	Length ft.	Length in.	Length ft.	Length ft.	Length ft.	Length in.	$+\frac{Lb}{2}=$	Length ft.	Length in.	Length ft.	Length in.	$+\frac{Lb}{2}=$	Length ft.	Length in.
15-16	12	0	5	0	35	0	35	0	0	0	0	0	28	28	10	½	+0.5Lb=			10	½	+0.5Lb=		
13-14	11	0	4	6	31	6	31	6	0	0	0	0	25	25	9	6½	+0.5Lb=			9	6½	+0.5Lb=		
11-12	10	0	4	0	27	0	27	0	0	0	0	0	21	21	9	½	+0.5Lb=			9	½	+0.5Lb=		
9-10	9	0	3	6	22	6	22	6	0	0	0	0	17	17	8	6½	+0.5Lb=			8	6½	+0.5Lb=		
7-8	7	6	2	9	16	9	16	9	0	0	0	0	12	12	7	9½	+0.5Lb=			7	9½	+0.5Lb=		
5-6	6	6	2	3	13	3	13	3	0	0	0	0	9	9	7	3½	+0.5Lb=			7	3½	+0.5Lb=		

Reinforcement Details

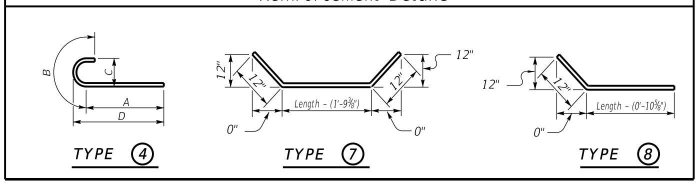

*Concrete quantities computed using 21" beam depth on ½" pad & Variable Bridge Width

Quantities

H	Concrete* C.Y.	Reinforcement LBS.
5	24.52+(0.71xLb) =	2346+(52.8xLb) =
6	26.6+(0.78xLb) =	2346+(52.8xLb) =
7	37.32+(0.93xLb) =	3489+(68.7xLb) =
8	39.84+(1.01xLb) =	3489+(68.7xLb) =
9	59.68+(1.19xLb) =	5624+(91xLb) =
10	62.94+(1.27xLb) =	5624+(91xLb) =
11	82.06+(1.41xLb) =	8428+(120.4xLb) =
12	85.92+(1.49xLb) =	8428+(120.4xLb) =
13	108.01+(1.64xLb) =	12499+(161xLb) =
14	112.46+(1.71xLb) =	12499+(161xLb) =
15	133.47+(1.86xLb) =	16606+(198.6xLb) =
16	138.37+(1.93xLb) =	16606+(198.6xLb) =

ABUTMENT SKEW CORRECTION FACTOR (SCF) = 1.0

NUMBER OF BARS TO ADD (Nb) = Bridge Width (feet) x SCF (round up to nearest whole number)

LENGTH OF ABUTMENT TO ADD (Lb) = Bridge Width (feet) x SCF (convert decimal to architectural)

GENERAL NOTES

SPECIFICATIONS: Construct abutments according to the current edition of the Kentucky Department of Highways Standard Specifications for Road and Bridge Construction. Abutments are designed for side by side box beams as detailed in Standard Drawings BDP-001 through BDP-012, current edition. Dimensions may be adjusted to allow for any out to out bridge width. Abutments are also adequate for Std. Dwg. slabs or steel beam superstructures.

FOUNDATION PRESSURE: Construct abutment footings on solid rock bearing material that can support a pressure of 8000 psf service or 10,800 psf strength factored as recommended by a geotechnical engineer.

WING LENGTHS: Calculated assuming 21" superstructure depth and stream bank elevation at top of footing.

FOOTING ELEVATION: Construct bottom of footing below the anticipated scour elevation. (This typically entails embedding the footings 1'-0" to 2'-0" into rock and pouring concrete directly against cut rock faces. as recommended by geotechnical engineer.)

NOTE: Distances to bars shown are clear dimensions unless otherwise noted.

MATERIAL SPECIFICATIONS:
Concrete, Class "A" = 3500 psi
Steel Reinforcement = Grade 60

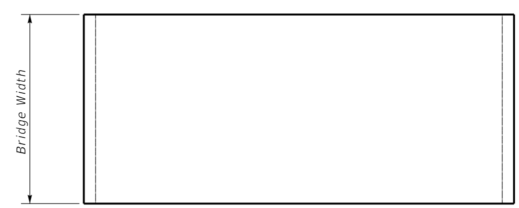

PLAN OF SUPERSTRUCTURE SLAB

KENTUCKY
DEPARTMENT OF HIGHWAYS

0° SKEW VARIABLE WIDTH ABUTMENT PARALLEL WINGS

STANDARD DRAWING NO. BSA-042

SUBMITTED ____ DIRECTOR DIVISION OF STRUCTURAL DESIGN 02-26-20 DATE

APPROVED ____ STATE HIGHWAY ENGINEER 02-26-20 DATE

5° SKEW VARIABLE BRIDGE WIDTH 2:1 FILL SLOPES WINGS PARALLEL TO ROADWAY

ABUTMENT SKEW CORRECTION FACTOR (SCF) = 1.004

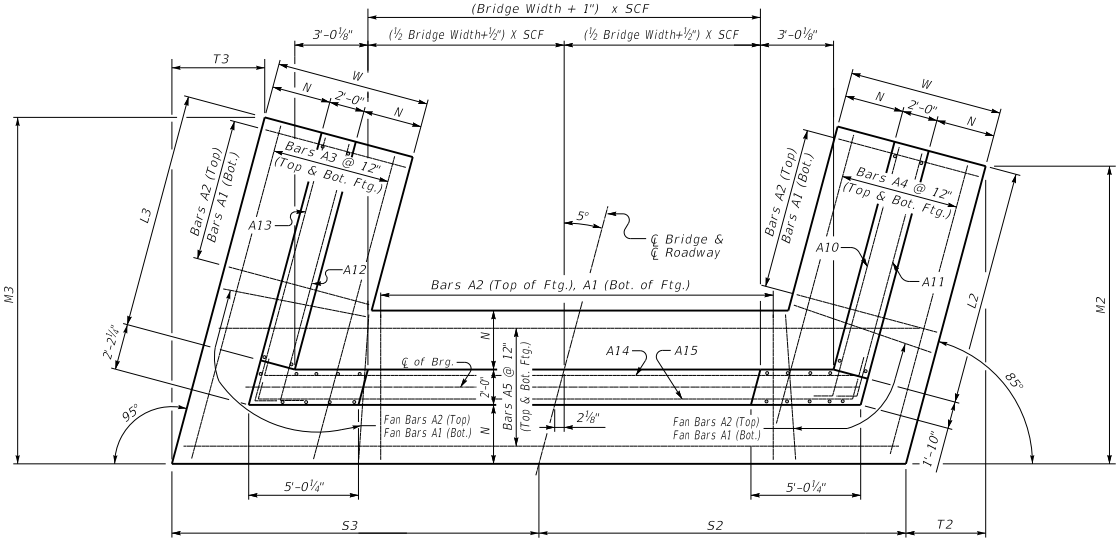

(Left Skew as shown;right skew opp. hand)

PLAN

NOTE: Trim A16 & A17 bars if necessary
Trim A3 bars as necessary

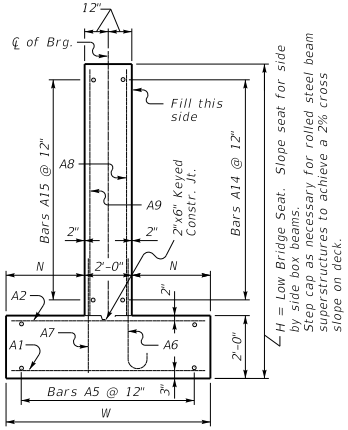

WALL SECTION

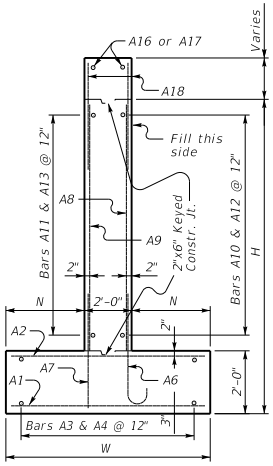

WING SECTION

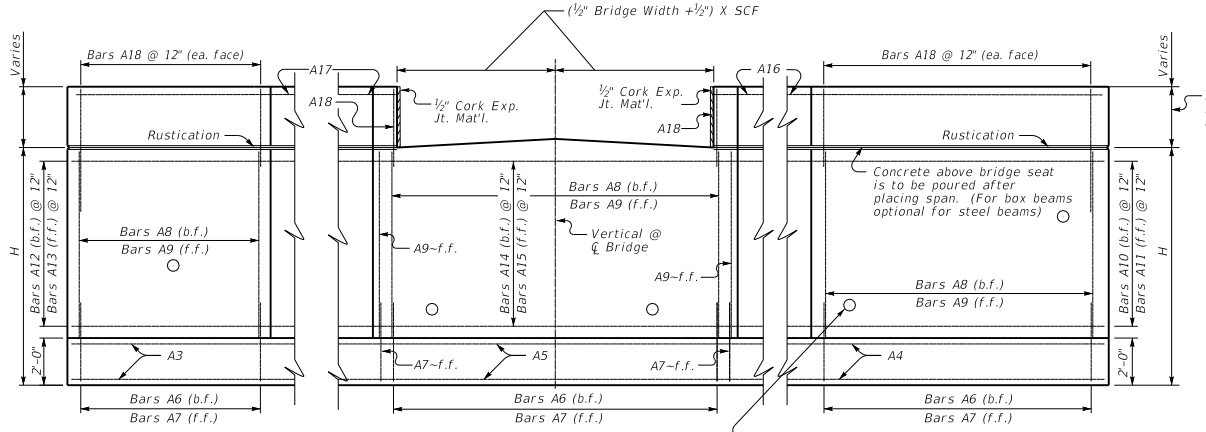

ELEVATION

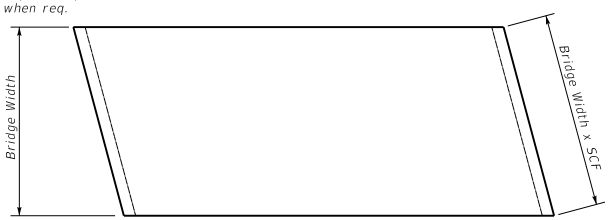

PLAN OF SUPERSTRUCTURE SLAB

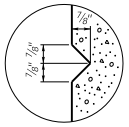

RUSTICATION GROOVE

KENTUCKY
DEPARTMENT OF HIGHWAYS

5° SKEW VARIABLE WIDTH ABUTMENT PARALLEL WINGS

STANDARD DRAWING NO. BSA-043

SUBMITTED _____ DIRECTOR DIVISION OF STRUCTURAL DESIGN — DATE 02-26-20

APPROVED _____ STATE HIGHWAY ENGINEER — DATE 02-26-20

5° SKEW VARIABLE BRIDGE WIDTH 2:1 FILL SLOPES WINGS PARALLEL TO ROADWAY

Bill of Reinforcement

MARK	A1					A2					A3			A4			A5					
TYPE	Str.					Str.					Str.			Str.			Str.					
SIZE											#5			#5			#5					
H	No.	Size	Length ft.	Length in.	Spacing	No.	Size	Length ft.	Length in.	Spacing	No.	Length ft.	Length in.	No.	Length ft.	Length in.	No.	Length ft.	Length in.	+Lb =	Length ft.	Length in.
15-16	93+Nb=	10	11	8	12	93+Nb=	7	11	8	12	24	36	3	24	35	1	24	19	9	+Lb=		
13-14	83+Nb=	9	10	8	12	83+Nb=	7	10	8	12	22	31	9	22	30	8	22	18	9	+Lb=		
11-12	73+Nb=	8	9	8	12	73+Nb=	6	9	8	12	20	27	2	20	26	2	20	17	9	+Lb=		
9-10	63+Nb=	7	8	8	12	63+Nb=	5	8	8	12	18	22	8	18	21	9	18	16	9	+Lb=		
7-8	50+Nb=	6	7	2	12	50+Nb=	5	7	2	12	16	16	10	16	16	0	16	15	3	+Lb=		
5-6	42+Nb=	5	6	2	12	42+Nb=	5	6	2	12	14	13	3	14	12	7	14	14	3	+Lb=		

MARK	A6													A7					A8				
TYPE	4													Str.					Str.				
SIZE																							
H	No.	Size	Length ft.	Length in.	Spacing	A ft.	A in.	B ft.	B in.	C ft.	C in.	D ft.	D in.	No.	Size	Length ft.	Length in.	Spacing	No.	Size	Length ft.	Length in.	Spacing
15-16	65+Nb=	9	9	11	12	8	1/8	1	10	0	11 3/4	8	6	73+Nb=	5	4	11	12	65+Nb=	6	12	10	12
13-14	57+Nb=	8	8	3	12	6	11	1	3	0	8	7	3	65+Nb=	5	4	11	12	57+Nb=	6	10	10	12
11-12	49+Nb=	7	7	1	12	5	10 1/2	1	2	0	7	6	2	57+Nb=	5	4	11	12	49+Nb=	5	8	10	12
9-10	41+Nb=	6	6	1	12	5	1	1	0	0	6	5	4	49+Nb=	5	4	11	12	41+Nb=	5	6	10	12
7-8	31+Nb=	5	5	7	12	4	8 1/2	0	10	0	5	4	11	39+Nb=	5	4	11	12	31+Nb=	5	4	10	12
5-6	25+Nb=	5	5	7	12	4	8 1/2	0	10	0	5	4	11	33+Nb=	5	4	11	12	25+Nb=	5	2	10	12

MARK	A9				A10			A11			A12			A13		
TYPE	Str.				8			8			8			8		
SIZE	#5				#5			#5			#5			#5		
H	No.	Length ft.	Length in.	Spacing	No.	Length ft.	Length in.	No.	Length ft.	Length in.	No.	Length ft.	Length in.	No.	Length ft.	Length in.
15-16	73+Nb=	12	10	12	14	31	6	14	31	6	14	31	5	14	31	10
13-14	65+Nb=	10	10	12	12	27	6	12	27	6	12	27	5	12	27	10
11-12	57+Nb=	8	10	12	10	23	6	10	23	6	10	23	5	10	23	10
9-10	49+Nb=	6	10	12	8	19	6	8	19	6	8	19	5	8	19	10
7-8	39+Nb=	4	10	12	6	14	6	6	14	6	6	14	5	6	14	10
5-6	33+Nb=	2	10	12	4	11	6	4	11	6	4	11	5	4	11	10

MARK	A14						A15						A16			A17			A18		
TYPE	7						7						Str.			Str.			Str.		
SIZE	#5						#5						#5			#5			#5		
H	No.	Length ft.	Length in.	+Lb =	Length ft.	Length in.	No.	Length ft.	Length in.	+Lb =	Length ft.	Length in.	No.	Length ft.	Length in.	No.	Length ft.	Length in.	No.	Length ft.	Length in.
15-16	14	11	5	+Lb=			14	11	5	+Lb=			2	35	9	2	36	1	141	5	9
13-14	12	11	5	+Lb=			12	11	5	+Lb=			2	31	9	2	32	1	125	5	9
11-12	10	11	5	+Lb=			10	11	5	+Lb=			2	27	9	2	28	1	109	5	9
9-10	8	11	5	+Lb=			8	11	5	+Lb=			2	23	9	2	24	1	93	5	9
7-8	6	11	5	+Lb=			6	11	5	+Lb=			2	18	9	2	19	1	73	5	9
5-6	4	11	5	+Lb=			4	11	5	+Lb=			2	15	9	2	16	1	61	5	9

Table of Dimensions

H	W Length ft.	W Length in.	N Length ft.	N Length in.	M2 Length ft.	M2 Length in.	M3 Length ft.	M3 Length in.	T2 Length ft.	T2 Length in.	T3 Length ft.	T3 Length in.	L2 Length ft.	L3 Length ft.	S2 Length ft.	S2 Length in.	S2 + Lb/2 =	S2 Length ft.	S2 Length in.	S3 Length ft.	S3 Length in.	S3 + Lb/2 =	S3 Length ft.	S3 Length in.
15-16	12	0	5	0	35	3 3/8	36	6	3	1	3	2 3/8	29	29	10	1	+0.5Lb=			10	1	+0.5Lb=		
13-14	11	0	4	6	30	10	31	11 5/8	2	8 3/8	2	9 5/8	25	25	9	6 7/8	+0.5Lb=			9	6 7/8	+0.5Lb=		
11-12	10	0	4	0	26	4 3/4	27	5 3/8	2	3 3/4	2	4 3/4	21	21	9	7/8	+0.5Lb=			9	7/8	+0.5Lb=		
9-10	9	0	3	6	21	11 1/2	22	11	1	11	2	0	17	17	8	6 7/8	+0.5Lb=			8	6 7/8	+0.5Lb=		
7-8	7	6	2	9	16	3 1/2	17	1 3/8	1	5 1/8	1	6	12	12	7	9 7/8	+0.5Lb=			7	9 7/8	+0.5Lb=		
5-6	6	6	2	3	12	10 1/8	13	7	1	1 1/2	1	2 1/4	9	9	7	3 7/8	+0.5Lb=			7	3 7/8	+0.5Lb=		

Reinforcement Details

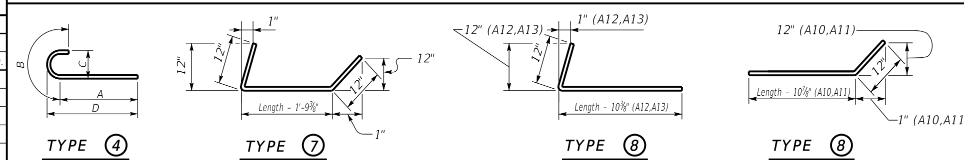

Quantities

H	Concrete* C.Y.	Reinforcement LBS.
5	24.56+(0.71xLb) =	2339+(52.8xLb) =
6	26.64+(0.78xLb) =	2339+(52.8xLb) =
7	37.36+(0.93xLb) =	3482+(68.7xLb) =
8	39.89+(1.01xLb) =	3482+(68.7xLb) =
9	59.73+(1.19xLb) =	5619+(91xLb) =
10	63+(1.27xLb) =	5619+(91xLb) =
11	82.12+(1.41xLb) =	8421+(120.4xLb) =
12	85.99+(1.49xLb) =	8421+(120.4xLb) =
13	108.08+(1.64xLb) =	12500+(161xLb) =
14	112.53+(1.71xLb) =	12500+(161xLb) =
15	137.59+(1.86xLb) =	17030+(198.6xLb) =
16	142.63+(1.93xLb) =	17030+(198.6xLb) =

*Concrete quantities computed using 21" beam depth on 1/2" pad & Variable Bridge Width

ABUTMENT SKEW CORRECTION FACTOR (SCF) = 1.004

NUMBER OF BARS TO ADD (Nb) = Bridge Width (feet) x SCF (round up to nearest whole number)

LENGTH OF ABUTMENT TO ADD (Lb) = Bridge Width (feet) x SCF (convert decimal to architectural)

GENERAL NOTES

SPECIFICATIONS: Construct abutments according to the current edition of the Kentucky Department of Highways Standard Specifications for Road and Bridge Construction. Abutments are designed for side by side box beams as detailed in Standard Drawings BDP-001 through BDP-012, current edition. Dimensions may be adjusted to allow for any out to out bridge width. Abutments are also adequate for Std. Dwg. slabs or steel beam superstructures.

FOUNDATION PRESSURE: Construct abutment footings on solid rock bearing material that can support a pressure of 8000 psf service or 10,800 psf strength factored as recommended by a geotechnical engineer.

WING LENGTHS: Calculated assuming 21" superstructure depth and stream bank elevation at top of footing.

FOOTING ELEVATION: Construct bottom of footing below the anticipated scour elevation. (This typically entails embedding the footings 1'-0" to 2'-0" into rock and pouring concrete directly against cut rock faces. as recommended by geotechnical engineer.)

NOTE: Distances to bars shown are clear dimensions unless otherwise noted.

MATERIAL SPECIFICATIONS:
Concrete, Class "A" = 3500 psi
Steel Reinforcement = Grade 60

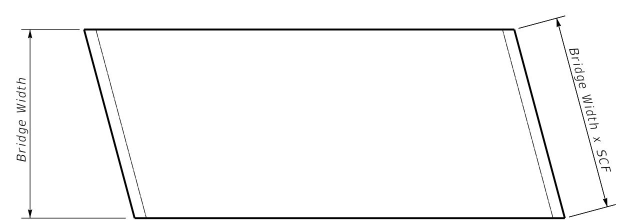

PLAN OF SUPERSTRUCTURE SLAB

KENTUCKY
DEPARTMENT OF HIGHWAYS

5° SKEW VARIABLE
WIDTH ABUTMENT
PARALLEL WINGS

STANDARD DRAWING NO. BSA-044

SUBMITTED ____ DIRECTOR DIVISION OF STRUCTURAL DESIGN 02-26-20 DATE

APPROVED ____ STATE HIGHWAY ENGINEER 02-26-20 DATE

10° SKEW VARIABLE BRIDGE WIDTH 2:1 FILL SLOPES WINGS PARALLEL TO ROADWAY

ABUTMENT SKEW CORRECTION FACTOR (SCF) = 1.015

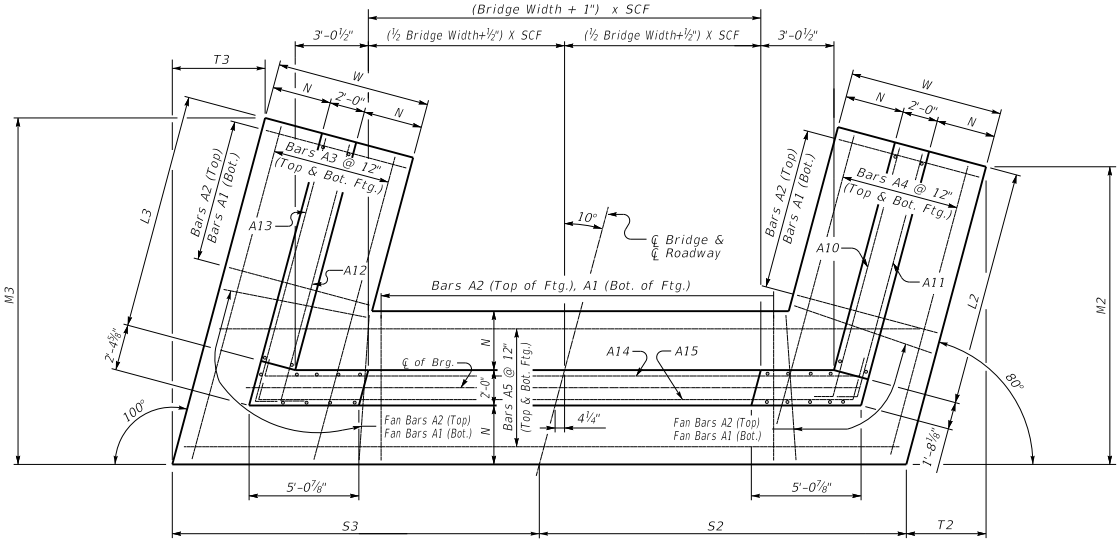

(Left Skew as shown;right skew opp. hand)

PLAN

Note: Trim A16 & A17 bars if necessary
Trim A3 bars as necessary

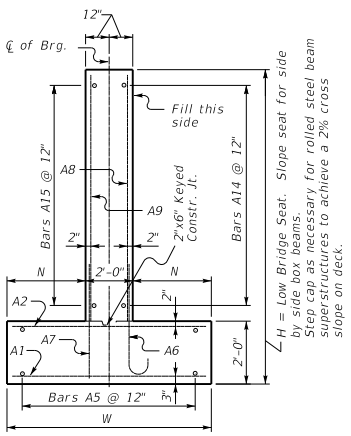

WALL SECTION

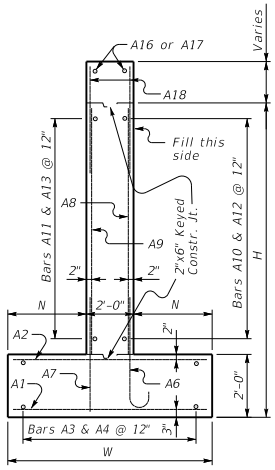

WING SECTION

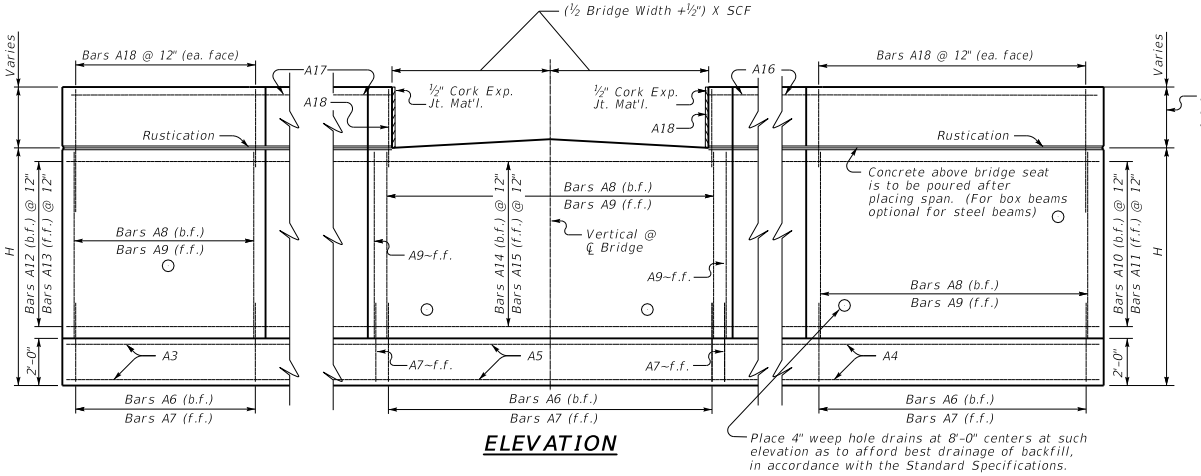

ELEVATION

Place 4" weep hole drains at 8'-0" centers at such elevation as to afford best drainage of backfill, in accordance with the Standard Specifications.

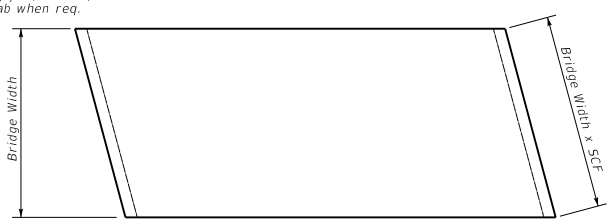

PLAN OF SUPERSTRUCTURE SLAB

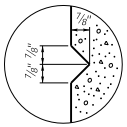

RUSTICATION GROOVE

KENTUCKY
DEPARTMENT OF HIGHWAYS

10° SKEW VARIABLE WIDTH ABUTMENT PARALLEL WINGS

STANDARD DRAWING NO. BSA-045

SUBMITTED _____ DIRECTOR DIVISION OF STRUCTURAL DESIGN — DATE 02-26-20

APPROVED _____ STATE HIGHWAY ENGINEER — DATE 02-26-20

10° SKEW VARIABLE BRIDGE WIDTH 2:1 FILL SLOPES WINGS PARALLEL TO ROADWAY

Bill of Reinforcement

MARK	A1	A2	A3	A4	A5	A6	A7	A8	A9	A10	A11	A12	A13	A14	A15	A16	A17	A18
TYPE	Str.	Str.	Str.	Str.	Str.	4	Str.	Str.	Str.	8	8	8	8	7	7	Str.	Str.	Str.
SIZE			#5	#5	#5				#5	#5	#5	#5	#5	#5	#5	#5	#5	#5
H	No. Size Length ft. in. Spacing	No. Size Length ft. in. Spacing	No. Length ft. in	No. Length ft. in	No. Length ft. in. = +Lb Length ft. in.	No. Size Length ft. in. Spacing A ft. in. B ft. in. C ft. in. D ft. in.	No. Size Length ft. in. Spacing	No. Size Length ft. in. Spacing	No. Length ft. in. Spacing	No. Length ft. in.	No. Length ft. in.	No. Length ft. in.	No. Length ft. in.	No. Length ft. in. = +Lb Length ft. in.	No. Length ft. in. = +Lb Length ft. in.	No. Length ft. in.	No. Length ft. in.	No. Length ft. in.
15–16	95+Nb= 10 11 8 12	95+Nb= 7 11 8 12	24 37	11 24 35	7 24 19 11 +Lb=	67+Nb= 9 9 11 12 8 ⅛ 1 10 0 11¾ 8 6	75+Nb= 5 4 11 12	67+Nb= 6 12 10 12	75+Nb= 12 10 12	14 32 6	14 32 5	14 32 6	14 33 0	14 11 6 +Lb=	14 11 6 +Lb=	2 36 8	2 37 5	145 5 9
13–14	85+Nb= 9 10 8 12	85+Nb= 7 10 8 12	22 33	4 22 31	2 22 18 10 +Lb=	59+Nb= 8 8 3 12 6 11 1 3 0 8 7 3	67+Nb= 5 4 11 12	59+Nb= 6 10 10 12	67+Nb= 10 10 12	12 28 6	12 28 5	12 28 6	12 29 0	12 11 6 +Lb=	12 11 6 +Lb=	2 32 8	2 33 5	129 5 9
11–12	75+Nb= 8 9 8 12	75+Nb= 6 9 8 12	20 28	9 20 26	9 20 17 10 +Lb=	51+Nb= 7 7 1 12 5 10½ 1 2 0 7 6 2	59+Nb= 5 4 11 12	51+Nb= 5 8 10 12	59+Nb= 8 10 12	10 24 6	10 24 5	10 24 6	10 25 0	10 11 6 +Lb=	10 11 6 +Lb=	2 28 8	2 29 5	113 5 9
9–10	65+Nb= 7 8 8 12	65+Nb= 5 8 8 12	18 24	2 18 22	4 18 16 10 +Lb=	43+Nb= 6 6 1 12 5 1 1 0 0 6 5 4	51+Nb= 5 4 11 12	43+Nb= 5 6 10 12	51+Nb= 6 10 12	8 20 6	8 20 5	8 20 6	8 21 0	8 11 6 +Lb=	8 11 6 +Lb=	2 24 8	2 25 5	97 5 9
7–8	52+Nb= 6 7 2 12	52+Nb= 5 7 2 12	16 18	3 16 16	8 16 15 5 +Lb=	33+Nb= 5 5 7 12 4 8½ 0 10 0 5 4 11	41+Nb= 5 4 11 12	33+Nb= 5 4 10 12	41+Nb= 4 10 12	6 15 6	6 15 5	6 15 6	6 16 0	6 11 6 +Lb=	6 11 6 +Lb=	2 19 8	2 20 5	77 5 9
5–6	42+Nb= 5 6 2 12	42+Nb= 5 6 2 12	14 13	8 14 12	3 14 14 5 +Lb=	25+Nb= 5 5 7 12 4 8½ 0 10 0 5 4 11	33+Nb= 5 4 11 12	25+Nb= 5 2 10 12	33+Nb= 2 10 12	4 11 6	4 11 5	4 11 6	4 12 0	4 11 6 +Lb=	4 11 6 +Lb=	2 15 8	2 16 5	61 5 9

Table of Dimensions

H	W Length ft.	W Length in.	N Length ft.	N Length in.	M2 Length ft.	M2 Length in.	M3 Length ft.	M3 Length in.	T2 Length ft.	T2 Length in.	T3 Length ft.	T3 Length in.	L2 Length ft.	L3 Length ft.	S2 Length ft.	S2 Length in. + Lb/2 =	S2 Length ft.	S2 Length in.	S3 Length ft.	S3 Length in. + Lb/2 =	S3 Length ft.	S3 Length in.
15–16	12	0	5	0	35	4	37	9⅛	6	2¾	6	7⅞	30	30	10	2⅜ +0.5Lb=			10	2⅜ +0.5Lb=		
13–14	11	0	4	6	30	11¾	33	2¾	5	5½	5	10⅜	26	26	9	8¼ +0.5Lb=			9	8¼ +0.5Lb=		
11–12	10	0	4	0	26	7½	28	8½	4	8⅜	5	¾	22	22	9	2⅛ +0.5Lb=			9	2⅛ +0.5Lb=		
9–10	9	0	3	6	22	3¼	24	2⅛	3	11⅛	4	3⅛	18	18	8	8⅛ +0.5Lb=			8	8⅛ +0.5Lb=		
7–8	7	6	2	9	16	8¾	18	4½	2	11⅜	3	2⅞	13	13	7	11 +0.5Lb=			7	11 +0.5Lb=		
5–6	6	6	2	3	12	4½	13	10¼	2	2⅛	2	5¼	9	9	7	4⅞ +0.5Lb=			7	4⅞ +0.5Lb=		

Reinforcement Details

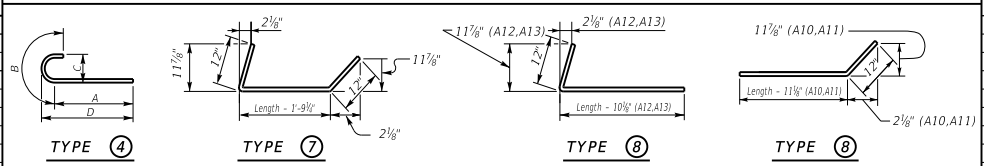

Quantities

H	Concrete* C.Y.	Reinforcement LBS.
5	24.66+(0.71xLb) =	2345+(52.8xLb) =
6	26.75+(0.78xLb) =	2345+(52.8xLb) =
7	39.68+(0.93xLb) =	3655+(68.7xLb) =
8	42.36+(1.01xLb) =	3655+(68.7xLb) =
9	62.59+(1.19xLb) =	5836+(91xLb) =
10	66.02+(1.27xLb) =	5836+(91xLb) =
11	85.46+(1.41xLb) =	8700+(120.4xLb) =
12	89.48+(1.49xLb) =	8700+(120.4xLb) =
13	111.88+(1.64xLb) =	12859+(161xLb) =
14	116.49+(1.71xLb) =	12859+(161xLb) =
15	141.86+(1.86xLb) =	17469+(198.6xLb) =
16	147.06+(1.93xLb) =	17469+(198.6xLb) =

*Concrete quantities computed using 21" beam depth on ½" pad & Variable Bridge Width

ABUTMENT SKEW CORRECTION FACTOR (SCF) = 1.015

NUMBER OF BARS TO ADD (Nb) = Bridge Width (feet) x SCF (round up to nearest whole number)

LENGTH OF ABUTMENT TO ADD (Lb) = Bridge Width (feet) x SCF (convert decimal to architectural)

GENERAL NOTES

SPECIFICATIONS: Construct abutments according to the current edition of the Kentucky Department of Highways Standard Specifications for Road and Bridge Construction. Abutments are designed for side by side box beams as detailed in Standard Drawings BDP-001 through BDP-012, current edition. Dimensions may be adjusted to allow for any out to out bridge width. Abutments are also adequate for Std. Dwg. slabs or steel beam superstructures.

FOUNDATION PRESSURE: Construct abutment footings on solid rock bearing material that can support a pressure of 8000 psf service or 10,800 psf strength factored as recommended by a geotechnical engineer.

WING LENGTHS: Calculated assuming 21" superstructure depth and stream bank elevation at top of footing.

FOOTING ELEVATION: Construct bottom of footing below the anticipated scour elevation. (This typically entails embedding the footings 1'-0" to 2'-0" into rock and pouring concrete directly against cut rock faces. as recommended by geotechnical engineer.)

NOTE: Distances to bars shown are clear dimensions unless otherwise noted.

MATERIAL SPECIFICATIONS:
Concrete, Class "A" = 3500 psi
Steel Reinforcement = Grade 60

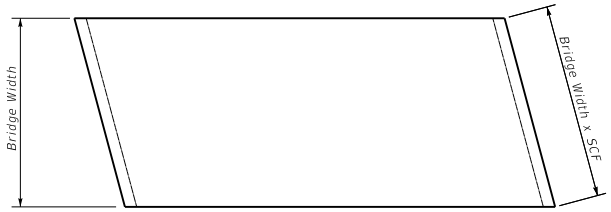

PLAN OF SUPERSTRUCTURE SLAB

KENTUCKY DEPARTMENT OF HIGHWAYS

10° SKEW VARIABLE WIDTH ABUTMENT PARALLEL WINGS

STANDARD DRAWING NO. BSA-046

SUBMITTED _____ DIRECTOR DIVISION OF STRUCTURAL DESIGN 02-26-20 DATE

APPROVED _____ STATE HIGHWAY ENGINEER 02-26-20 DATE

15° SKEW VARIABLE BRIDGE WIDTH 2:1 FILL SLOPES WINGS PARALLEL TO ROADWAY

ABUTMENT SKEW CORRECTION FACTOR (SCF) = 1.035

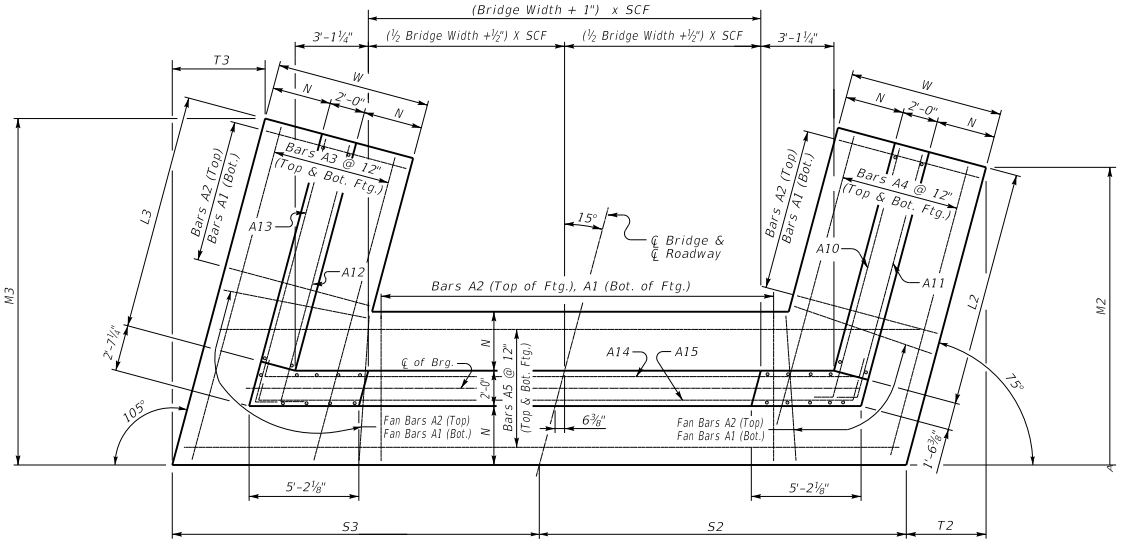

(Left Skew as shown;right skew opp. hand)

PLAN

NOTE: Trim A16 & A17 bars if necessary
Trim A3 bars as necessary

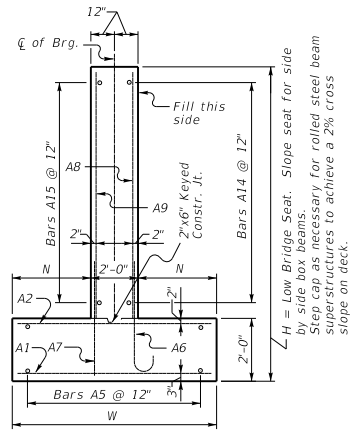

WALL SECTION

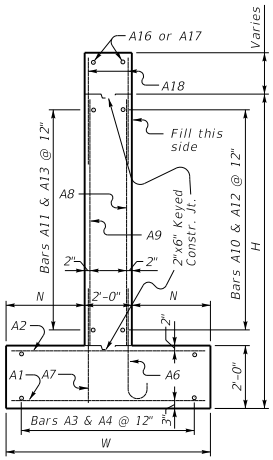

WING SECTION

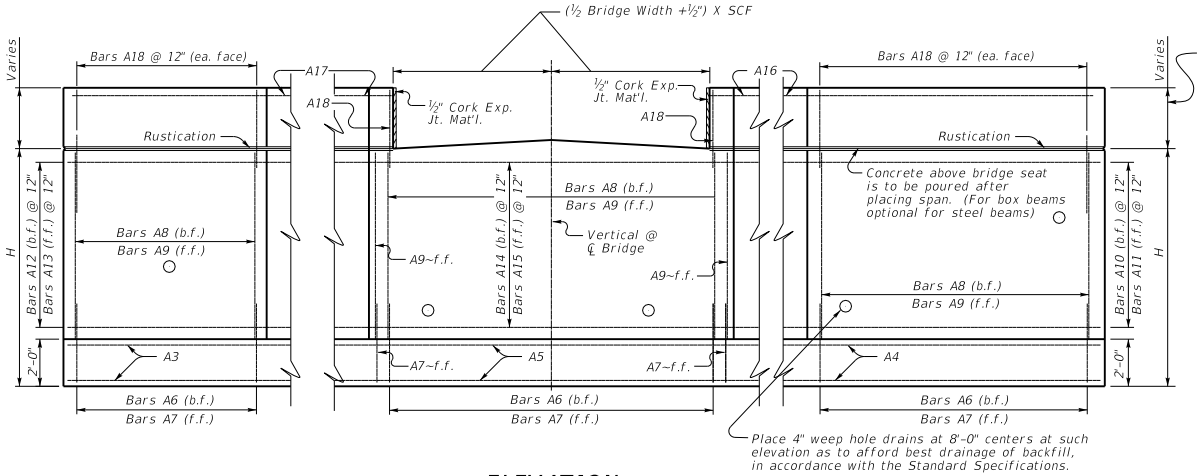

ELEVATION

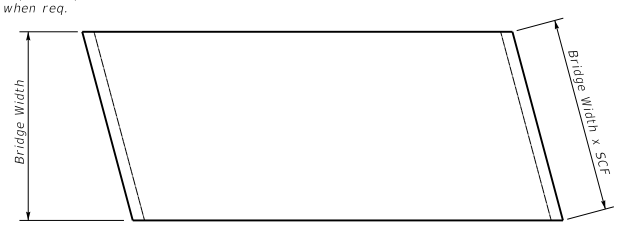

PLAN OF SUPERSTRUCTURE SLAB

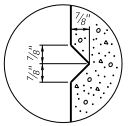

RUSTICATION GROOVE

KENTUCKY
DEPARTMENT OF HIGHWAYS

15° SKEW VARIABLE WIDTH ABUTMENT PARALLEL WINGS

STANDARD DRAWING NO. BSA-047

SUBMITTED _____ DIRECTOR DIVISION OF STRUCTURAL DESIGN — DATE 02-26-20

APPROVED _____ STATE HIGHWAY ENGINEER — DATE 02-26-20

15° SKEW VARIABLE BRIDGE WIDTH 2:1 FILL SLOPES WINGS PARALLEL TO ROADWAY

Bill of Reinforcement

MARK	A1	A2	A3	A4	A5	A6	A7	A8	A9	A10	A11	A12	A13	A14	A15	A16	A17	A18
TYPE	Str.	Str.	Str.	Str.	Str.	4	Str.	Str.	Str.	8	8	8	8	7	7	Str.	Str.	Str.
SIZE			#5	#5	#5				#5	#5	#5	#5	#5	#5	#5	#5	#5	#5
H	No. Size Length ft. in. Spacing	No. Size Length ft. in. Spacing	No. Length ft. in	No. Length ft. in	No. Length ft. in. = +Lb = Length ft. in.	No. Size Length ft. in. Spacing A ft. in. B ft. in. C ft. in. D ft. in.	No. Size Length ft. in. Spacing	No. Size Length ft. in. Spacing	No. Length ft. in. Spacing	No. Length ft. in.	No. Length ft. in.	No. Length ft. in.	No. Length ft. in.	No. Length ft. in. = +Lb = Length ft. in.	No. Length ft. in. = +Lb = Length ft. in.	No. Length ft. in.	No. Length ft. in.	No. Length ft. in.
15-16	96+Nb= 10 11 8 12	96+Nb= 7 11 8 12	24 38	8 24 35	2 24 20 2 +Lb=	67+Nb= 9 9 11 12 8 ⅛ 1 10 0 11¾ 8 6	75+Nb= 5 4 11 12	67+Nb= 6 12 10 12	75+Nb= 12 10 12	14 32 6	14 32 3	14 32 7	14 33 3	14 11 8 +Lb=	14 11 8 +Lb=	2 36 8	2 37 8	145 5 9
13-14	86+Nb= 9 10 8 12	86+Nb= 7 10 8 12	22 34	0 22 30	9 22 19 2 +Lb=	59+Nb= 8 8 3 12 6 11 1 3 0 8 7 3	67+Nb= 5 4 11 12	59+Nb= 6 10 10 12	67+Nb= 10 10 12	12 28 6	12 28 3	12 28 7	12 29 3	12 11 8 +Lb=	12 11 8 +Lb=	2 32 8	2 33 8	129 5 9
11-12	76+Nb= 8 9 8 12	76+Nb= 6 9 8 12	20 29	4 20 26	5 20 18 1 +Lb=	51+Nb= 7 7 1 12 5 10½ 1 2 0 7 6 2	59+Nb= 5 4 11 12	51+Nb= 5 8 10 12	59+Nb= 8 10 12	10 24 6	10 24 3	10 24 7	10 25 3	10 11 8 +Lb=	10 11 8 +Lb=	2 28 8	2 29 8	113 5 9
9-10	66+Nb= 7 8 8 12	66+Nb= 5 8 8 12	18 24	8 18 22	0 18 17 1 +Lb=	43+Nb= 6 6 1 12 5 1 1 0 0 6 5 4	51+Nb= 5 4 11 12	43+Nb= 5 6 10 12	51+Nb= 6 10 12	8 20 6	8 20 3	8 20 7	8 21 3	8 11 8 +Lb=	8 11 8 +Lb=	2 24 8	2 25 8	97 5 9
7-8	53+Nb= 6 7 2 12	53+Nb= 5 7 2 12	16 18	9 16 16	4 16 15 8 +Lb=	33+Nb= 5 5 7 12 4 8½ 0 10 0 5 4 11	41+Nb= 5 4 11 12	33+Nb= 5 4 10 12	41+Nb= 4 10 12	6 15 6	6 15 3	6 15 6	6 16 3	6 11 8 +Lb=	6 11 8 +Lb=	2 19 8	2 20 8	77 5 9
5-6	45+Nb= 5 6 2 12	45+Nb= 5 6 2 12	14 15	2 14 13	0 14 14 8 +Lb=	27+Nb= 5 5 7 12 4 8½ 0 10 0 5 4 11	35+Nb= 5 4 11 12	27+Nb= 5 2 10 12	35+Nb= 2 10 12	4 12 6	4 12 3	4 12 6	4 13 3	4 11 8 +Lb=	4 11 8 +Lb=	2 16 8	2 17 8	65 5 9

Table of Dimensions

H	W Length ft.	W Length in.	N Length ft.	N Length in.	M2 Length ft.	M2 Length in.	M3 Length ft.	M3 Length in.	T2 Length ft.	T2 Length in.	T3 Length ft.	T3 Length in.	L2 Length ft.	L3 Length ft.	S2 Length ft.	S2 Length in.	S2 + Lb/2 =	S2 Length ft.	S2 Length in.	S3 Length ft.	S3 Length in.	S3 + Lb/2 =	S3 Length ft.	S3 Length in.
15-16	12	0	5	0	34	2	37	9½	9	1⅞	10	1½	30	30	10	4¾	+0.5Lb=			10	4¾	+0.5Lb=		
13-14	11	0	4	6	29	11⅛	33	3½	8	¼	8	11	26	26	9	10½	+0.5Lb=			9	10½	+0.5Lb=		
11-12	10	0	4	0	25	8⅜	28	9⅜	6	10⅝	7	8⅜	22	22	9	4⅜	+0.5Lb=			9	4⅜	+0.5Lb=		
9-10	9	0	3	6	21	5½	24	3¾	5	9	6	6⅛	18	18	8	10⅛	+0.5Lb=			8	10⅛	+0.5Lb=		
7-8	7	6	2	9	16	⅞	18	6⅜	4	3¾	4	11⅜	13	13	8	¾	+0.5Lb=			8	¾	+0.5Lb=		
5-6	6	6	2	3	12	9¾	15	⅛	3	5⅛	4	¼	10	10	7	6⅝	+0.5Lb=			7	6⅝	+0.5Lb=		

Reinforcement Details

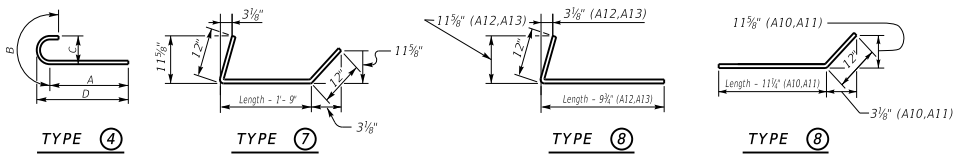

Quantities

H	Concrete* C.Y.	Reinforcement LBS.
5	26.58+(0.71xLb) =	2501+(52.8xLb) =
6	28.83+(0.78xLb) =	2501+(52.8xLb) =
7	39.9+(0.93xLb) =	3683+(68.7xLb) =
8	42.6+(1.01xLb) =	3683+(68.7xLb) =
9	62.86+(1.19xLb) =	5875+(91xLb) =
10	66.3+(1.27xLb) =	5875+(91xLb) =
11	85.77+(1.41xLb) =	8757+(120.4xLb) =
12	89.81+(1.49xLb) =	8757+(120.4xLb) =
13	112.24+(1.64xLb) =	12937+(161xLb) =
14	116.87+(1.71xLb) =	12937+(161xLb) =
15	142.27+(1.86xLb) =	17564+(198.6xLb) =
16	147.48+(1.93xLb) =	17564+(198.6xLb) =

*Concrete quantities computed using 21" beam depth on ½" pad & Variable Bridge Width

ABUTMENT SKEW CORRECTION FACTOR (SCF) = 1.035

NUMBER OF BARS TO ADD (Nb) = Bridge Width (feet) x SCF (round up to nearest whole number)

LENGTH OF ABUTMENT TO ADD (Lb) = Bridge Width (feet) x SCF (convert decimal to architectural)

GENERAL NOTES

SPECIFICATIONS: Construct abutments according to the current edition of the Kentucky Department of Highways Standard Specifications for Road and Bridge Construction. Abutments are designed for side by side box beams as detailed in Standard Drawings BDP-001 through BDP-012, current edition. Dimensions may be adjusted to allow for any out to out bridge width. Abutments are also adequate for Std. Dwg. slabs or steel beam superstructures.

FOUNDATION PRESSURE: Construct abutment footings on solid rock bearing material that can support a pressure of 8000 psf service or 10,800 psf strength factored as recommended by a geotechnical engineer.

WING LENGTHS: Calculated assuming 21" superstructure depth and stream bank elevation at top of footing.

FOOTING ELEVATION: Construct bottom of footing below the anticipated scour elevation. (This typically entails embedding the footings 1'-0" to 2'-0" into rock and pouring concrete directly against cut rock faces. as recommended by geotechnical engineer.)

NOTE: Distances to bars shown are clear dimensions unless otherwise noted.

MATERIAL SPECIFICATIONS:
Concrete, Class "A" = 3500 psi
Steel Reinforcement = Grade 60

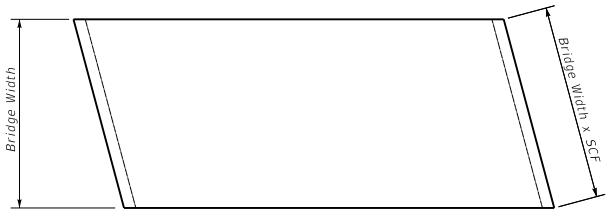

PLAN OF SUPERSTRUCTURE SLAB

KENTUCKY
DEPARTMENT OF HIGHWAYS

15° SKEW VARIABLE WIDTH ABUTMENT PARALLEL WINGS

STANDARD DRAWING NO. BSA-048

SUBMITTED _____ DIRECTOR DIVISION OF STRUCTURAL DESIGN — DATE 02-26-20

APPROVED _____ STATE HIGHWAY ENGINEER — DATE 02-26-20

20° SKEW VARIABLE BRIDGE WIDTH 2:1 FILL SLOPES WINGS PARALLEL TO ROADWAY

ABUTMENT SKEW CORRECTION FACTOR (SCF) = 1.064

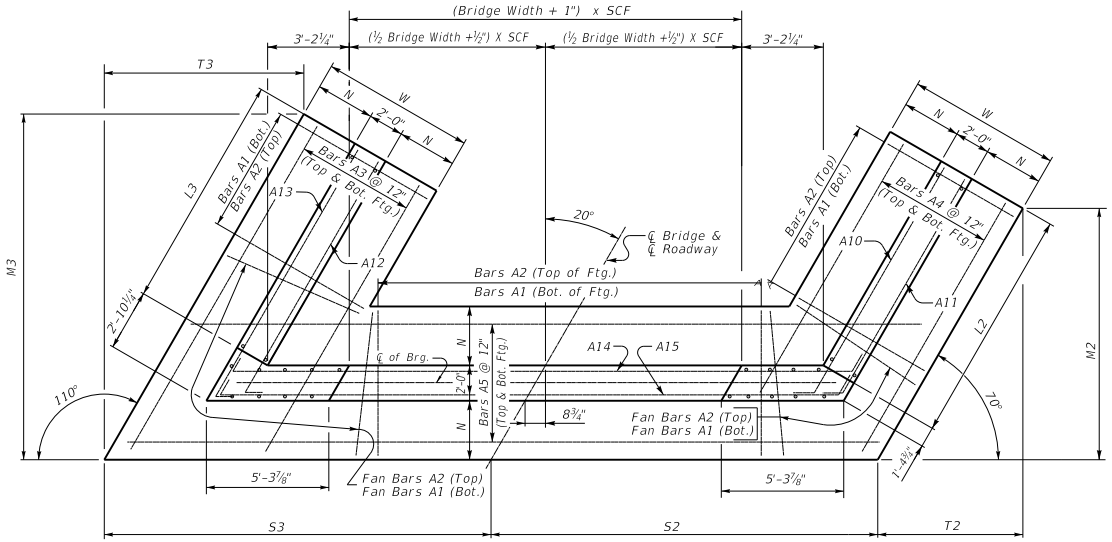

(Left Skew as shown;right skew opp. hand)

PLAN

NOTE: Trim A16 & A17 bars if necessary
Trim A3 bars as necessary

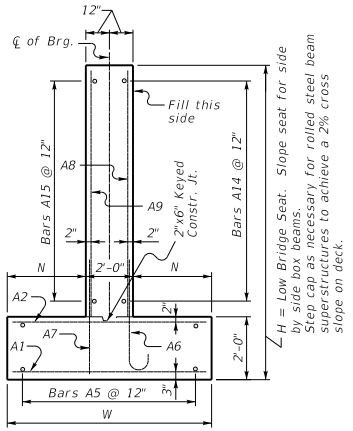

WALL SECTION

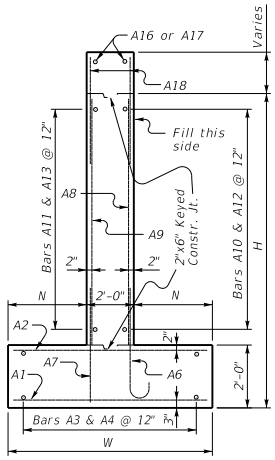

WING SECTION

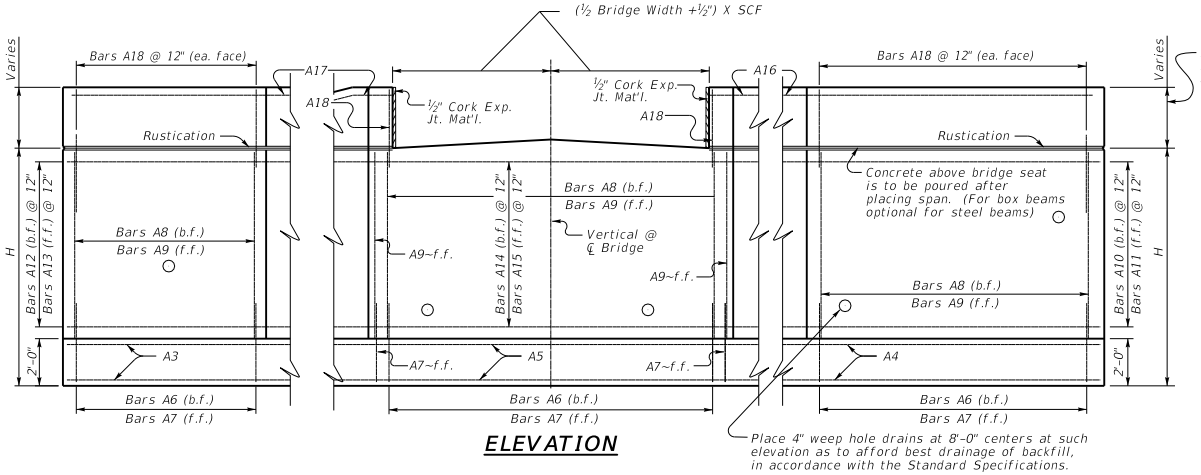

ELEVATION

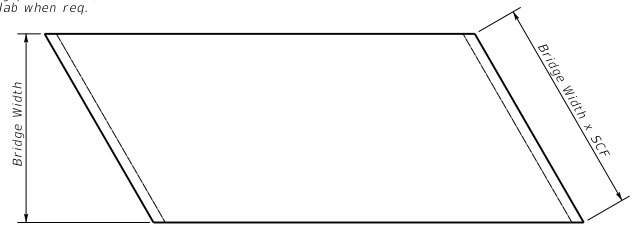

PLAN OF SUPERSTRUCTURE SLAB

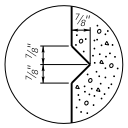

RUSTICATION GROOVE

KENTUCKY
DEPARTMENT OF HIGHWAYS

20° SKEW VARIABLE WIDTH ABUTMENT PARALLEL WINGS

STANDARD DRAWING NO. BSA-049

SUBMITTED _____ DIRECTOR DIVISION OF STRUCTURAL DESIGN — DATE 02-26-20

APPROVED _____ STATE HIGHWAY ENGINEER — DATE 02-26-20

20° SKEW VARIABLE BRIDGE WIDTH 2:1 FILL SLOPES WINGS PARALLEL TO ROADWAY

Bill of Reinforcement

MARK	A1	A2	A3	A4	A5	A6	A7	A8	A9	A10	A11	A12	A13	A14	A15	A16	A17	A18
TYPE	Str.	Str.	Str.	Str.	Str.	4	Str.	Str.	Str.	8	8	8	8	7	7	Str.	Str.	Str.
SIZE			#5	#5	#5				#5	#5	#5	#5	#5	#5	#5	#5	#5	#5
H	No.	No. Size Length ft. in. Spacing	No. Length ft. in.	No. Length ft. in.	No. Length ft. in.	No. Size Length ft. in. Spacing A ft. in. B ft. in. C ft. in. D ft. in.	No. Size Length ft. in. Spacing	No. Size Length ft. in. Spacing	No. Length ft. in.	No. Length ft. in.	No. Length ft. in.	No. Length ft. in.	No. Length ft. in.	No. Length ft. in.	No. Length ft. in.	No. Length ft. in.	No. Length ft. in.	No. Length ft. in.
15-16	99+Nb=	10 11 8 12	99+Nb=	7 11 8 12	24 40 6	24 35 9	24 20 8	+Lb=	69+Nb=	9 9 11 12 8 ⅛ 1 10 0 11¾ 8 6	77+Nb=	5 4 11 12	69+Nb=	6 12 10 12	77+Nb=	12 10 12	14 33 6	14 33 1	14 33 7	14 34 5	14 11 11 +Lb=	14 11 11 +Lb=	2 37 8	2 39 1	151 5 9
13-14	89+Nb=	9 10 8 12	89+Nb=	7 10 8 12	22 35 9	22 31 5	22 19 7	+Lb=	61+Nb=	8 8 3 12 6 11 1 3 0 8 7 3	69+Nb=	5 4 11 12	61+Nb=	6 10 10 12	69+Nb=	10 10 12	12 29 6	12 29 1	12 29 7	12 30 5	12 11 11 +Lb=	12 11 11 +Lb=	2 33 8	2 35 1	135 5 9
11-12	79+Nb=	8 9 8 12	79+Nb=	6 9 8 12	20 31 1	20 27 0	20 18 7	+Lb=	53+Nb=	7 7 1 12 5 10½ 1 2 0 7 6 2	61+Nb=	5 4 11 12	53+Nb=	5 8 10 12	61+Nb=	8 10 12	10 25 6	10 25 1	10 25 7	10 26 5	10 11 11 +Lb=	10 11 11 +Lb=	2 29 8	2 31 1	119 5 9
9-10	66+Nb=	7 8 8 12	66+Nb=	5 8 8 12	18 25 4	18 21 8	18 17 6	+Lb=	43+Nb=	6 6 1 12 5 1 1 0 0 6 5 4	51+Nb=	5 4 11 12	43+Nb=	5 6 10 12	51+Nb=	6 10 12	8 20 6	8 20 1	8 20 6	8 21 5	8 11 11 +Lb=	8 11 11 +Lb=	2 24 8	2 26 1	99 5 9
7-8	55+Nb=	6 7 2 12	55+Nb=	5 7 2 12	16 20 4	16 17 1	16 16 1	+Lb=	35+Nb=	5 5 7 12 4 8½ 0 10 0 5 4 11	43+Nb=	5 4 11 12	35+Nb=	5 4 10 12	43+Nb=	4 10 12	6 16 6	6 16 1	6 16 6	6 17 5	6 11 11 +Lb=	6 11 11 +Lb=	2 20 8	2 22 1	83 5 9
5-6	45+Nb=	5 6 2 12	45+Nb=	5 6 2 12	14 15 8	14 12 9	14 15 0	+Lb=	27+Nb=	5 5 7 12 4 8½ 0 10 0 5 4 11	35+Nb=	5 4 11 12	27+Nb=	5 2 10 12	35+Nb=	2 10 12	4 12 6	4 12 1	4 12 6	4 13 5	4 11 11 +Lb=	4 11 11 +Lb=	2 16 8	2 18 1	67 5 9

Table of Dimensions

H	W Length ft.	W Length in.	N Length ft.	N Length in.	M2 Length ft.	M2 Length in.	M3 Length ft.	M3 Length in.	T2 Length ft.	T2 Length in.	T3 Length ft.	T3 Length in.	L2 Length ft.	L3 Length ft.	S2 Length ft.	S2 Length in.	S2 + Lb/2 =	S2 Length ft.	S2 Length in.	S3 Length ft.	S3 Length in.	S3 + Lb/2 =	S3 Length ft.	S3 Length in.
15-16	12	0	5	0	33	8⅞	38	6¼	12	3⅜	14	¼	31	31	10	8¼	+0.5Lb=			10	8¼	+0.5Lb=		
13-14	11	0	4	6	29	7¾	34	1⅛	10	9½	12	4⅞	27	27	10	1⅛	+0.5Lb=			10	1⅛	+0.5Lb=		
11-12	10	0	4	0	25	6¾	29	8	9	3⅝	10	9⅝	23	23	9	7½	+0.5Lb=			9	7½	+0.5Lb=		
9-10	9	0	3	6	20	6⅞	24	3½	7	5⅝	8	10⅛	18	18	9	1⅛	+0.5Lb=			9	1⅛	+0.5Lb=		
7-8	7	6	2	9	16	3⅞	19	6⅜	5	11⅛	7	1¼	14	14	8	3½	+0.5Lb=			8	3½	+0.5Lb=		
5-6	6	6	2	3	12	2⅞	15	1¼	4	5¼	5	6	10	10	7	9⅛	+0.5Lb=			7	9⅛	+0.5Lb=		

Reinforcement Details

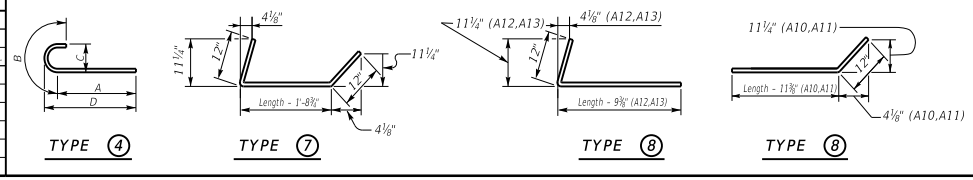

Quantities

H	Concrete* C.Y.	Reinforcement LBS.
5	26.83+(0.71xLb) =	2525+(52.8xLb) =
6	29.11+(0.78xLb) =	2525+(52.8xLb) =
7	42.4+(0.93xLb) =	3877+(68.7xLb) =
8	45.27+(1.01xLb) =	3877+(68.7xLb) =
9	63.26+(1.19xLb) =	5905+(91xLb) =
10	66.72+(1.27xLb) =	5905+(91xLb) =
11	89.38+(1.41xLb) =	9102+(120.4xLb) =
12	93.59+(1.49xLb) =	9102+(120.4xLb) =
13	116.36+(1.64xLb) =	13384+(161xLb) =
14	121.16+(1.71xLb) =	13384+(161xLb) =
15	146.89+(1.86xLb) =	18106+(198.6xLb) =
16	152.28+(1.93xLb) =	18106+(198.6xLb) =

*Concrete quantities computed using 21" beam depth on ½" pad & Variable Bridge Width

ABUTMENT SKEW CORRECTION FACTOR (SCF) = 1.064

NUMBER OF BARS TO ADD (Nb) = Bridge Width (feet) x SCF (round up to nearest whole number)

LENGTH OF ABUTMENT TO ADD (Lb) = Bridge Width (feet) x SCF (convert decimal to architectural)

GENERAL NOTES

SPECIFICATIONS: Construct abutments according to the current edition of the Kentucky Department of Highways Standard Specifications for Road and Bridge Construction. Abutments are designed for side by side box beams as detailed in Standard Drawings BDP-001 through BDP-012, current edition. Dimensions may be adjusted to allow for any out to out bridge width. Abutments are also adequate for Std. Dwg. slabs or steel beam superstructures.

FOUNDATION PRESSURE: Construct abutment footings on solid rock bearing material that can support a pressure of 8000 psf service or 10,800 psf strength factored as recommended by a geotechnical engineer.

WING LENGTHS: Calculated assuming 21" superstructure depth and stream bank elevation at top of footing.

FOOTING ELEVATION: Construct bottom of footing below the anticipated scour elevation. (This typically entails embedding the footings 1'-0" to 2'-0" into rock and pouring concrete directly against cut rock faces. as recommended by geotechnical engineer.)

NOTE: Distances to bars shown are clear dimensions unless otherwise noted.

MATERIAL SPECIFICATIONS:
Concrete, Class "A" = 3500 psi
Steel Reinforcement = Grade 60

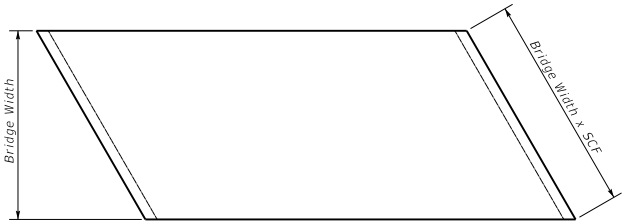

PLAN OF SUPERSTRUCTURE SLAB

KENTUCKY
DEPARTMENT OF HIGHWAYS

20° SKEW VARIABLE WIDTH ABUTMENT PARALLEL WINGS

STANDARD DRAWING NO. BSA-050

SUBMITTED _____ DIRECTOR DIVISION OF STRUCTURAL DESIGN — DATE 02-26-20

APPROVED _____ STATE HIGHWAY ENGINEER — DATE 02-26-20

25° SKEW VARIABLE BRIDGE WIDTH 2:1 FILL SLOPES WINGS PARALLEL TO ROADWAY

ABUTMENT SKEW CORRECTION FACTOR (SCF) = 1.103

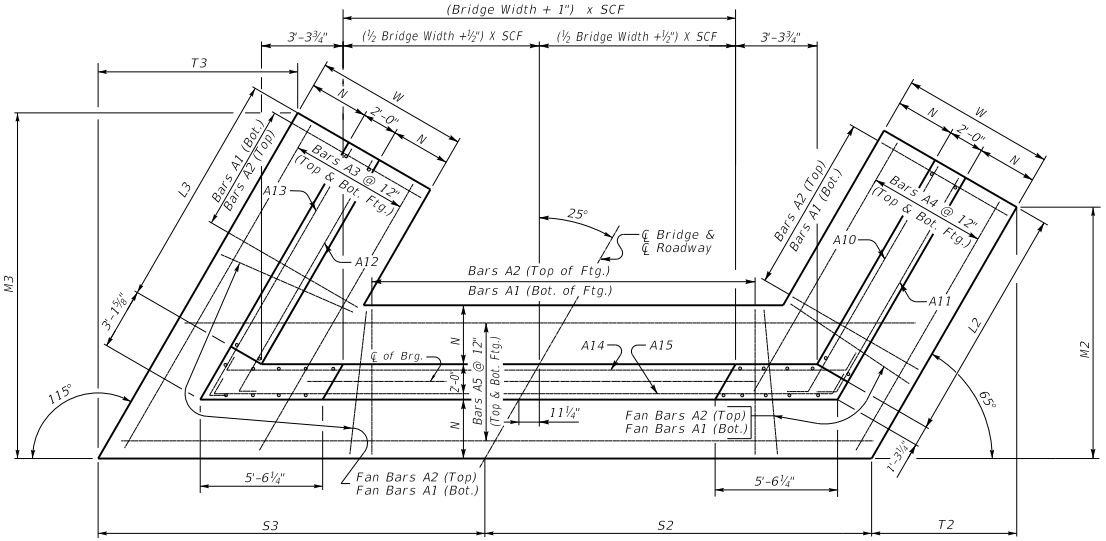

(Left Skew as shown;right skew opp. hand)

PLAN

NOTE: Trim A16 & A17 bars if necessary
Trim A3 bars as necessary

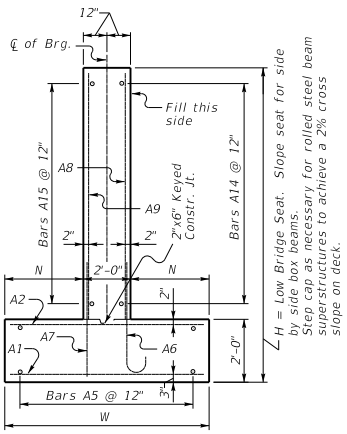

WALL SECTION

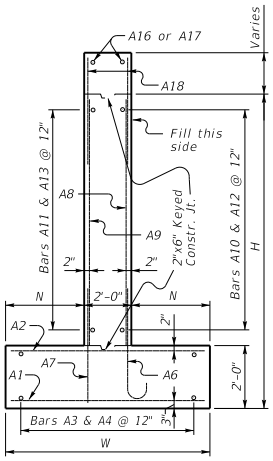

WING SECTION

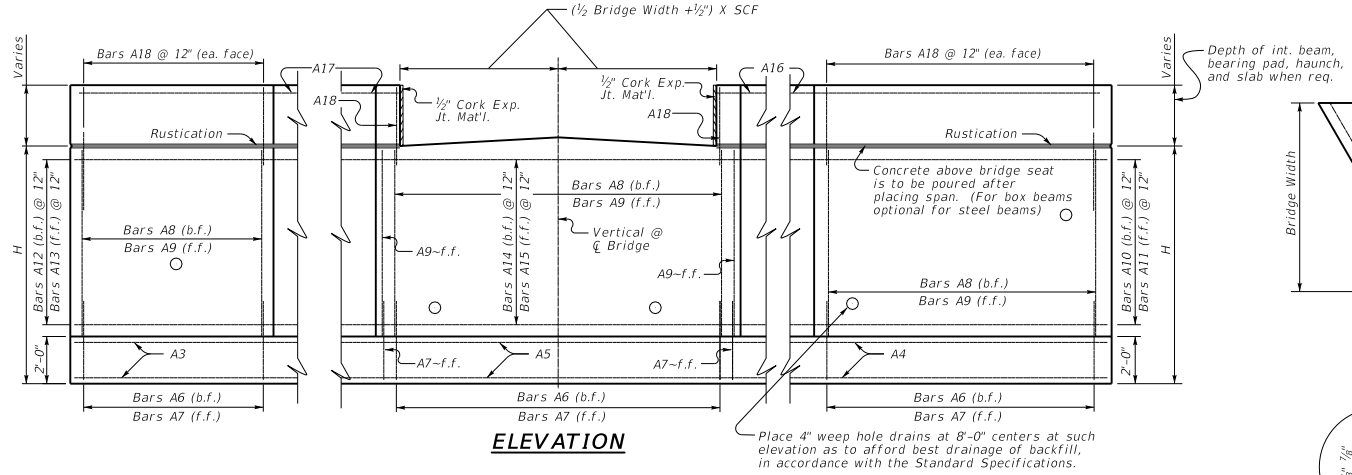

ELEVATION

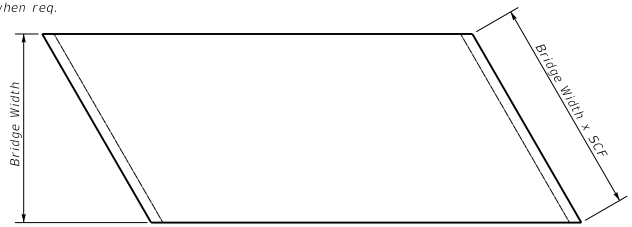

PLAN OF SUPERSTRUCTURE SLAB

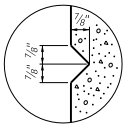

RUSTICATION GROOVE

KENTUCKY
DEPARTMENT OF HIGHWAYS

25° SKEW VARIABLE WIDTH ABUTMENT PARALLEL WINGS

STANDARD DRAWING NO. BSA-051

SUBMITTED _____ DIRECTOR DIVISION OF STRUCTURAL DESIGN — DATE 02-26-20

APPROVED _____ STATE HIGHWAY ENGINEER — DATE 02-26-20

25° SKEW VARIABLE BRIDGE WIDTH 2:1 FILL SLOPES
WINGS PARALLEL TO ROADWAY

Bill of Reinforcement

MARK	A1					A2				
TYPE	Str.					Str.				
SIZE										
H	No.	Size	Length ft.	Length in.	Spacing	No.	Size	Length ft.	Length in.	Spacing
15-16	103+Nb=	10	11	8	12	103+Nb=	7	11	8	12
13-14	93+Nb=	9	10	8	12	93+Nb=	7	10	8	12
11-12	82+Nb=	8	9	8	12	82+Nb=	6	9	8	12
9-10	70+Nb=	7	8	8	12	70+Nb=	5	8	8	12
7-8	59+Nb=	6	7	2	12	59+Nb=	5	7	2	12
5-6	49+Nb=	5	6	2	12	49+Nb=	5	6	2	12

MARK	A3			A4			A5					
TYPE	Str.			Str.			Str.					
SIZE	#5			#5			#5					
H	No.	Length ft.	Length in.	No.	Length ft.	Length in.	No.	Length ft.	Length in.	+Lb =	Length ft.	Length in.
15-16	24	42	5	24	36	4	24	21	4	+Lb=		
13-14	22	37	8	22	32	0	22	20	3	+Lb=		
11-12	20	32	10	20	27	8	20	19	2	+Lb=		
9-10	18	27	1	18	22	4	18	18	0	+Lb=		
7-8	16	22	0	16	17	9	16	16	7	+Lb=		
5-6	14	17	3	14	13	6	14	15	6	+Lb=		

MARK	A6												
TYPE	4												
SIZE													
H	No.	Size	Length ft.	Length in.	Spacing	A ft.	A in.	B ft.	B in.	C ft.	C in.	D ft.	D in.
15-16	71+Nb=	9	9	11	12	8	⅛	1	10	0	11¾	8	6
13-14	63+Nb=	8	8	3	12	6	11	1	3	0	8	7	3
11-12	55+Nb=	7	7	1	12	5	10½	1	2	0	7	6	2
9-10	45+Nb=	6	6	1	12	5	1	1	0	0	6	5	4
7-8	37+Nb=	5	5	7	12	4	8½	0	10	0	5	4	11
5-6	29+Nb=	5	5	7	12	4	8½	0	10	0	5	4	11

MARK	A7					A8				
TYPE	Str.					Str.				
SIZE										
H	No.	Size	Length ft.	Length in.	Spacing	No.	Size	Length ft.	Length in.	Spacing
15-16	80+Nb=	5	4	11	12	71+Nb=	6	12	10	12
13-14	72+Nb=	5	4	11	12	63+Nb=	6	10	10	12
11-12	64+Nb=	5	4	11	12	55+Nb=	5	8	10	12
9-10	54+Nb=	5	4	11	12	45+Nb=	5	6	10	12
7-8	46+Nb=	5	4	11	12	37+Nb=	5	4	10	12
5-6	38+Nb=	5	4	11	12	29+Nb=	5	2	10	12

MARK	A9				A10			A11			A12			A13		
TYPE	Str.				8			8			8			8		
SIZE	#5				#5			#5			#5			#5		
H	No.	Length ft.	Length in.	Spacing	No.	Length ft.	Length in.	No.	Length ft.	Length in.	No.	Length ft.	Length in.	No.	Length ft.	Length in.
15-16	80+Nb=	12	10	12	14	34	6	14	34	0	14	34	8	14	35	8
13-14	72+Nb=	10	10	12	12	30	6	12	30	0	12	30	8	12	31	8
11-12	64+Nb=	8	10	12	10	26	6	10	26	0	10	26	8	10	27	8
9-10	54+Nb=	6	10	12	8	21	7	8	21	0	8	21	8	8	22	8
7-8	46+Nb=	4	10	12	6	17	7	6	17	0	6	17	8	6	18	8
5-6	38+Nb=	2	10	12	4	13	7	4	13	0	4	13	8	4	14	8

MARK	A14						A15						A16			A17			A18		
TYPE	7						7						Str.			Str.			Str.		
SIZE	#5						#5						#5			#5			#5		
H	No.	Length ft.	Length in.	+Lb =	Length ft.	Length in.	No.	Length ft.	Length in.	+Lb =	Length ft.	Length in.	No.	Length ft.	Length in.	No.	Length ft.	Length in.	No.	Length ft.	Length in.
15-16	14	12	4	+Lb=			14	12	4	+Lb=			2	38	8	2	40	7	156	5	9
13-14	12	12	4	+Lb=			12	12	4	+Lb=			2	34	8	2	36	7	140	5	9
11-12	10	12	4	+Lb=			10	12	4	+Lb=			2	30	8	2	32	7	124	5	9
9-10	8	12	4	+Lb=			8	12	4	+Lb=			2	25	8	2	27	7	104	5	9
7-8	6	12	4	+Lb=			6	12	4	+Lb=			2	21	8	2	23	7	88	5	9
5-6	4	12	4	+Lb=			4	12	4	+Lb=			2	17	8	2	19	7	72	5	9

Table of Dimensions

H	W ft.	W in.	N ft.	N in.	M2 ft.	M2 in.	M3 ft.	M3 in.	T2 ft.	T2 in.	T3 ft.	T3 in.	L2 ft.	L3 ft.	S2 Length ft.	S2 Length in.	S2 + Lb/2 =	S2 Length ft.	S2 Length in.	S3 Length ft.	S3 Length in.	S3 + Lb/2 =	S3 Length ft.	S3 Length in.
15-16	12	0	5	0	33	½	38	11½	15	4⅞	18	2	32	32	11	1	+0.5Lb=			11	1	+0.5Lb=		
13-14	11	0	4	6	29	1½	34	7½	13	7	16	1¾	28	28	10	6⅜	+0.5Lb=			10	6⅜	+0.5Lb=		
11-12	10	0	4	0	25	2⅝	30	3½	11	9⅛	14	1½	24	24	9	11¾	+0.5Lb=			9	11¾	+0.5Lb=		
9-10	9	0	3	6	20	4¾	25	½	9	6⅛	11	8⅛	19	19	9	5⅛	+0.5Lb=			9	5⅛	+0.5Lb=		
7-8	7	6	2	9	16	4	20	4¼	7	7⅜	9	5⅞	15	15	8	7⅛	+0.5Lb=			8	7⅛	+0.5Lb=		
5-6	6	6	2	3	12	5⅛	16	⅛	5	9½	7	5⅝	11	11	8	½	+0.5Lb=			8	½	+0.5Lb=		

Reinforcement Details

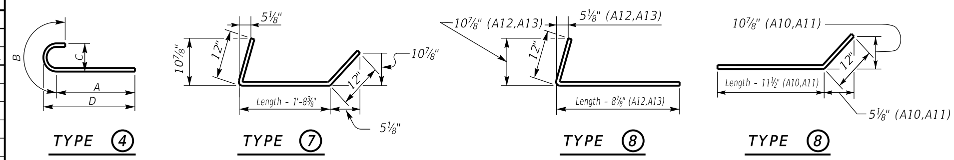

Quantities

H	Concrete* C.Y.	Reinforcement LBS.
5	28.92+(0.71xLb) =	2717+(52.8xLb) =
6	31.37+(0.78xLb) =	2717+(52.8xLb) =
7	45.02+(0.93xLb) =	4118+(68.7xLb) =
8	48.07+(1.01xLb) =	4118+(68.7xLb) =
9	66.5+(1.19xLb) =	6216+(91xLb) =
10	70.14+(1.27xLb) =	6216+(91xLb) =
11	93.16+(1.41xLb) =	9465+(120.4xLb) =
12	97.54+(1.49xLb) =	9465+(120.4xLb) =
13	120.67+(1.64xLb) =	13914+(161xLb) =
14	125.64+(1.71xLb) =	13914+(161xLb) =
15	151.73+(1.86xLb) =	18748+(198.6xLb) =
16	157.3+(1.93xLb) =	18748+(198.6xLb) =

*Concrete quantities computed using 21" beam depth on ½" pad & Variable Bridge Width

ABUTMENT SKEW CORRECTION FACTOR (SCF) = 1.103

NUMBER OF BARS TO ADD (Nb) = Bridge Width (feet) x SCF (round up to nearest whole number)

LENGTH OF ABUTMENT TO ADD (Lb) = Bridge Width (feet) x SCF (convert decimal to architectural)

GENERAL NOTES

SPECIFICATIONS: Construct abutments according to the current edition of the Kentucky Department of Highways Standard Specifications for Road and Bridge Construction. Abutments are designed for side by side box beams as detailed in Standard Drawings BDP-001 through BDP-012, current edition. Dimensions may be adjusted to allow for any out to out bridge width. Abutments are also adequate for Std. Dwg. slabs or steel beam superstructures.

FOUNDATION PRESSURE: Construct abutment footings on solid rock bearing material that can support a pressure of 8000 psf service or 10,800 psf strength factored as recommended by a geotechnical engineer.

WING LENGTHS: Calculated assuming 21" superstructure depth and stream bank elevation at top of footing.

FOOTING ELEVATION: Construct bottom of footing below the anticipated scour elevation. (This typically entails embedding the footings 1'-0" to 2'-0" into rock and pouring concrete directly against cut rock faces. as recommended by geotechnical engineer.)

NOTE: Distances to bars shown are clear dimensions unless otherwise noted.

MATERIAL SPECIFICATIONS:
Concrete, Class "A" = 3500 psi
Steel Reinforcement = Grade 60

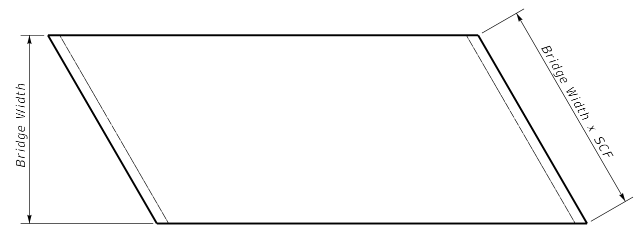

PLAN OF SUPERSTRUCTURE SLAB

KENTUCKY
DEPARTMENT OF HIGHWAYS

25° SKEW VARIABLE WIDTH ABUTMENT PARALLEL WINGS

STANDARD DRAWING NO. BSA-052

SUBMITTED ______ DIRECTOR DIVISION OF STRUCTURAL DESIGN 02-26-20 DATE

APPROVED ______ STATE HIGHWAY ENGINEER 02-26-20 DATE

30° SKEW VARIABLE BRIDGE WIDTH 2:1 FILL SLOPES WINGS PARALLEL TO ROADWAY

ABUTMENT SKEW CORRECTION FACTOR (SCF) = 1.155

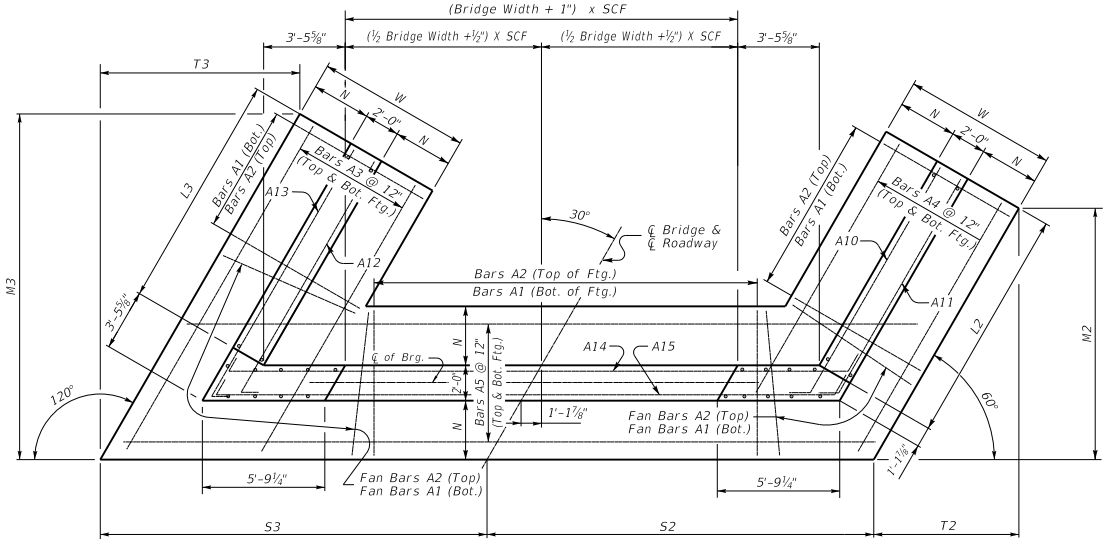

(Left Skew as shown;right skew opp. hand)

PLAN

NOTE: Trim A16 & A17 bars if necessary
Trim A3 bars as necessary

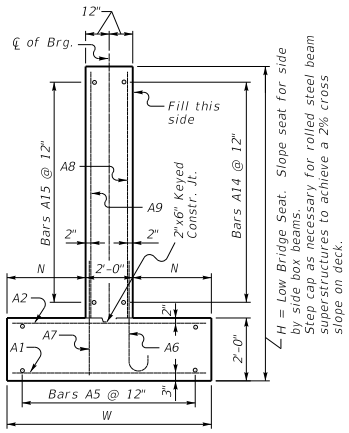

WALL SECTION

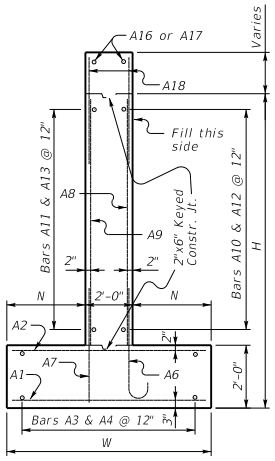

WING SECTION

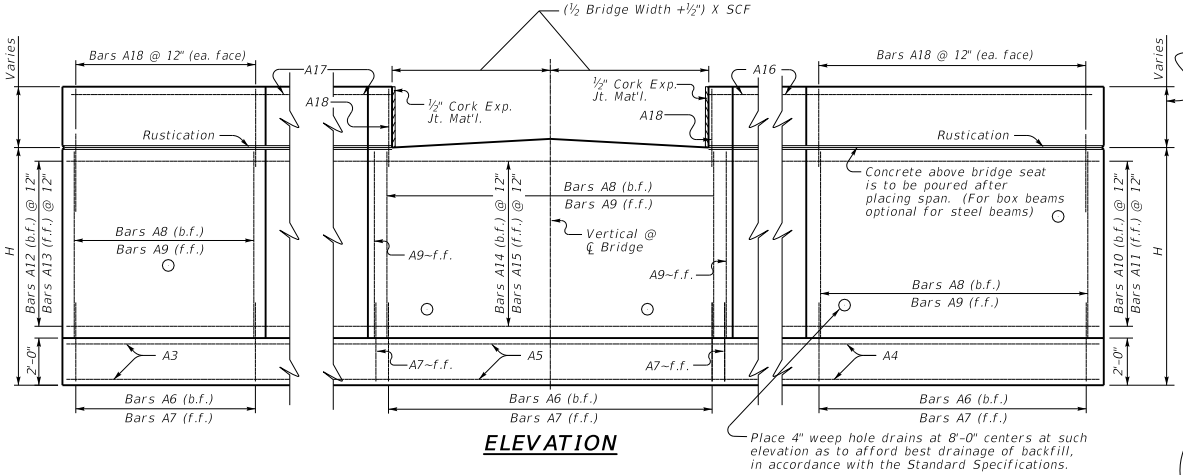

ELEVATION

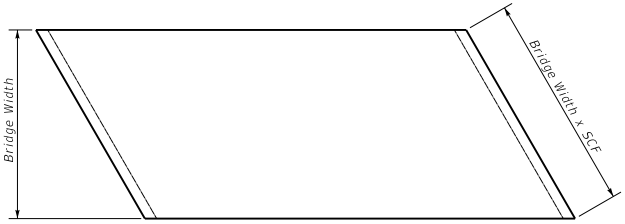

PLAN OF SUPERSTRUCTURE SLAB

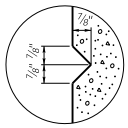

RUSTICATION GROOVE

KENTUCKY
DEPARTMENT OF HIGHWAYS

30° SKEW VARIABLE WIDTH ABUTMENT PARALLEL WINGS

STANDARD DRAWING NO. BSA-053

SUBMITTED _____ DIRECTOR DIVISION OF STRUCTURAL DESIGN — DATE 02-26-20

APPROVED _____ STATE HIGHWAY ENGINEER — DATE 02-26-20

30° SKEW VARIABLE BRIDGE WIDTH 2:1 FILL SLOPES WINGS PARALLEL TO ROADWAY

Bill of Reinforcement

MARK	A1					A2					A3			A4			A5					
TYPE	Str.					Str.					Str.			Str.			Str.					
SIZE											#5			#5			#5					
H	No.	Size	Length ft.	Length in.	Spacing	No.	Size	Length ft.	Length in.	Spacing	No.	Length ft.	Length in.	No.	Length ft.	Length in.	No.	Length ft.	Length in.	+Lb =	Length ft.	Length in.
15-16	108+Nb=	10	11	8	12	108+Nb=	7	11	8	12	24	45	6	24	37	11	24	22	3	+Lb=		
13-14	96+Nb=	9	10	8	12	96+Nb=	7	10	8	12	22	39	8	22	32	8	22	21	1	+Lb=		
11-12	86+Nb=	8	9	8	12	86+Nb=	6	9	8	12	20	34	9	20	28	5	20	19	11	+Lb=		
9-10	73+Nb=	7	8	8	12	73+Nb=	5	8	8	12	18	28	11	18	23	1	18	18	10	+Lb=		
7-8	62+Nb=	6	7	2	12	62+Nb=	5	7	2	12	16	23	9	16	18	6	16	17	4	+Lb=		
5-6	50+Nb=	5	6	2	12	50+Nb=	5	6	2	12	14	17	10	14	13	3	14	16	2	+Lb=		

MARK	A6													A7					A8				
TYPE	4													Str.					Str.				
SIZE																							
H	No.	Size	Length ft.	Length in.	Spacing	A ft.	A in.	B ft.	B in.	C ft.	C in.	D ft.	D in.	No.	Size	Length ft.	Length in.	Spacing	No.	Size	Length ft.	Length in.	Spacing
15-16	76+Nb=	9	9	11	12	8	1/8	1	10	0	11 3/4	8	6	85+Nb=	5	4	11	12	76+Nb=	6	12	10	12
13-14	66+Nb=	8	8	3	12	6	11	1	3	0	8	7	3	75+Nb=	5	4	11	12	66+Nb=	6	10	10	12
11-12	58+Nb=	7	7	1	12	5	10 1/2	1	2	0	7	6	2	67+Nb=	5	4	11	12	58+Nb=	5	8	10	12
9-10	48+Nb=	6	6	1	12	5	1	1	0	0	6	5	4	57+Nb=	5	4	11	12	48+Nb=	5	6	10	12
7-8	40+Nb=	5	5	7	12	4	8 1/2	0	10	0	5	4	11	49+Nb=	5	4	11	12	40+Nb=	5	4	10	12
5-6	30+Nb=	5	5	7	12	4	8 1/2	0	10	0	5	4	11	39+Nb=	5	4	11	12	30+Nb=	5	2	10	12

MARK	A9				A10			A11			A12			A13			A14						A15						A16			A17			A18		
TYPE	Str.				8			8			8			8			7						7						Str.			Str.			Str.		
SIZE	#5				#5			#5			#5			#5			#5						#5						#5			#5			#5		
H	No.	Length ft.	Length in.	Spacing	No.	Length ft.	Length in.	No.	Length ft.	Length in.	No.	Length ft.	Length in.	No.	Length ft.	Length in.	No.	Length ft.	Length in.	+Lb =	Length ft.	Length in.	No.	Length ft.	Length in.	+Lb =	Length ft.	Length in.	No.	Length ft.	Length in.	No.	Length ft.	Length in.	No.	Length ft.	Length in.
15-16	85+Nb=	12	10	12	14	36	8	14	35	11	14	36	8	14	37	11	14	12	9	+Lb=			14	12	9	+Lb=			2	40	10	2	43	2	165	5	9
13-14	75+Nb=	10	10	12	12	31	8	12	30	11	12	31	8	12	32	11	12	12	9	+Lb=			12	12	9	+Lb=			2	35	10	2	38	2	145	5	9
11-12	67+Nb=	8	10	12	10	27	8	10	26	11	10	27	8	10	28	11	10	12	9	+Lb=			10	12	9	+Lb=			2	31	10	2	34	2	129	5	9
9-10	57+Nb=	6	10	12	8	22	8	8	21	11	8	22	8	8	23	11	8	12	9	+Lb=			8	12	9	+Lb=			2	26	10	2	29	2	109	5	9
7-8	49+Nb=	4	10	12	6	18	8	6	17	11	6	18	8	6	19	11	6	12	9	+Lb=			6	12	9	+Lb=			2	22	10	2	25	2	93	5	9
5-6	39+Nb=	2	10	12	4	13	8	4	12	11	4	13	8	4	14	11	4	12	9	+Lb=			4	12	9	+Lb=			2	17	10	2	20	2	73	5	9

Table of Dimensions

H	W		N		M2		M3		T2		T3		L2	L3	S2					S3				
	Length ft.	Length in.	Length ft.	Length in.	Length ft.	Length in.	Length ft.	Length in.	Length ft.	Length in.	Length ft.	Length in.	Length ft.	Length ft.	Length ft.	Length in.	+ Lb/2 =	Length ft.	Length in.	Length ft.	Length in.	+ Lb/2 =	Length ft.	Length in.
15-16	12	0	5	0	32	11 3/8	39	11 3/8	19	1/4	23	3/4	34	34	11	7 1/8	+0.5Lb=			11	7 1/8	+0.5Lb=		
13-14	11	0	4	6	28	4 3/8	34	10 3/8	16	4 1/2	20	1 1/2	29	29	11	1/4	+0.5Lb=			11	1/4	+0.5Lb=		
11-12	10	0	4	0	24	7 3/4	30	7 3/4	14	2 3/4	17	8 3/8	25	25	10	5 1/4	+0.5Lb=			10	5 1/4	+0.5Lb=		
9-10	9	0	3	6	20	7/8	25	6 7/8	11	7	14	9 1/8	20	20	9	10 3/8	+0.5Lb=			9	10 3/8	+0.5Lb=		
7-8	7	6	2	9	16	2 3/4	20	11 3/4	9	4 1/2	12	1 3/8	16	16	9	0	+0.5Lb=			9	0	+0.5Lb=		
5-6	6	6	2	3	11	7 7/8	15	10 7/8	6	8 3/4	9	2 1/8	11	11	8	5	+0.5Lb=			8	5	+0.5Lb=		

Reinforcement Details

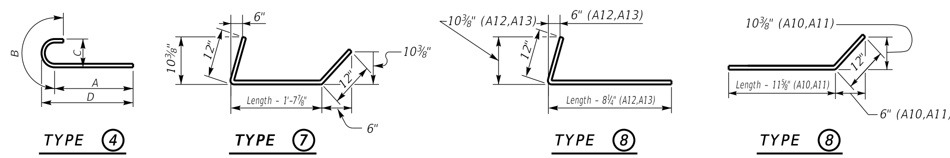

Quantities

H	Concrete* C.Y.	Reinforcement LBS.
5	29.38+(0.71xLb) =	2774+(52.8xLb) =
6	31.87+(0.78xLb) =	2774+(52.8xLb) =
7	47.78+(0.93xLb) =	4359+(68.7xLb) =
8	51.01+(1.01xLb) =	4359+(68.7xLb) =
9	69.91+(1.19xLb) =	6526+(91xLb) =
10	73.73+(1.27xLb) =	6526+(91xLb) =
11	97.12+(1.41xLb) =	9903+(120.4xLb) =
12	101.69+(1.49xLb) =	9903+(120.4xLb) =
13	125.19+(1.64xLb) =	14434+(161xLb) =
14	130.35+(1.71xLb) =	14434+(161xLb) =
15	160.85+(1.86xLb) =	19807+(198.6xLb) =
16	166.75+(1.93xLb) =	19807+(198.6xLb) =

*Concrete quantities computed using 21" beam depth on 1/2" pad & Variable Bridge Width

ABUTMENT SKEW CORRECTION FACTOR (SCF) = 1.155

NUMBER OF BARS TO ADD (Nb) = Bridge Width (feet) x SCF (round up to nearest whole number)

LENGTH OF ABUTMENT TO ADD (Lb) = Bridge Width (feet) x SCF (convert decimal to architectural)

GENERAL NOTES

SPECIFICATIONS: Construct abutments according to the current edition of the Kentucky Department of Highways Standard Specifications for Road and Bridge Construction. Abutments are designed for side by side box beams as detailed in Standard Drawings BDP-001 through BDP-012, current edition. Dimensions may be adjusted to allow for any out to out bridge width. Abutments are also adequate for Std. Dwg. slabs or steel beam superstructures.

FOUNDATION PRESSURE: Construct abutment footings on solid rock bearing material that can support a pressure of 8000 psf service or 10,800 psf strength factored as recommended by a geotechnical engineer.

WING LENGTHS: Calculated assuming 21" superstructure depth and stream bank elevation at top of footing.

FOOTING ELEVATION: Construct bottom of footing below the anticipated scour elevation. (This typically entails embedding the footings 1'-0" to 2'-0" into rock and pouring concrete directly against cut rock faces. as recommended by geotechnical engineer.)

NOTE: Distances to bars shown are clear dimensions unless otherwise noted.

MATERIAL SPECIFICATIONS:
Concrete, Class "A" = 3500 psi
Steel Reinforcement = Grade 60

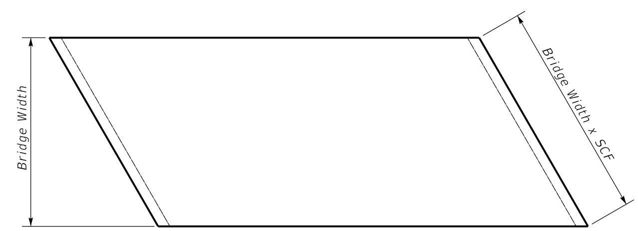

PLAN OF SUPERSTRUCTURE SLAB

KENTUCKY
DEPARTMENT OF HIGHWAYS

30° SKEW VARIABLE WIDTH ABUTMENT PARALLEL WINGS

STANDARD DRAWING NO. BSA-054

SUBMITTED ______ DIRECTOR DIVISION OF STRUCTURAL DESIGN 02-26-20 DATE

APPROVED ______ STATE HIGHWAY ENGINEER 02-26-20 DATE

35° SKEW VARIABLE BRIDGE WIDTH 2:1 FILL SLOPES WINGS PARALLEL TO ROADWAY

ABUTMENT SKEW CORRECTION FACTOR (SCF) = 1.221

For fanning A1 & A2 bars with an acute angle, space @ 12" at face of toe, then as you get closer to the corner start pulling every other bar back toward the heel. (Similar to as shown)

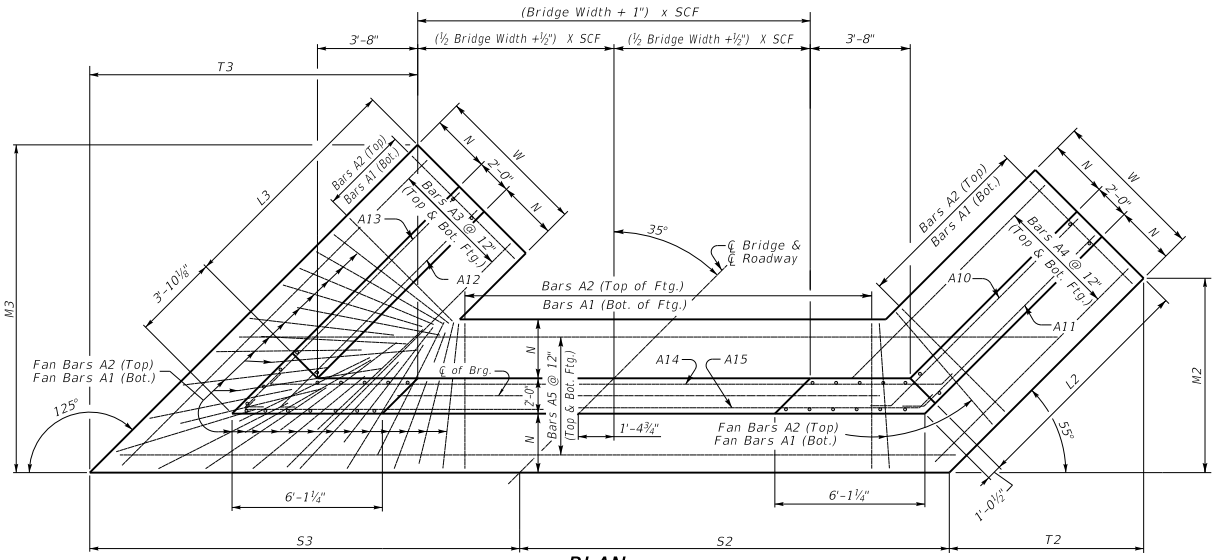

(Left Skew as shown;right skew opp. hand)

PLAN

NOTE: Trim A16 & A17 bars if necessary
Trim A3 bars as necessary

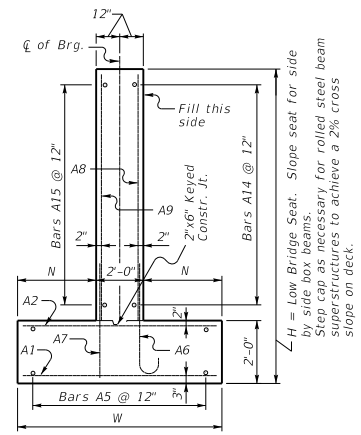

WALL SECTION

H = Low Bridge Seat. Slope seat for side by side box beams. Step cap as necessary for rolled steel beam superstructures to achieve a 2% cross slope on deck.

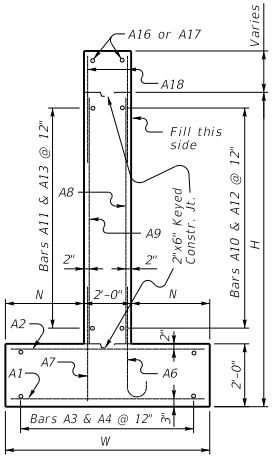

WING SECTION

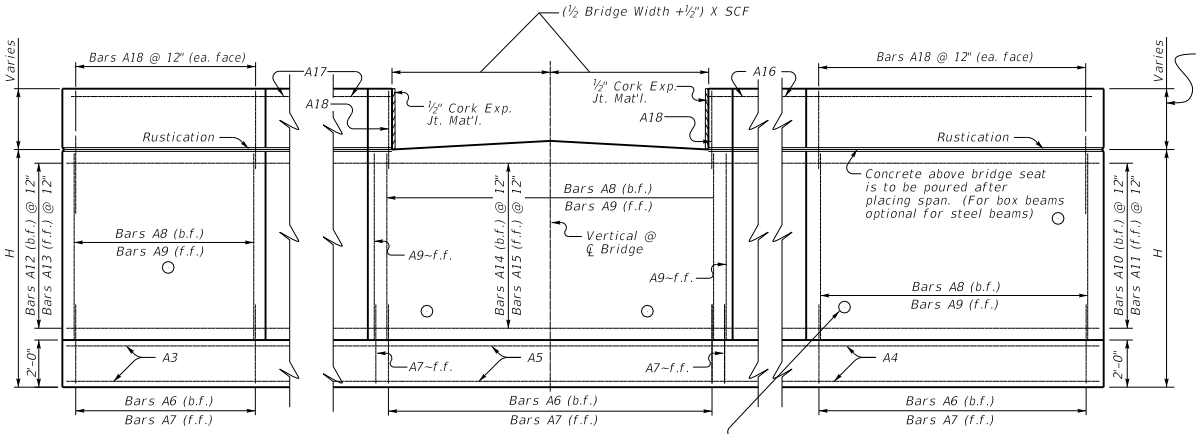

ELEVATION

Place 4" weep hole drains at 8'-0" centers at such elevation as to afford best drainage of backfill, in accordance with the Standard Specifications.

Depth of int. beam, bearing pad, haunch, and slab when req.

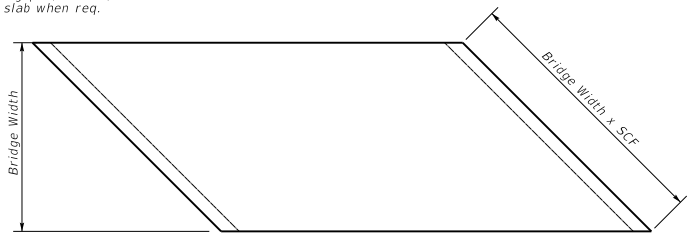

PLAN OF SUPERSTRUCTURE SLAB

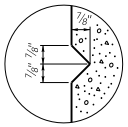

RUSTICATION GROOVE

KENTUCKY
DEPARTMENT OF HIGHWAYS

35° SKEW VARIABLE WIDTH ABUTMENT PARALLEL WINGS

STANDARD DRAWING NO. BSA-055

SUBMITTED _____ DIRECTOR DIVISION OF STRUCTURAL DESIGN — DATE 02-26-20

APPROVED _____ STATE HIGHWAY ENGINEER — DATE 02-26-20

35° SKEW VARIABLE BRIDGE WIDTH 2:1 FILL SLOPES WINGS PARALLEL TO ROADWAY

Bill of Reinforcement

MARK	A1					A2					A3			A4			A5					
TYPE	Str.					Str.					Str.			Str.			Str.					
SIZE											#5			#5			#5					
H	No.	Size	Length ft.	Length in.	Spacing	No.	Size	Length ft.	Length in.	Spacing	No.	Length ft.	Length in.	No.	Length ft.	Length in.	No.	Length ft.	Length in.	+Lb =	Length ft.	Length in.
15-16	115+Nb=	10	11	8	12	115+Nb=	7	11	8	12	24	48	9	24	39	7	24	23	5	+Lb=		
13-14	102+Nb=	9	10	8	12	102+Nb=	7	10	8	12	22	42	9	22	34	4	22	22	3	+Lb=		
11-12	90+Nb=	8	9	8	12	90+Nb=	6	9	8	12	20	36	10	20	29	1	20	21	0	+Lb=		
9-10	77+Nb=	7	8	8	12	77+Nb=	5	8	8	12	18	30	10	18	23	10	18	19	9	+Lb=		
7-8	66+Nb=	6	7	2	12	66+Nb=	5	7	2	12	16	25	7	16	19	3	16	18	4	+Lb=		
5-6	53+Nb=	5	6	2	12	53+Nb=	5	6	2	12	14	19	8	14	14	0	14	17	1	+Lb=		

MARK	A6													A7					A8				
TYPE	4													Str.					Str.				
SIZE																							
H	No.	Size	Length ft.	Length in.	Spacing	A ft.	A in.	B ft.	B in.	C ft.	C in.	D ft.	D in.	No.	Size	Length ft.	Length in.	Spacing	No.	Size	Length ft.	Length in.	Spacing
15-16	80+Nb=	9	9	11	12	8	⅛	1	10	0	11¾	8	6	90+Nb=	5	4	11	12	80+Nb=	6	12	10	12
13-14	70+Nb=	8	8	3	12	6	11	1	3	0	8	7	3	80+Nb=	5	4	11	12	70+Nb=	6	10	10	12
11-12	60+Nb=	7	7	1	12	5	10½	1	2	0	7	6	2	70+Nb=	5	4	11	12	60+Nb=	5	8	10	12
9-10	50+Nb=	6	6	1	12	5	1	1	0	0	6	5	4	60+Nb=	5	4	11	12	50+Nb=	5	6	10	12
7-8	42+Nb=	5	5	7	12	4	8½	0	10	0	5	4	11	52+Nb=	5	4	11	12	42+Nb=	5	4	10	12
5-6	32+Nb=	5	5	7	12	4	8½	0	10	0	5	4	11	42+Nb=	5	4	11	12	32+Nb=	5	2	10	12

MARK	A9				A10			A11			A12			A13		
TYPE	Str.				8			8			8			8		
SIZE	#5				#5			#5			#5			#5		
H	No.	Length ft.	Length in.	Spacing	No.	Length ft.	Length in.	No.	Length ft.	Length in.	No.	Length ft.	Length in.	No.	Length ft.	Length in.
15-16	90+Nb=	12	10	12	14	38	9	14	37	10	14	38	10	14	40	4
13-14	80+Nb=	10	10	12	12	33	9	12	32	10	12	33	10	12	35	4
11-12	70+Nb=	8	10	12	10	28	9	10	27	10	10	28	10	10	30	4
9-10	60+Nb=	6	10	12	8	23	9	8	22	10	8	23	10	8	25	4
7-8	52+Nb=	4	10	12	6	19	9	6	18	10	6	19	10	6	21	4
5-6	42+Nb=	2	10	12	4	14	9	4	13	10	4	14	10	4	16	4

MARK	A14						A15						A16			A17			A18		
TYPE	7						7						Str.			Str.			Str.		
SIZE	#5						#5						#5			#5			#5		
H	No.	Length ft.	Length in.	+Lb =	Length ft.	Length in.	No.	Length ft.	Length in.	+Lb =	Length ft.	Length in.	No.	Length ft.	Length in.	No.	Length ft.	Length in.	No.	Length ft.	Length in.
15-16	14	13	4	+Lb=			14	13	4	+Lb=			2	43	1	2	45	10	175	5	9
13-14	12	13	4	+Lb=			12	13	4	+Lb=			2	38	1	2	40	10	155	5	9
11-12	10	13	4	+Lb=			10	13	4	+Lb=			2	33	1	2	35	10	135	5	9
9-10	8	13	4	+Lb=			8	13	4	+Lb=			2	28	1	2	30	10	115	5	9
7-8	6	13	4	+Lb=			6	13	4	+Lb=			2	24	1	2	26	10	99	5	9
5-6	4	13	4	+Lb=			4	13	4	+Lb=			2	19	1	2	21	10	79	5	9

Table of Dimensions

H	W ft.	W in.	N ft.	N in.	M2 ft.	M2 in.	M3 ft.	M3 in.	T2 ft.	T2 in.	T3 ft.	T3 in.	L2 ft.	L3 ft.	S2 ft.	S2 in.	S2 + Lb/2 =	S2 Length ft.	S2 Length in.	S3 ft.	S3 in.	S3 + Lb/2 =	S3 Length ft.	S3 Length in.
15-16	12	0	5	0	32	5¾	40	6	22	8⅞	28	4⅜	36	36	12	3⅛	+0.5Lb=			12	3⅛	+0.5Lb=		
13-14	11	0	4	6	28	2	35	7½	19	8⅝	24	11⅜	31	31	11	7¾	+0.5Lb=			11	7¾	+0.5Lb=		
11-12	10	0	4	0	23	10¼	30	8⅞	16	8½	21	6¼	26	26	11	½	+0.5Lb=			11	½	+0.5Lb=		
9-10	9	0	3	6	19	6⅝	25	10¼	13	8¼	18	1¼	21	21	10	5⅛	+0.5Lb=			10	5⅛	+0.5Lb=		
7-8	7	6	2	9	15	11⅜	21	4¾	11	2	14	11⅞	17	17	9	6⅛	+0.5Lb=			9	6⅛	+0.5Lb=		
5-6	6	6	2	3	11	7¾	16	6¼	8	1⅞	11	6¾	12	12	8	10⅞	+0.5Lb=			8	10⅞	+0.5Lb=		

Reinforcement Details

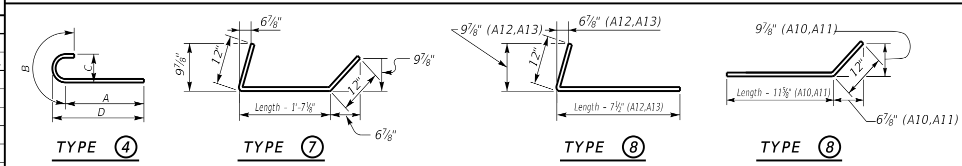

Quantities

H	Concrete* C.Y.	Reinforcement LBS.
5	31.7+(0.71xLb) =	2972+(52.8xLb) =
6	34.39+(0.78xLb) =	2972+(52.8xLb) =
7	50.7+(0.93xLb) =	4623+(68.7xLb) =
8	54.13+(1.01xLb) =	4623+(68.7xLb) =
9	73.52+(1.19xLb) =	6860+(91xLb) =
10	77.54+(1.27xLb) =	6860+(91xLb) =
11	101.33+(1.41xLb) =	10338+(120.4xLb) =
12	106.09+(1.49xLb) =	10338+(120.4xLb) =
13	133.58+(1.64xLb) =	15348+(161xLb) =
14	139.09+(1.71xLb) =	15348+(161xLb) =
15	170.28+(1.86xLb) =	20987+(198.6xLb) =
16	176.52+(1.93xLb) =	20987+(198.6xLb) =

*Concrete quantities computed using 21" beam depth on ½" pad & Variable Bridge Width

ABUTMENT SKEW CORRECTION FACTOR (SCF) = 1.221

NUMBER OF BARS TO ADD (Nb) = Bridge Width (feet) x SCF (round up to nearest whole number)

LENGTH OF ABUTMENT TO ADD (Lb) = Bridge Width (feet) x SCF (convert decimal to architectural)

GENERAL NOTES

SPECIFICATIONS: Construct abutments according to the current edition of the Kentucky Department of Highways Standard Specifications for Road and Bridge Construction. Abutments are designed for side by side box beams as detailed in Standard Drawings BDP-001 through BDP-012, current edition. Dimensions may be adjusted to allow for any out to out bridge width. Abutments are also adequate for Std. Dwg. slabs or steel beam superstructures.

FOUNDATION PRESSURE: Construct abutment footings on solid rock bearing material that can support a pressure of 8000 psf service or 10,800 psf strength factored as recommended by a geotechnical engineer.

WING LENGTHS: Calculated assuming 21" superstructure depth and stream bank elevation at top of footing.

FOOTING ELEVATION: Construct bottom of footing below the anticipated scour elevation. (This typically entails embedding the footings 1'-0" to 2'-0" into rock and pouring concrete directly against cut rock faces. as recommended by geotechnical engineer.)

NOTE: Distances to bars shown are clear dimensions unless otherwise noted.

MATERIAL SPECIFICATIONS:
Concrete, Class "A" = 3500 psi
Steel Reinforcement = Grade 60

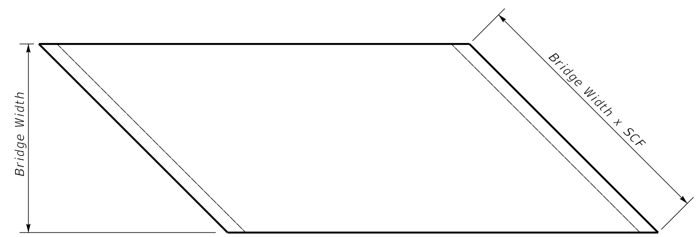

PLAN OF SUPERSTRUCTURE SLAB

KENTUCKY
DEPARTMENT OF HIGHWAYS

35° SKEW VARIABLE WIDTH ABUTMENT PARALLEL WINGS

STANDARD DRAWING NO. BSA-056

SUBMITTED ____ DIRECTOR DIVISION OF STRUCTURAL DESIGN — 02-26-20 DATE

APPROVED ____ STATE HIGHWAY ENGINEER — 02-26-20 DATE

40° SKEW VARIABLE BRIDGE WIDTH 2:1 FILL SLOPES WINGS PARALLEL TO ROADWAY

ABUTMENT SKEW CORRECTION FACTOR (SCF) = 1.305

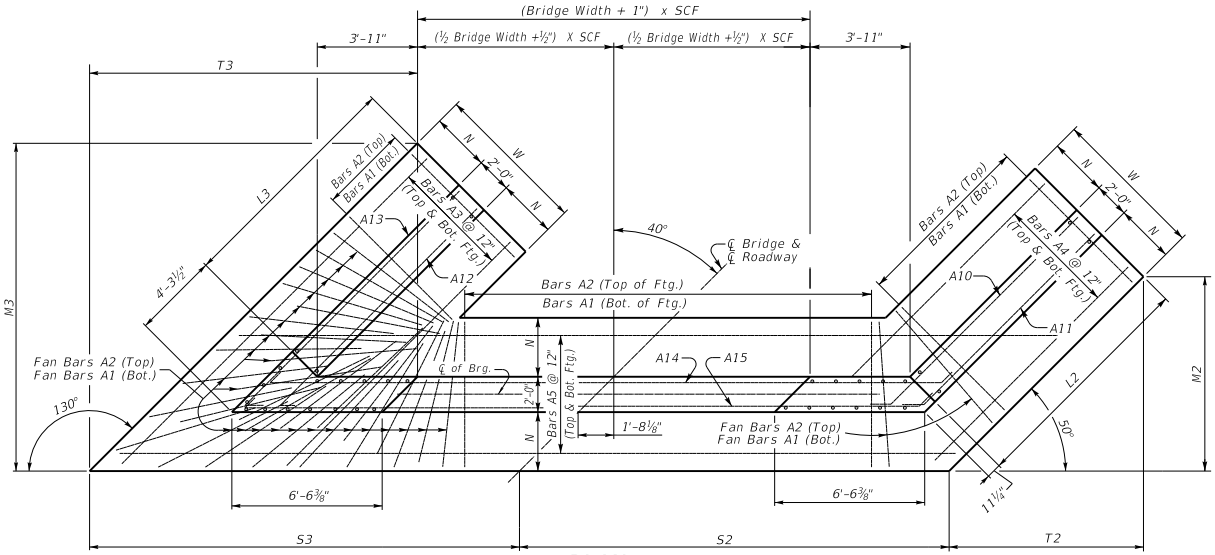

(Left Skew as shown;right skew opp. hand)

PLAN

NOTE: Trim A16 & A17 bars if necessary
Trim A3 bars as necessary

For fanning A1 & A2 bars with an acute angle, space @ 12" at face of toe, then as you get closer to the corner start pulling every other bar back toward the heel. (Similar to as shown)

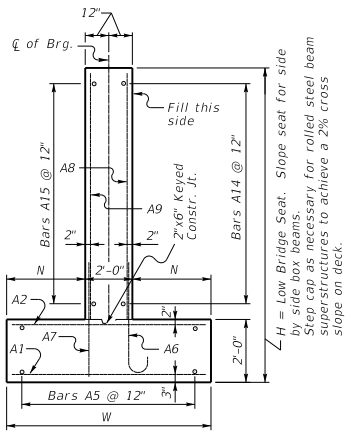

WALL SECTION

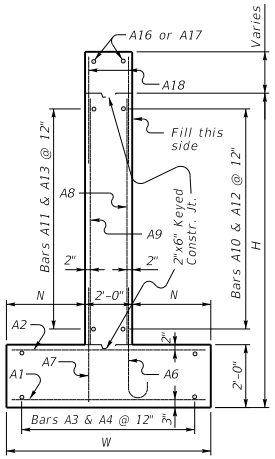

WING SECTION

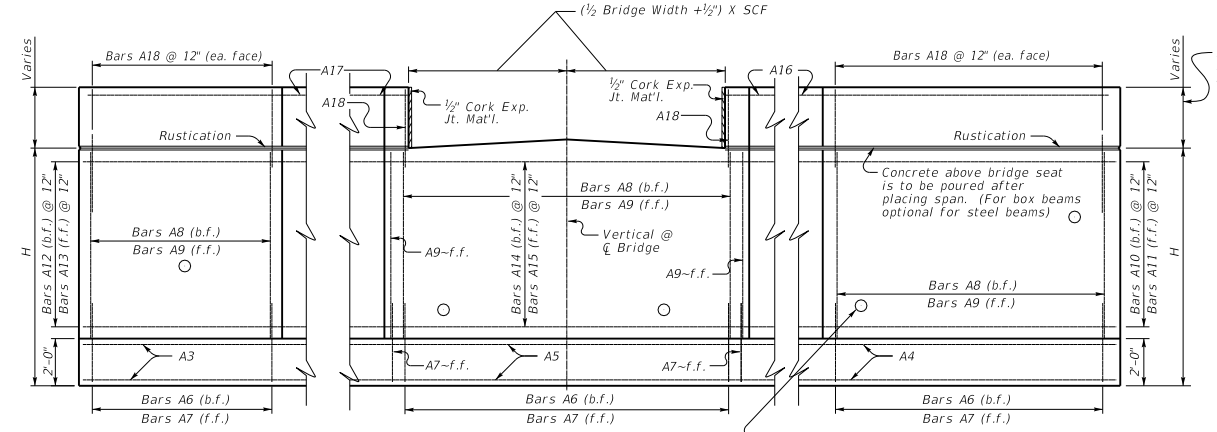

ELEVATION

Place 4" weep hole drains at 8'-0" centers at such elevation as to afford best drainage of backfill, in accordance with the Standard Specifications.

Depth of int. beam, bearing pad, haunch, and slab when req.

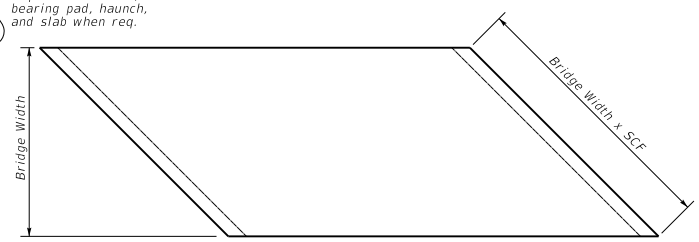

PLAN OF SUPERSTRUCTURE SLAB

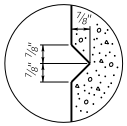

RUSTICATION GROOVE

KENTUCKY
DEPARTMENT OF HIGHWAYS

40° SKEW VARIABLE WIDTH ABUTMENT PARALLEL WINGS

STANDARD DRAWING NO. BSA-057

SUBMITTED _____ DIRECTOR DIVISION OF STRUCTURAL DESIGN — DATE 02-26-20

APPROVED _____ STATE HIGHWAY ENGINEER — DATE 02-26-20

40° SKEW VARIABLE BRIDGE WIDTH 2:1 FILL SLOPES WINGS PARALLEL TO ROADWAY

Bill of Reinforcement

MARK	A1					A2					A3			A4			A5					
TYPE	Str.					Str.					Str.			Str.			Str.					
SIZE											#5			#5			#5					
H	No.	Size	Length ft.	Length in.	Spacing	No.	Size	Length ft.	Length in.	Spacing	No.	Length ft.	Length in.	No.	Length ft.	Length in.	No.	Length ft.	Length in.	+Lb =	Length ft.	Length in.
15-16	122+Nb=	10	11	8	12	122+Nb=	7	11	8	12	24	52	3	24	41	3	24	25	0	+Lb=		
13-14	109+Nb=	9	10	8	12	109+Nb=	7	10	8	12	22	46	2	22	36	1	22	23	8	+Lb=		
11-12	97+Nb=	8	9	8	12	97+Nb=	6	9	8	12	20	40	1	20	30	10	20	22	5	+Lb=		
9-10	84+Nb=	7	8	8	12	84+Nb=	5	8	8	12	18	34	0	18	25	7	18	21	1	+Lb=		
7-8	70+Nb=	6	7	2	12	70+Nb=	5	7	2	12	16	27	7	16	20	0	16	19	6	+Lb=		
5-6	58+Nb=	5	6	2	12	58+Nb=	5	6	2	12	14	21	7	14	14	9	14	18	3	+Lb=		

MARK	A6													A7					A8				
TYPE	4													Str.					Str.				
SIZE																							
H	No.	Size	Length ft.	Length in.	Spacing	A ft.	A in.	B ft.	B in.	C ft.	C in.	D ft.	D in.	No.	Size	Length ft.	Length in.	Spacing	No.	Size	Length ft.	Length in.	Spacing
15-16	84+Nb=	9	9	11	12	8	⅛	1	10	0	11¾	8	6	95+Nb=	5	4	11	12	84+Nb=	6	12	10	12
13-14	74+Nb=	8	8	3	12	6	11	1	3	0	8	7	3	85+Nb=	5	4	11	12	74+Nb=	6	10	10	12
11-12	64+Nb=	7	7	1	12	5	10½	1	2	0	7	6	2	75+Nb=	5	4	11	12	64+Nb=	5	8	10	12
9-10	54+Nb=	6	6	1	12	5	1	1	0	0	6	5	4	65+Nb=	5	4	11	12	54+Nb=	5	6	10	12
7-8	44+Nb=	5	5	7	12	4	8½	0	10	0	5	4	11	55+Nb=	5	4	11	12	44+Nb=	5	4	10	12
5-6	34+Nb=	5	5	7	12	4	8½	0	10	0	5	4	11	45+Nb=	5	4	11	12	34+Nb=	5	2	10	12

MARK	A9				A10			A11			A12			A13		
TYPE	Str.				8			8			8			8		
SIZE	#5				#5			#5			#5			#5		
H	No.	Length ft.	Length in.	Spacing	No.	Length ft.	Length in.	No.	Length ft.	Length in.	No.	Length ft.	Length in.	No.	Length ft.	Length in.
15-16	95+Nb=	12	10	12	14	40	10	14	39	9	14	41	0	14	42	8
13-14	85+Nb=	10	10	12	12	35	10	12	34	9	12	35	11	12	37	8
11-12	75+Nb=	8	10	12	10	30	10	10	29	9	10	30	11	10	32	8
9-10	65+Nb=	6	10	12	8	25	11	8	24	9	8	25	11	8	27	8
7-8	55+Nb=	4	10	12	6	20	11	6	19	9	6	20	11	6	22	8
5-6	45+Nb=	2	10	12	4	15	11	4	14	9	4	15	11	4	17	8

MARK	A14						A15						A16			A17			A18		
TYPE	7						7						Str.			Str.			Str.		
SIZE	#5						#5						#5			#5			#5		
H	No.	Length ft.	Length in.	+Lb =	Length ft.	Length in.	No.	Length ft.	Length in.	+Lb =	Length ft.	Length in.	No.	Length ft.	Length in.	No.	Length ft.	Length in.	No.	Length ft.	Length in.
15-16	14	14	1	+Lb=			14	14	1	+Lb=			2	45	5	2	48	9	185	5	9
13-14	12	14	1	+Lb=			12	14	1	+Lb=			2	40	5	2	43	9	165	5	9
11-12	10	14	1	+Lb=			10	14	1	+Lb=			2	35	5	2	38	9	145	5	9
9-10	8	14	1	+Lb=			8	14	1	+Lb=			2	30	5	2	33	9	125	5	9
7-8	6	14	1	+Lb=			6	14	1	+Lb=			2	25	5	2	28	9	105	5	9
5-6	4	14	1	+Lb=			4	14	1	+Lb=			2	20	5	2	23	9	85	5	9

Table of Dimensions

H	W		N		M2		M3		T2		T3		L2	L3	S2					S3				
	Length ft.	Length in.	Length ft.	Length in.	Length ft.	Length in.	Length ft.	Length in.	Length ft.	Length in.	Length ft.	Length in.	Length ft.	Length ft.	Length ft.	Length in.	$+\frac{Lb}{2}=$	Length ft.	Length in.	Length ft.	Length in.	$+\frac{Lb}{2}=$	Length ft.	Length in.
15-16	12	0	5	0	31	7⅜	40	7¼	26	6¼	34	⅞	38	38	13	1¼	+0.5Lb=			13	1¼	+0.5Lb=		
13-14	11	0	4	6	27	7¼	35	11½	23	1⅞	30	2⅛	33	33	12	5½	+0.5Lb=			12	5½	+0.5Lb=		
11-12	10	0	4	0	23	7⅛	31	3⅝	19	9½	26	3¼	28	28	11	9⅝	+0.5Lb=			11	9⅝	+0.5Lb=		
9-10	9	0	3	6	19	7	26	7⅞	16	5¼	22	4⅜	23	23	11	1¾	+0.5Lb=			11	1¾	+0.5Lb=		
7-8	7	6	2	9	15	5⅞	21	7⅛	12	11⅞	18	1⅜	18	18	10	2	+0.5Lb=			10	2	+0.5Lb=		
5-6	6	6	2	3	11	5¾	16	11¼	9	7½	14	2⅝	13	13	9	6¼	+0.5Lb=			9	6¼	+0.5Lb=		

Reinforcement Details

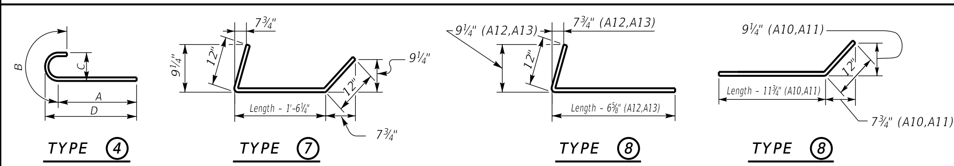

Quantities

H	Concrete* C.Y.	Reinforcement LBS.
5	34.19+(0.71xLb) =	3202+(52.8xLb) =
6	37.09+(0.78xLb) =	3202+(52.8xLb) =
7	53.82+(0.93xLb) =	4894+(68.7xLb) =
8	57.46+(1.01xLb) =	4894+(68.7xLb) =
9	80.09+(1.19xLb) =	7447+(91xLb) =
10	84.47+(1.27xLb) =	7447+(91xLb) =
11	108.97+(1.41xLb) =	11097+(120.4xLb) =
12	114.1+(1.49xLb) =	11097+(120.4xLb) =
13	142.31+(1.64xLb) =	16337+(161xLb) =
14	148.17+(1.71xLb) =	16337+(161xLb) =
15	180.08+(1.86xLb) =	22188+(198.6xLb) =
16	186.69+(1.93xLb) =	22188+(198.6xLb) =

*Concrete quantities computed using 21" beam depth on ½" pad & Variable Bridge Width

ABUTMENT SKEW CORRECTION FACTOR (SCF) = 1.305

NUMBER OF BARS TO ADD (Nb) = Bridge Width (feet) x SCF (round up to nearest whole number)

LENGTH OF ABUTMENT TO ADD (Lb) = Bridge Width (feet) x SCF (convert decimal to architectural)

GENERAL NOTES

SPECIFICATIONS: Construct abutments according to the current edition of the Kentucky Department of Highways Standard Specifications for Road and Bridge Construction. Abutments are designed for side by side box beams as detailed in Standard Drawings BDP-001 through BDP-012, current edition. Dimensions may be adjusted to allow for any out to out bridge width. Abutments are also adequate for Std. Dwg. slabs or steel beam superstructures.

FOUNDATION PRESSURE: Construct abutment footings on solid rock bearing material that can support a pressure of 8000 psf service or 10,800 psf strength factored as recommended by a geotechnical engineer.

WING LENGTHS: Calculated assuming 21" superstructure depth and stream bank elevation at top of footing.

FOOTING ELEVATION: Construct bottom of footing below the anticipated scour elevation. (This typically entails embedding the footings 1'-0" to 2'-0" into rock and pouring concrete directly against cut rock faces. as recommended by geotechnical engineer.)

NOTE: Distances to bars shown are clear dimensions unless otherwise noted.

MATERIAL SPECIFICATIONS:
Concrete, Class "A" = 3500 psi
Steel Reinforcement = Grade 60

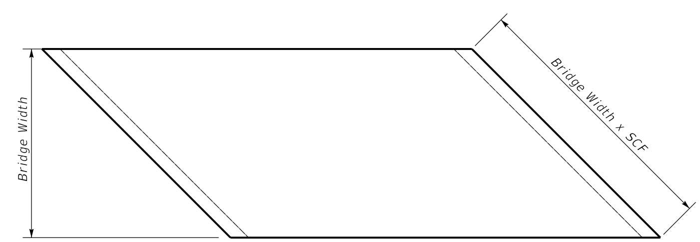

PLAN OF SUPERSTRUCTURE SLAB

KENTUCKY
DEPARTMENT OF HIGHWAYS

40° SKEW VARIABLE WIDTH ABUTMENT PARALLEL WINGS

STANDARD DRAWING NO. BSA-058

SUBMITTED ________ DIRECTOR DIVISION OF STRUCTURAL DESIGN 02-26-20 DATE

APPROVED ________ STATE HIGHWAY ENGINEER 02-26-20 DATE

45° SKEW VARIABLE BRIDGE WIDTH 2:1 FILL SLOPES WINGS PARALLEL TO ROADWAY

ABUTMENT SKEW CORRECTION FACTOR (SCF) = 1.414

For fanning A1 & A2 bars with an acute angle, space @ 12" at face of toe, then as you get closer to the corner start pulling every other bar back toward the heel. (Similar to as shown)

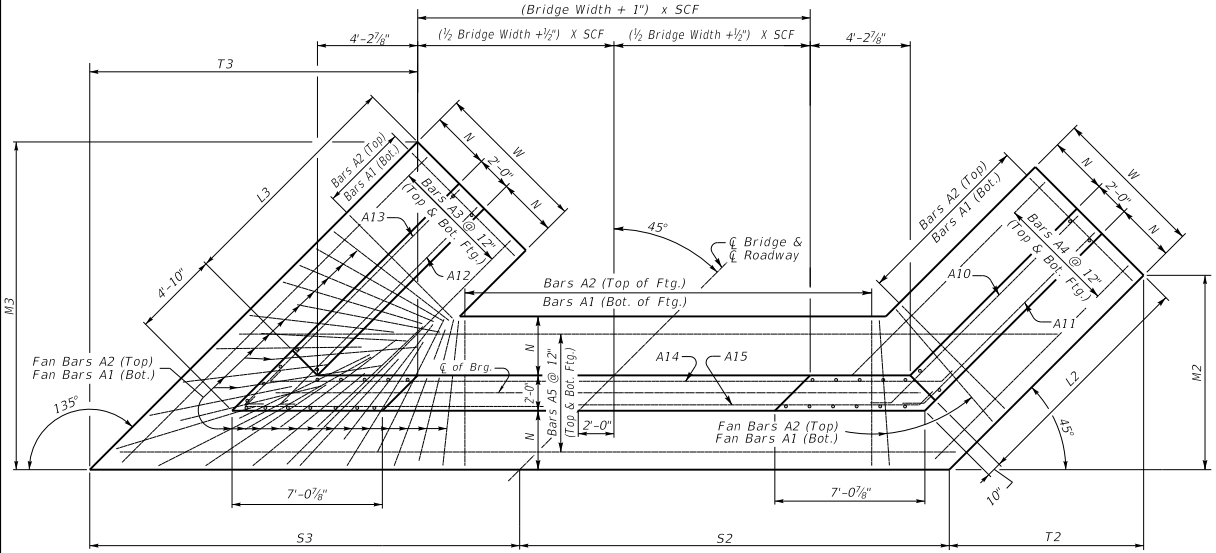

PLAN

(Left Skew as shown;right skew opp. hand)

NOTE: Trim A16 & A17 bars if necessary
Trim A3 bars as necessary

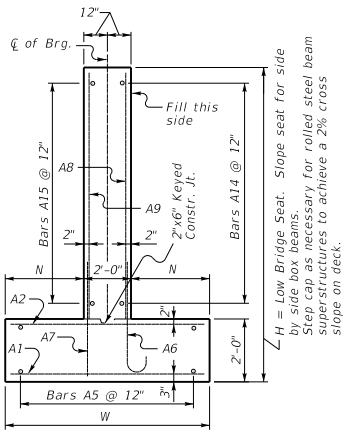

WALL SECTION

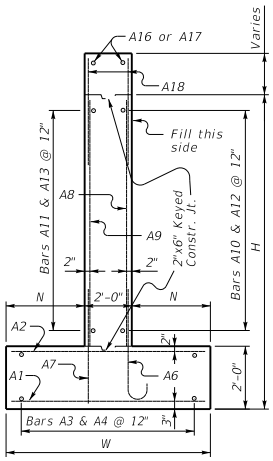

WING SECTION

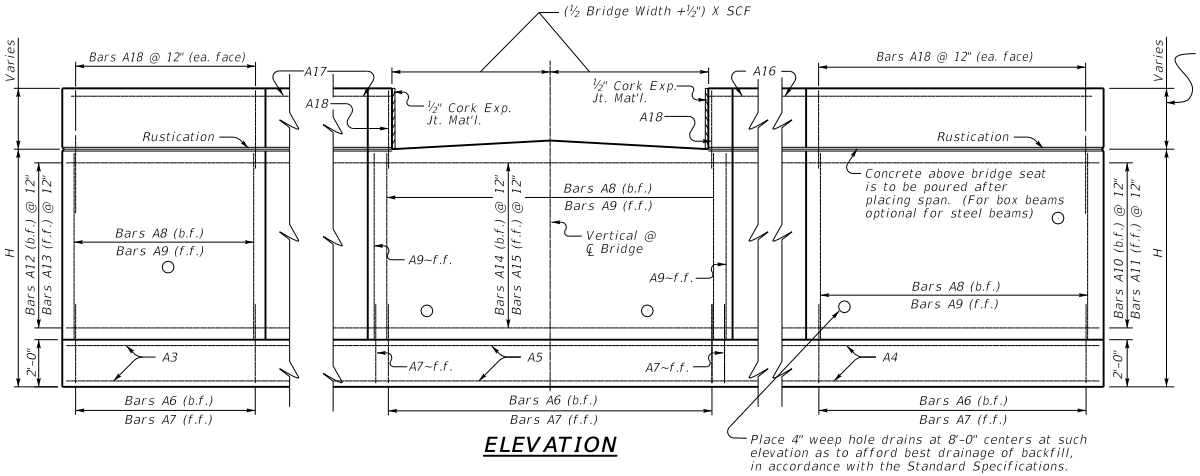

ELEVATION

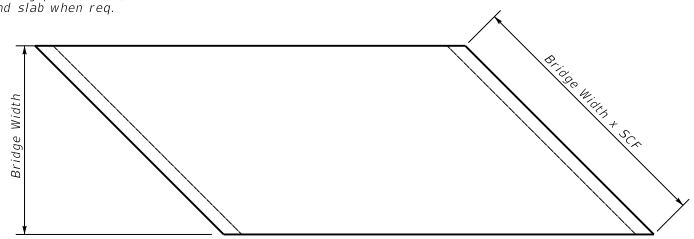

PLAN OF SUPERSTRUCTURE SLAB

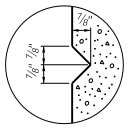

RUSTICATION GROOVE

KENTUCKY
DEPARTMENT OF HIGHWAYS

45° SKEW VARIABLE WIDTH ABUTMENT PARALLEL WINGS

STANDARD DRAWING NO. BSA-059

SUBMITTED _____ DIRECTOR DIVISION OF STRUCTURAL DESIGN — DATE 02-26-20

APPROVED _____ STATE HIGHWAY ENGINEER — DATE 02-26-20

45° SKEW VARIABLE BRIDGE WIDTH 2:1 FILL SLOPES
WINGS PARALLEL TO ROADWAY

Bill of Reinforcement

MARK	A1					A2					A3			A4			A5					
TYPE	Str.					Str.					Str.			Str.			Str.					
SIZE											#5			#5			#5					
H	No.	Size	Length ft.	Length in.	Spacing	No.	Size	Length ft.	Length in.	Spacing	No.	Length ft.	Length in.	No.	Length ft.	Length in.	No.	Length ft.	Length in.	+Lb =	Length ft.	Length in.
15-16	131+Nb=	10	11	8	12	131+Nb=	7	11	8	12	24	57	0	24	44	0	24	27	0	+Lb=		
13-14	119+Nb=	9	10	8	12	119+Nb=	7	10	8	12	22	50	10	22	38	9	22	25	7	+Lb=		
11-12	104+Nb=	8	9	8	12	104+Nb=	6	9	8	12	20	43	7	20	32	7	20	24	2	+Lb=		
9-10	91+Nb=	7	8	8	12	91+Nb=	5	8	8	12	18	37	5	18	27	4	18	22	9	+Lb=		
7-8	75+Nb=	6	7	2	12	75+Nb=	5	7	2	12	16	29	10	16	20	9	16	21	1	+Lb=		
5-6	62+Nb=	5	6	2	12	62+Nb=	5	6	2	12	14	23	8	14	15	7	14	19	8	+Lb=		

MARK	A6												
TYPE	4												
SIZE													
H	No.	Size	Length ft.	Length in.	Spacing	A ft.	A in.	B ft.	B in.	C ft.	C in.	D ft.	D in.
15-16	91+Nb=	9	9	11	12	8	⅛	1	10	0	11¾	8	6
13-14	81+Nb=	8	8	3	12	6	11	1	3	0	8	7	3
11-12	69+Nb=	7	7	1	12	5	10½	1	2	0	7	6	2
9-10	59+Nb=	6	6	1	12	5	1	1	0	0	6	5	4
7-8	47+Nb=	5	5	7	12	4	8½	0	10	0	5	4	11
5-6	37+Nb=	5	5	7	12	4	8½	0	10	0	5	4	11

MARK	A7					A8					A9			
TYPE	Str.					Str.					Str.			
SIZE											#5			
H	No.	Size	Length ft.	Length in.	Spacing	No.	Size	Length ft.	Length in.	Spacing	No.	Length ft.	Length in.	Spacing
15-16	102+Nb=	5	4	11	12	91+Nb=	6	12	10	12	102+Nb=	12	10	12
13-14	92+Nb=	5	4	11	12	81+Nb=	6	10	10	12	92+Nb=	10	10	12
11-12	80+Nb=	5	4	11	12	69+Nb=	5	8	10	12	80+Nb=	8	10	12
9-10	70+Nb=	5	4	11	12	59+Nb=	5	6	10	12	70+Nb=	6	10	12
7-8	58+Nb=	5	4	11	12	47+Nb=	5	4	10	12	58+Nb=	4	10	12
5-6	48+Nb=	5	4	11	12	37+Nb=	5	2	10	12	48+Nb=	2	10	12

MARK	A10			A11			A12			A13			A14						A15						A16			A17			A18		
TYPE	8			8			8			8			7						7						Str.			Str.			Str.		
SIZE	#5			#5			#5			#5			#5						#5						#5			#5			#5		
H	No.	Length ft.	Length in.	No.	Length ft.	Length in.	No.	Length ft.	Length in.	No.	Length ft.	Length in.	No.	Length ft.	Length in.	+Lb =	Length ft.	Length in.	No.	Length ft.	Length in.	+Lb =	Length ft.	Length in.	No.	Length ft.	Length in.	No.	Length ft.	Length in.	No.	Length ft.	Length in.
15-16	14	44	0	14	42	7	14	44	0	14	46	0	14	15	0	+Lb=			14	15	0	+Lb=			2	48	10	2	52	10	200	5	9
13-14	12	39	0	12	37	7	12	39	0	12	41	0	12	15	0	+Lb=			12	15	0	+Lb=			2	43	10	2	47	10	180	5	9
11-12	10	33	0	10	31	7	10	33	0	10	35	0	10	15	0	+Lb=			10	15	0	+Lb=			2	37	10	2	41	10	156	5	9
9-10	8	28	0	8	26	7	8	28	0	8	30	0	8	15	0	+Lb=			8	15	0	+Lb=			2	32	10	2	36	10	136	5	9
7-8	6	22	0	6	20	7	6	22	0	6	24	0	6	15	0	+Lb=			6	15	0	+Lb=			2	26	10	2	30	10	112	5	9
5-6	4	17	0	4	15	7	4	17	0	4	19	0	4	15	0	+Lb=			4	15	0	+Lb=			2	21	10	2	25	10	92	5	9

Table of Dimensions

H	W		N		M2		M3		T2		T3		L2	L3	S2					S3				
	Length ft.	Length in.	Length ft.	Length in.	Length ft.	Length in.	Length ft.	Length in.	Length ft.	Length in.	Length ft.	Length in.	Length ft.	Length ft.	Length ft.	Length in.	$+\frac{Lb}{2}=$	Length ft.	Length in.	Length ft.	Length in.	$+\frac{Lb}{2}=$	Length ft.	Length in.
15-16	12	0	5	0	31	½	40	11¼	31	½	40	11¼	41	41	14	2⅜	+0.5Lb=			14	2⅜	+0.5Lb=		
13-14	11	0	4	6	27	4⅜	36	6⅝	27	4⅜	36	6⅝	36	36	13	5⅞	+0.5Lb=			13	5⅞	+0.5Lb=		
11-12	10	0	4	0	22	11⅝	31	5½	22	11⅝	31	5½	30	30	12	9½	+0.5Lb=			12	9½	+0.5Lb=		
9-10	9	0	3	6	19	3½	27	¾	19	3½	27	¾	25	25	12	1	+0.5Lb=			12	1	+0.5Lb=		
7-8	7	6	2	9	14	9⅞	21	6½	14	9⅞	21	6½	19	19	11	¼	+0.5Lb=			11	¼	+0.5Lb=		
5-6	6	6	2	3	11	1¾	17	1⅞	11	1¾	17	1⅞	14	14	10	3¾	+0.5Lb=			10	3¾	+0.5Lb=		

Reinforcement Details

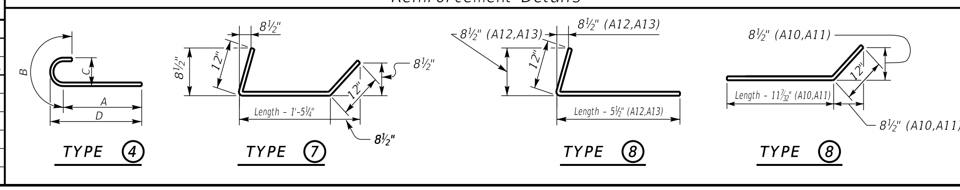

Quantities

H	Concrete* C.Y.	Reinforcement LBS.
5	36.9+(0.71xLb) =	3443+(52.8xLb) =
6	40.03+(0.78xLb) =	3443+(52.8xLb) =
7	57.21+(0.93xLb) =	5214+(68.7xLb) =
8	61.08+(1.01xLb) =	5214+(68.7xLb) =
9	86.98+(1.19xLb) =	8069+(91xLb) =
10	91.74+(1.27xLb) =	8069+(91xLb) =
11	117.01+(1.41xLb) =	11902+(120.4xLb) =
12	122.51+(1.49xLb) =	11902+(120.4xLb) =
13	155.06+(1.64xLb) =	17799+(161xLb) =
14	161.45+(1.71xLb) =	17799+(161xLb) =
15	194.42+(1.86xLb) =	23895+(198.6xLb) =
16	201.55+(1.93xLb) =	23895+(198.6xLb) =

*Concrete quantities computed using 21" beam depth on ½" pad & Variable Bridge Width

ABUTMENT SKEW CORRECTION FACTOR (SCF) = 1.414

NUMBER OF BARS TO ADD (Nb) = Bridge Width (feet) x SCF (round up to nearest whole number)

LENGTH OF ABUTMENT TO ADD (Lb) = Bridge Width (feet) x SCF (convert decimal to architectural)

GENERAL NOTES

SPECIFICATIONS: Construct abutments according to the current edition of the Kentucky Department of Highways Standard Specifications for Road and Bridge Construction. Abutments are designed for side by side box beams as detailed in Standard Drawings BDP-001 through BDP-012, current edition. Dimensions may be adjusted to allow for any out to out bridge width. Abutments are also adequate for Std. Dwg. slabs or steel beam superstructures.

FOUNDATION PRESSURE: Construct abutment footings on solid rock bearing material that can support a pressure of 8000 psf service or 10,800 psf strength factored as recommended by a geotechnical engineer.

WING LENGTHS: Calculated assuming 21" superstructure depth and stream bank elevation at top of footing.

FOOTING ELEVATION: Construct bottom of footing below the anticipated scour elevation. (This typically entails embedding the footings 1'-0" to 2'-0" into rock and pouring concrete directly against cut rock faces. as recommended by geotechnical engineer.)

NOTE: Distances to bars shown are clear dimensions unless otherwise noted.

MATERIAL SPECIFICATIONS:
Concrete, Class "A" = 3500 psi
Steel Reinforcement = Grade 60

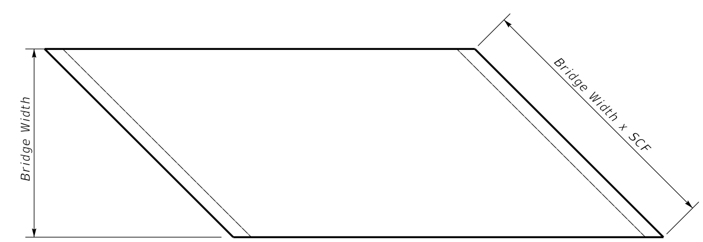

PLAN OF SUPERSTRUCTURE SLAB

KENTUCKY
DEPARTMENT OF HIGHWAYS

45° SKEW VARIABLE
WIDTH ABUTMENT
PARALLEL WINGS

STANDARD DRAWING NO. BSA-060

SUBMITTED [signature] DIRECTOR DIVISION OF STRUCTURAL DESIGN 02-26-20 DATE

APPROVED [signature] STATE HIGHWAY ENGINEER 02-26-20 DATE

0° SKEW 16'-0" - 17'-6" BRIDGE WIDTH 2:1 FILL SLOPES

Bill of Reinforcement

MARK	A1	A2	A3	A4	A5	A6	A7	A8	A9	A10	A11	A12	A13	A14	A15	A16	A17	A18
TYPE	Str.	Str.	Str.	Str.	Str.	4	Str.	Str.	Str.	8	8	8	8	7	7	Str.	Str.	Str.
SIZE			#5	#5	#5				#5	#5	#5	#5	#5	#5	#5	#5	#5	#5

H	A1 No.	A1 Size	A1 Length ft.	A1 Length in.	A1 Spacing	A2 No.	A2 Size	A2 Length ft.	A2 Length in.	A2 Spacing	A3 No.	A3 Length ft.	A3 Length in.	A4 No.	A4 Length ft.	A4 Length in.	A5 No.	A5 Length ft.	A5 Length in.
15-16	68	10	11	8	12	68	7	11	8	12	24	24	0	24	24	0	24	29	10
13-14	64	9	10	8	12	64	7	10	8	12	22	20	9	22	20	9	22	29	5
11-12	61	8	9	8	12	61	6	9	8	12	20	18	7	20	18	7	20	29	0
9-10	57	7	8	8	12	57	5	8	8	12	18	16	4	18	16	4	18	28	7
7-8	50	6	7	2	12	50	5	7	2	12	16	11	9	16	11	9	16	27	6
5-6	48	5	6	2	12	48	5	6	2	12	14	9	7	14	9	7	14	27	1

H	A6 No.	A6 Size	A6 Length ft.	A6 Length in.	A6 Spacing	A6 A ft.	A6 A in.	A6 B ft.	A6 B in.	A6 C ft.	A6 C in.	A6 D ft.	A6 D in.	A7 No.	A7 Length ft.	A7 Length in.	A7 Spacing	A8 No.	A8 Length ft.	A8 Length in.	A8 Spacing
15-16	66	9	9	11	12	8	⅛	1	10	0	11¾	8	6	69	5	4	11	12	66	6	12
13-14	60	8	8	3	12	6	11	1	3	0	8	7	3	63	5	4	11	12	60	6	10
11-12	56	7	7	1	12	5	10½	1	2	0	7	6	2	59	5	4	11	12	56	5	8
9-10	52	6	6	1	12	5	1	1	0	0	6	5	4	55	5	4	11	12	52	5	6
7-8	44	5	5	7	12	4	8½	0	10	0	5	4	11	47	5	4	11	12	44	5	4
5-6	40	5	5	7	12	4	8½	0	10	0	5	4	11	43	5	4	11	12	40	5	2

H	A9 No.	A9 Length ft.	A9 Length in.	A9 Spacing	A10 No.	A10 Length ft.	A10 Length in.	A11 No.	A11 Length ft.	A11 Length in.	A12 No.	A12 Length ft.	A12 Length in.	A13 No.	A13 Length ft.	A13 Length in.	A14 No.	A14 Length ft.	A14 Length in.	A15 No.	A15 Length ft.	A15 Length in.	A16 No.	A16 Length ft.	A16 Length in.	A17 No.	A17 Length ft.	A17 Length in.	A18 No.	A18 Length ft.	A18 Length in.
15-16	69	12	10	12	14	24	0	14	22	7	14	24	0	14	22	7	14	29	11	14	27	0	2	26	4	2	26	4	108	5	9
13-14	63	10	10	12	12	21	0	12	19	7	12	21	0	12	19	7	12	29	11	12	27	0	2	23	4	2	23	4	96	5	9
11-12	59	8	10	12	10	19	0	10	17	7	10	19	0	10	17	7	10	29	11	10	27	0	2	21	4	2	21	4	88	5	9
9-10	55	6	10	12	8	17	0	8	15	7	8	17	0	8	15	7	8	30	0	8	27	0	2	19	4	2	19	4	80	5	9
7-8	47	4	10	12	6	13	0	6	11	7	6	13	0	6	11	7	6	30	0	6	27	0	2	15	4	2	15	4	64	5	9
5-6	43	2	10	12	4	11	0	4	9	7	4	11	0	4	9	7	4	30	0	4	27	0	2	13	4	2	13	4	56	5	9

Reinforcement Details

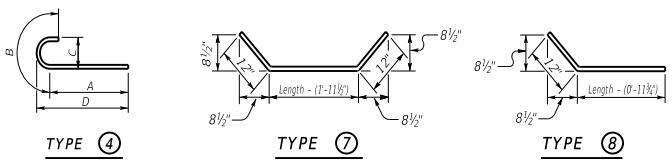

Table of Dimensions

H	W Length ft.	W Length in.	N Length ft.	N Length in.	M1 Length ft.	M1 Length in.	S1 Length ft.	S1 Length in.	T1 Length ft.	T1 Length in.	L1 Length ft.
15-16	12	0	5	0	16	10¾	14	8½	16	10¾	21
13-14	11	0	4	6	14	7⅝	14	5⅞	14	7⅝	18
11-12	10	0	4	0	13	⅞	14	3⅜	13	¾	16
9-10	9	0	3	6	11	6⅛	14	⅞	11	6⅛	14
7-8	7	6	2	9	8	5½	13	9⅝	8	5½	10
5-6	6	6	2	3	6	10⅞	13	6⅝	6	10⅞	8

4 foot min. shoulder

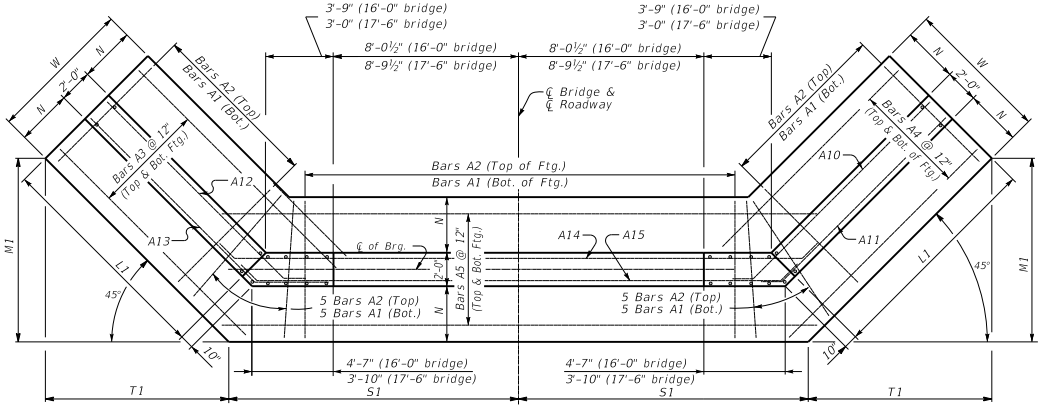

PLAN

NOTE: Trim A16 & A17 bars if necessary

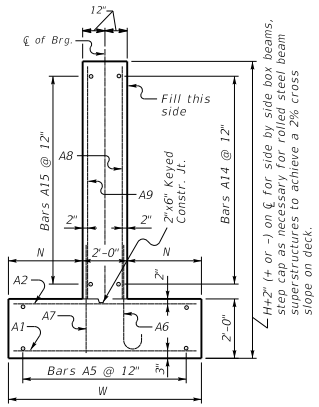

WALL SECTION

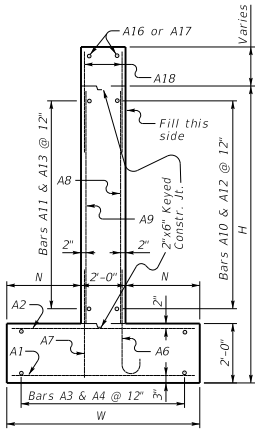

WING SECTION

Quantities

H	Concrete* C.Y.	Reinforcement LBS.
5	32.3	2801
6	35.3	2801
7	45.5	3843
8	48.9	3843
9	67.6	5792
10	71.5	5792
11	85.4	8010
12	89.7	8010
13	105.1	11097
14	109.6	11097
15	130.4	14634
16	135.4	14634

*Concrete quantities computed using 21" beam depth on ½" pad & 16'-0" Bridge Width

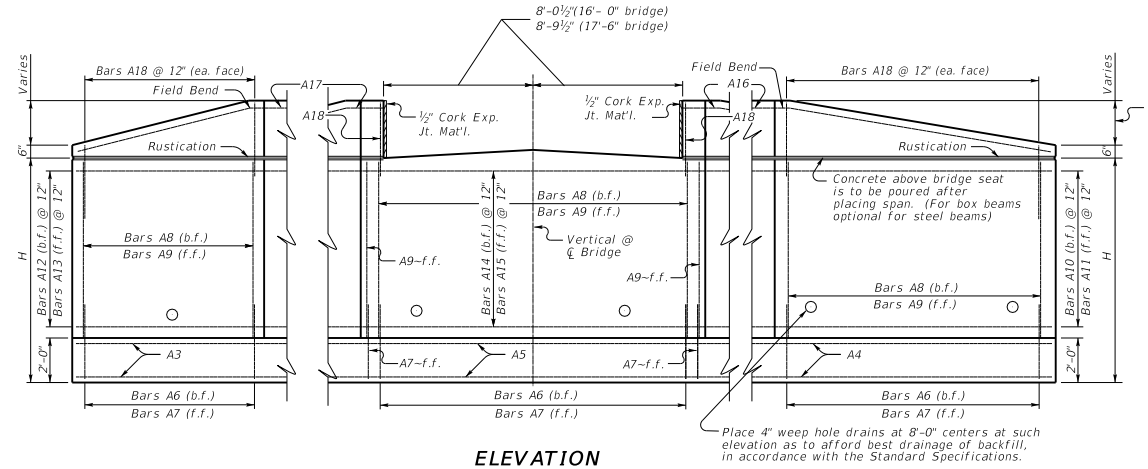

ELEVATION

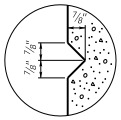

RUSTICATION GROOVE

GENERAL NOTES

SPECIFICATIONS: Construct abutments according to the current edition of the Kentucky Department of Highways Standard Specifications for Road and Bridge Construction. Abutments are designed for side by side box beams as detailed in Standard Drawings BDP-001 through BDP-012, current edition. Dimensions may be adjusted to allow for 17'-6" rolled steel beam bridge width.

FOUNDATION PRESSURE: Construct abutment footings on solid rock bearing material that can support a pressure of 8000 psf service or 10,800 psf strength factored as recommended by a geotechnical engineer.

WING LENGTHS: Calculated assuming 21" superstructure depth and stream bank elevation at top of footing.

FOOTING ELEVATION: Construct bottom of footing below the anticipated scour elevation. (This typically entails embedding the footings 1'-0" to 2'-0" into rock and pouring concrete directly against cut rock faces as recommended by geotechnical engineer.)

NOTE: Distances to bars shown are clear dimensions unless otherwise noted.

MATERIAL SPECIFICATIONS:
Concrete, Class "A" = 3500 psi
Steel Reinforcement = Grade 60

KENTUCKY
DEPARTMENT OF HIGHWAYS

0° SKEW
16'-0"-17'-6" BRIDGE WIDTH
2:1 FILL SLP, 4' MIN. SHLDR.

STANDARD DRAWING NO. BSA-101

SUBMITTED _____ DIRECTOR DIVISION OF STRUCTURAL DESIGN — DATE 02-26-20

APPROVED _____ STATE HIGHWAY ENGINEER — DATE 02-26-20

0° SKEW 24'-0" – 25'-6" BRIDGE WIDTH 2:1 FILL SLOPES

Bill of Reinforcement

MARK	A1				A2				A3	A4	A5	A6								A7				A8				A9				A10		A11		A12		A13		A14		A15		A16		A17		A18	
TYPE	Str.				Str.				Str.	Str.	Str.	4								Str.				Str.				Str.				8		8		8		8		7		7		Str.		Str.		Str.	
SIZE									#5	#5	#5																	#5				#5		#5		#5		#5		#5		#5		#5		#5		#5	
H	No.	Size	Length ft.	Length in.	No.	Size	Length ft.	Length in.	No.	No.	No.	No.	Size	Length ft.	Length in.	A ft.	A in.	B ft.	B in.	C ft.	C in.	D ft.	D in.	No.	Size	Length ft.	Length in.	No.	Size	Length ft.	Length in.	No.	Length ft.	Length in.	No.	Length ft.	Length in.	No.	Length ft.	Length in.	No.	Length ft.	Length in.	No.	Length ft.	Length in.	No.	Length ft.	Length in.	No.	Length ft.	Length in.
15-16	76	10	11	8	12	76	7	11	8	12	24	24	0	24	24	0	24	37	10	74	9	9	11	12	8	⅛	1	10	0	11¾	8	6	77	5	4	11	12	74	6	12	10	12	77	12	10	12	14	24	0	14	22	7	14	24	0	14	22	7	14	37	11	14	35	0	2	26	4	2	26	4	108	5	9
13-14	72	9	10	8	12	72	7	10	8	12	22	20	9	22	20	9	22	37	5	68	8	8	3	12	6	11	1	3	0	8	7	3	71	5	4	11	12	68	6	10	10	12	71	10	10	12	12	21	0	12	19	7	12	21	0	12	19	7	12	37	11	12	35	0	2	23	4	2	23	4	96	5	9
11-12	69	8	9	8	12	69	6	9	8	12	20	18	7	20	18	7	20	37	0	64	7	7	1	12	5	10½	1	2	0	7	6	2	67	5	4	11	12	64	5	8	10	12	67	8	10	12	10	19	0	10	17	7	10	19	0	10	17	7	10	37	11	10	35	0	2	21	4	2	21	4	88	5	9
9-10	65	7	8	8	12	65	5	8	8	12	18	16	4	18	16	4	18	36	7	60	6	6	1	12	5	1	1	0	0	6	5	4	63	5	4	11	12	60	5	6	10	12	63	6	10	12	8	17	0	8	15	7	8	17	0	8	15	7	8	38	0	8	35	0	2	19	4	2	19	4	80	5	9
7-8	58	6	7	2	12	58	5	7	2	12	16	13	9	16	13	9	16	35	6	52	5	5	7	12	4	8½	0	10	0	5	4	11	55	5	4	11	12	52	5	4	10	12	55	4	10	12	6	13	0	6	13	7	6	13	0	6	13	7	6	38	0	6	35	0	2	15	4	2	15	4	64	5	9
5-6	56	5	6	2	12	56	5	6	2	12	14	9	7	14	9	7	14	35	1	48	5	5	7	12	4	8½	0	10	0	5	4	11	51	5	4	11	12	48	5	2	10	12	51	2	10	12	4	11	0	4	9	7	4	11	0	4	9	7	4	38	0	4	35	0	2	13	4	2	13	4	56	5	9

Reinforcement Details

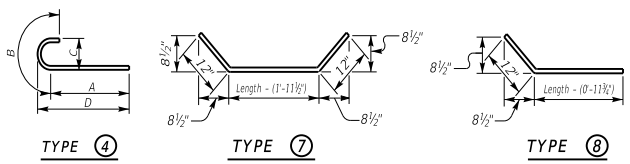

Table of Dimensions

H	W Length ft.	W Length in.	N Length ft.	N Length in.	M1 Length ft.	M1 Length in.	S1 Length ft.	S1 Length in.	T1 Length ft.	T1 Length in.	L1 Length ft.
15-16	12	0	5	0	16	10¾	18	8¼	16	10¾	21
13-14	11	0	4	6	14	7⅞	18	5¾	14	7⅞	18
11-12	10	0	4	0	13	⅞	18	3⅜	13	⅞	16
9-10	9	0	3	6	11	6⅛	18	⅞	11	6⅛	14
7-8	7	6	2	9	8	5½	17	9⅛	8	5½	10
5-6	6	6	2	3	6	10⅞	17	6⅜	6	10⅞	8

4 foot min. shoulder

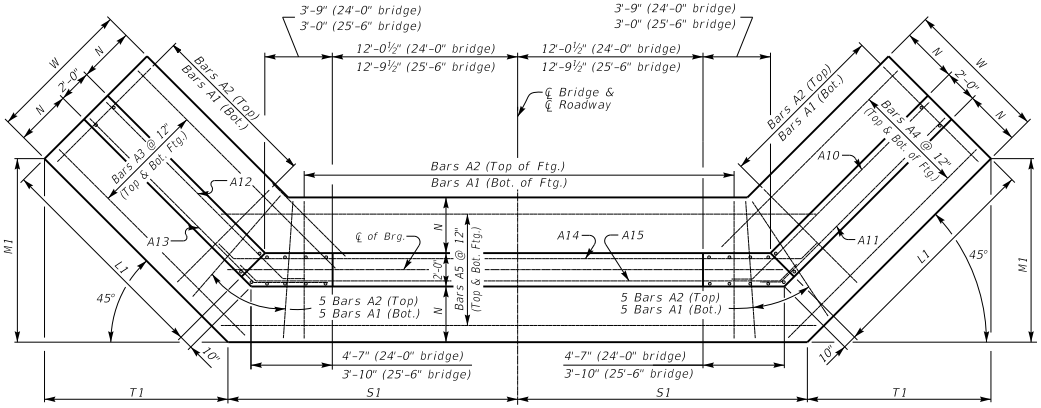

PLAN

NOTE: Trim A16 & A17 bars if necessary

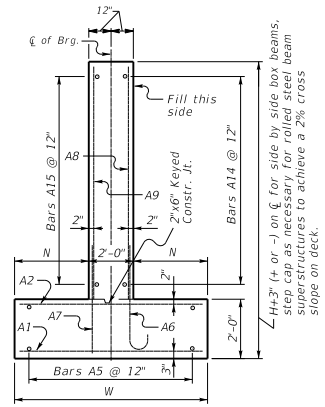

WALL SECTION

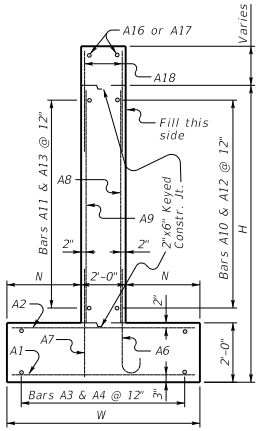

WING SECTION

Quantities

H	Concrete* C.Y.	Reinforcement LBS.
5	38	3223
6	41.7	3223
7	53.1	4392
8	57	4392
9	77.2	6520
10	81.7	6520
11	96.8	8974
12	101.7	8974
13	118.2	12385
14	123.4	12385
15	145.4	16223
16	150.9	16223

*Concrete quantities computed using 21" beam depth on ½" pad & 24'-0" Bridge Width

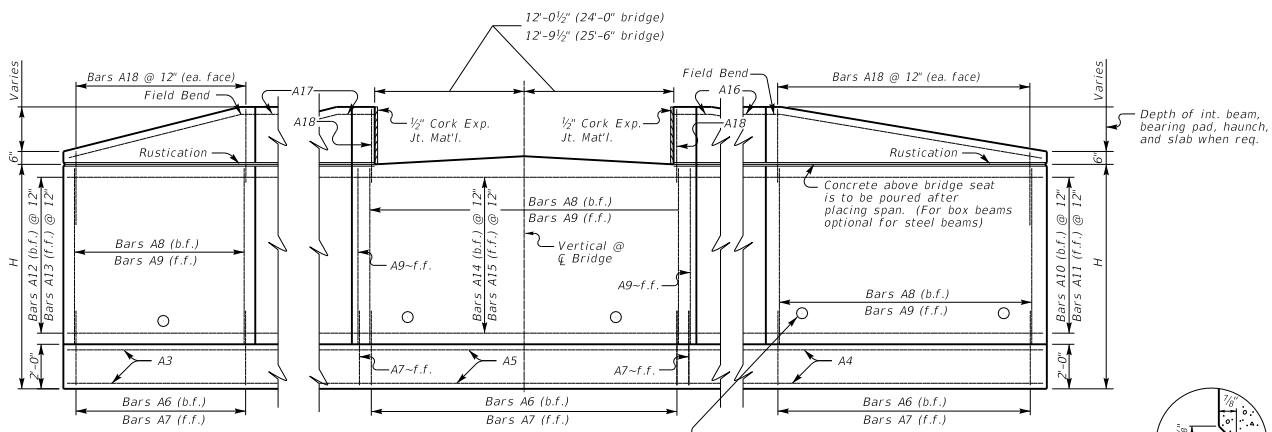

ELEVATION

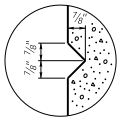

RUSTICATION GROOVE

GENERAL NOTES

SPECIFICATIONS: *Construct abutments according to the current edition of the Kentucky Department of Highways Standard Specifications for Road and Bridge Construction. Abutments are designed for side by side box beams as detailed in Standard Drawings BDP-001 through BDP-012, current edition. Dimensions may be adjusted to allow for 25'-6" rolled steel beam bridge width.*

FOUNDATION PRESSURE: *Construct abutment footings on solid rock bearing material that can support a pressure of 8000 psf service or 10,800 psf strength factored as recommended by a geotechnical engineer.*

WING LENGTHS: *Calculated assuming 21" superstructure depth and stream bank elevation at top of footing.*

FOOTING ELEVATION: *Construct bottom of footing below the anticipated scour elevation. (This typically entails embedding the footings 1'-0" to 2'-0" into rock and pouring concrete directly against cut rock faces as recommended by geotechnical engineer.)*

NOTE: *Distances to bars shown are clear dimensions unless otherwise noted.*

MATERIAL SPECIFICATIONS:
Concrete, Class "A" = 3500 psi
Steel Reinforcement = Grade 60

KENTUCKY
DEPARTMENT OF HIGHWAYS

0° SKEW
24'-0"-25'-6" BRIDGE WIDTH
2:1 FILL SLP, 4' MIN. SHLDR.

STANDARD DRAWING NO. BSA-102

SUBMITTED _____ DIRECTOR DIVISION OF STRUCTURAL DESIGN — DATE 02-26-20

APPROVED _____ STATE HIGHWAY ENGINEER — DATE 02-26-20

0° SKEW 32'-0" - 33'-6" BRIDGE WIDTH 2:1 FILL SLOPES

Bill of Reinforcement

MARK	A1				A2				A3				A4				A5				A6												A7				A8				A9				A10				A11				A12				A13				A14				A15				A16				A17				A18			
TYPE	Str.				Str.				Str.				Str.				Str.				4												Str.				Str.				Str.				8				8				8				8				7				7				Str.				Str.				Str.			
SIZE									#5				#5				#5																								#5				#5				#5				#5				#5				#5				#5				#5				#5			
H	No.	Size	Length ft.	Length in.	No.	Size	Length ft.	Length in.	No.	Size	Length ft.	Length in.	No.	Size	Length ft.	Length in.	No.	Size	Length ft.	Length in.	No.	Size	Length ft.	Length in.	A in.	B in.	C in.	D in.	No.	Size	Length ft.	Length in.	No.	Size	Length ft.	Length in.	No.	Size	Length ft.	Length in.	No.	Size	Length ft.	Length in.	No.	Size	Length ft.	Length in.	No.	Size	Length ft.	Length in.	No.	Size	Length ft.	Length in.	No.	Size	Length ft.	Length in.	No.	Size	Length ft.	Length in.	No.	Size	Length ft.	Length in.	No.	Size	Length ft.	Length in.	No.	Size	Length ft.	Length in.
15-16	84	10	11	8	12	84	7	11	8	12	24	24	0	24	24	0	24	45	10	82	9	9	11	12	8	⅛	1	10	0	1	1⅜	8	6	85	5	4	11	12	85	12	10	12	12	14	24	0	14	22	7	14	24	0	14	22	7	14	45	11	14	43	0	2	26	4	2	26	4	108	5	9
13-14	80	9	10	8	12	80	7	10	8	12	22	20	9	22	20	9	22	45	5	76	8	8	3	12	6	11	1	3	0	8	7	3	79	5	4	11	12	76	6	10	10	12	79	10	10	12	12	21	0	12	19	7	12	21	0	12	19	7	12	45	11	12	43	0	2	23	4	2	23	4	96	5	9
11-12	77	8	9	8	12	77	6	9	8	12	20	18	7	20	18	7	20	45	0	72	7	7	1	12	5	10½	1	2	0	7	6	2	75	5	4	11	12	72	5	8	10	12	75	8	10	12	10	19	0	10	17	7	10	19	0	10	17	7	10	45	11	10	43	0	2	21	4	2	21	4	88	5	9
9-10	73	7	8	8	12	73	5	8	8	12	18	16	4	18	16	4	18	44	7	68	6	6	1	12	5	1	1	0	0	6	5	4	71	5	4	11	12	68	5	6	10	12	71	6	10	12	8	17	0	8	15	7	8	17	0	8	15	7	8	46	0	8	43	0	2	19	4	2	19	4	80	5	9
7-8	66	6	7	2	12	66	5	7	2	12	16	11	9	16	11	9	16	43	6	60	5	5	7	12	4	8½	0	10	0	5	4	11	63	5	4	11	12	60	5	4	10	12	63	4	10	12	6	13	0	6	11	7	6	13	0	6	11	7	6	46	0	6	43	0	2	15	4	2	15	4	64	5	9
5-6	64	5	6	2	12	64	5	6	2	12	14	9	7	14	9	7	14	43	1	56	5	5	7	12	4	8½	0	10	0	5	4	11	59	5	4	11	12	56	5	2	10	12	59	2	10	12	4	11	0	4	9	7	4	11	0	4	9	7	4	46	0	4	43	0	2	13	4	2	13	4	56	5	9

Reinforcement Details

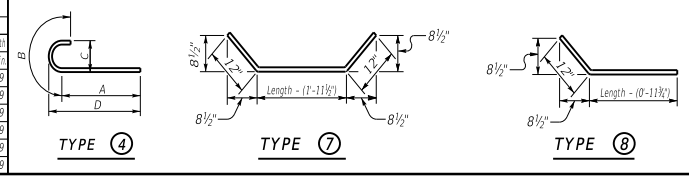

Table of Dimensions

H	W Length ft.	W Length in.	N Length ft.	N Length in.	M1 Length ft.	M1 Length in.	S1 Length ft.	S1 Length in.	T1 Length ft.	T1 Length in.	L1 Length ft.
15-16	12	0	5	0	16	10¾	22	8¼	16	10¾	21
13-14	11	0	4	6	14	7⅝	22	5¾	14	7⅝	18
11-12	10	0	4	0	13	⅞	22	3⅜	13	⅞	16
9-10	9	0	3	6	11	6⅛	22	⅞	11	6⅛	14
7-8	7	6	2	9	8	5½	21	9⅛	8	5½	10
5-6	6	6	2	3	6	10⅞	21	6⅝	6	10⅞	8

4 foot min. shoulder

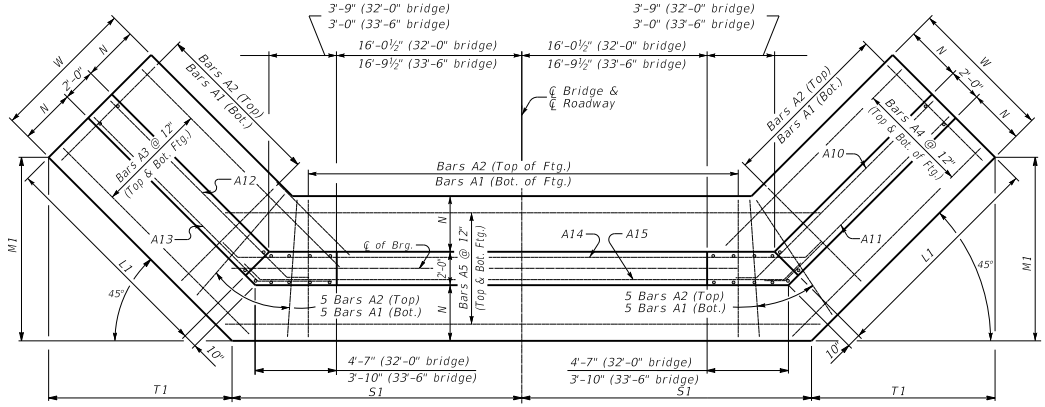

PLAN

Note: Trim A16 & A17 bars if necessary

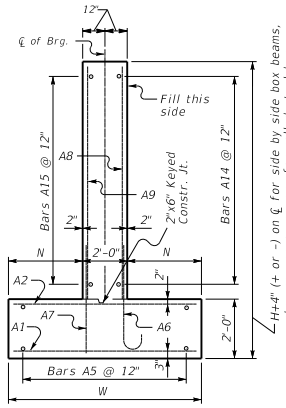

WALL SECTION

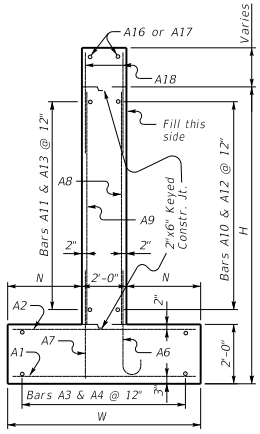

WING SECTION

Quantities

H	Concrete* C.Y.	Reinforcement LBS.
5	43.8	3646
6	48.1	3646
7	60.6	4941
8	65.2	4941
9	86.8	7248
10	91.9	7248
11	108.2	9938
12	113.7	9938
13	131.4	13673
14	137.2	13673
15	160.3	17812
16	166.5	17812

*Concrete quantities computed using 21" beam depth on ½" pad & 32'-0" Bridge Width

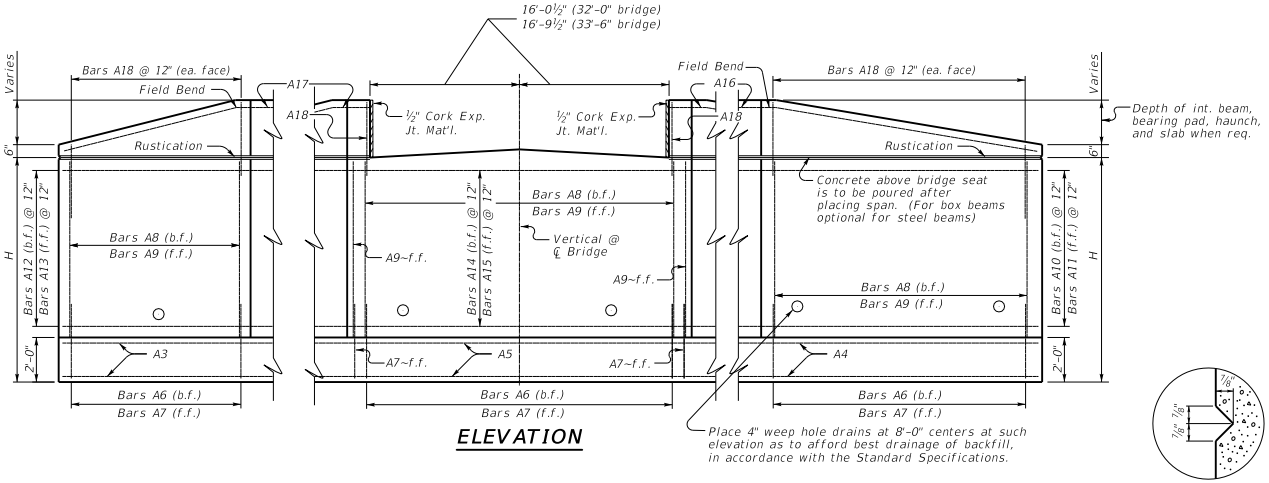

ELEVATION

RUSTICATION GROOVE

GENERAL NOTES

SPECIFICATIONS: Construct abutments according to the current edition of the Kentucky Department of Highways Standard Specifications for Road and Bridge Construction. Abutments are designed for side by side box beams as detailed in Standard Drawings BDP-001 through BDP-012, current edition. Dimensions may be adjusted to allow for 33'-6" rolled steel beam bridge width.

FOUNDATION PRESSURE: Construct abutment footings on solid rock bearing material that can support a pressure of 8000 psf service or 10,800 psf strength factored as recommended by a geotechnical engineer.

WING LENGTHS: Calculated assuming 21" superstructure depth and stream bank elevation at top of footing.

FOOTING ELEVATION: Construct bottom of footing below the anticipated scour elevation. (This typically entails embedding the footings 1'-0" to 2'-0" into rock and pouring concrete directly against cut rock faces as recommended by geotechnical engineer.)

NOTE: Distances to bars shown are clear dimensions unless otherwise noted.

MATERIAL SPECIFICATIONS:
Concrete, Class "A" = 3500 psi
Steel Reinforcement = Grade 60

KENTUCKY
DEPARTMENT OF HIGHWAYS

0° SKEW
32'-0"-33'-6" BRIDGE WIDTH
2:1 FILL SLP, 4' MIN. SHLDR.

STANDARD DRAWING NO. BSA-103

SUBMITTED _____ DIRECTOR DIVISION OF STRUCTURAL DESIGN — DATE 02-26-20

APPROVED _____ STATE HIGHWAY ENGINEER — DATE 02-26-20

15° SKEW 16'-0" – 17'-6" BRIDGE WIDTH 2:1 FILL SLOPES

Bill of Reinforcement

MARK	A1				A2				A3				A4				A5				A6												A7				A8				A9				A10				A11				A12				A13				A14				A15				A16				A17				A18			
TYPE	Str.				Str.				Str.				Str.				Str.				4												Str.				Str.				Str.				8				8				8				8				7				7				Str.				Str.				Str.			
SIZE									#5				#5				#5																								#5				#5				#5				#5				#5				#5				#5				#5				#5			
H	No.	Size	Length Ft.	Length In.	No.	Size	Length Ft.	Length In.	No.	Size	Length Ft.	Length In.	No.	Size	Length Ft.	Length In.	No.	Size	Length Ft.	Length In.	No.	Size	Length Ft.	Length In.	A In.	B Ft.	B In.	C Ft.	C In.	D Ft.	D In.	No.	Size	Length Ft.	Length In.	No.	Size	Length Ft.	Length In.	No.	Size	Length Ft.	Length In.	No.	Size	Length Ft.	Length In.	No.	Size	Length Ft.	Length In.	No.	Size	Length Ft.	Length In.	No.	Size	Length Ft.	Length In.	No.	Size	Length Ft.	Length In.	No.	Size	Length Ft.	Length In.	No.	Size	Length Ft.	Length In.	No.	Size	Length Ft.	Length In.
15-16	70	10	11	8	12	70	7	11	8	12	24	21	5	24	26	7	24	30	7	67	9	9	11	12	8	⅜	1	10	0	1⅞	8	6	70	5	4	11	12	67	6	12	10	12	70	12	10	12	27	4	14	25	6	14	20	10	14	19	9	14	30	10	14	27	10	2	29	8	2	23	3	110	5	9
13-14	65	9	10	8	12	65	7	10	8	12	22	19	2	22	23	5	22	30	2	62	8	8	3	12	6	11	1	3	0	8	7	3	65	5	4	11	12	62	6	10	10	12	65	10	10	12	24	4	12	22	6	12	18	10	12	17	9	12	30	11	12	27	10	2	26	8	2	21	3	100	5	9
11-12	62	8	9	8	12	62	6	9	8	12	20	16	11	20	20	3	20	29	9	57	7	7	1	12	5	10½	1	2	0	7	6	2	60	5	4	11	12	57	5	8	10	12	60	8	10	12	21	4	10	19	6	10	16	10	10	15	9	10	30	11	10	27	10	2	23	8	2	19	3	90	5	9
9-10	56	7	8	8	12	56	5	8	8	12	18	13	8	18	17	1	18	29	4	51	6	6	1	12	5	1	1	0	0	6	5	4	54	5	4	11	12	51	5	6	10	12	54	6	10	12	8	18	4	8	16	6	8	13	10	8	12	9	8	30	11	8	27	10	2	20	8	2	16	3	78	5	9
7-8	52	6	7	2	12	52	5	7	2	12	16	11	2	16	12	6	16	28	4	45	5	5	7	12	4	8½	0	10	0	5	4	11	48	5	4	11	12	45	5	4	10	12	48	4	10	12	6	14	4	6	12	6	6	11	10	6	10	9	6	30	11	6	27	10	2	16	8	2	14	3	66	5	9
5-6	48	5	6	2	12	48	5	6	2	12	14	8	11	14	10	4	14	27	11	41	5	5	7	12	4	8½	0	10	0	5	4	11	44	5	4	11	12	41	5	2	10	12	44	2	10	12	4	12	4	4	10	6	4	9	10	4	8	9	4	30	11	4	27	10	2	14	8	2	12	3	58	5	9

Reinforcement Details

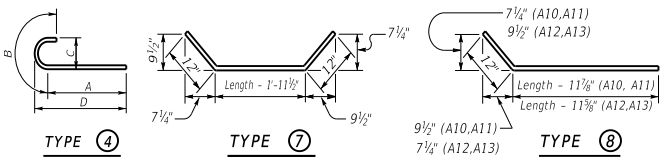

Table of Dimensions

H	W Length Ft.	W Length In.	N Length Ft.	N Length In.	M6 Length Ft.	M6 Length In.	M7 Length Ft.	M7 Length In.	S6 Length Ft.	S6 Length In.	S7 Length Ft.	S7 Length In.	T6 Length Ft.	T6 Length In.	T7 Length Ft.	T7 Length In.	L6 Length Ft.	L6 Length In.	L7 Length Ft.
15-16	12	0	5	0	16	⅜	17	¼	16	5½	13	9⅝	20	1⅛	13	¾	24		18
13-14	11	0	4	6	14	1½	15	2⅞	16	1⅞	13	8	18	4⅛	11	8¼	21		16
11-12	10	0	4	0	12	2⅜	13	5½	15	10½	13	6⅞	15	10⅞	10	3⅛	18		14
9-10	9	0	3	6	10	3½	10	10½	15	6⅝	13	5⅝	13	4⅝	8	4⅛	15		11
7-8	7	6	2	9	7	8⅛	9	0	15	1⅞	13	3⅜	10	⅛	6	10⅞	11		9
5-6	6	6	2	3	6	4½	7	2⅝	14	9½	13	2	8	3⅜	5	6½	9		7

4 foot min. shoulder

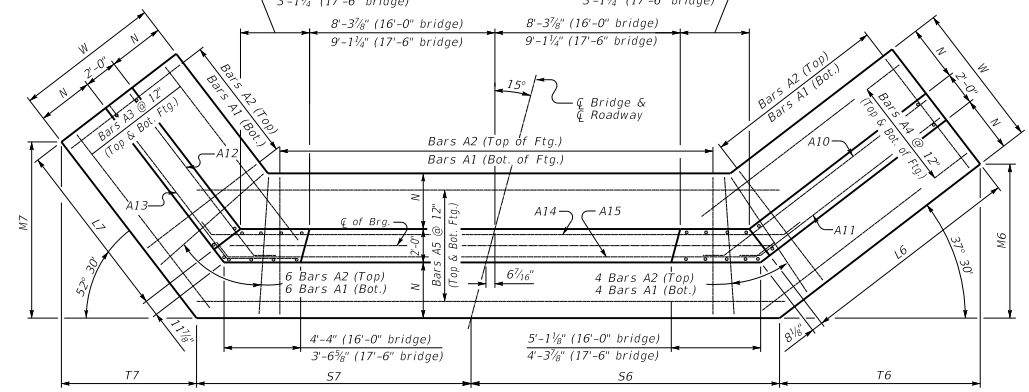

(Left Skew as shown;right skew opp. hand)

PLAN

NOTE: Trim A16 & A17 bars if necessary

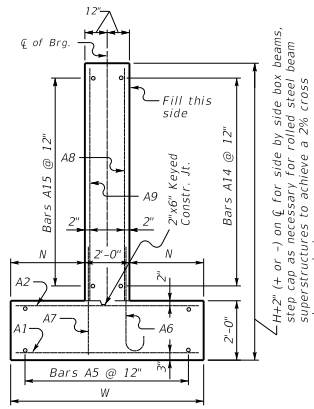

WALL SECTION

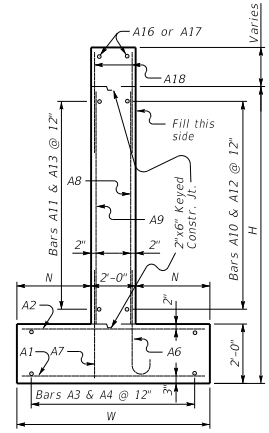

WING SECTION

Quantities		
H	Concrete* C.Y.	Reinforcement LBS.
5	32.9	2852
6	36	2852
7	46.4	3942
8	49.8	3942
9	66	5682
10	69.9	5682
11	86.7	8139
12	91	8139
13	108.2	11385
14	112.9	11385
15	132	14911
16	137.1	14911

*Concrete quantities computed using 21" beam depth on ½" pad & 16'-0" Bridge Width

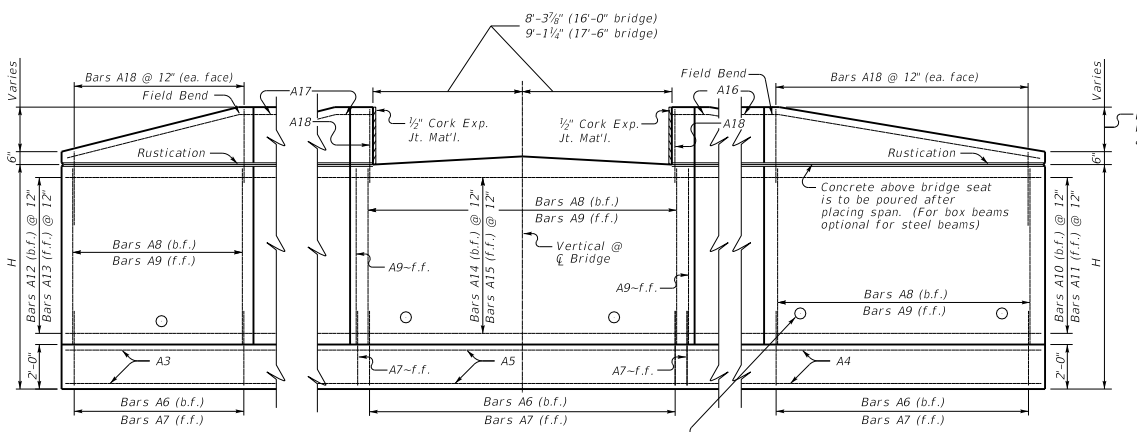

ELEVATION

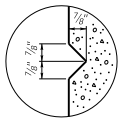

RUSTICATION GROOVE

GENERAL NOTES

SPECIFICATIONS: Construct abutments according to the current edition of the Kentucky Department of Highways Standard Specifications for Road and Bridge Construction. Abutments are designed for side by side box beams as detailed in Standard Drawings BDP-001 through BDP-012, current edition. Dimensions may be adjusted to allow for 17'-6" rolled steel beam bridge width.

FOUNDATION PRESSURE: Construct abutment footings on solid rock bearing material that can support a pressure of 8000 psf service or 10,800 psf strength factored as recommended by a geotechnical engineer.

WING LENGTHS: Calculated assuming 21" superstructure depth and stream bank elevation at top of footing.

FOOTING ELEVATION: Construct bottom of footing below the anticipated scour elevation. (This typically entails embedding the footings 1'-0" to 2'-0" into rock and pouring concrete directly against cut rock faces as recommended by geotechnical engineer.)

NOTE: Distances to bars shown are clear dimensions unless otherwise noted.

MATERIAL SPECIFICATIONS:
Concrete, Class "A" = 3500 psi
Steel Reinforcement = Grade 60

KENTUCKY
DEPARTMENT OF HIGHWAYS

15° SKEW
16'-0"-17'-6" BRIDGE WIDTH
2:1 FILL SLP. 4' MIN. SHLDR.

STANDARD DRAWING NO. BSA-104

SUBMITTED _____ DIRECTOR DIVISION OF STRUCTURAL DESIGN — DATE 02-26-20

APPROVED _____ STATE HIGHWAY ENGINEER — DATE 02-26-20

15° SKEW 24'-0" - 25'-6" BRIDGE WIDTH 2:1 FILL SLOPES

Bill of Reinforcement

MARK	A1				A2				A3			A4			A5			A6										A7				A8				A9				A10				A11				A12				A13				A14				A15				A16				A17				A18			
TYPE	Str.				Str.				Str.			Str.			Str.			4										Str.				Str.				Str.				8				8				8				8				7				7				Str.				Str.				Str.			
SIZE									#5			#5			#5																					#5				#5				#5				#5				#5				#5				#5				#5				#5			
H	No.	Size	Length Ft.	Length In.	No.	Size	Length Ft.	Length In.	No.	Length Ft.	Length In.	No.	Length Ft.	Length In.	No.	Length Ft.	Length In.	No.	Size	Length Ft.	Length In.	Shaping	A In.	B Ft.	C Ft.	D In.	No.	Size	Length Ft.	Length In.	Shaping	No.	Size	Length Ft.	Length In.	No.	Length Ft.	Length In.	No.	Length Ft.	Length In.	No.	Length Ft.	Length In.	No.	Length Ft.	Length In.	No.	Length Ft.	Length In.	No.	Length Ft.	Length In.	No.	Length Ft.	Length In.	No.	Length Ft.	Length In.	No.	Length Ft.	Length In.	No.	Length Ft.	Length In.	No.	Length Ft.	Length In.	No.	Length Ft.	Length In.
15-16	78	10	11	8	12	78	7	11	8	12	24	21	5	24	26	7	24	38	10	75	9	9	11	12	8	⅛	1	10	0	1 13/16	8	6	79	5	4	11	12	75	6	12	10	12	79	12	10	12	14	27	4	14	25	6	14	20	10	14	19	9	14	39	2	14	36	1	2	29	8	2	23	3	1	10	5	9
13-14	73	9	10	8	12	73	7	10	8	12	22	19	2	22	23	5	22	38	5	70	8	8	3	12	6	11	1	3	0	8	7	3	74	5	4	11	12	70	6	10	10	12	74	10	10	12	12	24	4	12	22	6	12	18	10	12	17	9	12	39	2	12	36	1	2	26	8	2	21	3	1	00	5	9
11-12	70	8	9	8	12	70	6	9	8	12	20	16	11	20	20	3	20	38	0	65	7	7	1	12	5	10½	1	2	0	7	6	2	69	5	4	11	12	65	5	8	10	12	69	8	10	10	21	4	10	19	6	10	16	10	10	15	9	10	39	2	10	36	1	2	23	8	2	19	3	90	5	9
9-10	64	7	8	8	12	64	5	8	8	12	18	13	8	18	17	1	18	37	7	59	6	6	1	12	5	1	1	0	0	6	5	4	63	5	4	11	12	59	5	6	10	12	63	6	10	12	8	18	4	8	16	6	8	13	10	8	12	9	8	39	2	8	36	1	2	20	8	2	16	3	78	5	9
7-8	60	6	7	2	12	60	5	7	2	12	16	11	2	16	12	6	16	36	7	53	5	5	7	12	4	8½	0	10	0	5	4	11	57	5	4	11	12	53	5	4	10	12	57	4	10	12	6	14	4	6	12	6	6	11	10	6	10	9	6	39	3	6	36	1	2	16	8	2	14	3	66	5	9
5-6	56	5	6	2	12	56	5	6	2	12	14	8	11	14	10	4	14	36	2	49	5	5	7	12	4	8½	0	10	0	5	4	11	53	5	4	11	12	49	5	2	10	12	53	2	10	12	4	12	4	4	10	6	4	9	10	4	8	9	4	39	3	4	36	1	2	14	8	2	12	3	58	5	9

Reinforcement Details

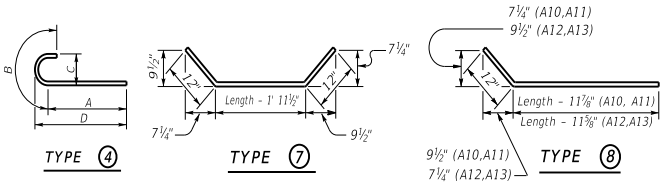

Table of Dimensions

H	W Length Ft.	W Length In.	N Length Ft.	N Length In.	M6 Length Ft.	M6 Length In.	M7 Length Ft.	M7 Length In.	S6 Length Ft.	S6 Length In.	S7 Length Ft.	S7 Length In.	T6 Length Ft.	T6 Length In.	T7 Length Ft.	T7 Length In.	L6 Length Ft.	L6 Length In.	L7 Length Ft.	L7 Length In.
15-16	12	0	5	0	16	⅜	17	¼	20	7¼	17	1¼	20	11¼	13	¾	24	18
13-14	11	0	4	6	14	1½	15	2⅞	20	3½	17	9¾	18	4⅛	11	8⅛	21	16
11-12	10	0	4	0	12	2⅜	13	5½	19	11⅞	17	8⅜	15	10¾	10	3⅛	18	14
9-10	9	0	3	6	10	3½	10	10¾	19	8¼	17	7	13	4⅝	8	4⅛	15	11
7-8	7	6	2	9	7	8⅛	9	0	19	2¾	17	5	10	⅛	6	10⅞	11	9
5-6	6	6	2	3	6	4½	7	2⅝	18	11¼	17	3⅜	8	3⅜	5	6½	9	7

4 foot min. shoulder

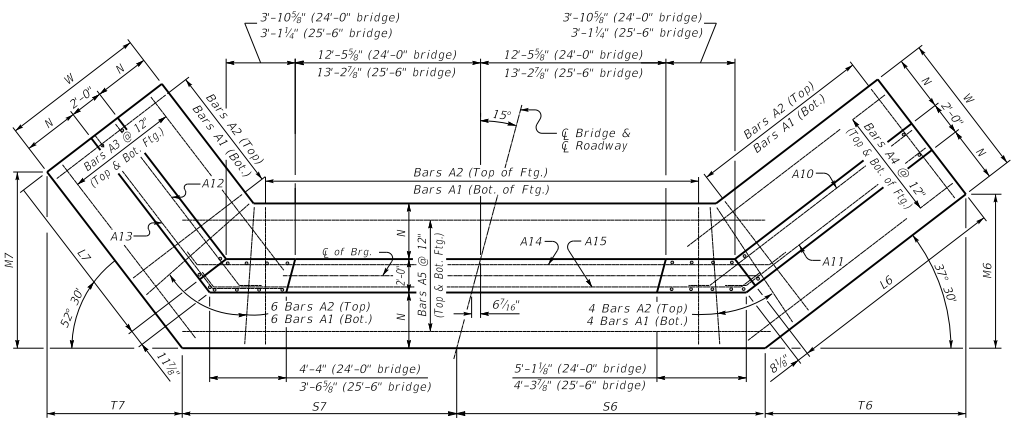

(Left Skew as shown;right skew opp. hand)

PLAN

NOTE: Trim A16 & A17 bars if necessary

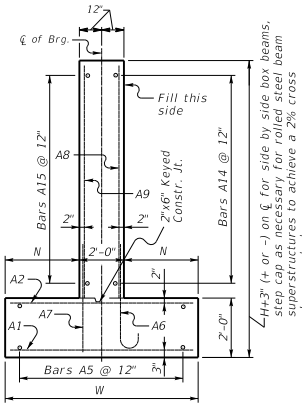

WALL SECTION

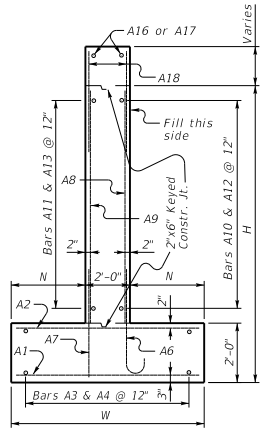

WING SECTION

Quantities		
H	Concrete* C.Y.	Reinforcement LBS.
5	38.9	3289
6	42.6	3289
7	54.2	4510
8	58.2	4510
9	76	6431
10	80.5	6431
11	98.5	9127
12	103.4	9127
13	121.9	12701
14	127.1	12701
15	147.5	16534
16	153.1	16534

*Concrete quantities computed using 21" beam depth on ½" pad & 24'-0" Bridge Width

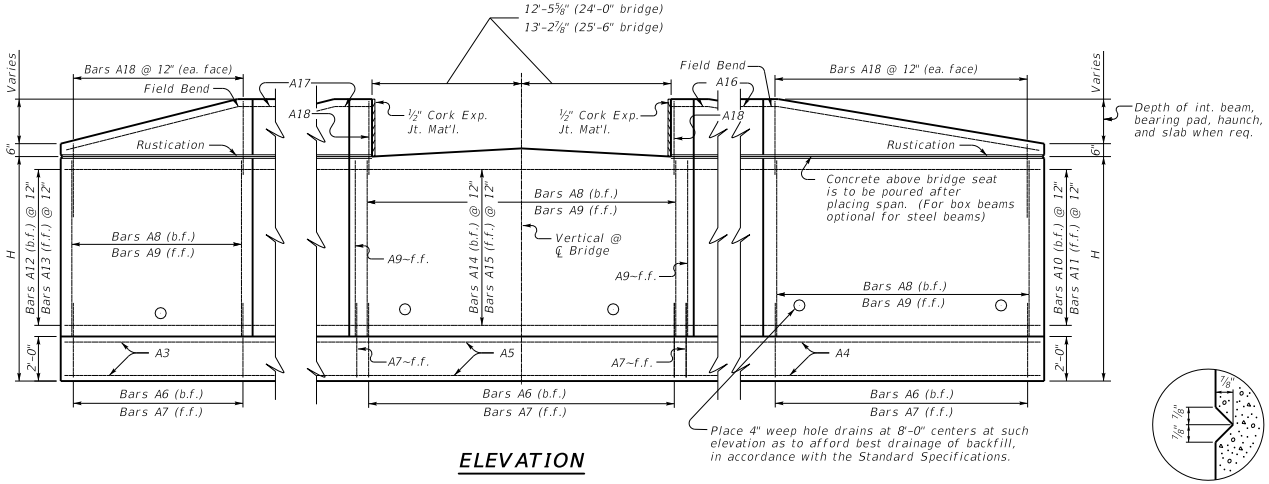

ELEVATION

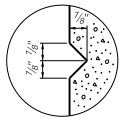

RUSTICATION GROOVE

GENERAL NOTES

SPECIFICATIONS: Construct abutments according to the current edition of the Kentucky Department of Highways Standard Specifications for Road and Bridge Construction. Abutments are designed for side by side box beams as detailed in Standard Drawings BDP-001 through BDP-012, current edition. Dimensions may be adjusted to allow for 25'-6" rolled steel beam bridge width.

FOUNDATION PRESSURE: Construct abutment footings on solid rock bearing material that can support a pressure of 8000 psf service or 10,800 psf strength factored as recommended by a geotechnical engineer.

WING LENGTHS: Calculated assuming 21" superstructure depth and stream bank elevation at top of footing.

FOOTING ELEVATION: Construct bottom of footing below the anticipated scour elevation. (This typically entails embedding the footings 1'-0" to 2'-0" into rock and pouring concrete directly against cut rock faces as recommended by geotechnical engineer.)

NOTE: Distances to bars shown are clear dimensions unless otherwise noted.

MATERIAL SPECIFICATIONS:
Concrete, Class "A" = 3500 psi
Steel Reinforcement = Grade 60

KENTUCKY
DEPARTMENT OF HIGHWAYS

15° SKEW
24'-0"-25'-6" BRIDGE WIDTH
2:1 FILL SLP. 4' MIN. SHLDR.

STANDARD DRAWING NO. BSA-105

SUBMITTED _____ DIRECTOR DIVISION OF STRUCTURAL DESIGN — DATE 02-26-20

APPROVED _____ STATE HIGHWAY ENGINEER — DATE 02-26-20

15° SKEW 32'-0" - 33'-6" BRIDGE WIDTH 2:1 FILL SLOPES

Bill of Reinforcement

MARK	A1				A2				A3			A4			A5			A6										A7				A8				A9				A10			A11			A12			A13			A14			A15			A16			A17			A18		
TYPE	Str.				Str.				Str.			Str.			Str.			4										Str.				Str.				Str.				8			8			8			8			7			7			Str.			Str.			Str.		
SIZE									#5			#5			#5																					#5				#5			#5			#5			#5			#5			#5			#5			#5			#5		
H	No.	Size	Length Ft.	Length In.	No.	Size	Length Ft.	Length In.	No.	Size	Length Ft.	No.	Size	Length Ft.	No.	Size	Length Ft.	No.	Size	Length Ft.	Spacing	A Ft.	A In.	B Ft.	B In.	C Ft.	C In.	D Ft.	D In.	No.	Size	Length Ft.	Length In.	No.	Size	Length Ft.	Length In.	No.	Size	Length Ft.	Length In.	No.	Size	Length Ft.	Length In.	No.	Size	Length Ft.	Length In.	No.	Size	Length Ft.	Length In.	No.	Size	Length Ft.	Length In.	No.	Size	Length Ft.	Length In.	No.	Size	Length Ft.	Length In.	No.	Size	Length Ft.	Length In.
15-16	86	10	11	8	12	86	7	11	8	12	24	21	5	24	26	7	24	47	1	83	9	9	11	12	8	⅞	1	10	0	11⅞	8	6	87	5	4	11	12	83	6	12	10	12	87	12	10	12	14	27	4	14	25	6	14	20	10	14	19	9	14	47	5	14	44	5	2	29	8	2	23	3	110	5	9
13-14	82	9	10	8	12	82	7	10	8	12	22	19	2	22	23	5	22	46	8	78	8	8	3	12	6	11	1	3	0	8	7	3	82	5	4	11	12	78	6	10	10	12	82	10	10	12	12	24	4	12	22	6	12	18	10	12	17	9	12	47	5	12	44	5	2	26	8	2	21	3	100	5	9
11-12	78	8	9	8	12	78	6	9	8	12	20	16	11	20	20	3	20	46	3	73	7	7	1	12	5	10¼	1	2	0	7	6	2	77	5	4	11	12	73	5	8	10	12	77	8	10	10	12	21	4	10	19	6	10	16	10	10	15	9	10	47	6	10	44	5	2	23	8	2	19	3	90	5	9
9-10	73	7	8	8	12	73	5	8	8	12	18	13	8	18	17	1	18	45	10	67	6	6	1	12	5	1	1	0	0	6	5	4	71	5	4	11	12	67	5	6	10	12	71	6	10	12	8	18	4	8	16	6	8	13	10	8	12	9	8	47	6	8	44	5	2	20	8	2	16	3	78	5	9
7-8	68	6	7	2	12	68	5	7	2	12	16	11	2	16	12	6	16	44	10	61	5	5	7	12	4	8½	0	10	0	5	4	11	65	5	4	11	12	61	5	4	10	12	65	4	10	12	6	14	4	6	12	6	6	11	10	6	10	9	6	47	6	6	44	5	2	16	8	2	14	3	66	5	9
5-6	65	5	6	2	12	65	5	6	2	12	14	8	11	14	10	4	14	44	5	57	5	5	7	12	4	8½	0	10	0	5	4	11	61	5	4	11	12	57	5	2	10	12	61	2	10	12	4	12	4	4	10	6	4	9	10	4	8	9	4	47	6	4	44	5	2	14	8	2	12	3	58	5	9

Reinforcement Details

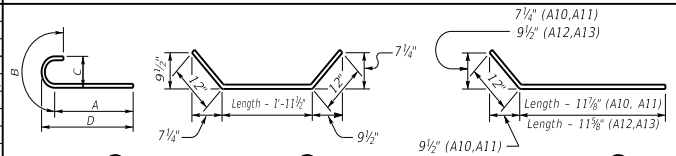

Table of Dimensions

H	W Length Ft.	W Length In.	N Length Ft.	N Length In.	M6 Length Ft.	M6 Length In.	M7 Length Ft.	M7 Length In.	S6 Length Ft.	S6 Length In.	S7 Length Ft.	S7 Length In.	T6 Length Ft.	T6 Length In.	T7 Length Ft.	T7 Length In.	L6 Length Ft.	L6 Length In.	L7 Length Ft.
15-16	12	0	5	0	16	⅜	17	⅞	24	8⅞	22	⅜	20	11⅛	13	¾	24	18	
13-14	11	0	4	6	14	1½	15	2⅞	24	5½	21	11½	18	4⅞	11	8¼	21	16	
11-12	10	0	4	0	12	2⅜	13	5½	24	1⅜	21	10⅝	15	10⅞	10	3⅞	18	14	
9-10	9	0	3	6	10	3½	10	10½	23	10	21	8¾	13	4⅝	8	4⅛	15	11	
7-8	7	6	2	9	7	8⅛	9	0	23	4½	21	6⅜	10	⅛	6	10⅞	11	9	
5-6	6	6	2	3	6	4½	7	2⅝	23	⅞	21	5⅜	8	3⅜	5	6½	9	7	

4 foot min. shoulder

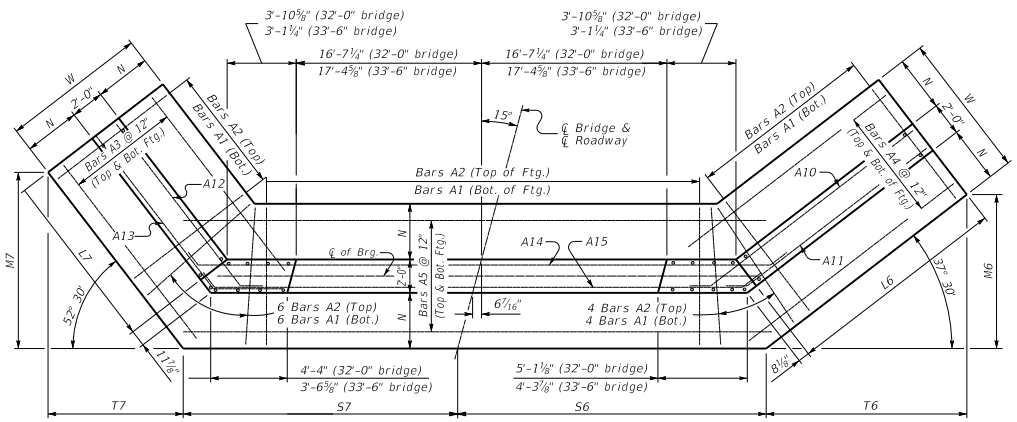

(Left Skew as shown;right skew opp. hand)

PLAN

NOTE: Trim A16 & A17 bars if necessary

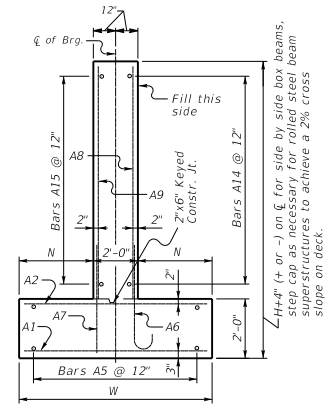

WALL SECTION

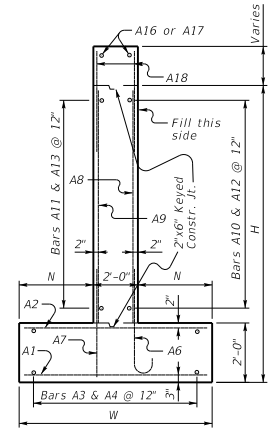

WING SECTION

Quantities		
H	Concrete* C.Y.	Reinforcement LBS.
5	44.9	3731
6	49.2	3731
7	62	5067
8	66.6	5067
9	86	7196
10	91.1	7196
11	110.3	10103
12	115.8	10103
13	135.5	14061
14	141.4	14061
15	163	18138
16	169.3	18138

*Concrete quantities computed using 21" beam depth on ½" pad & 32'-0" Bridge Width

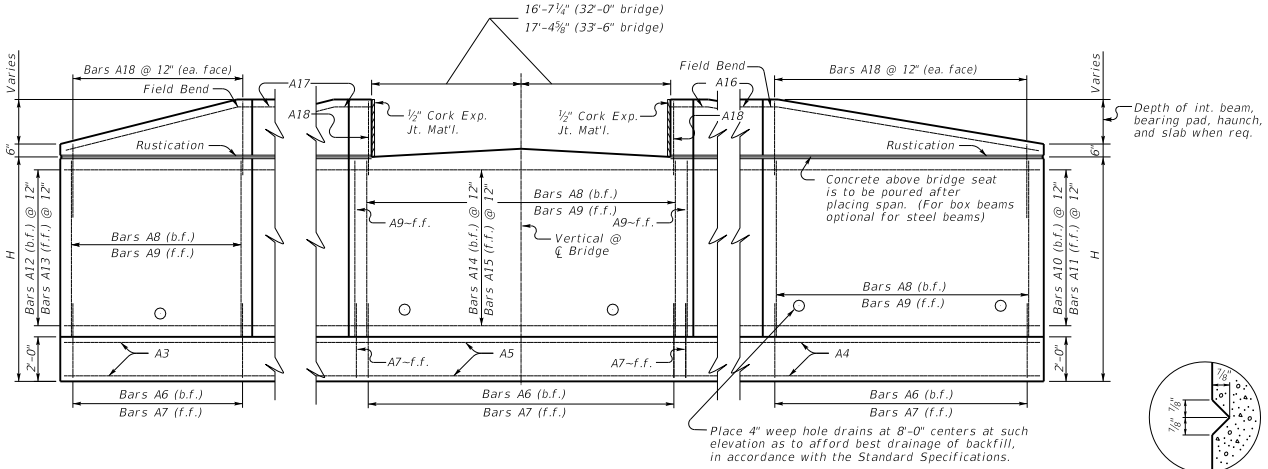

ELEVATION

RUSTICATION GROOVE

GENERAL NOTES

SPECIFICATIONS: *Construct abutments according to the current edition of the Kentucky Department of Highways Standard Specifications for Road and Bridge Construction. Abutments are designed for side by side box beams as detailed in Standard Drawings BDP-001 through BDP-012, current edition. Dimensions may be adjusted to allow for 33'-6" rolled steel beam bridge width.*

FOUNDATION PRESSURE: *Construct abutment footings on solid rock bearing material that can support a pressure of 8000 psf service or 10,800 psf strength factored as recommended by a geotechnical engineer.*

WING LENGTHS: *Calculated assuming 21" superstructure depth and stream bank elevation at top of footing.*

FOOTING ELEVATION: *Construct bottom of footing below the anticipated scour elevation. (This typically entails embedding the footings 1'-0" to 2'-0" into rock and pouring concrete directly against cut rock faces as recommended by geotechnical engineer.)*

NOTE: *Distances to bars shown are clear dimensions unless otherwise noted.*

MATERIAL SPECIFICATIONS:
Concrete, Class "A" = 3500 psi
Steel Reinforcement = Grade 60

KENTUCKY
DEPARTMENT OF HIGHWAYS

15° SKEW
32'-0"-33'-6" NRIDGE WIDTH
2:1 FILL SLP. 4' MIN. SHLDR.

STANDARD DRAWING NO. BSA-106

SUBMITTED _____ DIRECTOR DIVISION OF STRUCTURAL DESIGN — DATE 02-26-20

APPROVED _____ STATE HIGHWAY ENGINEER — DATE 02-26-20

30° SKEW 16'-0" – 17'-6" BRIDGE WIDTH 2:1 FILL SLOPES

Bill of Reinforcement

MARK	A1			A2			A3			A4			A5			A6									A7			A8			A9			A10			A11			A12			A13			A14			A15			A16			A17			A18		
TYPE	Str.			Str.			Str.			Str.			Str.			4									Str.			Str.			Str.			8			8			8			8			7			7			Str.			Str.			Str.		
SIZE							#5			#5			#5																		#5			#5			#5			#5			#5			#5			#5			#5			#5			#5		
H	No.	Size	Length ft.	in.	No.	Size	Length ft.	in.	Spacing	No.	Size	Length ft.	in.	Spacing	No.	Size	Length ft.	in.	Spacing	A ft.	in.	B ft.	in.	C ft.	in.	D ft.	in.	No.	Size	Length ft.	in.	Spacing	No.	Size	Length ft.	in.	Spacing	No.	Size	Length ft.	in.	Spacing	No.	Size	Length ft.	in.	Spacing	No.	Size	Length ft.	in.	Spacing	No.	Size	Length ft.	in.	Spacing	No.	Size	Length ft.	in.	Spacing
15–16	77	10	11	8	12	77	7	11	8	12	24	20	11	24	31	2	24	33	4	74	9	9	11	12	8	⅛	1	10	0	11⅜	8	6	77	5	4	11	12	74	6	12	10	12	77	12	10	12	4	32	10	14	30	4	14	19	8	14	18	11	14	34	1	14	30	8	2	35	6	2	22	5	121	5	9
13–14	70	9	10	8	12	70	7	10	8	12	22	17	8	22	27	1	22	32	11	67	8	8	3	12	6	11	1	3	0	8	7	3	70	5	4	11	12	67	6	10	10	12	70	10	10	12	24	10	10	22	4	10	14	8	10	13	11	10	34	1	10	30	8	2	31	6	2	19	5	107	5	9
11–12	64	8	9	8	12	64	6	9	8	12	20	15	5	20	22	11	20	32	6	61	7	7	1	12	5	10½	1	2	0	7	6	2	64	5	4	11	12	61	5	8	10	12	64	8	10	12	10	24	10	10	22	4	10	14	8	10	13	11	10	34	1	10	30	8	2	27	6	2	17	5	95	5	9
9–10	61	7	8	8	12	61	5	8	8	12	18	13	1	18	19	10	18	32	1	56	6	6	1	12	5	1	1	0	0	6	5	4	59	5	4	11	12	56	5	6	10	12	59	6	10	12	8	21	10	8	19	4	8	12	8	8	11	11	8	34	1	8	30	8	2	24	6	2	15	5	85	5	9
7–8	55	6	7	2	12	55	5	7	2	12	16	10	6	16	14	2	16	31	1	49	5	5	7	12	4	8½	0	10	0	5	4	11	52	5	4	11	12	49	5	4	10	12	52	4	10	12	6	16	11	6	14	4	6	10	8	6	9	11	6	34	2	6	30	8	2	19	6	2	13	5	71	5	9
5–6	51	5	6	2	12	51	5	6	2	12	14	8	3	14	11	0	14	30	8	44	5	5	7	12	4	8½	0	10	0	5	4	11	47	5	4	11	12	44	5	2	10	12	47	2	10	12	4	13	11	4	11	4	4	8	8	4	7	11	4	34	2	4	30	8	2	16	6	2	11	5	61	5	9

Reinforcement Details

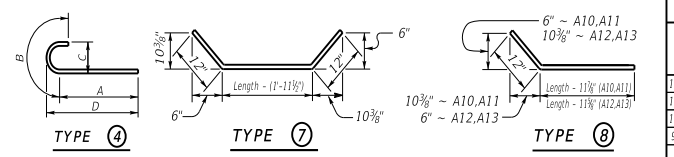

Table of Dimensions

H	W Length ft.	in.	N Length ft.	in.	M2 Length ft.	in.	M3 Length ft.	in.	S2 Length ft.	in.	S3 Length ft.	in.	T2 Length ft.	in.	T3 Length ft.	in.	L2 Length ft.	L3 Length ft.
15–16	12	0	5	0	15	5¼	18	2⅝	19	6⅜	13	7⅜	26	8⅞	10	6¼	29	17
13–14	11	0	4	6	13	4½	15	4½	19	7⅜	13	7⅜	23	7⅞	8	10½	25	14
11–12	10	0	4	0	11	3⅝	13	4⅜	18	8⅜	13	7⅜	19	7	7	8¾	21	12
9–10	9	0	3	6	9	8⅞	11	4⅞	18	3⅜	13	7⅜	16	10⅜	6	7	18	10
7–8	7	6	2	9	7	1⅞	9	3⅝	17	7⅜	13	7⅜	12	4⅝	5	4½	13	8
5–6	6	6	2	3	5	6⅞	7	3⅞	17	2½	13	7⅜	9	7¾	4	2¾	10	6

4 foot min. shoulder

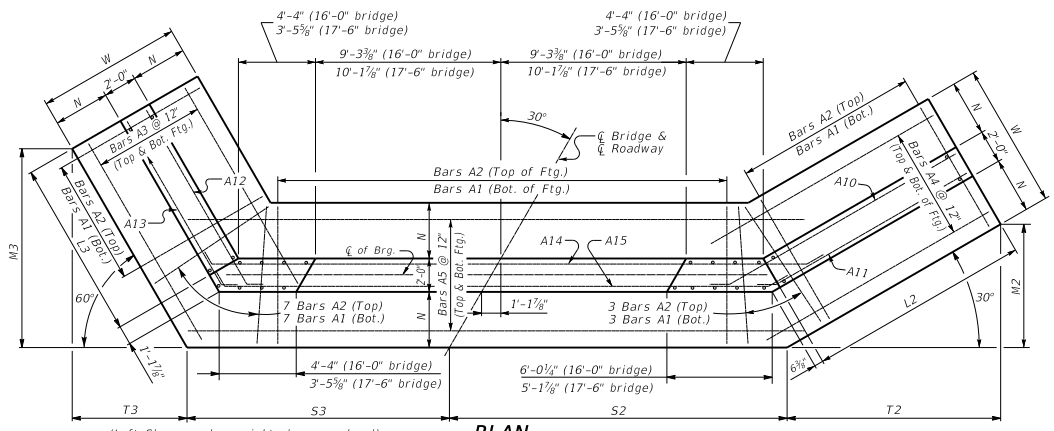

(Left Skew as shown;right skew opp. hand)

PLAN

NOTE: Trim A16 & A17 bars if necessary

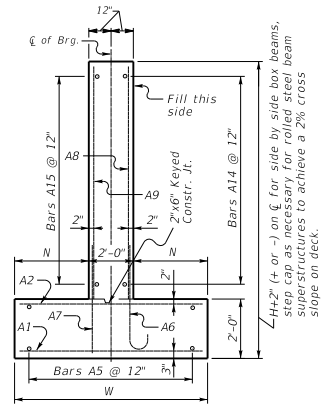

WALL SECTION

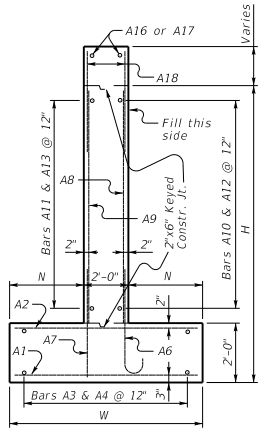

WING SECTION

Quantities

H	Concrete* C.Y.	Reinforcement LBS.
5	35.1	3029
6	38.4	3029
7	50.2	4232
8	53.9	4232
9	72.1	6186
10	76.4	6186
11	92.3	8576
12	96.9	8576
13	116.5	12240
14	121.5	12240
15	145.3	16380
16	150.8	16380

*Concrete quantities computed using 21" beam depth on ½" pad & 16'-0" Bridge Width

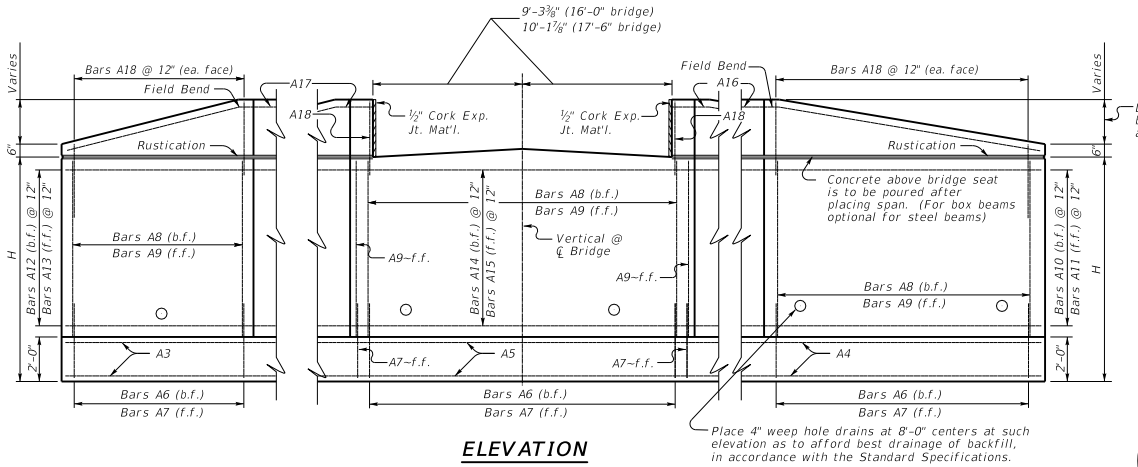

ELEVATION

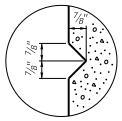

RUSTICATION GROOVE

GENERAL NOTES

SPECIFICATIONS: Construct abutments according to the current edition of the Kentucky Department of Highways Standard Specifications for Road and Bridge Construction. Abutments are designed for side by side box beams as detailed in Standard Drawings BDP-001 through BDP-012, current edition. Dimensions may be adjusted to allow for 17'-6" rolled steel beam bridge width.

FOUNDATION PRESSURE: Construct abutment footings on solid rock bearing material that can support a pressure of 8000 psf service or 10,800 psf strength factored as recommended by a geotechnical engineer.

WING LENGTHS: Calculated assuming 21" superstructure depth and stream bank elevation at top of footing.

FOOTING ELEVATION: Construct bottom of footing below the anticipated scour elevation. (This typically entails embedding the footings 1'-0" to 2'-0" into rock and pouring concrete directly against cut rock faces as recommended by geotechnical engineer.)

NOTE: Distances to bars shown are clear dimensions unless otherwise noted.

MATERIAL SPECIFICATIONS:
Concrete, Class "A" = 3500 psi
Steel Reinforcement = Grade 60

KENTUCKY
DEPARTMENT OF HIGHWAYS

30° SKEW
16'-0"–17'-6" BRIDGE WIDTH
2:1 FILL SLP, 4' MIN. SHLDR.

STANDARD DRAWING NO. BSA-107

SUBMITTED _____ DIRECTOR DIVISION OF STRUCTURAL DESIGN — DATE 02-26-20

APPROVED _____ STATE HIGHWAY ENGINEER — DATE 02-26-20

30° SKEW 24'-0" – 25'-6" BRIDGE WIDTH 2:1 FILL SLOPES

Bill of Reinforcement

MARK	A1				A2				A3				A4				A5				A6								A7				A8				A9				A10				A11				A12				A13				A14				A15				A16				A17				A18			
TYPE	Str.				Str.				Str.				Str.				Str.				4								Str.				Str.				Str.				8				8				8				8				7				7				Str.				Str.				Str.			
SIZE									#5				#5				#5																				#5				#5				#5				#5				#5				#5				#5				#5				#5			
H	No.	Size	Length ft.	Length in.	No.	Size	Length ft.	Length in.	No.	Size	Length ft.	Length in.	No.	Size	Length ft.	Length in.	No.	Size	Length ft.	Length in.	No.	Size	Length ft.	Length in.	A in.	A ft.	B in.	B ft.	C in.	C ft.	D in.	D ft.	No.	Size	Length ft.	Length in.	Spacing	No.	Size	Length ft.	Length in.	Spacing	No.	Length ft.	Length in.	Spacing	No.	Length ft.	Length in.	Spacing	No.	Length ft.	Length in.	Spacing	No.	Length ft.	Length in.	Spacing	No.	Length ft.	Length in.	Spacing	No.	Length ft.	Length in.	Spacing	No.	Length ft.	Length in.	Spacing	No.	Length ft.	Length in.	Spacing
15-16	86	10	11	8	12	86	7	11	8	12	24	20	11	24	31	2	24	42	2	7	83	9	9	11	12	8	⅞	1	10	0	11¾	8	6	86	5	4	11	12	83	6	12	10	12	86	12	10	12	14	32	10	14	30	4	14	19	8	14	18	11	14	43	3	14	39	11	2	35	6	2	22	5	121	5	9
13-14	79	9	10	8	12	79	7	10	8	12	22	17	8	22	27	1	22	42	2	7	76	8	8	3	12	6	11	1	3	0	8	7	3	79	5	4	11	12	76	6	10	10	12	79	10	10	12	12	28	10	12	26	4	12	16	8	12	15	11	12	43	4	12	39	11	2	31	6	2	19	5	107	5	9
11-12	74	8	9	8	12	74	6	9	8	12	20	15	5	20	22	1	20	41	8	70	7	7	1	12	5	10¼	1	2	0	7	6	2	73	5	4	11	12	70	5	8	10	12	73	8	10	12	10	24	10	10	22	4	10	14	8	10	13	11	10	43	4	10	39	11	2	27	6	2	17	5	95	5	9
9-10	70	7	8	8	12	70	5	8	8	12	18	13	1	18	19	10	18	41	3	65	6	6	1	12	5	1	1	0	0	6	5	4	68	5	4	11	12	65	5	6	10	12	68	6	10	12	8	21	10	8	19	4	8	12	8	8	11	11	8	43	4	8	39	11	2	24	6	2	15	5	85	5	9
7-8	65	6	7	2	12	65	5	7	2	12	16	10	6	16	14	2	16	40	4	58	5	5	7	12	4	8½	0	10	0	5	4	11	61	5	4	11	12	58	5	4	10	12	61	4	10	12	6	16	11	6	14	4	6	10	8	6	9	11	6	43	5	6	39	11	2	19	6	2	13	5	71	5	9
5-6	60	5	6	2	12	60	5	6	2	12	14	8	3	14	11	0	14	39	11	53	5	5	7	12	4	8½	0	10	0	5	4	11	56	5	4	11	12	53	5	2	10	12	56	2	10	12	4	13	11	4	11	4	4	8	8	4	7	11	4	43	5	4	39	11	2	16	6	2	11	5	61	5	9

Reinforcement Details

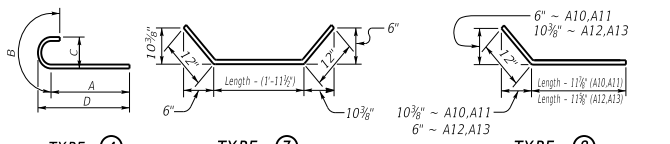

Table of Dimensions

H	W Length ft.	W Length in.	N Length ft.	N Length in.	M2 Length ft.	M2 Length in.	M3 Length ft.	M3 Length in.	S2 Length ft.	S2 Length in.	S3 Length ft.	S3 Length in.	T2 Length ft.	T2 Length in.	T3 Length ft.	T3 Length in.	L2 Length ft.	L3 Length ft.
15-16	12	0	5	0	15	5¼	18	2⅝	24	1⅞	18	2⅞	26	8⅝	10	6¼	29	17
13-14	11	0	4	6	13	4½	15	4½	23	8⅞	18	2⅞	23	1⅞	8	10½	25	14
11-12	10	0	4	0	11	3⅝	13	4¾	23	3⅝	18	2⅞	19	7	7	8¾	21	12
9-10	9	0	3	6	9	8⅞	11	4⅞	22	10⅝	18	2⅞	16	10⅜	6	7	18	10
7-8	7	6	2	9	7	1⅞	9	3⅝	22	3	18	2⅞	12	4⅝	5	4½	13	8
5-6	6	6	2	3	5	6⅞	7	3⅞	21	9⅞	18	2⅞	9	7¾	4	2¾	10	6

4 foot min. shoulder

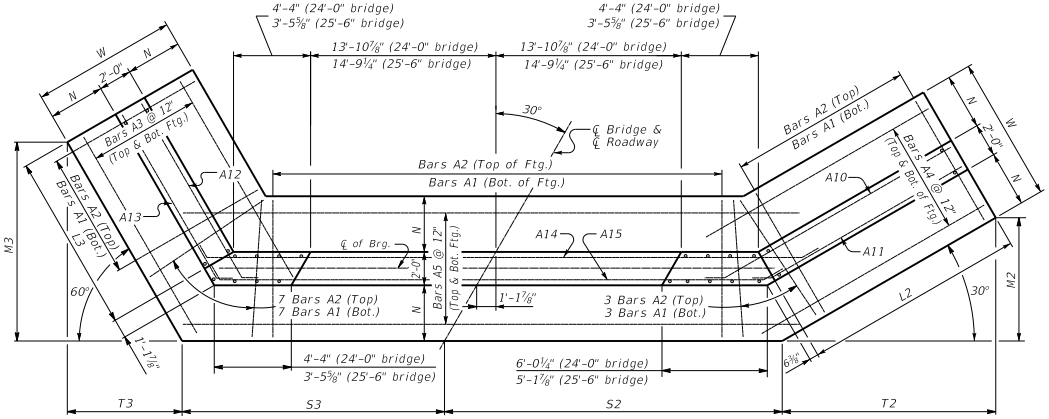

(Left Skew as shown;right skew opp. hand)

PLAN

NOTE: Trim A16 & A17 bars if necessary

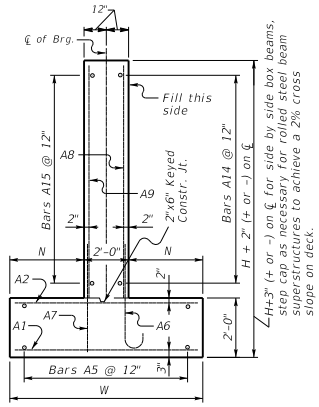

WALL SECTION

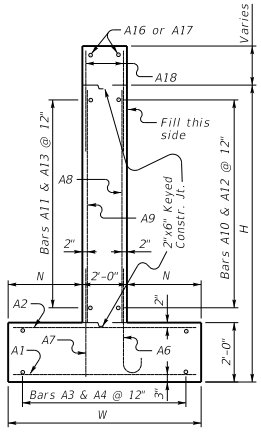

WING SECTION

Quantities

H	Concrete* C.Y.	Reinforcement LBS.
5	41.7	3510
6	45.7	3510
7	58.9	4875
8	63.3	4875
9	83.2	7013
10	88.1	7013
11	105.5	9709
12	110.8	9709
13	131.7	13702
14	137.4	13702
15	162.5	18180
16	168.7	18180

*Concrete quantities computed using 21" beam depth on ½" pad & 24'-0" Bridge Width

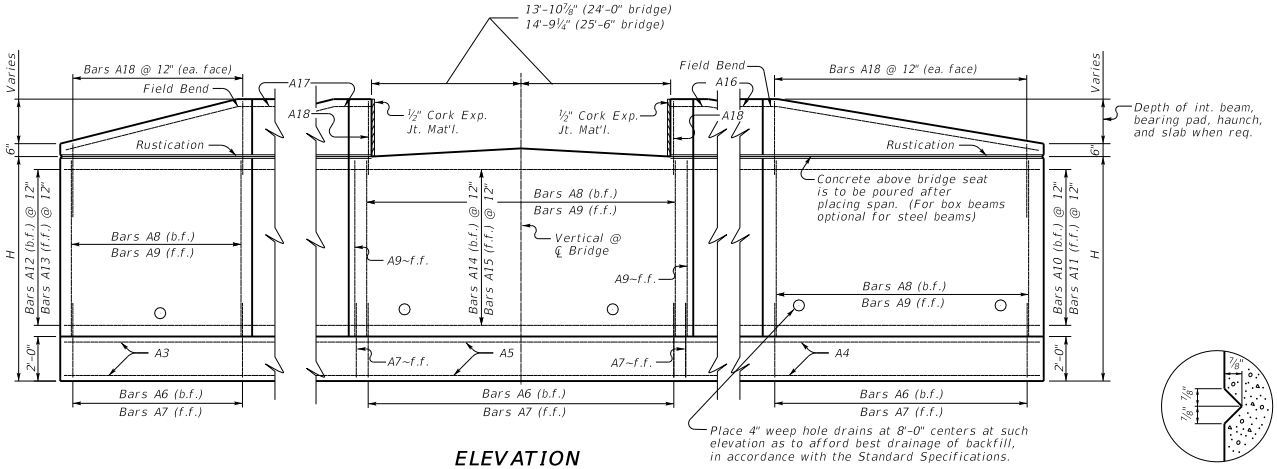

ELEVATION

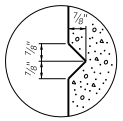

RUSTICATION GROOVE

GENERAL NOTES

SPECIFICATIONS: *Construct abutments according to the current edition of the Kentucky Department of Highways Standard Specifications for Road and Bridge Construction. Abutments are designed for side by side box beams as detailed in Standard Drawings BDP-001 through BDP-012, current edition. Dimensions may be adjusted to allow for 25'-6" rolled steel beam bridge width.*

FOUNDATION PRESSURE: *Construct abutment footings on solid rock bearing material that can support a pressure of 8000 psf service or 10,800 psf strength factored as recommended by a geotechnical engineer.*

WING LENGTHS: *Calculated assuming 21" superstructure depth and stream bank elevation at top of footing.*

FOOTING ELEVATION: *Construct bottom of footing below the anticipated scour elevation. (This typically entails embedding the footings 1'-0" to 2'-0" into rock and pouring concrete directly against cut rock faces as recommended by geotechnical engineer.)*

NOTE: *Distances to bars shown are clear dimensions unless otherwise noted.*

MATERIAL SPECIFICATIONS:
Concrete, Class "A" = 3500 psi
Steel Reinforcement = Grade 60

KENTUCKY
DEPARTMENT OF HIGHWAYS

30° SKEW
24'-0"-25'-6" BRIDGE WIDTH
2:1 FILL SLP, 4' MIN. SHLDR.

STANDARD DRAWING NO. BSA-108

SUBMITTED _____ DIRECTOR DIVISION OF STRUCTURAL DESIGN — DATE 02-26-20

APPROVED _____ STATE HIGHWAY ENGINEER — DATE 02-26-20

30° SKEW 32'-0" - 33'-6" BRIDGE WIDTH 2:1 FILL SLOPES

Bill of Reinforcement

MARK	A1				A2				A3			A4			A5			A6										A7				A8				A9				A10			A11			A12			A13			A14			A15			A16			A17			A18		
TYPE	Str.				Str.				Str.			Str.			Str.			4										Str.				Str.				Str.				8			8			8			8			7			7			Str.			Str.			Str.		
SIZE									#5			#5			#5																					#5				#5			#5			#5			#5			#5			#5			#5			#5			#5		
H	No.	Size	Length ft.	Length in.	No.	Size	Length ft.	Length in.	No.	Length ft.	Length in.	No.	Length ft.	Length in.	No.	Length ft.	Length in.	No.	Size	Length ft.	Length in.	Spacing	A in.	A ft.	B in.	B ft.	C in.	C ft.	D in.	D ft.	No.	Size	Length ft.	Length in.	Spacing	No.	Size	Length ft.	Length in.	Spacing	No.	Length ft.	Length in.	Spacing	No.	Length ft.	Length in.	Spacing	No.	Length ft.	Length in.	Spacing	No.	Length ft.	Length in.	Spacing	No.	Length ft.	Length in.	No.	Length ft.	Length in.	No.	Length ft.	Length in.
15-16	95	10	11	8	12	95	7	11	8	12	24	20	11	24	31	2	24	51	9	92	9	9	11	12	8	⅞	1	10	0	11⅜	8	6	96	5	4	11	12	92	6	12	10	12	96	12	10	12	14	32	10	14	30	4	14	19	8	14	18	11	14	52	6	14	49	2	2	35	6	2	22	5	121	5	9
13-14	88	9	10	8	12	88	7	10	8	12	22	17	8	22	27	1	22	51	4	85	8	8	3	12	6	11	1	3	0	8	7	3	89	5	4	11	12	85	6	10	10	12	89	10	10	12	12	28	10	12	26	4	12	16	8	12	15	11	12	52	6	12	49	2	2	31	6	2	19	5	107	5	9
11-12	83	8	9	8	12	83	6	9	8	12	20	15	5	20	22	1	20	50	11	79	7	7	1	12	5	10½	1	2	0	7	6	2	83	5	4	11	12	79	5	8	10	12	83	8	10	12	10	24	10	10	22	4	10	14	8	10	13	11	10	52	7	10	49	2	2	27	6	2	17	5	95	5	9
9-10	79	7	8	8	12	79	5	8	8	12	18	13	1	18	19	0	18	50	6	74	6	6	1	12	5	1	1	0	0	6	5	4	78	5	4	11	12	74	5	6	10	12	78	6	10	12	8	21	10	8	19	4	8	12	8	8	11	11	8	52	7	8	49	2	2	24	6	2	15	5	85	5	9
7-8	74	6	7	2	12	74	5	7	2	12	16	10	6	16	14	2	16	49	7	67	5	5	7	12	4	8½	0	10	0	5	4	11	71	5	4	11	12	67	5	4	10	12	71	4	10	12	6	16	11	6	14	4	6	10	8	6	9	11	6	52	7	6	49	2	2	19	6	2	13	5	71	5	9
5-6	69	5	6	2	12	69	5	6	2	12	14	8	3	14	11	0	14	49	2	62	5	5	7	12	4	8½	0	10	0	5	4	11	66	5	4	11	12	62	5	2	10	12	66	2	10	12	4	13	11	4	11	4	4	8	8	4	7	11	4	52	7	4	49	2	2	16	6	2	11	5	61	5	9

Reinforcement Details

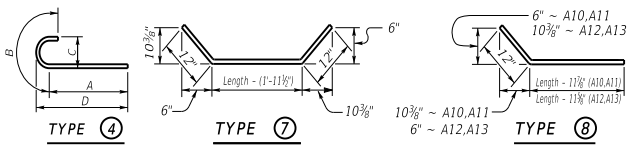

Table of Dimensions

H	W	N	M2	M3	S2	S3	T2	T3	L2	L3
	Length ft. in.	Length ft. in.	Length ft. in.	Length ft. in.	Length ft. in.	Length ft. in.	Length ft. in.	Length ft. in.	Length ft.	Length ft.
15-16	12 0	5 0	15 5¼	18 2⅝	28 9½	22 10¼	26 8⅞	10 6¼	29	17
13-14	11 0	4 6	13 4½	15 4½	28 4½	22 10¼	23 1⅞	8 10½	25	14
11-12	10 0	4 0	11 3⅝	13 4⅜	27 11½	22 10¼	19 7	7 8⅝	21	12
9-10	9 0	3 6	9 8⅝	11 4⅜	27 6	22 10¼	16 10⅜	6 7	18	10
7-8	7 6	2 9	7 1⅝	9 3⅝	26 10¾	22 10¼	12 4⅜	5 4½	13	8
5-6	6 6	2 3	5 6⅞	7 3⅞	26 5⅝	22 10¼	9 7¾	4 2¾	10	6

4 foot min. shoulder

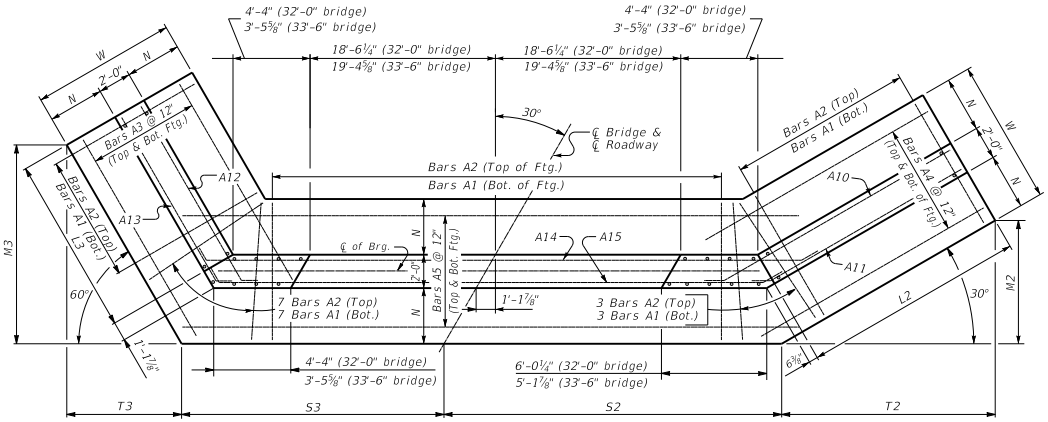

(Left Skew as shown;right skew opp. hand)

PLAN

NOTE: Trim A16 & A17 bars if necessary

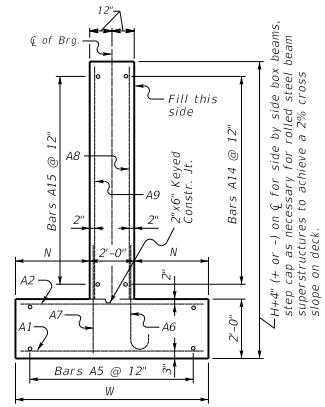

WALL SECTION

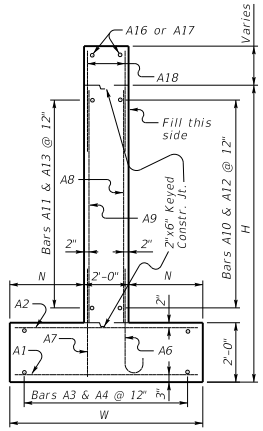

WING SECTION

Quantities		
H	Concrete* C.Y.	Reinforcement LBS.
5	48.4	3999
6	53.1	3999
7	67.6	5511
8	72.7	5511
9	94.4	7853
10	100	7853
11	118.7	10818
12	124.6	10818
13	146.9	15177
14	153.3	15177
15	179.8	19998
16	186.7	19998

*Concrete quantities computed using 21" beam depth on ½" pad & 32'-0" Bridge Width

NOTE: Bars A18 may be field bent to place superstructure.

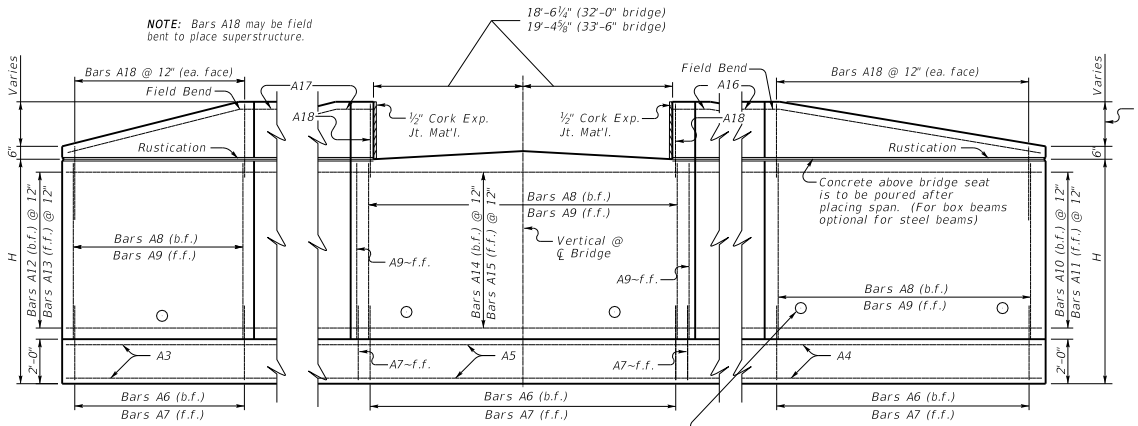

ELEVATION

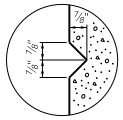

RUSTICATION GROOVE

GENERAL NOTES

SPECIFICATIONS: Construct abutments according to the current edition of the Kentucky Department of Highways Standard Specifications for Road and Bridge Construction. Abutments are designed for side by side box beams as detailed in Standard Drawings BDP-001 through BDP-012, current edition. Dimensions may be adjusted to allow for 33'-6" rolled steel beam bridge width.

FOUNDATION PRESSURE: Construct abutment footings on solid rock bearing material that can support a pressure of 8000 psf service or 10,800 psf strength factored as recommended by a geotechnical engineer.

WING LENGTHS: Calculated assuming 21" superstructure depth and stream bank elevation at top of footing.

FOOTING ELEVATION: Construct bottom of footing below the anticipated scour elevation. (This typically entails embedding the footings 1'-0" to 2'-0" into rock and pouring concrete directly against cut rock faces as recommended by geotechnical engineer.)

NOTE: Distances to bars shown are clear dimensions unless otherwise noted.

MATERIAL SPECIFICATIONS:
Concrete, Class "A" = 3500 psi
Steel Reinforcement = Grade 60

KENTUCKY
DEPARTMENT OF HIGHWAYS

30° SKEW
32'-0"-33'-6" BRIDGE WIDTH
2:1 FILL SLP, 4' MIN. SHLDR.

STANDARD DRAWING NO. BSA-109

SUBMITTED _____ DIRECTOR DIVISION OF STRUCTURAL DESIGN — 02-26-20 DATE

APPROVED _____ STATE HIGHWAY ENGINEER — 02-26-20 DATE

45° SKEW 16'-0" – 17'-6" BRIDGE WIDTH 2:1 FILL SLOPES

Bill of Reinforcement

MARK	A1				A2				A3	A4	A5	A6									A7				A8				A9				A10				A11				A12				A13				A14				A15				A16				A17				A18			
TYPE	Str.				Str.				Str.	Str.	Str.	4									Str.				Str.				Str.				8				8				8				8				7				7				Str.				Str.				Str.			
SIZE									#5	#5	#5																		#5				#5				#5				#5				#5				#5				#5				#5				#5			
H	No.	Size	Length ft.	Length in.	No.	Size	Length ft.	Length in.	Spacing	No.	Size	No.	Size	Length ft.	Length in.	Spacing	A ft.	A in.	B ft.	B in.	C ft.	C in.	D ft.	D in.	No.	Size	Length ft.	Length in.	Spacing	No.	Size	Length ft.	Length in.	No.	Size	Length ft.	Length in.	No.	Size	Length ft.	Length in.	No.	Size	Length ft.	Length in.	No.	Size	Length ft.	Length in.	No.	Size	Length ft.	Length in.	No.	Size	Length ft.	Length in.	No.	Size	Length ft.	Length in.	No.	Size	Length ft.	Length in.	No.	Size	Length ft.	Length in.
15-16	90	10	11	8	12	90	7	11	8	12	24	20	6	24	38	11	24	39	5	87	9	9	11	12	8	⅛	1	10	0	11⅞	8	6	90	5	4	11	12	87	6	12	10	12	90	12	10	12	14	41	8	14	38	2	14	18	6	14	18	1	14	40	11	14	36	10	2	45	0	2	21	11	140	5	9
13-14	84	9	10	8	12	84	7	10	8	12	22	18	2	22	34	10	22	39	0	81	8	8	3	12	6	11	1	3	0	8	7	3	84	5	4	11	12	81	6	10	10	12	84	10	10	12	12	37	9	12	34	2	12	16	6	12	16	1	12	41	0	12	36	10	2	41	0	2	19	11	128	5	9
11-12	78	8	9	8	12	78	6	9	8	12	20	15	10	20	29	9	20	38	7	74	7	7	1	12	5	10½	1	2	0	7	6	2	77	5	4	11	12	74	5	8	10	12	77	8	10	12	10	32	9	10	29	2	10	14	6	10	14	1	10	41	0	10	36	10	2	36	0	2	17	11	114	5	9
9-10	72	7	8	8	12	72	5	8	8	12	18	13	6	18	24	8	18	38	2	67	6	6	1	12	5	1	1	0	0	6	5	4	70	5	4	11	12	67	5	6	10	12	70	6	10	12	8	27	9	8	24	2	8	12	6	8	12	1	8	41	1	8	36	10	2	31	0	2	15	11	100	5	9
7-8	66	6	7	2	12	66	5	7	2	12	16	10	11	16	18	11	16	37	4	60	5	5	7	12	4	8½	0	10	0	5	4	11	63	5	4	11	12	60	5	4	10	12	63	4	10	12	6	22	10	6	19	2	6	10	6	6	10	1	6	41	1	6	36	10	2	26	0	2	13	11	86	5	9
5-6	60	5	6	2	12	60	5	6	2	12	14	8	7	14	13	9	14	36	10	53	5	5	7	12	4	8½	0	10	0	5	4	11	56	5	4	11	12	53	5	2	10	12	56	2	10	12	4	17	10	4	14	2	4	8	6	4	8	1	4	41	1	4	36	10	2	21	0	2	11	11	72	5	9

Reinforcement Details

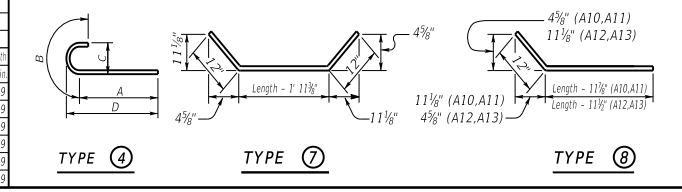

Table of Dimensions

H	W Length ft.	W Length in.	N Length ft.	N Length in.	M4 Length ft.	M4 Length in.	M5 Length ft.	M5 Length in.	S4 Length ft.	S4 Length in.	S5 Length ft.	S5 Length in.	T4 Length ft.	T4 Length in.	T5 Length ft.	T5 Length in.	L4 Length ft.	L5 Length ft.
15-16	12	0	5	0	14	8½	19	1½	25	⅞	14	4½	35	5⅝	7	11	37	16
13-14	11	0	4	6	13	1½	16	11¾	24	5⅝	14	6½	33	8¼	7	½	33	14
11-12	10	0	4	0	11	2	14	9½	23	10¾	14	8½	28	11⅜	6	1½	28	12
9-10	9	0	3	6	9	2⅝	12	7⅜	23	3½	14	10½	23	3⅛	5	2¾	23	10
7-8	7	6	2	9	7	3	10	3⅞	22	4½	15	1½	17	6	4	3⅜	18	8
5-6	6	6	2	3	5	3⅝	8	2	21	9½	15	3½	12	9½	3	4⅜	13	6

4 foot min. shoulder

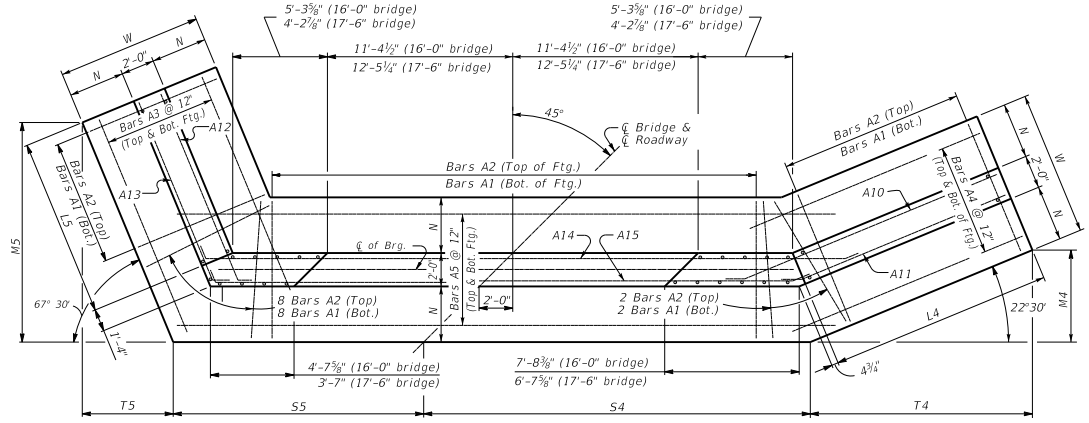

(Left Skew as shown;right skew opp. hand)

PLAN

NOTE: Trim A16 & A17 bars if necessary

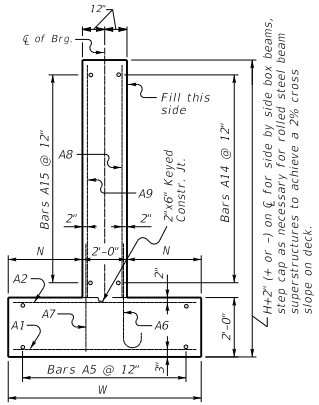

WALL SECTION

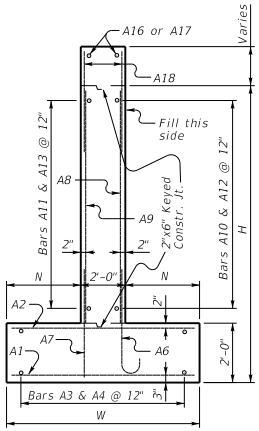

WING SECTION

Quantities

H	Concrete* C.Y.	Reinforcement LBS.
5	42.2	3593
6	46.2	3593
7	61.4	5111
8	65.9	5111
9	86.2	7315
10	91.3	7315
11	111.9	10341
12	117.5	10341
13	140.7	14673
14	146.8	14673
15	170.7	19131
16	177.2	19131

*Concrete quantities computed using 21" beam depth on ½" pad & 16'-0" Bridge Width

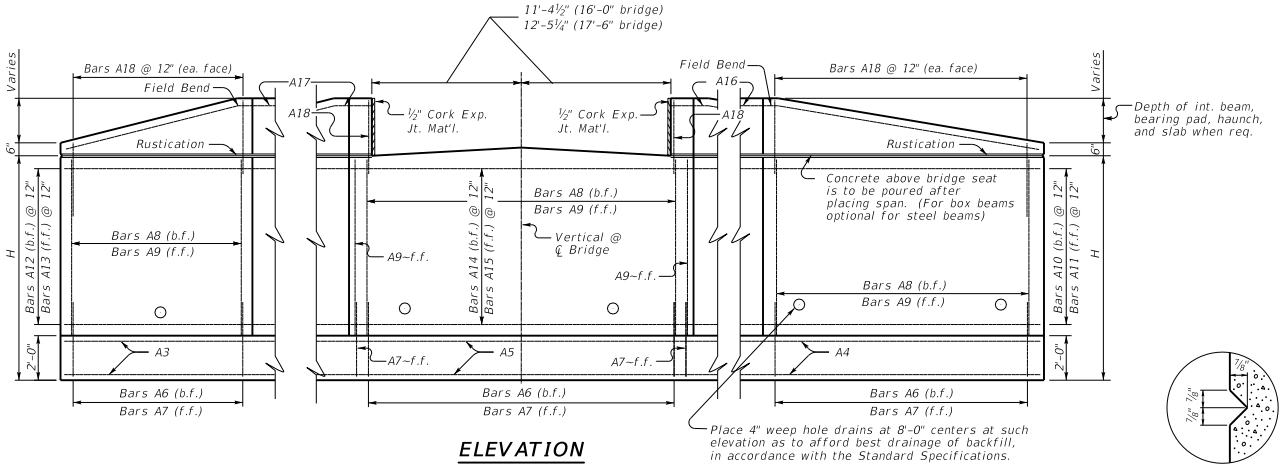

ELEVATION

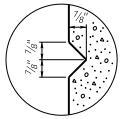

RUSTICATION GROOVE

GENERAL NOTES

SPECIFICATIONS: Construct abutments according to the current edition of the Kentucky Department of Highways Standard Specifications for Road and Bridge Construction. Abutments are designed for side by side box beams as detailed in Standard Drawings BDP-001 through BDP-012, current edition. Dimensions may be adjusted to allow for 17'-6" rolled steel beam bridge width.

FOUNDATION PRESSURE: Construct abutment footings on solid rock bearing material that can support a pressure of 8000 psf service or 10,800 psf strength factored as recommended by a geotechnical engineer.

WING LENGTHS: Calculated assuming 21" superstructure depth and stream bank elevation at top of footing.

FOOTING ELEVATION: Construct bottom of footing below the anticipated scour elevation. (This typically entails embedding the footings 1'-0" to 2'-0" into rock and pouring concrete directly against cut rock faces as recommended by geotechnical engineer.)

NOTE: Distances to bars shown are clear dimensions unless otherwise noted.

MATERIAL SPECIFICATIONS:
Concrete, Class "A" = 3500 psi
Steel Reinforcement = Grade 60

KENTUCKY
DEPARTMENT OF HIGHWAYS

45° SKEW
16'-0"-17'-6" BRIDGE WIDTH
2:1 FILL SLP, 4' MIN. SHLDR.

STANDARD DRAWING NO. BSA-110

SUBMITTED _____ DIRECTOR DIVISION OF STRUCTURAL DESIGN — DATE 02-26-20

APPROVED _____ STATE HIGHWAY ENGINEER — DATE 02-26-20

45° SKEW 24'-0" – 25'-6" BRIDGE WIDTH 2:1 FILL SLOPES

Bill of Reinforcement

MARK	A1				A2				A3				A4				A5				A6								A7				A8				A9				A10				A11				A12				A13				A14				A15				A16				A17				A18			
TYPE	Str.				Str.				Str.				Str.				Str.				4								Str.				Str.				Str.				8				8				8				8				7				7				Str.				Str.				Str.			
SIZE									#5				#5				#5																				#5				#5				#5				#5				#5				#5				#5				#5				#5			
H	No.	Size	Length ft.	Length in.	No.	Size	Length ft.	Length in.	No.	Size	Length ft.	Length in.	No.	Size	Length ft.	Length in.	No.	Size	Length ft.	Length in.	No.	Size	Length ft.	Length in.	A ft.	A in.	B ft.	B in.	C ft.	C in.	D ft.	D in.	No.	Size	Length ft.	Length in.	Staining	No.	Size	Length ft.	Length in.	Staining	No.	Length ft.	Length in.	Staining	No.	Length ft.	Length in.	Staining	No.	Length ft.	Length in.	Staining	No.	Length ft.	Length in.	Staining	No.	Length ft.	Length in.	Staining	No.	Length ft.	Length in.	Staining	No.	Length ft.	Length in.	Staining	No.	Length ft.	Length in.	Staining
15-16	101	10	11	8	12	101	7	11	8	12	24	20	6	24	38	11	24	50	9	98	9	9	11	12	8	⅛	1	10	0	11⅞	8	6	102	5	4	11	12	98	6	12	10	12	102	12	10	12	14	41	8	14	38	2	14	18	6	14	18	1	14	52	3	14	48	1	2	45	0	2	21	11	140	5	9
13-14	95	9	10	8	12	95	7	10	8	12	22	18	2	22	34	10	22	50	4	92	8	8	3	12	6	11	1	3	0	8	7	3	96	5	4	11	12	92	6	10	10	12	96	10	10	12	12	37	9	12	34	2	12	16	6	12	16	1	12	52	4	12	48	1	2	41	0	2	19	11	128	5	9
11-12	90	8	9	8	12	90	6	9	8	12	20	15	10	20	29	9	20	49	11	85	7	7	1	12	5	10½	1	2	0	7	6	2	89	5	4	11	12	85	5	8	10	12	89	8	10	12	10	32	9	10	29	2	10	14	6	10	14	1	10	52	4	10	48	1	2	36	0	2	17	11	114	5	9
9-10	83	7	8	8	12	83	5	8	8	12	18	13	6	18	24	8	18	49	6	78	6	6	1	12	5	1	1	0	0	6	5	4	82	5	4	11	12	78	5	6	10	12	82	6	10	12	8	27	9	8	24	2	8	12	6	8	12	1	8	52	4	8	48	1	2	31	0	2	15	11	100	5	9
7-8	78	6	7	2	12	78	5	7	2	12	16	10	11	16	18	11	16	48	7	71	5	5	7	12	4	8½	0	10	0	5	4	11	75	5	4	11	12	71	5	4	10	12	75	4	10	12	6	22	10	6	19	2	6	10	6	6	10	1	6	52	5	6	48	1	2	26	0	2	13	11	86	5	9
5-6	71	5	6	2	12	71	5	6	2	12	14	8	7	14	13	9	14	48	2	64	5	5	7	12	4	8½	0	10	0	5	4	11	68	5	4	11	12	64	5	2	10	12	68	2	10	12	4	17	10	4	14	2	4	8	6	4	8	1	4	52	5	4	48	1	2	21	0	2	11	11	72	5	9

Reinforcement Details

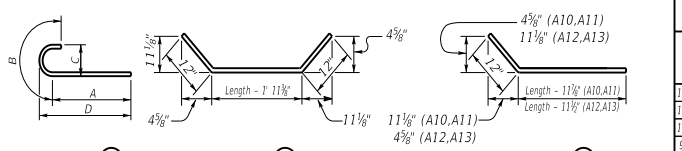

Table of Dimensions

H	W Length ft.	W Length in.	N Length ft.	N Length in.	M4 Length ft.	M4 Length in.	M5 Length ft.	M5 Length in.	S4 Length ft.	S4 Length in.	S5 Length ft.	S5 Length in.	T4 Length ft.	T4 Length in.	T5 Length ft.	T5 Length in.	L4 Length ft.	L5 Length ft.
15-16	12	0	5	0	14	8¼	19	1¼	30	8⅞	20	⅛	35	5⅝	7	11	37	16
13-14	11	0	4	6	13	1½	16	11⅜	30	1½	20	2⅞	33	8¼	7	¼	33	14
11-12	10	0	4	0	11	2	14	9½	29	6⅝	20	4⅛	28	11⅞	6	1½	28	12
9-10	9	0	3	6	9	2⅝	12	7⅞	28	11⅛	20	6⅛	22	3⅛	5	2¾	23	10
7-8	7	6	2	9	7	3	10	3⅞	28	⅜	20	9⅛	17	6	4	3⅜	18	8
5-6	6	6	2	3	5	3⅜	8	2	27	5⅛	20	11¼	13	9½	3	4⅜	13	6

4 foot min. shoulder

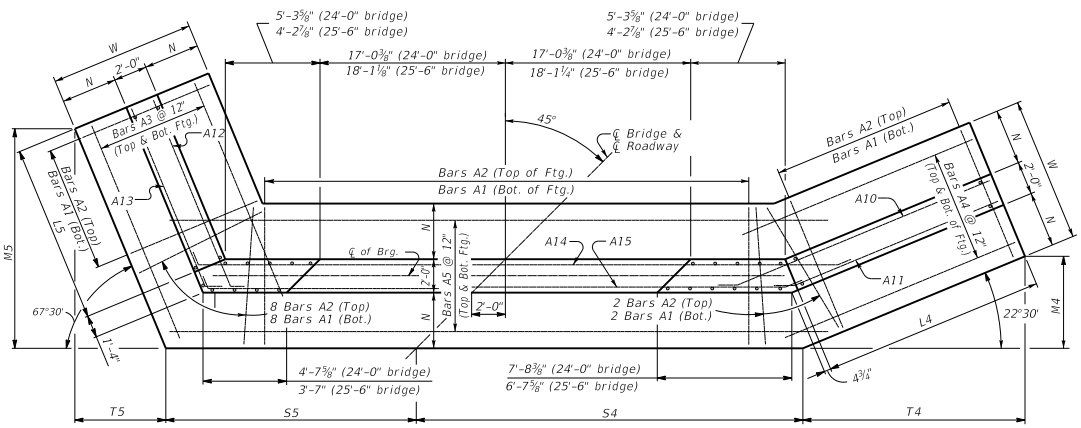

(Left Skew as shown;right skew opp. hand)

PLAN

NOTE: Trim A16 & A17 bars if necessary

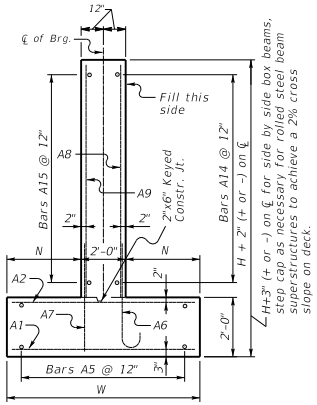

WALL SECTION

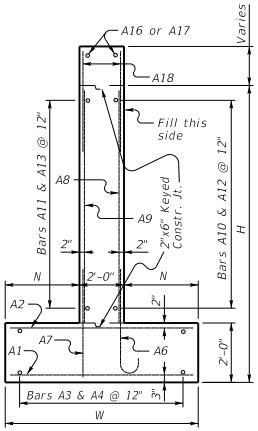

WING SECTION

Quantities		
H	Concrete* C.Y.	Reinforcement LBS.
5	50.3	4189
6	55.2	4189
7	72	5902
8	77.4	5902
9	99.8	8339
10	105.7	8339
11	128	11734
12	134.4	11734
13	159.4	16476
14	166.3	16476
15	191.8	21351
16	199.2	21351

*Concrete quantities computed using 21" beam depth on ½" pad & 24'-0" Bridge Width

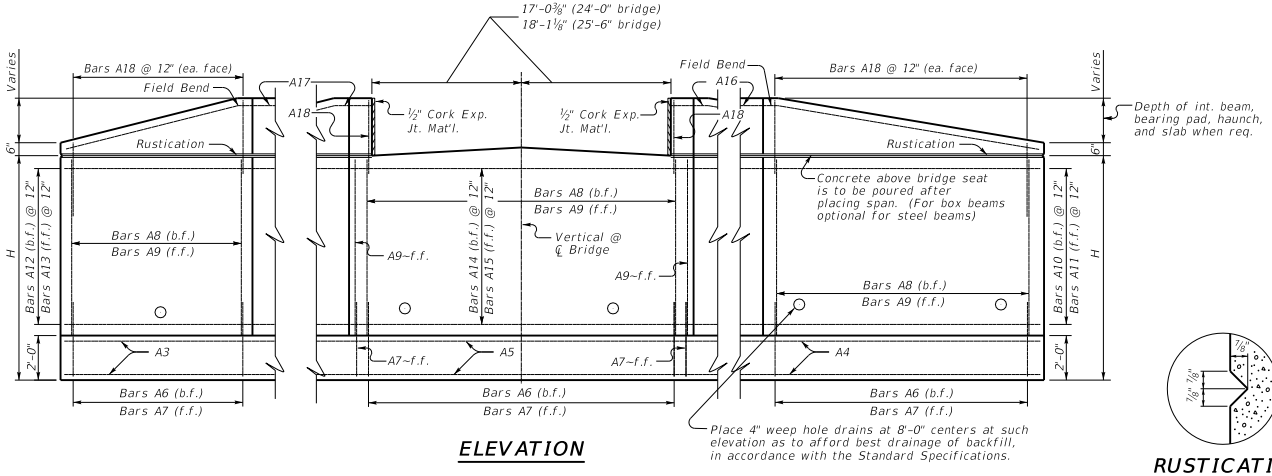

ELEVATION

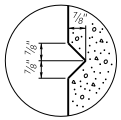

RUSTICATION GROOVE

GENERAL NOTES

SPECIFICATIONS: Construct abutments according to the current edition of the Kentucky Department of Highways Standard Specifications for Road and Bridge Construction. Abutments are designed for side by side box beams as detailed in Standard Drawings BDP-001 through BDP-012, current edition. Dimensions may be adjusted to allow for 25'-6" rolled steel beam bridge width.

FOUNDATION PRESSURE: Construct abutment footings on solid rock bearing material that can support a pressure of 8000 psf service or 10,800 psf strength factored as recommended by a geotechnical engineer.

WING LENGTHS: Calculated assuming 21" superstructure depth and stream bank elevation at top of footing.

FOOTING ELEVATION: Construct bottom of footing below the anticipated scour elevation. (This typically entails embedding the footings 1'-0" to 2'-0" into rock and pouring concrete directly against cut rock faces as recommended by geotechnical engineer.)

NOTE: Distances to bars shown are clear dimensions unless otherwise noted.

MATERIAL SPECIFICATIONS:
Concrete, Class "A" = 3500 psi
Steel Reinforcement = Grade 60

KENTUCKY
DEPARTMENT OF HIGHWAYS

45° SKEW
24'-0"-25'-6" BRIDGE WIDTH
2:1 FILL SLP, 4' MIN. SHLDR.

STANDARD DRAWING NO. BSA-111

SUBMITTED _____ DIRECTOR DIVISION OF STRUCTURAL DESIGN — DATE 02-26-20

APPROVED _____ STATE HIGHWAY ENGINEER — DATE 02-26-20

45° SKEW 32'-0" - 33'-6" BRIDGE WIDTH 2:1 FILL SLOPES

Bill of Reinforcement

MARK	A1			A2			A3	A4	A5*	A6							A7			A8			A9			A10			A11			A12			A13			A14*			A15			A16			A17			A18		
TYPE	Str.			Str.			Str.	Str.	Str.	4							Str.			Str.			Str.			8			8			8			8			7			7			Str.			Str.			Str.		
SIZE							#5	#5	#5														#5			#5			#5			#5			#5			#5			#5			#5			#5			#5		
H	No.	Size	Length ft. in.	No.	Size	Length ft. in.	Spacing	No.	Size	Length ft. in.	Spacing	No.	Size	Length ft. in.	A ft. in.	B ft. in.	C ft. in.	D ft. in.	No.	Size	Length ft. in.	Spacing	No.	Size	Length ft. in.	Spacing	No.	Length ft. in.	Spacing	No.	Length ft. in.	Spacing	No.	Length ft. in.	Spacing	No.	Length ft. in.	Spacing	No.	Length ft. in.	Spacing	No.	Length ft. in.	Spacing	No.	Length ft. in.	Spacing	No.	Length ft. in.	Spacing	No.	Length ft. in.	Spacing
15-16	112	10	11 8	12	112	7	11 8	12	24	20	6	24	38	11	24	62	1	109	9	9	11	12	8	⅞	1	10	0	11⅞	8	6	113	5	4	11	12	109	6	12	10	12	113	12	10	12	14	42	8	14	38	2	14	18	6	14	18	1	14	63	7	14	59	5	2	45	0	2	21	11	140	5	9
13-14	107	9	10 8	12	107	7	10 8	12	22	18	2	22	34	10	22	61	8	103	8	8	3	12	6	11	1	3	0	8	7	3	107	5	4	11	12	103	6	10	10	12	107	10	10	12	37	9	12	34	2	12	16	6	12	16	1	12	63	7	12	59	5	2	41	0	2	19	11	128	5	9
11-12	101	8	9 8	12	101	6	9 8	12	20	15	10	20	29	9	20	61	3	96	7	7	1	12	5	10½	1	2	0	7	6	2	100	5	4	11	12	96	5	8	10	12	100	8	10	12	30	32	9	10	29	2	10	14	6	10	14	1	10	63	8	10	59	5	2	36	0	2	17	11	114	5	9
9-10	94	7	8 8	12	94	5	8 8	12	18	13	6	18	24	8	18	60	9	89	6	6	1	12	5	1	1	0	0	6	5	4	93	5	4	11	12	89	5	6	10	12	93	6	10	12	8	27	9	8	24	2	8	12	6	8	12	1	8	63	8	8	59	5	2	31	0	2	15	11	100	5	9
7-8	89	6	7 2	12	89	5	7 2	12	16	10	11	16	18	11	16	59	11	82	5	5	7	12	4	8½	0	10	0	5	4	11	86	5	4	11	12	82	5	4	10	12	86	4	10	12	6	22	10	6	19	2	6	10	6	6	10	1	6	63	8	6	59	5	2	26	0	2	13	11	86	5	9
5-6	83	5	6 2	12	83	5	6 2	12	14	8	7	14	13	9	14	59	6	75	5	5	7	12	4	8½	0	10	0	5	4	11	79	5	4	11	12	75	5	2	10	12	79	2	10	12	4	17	10	4	14	2	4	8	6	4	8	1	4	63	8	4	59	5	2	21	0	2	11	11	72	5	9

Reinforcement Details

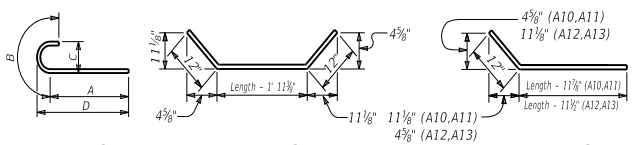

TYPE 4 TYPE 7 TYPE 8

Table of Dimensions

H	W	N	M4	M5	S4	S5	T4	T5	L4	L5
	Length ft. in.	Length ft. in.	Length ft. in.	Length ft. in.	Length ft. in.	Length ft. in.	Length ft. in.	Length ft. in.	Length ft.	Length ft.
15-16	12 0	5 0	14 8½	19 1¼	36 4⅝	23 8	35 5⅝	7 11	37	16
13-14	11 0	4 6	13 1½	16 11⅜	35 9⅝	25 10	33 8¼	7 ¼	33	14
11-12	10 0	4 0	11 2	14 9½	35 2¼	26 0	28 11⅜	6 1½	28	12
9-10	9 0	3 6	9 2⅝	12 7⅝	34 7	26 2	23 3⅛	5 2⅝	23	10
7-8	7 6	2 9	7 3	10 3⅞	33 8¼	26 5	17 6	4 3⅜	18	8
5-6	6 6	2 3	5 3⅞	8 2	33 1	26 7	12 9½	3 4⅝	13	6

NOTE: Bars with * next to mark may have lengths over 60 ft and may require a lap splice of 2'-2". The contractor shall determine the lap location and include the extra length necessary for the lap when ordering the steel reinforcement. This extra length is not included in the quantities and shall be incidental to the rebar.

4 foot min. shoulder

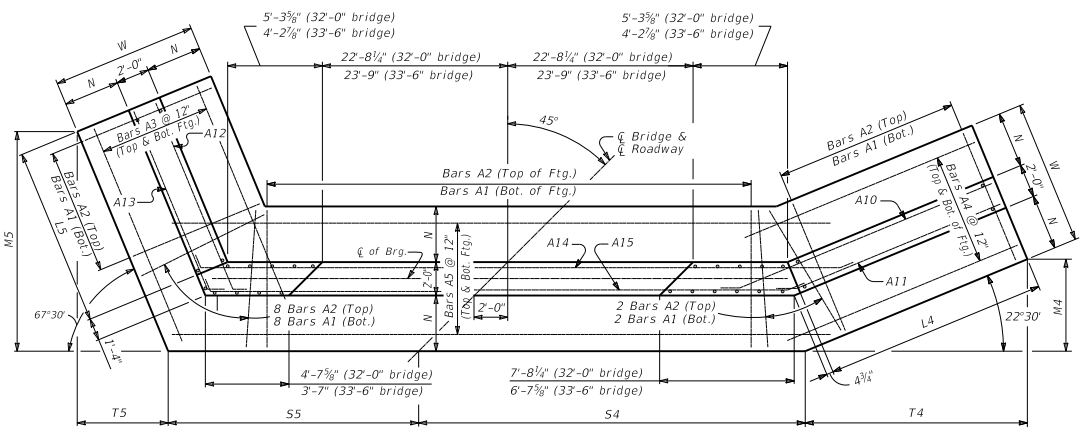

(Left Skew as shown;right skew opp. hand)

PLAN

NOTE: Trim A16 & A17 bars if necessary

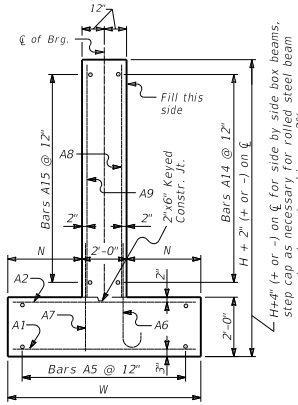

WALL SECTION

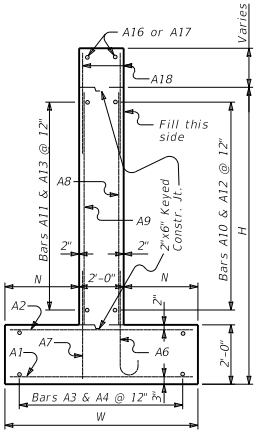

WING SECTION

Quantities		
H	Concrete* C.Y.	Reinforcement LBS.
5	58.5	4790
6	64.2	4790
7	82.8	6667
8	89	6667
9	113.5	9350
10	120.2	9350
11	144.2	13073
12	151.4	13073
13	178	18320
14	185.8	18320
15	213	23554
16	221.2	23554

*Concrete quantities computed using 21" beam depth on ½" pad & 32'-0" Bridge Width

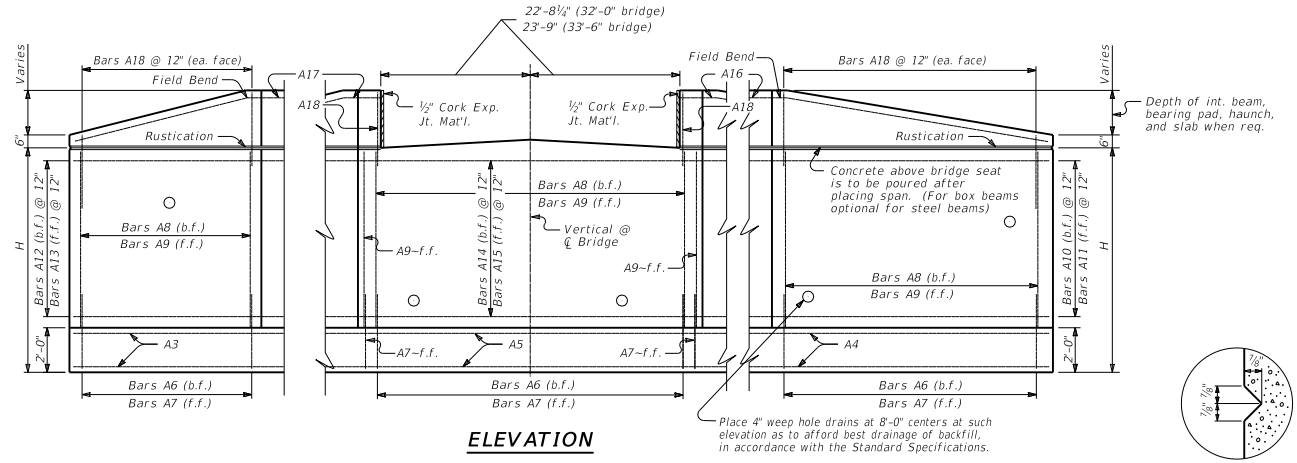

ELEVATION

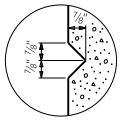

RUSTICATION GROOVE

GENERAL NOTES

SPECIFICATIONS: Construct abutments according to the current edition of the Kentucky Department of Highways Standard Specifications for Road and Bridge Construction. Abutments are designed for side by side box beams as detailed in Standard Drawings BDP-001 through BDP-012, current edition. Dimensions may be adjusted to allow for 33'-6" rolled steel beam bridge width.

FOUNDATION PRESSURE: Construct abutment footings on solid rock bearing material that can support a pressure of 8000 psf service or 10,800 psf strength factored as recommended by a geotechnical engineer.

WING LENGTHS: Calculated assuming 21" superstructure depth and stream bank elevation at top of footing.

FOOTING ELEVATION: Construct bottom of footing below the anticipated scour elevation. (This typically entails embedding the footings 1'-0" to 2'-0" into rock and pouring concrete directly against cut rock faces as recommended by geotechnical engineer.)

NOTE: Distances to bars shown are clear dimensions unless otherwise noted.

MATERIAL SPECIFICATIONS:
Concrete, Class "A" = 3500 psi
Steel Reinforcement = Grade 60

KENTUCKY
DEPARTMENT OF HIGHWAYS

45° SKEW
32'-0"-33'-6" BRIDGE WIDTH
2:1 FILL SLP, 4' MIN. SHLDR.

STANDARD DRAWING NO. BSA-112

SUBMITTED _____ DIRECTOR DIVISION OF STRUCTURAL DESIGN — DATE 02-26-20

APPROVED _____ STATE HIGHWAY ENGINEER — DATE 02-26-20

General Notes

SPECIFICATIONS: All references to the standard Specifications are to the current edition of the Kentucky Department of Highways Standard Specifications for Road and Bridge Construction, with current supplemental specifications. All references to the AASHTO Specifications are to the current edition of the AASHTO LRFD Bridge Design Specifications, with interims.

DESIGN LOADS: Beam sections are designed for H20 Live Load. The fatigue truck is also set at H20.

DESIGN LOAD DISTRIBUTION: Contrary to AASHTO LRFD Bridge Design Specification, the design moment and shear distribution for all beams is 0.6 lanes.

FUTURE WEARING SURFACE: These beams are designed for a 15 PSF future wearing surface load.

SUBSTRUCTURE DESIGN LOADS: Unfactored design reaction forces per beam end.

DC (kips): Beam, Slab, and assumed Type III railing dead loads.
DW (kips): Future wearing surface.
LL+I (kips): LL with Dynamic load allowance.

MATERIAL DESIGN SPECIFICATIONS:

for Beam Steel	FY = 50000 PSI
for Steel Reinforcement	FY = 60000 PSI
for Class "AA" Deck Concrete	F'C = 4000 PSI

MATERIAL STEEL	A.S.T.M	AASHTO
High Strength Low Alloy Structural Steel	*A709 GR 50	*M270 GR 50

High strength bolts, nuts, and washers F3125 Grade A325 M-164 Type 1

Sheet lead and Pig lead B29-79

All steel in longitudinal rolled wide flange beams shall meet the longitudinal Charpy V-Notch toughness test for non-fracture critical components Zone 2 in accordance with the following:

M270 GR 50 (up to 2" thickness) of 15 ft-lbs at 40°F.

Sampling and testing procedures shall be in accordance with AASHTO T243 current edition, utilizing (H) frequency testing. When plate thickness exceeds 1½", frequency of testing shall be (P).

HIGH STRENGTH BOLT CONNECTIONS: Unless otherwise specified on the plans, all bolted connnections shall be ASTM F3125 Grade A325 ¾" diameter high strength bolts, nuts, and washers. Open holes shall be 13/16" diameter. Type 1 galvanized bolts shall be used as described in AASHTO M164. All high strength bolted field connections are to be installed with "direct tension indicators" (DTI's) in accordance with the Standard Specifications and ASTM F959. All DTI's shall be manufactured from a steel conforming to the chemical requirements of ASTM A325 for Type 1 galvanized steel. DTI's shall be installed under the bolt head with the bumps facing the underside of the bolt head. Put a hardened washer under the nut and tension from the nut.

BEVELED EDGES: Bevel all exposed edges ¾".

REINFORCEMENT: Dimensions shown from the face of concrete to reinforcement are clear distances. Spacing of reinforcement is from center to center of reinforcement. All steel reinforcement is to be epoxy coated in accordance with Section 811.10 of the Specifications.

CORROSION PROTECTION: These beams and all steel components are to be hot dip galvanized. If hot dip galvanizing is cost prohibitive then all steel components must be painted. Unpainted weathering steel is not recommended within 10 feet of moving water. Additionally these beams do not meet fatigue design requirements of unpainted weathering steel.

BRIDGE DECK: A galvanized steel metal grid deck may be substituted for the 8" concrete deck. This will improve the load rating, but smaller beams are not to be used.

TABLE OF BEAM SIZES AND DESIGN DATA (4 FT. MAX. BEAM SPACING)

BEAM SPAN	ROLLED BEAM		DEFLECTION IN INCHES		UNFACTORED BEAM END REACTION		
	BEAM MEMBER	BEAM DEPTH (IN.)	STEEL ONLY	TOTAL DL	DC (kips)	DW (kips)	LL+I (kips)
15' Max.	W16x40	16.0	0.00	0.06	5.39	0.45	25.96
	W14x43	13.7	0.01	0.07	5.42		
	W12x50	12.2	0.01	0.08	5.48		
	W10x60	10.2	0.01	0.08	5.56		
20' Max.	W18x50	18.0	0.01	0.12	7.17	0.60	27.45
	W16x57	16.4	0.01	0.12	7.25		
	W14x61	13.9	0.02	0.15	7.29		
	W12x65	12.1	0.02	0.18	7.34		
	W10x77	10.6	0.03	0.21	7.47		
25' Max.	W21x55	20.8	0.02	0.20	8.94	0.75	28.34
	W18x65	18.4	0.02	0.21	9.07		
	W16x67	16.3	0.03	0.24	9.10		
	W14x74	14.2	0.04	0.29	9.19		
	W12x79	12.4	0.05	0.35	9.26		
30' Max.	W21x73	21.2	0.04	0.30	10.93	0.90	28.94
	W18x76	18.2	0.05	0.36	10.98		
	W16x77	16.5	0.06	0.43	11.00		
	W14x90	14.0	0.07	0.49	11.20		
	W12x96	12.7	0.09	0.59	11.30		
35' Max.	W24x94	24.3	0.05	0.34	13.07	1.05	29.37
	W21x101	21.4	0.06	0.38	13.20		
	W18x97	18.6	0.08	0.52	13.13		
	W14x109	14.3	0.12	0.75	13.35		
40' Max.	W24x104	24.1	0.08	0.51	15.09	1.20	29.69
	W21x111	21.5	0.10	0.60	15.23		
	W18x130	19.3	0.12	0.66	15.63		
	W14x145	14.8	0.19	0.97	15.94		
45' Max.	W27x102	27.1	0.11	0.70	16.87	1.35	29.93
	W24x104	24.1	0.13	0.81	16.92		
	W21x122	21.7	0.15	0.87	17.34		
	W18x143	19.5	0.19	0.96	17.83		
	W14x159	15.0	0.30	1.42	18.20		
50' Max.	W30x116	30.0	0.13	0.79	19.06	1.50	30.13
	W27x129	27.6	0.15	0.83	19.40		
	W24x131	24.5	0.18	0.99	19.45		
	W21x147	22.1	0.22	1.12	19.86		
	W18x175	20.0	0.27	1.22	20.58		
55' Max.	W33x130	33.1	0.16	0.87	21.32	1.65	30.29
	W30x148	30.7	0.18	0.89	21.83		
	W27x146	27.4	0.21	1.05	21.77		
	W24x146	24.7	0.26	1.30	21.77		
	W21x166	22.5	0.31	1.42	22.34		
60' Max.	W33x152	33.5	0.21	1.04	23.90	1.80	30.43
	W30x173	30.4	0.24	1.05	24.54		
	W27x161	27.6	0.29	1.36	24.17		
	W24x176	25.2	0.35	1.53	24.63		
	W21x201	23.0	0.42	1.69	25.40		

H-20 DESIGN LOAD

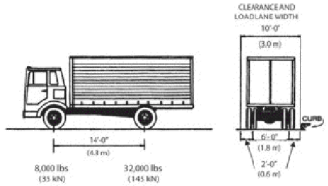

These beams were sized according to H-20 truck design. This does not meet federal minimum design HL-93 nor KY minimum KYHL-93.

Use of these beams will limit the loaded size of trucks allowed to cross the bridge.

This is suitable for very low volume roads with little potential for future development. These beams can handle a loaded school bus, but are not suitable for a loaded gravel truck or concrete truck. They are not suitable for typical trucks associated with construction, agriculture, or coal.

KENTUCKY
DEPARTMENT OF HIGHWAYS

H20 STEEL
BEAM
STANDARDS

STANDARD DRAWING NO. BSB-001

SUBMITTED _____ 02-26-20
DIRECTOR DIVISION OF STRUCTURAL DESIGN — DATE

APPROVED _____ 02-26-20
STATE HIGHWAY ENGINEER — DATE

General Notes

SPECIFICATIONS: All references to the standard Specifications are to the current edition of the Kentucky Department of Highways Standard Specifications for Road and Bridge Construction, with current supplemental specifications. All references to the AASHTO Specifications are to the current edition of the AASHTO LRFD Bridge Design Specifications, with interims.

DESIGN LOADS: Beam sections are designed for 1.25*HL93 (KYHL93) Live Load.

DESIGN LOAD DISTRIBUTION: Contrary to AASHTO LRFD Bridge Design Specification, the design moment and shear distribution for all beams is 0.6 lanes.

FUTURE WEARING SURFACE: These beams are designed for a 15 PSF future wearing surface load.

SUBSTRUCTURE DESIGN LOADS: Unfactored design reaction forces per beam end.

DC (kips): Beam, Slab, and assumed Type III railing dead loads.
DW (kips): Future wearing surface.
LL+I (kips): LL with Dynamic load allowance.

MATERIAL DESIGN SPECIFICATIONS:

for Beam Steel	FY = 50000 PSI
for Steel Reinforcement	FY = 60000 PSI
for Class "AA" Deck Concrete	F'C = 4000 PSI

MATERIAL STEEL	A.S.T.M	AASHTO
High Strength Low Alloy Structural Steel	*A709 GR 50	*M270 GR 50

High strength bolts, nuts, and washers F3125 Grade A325 M-164 Type 1

Sheet lead and Pig lead B29-79

All steel in longitudinal rolled wide flange beams shall meet the longitudinal Charpy V-Notch toughness test for non-fracture critical components Zone 2 in accordance with the following:

M270 GR 50 (up to 2" thickness) of 15 ft-lbs at 40°F.

Sampling and testing procedures shall be in accordance with AASHTO T243 current edition, utilizing (H) frequency testing. When plate thickness exceeds 1½", frequency of testing shall be (P).

HIGH STRENGTH BOLT CONNECTIONS: Unless otherwise specified on the plans, all bolted connnections shall be ASTM F3125 Grade A325 ¾" diameter high strength bolts, nuts, and washers. Open holes shall be 13/16" diameter. Type 1 galvanized bolts shall be used as described in AASHTO M164. All high strength bolted field connections are to be installed with "direct tension indicators" (DTI's) in accordance with the Standard Specifications and ASTM F959. All DTI's shall be manufactured from a steel conforming to the chemical requirements of ASTM A325 for Type 1 galvanized steel. DTI's shall be installed under the bolt head with the bumps facing the underside of the bolt head. Put a hardened washer under the nut and tension from the nut.

BEVELED EDGES: Bevel all exposed edges ¾".

REINFORCEMENT: Dimensions shown from the face of concrete to reinforcement are clear distances. Spacing of reinforcement is from center to center of reinforcement. All steel reinforcement is to be epoxy coated in accordance with Section 811.10 of the Specifications.

CORROSION PROTECTION: These beams and all steel components are to be hot dip galvanized. If hot dip galvanizing is cost prohibitive then all steel components must be painted. Unpainted weathering steel is not recommended within 10 feet of moving water. Additionally these beams do not meet fatigue design requirements of unpainted weathering steel.

BRIDGE DECK: A galvanized steel metal grid deck may be substituted for the 8" concrete deck. This will improve the load rating, but smaller beams are not to be used.

TABLE OF BEAM SIZES AND DESIGN DATA (4 FT. MAX. BEAM SPACING)

BEAM SPAN	ROLLED BEAM		DEFLECTION IN INCHES		UNFACTORED BEAM END REACTION		
	BEAM MEMBER	BEAM DEPTH (IN.)	STEEL ONLY	TOTAL DL	DC (kips)	DW (kips)	LL+I (kips)
15' Max.	W18x50	18.0	0.00	0.03	5.54	0.45	46.82
	W16x50	16.3	0.00	0.03	5.54		
	W14x53	13.9	0.01	0.06	5.56		
	W12x58	12.2	0.01	0.06	5.60		
	W10x77	10.6	0.01	0.07	5.76		
20' Max.	W18x65	18.2	0.00	0.08	7.41	0.60	49.69
	W16x67	16.3	0.00	0.09	7.44		
	W14x74	14.2	0.00	0.11	7.51		
	W12x79	12.4	0.00	0.13	7.56		
	W10x100	11.1	0.00	0.14	7.79		
25' Max.	W24x76	23.9	0.02	0.11	9.29	0.75	51.96
	W21x93	21.6	0.02	0.11	9.52		
	W18x76	18.2	0.02	0.18	9.29		
	W16x89	16.8	0.03	0.18	9.47		
	W14x99	14.2	0.03	0.21	9.59		
30' Max.	W24x103	24.5	0.03	0.16	11.49	0.90	56.68
	W21x101	21.4	0.03	0.20	11.46		
	W18x97	18.6	0.04	0.28	11.39		
	W14x145	14.8	0.06	0.31	12.16		
35' Max.	W27x129	27.6	0.04	0.20	13.79	1.05	61.07
	W24x117	24.3	0.05	0.26	13.57		
	W21x122	21.7	0.06	0.32	13.67		
	W18x143	19.5	0.07	0.35	14.05		
	W14x176	15.2	0.10	0.47	18.33		
40' Max.	W30x148	30.7	0.05	0.25	16.09	1.20	64.66
	W27x146	27.4	0.06	0.30	16.06		
	W24x146	24.7	0.07	0.36	16.06		
	W21x147	22.1	0.09	0.46	16.07		
	W18x192	20.4	0.11	0.45	17.01		
45' Max.	W33x130	33.1	0.07	0.39	17.63	1.35	67.72
	W30x132	30.3	0.08	0.45	17.68		
	W27x129	27.6	0.10	0.54	17.59		
	W24x146	24.7	0.11	0.58	18.00		
	W21x166	22.5	0.14	0.63	18.46		
50' Max.	W36x150	35.9	0.10	0.45	20.05	1.50	70.41
	W33x152	33.5	0.10	0.50	20.1		
	W30x148	30.7	0.12	0.60	19.98		
	W27x146	27.4	0.14	0.71	19.95		
	W24x162	25.0	0.17	0.80	20.35		
55' Max.	W36x160	36.0	0.13	0.62	22.27	1.65	72.83
	W33x169	33.8	0.14	0.65	22.51		
	W30x173	30.4	0.17	0.74	22.66		
	W27x178	27.8	0.20	0.87	22.80		
	W24x192	25.5	0.24	0.99	23.17		
60' Max.	W36x194	36.5	0.18	0.73	25.3	1.80	75.05
	W33x201	33.7	0.19	0.77	25.52		
	W30x173	30.4	0.24	1.05	24.66		
	W27x194	28.1	0.28	1.13	25.31		

KY-HL93 (1.25XHL93) DESIGN LOAD

From AASHTO design code -> Vehicular Live Loading designated HL-93 shall consist of design truck or design tandem plus design lane load.

DESIGN TRUCK

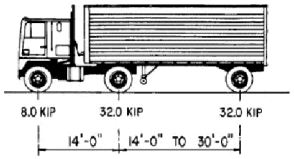

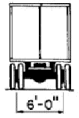

DESIGN TANDEM

Shall consist of a pair of 25,000 pound axles spaced at 4'-0" apart. Transverse wheel spacing is 6'-0".

DESIGN LANE LOAD

The design lane load shall consist of a load of 640 pound/ foot uniformly distributed in the longitudinal direction. Transversely the load is to be uniformly distributed over a 10'-0" width.

The current KY design standard for state roads is to increase the federal minimum (HL-93) by 25% (KY-HL93).

KENTUCKY
DEPARTMENT OF HIGHWAYS

KYHL-93 STEEL
BEAM
STANDARDS

STANDARD DRAWING NO. BSB-002

SUBMITTED _____ DIRECTOR DIVISION OF STRUCTURAL DESIGN — DATE 02-26-20

APPROVED _____ STATE HIGHWAY ENGINEER — DATE 02-26-20

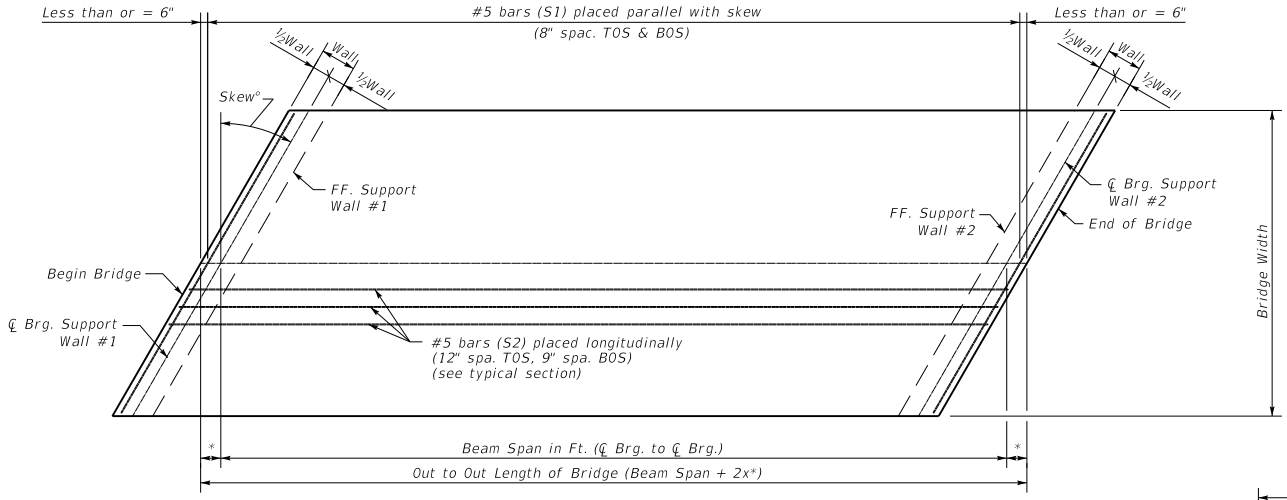

PLAN OF SLAB

NOTE: All reinforcing steel shall be epoxy coated.

#5 Skewed Transverse Bar (S1) Length

0° Skew -> Bridge Width - 4"
15° Skew -> ((Bridge Width - 4"))x 1.035)
30° Skew -> ((Bridge Width - 4") x 1.155) - ⅜"
45° Skew -> ((Bridge Width - 4") x 1.414) - ⅝"

* 0° skew, ½Wall
15° skew, ½Wall x 1.035
30° skew, ½Wall x 1.155
45° skew, ½Wall x 1.414

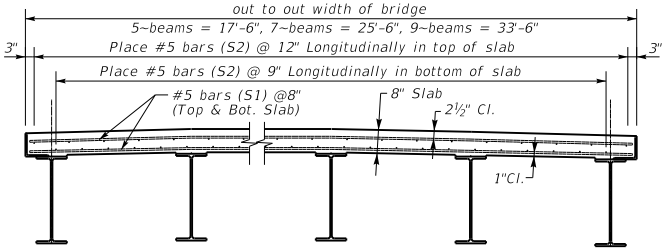

TYPICAL SECTION

NOTE: It is recommended a crash tested barrier be attached to the Superstructure to contain all vehicles within the roadway. Recommended barriers include the Type T631 guardrail, Type 3, or 32" Vertical Face railing.

NOTES: 1.) Diaphragm stirrups are to project into the slab regardless of slab forming method.

2.) Place stirrup bars parallel to face of beams.

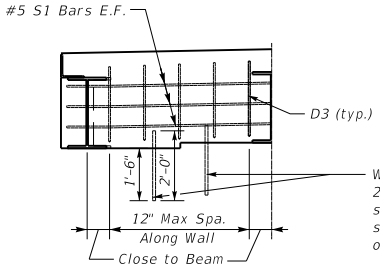

When required Place 2~#8 bars 2'-0" Long (D4) between beams spaced equally. Embed 1'-6" into support wall. (Note: Only one end of bridge to be fixed with dowels).

DIAPHRAGM

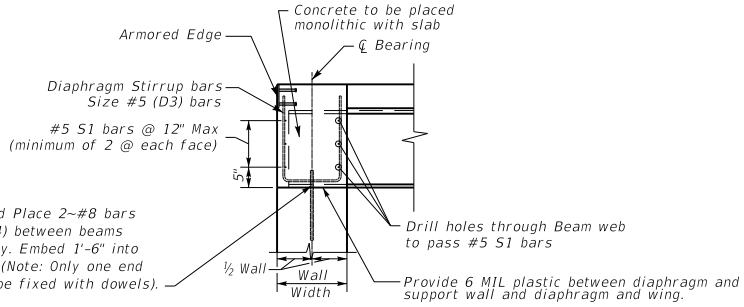

DIAPHRAGM X-SECTION

(Perpendicular to Diaphragm)

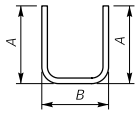

D3 BARS

Dim. "A" = Beam Depth + 4" for Slab
Dim. "A" = Beam Depth - 4" for Grid Deck.

Dim. "B" = 0° Skew -> (Wall Width - 4")
15° Skew -> (Wall Width - 4") x 1.035
30° Skew -> (Wall Width - 4") x 1.155
45° Skew -> (Wall Width - 4") x 1.414

NOTE: End Diaphragms are required on both Grid Deck and Slabs.

KENTUCKY
DEPARTMENT OF HIGHWAYS

SLAB AND END DIAPHRAGM DETAILS

STANDARD DRAWING NO. BSB-003

SUBMITTED _____ DIRECTOR DIVISION OF STRUCTURAL DESIGN 02-26-20 DATE

APPROVED _____ STATE HIGHWAY ENGINEER 02-26-20 DATE

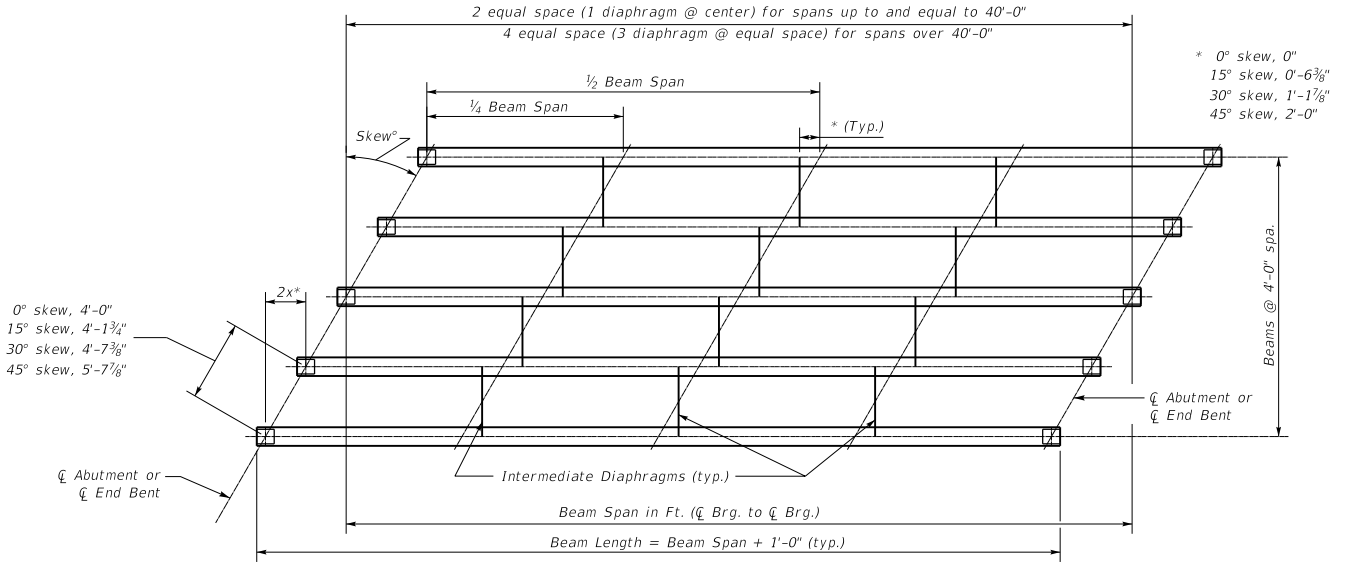

FRAMING PLAN

NOTE: Place girders with any mill or shop camber bowed up in the middle. Heat cambering is not required.

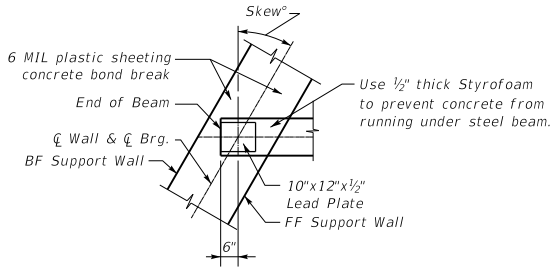

END OF BEAM DETAIL @ SUPPORTS

NOTE: Use ¾" ∅ Bolts with 13/16" ∅ Holes Throughout.

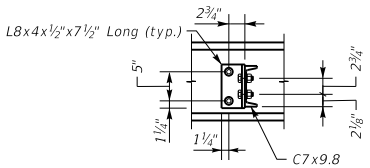

SECTION A-A

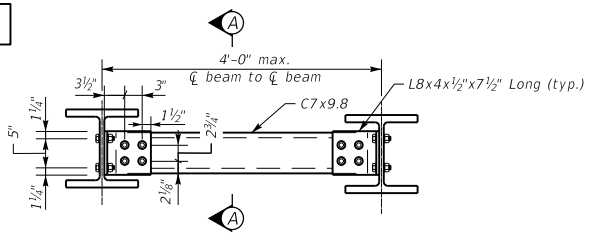

INTERMEDIATE DIAPHRAGM

(for up to 14" beam depth)

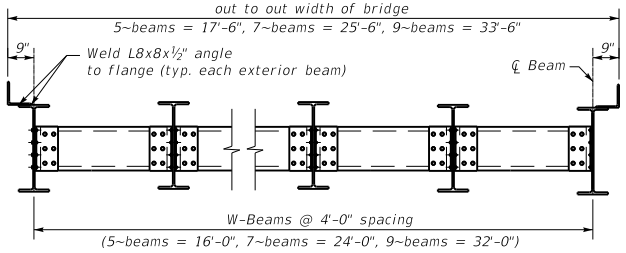

FRAMING TYPICAL

NOTE: Use ¾" ∅ Bolts with 13/16" ∅ Holes Throughout.

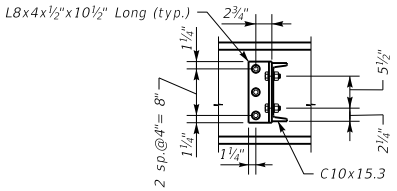

SECTION A-A

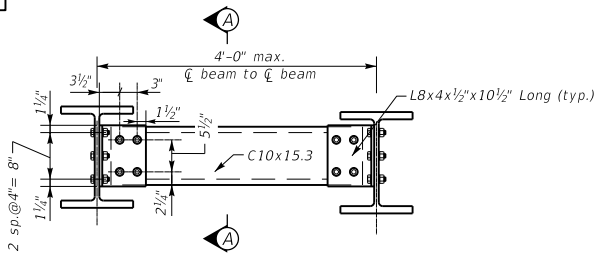

INTERMEDIATE DIAPHRAGM

(for up to 20" beam depth)

KENTUCKY
DEPARTMENT OF HIGHWAYS

ROLLED STEEL
DIAPHRAGM
DETAILS

STANDARD DRAWING NO. BSB-004

SUBMITTED _____ DIRECTOR DIVISION OF STRUCTURAL DESIGN — DATE 02-26-20

APPROVED _____ STATE HIGHWAY ENGINEER — DATE 02-26-20

NOTE: Use ¾" ∅ Bolts with 13/16" ∅ Holes Throughout.

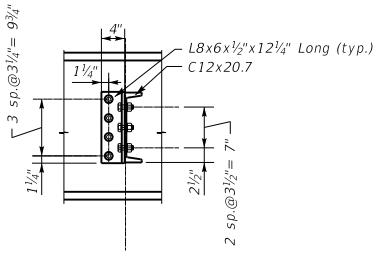

SECTION A-A

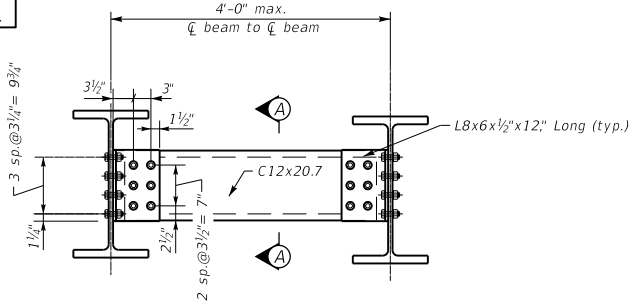

INTERMEDIATE DIAPHRAGM

(for up to 24" beam depth)

NOTE: Use ¾" ∅ Bolts with 13/16" ∅ Holes Throughout.

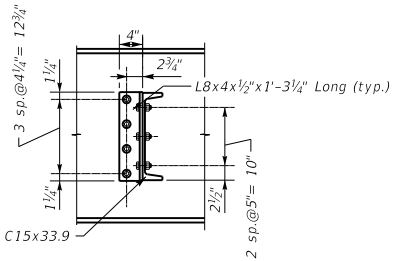

SECTION A-A

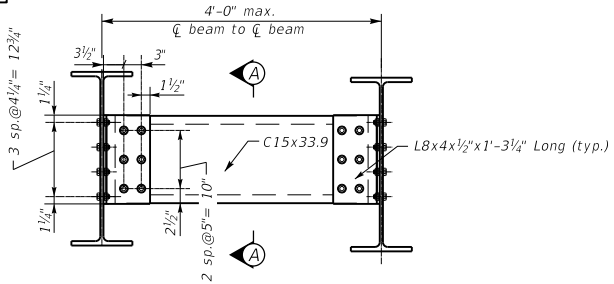

INTERMEDIATE DIAPHRAGM

(for up to 30" beam depth)

NOTE: Use ¾" ∅ Bolts with 13/16" ∅ Holes Throughout.

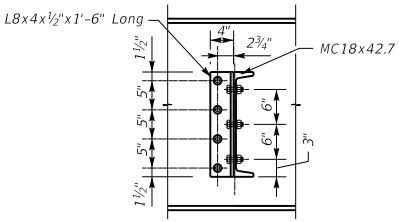

SECTION A-A

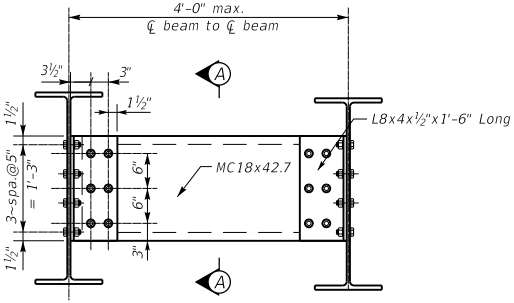

INTERMEDIATE DIAPHRAGM

(for up to 36" beam depth)

KENTUCKY
DEPARTMENT OF HIGHWAYS

ROLLED STEEL
DIAPHRAGM
DETAILS

STANDARD DRAWING NO. BSB-005

SUBMITTED _____ DIRECTOR DIVISION OF STRUCTURAL DESIGN — 02-26-20 DATE

APPROVED _____ STATE HIGHWAY ENGINEER — 02-26-20 DATE

NOTE: Use ¾" ∅ Bolts with 13/16" ∅ Holes Throughout.

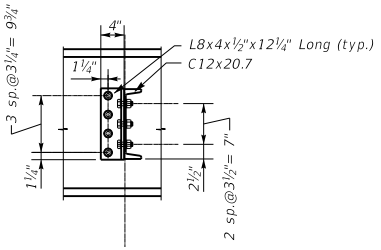

SECTION A-A

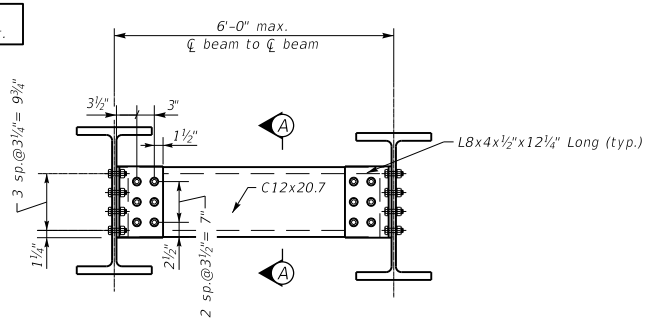

INTERMEDIATE DIAPHRAGM

(for up to 24" beam depth)

NOTE: Use ¾" ∅ Bolts with 13/16" ∅ Holes Throughout.

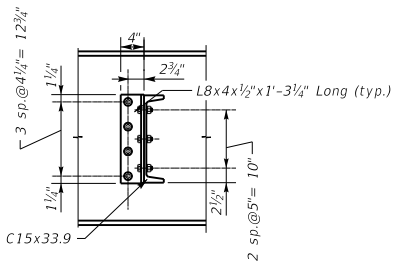

SECTION A-A

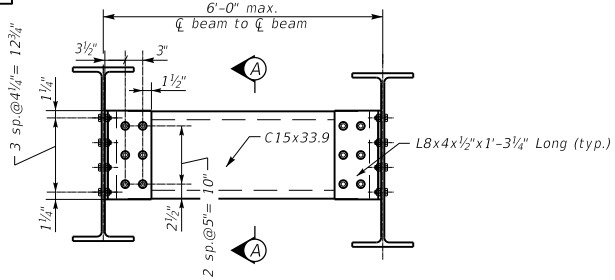

INTERMEDIATE DIAPHRAGM

(for up to 30" beam depth)

NOTE: Use ¾" ∅ Bolts with 13/16" ∅ Holes Throughout.

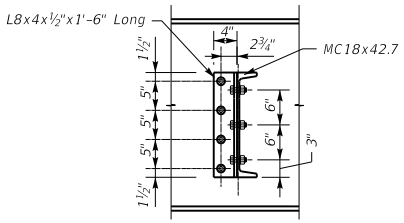

SECTION A-A

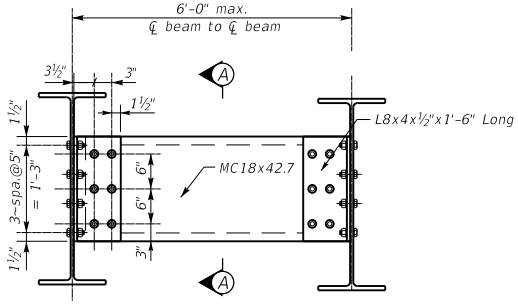

INTERMEDIATE DIAPHRAGM

(for up to 36" beam depth)

KENTUCKY
DEPARTMENT OF HIGHWAYS

COMPOSITE STEEL BEAM
SUPERSTRUCTURES
DIAPHRAGMS CONTINUED

STANDARD DRAWING NO. BSB-006

SUBMITTED _____ DIRECTOR DIVISION OF STRUCTURAL DESIGN — DATE 02-26-20

APPROVED _____ STATE HIGHWAY ENGINEER — DATE 02-26-20

General Notes

SPECIFICATIONS: All references to the standard Specifications are to the current edition of the Kentucky Department of Highways Standard Specifications for Road and Bridge Construction, with current supplemental specifications. All references to the AASHTO Specifications are to the current edition of the AASHTO LRFD Bridge Design Specifications, with interims.

DESIGN LOADS: Beam & Slab sections are designed for 1.25*HL93 (KYHL93) Live Load.

DESIGN LOAD DISTRIBUTION: Beams are designed according to the AASHTO LRFD Bridge Design Specifications for beam spacings up to 6ft and overhangs up to 3'-0" with a 9" wide barrier.

FUTURE WEARING SURFACE: These beams are designed for a 15 PSF future wearing surface load.

SUBSTRUCTURE DESIGN LOADS: Unfactored design reaction forces per beam end.

DC (kips): Beam, Slab, Diaphragms, SIP Forms, and assumed railing dead loads of 533 lbs/ft.
DW (kips): Future wearing surface.
LL+I (kips): LL with Dynamic load allowance.

MATERIAL DESIGN SPECIFICATIONS:

for Beam Steel	FY	=	50000 PSI
for Steel Reinforcement	FY	=	60000 PSI
for Class "AA" Deck Concrete	FY	=	4000 PSI

MATERIAL STEEL	A.S.T.M	AASHTO
High Strength Low Alloy Structural Steel	A709 GR 50	M270 GR 50
Shear Stud Connectors	UNS G 1018	M-169
Sheet lead and Pig Lead	B29-79	
High strength bolts, nuts, and washers	F3125 Grade A325	M-164 Type 1

All steel in longitudinal rolled wide flange beams shall meet the longitudinal Charpy V-Notch toughness test for non-fracture critical components Zone 2 in accordance with the following:

M270 GR 50 (up to 2" thickness) of 15 ft-lbs at 40°F.

Sampling and testing procedures shall be in accordance with AASHTO T243 current edition, utilizing (H) frequency testing. When plate thickness exceeds 1½" frequency of testing shall be (P).

HIGH STRENGTH BOLT CONNECTIONS: Unless otherwise specified on the plans, all bolted connnections shall be ASTM F3125 Grade A325 ¾" diameter high strength bolts, nuts, and washers. Open holes shall be 13/16" diameter. Type 1 galvanized bolts shall be used as described in AASHTO M164. All high strength bolted field connections are to be installed with "direct tension indicators" (DTI's) in accordance with the Standard Specifications and ASTM F959. All DTI's shall be manufactured from a steel conforming to the chemical requirements of ASTM A325 for Type 1 galvanized steel. DTI's shall be installed under the bolt head with the bumps facing the underside of the bolt head. Put a hardened washer under the nut and tension from the nut.

BEVELED EDGES: Bevel all exposed edges ¾".

REINFORCEMENT: Dimensions shown from the face of concrete to reinforcement are to center of bars unless otherwise shown. Spacing of bars is from center to center of bars. Clear distance to face of concrete is 2" unless otherwise noted. Epoxy coat all bars. Use stirrup bend diameters for all bent bars.

CORROSION PROTECTION: These beams and all steel components are to be hot dip galvanized according to ASTM A123. Weathering Steel is not allowed.

SHEAR CONNECTORS: The minimum length of studs is 6". Provide the necessary length to penetrate at least 2" above bottom of slab.

Include all costs for shear connectors with the price of the steel beams. Including shear connectors, welding and welding material, and materials necessary to field weld or shop weld the shear connectors in place according to the plans and specifications.

If the Contractor wishes to use something other than the stud shear connectors shown on the plans, the proposed arrangement shall be submitted for approval with the shop plans.

Studs shall be welded in accordance with AWS Specifications.

MILL TEST REPORTS: Notarized mill test reports shall be furnished in triplicate to the Department, showing that all material used in the structural steel conform to the requirements of the specifications.

PROHIBITED WELDING: No welding of any nature, other than indicated on the plans, is to be performed without the written consent of the designer, and then only in the manner and at the locations designated in the authorization.

SLAB: Ensure the entire superstructure slab and diaphragms are poured continuously, out to out, before allowing any concrete to set.

SHOP DRAWINGS: The fabricator shall submit all required shop plans, by email, to the design engineer for review. These submissions shall depict the shop plans in .pdf format. As either 11"x17" or 22"x36" sheets. Designers will make review comments on these electronic submissions as needed and shall return them to the fabricator. Upon reconciliation of the designers comments, files shall be returned to the designer and plans will be forwarded to the Division of Structural Designs Shop Plan coordinator for distribution. Only plans submitted directly to the shop plan coordinator will be distributed and only plans electronically stamped "Distributed by The Division of Structural Design" are to be used for fabrication. While this process does not require the submission of paper copies, The Division of Structural Design reserves the right to require such copies on a case by case basis.

When any changes to the design plans are proposed by the Fabricator or Supplier, the shop drawings reflecting these changes shall be submitted to the Design Engineer through the contractor.

KENTUCKY
DEPARTMENT OF HIGHWAYS

COMPOSITE STEEL BEAM
SUPERSTRUCTURES
GENERAL NOTES

STANDARD DRAWING NO. BSB-101

SUBMITTED _____ DIRECTOR DIVISION OF STRUCTURAL DESIGN 02-26-20 DATE

APPROVED _____ STATE HIGHWAY ENGINEER 02-26-20 DATE

TABLE OF BEAM SIZES AND DESIGN DATA (6 FT. MAX. BEAM SPACING WITH 3 FT. MAX. OVERHANG)

BEAM SPAN	ROLLED BEAM		DEFLECTION IN INCHES		SHEAR CONNECTORS				UNFACTORED BEAM END REACTION			LL DIST. FACT. (LANES)	
	BEAM MEMBER	BEAM DEPTH (IN.)	STEEL ONLY	TOTAL DL	#Per Row	Spa. @ Ea. End of Beam	Middle Spacing	ADTT	DC (kips)	DW (kips)	LL+I (kips)	LLDFM	LLDFV
20' Max.	W18x55	18.1	0.00	0.11	2	10 Spa. @ 5¼"	5¾" Spa.	300	11.85	0.90	72.65		.877
	W16x77	16.5	0.00	0.09	3	5 Spa. @ 5¾"	6" Spa.	Inf.	12.10		71.61		.865
	W14x82	14.3	0.00	0.11	3	14 Spa. @ 5¼"	6" Spa.	450	12.14		72.36		.874
	W12x106	12.9	0.00	0.11	3	14 Spa. @ 5¼"	6" Spa.	400	12.40		71.78		.867
25' Max.	W24x62	23.7	0.02	0.17	2	23 Spa. @ 5¼"	6" Spa.	400	14.75	1.13	74.47		.860
	W21x62	21.0	0.03	0.21	2	23 Spa. @ 5¼"	6" Spa.	350	14.75		75.31		.870
	W18x71	18.5	0.03	0.24	2	23 Spa. @ 5¼"	6" Spa.	290	14.86		75.67		.874
	W16x77	16.5	0.04	0.25	3	11 Spa. @ 5½"	6" Spa.	Inf.	14.96		76.05		.878
	W14x82	14.3	0.05	0.31	3	23 Spa. @ 5¼"	6" Spa.	425	15.01		76.89		.888
	W12x106	12.9	0.05	0.31	3	23 Spa. @ 5¼"	6" Spa.	385	15.33		76.25		.880
30' Max.	W24x76	23.9	0.04	0.28	2	28 Spa. @ 5¼"	6" Spa.	415	17.78	1.35	80.90		.856
	W21x83	21.4	0.05	0.32	2	28 Spa. @ 5¼"	6" Spa.	350	17.89		81.41		.862
	W18x86	18.4	0.06	0.39	3	7 Spa. @ 5¾"	6" Spa.	Inf.	17.94		82.40		.872
	W16x100	17.0	0.06	0.40	3	14 Spa. @ 5½"	6" Spa.	Inf.	18.18		82.26		.871
	W14x120	14.5	0.08	0.45	3	28 Spa. @ 5¼"	6" Spa.	440	18.48		82.48		.873
	W12x120	13.1	0.10	0.57	3	28 Spa. @ 5¼"	6" Spa.	375	18.48		83.41		.883
35' Max.	W27x84	26.7	0.06	0.39	3	6 Spa. @ 7¾"	8" Spa.	Inf.	20.79	1.58	86.49		.850
	W24x94	24.3	0.06	0.41	2	24 Spa. @ 5¼"	6" Spa.	420	20.97		86.69		.852
	W21x101	21.4	0.07	0.47	3	7 Spa. @ 6½"	7" Spa.	Inf.	21.10		87.33		.858
	W18x119	19.0	0.09	0.52	3	7 Spa. @ 6"	6½" Spa.	Inf.	21.43		87.50		.860
	W14x132	14.7	0.14	0.76	3	24 Spa. @ 5¼"	6" Spa.	425	21.66		89.15		.876
	W12x152	13.7	0.17	0.82	3	24 Spa. @ 5⅜"	6" Spa.	375	22.03		89.00		.874
40' Max.	W30x99	29.7	0.07	0.48	3	12 Spa. @ 8"	9" Spa.	Inf.	23.97	1.80	90.47		.840
	W27x102	27.1	0.08	0.53	3	20 Spa. @ 7½"	9" Spa.	Inf.	24.03		91.07		.845
	W24x117	24.3	0.09	0.56	3	14 Spa. @ 7"	8" Spa.	Inf.	24.35		91.22		.846
	W21x122	21.7	0.12	0.67	3	16 Spa. @ 6"	7" Spa.	Inf.	24.45		92.04	0.65	.854
	W18x130	19.3	0.15	0.81	3	9 Spa. @ 5½"	6" Spa.	Inf.	24.62		92.79		.861
	W14x176	15.2	0.21	0.98	3	19 Spa. @ 5¼"	6" Spa.	425	25.58		93.11		.864
	W12x190	14.4	0.25	1.12	3	19 Spa. @ 5¼"	6" Spa.	375	25.86		93.25		.865
45' Max.	W33x118	32.9	0.09	0.54	3	12 Spa. @ 9"	10" Spa.	Inf.	27.33	2.03	93.45		.828
	W30x116	30.0	0.11	0.64	3	21 Spa. @ 8"	10" Spa.	Inf.	27.29		94.36		.836
	W27x129	27.6	0.12	0.68	3	15 Spa. @ 7½"	9" Spa.	Inf.	27.57		94.53		.838
	W24x131	24.5	0.14	0.80	3	16 Spa. @ 7"	8" Spa.	Inf.	27.63		95.48		.846
	W21x147	22.1	0.17	0.91	3	17 Spa. @ 6½"	7" Spa.	Inf.	28.00		95.83		.849
	W18x158	19.7	0.22	1.08	3	10 Spa. @ 5½"	6" Spa.	Inf.	28.25		96.54		.855
50' Max.	W33x130	33.1	0.13	0.74	3	23 Spa. @ 8"	10" Spa.	Inf.	30.60	2.25	97.11		.828
	W30x132	30.3	0.15	0.86	3	24 Spa. @ 7½"	9" Spa.	Inf.	30.65		97.86		.834
	W27x146	27.4	0.17	0.89	3	18 Spa. @ 7"	8" Spa.	Inf.	31.02		98.11		.836
	W24x162	25.0	0.20	0.99	3	28 Spa. @ 6½"	8" Spa.	Inf.	31.43		98.43		.839
	W21x182	22.7	0.24	1.11	3	20 Spa. @ 6"	7" Spa.	Inf.	31.95		98.70		.841
	W18x192	20.4	0.30	1.36	3	35 Spa. @ 5¼"	7" Spa.	Inf.	32.19		99.51		.848
55' Max.	W36x135	35.6	0.17	0.93	3	16 Spa. @ 8¼"	10" Spa.	Inf.	33.73	2.48	100.10		.825
	W33x141	33.3	0.18	0.99	3	25 Spa. @ 8"	10" Spa.	Inf.	33.91		100.45		.828
	W30x148	30.7	0.21	1.11	3	28 Spa. @ 7¼"	9" Spa.	Inf.	34.09		100.97		.832
	W27x178	27.8	0.23	1.10	3	19 Spa. @ 7"	8" Spa.	Inf.	34.96		100.75		.830
	W24x192	25.5	0.27	1.25	3	31 Spa. @ 6½"	8" Spa.	Inf.	35.33		101.20		.834
	W21x223	23.4	0.33	1.35	3	33 Spa. @ 6"	8" Spa.	Inf.	36.21		101.10		.833
	W18x258	21.5	0.40	1.51	3	35 Spa. @ 5¾"	7" Spa.	Inf.	37.22		101.21		.834
60' Max.	W36x150	35.9	0.22	1.17	3	27 Spa. @ 8¼"	10" Spa.	Inf.	37.20	2.70	102.92		.823
	W33x169	33.8	0.24	1.16	3	18 Spa. @ 8"	9" Spa.	Inf.	37.76		102.82		.822
	W30x173	30.4	0.27	1.32	3	30 Spa. @ 7¼"	9" Spa.	Inf.	37.91		103.60		.828
	W27x194	28.1	0.31	1.42	3	21 Spa. @ 7"	8" Spa.	Inf.	38.56		103.72		.829
	W24x229	26.0	0.37	1.51	3	34 Spa. @ 6½"	8" Spa.	Inf.	39.61		103.58		.828

KENTUCKY
DEPARTMENT OF HIGHWAYS

COMPOSITE STEEL BEAM SUPERSTRUCTURES BEAM TABLES

STANDARD DRAWING NO. BSB-102

SUBMITTED _____ DIRECTOR DIVISION OF STRUCTURAL DESIGN — DATE 02-26-20

APPROVED _____ STATE HIGHWAY ENGINEER — DATE 02-26-20

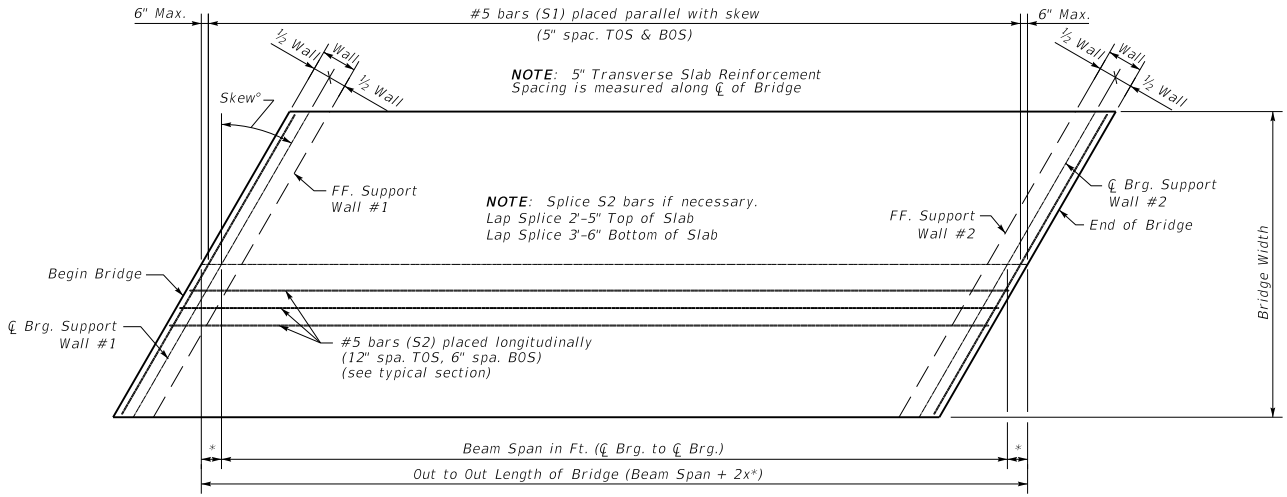

PLAN OF SLAB

NOTE: All reinforcing steel shall be epoxy coated.

$$\#5 \text{ Skewed Transverse Bar (S1) Length} = \frac{\text{Bridge Width} - 4''}{SF}$$

$$* = \frac{\frac{1}{2}\text{ Wall}}{SF}$$

Skew Factors	
Skew	SF
0°	1.000
5°	0.996
10°	0.985
15°	0.966
20°	0.940
25°	0.906
30°	0.866
35°	0.819
40°	0.766
45°	0.707

NOTE: It is recommended a crash tested barrier be attached to the Superstructure to contain all vehicles within the roadway. Recommended barriers include the Type T631 guardrail, Type 3, or 32" Vertical Face railing. See contract documents for required railing and railing drawings for additional reinforcement that may be required to be cast in deck.

NOTES:
1.) Diaphragm stirrups are to project into the slab regardless of slab forming method.
2.) Place stirrup bars parallel to face of beams.

$$\text{Estimate of Steel Quantities} = (\text{Bridge Length}-4\text{in})*(\text{Bridge Width}-4\text{in}) * \frac{(3.129 \text{ lb/sq. ft.} + 5.006 \text{ lb/sq. ft.})}{SF}$$

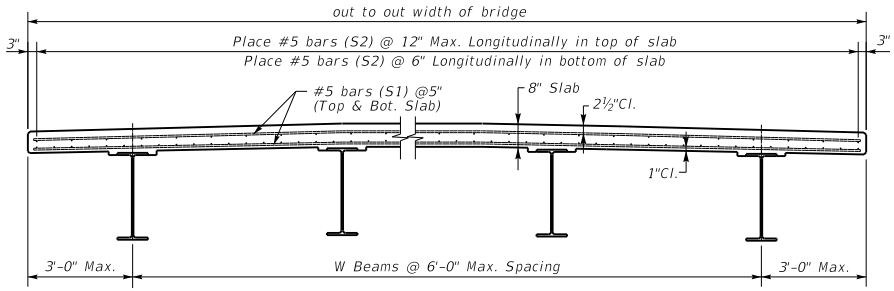

TYPICAL SECTION

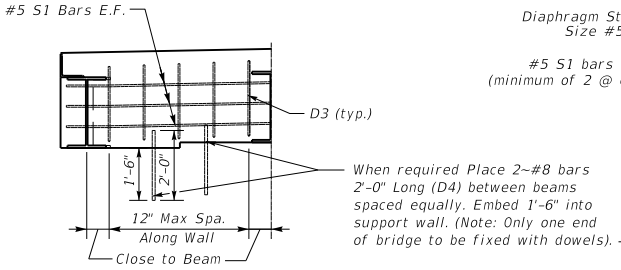

DIAPHRAGM

NOTE: End Diaphragms are required on both ends of Slabs.

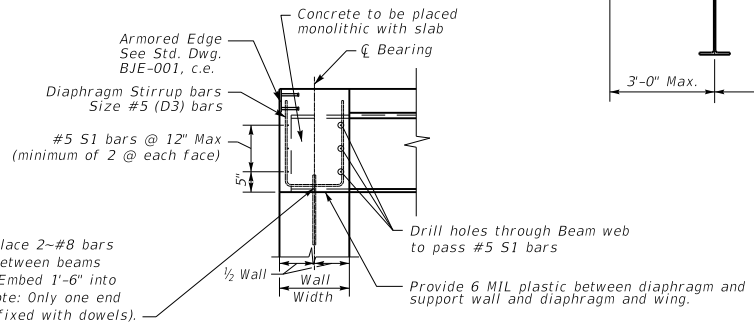

DIAPHRAGM X-SECTION

(Perpendicular to Diaphragm)

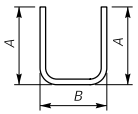

D3 BARS

$$\text{Dim. "A"} = \text{Beam Depth} + 4''$$

$$\text{Dim. "B"} = \frac{(\text{Wall Width} - 4'')}{SF}$$

KENTUCKY
DEPARTMENT OF HIGHWAYS

COMPOSITE STEEL BEAM
SUPERSTRUCTURES
SLAB DETAILS

STANDARD DRAWING NO. BSB-103

SUBMITTED _____ DIRECTOR DIVISION OF STRUCTURAL DESIGN — DATE 02-26-20

APPROVED _____ STATE HIGHWAY ENGINEER — DATE 02-26-20

Skew Factors		
Skew	SF	DM
0°	1.000	0.000
5°	0.996	0.087
10°	0.985	0.176
15°	0.966	0.268
20°	0.940	0.364
25°	0.906	0.466
30°	0.866	0.577
35°	0.819	0.700
40°	0.766	0.839
45°	0.707	1.000

NOTE: Place girders with any mill or shop camber bowed up in the middle. Heat cambering is not required.

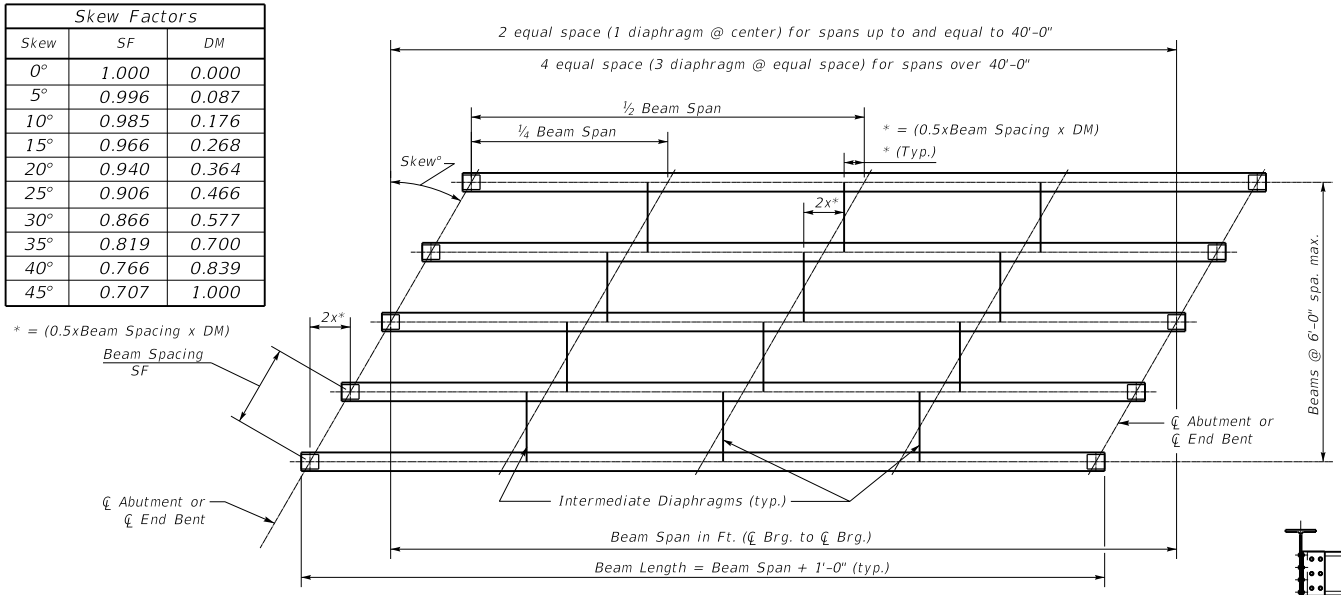

FRAMING PLAN

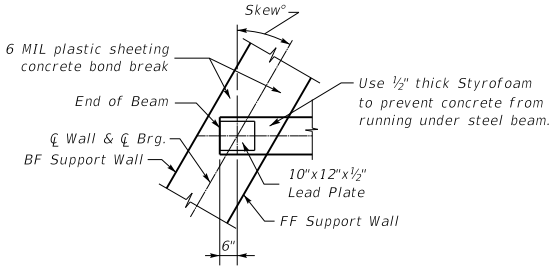

END OF BEAM DETAIL @ SUPPORTS

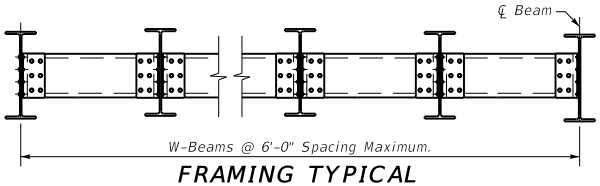

FRAMING TYPICAL

NOTE: Use ¾" ∅ Bolts with 13/16" ∅ Holes Throughout.

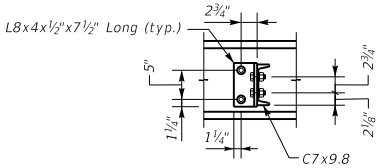

SECTION A-A

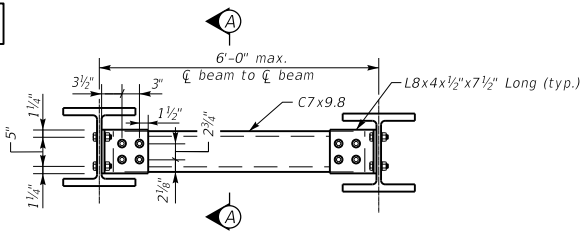

INTERMEDIATE DIAPHRAGM

(for up to 14" beam depth)

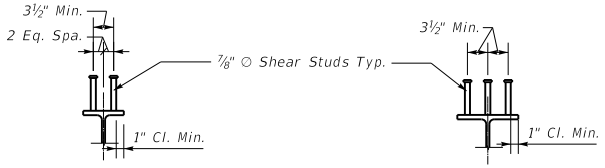

BEAM SECTION - 2 SHEAR STUDS PER ROW

BEAM SECTION - 3 SHEAR STUDS PER ROW

NOTE: Use ¾" ∅ Bolts with 13/16" ∅ Holes Throughout.

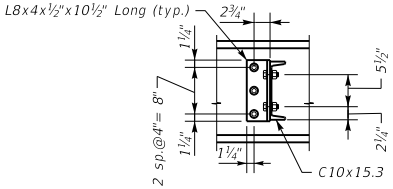

SECTION A-A

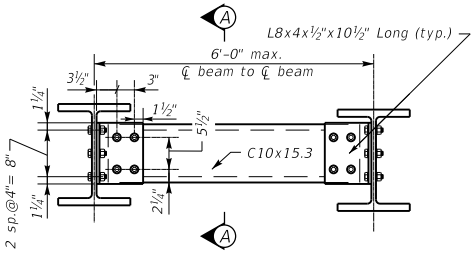

INTERMEDIATE DIAPHRAGM

(for up to 20" beam depth)

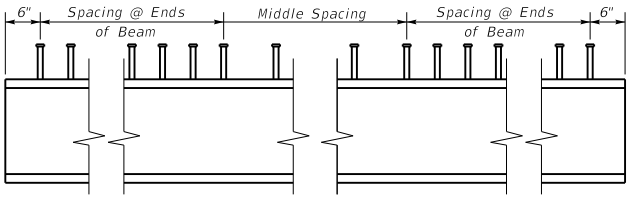

SHEAR CONNECTOR LAYOUT

(See Beam Tables for Spacings required and number of shear connectors per row)

KENTUCKY
DEPARTMENT OF HIGHWAYS

COMPOSITE STEEL BEAM
SUPERSTRUCTURES
FRAMING PLAN/DIAPHRAGMS

STANDARD DRAWING NO. BSB-104

SUBMITTED _____ DIRECTOR DIVISION OF STRUCTURAL DESIGN — DATE 02-26-20

APPROVED _____ STATE HIGHWAY ENGINEER — DATE 02-26-20

NOTE: Use ¾" ∅ Bolts with 13/16" ∅ Holes Throughout.

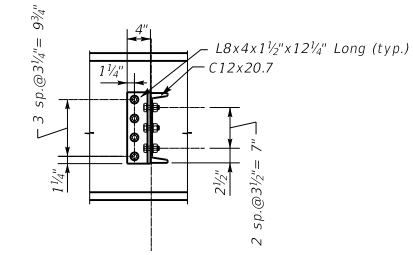

SECTION A-A

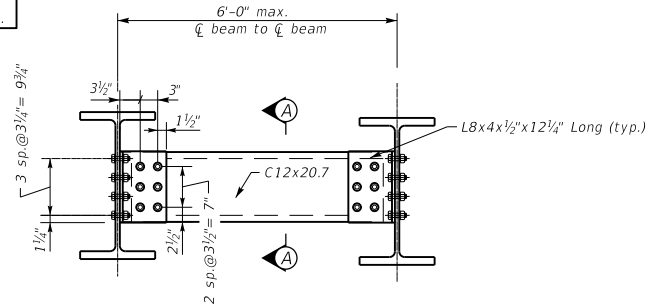

INTERMEDIATE DIAPHRAGM

(for up to 24" beam depth)

NOTE: Use ¾" ∅ Bolts with 13/16" ∅ Holes Throughout.

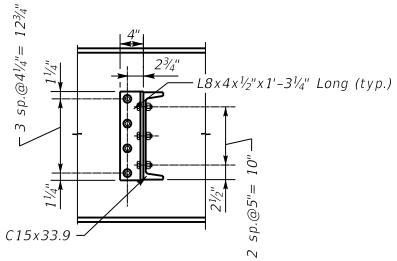

SECTION A-A

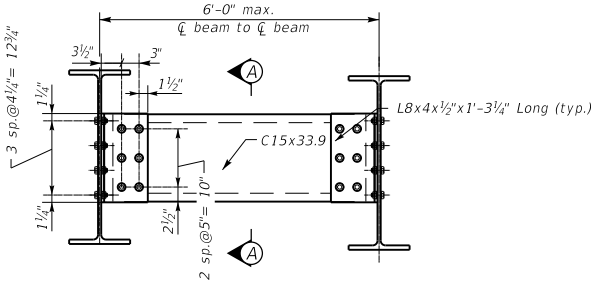

INTERMEDIATE DIAPHRAGM

(for up to 30" beam depth)

NOTE: Use ¾" ∅ Bolts with 13/16" ∅ Holes Throughout.

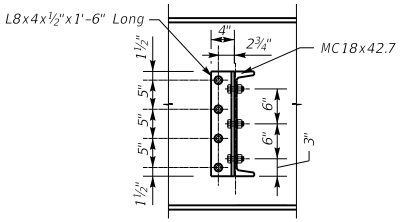

SECTION A-A

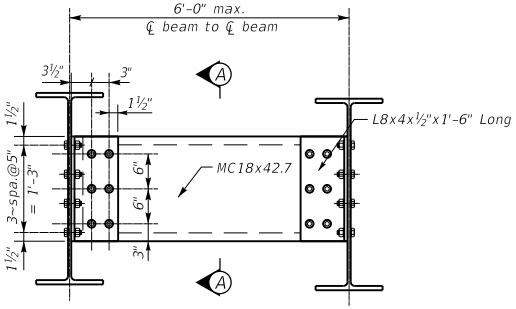

INTERMEDIATE DIAPHRAGM

(for up to 36" beam depth)

KENTUCKY
DEPARTMENT OF HIGHWAYS

COMPOSITE STEEL BEAM
SUPERSTRUCTURES
DIAPHRAGMS CONTINUED

STANDARD DRAWING NO. BSB-105

SUBMITTED _____ 02-26-20
DIRECTOR DIVISION OF STRUCTURAL DESIGN — DATE

APPROVED _____ 02-26-20
STATE HIGHWAY ENGINEER — DATE

4'-0" Width x 4'-0" Height

Fill Height (Ft.)	Top Slab										Bottom Slab										Sidewall						Mark "E" Distribution				Quantities	
	TS	J	K	Mark	Type	Length	A	B	C	D	BS	M	N	Mark	Type	Length	A	B	C	D	SW	P	R	Mark	Type	Length	W	X	Y	Z	Concrete CY/LF	Steel LBS/LF
0-2	8"	5	6"	A	1	6- 7	4- 11	0- 10	0- 5	5- 4	9"	5	6"	B	1	7- 7	5- 11	0- 10	0- 5	6- 4	10"	5	12"	C	Str	5- 0	10"	5	12"	12"	0.58	61
2.01-5	8"	5	7"	A	1	6- 7	4- 11	0- 10	0- 5	5- 4	9"	5	7"	B	1	7- 7	5- 11	0- 10	0- 5	6- 4	10"	5	12"	C	Str	5- 0	10"	5	12"	12"	0.58	57
5-10	8"	5	9"	A	1	6- 7	4- 11	0- 10	0- 5	5- 4	9"	5	9"	B	1	7- 7	5- 11	0- 10	0- 5	6- 4	10"	5	12"	C	Str	5- 0	10"	5	12"	12"	0.58	52
10-15	8"	5	7"	A	1	6- 7	4- 11	0- 10	0- 5	5- 4	9"	5	7"	B	1	7- 7	5- 11	0- 10	0- 5	6- 4	10"	5	12"	C	Str	5- 0	10"	5	12"	12"	0.58	57
15-20	8"	5	6"	A	1	6- 7	4- 11	0- 10	0- 5	5- 4	9"	5	6"	B	1	7- 7	5- 11	0- 10	0- 5	6- 4	10"	5	12"	C	Str	5- 0	10"	5	12"	12"	0.58	61
20-25	8"	5	5"	A	1	6- 7	4- 11	0- 10	0- 5	5- 4	9"	5	5"	B	1	7- 7	5- 11	0- 10	0- 5	6- 4	10"	5	12"	C	Str	5- 0	10"	5	12"	12"	0.58	67
25-30	9"	5	5"	A	1	6- 7	4- 11	0- 10	0- 5	5- 4	10"	5	5"	B	1	7- 7	5- 11	0- 10	0- 5	6- 4	10"	5	12"	C	Str	5- 2	10"	5	12"	12"	0.62	68
30-35	9"	6	5"	A	1	6- 10	4- 10	1- 0	0- 6	5- 4	10"	6	5"	B	1	7- 10	5- 10	1- 0	0- 6	6- 4	10"	5	12"	C	Str	5- 2	10"	5	12"	12"	0.62	85
35-40	10"	6	5"	A	1	6- 10	4- 10	1- 0	0- 6	5- 4	11"	6	5"	B	1	7- 10	5- 10	1- 0	0- 6	6- 4	10"	5	12"	C	Str	5- 4	10"	5	12"	12"	0.65	85

NOTE:
Bar Dimensions are per bar.

NOTE:
A & B bars may need to be rotated to maintain shown clearances.

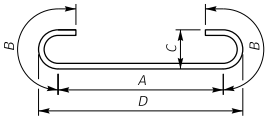

TYPE 1

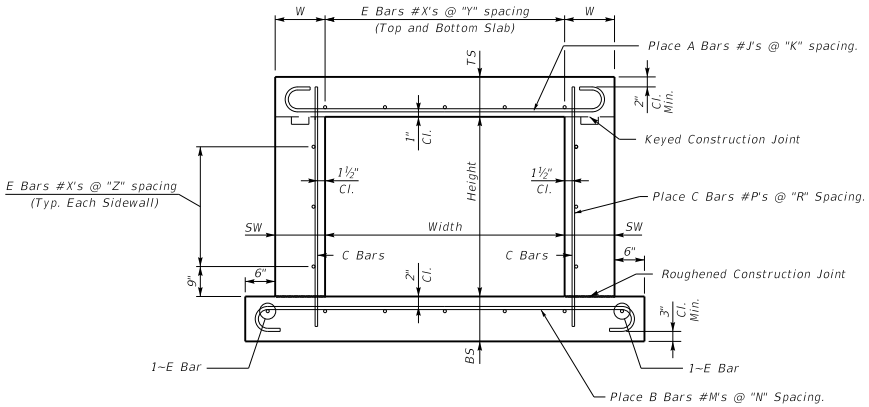

TYPICAL BARREL SECTION

KENTUCKY
DEPARTMENT OF HIGHWAYS

STANDARD CULVERT
4' - 0" WIDTH

STANDARD DRAWING NO. BSC-001

SUBMITTED _____ DIRECTOR DIVISION OF STRUCTURAL DESIGN — 02-26-20 DATE

APPROVED _____ STATE HIGHWAY ENGINEER — 02-26-20 DATE

6'-0" Width x 4'-0" Height

Fill Height (Ft.)	Top Slab										Bottom Slab										Sidewall						Mark "E" Distribution				Quantities	
	TS	J	K	Mark	Type	Length	A	B	C	D	BS	M	N	Mark	Type	Length	A	B	C	D	SW	P	R	Mark	Type	Length	W	X	Y	Z	Concrete CY/LF	Steel LBS/LF
0–2	9"	5	5"	A	1	8– 7	6–11	0–10	0– 5	7– 4	10"	5	5"	B	1	9– 7	7–11	0–10	0– 5	8– 4	10"	5	12"	C	Str	5– 2	10"	5	12"	12"	0.73	82
2.01–5	9"	5	5"	A	1	8– 7	6–11	0–10	0– 5	7– 4	10"	5	5"	B	1	9– 7	7–11	0–10	0– 5	8– 4	10"	5	12"	C	Str	5– 2	10"	5	12"	12"	0.73	82
5–10	8"	5	6"	A	1	8– 7	6–11	0–10	0– 5	7– 4	9"	5	6"	B	1	9– 7	7–11	0–10	0– 5	8– 4	10"	5	12"	C	Str	5– 0	10"	5	12"	12"	0.68	74
10–15	9"	5	5"	A	1	8– 7	6–11	0–10	0– 5	7– 4	10"	5	5"	B	1	9– 7	7–11	0–10	0– 5	8– 4	10"	5	12"	C	Str	5– 2	10"	5	12"	12"	0.73	82
15–20	9"	6	5"	A	1	8–10	6–10	1– 0	0– 6	7– 4	10"	6	5"	B	1	9–10	7–10	1– 0	0– 6	8– 4	10"	5	12"	C	Str	5– 2	10"	5	12"	12"	0.73	104
20–25	10"	6	5"	A	1	8–10	6–10	1– 0	0– 6	7– 4	11"	6	5"	B	1	9–10	7–10	1– 0	0– 6	8– 4	10"	5	12"	C	Str	5– 4	10"	5	12"	12"	0.78	104
25–30	11"	7	6"	A	1	9– 1	6– 9	1– 2	0– 7	7– 4	12"	7	6"	B	1	10– 1	7– 9	1– 2	0– 7	8– 4	10"	5	12"	C	Str	5– 6	10"	5	12"	12"	0.83	115
30–35	12"	8	6"	A	1	9– 2	6– 8	1– 3	0– 8	7– 4	13"	8	6"	B	1	10– 2	7– 8	1– 3	0– 8	8– 4	10"	5	12"	C	Str	5– 8	10"	5	12"	12"	0.88	141
35–40	13"	8	5"	A	1	9– 2	6– 8	1– 3	0– 8	7– 4	14"	8	5"	B	1	10– 2	7– 8	1– 3	0– 8	8– 4	10"	5	12"	C	Str	5–10	10"	5	12"	12"	0.93	162

6'-0" Width x 6'-0" Height

Fill Height (Ft.)	Top Slab										Bottom Slab										Sidewall						Mark "E" Distribution				Quantities	
	TS	J	K	Mark	Type	Length	A	B	C	D	BS	M	N	Mark	Type	Length	A	B	C	D	SW	P	R	Mark	Type	Length	W	X	Y	Z	Concrete CY/LF	Steel LBS/LF
0–2	9"	5	5"	A	1	8– 7	6–11	0–10	0– 5	7– 4	10"	5	5"	B	1	9– 7	7–11	0–10	0– 5	8– 4	10"	5	12"	C	Str	7– 2	10"	5	12"	12"	0.86	90
2.01–5	9"	5	5"	A	1	8– 7	6–11	0–10	0– 5	7– 4	10"	5	5"	B	1	9– 7	7–11	0–10	0– 5	8– 4	10"	5	12"	C	Str	7– 2	10"	5	12"	12"	0.86	90
5–10	8"	5	6"	A	1	8– 7	6–11	0–10	0– 5	7– 4	9"	5	6"	B	1	9– 7	7–11	0–10	0– 5	8– 4	10"	5	12"	C	Str	7– 0	10"	5	12"	12"	0.81	82
10–15	9"	5	5"	A	1	8– 7	6–11	0–10	0– 5	7– 4	10"	5	5"	B	1	9– 7	7–11	0–10	0– 5	8– 4	10"	5	12"	C	Str	7– 2	10"	5	12"	12"	0.86	90
15–20	9"	6	5"	A	1	8–10	6–10	1– 0	0– 6	7– 4	10"	6	5"	B	1	9–10	7–10	1– 0	0– 6	8– 4	10"	5	11"	C	Str	7– 2	10"	5	12"	12"	0.86	113
20–25	10"	6	5"	A	1	8–10	6–10	1– 0	0– 6	7– 4	11"	6	5"	B	1	9–10	7–10	1– 0	0– 6	8– 4	10"	5	10"	C	Str	7– 4	10"	5	12"	12"	0.91	115
25–30	11"	7	5"	A	1	9– 1	6– 9	1– 2	0– 7	7– 4	12"	7	5"	B	1	10– 1	7– 9	1– 2	0– 7	8– 4	10"	5	9"	C	Str	7– 6	10"	5	12"	12"	0.96	145
30–35	12"	8	5"	A	1	9– 2	6– 8	1– 3	0– 8	7– 4	13"	8	5"	B	1	10– 2	7– 8	1– 3	0– 8	8– 4	10"	5	8"	C	Str	7– 8	10"	5	12"	12"	1.01	178
35–40	14"	7	5"	A	1	9– 1	6– 9	1– 2	0– 7	7– 4	15"	7	5"	B	1	10– 1	7– 9	1– 2	0– 7	8– 4	10"	5	7"	C	Str	8– 0	10"	5	12"	12"	1.11	152

6'-0" Width x 8'-0" Height

Fill Height (Ft.)	Top Slab										Bottom Slab										Sidewall						Mark "E" Distribution				Quantities	
	TS	J	K	Mark	Type	Length	A	B	C	D	BS	M	N	Mark	Type	Length	A	B	C	D	SW	P	R	Mark	Type	Length	W	X	Y	Z	Concrete CY/LF	Steel LBS/LF
0–2	9"	5	5"	A	1	8– 7	6–11	0–10	0– 5	7– 4	10"	5	5"	B	1	9– 7	7–11	0–10	0– 5	8– 4	10"	5	12"	C	Str	9– 2	10"	5	12"	12"	0.98	99
2.01–5	9"	5	5"	A	1	8– 7	6–11	0–10	0– 5	7– 4	10"	5	5"	B	1	9– 7	7–11	0–10	0– 5	8– 4	10"	5	12"	C	Str	9– 2	10"	5	12"	12"	0.98	99
5–10	8"	5	5"	A	1	8– 7	6–11	0–10	0– 5	7– 4	9"	5	5"	B	1	9– 7	7–11	0–10	0– 5	8– 4	10"	5	10"	C	Str	9– 0	10"	5	12"	12"	0.93	102
10–15	9"	5	5"	A	1	8– 7	6–11	0–10	0– 5	7– 4	10"	5	5"	B	1	9– 7	7–11	0–10	0– 5	8– 4	10"	5	9"	C	Str	9– 2	10"	5	12"	12"	0.98	105
15–20	9"	6	5"	A	1	8–10	6–10	1– 0	0– 6	7– 4	10"	6	5"	B	1	9–10	7–10	1– 0	0– 6	8– 4	10"	5	8"	C	Str	9– 2	10"	5	12"	12"	0.98	130
20–25	10"	6	5"	A	1	8–10	6–10	1– 0	0– 6	7– 4	11"	6	5"	B	1	9–10	7–10	1– 0	0– 6	8– 4	10"	5	7"	C	Str	9– 4	10"	5	12"	12"	1.03	135
25–30	11"	8	6"	A	1	9– 2	6– 8	1– 3	0– 8	7– 4	12"	8	6"	B	1	10– 2	7– 8	1– 3	0– 8	8– 4	10"	5	6"	C	Str	9– 6	10"	5	12"	12"	1.08	177
30–35	12"	8	5"	A	1	9– 2	6– 8	1– 3	0– 8	7– 4	13"	8	5"	B	1	10– 2	7– 8	1– 3	0– 8	8– 4	10"	5	5"	C	Str	9– 8	10"	5	12"	12"	1.13	206
35–40	14"	8	5"	A	1	9– 2	6– 8	1– 3	0– 8	7– 4	15"	8	5"	B	1	10– 2	7– 8	1– 3	0– 8	8– 4	10"	6	6"	C	Str	10– 0	10"	5	12"	12"	1.23	218

NOTE:
A & B bars may need to be rotated to maintain shown clearances.

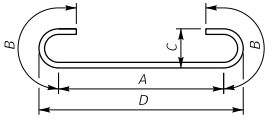

TYPE 1

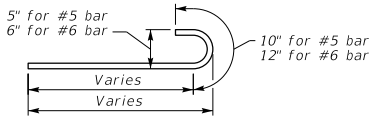

TYPE 4

NOTE:
Bar Dimensions are per bar.

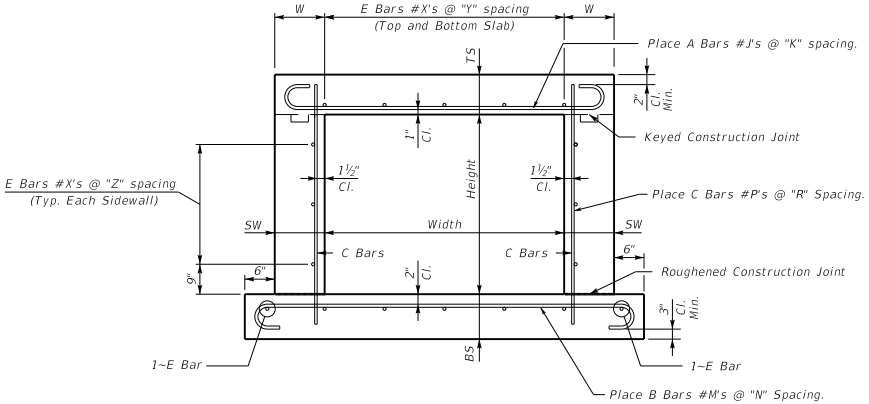

TYPICAL BARREL SECTION

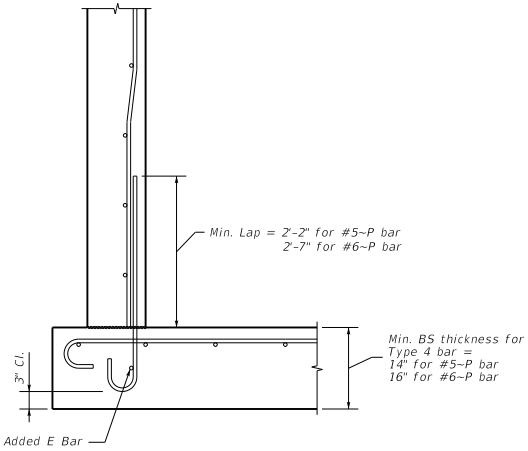

OPTIONAL HOOK DETAIL

NOTE:
The contractor will not be paid additionally if optional hook detail is used.

KENTUCKY
DEPARTMENT OF HIGHWAYS

STANDARD CULVERT
6' - 0" WIDTH

STANDARD DRAWING NO. BSC-002

SUBMITTED _____ 02-26-20
DIRECTOR DIVISION OF STRUCTURAL DESIGN — DATE

APPROVED _____ 02-26-20
STATE HIGHWAY ENGINEER — DATE

8'-0" Width x 4'-0" Height

Fill Height (Ft.)	Top Slab										Bottom Slab										Sidewall						Mark "E" Distribution				Quantities	
	TS	J	K	Mark	Type	Length	A	B	C	D	BS	M	N	Mark	Type	Length	A	B	C	D	SW	P	R	Mark	Type	Length	W	X	Y	Z	Concrete CY/LF	Steel LBS/LF
0–2	10"	6	6"	A	1	10–10	8–10	1– 0	0– 6	9– 4	11"	6	6"	B	1	11–10	9–10	1– 0	0– 6	10– 4	10"	5	12"	C	Str	5– 4	10"	5	12"	12"	0.91	109
2.01–5	10"	6	5"	A	1	10–10	8–10	1– 0	0– 6	9– 4	11"	6	5"	B	1	11–10	9–10	1– 0	0– 6	10– 4	10"	5	12"	C	Str	5– 4	10"	5	12"	12"	0.91	123
5–10	10"	5	5"	A	1	10– 7	8–11	0–10	0– 5	9– 4	11"	5	5"	B	1	11– 7	9–11	0–10	0– 5	10– 4	10"	5	12"	C	Str	5– 4	10"	5	12"	12"	0.91	96
10–15	10"	6	5"	A	1	10–10	8–10	1– 0	0– 6	9– 4	11"	6	5"	B	1	11–10	9–10	1– 0	0– 6	10– 4	10"	5	12"	C	Str	5– 4	10"	5	12"	12"	0.91	123
15–20	10"	7	5"	A	1	11– 1	8– 9	1– 2	0– 7	9– 4	11"	7	5"	B	1	12– 1	9– 9	1– 2	0– 7	10– 4	10"	5	12"	C	Str	5– 4	10"	5	12"	12"	0.91	155
20–25	12"	7	5"	A	1	11– 1	8– 9	1– 2	0– 7	9– 4	13"	7	5"	B	1	12– 1	9– 9	1– 2	0– 7	10– 4	10"	5	12"	C	Str	5– 8	10"	5	12"	12"	1.04	155
25–30	13"	8	5"	A	1	11– 2	8– 8	1– 3	0– 8	9– 4	14"	8	5"	B	1	12– 2	9– 8	1– 3	0– 8	10– 4	10"	5	12"	C	Str	5–10	10"	5	12"	12"	1.10	192
30–35	15"	8	5"	A	1	11– 2	8– 8	1– 3	0– 8	9– 4	16"	8	5"	B	1	12– 2	9– 8	1– 3	0– 8	10– 4	10"	5	12"	C	Str	6– 2	10"	5	12"	12"	1.23	192
35–40	16"	9	5"	A	1	12– 2	8– 4¼	1–11	0–11¾	9– 4	17"	9	5"	B	1	13– 2	9– 4¼	1–11	0–11¾	10– 4	10"	5	11"	C	Str	6– 4	10"	5	12"	12"	1.29	251

8'-0" Width x 6'-0" Height

Fill Height (Ft.)	Top Slab										Bottom Slab										Sidewall						Mark "E" Distribution				Quantities	
	TS	J	K	Mark	Type	Length	A	B	C	D	BS	M	N	Mark	Type	Length	A	B	C	D	SW	P	R	Mark	Type	Length	W	X	Y	Z	Concrete CY/LF	Steel LBS/LF
0–2	10"	6	6"	A	1	10–10	8–10	1– 0	0– 6	9– 4	11"	6	6"	B	1	11–10	9–10	1– 0	0– 6	10– 4	10"	5	12"	C	Str	7– 4	10"	5	12"	12"	1.04	117
2.01–5	10"	6	5"	A	1	10–10	8–10	1– 0	0– 6	9– 4	11"	6	5"	B	1	11–10	9–10	1– 0	0– 6	10– 4	10"	5	12"	C	Str	7– 4	10"	5	12"	12"	1.04	131
5–10	10"	5	5"	A	1	10– 7	8–11	0–10	0– 5	9– 4	11"	5	5"	B	1	11– 7	9–11	0–10	0– 5	10– 4	10"	5	12"	C	Str	7– 4	10"	5	12"	12"	1.04	105
10–15	10"	6	5"	A	1	10–10	8–10	1– 0	0– 6	9– 4	11"	6	5"	B	1	11–10	9–10	1– 0	0– 6	10– 4	10"	5	12"	C	Str	7– 4	10"	5	12"	12"	1.04	131
15–20	10"	7	5"	A	1	11– 1	8– 9	1– 2	0– 7	9– 4	11"	7	5"	B	1	12– 1	9– 9	1– 2	0– 7	10– 4	10"	5	11"	C	Str	7– 4	10"	5	12"	12"	1.04	164
20–25	12"	7	5"	A	1	11– 1	8– 9	1– 2	0– 7	9– 4	13"	7	5"	B	1	12– 1	9– 9	1– 2	0– 7	10– 4	10"	5	9"	C	Str	7– 8	10"	5	12"	12"	1.16	169
25–30	14"	8	6"	A	1	11– 2	8– 8	1– 3	0– 8	9– 4	15"	8	6"	B	1	12– 2	9– 8	1– 3	0– 8	10– 4	10"	5	8"	C	Str	8– 0	10"	5	12"	12"	1.29	184
30–35	15"	9	5"	A	1	12– 2	8– 4¼	1–11	0–11¾	9– 4	16"	9	5"	B	1	13– 2	9– 4¼	1–11	0–11¾	10– 4	10"	5	8"	C	Str	8– 2	10"	5	12"	12"	1.35	266
35–40	17"	10	7"	A	1	12– 7	8– 2¾	2– 2	1– 1¼	9– 4	18"	10	7"	B	1	13– 7	9– 2¾	2– 2	1– 1¼	10– 4	10"	5	7"	C	Str	8– 6	10"	5	12"	12"	1.48	258

8'-0" Width x 8'-0" Height

Fill Height (Ft.)	Top Slab										Bottom Slab										Sidewall						Mark "E" Distribution				Quantities	
	TS	J	K	Mark	Type	Length	A	B	C	D	BS	M	N	Mark	Type	Length	A	B	C	D	SW	P	R	Mark	Type	Length	W	X	Y	Z	Concrete CY/LF	Steel LBS/LF
0–2	10"	6	6"	A	1	10–10	8–10	1– 0	0– 6	9– 4	11"	6	6"	B	1	11–10	9–10	1– 0	0– 6	10– 4	10"	5	12"	C	Str	9– 4	10"	5	12"	12"	1.16	126
2.01–5	10"	6	5"	A	1	10–10	8–10	1– 0	0– 6	9– 4	11"	6	5"	B	1	11–10	9–10	1– 0	0– 6	10– 4	10"	5	12"	C	Str	9– 4	10"	5	12"	12"	1.16	139
5–10	10"	5	5"	A	1	10– 7	8–11	0–10	0– 5	9– 4	11"	5	5"	B	1	11– 7	9–11	0–10	0– 5	10– 4	10"	5	10"	C	Str	9– 4	10"	5	12"	12"	1.16	117
10–15	10"	6	5"	A	1	10–10	8–10	1– 0	0– 6	9– 4	11"	6	5"	B	1	11–10	9–10	1– 0	0– 6	10– 4	10"	5	9"	C	Str	9– 4	10"	5	12"	12"	1.16	146
15–20	11"	7	5"	A	1	11– 1	8– 9	1– 2	0– 7	9– 4	12"	7	5"	B	1	12– 1	9– 9	1– 2	0– 7	10– 4	10"	5	7"	C	Str	9– 6	10"	5	12"	12"	1.22	186
20–25	12"	8	5"	A	1	11– 2	8– 8	1– 3	0– 8	9– 4	13"	8	5"	B	1	12– 2	9– 8	1– 3	0– 8	10– 4	10"	5	7"	C	Str	9– 8	10"	5	12"	12"	1.28	222
25–30	14"	8	5"	A	1	11– 2	8– 8	1– 3	0– 8	9– 4	15"	8	5"	B	1	12– 2	9– 8	1– 3	0– 8	10– 4	10"	5	5"	C	Str	10– 0	10"	5	12"	12"	1.41	238
30–35	15"	9	5"	A	1	12– 2	8– 4¼	1–11	0–11¾	9– 4	16"	9	5"	B	1	13– 2	9– 4¼	1–11	0–11¾	10– 4	10"	6	6"	C	Str	10– 2	10"	5	12"	12"	1.47	306
35–40	17"	9	5"	A	1	12– 2	8– 4¼	1–11	0–11¾	9– 4	18"	9	5"	B	1	13– 2	9– 4¼	1–11	0–11¾	10– 4	10"	6	5"	C	Str	10– 6	10"	5	12"	12"	1.60	321

NOTE:
A & B bars may need to be rotated to maintain shown clearances.

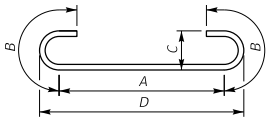

TYPE 1

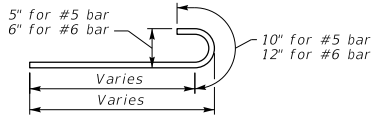

TYPE 4

NOTE:
Bar Dimensions are per bar.

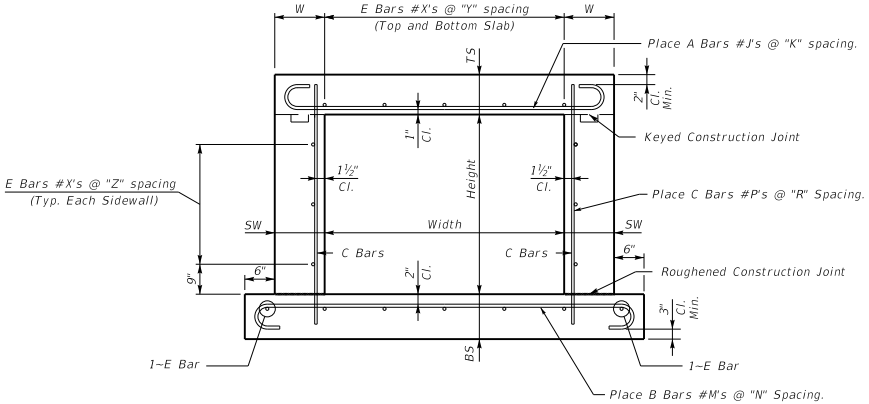

TYPICAL BARREL SECTION

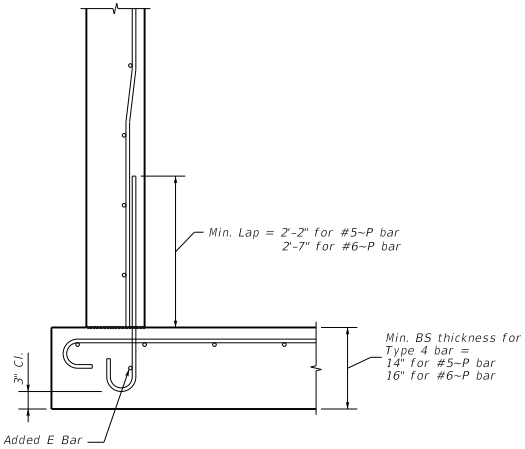

OPTIONAL HOOK DETAIL

NOTE:
The contractor will not be paid additionally if optional hook detail is used.

KENTUCKY
DEPARTMENT OF HIGHWAYS

STANDARD CULVERT
8' - 0" WIDTH

STANDARD DRAWING NO. BSC-003

SUBMITTED _____ DIRECTOR DIVISION OF STRUCTURAL DESIGN — DATE 02-26-20

APPROVED _____ STATE HIGHWAY ENGINEER — DATE 02-26-20

10'-0" Width x 4'-0" Height

Fill Height (Ft.)	Top Slab										Bottom Slab										Sidewall						Mark "E" Distribution				Quantities	
	TS	J	K	Mark	Type	Length	A	B	C	D	BS	M	N	Mark	Type	Length	A	B	C	D	SW	P	R	Mark	Type	Length	W	X	Y	Z	Concrete CY/LF	Steel LBS/LF
0-2	10"	7	6"	A	1	13- 1	10- 9	1- 2	0- 7	11- 4	11"	7	6"	B	1	14- 1	11- 9	1- 2	0- 7	12- 4	10"	5	12"	C	Str	5- 4	10"	5	10"	12"	1.04	160
2.01-5	10"	7	5"	A	1	13- 1	10- 9	1- 2	0- 7	11- 4	11"	7	5"	B	1	14- 1	11- 9	1- 2	0- 7	12- 4	10"	5	12"	C	Str	5- 4	10"	5	12"	12"	1.04	178
5-10	10"	7	5"	A	1	13- 1	10- 9	1- 2	0- 7	11- 4	11"	7	5"	B	1	14- 1	11- 9	1- 2	0- 7	12- 4	10"	5	12"	C	Str	5- 4	10"	5	12"	12"	1.04	178
10-15	10"	7	5"	A	1	13- 1	10- 9	1- 2	0- 7	11- 4	11"	7	5"	B	1	14- 1	11- 9	1- 2	0- 7	12- 4	10"	5	12"	C	Str	5- 4	10"	5	12"	12"	1.04	178
15-20	12"	7	5"	A	1	13- 1	10- 9	1- 2	0- 7	11- 4	13"	7	5"	B	1	14- 1	11- 9	1- 2	0- 7	12- 4	10"	5	12"	C	Str	5- 8	10"	5	12"	12"	1.19	179
20-25	14"	8	5"	A	1	13- 2	10- 8	1- 3	0- 8	11- 4	15"	8	5"	B	1	14- 2	11- 8	1- 3	0- 8	12- 4	10"	5	12"	C	Str	6- 0	10"	5	12"	12"	1.34	222
25-30	16"	9	6"	A	1	14- 2	10- 4¼	1-11	0-11¾	11- 4	17"	9	6"	B	1	15- 2	11- 4¼	1-11	0-11¾	12- 4	10"	5	12"	C	Str	6- 4	10"	5	12"	12"	1.49	247
30-35	17"	10	5"	A	1	14- 7	10- 2¾	2- 2	1- 1¼	11- 4	18"	10	5"	B	1	15- 7	11- 2¾	2- 2	1- 1¼	12- 4	10"	5	12"	C	Str	6- 6	10"	5	12"	12"	1.57	360
35-40	18"	11	5"	A	1	15- 3	10- 5¼	2- 5	1- 2¾	11- 8	19"	11	5"	B	1	16- 3	11- 5¼	2- 5	1- 2¾	12- 8	12"	5	12"	C	Str	6- 8	12"	5	12"	12"	1.73	449

10'-0" Width x 6'-0" Height

Fill Height (Ft.)	Top Slab										Bottom Slab										Sidewall						Mark "E" Distribution				Quantities	
	TS	J	K	Mark	Type	Length	A	B	C	D	BS	M	N	Mark	Type	Length	A	B	C	D	SW	P	R	Mark	Type	Length	W	X	Y	Z	Concrete CY/LF	Steel LBS/LF
0-2	10"	7	6"	A	1	13- 1	10- 9	1- 2	0- 7	11- 4	11"	7	6"	B	1	14- 1	11- 9	1- 2	0- 7	12- 4	10"	5	12"	C	Str	7- 4	10"	5	10"	12"	1.17	169
2.01-5	10"	7	5"	A	1	13- 1	10- 9	1- 2	0- 7	11- 4	11"	7	5"	B	1	14- 1	11- 9	1- 2	0- 7	12- 4	10"	5	12"	C	Str	7- 4	10"	5	12"	12"	1.17	187
5-10	10"	7	5"	A	1	13- 1	10- 9	1- 2	0- 7	11- 4	11"	7	5"	B	1	14- 1	11- 9	1- 2	0- 7	12- 4	10"	5	12"	C	Str	7- 4	10"	5	12"	12"	1.17	187
10-15	10"	7	5"	A	1	13- 1	10- 9	1- 2	0- 7	11- 4	11"	7	5"	B	1	14- 1	11- 9	1- 2	0- 7	12- 4	10"	5	12"	C	Str	7- 4	10"	5	12"	12"	1.17	187
15-20	12"	8	5"	A	1	13- 2	10- 8	1- 3	0- 8	11- 4	13"	8	5"	B	1	14- 2	11- 8	1- 3	0- 8	12- 4	10"	5	11"	C	Str	7- 8	10"	5	12"	12"	1.32	231
20-25	14"	8	5"	A	1	13- 2	10- 8	1- 3	0- 8	11- 4	15"	8	5"	B	1	14- 2	11- 8	1- 3	0- 8	12- 4	10"	5	9"	C	Str	8- 0	10"	5	12"	12"	1.47	236
25-30	16"	9	5"	A	1	14- 2	10- 4¼	1-11	0-11¾	11- 4	17"	9	5"	B	1	15- 2	11- 4¼	1-11	0-11¾	12- 4	10"	5	8"	C	Str	8- 4	10"	5	12"	12"	1.62	304
30-35	17"	10	5"	A	1	14- 7	10- 2¾	2- 2	1- 1¼	11- 4	18"	10	5"	B	1	15- 7	11- 2¾	2- 2	1- 1¼	12- 4	10"	5	7"	C	Str	8- 6	10"	5	12"	12"	1.69	381
35-40	19"	11	5"	A	1	15- 3	10- 5¾	2- 5	1- 2¾	11- 8	20"	11	5"	B	1	16- 3	11- 5¼	2- 5	1- 2¾	12- 8	12"	5	8"	C	Str	8-10	12"	5	12"	12"	1.96	467

10'-0" Width x 8'-0" Height

Fill Height (Ft.)	Top Slab										Bottom Slab										Sidewall						Mark "E" Distribution				Quantities	
	TS	J	K	Mark	Type	Length	A	B	C	D	BS	M	N	Mark	Type	Length	A	B	C	D	SW	P	R	Mark	Type	Length	W	X	Y	Z	Concrete CY/LF	Steel LBS/LF
0-2	10"	7	6"	A	1	13- 1	10- 9	1- 2	0- 7	11- 4	11"	7	6"	B	1	14- 1	11- 9	1- 2	0- 7	12- 4	10"	5	12"	C	Str	9- 4	10"	5	10"	12"	1.29	177
2.01-5	10"	7	5"	A	1	13- 1	10- 9	1- 2	0- 7	11- 4	11"	7	5"	B	1	14- 1	11- 9	1- 2	0- 7	12- 4	10"	5	12"	C	Str	9- 4	10"	5	12"	12"	1.29	195
5-10	10"	7	5"	A	1	13- 1	10- 9	1- 2	0- 7	11- 4	11"	7	5"	B	1	14- 1	11- 9	1- 2	0- 7	12- 4	10"	5	10"	C	Str	9- 4	10"	5	12"	12"	1.29	199
10-15	10"	7	5"	A	1	13- 1	10- 9	1- 2	0- 7	11- 4	11"	7	5"	B	1	14- 1	11- 9	1- 2	0- 7	12- 4	10"	5	9"	C	Str	9- 4	10"	5	12"	12"	1.29	202
15-20	12"	8	5"	A	1	13- 2	10- 8	1- 3	0- 8	11- 4	13"	8	5"	B	1	14- 2	11- 8	1- 3	0- 8	12- 4	10"	5	8"	C	Str	9- 8	10"	5	12"	12"	1.44	248
20-25	15"	8	6"	A	1	13- 2	10- 8	1- 3	0- 8	11- 4	16"	8	6"	B	1	14- 2	11- 8	1- 3	0- 8	12- 4	10"	5	7"	C	Str	10- 2	10"	5	12"	12"	1.66	225
25-30	16"	9	5"	A	1	14- 2	10- 4¼	1-11	0-11¾	11- 4	17"	9	5"	B	1	15- 2	11- 4¼	1-11	0-11¾	12- 4	10"	5	5"	C	Str	10- 4	10"	5	12"	12"	1.74	333
30-35	18"	10	5"	A	1	14-11	10- 6¾	2- 2	1- 1¼	11- 8	19"	10	5"	B	1	15-11	11- 6¾	2- 2	1- 1¼	12- 8	12"	5	6"	C	Str	10- 8	12"	5	12"	12"	2.03	406
35-40	19"	11	5"	A	1	15- 3	10- 5¼	2- 5	1- 2¾	11- 8	20"	11	5"	B	1	16- 3	11- 5¼	2- 5	1- 2¾	12- 8	12"	5	5"	C	Str	10-10	12"	5	12"	12"	2.10	498

10'-0" Width x 10'-0" Height

Fill Height (Ft.)	Top Slab										Bottom Slab										Sidewall						Mark "E" Distribution				Quantities	
	TS	J	K	Mark	Type	Length	A	B	C	D	BS	M	N	Mark	Type	Length	A	B	C	D	SW	P	R	Mark	Type	Length	W	X	Y	Z	Concrete CY/LF	Steel LBS/LF
0-2	10"	7	6"	A	1	13- 1	10- 9	1- 2	0- 7	11- 4	11"	7	6"	B	1	14- 1	11- 9	1- 2	0- 7	12- 4	10"	5	11"	C	Str	11- 4	10"	5	10"	12"	1.41	188
2.01-5	10"	7	5"	A	1	13- 1	10- 9	1- 2	0- 7	11- 4	11"	7	5"	B	1	14- 1	11- 9	1- 2	0- 7	12- 4	10"	5	9"	C	Str	11- 4	10"	5	12"	12"	1.41	211
5-10	10"	7	5"	A	1	13- 1	10- 9	1- 2	0- 7	11- 4	11"	7	5"	B	1	14- 1	11- 9	1- 2	0- 7	12- 4	10"	5	7"	C	Str	11- 4	10"	5	12"	12"	1.41	220
10-15	11"	7	5"	A	1	13- 1	10- 9	1- 2	0- 7	11- 4	12"	7	5"	B	1	14- 1	11- 9	1- 2	0- 7	12- 4	10"	5	6"	C	Str	11- 6	10"	5	12"	12"	1.49	228
15-20	13"	7	5"	A	1	13- 1	10- 9	1- 2	0- 7	11- 4	14"	7	5"	B	1	14- 1	11- 9	1- 2	0- 7	12- 4	10"	6	7"	C	Str	11-10	10"	5	12"	12"	1.64	241
20-25	15"	8	5"	A	1	13- 6	11- 0	1- 3	0- 8	11- 8	16"	8	5"	B	1	14- 6	12- 0	1- 3	0- 8	12- 8	12"	6	7"	C	Str	12- 2	12"	5	12"	12"	1.94	289
25-30	17"	10	7"	A	1	14-11	10- 6¾	2- 2	1- 1¼	11- 8	18"	10	7"	B	1	15-11	11- 6¾	2- 2	1- 1¼	12- 8	12"	6	6"	C	Str	12- 6	12"	5	12"	12"	2.10	349
30-35	18"	10	5"	A	1	15- 5	11- 0¾	2- 2	1- 1¼	12- 2	19"	10	5"	B	1	16- 5	12- 0¾	2- 2	1- 1¼	13- 2	15"	6	7"	C	Str	12- 8	15"	5	12"	12"	2.42	441
35-40	20"	11	5"	A	1	15- 9	10-11¼	2- 5	1- 2¾	12- 2	21"	11	5"	B	1	16- 9	11-11¼	2- 5	1- 2¾	13- 2	15"	6	6"	C	Str	13- 0	15"	5	12"	12"	2.58	539

NOTE:
Bar Dimensions are per bar.

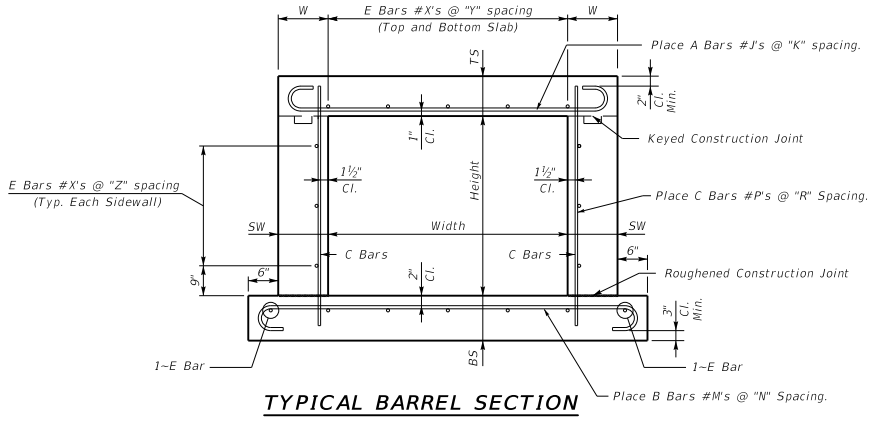

TYPICAL BARREL SECTION

NOTE:
A & B bars may need to be rotated to maintain shown clearances.

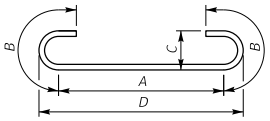

TYPE 1

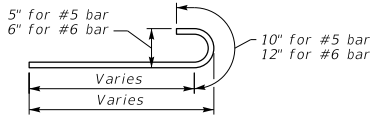

TYPE 4

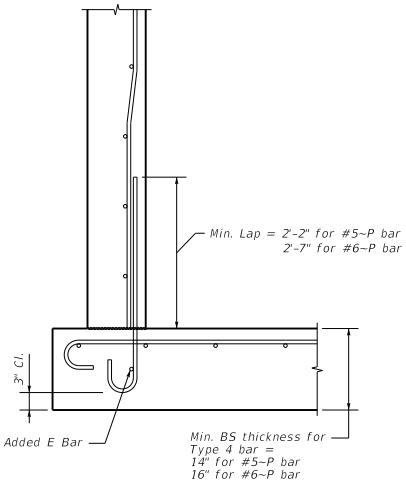

OPTIONAL HOOK DETAIL

NOTE:
The contractor will not be paid additionally if optional hook detail is used.

KENTUCKY
DEPARTMENT OF HIGHWAYS

STANDARD CULVERT
10' - 0" WIDTH

STANDARD DRAWING NO. BSC-004

SUBMITTED _____ DIRECTOR DIVISION OF STRUCTURAL DESIGN — DATE 02-26-20

APPROVED _____ STATE HIGHWAY ENGINEER — DATE 02-26-20

12'-0" Width x 4'-0" Height

Fill Height (Ft.)	Top Slab										Bottom Slab										Sidewall						Mark "E" Distribution				Quantities	
	TS	J	K	Mark	Type	Length	A	B	C	D	BS	M	N	Mark	Type	Length	A	B	C	D	SW	P	R	Mark	Type	Length	W	X	Y	Z	Concrete CY/LF	Steel LBS/LF
0-2	11"	7	5"	A	1	15- 1	12- 9	1- 2	0- 7	13- 4	12"	7	5"	B	1	16- 1	13- 9	1- 2	0- 7	14- 4	10"	5	12"	C	Str	5- 6	12"	5	10"	12"	1.26	207
2.01-5	11"	7	5"	A	1	15- 1	12- 9	1- 2	0- 7	13- 4	12"	7	5"	B	1	16- 1	13- 9	1- 2	0- 7	14- 4	10"	5	12"	C	Str	5- 6	10"	5	12"	12"	1.26	203
5-10	11"	8	5"	A	1	15- 2	12- 8	1- 3	0- 8	13- 4	12"	8	5"	B	1	16- 2	13- 8	1- 3	0- 8	14- 4	10"	5	12"	C	Str	5- 6	10"	5	12"	12"	1.26	250
10-15	11"	8	5"	A	1	15- 2	12- 8	1- 3	0- 8	13- 4	12"	8	5"	B	1	16- 2	13- 8	1- 3	0- 8	14- 4	10"	5	12"	C	Str	5- 6	10"	5	12"	12"	1.26	250
15-20	14"	8	5"	A	1	15- 2	12- 8	1- 3	0- 8	13- 4	15"	8	5"	B	1	16- 2	13- 8	1- 3	0- 8	14- 4	10"	5	12"	C	Str	6- 0	10"	5	12"	12"	1.52	252
20-25	16"	9	6"	A	1	16- 2	12- 4¼	1-11	0-11¾	13- 4	17"	9	6"	B	1	17- 2	13- 4¼	1-11	0-11¾	14- 4	10"	5	12"	C	Str	6- 4	10"	5	12"	12"	1.70	278
25-30	17"	10	5"	A	1	16- 7	12- 2¾	2- 2	1- 1¼	13- 4	18"	10	5"	B	1	17- 7	13- 2¾	2- 2	1- 1¼	14- 4	10"	5	12"	C	Str	6- 6	10"	5	12"	12"	1.78	405
30-35	19"	11	5"	A	1	17- 3	12- 5¼	2- 5	1- 2¾	13- 8	20"	11	5"	B	1	18- 3	13- 5¼	2- 5	1- 2¾	14- 8	12"	5	12"	C	Str	6-10	12"	5	12"	12"	2.05	505
35-40	22"	11	5"	A	1	17- 9	12-11¼	2- 5	1- 2¾	14- 2	23"	11	5"	B	1	18- 9	13-11¼	2- 5	1- 2¾	15- 2	15"	5	12"	C	Str	7- 4	15"	5	12"	12"	2.46	519

12'-0" Width x 6'-0" Height

Fill Height (Ft.)	Top Slab										Bottom Slab										Sidewall						Mark "E" Distribution				Quantities	
	TS	J	K	Mark	Type	Length	A	B	C	D	BS	M	N	Mark	Type	Length	A	B	C	D	SW	P	R	Mark	Type	Length	W	X	Y	Z	Concrete CY/LF	Steel LBS/LF
0-2	11"	7	5"	A	1	15- 1	12- 9	1- 2	0- 7	13- 4	12"	7	5"	B	1	16- 1	13- 9	1- 2	0- 7	14- 4	10"	5	12"	C	Str	7- 6	12"	5	10"	12"	1.38	215
2.01-5	11"	7	5"	A	1	15- 1	12- 9	1- 2	0- 7	13- 4	12"	7	5"	B	1	16- 1	13- 9	1- 2	0- 7	14- 4	10"	5	12"	C	Str	7- 6	10"	5	12"	12"	1.38	211
5-10	11"	8	5"	A	1	15- 2	12- 8	1- 3	0- 8	13- 4	12"	8	5"	B	1	16- 2	13- 8	1- 3	0- 8	14- 4	10"	5	12"	C	Str	7- 6	10"	5	12"	12"	1.38	259
10-15	11"	8	5"	A	1	15- 2	12- 8	1- 3	0- 8	13- 4	12"	8	5"	B	1	16- 2	13- 8	1- 3	0- 8	14- 4	10"	5	12"	C	Str	7- 6	10"	5	12"	12"	1.38	259
15-20	14"	8	5"	A	1	15- 2	12- 8	1- 3	0- 8	13- 4	15"	8	5"	B	1	16- 2	13- 8	1- 3	0- 8	14- 4	10"	5	10"	C	Str	8- 0	10"	5	12"	12"	1.64	263
20-25	16"	9	5"	A	1	16- 2	12- 4¼	1-11	0-11¾	13- 4	17"	9	5"	B	1	17- 2	13- 4¼	1-11	0-11¾	14- 4	10"	5	9"	C	Str	8- 4	10"	5	12"	12"	1.82	337
25-30	18"	10	5"	A	1	16-11	12- 6¾	2- 2	1- 1¼	13- 8	19"	10	5"	B	1	17-11	13- 6¾	2- 2	1- 1¼	14- 8	12"	5	9"	C	Str	8- 8	12"	5	12"	12"	2.11	427
30-35	20"	11	5"	A	1	17- 3	12- 5¼	2- 5	1- 2¾	13- 8	21"	11	5"	B	1	18- 3	13- 5¼	2- 5	1- 2¾	14- 8	12"	5	8"	C	Str	9- 0	12"	5	12"	12"	2.29	523
35-40	23"	11	5"	A	1	17- 9	12-11¼	2- 5	1- 2¾	14- 2	24"	11	5"	B	1	18- 9	13-11¼	2- 5	1- 2¾	15- 2	15"	5	8"	C	Str	9- 6	15"	5	12"	12"	2.74	537

12'-0" Width x 8'-0" Height

Fill Height (Ft.)	Top Slab										Bottom Slab										Sidewall						Mark "E" Distribution				Quantities	
	TS	J	K	Mark	Type	Length	A	B	C	D	BS	M	N	Mark	Type	Length	A	B	C	D	SW	P	R	Mark	Type	Length	W	X	Y	Z	Concrete CY/LF	Steel LBS/LF
0-2	11"	7	5"	A	1	15- 1	12- 9	1- 2	0- 7	13- 4	12"	7	5"	B	1	16- 1	13- 9	1- 2	0- 7	14- 4	10"	5	12"	C	Str	9- 6	12"	5	10"	12"	1.51	223
2.01-5	11"	7	5"	A	1	15- 1	12- 9	1- 2	0- 7	13- 4	12"	7	5"	B	1	16- 1	13- 9	1- 2	0- 7	14- 4	10"	5	12"	C	Str	9- 6	10"	5	12"	12"	1.51	219
5-10	11"	8	5"	A	1	15- 2	12- 8	1- 3	0- 8	13- 4	12"	8	5"	B	1	16- 2	13- 8	1- 3	0- 8	14- 4	10"	5	10"	C	Str	9- 6	10"	5	12"	12"	1.51	271
10-15	11"	8	5"	A	1	15- 2	12- 8	1- 3	0- 8	13- 4	12"	8	5"	B	1	16- 2	13- 8	1- 3	0- 8	14- 4	10"	5	9"	C	Str	9- 6	10"	5	12"	12"	1.51	274
15-20	14"	8	5"	A	1	15- 2	12- 8	1- 3	0- 8	13- 4	15"	8	5"	B	1	16- 2	13- 8	1- 3	0- 8	14- 4	10"	5	7"	C	Str	10- 0	10"	5	12"	12"	1.77	283
20-25	17"	8	5"	A	1	15- 2	12- 8	1- 3	0- 8	13- 4	18"	8	5"	B	1	16- 2	13- 8	1- 3	0- 8	14- 4	10"	5	6"	C	Str	10- 6	10"	5	12"	12"	2.03	291
25-30	18"	11	5"	A	1	17- 3	12- 5¼	2- 5	1- 2¾	13- 8	19"	11	5"	B	1	18- 3	13- 5¼	2- 5	1- 2¾	14- 8	12"	5	7"	C	Str	10- 8	12"	5	12"	12"	2.25	537
30-35	20"	11	5"	A	1	17- 3	12- 5¼	2- 5	1- 2¾	13- 8	21"	11	5"	B	1	18- 3	13- 5¼	2- 5	1- 2¾	14- 8	12"	5	5"	C	Str	11- 0	12"	5	12"	12"	2.43	554
35-40	23"	11	5"	A	1	17- 9	12-11¼	2- 5	1- 2¾	14- 2	24"	11	5"	B	1	18- 9	13-11¼	2- 5	1- 2¾	15- 2	15"	5	6"	C	Str	11- 6	15"	5	12"	12"	2.92	560

12'-0" Width x 10'-0" Height

Fill Height (Ft.)	Top Slab										Bottom Slab										Sidewall						Mark "E" Distribution				Quantities	
	TS	J	K	Mark	Type	Length	A	B	C	D	BS	M	N	Mark	Type	Length	A	B	C	D	SW	P	R	Mark	Type	Length	W	X	Y	Z	Concrete CY/LF	Steel LBS/LF
0-2	11"	7	5"	A	1	15- 1	12- 9	1- 2	0- 7	13- 4	12"	7	5"	B	1	16- 1	13- 9	1- 2	0- 7	14- 4	10"	5	11"	C	Str	11- 6	12"	5	10"	12"	1.63	234
2.01-5	11"	7	5"	A	1	15- 1	12- 9	1- 2	0- 7	13- 4	12"	7	5"	B	1	16- 1	13- 9	1- 2	0- 7	14- 4	10"	5	9"	C	Str	11- 6	10"	5	12"	12"	1.63	236
5-10	11"	8	5"	A	1	15- 2	12- 8	1- 3	0- 8	13- 4	12"	8	5"	B	1	16- 2	13- 8	1- 3	0- 8	14- 4	10"	5	7"	C	Str	11- 6	10"	5	12"	12"	1.63	293
10-15	12"	8	5"	A	1	15- 2	12- 8	1- 3	0- 8	13- 4	13"	8	5"	B	1	16- 2	13- 8	1- 3	0- 8	14- 4	10"	5	6"	C	Str	11- 8	10"	5	12"	12"	1.72	300
15-20	15"	8	5"	A	1	15- 6	13- 0	1- 3	0- 8	13- 8	16"	8	5"	B	1	16- 6	14- 0	1- 3	0- 8	14- 8	12"	6	8"	C	Str	12- 2	12"	5	12"	12"	2.13	311
20-25	17"	10	7"	A	1	16-11	12- 6¾	2- 2	1- 1¼	13- 8	18"	10	7"	B	1	17-11	13- 6¾	2- 2	1- 1¼	14- 8	12"	6	7"	C	Str	12- 6	12"	5	12"	12"	2.31	372
25-30	18"	11	5"	A	1	17- 9	12-11¼	2- 5	1- 2¾	14- 2	19"	11	5"	B	1	18- 9	13-11¼	2- 5	1- 2¾	15- 2	15"	6	8"	C	Str	12- 8	15"	5	12"	12"	2.65	573
30-35	21"	11	5"	A	1	17- 9	12-11¼	2- 5	1- 2¾	14- 2	22"	11	5"	B	1	18- 9	13-11¼	2- 5	1- 2¾	15- 2	15"	6	7"	C	Str	13- 2	15"	5	12"	12"	2.92	584
35-40	24"	11	5"	A	1	18- 3	13- 5¼	2- 5	1- 2¾	14- 8	25"	11	5"	B	1	19- 3	14- 5¼	2- 5	1- 2¾	15- 8	18"	6	7"	C	Str	13- 8	18"	5	12"	12"	3.46	599

NOTE:
A & B bars may need to be rotated to maintain shown clearances.

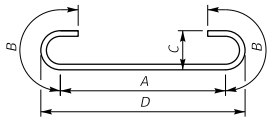

TYPE 1

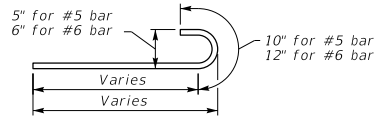

TYPE 4

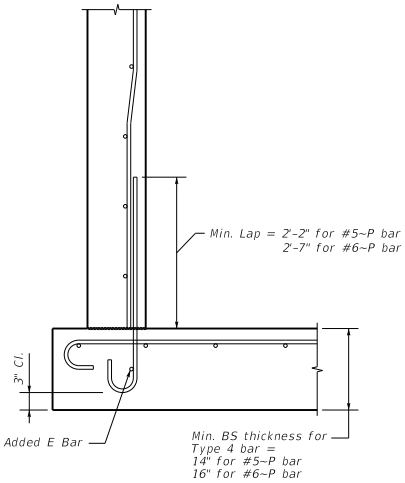

OPTIONAL HOOK DETAIL

NOTE:
The contractor will not be paid additionally if optional hook detail is used.

NOTE:
Bar Dimensions are per bar.

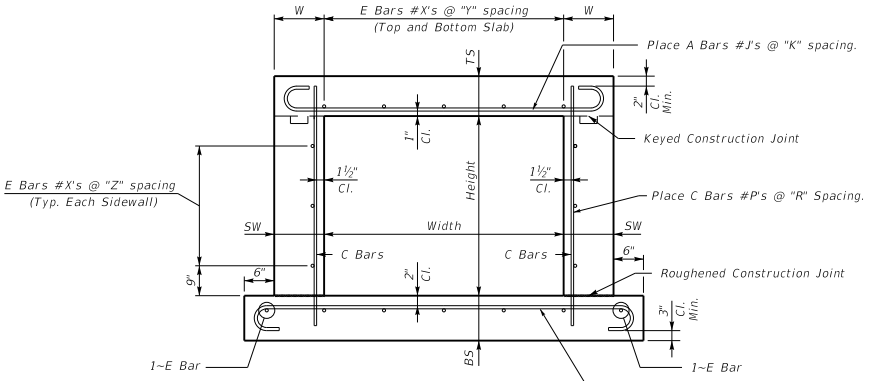

TYPICAL BARREL SECTION

KENTUCKY
DEPARTMENT OF HIGHWAYS

STANDARD CULVERT
12' - 0" WIDTH

STANDARD DRAWING NO. BSC-005

SUBMITTED _____ DIRECTOR DIVISION OF STRUCTURAL DESIGN — DATE 02-26-20

APPROVED _____ STATE HIGHWAY ENGINEER — DATE 02-26-20

14'-0" Width x 4'-0" Height

Fill Height (Ft.)	Top Slab										Bottom Slab										Sidewall						Mark "E" Distribution				Quantities	
	TS	J	K	Mark	Type	Length	A	B	C	D	BS	M	N	Mark	Type	Length	A	B	C	D	SW	P	R	Mark	Type	Length	W	X	Y	Z	Concrete CY/LF	Steel LBS/LF
0-2	12"	7	5"	A	1	17- 1	14- 9	1- 2	0- 7	15- 4	13"	7	5"	B	1	18- 1	15- 9	1- 2	0- 7	16- 4	10"	5	12"	C	Str	5- 8	13"	5	9"	12"	1.50	235
2.01-5	12"	8	6"	A	1	17- 2	14- 8	1- 3	0- 8	15- 4	13"	8	6"	B	1	18- 2	15- 8	1- 3	0- 8	16- 4	10"	5	12"	C	Str	5- 8	10"	5	12"	12"	1.50	243
5-10	12"	8	5"	A	1	17- 2	14- 8	1- 3	0- 8	15- 4	13"	8	5"	B	1	18- 2	15- 8	1- 3	0- 8	16- 4	10"	5	12"	C	Str	5- 8	10"	5	12"	12"	1.50	281
10-15	13"	8	5"	A	1	17- 2	14- 8	1- 3	0- 8	15- 4	14"	8	5"	B	1	18- 2	15- 8	1- 3	0- 8	16- 4	10"	5	12"	C	Str	5-10	10"	5	12"	12"	1.60	281
15-20	15"	9	5"	A	1	18- 2	14- 4¼	1-11	0-11¾	15- 4	16"	9	5"	B	1	19- 2	15- 4¼	1-11	0-11¾	16- 4	10"	5	12"	C	Str	6- 2	10"	5	12"	12"	1.80	360
20-25	17"	10	5"	A	1	18- 7	14- 2¾	2- 2	1- 1¼	15- 4	18"	10	5"	B	1	19- 7	15- 2¾	2- 2	1- 1¼	16- 4	10"	5	12"	C	Str	6- 6	10"	5	12"	12"	2.00	451
25-30	19"	11	5"	A	1	19- 3	14- 5¼	2- 5	1- 2¾	15- 8	20"	11	5"	B	1	20- 3	15- 5¼	2- 5	1- 2¾	16- 8	12"	5	12"	C	Str	6-10	12"	5	12"	12"	2.29	560
30-35	23"	11	5"	A	1	19- 9	14-11¼	2- 5	1- 2¾	16- 2	24"	11	5"	B	1	20- 9	15-11¼	2- 5	1- 2¾	17- 2	15"	5	12"	C	Str	7- 6	15"	5	12"	12"	2.84	574
35-40	26"	11	5"	A	1	20- 3	15- 5¼	2- 5	1- 2¾	16- 8	27"	11	5"	B	1	21- 3	16- 5¼	2- 5	1- 2¾	17- 8	18"	5	12"	C	Str	8- 0	18"	5	12"	12"	3.31	588

14'-0" Width x 6'-0" Height

Fill Height (Ft.)	Top Slab										Bottom Slab										Sidewall						Mark "E" Distribution				Quantities	
	TS	J	K	Mark	Type	Length	A	B	C	D	BS	M	N	Mark	Type	Length	A	B	C	D	SW	P	R	Mark	Type	Length	W	X	Y	Z	Concrete CY/LF	Steel LBS/LF
0-2	12"	7	5"	A	1	17- 1	14- 9	1- 2	0- 7	15- 4	13"	7	5"	B	1	18- 1	15- 9	1- 2	0- 7	16- 4	10"	5	12"	C	Str	7- 8	13"	5	9"	12"	1.62	243
2.01-5	12"	8	6"	A	1	17- 2	14- 8	1- 3	0- 8	15- 4	13"	8	6"	B	1	18- 2	15- 8	1- 3	0- 8	16- 4	10"	5	12"	C	Str	7- 8	10"	5	12"	12"	1.62	251
5-10	12"	8	5"	A	1	17- 2	14- 8	1- 3	0- 8	15- 4	13"	8	5"	B	1	18- 2	15- 8	1- 3	0- 8	16- 4	10"	5	12"	C	Str	7- 8	10"	5	12"	12"	1.62	289
10-15	13"	8	5"	A	1	17- 2	14- 8	1- 3	0- 8	15- 4	14"	8	5"	B	1	18- 2	15- 8	1- 3	0- 8	16- 4	10"	5	12"	C	Str	7-10	10"	5	12"	12"	1.72	289
15-20	15"	9	5"	A	1	18- 2	14- 4¼	1-11	0-11¾	15- 4	16"	9	5"	B	1	19- 2	15- 4¼	1-11	0-11¾	16- 4	10"	5	10"	C	Str	8- 2	10"	5	12"	12"	1.92	372
20-25	18"	10	5"	A	1	18-11	14- 6¾	2- 2	1- 1¼	15- 8	19"	10	5"	B	1	19-11	15- 6¾	2- 2	1- 1¼	16- 8	12"	5	10"	C	Str	8- 8	12"	5	12"	12"	2.33	470
25-30	20"	11	5"	A	1	19- 3	14- 5¼	2- 5	1- 2¾	15- 8	21"	11	5"	B	1	20- 3	15- 5¼	2- 5	1- 2¾	16- 8	12"	5	8"	C	Str	9- 0	12"	5	12"	12"	2.54	578
30-35	23"	11	5"	A	1	19- 9	14-11¼	2- 5	1- 2¾	16- 2	24"	11	5"	B	1	20- 9	15-11¼	2- 5	1- 2¾	17- 2	15"	5	9"	C	Str	9- 6	15"	5	12"	12"	3.03	589
35-40	27"	11	5"	A	1	20- 3	15- 5¼	2- 5	1- 2¾	16- 8	28"	11	5"	B	1	21- 3	16- 5¼	2- 5	1- 2¾	17- 8	18"	5	10"	C	Str	10- 2	18"	5	12"	12"	3.64	601

14'-0" Width x 8'-0" Height

Fill Height (Ft.)	Top Slab										Bottom Slab										Sidewall						Mark "E" Distribution				Quantities	
	TS	J	K	Mark	Type	Length	A	B	C	D	BS	M	N	Mark	Type	Length	A	B	C	D	SW	P	R	Mark	Type	Length	W	X	Y	Z	Concrete CY/LF	Steel LBS/LF
0-2	12"	8	6"	A	1	17- 2	14- 8	1- 3	0- 8	15- 4	13"	8	6"	B	1	18- 2	15- 8	1- 3	0- 8	16- 4	10"	5	12"	C	Str	9- 8	13"	5	9"	12"	1.75	268
2.01-5	12"	8	6"	A	1	17- 2	14- 8	1- 3	0- 8	15- 4	13"	8	6"	B	1	18- 2	15- 8	1- 3	0- 8	16- 4	10"	5	12"	C	Str	9- 8	10"	5	12"	12"	1.75	260
5-10	12"	8	5"	A	1	17- 2	14- 8	1- 3	0- 8	15- 4	13"	8	5"	B	1	18- 2	15- 8	1- 3	0- 8	16- 4	10"	5	10"	C	Str	9- 8	10"	5	12"	12"	1.75	301
10-15	13"	8	5"	A	1	17- 2	14- 8	1- 3	0- 8	15- 4	14"	8	5"	B	1	18- 2	15- 8	1- 3	0- 8	16- 4	10"	5	8"	C	Str	9-10	10"	5	12"	12"	1.85	308
15-20	16"	8	5"	A	1	17- 2	14- 8	1- 3	0- 8	15- 4	17"	8	5"	B	1	18- 2	15- 8	1- 3	0- 8	16- 4	10"	5	7"	C	Str	10- 4	10"	5	12"	12"	2.15	314
20-25	18"	10	5"	A	1	18-11	14- 6¾	2- 2	1- 1¼	15- 8	19"	10	5"	B	1	19-11	15- 6¾	2- 2	1- 1¼	16- 8	12"	5	7"	C	Str	10- 8	12"	5	12"	12"	2.48	491
25-30	20"	11	5"	A	1	19- 3	14- 5¼	2- 5	1- 2¾	15- 8	21"	11	5"	B	1	20- 3	15- 5¼	2- 5	1- 2¾	16- 8	12"	5	6"	C	Str	11- 0	12"	5	12"	12"	2.69	600
30-35	24"	11	5"	A	1	20- 3	15- 5¼	2- 5	1- 2¾	16- 8	25"	11	5"	B	1	21- 3	16- 5¼	2- 5	1- 2¾	17- 8	18"	6	9"	C	Str	11- 8	18"	5	12"	12"	3.54	627
35-40	28"	11	5"	A	1	20- 3	15- 5¼	2- 5	1- 2¾	16- 8	29"	11	5"	B	1	21- 3	16- 5¼	2- 5	1- 2¾	17- 8	18"	6	8"	C	Str	12- 4	18"	5	12"	12"	3.97	635

14'-0" Width x 10'-0" Height

Fill Height (Ft.)	Top Slab										Bottom Slab										Sidewall						Mark "E" Distribution				Quantities	
	TS	J	K	Mark	Type	Length	A	B	C	D	BS	M	N	Mark	Type	Length	A	B	C	D	SW	P	R	Mark	Type	Length	W	X	Y	Z	Concrete CY/LF	Steel LBS/LF
0-2	12"	8	6"	A	1	17- 2	14- 8	1- 3	0- 8	15- 4	13"	8	6"	B	1	18- 2	15- 8	1- 3	0- 8	16- 4	10"	5	11"	C	Str	11- 8	13"	5	9"	12"	1.87	279
2.01-5	12"	8	6"	A	1	17- 2	14- 8	1- 3	0- 8	15- 4	13"	8	6"	B	1	18- 2	15- 8	1- 3	0- 8	16- 4	10"	5	9"	C	Str	11- 8	10"	5	12"	12"	1.87	276
5-10	12"	8	5"	A	1	17- 2	14- 8	1- 3	0- 8	15- 4	13"	8	5"	B	1	18- 2	15- 8	1- 3	0- 8	16- 4	10"	5	7"	C	Str	11- 8	10"	5	12"	12"	1.87	323
10-15	13"	8	5"	A	1	17- 2	14- 8	1- 3	0- 8	15- 4	14"	8	5"	B	1	18- 2	15- 8	1- 3	0- 8	16- 4	10"	5	6"	C	Str	11-10	10"	5	12"	12"	1.97	331
15-20	16"	9	5"	A	1	18- 6	14- 8¼	1-11	0-11¾	15- 8	17"	9	5"	B	1	19- 6	15- 8¼	1-11	0-11¾	16- 8	12"	6	8"	C	Str	12- 4	12"	5	12"	12"	2.43	421
20-25	18"	11	5"	A	1	19- 9	14-11¼	2- 5	1- 2¾	16- 2	19"	11	5"	B	1	20- 9	15-11¼	2- 5	1- 2¾	17- 2	15"	5	6"	C	Str	12- 8	15"	5	12"	12"	2.87	624
25-30	21"	11	5"	A	1	19- 9	14-11¼	2- 5	1- 2¾	16- 2	22"	11	5"	B	1	20- 9	15-11¼	2- 5	1- 2¾	17- 2	15"	5	5"	C	Str	13- 2	15"	5	12"	12"	3.19	637
30-35	25"	11	5"	A	1	20- 3	15- 5¼	2- 5	1- 2¾	16- 8	26"	11	5"	B	1	21- 3	16- 5¼	2- 5	1- 2¾	17- 8	18"	6	8"	C	Str	13-10	18"	5	12"	12"	3.87	646
35-40	28"	11	5"	A	1	20- 3	15- 5¼	2- 5	1- 2¾	16- 8	29"	11	5"	B	1	21- 3	16- 5¼	2- 5	1- 2¾	17- 8	18"	6	7"	C	Str	14- 4	18"	5	12"	12"	4.20	658

NOTE:
A & B bars may need to be rotated to maintain shown clearances.

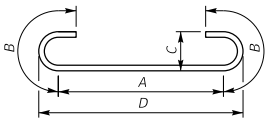

TYPE 1

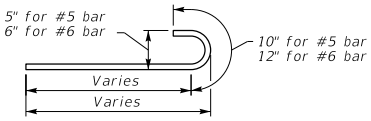

TYPE 4

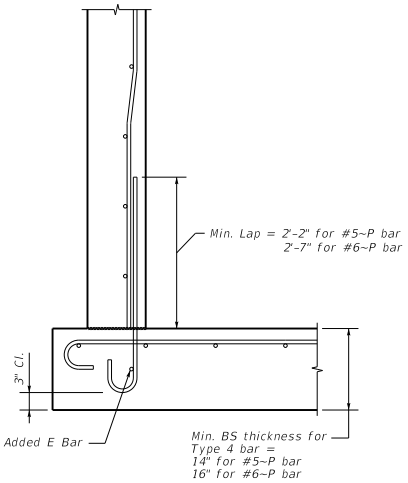

OPTIONAL HOOK DETAIL

NOTE:
The contractor will not be paid additionally if optional hook detail is used.

NOTE:
Bar Dimensions are per bar.

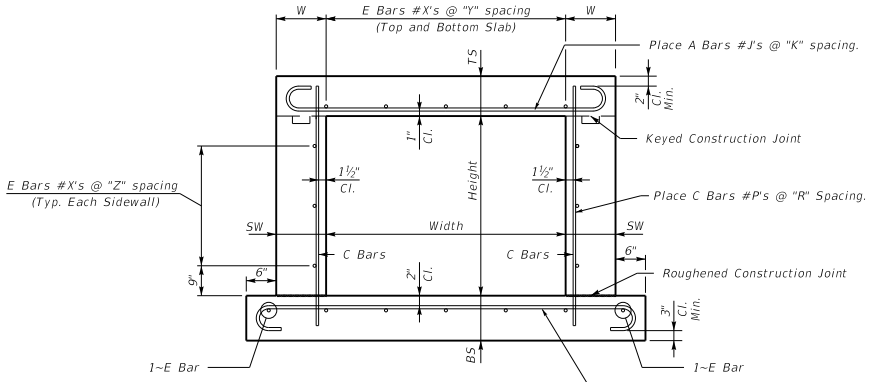

TYPICAL BARREL SECTION

KENTUCKY
DEPARTMENT OF HIGHWAYS

STANDARD CULVERT
14' - 0" WIDTH

STANDARD DRAWING NO. BSC-006

SUBMITTED _____ DIRECTOR DIVISION OF STRUCTURAL DESIGN — DATE 02-26-20

APPROVED _____ STATE HIGHWAY ENGINEER — DATE 02-26-20

16'-0" Width x 4'-0" Height

Fill Height (Ft.)	Top Slab										Bottom Slab										Sidewall						Mark "E" Distribution				Quantities	
	TS	J	K	Mark	Type	Length	A	B	C	D	BS	M	N	Mark	Type	Length	A	B	C	D	SW	P	R	Mark	Type	Length	W	X	Y	Z	Concrete CY/LF	Steel LBS/LF
0-2	13"	8	5"	A	1	19- 2	16- 8	1- 3	0- 8	17- 4	14"	8	5"	B	1	20- 2	17- 8	1- 3	0- 8	18- 4	10"	5	12"	C	Str	5-10	11½"	5	9"	12"	1.77	321
2.01-5	13"	8	5"	A	1	19- 2	16- 8	1- 3	0- 8	17- 4	14"	8	5"	B	1	20- 2	17- 8	1- 3	0- 8	18- 4	10"	5	12"	C	Str	5-10	10"	5	12"	12"	1.77	311
5-10	14"	8	5"	A	1	19- 2	16- 8	1- 3	0- 8	17- 4	15"	8	5"	B	1	20- 2	17- 8	1- 3	0- 8	18- 4	10"	5	12"	C	Str	6- 0	10"	5	12"	12"	1.88	311
10-15	15"	9	5"	A	1	20- 2	16- 4¼	1-11	0-11¾	17- 4	16"	9	5"	B	1	21- 2	17- 4¼	1-11	0-11¾	18- 4	10"	5	12"	C	Str	6- 2	10"	5	12"	12"	1.99	397
15-20	17"	9	5"	A	1	20- 2	16- 4¼	1-11	0-11¾	17- 4	18"	9	5"	B	1	21- 2	17- 4¼	1-11	0-11¾	18- 4	10"	5	12"	C	Str	6- 6	10"	5	12"	12"	2.22	397
20-25	19"	11	5"	A	1	21- 3	16- 5¼	2- 5	1- 2¾	17- 8	20"	11	5"	B	1	22- 3	17- 5¼	2- 5	1- 2¾	18- 8	12"	5	12"	C	Str	6-10	12"	5	12"	12"	2.53	615
25-30	23"	11	5"	A	1	21- 9	16-11¼	2- 5	1- 2¾	18- 2	24"	11	5"	B	1	22- 9	17-11¼	2- 5	1- 2¾	19- 2	15"	5	12"	C	Str	7- 6	15"	5	12"	12"	3.13	630
30-35	26"	11	5"	A	1	22- 3	17- 5¼	2- 5	1- 2¾	18- 8	27"	11	5"	B	1	23- 3	18- 5¼	2- 5	1- 2¾	19- 8	18"	5	12"	C	Str	8- 0	18"	5	12"	12"	3.64	643
35-40	30"	11	5"	A	1	22- 3	17- 5¼	2- 5	1- 2¾	18- 8	31"	11	5"	B	1	23- 3	18- 5¼	2- 5	1- 2¾	19- 8	18"	5	12"	C	Str	8- 8	18"	5	12"	12"	4.12	645

16'-0" Width x 6'-0" Height

Fill Height (Ft.)	Top Slab										Bottom Slab										Sidewall						Mark "E" Distribution				Quantities	
	TS	J	K	Mark	Type	Length	A	B	C	D	BS	M	N	Mark	Type	Length	A	B	C	D	SW	P	R	Mark	Type	Length	W	X	Y	Z	Concrete CY/LF	Steel LBS/LF
0-2	13"	8	5"	A	1	19- 2	16- 8	1- 3	0- 8	17- 4	14"	8	5"	B	1	20- 2	17- 8	1- 3	0- 8	18- 4	10"	5	12"	C	Str	7-10	11½"	5	9"	12"	1.89	330
2.01-5	13"	8	5"	A	1	19- 2	16- 8	1- 3	0- 8	17- 4	14"	8	5"	B	1	20- 2	17- 8	1- 3	0- 8	18- 4	10"	5	12"	C	Str	7-10	10"	5	12"	12"	1.89	319
5-10	14"	8	5"	A	1	19- 2	16- 8	1- 3	0- 8	17- 4	15"	8	5"	B	1	20- 2	17- 8	1- 3	0- 8	18- 4	10"	5	12"	C	Str	8- 0	10"	5	12"	12"	2.00	320
10-15	15"	9	5"	A	1	20- 2	16- 4¼	1-11	0-11¾	17- 4	16"	9	5"	B	1	21- 2	17- 4¼	1-11	0-11¾	18- 4	10"	5	12"	C	Str	8- 2	10"	5	12"	12"	2.12	405
15-20	17"	9	5"	A	1	20- 2	16- 4¼	1-11	0-11¾	17- 4	18"	9	5"	B	1	21- 2	17- 4¼	1-11	0-11¾	18- 4	10"	5	10"	C	Str	8- 6	10"	5	12"	12"	2.34	409
20-25	19"	11	5"	A	1	21- 3	16- 5¼	2- 5	1- 2¾	17- 8	20"	11	5"	B	1	22- 3	17- 5¼	2- 5	1- 2¾	18- 8	12"	5	10"	C	Str	8-10	12"	5	12"	12"	2.68	627
25-30	23"	11	5"	A	1	21- 9	16-11¼	2- 5	1- 2¾	18- 2	24"	11	5"	B	1	22- 9	17-11¼	2- 5	1- 2¾	19- 2	15"	5	11"	C	Str	9- 6	15"	5	12"	12"	3.32	640
30-35	27"	11	5"	A	1	22- 3	17- 5¼	2- 5	1- 2¾	18- 8	28"	11	5"	B	1	23- 3	18- 5¼	2- 5	1- 2¾	19- 8	18"	5	11"	C	Str	10- 2	18"	5	12"	12"	3.98	654
35-40	31"	11	5"	A	1	22- 3	17- 5¼	2- 5	1- 2¾	18- 8	32"	11	5"	B	1	23- 3	18- 5¼	2- 5	1- 2¾	19- 8	18"	5	9"	C	Str	10-10	18"	5	12"	12"	4.46	661

16'-0" Width x 8'-0" Height

Fill Height (Ft.)	Top Slab										Bottom Slab										Sidewall						Mark "E" Distribution				Quantities	
	TS	J	K	Mark	Type	Length	A	B	C	D	BS	M	N	Mark	Type	Length	A	B	C	D	SW	P	R	Mark	Type	Length	W	X	Y	Z	Concrete CY/LF	Steel LBS/LF
0-2	13"	8	5"	A	1	19- 2	16- 8	1- 3	0- 8	17- 4	14"	8	5"	B	1	20- 2	17- 8	1- 3	0- 8	18- 4	10"	5	12"	C	Str	9-10	11½"	5	9"	12"	2.01	338
2.01-5	13"	8	5"	A	1	19- 2	16- 8	1- 3	0- 8	17- 4	14"	8	5"	B	1	20- 2	17- 8	1- 3	0- 8	18- 4	10"	5	12"	C	Str	9-10	10"	5	12"	12"	2.01	328
5-10	14"	8	5"	A	1	19- 2	16- 8	1- 3	0- 8	17- 4	15"	8	5"	B	1	20- 2	17- 8	1- 3	0- 8	18- 4	10"	5	10"	C	Str	10- 0	10"	5	12"	12"	2.13	332
10-15	15"	9	5"	A	1	20- 2	16- 4¼	1-11	0-11¾	17- 4	16"	9	5"	B	1	21- 2	17- 4¼	1-11	0-11¾	18- 4	10"	5	8"	C	Str	10- 2	10"	5	12"	12"	2.24	424
15-20	17"	10	5"	A	1	20- 7	16- 2¾	2- 2	1- 1¼	17- 4	18"	10	5"	B	1	21- 7	17- 2¾	2- 2	1- 1¼	18- 4	10"	5	7"	C	Str	10- 6	10"	5	12"	12"	2.46	529
20-25	20"	11	5"	A	1	21- 3	16- 5¼	2- 5	1- 2¾	17- 8	21"	11	5"	B	1	22- 3	17- 5¼	2- 5	1- 2¾	18- 8	12"	5	7"	C	Str	11- 0	12"	5	12"	12"	2.94	649
25-30	24"	11	5"	A	1	22- 3	17- 5¼	2- 5	1- 2¾	18- 8	25"	11	5"	B	1	23- 3	18- 5¼	2- 5	1- 2¾	19- 8	18"	5	8"	C	Str	11- 8	18"	5	12"	12"	3.84	672
30-35	28"	11	5"	A	1	22- 3	17- 5¼	2- 5	1- 2¾	18- 8	29"	11	5"	B	1	23- 3	18- 5¼	2- 5	1- 2¾	19- 8	18"	6	9"	C	Str	12- 4	18"	5	12"	12"	4.33	684
35-40	31"	11	5"	A	1	22- 3	17- 5¼	2- 5	1- 2¾	18- 8	32"	11	5"	B	1	23- 3	18- 5¼	2- 5	1- 2¾	19- 8	18"	6	8"	C	Str	12-10	18"	5	12"	12"	4.69	693

16'-0" Width x 10'-0" Height

Fill Height (Ft.)	Top Slab										Bottom Slab										Sidewall						Mark "E" Distribution				Quantities	
	TS	J	K	Mark	Type	Length	A	B	C	D	BS	M	N	Mark	Type	Length	A	B	C	D	SW	P	R	Mark	Type	Length	W	X	Y	Z	Concrete CY/LF	Steel LBS/LF
0-2	13"	8	5"	A	1	19- 2	16- 8	1- 3	0- 8	17- 4	14"	8	5"	B	1	20- 2	17- 8	1- 3	0- 8	18- 4	10"	5	11"	C	Str	11-10	11½"	5	9"	12"	2.14	349
2.01-5	13"	8	5"	A	1	19- 2	16- 8	1- 3	0- 8	17- 4	14"	8	5"	B	1	20- 2	17- 8	1- 3	0- 8	18- 4	10"	5	9"	C	Str	11-10	10"	5	12"	12"	2.14	344
5-10	14"	8	5"	A	1	19- 2	16- 8	1- 3	0- 8	17- 4	15"	8	5"	B	1	20- 2	17- 8	1- 3	0- 8	18- 4	10"	5	7"	C	Str	12- 0	10"	5	12"	12"	2.25	354
10-15	16"	9	5"	A	1	20- 2	16- 4¼	1-11	0-11¾	17- 4	17"	9	5"	B	1	21- 2	17- 4¼	1-11	0-11¾	18- 4	10"	5	6"	C	Str	12- 4	10"	5	12"	12"	2.47	448
15-20	17"	10	5"	A	1	20-11	16- 6¾	2- 2	1- 1¼	17- 8	18"	10	5"	B	1	21-11	17- 6¾	2- 2	1- 1¼	18- 8	12"	5	6"	C	Str	12- 6	12"	5	12"	12"	2.75	554
20-25	20"	11	5"	A	1	21- 3	16- 5¼	2- 5	1- 2¾	17- 8	21"	11	5"	B	1	22- 3	17- 5¼	2- 5	1- 2¾	18- 8	12"	5	5"	C	Str	13- 0	12"	5	12"	12"	3.09	679
25-30	25"	11	5"	A	1	22- 3	17- 5¼	2- 5	1- 2¾	18- 8	26"	11	5"	B	1	23- 3	18- 5¼	2- 5	1- 2¾	19- 8	18"	5	5"	C	Str	13-10	18"	5	12"	12"	4.19	709
30-35	28"	11	5"	A	1	22- 3	17- 5¼	2- 5	1- 2¾	18- 8	29"	11	5"	B	1	23- 3	18- 5¼	2- 5	1- 2¾	19- 8	18"	6	8"	C	Str	14- 4	18"	5	12"	12"	4.55	704
35-40	32"	11	5"	A	1	22- 3	17- 5¼	2- 5	1- 2¾	18- 8	33"	11	5"	B	1	23- 3	18- 5¼	2- 5	1- 2¾	19- 8	18"	6	7"	C	Str	15- 0	18"	5	12"	12"	5.03	716

NOTE:
A & B bars may need to be rotated to maintain shown clearances.

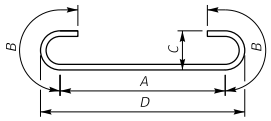

TYPE 1

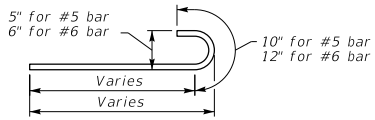

TYPE 4

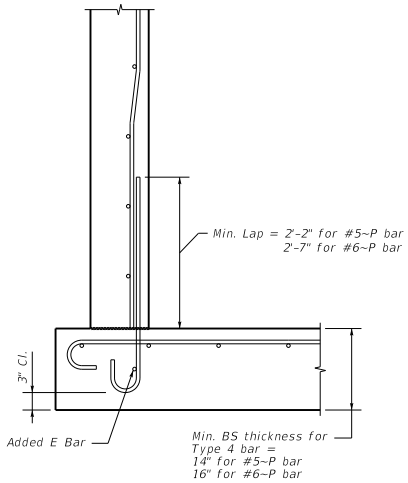

OPTIONAL HOOK DETAIL

NOTE:
The contractor will not be paid additionally if optional hook detail is used.

NOTE:
Bar Dimensions are per bar.

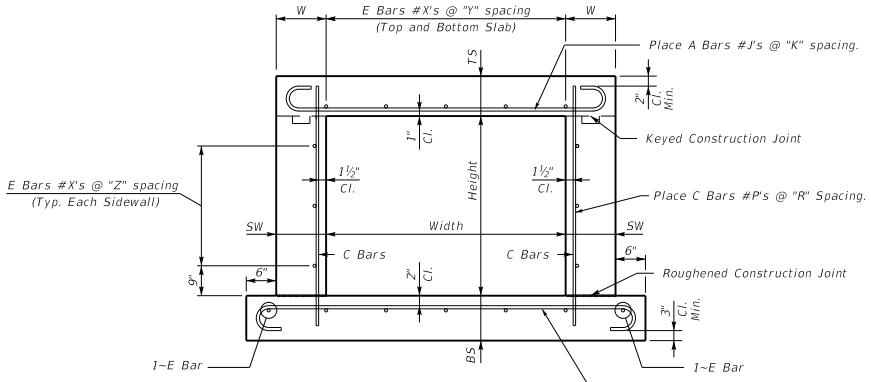

TYPICAL BARREL SECTION

KENTUCKY
DEPARTMENT OF HIGHWAYS

STANDARD CULVERT
16' - 0" WIDTH

STANDARD DRAWING NO. BSC-007

SUBMITTED _____ DIRECTOR DIVISION OF STRUCTURAL DESIGN — 02-26-20 DATE

APPROVED _____ STATE HIGHWAY ENGINEER — 02-26-20 DATE

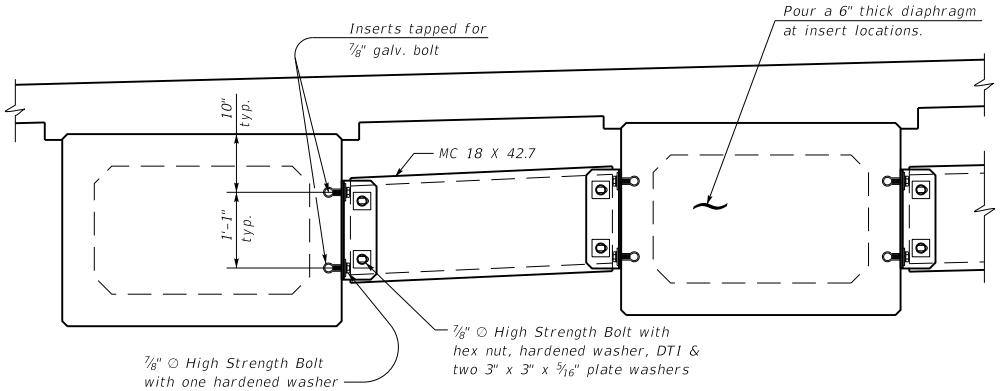

INTERMEDIATE DIAPHRAGM

~Typical for SB-33 Beams~

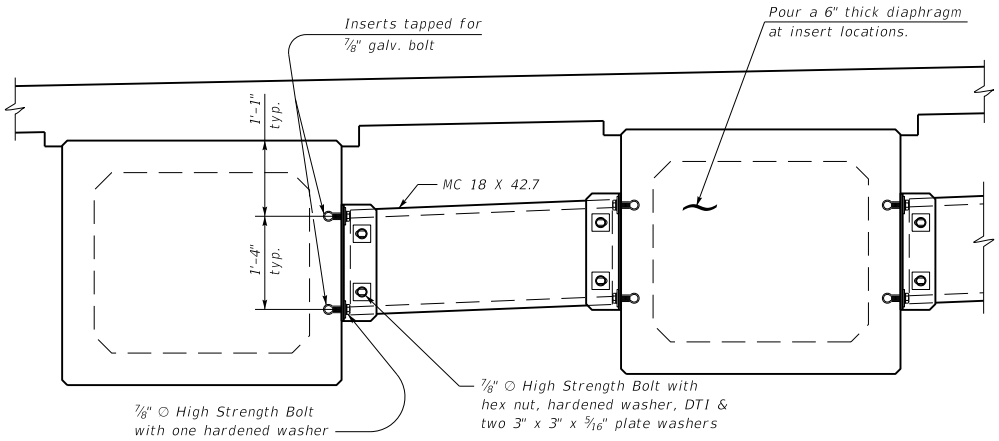

INTERMEDIATE DIAPHRAGM

~Typical for SB-42 Beams~

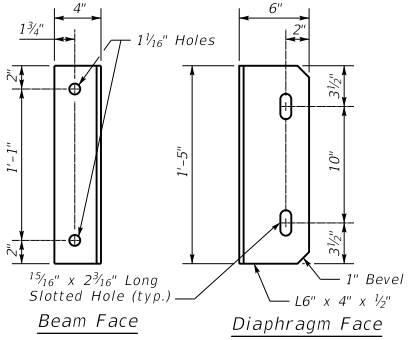

CLIP ANGLE

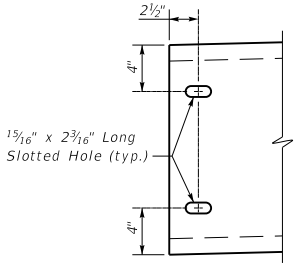

CHANNEL END

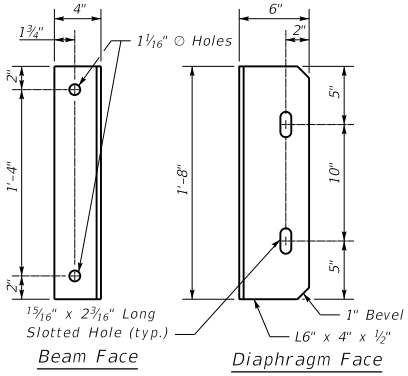

CLIP ANGLE

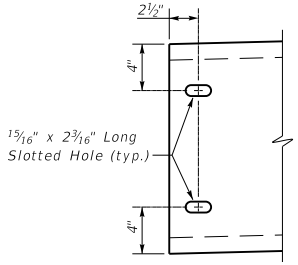

CHANNEL END

Diaphragm Notes

CONNECTIONS: *Ensure all bolted connections are ASTM A325, 7/8 inch diameter high strength bolts, nuts, and washers, mechanically zinc coated in accordance with AASHTO M298, for Class 50. Install all high strength bolted field connections using "direct tension indicators" (DTI's) in accordance with the Standard Specificationsand ASTM F959. Ensure all DTI's are mechanically zinc coated. Show installation details of the DTI's on the shop plans. Place DTI's under the bolt head.*

STRUCTURAL STEEL: *Ensure plates, angles, and channels conform to ASTM A36 or A572 and galvanized after fabrication.*

SHOP DRAWINGS: *Show the location of all inserts and holes on the precast beam shop drawings. Submit shop drawings for the steel diaphragms to the Division of Structural Design for approval.*

DIAPHRAGMS: *Erect the diaphragms the same day that the precast beams are placed on the substructure. Include the cost of all materials and labor required to fabricate and erect the diaphragms in the bid for Precast Beams.*

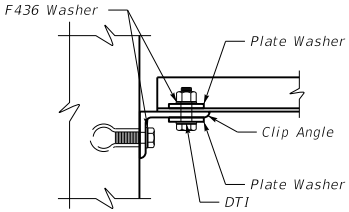

CONNECTION DETAILS

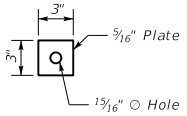

PLATE WASHER

KENTUCKY
DEPARTMENT OF HIGHWAYS

BOX BEAM
DIAPHRAGMS

STANDARD DRAWING NO. BSD-001

SUBMITTED _____ 02-26-20
DIRECTOR DIVISION OF STRUCTURAL DESIGN — DATE

APPROVED _____ 02-26-20
STATE HIGHWAY ENGINEER — DATE

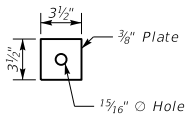

BACKING PLATE

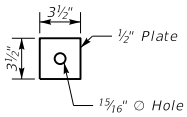

FILLER PLATE

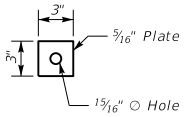

PLATE WASHER

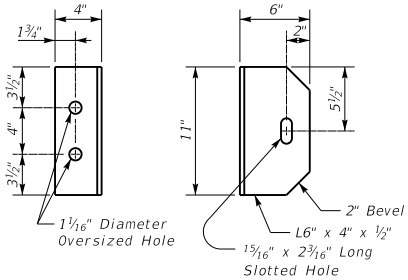

CLIP ANGLE - L1

CROSS FRAME NOTES

CONNECTIONS: Ensure all bolted connections are ASTM A325, ⅞ inch diameter high strength bolts, nuts, and washers, mechanically zinc coated in accordance with AASHTO M298, for Class 50. Install all high strength bolted field connections using "direct tension indicators" (DTI's) in accordance with the Standard Specifications and ASTM F959. Ensure all DTI's are mechanically zinc coated. Show installation details of the DTI's on the shop plans. Place DTI's under the bolt head. ASTM A449 bolts may be used in lieu of A325 for the bolts carried through the girder webs only.

STRUCTURAL STEEL: Ensure plates and angles conform to ASTM A36 or A572 and galvanized after fabrication.

SHOP DRAWINGS: Show the location of all inserts and holes on the precast beam shop drawings. Submit shop drawings for the steel diaphragms to the Division of Structural Design for approval.

DIAPHRAGMS: Erect the diaphragms the same day that the precast beams are placed on the substructure. Include the cost of all materials and labor required to fabricate and erect the diaphragms in the bid for Precast Beams.

BEAMS: This crossframe is to be used on PPC I-Beams with heights of 60 inches or greater such as Type 5-8 and HN60 to HN84.

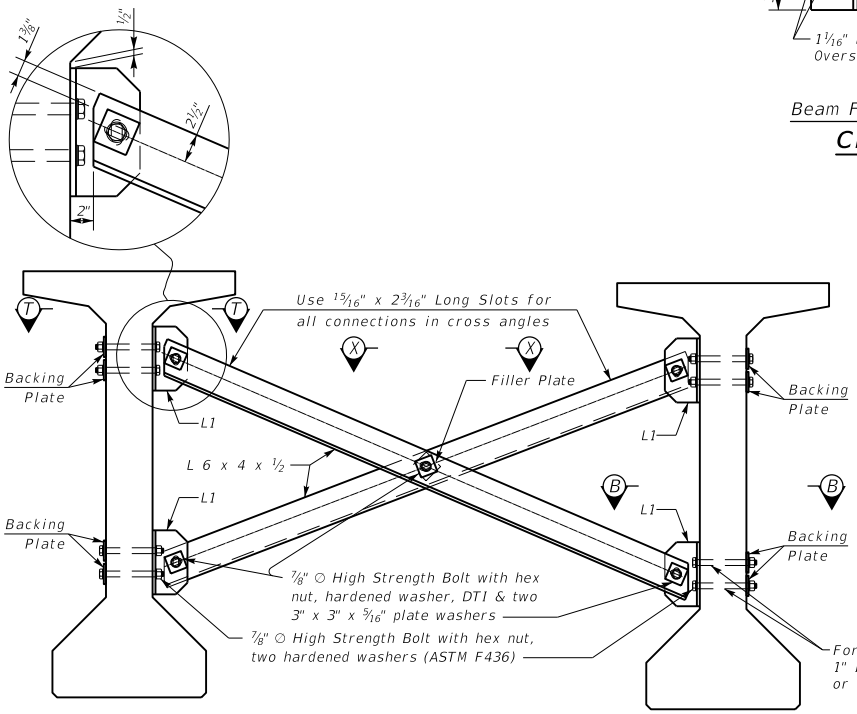

INTERMEDIATE DIAPHRAGM DETAILS BETWEEN INTERIOR BEAMS

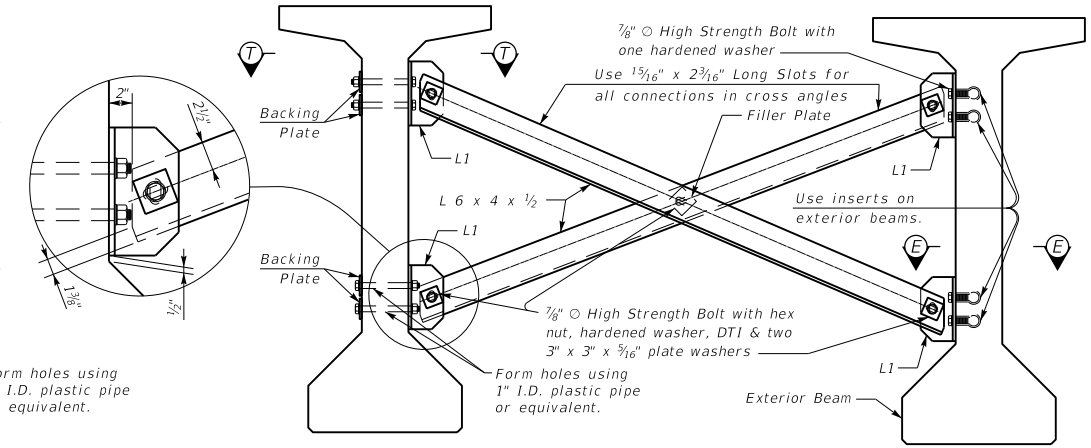

INTERMEDIATE DIAPHRAGM DETAILS BETWEEN OUTMOST BEAMS

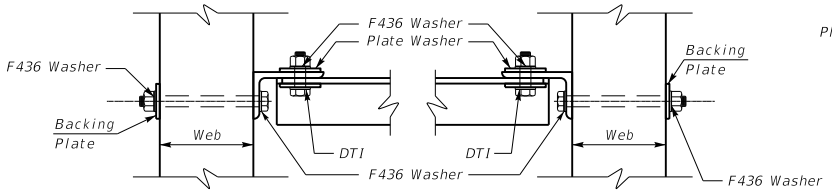

SECTION T-T **SECTION B-B**

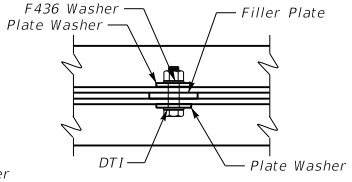

SECTION X-X

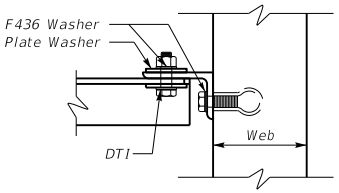

SECTION E-E

KENTUCKY
DEPARTMENT OF HIGHWAYS

PPC I-BEAM
SKEWED STEEL
CROSS FRAME DETAILS

STANDARD DRAWING NO. BSD-002

SUBMITTED _____ DIRECTOR DIVISION OF STRUCTURAL DESIGN — 02-26-20 DATE

APPROVED _____ STATE HIGHWAY ENGINEER — 02-26-20 DATE

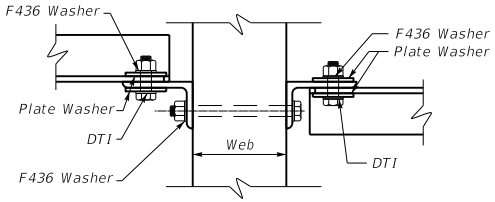

SECTION T-T

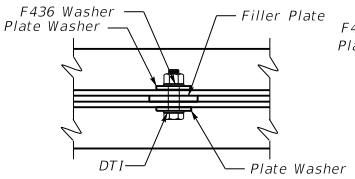

SECTION X-X

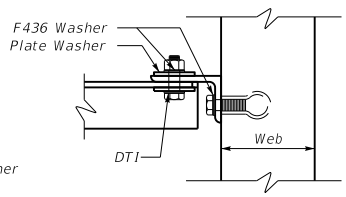

SECTION E-E

CROSS FRAME NOTES

CONNECTIONS: Ensure all bolted connections are ASTM A325, 7/8 inch diameter high strength bolts, nuts, and washers, mechanically zinc coated in accordance with AASHTO M298, for Class 50. Install all high strength bolted field connections using "direct tension indicators" (DTI's) in accordance with the Standard Specifications and ASTM F959. Ensure all DTI's are mechanically zinc coated. Show installation details of the DTI's on the shop plans. Place DTI's under the bolt head. ASTM A449 bolts may be used in lieu of A325 for the bolts carried through the girder webs only.

STRUCTURAL STEEL: Ensure plates and angles conform to ASTM A36 or A572 and galvanized after fabrication.

SHOP DRAWINGS: Show the location of all inserts and holes on the precast beam shop drawings. Submit shop drawings for the steel diaphragms to the Division of Structural Design for approval.

DIAPHRAGMS: Erect the diaphragms the same day that the precast beams are placed on the substructure. Include the cost of all materials and labor required to fabricate and erect the diaphragms in the bid for Precast Beams.

BEAMS: This crossframe is to be used on PPC I-Beams with heights of 60 inches or greater such as Type 5-8 and HN60 to HN84.

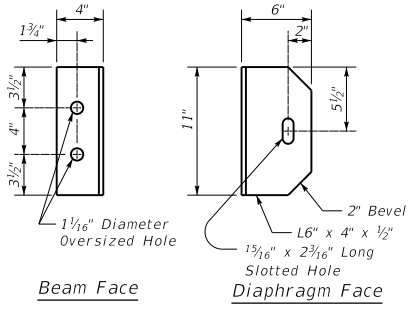

CLIP ANGLE - L1

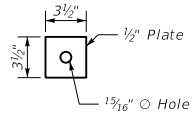

FILLER PLATE

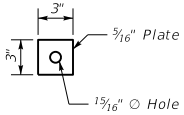

PLATE WASHER

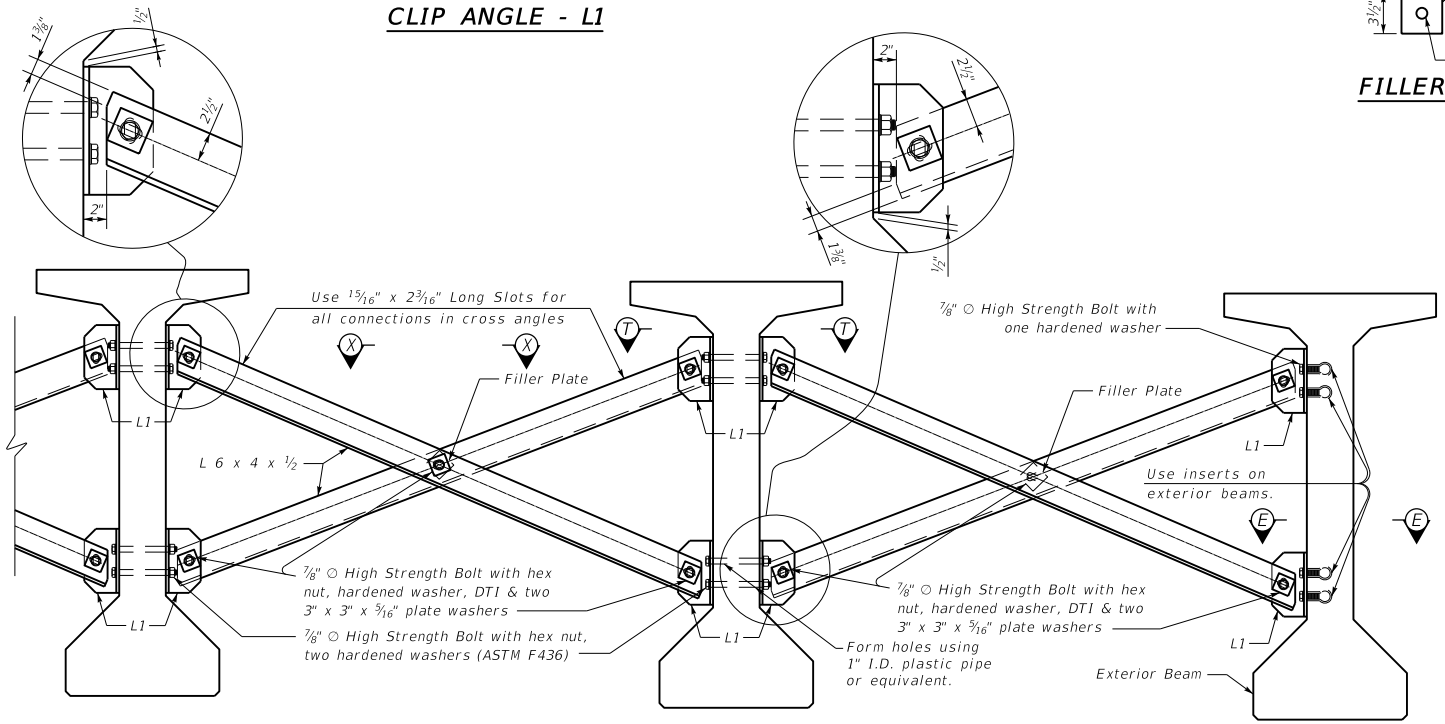

INTERMEDIATE DIAPHRAGM DETAILS

KENTUCKY
DEPARTMENT OF HIGHWAYS

PPC I-BEAM
0° SKEW STEEL
CROSS FRAME DETAILS

STANDARD DRAWING NO. BSD-003

SUBMITTED _____ DIRECTOR DIVISION OF STRUCTURAL DESIGN — DATE 02-26-20

APPROVED _____ STATE HIGHWAY ENGINEER — DATE 02-26-20

DIAPHRAGM NOTES

CONNECTIONS: Ensure all bolted connections are ASTM A325, 7/8 inch diameter high strength bolts, nuts, and washers, mechanically zinc coated in accordance with AASHTO M298, for Class 50. Install all high strength bolted field connections using "direct tension indicators" (DTI's) in accordance with the Standard Specifications and ASTM F959. Ensure all DTI's are mechanically zinc coated. Show installation details of the DTI's on the shop plans. Place DTI's under the bolt head. ASTM A449 bolts may be used in lieu of A325 for the bolts carried through the girder webs only.

STRUCTURAL STEEL: Ensure plates, angles, and channels conform to ASTM A36 or A572 and galvanized after fabrication.

SHOP DRAWINGS: Show the location of all inserts and holes on the precast beam shop drawings. Submit shop drawings for the steel diaphragms to the Division of Structural Design for approval.

DIAPHRAGMS: Erect the diaphragms the same day that the precast beams are placed on the substructure. Include the cost of all materials and labor required to fabricate and erect the diaphragms in the bid for Precast Beams.

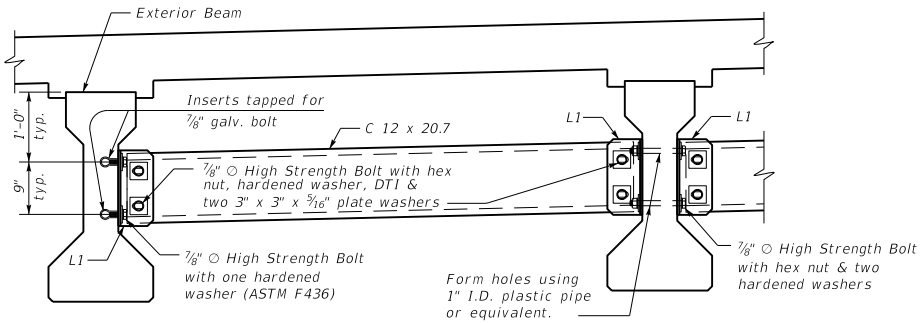

INTERMEDIATE DIAPHRAGM

~Typical for 0° Skew PCI, Type 2 Beams~

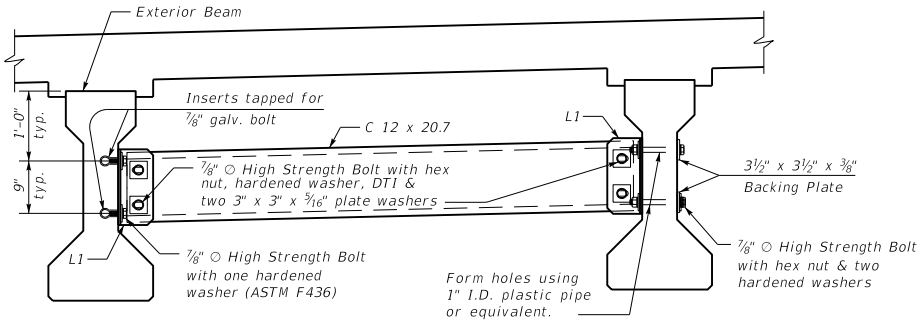

INTERMEDIATE DIAPHRAGM

~Typical for Skewed PCI, Type 2 Beams~

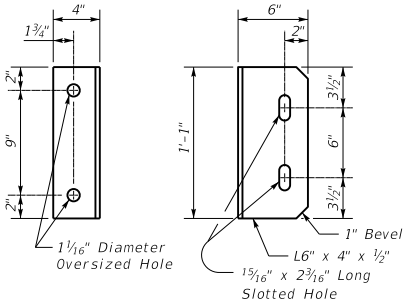

Beam Face

Diaphragm Face

CLIP ANGLE - L1

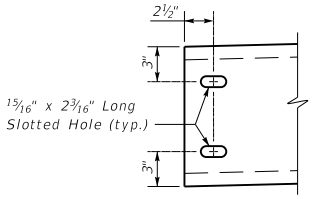

CHANNEL END

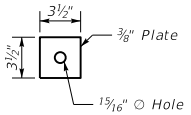

BACKING PLATE

Skewed Spans, Only

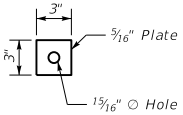

PLATE WASHER

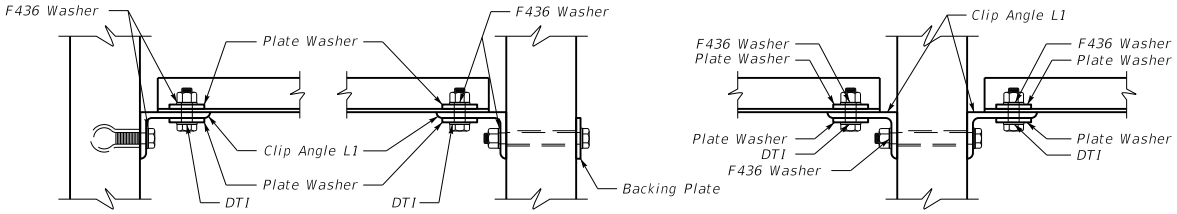

Exterior Beam

Interior Beam, Skewed

Interior Beam, Straight

CONNECTION DETAILS

KENTUCKY
DEPARTMENT OF HIGHWAYS

PPC I-BEAM
TYPE 2
DIAPHRAGM DETAILS

STANDARD DRAWING NO. BSD-004

SUBMITTED _____ DIRECTOR DIVISION OF STRUCTURAL DESIGN — DATE 02-26-20

APPROVED _____ STATE HIGHWAY ENGINEER — DATE 02-26-20

DIAPHRAGM NOTES

CONNECTIONS: Ensure all bolted connections are ASTM A325, 7/8 inch diameter high strength bolts, nuts, and washers, mechanically zinc coated in accordance with AASHTO M298, for Class 50. Install all high strength bolted field connections using "direct tension indicators" (DTI's) in accordance with the Standard Specifications and ASTM F959. Ensure all DTI's are mechanically zinc coated. Show installation details of the DTI's on the shop plans. Place DTI's under the bolt head. ASTM A449 bolts may be used in lieu of A325 for the bolts carried through the girder webs only.

STRUCTURAL STEEL: Ensure plates, angles, and channels conform to ASTM A36 or A572 and galvanized after fabrication.

SHOP DRAWINGS: Show the location of all inserts and holes on the precast beam shop drawings. Submit shop drawings for the steel diaphragms to the Division of Structural Design for approval.

DIAPHRAGMS: Erect the diaphragms the same day that the precast beams are placed on the substructure. Include the cost of all materials and labor required to fabricate and erect the diaphragms in the bid for Precast Beams.

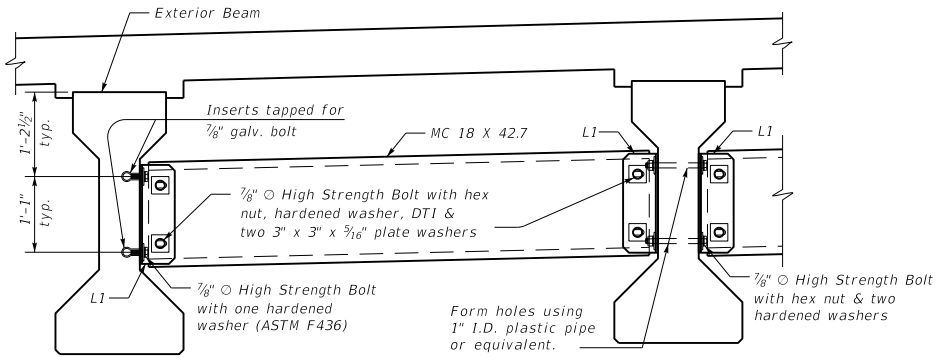

INTERMEDIATE DIAPHRAGM

~Typical for 0° Skew PCI, Type 3 Beams~

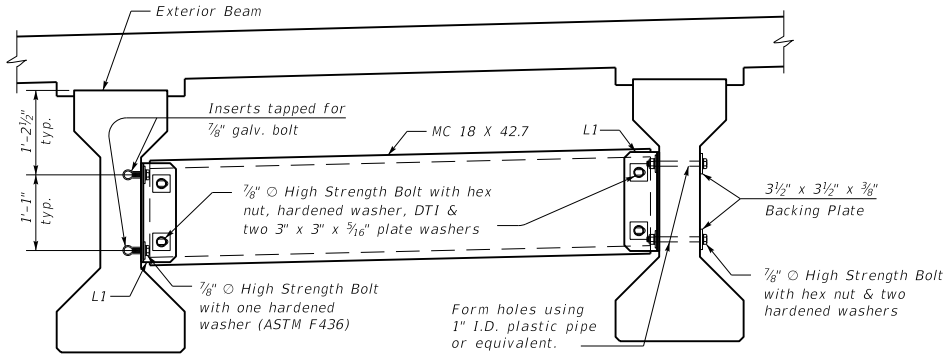

INTERMEDIATE DIAPHRAGM

~Typical for Skewed PCI, Type 3 Beams~

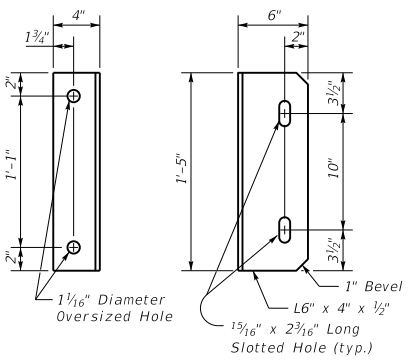

CLIP ANGLE - L1

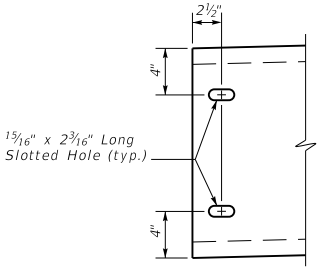

CHANNEL END

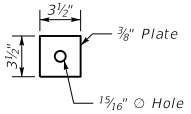

BACKING PLATE

Skewed Spans, Only

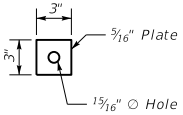

PLATE WASHER

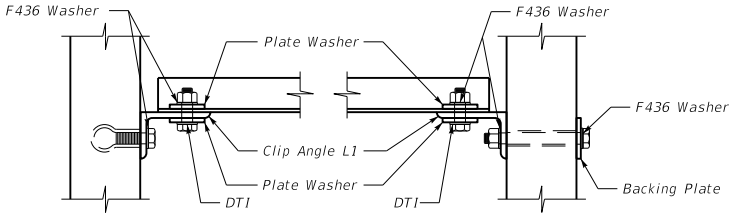

Exterior Beam

Interior Beam, Skewed

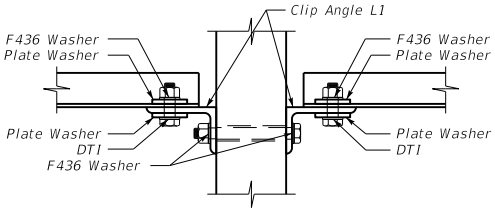

Interior Beam, Straight

CONNECTION DETAILS

KENTUCKY
DEPARTMENT OF HIGHWAYS

PPC I-BEAM
TYPE 3
DIAPHRAGM DETAILS

STANDARD DRAWING NO. BSD-005

SUBMITTED _____ DIRECTOR DIVISION OF STRUCTURAL DESIGN — DATE 02-26-20

APPROVED _____ STATE HIGHWAY ENGINEER — DATE 02-26-20

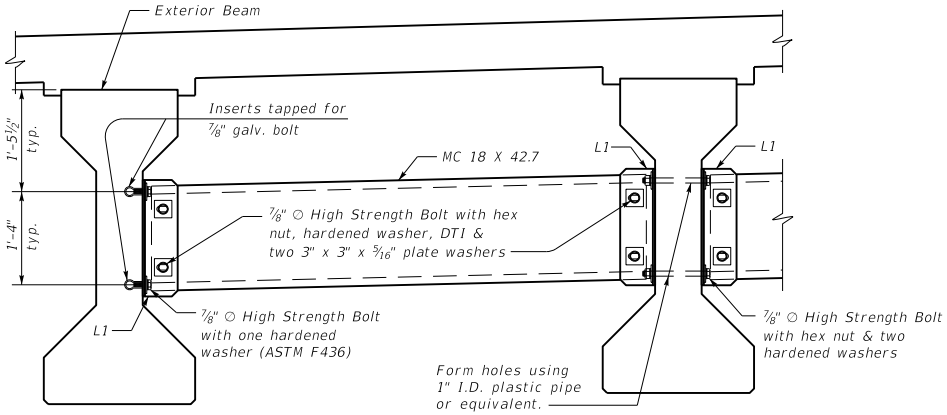

INTERMEDIATE DIAPHRAGM

~Typical for 0° Skew PCI, Type 4 Beams~

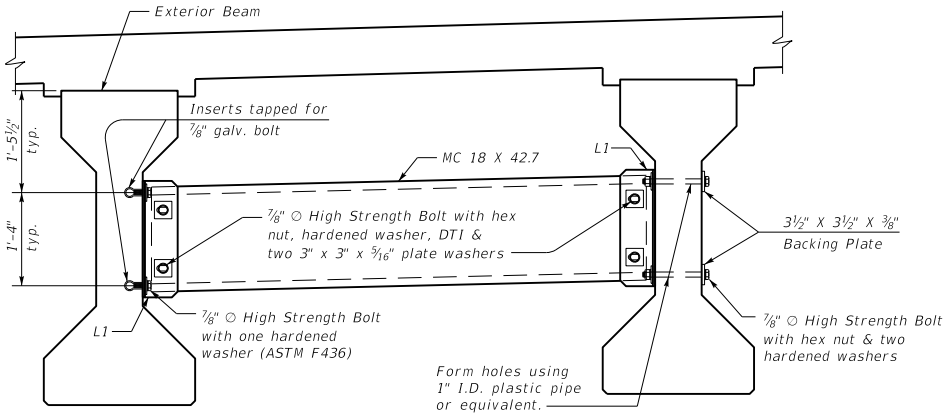

INTERMEDIATE DIAPHRAGM

~Typical for Skewed PCI, Type 4 Beams~

DIAPHRAGM NOTES

CONNECTIONS: Ensure all bolted connections are ASTM A325, 7/8 inch diameter high strength bolts, nuts, and washers, mechanically zinc coated in accordance with AASHTO M298, for Class 50. Install all high strength bolted field connections using "direct tension indicators" (DTI's) in accordance with the Standard Specifications and ASTM F959. Ensure all DTI's are mechanically zinc coated. Show installation details of the DTI's on the shop plans. Place DTI's under the bolt head. ASTM A449 bolts may be used in lieu of A325 for the bolts carried through the girder webs only.

STRUCTURAL STEEL: Ensure plates, angles, and channels conform to ASTM A36 or A572 and galvanized after fabrication.

SHOP DRAWINGS: Show the location of all inserts and holes on the precast beam shop drawings. Submit shop drawings for the steel diaphragms to the Division of Structural Design for approval.

DIAPHRAGMS: Erect the diaphragms the same day that the precast beams are placed on the substructure. Include the cost of all materials and labor required to fabricate and erect the diaphragms in the bid for Precast Beams.

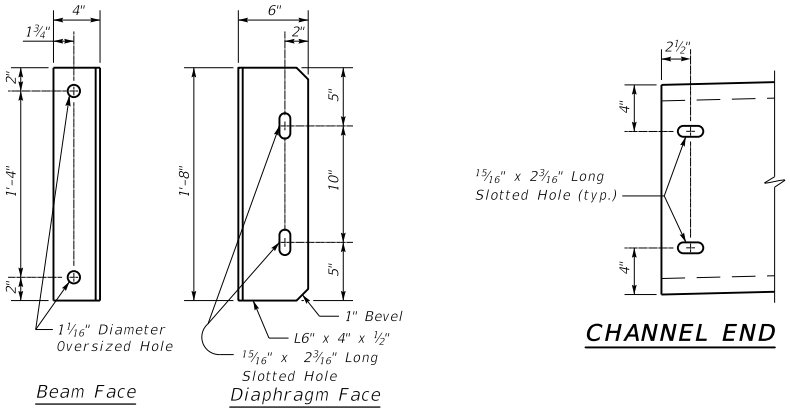

CHANNEL END

CLIP ANGLE - L1

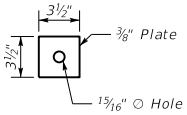

BACKING PLATE

Skewed Spans, Only

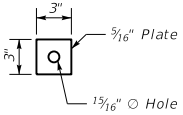

PLATE WASHER

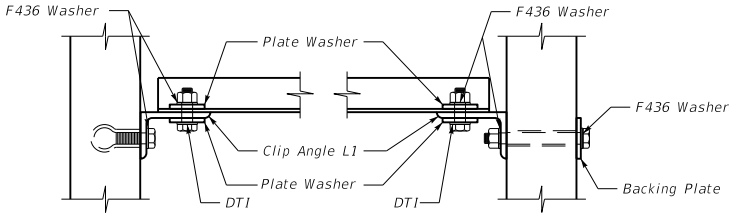

Exterior Beam

Interior Beam, Skewed

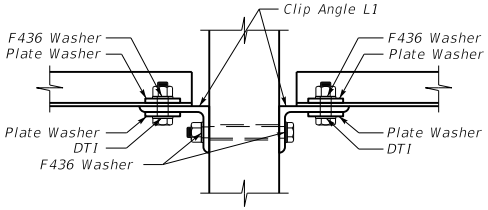

Interior Beam, Straight

CONNECTION DETAILS

KENTUCKY
DEPARTMENT OF HIGHWAYS

PRESTRESSED PREFORMED CONCRETE I-BEAM TYPE 4 DIAPHRAGM DETAILS

STANDARD DRAWING NO. BSD-006

SUBMITTED _____ DIRECTOR DIVISION OF STRUCTURAL DESIGN — DATE 02-26-20

APPROVED _____ STATE HIGHWAY ENGINEER — DATE 02-26-20

DIAPHRAGM NOTES

CONNECTIONS: Ensure all bolted connections are ASTM A325, 7/8 inch diameter high strength bolts, nuts, and washers, mechanically zinc coated in accordance with AASHTO M298, for Class 50. Install all high strength bolted field connections using "direct tension indicators" (DTI's) in accordance with the Standard Specifications and ASTM F959. Ensure all DTI's are mechanically zinc coated. Show installation details of the DTI's on the shop plans. Place DTI's under the bolt head. ASTM A449 bolts may be used in lieu of A325 for the bolts carried through the girder webs only.

STRUCTURAL STEEL: Ensure plates, angles, and channels conform to ASTM A36 or A572 and galvanized after fabrication.

SHOP DRAWINGS: Show the location of all inserts and holes on the precast beam shop drawings. Submit shop drawings for the steel diaphragms to the Division of Structural Design for approval.

DIAPHRAGMS: Erect the diaphragms the same day that the precast beams are placed on the substructure. Include the cost of all materials and labor required to fabricate and erect the diaphragms in the bid for Precast Beams.

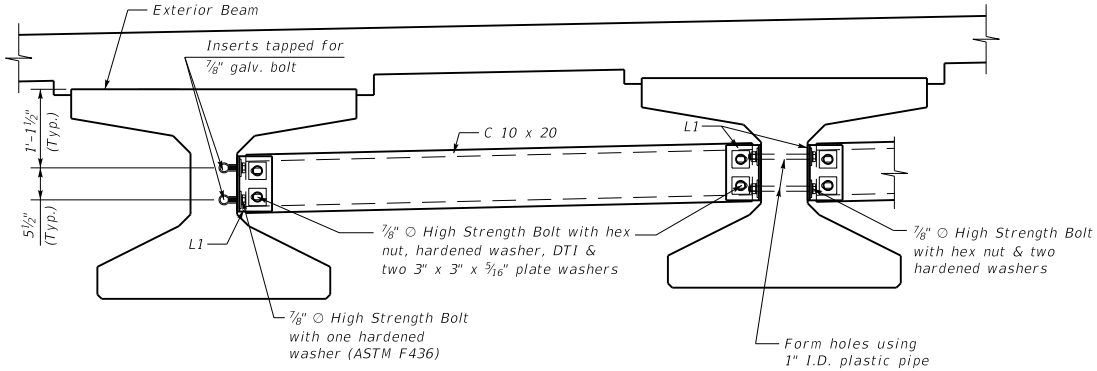

INTERMEDIATE DIAPHRAGM

~Typical for 0° Skew~

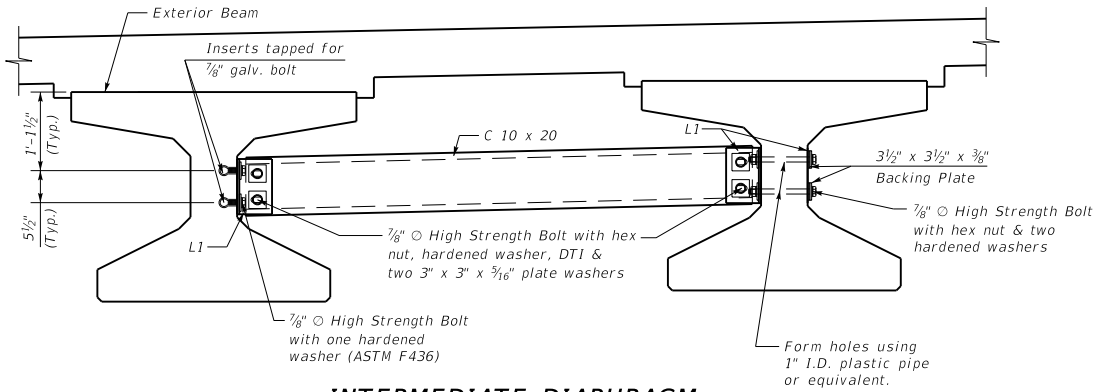

INTERMEDIATE DIAPHRAGM

~Typical for Skewed~

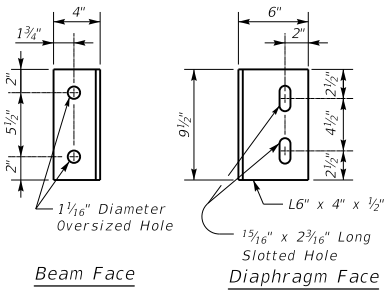

CLIP ANGLE - L1

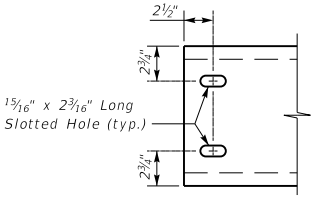

CHANNEL END

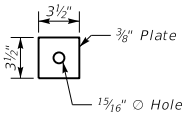

BACKING PLATE

Skewed Spans, Only

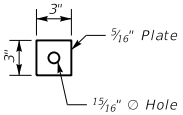

PLATE WASHER

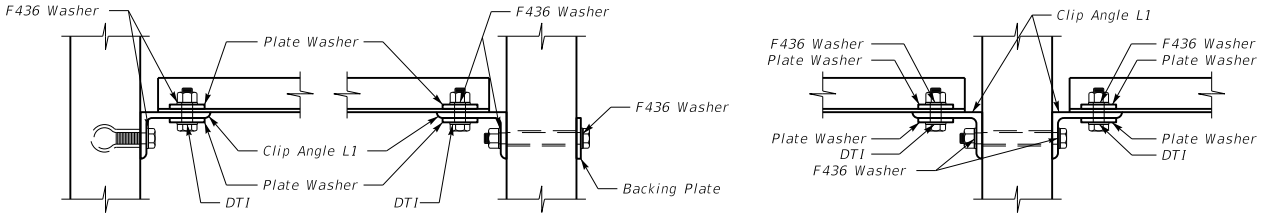

Exterior Beam | Interior Beam, Skewed | Interior Beam, Straight

CONNECTION DETAILS

KENTUCKY
DEPARTMENT OF HIGHWAYS

PPC I-BEAM HN36
DIAPHRAGM DETAILS

STANDARD DRAWING NO. BSD-007

SUBMITTED _____ DIRECTOR DIVISION OF STRUCTURAL DESIGN — DATE 02-26-20

APPROVED _____ STATE HIGHWAY ENGINEER — DATE 02-26-20

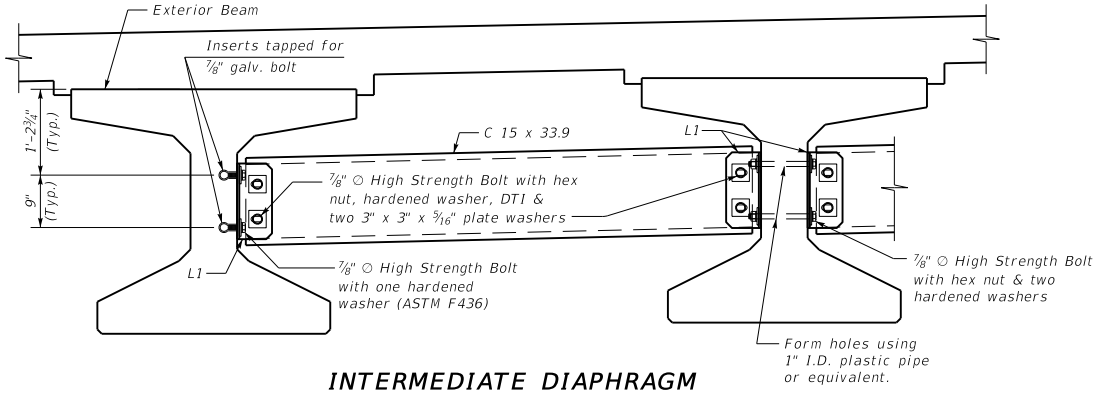

INTERMEDIATE DIAPHRAGM

~Typical for 0° Skew~

DIAPHRAGM NOTES

CONNECTIONS: Ensure all bolted connections are ASTM A325, 7/8 inch diameter high strength bolts, nuts, and washers, mechanically zinc coated in accordance with AASHTO M298, for Class 50. Install all high strength bolted field connections using "direct tension indicators" (DTI's) in accordance with the Standard Specifications and ASTM F959. Ensure all DTI's are mechanically zinc coated. Show installation details of the DTI's on the shop plans. Place DTI's under the bolt head. ASTM A449 bolts may be used in lieu of A325 for the bolts carried through the girder webs only.

STRUCTURAL STEEL: Ensure plates, angles, and channels conform to ASTM A36 or A572 and galvanized after fabrication.

SHOP DRAWINGS: Show the location of all inserts and holes on the precast beam shop drawings. Submit shop drawings for the steel diaphragms to the Division of Structural Design for approval.

DIAPHRAGMS: Erect the diaphragms the same day that the precast beams are placed on the substructure. Include the cost of all materials and labor required to fabricate and erect the diaphragms in the bid for Precast Beams.

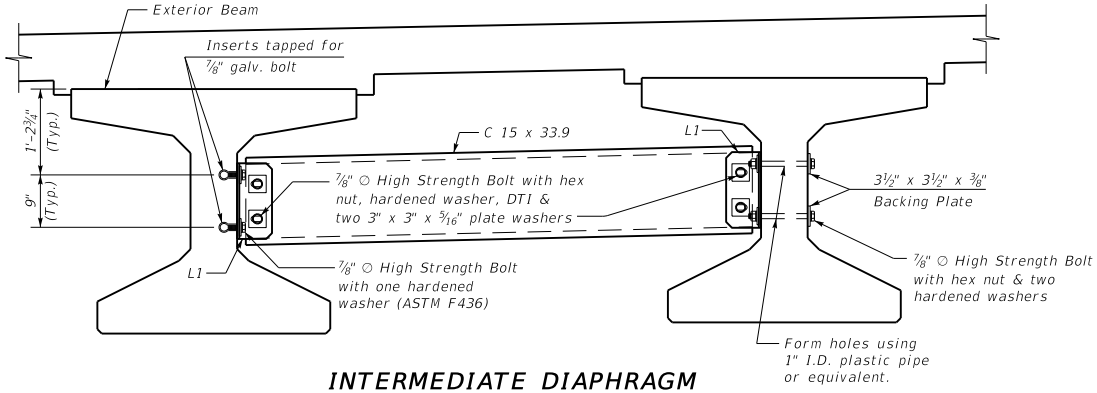

INTERMEDIATE DIAPHRAGM

~Typical for Skewed~

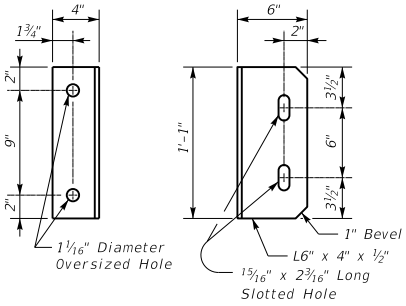

CLIP ANGLE - L1

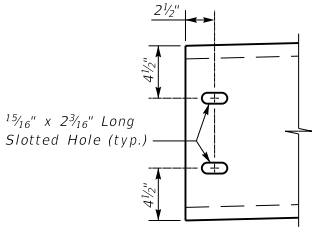

CHANNEL END

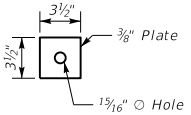

BACKING PLATE

Skewed Spans, Only

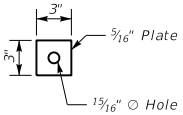

PLATE WASHER

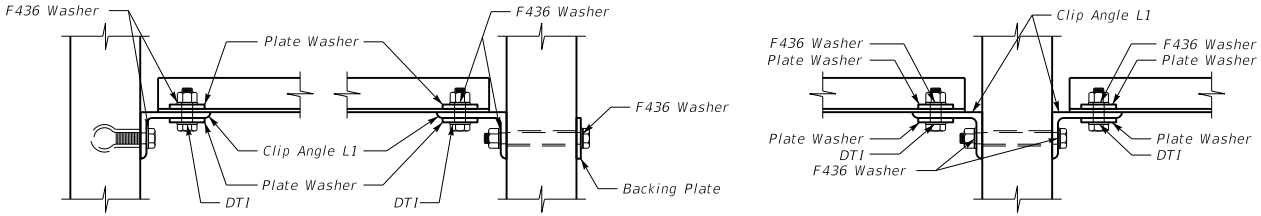

Exterior Beam | Interior Beam, Skewed | Interior Beam, Straight

CONNECTION DETAILS

KENTUCKY
DEPARTMENT OF HIGHWAYS

PPC I-BEAM HN42
DIAPHRAGM DETAILS

STANDARD DRAWING NO. BSD-008

SUBMITTED _____ DIRECTOR DIVISION OF STRUCTURAL DESIGN — DATE 02-26-20

APPROVED _____ STATE HIGHWAY ENGINEER — DATE 02-26-20

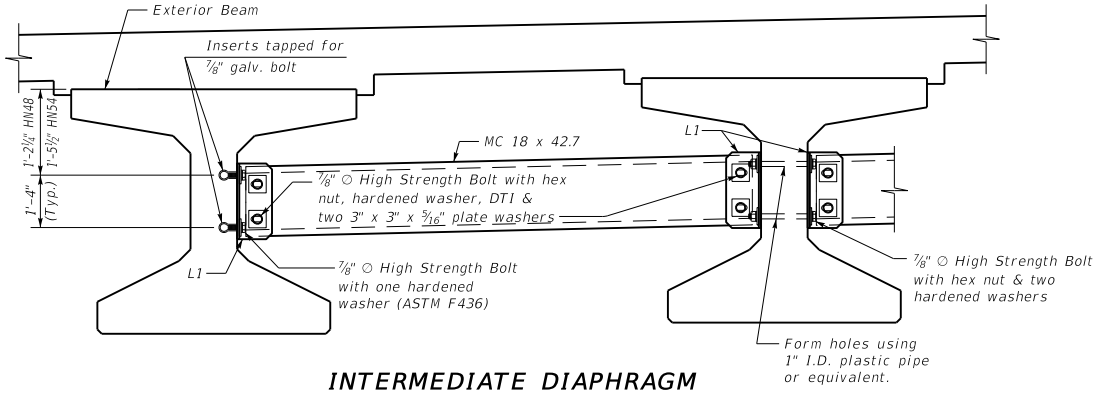

INTERMEDIATE DIAPHRAGM

~Typical for 0° Skew~

DIAPHRAGM NOTES

CONNECTIONS: Ensure all bolted connections are ASTM A325, 7/8 inch diameter high strength bolts, nuts, and washers, mechanically zinc coated in accordance with AASHTO M298, for Class 50. Install all high strength bolted field connections using "direct tension indicators" (DTI's) in accordance with the Standard Specifications and ASTM F959. Ensure all DTI's are mechanically zinc coated. Show installation details of the DTI's on the shop plans. Place DTI's under the bolt head. ASTM A449 bolts may be used in lieu of A325 for the bolts carried through the girder webs only.

STRUCTURAL STEEL: Ensure plates, angles, and channels conform to ASTM A36 or A572 and galvanized after fabrication.

SHOP DRAWINGS: Show the location of all inserts and holes on the precast beam shop drawings. Submit shop drawings for the steel diaphragms to the Division of Structural Design for approval.

DIAPHRAGMS: Erect the diaphragms the same day that the precast beams are placed on the substructure. Include the cost of all materials and labor required to fabricate and erect the diaphragms in the bid for Precast Beams.

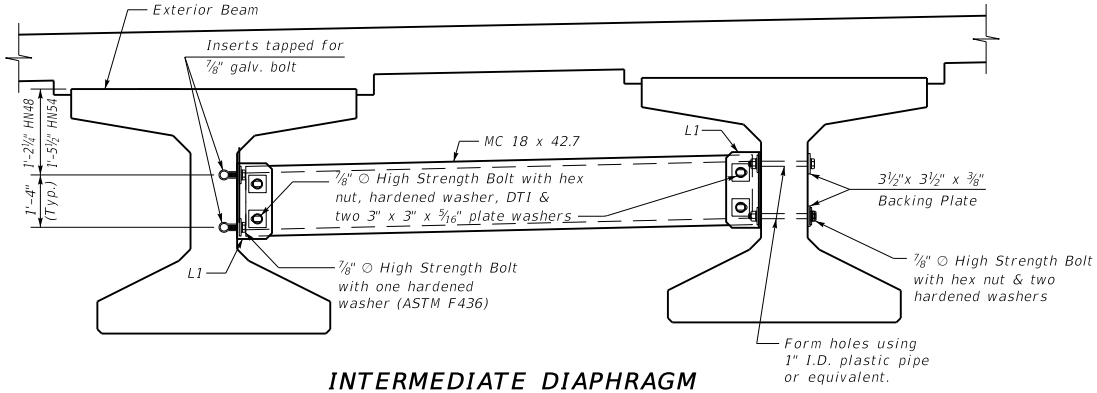

INTERMEDIATE DIAPHRAGM

~Typical for Skewed~

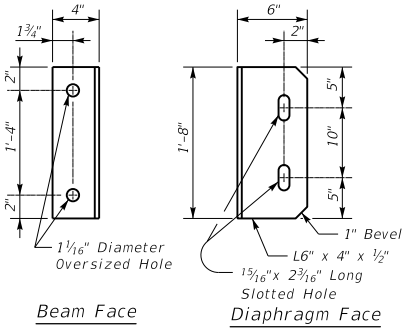

CLIP ANGLE - L1

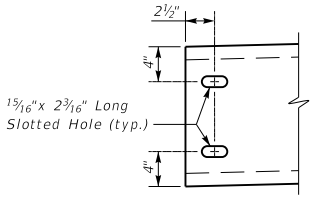

CHANNEL END

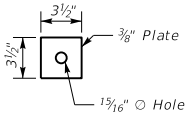

BACKING PLATE

Skewed Spans, Only

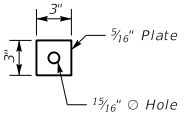

PLATE WASHER

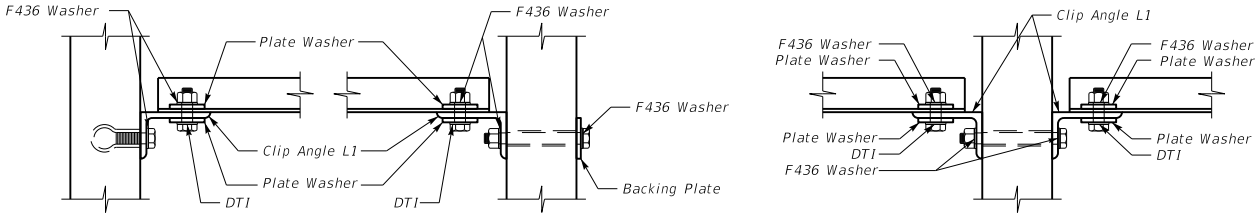

Exterior Beam | Interior Beam, Skewed | Interior Beam, Straight

CONNECTION DETAILS

KENTUCKY
DEPARTMENT OF HIGHWAYS

PPC I-BEAM
HN48 AND HN54
DIAPHRAGM DETAILS

STANDARD DRAWING NO. BSD-009

SUBMITTED _____ DIRECTOR DIVISION OF STRUCTURAL DESIGN — DATE 02-26-20

APPROVED _____ STATE HIGHWAY ENGINEER — DATE 02-26-20

CAP BILL OF REINFORCEMENT

SUPERSTRUCTURE HEIGHT SDH = Beam+Pad Height +(haunch+slab) [if applicable]		16'-0" BRIDGE WIDTH					24'-0" BRIDGE WIDTH					32'-0" BRIDGE WIDTH				
		MARK	TYPE	NO.	SIZE	LENGTH	MARK	TYPE	NO.	SIZE	LENGTH	MARK	TYPE	NO.	SIZE	LENGTH
H1	12" ≤SDH≤27"	A1e	14s	22	5	11- 0	A1e	14s	29	5	11- 0	A1e	14s	36	5	11- 0
		A2e	Str.	9	8	22- 9	A2e	Str.	9	8	30- 9	A2e	Str.	9	8	38- 9
		A3e	Str.	4	5	22- 9	A3e	Str.	4	5	30- 9	A3e	Str.	4	5	38- 9
H2	27" <SDH≤35"	A1e	14s	24	5	11- 0	A1e	14s	30	5	11- 0	A1e	14s	38	5	11- 0
		A2e	Str.	9	8	25- 5	A2e	Str.	9	8	33- 5	A2e	Str.	9	8	41- 5
		A3e	Str.	4	5	25- 5	A3e	Str.	4	5	33- 5	A3e	Str.	4	5	41- 5
H3	35" <SDH≤50"	A1e	14s	29	5	11- 0	A1e	14s	36	5	11- 0	A1e	14s	43	5	11- 0
		A2e	Str.	9	8	30- 5	A2e	Str.	9	8	38- 5	A2e	Str.	9	8	46- 5
		A3e	Str.	4	5	30- 5	A3e	Str.	4	5	38- 5	A3e	Str.	4	5	46- 5

WING BILL OF REINFORCEMENT

MARK	TYPE	NO.	SIZE	LENGTH
A4e	Str.	12	5	4- 0
A5e	Str.	8	5	3- 2
A6e	Str.	4	6	3- 2
A4e	Str.	20	5	4- 8
A5e	Str.	12	5	4- 6
A6e	Str.	4	6	4- 6
A4e	Str.	28	5	5-11
A5e	Str.	16	5	7- 0
A6e	Str.	4	6	7- 5

BRIDGE WIDTH	PILE LOAD		PILES				DIMENSIONS														QUANTITIES	
	SIZE	TONS	NO.	PE	PS	PL	A	B	C	D	E	F	G	H	J	L	WL	WU	WV	WX	CONCRETE (C.Y.)	STEEL (LBS.)
16	H1	92	3	3'-6½"	8'-0"	16'-0"	3½"	4	9"	2'-3"	7	6'-0"	3	2'-0"	2	23'-1"	3'-6"	3'-6"	0	0	9.8	991
	H2	87	4	2'-4½"	7'-0"	21'-0"	2½"	3	7"	1'-2"	6	5'-0"	5	4'-0"	3	25'-9"	4'-10"	4'-10"	0	0	12.2	1175
	H3	107	4	3'-4½"	8'-0"	24'-0"	4½"	4	8"	2'-0"	7	6'-0"	7	6'-0"	4	30'-9"	7'-4"	3'-3"	4'-1"	2'-1"	16.8	1527
24	H1	97	4	3'-6½"	8'-0"	24'-0"	3½"	4	9"	2'-3"	7	6'-0"	3	2'-0"	2	31'-1"	3'-6"	3'-6"	0	0	12.4	1297
	H2	99	5	2'-10½"	7'-0"	28'-0"	2½"	3	10"	1'-8"	6	5'-0"	5	4'-0"	3	33'-9"	4'-10"	4'-10"	0	0	14.8	1469
	H3	122	5	3'-4½"	8'-0"	32'-0"	4½"	4	8"	2'-0"	7	6'-0"	7	6'-0"	4	38'-9"	7'-4"	3'-3"	4'-1"	2'-1"	19.4	1833
32	H1	103	5	3'-6½"	8'-0"	32'-0"	3½"	4	9"	2'-3"	7	6'-0"	3	2'-0"	2	39'-1"	3'-6"	3'-6"	0	0	15.1	1604
	H2	109	6	3'-4½"	7'-0"	35'-0"	4½"	4	8"	2'-0"	6	5'-0"	5	4'-0"	3	41'-9"	4'-10"	4'-10"	0	0	17.5	1787
	H3	133	6	3'-4½"	8'-0"	40'-0"	4½"	4	8"	2'-0"	7	6'-0"	7	6'-0"	4	46'-9"	7'-4"	3'-3"	4'-1"	2'-1"	22.1	2139

NOTES:

1) Conform to KYTC, Standard Specifications, Current Edition.
2) Concrete to be Class "A", 3500 psi.
3) Rebar to be epoxy coated A615, Grade 60.
4) Maintain 2" clear cover to reinforcement unless otherwise noted.
5) End Bents are designed for the maximum span of the following steel and concrete beams as shown in the current standards:
   H1 - B12, CB12, B17, CB17, B21 or rolled steel beams up to 16" nominal depth.
   H2 - CB21, B27, CB27, B33 or rolled steel beams up to 24" nominal depth.
   H3 - CB33, B42, CB42 or rolled steel beams up to 36" nominal depth.
6) Piles may be HP12x53 or 16" Steel Pipes with ½" wall thickness.
7) Piles driven to rock must be driven to Refusal. Friction Piles must be driven to (Pile Load/0.4) using the Gates Method.
8) Pile load given is Factored Strength Load.
9) Piles must be driven 10' into existing ground or to refusal on bedrock. Piles at wet crossings must be driven to 10' below stream bed or to refusal on bedrock. A minimum pile length of 10' is required in all circumstances.
10) Contractor shall provide a hammer capable of driving the piling to refusal or capacity without encountering excessive blow counts or damaging the pile. Contractor shall be responsible for all damaged piling.

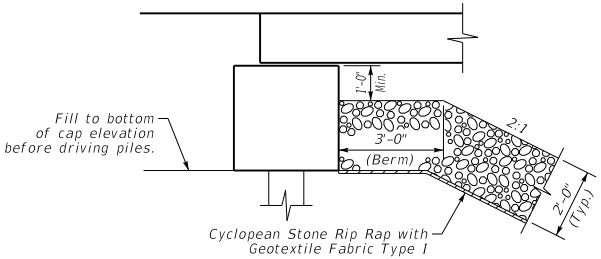

SECTION THRU END BENT

(Showing berm and fill slope)

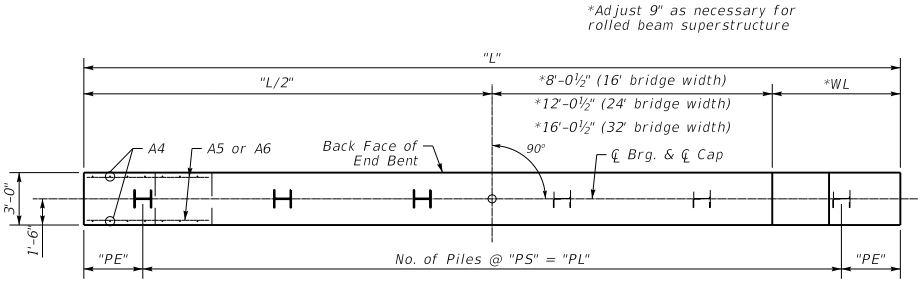

PLAN

NOTE:
Slope cap as necessary with side by side box beams and step cap seats with rolled steel beams to maintain proper roadway slope.

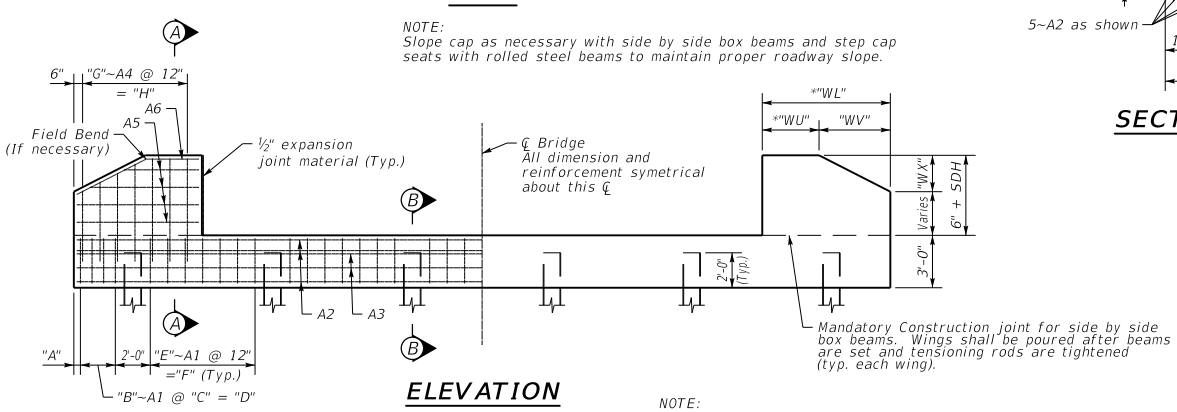

ELEVATION

NOTE:
Trim A4-A6 bars as necessary.

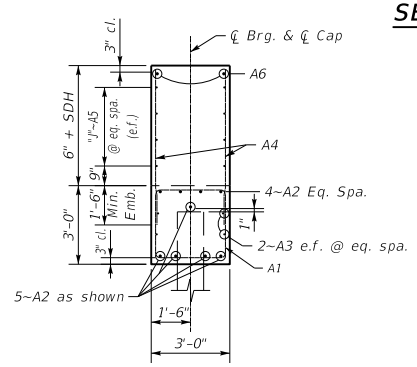

SECTION A-A

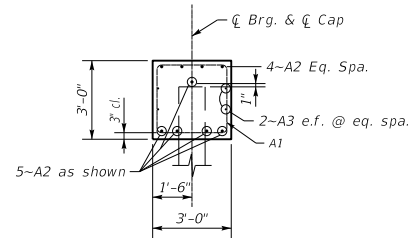

SECTION B-B

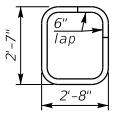

A1 Bar

~Size #5~

KENTUCKY
DEPARTMENT OF HIGHWAYS

PILE END BENT
0° SKEW

STANDARD DRAWING NO. BSE-001

SUBMITTED _____ DIRECTOR DIVISION OF STRUCTURAL DESIGN — DATE 02-26-20

APPROVED _____ STATE HIGHWAY ENGINEER — DATE 02-26-20

CAP BILL OF REINFORCEMENT

SUPERSTRUCTURE HEIGHT SDH=Beam Height +pad height +(haunch+slab) [if applicable]	16'-0" BRIDGE WIDTH					24'-0" BRIDGE WIDTH					32'-0" BRIDGE WIDTH				
	MARK	TYPE	NO.	SIZE	LENGTH	MARK	TYPE	NO.	SIZE	LENGTH	MARK	TYPE	NO.	SIZE	LENGTH
H1 12" ≤SDH≤27"	A1e	14s	22	5	11-0	A1e	14s	29	5	11-0	A1e	14s	36	5	11-0
	A2e	Str.	9	8	23-7	A2e	Str.	9	8	31-11	A2e	Str.	9	8	40-2
	A3e	Str.	4	5	23-7	A3e	Str.	4	5	31-11	A3e	Str.	4	5	40-2
H2 27" <SDH≤35"	A1e	14s	24	5	11-0	A1e	14s	34	5	11-0	A1e	14s	41	5	11-0
	A2e	Str.	9	8	26-4	A2e	Str.	9	8	34-8	A2e	Str.	9	8	42-11
	A3e	Str.	4	5	26-4	A3e	Str.	4	5	34-8	A3e	Str.	4	5	42-11
H3 35" <SDH≤50"	A1e	14s	29	5	11-0	A1e	14s	36	5	11-0	A1e	14s	44	5	11-0
	A2e	Str.	9	8	31-7	A2e	Str.	9	8	39-11	A2e	Str.	9	8	48-2
	A3e	Str.	4	5	31-7	A3e	Str.	4	5	39-11	A3e	Str.	4	5	48-2

WING BILL OF REINFORCEMENT

MARK	TYPE	NO.	SIZE	LENGTH	MARK	TYPE	NO.	SIZE	LENGTH	MARK	TYPE	NO.	SIZE	LENGTH
A4e	Str.	14	5	4-0	A7e	Str.	2	5	3-4	A10e	Str.	1	6	2-6
A5e	Str.	2	5	3-2	A8e	Str.	2	5	4-1	A11e	Str.	1	6	3-4
A6e	Str.	2	5	2-6	A9e	Str.	1	6	3-2	A12e	Str.	1	6	4-1
A4e	Str.	20	5	4-8	A7e	Str.	3	5	4-8	A10e	Str.	1	6	3-11
A5e	Str.	3	5	4-7	A8e	Str.	3	5	5-4	A11e	Str.	1	6	4-8
A6e	Str.	3	5	3-11	A9e	Str.	1	6	4-7	A12e	Str.	1	6	5-4
A4e	Str.	30	5	5-11	A7e	Str.	4	5	7-4	A10e	Str.	1	6	7-0
A5e	Str.	4	5	7-2	A8e	Str.	4	5	8-0	A11e	Str.	1	6	7-10
A6e	Str.	4	5	6-6	A9e	Str.	1	6	7-8	A12e	Str.	1	6	8-6

BRIDGE WIDTH	PILE LOAD		PILES				DIMENSIONS										WING A												WING B												QUANTITIES	
							Geometry			Reinforcement							Back Face						Front Face						Back Face						Front Face							
	SIZE	TONS	NO.	PE	PS	PL	L	L1	L2	A	B	C	D	E	F	G	H	WALB	WAUB	WV	WX	J	K	WALF	WAUF	WV	WX	J	K	WBLB	WBUB	WV	WX	J	K	WBLF	WBUF	WV	WX	J	K	CONC. (C.Y.)	STEEL (LBS.)
16	H1	95	3	3'-11⅞"	8'-0"	16'-0"	23'-11¾"	11'-6⅞"	12'-4⅞"	2⅞"	4	1"	2'-9"	7	12"	6'-0"	2	3'-7⅞"	0	0	0	3	2'-0"	2'-10⅛"	0	0	0	3	2'-0"	3'-8⅛"	0	0	0	4	3'-0"	4'-5⅞"	0	0	0	4	3'-0"	10.2	1024
	H2	87	4	2'-10⅜"	7'-0"	21'-0"	26'-8¾"	12'-11⅞"	13'-8⅞"	4⅜"	3	9"	1'-6"	6	12"	5'-0"	3	5'-0⅞"	0	0	0	5	4'-0"	4'-3⅛"	0	0	0	4	3'-0"	5'-0⅛"	0	0	0	5	4'-0"	5'-9⅞"	0	0	0	6	5'-0"	12.6	1203
	H3	108	4	3'-11⅞"	8'-0"	24'-0"	31'-11¾"	15'-6⅞"	16'-4⅞"	2⅞"	4	1"	2'-9"	7	12"	6'-0"	4	7'-7⅞"	3'-4⅞"	4'-3"	2'-1"	7	6'-0"	6'-10⅛"	2'-7⅛"	4'-3"	2'-1"	7	6'-0"	7'-8⅛"	3'-5⅛"	4'-3"	2'-1"	8	7'-0"	8'-5⅞"	4'-2⅞"	4'-3"	2'-1"	8	7'-0"	17.5	1578
24	H1	99	4	4'-1⅝"	8'-0"	24'-0"	32'-3¼"	15'-8⅜"	16'-6⅝"	4⅜"	4	1"	2'-9"	7	12"	6'-0"	2	3'-7⅞"	0	0	0	3	2'-0"	2'-10⅛"	0	0	0	3	2'-0"	3'-8⅛"	0	0	0	4	3'-0"	4'-5⅞"	0	0	0	4	3'-0"	12.9	1340
	H2	98	5	2'-6⅛"	7'-6"	30'-0"	35'-0¼"	17'-1⅜"	17'-10⅝"	4⅛"	3	7"	1'-2"	7	11"	5'-6"	3	5'-0⅞"	0	0	0	5	4'-0"	4'-3⅛"	0	0	0	4	3'-0"	5'-0⅛"	0	0	0	5	4'-0"	5'-9⅞"	0	0	0	6	5'-0"	15.4	1553
	H3	123	5	4'-1⅝"	8'-0"	32'-0"	40'-3¼"	19'-8⅜"	20'-6⅝"	4⅜"	4	1"	2'-9"	7	12"	6'-0"	4	7'-7⅞"	3'-4⅞"	4'-3"	2'-1"	7	6'-0"	6'-10⅛"	2'-7⅛"	4'-3"	2'-1"	7	6'-0"	7'-8⅛"	3'-5⅛"	4'-3"	2'-1"	8	7'-0"	8'-5⅞"	4'-2⅞"	4'-3"	2'-1"	8	7'-0"	20.2	1887
32	H1	87	6	2'-9¼"	7'-0"	35'-0"	40'-6½"	19'-10¼"	20'-8¼"	3¼"	3	9"	1'-6"	6	12"	5'-0"	2	3'-7⅞"	0	0	0	3	2'-0"	2'-10⅛"	0	0	0	3	2'-0"	3'-8⅛"	0	0	0	4	3'-0"	4'-5⅞"	0	0	0	4	3'-0"	15.7	1653
	H2	108	6	2'-10¾"	7'-6"	37'-6"	43'-3½"	21'-3¼"	22'-0¼"	2¾"	3	10"	1'-8"	7	11"	5'-6"	3	5'-0⅞"	0	0	0	5	4'-0"	4'-3⅛"	0	0	0	4	3'-0"	5'-0⅛"	0	0	0	5	4'-0"	5'-9⅞"	0	0	0	6	5'-0"	18.2	1866
	H3	115	7	3'-3¼"	7'-0"	42'-0"	48'-6½"	23'-10¼"	24'-8¼"	3¼"	4	8"	2'-0"	6	12"	5'-0"	4	7'-7⅞"	3'-4⅞"	4'-3"	2'-1"	7	6'-0"	6'-10⅛"	2'-7⅛"	4'-3"	2'-1"	7	6'-0"	7'-8⅛"	3'-5⅛"	4'-3"	2'-1"	8	7'-0"	8'-5⅞"	4'-2⅞"	4'-3"	2'-1"	8	7'-0"	23.0	2219

NOTES:

1) Conform to KYTC, Standard Specifications, Current Edition.
2) Concrete to be Class "A", 3500 psi.
3) Rebar to be epoxy coated A615, Grade 60.
4) Maintain 2" clear cover to reinforcement unless otherwise noted.
5) End Bents are designed for the maximum span of the following steel and concrete beams as shown in the current standards:
   H1 - B12, CB12, B17, CB17, B21 or rolled steel beams up to 16" nominal depth.
   H2 - CB21, B27, CB27, B33 or rolled steel beams up to 24" nominal depth.
   H3 - CB33, B42, CB42 or rolled steel beams up to 36" nominal depth.
6) Piles may be HP12x53 or 16" Steel Pipes with ½" wall thickness.
7) Piles driven to rock must be driven to Refusal. Friction Piles must be driven to (Pile Load/0.4) using the Gates Method.
8) Pile load given is Factored Strength Load.
9) Piles must be driven 10' into existing ground or to refusal on bedrock. Piles at wet crossings must be driven to 10' below stream bed or to refusal on bedrock. A minimum pile length of 10' is required in all circumstances.
10) Contractor shall provide a hammer capable of driving the piling to refusal or capacity without encountering excessive blow counts or damaging the pile. Contractor shall be responsible for all damaged piling.

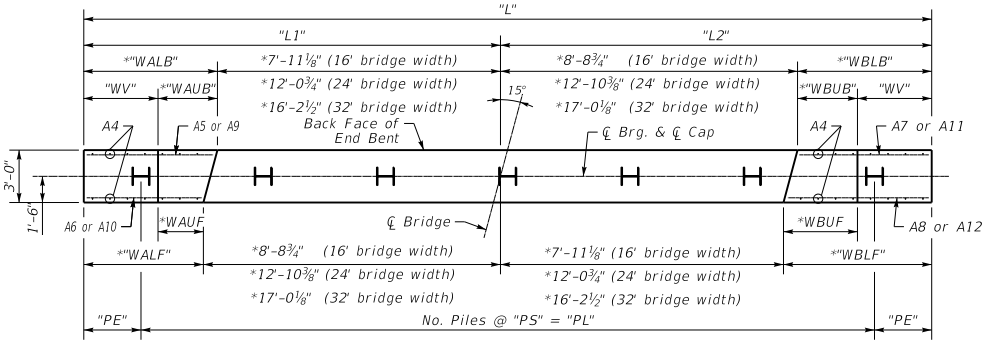

PLAN

(Left skew shown, right skew opposite hand)

*Adjust 9⅜" as necessary for rolled beam superstructure

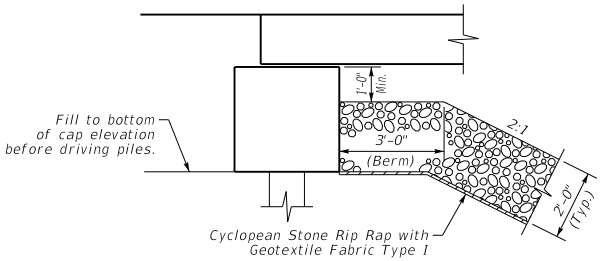

SECTION THRU END BENT

(Showing berm and fill slope)

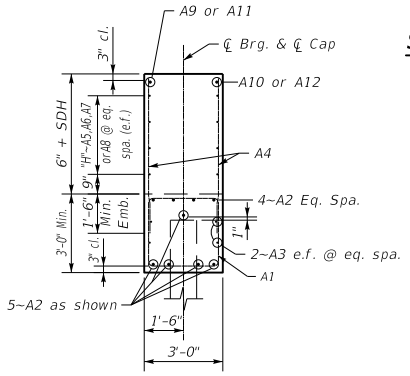

SECTION A-A

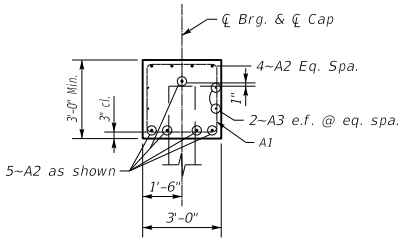

SECTION B-B

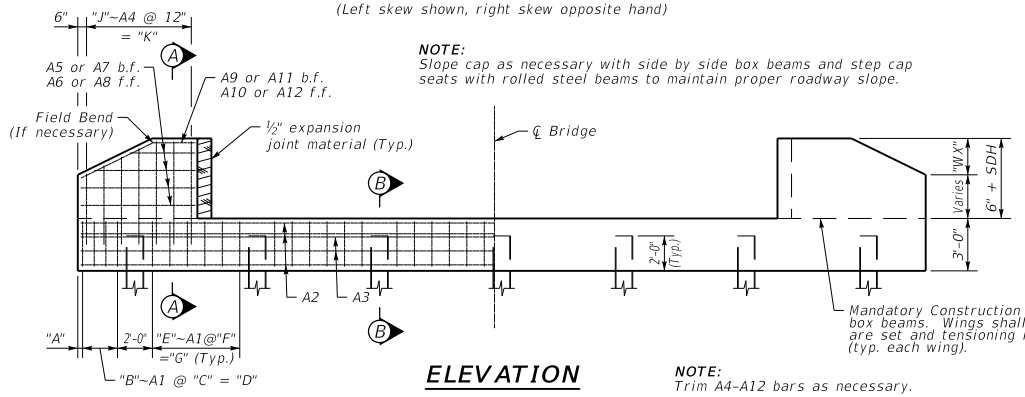

NOTE:
Slope cap as necessary with side by side box beams and step cap seats with rolled steel beams to maintain proper roadway slope.

ELEVATION

Mandatory Construction joint for side by side box beams. Wings shall be poured after beams are set and tensioning rods are tightened (typ. each wing).

NOTE:
Trim A4-A12 bars as necessary.

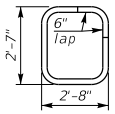

A1 Bar

~Size #5~

KENTUCKY
DEPARTMENT OF HIGHWAYS

PILE END BENT
15° SKEW

STANDARD DRAWING NO. BSE-002

SUBMITTED _____ DIRECTOR DIVISION OF STRUCTURAL DESIGN — DATE 02-26-20

APPROVED _____ STATE HIGHWAY ENGINEER — DATE 02-26-20

SUPERSTRUCTURE HEIGHT SDH=Beam Height +pad height +(haunch+slab) [if applicable]		CAP BILL OF REINFORCEMENT 16'-0" BRIDGE WIDTH					24'-0" BRIDGE WIDTH					32'-0" BRIDGE WIDTH				
		MARK	TYPE	NO.	SIZE	LENGTH	MARK	TYPE	NO.	SIZE	LENGTH	MARK	TYPE	NO.	SIZE	LENGTH
H1	12" ≤SDH≤27"	A1e	14s	24	5	11'-0"	A1e	14s	34	5	11'-0"	A1e	14s	41	5	11'-0"
		A2e	Str.	9	8	26'-3"	A2e	Str.	9	8	35'-6"	A2e	Str.	9	8	44'-9"
		A3e	Str.	4	5	26'-3"	A3e	Str.	4	5	35'-6"	A3e	Str.	4	5	44'-9"
H2	27" <SDH≤35"	A1e	14s	27	5	11'-0"	A1e	14s	36	5	11'-0"	A1e	14s	43	5	11'-0"
		A2e	Str.	9	8	29'-5"	A2e	Str.	9	8	38'-8"	A2e	Str.	9	8	47'-11"
		A3e	Str.	4	5	29'-5"	A3e	Str.	4	5	38'-8"	A3e	Str.	4	5	47'-11"
H3	35" <SDH≤50"	A1e	14s	34	5	11'-0"	A1e	14s	41	5	11'-0"	A1e	14s	48	5	11'-0"
		A2e	Str.	9	8	35'-3"	A2e	Str.	9	8	44'-6"	A2e	Str.	9	8	53'-9"
		A3e	Str.	4	5	35'-3"	A3e	Str.	4	5	44'-6"	A3e	Str.	4	5	53'-9"

WING BILL OF REINFORCEMENT															
MARK	TYPE	NO.	SIZE	LENGTH	MARK	TYPE	NO.	SIZE	LENGTH	MARK	TYPE	NO.	SIZE	LENGTH
A4e	Str.	15	5	4'-0"	A7e	Str.	2	5	3'-9"	A10e	Str.	1	6	2'-0"
A5e	Str.	2	5	3'-6"	A8e	Str.	2	5	5'-3"	A11e	Str.	1	6	3'-9"
A6e	Str.	2	5	2'-0"	A9e	Str.	1	6	3'-6"	A12e	Str.	1	6	5'-3"
A4e	Str.	22	5	4'-8"	A7e	Str.	3	5	5'-4"	A10e	Str.	1	6	3'-7"
A5e	Str.	3	5	5'-1"	A8e	Str.	3	5	6'-10"	A11e	Str.	1	6	5'-4"
A6e	Str.	3	5	3'-7"	A9e	Str.	1	6	5'-1"	A12e	Str.	1	6	6'-10"
A4e	Str.	33	5	5'-11"	A7e	Str.	4	5	8'-3"	A10e	Str.	1	6	6'-11"
A5e	Str.	4	5	8'-0"	A8e	Str.	4	5	9'-9"	A11e	Str.	1	6	8'-9"
A6e	Str.	4	5	6'-6"	A9e	Str.	1	6	8'-5"	A12e	Str.	1	6	10'-2"

BRIDGE WIDTH	PILE LOAD		PILES				DIMENSIONS										WING A												WING B												QUANTITIES	
							Geometry			Reinforcement							Back Face						Front Face						Back Face						Front Face							
	SIZE	TONS	NO.	PE	PS	PL	L	L1	L2	A	B	C	D	E	F	G	H	WALB	WAUB	WV	WX	J	K	WALF	WAUF	WV	WX	J	K	WBLB	WBUB	WV	WX	J	K	WBLF	WBUF	WV	WX	J	K	CONC. (C.Y.)	STEEL (LBS.)
16	H1	73	4	2'-9⅞"	7'-0"	21'-0"	26'-7⅞"	12'-5½"	14'-2⅜"	3⅞"	3	9"	1'-6"	6	12"	5'-0"	2	4'-0⅜"	0	0	0	4	3'-0"	2'-3⅝"	0	0	0	2	1'-0"	4'-0⅝"	0	0	0	4	3'-0"	5'-9⅜"	0	0	0	5	4'-0"	11.3	1132
	H2	87	4	2'-10⅞"	8'-0"	24'-0"	29'-9⅞"	14'-0½"	15'-9⅜"	2⅞"	3	10"	1'-8"	7	12"	6'-0"	3	5'-7⅜"	0	0	0	5	4'-0"	3'-10⅝"	0	0	0	4	3'-0"	5'-7⅝"	0	0	0	6	5'-0"	7'-4⅜"	0	0	0	7	6'-0"	14.1	1345
	H3	88	5	2'-9⅞"	7'-6"	30'-0"	35'-7⅞"	16'-11½"	18'-8⅜"	3⅞"	3	9"	1'-6"	7	11"	5'-6"	4	8'-6⅜"	3'-9⅜"	4'-9"	2'-1"	8	7'-0"	6'-9⅝"	2'-0⅝"	4'-9"	2'-1"	7	6'-0"	8'-6⅝"	3'-9⅝"	4'-9"	2'-1"	8	7'-0"	10'-3⅜"	5'-6⅜"	4'-9"	2'-1"	10	9'-0"	19.5	1777
24	H1	80	5	2'-11⅜"	7'-6"	30'-0"	35'-10¾"	17'-0⅞"	18'-9⅞"	3⅜"	3	10"	1'-8"	7	11"	5'-6"	2	4'-0⅜"	0	0	0	4	3'-0"	2'-3⅝"	0	0	0	2	1'-0"	4'-0⅝"	0	0	0	4	3'-0"	5'-9⅜"	0	0	0	5	4'-0"	14.4	1508
	H2	99	5	3'-6⅜"	8'-0"	32'-0"	39'-0¾"	18'-7⅞"	20'-4⅛"	3⅜"	4	9"	2'-3"	7	12"	6'-0"	3	5'-7⅜"	0	0	0	5	4'-0"	3'-10⅝"	0	0	0	4	3'-0"	5'-7⅝"	0	0	0	6	5'-0"	7'-4⅜"	0	0	0	7	6'-0"	17.2	1709
	H3	103	6	2'-5⅜"	8'-0"	40'-0"	44'-10¾"	21'-6⅞"	23'-3⅞"	3⅜"	3	7"	1'-2"	7	12"	6'-0"	4	8'-6⅜"	3'-9⅜"	4'-9"	2'-1"	7	6'-0"	6'-9⅝"	2'-0⅝"	4'-9"	2'-1"	7	6'-0"	8'-6⅝"	3'-9⅝"	4'-9"	2'-1"	8	7'-0"	10'-3⅜"	5'-6⅜"	4'-9"	2'-1"	10	9'-0"	22.6	2119
32	H1	88	6	2'-6¾"	8'-0"	40'-0"	45'-1½"	21'-8¼"	23'-5¼"	2¾"	3	8"	1'-4"	7	12"	6'-0"	2	4'-0⅜"	0	0	0	4	3'-0"	2'-3⅝"	0	0	0	2	1'-0"	4'-0⅝"	0	0	0	4	3'-0"	5'-9⅜"	0	0	0	5	4'-0"	17.4	1850
	H2	109	6	4'-1¾"	8'-0"	40'-0"	48'-3½"	23'-3¼"	25'-0¼"	4¾"	4	11"	2'-9"	7	12"	6'-0"	3	5'-7⅜"	0	0	0	5	4'-0"	3'-10⅝"	0	0	0	4	3'-0"	5'-7⅝"	0	0	0	6	5'-0"	7'-4⅜"	0	0	0	7	6'-0"	20.3	2051
	H3	116	7	3'-3¾"	8'-0"	48'-0"	54'-1½"	26'-2¼"	27'-11¼"	2¾"	3	11"	1'-10"	7	12"	6'-0"	4	8'-6⅜"	3'-9⅜"	4'-9"	2'-1"	8	7'-0"	6'-9⅝"	2'-0⅝"	4'-9"	2'-1"	7	6'-0"	8'-6⅝"	3'-9⅝"	4'-9"	2'-1"	8	7'-0"	10'-3⅜"	5'-6⅜"	4'-9"	2'-1"	10	9'-0"	25.6	2460

NOTES:

1) Conform to KYTC, Standard Specifications, Current Edition.
2) Concrete to be Class "A", 3500 psi.
3) Rebar to be epoxy coated A615, Grade 60.
4) Maintain 2" clear cover to reinforcement unless otherwise noted.
5) End Bents are designed for the maximum span of the following steel and concrete beams as shown in the current standards:
   H1 - B12, CB12, B17, CB17, B21 or rolled steel beams up to 16" nominal depth.
   H2 - CB21, B27, CB27, B33 or rolled steel beams up to 24" nominal depth.
   H3 - CB33, B42, CB42 or rolled steel beams up to 36" nominal depth.
6) Piles may be HP12x53 or 16" Steel Pipes with ½" wall thickness.
7) Piles driven to rock must be driven to Refusal. Friction Piles must be driven to (Pile Load/0.4) using the Gates Method.
8) Pile load given is Factored Strength Load.
9) Piles must be driven 10' into existing ground or to refusal on bedrock. Piles at wet crossings must be driven to 10' below stream bed or to refusal on bedrock. A minimum pile length of 10' is required in all circumstances.
10) Contractor shall provide a hammer capable of driving the piling to refusal or capacity without encountering excessive blow counts or damaging the pile. Contractor shall be responsible for all damaged piling.

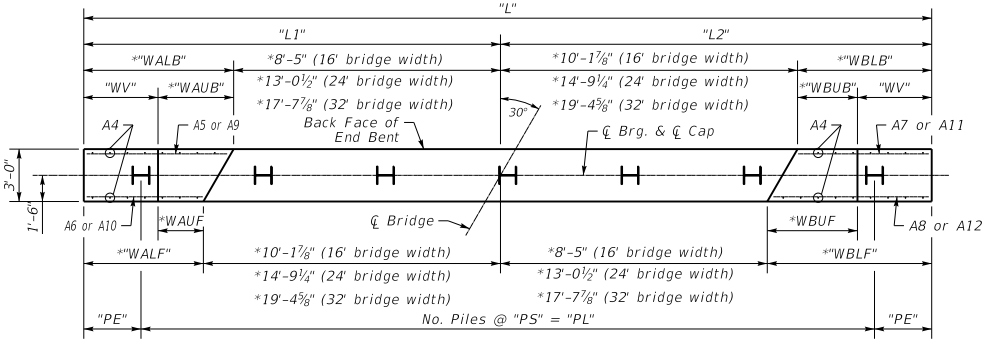

PLAN

(Left skew shown, right skew opposite hand)

*Adjust 10⅜" as necessary for rolled beam superstructure

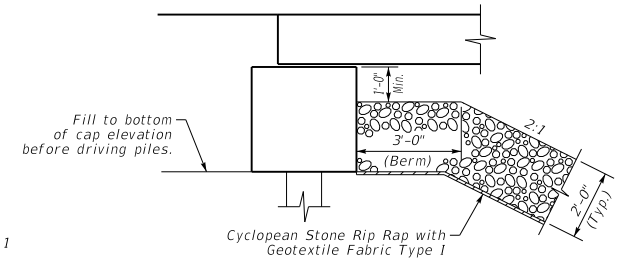

SECTION THRU END BENT

(Showing berm and fill slope)

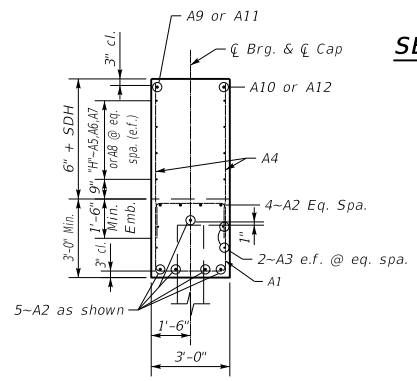

SECTION A-A

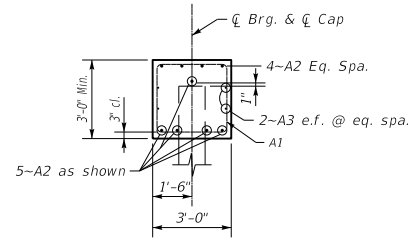

SECTION B-B

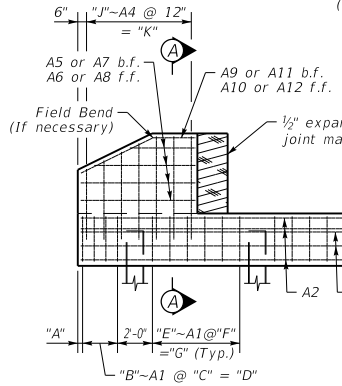

NOTE:
Slope cap as necessary with side by side box beams and step cap seats with rolled steel beams to maintain proper roadway slope.

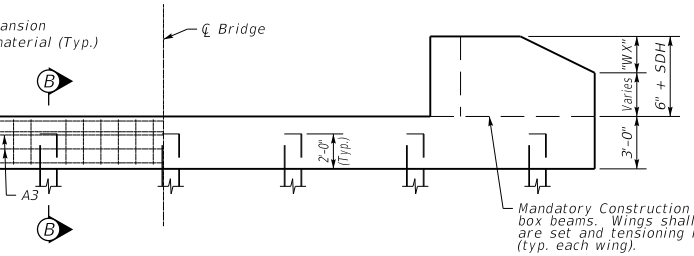

ELEVATION

NOTE:
Trim A4-A12 bars as necessary.

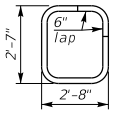

A1 Bar

~Size #5~

KENTUCKY
DEPARTMENT OF HIGHWAYS

PILE END BENT
30° SKEW

STANDARD DRAWING NO. BSE-003

SUBMITTED _____ DIRECTOR DIVISION OF STRUCTURAL DESIGN — DATE 02-26-20

APPROVED _____ STATE HIGHWAY ENGINEER — DATE 02-26-20

CAP BILL OF REINFORCEMENT

SUPERSTRUCTURE HEIGHT SDH=Beam Height +pad height +(haunch+slab) [if applicable]		16'-0" BRIDGE WIDTH					24'-0" BRIDGE WIDTH					32'-0" BRIDGE WIDTH				
		MARK	TYPE	NO.	SIZE	LENGTH	MARK	TYPE	NO.	SIZE	LENGTH	MARK	TYPE	NO.	SIZE	LENGTH
H1	12" ≤SDH≤27"	A1e	14s	30	5	11- 0	A1e	14s	43	5	11- 0	A1e	14s	50	5	11- 0
		A2e	Str.	9	8	32- 5	A2e	Str.	9	8	43- 8	A2e	Str.	9	8	55- 0
		A3e	Str.	4	5	32- 5	A3e	Str.	4	5	43- 8	A3e	Str.	4	5	55- 0
H2	27" <SDH≤35"	A1e	14s	34	5	11- 0	A1e	14s	43	5	11- 0	A1e	14s	57	5	11- 0
		A2e	Str.	9	8	36- 1	A2e	Str.	9	8	47- 4	A2e	Str.	9	8	58- 8
		A3e	Str.	4	5	36- 1	A3e	Str.	4	5	47- 4	A3e	Str.	4	5	58- 8
H3	35" <SDH≤50"	A1e	14s	41	5	11- 0	A1e	14s	50	5	11- 0	A1e	14s	62	5	11- 0
		A2e	Str.	9	8	43- 3	A2e	Str.	9	8	54- 6	A2e	Str.	18	8	35- 8
		A3e	Str.	4	5	43- 3	A3e	Str.	4	5	54- 6	A3e	Str.	8	5	34- 3

WING BILL OF REINFORCEMENT

MARK	TYPE	NO.	SIZE	LENGTH	MARK	TYPE	NO.	SIZE	LENGTH	MARK	TYPE	NO.	SIZE	LENGTH
A4e	Str.	20	5	4- 0	A7e	Str.	2	5	4-10	A10e	Str.	1	6	1-10
A5e	Str.	2	5	4- 4	A8e	Str.	2	5	7- 4	A11e	Str.	1	6	4-10
A6e	Str.	2	5	1-10	A9e	Str.	1	6	4- 4	A12e	Str.	1	6	7- 4
A4e	Str.	26	5	4- 8	A7e	Str.	3	5	6- 8	A10e	Str.	1	6	3- 8
A5e	Str.	3	5	6- 2	A8e	Str.	3	5	9- 2	A11e	Str.	1	6	6- 8
A6e	Str.	3	5	3- 8	A9e	Str.	1	6	6- 2	A12e	Str.	1	6	9- 2
A4e	Str.	40	5	5-11	A7e	Str.	4	5	10- 2	A10e	Str.	1	6	7- 5
A5e	Str.	4	5	9- 9	A8e	Str.	4	5	12- 9	A11e	Str.	1	6	10- 6
A6e	Str.	4	5	7- 2	A9e	Str.	1	6	10- 0	A12e	Str.	1	6	13- 0

BRIDGE WIDTH	PILE LOAD		PILES				DIMENSIONS										WING A												WING B												QUANTITIES	
							Geometry			Reinforcement							Back Face							Front Face						Back Face							Front Face							
	SIZE	TONS	NO.	PE	PS	PL	L	L1	L2	A	B	C	D	E	F	G	H	WALB	WAUB	WV	WX	J	K	WALF	WAUF	WV	WX	J	K	WBLB	WBUB	WV	WX	J	K	WBLF	WBUF	WV	WX	J	K	CONC. (C.Y.)	STEEL (LBS.)
16	H1	60	5	2'-4½"	7'-0"	28'-0"	32'-9"	14'-10½"	17'-10½"	4½"	3	6"	1'-0"	6	12"	5'-0"	2	5'-0"	0	0	0	5	4'-0"	2'-0"	0	0	0	2	1'-0"	5'-0"	0	0	0	5	4'-0"	8'-0"	0	0	0	8	7'-0"	13.9	1410
	H2	71	5	3'-2½"	7'-6"	30'-0"	36'-5"	16'-8½"	19'-8½"	4½"	3	11"	1'-10"	7	11"	5'-6"	3	6'-10"	0	0	0	6	5'-0"	3'-10"	0	0	0	4	3'-0"	6'-10"	0	0	0	7	6'-0"	9'-10"	0	0	0	9	8'-0"	17.2	1655
	H3	76	6	3'-0½"	7'-6"	37'-6"	43'-7"	20'-3½"	23'-3½"	4½"	3	10"	1'-8"	7	11"	5'-6"	4	10'-5"	4'-8"	5'-9"	2'-0"	10	9'-0"	7'-5"	1'-8"	5'-9"	2'-0"	7	6'-0"	10'-5"	4'-8"	5'-9"	2'-0"	10	9'-0"	13'-5"	7'-8"	5'-9"	2'-0"	13	12'-0"	23.9	2167
24	H1	69	6	3'-3⅜"	7'-6"	37'-6"	44'-0¾"	20'-6⅜"	23'-6⅜"	3⅜"	4	8"	2'-0"	7	11"	5'-6"	2	5'-0"	0	0	0	5	4'-0"	2'-0"	0	0	0	2	1'-0"	5'-0"	0	0	0	5	4'-0"	8'-0"	0	0	0	8	7'-0"	17.7	1877
	H2	85	6	3'-10⅜"	8'-0"	40'-0"	47'-8¾"	22'-4⅜"	25'-4⅜"	4⅜"	4	10"	2'-6"	7	12"	6'-0"	3	6'-10"	0	0	0	6	5'-0"	3'-10"	0	0	0	4	3'-0"	6'-10"	0	0	0	7	6'-0"	9'-10"	0	0	0	9	8'-0"	21.0	2076
	H3	91	7	3'-5⅜"	8'-0"	48'-0"	54'-10¾"	25'-11⅜"	28'-11⅜"	5⅜"	4	8"	2'-0"	7	12"	6'-0"	4	10'-5"	4'-8"	5'-9"	2'-0"	10	9'-0"	7'-5"	1'-8"	5'-9"	2'-0"	7	6'-0"	10'-5"	4'-8"	5'-9"	2'-0"	10	9'-0"	13'-5"	7'-8"	5'-9"	2'-0"	13	12'-0"	27.6	2588
32	H1	79	7	3'-8¼"	8'-0"	48'-0"	55'-4½"	26'-2¼"	29'-2¼"	5¼"	4	9"	2'-3"	7	12"	6'-0"	2	5'-0"	0	0	0	5	4'-0"	2'-0"	0	0	0	2	1'-0"	5'-0"	0	0	0	5	4'-0"	8'-0"	0	0	0	8	7'-0"	21.4	2277
	H2	84	8	3'-3¼"	7'-6"	52'-6"	59'-0½"	28'-0¼"	31'-0¼"	3¼"	4	8"	2'-0"	7	11"	5'-6"	3	6'-10"	0	0	0	6	5'-0"	3'-10"	0	0	0	4	3'-0"	6'-10"	0	0	0	7	6'-0"	9'-10"	0	0	0	9	8'-0"	24.7	2557
	H3	93	9	3'-1¼"	7'-6"	60'-0"	66'-2½"	31'-7¼"	34'-7¼"	3¼"	3	11"	1'-10"	7	11"	5'-6"	4	10'-5"	4'-8"	5'-9"	2'-0"	10	9'-0"	7'-5"	1'-8"	5'-9"	2'-0"	7	6'-0"	10'-5"	4'-8"	5'-9"	2'-0"	10	9'-0"	13'-5"	7'-8"	5'-9"	2'-0"	13	12'-0"	31.4	3190

NOTES:

1) Conform to KYTC, Standard Specifications, Current Edition.
2) Concrete to be Class "A", 3500 psi.
3) Rebar to be epoxy coated A615, Grade 60.
4) Maintain 2" clear cover to reinforcement unless otherwise noted.
5) End Bents are designed for the maximum span of the following steel and concrete beams as shown in the current standards:
   H1 - B12, CB12, B17, CB17, B21 or rolled steel beams up to 16" nominal depth.
   H2 - CB21, B27, CB27, B33 or rolled steel beams up to 24" nominal depth.
   H3 - CB33, B42, CB42 or rolled steel beams up to 36" nominal depth.
6) Piles may be HP12x53 or 16" Steel Pipes with ½" wall thickness.
7) Piles driven to rock must be driven to Refusal. Friction Piles must be driven to (Pile Load/0.4) using the Gates Method.
8) Pile load given is Factored Strength Load.
9) Piles must be driven 10' into existing ground or to refusal on bedrock. Piles at wet crossings must be driven to 10' below stream bed or to refusal on bedrock. A minimum pile length of 10' is required in all circumstances.
10) Contractor shall provide a hammer capable of driving the piling to refusal or capacity without encountering excessive blow counts or damaging the pile. Contractor shall be responsible for all damaged piling.

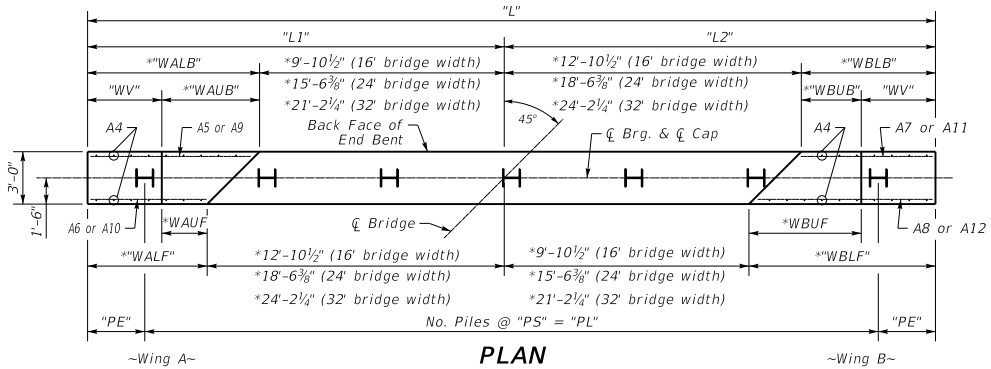

PLAN

(Left skew shown, right skew opposite hand)

*Adjust 1'-0¾" as necessary for rolled beam superstructure

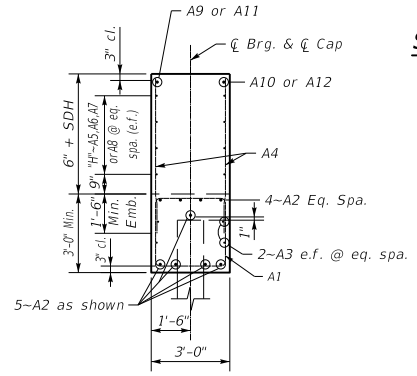

SECTION A-A

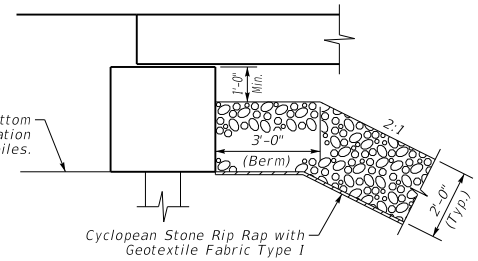

SECTION THRU END BENT

(Showing berm and fill slope)

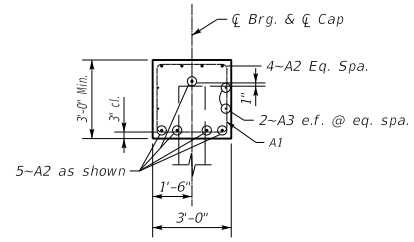

SECTION B-B

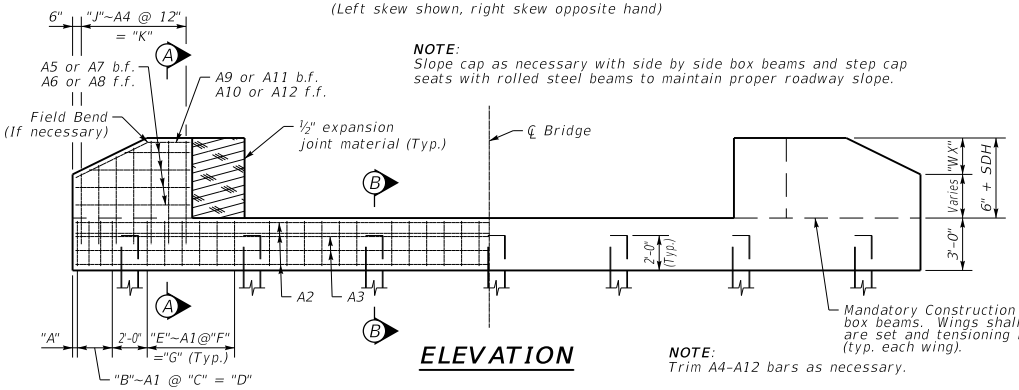

NOTE:
Slope cap as necessary with side by side box beams and step cap seats with rolled steel beams to maintain proper roadway slope.

ELEVATION

NOTE:
Trim A4-A12 bars as necessary.

Mandatory Construction joint for side by side box beams. Wings shall be poured after beams are set and tensioning rods are tightened (typ. each wing).

NOTE:
A2 bars (#8), 5'-6" min. lap if required
A3 bars (#5), 2'-8" min. lap if required

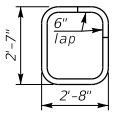

A1 Bar

~Size #5~

KENTUCKY
DEPARTMENT OF HIGHWAYS

PILE END BENT
45° SKEW

STANDARD DRAWING NO. BSE-004

SUBMITTED _____ DIRECTOR DIVISION OF STRUCTURAL DESIGN — DATE 02-26-20

APPROVED _____ STATE HIGHWAY ENGINEER — DATE 02-26-20

0° SKEW 16'-0" - 17'-6" BRIDGE WIDTH (No Seismic Load)

Bill of Reinforcement

MARK	P1				P2				P3				P4								P5								P6				P7				P8				P9(e)				P10(e)				P11(e)			
TYPE	Str.				Str.				Str.				Type 4								Type 10								Str.				Type 31				Str.				Str.				Str.				Type 14			
SIZE																																	#4								#8				#5				#5			
H	No.	Size	Length ft.	Length in.	No.	Size	Length ft.	Length in.	Spacing	No.	Size	Length ft.	Length in.	Spacing	A ft.	A in.	B ft.	B in.	C ft.	C in.	D ft.	D in.	No.	Size	Length ft.	Length in.	Spacing	A ft.	A in.	No.	Size	Length ft.	Length in.	No.	Length ft.	Length in.	No.	Size	Length ft.	Length in.	Spacing	No.	Length ft.	Length in.	No.	Length ft.	Length in.	No.	Length ft.	Length in.	No.	Length ft.	Length in.
10-11	30	8	12	8	8	26	5	19	8	12	30	5	12	8	8	42	8	8	10	8	7	5	1	5	0	8	7	9	10	5	7	5	12	2	6	10	5	13	0	12	35	2	5	42	8	8	0	8	8	18	8	4	18	8	19	13	2
12-13	30	8	12	8	8	26	5	19	8	12	30	5	12	8	8	42	8	8	10	8	7	5	1	5	0	8	7	9	14	5	7	5	12	2	6	14	5	13	0	12	49	2	5	42	8	10	0	8	8	18	8	4	18	8	19	13	2
14-15	30	8	12	8	8	26	5	19	8	12	30	5	12	8	8	42	8	8	10	8	7	5	1	5	0	8	7	9	18	5	7	5	12	2	6	18	5	13	0	12	63	2	5	42	8	12	0	8	8	18	8	4	18	8	19	13	2
16-17	30	8	12	8	8	26	5	19	8	12	30	5	12	8	8	42	8	8	10	8	7	5	1	5	0	8	7	9	22	5	7	5	12	2	6	22	5	13	0	12	77	2	5	42	8	14	0	8	8	18	8	4	18	8	19	13	2
18-19	30	8	12	8	8	26	5	19	8	12	30	5	12	8	8	42	8	8	10	8	7	5	1	5	0	8	7	9	26	5	7	5	12	2	6	26	5	13	0	12	91	2	5	42	8	16	0	8	8	18	8	4	18	8	19	13	2
20-21	30	8	12	8	8	26	5	19	8	12	30	5	12	8	8	42	8	8	10	8	7	5	1	5	0	8	7	9	30	5	7	5	12	2	6	30	5	13	0	12	105	2	5	42	8	18	0	8	8	18	8	4	18	8	19	13	2
22-23	30	8	12	8	8	26	5	19	8	12	30	5	12	8	8	42	8	8	10	8	7	5	1	5	0	8	7	9	34	5	7	5	12	2	6	34	5	13	0	12	119	2	5	42	8	20	0	8	8	18	8	4	18	8	19	13	2
24-25	30	8	12	8	8	26	5	19	8	12	30	5	12	8	8	42	8	8	10	8	7	5	1	5	0	8	7	9	38	5	7	5	12	2	6	38	5	13	0	12	133	2	5	42	8	22	0	8	8	18	8	4	18	8	19	13	2

Reinforcement Details

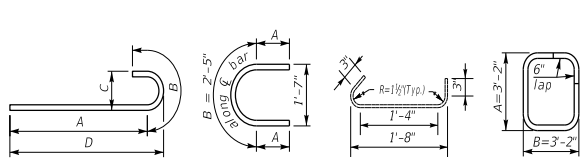

TYPE 4 — TYPE 10 (#5 bar) — TYPE 31 (#4 bar) — TYPE 14 (#5 bar)

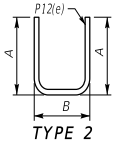

TYPE 2

(For Stepped Cap)
A=Ht. diff.-2" Cl. +2'-0"emb.
B=1'-2½"

DIMENSIONS TABLE

H	A ft.	A in.	B ft.	B in.	C ft.	C in.	D ft.	D in.
10-11	2	6	2	6	10	0	5	6
12-13	2	6	2	6	10	0	5	6
14-15	2	6	2	6	10	0	5	6
16-17	2	6	2	6	10	0	5	6
18-19	2	6	2	6	10	0	5	6
20-21	2	6	2	6	10	0	5	6
22-23	2	6	2	6	10	0	5	6
24-25	2	6	2	6	10	0	5	6

QUANTITIES

H	CONCRETE CLASS "A" CU. YDS. (1)	STEEL REINFORCEMENT EPOXY COATED LBS.	STEEL REINFORCEMENT LBS.
10-11	38.3	740	4113
12-13	40.5	740	4446
14-15	42.6	740	4779
16-17	44.8	740	5112
18-19	47	740	5445
20-21	49.1	740	5778
22-23	51.3	740	6111
24-25	53.4	740	6444

Note: All bars in cap shall be epoxy coated.

Note: All concrete shall be Class "A"

(1) Quantity is based on taller height. Reduce by 1.0 cubic yd. for shorter height.

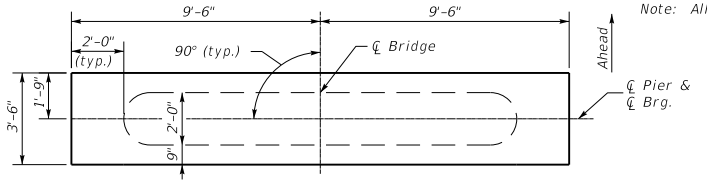

PLAN OF CAP

Note: Grade cap to roadway grade for box beams. Step cap if necessary for steel beams.

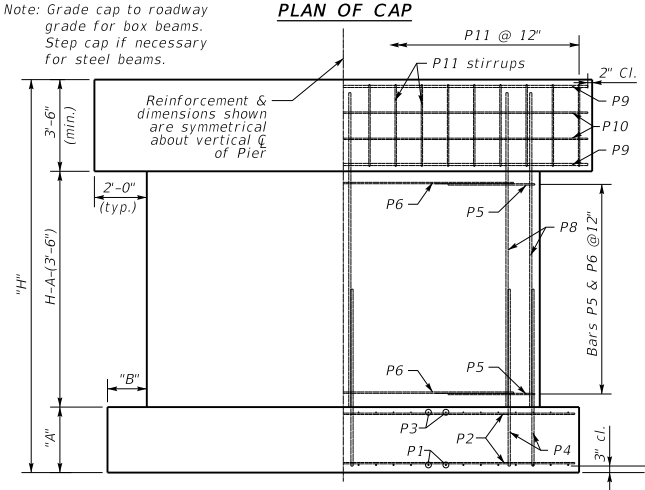

ELEVATION

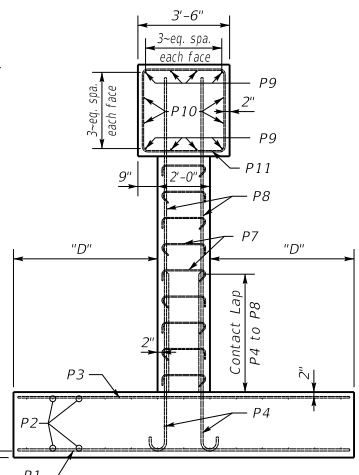

END ELEVATION

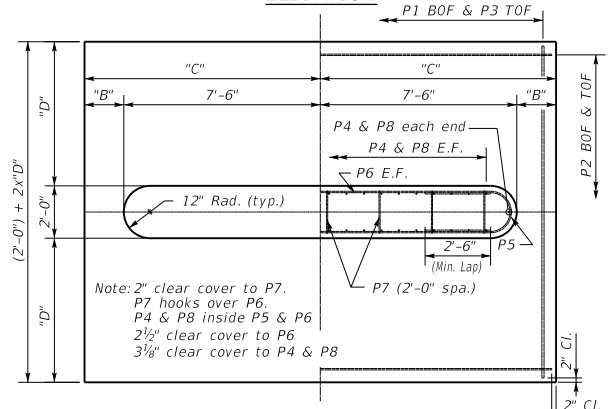

PLAN OF FOOTING

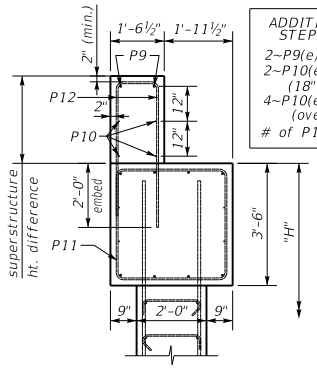

STEPPED CAP
(if necessary)

ADDITIONAL BARS FOR STEPPED PIER CAP
2~P9(e)'s
2~P10(e)'s
(18" to 28" ht. diff.)
4~P10(e)'s
(over 28" ht. diff.)
# of P12(e)=# of P11(e)

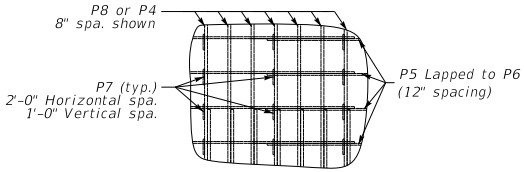

P7 BAR PLACEMENT
(alternate 90° & 135° bar ends)

GENERAL NOTES

SPECIFICATIONS: Construct piers according to the current edition of the Kentucky Department of Highways Standard Specifications for Road and Bridge Construction. Piers are designed for side by side box beams as detailed in Standard Drawings BDP-001 through BDP-012, current edition. They may be slightly modified to allow for 17'-6" rolled steel beam bridge width.

FOUNDATION PRESSURE: Construct pier footings on solid rock bearing material that can support a pressure of 8000 psf service or 10,800 psf strength factored as recommended by a geotechnical engineer.

DESIGN LOADS: Pier is designed for the CB42 beam superstructure with 3~97 foot spans. Pier is designed to handle a half a 97 foot span for thermal load with expansion bearings under the beams. Pier is designed for 100 mph wind. Wind on superstructure is for 1~97' span longitudinal and transverse. Pier is designed for stream flow of 10 ft./sec. up to the top of the pier. It is not designed for flow acting on the superstructure. Pier is not designed for earthquake loading.

DESIGN APPLICABILITY: Consult with a structural engineer to determine if these details are applicable for any particular project.

FOOTING ELEVATION: Construct bottom of footing below the anticipated scour elevation. (This typically entails embedding the footings 1'-0" to 2'-0" into rock and pouring concrete directly against cut rock faces as recommended by geotechnical engineer.)

NOTE: Distances to bars shown are clear dimensions unless otherwise noted.

MATERIAL SPECIFICATIONS:
Concrete, Class "A" = 3500 psi
Steel Reinforcement = Grade 60

KENTUCKY
DEPARTMENT OF HIGHWAYS

Standard Pier
0° Skew
16'-0"-17'-6" Bridge Width

STANDARD DRAWING NO. BSP-001

SUBMITTED _____ DIRECTOR DIVISION OF STRUCTURAL DESIGN — DATE 02-26-20

APPROVED _____ STATE HIGHWAY ENGINEER — DATE 02-26-20

0° SKEW 24'-0" - 25'-6" BRIDGE WIDTH (No Seismic Load)

Bill of Reinforcement

MARK	P1					P2					P3					P4										P5					P6					P7			P8					P9(e)			P10(e)			P11(e)		
TYPE	Str.					Str.					Str.					Type 4										Type 10					Str.					Type 31			Str.					Str.			Str.			Type 14		
SIZE																																			#4								#8			#5			#5		
H	No.	Size	Length ft.	Length in.	Spacing	No.	Size	Length ft.	Length in.	Spacing	No.	Size	Length ft.	Length in.	Spacing	No.	Size	Length ft.	Length in.	Spacing	A ft.	A in.	B ft.	B in.	C ft.	C in.	D ft.	D in.	No.	Size	Length ft.	Length in.	Spacing	A ft.	A in.	No.	Size	Length ft.	Length in.	No.	Size	Length ft.	Length in.	Spacing	No.	Length ft.	Length in.	No.	Length ft.	Length in.	No.	Length ft.	Length in.
10-11	40	8	12	8	8	26	6	26	2	12	40	5	12	8	8	60	8	8	10	8	7	5	1	5	0	8	7	9	10	5	7	5	12	2	6	10	5	19	0	12	50	2	5	60	8	8	0	8	8	26	8	4	26	8	27	13	2
12-13	40	8	12	8	8	26	6	26	2	12	40	5	12	8	8	60	8	8	10	8	7	5	1	5	0	8	7	9	14	5	7	5	12	2	6	14	5	19	0	12	70	2	5	60	8	10	0	8	8	26	8	4	26	8	27	13	2
14-15	40	8	12	8	8	26	6	26	2	12	40	5	12	8	8	60	8	8	10	8	7	5	1	5	0	8	7	9	18	5	7	5	12	2	6	18	5	19	0	12	90	2	5	60	8	12	0	8	8	26	8	4	26	8	27	13	2
16-17	40	8	12	8	8	26	6	26	2	12	40	5	12	8	8	60	8	8	10	8	7	5	1	5	0	8	7	9	22	5	7	5	12	2	6	22	5	19	0	12	110	2	5	60	8	14	0	8	8	26	8	4	26	8	27	13	2
18-19	40	8	12	8	8	26	6	26	2	12	40	5	12	8	8	60	8	8	10	8	7	5	1	5	0	8	7	9	26	5	7	5	12	2	6	26	5	19	0	12	130	2	5	60	8	16	0	8	8	26	8	4	26	8	27	13	2
20-21	40	8	12	8	8	26	6	26	2	12	40	5	12	8	8	60	8	8	10	8	7	5	1	5	0	8	7	9	30	5	7	5	12	2	6	30	5	19	0	12	150	2	5	60	8	18	0	8	8	26	8	4	26	8	27	13	2
22-23	40	8	12	8	8	26	6	26	2	12	40	5	12	8	8	60	8	8	10	8	7	5	1	5	0	8	7	9	34	5	7	5	12	2	6	34	5	19	0	12	170	2	5	60	8	20	0	8	8	26	8	4	26	8	27	13	2
24-25	40	8	12	8	8	26	6	26	2	12	40	5	12	8	8	60	8	8	10	8	7	5	1	5	0	8	7	9	38	5	7	5	12	2	6	38	5	19	0	12	190	2	5	60	8	22	0	8	8	26	8	4	26	8	27	13	2

Reinforcement Details

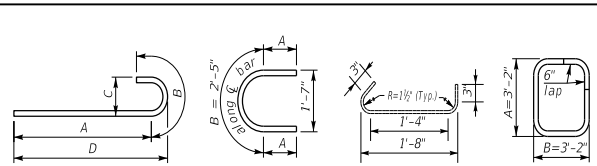

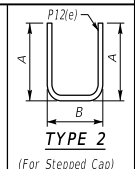

DIMENSIONS TABLE

H	A ft.	A in.	B ft.	B in.	C ft.	C in.	D ft.	D in.
10-11	2	6	2	9	13	3	5	6
12-13	2	6	2	9	13	3	5	6
14-15	2	6	2	9	13	3	5	6
16-17	2	6	2	9	13	3	5	6
18-19	2	6	2	9	13	3	5	6
20-21	2	6	2	9	13	3	5	6
22-23	2	6	2	9	13	3	5	6
24-25	2	6	2	9	13	3	5	6

QUANTITIES

H	CONCRETE CLASS "A" CU. YDS. (1)	STEEL REINFORCEMENT EPOXY COATED LBS.	STEEL REINFORCEMENT LBS.
10-11	52.2	1055	5973
12-13	55.3	1055	6438
14-15	58.3	1055	6902
16-17	61.4	1055	7366
18-19	64.4	1055	7830
20-21	67.5	1055	8295
22-23	70.5	1055	8759
24-25	73.6	1055	9223

Note: All bars in cap shall be epoxy coated.

Note: All concrete shall be Class "A"

(1) Quantity is based on taller height. Reduce by 1.5 cubic yard for shorter height.

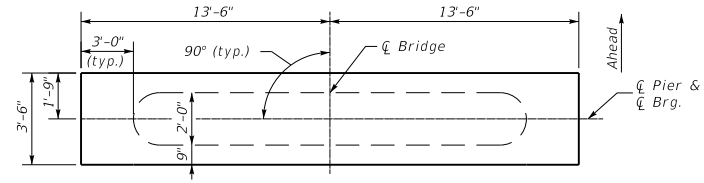

PLAN OF CAP

Note: Grade cap to roadway grade for box beams. Step cap if necessary for steel beams.

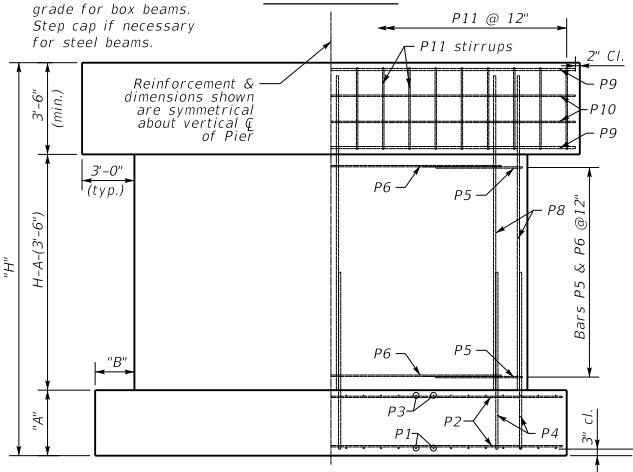

ELEVATION

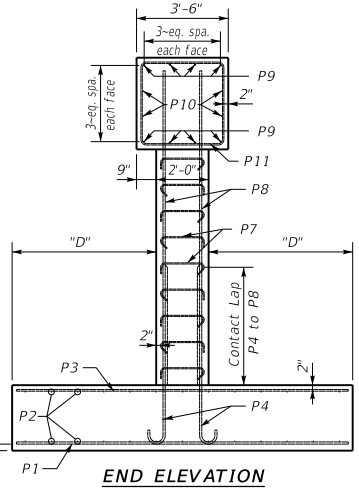

END ELEVATION

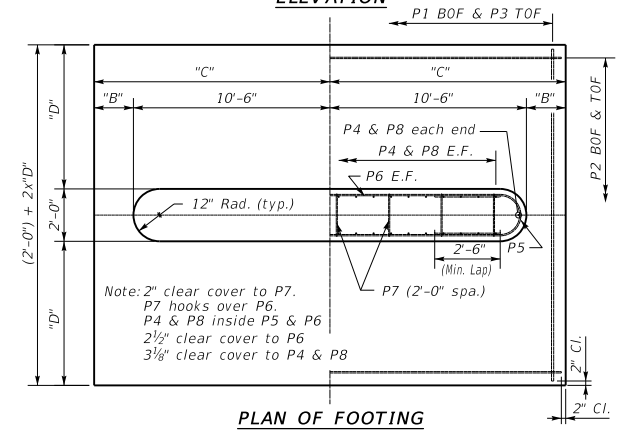

PLAN OF FOOTING

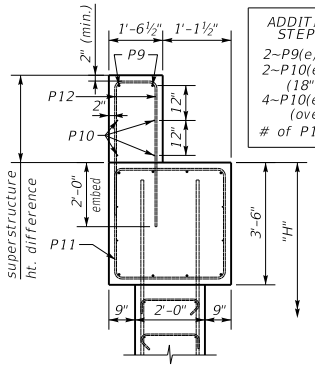

STEPPED CAP

(if necessary)

ADDITIONAL BARS FOR STEPPED PIER CAP

2~P9(e)'s
2~P10(e)'s
(18" to 28" ht. diff.)
4~P10(e)'s
(over 28" ht. diff.)
# of P12(e)=# of P11(e)

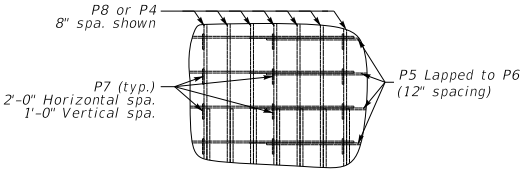

P7 BAR PLACEMENT

(alternate 90° & 135° bar ends)

GENERAL NOTES

SPECIFICATIONS: Construct piers according to the current edition of the Kentucky Department of Highways Standard Specifications for Road and Bridge Construction. Piers are designed for side by side box beams as detailed in Standard Drawings BDP-001 through BDP-012, current edition. They may be slightly modified to allow for 25'-6" rolled steel beam bridge width.

FOUNDATION PRESSURE: Construct pier footings on solid rock bearing material that can support a pressure of 8000 psf service or 10,800 psf strength factored as recommended by a geotechnical engineer.

DESIGN LOADS: Pier is designed for the CB42 beam superstructure with 3~97 foot spans. Pier is designed to handle a half a 97 foot span for thermal load with expansion bearings under the beams. Pier is designed for 100 mph wind. Wind on superstructure is for 1~97' span longitudinal and transverse. Pier is designed for stream flow of 10 ft./sec. up to the top of the pier. It is not designed for flow acting on the superstructure. Pier is not designed for earthquake loading.

DESIGN APPLICABILITY: Consult with a structural engineer to determine if these details are applicable for any particular project.

FOOTING ELEVATION: Construct bottom of footing below the anticipated scour elevation. (This typically entails embedding the footings 1'-0" to 2'-0" into rock and pouring concrete directly against cut rock faces as recommended by geotechnical engineer.)

NOTE: Distances to bars shown are clear dimensions unless otherwise noted.

MATERIAL SPECIFICATIONS:
Concrete, Class "A" = 3500 psi
Steel Reinforcement = Grade 60

KENTUCKY
DEPARTMENT OF HIGHWAYS

Standard Pier
0° Skew
24'-0"-25'-6" Bridge Width

STANDARD DRAWING NO. BSP-002

SUBMITTED _____ DIRECTOR DIVISION OF STRUCTURAL DESIGN — DATE 02-26-20

APPROVED _____ STATE HIGHWAY ENGINEER — DATE 02-26-20

0° SKEW 32'-0" - 33'-6" BRIDGE WIDTH (No Seismic Load)

Bill of Reinforcement

MARK	P1				P2				P3				P4								P5								P6				P7		P8				P9(e)		P10(e)		P11(e)	
TYPE	Str.				Str.				Str.				Type 4								Type 10								Str.				Type 31		Str.				Str.		Str.		Type 14	
SIZE																																	#4						#8		#5		#5	
H	No.	Size	Length ft.	Length in.	No.	Size	Length ft.	Length in.	No.	Size	Length ft.	Length in.	No.	Size	Length ft.	Length in.	A ft.	A in.	B ft.	B in.	C ft.	C in.	D ft.	D in.	No.	Size	Length ft.	Length in.	A ft.	A in.	No.	Size	Length ft.	Length in.	No.	Size	Length ft.	Length in.	No.	Length ft.	Length in.	No.	Length ft.	No.	Length ft.	Length in.
10-11	52	8	12	8	26	6	34	2	52	5	12	8	84	8	10	8	7	5	1	5	0	8	7	9	10	5	7	5	12	2	6	10	5	27	0	12	70	2	5	84	8	8	0	8	8	34	8	4	34	8	35	13	2
12-13	52	8	12	8	26	6	34	2	52	5	12	8	84	8	8	10	8	7	5	1	0	8	7	9	14	5	7	5	12	2	6	14	5	27	0	12	98	2	5	84	8	10	0	8	8	34	8	4	34	8	35	13	2
14-15	52	8	12	8	26	6	34	2	52	5	12	8	84	8	8	10	8	7	5	1	5	0	8	7	9	18	5	7	5	12	2	6	18	5	27	0	12	126	2	5	84	8	12	0	8	8	34	8	4	34	8	35	13	2
16-17	52	8	12	8	26	6	34	2	52	5	12	8	84	8	8	10	8	7	5	1	5	0	8	7	9	22	5	7	5	12	2	6	22	5	27	0	12	154	2	5	84	8	14	0	8	8	34	8	4	34	8	35	13	2
18-19	52	8	12	8	26	6	34	2	52	5	12	8	84	8	8	10	8	7	5	1	5	0	8	7	9	26	5	7	5	12	2	6	26	5	27	0	12	182	2	5	84	8	16	0	8	8	34	8	4	34	8	35	13	2
20-21	52	8	12	8	26	6	34	2	52	5	12	8	84	8	8	10	8	7	5	1	5	0	8	7	9	30	5	7	5	12	2	6	30	5	27	0	12	210	2	5	84	8	18	0	8	8	34	8	4	34	8	35	13	2
22-23	52	8	12	8	26	6	34	2	52	5	12	8	84	8	8	10	8	7	5	1	5	0	8	7	9	34	5	7	5	12	2	6	34	5	27	0	12	238	2	5	84	8	20	0	8	8	34	8	4	34	8	35	13	2
24-25	52	8	12	8	26	6	34	2	52	5	12	8	84	8	8	10	8	7	5	1	5	0	8	7	9	38	5	7	5	12	2	6	38	5	27	0	12	266	2	5	84	8	22	0	8	8	34	8	4	34	8	35	13	2

Reinforcement Details

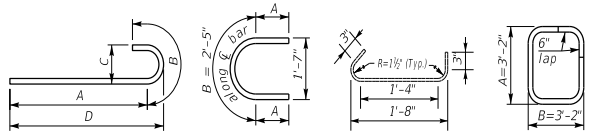

TYPE 4 — TYPE 10 (#5 bar) — TYPE 31 (#4 bar) — TYPE 14 (#5 bar)

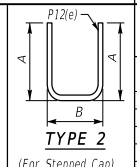

TYPE 2

(For Stepped Cap)
A=Ht. diff.-2" Cl.
+2'-0"emb.
B=1'-2½"

DIMENSIONS TABLE

H	A ft.	A in.	B ft.	B in.	C ft.	C in.	D ft.	D in.
10-11	2	6	2	9	17	3	5	6
12-13	2	6	2	9	17	3	5	6
14-15	2	6	2	9	17	3	5	6
16-17	2	6	2	9	17	3	5	6
18-19	2	6	2	9	17	3	5	6
20-21	2	6	2	9	17	3	5	6
22-23	2	6	2	9	17	3	5	6
24-25	2	6	2	9	17	3	5	6

QUANTITIES

H	CONCRETE CLASS "A" CU. YDS. (1)	STEEL REINFORCEMENT EPOXY COATED LBS.	STEEL REINFORCEMENT LBS.
10-11	68.8	1370	8051
12-13	73	1370	8691
14-15	77.2	1370	9330
16-17	81.5	1370	9969
18-19	85.7	1370	10608
20-21	89.9	1370	11247
22-23	94.2	1370	11887
24-25	98.4	1370	12526

Note: All bars in cap shall be epoxy coated.

Note: All concrete shall be Class "A"

(1) Quantity is based on taller height. Reduce by 2.1 cubic yard for shorter height.

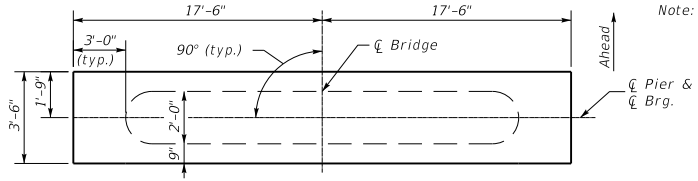

PLAN OF CAP

Note: Grade cap to roadway grade for box beams. Step cap if necessary for steel beams.

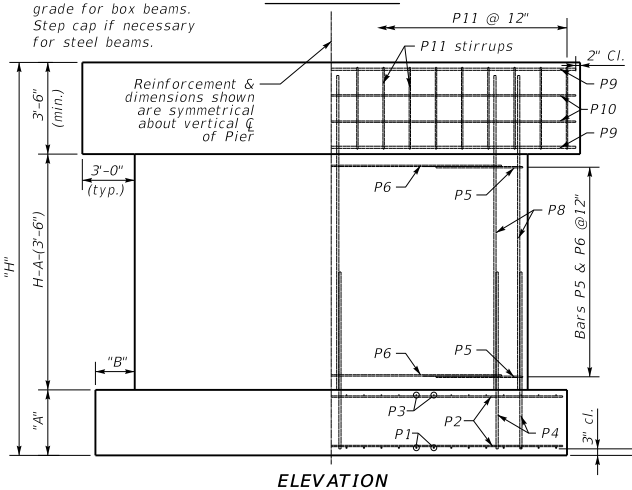

ELEVATION

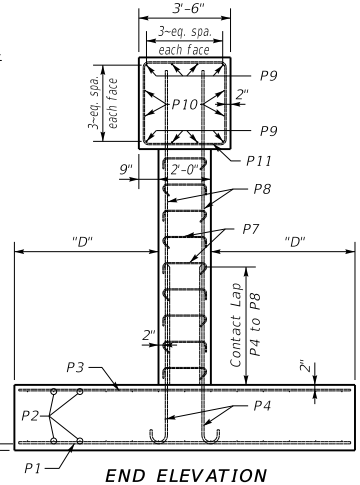

END ELEVATION

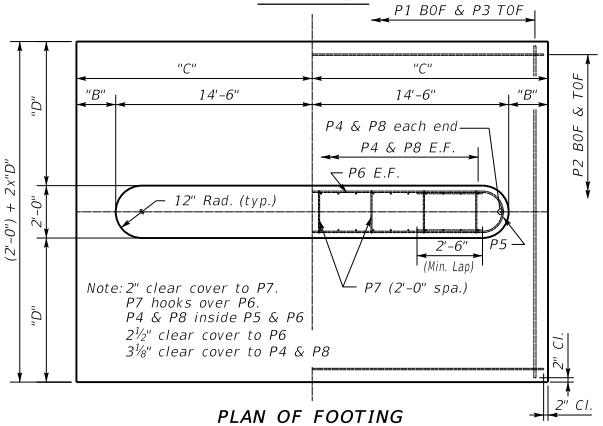

Note: 2" clear cover to P7.
P7 hooks over P6.
P4 & P8 inside P5 & P6
2½" clear cover to P6
3⅛" clear cover to P4 & P8

PLAN OF FOOTING

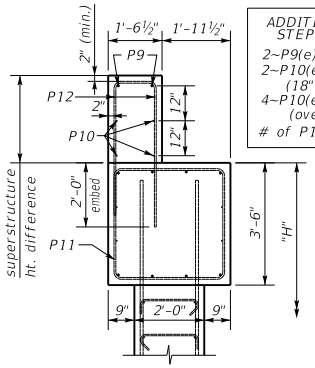

STEPPED CAP
(if necessary)

ADDITIONAL BARS FOR STEPPED PIER CAP
2~P9(e)'s
2~P10(e)'s
(18" to 28" ht. diff.)
4~P10(e)'s
(over 28" ht. diff.)
# of P12(e)=# of P11(e)

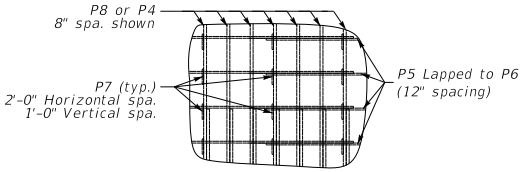

P7 BAR PLACEMENT
(alternate 90° & 135° bar ends)

GENERAL NOTES

SPECIFICATIONS: Construct piers according to the current edition of the Kentucky Department of Highways Standard Specifications for Road and Bridge Construction. Piers are designed for side by side box beams as detailed in Standard Drawings BDP-001 through BDP-012, current edition. They may be slightly modified to allow for 33'-6" rolled steel beam bridge width.

FOUNDATION PRESSURE: Construct pier footings on solid rock bearing material that can support a pressure of 8000 psf service or 10,800 psf strength factored as recommended by a geotechnical engineer.

DESIGN LOADS: Pier is designed for the CB42 beam superstructure with 3~97 foot spans. Pier is designed to handle a half a 97 foot span for thermal load with expansion bearings under the beams. Pier is designed for 100 mph wind. Wind on superstructure is for 1~97' span longitudinal and transverse. Pier is designed for stream flow of 10 ft./sec. up to the top of the pier. It is not designed for flow acting on the superstructure. Pier is not designed for earthquake loading.

DESIGN APPLICABILITY: Consult with a structural engineer to determine if these details are applicable for any particular project.

FOOTING ELEVATION: Construct bottom of footing below the anticipated scour elevation. (This typically entails embedding the footings 1'-0" to 2'-0" into rock and pouring concrete directly against cut rock faces as recommended by geotechnical engineer.)

NOTE: Distances to bars shown are clear dimensions unless otherwise noted.

MATERIAL SPECIFICATIONS:
Concrete, Class "A" = 3500 psi
Steel Reinforcement = Grade 60

KENTUCKY
DEPARTMENT OF HIGHWAYS

Standard Pier
0° Skew
32'-0"-33'-6" Bridge Width

STANDARD DRAWING NO. BSP-003

SUBMITTED _____ DIRECTOR DIVISION OF STRUCTURAL DESIGN — DATE 02-26-20

APPROVED _____ STATE HIGHWAY ENGINEER — DATE 02-26-20

15° SKEW 16'-0" - 17'-6" BRIDGE WIDTH (No Seismic Load)

Bill of Reinforcement

MARK	P1				P2				P3				P4								P5								P6				P7				P8				P9(e)				P10(e)				P11(e)			
TYPE	Str.				Str.				Str.				Type 4								Type 10								Str.				Type 31				Str.				Str.				Str.				Type 14			
SIZE																																	#4								#8				#5				#5			
H	No.	Size	Length ft.	Length in.	No.	Size	Length ft.	Length in.	No.	Size	Length ft.	Length in.	No.	Size	Length ft.	Length in.	Spacing	A ft.	A in.	B ft.	B in.	C ft.	C in.	D ft.	D in.	No.	Size	Length ft.	Length in.	Spacing	A in.	No.	Size	Length ft.	Length in.	No.	Size	Length ft.	Length in.	No.	Size	Length ft.	Length in.	No.	Size	Length ft.	Length in.	No.	Size	Length ft.	Length in.
10-11	29	8	12	2	8	26	5	19	2	12	29	5	12	2	8	42	8	8	10	8	7	5	1	5	0	8	7	9	10	5	7	5	12	2	6	10	5	13	0	12	35	2	5	42	8	8	0	8	8	20	2	4	20	2	20	13	2
12-13	29	8	12	2	8	26	5	19	2	12	29	5	12	2	8	42	8	8	10	8	7	5	1	5	0	8	7	9	14	5	7	5	12	2	6	14	5	13	0	12	49	2	5	42	8	10	0	8	8	20	2	4	20	2	20	13	2
14-15	29	8	12	2	8	26	5	19	2	12	29	5	12	2	8	42	8	8	10	8	7	5	1	5	0	8	7	9	18	5	7	5	12	2	6	18	5	13	0	12	63	2	5	42	8	12	0	8	8	20	2	4	20	2	20	13	2
16-17	29	8	12	2	8	26	5	19	2	12	29	5	12	2	8	42	8	8	10	8	7	5	1	5	0	8	7	9	22	5	7	5	12	2	6	22	5	13	0	12	77	2	5	42	8	14	0	8	8	20	2	4	20	2	20	13	2
18-19	29	8	12	2	8	26	5	19	2	12	29	5	12	2	8	42	8	8	10	8	7	5	1	5	0	8	7	9	26	5	7	5	12	2	6	26	5	13	0	12	91	2	5	42	8	16	0	8	8	20	2	4	20	2	20	13	2
20-21	29	8	12	2	8	26	5	19	2	12	29	5	12	2	8	42	8	8	10	8	7	5	1	5	0	8	7	9	30	5	7	5	12	2	6	30	5	13	0	12	105	2	5	42	8	18	0	8	8	20	2	4	20	2	20	13	2
22-23	29	8	12	2	8	26	5	19	2	12	29	5	12	2	8	42	8	8	10	8	7	5	1	5	0	8	7	9	34	5	7	5	12	2	6	34	5	13	0	12	119	2	5	42	8	20	0	8	8	20	2	4	20	2	20	13	2
24-25	29	8	12	2	8	26	5	19	2	12	29	5	12	2	8	42	8	8	10	8	7	5	1	5	0	8	7	9	38	5	7	5	12	2	6	38	5	13	0	12	133	2	5	42	8	22	0	8	8	20	2	4	20	2	20	13	2

Reinforcement Details

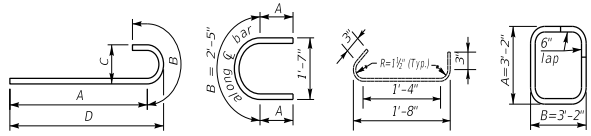

TYPE 4 — TYPE 10 (#5 bar) — TYPE 31 (#4 bar) — TYPE 14 (#5 bar)

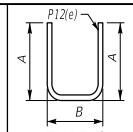

TYPE 2

(For Stepped Cap)
A=Ht. diff.-2" Cl. +2'-0"emb.
B=1'-2½"

DIMENSIONS TABLE

H	A ft.	A in.	B ft.	B in.	C ft.	C in.	D ft.	D in.
10-11	2	6	2	3	9	9	5	3
12-13	2	6	2	3	9	9	5	3
14-15	2	6	2	3	9	9	5	3
16-17	2	6	2	3	9	9	5	3
18-19	2	6	2	3	9	9	5	3
20-21	2	6	2	3	9	9	5	3
22-23	2	6	2	3	9	9	5	3
24-25	2	6	2	3	9	9	5	3

QUANTITIES

H	CONCRETE CLASS "A" CU. YDS. (1)	STEEL REINFORCEMENT EPOXY COATED LBS.	STEEL REINFORCEMENT LBS.
10-11	37.5	792	3998
12-13	39.7	792	4331
14-15	41.8	792	4665
16-17	44	792	4998
18-19	46.2	792	5331
20-21	48.3	792	5664
22-23	50.5	792	5997
24-25	52.6	792	6330

Note: All bars in cap shall be epoxy coated.

Note: All concrete shall be Class "A"

(1) Quantity is based on taller height. Reduce by 1.0 cubic yd. for shorter height.

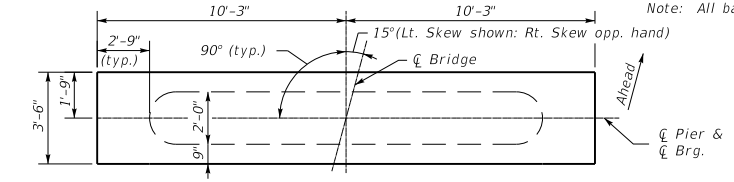

PLAN OF CAP

Note: Grade cap to roadway grade for box beams. Step cap if necessary for steel beams.

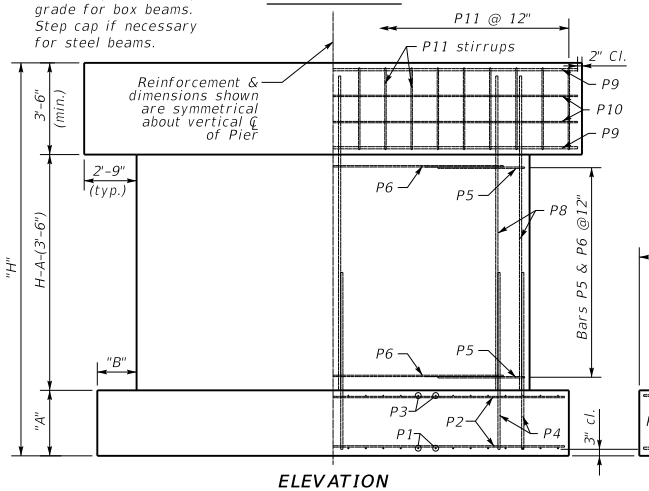

ELEVATION

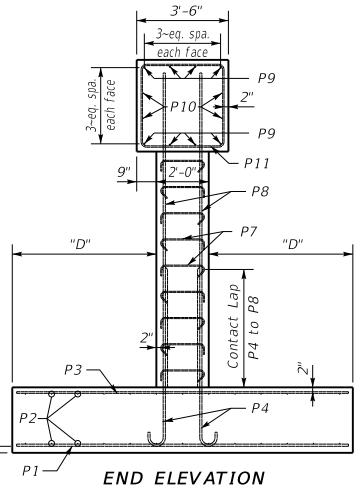

END ELEVATION

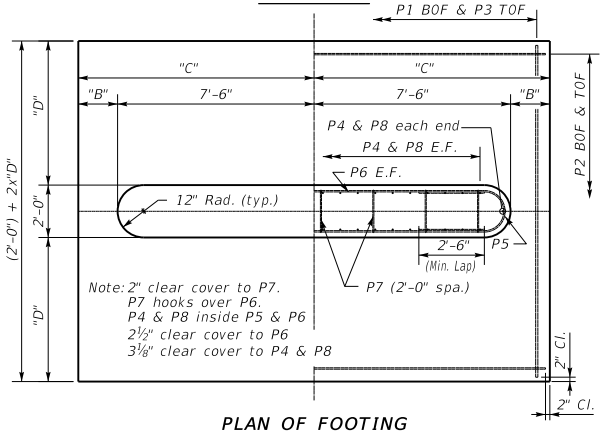

Note: 2" clear cover to P7.
P7 hooks over P6.
P4 & P8 inside P5 & P6
2½" clear cover to P6
3⅛" clear cover to P4 & P8

PLAN OF FOOTING

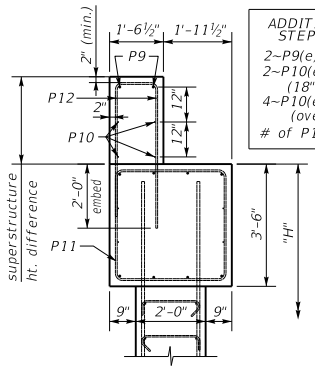

STEPPED CAP
(if necessary)

ADDITIONAL BARS FOR STEPPED PIER CAP
2~P9(e)'s
2~P10(e)'s
(18" to 28" ht. diff.)
4~P10(e)'s
(over 28" ht. diff.)
# of P12(e)=# of P11(e)

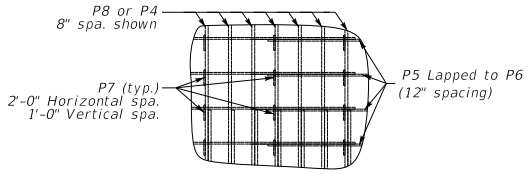

P7 BAR PLACEMENT
(alternate 90° & 135° bar ends)

GENERAL NOTES

SPECIFICATIONS: Construct piers according to the current edition of the Kentucky Department of Highways Standard Specifications for Road and Bridge Construction. Piers are designed for side by side box beams as detailed in Standard Drawings BDP-001 through BDP-012, current edition. They may be slightly modified to allow for 17'-6" rolled steel beam bridge width.

FOUNDATION PRESSURE: Construct pier footings on solid rock bearing material that can support a pressure of 8000 psf service or 10,800 psf strength factored as recommended by a geotechnical engineer.

DESIGN LOADS: Pier is designed for the CB42 beam superstructure with 3~97 foot spans. Pier is designed to handle a half a 97 foot span for thermal load with expansion bearings under the beams. Pier is designed for 100 mph wind. Wind on superstructure is for 1~97' span longitudinal and transverse. Pier is designed for stream flow of 10 ft./sec. up to the top of the pier. It is not designed for flow acting on the superstructure. Pier is not designed for earthquake loading.

DESIGN APPLICABILITY: Consult with a structural engineer to determine if these details are applicable for any particular project.

FOOTING ELEVATION: Construct bottom of footing below the anticipated scour elevation. (This typically entails embedding the footings 1'-0" to 2'-0" into rock and pouring concrete directly against cut rock faces as recommended by geotechnical engineer.)

NOTE: Distances to bars shown are clear dimensions unless otherwise noted.

MATERIAL SPECIFICATIONS:
Concrete, Class "A" = 3500 psi
Steel Reinforcement = Grade 60

KENTUCKY
DEPARTMENT OF HIGHWAYS

Standard Pier
15° Skew
16'-0"-17'-6" Bridge Width

STANDARD DRAWING NO. BSP-004

SUBMITTED _____ DIRECTOR DIVISION OF STRUCTURAL DESIGN — DATE 02-26-20

APPROVED _____ STATE HIGHWAY ENGINEER — DATE 02-26-20

15° SKEW 24'-0" - 25'-6" BRIDGE WIDTH (No Seismic Load)

Bill of Reinforcement

MARK	P1				P2				P3				P4								P5								P6				P7				P8				P9(e)				P10(e)				P11(e)			
TYPE	Str.				Str.				Str.				Type 4								Type 10								Str.				Type 31				Str.				Str.				Str.				Type 14			
SIZE																																	#4								#8				#5				#5			
H	No.	Size	Length ft.	Length in.	No.	Size	Length ft.	Length in.	No.	Size	Length ft.	Length in.	No.	Size	Length ft.	Length in.	Spacing	A ft.	A in.	B ft.	B in.	C ft.	C in.	D ft.	D in.	No.	Size	Length ft.	Length in.	Spacing	A ft.	A in.	No.	Size	Length ft.	Length in.	No.	Size	Length ft.	Length in.	No.	Size	Length ft.	Length in.	No.	Size	Length ft.	Length in.	No.	Size	Length ft.	Length in.
10-11	43	8	12	8	26	5	28	2	12	43	5	12	8	8	64	8	8	10	8	7	5	1	5	0	8	7	9	10	5	7	5	12	2	6	10	5	20	6	12	55	2	5	64	8	8	0	0	8	8	28	2	4	28	2	28	13	2
12-13	43	8	12	8	26	5	28	2	12	43	5	12	8	8	64	8	8	10	8	7	5	1	5	0	8	7	9	14	5	7	5	12	2	6	14	5	20	6	12	77	2	5	64	8	10	0	0	8	8	28	2	4	28	2	28	13	2
14-15	43	8	12	8	26	5	28	2	12	43	5	12	8	8	64	8	8	10	8	7	5	1	5	0	8	7	9	18	5	7	5	12	2	6	18	5	20	6	12	99	2	5	64	8	12	0	0	8	8	28	2	4	28	2	28	13	2
16-17	43	8	12	8	26	5	28	2	12	43	5	12	8	8	64	8	8	10	8	7	5	1	5	0	8	7	9	22	5	7	5	12	2	6	22	5	20	6	12	121	2	5	64	8	14	0	0	8	8	28	2	4	28	2	28	13	2
18-19	43	8	12	8	26	5	28	2	12	43	5	12	8	8	64	8	8	10	8	7	5	1	5	0	8	7	9	26	5	7	5	12	2	6	26	5	20	6	12	143	2	5	64	8	16	0	0	8	8	28	2	4	28	2	28	13	2
20-21	43	8	12	8	26	5	28	2	12	43	5	12	8	8	64	8	8	10	8	7	5	1	5	0	8	7	9	30	5	7	5	12	2	6	30	5	20	6	12	165	2	5	64	8	18	0	0	8	8	28	2	4	28	2	28	13	2
22-23	43	8	12	8	26	5	28	2	12	43	5	12	8	8	64	8	8	10	8	7	5	1	5	0	8	7	9	34	5	7	5	12	2	6	34	5	20	6	12	187	2	5	64	8	20	0	0	8	8	28	2	4	28	2	28	13	2
24-25	43	8	12	8	26	5	28	2	12	43	5	12	8	8	64	8	8	10	8	7	5	1	5	0	8	7	9	38	5	7	5	12	2	6	38	5	20	6	12	209	2	5	64	8	22	0	0	8	8	28	2	4	28	2	28	13	2

Reinforcement Details

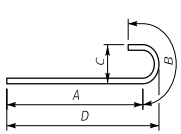

TYPE 4

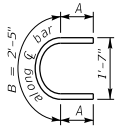

TYPE 10
(#5 bar)

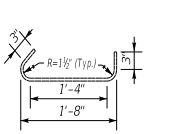

TYPE 31
(#4 bar)

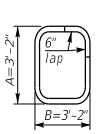

TYPE 14
(#5 bar)

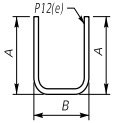

TYPE 2
(For Stepped Cap)
A=Ht. diff.-2" Cl. +2'-0"emb.
B=1'-2½"

DIMENSIONS TABLE / QUANTITIES

H	A ft.	A in.	B ft.	B in.	C ft.	C in.	D ft.	D in.	H	CONCRETE CLASS "A" CU. YDS. (1)	STEEL REINFORCEMENT EPOXY COATED LBS.	STEEL REINFORCEMENT LBS.
10-11	2	6	3	0	14	3	5	6	10-11	55.9	1107	6060
12-13	2	6	3	0	14	3	5	6	12-13	59.2	1107	6555
14-15	2	6	3	0	14	3	5	6	14-15	62.5	1107	7051
16-17	2	6	3	0	14	3	5	6	16-17	65.7	1107	7546
18-19	2	6	3	0	14	3	5	6	18-19	69	1107	8041
20-21	2	6	3	0	14	3	5	6	20-21	72.3	1107	8536
22-23	2	6	3	0	14	3	5	6	22-23	75.5	1107	9031
24-25	2	6	3	0	14	3	5	6	24-25	78.8	1107	9527

Note: All bars in cap shall be epoxy coated.

Note: All concrete shall be Class "A"

(1) Quantity is based on taller height. Reduce by 1.6 cubic yard for shorter height.

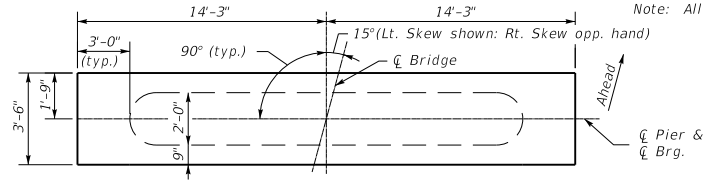

PLAN OF CAP

Note: Grade cap to roadway grade for box beams. Step cap if necessary for steel beams.

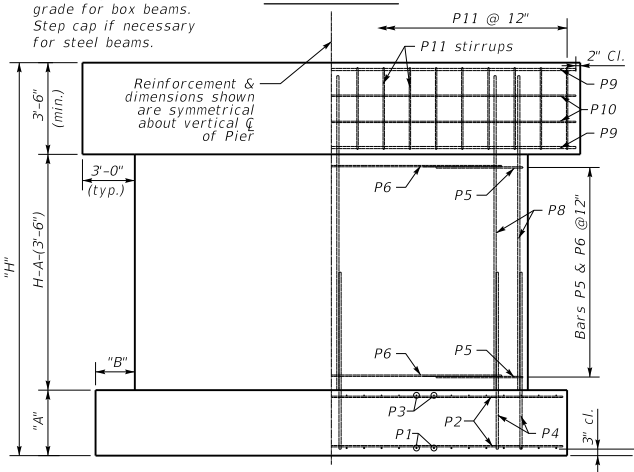

ELEVATION

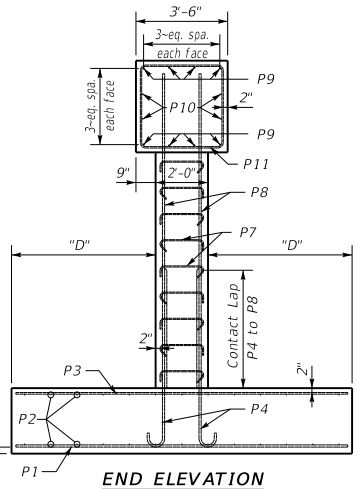

END ELEVATION

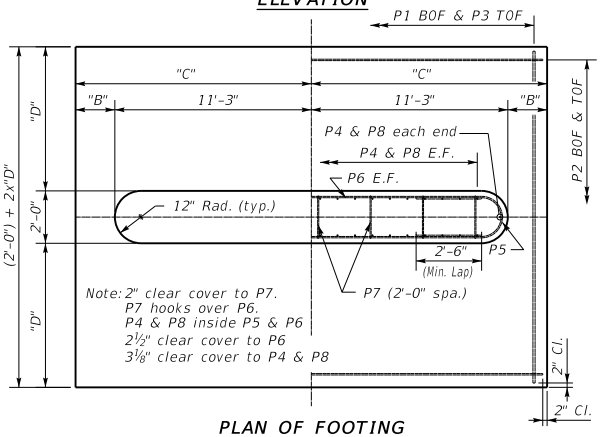

PLAN OF FOOTING

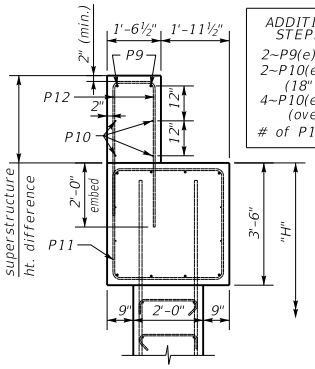

STEPPED CAP
(if necessary)

ADDITIONAL BARS FOR STEPPED PIER CAP
2~P9(e)'s
2~P10(e)'s
(18" to 28" ht. diff.)
4~P10(e)'s
(over 28" ht. diff.)
# of P12(e)=# of P11(e)

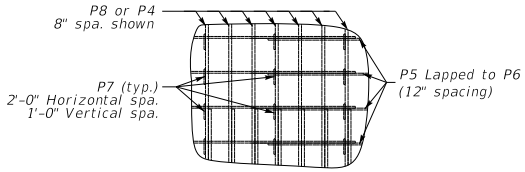

P7 BAR PLACEMENT
(alternate 90° & 135° bar ends)

GENERAL NOTES

SPECIFICATIONS: Construct piers according to the current edition of the Kentucky Department of Highways Standard Specifications for Road and Bridge Construction. Piers are designed for side by side box beams as detailed in Standard Drawings BDP-001 through BDP-012, current edition. They may be slightly modified to allow for 25'-6" rolled steel beam bridge width.

FOUNDATION PRESSURE: Construct pier footings on solid rock bearing material that can support a pressure of 8000 psf service or 10,800 psf strength factored as recommended by a geotechnical engineer.

DESIGN LOADS: Pier is designed for the CB42 beam superstructure with 3~97 foot spans. Pier is designed to handle a half a 97 foot span for thermal load with expansion bearings under the beams. Pier is designed for 100 mph wind. Wind on superstructure is for 1~97' span longitudinal and transverse. Pier is designed for stream flow of 10 ft./sec. up to the top of the pier. It is not designed for flow acting on the superstructure. Pier is not designed for earthquake loading.

DESIGN APPLICABILITY: Consult with a structural engineer to determine if these details are applicable for any particular project.

FOOTING ELEVATION: Construct bottom of footing below the anticipated scour elevation. (This typically entails embedding the footings 1'-0" to 2'-0" into rock and pouring concrete directly against cut rock faces as recommended by geotechnical engineer.)

NOTE: Distances to bars shown are clear dimensions unless otherwise noted.

MATERIAL SPECIFICATIONS:
Concrete, Class "A" = 3500 psi
Steel Reinforcement = Grade 60

KENTUCKY
DEPARTMENT OF HIGHWAYS

Standard Pier
15° Skew
24'-0"-25'-6" Bridge Width

STANDARD DRAWING NO. BSP-005

SUBMITTED _____ DIRECTOR DIVISION OF STRUCTURAL DESIGN — DATE 02-26-20

APPROVED _____ STATE HIGHWAY ENGINEER — DATE 02-26-20

15° SKEW 32'-0" - 33'-6" BRIDGE WIDTH (No Seismic Load)

Bill of Reinforcement

MARK	P1				P2				P3				P4								P5								P6				P7				P8				P9(e)				P10(e)				P11(e)			
TYPE	Str.				Str.				Str.				Type 4								Type 10								Str.				Type 31				Str.				Str.				Str.				Type 14			
SIZE																																	#4								#8				#5				#5			
H	No.	Size	Length ft.	Length in.	No.	Size	Length ft.	Length in.	No.	Size	Length ft.	Length in.	No.	Size	Length ft.	Length in.	Spacing	A ft.	A in.	B ft.	C ft.	C in.	D ft.	D in.	No.	Size	Length ft.	Length in.	Spacing	A ft.	A in.	No.	Size	Length ft.	Length in.	No.	Size	Length ft.	Length in.	No.	Size	Length ft.	Length in.	No.	Size	Length ft.	Length in.	No.	Size	Length ft.	Length in.
10-11	55	8	12	8	8	26	6	36	2	12	55	5	12	8	8	90	8	8	10	8	7	5	1	5	0	8	7	9	10	5	7	5	12	2	6	10	5	29	0	12	75	2	5	90	8	8	0	8	8	36	8	4	36	8	37	13	2
12-13	55	8	12	8	8	26	6	36	2	12	55	5	12	8	8	90	8	8	10	8	7	5	1	5	0	8	7	9	14	5	7	5	12	2	6	14	5	29	0	12	105	2	5	90	8	10	0	8	8	36	8	4	36	8	37	13	2
14-15	55	8	12	8	8	26	6	36	2	12	55	5	12	8	8	90	8	8	10	8	7	5	1	5	0	8	7	9	18	5	7	5	12	2	6	18	5	29	0	12	135	2	5	90	8	12	0	8	8	36	8	4	36	8	37	13	2
16-17	55	8	12	8	8	26	6	36	2	12	55	5	12	8	8	90	8	8	10	8	7	5	1	5	0	8	7	9	22	5	7	5	12	2	6	22	5	29	0	12	165	2	5	90	8	14	0	8	8	36	8	4	36	8	37	13	2
18-19	55	8	12	8	8	26	6	36	2	12	55	5	12	8	8	90	8	8	10	8	7	5	1	5	0	8	7	9	26	5	7	5	12	2	6	26	5	29	0	12	195	2	5	90	8	16	0	8	8	36	8	4	36	8	37	13	2
20-21	55	8	12	8	8	26	6	36	2	12	55	5	12	8	8	90	8	8	10	8	7	5	1	5	0	8	7	9	30	5	7	5	12	2	6	30	5	29	0	12	225	2	5	90	8	18	0	8	8	36	8	4	36	8	37	13	2
22-23	55	8	12	8	8	26	6	36	2	12	55	5	12	8	8	90	8	8	10	8	7	5	1	5	0	8	7	9	34	5	7	5	12	2	6	34	5	29	0	12	255	2	5	90	8	20	0	8	8	36	8	4	36	8	37	13	2
24-25	55	8	12	8	8	26	6	36	2	12	55	5	12	8	8	90	8	8	10	8	7	5	1	5	0	8	7	9	38	5	7	5	12	2	6	38	5	29	0	12	285	2	5	90	8	22	0	8	8	36	8	4	36	8	37	13	2

Reinforcement Details

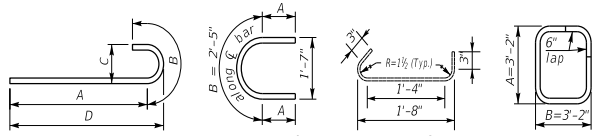

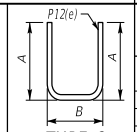

TYPE 2

(For Stepped Cap)
A=Ht. diff.-2" Cl.
+2'-0"emb.
B=1'-2½"

DIMENSIONS TABLE

H	A ft.	A in.	B ft.	B in.	C ft.	C in.	D ft.	D in.
10-11	2	6	2	9	18	3	5	6
12-13	2	6	2	9	18	3	5	6
14-15	2	6	2	9	18	3	5	6
16-17	2	6	2	9	18	3	5	6
18-19	2	6	2	9	18	3	5	6
20-21	2	6	2	9	18	3	5	6
22-23	2	6	2	9	18	3	5	6
24-25	2	6	2	9	18	3	5	6

QUANTITIES

H	CONCRETE CLASS "A" CU. YDS. (1)	STEEL REINFORCEMENT EPOXY COATED LBS.	STEEL REINFORCEMENT LBS.
10-11	72.9	1449	8570
12-13	77.4	1449	9253
14-15	82	1449	9936
16-17	86.5	1449	10619
18-19	91	1449	11302
20-21	95.5	1449	11985
22-23	100.1	1449	12668
24-25	104.6	1449	13351

Note: All bars in cap shall be epoxy coated.

Note: All concrete shall be Class "A"

(1) Quantity is based on taller height.
Reduce by 2.2 cubic yard for shorter height.

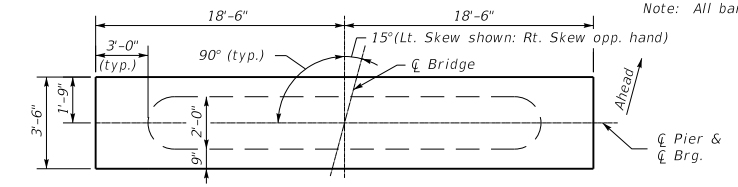

PLAN OF CAP

Note: Grade cap to roadway grade for box beams. Step cap if necessary for steel beams.

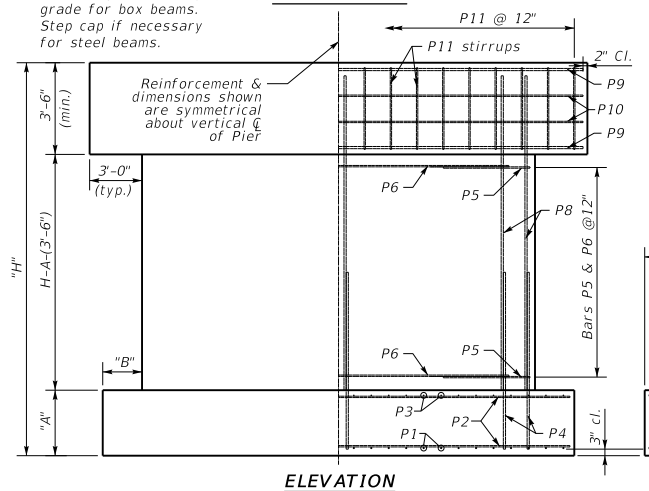

ELEVATION

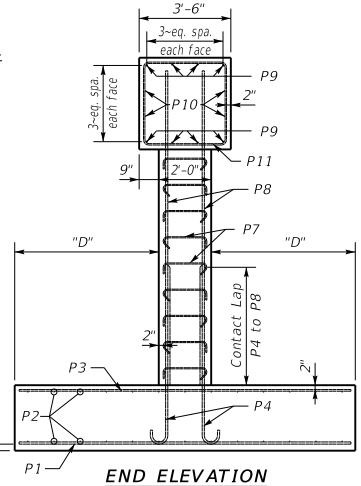

END ELEVATION

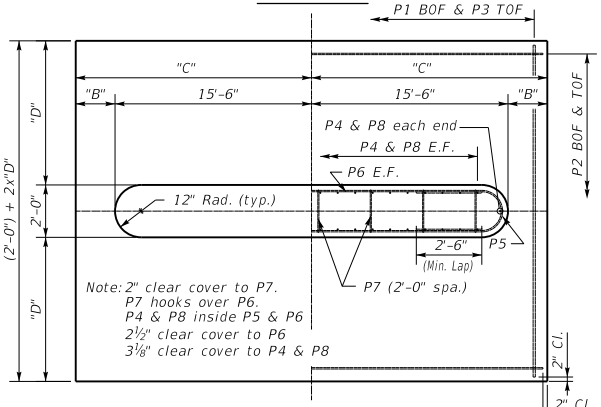

PLAN OF FOOTING

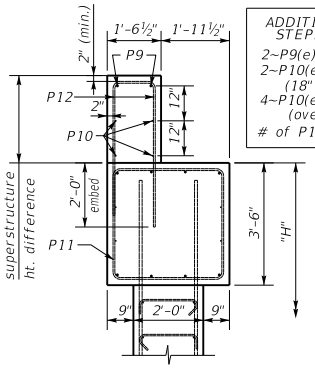

STEPPED CAP
(if necessary)

ADDITIONAL BARS FOR STEPPED PIER CAP
2~P9(e)'s
2~P10(e)'s
(18" to 28" ht. diff.)
4~P10(e)'s
(over 28" ht. diff.)
# of P12(e)=# of P11(e)

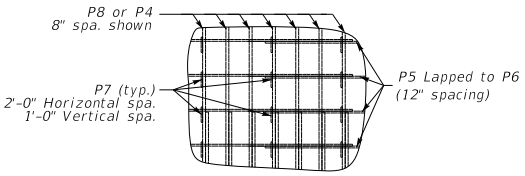

P7 BAR PLACEMENT
(alternate 90° & 135° bar ends)

GENERAL NOTES

SPECIFICATIONS: Construct piers according to the current edition of the Kentucky Department of Highways Standard Specifications for Road and Bridge Construction. Piers are designed for side by side box beams as detailed in Standard Drawings BDP-001 through BDP-012, current edition. They may be slightly modified to allow for 33'-6" rolled steel beam bridge width.

FOUNDATION PRESSURE: Construct pier footings on solid rock bearing material that can support a pressure of 8000 psf service or 10,800 psf strength factored as recommended by a geotechnical engineer.

DESIGN LOADS: Pier is designed for the CB42 beam superstructure with 3~97 foot spans. Pier is designed to handle a half a 97 foot span for thermal load with expansion bearings under the beams. Pier is designed for 100 mph wind. Wind on superstructure is for 1~97' span longitudinal and transverse. Pier is designed for stream flow of 10 ft./sec. up to the top of the pier. It is not designed for flow acting on the superstructure. Pier is not designed for earthquake loading.

DESIGN APPLICABILITY: Consult with a structural engineer to determine if these details are applicable for any particular project.

FOOTING ELEVATION: Construct bottom of footing below the anticipated scour elevation. (This typically entails embedding the footings 1'-0" to 2'-0" into rock and pouring concrete directly against cut rock faces as recommended by geotechnical engineer.)

NOTE: Distances to bars shown are clear dimensions unless otherwise noted.

MATERIAL SPECIFICATIONS:
Concrete, Class "A" = 3500 psi
Steel Reinforcement = Grade 60

KENTUCKY
DEPARTMENT OF HIGHWAYS

Standard Pier
15° Skew
32'-0"-33'-6" Bridge Width

STANDARD DRAWING NO. BSP-006

SUBMITTED _____ DIRECTOR DIVISION OF STRUCTURAL DESIGN — DATE 02-26-20

APPROVED _____ STATE HIGHWAY ENGINEER — DATE 02-26-20

30° SKEW 16'-0" - 17'-6" BRIDGE WIDTH (No Seismic Load)

Bill of Reinforcement

MARK	P1				P2				P3				P4								P5								P6				P7				P8				P9(e)				P10(e)				P11(e)			
TYPE	Str.				Str.				Str.				Type 4								Type 10								Str.				Type 31				Str.				Str.				Str.				Type 14			
SIZE																																	#4								#8				#5				#5			
H	No.	Size	Length ft.	Length in.	No.	Size	Length ft.	Length in.	No.	Size	Length ft.	Length in.	No.	Size	Length ft.	Length in.	A in.	B ft.	B in.	C ft.	C in.	D ft.	D in.	No.	Size	Length ft.	Length in.	A in.	No.	Size	Length ft.	Length in.	No.	Size	Length ft.	Length in.	No.	Size	Length ft.	Length in.	No.	Size	Length ft.	Length in.	No.	Size	Length ft.	Length in.	No.	Size	Length ft.	Length in.
10-11	32	8	12	2	8	26	5	21	2	12	32	5	12	2	8	48	8	8	10	8	7	5	1	5	0	8	7	9	10	5	7	5	12	2	6	10	5	15	0	12	40	2	5	48	8	8	0	8	8	23	8	4	23	8	24	13	2
12-13	32	8	12	2	8	26	5	21	2	12	32	5	12	2	8	48	8	8	10	8	7	5	1	5	0	8	7	9	14	5	7	5	12	2	6	14	5	15	0	12	56	2	5	48	8	10	0	8	8	23	8	4	23	8	24	13	2
14-15	32	8	12	2	8	26	5	21	2	12	32	5	12	2	8	48	8	8	10	8	7	5	1	5	0	8	7	9	18	5	7	5	12	2	6	18	5	15	0	12	72	2	5	48	8	12	0	8	8	23	8	4	23	8	24	13	2
16-17	32	8	12	2	8	26	5	21	2	12	32	5	12	2	8	48	8	8	10	8	7	5	1	5	0	8	7	9	22	5	7	5	12	2	6	22	5	15	0	12	88	2	5	48	8	14	0	8	8	23	8	4	23	8	24	13	2
18-19	32	8	12	2	8	26	5	21	2	12	32	5	12	2	8	48	8	8	10	8	7	5	1	5	0	8	7	9	26	5	7	5	12	2	6	26	5	15	0	12	104	2	5	48	8	16	0	8	8	23	8	4	23	8	24	13	2
20-21	32	8	12	2	8	26	5	21	2	12	32	5	12	2	8	48	8	8	10	8	7	5	1	5	0	8	7	9	30	5	7	5	12	2	6	30	5	15	0	12	120	2	5	48	8	18	0	8	8	23	8	4	23	8	24	13	2
22-23	32	8	12	2	8	26	5	21	2	12	32	5	12	2	8	48	8	8	10	8	7	5	1	5	0	8	7	9	34	5	7	5	12	2	6	34	5	15	0	12	136	2	5	48	8	20	0	8	8	23	8	4	23	8	24	13	2
24-25	32	8	12	2	8	26	5	21	2	12	32	5	12	2	8	48	8	8	10	8	7	5	1	5	0	8	7	9	38	5	7	5	12	2	6	38	5	15	0	12	152	2	5	48	8	22	0	8	8	23	8	4	23	8	24	13	2

Reinforcement Details

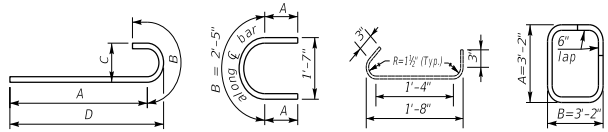

TYPE 4 — TYPE 10 (#5 bar) — TYPE 31 (#4 bar) — TYPE 14 (#5 bar)

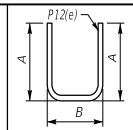

TYPE 2

(For Stepped Cap)
A=Ht. diff.-2" Cl. +2'-0"emb.
B=1'-2½"

DIMENSIONS TABLE

H	A ft.	A in.	B ft.	B in.	C ft.	C in.	D ft.	D in.
10-11	2	6	2	3	10	9	5	3
12-13	2	6	2	3	10	9	5	3
14-15	2	6	2	3	10	9	5	3
16-17	2	6	2	3	10	9	5	3
18-19	2	6	2	3	10	9	5	3
20-21	2	6	2	3	10	9	5	3
22-23	2	6	2	3	10	9	5	3
24-25	2	6	2	3	10	9	5	3

QUANTITIES

H	CONCRETE CLASS "A" CU. YDS. (1)	STEEL REINFORCEMENT EPOXY COATED LBS.	STEEL REINFORCEMENT LBS.
10-11	42.2	937	4489
12-13	44.7	937	4866
14-15	47.1	937	5242
16-17	49.6	937	5619
18-19	52.1	937	5996
20-21	54.5	937	6373
22-23	57	937	6750
24-25	59.4	937	7126

Note: All bars in cap shall be epoxy coated.

Note: All concrete shall be Class "A"

(1) Quantity is based on taller height. Reduce by 1.2 cubic yd. for shorter height.

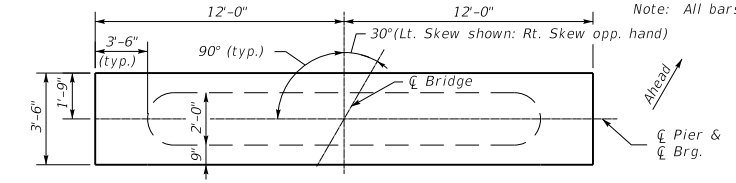

Note: Grade cap to roadway grade for box beams. Step cap if necessary for steel beams.

PLAN OF CAP

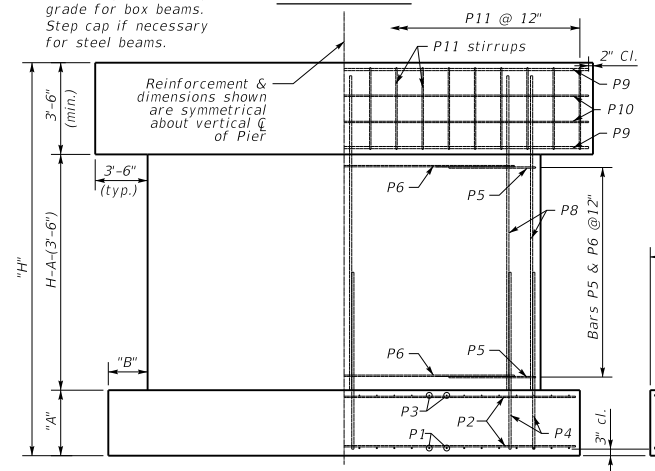

ELEVATION

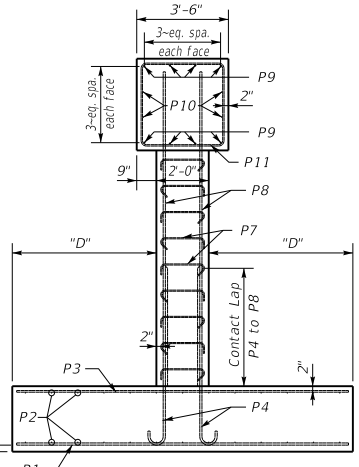

END ELEVATION

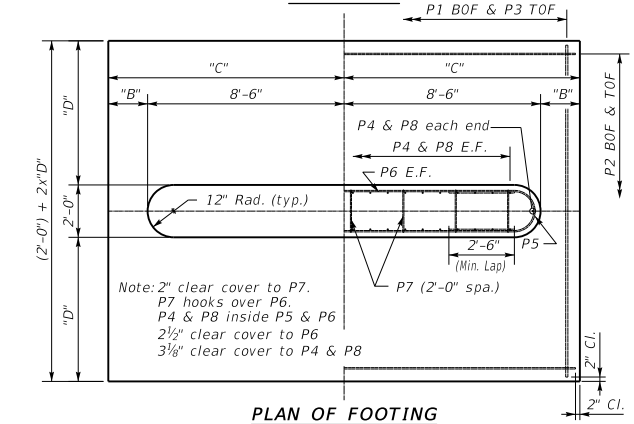

PLAN OF FOOTING

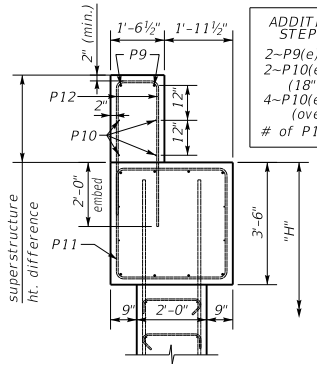

ADDITIONAL BARS FOR STEPPED PIER CAP
2~P9(e)'s
2~P10(e)'s
(18" to 28" ht. diff.)
4~P10(e)'s
(over 28" ht. diff.)
# of P12(e)=# of P11(e)

STEPPED CAP
(if necessary)

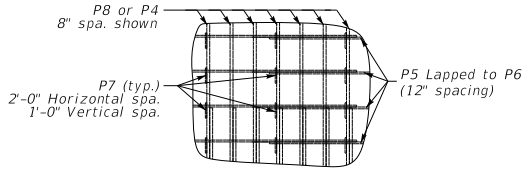

P7 BAR PLACEMENT
(alternate 90° & 135° bar ends)

GENERAL NOTES

SPECIFICATIONS: Construct piers according to the current edition of the Kentucky Department of Highways Standard Specifications for Road and Bridge Construction. Piers are designed for side by side box beams as detailed in Standard Drawings BDP-001 through BDP-012, current edition. They may be slightly modified to allow for 17'-6" rolled steel beam bridge width.

FOUNDATION PRESSURE: Construct pier footings on solid rock bearing material that can support a pressure of 8000 psf service or 10,800 psf strength factored as recommended by a geotechnical engineer.

DESIGN LOADS: Pier is designed for the CB42 beam superstructure with 3~97 foot spans. Pier is designed to handle a half a 97 foot span for thermal load with expansion bearings under the beams. Pier is designed for 100 mph wind. Wind on superstructure is for 1~97' span longitudinal and transverse. Pier is designed for stream flow of 10 ft./sec. up to the top of the pier. It is not designed for flow acting on the superstructure. Pier is not designed for earthquake loading.

DESIGN APPLICABILITY: Consult with a structural engineer to determine if these details are applicable for any particular project.

FOOTING ELEVATION: Construct bottom of footing below the anticipated scour elevation. (This typically entails embedding the footings 1'-0" to 2'-0" into rock and pouring concrete directly against cut rock faces as recommended by geotechnical engineer.)

NOTE: Distances to bars shown are clear dimensions unless otherwise noted.

MATERIAL SPECIFICATIONS:
Concrete, Class "A" = 3500 psi
Steel Reinforcement = Grade 60

KENTUCKY
DEPARTMENT OF HIGHWAYS

Standard Pier
30° Skew
16'-0"-17'-6" Bridge Width

STANDARD DRAWING NO. BSP-007

SUBMITTED _____ DIRECTOR DIVISION OF STRUCTURAL DESIGN — DATE 02-26-20

APPROVED _____ STATE HIGHWAY ENGINEER — DATE 02-26-20

30° SKEW 24'-0" - 25'-6" BRIDGE WIDTH (No Seismic Load)

Bill of Reinforcement

MARK	P1				P2				P3				P4								P5								P6				P7		P8			P9(e)		P10(e)		P11(e)	
TYPE	Str.				Str.				Str.				Type 4								Type 10								Str.				Type 31		Str.			Str.		Str.		Type 14	
SIZE																																	#4					#8		#5		#5	
H	No.	Size	Length ft.	Length in.	No.	Size	Length ft.	Length in.	No.	Size	Length ft.	Length in.	No.	Size	Length ft.	Length in.	A ft.	A in.	B ft.	B in.	C ft.	C in.	D ft.	D in.	No.	Size	Length ft.	Length in.	No.	Size	Length ft.	Length in.	No.	Length ft.	No.	Size	Length ft.	Spacing	No.	Length ft.	No.	Length ft.	No.	Length ft.
10-11	47	8	12	8	8	26	6	31	2	12	47	5	12	8	8	76	8	8	10	8	7	5	1	5	0	8	7	9	10	5	7	5	12	2	6	10	5	24	0	12	65	2	5	76	8	8	0	8	8	32	8	4	32	8	33	13	2
12-13	47	8	12	8	8	26	6	31	2	12	47	5	12	8	8	76	8	8	10	8	7	5	1	5	0	8	7	9	14	5	7	5	12	2	6	14	5	24	0	12	91	2	5	76	8	10	0	8	8	32	8	4	32	8	33	13	2
14-15	47	8	12	8	8	26	6	31	2	12	47	5	12	8	8	76	8	8	10	8	7	5	1	5	0	8	7	9	18	5	7	5	12	2	6	18	5	24	0	12	117	2	5	76	8	12	0	8	8	32	8	4	32	8	33	13	2
16-17	47	8	12	8	8	26	6	31	2	12	47	5	12	8	8	76	8	8	10	8	7	5	1	5	0	8	7	9	22	5	7	5	12	2	6	22	5	24	0	12	143	2	5	76	8	14	0	8	8	32	8	4	32	8	33	13	2
18-19	47	8	12	8	8	26	6	31	2	12	47	5	12	8	8	76	8	8	10	8	7	5	1	5	0	8	7	9	26	5	7	5	12	2	6	26	5	24	0	12	169	2	5	76	8	16	0	8	8	32	8	4	32	8	33	13	2
20-21	47	8	12	8	8	26	6	31	2	12	47	5	12	8	8	76	8	8	10	8	7	5	1	5	0	8	7	9	30	5	7	5	12	2	6	30	5	24	0	12	195	2	5	76	8	18	0	8	8	32	8	4	32	8	33	13	2
22-23	47	8	12	8	8	26	6	31	2	12	47	5	12	8	8	76	8	8	10	8	7	5	1	5	0	8	7	9	34	5	7	5	12	2	6	34	5	24	0	12	221	2	5	76	8	20	0	8	8	32	8	4	32	8	33	13	2
24-25	47	8	12	8	8	26	6	31	2	12	47	5	12	8	8	76	8	8	10	8	7	5	1	5	0	8	7	9	38	5	7	5	12	2	6	38	5	24	0	12	247	2	5	76	8	22	0	8	8	32	8	4	32	8	33	13	2

Reinforcement Details

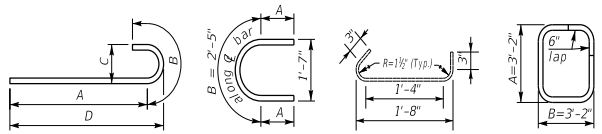

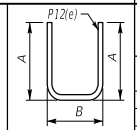

TYPE 2

(For Stepped Cap)
A=Ht. diff.-2" Cl.
+2'-0"emb.
B=1'-2½"

DIMENSIONS TABLE

H	A ft.	A in.	B ft.	B in.	C ft.	C in.	D ft.	D in.
10-11	2	6	2	9	15	9	5	6
12-13	2	6	2	9	15	9	5	6
14-15	2	6	2	9	15	9	5	6
16-17	2	6	2	9	15	9	5	6
18-19	2	6	2	9	15	9	5	6
20-21	2	6	2	9	15	9	5	6
22-23	2	6	2	9	15	9	5	6
24-25	2	6	2	9	15	9	5	6

QUANTITIES

H	CONCRETE CLASS "A" CU. YDS. (1)	STEEL REINFORCEMENT EPOXY COATED LBS.	STEEL REINFORCEMENT LBS.
10-11	63	1291	7298
12-13	66.8	1291	7878
14-15	70.5	1291	8459
16-17	74.3	1291	9039
18-19	78.1	1291	9620
20-21	81.9	1291	10200
22-23	85.7	1291	10781
24-25	89.5	1291	11362

Note: All bars in cap shall be epoxy coated.

Note: All concrete shall be Class "A"

(1) Quantity is based on taller height.
Reduce by 1.9 cubic yd. for shorter height.

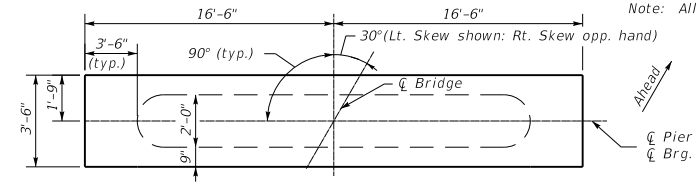

PLAN OF CAP

Note: Grade cap to roadway grade for box beams. Step cap if necessary for steel beams.

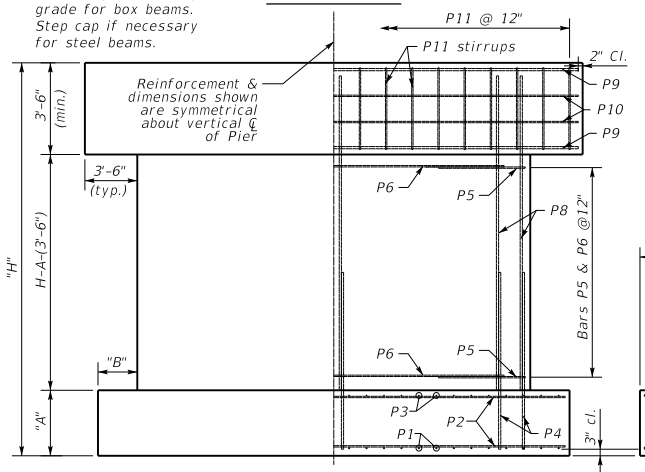

ELEVATION

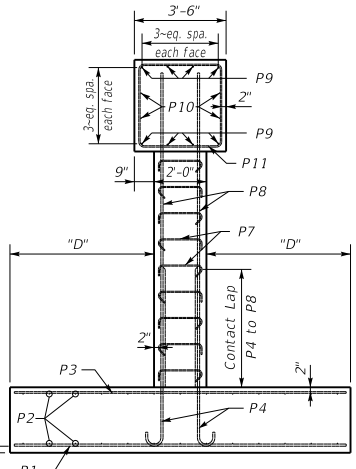

END ELEVATION

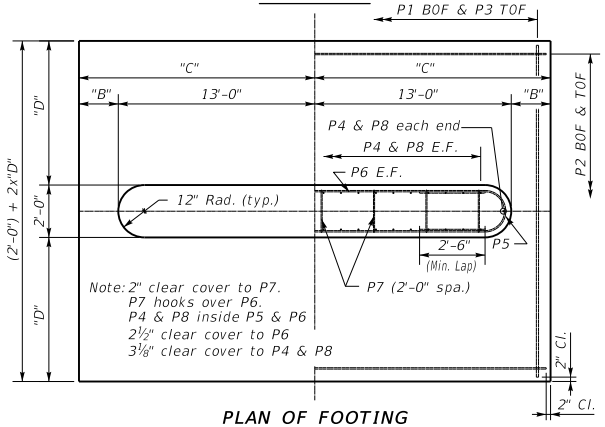

PLAN OF FOOTING

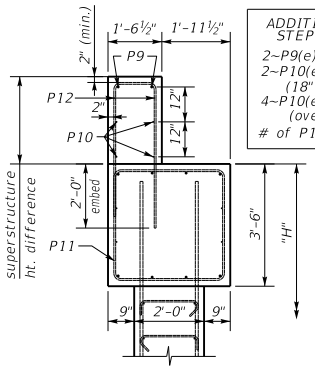

STEPPED CAP
(if necessary)

ADDITIONAL BARS FOR STEPPED PIER CAP
2~P9(e)'s
2~P10(e)'s
(18" to 28" ht. diff.)
4~P10(e)'s
(over 28" ht. diff.)
# of P12(e)=# of P11(e)

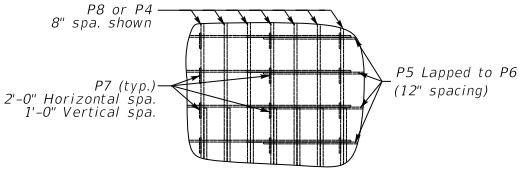

P7 BAR PLACEMENT
(alternate 90° & 135° bar ends)

GENERAL NOTES

SPECIFICATIONS: Construct piers according to the current edition of the Kentucky Department of Highways Standard Specifications for Road and Bridge Construction. Piers are designed for side by side box beams as detailed in Standard Drawings BDP-001 through BDP-012, current edition. They may be slightly modified to allow for 25'-6" rolled steel beam bridge width.

FOUNDATION PRESSURE: Construct pier footings on solid rock bearing material that can support a pressure of 8000 psf service or 10,800 psf strength factored as recommended by a geotechnical engineer.

DESIGN LOADS: Pier is designed for the CB42 beam superstructure with 3~97 foot spans. Pier is designed to handle a half a 97 foot span for thermal load with expansion bearings under the beams. Pier is designed for 100 mph wind. Wind on superstructure is for 1~97' span longitudinal and transverse. Pier is designed for stream flow of 10 ft./sec. up to the top of the pier. It is not designed for flow acting on the superstructure. Pier is not designed for earthquake loading.

DESIGN APPLICABILITY: Consult with a structural engineer to determine if these details are applicable for any particular project.

FOOTING ELEVATION: Construct bottom of footing below the anticipated scour elevation. (This typically entails embedding the footings 1'-0" to 2'-0" into rock and pouring concrete directly against cut rock faces as recommended by geotechnical engineer.)

NOTE: Distances to bars shown are clear dimensions unless otherwise noted.

MATERIAL SPECIFICATIONS:
Concrete, Class "A" = 3500 psi
Steel Reinforcement = Grade 60

KENTUCKY
DEPARTMENT OF HIGHWAYS

Standard Pier
30° Skew
24'-0"-25'-6" Bridge Width

STANDARD DRAWING NO. BSP-008

SUBMITTED _____ DIRECTOR DIVISION OF STRUCTURAL DESIGN — DATE 02-26-20

APPROVED _____ STATE HIGHWAY ENGINEER — DATE 02-26-20

30° SKEW 32'-0" - 33'-6" BRIDGE WIDTH (No Seismic Load)

Bill of Reinforcement

MARK	P1				P2				P3				P4								P5								P6				P7				P8				P9(e)				P10(e)				P11(e)			
TYPE	Str.				Str.				Str.				Type 4								Type 10								Str.				Type 31				Str.				Str.				Str.				Type 14			
SIZE																																	#4								#8				#5				#5			
H	No.	Size	Length ft.	Length in.	No.	Size	Length ft.	Length in.	No.	Size	Length ft.	Length in.	No.	Size	Length ft.	Length in.	A ft.	A in.	B ft.	B in.	C ft.	C in.	D ft.	D in.	No.	Size	Length ft.	Length in.	A ft.	A in.	No.	Size	Length ft.	Length in.	No.	Size	Length ft.	Length in.	No.	Size	Length ft.	Length in.	No.	Size	Length ft.	Length in.	No.	Size	Length ft.	Length in.	No.	Size	Length ft.	Length in.
10-11	61	8	12	8	8	26	6	40	2	12	61	5	12	8	8	104	8	8	10	8	7	5	1	5	0	8	7	9	10	5	7	5	12	2	6	10	5	33	6	12	85	2	5	104	8	8	0	8	8	42	2	4	42	2	42	13	2
12-13	61	8	12	8	8	26	6	40	2	12	61	5	12	8	8	104	8	8	10	8	7	5	1	5	0	8	7	9	14	5	7	5	12	2	6	14	5	33	6	12	119	2	5	104	8	10	0	8	8	42	2	4	42	2	42	13	2
14-15	61	8	12	8	8	26	6	40	2	12	61	5	12	8	8	104	8	8	10	8	7	5	1	5	0	8	7	9	18	5	7	5	12	2	6	18	5	33	6	12	153	2	5	104	8	12	0	8	8	42	2	4	42	2	42	13	2
16-17	61	8	12	8	8	26	6	40	2	12	61	5	12	8	8	104	8	8	10	8	7	5	1	5	0	8	7	9	22	5	7	5	12	2	6	22	5	33	6	12	187	2	5	104	8	14	0	8	8	42	2	4	42	2	42	13	2
18-19	61	8	12	8	8	26	6	40	2	12	61	5	12	8	8	104	8	8	10	8	7	5	1	5	0	8	7	9	26	5	7	5	12	2	6	26	5	33	6	12	221	2	5	104	8	16	0	8	8	42	2	4	42	2	42	13	2
20-21	61	8	12	8	8	26	6	40	2	12	61	5	12	8	8	104	8	8	10	8	7	5	1	5	0	8	7	9	30	5	7	5	12	2	6	30	5	33	6	12	255	2	5	104	8	18	0	8	8	42	2	4	42	2	42	13	2
22-23	61	8	12	8	8	26	6	40	2	12	61	5	12	8	8	104	8	8	10	8	7	5	1	5	0	8	7	9	34	5	7	5	12	2	6	34	5	33	6	12	289	2	5	104	8	20	0	8	8	42	2	4	42	2	42	13	2
24-25	61	8	12	8	8	26	6	40	2	12	61	5	12	8	8	104	8	8	10	8	7	5	1	5	0	8	7	9	38	5	7	5	12	2	6	38	5	33	6	12	323	2	5	104	8	22	0	8	8	42	2	4	42	2	42	13	2

Reinforcement Details

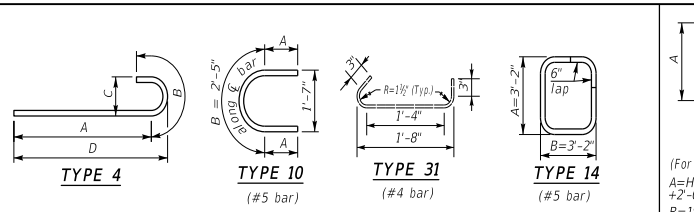

DIMENSIONS TABLE

H	A ft.	A in.	B ft.	B in.	C ft.	C in.	D ft.	D in.	H
10-11	2	6	2	6	20	3	5	6	10-11
12-13	2	6	2	6	20	3	5	6	12-13
14-15	2	6	2	6	20	3	5	6	14-15
16-17	2	6	2	6	20	3	5	6	16-17
18-19	2	6	2	6	20	3	5	6	18-19
20-21	2	6	2	6	20	3	5	6	20-21
22-23	2	6	2	6	20	3	5	6	22-23
24-25	2	6	2	6	20	3	5	6	24-25

QUANTITIES

H	CONCRETE CLASS "A" CU. YDS. (1)	STEEL REINFORCEMENT EPOXY COATED LBS.	STEEL REINFORCEMENT LBS.
10-11	82	1658	9704
12-13	87.2	1658	10487
14-15	92.4	1658	11271
16-17	97.6	1658	12054
18-19	102.8	1658	12837
20-21	108	1658	13620
22-23	113.2	1658	14404
24-25	118.4	1658	15187

Note: All bars in cap shall be epoxy coated.

Note: All concrete shall be Class "A"

(1) Quantity is based on taller height. Reduce by 2.6 cubic yd. for shorter height.

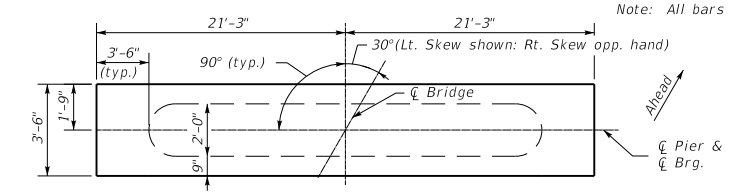

PLAN OF CAP

Note: Grade cap to roadway grade for box beams. Step cap if necessary for steel beams.

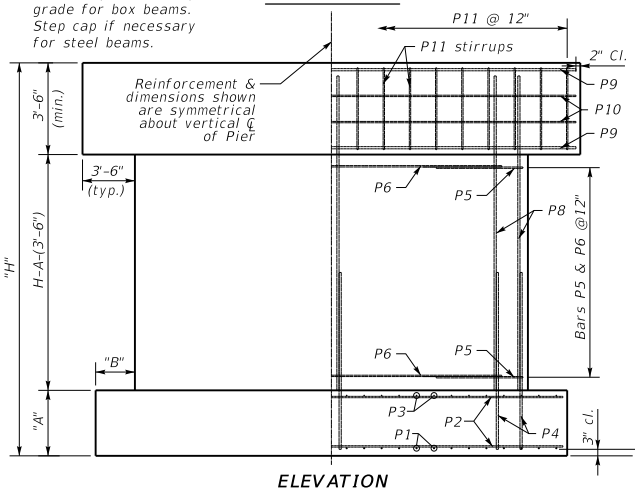

ELEVATION

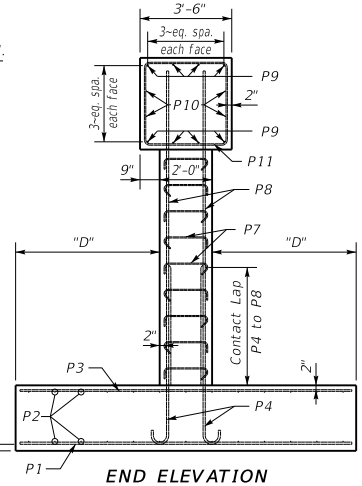

END ELEVATION

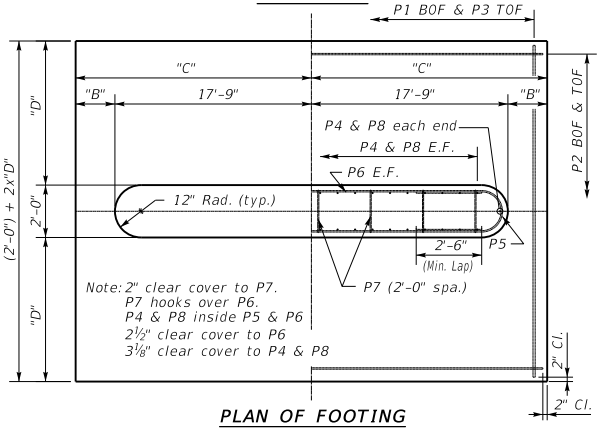

PLAN OF FOOTING

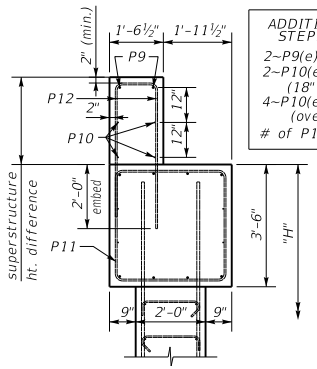

STEPPED CAP
(if necessary)

ADDITIONAL BARS FOR STEPPED PIER CAP
2~P9(e)'s
2~P10(e)'s
(18" to 28" ht. diff.)
4~P10(e)'s
(over 28" ht. diff.)
# of P12(e)=# of P11(e)

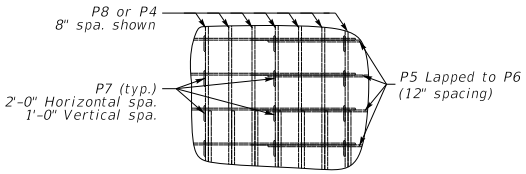

P7 BAR PLACEMENT
(alternate 90° & 135° bar ends)

GENERAL NOTES

SPECIFICATIONS: Construct piers according to the current edition of the Kentucky Department of Highways Standard Specifications for Road and Bridge Construction. Piers are designed for side by side box beams as detailed in Standard Drawings BDP-001 through BDP-012, current edition. They may be slightly modified to allow for 33'-6" rolled steel beam bridge width.

FOUNDATION PRESSURE: Construct pier footings on solid rock bearing material that can support a pressure of 8000 psf service or 10,800 psf strength factored as recommended by a geotechnical engineer.

DESIGN LOADS: Pier is designed for the CB42 beam superstructure with 3~97 foot spans. Pier is designed to handle a half a 97 foot span for thermal load with expansion bearings under the beams. Pier is designed for 100 mph wind. Wind on superstructure is for 1~97' span longitudinal and transverse. Pier is designed for stream flow of 10 ft./sec. up to the top of the pier. It is not designed for flow acting on the superstructure. Pier is not designed for earthquake loading.

DESIGN APPLICABILITY: Consult with a structural engineer to determine if these details are applicable for any particular project.

FOOTING ELEVATION: Construct bottom of footing below the anticipated scour elevation. (This typically entails embedding the footings 1'-0" to 2'-0" into rock and pouring concrete directly against cut rock faces as recommended by geotechnical engineer.)

NOTE: Distances to bars shown are clear dimensions unless otherwise noted.

MATERIAL SPECIFICATIONS:
Concrete, Class "A" = 3500 psi
Steel Reinforcement = Grade 60

KENTUCKY
DEPARTMENT OF HIGHWAYS

Standard Pier
30° Skew
32'-0"-33'-6" Bridge Width

STANDARD DRAWING NO. BSP-009

SUBMITTED _____ DIRECTOR DIVISION OF STRUCTURAL DESIGN — DATE 02-26-20

APPROVED _____ STATE HIGHWAY ENGINEER — DATE 02-26-20

45° SKEW 16'-0" - 17'-6" BRIDGE WIDTH (No Seismic Load)

Bill of Reinforcement

MARK	P1				P2				P3				P4								P5								P6				P7		P8				P9(e)		P10(e)		P11(e)	
TYPE	Str.				Str.				Str.				Type 4								Type 10								Str.				Type 31		Str.				Str.		Str.		Type 14	
SIZE																																	#4						#8		#5		#5	
H	No.	Size	Length ft.	Length in.	No.	Size	Length ft.	Length in.	No.	Size	Length ft.	Length in.	No.	Size	Length ft.	Length in.	A in.	B ft.	B in.	C ft.	C in.	D ft.	D in.	No.	Size	Length ft.	Length in.	A in.	No.	Size	Length ft.	Length in.	No.	Size	Length ft.	Length in.	No.	Size	Length ft.	Length in.	No.	Length ft.	Length in.	No.	Length ft.	Length in.
10-11	40	7	10	8	8	22	6	26	8	12	40	5	10	8	8	62	8	8	10	8	7	5	1	5	0	8	7	9	10	5	7	5	12	2	6	50	2	5	62	8	8	0	8	8	29	2	4	29	2	29	13	2
12-13	40	7	10	8	8	22	6	26	8	12	40	5	10	8	8	62	8	8	10	8	7	5	1	5	0	8	7	9	14	5	7	5	12	2	6	70	2	5	62	8	10	0	8	8	29	2	4	29	2	29	13	2
14-15	40	7	10	8	8	22	6	26	8	12	40	5	10	8	8	62	8	8	10	8	7	5	1	5	0	8	7	9	18	5	7	5	12	2	6	90	2	5	62	8	12	0	8	8	29	2	4	29	2	29	13	2
16-17	40	7	10	8	8	22	6	26	8	12	40	5	10	8	8	62	8	8	10	8	7	5	1	5	0	8	7	9	22	5	7	5	12	2	6	110	2	5	62	8	14	0	8	8	29	2	4	29	2	29	13	2
18-19	40	7	10	8	8	22	6	26	8	12	40	5	10	8	8	62	8	8	10	8	7	5	1	5	0	8	7	9	26	5	7	5	12	2	6	130	2	5	62	8	16	0	8	8	29	2	4	29	2	29	13	2
20-21	40	7	10	8	8	22	6	26	8	12	40	5	10	8	8	62	8	8	10	8	7	5	1	5	0	8	7	9	30	5	7	5	12	2	6	150	2	5	62	8	18	0	8	8	29	2	4	29	2	29	13	2
22-23	40	7	10	8	8	22	6	26	8	12	40	5	10	8	8	62	8	8	10	8	7	5	1	5	0	8	7	9	34	5	7	5	12	2	6	34	5	19	6	12	170	2	5	62	8	20	0	8	8	29	2	4	29	2	29	13	2
24-25	40	7	10	8	8	22	6	26	8	12	40	5	10	8	8	62	8	8	10	8	7	5	1	5	0	8	7	9	38	5	7	5	12	2	6	38	5	19	6	12	190	2	5	62	8	22	0	8	8	29	2	4	29	2	29	13	2

Reinforcement Details

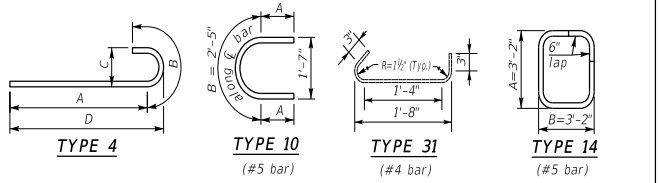

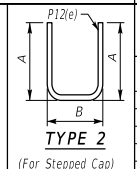

DIMENSIONS TABLE

H	A ft.	A in.	B ft.	B in.	C ft.	C in.	D ft.	D in.
10-11	2	6	2	9	13	6	4	6
12-13	2	6	2	9	13	6	4	6
14-15	2	6	2	9	13	6	4	6
16-17	2	6	2	9	13	6	4	6
18-19	2	6	2	9	13	6	4	6
20-21	2	6	2	9	13	6	4	6
22-23	2	6	2	9	13	6	4	6
24-25	2	6	2	9	13	6	4	6

QUANTITIES

H	CONCRETE CLASS "A" CU. YDS. (1)	STEEL REINFORCEMENT EPOXY COATED LBS.	STEEL REINFORCEMENT LBS.
10-11	49.1	1146	5362
12-13	52.2	1146	5839
14-15	55.3	1146	6317
16-17	58.5	1146	6794
18-19	61.6	1146	7271
20-21	64.7	1146	7748
22-23	67.8	1146	8225
24-25	70.9	1146	8692

Note: All bars in cap shall be epoxy coated.

Note: All concrete shall be Class "A"

(1) Quantity is based on taller height. Reduce by 1.5 cubic yd. for shorter height.

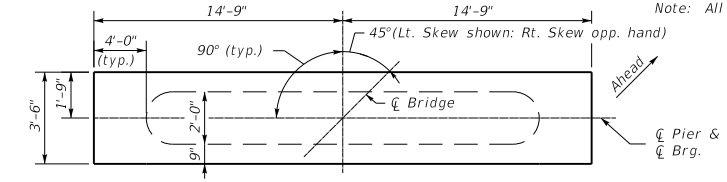

PLAN OF CAP

Note: Grade cap to roadway grade for box beams. Step cap if necessary for steel beams.

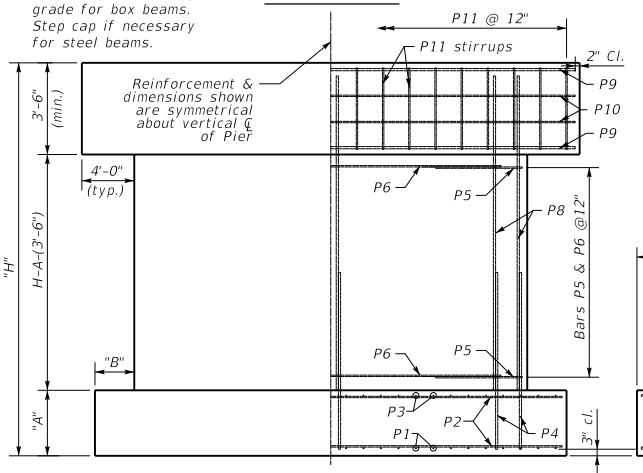

ELEVATION

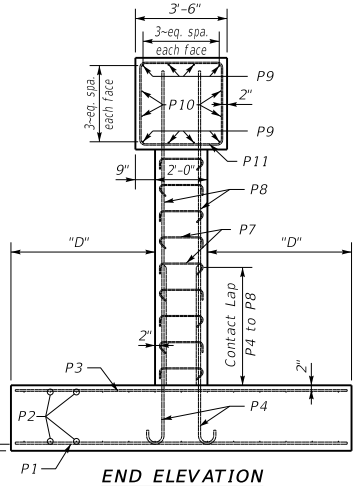

END ELEVATION

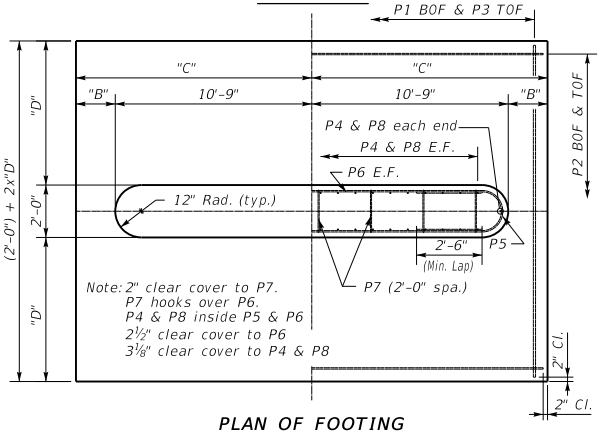

PLAN OF FOOTING

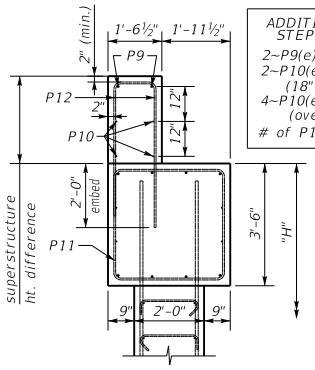

STEPPED CAP
(if necessary)

ADDITIONAL BARS FOR STEPPED PIER CAP
2~P9(e)'s
2~P10(e)'s
(18" to 28" ht. diff.)
4~P10(e)'s
(over 28" ht. diff.)
# of P12(e)=# of P11(e)

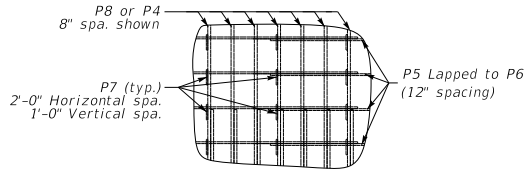

P7 BAR PLACEMENT
(alternate 90° & 135° bar ends)

GENERAL NOTES

SPECIFICATIONS: Construct piers according to the current edition of the Kentucky Department of Highways Standard Specifications for Road and Bridge Construction. Piers are designed for side by side box beams as detailed in Standard Drawings BDP-001 through BDP-012, current edition. They may be slightly modified to allow for 17'-6" rolled steel beam bridge width.

FOUNDATION PRESSURE: Construct pier footings on solid rock bearing material that can support a pressure of 8000 psf service or 10,800 psf strength factored as recommended by a geotechnical engineer.

DESIGN LOADS: Pier is designed for the CB42 beam superstructure with 3~97 foot spans. Pier is designed to handle a half a 97 foot span for thermal load with expansion bearings under the beams. Pier is designed for 100 mph wind. Wind on superstructure is for 1~97' span longitudinal and transverse. Pier is designed for stream flow of 10 ft./sec. up to the top of the pier. It is not designed for flow acting on the superstructure. Pier is not designed for earthquake loading.

DESIGN APPLICABILITY: Consult with a structural engineer to determine if these details are applicable for any particular project.

FOOTING ELEVATION: Construct bottom of footing below the anticipated scour elevation. (This typically entails embedding the footings 1'-0" to 2'-0" into rock and pouring concrete directly against cut rock faces as recommended by geotechnical engineer.)

NOTE: Distances to bars shown are clear dimensions unless otherwise noted.

MATERIAL SPECIFICATIONS:
Concrete, Class "A" = 3500 psi
Steel Reinforcement = Grade 60

KENTUCKY
DEPARTMENT OF HIGHWAYS

Standard Pier
45° Skew
16'-0"-17'-6" Bridge Width

STANDARD DRAWING NO. BSP-010

SUBMITTED _____ DIRECTOR DIVISION OF STRUCTURAL DESIGN — DATE 02-26-20

APPROVED _____ STATE HIGHWAY ENGINEER — DATE 02-26-20

45° SKEW 24'-0" - 25'-6" BRIDGE WIDTH (No Seismic Load)

Bill of Reinforcement

MARK	P1				P2				P3				P4								P5								P6				P7				P8				P9(e)				P10(e)				P11(e)			
TYPE	Str.				Str.				Str.				Type 4								Type 10								Str.				Type 31				Str.				Str.				Str.				Type 14			
SIZE																																	#4								#8				#5				#5			
H	No.	Size	Length ft.	Length in.	No.	Size	Length ft.	Length in.	No.	Size	Length ft.	Length in.	No.	Size	Length ft.	Length in.	Spacing	A ft.	A in.	B ft.	B in.	C ft.	C in.	D ft.	D in.	No.	Size	Length ft.	Length in.	Spacing	A in.	No.	Size	Length ft.	Length in.	No.	Size	Length ft.	Length in.	No.	Size	Length ft.	Length in.	No.	Size	Length ft.	Length in.	No.	Size	Length ft.	Length in.
10-11	56	7	12	2	8	26	6	37	2	12	56	5	12	2	8	94	8	8	10	8	7	5	1	5	0	8	7	9	10	5	7	5	12	2	6	10	5	30	6	12	80	2	5	94	8	8	0	8	8	40	2	4	40	2	40	13	2
12-13	56	7	12	2	8	26	6	37	2	12	56	5	12	2	8	94	8	8	10	8	7	5	1	5	0	8	7	9	14	5	7	5	12	2	6	14	5	30	6	12	112	2	5	94	8	10	0	8	8	40	2	4	40	2	40	13	2
14-15	56	7	12	2	8	26	6	37	2	12	56	5	12	2	8	94	8	8	10	8	7	5	1	5	0	8	7	9	18	5	7	5	12	2	6	18	5	30	6	12	144	2	5	94	8	12	0	8	8	40	2	4	40	2	40	13	2
16-17	56	7	12	2	8	26	6	37	2	12	56	5	12	2	8	94	8	8	10	8	7	5	1	5	0	8	7	9	22	5	7	5	12	2	6	22	5	30	6	12	176	2	5	94	8	14	0	8	8	40	2	4	40	2	40	13	2
18-19	56	7	12	2	8	26	6	37	2	12	56	5	12	2	8	94	8	8	10	8	7	5	1	5	0	8	7	9	26	5	7	5	12	2	6	26	5	30	6	12	208	2	5	94	8	16	0	8	8	40	2	4	40	2	40	13	2
20-21	56	7	12	2	8	26	6	37	2	12	56	5	12	2	8	94	8	8	10	8	7	5	1	5	0	8	7	9	30	5	7	5	12	2	6	30	5	30	6	12	240	2	5	94	8	18	0	8	8	40	2	4	40	2	40	13	2
22-23	56	7	12	2	8	26	6	37	2	12	56	5	12	2	8	94	8	8	10	8	7	5	1	5	0	8	7	9	34	5	7	5	12	2	6	34	5	30	6	12	272	2	5	94	8	20	0	8	8	40	2	4	40	2	40	13	2
24-25	56	7	12	2	8	26	6	37	2	12	56	5	12	2	8	94	8	8	10	8	7	5	1	5	0	8	7	9	38	5	7	5	12	2	6	38	5	30	6	12	304	2	5	94	8	22	0	8	8	40	2	4	40	2	40	13	2

Reinforcement Details

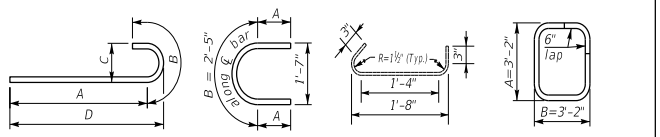

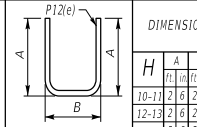

DIMENSIONS TABLE

H	A ft.	A in.	B ft.	B in.	C ft.	C in.	D ft.	D in.
10-11	2	6	2	6	18	9	5	3
12-13	2	6	2	6	18	9	5	3
14-15	2	6	2	6	18	9	5	3
16-17	2	6	2	6	18	9	5	3
18-19	2	6	2	6	18	9	5	3
20-21	2	6	2	6	18	9	5	3
22-23	2	6	2	6	18	9	5	3
24-25	2	6	2	6	18	9	5	3

QUANTITIES

H	CONCRETE CLASS "A" CU. YDS. (1)	STEEL REINFORCEMENT EPOXY COATED LBS.	STEEL REINFORCEMENT LBS.
10-11	74.4	1580	8329
12-13	79.2	1580	9049
14-15	83.9	1580	9757
16-17	88.7	1580	10471
18-19	93.4	1580	11184
20-21	98.2	1580	11898
22-23	102.9	1580	12612
24-25	107.7	1580	13326

Note: All bars in cap shall be epoxy coated.

Note: All concrete shall be Class "A"

(1) Quantity is based on taller height. Reduce by 2.3 cubic yd. for shorter height.

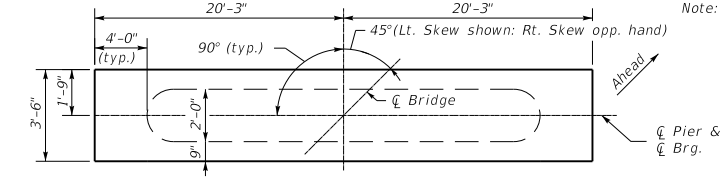

PLAN OF CAP

Note: Grade cap to roadway grade for box beams. Step cap if necessary for steel beams.

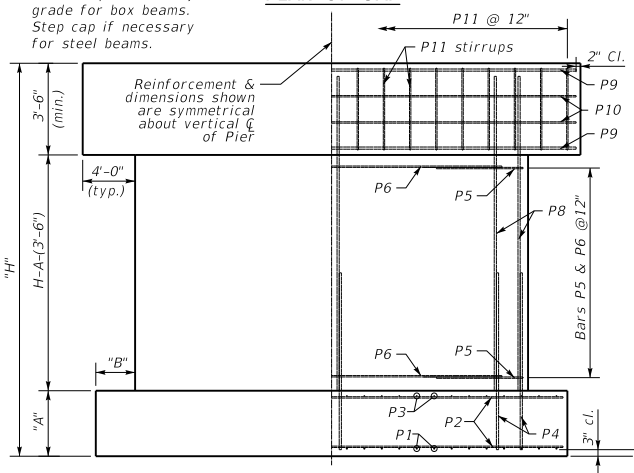

ELEVATION

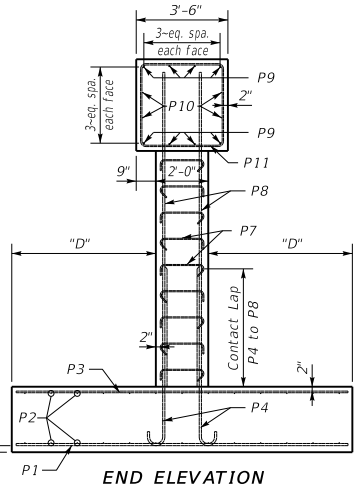

END ELEVATION

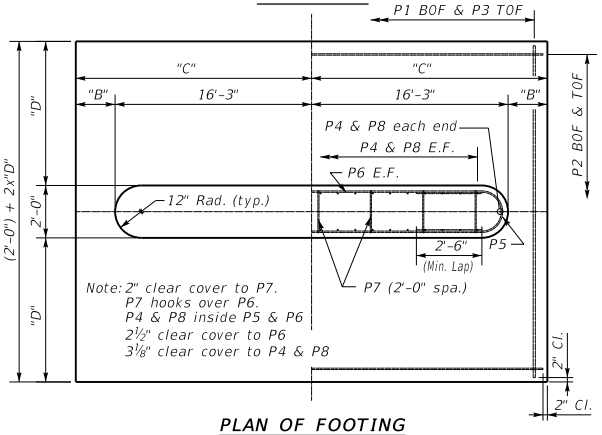

PLAN OF FOOTING

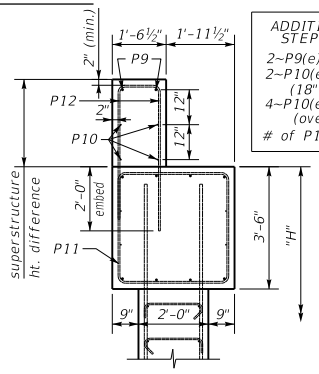

STEPPED CAP
(if necessary)

ADDITIONAL BARS FOR STEPPED PIER CAP
2~P9(e)'s
2~P10(e)'s
(18" to 28" ht. diff.)
4~P10(e)'s
(over 28" ht. diff.)
# of P12(e)=# of P11(e)

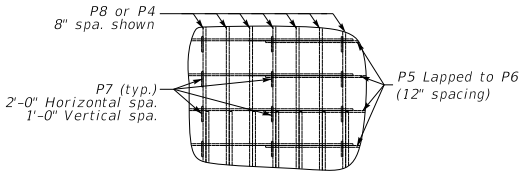

P7 BAR PLACEMENT
(alternate 90° & 135° bar ends)

GENERAL NOTES

SPECIFICATIONS: Construct piers according to the current edition of the Kentucky Department of Highways Standard Specifications for Road and Bridge Construction. Piers are designed for side by side box beams as detailed in Standard Drawings BDP-001 through BDP-012, current edition. They may be slightly modified to allow for 25'-6" rolled steel beam bridge width.

FOUNDATION PRESSURE: Construct pier footings on solid rock bearing material that can support a pressure of 8000 psf service or 10,800 psf strength factored as recommended by a geotechnical engineer.

DESIGN LOADS: Pier is designed for the CB42 beam superstructure with 3~97 foot spans. Pier is designed to handle a half a 97 foot span for thermal load with expansion bearings under the beams. Pier is designed for 100 mph wind. Wind on superstructure is for 1~97' span longitudinal and transverse. Pier is designed for stream flow of 10 ft./sec. up to the top of the pier. It is not designed for flow acting on the superstructure. Pier is not designed for earthquake loading.

DESIGN APPLICABILITY: Consult with a structural engineer to determine if these details are applicable for any particular project.

FOOTING ELEVATION: Construct bottom of footing below the anticipated scour elevation. (This typically entails embedding the footings 1'-0" to 2'-0" into rock and pouring concrete directly against cut rock faces as recommended by geotechnical engineer.)

NOTE: Distances to bars shown are clear dimensions unless otherwise noted.

MATERIAL SPECIFICATIONS:
Concrete, Class "A" = 3500 psi
Steel Reinforcement = Grade 60

KENTUCKY
DEPARTMENT OF HIGHWAYS

Standard Pier
45° Skew
24'-0"-25'-6" Bridge Width

STANDARD DRAWING NO. BSP-011

SUBMITTED _____ DIRECTOR DIVISION OF STRUCTURAL DESIGN — DATE 02-26-20

APPROVED _____ STATE HIGHWAY ENGINEER — DATE 02-26-20

45° SKEW 32'-0" - 33'-6" BRIDGE WIDTH (No Seismic Load)

Bill of Reinforcement

MARK	P1				P2				P3				P4								P5								P6				P7		P8				P9(e)		P10(e)		P11(e)	
TYPE	Str.				Str.				Str.				Type 4								Type 10								Str.				Type 31		Str.				Str.		Str.		Type 14	
SIZE																																	#4						#8		#5		#5	
H	No.	Size	Length ft.	Length in.	No.	Size	Length ft.	Length in.	No.	Size	Length ft.	Length in.	No.	Size	Length ft.	Length in.	Spacing	A ft.	A in.	B ft.	C ft.	C in.	D ft.	D in.	No.	Size	Length ft.	Length in.	Spacing	A ft.	A in.	No.	Size	Length ft.	Length in.	No.	Size	Length ft.	Length in.	No.	Length ft.	Length in.	No.	Length ft.	Length in.
10-11	72	7	12	8	26	5	47	8	12	72	5	12	8	8	126	8	10	8	7	5	1	5	0	8	7	9	10	5	7	5	12	2	6	10	5	41	0	12	105	2	5	126	8	8	0	8	8	51	2	4	51	2	51	13	2
12-13	72	7	12	8	26	5	47	8	12	72	5	12	8	8	126	8	10	8	7	5	1	5	0	8	7	9	14	5	7	5	12	2	6	14	5	41	0	12	147	2	5	126	8	10	0	8	8	51	2	4	51	2	51	13	2
14-15	72	7	12	8	26	5	47	8	12	72	5	12	8	8	126	8	10	8	7	5	1	5	0	8	7	9	18	5	7	5	12	2	6	18	5	41	0	12	189	2	5	126	8	12	0	8	8	51	2	4	51	2	51	13	2
16-17	72	7	12	8	26	5	47	8	12	72	5	12	8	8	126	8	10	8	7	5	1	5	0	8	7	9	22	5	7	5	12	2	6	22	5	41	0	12	231	2	5	126	8	14	0	8	8	51	2	4	51	2	51	13	2
18-19	72	7	12	8	26	5	47	8	12	72	5	12	8	8	126	8	10	8	7	5	1	5	0	8	7	9	26	5	7	5	12	2	6	26	5	41	0	12	273	2	5	126	8	16	0	8	8	51	2	4	51	2	51	13	2
20-21	72	7	12	8	26	5	47	8	12	72	5	12	8	8	126	8	10	8	7	5	1	5	0	8	7	9	30	5	7	5	12	2	6	30	5	41	0	12	315	2	5	126	8	18	0	8	8	51	2	4	51	2	51	13	2
22-23	72	7	12	8	26	5	47	8	12	72	5	12	8	8	126	8	10	8	7	5	1	5	0	8	7	9	34	5	7	5	12	2	6	34	5	41	0	12	357	2	5	126	8	20	0	8	8	51	2	4	51	2	51	13	2
24-25	72	7	12	8	26	5	47	8	12	72	5	12	8	8	126	8	10	8	7	5	1	5	0	8	7	9	38	5	7	5	12	2	6	38	5	41	0	12	399	2	5	126	8	22	0	8	8	51	2	4	51	2	51	13	2

Reinforcement Details

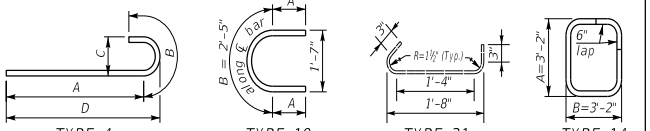

TYPE 4 — TYPE 10 (#5 bar) — TYPE 31 (#4 bar) — TYPE 14 (#5 bar)

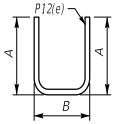

TYPE 2

(For Stepped Cap)
A=Ht. diff.-2" Cl. +2'-0"emb.
B=1'-2½"

DIMENSIONS TABLE

H	A ft.	A in.	B ft.	B in.	C ft.	C in.	D ft.	D in.
10-11	2	6	2	6	24	0	5	6
12-13	2	6	2	6	24	0	5	6
14-15	2	6	2	6	24	0	5	6
16-17	2	6	2	6	24	0	5	6
18-19	2	6	2	6	24	0	5	6
20-21	2	6	2	6	24	0	5	6
22-23	2	6	2	6	24	0	5	6
24-25	2	6	2	6	24	0	5	6

QUANTITIES

H	CONCRETE CLASS "A" CU. YDS. (1)	STEEL REINFORCEMENT EPOXY COATED LBS.	STEEL REINFORCEMENT LBS.
10-11	98.1	2013	10477
12-13	104.4	2013	11422
14-15	110.7	2013	12367
16-17	117	2013	13313
18-19	123.4	2013	14278
20-21	129.7	2013	15204
22-23	136	2013	16149
24-25	142.3	2013	17094

Note: All bars in cap shall be epoxy coated.

Note: All concrete shall be Class "A"

(1) Quantity is based on taller height. Reduce by 3.1 cubic yd. for shorter height.

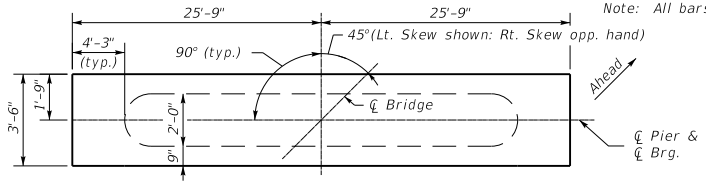

PLAN OF CAP

Note: Grade cap to roadway grade for box beams. Step cap if necessary for steel beams.

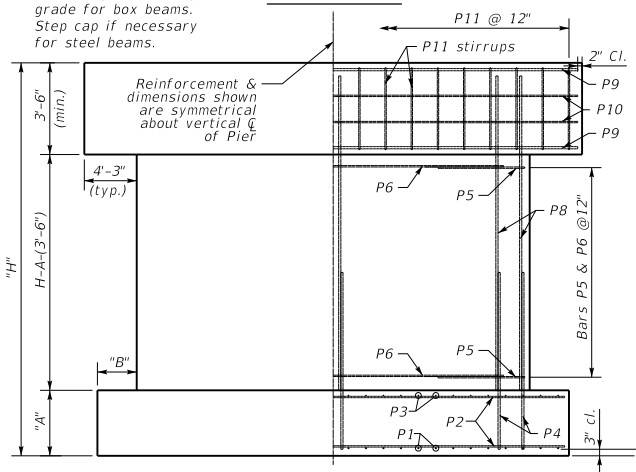

ELEVATION

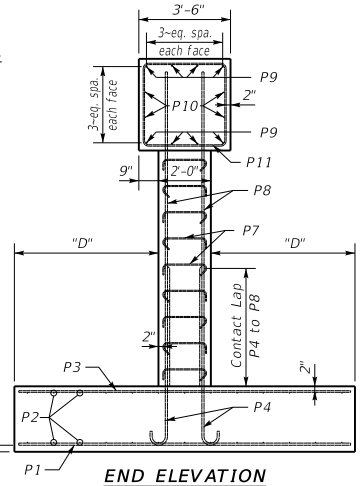

END ELEVATION

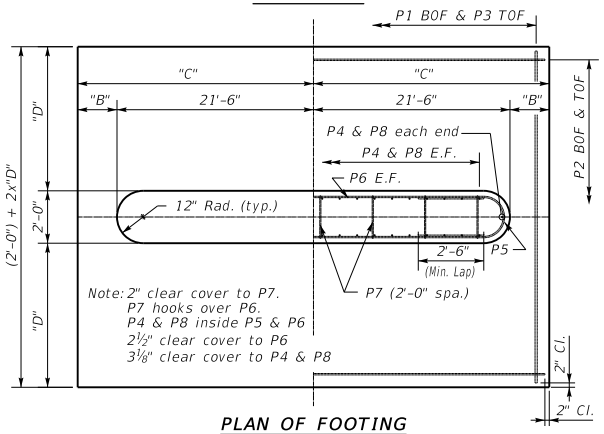

PLAN OF FOOTING

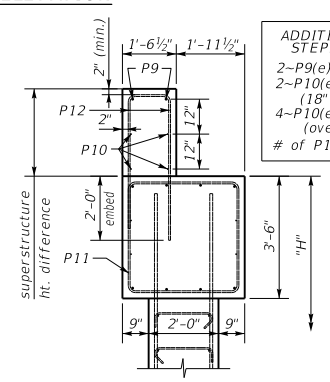

STEPPED CAP
(if necessary)

ADDITIONAL BARS FOR STEPPED PIER CAP
2~P9(e)'s
2~P10(e)'s
(18" to 28" ht. diff.)
4~P10(e)'s
(over 28" ht. diff.)
# of P12(e)=# of P11(e)

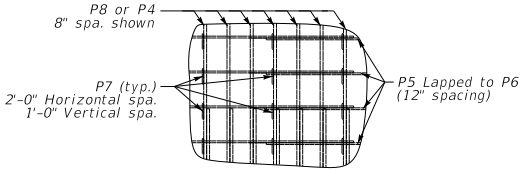

P7 BAR PLACEMENT
(alternate 90° & 135° bar ends)

GENERAL NOTES

SPECIFICATIONS: Construct piers according to the current edition of the Kentucky Department of Highways Standard Specifications for Road and Bridge Construction. Piers are designed for side by side box beams as detailed in Standard Drawings BDP-001 through BDP-012, current edition. They may be slightly modified to allow for 33'-6" rolled steel beam bridge width.

FOUNDATION PRESSURE: Construct pier footings on solid rock bearing material that can support a pressure of 8000 psf service or 10,800 psf strength factored as recommended by a geotechnical engineer.

DESIGN LOADS: Pier is designed for the CB42 beam superstructure with 3~97 foot spans. Pier is designed to handle a half a 97 foot span for thermal load with expansion bearings under the beams. Pier is designed for 100 mph wind. Wind on superstructure is for 1~97' span longitudinal and transverse. Pier is designed for stream flow of 10 ft./sec. up to the top of the pier. It is not designed for flow acting on the superstructure. Pier is not designed for earthquake loading.

DESIGN APPLICABILITY: Consult with a structural engineer to determine if these details are applicable for any particular project.

FOOTING ELEVATION: Construct bottom of footing below the anticipated scour elevation. (This typically entails embedding the footings 1'-0" to 2'-0" into rock and pouring concrete directly against cut rock faces as recommended by geotechnical engineer.)

NOTE: Distances to bars shown are clear dimensions unless otherwise noted.

MATERIAL SPECIFICATIONS:
Concrete, Class "A" = 3500 psi
Steel Reinforcement = Grade 60

KENTUCKY
DEPARTMENT OF HIGHWAYS

Standard Pier
45° Skew
32'-0"-33'-6" Bridge Width

STANDARD DRAWING NO. BSP-012

SUBMITTED _____ DIRECTOR DIVISION OF STRUCTURAL DESIGN — DATE 02-26-20

APPROVED _____ STATE HIGHWAY ENGINEER — DATE 02-26-20