0° SKEW VARIABLE BRIDGE WIDTH 2:1 FILL SLOPES
45° SKEW FROM ROADWAY ON WINGS

ABUTMENT SKEW CORRECTION FACTOR (SCF) = 1.000

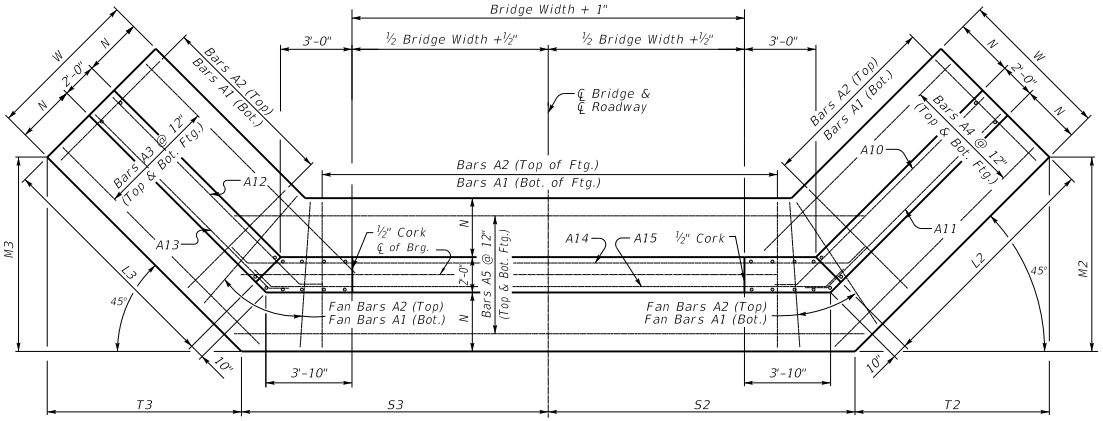

PLAN

Note: Trim A16 & A17 bars if necessary

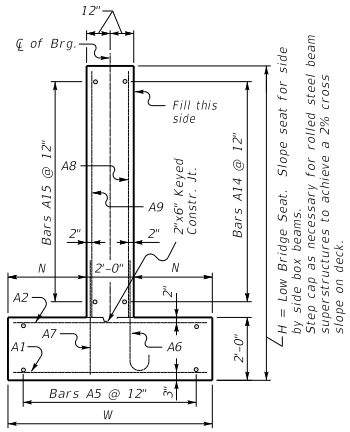

WALL SECTION

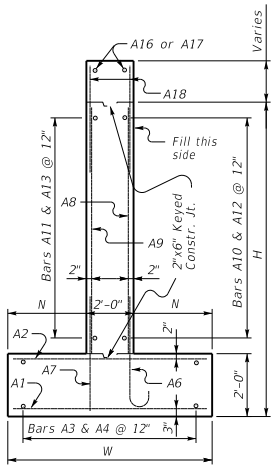

WING SECTION

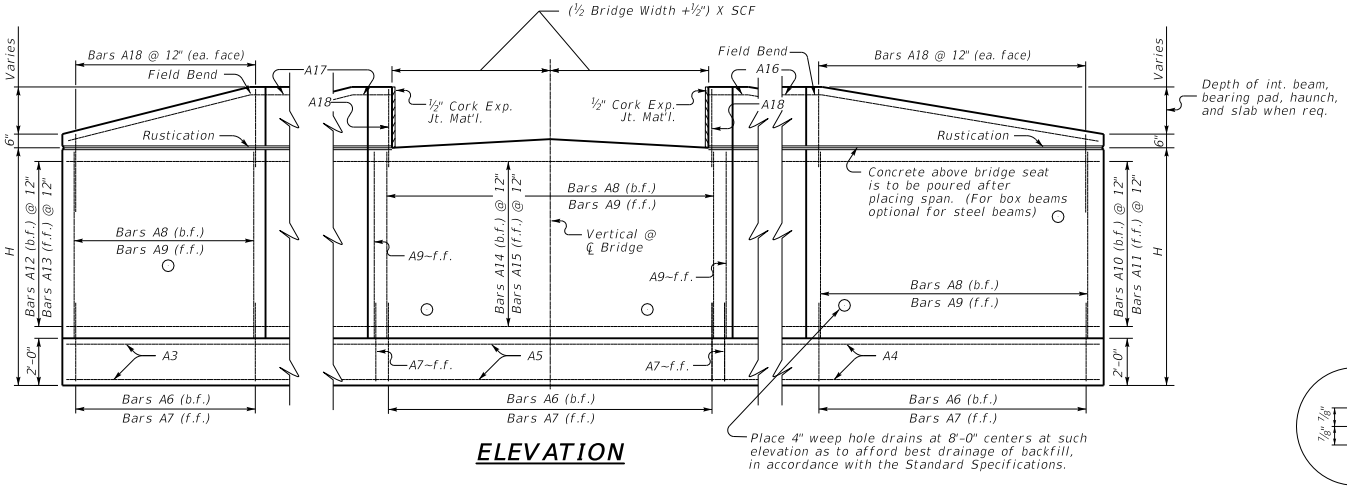

ELEVATION

PLAN OF SUPERSTRUCTURE SLAB

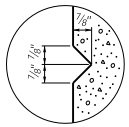

RUSTICATION GROOVE

KENTUCKY
DEPARTMENT OF HIGHWAYS

0° SKEW VARIABLE WIDTH ABUTMENT 50% SKEWED WINGS

STANDARD DRAWING NO. BSA-001

SUBMITTED _____ DIRECTOR DIVISION OF STRUCTURAL DESIGN — DATE 02-26-20

APPROVED _____ STATE HIGHWAY ENGINEER — DATE 02-26-20

0° SKEW VARIABLE BRIDGE WIDTH 2:1 FILL SLOPES
45° SKEW FROM ROADWAY ON WINGS

Bill of Reinforcement

MARK	A1					A2					A3		A4		A5					A6										A7					A8					A9					A10		A11		A12		A13		A14					A15					A16		A17		A18	
TYPE	Str.					Str.					Str.		Str.		Str.					4										Str.					Str.					Str.					8		8		8		8		7					7					Str.		Str.		Str.	
SIZE											#5		#5		#5																								#5																													
H	No.	Size	Length ft.	Length in.	Spacing	No.	Size	Length ft.	Length in.	Spacing	No.	Length ft.	No.	Length in.	No.	Length ft.	Length in.	+Lb=	Length ft.	Length in.	No.	Size	Length ft.	Length in.	Spacing	A ft.	A in.	B ft.	B in.	C ft.	C in.	D ft.	D in.	No.	Size	Length ft.	Length in.	Spacing	No.	Size	Length ft.	Length in.	Spacing	No.	Length ft.	Length in.	No.	Length ft.	Length in.	No.	Length ft.	Length in.	No.	Length ft.	Length in.	+Lb=	Length ft.	Length in.	No.	Length ft.	Length in.	+Lb=	Length ft.	Length in.	No.	Length ft.	No.	Length ft.	No.	Length ft.
15-16	60+Nb=	10	11	8	12	60+Nb=	7	11	8	12	24	24	0	24	24	0	24	12	4	+Lb=		49+Nb=	9	9	11	12	8	⅛	1	10	0	11¾	8	6	52+Nb=	5	4	11	12	49+Nb=	6	12	10	12	52+Nb=	12	10	12	14	24	0	14	22	7	14	24	0	14	22	7	14	12	5	+Lb=		14	9	6	+Lb=		2	25	7	2	25	7	104	5	9
13-14	53+Nb=	9	10	8	12	53+Nb=	7	10	8	12	22	20	9	22	20	9	22	11	11	+Lb=		43+Nb=	8	8	3	12	6	11	1	3	0	8	7	3	46+Nb=	5	4	11	12	43+Nb=	6	10	10	12	46+Nb=	10	10	12	12	21	0	12	19	7	12	21	0	12	19	7	12	12	5	+Lb=		12	9	6	+Lb=		2	22	7	2	22	7	92	5	9
11-12	49+Nb=	8	9	8	12	49+Nb=	6	9	8	12	20	18	7	20	18	7	20	11	6	+Lb=		39+Nb=	7	7	1	12	5	10½	1	2	0	7	6	2	42+Nb=	5	4	11	12	39+Nb=	5	8	10	12	42+Nb=	8	10	12	10	19	0	10	17	7	10	19	0	10	17	7	10	12	5	+Lb=		10	9	6	+Lb=		2	20	7	2	20	7	84	5	9
9-10	44+Nb=	7	8	8	12	44+Nb=	5	8	8	12	18	16	4	18	16	4	18	11	1	+Lb=		35+Nb=	6	6	1	12	5	1	1	0	0	6	5	4	38+Nb=	5	4	11	12	35+Nb=	5	6	10	12	38+Nb=	6	10	12	8	17	0	8	15	7	8	17	0	8	15	7	8	12	6	+Lb=		8	9	6	+Lb=		2	18	7	2	18	7	76	5	9
7-8	34+Nb=	6	7	2	12	34+Nb=	5	7	2	12	16	11	9	16	11	9	16	10	0	+Lb=		27+Nb=	5	5	7	12	4	8½	0	10	0	5	4	11	30+Nb=	5	4	11	12	27+Nb=	5	4	10	12	30+Nb=	4	10	12	6	13	0	6	11	7	6	13	0	6	11	7	6	12	6	+Lb=		6	9	6	+Lb=		2	14	7	2	14	7	60	5	9
5-6	30+Nb=	5	6	2	12	30+Nb=	5	6	2	12	14	9	7	14	9	7	14	9	7	+Lb=		23+Nb=	5	5	7	12	4	8½	0	10	0	5	4	11	26+Nb=	5	4	11	12	23+Nb=	5	2	10	12	26+Nb=	2	10	12	4	11	0	4	9	7	4	11	0	4	9	7	4	12	6	+Lb=		4	9	6	+Lb=		2	12	7	2	12	7	52	5	9

Table of Dimensions

H	W Length ft.	W Length in.	N Length ft.	N Length in.	M2 Length ft.	M2 Length in.	M3 Length ft.	M3 Length in.	T2 Length ft.	T2 Length in.	T3 Length ft.	T3 Length in.	L2 Length ft.	L3 Length ft.	S2 Length ft.	S2 Length in.	S2 + Lb/2 =	S2 Length ft.	S2 Length in.	S3 Length ft.	S3 Length in.	S3 + Lb/2 =	S3 Length ft.	S3 Length in.
15-16	12	0	5	0	16	10¾	16	10¾	16	10¾	16	10¾	21	21	5	11¼	+0.5Lb=			5	11¼	+0.5Lb=		
13-14	11	0	4	6	14	7⅝	14	7⅝	14	7⅝	14	7⅝	18	18	5	8¾	+0.5Lb=			5	8¾	+0.5Lb=		
11-12	10	0	4	0	13	⅞	13	⅞	13	⅞	13	⅞	16	16	5	6⅜	+0.5Lb=			5	6⅜	+0.5Lb=		
9-10	9	0	3	6	11	6⅛	11	6⅛	11	6⅛	11	6⅛	14	14	5	3⅞	+0.5Lb=			5	3⅞	+0.5Lb=		
7-8	7	6	2	9	8	5½	8	5½	8	5½	8	5½	10	10	5	⅛	+0.5Lb=			5	⅛	+0.5Lb=		
5-6	6	6	2	3	6	10⅞	6	10⅞	6	10⅞	6	10⅞	8	8	4	9⅝	+0.5Lb=			4	9⅝	+0.5Lb=		

Reinforcement Details

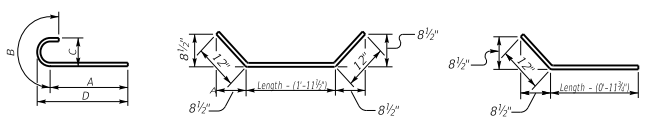

*Concrete quantities computed using 21" beam depth on ½" pad & Variable Bridge Width

Quantities

H	Concrete* C.Y.	Reinforcement LBS.
5	19.71+(0.71xLb) =	1851+(52.8xLb) =
6	21.47+(0.78xLb) =	1851+(52.8xLb) =
7	29.09+(0.93xLb) =	2651+(68.7xLb) =
8	31.15+(1.01xLb) =	2651+(68.7xLb) =
9	46.58+(1.19xLb) =	4307+(91xLb) =
10	49.23+(1.27xLb) =	4307+(91xLb) =
11	60.56+(1.41xLb) =	6117+(120.4xLb) =
12	63.5+(1.49xLb) =	6117+(120.4xLb) =
13	76.32+(1.64xLb) =	8656+(161xLb) =
14	79.56+(1.71xLb) =	8656+(161xLb) =
15	97.76+(1.86xLb) =	11857+(198.6xLb) =
16	101.44+(1.93xLb) =	11857+(198.6xLb) =

ABUTMENT SKEW CORRECTION FACTOR (SCF) = 1.0

NUMBER OF BARS TO ADD (Nb) = Bridge Width (feet) x SCF (round up to nearest whole number)

LENGTH OF ABUTMENT TO ADD (Lb) = Bridge Width (feet) x SCF (convert decimal to architectural)

GENERAL NOTES

SPECIFICATIONS: Construct abutments according to the current edition of the Kentucky Department of Highways Standard Specifications for Road and Bridge Construction. Abutments are designed for side by side box beams as detailed in Standard Drawings BDP-001 through BDP-012, current edition. Dimensions may be adjusted to allow for any out to out bridge width. Abutments are also adequate for Std. Dwg. slabs or steel beam superstructures.

FOUNDATION PRESSURE: Construct abutment footings on solid rock bearing material that can support a pressure of 8000 psf service or 10,800 psf strength factored as recommended by a geotechnical engineer.

WING LENGTHS: Calculated assuming 21" superstructure depth and stream bank elevation at top of footing.

FOOTING ELEVATION: Construct bottom of footing below the anticipated scour elevation. (This typically entails embedding the footings 1'-0" to 2'-0" into rock and pouring concrete directly against cut rock faces. as recommended by geotechnical engineer.)

NOTE: Distances to bars shown are clear dimensions unless otherwise noted.

MATERIAL SPECIFICATIONS:
Concrete, Class "A" = 3500 psi
Steel Reinforcement = Grade 60

PLAN OF SUPERSTRUCTURE SLAB

KENTUCKY
DEPARTMENT OF HIGHWAYS

0° SKEW VARIABLE
WIDTH ABUTMENT
50% SKEWED WINGS

STANDARD DRAWING NO. BSA-002

SUBMITTED _____ DIRECTOR DIVISION OF STRUCTURAL DESIGN — DATE 02-26-20

APPROVED _____ STATE HIGHWAY ENGINEER — DATE 02-26-20

5° SKEW VARIABLE BRIDGE WIDTH 2:1 FILL SLOPES WINGS SKEWED 50% FROM ROADWAY TO BREASTWALL

ABUTMENT SKEW CORRECTION FCTOR (SCF) = 1.004

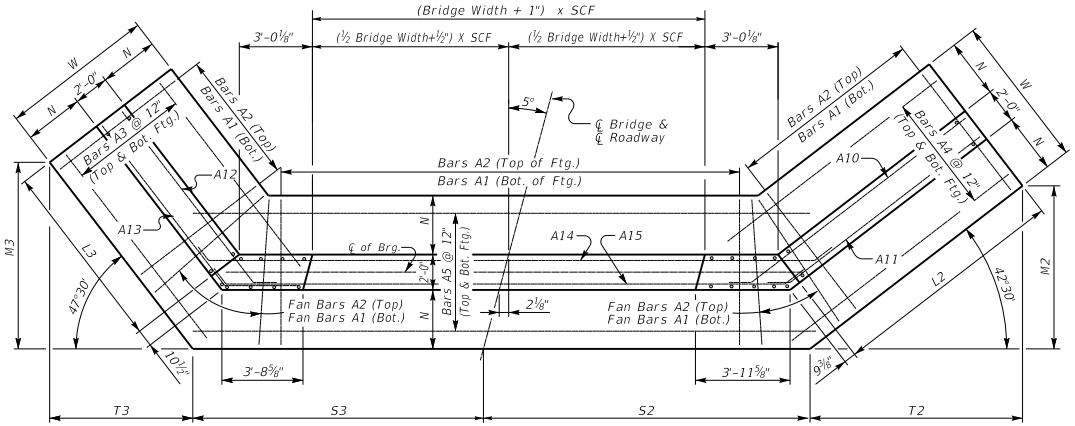

(Left Skew as shown;right skew opp. hand)

PLAN

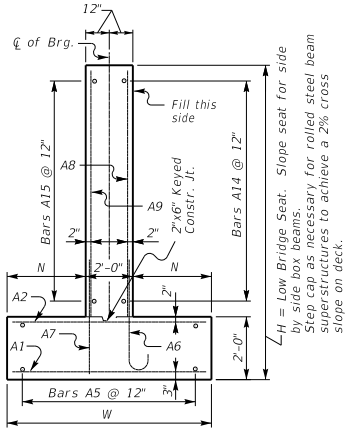

WALL SECTION

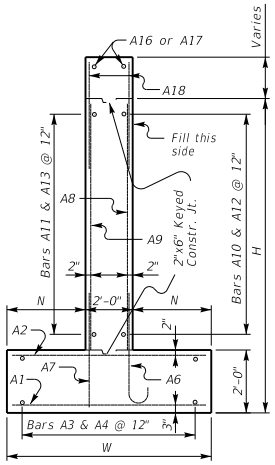

WING SECTION

Note: Trim A16 & A17 bars if necessary

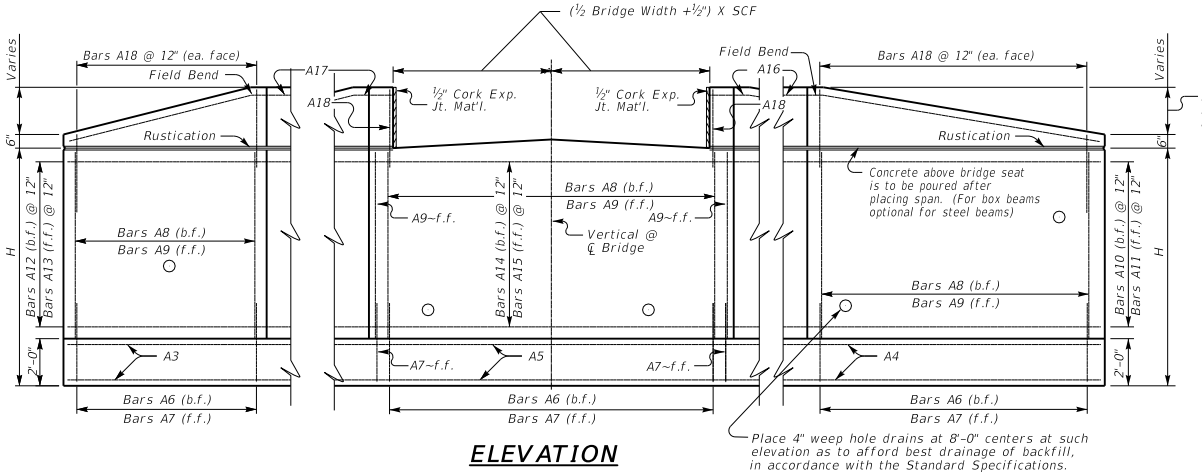

ELEVATION

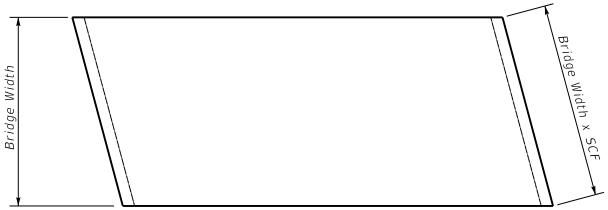

PLAN OF SUPERSTRUCTURE SLAB

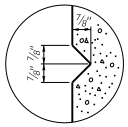

RUSTICATION GROOVE

KENTUCKY
DEPARTMENT OF HIGHWAYS

5° SKEW VARIABLE
WIDTH ABUTMENT
50% SKEWED WINGS

STANDARD DRAWING NO. BSA-003

SUBMITTED _____ 02-26-20
DIRECTOR DIVISION OF STRUCTURAL DESIGN — DATE

APPROVED _____ 02-26-20
STATE HIGHWAY ENGINEER — DATE

5° SKEW VARIABLE BRIDGE WIDTH 2:1 FILL SLOPES WINGS SKEWED 50% FROM ROADWAY TO BREASTWALL

Bill of Reinforcement

MARK	A1					A2					A3		A4		A5					A6										A7					A8					A9					A10		A11		A12		A13		A14					A15					A16		A17		A18	
TYPE	Str.					Str.					Str.		Str.		Str.					4										Str.					Str.					Str.					8		8		8		8		7					7					Str.		Str.		Str.	
SIZE											#5		#5		#5																								#5					#5		#5		#5		#5		#5					#5					#5		#5		#5	
H	No.	Size	Length ft.	Length in.	Spacing	No.	Size	Length ft.	Length in.	Spacing	No.	Length ft.	Length in.	No.	Length ft.	Length in.	No.	Length ft.	Length in.	No.	Size	Length ft.	Length in.	Spacing	A ft.	A in.	B ft.	B in.	C ft.	C in.	D ft.	D in.	No.	Size	Length ft.	Length in.	Spacing	No.	Size	Length ft.	Length in.	Spacing	No.	Length ft.	Length in.	No.	Length ft.	Length in.	No.	Length ft.	Length in.	No.	Length ft.	Length in.	= +Lb	Length ft.	Length in.	No.	Length ft.	Length in.	= +Lb	Length ft.	Length in.	No.	Length ft.	No.	Length ft.	No.	Length ft.
15-16	60+Nb=	10	11	8	12	60+Nb=	7	11	8	12	24	23	1	24	24	10	24	12	4	+Lb=			49+Nb=	9	9	11	12	8	1/8	1	10	0	11 3/4	8	6	52+Nb=	5	4	11	12	49+Nb=	6	12	10	12	52+Nb=	12	10	12	14	25	1	14	23	7	14	22	11	14	21	8	14	12	5	+Lb=			14	9	6	+Lb=			2	26	8	2	24	6	104	5	9
13-14	53+Nb=	9	10	8	12	53+Nb=	7	10	8	12	22	19	11	22	21	8	22	11	11	+Lb=			43+Nb=	8	8	3	12	6	11	1	3	0	8	7	3	46+Nb=	5	4	11	12	43+Nb=	6	10	10	12	46+Nb=	10	10	12	12	22	1	12	20	7	12	19	11	12	18	8	12	12	6	+Lb=			12	9	6	+Lb=			2	23	8	2	21	6	92	5	9
11-12	48+Nb=	8	9	8	12	48+Nb=	6	9	8	12	20	17	8	20	18	5	20	11	6	+Lb=			38+Nb=	7	7	1	12	5	10 1/2	1	2	0	7	6	2	41+Nb=	5	4	11	12	38+Nb=	5	8	10	12	41+Nb=	8	10	12	10	19	1	10	17	7	10	17	11	10	16	8	10	12	6	+Lb=			10	9	6	+Lb=			2	20	8	2	19	6	82	5	9
9-10	43+Nb=	7	8	8	12	43+Nb=	5	8	8	12	18	15	6	18	16	3	18	11	1	+Lb=			34+Nb=	6	6	1	12	5	1	1	0	0	6	5	4	37+Nb=	5	4	11	12	34+Nb=	5	6	10	12	37+Nb=	6	10	12	8	17	1	8	15	7	8	15	11	8	14	8	8	12	6	+Lb=			8	9	6	+Lb=			2	18	8	2	17	6	74	5	9
7-8	34+Nb=	6	7	2	12	34+Nb=	5	7	2	12	16	10	11	16	11	8	16	10	0	+Lb=			26+Nb=	5	5	7	12	4	8 1/2	0	10	0	5	4	11	29+Nb=	5	4	11	12	26+Nb=	5	4	10	12	29+Nb=	4	10	12	6	13	2	6	11	7	6	12	0	6	10	8	6	12	6	+Lb=			6	9	6	+Lb=			2	14	8	2	13	6	58	5	9
5-6	29+Nb=	5	6	2	12	29+Nb=	5	6	2	12	14	8	8	14	9	6	14	9	7	+Lb=			22+Nb=	5	5	7	12	4	8 1/2	0	10	0	5	4	11	25+Nb=	5	4	11	12	22+Nb=	5	2	10	12	25+Nb=	2	10	12	4	11	2	4	9	7	4	10	0	4	8	8	4	12	6	+Lb=			4	9	6	+Lb=			2	12	8	2	11	6	50	5	9

Table of Dimensions

H	W Length ft.	W Length in.	N Length ft.	N Length in.	M2 Length ft.	M2 Length in.	M3 Length ft.	M3 Length in.	T2 Length ft.	T2 Length in.	T3 Length ft.	T3 Length ft.	L2 Length ft.	L3 Length ft.	S2 Length ft.	S2 Length in.	+ Lb/2 =	S2 Length ft.	S2 Length in.	S3 Length ft.	S3 Length in.	+ Lb/2 =	S3 Length ft.	S3 Length in.
15-16	12	0	5	0	16	8 3/8	17	1/4	18	2 3/4	15	7 1/8	22	20	6	4 7/8	+0.5Lb=			5	6 1/4	+0.5Lb=		
13-14	11	0	4	6	14	6 1/2	14	7 3/4	15	10 1/2	13	5	19	17	6	1 3/4	+0.5Lb=			5	4 1/8	+0.5Lb=		
11-12	10	0	4	0	12	4 5/8	13	1/8	13	6 1/4	11	11	16	15	5	11	+0.5Lb=			5	2	+0.5Lb=		
9-10	9	0	3	6	10	10 7/8	11	4 3/8	11	10 3/4	10	5	14	13	5	8 1/8	+0.5Lb=			4	11 7/8	+0.5Lb=		
7-8	7	6	2	9	8	0	8	2 1/8	8	8 7/8	7	5 7/8	10	9	5	3 3/4	+0.5Lb=			4	8 3/4	+0.5Lb=		
5-6	6	6	2	3	6	6 1/4	6	6 1/2	7	1 3/8	5	11 7/8	8	7	5	7/8	+0.5Lb=			4	6 5/8	+0.5Lb=		

Reinforcement Details

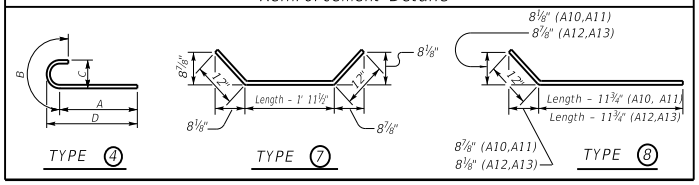

*Concrete quantities computed using 21" beam depth on 1/2" pad & Variable Bridge Width

Quantities

H	Concrete* C.Y.	Reinforcement LBS.
5	18.92+(0.71xLb) =	1785+(52.8xLb) =
6	20.61+(0.78xLb) =	1785+(52.8xLb) =
7	28.09+(0.93xLb) =	2590+(68.7xLb) =
8	30.07+(1.01xLb) =	2590+(68.7xLb) =
9	45.33+(1.19xLb) =	4204+(91xLb) =
10	47.9+(1.27xLb) =	4204+(91xLb) =
11	59.09+(1.41xLb) =	5983+(120.4xLb) =
12	61.96+(1.49xLb) =	5983+(120.4xLb) =
13	76.36+(1.64xLb) =	8660+(161xLb) =
14	79.6+(1.71xLb) =	8660+(161xLb) =
15	97.81+(1.86xLb) =	11856+(198.6xLb) =
16	101.5+(1.93xLb) =	11856+(198.6xLb) =

ABUTMENT SKEW CORRECTION FACTOR (SCF) = 1.004

NUMBER OF BARS TO ADD (Nb) = Bridge Width (feet) x SCF (round up to nearest whole number)

LENGTH OF ABUTMENT TO ADD (Lb) = Bridge Width (feet) x SCF (convert decimal to architectural)

GENERAL NOTES

SPECIFICATIONS: Construct abutments according to the current edition of the Kentucky Department of Highways Standard Specifications for Road and Bridge Construction. Abutments are designed for side by side box beams as detailed in Standard Drawings BDP-001 through BDP-012, current edition. Dimensions may be adjusted to allow for any out to out bridge width. Abutments are also adequate for Std. Dwg. slabs or steel beam superstructures.

FOUNDATION PRESSURE: Construct abutment footings on solid rock bearing material that can support a pressure of 8000 psf service or 10,800 psf strength factored as recommended by a geotechnical engineer.

WING LENGTHS: Calculated assuming 21" superstructure depth and stream bank elevation at top of footing.

FOOTING ELEVATION: Construct bottom of footing below the anticipated scour elevation. (This typically entails embedding the footings 1'-0" to 2'-0" into rock and pouring concrete directly against cut rock faces. as recommended by geotechnical engineer.)

NOTE: Distances to bars shown are clear dimensions unless otherwise noted.

MATERIAL SPECIFICATIONS:
Concrete, Class "A" = 3500 psi
Steel Reinforcement = Grade 60

PLAN OF SUPERSTRUCTURE SLAB

KENTUCKY
DEPARTMENT OF HIGHWAYS

5° SKEW VARIABLE
WIDTH ABUTMENT
50% SKEWED WINGS

STANDARD DRAWING NO. BSA-004

SUBMITTED _____ DIRECTOR DIVISION OF STRUCTURAL DESIGN — DATE 02-26-20

APPROVED _____ STATE HIGHWAY ENGINEER — DATE 02-26-20

10° SKEW VARIABLE BRIDGE WIDTH 2:1 FILL SLOPES WINGS SKEWED 50% FROM ROADWAY TO BREASTWALL

ABUTMENT SKEW CORRECTION FACTOR (SCF) = 1.015

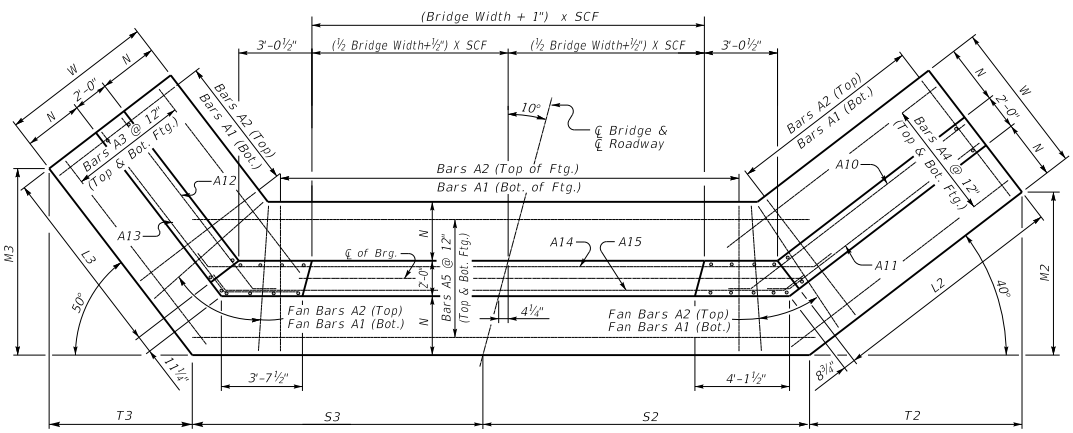

(Left Skew as shown;right skew opp. hand)

PLAN

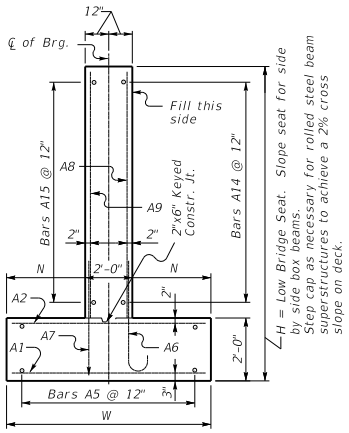

WALL SECTION

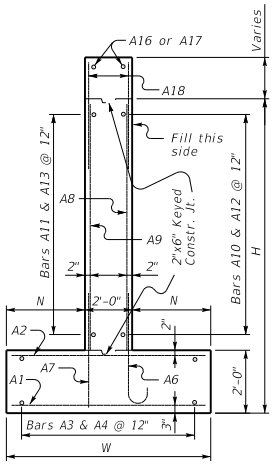

WING SECTION

Note: Trim A16 & A17 bars if necessary

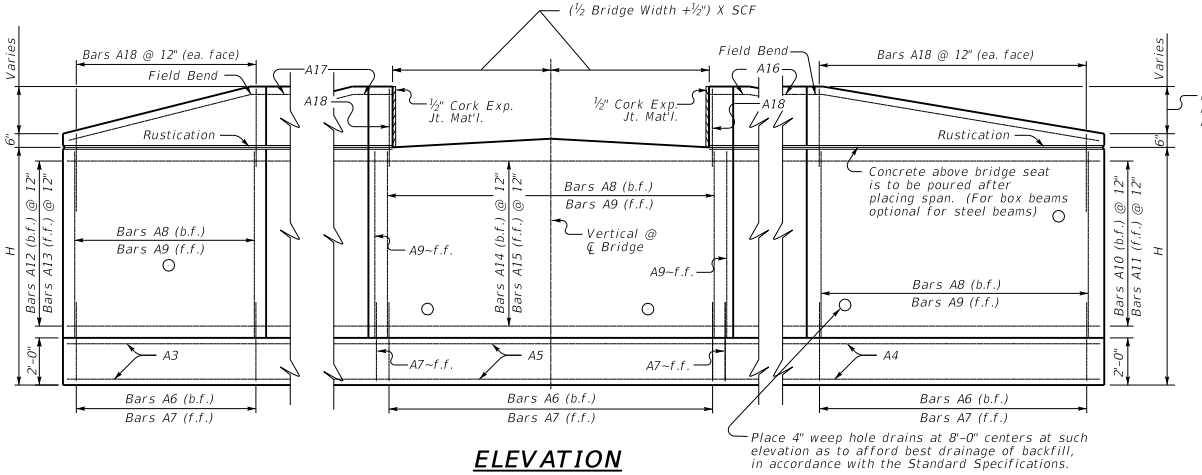

ELEVATION

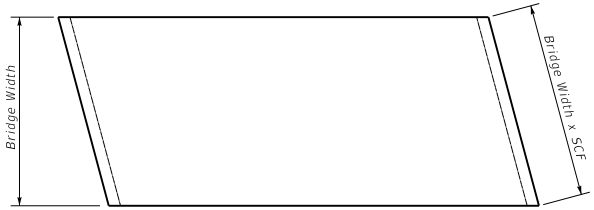

PLAN OF SUPERSTRUCTURE SLAB

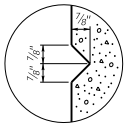

RUSTICATION GROOVE

KENTUCKY
DEPARTMENT OF HIGHWAYS

10° SKEW VARIABLE WIDTH ABUTMENT 50% SKEWED WINGS

STANDARD DRAWING NO. BSA-005

SUBMITTED _____ DIRECTOR DIVISION OF STRUCTURAL DESIGN — DATE 02-26-20

APPROVED _____ STATE HIGHWAY ENGINEER — DATE 02-26-20

10° SKEW VARIABLE BRIDGE WIDTH 2:1 FILL SLOPES WINGS SKEWED 50% FROM ROADWAY TO BREASTWALL

Bill of Reinforcement

MARK	A1					A2					A3			A4			A5					
TYPE	Str.					Str.					Str.			Str.			Str.					
SIZE											#5			#5			#5					
H	No.	Size	Length ft.	Length in.	Spacing	No.	Size	Length ft.	Length in.	Spacing	No.	Length ft.	Length in.	No.	Length ft.	Length in.	No.	Length ft.	Length in.	+Lb =	Length ft.	Length in.
15-16	61+Nb=	10	11	8	12	61+Nb=	7	11	8	12	24	22	3	24	25	8	24	12	4	+Lb=		
13-14	55+Nb=	9	10	8	12	55+Nb=	7	10	8	12	22	20	1	22	22	6	22	11	11	+Lb=		
11-12	48+Nb=	8	9	8	12	48+Nb=	6	9	8	12	20	16	10	20	19	4	20	11	6	+Lb=		
9-10	42+Nb=	7	8	8	12	42+Nb=	5	8	8	12	18	14	7	18	16	2	18	11	1	+Lb=		
7-8	35+Nb=	6	7	2	12	35+Nb=	5	7	2	12	16	11	0	16	12	7	16	10	1	+Lb=		
5-6	29+Nb=	5	6	2	12	29+Nb=	5	6	2	12	14	8	9	14	9	5	14	9	8	+Lb=		

MARK	A6													A7					A8				
TYPE	4													Str.					Str.				
SIZE																							
H	No.	Size	Length ft.	Length in.	Spacing	A ft.	A in.	B ft.	B in.	C ft.	C in.	D ft.	D in.	No.	Size	Length ft.	Length in.	Spacing	No.	Size	Length ft.	Length in.	Spacing
15-16	49+Nb=	9	9	11	12	8	⅛	1	10	0	11¾	8	6	52+Nb=	5	4	11	12	49+Nb=	6	12	10	12
13-14	44+Nb=	8	8	3	12	6	11	1	3	0	8	7	3	47+Nb=	5	4	11	12	44+Nb=	6	10	10	12
11-12	38+Nb=	7	7	1	12	5	10½	1	2	0	7	6	2	41+Nb=	5	4	11	12	38+Nb=	5	8	10	12
9-10	33+Nb=	6	6	1	12	5	1	1	0	0	6	5	4	36+Nb=	5	4	11	12	33+Nb=	5	6	10	12
7-8	27+Nb=	5	5	7	12	4	8½	0	10	0	5	4	11	30+Nb=	5	4	11	12	27+Nb=	5	4	10	12
5-6	22+Nb=	5	5	7	12	4	8½	0	10	0	5	4	11	25+Nb=	5	4	11	12	22+Nb=	5	2	10	12

MARK	A9				A10			A11			A12			A13			A14						A15						A16			A17			A18		
TYPE	Str.				8			8			8			8			7						7						Str.			Str.			Str.		
SIZE	#5				#5			#5			#5			#5			#5						#5						#5			#5			#5		
H	No.	Length ft.	Length in.	Spacing	No.	Length ft.	Length in.	No.	Length ft.	Length in.	No.	Length ft.	Length in.	No.	Length ft.	Length in.	No.	Length ft.	Length in.	+Lb =	Length ft.	Length in.	No.	Length ft.	Length in.	+Lb =	Length ft.	Length in.	No.	Length ft.	Length in.	No.	Length ft.	Length in.	No.	Length ft.	Length in.
15-16	52+Nb=	12	10	12	14	26	2	14	24	6	14	21	10	14	20	9	14	12	7	+Lb=			14	9	7	+Lb=			2	27	9	2	23	6	104	5	9
13-14	47+Nb=	10	10	12	12	23	2	12	21	6	12	19	10	12	18	9	12	12	7	+Lb=			12	9	7	+Lb=			2	24	9	2	21	6	94	5	9
11-12	41+Nb=	8	10	12	10	20	3	10	18	6	10	16	10	10	15	9	10	12	7	+Lb=			10	9	7	+Lb=			2	21	9	2	18	6	82	5	9
9-10	36+Nb=	6	10	12	8	17	3	8	15	6	8	14	11	8	13	9	8	12	7	+Lb=			8	9	7	+Lb=			2	18	9	2	16	6	72	5	9
7-8	30+Nb=	4	10	12	6	14	3	6	12	6	6	11	11	6	10	9	6	12	8	+Lb=			6	9	7	+Lb=			2	15	9	2	13	6	60	5	9
5-6	25+Nb=	2	10	12	4	11	3	4	9	6	4	9	11	4	8	9	4	12	8	+Lb=			4	9	7	+Lb=			2	12	9	2	11	6	50	5	9

Table of Dimensions

H	W Length ft.	W Length in.	N Length ft.	N Length in.	M2 Length ft.	M2 Length in.	M3 Length ft.	M3 Length in.	T2 Length ft.	T2 Length in.	T3 Length ft.	T3 Length in.	L2 Length ft.	L3 Length ft.	S2 Length ft.	S2 Length in.	S2 + Lb/2 =	S2 Length ft.	S2 Length in.	S3 Length ft.	S3 Length in.	S3 + Lb/2 =	S3 Length ft.	S3 Length in.
15-16	12	0	5	0	16	5	17	⅝	19	6⅞	14	3¾	23	19	6	10½	+0.5Lb=			5	1⅜	+0.5Lb=		
13-14	11	0	4	6	14	4½	15	4⅛	17	1⅝	12	10½	20	17	6	7¼	+0.5Lb=			4	11⅝	+0.5Lb=		
11-12	10	0	4	0	12	4	12	10⅜	14	8⅜	10	9⅝	17	14	6	4	+0.5Lb=			4	10	+0.5Lb=		
9-10	9	0	3	6	10	3⅜	11	1⅞	12	3⅛	9	4⅜	14	12	6	¾	+0.5Lb=			4	8¼	+0.5Lb=		
7-8	7	6	2	9	8	2⅛	8	7⅛	9	9	7	2½	11	9	5	7⅞	+0.5Lb=			4	5⅝	+0.5Lb=		
5-6	6	6	2	3	6	1⅝	6	10⅝	7	3¾	5	9¼	8	7	5	4⅝	+0.5Lb=			4	3⅞	+0.5Lb=		

Reinforcement Details

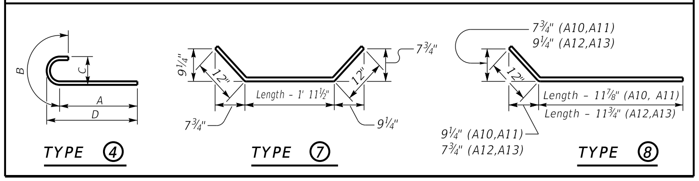

*Concrete quantities computed using 21" beam depth on ½" pad & Variable Bridge Width

Quantities

H	Concrete* C.Y.	Reinforcement LBS.
5	18.99+(0.71xLb) =	1788+(52.8xLb) =
6	20.68+(0.78xLb) =	1788+(52.8xLb) =
7	29.2+(0.93xLb) =	2676+(68.7xLb) =
8	31.26+(1.01xLb) =	2676+(68.7xLb) =
9	44.14+(1.19xLb) =	4102+(91xLb) =
10	46.65+(1.27xLb) =	4102+(91xLb) =
11	59.21+(1.41xLb) =	5987+(120.4xLb) =
12	62.08+(1.49xLb) =	5987+(120.4xLb) =
13	78.23+(1.64xLb) =	8896+(161xLb) =
14	81.55+(1.71xLb) =	8896+(161xLb) =
15	97.96+(1.86xLb) =	11932+(198.6xLb) =
16	101.65+(1.93xLb) =	11932+(198.6xLb) =

ABUTMENT SKEW CORRECTION FACTOR (SCF) = 1.015

NUMBER OF BARS TO ADD (Nb) = Bridge Width (feet) x SCF (round up to nearest whole number)

LENGTH OF ABUTMENT TO ADD (Lb) = Bridge Width (feet) x SCF (convert decimal to architectural)

GENERAL NOTES

SPECIFICATIONS: Construct abutments according to the current edition of the Kentucky Department of Highways Standard Specifications for Road and Bridge Construction. Abutments are designed for side by side box beams as detailed in Standard Drawings BDP-001 through BDP-012, current edition. Dimensions may be adjusted to allow for any out to out bridge width. Abutments are also adequate for Std. Dwg. slabs or steel beam superstructures.

FOUNDATION PRESSURE: Construct abutment footings on solid rock bearing material that can support a pressure of 8000 psf service or 10,800 psf strength factored as recommended by a geotechnical engineer.

WING LENGTHS: Calculated assuming 21" superstructure depth and stream bank elevation at top of footing.

FOOTING ELEVATION: Construct bottom of footing below the anticipated scour elevation. (This typically entails embedding the footings 1'-0" to 2'-0" into rock and pouring concrete directly against cut rock faces. as recommended by geotechnical engineer.)

NOTE: Distances to bars shown are clear dimensions unless otherwise noted.

MATERIAL SPECIFICATIONS:
Concrete, Class "A" = 3500 psi
Steel Reinforcement = Grade 60

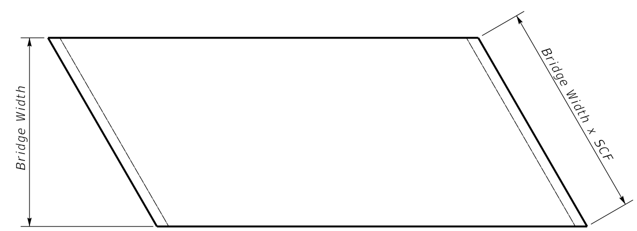

PLAN OF SUPERSTRUCTURE SLAB

KENTUCKY
DEPARTMENT OF HIGHWAYS

10° SKEW VARIABLE
WIDTH ABUTMENT
50% SKEWED WINGS

STANDARD DRAWING NO. BSA-006

SUBMITTED ____ DIRECTOR DIVISION OF STRUCTURAL DESIGN 02-26-20 DATE

APPROVED ____ STATE HIGHWAY ENGINEER 02-26-20 DATE

15° SKEW VARIABLE BRIDGE WIDTH 2:1 FILL SLOPES WINGS SKEWED 50% FROM ROADWAY TO BREASTWALL

ABUTMENT SKEW CORRECTION FACTOR (SCF) = 1.035

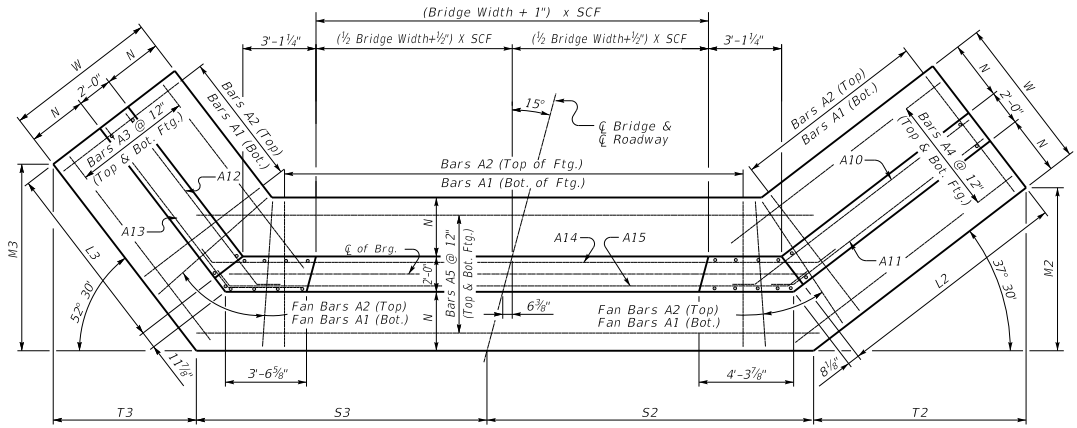

(Left Skew as shown;right skew opp. hand)

PLAN

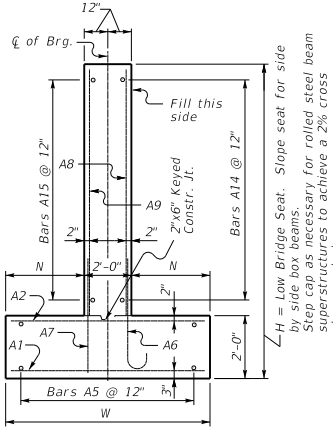

WALL SECTION

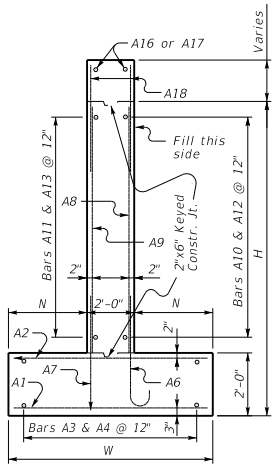

WING SECTION

Note: Trim A16 & A17 bars if necessary

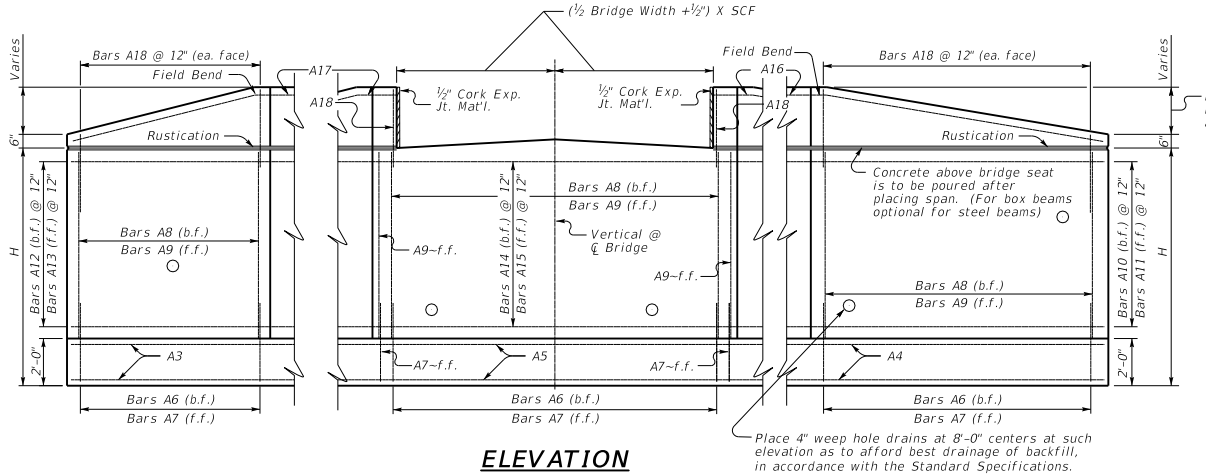

ELEVATION

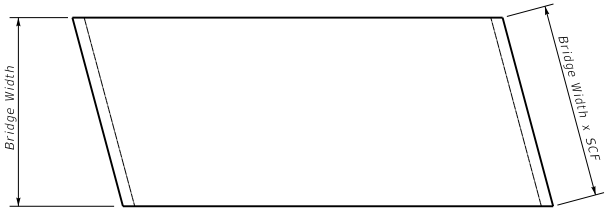

PLAN OF SUPERSTRUCTURE SLAB

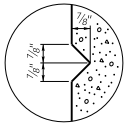

RUSTICATION GROOVE

KENTUCKY
DEPARTMENT OF HIGHWAYS

15° SKEW VARIABLE WIDTH ABUTMENT 50% SKEWED WINGS

STANDARD DRAWING NO. BSA-007

SUBMITTED _____ DIRECTOR DIVISION OF STRUCTURAL DESIGN — DATE 02-26-20

APPROVED _____ STATE HIGHWAY ENGINEER — DATE 02-26-20

15° SKEW VARIABLE BRIDGE WIDTH 2:1 FILL SLOPES WINGS SKEWED 50% FROM ROADWAY TO BREASTWALL

Bill of Reinforcement

MARK	A1					A2					A3			A4			A5					
TYPE	Str.					Str.					Str.			Str.			Str.					
SIZE											#5			#5			#5					
H	No.	Size	Length ft.	Length in.	Spacing	No.	Size	Length ft.	Length in.	Spacing	No.	Length ft.	Length in.	No.	Length ft.	Length in.	No.	Length ft.	Length in.	+Lb =	Length ft.	Length in.
15-16	61+Nb=	10	11	8	12	61+Nb=	7	11	8	12	24	21	5	24	26	7	24	12	5	+Lb=		
13-14	55+Nb=	9	10	8	12	55+Nb=	7	10	8	12	22	19	2	22	23	5	22	12	0	+Lb=		
11-12	49+Nb=	8	9	8	12	49+Nb=	6	9	8	12	20	16	11	20	20	3	20	11	7	+Lb=		
9-10	43+Nb=	7	8	8	12	43+Nb=	5	8	8	12	18	13	8	18	17	1	18	11	2	+Lb=		
7-8	35+Nb=	6	7	2	12	35+Nb=	5	7	2	12	16	11	2	16	12	6	16	10	2	+Lb=		
5-6	30+Nb=	5	6	2	12	30+Nb=	5	6	2	12	14	8	11	14	10	4	14	9	9	+Lb=		

MARK	A6													A7					A8				
TYPE	4													Str.					Str.				
SIZE																							
H	No.	Size	Length ft.	Length in.	Spacing	A ft.	A in.	B ft.	B in.	C ft.	C in.	D ft.	D in.	No.	Size	Length ft.	Length in.	Spacing	No.	Size	Length ft.	Length in.	Spacing
15-16	49+Nb=	9	9	11	12	8	⅛	1	10	0	11¾	8	6	52+Nb=	5	4	11	12	49+Nb=	6	12	10	12
13-14	44+Nb=	8	8	3	12	6	11	1	3	0	8	7	3	47+Nb=	5	4	11	12	44+Nb=	6	10	10	12
11-12	39+Nb=	7	7	1	12	5	10½	1	2	0	7	6	2	42+Nb=	5	4	11	12	39+Nb=	5	8	10	12
9-10	33+Nb=	6	6	1	12	5	1	1	0	0	6	5	4	36+Nb=	5	4	11	12	33+Nb=	5	6	10	12
7-8	27+Nb=	5	5	7	12	4	8½	0	10	0	5	4	11	30+Nb=	5	4	11	12	27+Nb=	5	4	10	12
5-6	23+Nb=	5	5	7	12	4	8½	0	10	0	5	4	11	26+Nb=	5	4	11	12	23+Nb=	5	2	10	12

MARK	A9				A10			A11			A12			A13			A14						A15						A16			A17			A18		
TYPE	Str.				8			8			8			8			7						7						Str.			Str.			Str.		
SIZE	#5				#5			#5			#5			#5			#5						#5						#5			#5			#5		
H	No.	Length ft.	Length in.	Spacing	No.	Length ft.	Length in.	No.	Length ft.	Length in.	No.	Length ft.	Length in.	No.	Length ft.	Length in.	No.	Length ft.	Length in.	+Lb =	Length ft.	Length in.	No.	Length ft.	Length in.	+Lb =	Length ft.	Length in.	No.	Length ft.	Length in.	No.	Length ft.	Length in.	No.	Length ft.	Length in.
15-16	52+Nb=	12	10	12	14	27	4	14	25	6	14	20	10	14	19	9	14	12	9	+Lb=			14	9	8	+Lb=			2	28	11	2	22	6	105	5	9
13-14	47+Nb=	10	10	12	12	24	4	12	22	6	12	18	10	12	17	9	12	12	9	+Lb=			12	9	8	+Lb=			2	25	11	2	20	6	95	5	9
11-12	42+Nb=	8	10	12	10	21	4	10	19	6	10	16	10	10	15	9	10	12	9	+Lb=			10	9	8	+Lb=			2	22	11	2	18	6	85	5	9
9-10	36+Nb=	6	10	12	8	18	4	8	16	6	8	13	10	8	12	9	8	12	10	+Lb=			8	9	8	+Lb=			2	19	11	2	15	6	73	5	9
7-8	30+Nb=	4	10	12	6	14	4	6	12	6	6	11	10	6	10	9	6	12	10	+Lb=			6	9	8	+Lb=			2	15	11	2	13	6	61	5	9
5-6	26+Nb=	2	10	12	4	12	4	4	10	6	4	9	10	4	8	9	4	12	10	+Lb=			4	9	8	+Lb=			2	13	11	2	11	6	53	5	9

Table of Dimensions

H	W Length ft.	W Length in.	N Length ft.	N Length in.	M2 Length ft.	M2 Length in.	M3 Length ft.	M3 Length in.	T2 Length ft.	T2 Length in.	T3 Length ft.	T3 Length in.	L2 Length ft.	L3 Length ft.	S2 Length ft.	S2 Length in.	S2 $+\frac{Lb}{2}=$	S2 Length ft.	S2 Length in.	S3 Length ft.	S3 Length in.	S3 $+\frac{Lb}{2}=$	S3 Length ft.	S3 Length in.
15-16	12	0	5	0	16	⅝	17	¼	20	11⅛	13	¾	24	18	7	4¾	+0.5Lb=			4	8¾	+0.5Lb=		
13-14	11	0	4	6	14	1½	15	2⅞	18	4⅞	11	8¼	21	16	7	1⅛	+0.5Lb=			4	7⅜	+0.5Lb=		
11-12	10	0	4	0	12	2⅜	13	5½	15	10¾	10	3⅞	18	14	6	9½	+0.5Lb=			4	6	+0.5Lb=		
9-10	9	0	3	6	10	3¼	10	10½	13	4⅝	8	4⅛	15	11	6	5⅞	+0.5Lb=			4	4⅝	+0.5Lb=		
7-8	7	6	2	9	7	8⅛	9	0	10	⅛	6	10⅞	11	9	6	⅜	+0.5Lb=			4	2⅝	+0.5Lb=		
5-6	6	6	2	3	6	4¼	7	2⅝	8	3⅜	5	6½	9	7	5	8¾	+0.5Lb=			4	1¼	+0.5Lb=		

Reinforcement Details

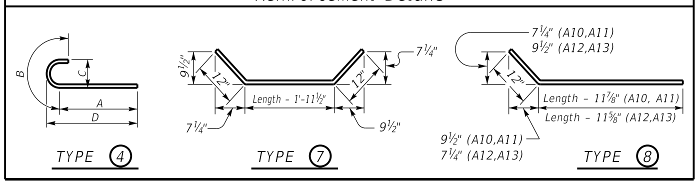

*Concrete quantities computed using 21" beam depth on ½" pad & Variable Bridge Width

Quantities

H	Concrete* C.Y.	Reinforcement LBS.
5	19.9+(0.71xLb) =	1864+(52.8xLb) =
6	21.68+(0.78xLb) =	1864+(52.8xLb) =
7	29.34+(0.93xLb) =	2687+(68.7xLb) =
8	31.41+(1.01xLb) =	2687+(68.7xLb) =
9	44.31+(1.19xLb) =	4139+(91xLb) =
10	46.83+(1.27xLb) =	4139+(91xLb) =
11	60.91+(1.41xLb) =	6133+(120.4xLb) =
12	63.87+(1.49xLb) =	6133+(120.4xLb) =
13	78.45+(1.64xLb) =	8909+(161xLb) =
14	81.78+(1.71xLb) =	8909+(161xLb) =
15	98.21+(1.86xLb) =	11949+(198.6xLb) =
16	101.91+(1.93xLb) =	11949+(198.6xLb) =

ABUTMENT SKEW CORRECTION FACTOR (SCF) = 1.035

NUMBER OF BARS TO ADD (Nb) = Bridge Width (feet) x SCF (round up to nearest whole number)

LENGTH OF ABUTMENT TO ADD (Lb) = Bridge Width (feet) x SCF (convert decimal to architectural)

GENERAL NOTES

SPECIFICATIONS: Construct abutments according to the current edition of the Kentucky Department of Highways Standard Specifications for Road and Bridge Construction. Abutments are designed for side by side box beams as detailed in Standard Drawings BDP-001 through BDP-012, current edition. Dimensions may be adjusted to allow for any out to out bridge width. Abutments are also adequate for Std. Dwg. slabs or steel beam superstructures.

FOUNDATION PRESSURE: Construct abutment footings on solid rock bearing material that can support a pressure of 8000 psf service or 10,800 psf strength factored as recommended by a geotechnical engineer.

WING LENGTHS: Calculated assuming 21" superstructure depth and stream bank elevation at top of footing.

FOOTING ELEVATION: Construct bottom of footing below the anticipated scour elevation. (This typically entails embedding the footings 1'-0" to 2'-0" into rock and pouring concrete directly against cut rock faces. as recommended by geotechnical engineer.)

NOTE: Distances to bars shown are clear dimensions unless otherwise noted.

MATERIAL SPECIFICATIONS:
Concrete, Class "A" = 3500 psi
Steel Reinforcement = Grade 60

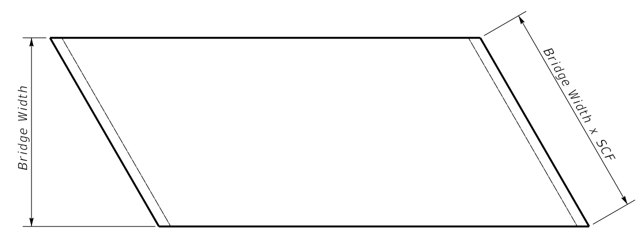

PLAN OF SUPERSTRUCTURE SLAB

KENTUCKY
DEPARTMENT OF HIGHWAYS

15° SKEW VARIABLE
WIDTH ABUTMENT
50% SKEWED WINGS

STANDARD DRAWING NO. BSA-008

SUBMITTED [signature] DIRECTOR DIVISION OF STRUCTURAL DESIGN 02-26-20 DATE

APPROVED [signature] STATE HIGHWAY ENGINEER 02-26-20 DATE

20° SKEW VARIABLE BRIDGE WIDTH 2:1 FILL SLOPES WINGS SKEWED 50% FROM ROADWAY TO BREASTWALL

ABUTMENT SKEW CORRECTION FACTOR (SCF) = 1.064

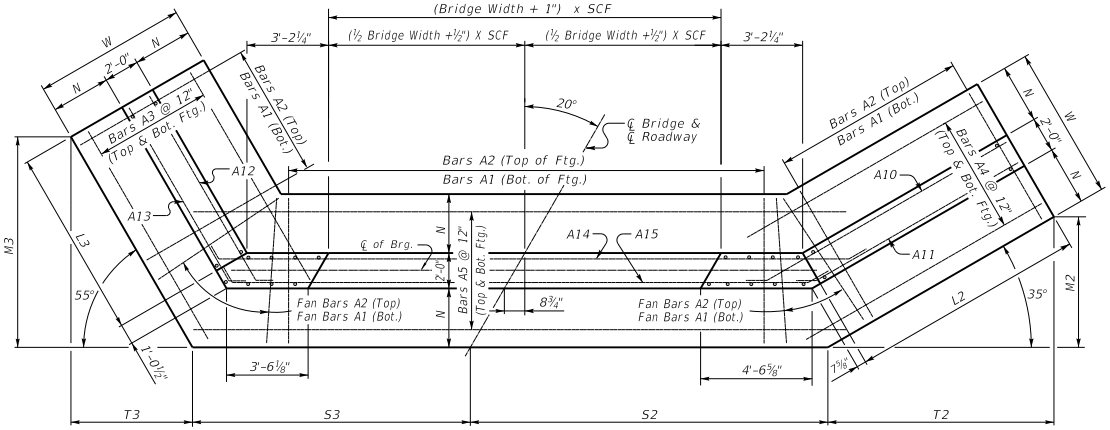

(Left Skew as shown;right skew opp. hand)

PLAN

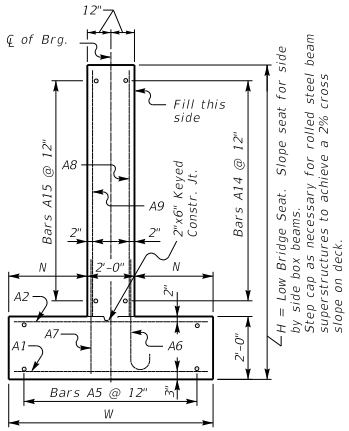

WALL SECTION

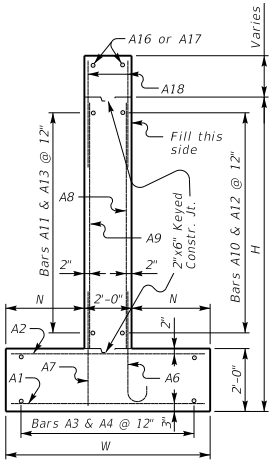

WING SECTION

NOTE: Trim A16 & A17 bars if necessary

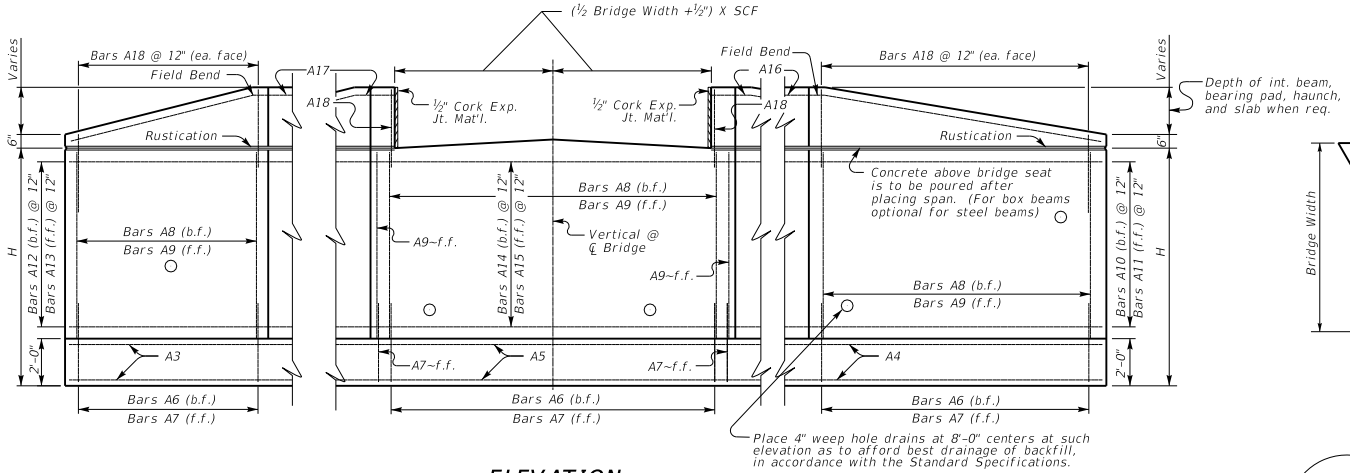

ELEVATION

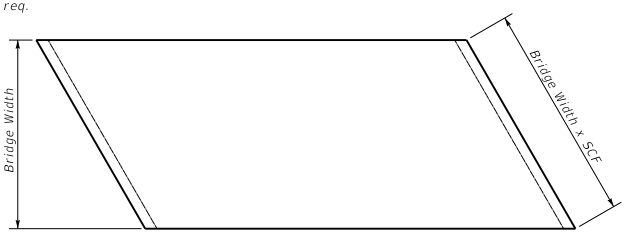

PLAN OF SUPERSTRUCTURE SLAB

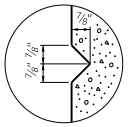

RUSTICATION GROOVE

KENTUCKY DEPARTMENT OF HIGHWAYS

20° SKEW VARIABLE WIDTH ABUTMENT 50% SKEWED WINGS

STANDARD DRAWING NO. BSA-009

SUBMITTED _____ DIRECTOR DIVISION OF STRUCTURAL DESIGN — DATE 02-26-20

APPROVED _____ STATE HIGHWAY ENGINEER — DATE 02-26-20

20° SKEW VARIABLE BRIDGE WIDTH 2:1 FILL SLOPES
WINGS SKEWED 50% FROM ROADWAY TO BREASTWALL

Bill of Reinforcement

MARK	A1					A2					A3			A4			A5					
TYPE	Str.					Str.					Str.			Str.			Str.					
SIZE											#5			#5			#5					
H	No.	Size	Length ft.	Length in.	Spacing	No.	Size	Length ft.	Length in.	Spacing	No.	Length ft.	Length in.	No.	Length ft.	Length in.	No.	Length ft.	Length in.	+Lb =	Length ft.	Length in.
15-16	63+Nb=	10	11	8	12	63+Nb=	7	11	8	12	24	21	7	24	28	5	24	12	7	+Lb=		
13-14	55+Nb=	9	10	8	12	55+Nb=	7	10	8	12	22	18	4	22	24	3	22	12	2	+Lb=		
11-12	49+Nb=	8	9	8	12	49+Nb=	6	9	8	12	20	16	1	20	21	1	20	11	9	+Lb=		
9-10	43+Nb=	7	8	8	12	43+Nb=	5	8	8	12	18	13	10	18	17	11	18	11	4	+Lb=		
7-8	35+Nb=	6	7	2	12	35+Nb=	5	7	2	12	16	10	3	16	13	4	16	10	4	+Lb=		
5-6	29+Nb=	5	6	2	12	29+Nb=	5	6	2	12	14	8	0	14	10	2	14	9	11	+Lb=		

MARK	A6												
TYPE	4												
SIZE													
H	No.	Size	Length ft.	Length in.	Spacing	A ft.	A in.	B ft.	B in.	C ft.	C in.	D ft.	D in.
15-16	51+Nb=	9	9	11	12	8	⅛	1	10	0	11¾	8	6
13-14	44+Nb=	8	8	3	12	6	11	1	3	0	8	7	3
11-12	39+Nb=	7	7	1	12	5	10½	1	2	0	7	6	2
9-10	34+Nb=	6	6	1	12	5	1	1	0	0	6	5	4
7-8	27+Nb=	5	5	7	12	4	8½	0	10	0	5	4	11
5-6	22+Nb=	5	5	7	12	4	8½	0	10	0	5	4	11

MARK	A7					A8					A9			
TYPE	Str.					Str.					Str.			
SIZE											#5			
H	No.	Size	Length ft.	Length in.	Spacing	No.	Size	Length ft.	Length in.	Spacing	No.	Length ft.	Length in.	Spacing
15-16	54+Nb=	5	4	11	12	51+Nb=	6	12	10	12	54+Nb=	12	10	12
13-14	47+Nb=	5	4	11	12	44+Nb=	6	10	10	12	47+Nb=	10	10	12
11-12	42+Nb=	5	4	11	12	39+Nb=	5	8	10	12	42+Nb=	8	10	12
9-10	37+Nb=	5	4	11	12	34+Nb=	5	6	10	12	37+Nb=	6	10	12
7-8	30+Nb=	5	4	11	12	27+Nb=	5	4	10	12	30+Nb=	4	10	12
5-6	25+Nb=	5	4	11	12	22+Nb=	5	2	10	12	25+Nb=	2	10	12

MARK	A10			A11			A12			A13			A14					
TYPE	8			8			8			8			7					
SIZE	#5			#5			#5			#5			#5					
H	No.	Length ft.	Length in.	No.	Length ft.	Length in.	No.	Length ft.	Length in.	No.	Length ft.	Length in.	No.	Length ft.	Length in.	+Lb =	Length ft.	Length in.
15-16	14	29	5	14	27	5	14	20	9	14	19	10	14	13	0	+Lb=		
13-14	12	25	6	12	23	5	12	17	9	12	16	10	12	13	0	+Lb=		
11-12	10	22	6	10	20	5	10	15	9	10	14	10	10	13	1	+Lb=		
9-10	8	19	6	8	17	5	8	13	9	8	12	10	8	13	1	+Lb=		
7-8	6	15	6	6	13	5	6	10	9	6	9	10	6	13	1	+Lb=		
5-6	4	12	6	4	10	5	4	8	9	4	7	10	4	13	1	+Lb=		

MARK	A15						A16			A17			A18		
TYPE	7						Str.			Str.			Str.		
SIZE	#5						#5			#5			#5		
H	No.	Length ft.	Length in.	+Lb =	Length ft.	Length in.	No.	Length ft.	Length in.	No.	Length ft.	Length in.	No.	Length ft.	Length in.
15-16	14	9	11	+Lb=			2	31	1	2	22	6	109	5	9
13-14	12	9	11	+Lb=			2	27	1	2	19	6	95	5	9
11-12	10	9	11	+Lb=			2	24	1	2	17	6	85	5	9
9-10	8	9	11	+Lb=			2	21	1	2	15	6	75	5	9
7-8	6	9	11	+Lb=			2	17	1	2	12	6	61	5	9
5-6	4	9	11	+Lb=			2	14	1	2	10	6	51	5	9

Table of Dimensions

H	W Length ft.	W Length in.	N Length ft.	N Length in.	M2 Length ft.	M2 Length in.	M3 Length ft.	M3 Length in.	T2 Length ft.	T2 Length in.	T3 Length ft.	T3 Length in.	L2 Length ft.	L3 Length ft.	S2 Length ft.	S2 Length in.	S2 + Lb/2 =	S2 Length ft.	S2 Length in.	S3 Length ft.	S3 Length in.	S3 + Lb/2 =	S3 Length ft.	S3 Length in.
15-16	12	0	5	0	16	2⅛	17	8¾	23	1¼	12	5	26	18	7	11⅞	+0.5Lb=			4	4	+0.5Lb=		
13-14	11	0	4	6	13	9½	15	¾	19	8⅜	10	6½	22	15	7	7⅞	+0.5Lb=			4	3	+0.5Lb=		
11-12	10	0	4	0	11	11¾	13	2½	17	1⅜	9	3	19	13	7	3¾	+0.5Lb=			4	2⅛	+0.5Lb=		
9-10	9	0	3	6	10	2⅛	11	4¼	14	6⅜	7	11⅜	16	11	6	11⅝	+0.5Lb=			4	1⅛	+0.5Lb=		
7-8	7	6	2	9	7	8⅞	8	7	11	⅝	6	⅛	12	8	6	5½	+0.5Lb=			3	11¾	+0.5Lb=		
5-6	6	6	2	3	5	11⅛	6	8¾	8	5⅝	4	8½	9	6	6	1½	+0.5Lb=			3	10⅞	+0.5Lb=		

Reinforcement Details

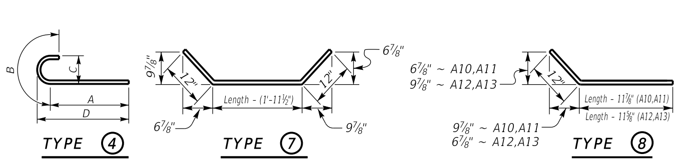

*Concrete quantities computed using 21" beam depth on ½" pad & Variable Bridge Width

Quantities

H	Concrete* C.Y.	Reinforcement LBS.
5	19.26+(0.71xLb) =	1802+(52.8xLb) =
6	20.97+(0.78xLb) =	1802+(52.8xLb) =
7	29.54+(0.93xLb) =	2692+(68.7xLb) =
8	31.63+(1.01xLb) =	2692+(68.7xLb) =
9	45.85+(1.19xLb) =	4226+(91xLb) =
10	48.45+(1.27xLb) =	4226+(91xLb) =
11	61.2+(1.41xLb) =	6144+(120.4xLb) =
12	64.18+(1.49xLb) =	6144+(120.4xLb) =
13	78.78+(1.64xLb) =	8921+(161xLb) =
14	82.13+(1.71xLb) =	8921+(161xLb) =
15	102.49+(1.86xLb) =	12387+(198.6xLb) =
16	106.35+(1.93xLb) =	12387+(198.6xLb) =

ABUTMENT SKEW CORRECTION FACTOR (SCF) = 1.064

NUMBER OF BARS TO ADD (Nb) = Bridge Width (feet) x SCF (round up to nearest whole number)

LENGTH OF ABUTMENT TO ADD (Lb) = Bridge Width (feet) x SCF (convert decimal to architectural)

GENERAL NOTES

SPECIFICATIONS: Construct abutments according to the current edition of the Kentucky Department of Highways Standard Specifications for Road and Bridge Construction. Abutments are designed for side by side box beams as detailed in Standard Drawings BDP-001 through BDP-012, current edition. Dimensions may be adjusted to allow for any out to out bridge width. Abutments are also adequate for Std. Dwg. slabs or steel beam superstructures.

FOUNDATION PRESSURE: Construct abutment footings on solid rock bearing material that can support a pressure of 8000 psf service or 10,800 psf strength factored as recommended by a geotechnical engineer.

WING LENGTHS: Calculated assuming 21" superstructure depth and stream bank elevation at top of footing.

FOOTING ELEVATION: Construct bottom of footing below the anticipated scour elevation. (This typically entails embedding the footings 1'-0" to 2'-0" into rock and pouring concrete directly against cut rock faces. as recommended by geotechnical engineer.)

NOTE: Distances to bars shown are clear dimensions unless otherwise noted.

MATERIAL SPECIFICATIONS:
Concrete, Class "A" = 3500 psi
Steel Reinforcement = Grade 60

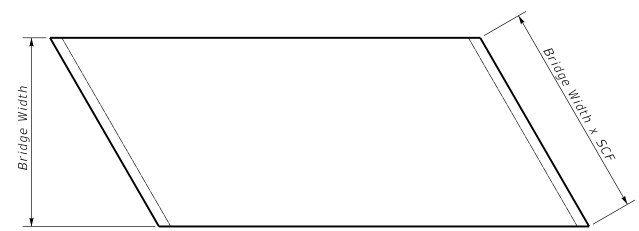

PLAN OF SUPERSTRUCTURE SLAB

KENTUCKY
DEPARTMENT OF HIGHWAYS

20° SKEW VARIABLE
WIDTH ABUTMENT
50% SKEWED WINGS

STANDARD DRAWING NO. BSA-010

SUBMITTED ____ DIRECTOR DIVISION OF STRUCTURAL DESIGN 02-26-20 DATE

APPROVED ____ STATE HIGHWAY ENGINEER 02-26-20 DATE

25° SKEW VARIABLE BRIDGE WIDTH 2:1 FILL SLOPES WINGS SKEWED 50% FROM ROADWAY TO BREASTWALL

ABUTMENT SKEW CORRECTION FACTOR (SCF) = 1.103

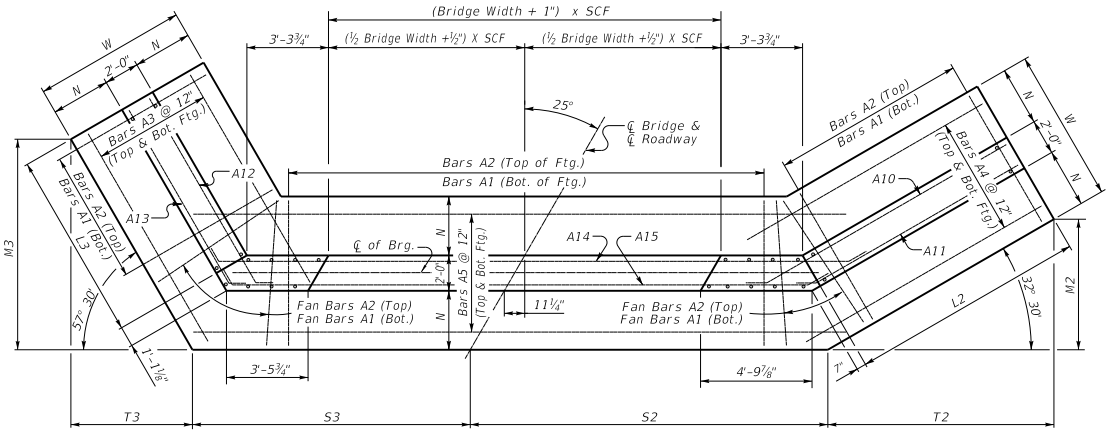

(Left Skew as shown;right skew opp. hand)

PLAN

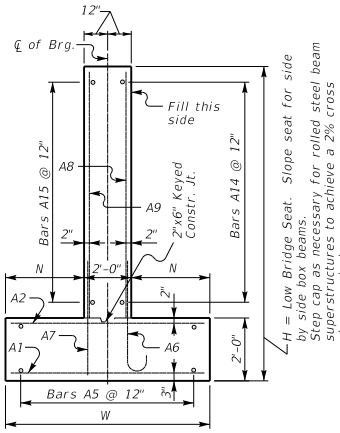

WALL SECTION

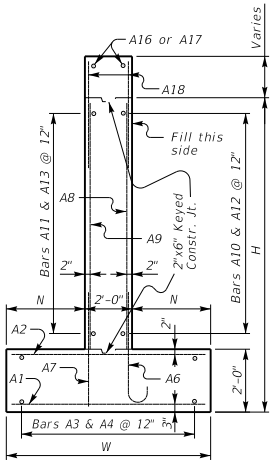

WING SECTION

NOTE: Trim A16 & A17 bars if necessary

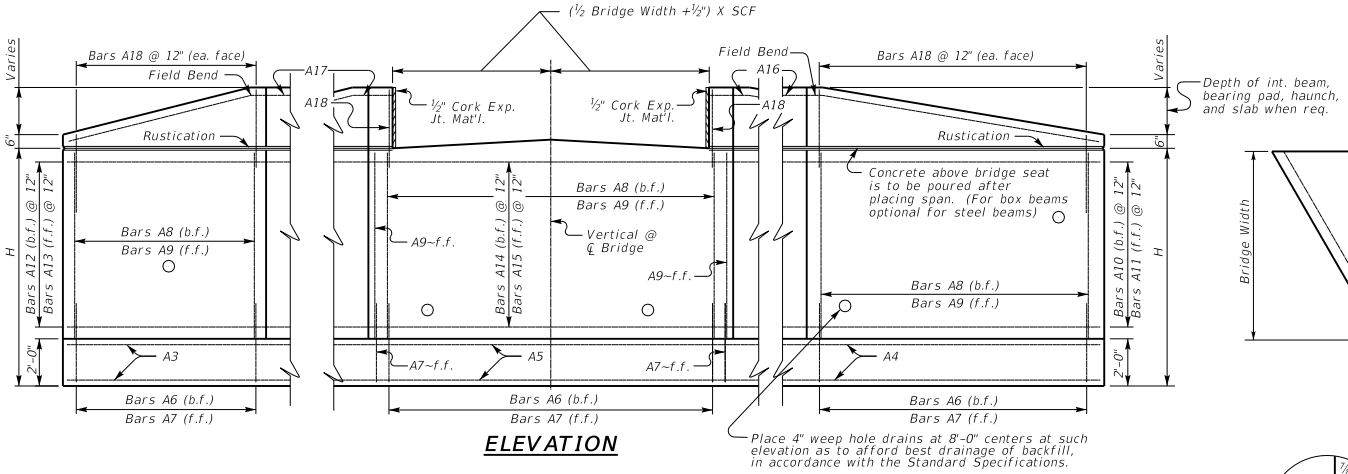

ELEVATION

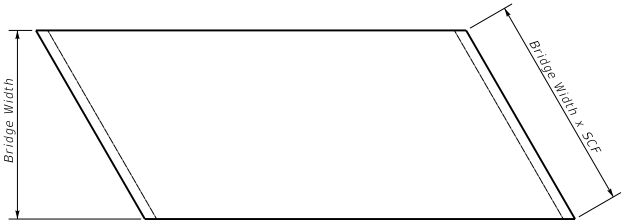

PLAN OF SUPERSTRUCTURE SLAB

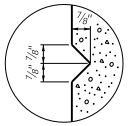

RUSTICATION GROOVE

KENTUCKY
DEPARTMENT OF HIGHWAYS

25° SKEW VARIABLE WIDTH ABUTMENT 50% SKEWED WINGS

STANDARD DRAWING NO. BSA-011

SUBMITTED _____ DIRECTOR DIVISION OF STRUCTURAL DESIGN — DATE 02-26-20

APPROVED _____ STATE HIGHWAY ENGINEER — DATE 02-26-20

25° SKEW VARIABLE BRIDGE WIDTH 2:1 FILL SLOPES WINGS SKEWED 50% FROM ROADWAY TO BREASTWALL

Bill of Reinforcement

MARK	A1	A2	A3	A4	A5	A6	A7	A8	A9	A10	A11	A12	A13	A14	A15	A16	A17	A18
TYPE	Str.	Str.	Str.	Str.	Str.	4	Str.	Str.	Str.	8	8	8	8	7	7	Str.	Str.	Str.
SIZE			#5	#5	#5				#5	#5	#5	#5	#5	#5	#5	#5	#5	#5
H	No.	No. Size Length ft. in. Spacing	No. Length ft. in.	No. Length ft. in.	No. Length ft. in. +Lb= Length ft. in.	No. Size Length ft. in. Spacing A ft. in. B ft. in. C ft. in. D ft. in.	No. Size Length ft. in. Spacing	No. Size Length ft. in. Spacing	No. Length ft. in.	No. Length ft. in.	No. Length ft. in.	No. Length ft. in.	No. Length ft. in.	No. Length ft. in. +Lb= Length ft. in.	No. Length ft. in. +Lb= Length ft. in.	No. Length ft. in.	No. Length ft. in.	No. Length ft. in.
15–16	64+Nb=	10 11 8 12	64+Nb=	7 11 8 12	24 20 9	24 29 4	24 12 10 +Lb=	51+Nb=	9 9 11 12 8 ⅛ 1 10 0 11¾ 8 6	55+Nb=	5 4 11 12	51+Nb=	6 12 10 12	55+Nb=	12 10 12 14 30 7	14 28 4	14 19 8	14 18 11	14 13 4 +Lb=	14 10 1 +Lb=	2 32 4	2 21 6	111 5 9
13–14	58+Nb=	9 10 8 12	58+Nb=	7 10 8 12	22 18 6	22 26 2	22 12 5 +Lb=	46+Nb=	8 8 3 12 6 11 1 3 0 8 7 3	50+Nb=	5 4 11 12	46+Nb=	6 10 10 12	50+Nb=	10 10 12 12 27 8	12 25 4	12 17 9	12 16 11	12 13 5 +Lb=	12 10 1 +Lb=	2 29 4	2 19 6	101 5 9
11–12	51+Nb=	8 9 8 12	51+Nb=	6 9 8 12	20 16 3	20 22 0	20 12 0 +Lb=	40+Nb=	7 7 1 12 5 10½ 1 2 0 7 6 2	44+Nb=	5 4 11 12	40+Nb=	5 8 10 12	44+Nb=	8 10 12 10 23 8	10 21 4	10 15 9	10 14 11	10 13 5 +Lb=	10 10 1 +Lb=	2 25 4	2 17 6	89 5 9
9–10	44+Nb=	7 8 8 12	44+Nb=	5 8 8 12	18 12 11	18 18 10	18 11 6 +Lb=	34+Nb=	6 6 1 12 5 1 1 0 0 6 5 4	38+Nb=	5 4 11 12	34+Nb=	5 6 10 12	38+Nb=	6 10 12 8 20 8	8 18 4	8 12 9	8 11 11	8 13 5 +Lb=	8 10 1 +Lb=	2 22 4	2 14 6	77 5 9
7–8	37+Nb=	6 7 2 12	37+Nb=	5 7 2 12	16 10 5	16 14 3	16 10 7 +Lb=	28+Nb=	5 5 7 12 4 8½ 0 10 0 5 4 11	32+Nb=	5 4 11 12	28+Nb=	5 4 10 12	32+Nb=	4 10 12 6 16 8	6 14 4	6 10 9	6 9 11	6 13 5 +Lb=	6 10 1 +Lb=	2 18 4	2 12 6	65 5 9
5–6	30+Nb=	5 6 2 12	30+Nb=	5 6 2 12	14 8 1	14 10 1	14 10 2 +Lb=	22+Nb=	5 5 7 12 4 8½ 0 10 0 5 4 11	26+Nb=	5 4 11 12	22+Nb=	5 2 10 12	26+Nb=	2 10 12 4 12 8	4 10 4	4 8 9	4 7 11	4 13 5 +Lb=	4 10 1 +Lb=	2 14 4	2 10 6	53 5 9

Table of Dimensions

H	W Length ft.	W Length in.	N Length ft.	N Length in.	M2 Length ft.	M2 Length in.	M3 Length ft.	M3 Length in.	T2 Length ft.	T2 Length in.	T3 Length ft.	T3 Length in.	L2 Length ft.	L3 Length ft.	S2 Length ft.	S2 Length in. + Lb/2 =	S2 Length ft.	S2 Length in.	S3 Length ft.	S3 Length in. + Lb/2 =	S3 Length ft.	S3 Length in.
15–16	12	0	5	0	15	7¼	17	6⅞	24	5⅞	11	2⅜	27	17	8	7⅞ +0.5Lb=			3	11⅛ +0.5Lb=		
13–14	11	0	4	6	13	11	15	7⅞	21	10⅛	9	11¾	24	15	8	3⅜ +0.5Lb=			3	10¾ +0.5Lb=		
11–12	10	0	4	0	11	8¼	13	8⅞	18	4⅛	8	9	20	13	7	10⅞ +0.5Lb=			3	10¼ +0.5Lb=		
9–10	9	0	3	6	10	0	10	11¾	15	8¼	6	11⅞	17	10	7	6¼ +0.5Lb=			3	9¾ +0.5Lb=		
7–8	7	6	2	9	7	8¾	8	11⅜	12	1⅝	5	8⅜	13	8	6	11½ +0.5Lb=			3	9 +0.5Lb=		
5–6	6	6	2	3	5	6	7	⅜	8	7⅝	4	5¾	9	6	6	6⅞ +0.5Lb=			3	8½ +0.5Lb=		

Reinforcement Details

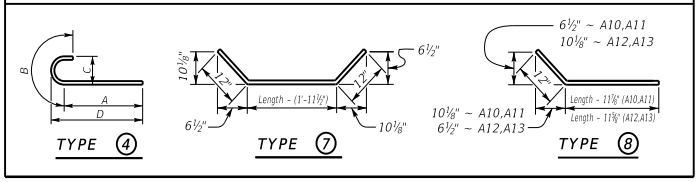

*Concrete quantities computed using 21" beam depth on ½" pad & Variable Bridge Width

Quantities

H	Concrete* C.Y.	Reinforcement LBS.
5	19.48+(0.71xLb) =	1842+(52.8xLb) =
6	21.21+(0.78xLb) =	1842+(52.8xLb) =
7	30.84+(0.93xLb) =	2826+(68.7xLb) =
8	33.02+(1.01xLb) =	2826+(68.7xLb) =
9	46.18+(1.19xLb) =	4287+(91xLb) =
10	48.81+(1.27xLb) =	4287+(91xLb) =
11	63.11+(1.41xLb) =	6360+(120.4xLb) =
12	66.17+(1.49xLb) =	6360+(120.4xLb) =
13	82.69+(1.64xLb) =	9375+(161xLb) =
14	86.2+(1.71xLb) =	9375+(161xLb) =
15	102.99+(1.86xLb) =	12507+(198.6xLb) =
16	106.87+(1.93xLb) =	12507+(198.6xLb) =

ABUTMENT SKEW CORRECTION FACTOR (SCF) = 1.103

NUMBER OF BARS TO ADD (Nb) = Bridge Width (feet) x SCF (round up to nearest whole number)

LENGTH OF ABUTMENT TO ADD (Lb) = Bridge Width (feet) x SCF (convert decimal to architectural)

GENERAL NOTES

SPECIFICATIONS: Construct abutments according to the current edition of the Kentucky Department of Highways Standard Specifications for Road and Bridge Construction. Abutments are designed for side by side box beams as detailed in Standard Drawings BDP-001 through BDP-012, current edition. Dimensions may be adjusted to allow for any out to out bridge width. Abutments are also adequate for Std. Dwg. slabs or steel beam superstructures.

FOUNDATION PRESSURE: Construct abutment footings on solid rock bearing material that can support a pressure of 8000 psf service or 10,800 psf strength factored as recommended by a geotechnical engineer.

WING LENGTHS: Calculated assuming 21" superstructure depth and stream bank elevation at top of footing.

FOOTING ELEVATION: Construct bottom of footing below the anticipated scour elevation. (This typically entails embedding the footings 1'-0" to 2'-0" into rock and pouring concrete directly against cut rock faces. as recommended by geotechnical engineer.)

NOTE: Distances to bars shown are clear dimensions unless otherwise noted.

MATERIAL SPECIFICATIONS:
Concrete, Class "A" = 3500 psi
Steel Reinforcement = Grade 60

PLAN OF SUPERSTRUCTURE SLAB

KENTUCKY
DEPARTMENT OF HIGHWAYS

25° SKEW VARIABLE WIDTH ABUTMENT 50% SKEWED WINGS

STANDARD DRAWING NO. BSA-012

SUBMITTED _____ DIRECTOR DIVISION OF STRUCTURAL DESIGN — DATE 02-26-20

APPROVED _____ STATE HIGHWAY ENGINEER — DATE 02-26-20

30° SKEW VARIABLE BRIDGE WIDTH 2:1 FILL SLOPES WINGS SKEWED 50% FROM ROADWAY TO BREASTWALL

ABUTMENT SKEW CORRECTION FACTOR (SCF) = 1.155

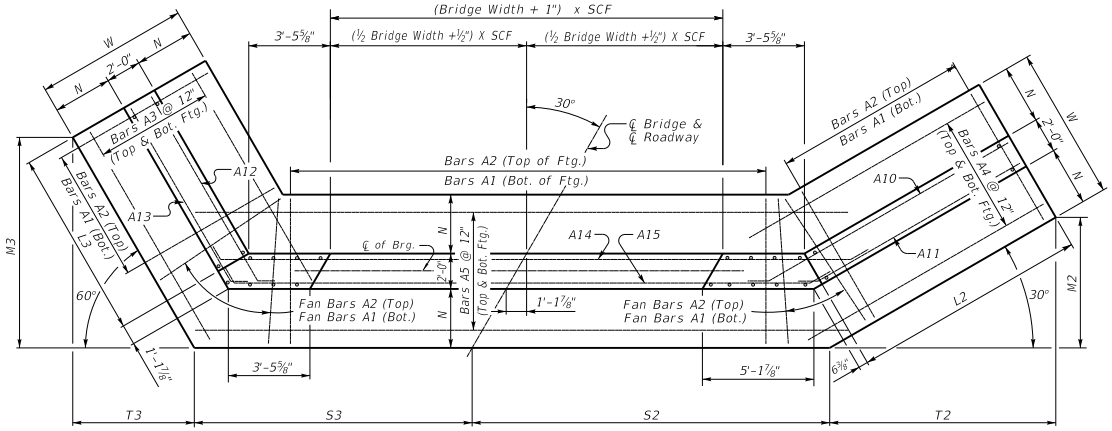

(Left Skew as shown;right skew opp. hand)

PLAN

NOTE: Trim A16 & A17 bars if necessary

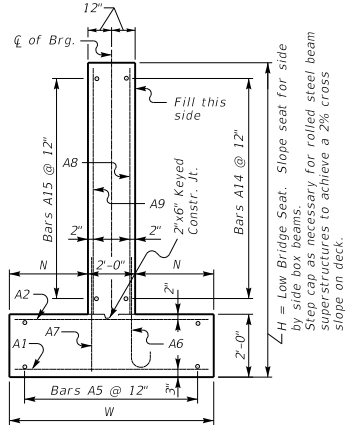

WALL SECTION

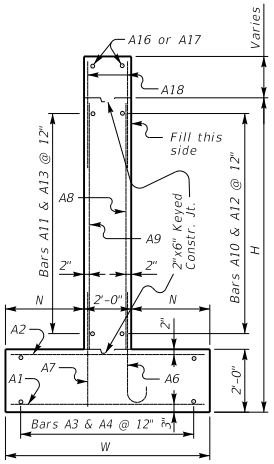

WING SECTION

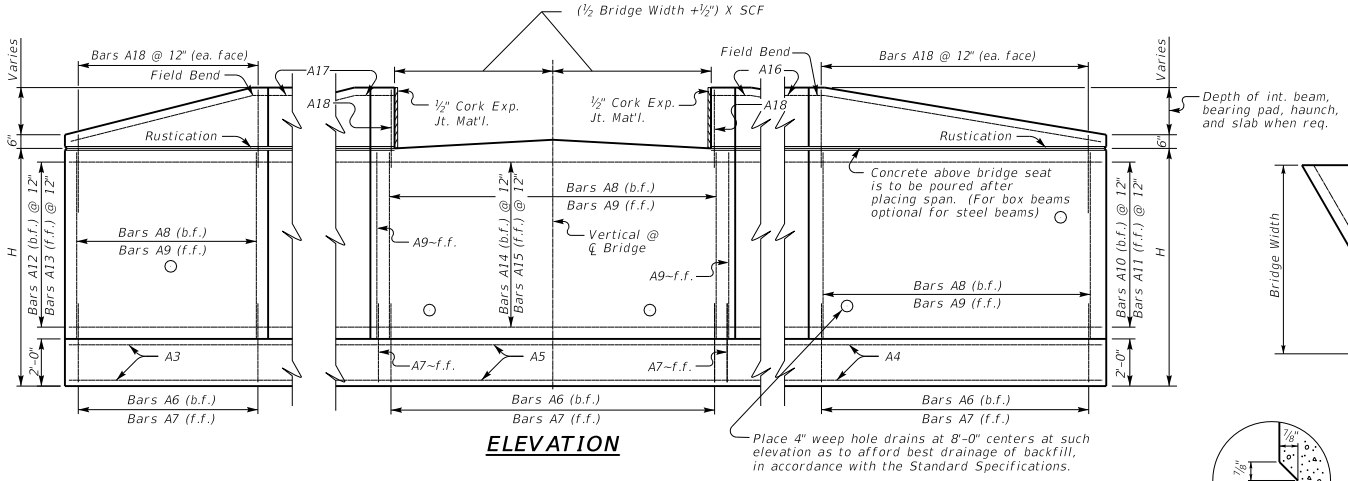

ELEVATION

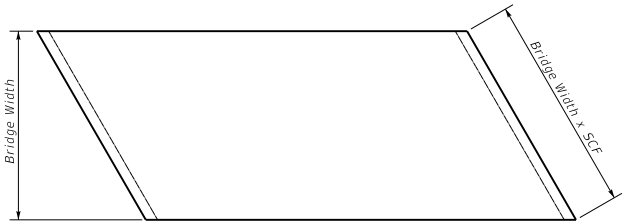

PLAN OF SUPERSTRUCTURE SLAB

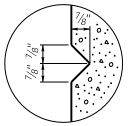

RUSTICATION GROOVE

KENTUCKY
DEPARTMENT OF HIGHWAYS

30° SKEW VARIABLE WIDTH ABUTMENT 50% SKEWED WINGS

STANDARD DRAWING NO. BSA-013

SUBMITTED _____ DIRECTOR DIVISION OF STRUCTURAL DESIGN — DATE 02-26-20

APPROVED _____ STATE HIGHWAY ENGINEER — DATE 02-26-20

30° SKEW VARIABLE BRIDGE WIDTH 2:1 FILL SLOPES WINGS SKEWED 50% FROM ROADWAY TO BREASTWALL

Bill of Reinforcement

MARK	A1					A2					A3			A4			A5					
TYPE	Str.					Str.					Str.			Str.			Str.					
SIZE											#5			#5			#5					
			Length					Length				Length			Length			Length			Length	
H	No.	Size	ft.	in.	Spacing	No.	Size	ft.	in.	Spacing	No.	ft.	in.	No.	ft.	in.	No.	ft.	in.	+Lb =	ft.	in.
15-16	66+Nb=	10	11	8	12	66+Nb=	7	11	8	12	24	20	11	24	31	2	24	13	1	+Lb=		
13-14	58+Nb=	9	10	8	12	58+Nb=	7	10	8	12	22	17	8	22	27	1	22	12	8	+Lb=		
11-12	51+Nb=	8	9	8	12	51+Nb=	6	9	8	12	20	15	5	20	22	11	20	12	3	+Lb=		
9-10	45+Nb=	7	8	8	12	45+Nb=	5	8	8	12	18	13	1	18	19	10	18	11	10	+Lb=		
7-8	37+Nb=	6	7	2	12	37+Nb=	5	7	2	12	16	10	6	16	14	2	16	10	11	+Lb=		
5-6	31+Nb=	5	6	2	12	31+Nb=	5	6	2	12	14	8	3	14	11	0	14	10	6	+Lb=		

MARK	A6													A7					A8				
TYPE	4													Str.					Str.				
SIZE																							
			Length			A		B		C		D				Length					Length		
H	No.	Size	ft.	in.	Spacing	ft.	in.	ft.	in.	ft.	in.	ft.	in.	No.	Size	ft.	in.	Spacing	No.	Size	ft.	in.	Spacing
15-16	54+Nb=	9	9	11	12	8	⅛	1	10	0	11¾	8	6	57+Nb=	5	4	11	12	54+Nb=	6	12	10	12
13-14	47+Nb=	8	8	3	12	6	11	1	3	0	8	7	3	50+Nb=	5	4	11	12	47+Nb=	6	10	10	12
11-12	41+Nb=	7	7	1	12	5	10½	1	2	0	7	6	2	44+Nb=	5	4	11	12	41+Nb=	5	8	10	12
9-10	36+Nb=	6	6	1	12	5	1	1	0	0	6	5	4	39+Nb=	5	4	11	12	36+Nb=	5	6	10	12
7-8	29+Nb=	5	5	7	12	4	8½	0	10	0	5	4	11	32+Nb=	5	4	11	12	29+Nb=	5	4	10	12
5-6	24+Nb=	5	5	7	12	4	8½	0	10	0	5	4	11	27+Nb=	5	4	11	12	24+Nb=	5	2	10	12

MARK	A9				A10			A11			A12			A13			A14						A15						A16			A17			A18		
TYPE	Str.				8			8			8			8			7						7						Str.			Str.			Str.		
SIZE	#5				#5			#5			#5			#5			#5						#5						#5			#5			#5		
		Length				Length			Length			Length			Length			Length			Length			Length			Length			Length			Length			Length	
H	No.	ft.	in.	Spacing	No.	ft.	in.	No.	ft.	in.	No.	ft.	in.	No.	ft.	in.	No.	ft.	in.	+Lb =	ft.	in.	No.	ft.	in.	+Lb =	ft.	in.	No.	ft.	in.	No.	ft.	in.	No.	ft.	in.
15-16	57+Nb=	12	10	12	14	32	10	14	30	4	14	19	8	14	18	11	14	13	10	+Lb=			14	10	5	+Lb=			2	34	7	2	21	6	115	5	9
13-14	50+Nb=	10	10	12	12	28	10	12	26	4	12	16	8	12	15	11	12	13	10	+Lb=			12	10	5	+Lb=			2	30	7	2	18	6	101	5	9
11-12	44+Nb=	8	10	12	10	24	10	10	22	4	10	14	8	10	13	11	10	13	11	+Lb=			10	10	5	+Lb=			2	26	7	2	16	6	89	5	9
9-10	39+Nb=	6	10	12	8	21	10	8	19	4	8	12	8	8	11	11	8	13	11	+Lb=			8	10	5	+Lb=			2	23	7	2	14	6	79	5	9
7-8	32+Nb=	4	10	12	6	16	11	6	14	4	6	10	8	6	9	11	6	13	11	+Lb=			6	10	5	+Lb=			2	18	7	2	12	6	65	5	9
5-6	27+Nb=	2	10	12	4	13	11	4	11	4	4	8	8	4	7	11	4	13	11	+Lb=			4	10	5	+Lb=			2	15	7	2	10	6	55	5	9

Table of Dimensions

H	W		N		M2		M3		T2		T3		L2	L3	S2					S3				
	Length		Length		Length		Length		Length		Length		Length	Length	Length		$+\frac{Lb}{2}=$	Length		Length		$+\frac{Lb}{2}=$	Length	
	ft.	in.	ft.	in.	ft.	in.	ft.	in.	ft.	in.	ft.	in.	ft.	ft.	ft.	in.		ft.	in.	ft.	in.		ft.	in.
15-16	12	0	5	0	15	5¼	18	2⅝	26	8⅞	10	6¼	29	17	9	5⅛	+0.5Lb=			3	6⅛	+0.5Lb=		
13-14	11	0	4	6	13	4½	15	4½	23	1⅞	8	10½	25	14	9	⅛	+0.5Lb=			3	6⅛	+0.5Lb=		
11-12	10	0	4	0	11	3⅝	13	4¾	19	7	7	8¾	21	12	8	7	+0.5Lb=			3	6⅛	+0.5Lb=		
9-10	9	0	3	6	9	8⅞	11	4⅞	16	10⅜	6	7	18	10	8	1⅞	+0.5Lb=			3	6⅛	+0.5Lb=		
7-8	7	6	2	9	7	1⅝	9	3⅝	12	4⅜	5	4½	13	8	7	6⅜	+0.5Lb=			3	6⅛	+0.5Lb=		
5-6	6	6	2	3	5	6⅞	7	3⅞	9	7¾	4	2¾	10	6	7	1¼	+0.5Lb=			3	6⅛	+0.5Lb=		

Reinforcement Details

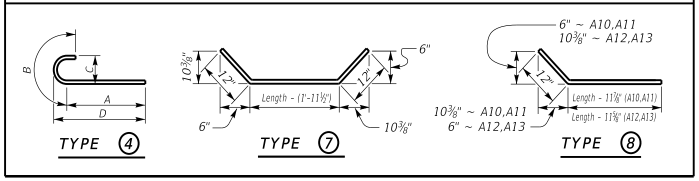

*Concrete quantities computed using 21" beam depth on ½" pad & Variable Bridge Width

Quantities

H	Concrete*	Reinforcement
	C.Y.	LBS.
5	20.57+(0.71xLb) =	1928+(52.8xLb) =
6	22.4+(0.78xLb) =	1928+(52.8xLb) =
7	31.2+(0.93xLb) =	2849+(68.7xLb) =
8	33.4+(1.01xLb) =	2849+(68.7xLb) =
9	47.91+(1.19xLb) =	4426+(91xLb) =
10	50.63+(1.27xLb) =	4426+(91xLb) =
11	63.62+(1.41xLb) =	6401+(120.4xLb) =
12	66.71+(1.49xLb) =	6401+(120.4xLb) =
13	83.28+(1.64xLb) =	9432+(161xLb) =
14	86.81+(1.71xLb) =	9432+(161xLb) =
15	107.56+(1.86xLb) =	13008+(198.6xLb) =
16	111.61+(1.93xLb) =	13008+(198.6xLb) =

ABUTMENT SKEW CORRECTION FACTOR (SCF) = 1.155

NUMBER OF BARS TO ADD (Nb) = Bridge Width (feet) x SCF (round up to nearest whole number)

LENGTH OF ABUTMENT TO ADD (Lb) = Bridge Width (feet) x SCF (convert decimal to architectural)

GENERAL NOTES

SPECIFICATIONS: Construct abutments according to the current edition of the Kentucky Department of Highways Standard Specifications for Road and Bridge Construction. Abutments are designed for side by side box beams as detailed in Standard Drawings BDP-001 through BDP-012, current edition. Dimensions may be adjusted to allow for any out to out bridge width. Abutments are also adequate for Std. Dwg. slabs or steel beam superstructures.

FOUNDATION PRESSURE: Construct abutment footings on solid rock bearing material that can support a pressure of 8000 psf service or 10,800 psf strength factored as recommended by a geotechnical engineer.

WING LENGTHS: Calculated assuming 21" superstructure depth and stream bank elevation at top of footing.

FOOTING ELEVATION: Construct bottom of footing below the anticipated scour elevation. (This typically entails embedding the footings 1'-0" to 2'-0" into rock and pouring concrete directly against cut rock faces. as recommended by geotechnical engineer.)

NOTE: Distances to bars shown are clear dimensions unless otherwise noted.

MATERIAL SPECIFICATIONS:
Concrete, Class "A" = 3500 psi
Steel Reinforcement = Grade 60

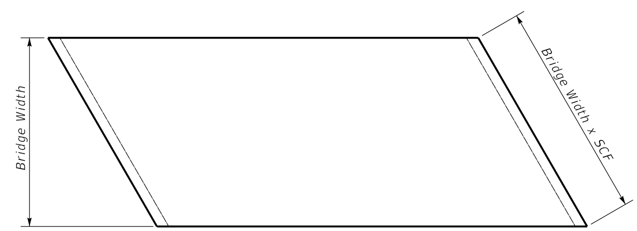

PLAN OF SUPERSTRUCTURE SLAB

KENTUCKY
DEPARTMENT OF HIGHWAYS

30° SKEW VARIABLE WIDTH ABUTMENT 50% SKEWED WINGS

STANDARD DRAWING NO. BSA-014

SUBMITTED ____ DIRECTOR DIVISION OF STRUCTURAL DESIGN 02-26-20 DATE

APPROVED ____ STATE HIGHWAY ENGINEER 02-26-20 DATE

35° SKEW VARIABLE BRIDGE WIDTH 2:1 FILL SLOPES WINGS SKEWED 50% FROM ROADWAY TO BREASTWALL

ABUTMENT SKEW CORRECTION FACTOR (SCF) = 1.221

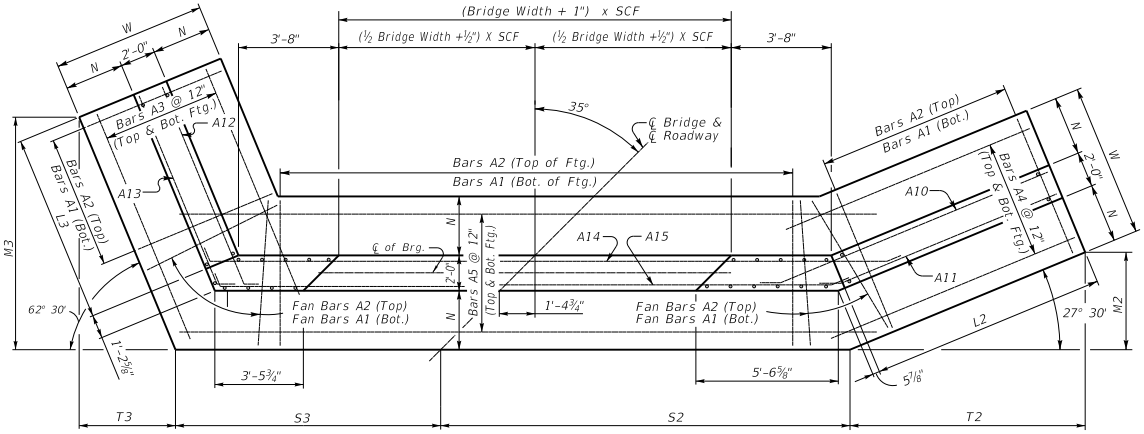

(Left Skew as shown;right skew opp. hand)

PLAN

NOTE: Trim A16 & A17 bars if necessary

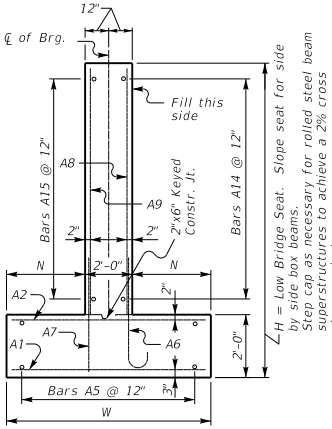

WALL SECTION

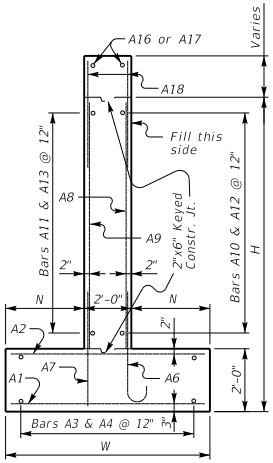

WING SECTION

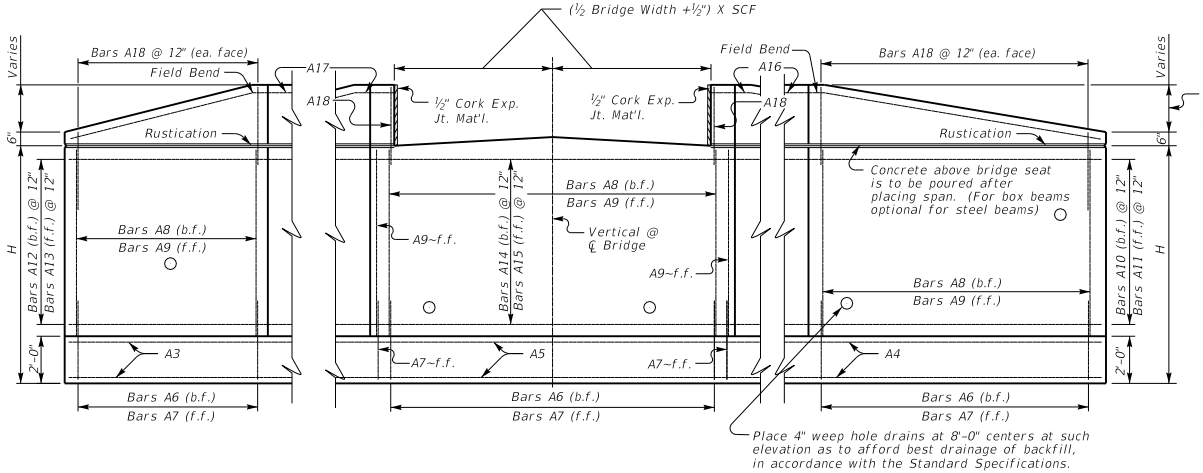

ELEVATION

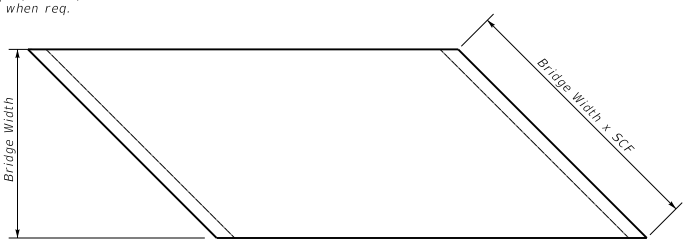

PLAN OF SUPERSTRUCTURE SLAB

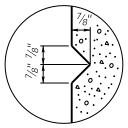

RUSTICATION GROOVE

KENTUCKY
DEPARTMENT OF HIGHWAYS

35° SKEW VARIABLE WIDTH ABUTMENT 50% SKEWED WINGS

STANDARD DRAWING NO. BSA-015

SUBMITTED _____ DIRECTOR DIVISION OF STRUCTURAL DESIGN — DATE 02-26-20

APPROVED _____ STATE HIGHWAY ENGINEER — DATE 02-26-20

35° SKEW VARIABLE BRIDGE WIDTH 2:1 FILL SLOPES
WINGS SKEWED 50% FROM ROADWAY TO BREASTWALL

Bill of Reinforcement

MARK	A1					A2					A3			A4			A5					
TYPE	Str.					Str.					Str.			Str.			Str.					
SIZE											#5			#5			#5					
H	No.	Size	Length ft.	Length in.	Spacing	No.	Size	Length ft.	Length in.	Spacing	No.	Length ft.	Length in.	No.	Length ft.	Length in.	No.	Length ft.	Length in.	+Lb =	Length ft.	Length in.
15-16	68+Nb=	10	11	8	12	68+Nb=	7	11	8	12	24	20	2	24	34	1	24	13	6	+Lb=		
13-14	62+Nb=	9	10	8	12	62+Nb=	7	10	8	12	22	17	10	22	30	0	22	13	1	+Lb=		
11-12	54+Nb=	8	9	8	12	54+Nb=	6	9	8	12	20	15	6	20	24	10	20	12	8	+Lb=		
9-10	48+Nb=	7	8	8	12	48+Nb=	5	8	8	12	18	13	3	18	21	9	18	12	3	+Lb=		
7-8	40+Nb=	6	7	2	12	40+Nb=	5	7	2	12	16	10	8	16	16	1	16	11	4	+Lb=		
5-6	33+Nb=	5	6	2	12	33+Nb=	5	6	2	12	14	8	4	14	11	11	14	10	11	+Lb=		

MARK	A6													A7					A8				
TYPE	4													Str.					Str.				
SIZE																							
H	No.	Size	Length ft.	Length in.	Spacing	A ft.	A in.	B ft.	B in.	C ft.	C in.	D ft.	D in.	No.	Size	Length ft.	Length in.	Spacing	No.	Size	Length ft.	Length in.	Spacing
15-16	56+Nb=	9	9	11	12	8	⅛	1	10	0	11¾	8	6	59+Nb=	5	4	11	12	56+Nb=	6	12	10	12
13-14	50+Nb=	8	8	3	12	6	11	1	3	0	8	7	3	53+Nb=	5	4	11	12	50+Nb=	6	10	10	12
11-12	43+Nb=	7	7	1	12	5	10½	1	2	0	7	6	2	46+Nb=	5	4	11	12	43+Nb=	5	8	10	12
9-10	38+Nb=	6	6	1	12	5	1	1	0	0	6	5	4	41+Nb=	5	4	11	12	38+Nb=	5	6	10	12
7-8	31+Nb=	5	5	7	12	4	8½	0	10	0	5	4	11	34+Nb=	5	4	11	12	31+Nb=	5	4	10	12
5-6	25+Nb=	5	5	7	12	4	8½	0	10	0	5	4	11	28+Nb=	5	4	11	12	25+Nb=	5	2	10	12

MARK	A9				A10			A11			A12			A13			A14						A15						A16			A17			A18		
TYPE	Str.				8			8			8			8			7						7						Str.			Str.			Str.		
SIZE	#5				#5			#5			#5			#5			#5						#5						#5			#5			#5		
H	No.	Length ft.	Length in.	Spacing	No.	Length ft.	Length in.	No.	Length ft.	Length in.	No.	Length ft.	Length in.	No.	Length ft.	Length in.	No.	Length ft.	Length in.	+Lb =	Length ft.	Length in.	No.	Length ft.	Length in.	+Lb =	Length ft.	Length in.	No.	Length ft.	Length in.	No.	Length ft.	Length in.	No.	Length ft.	Length in.
15-16	59+Nb=	12	10	12	14	36	1	14	33	3	14	18	8	14	18	0	14	14	5	+Lb=			14	10	10	+Lb=			2	37	11	2	20	7	121	5	9
13-14	53+Nb=	10	10	12	12	32	1	12	29	3	12	16	8	12	16	0	12	14	6	+Lb=			12	10	10	+Lb=			2	33	11	2	18	7	109	5	9
11-12	46+Nb=	8	10	12	10	27	1	10	24	3	10	14	8	10	14	0	10	14	6	+Lb=			10	10	10	+Lb=			2	28	11	2	16	7	95	5	9
9-10	41+Nb=	6	10	12	8	24	1	8	21	3	8	12	8	8	12	0	8	14	6	+Lb=			8	10	10	+Lb=			2	25	11	2	14	7	85	5	9
7-8	34+Nb=	4	10	12	6	19	2	6	16	3	6	10	8	6	10	0	6	14	6	+Lb=			6	10	10	+Lb=			2	20	11	2	12	7	71	5	9
5-6	28+Nb=	2	10	12	4	15	2	4	12	3	4	8	8	4	8	0	4	14	6	+Lb=			4	10	10	+Lb=			2	16	11	2	10	7	59	5	9

Table of Dimensions

H	W		N		M2		M3		T2		T3		L2	L3	S2					S3				
	Length ft.	Length in.	Length ft.	Length in.	Length ft.	Length in.	Length ft.	Length in.	Length ft.	Length in.	Length ft.	Length in.	Length ft.	Length ft.	Length ft.	Length in.	+ Lb/2 =	Length ft.	Length in.	Length ft.	Length in.	+ Lb/2 =	Length ft.	Length in.
15-16	12	0	5	0	15	6¾	17	11½	29	10⅞	9	4¼	32	16	10	3⅞	+0.5Lb=			3	¾	+0.5Lb=		
13-14	11	0	4	6	13	8	15	11	26	3	8	3⅜	28	14	9	10¼	+0.5Lb=			3	1¼	+0.5Lb=		
11-12	10	0	4	0	11	3⅝	13	10½	21	8½	7	2⅝	23	12	9	4⅝	+0.5Lb=			3	1⅞	+0.5Lb=		
9-10	9	0	3	6	9	10¼	11	10	18	11¼	6	1⅞	20	10	8	10⅞	+0.5Lb=			3	2⅜	+0.5Lb=		
7-8	7	6	2	9	7	5½	9	7⅞	14	4	5	¼	15	8	8	2⅜	+0.5Lb=			3	3¼	+0.5Lb=		
5-6	6	6	2	3	5	6¾	7	7⅜	10	8⅛	3	11½	11	6	7	8¾	+0.5Lb=			3	3¾	+0.5Lb=		

Reinforcement Details

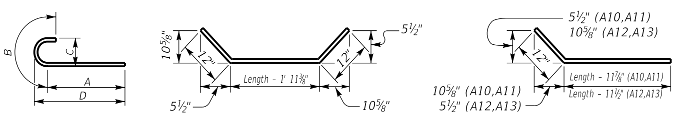

TYPE (4) TYPE (7) TYPE (8)

*Concrete quantities computed using 21" beam depth on ½" pad & Variable Bridge Width

Quantities

H	Concrete* C.Y.	Reinforcement LBS.
5	21.74+(0.71xLb) =	2032+(52.8xLb) =
6	23.67+(0.78xLb) =	2032+(52.8xLb) =
7	33.71+(0.93xLb) =	3062+(68.7xLb) =
8	36.09+(1.01xLb) =	3062+(68.7xLb) =
9	51.05+(1.19xLb) =	4695+(91xLb) =
10	53.95+(1.27xLb) =	4695+(91xLb) =
11	67.29+(1.41xLb) =	6745+(120.4xLb) =
12	70.56+(1.49xLb) =	6745+(120.4xLb) =
13	89.22+(1.64xLb) =	10057+(161xLb) =
14	93.01+(1.71xLb) =	10057+(161xLb) =
15	112.3+(1.86xLb) =	13480+(198.6xLb) =
16	116.54+(1.93xLb) =	13480+(198.6xLb) =

ABUTMENT SKEW CORRECTION FACTOR (SCF) = 1.221

NUMBER OF BARS TO ADD (Nb) = Bridge Width (feet) x SCF (round up to nearest whole number)

LENGTH OF ABUTMENT TO ADD (Lb) = Bridge Width (feet) x SCF (convert decimal to architectural)

GENERAL NOTES

SPECIFICATIONS: Construct abutments according to the current edition of the Kentucky Department of Highways Standard Specifications for Road and Bridge Construction. Abutments are designed for side by side box beams as detailed in Standard Drawings BDP-001 through BDP-012, current edition. Dimensions may be adjusted to allow for any out to out bridge width. Abutments are also adequate for Std. Dwg. slabs or steel beam superstructures.

FOUNDATION PRESSURE: Construct abutment footings on solid rock bearing material that can support a pressure of 8000 psf service or 10,800 psf strength factored as recommended by a geotechnical engineer.

WING LENGTHS: Calculated assuming 21" superstructure depth and stream bank elevation at top of footing.

FOOTING ELEVATION: Construct bottom of footing below the anticipated scour elevation. (This typically entails embedding the footings 1'-0" to 2'-0" into rock and pouring concrete directly against cut rock faces. as recommended by geotechnical engineer.)

NOTE: Distances to bars shown are clear dimensions unless otherwise noted.

MATERIAL SPECIFICATIONS:
Concrete, Class "A" = 3500 psi
Steel Reinforcement = Grade 60

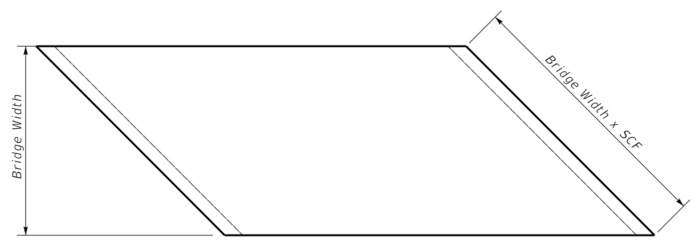

PLAN OF SUPERSTRUCTURE SLAB

KENTUCKY
DEPARTMENT OF HIGHWAYS

35° SKEW VARIABLE
WIDTH ABUTMENT
50% SKEWED WINGS

STANDARD DRAWING NO. BSA-016

SUBMITTED [signature] DIRECTOR DIVISION OF STRUCTURAL DESIGN 02-26-20 DATE

APPROVED [signature] STATE HIGHWAY ENGINEER 02-26-20 DATE

40° SKEW VARIABLE BRIDGE WIDTH 2:1 FILL SLOPES WINGS SKEWED 50% FROM ROADWAY TO BREASTWALL

ABUTMENT SKEW CORRECTION FACTOR (SCF) = 1.305

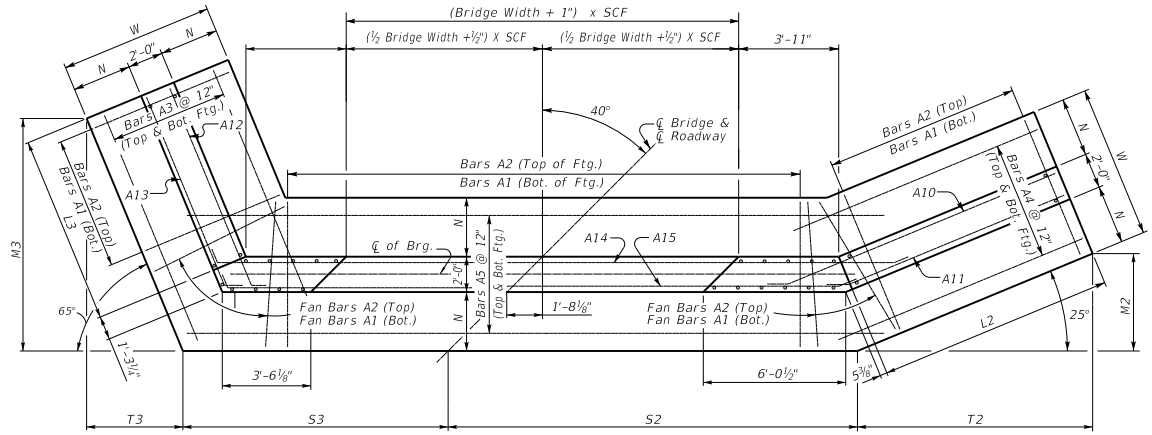

PLAN

NOTE: Trim A16 & A17 bars if necessary

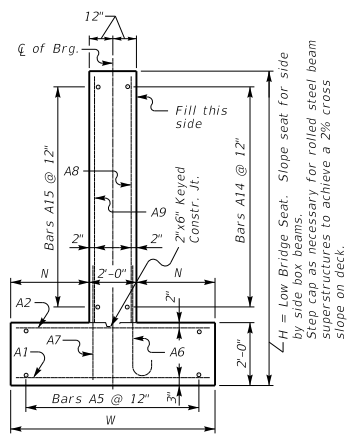

WALL SECTION

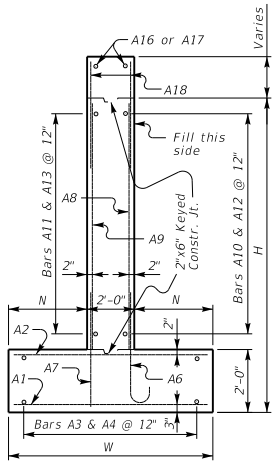

WING SECTION

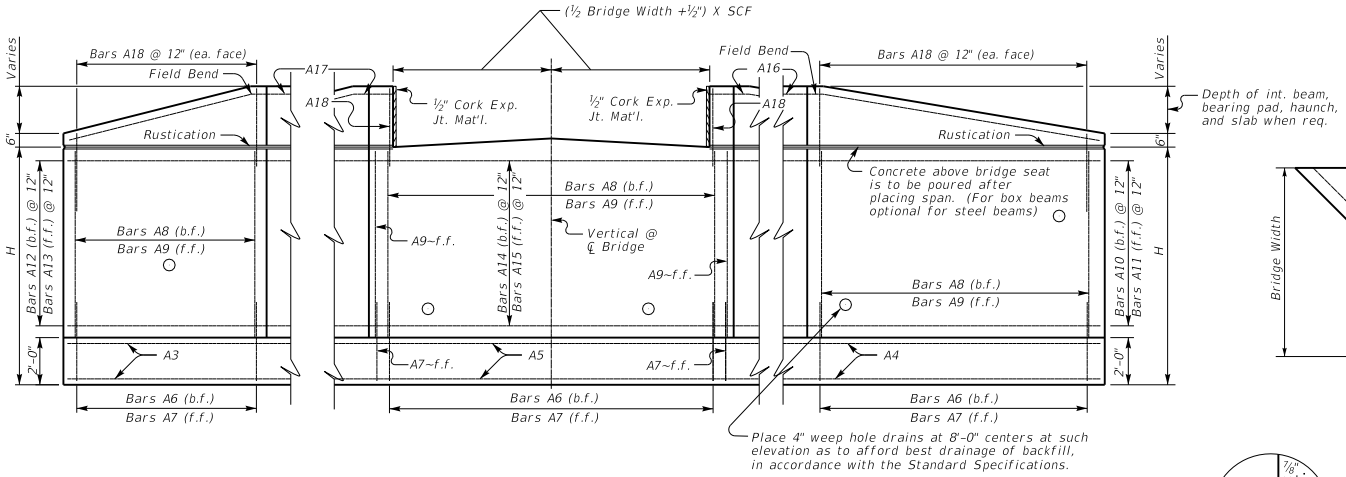

ELEVATION

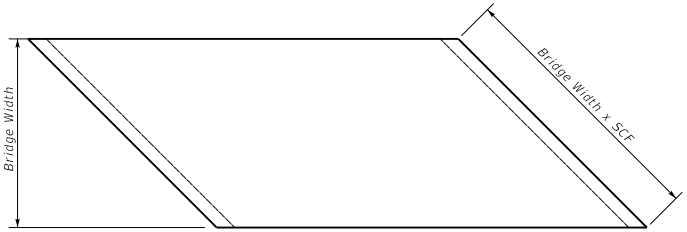

PLAN OF SUPERSTRUCTURE SLAB

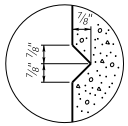

RUSTICATION GROOVE

KENTUCKY DEPARTMENT OF HIGHWAYS

40° SKEW VARIABLE WIDTH ABUTMENT 50% SKEWED WINGS

STANDARD DRAWING NO. BSA-017

SUBMITTED _____ DIRECTOR DIVISION OF STRUCTURAL DESIGN — DATE 02-26-20

APPROVED _____ STATE HIGHWAY ENGINEER — DATE 02-26-20

40° SKEW VARIABLE BRIDGE WIDTH 2:1 FILL SLOPES WINGS SKEWED 50% FROM ROADWAY TO BREASTWALL

Bill of Reinforcement

MARK	A1					A2					A3			A4			A5					
TYPE	Str.					Str.					Str.			Str.			Str.					
SIZE											#5			#5			#5					
H	No.	Size	Length ft.	Length in.	Spacing	No.	Size	Length ft.	Length in.	Spacing	No.	Length ft.	Length in.	No.	Length ft.	Length in.	No.	Length ft.	Length in.	+Lb =	Length ft.	Length in.
15-16	72+Nb=	10	11	8	12	72+Nb=	7	11	8	12	24	20	4	24	37	0	24	14	0	+Lb=		
13-14	64+Nb=	9	10	8	12	64+Nb=	7	10	8	12	22	18	0	22	31	11	22	13	7	+Lb=		
11-12	57+Nb=	8	9	8	12	57+Nb=	6	9	8	12	20	15	8	20	26	9	20	13	2	+Lb=		
9-10	51+Nb=	7	8	8	12	51+Nb=	5	8	8	12	18	13	4	18	23	8	18	12	9	+Lb=		
7-8	42+Nb=	6	7	2	12	42+Nb=	5	7	2	12	16	10	9	16	18	0	16	11	10	+Lb=		
5-6	35+Nb=	5	6	2	12	35+Nb=	5	6	2	12	14	8	6	14	12	10	14	11	5	+Lb=		

MARK	A6													A7					A8				
TYPE	4													Str.					Str.				
SIZE																							
H	No.	Size	Length ft.	Length in.	Spacing	A ft.	A in.	B ft.	B in.	C ft.	C in.	D ft.	D in.	No.	Size	Length ft.	Length in.	Spacing	No.	Size	Length ft.	Length in.	Spacing
15-16	59+Nb=	9	9	11	12	8	⅛	1	10	0	11¾	8	6	63+Nb=	5	4	11	12	59+Nb=	6	12	10	12
13-14	52+Nb=	8	8	3	12	6	11	1	3	0	8	7	3	56+Nb=	5	4	11	12	52+Nb=	6	10	10	12
11-12	45+Nb=	7	7	1	12	5	10½	1	2	0	7	6	2	49+Nb=	5	4	11	12	45+Nb=	5	8	10	12
9-10	40+Nb=	6	6	1	12	5	1	1	0	0	6	5	4	44+Nb=	5	4	11	12	40+Nb=	5	6	10	12
7-8	33+Nb=	5	5	7	12	4	8½	0	10	0	5	4	11	37+Nb=	5	4	11	12	33+Nb=	5	4	10	12
5-6	26+Nb=	5	5	7	12	4	8½	0	10	0	5	4	11	30+Nb=	5	4	11	12	26+Nb=	5	2	10	12

MARK	A9				A10			A11			A12			A13			A14						A15						A16			A17			A18		
TYPE	Str.				8			8			8			8			7						7						Str.			Str.			Str.		
SIZE	#5				#5			#5			#5			#5			#5						#5						#5			#5			#5		
H	No.	Length ft.	Length in.	Spacing	No.	Length ft.	Length in.	No.	Length ft.	Length in.	No.	Length ft.	Length in.	No.	Length ft.	Length in.	No.	Length ft.	Length in.	+Lb =	Length ft.	Length in.	No.	Length ft.	Length in.	+Lb =	Length ft.	Length in.	No.	Length ft.	Length in.	No.	Length ft.	Length in.	No.	Length ft.	Length in.
15-16	63+Nb=	12	10	12	14	39	4	14	36	3	14	18	6	14	18	0	14	15	3	+Lb=			14	11	5	+Lb=			2	41	5	2	20	8	128	5	9
13-14	56+Nb=	10	10	12	12	34	4	12	31	3	12	16	6	12	16	0	12	15	3	+Lb=			12	11	5	+Lb=			2	36	5	2	18	8	114	5	9
11-12	49+Nb=	8	10	12	10	29	5	10	26	3	10	14	6	10	14	0	10	15	3	+Lb=			10	11	5	+Lb=			2	31	5	2	16	8	100	5	9
9-10	44+Nb=	6	10	12	8	26	5	8	23	3	8	12	7	8	12	0	8	15	4	+Lb=			8	11	5	+Lb=			2	28	5	2	14	8	90	5	9
7-8	37+Nb=	4	10	12	6	21	5	6	18	3	6	10	7	6	10	0	6	15	4	+Lb=			6	11	5	+Lb=			2	23	5	2	12	8	76	5	9
5-6	30+Nb=	2	10	12	4	16	5	4	13	3	4	8	7	4	8	0	4	15	4	+Lb=			4	11	5	+Lb=			2	18	5	2	10	8	62	5	9

Table of Dimensions

H	W Length ft.	W Length in.	N Length ft.	N Length in.	M2 Length ft.	M2 Length in.	M3 Length ft.	M3 Length in.	T2 Length ft.	T2 Length in.	T3 Length ft.	T3 Length in.	L2 Length ft.	L3 Length ft.	S2 Length ft.	S2 Length in.	S2 + Lb/2 =	S2 Length ft.	S2 Length in.	S3 Length ft.	S3 Length in.	S3 + Lb/2 =	S3 Length ft.	S3 Length in.
15-16	12	0	5	0	15	5⅜	18	6½	33	1½	8	7¾	35	16	11	4¾	+0.5Lb=			2	6⅝	+0.5Lb=		
13-14	11	0	4	6	13	3½	16	5¼	28	6	7	8	30	14	10	10⅜	+0.5Lb=			2	7⅞	+0.5Lb=		
11-12	10	0	4	0	11	1½	14	4⅛	23	10⅜	6	8¼	25	12	10	4	+0.5Lb=			2	9⅛	+0.5Lb=		
9-10	9	0	3	6	9	9¾	12	2⅞	21	½	5	8½	22	10	9	9⅝	+0.5Lb=			2	10⅜	+0.5Lb=		
7-8	7	6	2	9	7	7½	9	11⅞	16	4⅜	4	7⅞	17	8	9	⅛	+0.5Lb=			3	⅛	+0.5Lb=		
5-6	6	6	2	3	5	5⅝	7	10¾	11	8¾	3	8⅛	12	6	8	5¾	+0.5Lb=			3	1⅜	+0.5Lb=		

Reinforcement Details

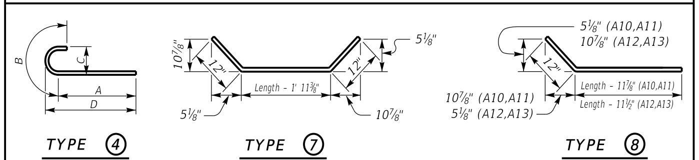

*Concrete quantities computed using 21" beam depth on ½" pad & Variable Bridge Width

Quantities

H	Concrete* C.Y.	Reinforcement LBS.
5	23.01+(0.71xLb) =	2143+(52.8xLb) =
6	25.06+(0.78xLb) =	2143+(52.8xLb) =
7	36.35+(0.93xLb) =	3263+(68.7xLb) =
8	38.92+(1.01xLb) =	3263+(68.7xLb) =
9	54.35+(1.19xLb) =	4975+(91xLb) =
10	57.43+(1.27xLb) =	4975+(91xLb) =
11	71.15+(1.41xLb) =	7104+(120.4xLb) =
12	74.61+(1.49xLb) =	7104+(120.4xLb) =
13	93.64+(1.64xLb) =	10462+(161xLb) =
14	97.62+(1.71xLb) =	10462+(161xLb) =
15	119.24+(1.86xLb) =	14253+(198.6xLb) =
16	123.73+(1.93xLb) =	14253+(198.6xLb) =

ABUTMENT SKEW CORRECTION FACTOR (SCF) = 1.305

NUMBER OF BARS TO ADD (Nb) = Bridge Width (feet) x SCF (round up to nearest whole number)

LENGTH OF ABUTMENT TO ADD (Lb) = Bridge Width (feet) x SCF (convert decimal to architectural)

GENERAL NOTES

SPECIFICATIONS: Construct abutments according to the current edition of the Kentucky Department of Highways Standard Specifications for Road and Bridge Construction. Abutments are designed for side by side box beams as detailed in Standard Drawings BDP-001 through BDP-012, current edition. Dimensions may be adjusted to allow for any out to out bridge width. Abutments are also adequate for Std. Dwg. slabs or steel beam superstructures.

FOUNDATION PRESSURE: Construct abutment footings on solid rock bearing material that can support a pressure of 8000 psf service or 10,800 psf strength factored as recommended by a geotechnical engineer.

WING LENGTHS: Calculated assuming 21" superstructure depth and stream bank elevation at top of footing.

FOOTING ELEVATION: Construct bottom of footing below the anticipated scour elevation. (This typically entails embedding the footings 1'-0" to 2'-0" into rock and pouring concrete directly against cut rock faces. as recommended by geotechnical engineer.)

NOTE: Distances to bars shown are clear dimensions unless otherwise noted.

MATERIAL SPECIFICATIONS:
Concrete, Class "A" = 3500 psi
Steel Reinforcement = Grade 60

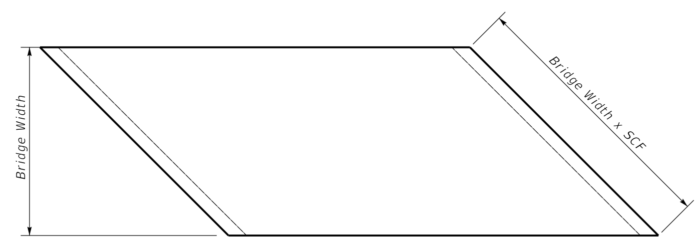

PLAN OF SUPERSTRUCTURE SLAB

KENTUCKY
DEPARTMENT OF HIGHWAYS

40° SKEW VARIABLE
WIDTH ABUTMENT
50% SKEWED WINGS

STANDARD DRAWING NO. BSA-018

SUBMITTED ______ DIRECTOR DIVISION OF STRUCTURAL DESIGN 02-26-20 DATE

APPROVED ______ STATE HIGHWAY ENGINEER 02-26-20 DATE

45° SKEW VARIABLE BRIDGE WIDTH 2:1 FILL SLOPES WINGS SKEWED 50% FROM ROADWAY TO BREASTWALL

ABUTMENT SKEW CORRECTION FACTOR (SCF) = 1.414

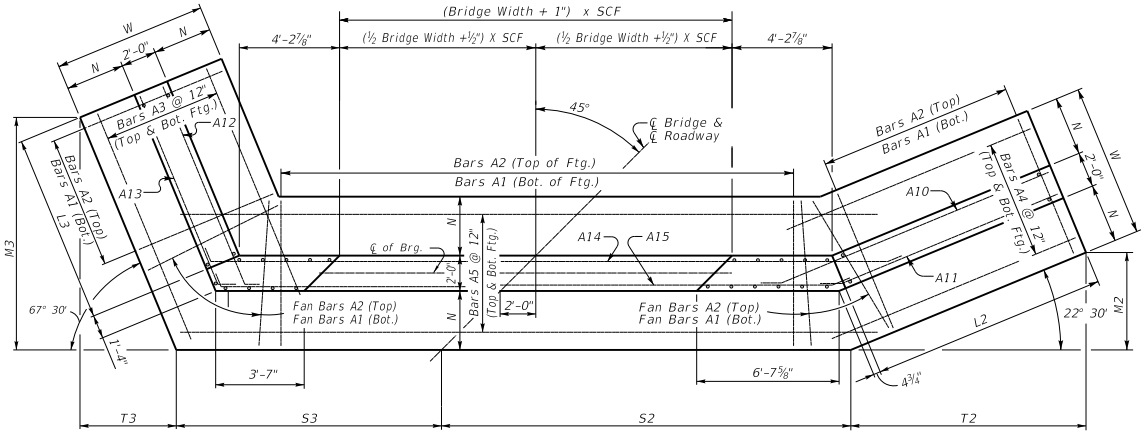

(Left Skew as shown;right skew opp. hand)

PLAN

NOTE: Trim A16 & A17 bars if necessary

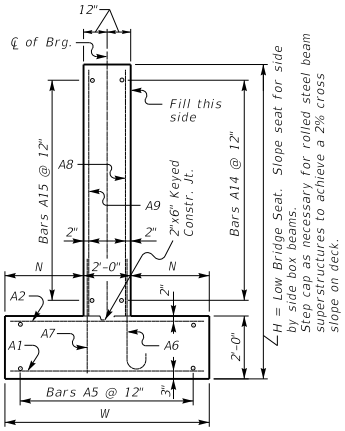

WALL SECTION

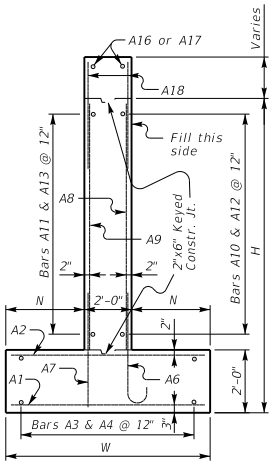

WING SECTION

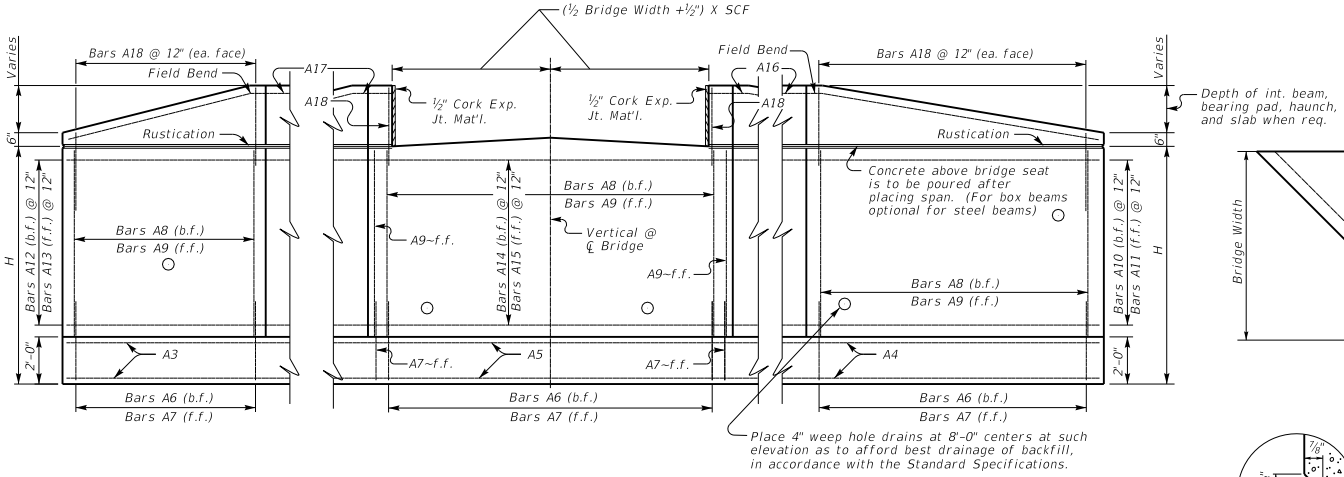

ELEVATION

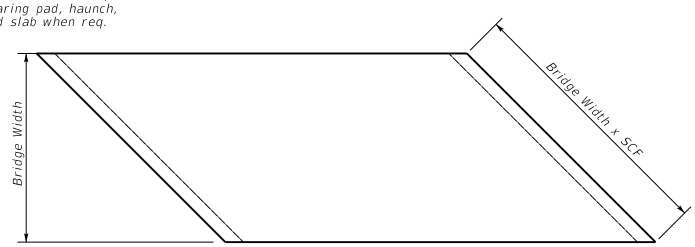

PLAN OF SUPERSTRUCTURE SLAB

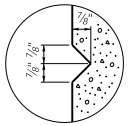

RUSTICATION GROOVE

KENTUCKY
DEPARTMENT OF HIGHWAYS

45° SKEW VARIABLE WIDTH ABUTMENT 50% SKEWED WINGS

STANDARD DRAWING NO. BSA-019

SUBMITTED _____ DIRECTOR DIVISION OF STRUCTURAL DESIGN — DATE 02-26-20

APPROVED _____ STATE HIGHWAY ENGINEER — DATE 02-26-20

45° SKEW VARIABLE BRIDGE WIDTH 2:1 FILL SLOPES WINGS SKEWED 50% FROM ROADWAY TO BREASTWALL

Bill of Reinforcement

MARK	A1	A2	A3	A4	A5	A6	A7	A8	A9	A10	A11	A12	A13	A14	A15	A16	A17	A18
TYPE	Str.	Str.	Str.	Str.	Str.	4	Str.	Str.	Str.	8	8	8	8	7	7	Str.	Str.	Str.
SIZE			#5	#5	#5				#5	#5	#5	#5	#5	#5	#5	#5	#5	#5
H	No.	No. Size Length ft. in. Spacing	No. Length ft. in.	No. Length ft. in.	No. Length ft. in. +Lb= Length ft. in.	No. Size Length ft. in. Spacing A ft. in. B ft. in. C ft. in. D ft. in.	No. Size Length ft. in. Spacing	No. Size Length ft. in. Spacing	No. Length ft. in.	No. Length ft. in.	No. Length ft. in.	No. Length ft. in.	No. Length ft. in.	No. Length ft. in. +Lb= Length ft. in.	No. Length ft. in. +Lb= Length ft. in.	No. Length ft. in.	No. Length ft. in.	No. Length ft. in.
15-16	75+Nb=	10 11 8 12	75+Nb=	7 11 8 12	24 20 6	24 38 11	24 14 8 +Lb=	62+Nb=	9 9 11 12 8 ⅛ 1 10 0 11¾ 8 6	66+Nb=	5 4 11 12	62+Nb=	6 12 10 12	66+Nb=	12 10 12	14 41 8	14 38 2	14 18 6	14 18 1	14 16 2 +Lb=	14 12 1 +Lb=	2 43 11	2 20 10	134 5 9
13-14	68+Nb=	9 10 8 12	68+Nb=	7 10 8 12	22 18 2	22 34 10	22 14 3 +Lb=	56+Nb=	8 8 3 12 6 11 1 3 0 8 7 3	60+Nb=	5 4 11 12	56+Nb=	6 10 10 12	60+Nb=	10 10 12	12 37 9	12 34 2	12 16 6	12 16 1	12 16 3 +Lb=	12 12 1 +Lb=	2 39 11	2 18 10	122 5 9
11-12	60+Nb=	8 9 8 12	60+Nb=	6 9 8 12	20 15 10	20 29 9	20 13 10 +Lb=	49+Nb=	7 7 1 12 5 10½ 1 2 0 7 6 2	53+Nb=	5 4 11 12	49+Nb=	5 8 10 12	53+Nb=	8 10 12	10 32 9	10 29 2	10 14 6	10 14 1	10 16 3 +Lb=	10 12 1 +Lb=	2 34 11	2 16 10	108 5 9
9-10	52+Nb=	7 8 8 12	52+Nb=	5 8 8 12	18 13 6	18 24 8	18 13 5 +Lb=	42+Nb=	6 6 1 12 5 1 1 0 0 6 5 4	46+Nb=	5 4 11 12	42+Nb=	5 6 10 12	46+Nb=	6 10 12	8 27 9	8 24 2	8 12 6	8 12 1	8 16 4 +Lb=	8 12 1 +Lb=	2 29 11	2 14 10	94 5 9
7-8	44+Nb=	6 7 2 12	44+Nb=	5 7 2 12	16 10 11	16 18 11	16 12 7 +Lb=	35+Nb=	5 5 7 12 4 8½ 0 10 0 5 4 11	39+Nb=	5 4 11 12	35+Nb=	5 4 10 12	39+Nb=	4 10 12	6 22 10	6 19 2	6 10 6	6 10 1	6 16 4 +Lb=	6 12 1 +Lb=	2 24 11	2 12 10	80 5 9
5-6	36+Nb=	5 6 2 12	36+Nb=	5 6 2 12	14 8 7	14 13 9	14 12 1 +Lb=	28+Nb=	5 5 7 12 4 8½ 0 10 0 5 4 11	32+Nb=	5 4 11 12	28+Nb=	5 2 10 12	32+Nb=	2 10 12	4 17 10	4 14 2	4 8 6	4 8 1	4 16 4 +Lb=	4 12 1 +Lb=	2 19 11	2 10 10	66 5 9

Table of Dimensions

H	W Length ft.	W Length in.	N Length ft.	N Length in.	M2 Length ft.	M2 Length in.	M3 Length ft.	M3 Length in.	T2 Length ft.	T2 Length in.	T3 Length ft.	T3 Length in.	L2 Length ft.	L3 Length ft.	S2 Length ft.	S2 Length in.	S2 + Lb/2 =	S2 Length ft.	S2 Length in.	S3 Length ft.	S3 Length in.	S3 + Lb/2 =	S3 Length ft.	S3 Length in.
15-16	12	0	5	0	14	8¼	19	1¼	35	5⅝	7	11	37	16	12	8⅜	+0.5Lb=			1	11¾	+0.5Lb=		
13-14	11	0	4	6	13	1½	16	11⅜	31	8¼	7	¼	33	14	12	1⅛	+0.5Lb=			2	1¾	+0.5Lb=		
11-12	10	0	4	0	11	2	14	9½	26	11⅝	6	1½	28	12	11	6	+0.5Lb=			2	3¾	+0.5Lb=		
9-10	9	0	3	6	9	2⅝	12	7⅝	22	3⅛	5	2¾	23	10	10	10¾	+0.5Lb=			2	5¾	+0.5Lb=		
7-8	7	6	2	9	7	3	10	3⅞	17	6	4	3⅜	18	8	10	0	+0.5Lb=			2	8¾	+0.5Lb=		
5-6	6	6	2	3	5	3⅝	8	2	12	9½	3	4⅝	13	6	9	4¾	+0.5Lb=			2	10¾	+0.5Lb=		

Reinforcement Details

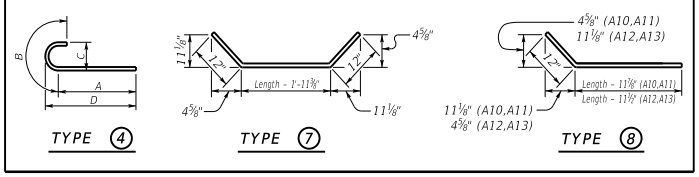

*Concrete quantities computed using 21" beam depth on ½" pad & Variable Bridge Width

Quantities

H	Concrete* C.Y.	Reinforcement LBS.
5	24.42+(0.71xLb) =	2258+(52.8xLb) =
6	26.59+(0.78xLb) =	2258+(52.8xLb) =
7	38.13+(0.93xLb) =	3425+(68.7xLb) =
8	40.82+(1.01xLb) =	3425+(68.7xLb) =
9	56.56+(1.19xLb) =	5154+(91xLb) =
10	59.77+(1.27xLb) =	5154+(91xLb) =
11	76.76+(1.41xLb) =	7598+(120.4xLb) =
12	80.49+(1.49xLb) =	7598+(120.4xLb) =
13	100.06+(1.64xLb) =	11157+(161xLb) =
14	104.31+(1.71xLb) =	11157+(161xLb) =
15	124.53+(1.86xLb) =	14883+(198.6xLb) =
16	129.22+(1.93xLb) =	14883+(198.6xLb) =

ABUTMENT SKEW CORRECTION FACTOR (SCF) = 1.414

NUMBER OF BARS TO ADD (Nb) = Bridge Width (feet) x SCF (round up to nearest whole number)

LENGTH OF ABUTMENT TO ADD (Lb) = Bridge Width (feet) x SCF (convert decimal to architectural)

GENERAL NOTES

SPECIFICATIONS: Construct abutments according to the current edition of the Kentucky Department of Highways Standard Specifications for Road and Bridge Construction. Abutments are designed for side by side box beams as detailed in Standard Drawings BDP-001 through BDP-012, current edition. Dimensions may be adjusted to allow for any out to out bridge width. Abutments are also adequate for Std. Dwg. slabs or steel beam superstructures.

FOUNDATION PRESSURE: Construct abutment footings on solid rock bearing material that can support a pressure of 8000 psf service or 10,800 psf strength factored as recommended by a geotechnical engineer.

WING LENGTHS: Calculated assuming 21" superstructure depth and stream bank elevation at top of footing.

FOOTING ELEVATION: Construct bottom of footing below the anticipated scour elevation. (This typically entails embedding the footings 1'-0" to 2'-0" into rock and pouring concrete directly against cut rock faces. as recommended by geotechnical engineer.)

NOTE: Distances to bars shown are clear dimensions unless otherwise noted.

MATERIAL SPECIFICATIONS:
Concrete, Class "A" = 3500 psi
Steel Reinforcement = Grade 60

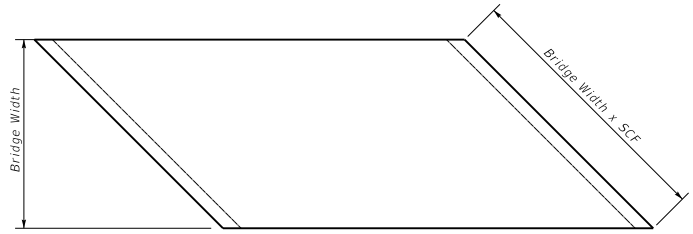

PLAN OF SUPERSTRUCTURE SLAB

KENTUCKY
DEPARTMENT OF HIGHWAYS

45° SKEW SUPPORT
VARIABLE WIDTH ABUTMENT
50% SKEWED WINGS

STANDARD DRAWING NO. BSA-020

SUBMITTED _____ DIRECTOR DIVISION OF STRUCTURAL DESIGN — DATE 02-26-20

APPROVED _____ STATE HIGHWAY ENGINEER — DATE 02-26-20

0° SKEW VARIABLE BRIDGE WIDTH 2:1 FILL SLOPES
22.5° SKEW FROM ROADWAY ON WINGS

ABUTMENT SKEW CORRECTION FACTOR (SCF) = 1.000

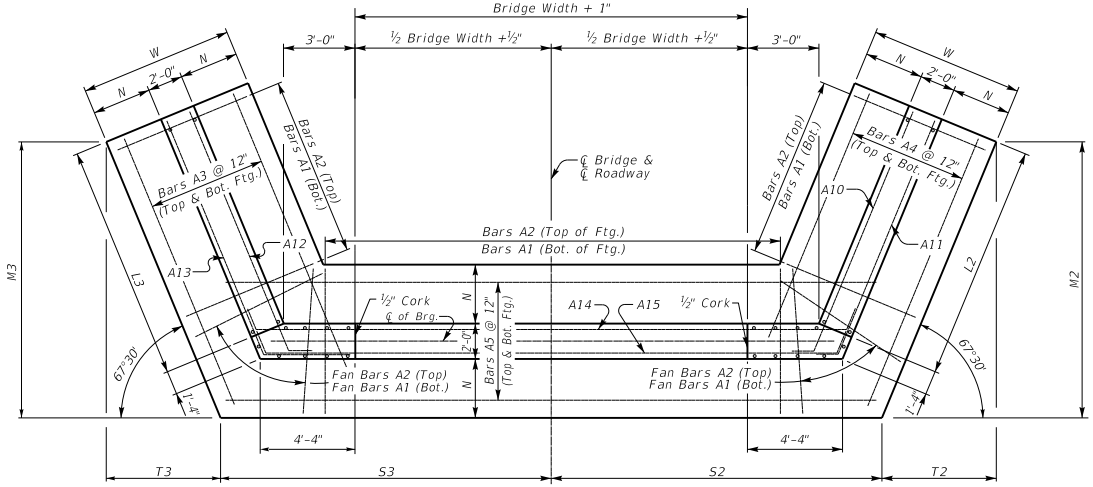

PLAN

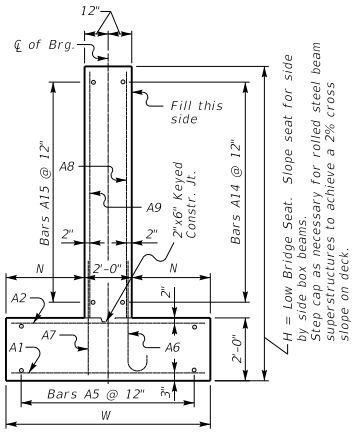

WALL SECTION

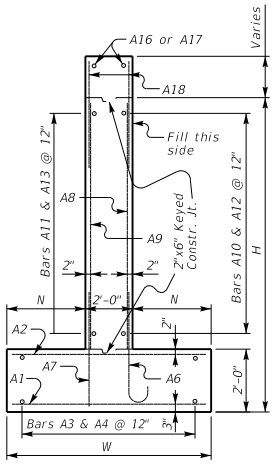

WING SECTION

Note: Trim A16 & A17 bars if necessary

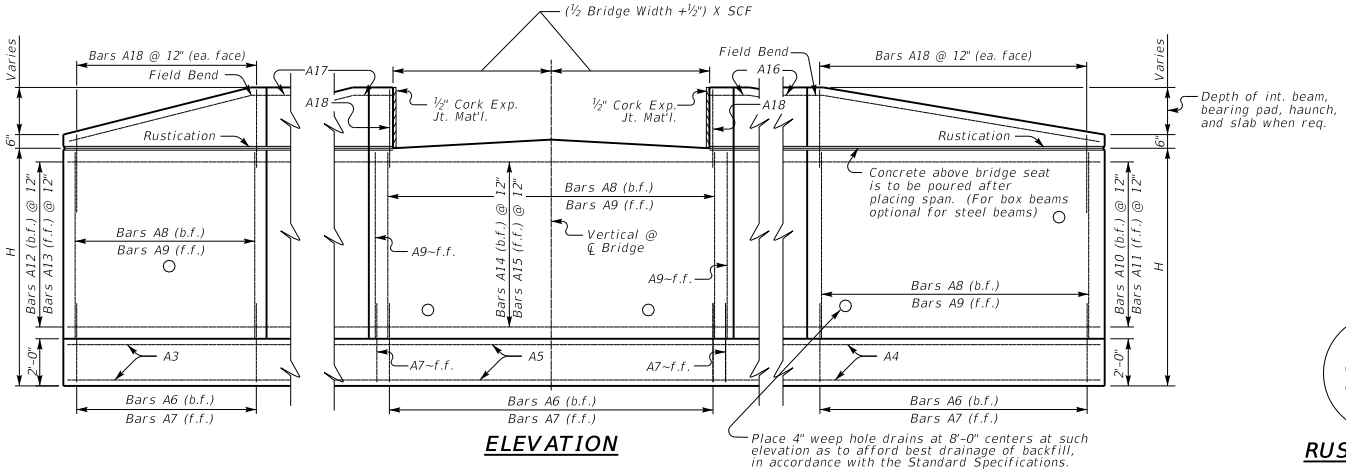

ELEVATION

PLAN OF SUPERSTRUCTURE SLAB

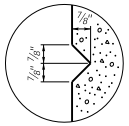

RUSTICATION GROOVE

KENTUCKY
DEPARTMENT OF HIGHWAYS

0° SKEW VARIABLE WIDTH ABUTMENT 25% SKEWED WINGS

STANDARD DRAWING NO. BSA-021

SUBMITTED _____ DIRECTOR DIVISION OF STRUCTURAL DESIGN — DATE 02-26-20

APPROVED _____ STATE HIGHWAY ENGINEER — DATE 02-26-20

0° SKEW VARIABLE BRIDGE WIDTH 2:1 FILL SLOPES
22.5° SKEW FROM ROADWAY ON WINGS

Bill of Reinforcement

MARK	A1					A2					A3			A4			A5					
TYPE	Str.					Str.					Str.			Str.			Str.					
SIZE											#5			#5			#5					
H	No.	Size	Length ft.	Length in.	Spacing	No.	Size	Length ft.	Length in.	Spacing	No.	Length ft.	Length in.	No.	Length ft.	Length in.	No.	Length ft.	Length in.	+Lb =	Length ft.	Length in.
15-16	69+Nb=	10	11	8	12	69+Nb=	7	11	8	12	24	26	6	24	26	6	24	15	6	+Lb=		
13-14	62+Nb=	9	10	8	12	62+Nb=	7	10	8	12	22	23	2	22	23	2	22	14	10	+Lb=		
11-12	55+Nb=	8	9	8	12	55+Nb=	6	9	8	12	20	19	10	20	19	10	20	14	2	+Lb=		
9-10	49+Nb=	7	8	8	12	49+Nb=	5	8	8	12	18	17	6	18	17	6	18	13	6	+Lb=		
7-8	39+Nb=	6	7	2	12	39+Nb=	5	7	2	12	16	12	11	16	12	11	16	12	3	+Lb=		
5-6	34+Nb=	5	6	2	12	34+Nb=	5	6	2	12	14	10	7	14	10	7	14	11	7	+Lb=		

MARK	A6													A7					A8					A9			
TYPE	4													Str.					Str.					Str.			
SIZE																								#5			
H	No.	Size	Length ft.	Length in.	Spacing	A ft.	A in.	B ft.	B in.	C ft.	C in.	D ft.	D in.	No.	Size	Length ft.	Length in.	Spacing	No.	Size	Length ft.	Length in.	Spacing	No.	Length ft.	Length in.	Spacing
15-16	51+Nb=	9	9	11	12	8	⅛	1	10	0	11¾	8	6	56+Nb=	5	4	11	12	51+Nb=	6	12	10	12	56+Nb=	12	10	12
13-14	45+Nb=	8	8	3	12	6	11	1	3	0	8	7	3	50+Nb=	5	4	11	12	45+Nb=	6	10	10	12	50+Nb=	10	10	12
11-12	39+Nb=	7	7	1	12	5	10½	1	2	0	7	6	2	44+Nb=	5	4	11	12	39+Nb=	5	8	10	12	44+Nb=	8	10	12
9-10	35+Nb=	6	6	1	12	5	1	1	0	0	6	5	4	40+Nb=	5	4	11	12	35+Nb=	5	6	10	12	40+Nb=	6	10	12
7-8	27+Nb=	5	5	7	12	4	8½	0	10	0	5	4	11	32+Nb=	5	4	11	12	27+Nb=	5	4	10	12	32+Nb=	4	10	12
5-6	23+Nb=	5	5	7	12	4	8½	0	10	0	5	4	11	28+Nb=	5	4	11	12	23+Nb=	5	2	10	12	28+Nb=	2	10	12

MARK	A10			A11			A12			A13			A14						A15						A16			A17			A18		
TYPE	8			8			8			8			7						7						Str.			Str.			Str.		
SIZE	#5			#5			#5			#5			#5						#5						#5			#5			#5		
H	No.	Length ft.	Length in.	No.	Length ft.	Length in.	No.	Length ft.	Length in.	No.	Length ft.	Length in.	No.	Length ft.	Length in.	+Lb =	Length ft.	Length in.	No.	Length ft.	Length in.	+Lb =	Length ft.	Length in.	No.	Length ft.	Length in.	No.	Length ft.	Length in.	No.	Length ft.	Length in.
15-16	14	24	6	14	24	1	14	24	6	14	24	1	14	11	7	+Lb=			14	10	4	+Lb=			2	27	7	2	27	7	110	5	9
13-14	12	21	6	12	21	1	12	21	6	12	21	1	12	11	7	+Lb=			12	10	4	+Lb=			2	24	7	2	24	7	98	5	9
11-12	10	18	6	10	18	1	10	18	6	10	18	1	10	11	7	+Lb=			10	10	4	+Lb=			2	21	7	2	21	7	86	5	9
9-10	8	16	6	8	16	1	8	16	6	8	16	1	8	11	7	+Lb=			8	10	4	+Lb=			2	19	7	2	19	7	78	5	9
7-8	6	12	6	6	12	1	6	12	6	6	12	1	6	11	7	+Lb=			6	10	4	+Lb=			2	15	7	2	15	7	62	5	9
5-6	4	10	6	4	10	1	4	10	6	4	10	1	4	11	7	+Lb=			4	10	4	+Lb=			2	13	7	2	13	7	54	5	9

Table of Dimensions

H	W Length ft.	W Length in.	N Length ft.	N Length in.	M2 Length ft.	M2 Length in.	M3 Length ft.	M3 Length in.	T2 Length ft.	T2 Length in.	T3 Length ft.	T3 Length in.	L2 Length ft.	L3 Length ft.	S2 Length ft.	S2 Length in.	S2 + Lb/2 =	S2 Length ft.	S2 Length in.	S3 Length ft.	S3 Length in.	S3 + Lb/2 =	S3 Length ft.	S3 Length in.
15-16	12	0	5	0	24	7¾	24	7¾	10	2½	10	2½	22	22	7	8⅝	+0.5Lb=			7	8⅝	+0.5Lb=		
13-14	11	0	4	6	21	6¾	21	6¾	8	11¼	8	11¼	19	19	7	4⅝	+0.5Lb=			7	4⅝	+0.5Lb=		
11-12	10	0	4	0	18	5⅞	18	5⅞	7	7⅞	7	7⅞	16	16	7	⅝	+0.5Lb=			7	⅝	+0.5Lb=		
9-10	9	0	3	6	16	4	16	4	6	9⅛	6	9⅛	14	14	6	8⅝	+0.5Lb=			6	8⅝	+0.5Lb=		
7-8	7	6	2	9	12	2	12	2	5	½	5	½	10	10	6	2⅝	+0.5Lb=			6	2⅝	+0.5Lb=		
5-6	6	6	2	3	10	⅛	10	⅛	4	1¾	4	1¾	8	8	5	10⅝	+0.5Lb=			5	10⅝	+0.5Lb=		

Reinforcement Details

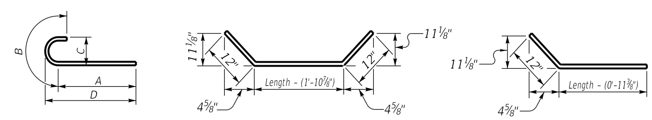

TYPE (4) TYPE (7) TYPE (8)

*Concrete quantities computed using 21" beam depth on ½" pad & Variable Bridge Width

Quantities

H	Concrete* C.Y.	Reinforcement LBS.
5	20.59+(0.71xLb) =	1993+(52.8xLb) =
6	22.42+(0.78xLb) =	1993+(52.8xLb) =
7	30.2+(0.93xLb) =	2856+(68.7xLb) =
8	32.33+(1.01xLb) =	2856+(68.7xLb) =
9	47.95+(1.19xLb) =	4571+(91xLb) =
10	50.68+(1.27xLb) =	4571+(91xLb) =
11	62.16+(1.41xLb) =	6513+(120.4xLb) =
12	65.18+(1.49xLb) =	6513+(120.4xLb) =
13	81.61+(1.64xLb) =	9594+(161xLb) =
14	85.07+(1.71xLb) =	9594+(161xLb) =
15	103.72+(1.86xLb) =	13000+(198.6xLb) =
16	107.63+(1.93xLb) =	13000+(198.6xLb) =

ABUTMENT SKEW CORRECTION FACTOR (SCF) = 1.0

NUMBER OF BARS TO ADD (Nb) = Bridge Width (feet) x SCF (round up to nearest whole number)

LENGTH OF ABUTMENT TO ADD (Lb) = Bridge Width (feet) x SCF (convert decimal to architectural)

GENERAL NOTES

SPECIFICATIONS: Construct abutments according to the current edition of the Kentucky Department of Highways Standard Specifications for Road and Bridge Construction. Abutments are designed for side by side box beams as detailed in Standard Drawings BDP-001 through BDP-012, current edition. Dimensions may be adjusted to allow for any out to out bridge width. Abutments are also adequate for Std. Dwg. slabs or steel beam superstructures.

FOUNDATION PRESSURE: Construct abutment footings on solid rock bearing material that can support a pressure of 8000 psf service or 10,800 psf strength factored as recommended by a geotechnical engineer.

WING LENGTHS: Calculated assuming 21" superstructure depth and stream bank elevation at top of footing.

FOOTING ELEVATION: Construct bottom of footing below the anticipated scour elevation. (This typically entails embedding the footings 1'-0" to 2'-0" into rock and pouring concrete directly against cut rock faces. as recommended by geotechnical engineer.)

NOTE: Distances to bars shown are clear dimensions unless otherwise noted.

MATERIAL SPECIFICATIONS:
Concrete, Class "A" = 3500 psi
Steel Reinforcement = Grade 60

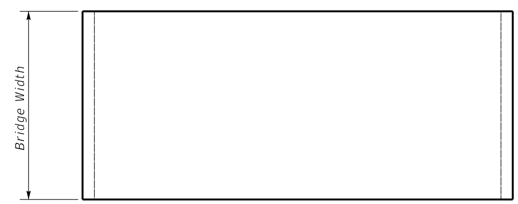

PLAN OF SUPERSTRUCTURE SLAB

KENTUCKY
DEPARTMENT OF HIGHWAYS

0° SKEW VARIABLE WIDTH ABUTMENT 25% SKEWED WINGS

STANDARD DRAWING NO. BSA-022

SUBMITTED ____ DIRECTOR DIVISION OF STRUCTURAL DESIGN 02-26-20 DATE

APPROVED ____ STATE HIGHWAY ENGINEER 02-26-20 DATE

5° SKEW VARIABLE BRIDGE WIDTH 2:1 FILL SLOPES WINGS SKEWED 25% FROM ROADWAY TO BREASTWALL

ABUTMENT SKEW CORRECTION FACTOR (SCF) = 1.004

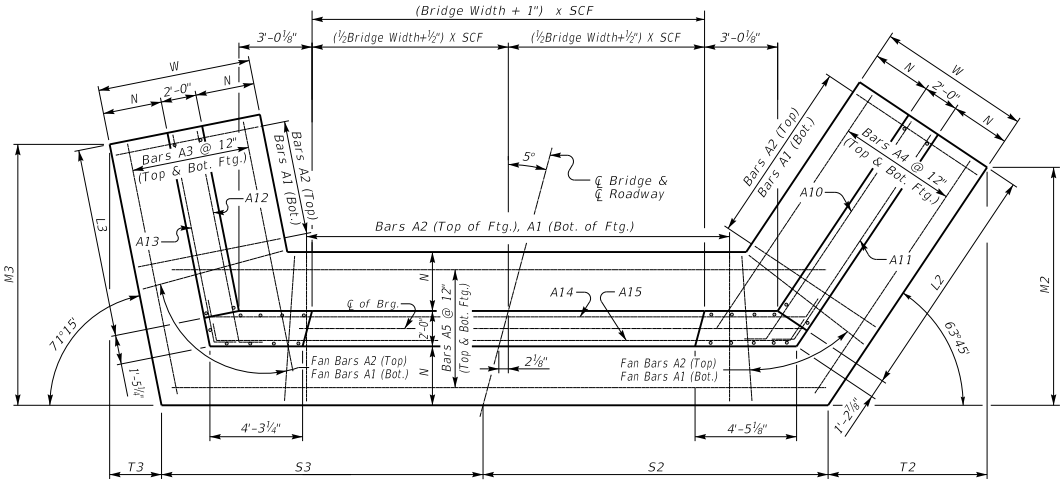

(Left Skew as shown;right skew opp. hand)

PLAN

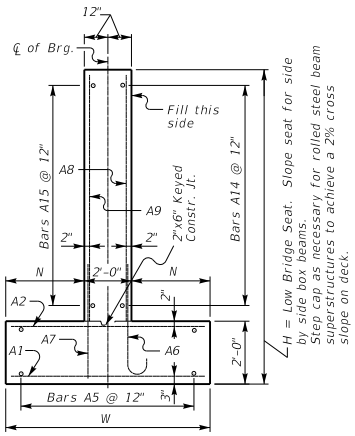

WALL SECTION

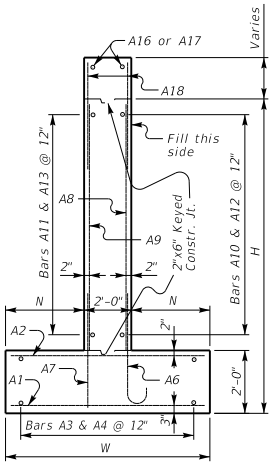

WING SECTION

NOTE: Trim A16 & A17 bars if necessary

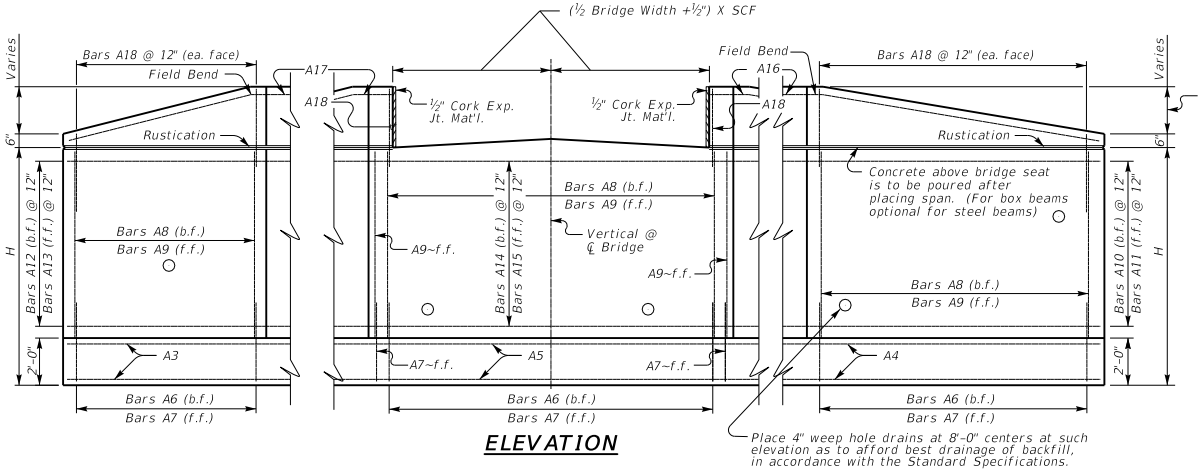

ELEVATION

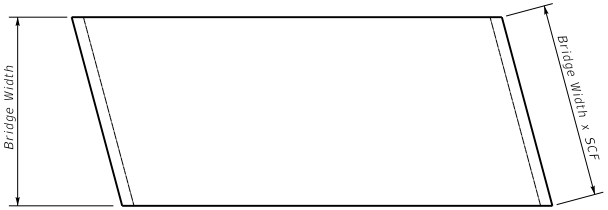

PLAN OF SUPERSTRUCTURE SLAB

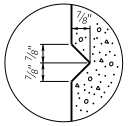

RUSTICATION GROOVE

KENTUCKY
DEPARTMENT OF HIGHWAYS

5° SKEW VARIABLE WIDTH ABUTMENT 25% SKEWED WINGS

STANDARD DRAWING NO. BSA-023

SUBMITTED _____ DIRECTOR DIVISION OF STRUCTURAL DESIGN — DATE 02-26-20

APPROVED _____ STATE HIGHWAY ENGINEER — DATE 02-26-20

5° SKEW VARIABLE BRIDGE WIDTH 2:1 FILL SLOPES WINGS SKEWED 25% FROM ROADWAY TO BREASTWALL

Bill of Reinforcement

MARK	A1					A2					A3			A4			A5					
TYPE	Str.					Str.					Str.			Str.			Str.					
SIZE											#5			#5			#5					
H	No.	Size	Length ft.	Length in.	Spacing	No.	Size	Length ft.	Length in.	Spacing	No.	Length ft.	Length in.	No.	Length ft.	Length in.	No.	Length ft.	Length in.	+Lb =	Length ft.	Length in.
15-16	70+Nb=	10	11	8	12	70+Nb=	7	11	8	12	24	26	10	24	27	3	24	15	5	+Lb=		
13-14	63+Nb=	9	10	8	12	63+Nb=	7	10	8	12	22	23	6	22	23	11	22	14	9	+Lb=		
11-12	54+Nb=	8	9	8	12	54+Nb=	6	9	8	12	20	19	1	20	19	7	20	14	1	+Lb=		
9-10	48+Nb=	7	8	8	12	48+Nb=	5	8	8	12	18	16	9	18	17	4	18	13	5	+Lb=		
7-8	39+Nb=	6	7	2	12	39+Nb=	5	7	2	12	16	13	2	16	12	9	16	12	3	+Lb=		
5-6	34+Nb=	5	6	2	12	34+Nb=	5	6	2	12	14	10	9	14	10	5	14	11	7	+Lb=		

MARK	A6													A7					A8				
TYPE	4													Str.					Str.				
SIZE																							
H	No.	Size	Length ft.	Length in.	Spacing	A ft.	A in.	B ft.	B in.	C ft.	C in.	D ft.	D in.	No.	Size	Length ft.	Length in.	Spacing	No.	Size	Length ft.	Length in.	Spacing
15-16	52+Nb=	9	9	11	12	8	⅛	1	10	0	11¾	8	6	57+Nb=	5	4	11	12	52+Nb=	6	12	10	12
13-14	46+Nb=	8	8	3	12	6	11	1	3	0	8	7	3	51+Nb=	5	4	11	12	46+Nb=	6	10	10	12
11-12	38+Nb=	7	7	1	12	5	10½	1	2	0	7	6	2	43+Nb=	5	4	11	12	38+Nb=	5	8	10	12
9-10	34+Nb=	6	6	1	12	5	1	1	0	0	6	5	4	39+Nb=	5	4	11	12	34+Nb=	5	6	10	12
7-8	27+Nb=	5	5	7	12	4	8½	0	10	0	5	4	11	32+Nb=	5	4	11	12	27+Nb=	5	4	10	12
5-6	23+Nb=	5	5	7	12	4	8½	0	10	0	5	4	11	28+Nb=	5	4	11	12	23+Nb=	5	2	10	12

MARK	A9				A10			A11			A12			A13			A14						A15						A16			A17			A18		
TYPE	Str.				8			8			8			8			7						7						Str.			Str.			Str.		
SIZE	#5				#5			#5			#5			#5			#5						#5						#5			#5			#5		
H	No.	Length ft.	Length in.	Spacing	No.	Length ft.	Length in.	No.	Length ft.	Length in.	No.	Length ft.	Length in.	No.	Length ft.	Length in.	No.	Length ft.	Length in.	+Lb =	Length ft.	Length in.	No.	Length ft.	Length in.	+Lb =	Length ft.	Length in.	No.	Length ft.	Length in.	No.	Length ft.	Length in.	No.	Length ft.	Length in.
15-16	57+Nb=	12	10	12	14	25	6	14	24	11	14	24	6	14	24	2	14	11	7	+Lb=			14	10	4	+Lb=			2	28	7	2	27	7	112	5	9
13-14	51+Nb=	10	10	12	12	22	7	12	21	11	12	21	6	12	21	2	12	11	7	+Lb=			12	10	4	+Lb=			2	25	7	2	24	7	100	5	9
11-12	43+Nb=	8	10	12	10	18	7	10	17	11	10	17	6	10	17	2	10	11	7	+Lb=			10	10	4	+Lb=			2	21	7	2	20	7	84	5	9
9-10	39+Nb=	6	10	12	8	16	7	8	15	11	8	15	6	8	15	2	8	11	7	+Lb=			8	10	4	+Lb=			2	19	7	2	18	7	76	5	9
7-8	32+Nb=	4	10	12	6	12	7	6	11	11	6	12	6	6	12	2	6	11	7	+Lb=			6	10	4	+Lb=			2	15	7	2	15	7	62	5	9
5-6	28+Nb=	2	10	12	4	10	7	4	9	11	4	10	6	4	10	2	4	11	7	+Lb=			4	10	4	+Lb=			2	13	7	2	13	7	54	5	9

Table of Dimensions

H	W Length ft.	W Length in.	N Length ft.	N Length in.	M2 Length ft.	M2 Length in.	M3 Length ft.	M3 Length in.	T2 Length ft.	T2 Length in.	T3 Length ft.	T3 Length in.	L2 Length ft.	L3 Length ft.	S2 Length ft.	S2 Length in.	S2 + Lb/2 =	S2 Length ft.	S2 Length in.	S3 Length ft.	S3 Length in.	S3 + Lb/2 =	S3 Length ft.	S3 Length in.
15-16	12	0	5	0	24	6⅜	25	7	12	1⅛	8	8¼	23	22	8	¼	+0.5Lb=			7	5½	+0.5Lb=		
13-14	11	0	4	6	21	6¾	22	4⅞	10	7⅝	7	7¼	20	19	7	8	+0.5Lb=			7	1¾	+0.5Lb=		
11-12	10	0	4	0	17	8⅜	18	3¼	8	8¾	6	2½	16	15	7	3¾	+0.5Lb=			6	9⅞	+0.5Lb=		
9-10	9	0	3	6	15	7½	16	½	7	8½	5	5⅜	14	13	6	11½	+0.5Lb=			6	6⅛	+0.5Lb=		
7-8	7	6	2	9	11	7⅜	12	8¼	5	8¾	4	3¾	10	10	6	5⅛	+0.5Lb=			6	½	+0.5Lb=		
5-6	6	6	2	3	9	6½	10	5½	4	8½	3	6⅝	8	8	6	⅞	+0.5Lb=			5	8¾	+0.5Lb=		

Reinforcement Details

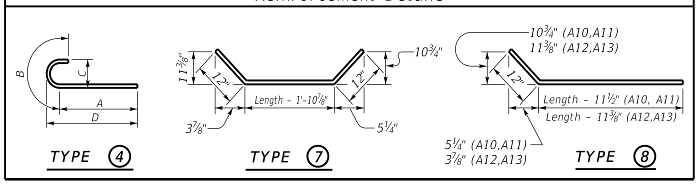

*Concrete quantities computed using 21" beam depth on ½" pad & Variable Bridge Width

Quantities

H	Concrete* C.Y.	Reinforcement LBS.
5	20.61+(0.71xLb) =	1993+(52.8xLb) =
6	22.45+(0.78xLb) =	1993+(52.8xLb) =
7	30.23+(0.93xLb) =	2857+(68.7xLb) =
8	32.37+(1.01xLb) =	2857+(68.7xLb) =
9	46.71+(1.19xLb) =	4466+(91xLb) =
10	49.36+(1.27xLb) =	4466+(91xLb) =
11	60.69+(1.41xLb) =	6377+(120.4xLb) =
12	63.64+(1.49xLb) =	6377+(120.4xLb) =
13	83.39+(1.64xLb) =	9769+(161xLb) =
14	86.93+(1.71xLb) =	9769+(161xLb) =
15	105.73+(1.86xLb) =	13211+(198.6xLb) =
16	109.71+(1.93xLb) =	13211+(198.6xLb) =

ABUTMENT SKEW CORRECTION FACTOR (SCF) = 1.004

NUMBER OF BARS TO ADD (Nb) = Bridge Width (feet) x SCF (round up to nearest whole number)

LENGTH OF ABUTMENT TO ADD (Lb) = Bridge Width (feet) x SCF (convert decimal to architectural)

GENERAL NOTES

SPECIFICATIONS: Construct abutments according to the current edition of the Kentucky Department of Highways Standard Specifications for Road and Bridge Construction. Abutments are designed for side by side box beams as detailed in Standard Drawings BDP-001 through BDP-012, current edition. Dimensions may be adjusted to allow for any out to out bridge width. Abutments are also adequate for Std. Dwg. slabs or steel beam superstructures.

FOUNDATION PRESSURE: Construct abutment footings on solid rock bearing material that can support a pressure of 8000 psf service or 10,800 psf strength factored as recommended by a geotechnical engineer.

WING LENGTHS: Calculated assuming 21" superstructure depth and stream bank elevation at top of footing.

FOOTING ELEVATION: Construct bottom of footing below the anticipated scour elevation. (This typically entails embedding the footings 1'-0" to 2'-0" into rock and pouring concrete directly against cut rock faces. as recommended by geotechnical engineer.)

NOTE: Distances to bars shown are clear dimensions unless otherwise noted.

MATERIAL SPECIFICATIONS:
Concrete, Class "A" = 3500 psi
Steel Reinforcement = Grade 60

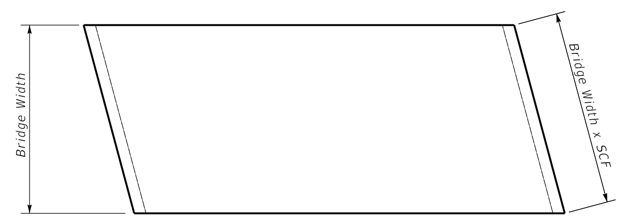

PLAN OF SUPERSTRUCTURE SLAB

KENTUCKY
DEPARTMENT OF HIGHWAYS

5° SKEW VARIABLE
WIDTH ABUTMENT
25% SKEWED WINGS

STANDARD DRAWING NO. BSA-024

SUBMITTED ________ DIRECTOR DIVISION OF STRUCTURAL DESIGN 02-26-20 DATE

APPROVED ________ STATE HIGHWAY ENGINEER 02-26-20 DATE

10° SKEW VARIABLE BRIDGE WIDTH 2:1 FILL SLOPES WINGS SKEWED 25% FROM ROADWAY TO BREASTWALL

ABUTMENT SKEW CORRECTION FACTOR (SCF) = 1.015

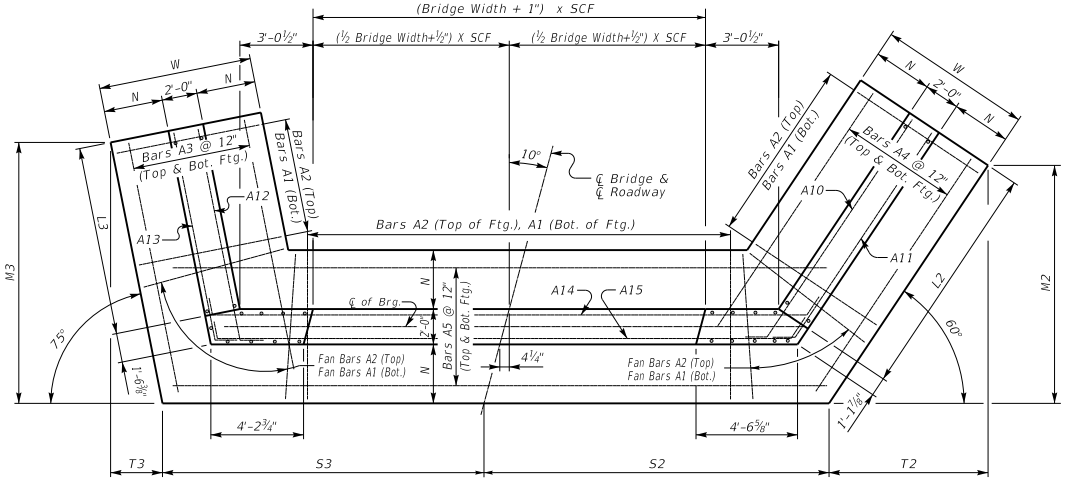

(Left Skew as shown;right skew opp. hand)

PLAN

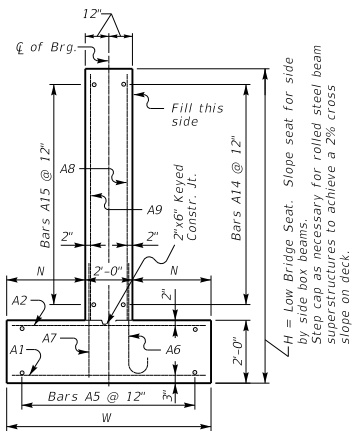

WALL SECTION

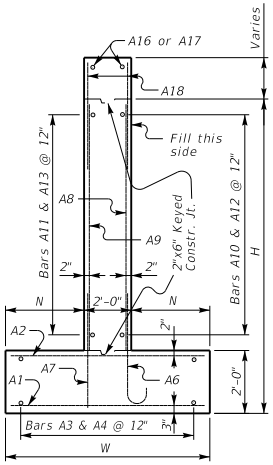

WING SECTION

NOTE: Trim A16 & A17 bars if necessary

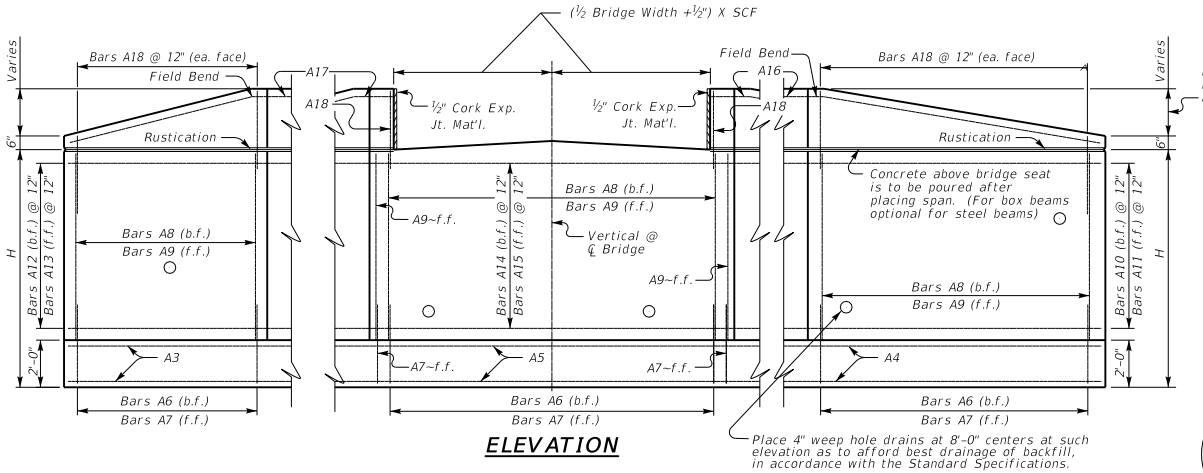

ELEVATION

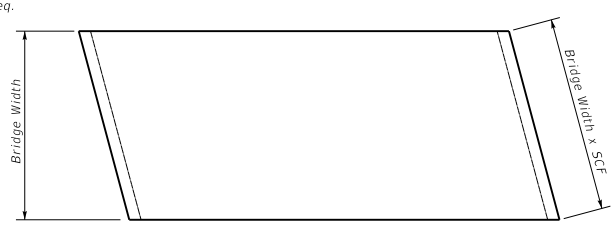

PLAN OF SUPERSTRUCTURE SLAB

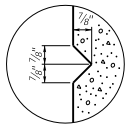

RUSTICATION GROOVE

KENTUCKY
DEPARTMENT OF HIGHWAYS

10° SKEW VARIABLE WIDTH ABUTMENT 25% SKEWED WINGS

STANDARD DRAWING NO. BSA-025

SUBMITTED _____ DIRECTOR DIVISION OF STRUCTURAL DESIGN — DATE 02-26-20

APPROVED _____ STATE HIGHWAY ENGINEER — DATE 02-26-20

10° SKEW VARIABLE BRIDGE WIDTH 2:1 FILL SLOPES WINGS SKEWED 25% FROM ROADWAY TO BREASTWALL

Bill of Reinforcement

MARK	A1					A2					A3			A4			A5					
TYPE	Str.					Str.					Str.			Str.			Str.					
SIZE											#5			#5			#5					
H	No.	Size	Length ft.	Length in.	Spacing	No.	Size	Length ft.	Length in.	Spacing	No.	Length ft.	Length in.	No.	Length ft.	Length in.	No.	Length ft.	Length in.	+Lb =	Length ft.	Length in.
15-16	71+Nb=	10	11	8	12	71+Nb=	7	11	8	12	24	26	2	24	27	11	24	15	6	+Lb=		
13-14	63+Nb=	9	10	8	12	63+Nb=	7	10	8	12	22	22	9	22	24	8	22	14	10	+Lb=		
11-12	55+Nb=	8	9	8	12	55+Nb=	6	9	8	12	20	19	5	20	20	5	20	14	2	+Lb=		
9-10	49+Nb=	7	8	8	12	49+Nb=	5	8	8	12	18	16	0	18	18	1	18	13	6	+Lb=		
7-8	40+Nb=	6	7	2	12	40+Nb=	5	7	2	12	16	12	4	16	13	6	16	12	4	+Lb=		
5-6	34+Nb=	5	6	2	12	34+Nb=	5	6	2	12	14	10	0	14	11	3	14	11	8	+Lb=		

MARK	A6													A7					A8				
TYPE	4													Str.					Str.				
SIZE																							
H	No.	Size	Length ft.	Length in.	Spacing	A ft.	A in.	B ft.	B in.	C ft.	C in.	D ft.	D in.	No.	Size	Length ft.	Length in.	Spacing	No.	Size	Length ft.	Length in.	Spacing
15-16	52+Nb=	9	9	11	12	8	⅛	1	10	0	11¾	8	6	57+Nb=	5	4	11	12	52+Nb=	6	12	10	12
13-14	46+Nb=	8	8	3	12	6	11	1	3	0	8	7	3	51+Nb=	5	4	11	12	46+Nb=	6	10	10	12
11-12	39+Nb=	7	7	1	12	5	10½	1	2	0	7	6	2	44+Nb=	5	4	11	12	39+Nb=	5	8	10	12
9-10	34+Nb=	6	6	1	12	5	1	1	0	0	6	5	4	39+Nb=	5	4	11	12	34+Nb=	5	6	10	12
7-8	27+Nb=	5	5	7	12	4	8½	0	10	0	5	4	11	32+Nb=	5	4	11	12	27+Nb=	5	4	10	12
5-6	23+Nb=	5	5	7	12	4	8½	0	10	0	5	4	11	28+Nb=	5	4	11	12	23+Nb=	5	2	10	12

MARK	A9				A10			A11			A12			A13		
TYPE	Str.				8			8			8			8		
SIZE	#5				#5			#5			#5			#5		
H	No.	Length ft.	Length in.	Spacing	No.	Length ft.	Length in.	No.	Length ft.	Length in.	No.	Length ft.	Length in.	No.	Length ft.	Length in.
15-16	57+Nb=	12	10	12	14	26	8	14	25	11	14	23	6	14	23	3
13-14	51+Nb=	10	10	12	12	23	8	12	22	11	12	20	6	12	20	3
11-12	44+Nb=	8	10	12	10	19	8	10	18	11	10	17	6	10	17	3
9-10	39+Nb=	6	10	12	8	17	8	8	16	11	8	14	6	8	14	3
7-8	32+Nb=	4	10	12	6	13	8	6	12	11	6	11	6	6	11	3
5-6	28+Nb=	2	10	12	4	11	8	4	10	11	4	9	6	4	9	3

MARK	A14						A15						A16			A17			A18		
TYPE	7						7						Str.			Str.			Str.		
SIZE	#5						#5						#5			#5			#5		
H	No.	Length ft.	Length in.	+Lb =	Length ft.	Length in.	No.	Length ft.	Length in.	+Lb =	Length ft.	Length in.	No.	Length ft.	Length in.	No.	Length ft.	Length in.	No.	Length ft.	Length in.
15-16	14	11	8	+Lb=			14	10	5	+Lb=			2	29	8	2	26	8	112	5	9
13-14	12	11	8	+Lb=			12	10	5	+Lb=			2	26	8	2	23	8	100	5	9
11-12	10	11	8	+Lb=			10	10	5	+Lb=			2	22	8	2	20	8	86	5	9
9-10	8	11	8	+Lb=			8	10	5	+Lb=			2	20	8	2	17	8	76	5	9
7-8	6	11	8	+Lb=			6	10	5	+Lb=			2	16	8	2	14	8	62	5	9
5-6	4	11	8	+Lb=			4	10	5	+Lb=			2	14	8	2	12	8	54	5	9

Table of Dimensions

H	W		N		M2		M3		T2		T3		L2	L3	S2					S3				
	Length ft.	Length in.	Length ft.	Length in.	Length ft.	Length in.	Length ft.	Length in.	Length ft.	Length in.	Length ft.	Length in.	Length ft.	Length ft.	Length ft.	Length in.	$+\frac{Lb}{2}=$	Length ft.	Length in.	Length ft.	Length in.	$+\frac{Lb}{2}=$	Length ft.	Length in.
15-16	12	0	5	0	24	3⅜	25	5⅝	14	¼	6	9⅞	24	21	8	4⅜	+0.5Lb=			7	2¾	+0.5Lb=		
13-14	11	0	4	6	21	5¼	22	2½	12	4½	5	11⅜	21	18	7	11⅞	+0.5Lb=			6	11⅛	+0.5Lb=		
11-12	10	0	4	0	17	8⅝	18	11¼	10	2¾	5	⅞	17	15	7	7⅜	+0.5Lb=			6	7⅝	+0.5Lb=		
9-10	9	0	3	6	15	8⅞	15	8	9	1	4	2⅜	15	12	7	2¾	+0.5Lb=			6	4⅛	+0.5Lb=		
7-8	7	6	2	9	11	10⅞	12	2⅝	6	10½	3	3¼	11	9	6	8	+0.5Lb=			5	10¾	+0.5Lb=		
5-6	6	6	2	3	9	11	9	11	5	8¾	2	7⅞	9	7	6	3½	+0.5Lb=			5	7¼	+0.5Lb=		

Reinforcement Details

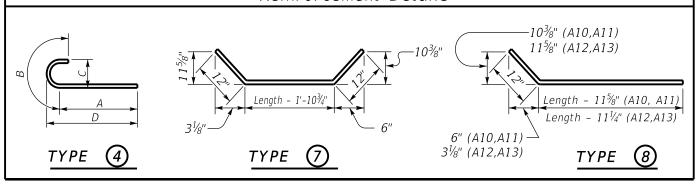

*Concrete quantities computed using 21" beam depth on ½" pad & Variable Bridge Width

Quantities

H	Concrete* C.Y.	Reinforcement LBS.
5	20.69+(0.71xLb) =	1998+(52.8xLb) =
6	22.53+(0.78xLb) =	1998+(52.8xLb) =
7	30.33+(0.93xLb) =	2878+(68.7xLb) =
8	32.46+(1.01xLb) =	2878+(68.7xLb) =
9	46.82+(1.19xLb) =	4497+(91xLb) =
10	49.48+(1.27xLb) =	4497+(91xLb) =
11	62.34+(1.41xLb) =	6520+(120.4xLb) =
12	65.36+(1.49xLb) =	6520+(120.4xLb) =
13	83.54+(1.64xLb) =	9776+(161xLb) =
14	87.08+(1.71xLb) =	9776+(161xLb) =
15	105.9+(1.86xLb) =	13292+(198.6xLb) =
16	109.89+(1.93xLb) =	13292+(198.6xLb) =

ABUTMENT SKEW CORRECTION FACTOR (SCF) = 1.015

NUMBER OF BARS TO ADD (Nb) = Bridge Width (feet) x SCF (round up to nearest whole number)

LENGTH OF ABUTMENT TO ADD (Lb) = Bridge Width (feet) x SCF (convert decimal to architectural)

GENERAL NOTES

SPECIFICATIONS: Construct abutments according to the current edition of the Kentucky Department of Highways Standard Specifications for Road and Bridge Construction. Abutments are designed for side by side box beams as detailed in Standard Drawings BDP-001 through BDP-012, current edition. Dimensions may be adjusted to allow for any out to out bridge width. Abutments are also adequate for Std. Dwg. slabs or steel beam superstructures.

FOUNDATION PRESSURE: Construct abutment footings on solid rock bearing material that can support a pressure of 8000 psf service or 10,800 psf strength factored as recommended by a geotechnical engineer.

WING LENGTHS: Calculated assuming 21" superstructure depth and stream bank elevation at top of footing.

FOOTING ELEVATION: Construct bottom of footing below the anticipated scour elevation. (This typically entails embedding the footings 1'-0" to 2'-0" into rock and pouring concrete directly against cut rock faces. as recommended by geotechnical engineer.)

NOTE: Distances to bars shown are clear dimensions unless otherwise noted.

MATERIAL SPECIFICATIONS:
Concrete, Class "A" = 3500 psi
Steel Reinforcement = Grade 60

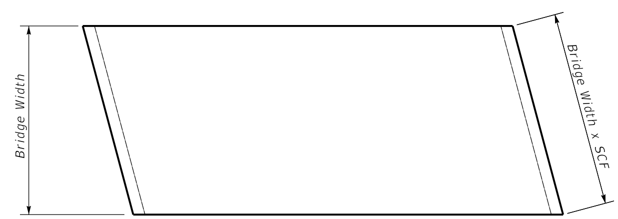

PLAN OF SUPERSTRUCTURE SLAB

KENTUCKY
DEPARTMENT OF HIGHWAYS

10° SKEW VARIABLE
WIDTH ABUTMENT
25% SKEWED WINGS

STANDARD DRAWING NO. BSA-026

SUBMITTED ______ DIRECTOR DIVISION OF STRUCTURAL DESIGN 02-26-20 DATE

APPROVED ______ STATE HIGHWAY ENGINEER 02-26-20 DATE

15° SKEW VARIABLE BRIDGE WIDTH 2:1 FILL SLOPES WINGS SKEWED 25% FROM ROADWAY TO BREASTWALL

ABUTMENT SKEW CORRECTION FACTOR (SCF) = 1.035

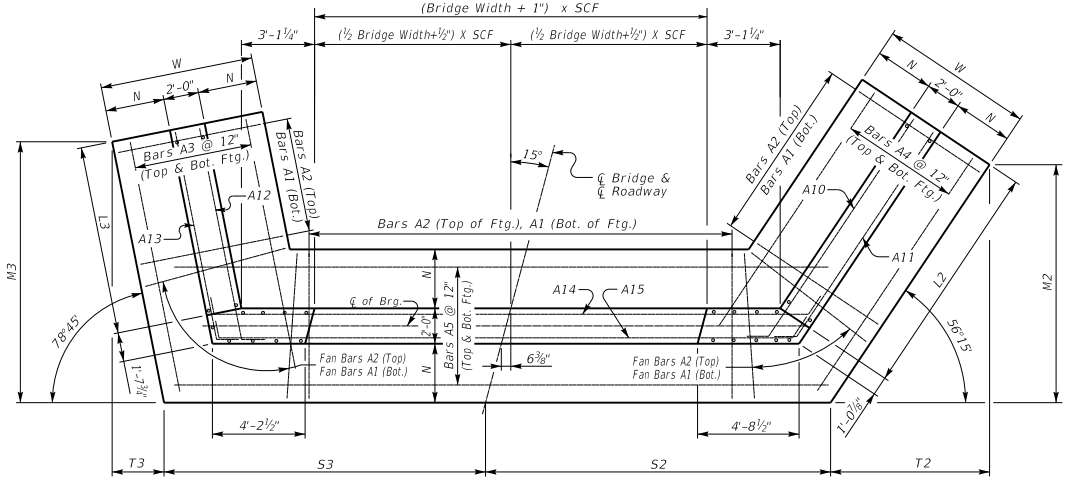

(Left Skew as shown;right skew opp. hand)

PLAN

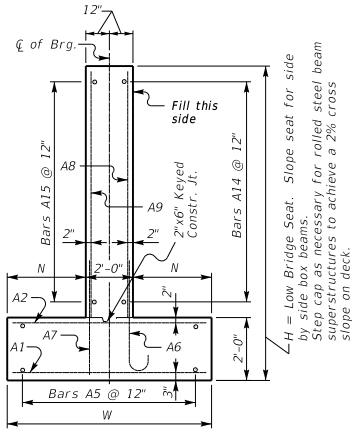

WALL SECTION

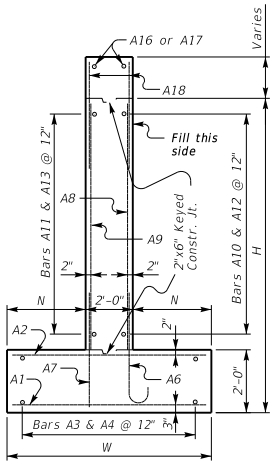

WING SECTION

NOTE: Trim A16 & A17 bars if necessary

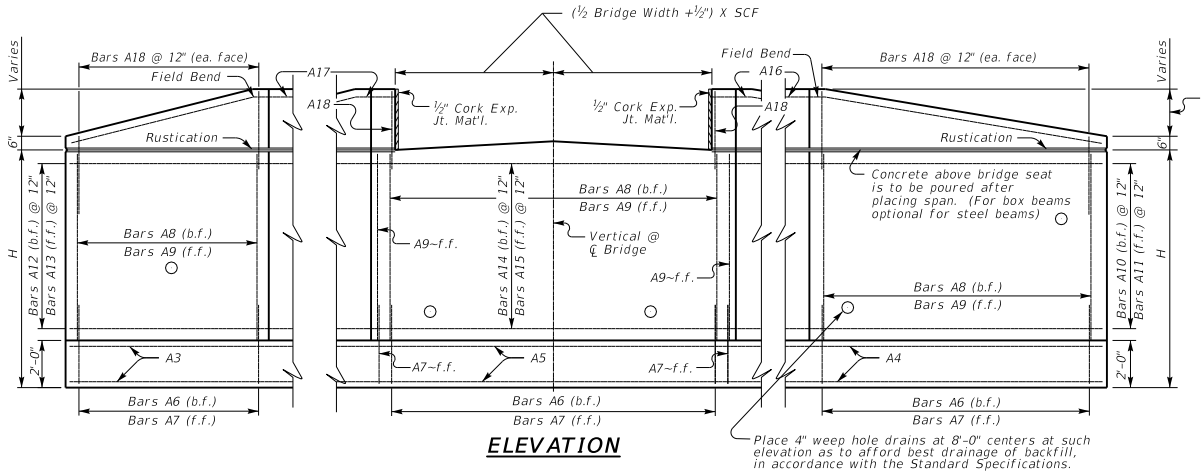

ELEVATION

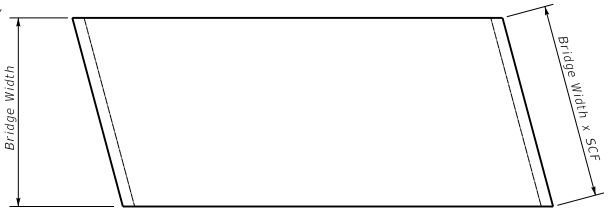

PLAN OF SUPERSTRUCTURE SLAB

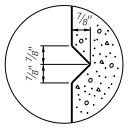

RUSTICATION GROOVE

KENTUCKY
DEPARTMENT OF HIGHWAYS

15° SKEW VARIABLE WIDTH ABUTMENT 25% SKEWED WINGS

STANDARD DRAWING NO. BSA-027

SUBMITTED _____ DIRECTOR DIVISION OF STRUCTURAL DESIGN — DATE 02-26-20

APPROVED _____ STATE HIGHWAY ENGINEER — DATE 02-26-20

15° SKEW VARIABLE BRIDGE WIDTH 2:1 FILL SLOPES WINGS SKEWED 25% FROM ROADWAY TO BREASTWALL

Bill of Reinforcement

MARK	A1	A2	A3	A4	A5	A6	A7	A8	A9	A10	A11	A12	A13	A14	A15	A16	A17	A18
TYPE	Str.	Str.	Str.	Str.	Str.	4	Str.	Str.	Str.	8	8	8	8	7	7	Str.	Str.	Str.
SIZE			#5	#5	#5				#5	#5	#5	#5	#5	#5	#5	#5	#5	#5
H	No.	No. Size Length ft. in. Spacing	No. Length ft. in.	No. Length ft. in.	No. Length ft. in.	No. Size Length ft. in. Spacing A ft. in. B ft. in. C ft. in. D ft. in.	No. Size Length ft. in. Spacing	No. Size Length ft. in. Spacing	No. Length ft. in.	No. Length ft. in.	No. Length ft. in.	No. Length ft. in.	No. Length ft. in.	No. Length ft. in. = +Lb Length ft. in.	No. Length ft. in. = +Lb Length ft. in.	No. Length ft. in.	No. Length ft. in.	No. Length ft. in.
15-16	71+Nb=	71+Nb= 7 11 8 12	24 25 6	24 28 8	24 15 8 +Lb=	52+Nb= 9 9 11 12 8 ⅛ 1 10 0 11¾ 8 6	57+Nb= 5 4 11 12	52+Nb= 6 12 10 12	57+Nb= 12 10 12	14 27 9	14 26 10	14 22 6	14 22 4	14 11 10 +Lb=	14 10 7 +Lb=	2 30 8	2 25 9	113 5 9
13-14	64+Nb=	64+Nb= 9 10 8 12	22 22 1	22 25 5	22 14 11 +Lb=	46+Nb= 8 8 3 12 6 11 1 3 0 8 7 3	51+Nb= 5 4 11 12	46+Nb= 6 10 10 12	51+Nb= 10 10 12	12 24 9	12 23 10	12 19 6	12 19 4	12 11 10 +Lb=	12 10 7 +Lb=	2 27 8	2 22 9	101 5 9
11-12	56+Nb=	56+Nb= 6 9 8 12	20 18 8	20 21 2	20 14 3 +Lb=	39+Nb= 7 7 1 12 5 10½ 1 2 0 7 6 2	44+Nb= 5 4 11 12	39+Nb= 5 8 10 12	44+Nb= 8 10 12	10 20 9	10 19 10	10 16 6	10 16 4	10 11 10 +Lb=	10 10 7 +Lb=	2 23 8	2 19 9	87 5 9
9-10	49+Nb=	49+Nb= 5 8 8 12	18 16 3	18 17 11	18 13 7 +Lb=	34+Nb= 6 6 1 12 5 1 1 0 0 6 5 4	39+Nb= 5 4 11 12	34+Nb= 5 6 10 12	39+Nb= 6 10 12	8 17 9	8 16 10	8 14 6	8 14 4	8 11 10 +Lb=	8 10 7 +Lb=	2 20 8	2 17 9	77 5 9
7-8	41+Nb=	41+Nb= 5 7 2 12	16 12 7	16 14 4	16 12 6 +Lb=	28+Nb= 5 5 7 12 4 8½ 0 10 0 5 4 11	33+Nb= 5 4 11 12	28+Nb= 5 4 10 12	33+Nb= 4 10 12	6 14 9	6 13 10	6 11 6	6 11 4	6 11 11 +Lb=	6 10 7 +Lb=	2 17 8	2 14 9	65 5 9
5-6	35+Nb=	35+Nb= 5 6 2 12	14 10 2	14 11 1	14 11 10 +Lb=	23+Nb= 5 5 7 12 4 8½ 0 10 0 5 4 11	28+Nb= 5 4 11 12	23+Nb= 5 2 10 12	28+Nb= 2 10 12	4 11 9	4 10 10	4 9 6	4 9 4	4 11 11 +Lb=	4 10 7 +Lb=	2 14 8	2 12 9	55 5 9

Table of Dimensions

H	W Length ft.	W Length in.	N Length ft.	N Length in.	M2 Length ft.	M2 Length in.	M3 Length ft.	M3 Length in.	T2 Length ft.	T2 Length in.	T3 Length ft.	T3 Length in.	L2 Length ft.	L3 Length ft.	S2 Length ft.	S2 Length in. + Lb/2 =	S2 Length ft.	S2 Length in.	S3 Length ft.	S3 Length in. + Lb/2 =	S3 Length ft.	S3 Length in.
15-16	12	0	5	0	23	10¾	25	3	15	11⅜	5	¼	25	20	8	9¼ +0.5Lb=			7	¼ +0.5Lb=		
13-14	11	0	4	6	21	2½	21	10⅞	14	1⅞	4	4¼	22	17	8	4⅜ +0.5Lb=			6	8⅞ +0.5Lb=		
11-12	10	0	4	0	17	7⅝	18	6¾	11	9⅜	3	8¼	18	14	7	11⅝ +0.5Lb=			6	5⅝ +0.5Lb=		
9-10	9	0	3	6	14	11	16	2⅜	9	11⅜	3	2⅝	15	12	7	6¾ +0.5Lb=			6	2¼ +0.5Lb=		
7-8	7	6	2	9	12	1⅛	12	7¾	8	⅞	2	6¼	12	9	6	11½ +0.5Lb=			5	9¼ +0.5Lb=		
5-6	6	6	2	3	9	4½	10	3⅜	6	3⅛	2	½	9	7	6	6¾ +0.5Lb=			5	6 +0.5Lb=		

Reinforcement Details

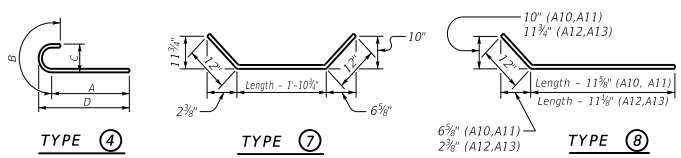

*Concrete quantities computed using 21" beam depth on ½" pad & Variable Bridge Width

Quantities

H	Concrete* C.Y.	Reinforcement LBS.
5	20.81+(0.71xLb) =	2021+(52.8xLb) =
6	22.67+(0.78xLb) =	2021+(52.8xLb) =
7	31.51+(0.93xLb) =	2974+(68.7xLb) =
8	33.73+(1.01xLb) =	2974+(68.7xLb) =
9	47.01+(1.19xLb) =	4510+(91xLb) =
10	49.68+(1.27xLb) =	4510+(91xLb) =
11	62.56+(1.41xLb) =	6573+(120.4xLb) =
12	65.6+(1.49xLb) =	6573+(120.4xLb) =
13	83.79+(1.64xLb) =	9849+(161xLb) =
14	87.35+(1.71xLb) =	9849+(161xLb) =
15	106.18+(1.86xLb) =	13311+(198.6xLb) =
16	110.18+(1.93xLb) =	13311+(198.6xLb) =

ABUTMENT SKEW CORRECTION FACTOR (SCF) = 1.035

NUMBER OF BARS TO ADD (Nb) = Bridge Width (feet) x SCF (round up to nearest whole number)

LENGTH OF ABUTMENT TO ADD (Lb) = Bridge Width (feet) x SCF (convert decimal to architectural)

GENERAL NOTES

SPECIFICATIONS: Construct abutments according to the current edition of the Kentucky Department of Highways Standard Specifications for Road and Bridge Construction. Abutments are designed for side by side box beams as detailed in Standard Drawings BDP-001 through BDP-012, current edition. Dimensions may be adjusted to allow for any out to out bridge width. Abutments are also adequate for Std. Dwg. slabs or steel beam superstructures.

FOUNDATION PRESSURE: Construct abutment footings on solid rock bearing material that can support a pressure of 8000 psf service or 10,800 psf strength factored as recommended by a geotechnical engineer.

WING LENGTHS: Calculated assuming 21" superstructure depth and stream bank elevation at top of footing.

FOOTING ELEVATION: Construct bottom of footing below the anticipated scour elevation. (This typically entails embedding the footings 1'-0" to 2'-0" into rock and pouring concrete directly against cut rock faces. as recommended by geotechnical engineer.)

NOTE: Distances to bars shown are clear dimensions unless otherwise noted.

MATERIAL SPECIFICATIONS:
Concrete, Class "A" = 3500 psi
Steel Reinforcement = Grade 60

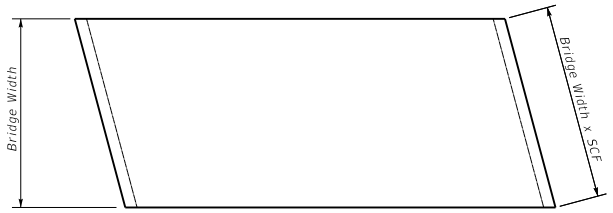

PLAN OF SUPERSTRUCTURE SLAB

KENTUCKY
DEPARTMENT OF HIGHWAYS

15° SKEW VARIABLE WIDTH ABUTMENT 25% SKEWED WINGS

STANDARD DRAWING NO. BSA-028

SUBMITTED _____ DIRECTOR DIVISION OF STRUCTURAL DESIGN — DATE 02-26-20

APPROVED _____ STATE HIGHWAY ENGINEER — DATE 02-26-20

20° SKEW VARIABLE BRIDGE WIDTH 2:1 FILL SLOPES WINGS SKEWED 25% FROM ROADWAY TO BREASTWALL

ABUTMENT SKEW CORRECTION FACTOR (SCF) = 1.064

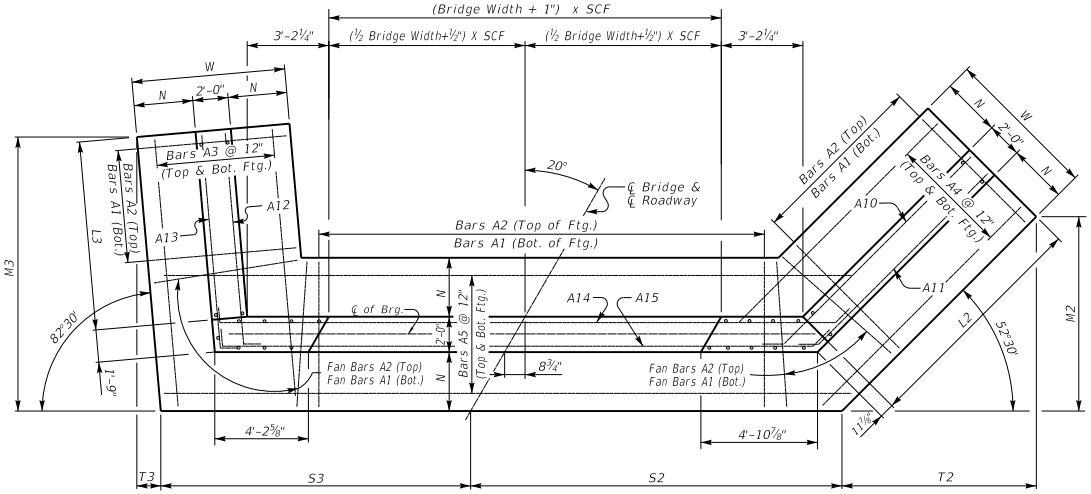

(Left Skew as shown;right skew opp. hand)

PLAN

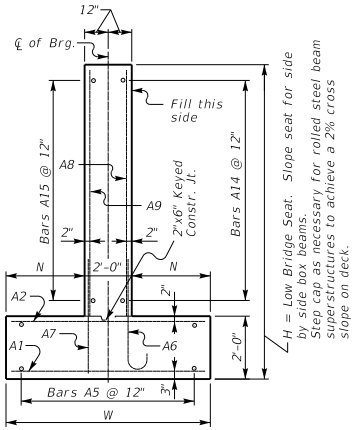

WALL SECTION

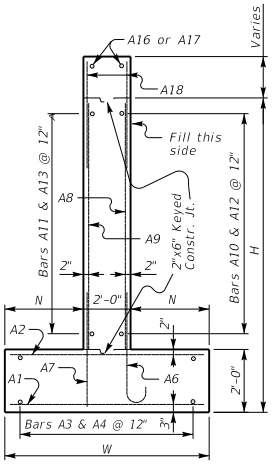

WING SECTION

NOTE: Trim A16 & A17 bars if necessary

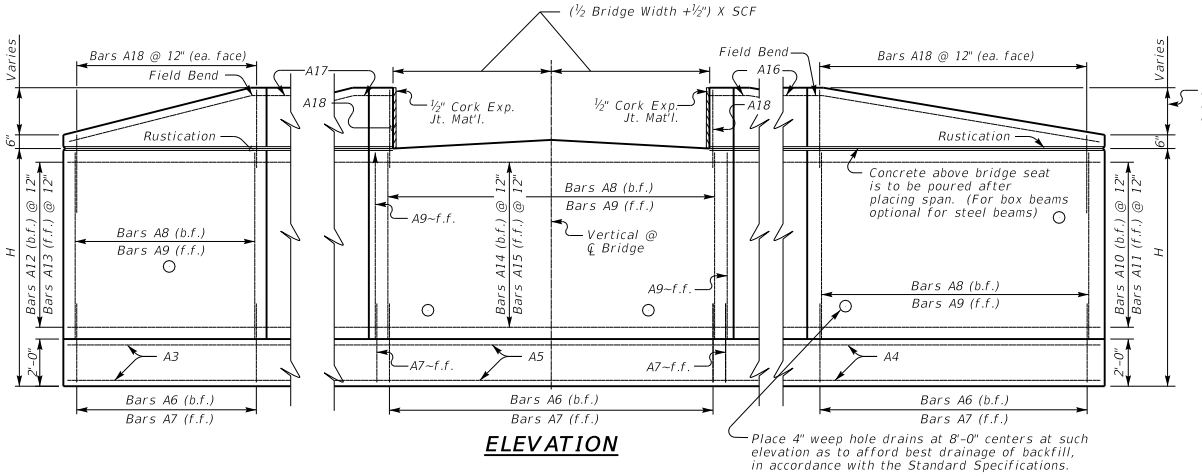

ELEVATION

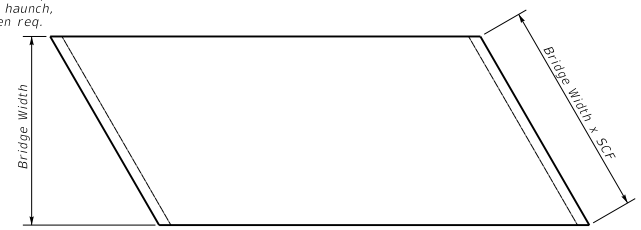

PLAN OF SUPERSTRUCTURE SLAB

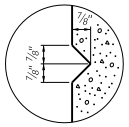

RUSTICATION GROOVE

KENTUCKY
DEPARTMENT OF HIGHWAYS

20° SKEW VARIABLE WIDTH ABUTMENT 25% SKEWED WINGS

STANDARD DRAWING NO. BSA-029

SUBMITTED _____ DIRECTOR DIVISION OF STRUCTURAL DESIGN — DATE 02-26-20

APPROVED _____ STATE HIGHWAY ENGINEER — DATE 02-26-20

20° SKEW VARIABLE BRIDGE WIDTH 2:1 FILL SLOPES WINGS SKEWED 25% FROM ROADWAY TO BREASTWALL

Bill of Reinforcement

MARK	A1				A2				A3		A4		A5				A6										A7				A8				A9				A10		A11		A12		A13		A14				A15				A16		A17		A18	
TYPE	Str.				Str.				Str.		Str.		Str.				4										Str.				Str.				Str.				8		8		8		8		7				7				Str.		Str.		Str.	
SIZE									#5		#5		#5																						#5				#5		#5		#5		#5		#5				#5				#5		#5		#5	
H	No.	Size	Length ft.	Length in.	No.	Size	Length ft.	Length in.	Spacing	No.	Length ft.	Length in.	No.	Length ft.	Length in.	= +Lb	Length ft.	Length in.	No.	Size	Length ft.	Length in.	Spacing	A ft.	A in.	B ft.	B in.	C ft.	C in.	D ft.	D in.	No.	Size	Length ft.	Length in.	Spacing	No.	Size	Length ft.	Length in.	Spacing	No.	Length ft.	Length in.	No.	Length ft.	Length in.	No.	Length ft.	Length in.	No.	Length ft.	Length in.	= +Lb	Length ft.	Length in.	No.	Length ft.	Length in.	No.	Length ft.	Length in.	No.	Length ft.	Length in.
15-16	72+Nb=	10	11	8	12	72+Nb=	7	11	8	12	24	25	10	24	29	5	24	15	10	+Lb=			53+Nb=	9	9	11	12	8	1/8	1	10	0	11 3/4	8	6	58+Nb=	5	4	11	12	53+Nb=	6	12	10	12	58+Nb=	12	10	12	14	28	10	14	27	9	14	22	6	14	22	6	14	12	1	+Lb=			14	10	9	+Lb=			2	31	10	2	25	11	116	5	9
13-14	65+Nb=	9	10	8	12	65+Nb=	7	10	8	12	22	22	5	22	26	2	22	15	2	+Lb=			47+Nb=	8	8	3	12	6	11	1	3	0	8	7	3	52+Nb=	5	4	11	12	47+Nb=	6	10	10	12	52+Nb=	10	10	12	12	25	10	12	24	9	12	19	6	12	19	6	12	12	1	+Lb=			12	10	9	+Lb=			2	28	10	2	22	11	104	5	9
11-12	56+Nb=	8	9	8	12	56+Nb=	6	9	8	12	20	19	0	20	21	11	20	14	6	+Lb=			40+Nb=	7	7	1	12	5	10 1/2	1	2	0	7	6	2	45+Nb=	5	4	11	12	40+Nb=	5	8	10	12	45+Nb=	8	10	12	10	21	10	10	20	9	10	16	6	10	16	6	10	12	1	+Lb=			10	10	9	+Lb=			2	24	10	2	19	11	90	5	9
9-10	50+Nb=	7	8	8	12	50+Nb=	5	8	8	12	18	16	7	18	18	8	18	13	10	+Lb=			35+Nb=	6	6	1	12	5	1	1	0	0	6	5	4	40+Nb=	5	4	11	12	35+Nb=	5	6	10	12	40+Nb=	6	10	12	8	18	10	8	17	9	8	14	6	8	14	6	8	12	1	+Lb=			8	10	9	+Lb=			2	21	10	2	17	11	80	5	9
7-8	42+Nb=	6	7	2	12	42+Nb=	5	7	2	12	16	12	10	16	15	2	16	12	8	+Lb=			29+Nb=	5	5	7	12	4	8 1/2	0	10	0	5	4	11	34+Nb=	5	4	11	12	29+Nb=	5	4	10	12	34+Nb=	4	10	12	6	15	10	6	14	9	6	11	6	6	11	6	6	12	1	+Lb=			6	10	9	+Lb=			2	18	10	2	14	11	68	5	9
5-6	36+Nb=	5	6	2	12	36+Nb=	5	6	2	12	14	10	5	14	11	11	14	12	0	+Lb=			24+Nb=	5	5	7	12	4	8 1/2	0	10	0	5	4	11	29+Nb=	5	4	11	12	24+Nb=	5	2	10	12	29+Nb=	2	10	12	4	12	10	4	11	9	4	9	6	4	9	6	4	12	1	+Lb=			4	10	9	+Lb=			2	15	10	2	12	11	58	5	9

Table of Dimensions

H	W Length ft.	W Length in.	N Length ft.	N Length in.	M2 Length ft.	M2 Length in.	M3 Length ft.	M3 Length in.	T2 Length ft.	T2 Length in.	T3 Length ft.	T3 Length in.	L2 Length ft.	L3 Length ft.	S2 Length ft.	S2 Length in.	$+\frac{Lb}{2}=$	Length ft.	Length in.	S3 Length ft.	S3 Length in.	$+\frac{Lb}{2}=$	Length ft.	Length in.
15-16	12	0	5	0	23	4 3/8	25	11	17	11 1/8	3	5	26	20	9	2 7/8	+0.5Lb=			6	9 7/8	+0.5Lb=		
13-14	11	0	4	6	20	9 1/2	22	6 1/8	15	11 3/8	2	11 1/2	23	17	8	9 3/4	+0.5Lb=			6	6 7/8	+0.5Lb=		
11-12	10	0	4	0	17	5	19	1 1/8	13	4 3/8	2	6 7/8	19	14	8	4 1/2	+0.5Lb=			6	3 3/4	+0.5Lb=		
9-10	9	0	3	6	14	10 1/8	16	8 1/8	11	4 3/4	2	2 3/8	16	12	7	11 3/8	+0.5Lb=			6	3/4	+0.5Lb=		
7-8	7	6	2	9	12	2 1/8	13	5/8	9	4 1/8	1	8 3/8	13	9	7	3 3/4	+0.5Lb=			5	8 1/8	+0.5Lb=		
5-6	6	6	2	3	9	7 1/8	10	7 5/8	7	4 3/8	1	4 3/8	10	7	6	10 1/2	+0.5Lb=			5	5	+0.5Lb=		

Reinforcement Details

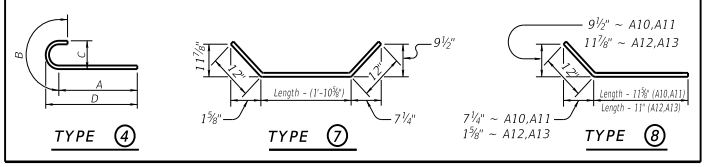

*Concrete quantities computed using 21" beam depth on 1/2" pad & Variable Bridge Width

Quantities

H	Concrete* C.Y.	Reinforcement LBS.
5	21.8+(0.71xLb) =	2101+(52.8xLb) =
6	23.74+(0.78xLb) =	2101+(52.8xLb) =
7	32.76+(0.93xLb) =	3071+(68.7xLb) =
8	35.08+(1.01xLb) =	3071+(68.7xLb) =
9	48.58+(1.19xLb) =	4633+(91xLb) =
10	51.34+(1.27xLb) =	4633+(91xLb) =
11	64.4+(1.41xLb) =	6687+(120.4xLb) =
12	67.52+(1.49xLb) =	6687+(120.4xLb) =
13	85.9+(1.64xLb) =	10046+(161xLb) =
14	89.54+(1.71xLb) =	10046+(161xLb) =
15	108.56+(1.86xLb) =	13545+(198.6xLb) =
16	112.65+(1.93xLb) =	13545+(198.6xLb) =

ABUTMENT SKEW CORRECTION FACTOR (SCF) = 1.064

NUMBER OF BARS TO ADD (Nb) = Bridge Width (feet) x SCF (round up to nearest whole number)

LENGTH OF ABUTMENT TO ADD (Lb) = Bridge Width (feet) x SCF (convert decimal to architectural)

GENERAL NOTES

SPECIFICATIONS: Construct abutments according to the current edition of the Kentucky Department of Highways Standard Specifications for Road and Bridge Construction. Abutments are designed for side by side box beams as detailed in Standard Drawings BDP-001 through BDP-012, current edition. Dimensions may be adjusted to allow for any out to out bridge width. Abutments are also adequate for Std. Dwg. slabs or steel beam superstructures.

FOUNDATION PRESSURE: Construct abutment footings on solid rock bearing material that can support a pressure of 8000 psf service or 10,800 psf strength factored as recommended by a geotechnical engineer.

WING LENGTHS: Calculated assuming 21" superstructure depth and stream bank elevation at top of footing.

FOOTING ELEVATION: Construct bottom of footing below the anticipated scour elevation. (This typically entails embedding the footings 1'-0" to 2'-0" into rock and pouring concrete directly against cut rock faces. as recommended by geotechnical engineer.)

NOTE: Distances to bars shown are clear dimensions unless otherwise noted.

MATERIAL SPECIFICATIONS:
Concrete, Class "A" = 3500 psi
Steel Reinforcement = Grade 60

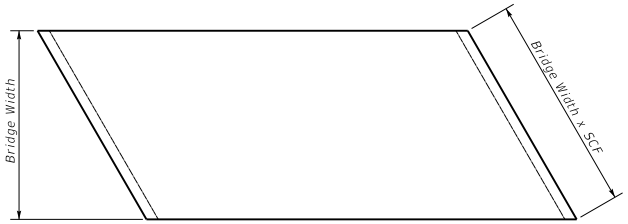

PLAN OF SUPERSTRUCTURE SLAB

KENTUCKY
DEPARTMENT OF HIGHWAYS

20° SKEW VARIABLE WIDTH ABUTMENT 25% SKEWED WINGS

STANDARD DRAWING NO. BSA-030

SUBMITTED _____ DIRECTOR DIVISION OF STRUCTURAL DESIGN — DATE 02-26-20

APPROVED _____ STATE HIGHWAY ENGINEER — DATE 02-26-20

25° SKEW VARIABLE BRIDGE WIDTH 2:1 FILL SLOPES WINGS SKEWED 25% FROM ROADWAY TO BREASTWALL

ABUTMENT SKEW CORRECTION FACTOR (SCF) = 1.103

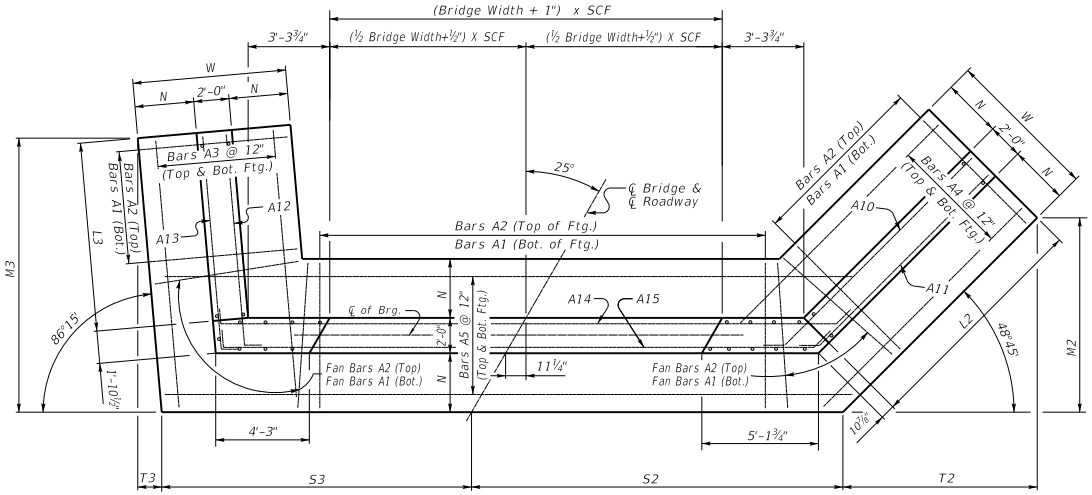

(Left Skew as shown;right skew opp. hand)

PLAN

NOTE: Trim A16 & A17 bars if necessary

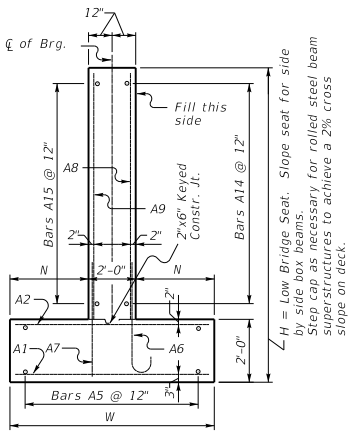

WALL SECTION

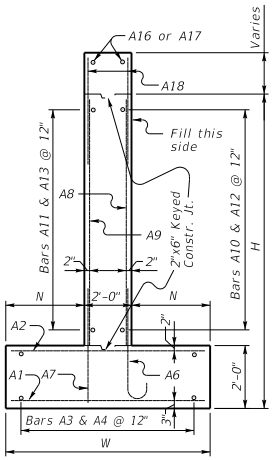

WING SECTION

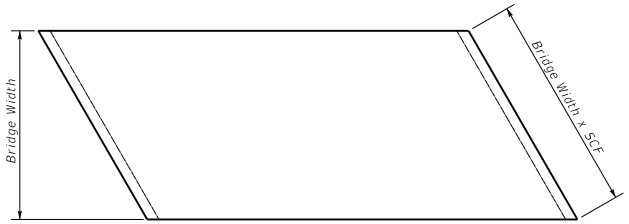

PLAN OF SUPERSTRUCTURE SLAB

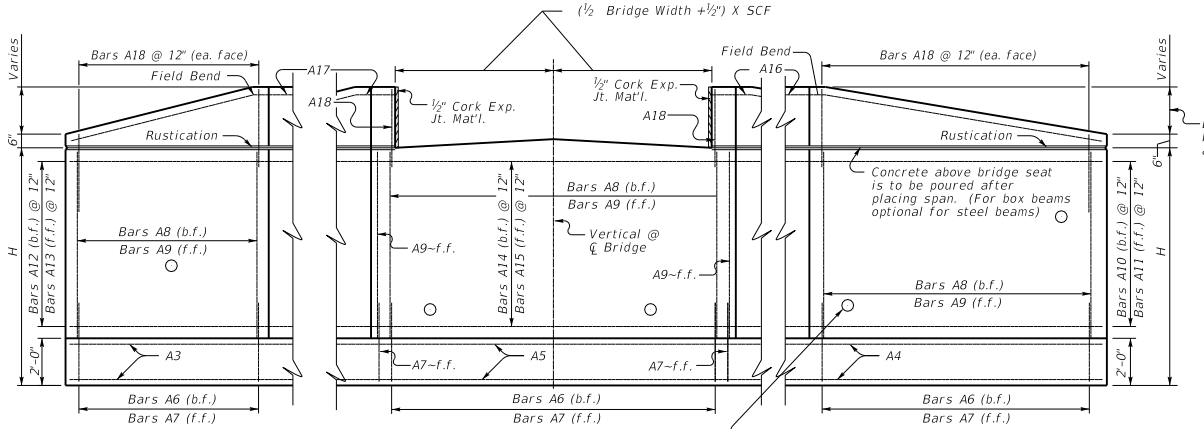

ELEVATION

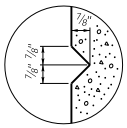

RUSTICATION GROOVE

KENTUCKY
DEPARTMENT OF HIGHWAYS

25° SKEW VARIABLE WIDTH ABUTMENT 25% SKEWED WINGS

STANDARD DRAWING NO. BSA-031

SUBMITTED _____ DIRECTOR DIVISION OF STRUCTURAL DESIGN — 02-26-20 DATE

APPROVED _____ STATE HIGHWAY ENGINEER — 02-26-20 DATE

25° SKEW VARIABLE BRIDGE WIDTH 2:1 FILL SLOPES
WINGS SKEWED 25% FROM ROADWAY TO BREASTWALL

Bill of Reinforcement

MARK	A1					A2					A3			A4			A5					
TYPE	Str.					Str.					Str.			Str.			Str.					
SIZE											#5			#5			#5					
H	No.	Size	Length ft.	Length in.	Spacing	No.	Size	Length ft.	Length in.	Spacing	No.	Length ft.	Length in.	No.	Length ft.	Length in.	No.	Length ft.	Length in.	+Lb =	Length ft.	Length in.
15-16	74+Nb=	10	11	8	12	74+Nb=	7	11	8	12	24	25	3	24	31	2	24	16	2	+Lb=		
13-14	67+Nb=	9	10	8	12	67+Nb=	7	10	8	12	22	21	9	22	28	0	22	15	6	+Lb=		
11-12	60+Nb=	8	9	8	12	60+Nb=	6	9	8	12	20	19	4	20	23	9	20	14	9	+Lb=		
9-10	52+Nb=	7	8	8	12	52+Nb=	5	8	8	12	18	15	10	18	20	6	18	14	1	+Lb=		
7-8	44+Nb=	6	7	2	12	44+Nb=	5	7	2	12	16	13	2	16	16	0	16	13	0	+Lb=		
5-6	37+Nb=	5	6	2	12	37+Nb=	5	6	2	12	14	9	8	14	12	9	14	12	4	+Lb=		

MARK	A6													A7					A8				
TYPE	4													Str.					Str.				
SIZE																							
H	No.	Size	Length ft.	Length in.	Spacing	A ft.	A in.	B ft.	B in.	C ft.	C in.	D ft.	D in.	No.	Size	Length ft.	Length in.	Spacing	No.	Size	Length ft.	Length in.	Spacing
15-16	54+Nb=	9	9	11	12	8	⅛	1	10	0	11¾	8	6	60+Nb=	5	4	11	12	54+Nb=	6	12	10	12
13-14	48+Nb=	8	8	3	12	6	11	1	3	0	8	7	3	54+Nb=	5	4	11	12	48+Nb=	6	10	10	12
11-12	42+Nb=	7	7	1	12	5	10½	1	2	0	7	6	2	48+Nb=	5	4	11	12	42+Nb=	5	8	10	12
9-10	36+Nb=	6	6	1	12	5	1	1	0	0	6	5	4	42+Nb=	5	4	11	12	36+Nb=	5	6	10	12
7-8	30+Nb=	5	5	7	12	4	8½	0	10	0	5	4	11	36+Nb=	5	4	11	12	30+Nb=	5	4	10	12
5-6	24+Nb=	5	5	7	12	4	8½	0	10	0	5	4	11	30+Nb=	5	4	11	12	24+Nb=	5	2	10	12

MARK	A9				A10			A11			A12			A13			A14						A15						A16			A17			A18		
TYPE	Str.				8			8			8			8			7						7						Str.			Str.			Str.		
SIZE	#5				#5			#5			#5			#5			#5						#5						#5			#5			#5		
H	No.	Length ft.	Length in.	Spacing	No.	Length ft.	Length in.	No.	Length ft.	Length in.	No.	Length ft.	Length in.	No.	Length ft.	Length in.	No.	Length ft.	Length in.	+Lb =	Length ft.	Length in.	No.	Length ft.	Length in.	+Lb =	Length ft.	Length in.	No.	Length ft.	Length in.	No.	Length ft.	Length in.	No.	Length ft.	Length in.
15-16	60+Nb=	12	10	12	14	30	11	14	29	8	14	21	6	14	21	7	14	12	5	+Lb=			14	11	0	+Lb=			2	34	0	2	25	0	118	5	9
13-14	54+Nb=	10	10	12	12	27	11	12	26	8	12	18	6	12	18	7	12	12	5	+Lb=			12	11	0	+Lb=			2	31	0	2	22	0	106	5	9
11-12	48+Nb=	8	10	12	10	23	11	10	22	8	10	16	6	10	16	7	10	12	5	+Lb=			10	11	0	+Lb=			2	27	0	2	20	0	94	5	9
9-10	42+Nb=	6	10	12	8	20	11	8	19	8	8	13	6	8	13	7	8	12	5	+Lb=			8	11	0	+Lb=			2	24	0	2	17	0	82	5	9
7-8	36+Nb=	4	10	12	6	16	11	6	15	8	6	11	6	6	11	7	6	12	5	+Lb=			6	11	0	+Lb=			2	20	0	2	15	0	70	5	9
5-6	30+Nb=	2	10	12	4	13	11	4	12	8	4	8	6	4	8	7	4	12	5	+Lb=			4	11	0	+Lb=			2	17	0	2	12	0	58	5	9

Table of Dimensions

H	W Length ft.	W Length in.	N Length ft.	N Length in.	M2 Length ft.	M2 Length in.	M3 Length ft.	M3 Length in.	T2 Length ft.	T2 Length in.	T3 Length ft.	T3 Length in.	L2 Length ft.	L3 Length ft.	S2 Length ft.	S2 Length in.	S2 + Lb/2 =	S2 Length ft.	S2 Length in.	S3 Length ft.	S3 Length in.	S3 + Lb/2 =	S3 Length ft.	S3 Length in.
15-16	12	0	5	0	23	5¼	25	6	20	6⅝	1	8	28	19	9	9½	+0.5Lb=			6	7¾	+0.5Lb=		
13-14	11	0	4	6	21	⅛	22	½	18	5⅛	1	5⅜	25	16	9	4	+0.5Lb=			6	5	+0.5Lb=		
11-12	10	0	4	0	17	10	19	6⅞	15	7⅝	1	3⅜	21	14	8	10½	+0.5Lb=			6	2⅛	+0.5Lb=		
9-10	9	0	3	6	15	4⅞	16	1⅜	13	6⅛	1	⅝	18	11	8	5	+0.5Lb=			5	11⅜	+0.5Lb=		
7-8	7	6	2	9	12	1¾	13	5	10	7¾	0	10½	14	9	7	8⅝	+0.5Lb=			5	7⅛	+0.5Lb=		
5-6	6	6	2	3	9	8⅝	9	11½	8	6¼	0	7⅞	11	6	7	3⅛	+0.5Lb=			5	4¼	+0.5Lb=		

Reinforcement Details

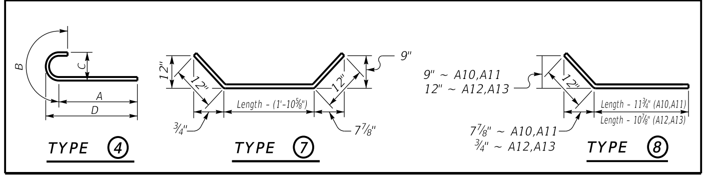

*Concrete quantities computed using 21" beam depth on ½" pad & Variable Bridge Width

Quantities

H	Concrete* C.Y.	Reinforcement LBS.
5	22.04+(0.71xLb) =	2131+(52.8xLb) =
6	24.01+(0.78xLb) =	2131+(52.8xLb) =
7	34.1+(0.93xLb) =	3195+(68.7xLb) =
8	36.51+(1.01xLb) =	3195+(68.7xLb) =
9	50.24+(1.19xLb) =	4790+(91xLb) =
10	53.1+(1.27xLb) =	4790+(91xLb) =
11	67.85+(1.41xLb) =	7067+(120.4xLb) =
12	71.15+(1.49xLb) =	7067+(120.4xLb) =
13	88.13+(1.64xLb) =	10316+(161xLb) =
14	91.87+(1.71xLb) =	10316+(161xLb) =
15	111.07+(1.86xLb) =	13872+(198.6xLb) =
16	115.26+(1.93xLb) =	13872+(198.6xLb) =

ABUTMENT SKEW CORRECTION FACTOR (SCF) = 1.103

NUMBER OF BARS TO ADD (Nb) = Bridge Width (feet) x SCF (round up to nearest whole number)

LENGTH OF ABUTMENT TO ADD (Lb) = Bridge Width (feet) x SCF (convert decimal to architectural)

GENERAL NOTES

SPECIFICATIONS: Construct abutments according to the current edition of the Kentucky Department of Highways Standard Specifications for Road and Bridge Construction. Abutments are designed for side by side box beams as detailed in Standard Drawings BDP-001 through BDP-012, current edition. Dimensions may be adjusted to allow for any out to out bridge width. Abutments are also adequate for Std. Dwg. slabs or steel beam superstructures.

FOUNDATION PRESSURE: Construct abutment footings on solid rock bearing material that can support a pressure of 8000 psf service or 10,800 psf strength factored as recommended by a geotechnical engineer.

WING LENGTHS: Calculated assuming 21" superstructure depth and stream bank elevation at top of footing.

FOOTING ELEVATION: Construct bottom of footing below the anticipated scour elevation. (This typically entails embedding the footings 1'-0" to 2'-0" into rock and pouring concrete directly against cut rock faces. as recommended by geotechnical engineer.)

NOTE: Distances to bars shown are clear dimensions unless otherwise noted.

MATERIAL SPECIFICATIONS:
Concrete, Class "A" = 3500 psi
Steel Reinforcement = Grade 60

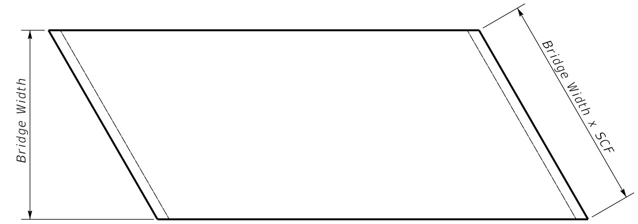

PLAN OF SUPERSTRUCTURE SLAB

KENTUCKY
DEPARTMENT OF HIGHWAYS

25° SKEW VARIABLE
WIDTH ABUTMENT
25% SKEWED WINGS

STANDARD DRAWING NO. BSA-032

SUBMITTED ______ DIRECTOR DIVISION OF STRUCTURAL DESIGN 02-26-20 DATE

APPROVED ______ STATE HIGHWAY ENGINEER 02-26-20 DATE

30° SKEW VARIABLE BRIDGE WIDTH 2:1 FILL SLOPES WINGS SKEWED 25% FROM ROADWAY TO BREASTWALL

ABUTMENT SKEW CORRECTION FACTOR (SCF) = 1.155

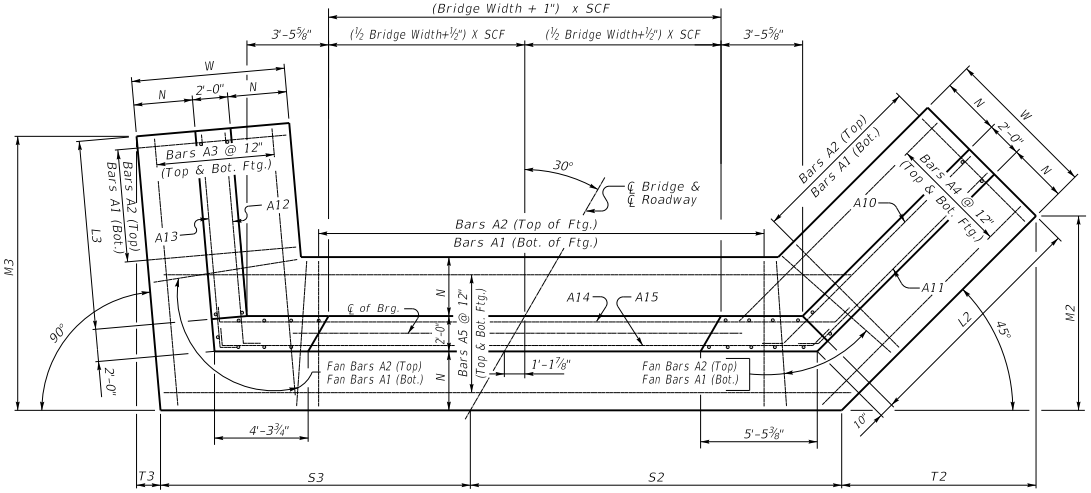

(Left Skew as shown;right skew opp. hand)

PLAN

NOTE: Trim A16 & A17 bars if necessary

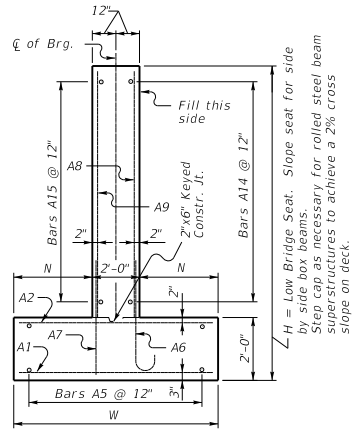

WALL SECTION

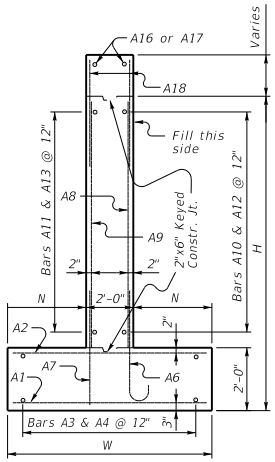

WING SECTION

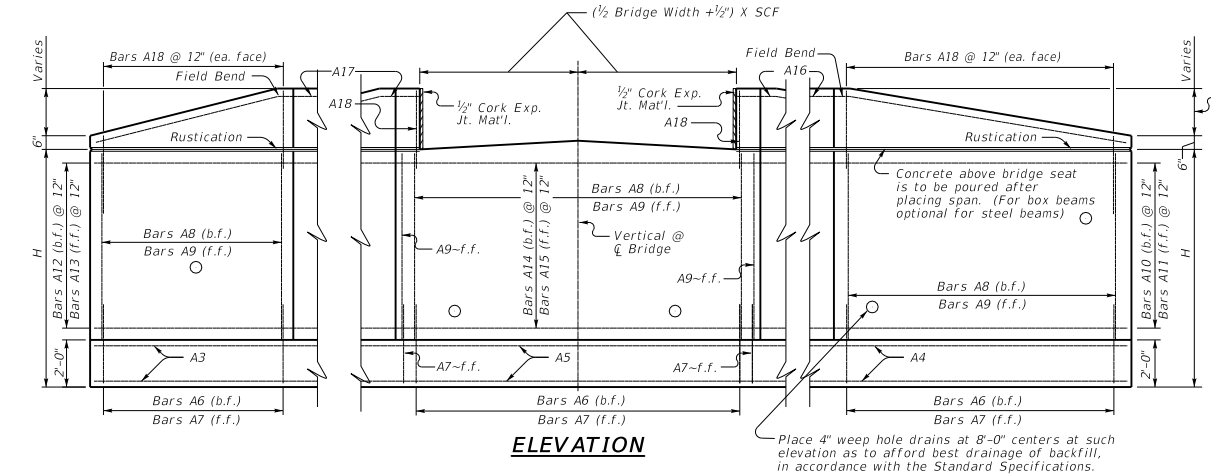

ELEVATION

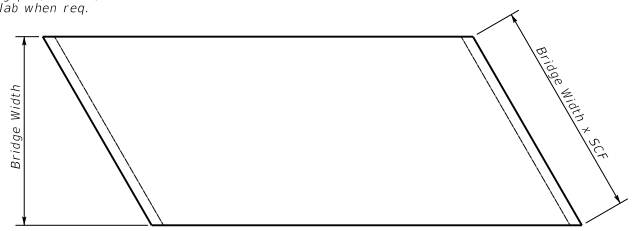

PLAN OF SUPERSTRUCTURE SLAB

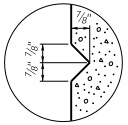

RUSTICATION GROOVE

KENTUCKY
DEPARTMENT OF HIGHWAYS

30° SKEW VARIABLE WIDTH ABUTMENT 25% SKEWED WINGS

STANDARD DRAWING NO. BSA-033

SUBMITTED _____ DIRECTOR DIVISION OF STRUCTURAL DESIGN — DATE 02-26-20

APPROVED _____ STATE HIGHWAY ENGINEER — DATE 02-26-20

30° SKEW VARIABLE BRIDGE WIDTH 2:1 FILL SLOPES WINGS SKEWED 25% FROM ROADWAY TO BREASTWALL

Bill of Reinforcement

MARK	A1					A2					A3			A4			A5					
TYPE	Str.					Str.					Str.			Str.			Str.					
SIZE											#5			#5			#5					
H	No.	Size	Length ft.	Length in.	Spacing	No.	Size	Length ft.	Length in.	Spacing	No.	Length ft.	Length in.	No.	Length ft.	Length in.	No.	Length ft.	Length in.	+Lb =	Length ft.	Length in.
15-16	77+Nb=	10	11	8	12	77+Nb=	7	11	8	12	24	25	8	24	33	0	24	16	7	+Lb=		
13-14	68+Nb=	9	10	8	12	68+Nb=	7	10	8	12	22	22	2	22	28	9	22	15	11	+Lb=		
11-12	61+Nb=	8	9	8	12	61+Nb=	6	9	8	12	20	19	8	20	24	7	20	15	2	+Lb=		
9-10	54+Nb=	7	8	8	12	54+Nb=	5	8	8	12	18	16	2	18	21	4	18	14	6	+Lb=		
7-8	44+Nb=	6	7	2	12	44+Nb=	5	7	2	12	16	13	5	16	15	9	16	13	5	+Lb=		
5-6	37+Nb=	5	6	2	12	37+Nb=	5	6	2	12	14	9	11	14	12	7	14	12	8	+Lb=		

MARK	A6													A7					A8				
TYPE	4													Str.					Str.				
SIZE																							
H	No.	Size	Length ft.	Length in.	Spacing	A ft.	A in.	B ft.	B in.	C ft.	C in.	D ft.	D in.	No.	Size	Length ft.	Length in.	Spacing	No.	Size	Length ft.	Length in.	Spacing
15-16	57+Nb=	9	9	11	12	8	1/8	1	10	0	11 3/4	8	6	62+Nb=	5	4	11	12	57+Nb=	6	12	10	12
13-14	50+Nb=	8	8	3	12	6	11	1	3	0	8	7	3	55+Nb=	5	4	11	12	50+Nb=	6	10	10	12
11-12	44+Nb=	7	7	1	12	5	10 1/2	1	2	0	7	6	2	49+Nb=	5	4	11	12	44+Nb=	5	8	10	12
9-10	38+Nb=	6	6	1	12	5	1	1	0	0	6	5	4	43+Nb=	5	4	11	12	38+Nb=	5	6	10	12
7-8	31+Nb=	5	5	7	12	4	8 1/2	0	10	0	5	4	11	36+Nb=	5	4	11	12	31+Nb=	5	4	10	12
5-6	25+Nb=	5	5	7	12	4	8 1/2	0	10	0	5	4	11	30+Nb=	5	4	11	12	25+Nb=	5	2	10	12

MARK	A9				A10			A11			A12			A13			A14						A15						A16			A17			A18		
TYPE	Str.				8			8			8			8			7						7						Str.			Str.			Str.		
SIZE	#5				#5			#5			#5			#5			#5						#5						#5			#5			#5		
H	No.	Length ft.	Length in.	Spacing	No.	Length ft.	Length in.	No.	Length ft.	Length in.	No.	Length ft.	Length in.	No.	Length ft.	Length in.	No.	Length ft.	Length in.	+Lb =	Length ft.	Length in.	No.	Length ft.	Length in.	+Lb =	Length ft.	Length in.	No.	Length ft.	Length in.	No.	Length ft.	Length in.	No.	Length ft.	Length in.
15-16	62+Nb=	12	10	12	14	33	0	14	31	7	14	21	6	14	21	8	14	12	10	+Lb=			14	11	4	+Lb=			2	36	2	2	25	3	124	5	9
13-14	55+Nb=	10	10	12	12	29	0	12	27	7	12	18	6	12	18	8	12	12	10	+Lb=			12	11	4	+Lb=			2	32	2	2	22	3	110	5	9
11-12	49+Nb=	8	10	12	10	25	0	10	23	7	10	16	6	10	16	8	10	12	10	+Lb=			10	11	4	+Lb=			2	28	2	2	20	3	98	5	9
9-10	43+Nb=	6	10	12	8	22	0	8	20	7	8	13	6	8	13	8	8	12	10	+Lb=			8	11	4	+Lb=			2	25	2	2	17	3	86	5	9
7-8	36+Nb=	4	10	12	6	17	0	6	15	7	6	11	6	6	11	8	6	12	11	+Lb=			6	11	4	+Lb=			2	20	2	2	15	3	72	5	9
5-6	30+Nb=	2	10	12	4	14	0	4	12	7	4	8	6	4	8	8	4	12	11	+Lb=			4	11	4	+Lb=			2	17	2	2	12	3	60	5	9

Table of Dimensions

H	W Length ft.	W Length in.	N Length ft.	N Length in.	M2 Length ft.	M2 Length in.	M3 Length ft.	M3 Length in.	T2 Length ft.	T2 Length in.	T3 Length ft.	T3 Length in.	L2 Length ft.	L3 Length ft.	S2 Length ft.	S2 Length in.	S2 + Lb/2 =	S2 Length ft.	S2 Length in.	S3 Length ft.	S3 Length in.	S3 + Lb/2 =	S3 Length ft.	S3 Length in.
15-16	12	0	5	0	23	3 1/8	26	0	23	3 1/8	0	0	30	19	10	5 1/2	+0.5Lb=			6	5 5/8	+0.5Lb=		
13-14	11	0	4	6	20	3 1/2	22	6	20	3 1/2	0	0	26	16	9	11 1/2	+0.5Lb=			6	3 1/8	+0.5Lb=		
11-12	10	0	4	0	17	3 3/4	20	0	17	3 3/4	0	0	22	14	9	5 1/2	+0.5Lb=			6	5/8	+0.5Lb=		
9-10	9	0	3	6	15	1/2	16	6	15	1/2	0	0	19	11	8	11 5/8	+0.5Lb=			5	10	+0.5Lb=		
7-8	7	6	2	9	11	3 1/2	13	9	11	3 1/2	0	0	14	9	8	2 5/8	+0.5Lb=			5	6 1/4	+0.5Lb=		
5-6	6	6	2	3	9	1/4	10	3	9	1/4	0	0	11	6	7	8 3/4	+0.5Lb=			5	3 3/4	+0.5Lb=		

Reinforcement Details

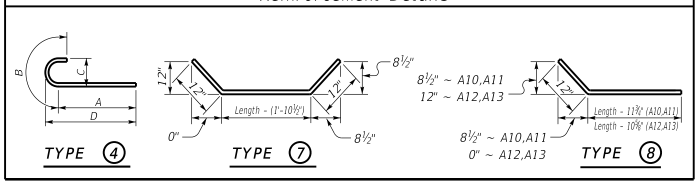

*Concrete quantities computed using 21" beam depth on ½" pad & Variable Bridge Width

Quantities

H	Concrete* C.Y.	Reinforcement LBS.
5	22.36+(0.71xLb) =	2163+(52.8xLb) =
6	24.35+(0.78xLb) =	2163+(52.8xLb) =
7	34.5+(0.93xLb) =	3232+(68.7xLb) =
8	36.93+(1.01xLb) =	3232+(68.7xLb) =
9	52.02+(1.19xLb) =	4969+(91xLb) =
10	54.98+(1.27xLb) =	4969+(91xLb) =
11	69.94+(1.41xLb) =	7260+(120.4xLb) =
12	73.33+(1.49xLb) =	7260+(120.4xLb) =
13	90.51+(1.64xLb) =	10566+(161xLb) =
14	94.36+(1.71xLb) =	10566+(161xLb) =
15	115.71+(1.86xLb) =	14465+(198.6xLb) =
16	120.07+(1.93xLb) =	14465+(198.6xLb) =

ABUTMENT SKEW CORRECTION FACTOR (SCF) = 1.155

NUMBER OF BARS TO ADD (Nb) = Bridge Width (feet) x SCF (round up to nearest whole number)

LENGTH OF ABUTMENT TO ADD (Lb) = Bridge Width (feet) x SCF (convert decimal to architectural)

GENERAL NOTES

SPECIFICATIONS: Construct abutments according to the current edition of the Kentucky Department of Highways Standard Specifications for Road and Bridge Construction. Abutments are designed for side by side box beams as detailed in Standard Drawings BDP-001 through BDP-012, current edition. Dimensions may be adjusted to allow for any out to out bridge width. Abutments are also adequate for Std. Dwg. slabs or steel beam superstructures.

FOUNDATION PRESSURE: Construct abutment footings on solid rock bearing material that can support a pressure of 8000 psf service or 10,800 psf strength factored as recommended by a geotechnical engineer.

WING LENGTHS: Calculated assuming 21" superstructure depth and stream bank elevation at top of footing.

FOOTING ELEVATION: Construct bottom of footing below the anticipated scour elevation. (This typically entails embedding the footings 1'-0" to 2'-0" into rock and pouring concrete directly against cut rock faces. as recommended by geotechnical engineer.)

NOTE: Distances to bars shown are clear dimensions unless otherwise noted.

MATERIAL SPECIFICATIONS:
Concrete, Class "A" = 3500 psi
Steel Reinforcement = Grade 60

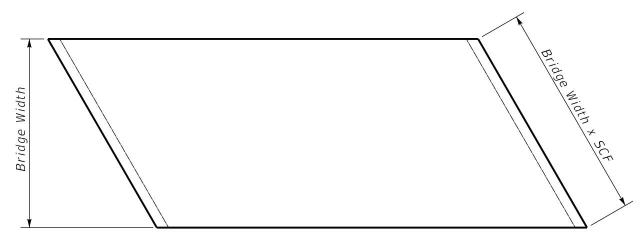

PLAN OF SUPERSTRUCTURE SLAB

KENTUCKY
DEPARTMENT OF HIGHWAYS

30° SKEW VARIABLE
WIDTH ABUTMENT
25% SKEWED WINGS

STANDARD DRAWING NO. BSA-034

SUBMITTED ______ DIRECTOR DIVISION OF STRUCTURAL DESIGN — 02-26-20 DATE

APPROVED ______ STATE HIGHWAY ENGINEER — 02-26-20 DATE

35° SKEW VARIABLE BRIDGE WIDTH 2:1 FILL SLOPES WINGS SKEWED 25% FROM ROADWAY TO BREASTWALL

ABUTMENT SKEW CORRECTION FACTOR (SCF) = 1.221

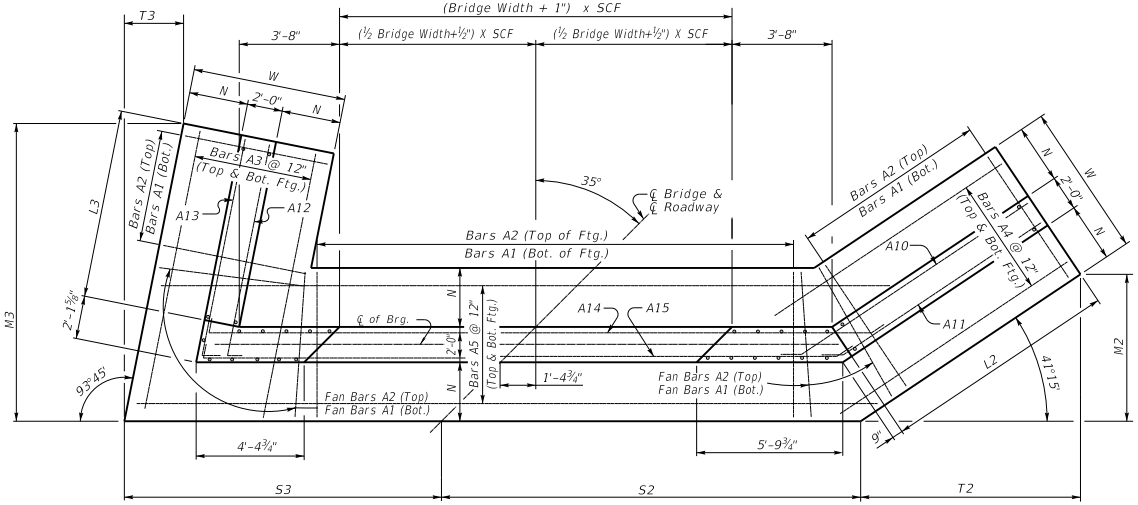

(Left Skew as shown;right skew opp. hand)

PLAN

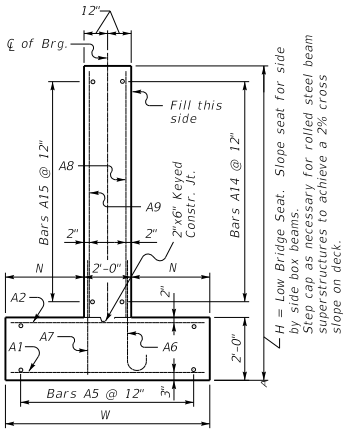

WALL SECTION

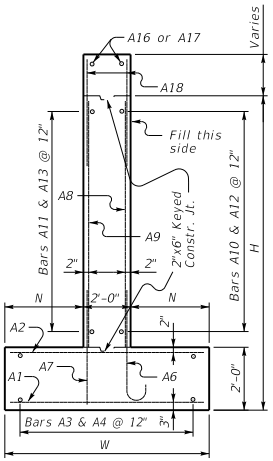

WING SECTION

NOTE: Trim A16 & A17 bars if necessary
Trim A3 bars as necessary

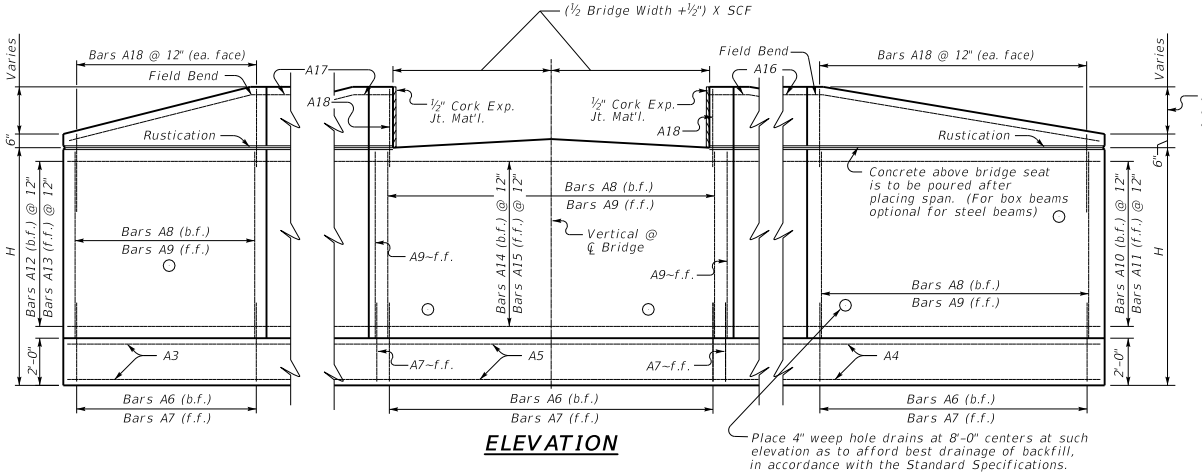

ELEVATION

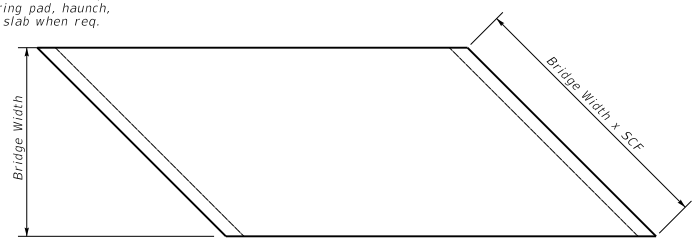

PLAN OF SUPERSTRUCTURE SLAB

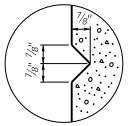

RUSTICATION GROOVE

KENTUCKY
DEPARTMENT OF HIGHWAYS

35° SKEW VARIABLE WIDTH ABUTMENT 25% SKEWED WINGS

STANDARD DRAWING NO. BSA-035

SUBMITTED _____ DIRECTOR DIVISION OF STRUCTURAL DESIGN — DATE 02-26-20

APPROVED _____ STATE HIGHWAY ENGINEER — DATE 02-26-20

35° SKEW VARIABLE BRIDGE WIDTH 2:1 FILL SLOPES WINGS SKEWED 25% FROM ROADWAY TO BREASTWALL

Bill of Reinforcement

MARK	A1					A2					A3			A4			A5					
TYPE	Str.					Str.					Str.			Str.			Str.					
SIZE											#5			#5			#5					
H	No.	Size	Length ft.	Length in.	Spacing	No.	Size	Length ft.	Length in.	Spacing	No.	Length ft.	Length in.	No.	Length ft.	Length in.	No.	Length ft.	Length in.	+Lb =	Length ft.	Length in.
15-16	81+Nb=	10	11	8	12	81+Nb=	7	11	8	12	24	26	1	24	35	9	24	17	2	+Lb=		
13-14	72+Nb=	9	10	8	12	72+Nb=	7	10	8	12	22	22	7	22	31	7	22	16	5	+Lb=		
11-12	64+Nb=	8	9	8	12	64+Nb=	6	9	8	12	20	20	0	20	26	5	20	15	8	+Lb=		
9-10	55+Nb=	7	8	8	12	55+Nb=	5	8	8	12	18	16	6	18	22	2	18	15	0	+Lb=		
7-8	46+Nb=	6	7	2	12	46+Nb=	5	7	2	12	16	13	9	16	16	7	16	13	11	+Lb=		
5-6	39+Nb=	5	6	2	12	39+Nb=	5	6	2	12	14	10	2	14	13	5	14	13	2	+Lb=		

MARK	A6													A7					A8				
TYPE	4													Str.					Str.				
SIZE																							
H	No.	Size	Length ft.	Length in.	Spacing	A ft.	A in.	B ft.	B in.	C ft.	C in.	D ft.	D in.	No.	Size	Length ft.	Length in.	Spacing	No.	Size	Length ft.	Length in.	Spacing
15-16	60+Nb=	9	9	11	12	8	⅛	1	10	0	11¾	8	6	66+Nb=	5	4	11	12	60+Nb=	6	12	10	12
13-14	53+Nb=	8	8	3	12	6	11	1	3	0	8	7	3	59+Nb=	5	4	11	12	53+Nb=	6	10	10	12
11-12	46+Nb=	7	7	1	12	5	10½	1	2	0	7	6	2	52+Nb=	5	4	11	12	46+Nb=	5	8	10	12
9-10	39+Nb=	6	6	1	12	5	1	1	0	0	6	5	4	45+Nb=	5	4	11	12	39+Nb=	5	6	10	12
7-8	32+Nb=	5	5	7	12	4	8½	0	10	0	5	4	11	38+Nb=	5	4	11	12	32+Nb=	5	4	10	12
5-6	26+Nb=	5	5	7	12	4	8½	0	10	0	5	4	11	32+Nb=	5	4	11	12	26+Nb=	5	2	10	12

MARK	A9				A10			A11			A12			A13			A14						A15						A16			A17			A18		
TYPE	Str.				8			8			8			8			7						7						Str.			Str.			Str.		
SIZE	#5				#5			#5			#5			#5			#5						#5						#5			#5			#5		
H	No.	Length ft.	Length in.	Spacing	No.	Length ft.	Length in.	No.	Length ft.	Length in.	No.	Length ft.	Length in.	No.	Length ft.	Length in.	No.	Length ft.	Length in.	+Lb =	Length ft.	Length in.	No.	Length ft.	Length in.	+Lb =	Length ft.	Length in.	No.	Length ft.	Length in.	No.	Length ft.	Length in.	No.	Length ft.	Length in.
15-16	66+Nb=	12	10	12	14	36	2	14	34	7	14	21	5	14	21	9	14	13	5	+Lb=			14	11	10	+Lb=			2	39	6	2	25	5	130	5	9
13-14	59+Nb=	10	10	12	12	32	2	12	30	7	12	18	5	12	18	9	12	13	5	+Lb=			12	11	10	+Lb=			2	35	6	2	22	5	116	5	9
11-12	52+Nb=	8	10	12	10	27	2	10	25	7	10	16	5	10	16	9	10	13	5	+Lb=			10	11	10	+Lb=			2	30	6	2	20	5	102	5	9
9-10	45+Nb=	6	10	12	8	23	2	8	21	7	8	13	5	8	13	9	8	13	5	+Lb=			8	11	10	+Lb=			2	26	6	2	17	5	88	5	9
7-8	38+Nb=	4	10	12	6	18	2	6	16	7	6	11	5	6	11	9	6	13	5	+Lb=			6	11	10	+Lb=			2	21	6	2	15	5	74	5	9
5-6	32+Nb=	2	10	12	4	15	2	4	13	7	4	8	5	4	8	9	4	13	5	+Lb=			4	11	10	+Lb=			2	18	6	2	12	5	62	5	9

Table of Dimensions

H	W		N		M2		M3		T2		T3		L2	L3	S2					S3				
	Length ft.	Length in.	Length ft.	Length in.	Length ft.	Length in.	Length ft.	Length in.	Length ft.	Length in.	Length ft.	Length in.	Length ft.	Length ft.	Length ft.	Length in.	+ Lb/2 =	Length ft.	Length in.	Length ft.	Length in.	+ Lb/2 =	Length ft.	Length in.
15-16	12	0	5	0	23	6	26	5	26	9½	1	8¾	33	19	11	3	+0.5Lb=			6	3⅜	+0.5Lb=		
13-14	11	0	4	6	20	8¾	22	10¾	23	7¾	1	6	29	16	10	8½	+0.5Lb=			6	1¼	+0.5Lb=		
11-12	10	0	4	0	17	3¾	20	4⅜	19	8⅞	1	4	24	14	10	2⅛	+0.5Lb=			5	11	+0.5Lb=		
9-10	9	0	3	6	14	6⅝	16	10	16	7⅛	1	1¼	20	11	9	7⅝	+0.5Lb=			5	8¾	+0.5Lb=		
7-8	7	6	2	9	11	⅞	14	½	12	7½	0	11	15	9	8	9⅞	+0.5Lb=			5	5½	+0.5Lb=		
5-6	6	6	2	3	8	11⅝	10	6⅛	10	2¾	0	8¼	12	6	8	3½	+0.5Lb=			5	3¼	+0.5Lb=		

Reinforcement Details

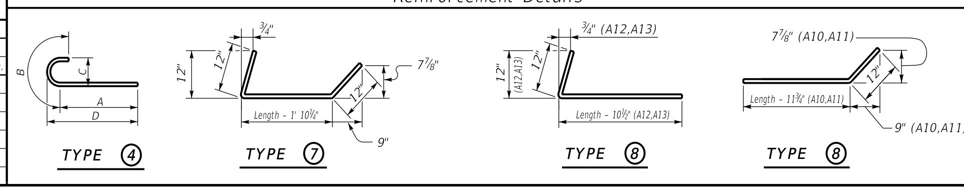

Quantities

H	Concrete* C.Y.	Reinforcement LBS.
5	23.58+(0.71xLb) =	2265+(52.8xLb) =
6	25.67+(0.78xLb) =	2265+(52.8xLb) =
7	36.04+(0.93xLb) =	3363+(68.7xLb) =
8	38.58+(1.01xLb) =	3363+(68.7xLb) =
9	53.94+(1.19xLb) =	5110+(91xLb) =
10	57+(1.27xLb) =	5110+(91xLb) =
11	73.69+(1.41xLb) =	7612+(120.4xLb) =
12	77.27+(1.49xLb) =	7612+(120.4xLb) =
13	96.54+(1.64xLb) =	11200+(161xLb) =
14	100.64+(1.71xLb) =	11200+(161xLb) =
15	122.51+(1.86xLb) =	15233+(198.6xLb) =
16	127.13+(1.93xLb) =	15233+(198.6xLb) =

*Concrete quantities computed using 21" beam depth on ½" pad & Variable Bridge Width

ABUTMENT SKEW CORRECTION FACTOR (SCF) = 1.221

NUMBER OF BARS TO ADD (Nb) = Bridge Width (feet) x SCF (round up to nearest whole number)

LENGTH OF ABUTMENT TO ADD (Lb) = Bridge Width (feet) x SCF (convert decimal to architectural)

GENERAL NOTES

SPECIFICATIONS: Construct abutments according to the current edition of the Kentucky Department of Highways Standard Specifications for Road and Bridge Construction. Abutments are designed for side by side box beams as detailed in Standard Drawings BDP-001 through BDP-012, current edition. Dimensions may be adjusted to allow for any out to out bridge width. Abutments are also adequate for Std. Dwg. slabs or steel beam superstructures.

FOUNDATION PRESSURE: Construct abutment footings on solid rock bearing material that can support a pressure of 8000 psf service or 10,800 psf strength factored as recommended by a geotechnical engineer.

WING LENGTHS: Calculated assuming 21" superstructure depth and stream bank elevation at top of footing.

FOOTING ELEVATION: Construct bottom of footing below the anticipated scour elevation. (This typically entails embedding the footings 1'-0" to 2'-0" into rock and pouring concrete directly against cut rock faces. as recommended by geotechnical engineer.)

NOTE: Distances to bars shown are clear dimensions unless otherwise noted.

MATERIAL SPECIFICATIONS:
Concrete, Class "A" = 3500 psi
Steel Reinforcement = Grade 60

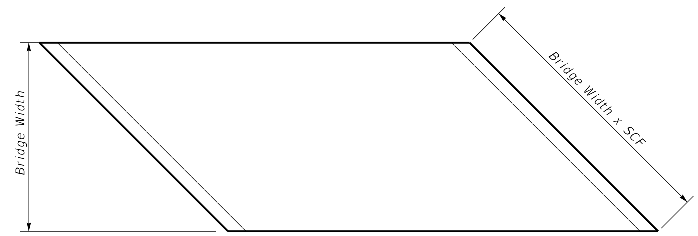

PLAN OF SUPERSTRUCTURE SLAB

KENTUCKY
DEPARTMENT OF HIGHWAYS

35° SKEW VARIABLE
WIDTH ABUTMENT
25% SKEWED WINGS

STANDARD DRAWING NO. BSA-036

SUBMITTED ____ DIRECTOR DIVISION OF STRUCTURAL DESIGN 02-26-20 DATE

APPROVED ____ STATE HIGHWAY ENGINEER 02-26-20 DATE

40° SKEW VARIABLE BRIDGE WIDTH 2:1 FILL SLOPES WINGS SKEWED 25% FROM ROADWAY TO BREASTWALL

ABUTMENT SKEW CORRECTION FACTOR (SCF) = 1.305

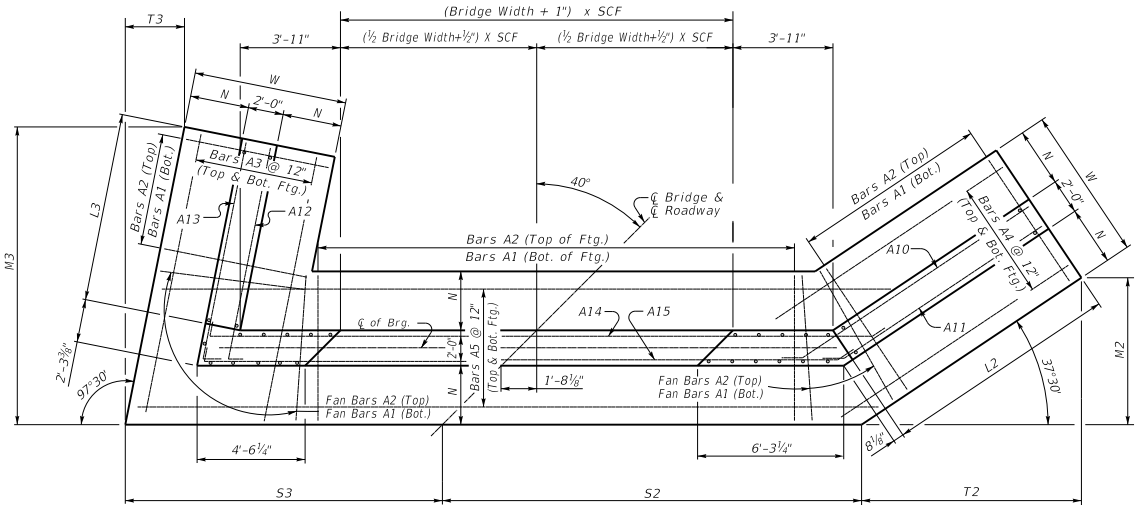

(Left Skew as shown;right skew opp. hand)

PLAN

NOTE: Trim A16 & A17 bars if necessary
Trim A3 bars as necessary

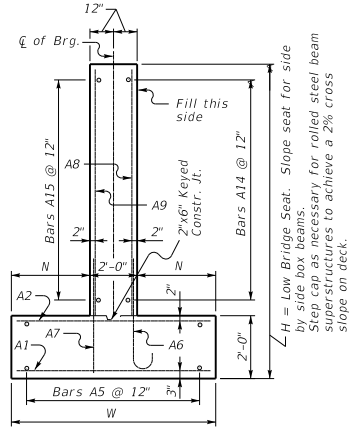

WALL SECTION

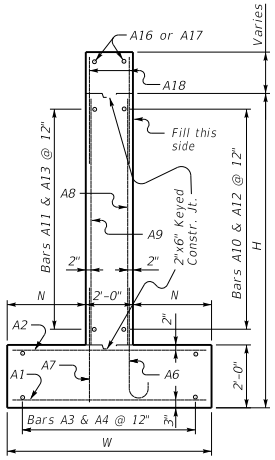

WING SECTION

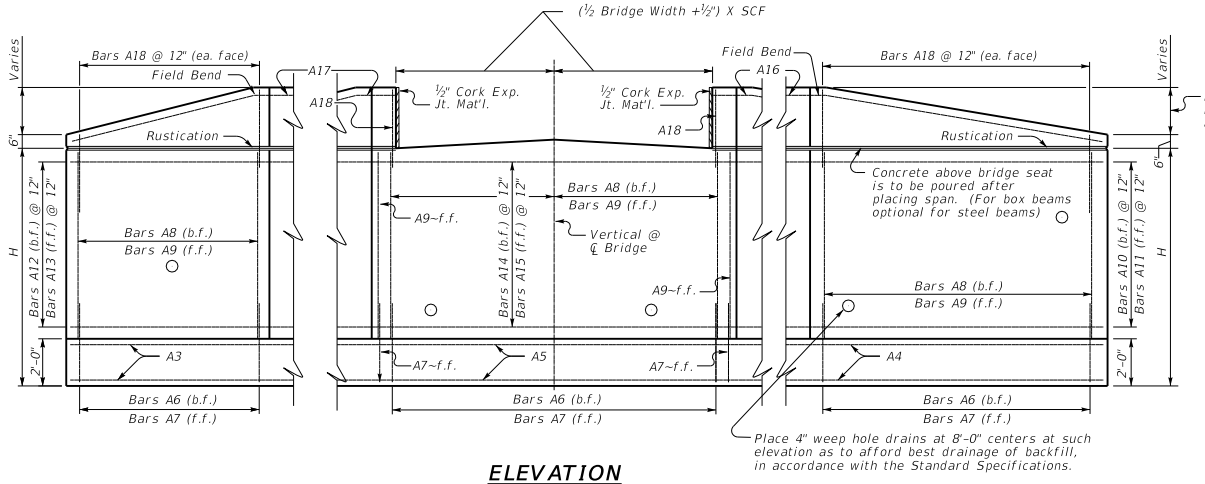

ELEVATION

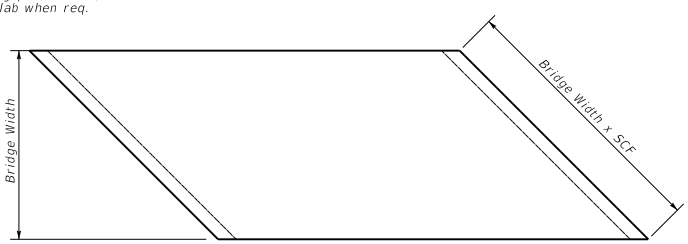

PLAN OF SUPERSTRUCTURE SLAB

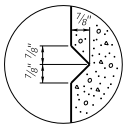

RUSTICATION GROOVE

KENTUCKY
DEPARTMENT OF HIGHWAYS

40° SKEW VARIABLE WIDTH ABUTMENT 25% SKEWED WINGS

STANDARD DRAWING NO. BSA-037

SUBMITTED _____ DIRECTOR DIVISION OF STRUCTURAL DESIGN — DATE 02-26-20

APPROVED _____ STATE HIGHWAY ENGINEER — DATE 02-26-20

40° SKEW VARIABLE BRIDGE WIDTH 2:1 FILL SLOPES
WINGS SKEWED 25% FROM ROADWAY TO BREASTWALL

Bill of Reinforcement

MARK	A1					A2					A3			A4			A5					
TYPE	Str.					Str.					Str.			Str.			Str.					
SIZE											#5			#5			#5					
H	No.	Size	Length ft.	Length in.	Spacing	No.	Size	Length ft.	Length in.	Spacing	No.	Length ft.	Length in.	No.	Length ft.	Length in.	No.	Length ft.	Length in.	+Lb =	Length ft.	Length in.
15-16	85+Nb=	10	11	8	12	85+Nb=	7	11	8	12	24	26	7	24	38	7	24	17	10	+Lb=		
13-14	76+Nb=	9	10	8	12	76+Nb=	7	10	8	12	22	23	0	22	33	5	22	17	1	+Lb=		
11-12	67+Nb=	8	9	8	12	67+Nb=	6	9	8	12	20	20	5	20	28	3	20	16	4	+Lb=		
9-10	59+Nb=	7	8	8	12	59+Nb=	5	8	8	12	18	16	10	18	24	1	18	15	7	+Lb=		
7-8	49+Nb=	6	7	2	12	49+Nb=	5	7	2	12	16	14	1	16	18	6	16	14	7	+Lb=		
5-6	41+Nb=	5	6	2	12	41+Nb=	5	6	2	12	14	10	6	14	14	4	14	13	10	+Lb=		

MARK	A6													A7					A8				
TYPE	4													Str.					Str.				
SIZE																							
H	No.	Size	Length ft.	Length in.	Spacing	A ft.	A in.	B ft.	B in.	C ft.	C in.	D ft.	D in.	No.	Size	Length ft.	Length in.	Spacing	No.	Size	Length ft.	Length in.	Spacing
15-16	63+Nb=	9	9	11	12	8	1/8	1	10	0	11 3/4	8	6	69+Nb=	5	4	11	12	63+Nb=	6	12	10	12
13-14	55+Nb=	8	8	3	12	6	11	1	3	0	8	7	3	61+Nb=	5	4	11	12	55+Nb=	6	10	10	12
11-12	48+Nb=	7	7	1	12	5	10 1/2	1	2	0	7	6	2	54+Nb=	5	4	11	12	48+Nb=	5	8	10	12
9-10	41+Nb=	6	6	1	12	5	1	1	0	0	6	5	4	47+Nb=	5	4	11	12	41+Nb=	5	6	10	12
7-8	34+Nb=	5	5	7	12	4	8 1/2	0	10	0	5	4	11	40+Nb=	5	4	11	12	34+Nb=	5	4	10	12
5-6	27+Nb=	5	5	7	12	4	8 1/2	0	10	0	5	4	11	33+Nb=	5	4	11	12	27+Nb=	5	2	10	12

MARK	A9				A10			A11			A12			A13		
TYPE	Str.				8			8			8			8		
SIZE	#5				#5			#5			#5			#5		
H	No.	Length ft.	Length in.	Spacing	No.	Length ft.	Length in.	No.	Length ft.	Length in.	No.	Length ft.	Length in.	No.	Length ft.	Length in.
15-16	69+Nb=	12	10	12	14	39	4	14	37	6	14	21	6	14	21	11
13-14	61+Nb=	10	10	12	12	34	4	12	32	6	12	18	6	12	18	11
11-12	54+Nb=	8	10	12	10	29	4	10	27	6	10	16	6	10	16	11
9-10	47+Nb=	6	10	12	8	25	4	8	23	6	8	13	6	8	13	11
7-8	40+Nb=	4	10	12	6	20	4	6	18	6	6	11	5	6	11	11
5-6	33+Nb=	2	10	12	4	16	4	4	14	6	4	8	5	4	8	11

MARK	A14						A15						A16			A17			A18		
TYPE	7						7						Str.			Str.			Str.		
SIZE	#5						#5						#5			#5			#5		
H	No.	Length ft.	Length in.	+Lb =	Length ft.	Length in.	No.	Length ft.	Length in.	+Lb =	Length ft.	Length in.	No.	Length ft.	Length in.	No.	Length ft.	Length in.	No.	Length ft.	Length in.
15-16	14	14	1	+Lb=			14	12	5	+Lb=			2	42	10	2	25	9	138	5	9
13-14	12	14	1	+Lb=			12	12	5	+Lb=			2	37	10	2	22	9	122	5	9
11-12	10	14	1	+Lb=			10	12	5	+Lb=			2	32	10	2	20	9	108	5	9
9-10	8	14	2	+Lb=			8	12	5	+Lb=			2	28	10	2	17	9	94	5	9
7-8	6	14	2	+Lb=			6	12	5	+Lb=			2	23	10	2	15	9	80	5	9
5-6	4	14	2	+Lb=			4	12	5	+Lb=			2	19	10	2	12	9	66	5	9

Table of Dimensions

H	W		N		M2		M3		T2		T3		L2	L3	S2					S3				
	Length ft.	Length in.	Length ft.	Length in.	Length ft.	Length in.	Length ft.	Length in.	Length ft.	Length in.	Length ft.	Length in.	Length ft.	Length ft.	Length ft.	Length in.	+ Lb/2 =	Length ft.	Length in.	Length ft.	Length in.	+ Lb/2 =	Length ft.	Length in.
15-16	12	0	5	0	23	4 3/8	26	9	30	5 3/8	3	6 1/4	36	19	12	2 5/8	+0.5Lb=			6	1	+0.5Lb=		
13-14	11	0	4	6	20	2 5/8	23	2 1/2	26	4 1/8	3	5/8	31	16	11	7 5/8	+0.5Lb=			5	11 1/8	+0.5Lb=		
11-12	10	0	4	0	17	3/4	20	8	22	2 7/8	2	8 5/8	26	14	11	1/2	+0.5Lb=			5	9 3/8	+0.5Lb=		
9-10	9	0	3	6	14	6 3/8	17	1 1/2	18	11 1/4	2	3	22	11	10	5 3/8	+0.5Lb=			5	7 1/2	+0.5Lb=		
7-8	7	6	2	9	11	4	14	3 1/2	14	9 1/4	1	10 5/8	17	9	9	6 7/8	+0.5Lb=			5	4 7/8	+0.5Lb=		
5-6	6	6	2	3	8	9 1/2	10	9	11	5 1/2	1	5	13	6	8	11 3/4	+0.5Lb=			5	3	+0.5Lb=		

Reinforcement Details

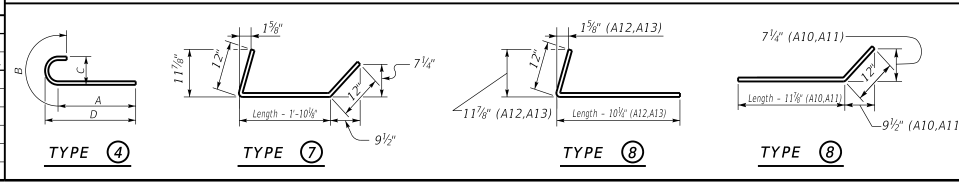

Quantities

H	Concrete* C.Y.	Reinforcement LBS.
5	24.9+(0.71xLb) =	2378+(52.8xLb) =
6	27.11+(0.78xLb) =	2378+(52.8xLb) =
7	38.74+(0.93xLb) =	3585+(68.7xLb) =
8	41.47+(1.01xLb) =	3585+(68.7xLb) =
9	57.31+(1.19xLb) =	5417+(91xLb) =
10	60.57+(1.27xLb) =	5417+(91xLb) =
11	77.63+(1.41xLb) =	7970+(120.4xLb) =
12	81.4+(1.49xLb) =	7970+(120.4xLb) =
13	101.07+(1.64xLb) =	11721+(161xLb) =
14	105.36+(1.71xLb) =	11721+(161xLb) =
15	129.56+(1.86xLb) =	16006+(198.6xLb) =
16	134.44+(1.93xLb) =	16006+(198.6xLb) =

*Concrete quantities computed using 21" beam depth on 1/2" pad & Variable Bridge Width

ABUTMENT SKEW CORRECTION FACTOR (SCF) = 1.305

NUMBER OF BARS TO ADD (Nb) = Bridge Width (feet) x SCF (round up to nearest whole number)

LENGTH OF ABUTMENT TO ADD (Lb) = Bridge Width (feet) x SCF (convert decimal to architectural)

GENERAL NOTES

SPECIFICATIONS: Construct abutments according to the current edition of the Kentucky Department of Highways Standard Specifications for Road and Bridge Construction. Abutments are designed for side by side box beams as detailed in Standard Drawings BDP-001 through BDP-012, current edition. Dimensions may be adjusted to allow for any out to out bridge width. Abutments are also adequate for Std. Dwg. slabs or steel beam superstructures.

FOUNDATION PRESSURE: Construct abutment footings on solid rock bearing material that can support a pressure of 8000 psf service or 10,800 psf strength factored as recommended by a geotechnical engineer.

WING LENGTHS: Calculated assuming 21" superstructure depth and stream bank elevation at top of footing.

FOOTING ELEVATION: Construct bottom of footing below the anticipated scour elevation. (This typically entails embedding the footings 1'-0" to 2'-0" into rock and pouring concrete directly against cut rock faces. as recommended by geotechnical engineer.)

NOTE: Distances to bars shown are clear dimensions unless otherwise noted.

MATERIAL SPECIFICATIONS:
Concrete, Class "A" = 3500 psi
Steel Reinforcement = Grade 60

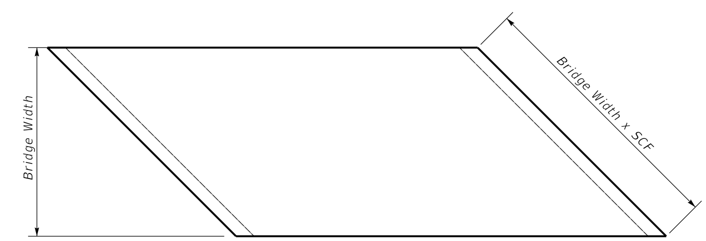

PLAN OF SUPERSTRUCTURE SLAB

KENTUCKY
DEPARTMENT OF HIGHWAYS

40° SKEW VARIABLE
WIDTH ABUTMENT
25% SKEWED WINGS

STANDARD DRAWING NO. BSA-038

SUBMITTED ____________ DIRECTOR DIVISION OF STRUCTURAL DESIGN — 02-26-20 DATE

APPROVED ____________ STATE HIGHWAY ENGINEER — 02-26-20 DATE

45° SKEW VARIABLE BRIDGE WIDTH 2:1 FILL SLOPES WINGS SKEWED 25% FROM ROADWAY TO BREASTWALL

ABUTMENT SKEW CORRECTION FACTOR (SCF) = 1.414

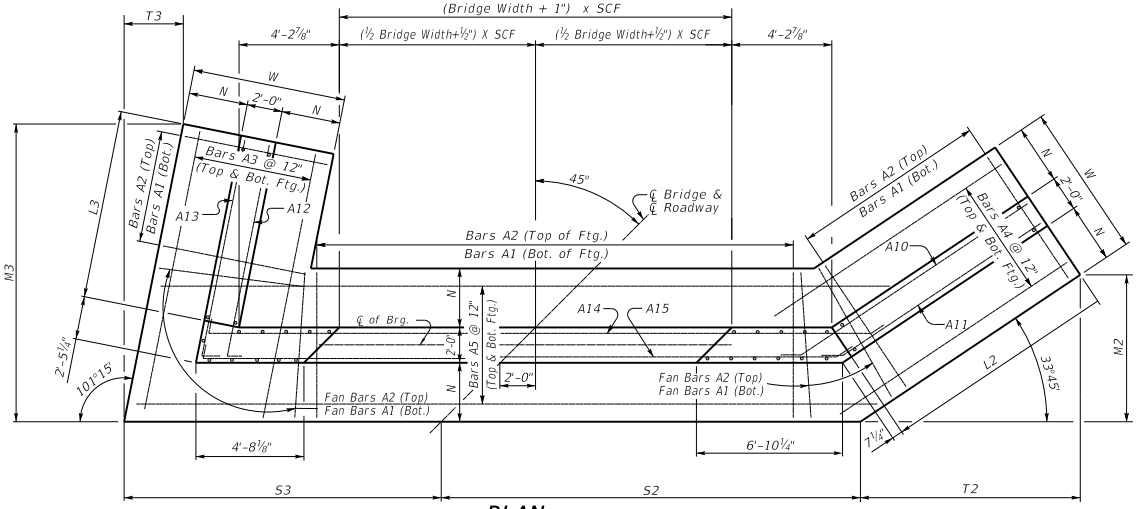

PLAN

(Left Skew as shown;right skew opp. hand)

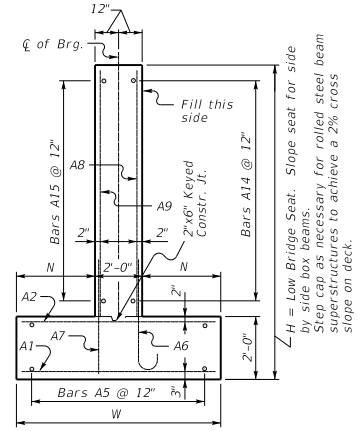

WALL SECTION

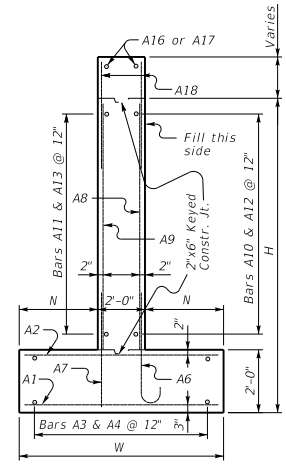

WING SECTION

NOTE: Trim A16 & A17 bars if necessary
Trim A3 bars as necessary

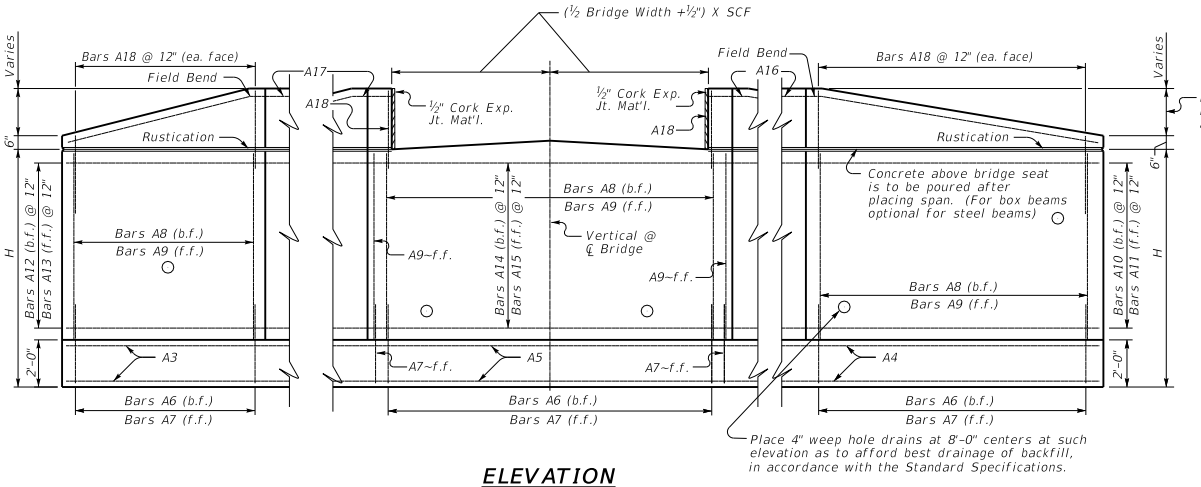

ELEVATION

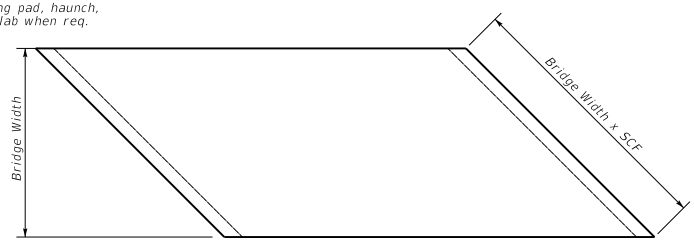

PLAN OF SUPERSTRUCTURE SLAB

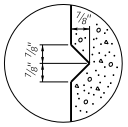

RUSTICATION GROOVE

KENTUCKY
DEPARTMENT OF HIGHWAYS

45° SKEW VARIABLE WIDTH ABUTMENT 25% SKEWED WINGS

STANDARD DRAWING NO. BSA-039

SUBMITTED _____ DIRECTOR DIVISION OF STRUCTURAL DESIGN — DATE 02-26-20

APPROVED _____ STATE HIGHWAY ENGINEER — DATE 02-26-20

45° SKEW VARIABLE BRIDGE WIDTH 2:1 FILL SLOPES WINGS SKEWED 25% FROM ROADWAY TO BREASTWALL

Bill of Reinforcement

MARK	A1					A2				
TYPE	Str.					Str.				
SIZE										
H	No.	Size	Length ft.	Length in.	Spacing	No.	Size	Length ft.	Length in.	Spacing
15-16	88+Nb=	10	11	8	12	88+Nb=	7	11	8	12
13-14	79+Nb=	9	10	8	12	79+Nb=	7	10	8	12
11-12	70+Nb=	8	9	8	12	70+Nb=	6	9	8	12
9-10	59+Nb=	7	8	8	12	59+Nb=	5	8	8	12
7-8	50+Nb=	6	7	2	12	50+Nb=	5	7	2	12
5-6	42+Nb=	5	6	2	12	42+Nb=	5	6	2	12

MARK	A3			A4			A5					
TYPE	Str.			Str.			Str.					
SIZE	#5			#5			#5					
H	No.	Length ft.	Length in.	No.	Length ft.	Length in.	No.	Length ft.	Length in.	+Lb =	Length ft.	Length in.
15-16	24	26	1	24	41	4	24	18	9	+Lb=		
13-14	22	22	6	22	36	3	22	18	0	+Lb=		
11-12	20	19	11	20	31	1	20	17	2	+Lb=		
9-10	18	16	3	18	24	11	18	16	5	+Lb=		
7-8	16	13	5	16	19	4	16	15	5	+Lb=		
5-6	14	10	10	14	14	2	14	14	8	+Lb=		

MARK	A6												
TYPE	4												
SIZE													
H	No.	Size	Length ft.	Length in.	Spacing	A ft.	A in.	B ft.	B in.	C ft.	C in.	D ft.	D in.
15-16	66+Nb=	9	9	11	12	8	1/8	1	10	0	11 3/4	8	6
13-14	58+Nb=	8	8	3	12	6	11	1	3	0	8	7	3
11-12	51+Nb=	7	7	1	12	5	10 1/2	1	2	0	7	6	2
9-10	42+Nb=	6	6	1	12	5	1	1	0	0	6	5	4
7-8	35+Nb=	5	5	7	12	4	8 1/2	0	10	0	5	4	11
5-6	28+Nb=	5	5	7	12	4	8 1/2	0	10	0	5	4	11

MARK	A7					A8				
TYPE	Str.					Str.				
SIZE										
H	No.	Size	Length ft.	Length in.	Spacing	No.	Size	Length ft.	Length in.	Spacing
15-16	72+Nb=	5	4	11	12	66+Nb=	6	12	10	12
13-14	64+Nb=	5	4	11	12	58+Nb=	6	10	10	12
11-12	57+Nb=	5	4	11	12	51+Nb=	5	8	10	12
9-10	48+Nb=	5	4	11	12	42+Nb=	5	6	10	12
7-8	41+Nb=	5	4	11	12	35+Nb=	5	4	10	12
5-6	34+Nb=	5	4	11	12	28+Nb=	5	2	10	12

MARK	A9				A10			A11			A12			A13		
TYPE	Str.				8			8			8			8		
SIZE	#5				#5			#5			#5			#5		
H	No.	Length ft.	Length in.	Spacing	No.	Length ft.	Length in.	No.	Length ft.	Length in.	No.	Length ft.	Length in.	No.	Length ft.	Length in.
15-16	72+Nb=	12	10	12	14	42	6	14	40	5	14	20	6	14	21	1
13-14	64+Nb=	10	10	12	12	37	7	12	35	5	12	17	6	12	18	1
11-12	57+Nb=	8	10	12	10	32	7	10	30	5	10	15	6	10	16	1
9-10	48+Nb=	6	10	12	8	26	7	8	24	5	8	12	6	8	13	1
7-8	41+Nb=	4	10	12	6	21	7	6	19	5	6	10	6	6	11	1
5-6	34+Nb=	2	10	12	4	16	7	4	14	5	4	8	6	4	9	1

MARK	A14						A15						A16			A17			A18		
TYPE	7						7						Str.			Str.			Str.		
SIZE	#5						#5						#5			#5			#5		
H	No.	Length ft.	Length in.	+Lb =	Length ft.	Length in.	No.	Length ft.	Length in.	+Lb =	Length ft.	Length in.	No.	Length ft.	Length in.	No.	Length ft.	Length in.	No.	Length ft.	Length in.
15-16	14	15	0	+Lb=			14	13	1	+Lb=			2	46	4	2	25	0	144	5	9
13-14	12	15	0	+Lb=			12	13	1	+Lb=			2	41	4	2	22	0	128	5	9
11-12	10	15	0	+Lb=			10	13	1	+Lb=			2	36	4	2	20	0	114	5	9
9-10	8	15	1	+Lb=			8	13	1	+Lb=			2	30	4	2	17	0	96	5	9
7-8	6	15	1	+Lb=			6	13	1	+Lb=			2	25	4	2	15	0	82	5	9
5-6	4	15	1	+Lb=			4	13	1	+Lb=			2	20	4	2	13	0	68	5	9

Table of Dimensions

H	W Length ft.	W Length in.	N Length ft.	N Length in.	M2 Length ft.	M2 Length in.	M3 Length ft.	M3 Length in.	T2 Length ft.	T2 Length in.	T3 Length ft.	T3 Length in.	L2 Length ft.	L3 Length ft.	S2 Length ft.	S2 Length in.	S2 $+\frac{Lb}{2}=$	S2 Length ft.	S2 Length in.	S3 Length ft.	S3 Length in.	S3 $+\frac{Lb}{2}=$	S3 Length ft.	S3 Length in.
15-16	12	0	5	0	22	10 1/8	26	1/4	34	2 3/8	5	2 1/8	39	18	13	5 1/8	+0.5Lb=			5	10	+0.5Lb=		
13-14	11	0	4	6	19	11 7/8	22	5 3/4	29	10 7/8	4	5 5/8	34	15	12	9 1/4	+0.5Lb=			5	8 5/8	+0.5Lb=		
11-12	10	0	4	0	17	1 1/2	19	11	25	7 1/2	3	11 1/2	29	13	12	1 1/2	+0.5Lb=			5	7 3/8	+0.5Lb=		
9-10	9	0	3	6	13	8 1/2	16	4 5/8	20	6 1/8	3	3 1/8	23	10	11	5 5/8	+0.5Lb=			5	6	+0.5Lb=		
7-8	7	6	2	9	10	9 5/8	13	6 1/4	16	2	2	8 1/4	18	8	10	5 7/8	+0.5Lb=			5	4 1/8	+0.5Lb=		
5-6	6	6	2	3	7	11 1/4	10	11 5/8	11	10 5/8	2	2 1/8	13	6	9	10 1/8	+0.5Lb=			5	2 3/4	+0.5Lb=		

Reinforcement Details

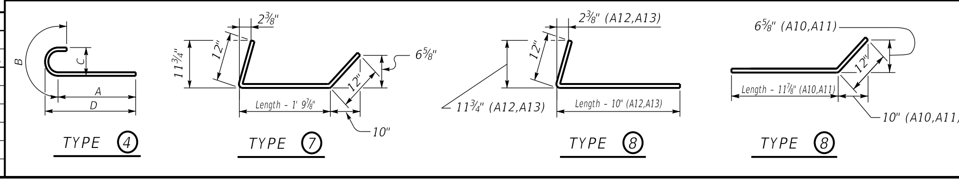

Quantities

H	Concrete* C.Y.	Reinforcement LBS.
5	25.56+(0.71xLb) =	2445+(52.8xLb) =
6	27.83+(0.78xLb) =	2445+(52.8xLb) =
7	39.56+(0.93xLb) =	3668+(68.7xLb) =
8	42.35+(1.01xLb) =	3668+(68.7xLb) =
9	58.33+(1.19xLb) =	5496+(91xLb) =
10	61.64+(1.27xLb) =	5496+(91xLb) =
11	81.84+(1.41xLb) =	8376+(120.4xLb) =
12	85.81+(1.49xLb) =	8376+(120.4xLb) =
13	105.88+(1.64xLb) =	12251+(161xLb) =
14	110.37+(1.71xLb) =	12251+(161xLb) =
15	134.98+(1.86xLb) =	16645+(198.6xLb) =
16	140.07+(1.93xLb) =	16645+(198.6xLb) =

*Concrete quantities computed using 21" beam depth on 1/2" pad & Variable Bridge Width

ABUTMENT SKEW CORRECTION FACTOR (SCF) = 1.414

NUMBER OF BARS TO ADD (Nb) = Bridge Width (feet) x SCF (round up to nearest whole number)

LENGTH OF ABUTMENT TO ADD (Lb) = Bridge Width (feet) x SCF (convert decimal to architectural)

GENERAL NOTES

SPECIFICATIONS: Construct abutments according to the current edition of the Kentucky Department of Highways Standard Specifications for Road and Bridge Construction. Abutments are designed for side by side box beams as detailed in Standard Drawings BDP-001 through BDP-012, current edition. Dimensions may be adjusted to allow for any out to out bridge width. Abutments are also adequate for Std. Dwg. slabs or steel beam superstructures.

FOUNDATION PRESSURE: Construct abutment footings on solid rock bearing material that can support a pressure of 8000 psf service or 10,800 psf strength factored as recommended by a geotechnical engineer.

WING LENGTHS: Calculated assuming 21" superstructure depth and stream bank elevation at top of footing.

FOOTING ELEVATION: Construct bottom of footing below the anticipated scour elevation. (This typically entails embedding the footings 1'-0" to 2'-0" into rock and pouring concrete directly against cut rock faces. as recommended by geotechnical engineer.)

NOTE: Distances to bars shown are clear dimensions unless otherwise noted.

MATERIAL SPECIFICATIONS:
Concrete, Class "A" = 3500 psi
Steel Reinforcement = Grade 60

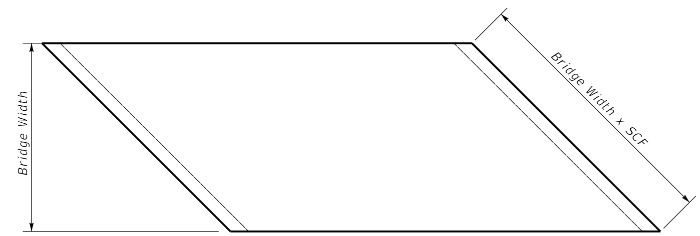

PLAN OF SUPERSTRUCTURE SLAB

KENTUCKY
DEPARTMENT OF HIGHWAYS

45° SKEW VARIABLE
WIDTH ABUTMENT
25% SKEWED WINGS

STANDARD DRAWING NO. BSA-040

SUBMITTED ____ DIRECTOR DIVISION OF STRUCTURAL DESIGN 02-26-20 DATE

APPROVED ____ STATE HIGHWAY ENGINEER 02-26-20 DATE

0° SKEW VARIABLE BRIDGE WIDTH 2:1 FILL SLOPES WINGS PARALLEL TO ROADWAY

ABUTMENT SKEW CORRECTION FACTOR (SCF) = 1.000

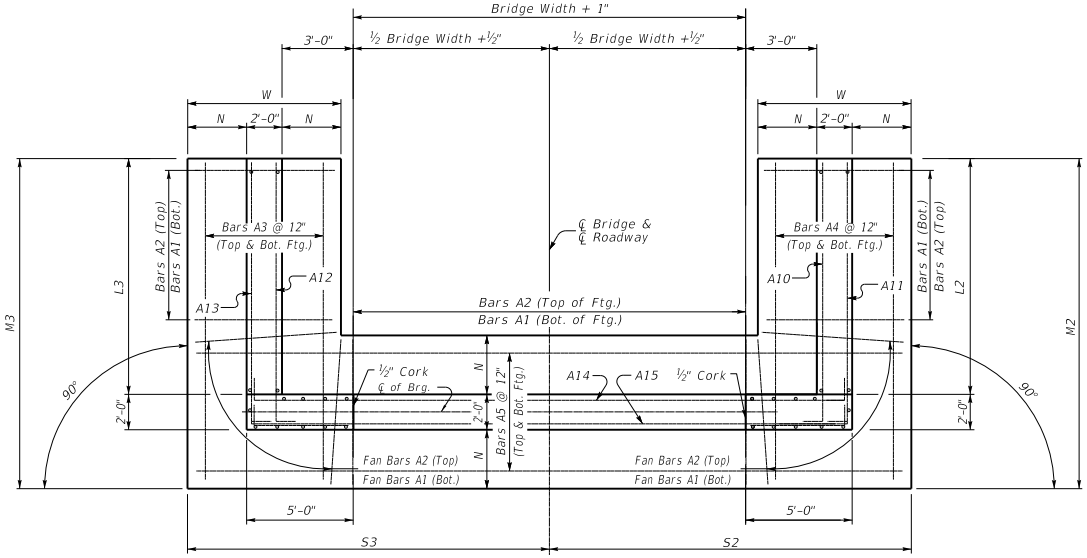

PLAN

NOTE: Trim A16 & A17 bars if necessary

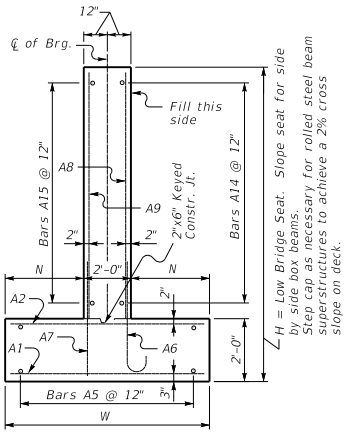

WALL SECTION

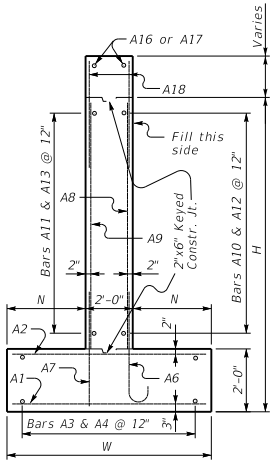

WING SECTION

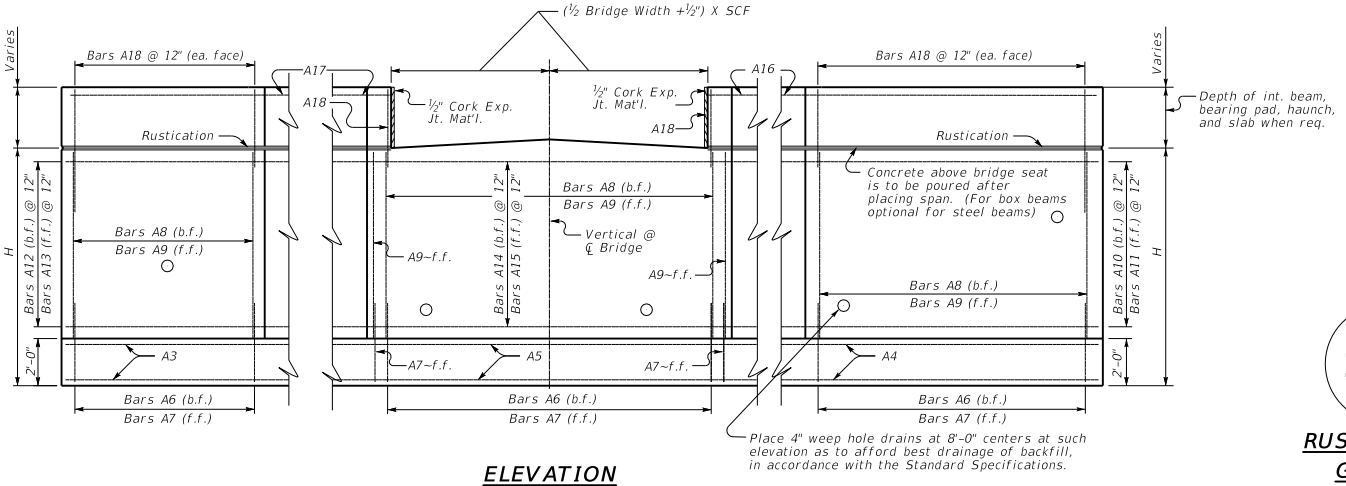

ELEVATION

PLAN OF SUPERSTRUCTURE SLAB

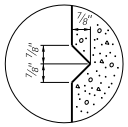

RUSTICATION GROOVE

KENTUCKY DEPARTMENT OF HIGHWAYS

0° SKEW VARIABLE WIDTH ABUTMENT PARALLEL WINGS

STANDARD DRAWING NO. BSA-041

SUBMITTED _____ DIRECTOR DIVISION OF STRUCTURAL DESIGN — DATE 02-26-20

APPROVED _____ STATE HIGHWAY ENGINEER — DATE 02-26-20

0° SKEW VARIABLE BRIDGE WIDTH 2:1 FILL SLOPES
WINGS PARALLEL TO ROADWAY

Bill of Reinforcement

MARK	A1					A2				
TYPE	Str.					Str.				
SIZE										
H	No.	Size	Length ft.	Length in.	Spacing	No.	Size	Length ft.	Length in.	Spacing
15-16	91+Nb=	10	11	8	12	91+Nb=	7	11	8	12
13-14	83+Nb=	9	10	8	12	83+Nb=	7	10	8	12
11-12	73+Nb=	8	9	8	12	73+Nb=	6	9	8	12
9-10	63+Nb=	7	8	8	12	63+Nb=	5	8	8	12
7-8	50+Nb=	6	7	2	12	50+Nb=	5	7	2	12
5-6	42+Nb=	5	6	2	12	42+Nb=	5	6	2	12

MARK	A3			A4			A5					
TYPE	Str.			Str.			Str.					
SIZE	#5			#5			#5					
H	No.	Length ft.	Length in.	No.	Length ft.	Length in.	No.	Length ft.	Length in.	+Lb =	Length ft.	Length in.
15-16	24	34	8	24	34	8	24	19	9	+Lb=		
13-14	22	31	2	22	31	2	22	18	9	+Lb=		
11-12	20	26	8	20	26	8	20	17	9	+Lb=		
9-10	18	22	2	18	22	2	18	16	9	+Lb=		
7-8	16	16	5	16	16	5	16	15	3	+Lb=		
5-6	14	12	11	14	12	11	14	14	3	+Lb=		

MARK	A6												
TYPE	4												
SIZE													
H	No.	Size	Length ft.	Length in.	Spacing	A ft.	A in.	B ft.	B in.	C ft.	C in.	D ft.	D in.
15-16	63+Nb=	9	9	11	12	8	⅛	1	10	0	11¾	8	6
13-14	57+Nb=	8	8	3	12	6	11	1	3	0	8	7	3
11-12	49+Nb=	7	7	1	12	5	10½	1	2	0	7	6	2
9-10	41+Nb=	6	6	1	12	5	1	1	0	0	6	5	4
7-8	31+Nb=	5	5	7	12	4	8½	0	10	0	5	4	11
5-6	25+Nb=	5	5	7	12	4	8½	0	10	0	5	4	11

MARK	A7					A8				
TYPE	Str.					Str.				
SIZE										
H	No.	Size	Length ft.	Length in.	Spacing	No.	Size	Length ft.	Length in.	Spacing
15-16	71+Nb=	5	4	11	12	63+Nb=	6	12	10	12
13-14	65+Nb=	5	4	11	12	57+Nb=	6	10	10	12
11-12	57+Nb=	5	4	11	12	49+Nb=	5	8	10	12
9-10	49+Nb=	5	4	11	12	41+Nb=	5	6	10	12
7-8	39+Nb=	5	4	11	12	31+Nb=	5	4	10	12
5-6	33+Nb=	5	4	11	12	25+Nb=	5	2	10	12

MARK	A9				A10			A11			A12			A13		
TYPE	Str.				8			8			8			8		
SIZE	#5				#5			#5			#5			#5		
H	No.	Length ft.	Length in.	Spacing	No.	Length ft.	Length in.	No.	Length ft.	Length in.	No.	Length ft.	Length in.	No.	Length ft.	Length in.
15-16	71+Nb=	12	10	12	14	30	6	14	30	8	14	30	6	14	30	8
13-14	65+Nb=	10	10	12	12	27	6	12	27	8	12	27	6	12	27	8
11-12	57+Nb=	8	10	12	10	23	6	10	23	8	10	23	6	10	23	8
9-10	49+Nb=	6	10	12	8	19	6	8	19	8	8	19	6	8	19	8
7-8	39+Nb=	4	10	12	6	14	6	6	14	8	6	14	6	6	14	8
5-6	33+Nb=	2	10	12	4	11	6	4	11	8	4	11	6	4	11	8

MARK	A14						A15						A16			A17			A18		
TYPE	7						7						Str.			Str.			Str.		
SIZE	#5						#5						#5			#5			#5		
H	No.	Length ft.	Length in.	+Lb =	Length ft.	Length in.	No.	Length ft.	Length in.	+Lb =	Length ft.	Length in.	No.	Length ft.	Length in.	No.	Length ft.	Length in.	No.	Length ft.	Length in.
15-16	14	11	5	+Lb=			14	11	5	+Lb=			2	34	11	2	34	11	137	5	9
13-14	12	11	5	+Lb=			12	11	5	+Lb=			2	31	11	2	31	11	125	5	9
11-12	10	11	5	+Lb=			10	11	5	+Lb=			2	27	11	2	27	11	110	5	9
9-10	8	11	5	+Lb=			8	11	5	+Lb=			2	23	11	2	23	11	94	5	9
7-8	6	11	5	+Lb=			6	11	5	+Lb=			2	18	11	2	18	11	74	5	9
5-6	4	11	5	+Lb=			4	11	5	+Lb=			2	15	11	2	15	11	62	5	9

Table of Dimensions

H	W Length ft.	W Length in.	N Length ft.	N Length in.	M2 Length ft.	M2 Length in.	M3 Length ft.	M3 Length in.	T2 Length ft.	T2 Length in.	T3 Length ft.	T3 Length in.	L2 Length ft.	L3 Length ft.	S2 Length ft.	S2 Length in.	S2 + Lb/2 =	S2 Length ft.	S2 Length in.	S3 Length ft.	S3 Length in.	S3 + Lb/2 =	S3 Length ft.	S3 Length in.
15-16	12	0	5	0	35	0	35	0	0	0	0	0	28	28	10	½	+0.5Lb=			10	½	+0.5Lb=		
13-14	11	0	4	6	31	6	31	6	0	0	0	0	25	25	9	6½	+0.5Lb=			9	6½	+0.5Lb=		
11-12	10	0	4	0	27	0	27	0	0	0	0	0	21	21	9	½	+0.5Lb=			9	½	+0.5Lb=		
9-10	9	0	3	6	22	6	22	6	0	0	0	0	17	17	8	6½	+0.5Lb=			8	6½	+0.5Lb=		
7-8	7	6	2	9	16	9	16	9	0	0	0	0	12	12	7	9½	+0.5Lb=			7	9½	+0.5Lb=		
5-6	6	6	2	3	13	3	13	3	0	0	0	0	9	9	7	3½	+0.5Lb=			7	3½	+0.5Lb=		

Reinforcement Details

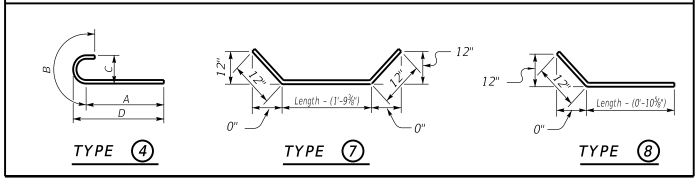

*Concrete quantities computed using 21" beam depth on ½" pad & Variable Bridge Width

Quantities

H	Concrete* C.Y.	Reinforcement LBS.
5	24.52+(0.71xLb) =	2346+(52.8xLb) =
6	26.6+(0.78xLb) =	2346+(52.8xLb) =
7	37.32+(0.93xLb) =	3489+(68.7xLb) =
8	39.84+(1.01xLb) =	3489+(68.7xLb) =
9	59.68+(1.19xLb) =	5624+(91xLb) =
10	62.94+(1.27xLb) =	5624+(91xLb) =
11	82.06+(1.41xLb) =	8428+(120.4xLb) =
12	85.92+(1.49xLb) =	8428+(120.4xLb) =
13	108.01+(1.64xLb) =	12499+(161xLb) =
14	112.46+(1.71xLb) =	12499+(161xLb) =
15	133.47+(1.86xLb) =	16606+(198.6xLb) =
16	138.37+(1.93xLb) =	16606+(198.6xLb) =

ABUTMENT SKEW CORRECTION FACTOR (SCF) = 1.0

NUMBER OF BARS TO ADD (Nb) = Bridge Width (feet) x SCF (round up to nearest whole number)

LENGTH OF ABUTMENT TO ADD (Lb) = Bridge Width (feet) x SCF (convert decimal to architectural)

GENERAL NOTES

SPECIFICATIONS: Construct abutments according to the current edition of the Kentucky Department of Highways Standard Specifications for Road and Bridge Construction. Abutments are designed for side by side box beams as detailed in Standard Drawings BDP-001 through BDP-012, current edition. Dimensions may be adjusted to allow for any out to out bridge width. Abutments are also adequate for Std. Dwg. slabs or steel beam superstructures.

FOUNDATION PRESSURE: Construct abutment footings on solid rock bearing material that can support a pressure of 8000 psf service or 10,800 psf strength factored as recommended by a geotechnical engineer.

WING LENGTHS: Calculated assuming 21" superstructure depth and stream bank elevation at top of footing.

FOOTING ELEVATION: Construct bottom of footing below the anticipated scour elevation. (This typically entails embedding the footings 1'-0" to 2'-0" into rock and pouring concrete directly against cut rock faces. as recommended by geotechnical engineer.)

NOTE: Distances to bars shown are clear dimensions unless otherwise noted.

MATERIAL SPECIFICATIONS:
Concrete, Class "A" = 3500 psi
Steel Reinforcement = Grade 60

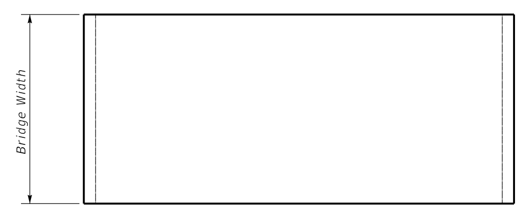

PLAN OF SUPERSTRUCTURE SLAB

KENTUCKY
DEPARTMENT OF HIGHWAYS

0° SKEW VARIABLE
WIDTH ABUTMENT
PARALLEL WINGS

STANDARD DRAWING NO. BSA-042

SUBMITTED [signature] DIRECTOR DIVISION OF STRUCTURAL DESIGN 02-26-20 DATE

APPROVED [signature] STATE HIGHWAY ENGINEER 02-26-20 DATE

5° SKEW VARIABLE BRIDGE WIDTH 2:1 FILL SLOPES WINGS PARALLEL TO ROADWAY

ABUTMENT SKEW CORRECTION FACTOR (SCF) = 1.004

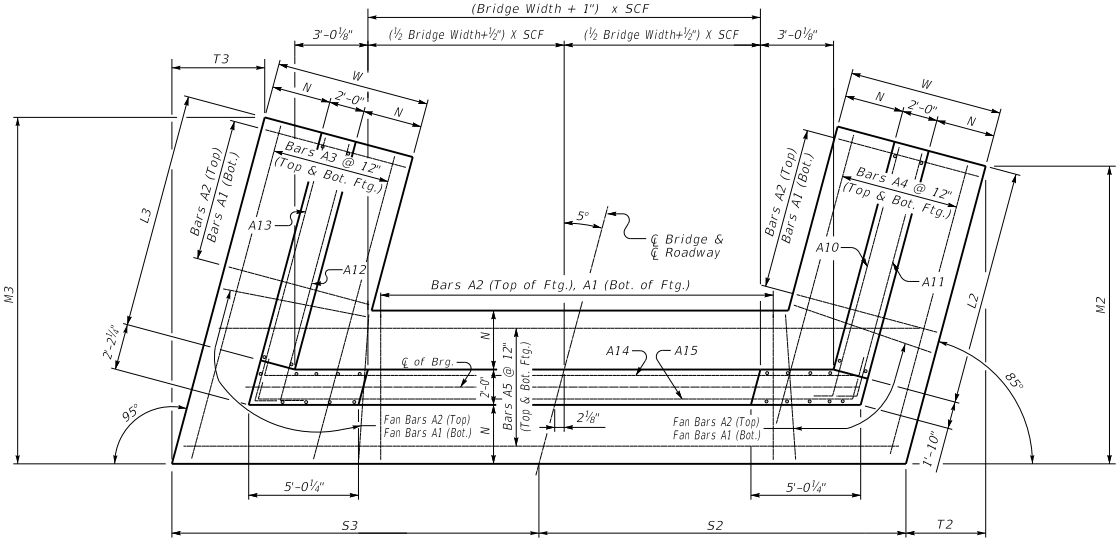

(Left Skew as shown;right skew opp. hand)

PLAN

NOTE: Trim A16 & A17 bars if necessary
Trim A3 bars as necessary

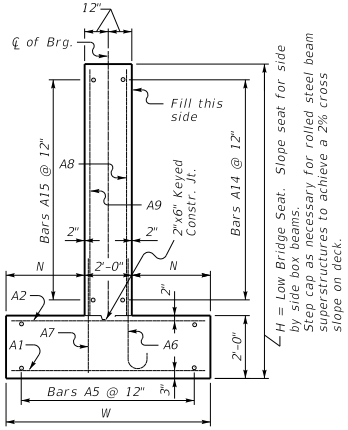

WALL SECTION

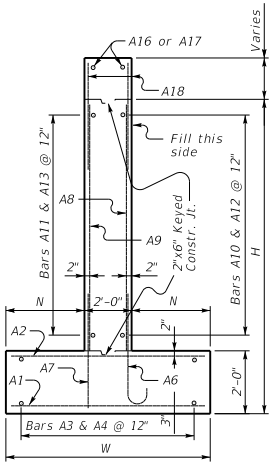

WING SECTION

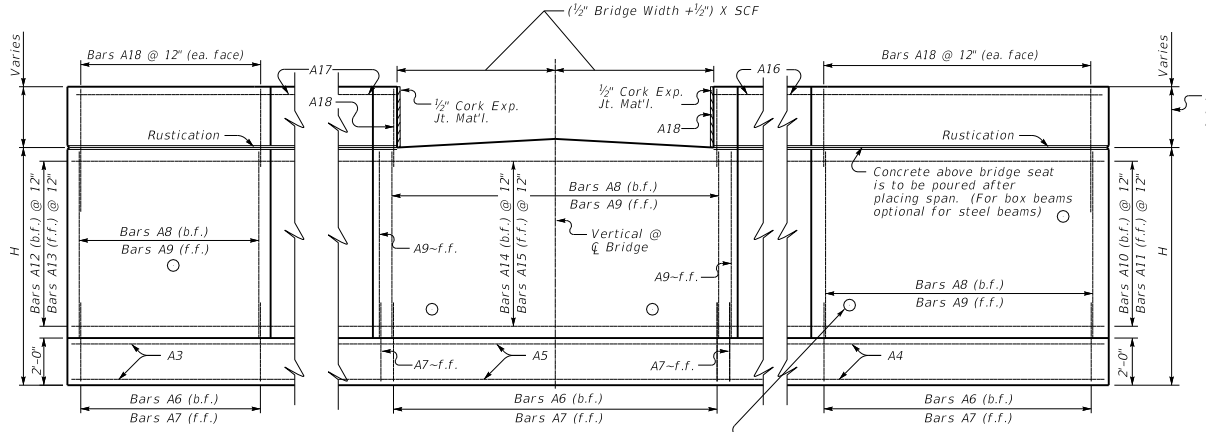

ELEVATION

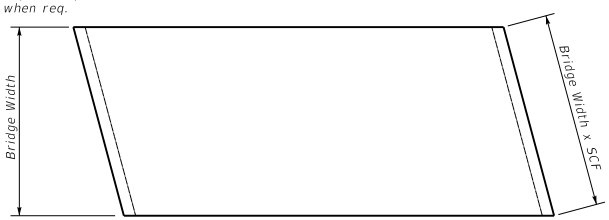

PLAN OF SUPERSTRUCTURE SLAB

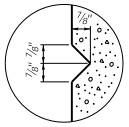

RUSTICATION GROOVE

KENTUCKY
DEPARTMENT OF HIGHWAYS

5° SKEW VARIABLE WIDTH ABUTMENT PARALLEL WINGS

STANDARD DRAWING NO. BSA-043

SUBMITTED _____ DIRECTOR DIVISION OF STRUCTURAL DESIGN — DATE 02-26-20

APPROVED _____ STATE HIGHWAY ENGINEER — DATE 02-26-20

5° SKEW VARIABLE BRIDGE WIDTH 2:1 FILL SLOPES WINGS PARALLEL TO ROADWAY

Bill of Reinforcement

MARK	A1					A2					A3			A4			A5					
TYPE	Str.					Str.					Str.			Str.			Str.					
SIZE											#5			#5			#5					
H	No.	Size	Length ft.	Length in.	Spacing	No.	Size	Length ft.	Length in.	Spacing	No.	Length ft.	Length in.	No.	Length ft.	Length in.	No.	Length ft.	Length in.	+Lb =	Length ft.	Length in.
15-16	93+Nb=	10	11	8	12	93+Nb=	7	11	8	12	24	36	3	24	35	1	24	19	9	+Lb=		
13-14	83+Nb=	9	10	8	12	83+Nb=	7	10	8	12	22	31	9	22	30	8	22	18	9	+Lb=		
11-12	73+Nb=	8	9	8	12	73+Nb=	6	9	8	12	20	27	2	20	26	2	20	17	9	+Lb=		
9-10	63+Nb=	7	8	8	12	63+Nb=	5	8	8	12	18	22	8	18	21	9	18	16	9	+Lb=		
7-8	50+Nb=	6	7	2	12	50+Nb=	5	7	2	12	16	16	10	16	16	0	16	15	3	+Lb=		
5-6	42+Nb=	5	6	2	12	42+Nb=	5	6	2	12	14	13	3	14	12	7	14	14	3	+Lb=		

MARK	A6													A7					A8				
TYPE	4													Str.					Str.				
SIZE																							
H	No.	Size	Length ft.	Length in.	Spacing	A ft.	A in.	B ft.	B in.	C ft.	C in.	D ft.	D in.	No.	Size	Length ft.	Length in.	Spacing	No.	Size	Length ft.	Length in.	Spacing
15-16	65+Nb=	9	9	11	12	8	⅛	1	10	0	11¾	8	6	73+Nb=	5	4	11	12	65+Nb=	6	12	10	12
13-14	57+Nb=	8	8	3	12	6	11	1	3	0	8	7	3	65+Nb=	5	4	11	12	57+Nb=	6	10	10	12
11-12	49+Nb=	7	7	1	12	5	10½	1	2	0	7	6	2	57+Nb=	5	4	11	12	49+Nb=	5	8	10	12
9-10	41+Nb=	6	6	1	12	5	1	1	0	0	6	5	4	49+Nb=	5	4	11	12	41+Nb=	5	6	10	12
7-8	31+Nb=	5	5	7	12	4	8½	0	10	0	5	4	11	39+Nb=	5	4	11	12	31+Nb=	5	4	10	12
5-6	25+Nb=	5	5	7	12	4	8½	0	10	0	5	4	11	33+Nb=	5	4	11	12	25+Nb=	5	2	10	12

MARK	A9				A10			A11			A12			A13			A14						A15						A16			A17			A18		
TYPE	Str.				8			8			8			8			7						7						Str.			Str.			Str.		
SIZE	#5				#5			#5			#5			#5			#5						#5						#5			#5			#5		
H	No.	Length ft.	Length in.	Spacing	No.	Length ft.	Length in.	No.	Length ft.	Length in.	No.	Length ft.	Length in.	No.	Length ft.	Length in.	No.	Length ft.	Length in.	+Lb =	Length ft.	Length in.	No.	Length ft.	Length in.	+Lb =	Length ft.	Length in.	No.	Length ft.	Length in.	No.	Length ft.	Length in.	No.	Length ft.	Length in.
15-16	73+Nb=	12	10	12	14	31	6	14	31	6	14	31	5	14	31	10	14	11	5	+Lb=			14	11	5	+Lb=			2	35	9	2	36	1	141	5	9
13-14	65+Nb=	10	10	12	12	27	6	12	27	6	12	27	5	12	27	10	12	11	5	+Lb=			12	11	5	+Lb=			2	31	9	2	32	1	125	5	9
11-12	57+Nb=	8	10	12	10	23	6	10	23	6	10	23	5	10	23	10	10	11	5	+Lb=			10	11	5	+Lb=			2	27	9	2	28	1	109	5	9
9-10	49+Nb=	6	10	12	8	19	6	8	19	6	8	19	5	8	19	10	8	11	5	+Lb=			8	11	5	+Lb=			2	23	9	2	24	1	93	5	9
7-8	39+Nb=	4	10	12	6	14	6	6	14	6	6	14	5	6	14	10	6	11	5	+Lb=			6	11	5	+Lb=			2	18	9	2	19	1	73	5	9
5-6	33+Nb=	2	10	12	4	11	6	4	11	6	4	11	5	4	11	10	4	11	5	+Lb=			4	11	5	+Lb=			2	15	9	2	16	1	61	5	9

Table of Dimensions

H	W		N		M2		M3		T2		T3		L2	L3	S2					S3				
	Length ft.	Length in.	Length ft.	Length in.	Length ft.	Length in.	Length ft.	Length in.	Length ft.	Length in.	Length ft.	Length in.	Length ft.	Length ft.	Length ft.	Length in.	$+\frac{Lb}{2}=$	Length ft.	Length in.	Length ft.	Length in.	$+\frac{Lb}{2}=$	Length ft.	Length in.
15-16	12	0	5	0	35	3⅜	36	6	3	1	3	2⅜	29	29	10	1	+0.5Lb=			10	1	+0.5Lb=		
13-14	11	0	4	6	30	10	31	11⅝	2	8⅜	2	9⅝	25	25	9	6⅞	+0.5Lb=			9	6⅞	+0.5Lb=		
11-12	10	0	4	0	26	4¾	27	5⅜	2	3¾	2	4¾	21	21	9	⅞	+0.5Lb=			9	⅞	+0.5Lb=		
9-10	9	0	3	6	21	11½	22	11	1	11	2	0	17	17	8	6⅞	+0.5Lb=			8	6⅞	+0.5Lb=		
7-8	7	6	2	9	16	3½	17	1⅜	1	5⅛	1	6	12	12	7	9⅞	+0.5Lb=			7	9⅞	+0.5Lb=		
5-6	6	6	2	3	12	10⅛	13	7	1	1½	1	2¼	9	9	7	3⅞	+0.5Lb=			7	3⅞	+0.5Lb=		

Reinforcement Details

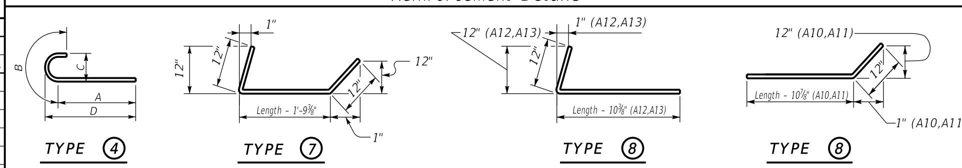

Quantities

H	Concrete* C.Y.	Reinforcement LBS.
5	24.56+(0.71xLb) =	2339+(52.8xLb) =
6	26.64+(0.78xLb) =	2339+(52.8xLb) =
7	37.36+(0.93xLb) =	3482+(68.7xLb) =
8	39.89+(1.01xLb) =	3482+(68.7xLb) =
9	59.73+(1.19xLb) =	5619+(91xLb) =
10	63+(1.27xLb) =	5619+(91xLb) =
11	82.12+(1.41xLb) =	8421+(120.4xLb) =
12	85.99+(1.49xLb) =	8421+(120.4xLb) =
13	108.08+(1.64xLb) =	12500+(161xLb) =
14	112.53+(1.71xLb) =	12500+(161xLb) =
15	137.59+(1.86xLb) =	17030+(198.6xLb) =
16	142.63+(1.93xLb) =	17030+(198.6xLb) =

*Concrete quantities computed using 21" beam depth on ½" pad & Variable Bridge Width

ABUTMENT SKEW CORRECTION FACTOR (SCF) = 1.004

NUMBER OF BARS TO ADD (Nb) = Bridge Width (feet) x SCF (round up to nearest whole number)

LENGTH OF ABUTMENT TO ADD (Lb) = Bridge Width (feet) x SCF (convert decimal to architectural)

GENERAL NOTES

SPECIFICATIONS: *Construct abutments according to the current edition of the Kentucky Department of Highways Standard Specifications for Road and Bridge Construction. Abutments are designed for side by side box beams as detailed in Standard Drawings BDP-001 through BDP-012, current edition. Dimensions may be adjusted to allow for any out to out bridge width. Abutments are also adequate for Std. Dwg. slabs or steel beam superstructures.*

FOUNDATION PRESSURE: *Construct abutment footings on solid rock bearing material that can support a pressure of 8000 psf service or 10,800 psf strength factored as recommended by a geotechnical engineer.*

WING LENGTHS: *Calculated assuming 21" superstructure depth and stream bank elevation at top of footing.*

FOOTING ELEVATION: *Construct bottom of footing below the anticipated scour elevation. (This typically entails embedding the footings 1'-0" to 2'-0" into rock and pouring concrete directly against cut rock faces. as recommended by geotechnical engineer.)*

NOTE: *Distances to bars shown are clear dimensions unless otherwise noted.*

MATERIAL SPECIFICATIONS:
Concrete, Class "A" = 3500 psi
Steel Reinforcement = Grade 60

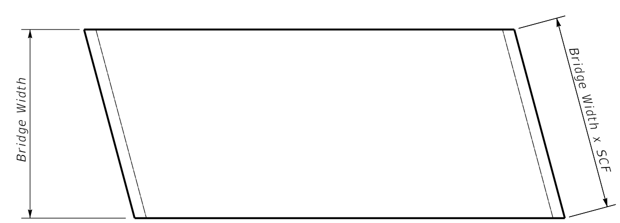

PLAN OF SUPERSTRUCTURE SLAB

KENTUCKY
DEPARTMENT OF HIGHWAYS

5° SKEW VARIABLE WIDTH ABUTMENT PARALLEL WINGS

STANDARD DRAWING NO. BSA-044

SUBMITTED ________ DIRECTOR DIVISION OF STRUCTURAL DESIGN 02-26-20 DATE

APPROVED ________ STATE HIGHWAY ENGINEER 02-26-20 DATE

10° SKEW VARIABLE BRIDGE WIDTH 2:1 FILL SLOPES WINGS PARALLEL TO ROADWAY

ABUTMENT SKEW CORRECTION FACTOR (SCF) = 1.015

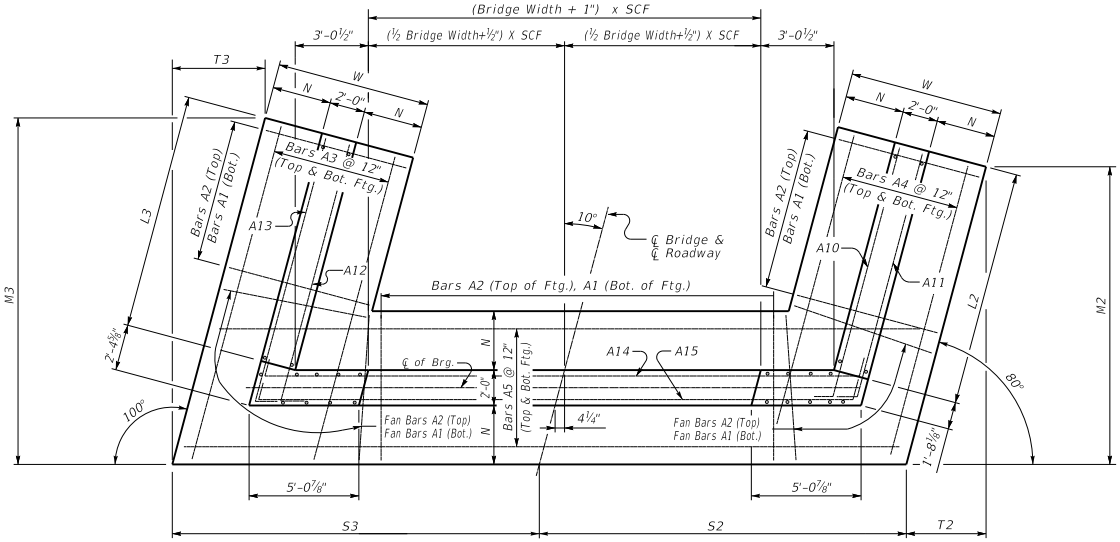

(Left Skew as shown;right skew opp. hand)

PLAN

Note: Trim A16 & A17 bars if necessary
Trim A3 bars as necessary

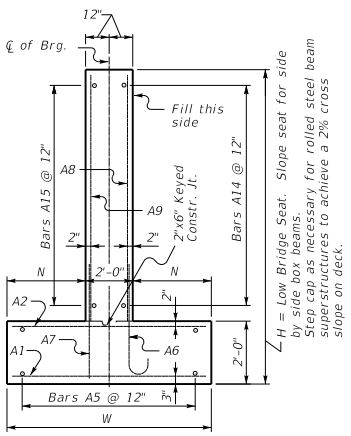

WALL SECTION

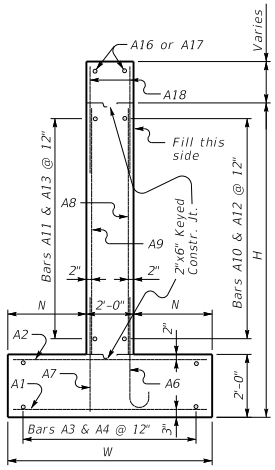

WING SECTION

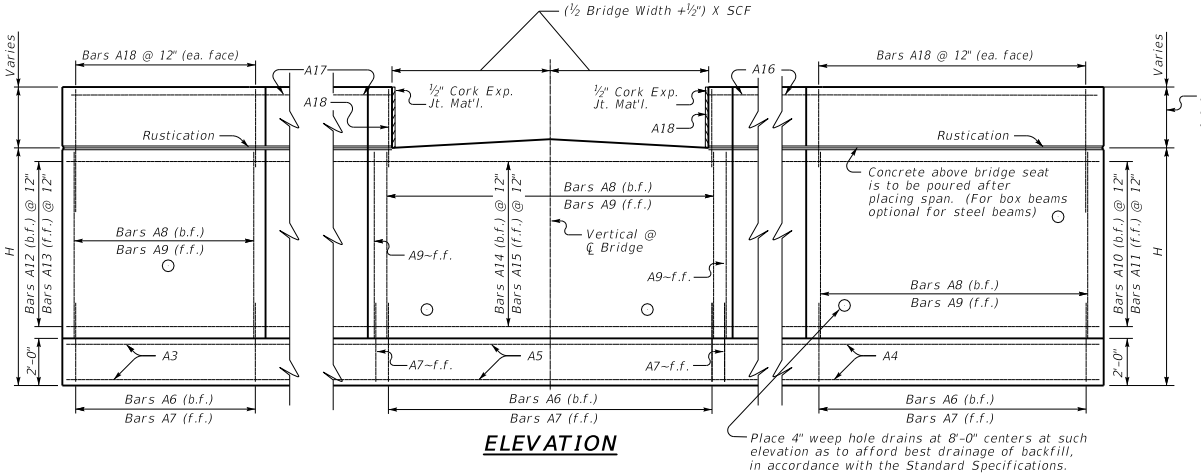

ELEVATION

Place 4" weep hole drains at 8'-0" centers at such elevation as to afford best drainage of backfill, in accordance with the Standard Specifications.

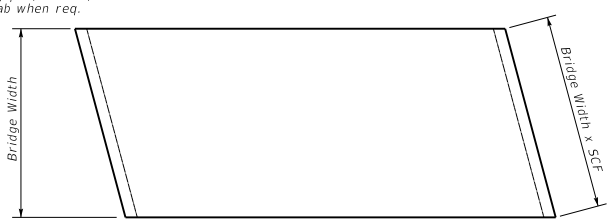

PLAN OF SUPERSTRUCTURE SLAB

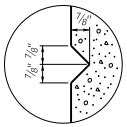

RUSTICATION GROOVE

KENTUCKY
DEPARTMENT OF HIGHWAYS

10° SKEW VARIABLE WIDTH ABUTMENT PARALLEL WINGS

STANDARD DRAWING NO. BSA-045

SUBMITTED _____ DIRECTOR DIVISION OF STRUCTURAL DESIGN — DATE 02-26-20

APPROVED _____ STATE HIGHWAY ENGINEER — DATE 02-26-20

10° SKEW VARIABLE BRIDGE WIDTH 2:1 FILL SLOPES WINGS PARALLEL TO ROADWAY

Bill of Reinforcement

MARK	A1	A2	A3	A4	A5	A6	A7	A8	A9	A10	A11	A12	A13	A14	A15	A16	A17	A18
TYPE	Str.	Str.	Str.	Str.	Str.	4	Str.	Str.	Str.	8	8	8	8	7	7	Str.	Str.	Str.
SIZE			#5	#5	#5				#5	#5	#5	#5	#5	#5	#5	#5	#5	#5
H	No. Size Length ft. in. Spacing	No. Size Length ft. in. Spacing	No. Length ft. in	No. Length ft. in	No. Length ft. in. = +Lb Length ft. in.	No. Size Length ft. in. Spacing A ft. in. B ft. in. C ft. in. D ft. in.	No. Size Length ft. in. Spacing	No. Size Length ft. in. Spacing	No. Length ft. in. Spacing	No. Length ft. in.	No. Length ft. in.	No. Length ft. in.	No. Length ft. in.	No. Length ft. in. = +Lb Length ft. in.	No. Length ft. in. = +Lb Length ft. in.	No. Length ft. in.	No. Length ft. in.	No. Length ft. in.
15–16	95+Nb= 10 11 8 12	95+Nb= 7 11 8 12	24 37	11 24 35	7 24 19 11 +Lb=	67+Nb= 9 9 11 12 8 ⅛ 1 10 0 11¾ 8 6	75+Nb= 5 4 11 12	67+Nb= 6 12 10 12	75+Nb= 12 10 12	14 32 6	14 32 5	14 32 6	14 33 0	14 11 6 +Lb=	14 11 6 +Lb=	2 36 8	2 37 5	145 5 9
13–14	85+Nb= 9 10 8 12	85+Nb= 7 10 8 12	22 33	4 22 31	2 22 18 10 +Lb=	59+Nb= 8 8 3 12 6 11 1 3 0 8 7 3	67+Nb= 5 4 11 12	59+Nb= 6 10 10 12	67+Nb= 10 10 12	12 28 6	12 28 5	12 28 6	12 29 0	12 11 6 +Lb=	12 11 6 +Lb=	2 32 8	2 33 5	129 5 9
11–12	75+Nb= 8 9 8 12	75+Nb= 6 9 8 12	20 28	9 20 26	9 20 17 10 +Lb=	51+Nb= 7 7 1 12 5 10½ 1 2 0 7 6 2	59+Nb= 5 4 11 12	51+Nb= 5 8 10 12	59+Nb= 8 10 12	10 24 6	10 24 5	10 24 6	10 25 0	10 11 6 +Lb=	10 11 6 +Lb=	2 28 8	2 29 5	113 5 9
9–10	65+Nb= 7 8 8 12	65+Nb= 5 8 8 12	18 24	2 18 22	4 18 16 10 +Lb=	43+Nb= 6 6 1 12 5 1 1 0 0 6 5 4	51+Nb= 5 4 11 12	43+Nb= 5 6 10 12	51+Nb= 6 10 12	8 20 6	8 20 5	8 20 6	8 21 0	8 11 6 +Lb=	8 11 6 +Lb=	2 24 8	2 25 5	97 5 9
7–8	52+Nb= 6 7 2 12	52+Nb= 5 7 2 12	16 18	3 16 16	8 16 15 5 +Lb=	33+Nb= 5 5 7 12 4 8½ 0 10 0 5 4 11	41+Nb= 5 4 11 12	33+Nb= 5 4 10 12	41+Nb= 4 10 12	6 15 6	6 15 5	6 15 6	6 16 0	6 11 6 +Lb=	6 11 6 +Lb=	2 19 8	2 20 5	77 5 9
5–6	42+Nb= 5 6 2 12	42+Nb= 5 6 2 12	14 13	8 14 12	3 14 14 5 +Lb=	25+Nb= 5 5 7 12 4 8½ 0 10 0 5 4 11	33+Nb= 5 4 11 12	25+Nb= 5 2 10 12	33+Nb= 2 10 12	4 11 6	4 11 5	4 11 6	4 12 0	4 11 6 +Lb=	4 11 6 +Lb=	2 15 8	2 16 5	61 5 9

Table of Dimensions

H	W Length ft.	W Length in.	N Length ft.	N Length in.	M2 Length ft.	M2 Length in.	M3 Length ft.	M3 Length in.	T2 Length ft.	T2 Length in.	T3 Length ft.	T3 Length in.	L2 Length ft.	L3 Length ft.	S2 Length ft.	S2 Length in. + Lb/2 =	S2 Length ft.	S2 Length in.	S3 Length ft.	S3 Length in. + Lb/2 =	S3 Length ft.	S3 Length in.
15–16	12	0	5	0	35	4	37	9⅛	6	2¾	6	7⅞	30	30	10	2⅜ +0.5Lb=			10	2⅜ +0.5Lb=		
13–14	11	0	4	6	30	11¾	33	2¾	5	5½	5	10⅜	26	26	9	8¼ +0.5Lb=			9	8¼ +0.5Lb=		
11–12	10	0	4	0	26	7½	28	8½	4	8⅜	5	¾	22	22	9	2⅛ +0.5Lb=			9	2⅛ +0.5Lb=		
9–10	9	0	3	6	22	3¼	24	2⅛	3	11⅛	4	3⅛	18	18	8	8⅛ +0.5Lb=			8	8⅛ +0.5Lb=		
7–8	7	6	2	9	16	8¾	18	4½	2	11⅜	3	2⅞	13	13	7	11 +0.5Lb=			7	11 +0.5Lb=		
5–6	6	6	2	3	12	4½	13	10¼	2	2⅛	2	5¼	9	9	7	4⅞ +0.5Lb=			7	4⅞ +0.5Lb=		

Reinforcement Details

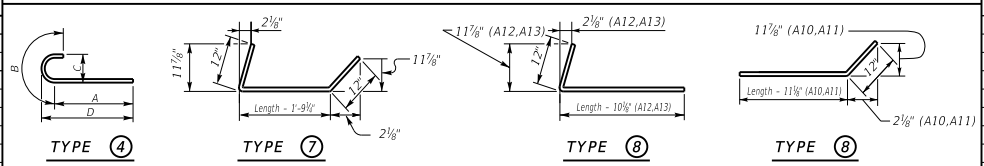

Quantities

H	Concrete* C.Y.	Reinforcement LBS.
5	24.66+(0.71xLb) =	2345+(52.8xLb) =
6	26.75+(0.78xLb) =	2345+(52.8xLb) =
7	39.68+(0.93xLb) =	3655+(68.7xLb) =
8	42.36+(1.01xLb) =	3655+(68.7xLb) =
9	62.59+(1.19xLb) =	5836+(91xLb) =
10	66.02+(1.27xLb) =	5836+(91xLb) =
11	85.46+(1.41xLb) =	8700+(120.4xLb) =
12	89.48+(1.49xLb) =	8700+(120.4xLb) =
13	111.88+(1.64xLb) =	12859+(161xLb) =
14	116.49+(1.71xLb) =	12859+(161xLb) =
15	141.86+(1.86xLb) =	17469+(198.6xLb) =
16	147.06+(1.93xLb) =	17469+(198.6xLb) =

*Concrete quantities computed using 21" beam depth on ½" pad & Variable Bridge Width

ABUTMENT SKEW CORRECTION FACTOR (SCF) = 1.015

NUMBER OF BARS TO ADD (Nb) = Bridge Width (feet) x SCF (round up to nearest whole number)

LENGTH OF ABUTMENT TO ADD (Lb) = Bridge Width (feet) x SCF (convert decimal to architectural)

GENERAL NOTES

SPECIFICATIONS: Construct abutments according to the current edition of the Kentucky Department of Highways Standard Specifications for Road and Bridge Construction. Abutments are designed for side by side box beams as detailed in Standard Drawings BDP-001 through BDP-012, current edition. Dimensions may be adjusted to allow for any out to out bridge width. Abutments are also adequate for Std. Dwg. slabs or steel beam superstructures.

FOUNDATION PRESSURE: Construct abutment footings on solid rock bearing material that can support a pressure of 8000 psf service or 10,800 psf strength factored as recommended by a geotechnical engineer.

WING LENGTHS: Calculated assuming 21" superstructure depth and stream bank elevation at top of footing.

FOOTING ELEVATION: Construct bottom of footing below the anticipated scour elevation. (This typically entails embedding the footings 1'-0" to 2'-0" into rock and pouring concrete directly against cut rock faces. as recommended by geotechnical engineer.)

NOTE: Distances to bars shown are clear dimensions unless otherwise noted.

MATERIAL SPECIFICATIONS:
Concrete, Class "A" = 3500 psi
Steel Reinforcement = Grade 60

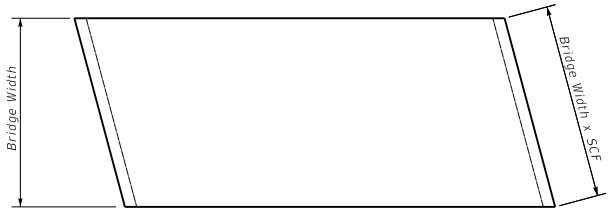

PLAN OF SUPERSTRUCTURE SLAB

KENTUCKY DEPARTMENT OF HIGHWAYS

10° SKEW VARIABLE WIDTH ABUTMENT PARALLEL WINGS

STANDARD DRAWING NO. BSA-046

SUBMITTED _____ DIRECTOR DIVISION OF STRUCTURAL DESIGN 02-26-20 DATE

APPROVED _____ STATE HIGHWAY ENGINEER 02-26-20 DATE

15° SKEW VARIABLE BRIDGE WIDTH 2:1 FILL SLOPES WINGS PARALLEL TO ROADWAY

ABUTMENT SKEW CORRECTION FACTOR (SCF) = 1.035

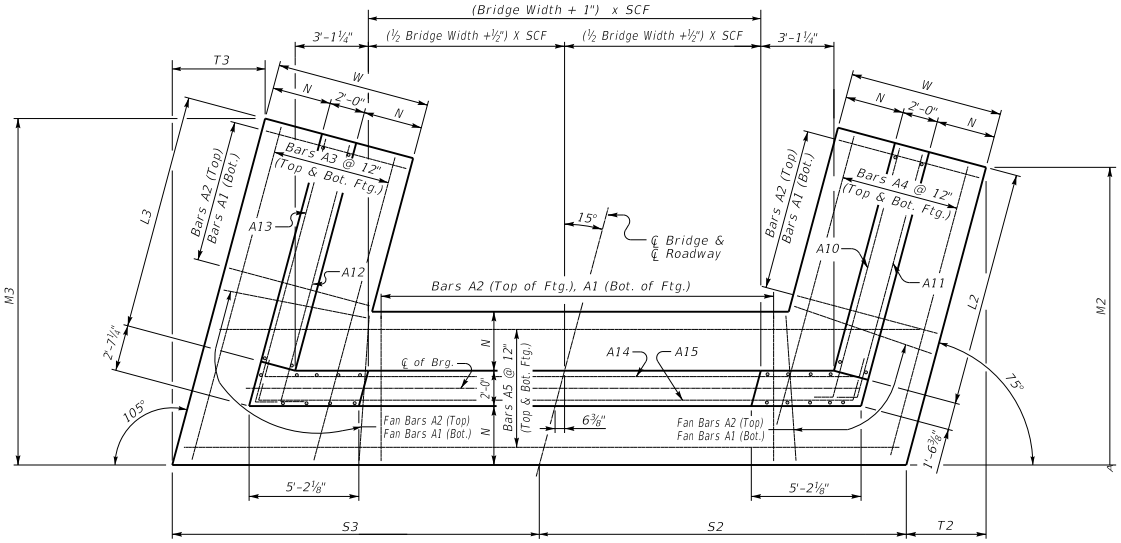

(Left Skew as shown;right skew opp. hand)

PLAN

NOTE: Trim A16 & A17 bars if necessary
Trim A3 bars as necessary

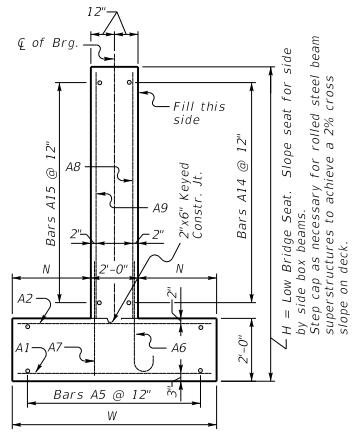

WALL SECTION

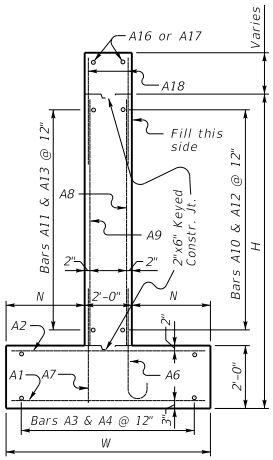

WING SECTION

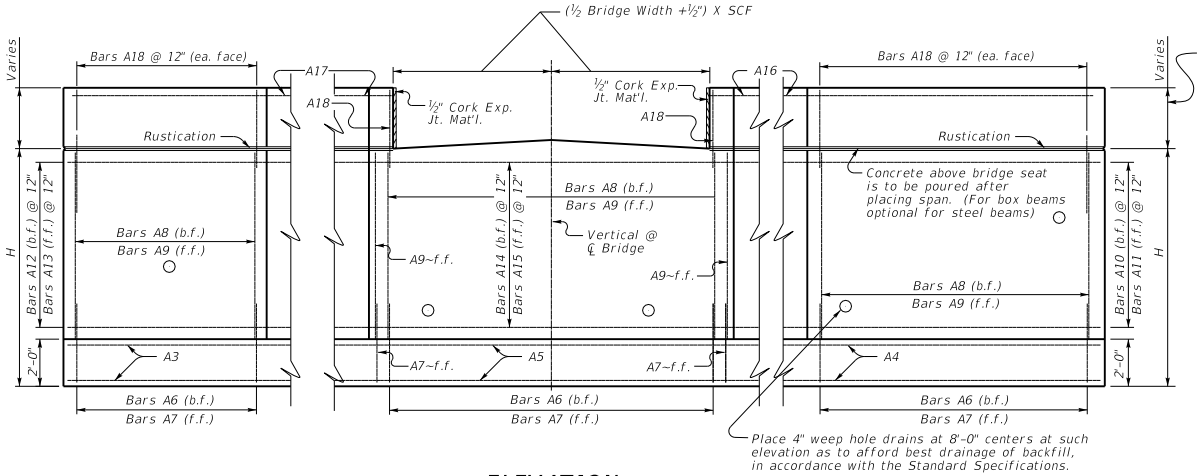

ELEVATION

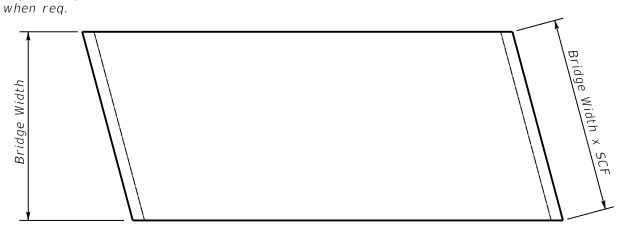

PLAN OF SUPERSTRUCTURE SLAB

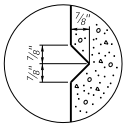

RUSTICATION GROOVE

KENTUCKY
DEPARTMENT OF HIGHWAYS

15° SKEW VARIABLE WIDTH ABUTMENT PARALLEL WINGS

STANDARD DRAWING NO. BSA-047

SUBMITTED _____ DIRECTOR DIVISION OF STRUCTURAL DESIGN — DATE 02-26-20

APPROVED _____ STATE HIGHWAY ENGINEER — DATE 02-26-20

15° SKEW VARIABLE BRIDGE WIDTH 2:1 FILL SLOPES WINGS PARALLEL TO ROADWAY

Bill of Reinforcement

MARK	A1	A2	A3	A4	A5	A6	A7	A8	A9	A10	A11	A12	A13	A14	A15	A16	A17	A18
TYPE	Str.	Str.	Str.	Str.	Str.	4	Str.	Str.	Str.	8	8	8	8	7	7	Str.	Str.	Str.
SIZE			#5	#5	#5				#5	#5	#5	#5	#5	#5	#5	#5	#5	#5
H	No. Size Length ft. in. Spacing	No. Size Length ft. in. Spacing	No. Length ft. in	No. Length ft. in	No. Length ft. in. = +Lb = Length ft. in.	No. Size Length ft. in. Spacing A ft. in. B ft. in. C ft. in. D ft. in.	No. Size Length ft. in. Spacing	No. Size Length ft. in. Spacing	No. Length ft. in. Spacing	No. Length ft. in.	No. Length ft. in.	No. Length ft. in.	No. Length ft. in.	No. Length ft. in. = +Lb = Length ft. in.	No. Length ft. in. = +Lb = Length ft. in.	No. Length ft. in.	No. Length ft. in.	No. Length ft. in.
15-16	96+Nb= 10 11 8 12	96+Nb= 7 11 8 12	24 38	8 24 35	2 24 20 2 +Lb=	67+Nb= 9 9 11 12 8 ⅛ 1 10 0 11¾ 8 6	75+Nb= 5 4 11 12	67+Nb= 6 12 10 12	75+Nb= 12 10 12	14 32 6	14 32 3	14 32 7	14 33 3	14 11 8 +Lb=	14 11 8 +Lb=	2 36 8	2 37 8	145 5 9
13-14	86+Nb= 9 10 8 12	86+Nb= 7 10 8 12	22 34	0 22 30	9 22 19 2 +Lb=	59+Nb= 8 8 3 12 6 11 1 3 0 8 7 3	67+Nb= 5 4 11 12	59+Nb= 6 10 10 12	67+Nb= 10 10 12	12 28 6	12 28 3	12 28 7	12 29 3	12 11 8 +Lb=	12 11 8 +Lb=	2 32 8	2 33 8	129 5 9
11-12	76+Nb= 8 9 8 12	76+Nb= 6 9 8 12	20 29	4 20 26	5 20 18 1 +Lb=	51+Nb= 7 7 1 12 5 10½ 1 2 0 7 6 2	59+Nb= 5 4 11 12	51+Nb= 5 8 10 12	59+Nb= 8 10 12	10 24 6	10 24 3	10 24 7	10 25 3	10 11 8 +Lb=	10 11 8 +Lb=	2 28 8	2 29 8	113 5 9
9-10	66+Nb= 7 8 8 12	66+Nb= 5 8 8 12	18 24	8 18 22	0 18 17 1 +Lb=	43+Nb= 6 6 1 12 5 1 1 0 0 6 5 4	51+Nb= 5 4 11 12	43+Nb= 5 6 10 12	51+Nb= 6 10 12	8 20 6	8 20 3	8 20 7	8 21 3	8 11 8 +Lb=	8 11 8 +Lb=	2 24 8	2 25 8	97 5 9
7-8	53+Nb= 6 7 2 12	53+Nb= 5 7 2 12	16 18	9 16 16	4 16 15 8 +Lb=	33+Nb= 5 5 7 12 4 8½ 0 10 0 5 4 11	41+Nb= 5 4 11 12	33+Nb= 5 4 10 12	41+Nb= 4 10 12	6 15 6	6 15 3	6 15 6	6 16 3	6 11 8 +Lb=	6 11 8 +Lb=	2 19 8	2 20 8	77 5 9
5-6	45+Nb= 5 6 2 12	45+Nb= 5 6 2 12	14 15	2 14 13	0 14 14 8 +Lb=	27+Nb= 5 5 7 12 4 8½ 0 10 0 5 4 11	35+Nb= 5 4 11 12	27+Nb= 5 2 10 12	35+Nb= 2 10 12	4 12 6	4 12 3	4 12 6	4 13 3	4 11 8 +Lb=	4 11 8 +Lb=	2 16 8	2 17 8	65 5 9

Table of Dimensions

H	W Length ft.	W Length in.	N Length ft.	N Length in.	M2 Length ft.	M2 Length in.	M3 Length ft.	M3 Length in.	T2 Length ft.	T2 Length in.	T3 Length ft.	T3 Length in.	L2 Length ft.	L3 Length ft.	S2 Length ft.	S2 Length in.	S2 + Lb/2 =	S2 Length ft.	S2 Length in.	S3 Length ft.	S3 Length in.	S3 + Lb/2 =	S3 Length ft.	S3 Length in.
15-16	12	0	5	0	34	2	37	9½	9	1⅞	10	1½	30	30	10	4¾	+0.5Lb=			10	4¾	+0.5Lb=		
13-14	11	0	4	6	29	11⅛	33	3½	8	¼	8	11	26	26	9	10½	+0.5Lb=			9	10½	+0.5Lb=		
11-12	10	0	4	0	25	8⅜	28	9⅜	6	10⅝	7	8⅜	22	22	9	4⅜	+0.5Lb=			9	4⅜	+0.5Lb=		
9-10	9	0	3	6	21	5½	24	3¾	5	9	6	6⅛	18	18	8	10⅛	+0.5Lb=			8	10⅛	+0.5Lb=		
7-8	7	6	2	9	16	⅞	18	6⅜	4	3¾	4	11⅜	13	13	8	¾	+0.5Lb=			8	¾	+0.5Lb=		
5-6	6	6	2	3	12	9¾	15	⅛	3	5⅛	4	¼	10	10	7	6⅝	+0.5Lb=			7	6⅝	+0.5Lb=		

Reinforcement Details

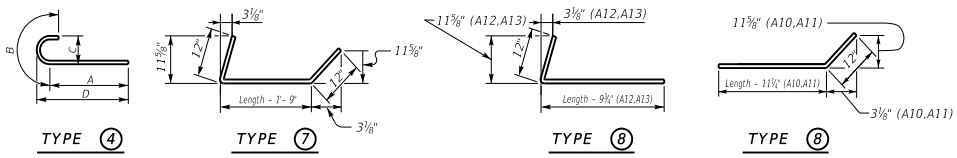

Quantities

H	Concrete* C.Y.	Reinforcement LBS.
5	26.58+(0.71xLb) =	2501+(52.8xLb) =
6	28.83+(0.78xLb) =	2501+(52.8xLb) =
7	39.9+(0.93xLb) =	3683+(68.7xLb) =
8	42.6+(1.01xLb) =	3683+(68.7xLb) =
9	62.86+(1.19xLb) =	5875+(91xLb) =
10	66.3+(1.27xLb) =	5875+(91xLb) =
11	85.77+(1.41xLb) =	8757+(120.4xLb) =
12	89.81+(1.49xLb) =	8757+(120.4xLb) =
13	112.24+(1.64xLb) =	12937+(161xLb) =
14	116.87+(1.71xLb) =	12937+(161xLb) =
15	142.27+(1.86xLb) =	17564+(198.6xLb) =
16	147.48+(1.93xLb) =	17564+(198.6xLb) =

*Concrete quantities computed using 21" beam depth on ½" pad & Variable Bridge Width

ABUTMENT SKEW CORRECTION FACTOR (SCF) = 1.035

NUMBER OF BARS TO ADD (Nb) = Bridge Width (feet) x SCF (round up to nearest whole number)

LENGTH OF ABUTMENT TO ADD (Lb) = Bridge Width (feet) x SCF (convert decimal to architectural)

GENERAL NOTES

SPECIFICATIONS: Construct abutments according to the current edition of the Kentucky Department of Highways Standard Specifications for Road and Bridge Construction. Abutments are designed for side by side box beams as detailed in Standard Drawings BDP-001 through BDP-012, current edition. Dimensions may be adjusted to allow for any out to out bridge width. Abutments are also adequate for Std. Dwg. slabs or steel beam superstructures.

FOUNDATION PRESSURE: Construct abutment footings on solid rock bearing material that can support a pressure of 8000 psf service or 10,800 psf strength factored as recommended by a geotechnical engineer.

WING LENGTHS: Calculated assuming 21" superstructure depth and stream bank elevation at top of footing.

FOOTING ELEVATION: Construct bottom of footing below the anticipated scour elevation. (This typically entails embedding the footings 1'-0" to 2'-0" into rock and pouring concrete directly against cut rock faces. as recommended by geotechnical engineer.)

NOTE: Distances to bars shown are clear dimensions unless otherwise noted.

MATERIAL SPECIFICATIONS:
Concrete, Class "A" = 3500 psi
Steel Reinforcement = Grade 60

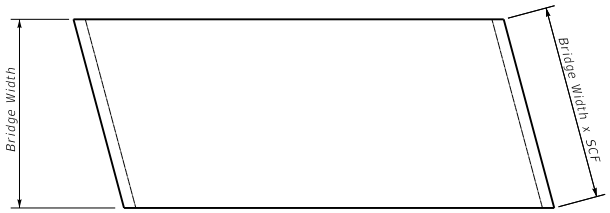

PLAN OF SUPERSTRUCTURE SLAB

KENTUCKY
DEPARTMENT OF HIGHWAYS

15° SKEW VARIABLE WIDTH ABUTMENT PARALLEL WINGS

STANDARD DRAWING NO. BSA-048

SUBMITTED _____ DIRECTOR DIVISION OF STRUCTURAL DESIGN — DATE 02-26-20

APPROVED _____ STATE HIGHWAY ENGINEER — DATE 02-26-20

20° SKEW VARIABLE BRIDGE WIDTH 2:1 FILL SLOPES WINGS PARALLEL TO ROADWAY

ABUTMENT SKEW CORRECTION FACTOR (SCF) = 1.064

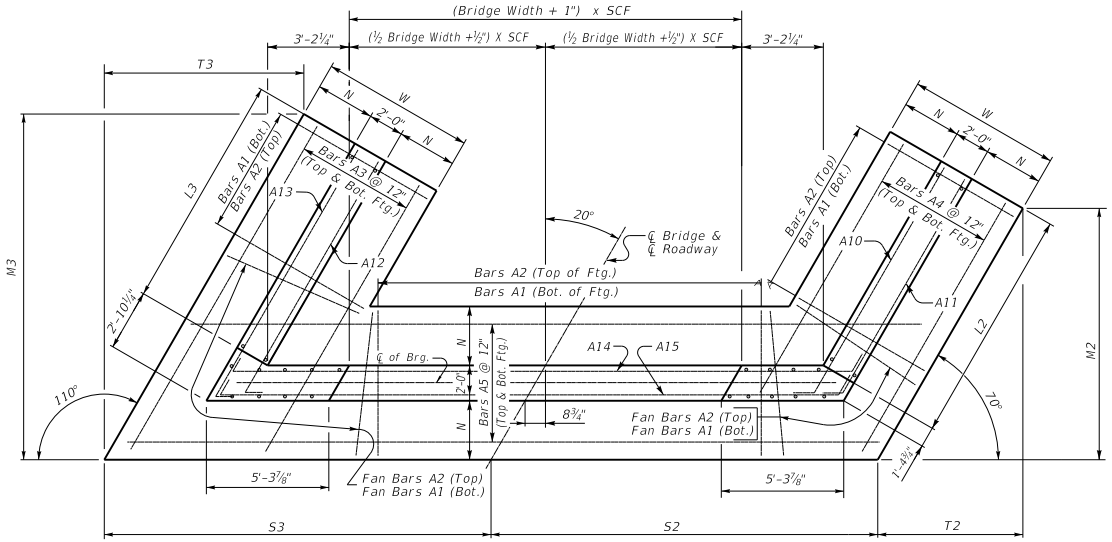

(Left Skew as shown;right skew opp. hand)

PLAN

NOTE: Trim A16 & A17 bars if necessary
Trim A3 bars as necessary

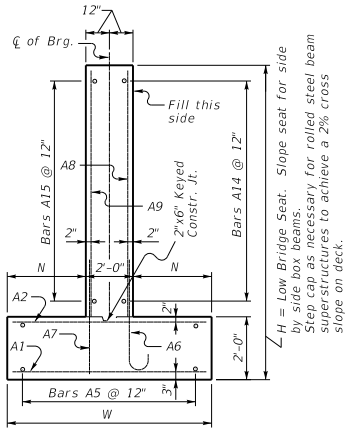

WALL SECTION

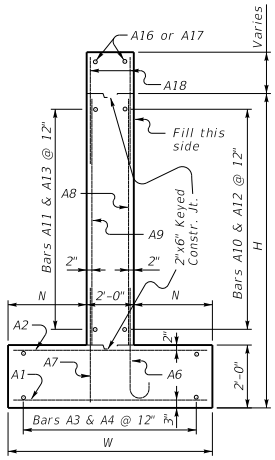

WING SECTION

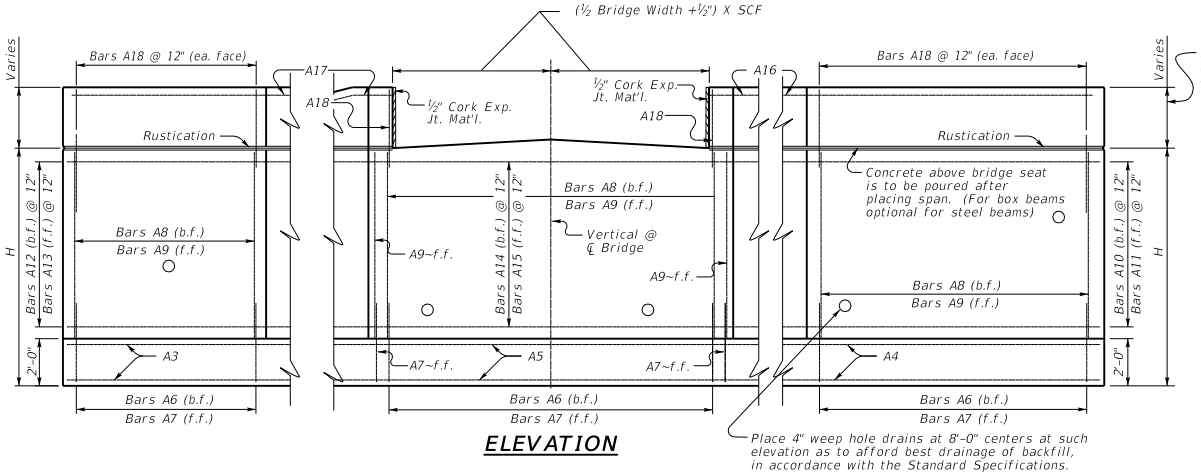

ELEVATION

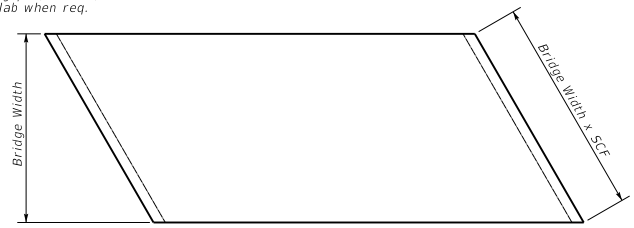

PLAN OF SUPERSTRUCTURE SLAB

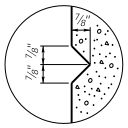

RUSTICATION GROOVE

KENTUCKY
DEPARTMENT OF HIGHWAYS

20° SKEW VARIABLE WIDTH ABUTMENT PARALLEL WINGS

STANDARD DRAWING NO. BSA-049

SUBMITTED _____ DIRECTOR DIVISION OF STRUCTURAL DESIGN — DATE 02-26-20

APPROVED _____ STATE HIGHWAY ENGINEER — DATE 02-26-20

20° SKEW VARIABLE BRIDGE WIDTH 2:1 FILL SLOPES WINGS PARALLEL TO ROADWAY

Bill of Reinforcement

MARK	A1	A2	A3	A4	A5	A6	A7	A8	A9	A10	A11	A12	A13	A14	A15	A16	A17	A18
TYPE	Str.	Str.	Str.	Str.	Str.	4	Str.	Str.	Str.	8	8	8	8	7	7	Str.	Str.	Str.
SIZE			#5	#5	#5				#5	#5	#5	#5	#5	#5	#5	#5	#5	#5
H	No.	No. Size Length ft. in. Spacing	No. Length ft. in.	No. Length ft. in.	No. Length ft. in.	No. Size Length ft. in. Spacing A ft. in. B ft. in. C ft. in. D ft. in.	No. Size Length ft. in. Spacing	No. Size Length ft. in. Spacing	No. Length ft. in.	No. Length ft. in.	No. Length ft. in.	No. Length ft. in.	No. Length ft. in.	No. Length ft. in.	No. Length ft. in.	No. Length ft. in.	No. Length ft. in.	No. Length ft. in.
15-16	99+Nb=	10 11 8 12	99+Nb=	7 11 8 12	24 40 6	24 35 9	24 20 8	+Lb=	69+Nb=	9 9 11 12 8 ⅛ 1 10 0 11¾ 8 6	77+Nb=	5 4 11 12	69+Nb=	6 12 10 12	77+Nb=	12 10 12	14 33 6	14 33 1	14 33 7	14 34 5	14 11 11 +Lb=	14 11 11 +Lb=	2 37 8	2 39 1	151 5 9
13-14	89+Nb=	9 10 8 12	89+Nb=	7 10 8 12	22 35 9	22 31 5	22 19 7	+Lb=	61+Nb=	8 8 3 12 6 11 1 3 0 8 7 3	69+Nb=	5 4 11 12	61+Nb=	6 10 10 12	69+Nb=	10 10 12	12 29 6	12 29 1	12 29 7	12 30 5	12 11 11 +Lb=	12 11 11 +Lb=	2 33 8	2 35 1	135 5 9
11-12	79+Nb=	8 9 8 12	79+Nb=	6 9 8 12	20 31 1	20 27 0	20 18 7	+Lb=	53+Nb=	7 7 1 12 5 10½ 1 2 0 7 6 2	61+Nb=	5 4 11 12	53+Nb=	5 8 10 12	61+Nb=	8 10 12	10 25 6	10 25 1	10 25 7	10 26 5	10 11 11 +Lb=	10 11 11 +Lb=	2 29 8	2 31 1	119 5 9
9-10	66+Nb=	7 8 8 12	66+Nb=	5 8 8 12	18 25 4	18 21 8	18 17 6	+Lb=	43+Nb=	6 6 1 12 5 1 1 0 0 6 5 4	51+Nb=	5 4 11 12	43+Nb=	5 6 10 12	51+Nb=	6 10 12	8 20 6	8 20 1	8 20 6	8 21 5	8 11 11 +Lb=	8 11 11 +Lb=	2 24 8	2 26 1	99 5 9
7-8	55+Nb=	6 7 2 12	55+Nb=	5 7 2 12	16 20 4	16 17 1	16 16 1	+Lb=	35+Nb=	5 5 7 12 4 8½ 0 10 0 5 4 11	43+Nb=	5 4 11 12	35+Nb=	5 4 10 12	43+Nb=	4 10 12	6 16 6	6 16 1	6 16 6	6 17 5	6 11 11 +Lb=	6 11 11 +Lb=	2 20 8	2 22 1	83 5 9
5-6	45+Nb=	5 6 2 12	45+Nb=	5 6 2 12	14 15 8	14 12 9	14 15 0	+Lb=	27+Nb=	5 5 7 12 4 8½ 0 10 0 5 4 11	35+Nb=	5 4 11 12	27+Nb=	5 2 10 12	35+Nb=	2 10 12	4 12 6	4 12 1	4 12 6	4 13 5	4 11 11 +Lb=	4 11 11 +Lb=	2 16 8	2 18 1	67 5 9

Table of Dimensions

H	W Length ft.	W Length in.	N Length ft.	N Length in.	M2 Length ft.	M2 Length in.	M3 Length ft.	M3 Length in.	T2 Length ft.	T2 Length in.	T3 Length ft.	T3 Length in.	L2 Length ft.	L3 Length ft.	S2 Length ft.	S2 Length in.	S2 + Lb/2 =	S2 Length ft.	S2 Length in.	S3 Length ft.	S3 Length in.	S3 + Lb/2 =	S3 Length ft.	S3 Length in.
15-16	12	0	5	0	33	8⅞	38	6¼	12	3⅜	14	¼	31	31	10	8¼	+0.5Lb=			10	8¼	+0.5Lb=		
13-14	11	0	4	6	29	7¾	34	1⅛	10	9½	12	4⅞	27	27	10	1⅛	+0.5Lb=			10	1⅛	+0.5Lb=		
11-12	10	0	4	0	25	6¾	29	8	9	3⅝	10	9⅝	23	23	9	7½	+0.5Lb=			9	7½	+0.5Lb=		
9-10	9	0	3	6	20	6⅞	24	3½	7	5⅝	8	10⅛	18	18	9	1⅛	+0.5Lb=			9	1⅛	+0.5Lb=		
7-8	7	6	2	9	16	3⅞	19	6⅜	5	11⅛	7	1¼	14	14	8	3½	+0.5Lb=			8	3½	+0.5Lb=		
5-6	6	6	2	3	12	2⅞	15	1¼	4	5¼	5	6	10	10	7	9⅛	+0.5Lb=			7	9⅛	+0.5Lb=		

Reinforcement Details

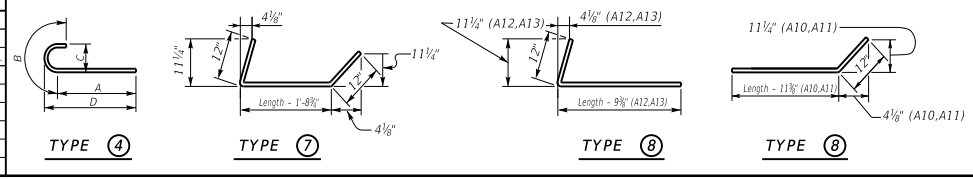

Quantities

H	Concrete* C.Y.	Reinforcement LBS.
5	26.83+(0.71xLb) =	2525+(52.8xLb) =
6	29.11+(0.78xLb) =	2525+(52.8xLb) =
7	42.4+(0.93xLb) =	3877+(68.7xLb) =
8	45.27+(1.01xLb) =	3877+(68.7xLb) =
9	63.26+(1.19xLb) =	5905+(91xLb) =
10	66.72+(1.27xLb) =	5905+(91xLb) =
11	89.38+(1.41xLb) =	9102+(120.4xLb) =
12	93.59+(1.49xLb) =	9102+(120.4xLb) =
13	116.36+(1.64xLb) =	13384+(161xLb) =
14	121.16+(1.71xLb) =	13384+(161xLb) =
15	146.89+(1.86xLb) =	18106+(198.6xLb) =
16	152.28+(1.93xLb) =	18106+(198.6xLb) =

*Concrete quantities computed using 21" beam depth on ½" pad & Variable Bridge Width

ABUTMENT SKEW CORRECTION FACTOR (SCF) = 1.064

NUMBER OF BARS TO ADD (Nb) = Bridge Width (feet) x SCF (round up to nearest whole number)

LENGTH OF ABUTMENT TO ADD (Lb) = Bridge Width (feet) x SCF (convert decimal to architectural)

GENERAL NOTES

SPECIFICATIONS: Construct abutments according to the current edition of the Kentucky Department of Highways Standard Specifications for Road and Bridge Construction. Abutments are designed for side by side box beams as detailed in Standard Drawings BDP-001 through BDP-012, current edition. Dimensions may be adjusted to allow for any out to out bridge width. Abutments are also adequate for Std. Dwg. slabs or steel beam superstructures.

FOUNDATION PRESSURE: Construct abutment footings on solid rock bearing material that can support a pressure of 8000 psf service or 10,800 psf strength factored as recommended by a geotechnical engineer.

WING LENGTHS: Calculated assuming 21" superstructure depth and stream bank elevation at top of footing.

FOOTING ELEVATION: Construct bottom of footing below the anticipated scour elevation. (This typically entails embedding the footings 1'-0" to 2'-0" into rock and pouring concrete directly against cut rock faces. as recommended by geotechnical engineer.)

NOTE: Distances to bars shown are clear dimensions unless otherwise noted.

MATERIAL SPECIFICATIONS:
Concrete, Class "A" = 3500 psi
Steel Reinforcement = Grade 60

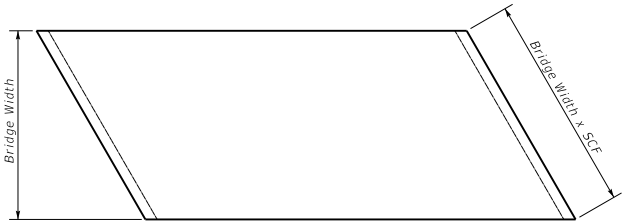

PLAN OF SUPERSTRUCTURE SLAB

KENTUCKY
DEPARTMENT OF HIGHWAYS

20° SKEW VARIABLE WIDTH ABUTMENT PARALLEL WINGS

STANDARD DRAWING NO. BSA-050

SUBMITTED _____ DIRECTOR DIVISION OF STRUCTURAL DESIGN — DATE 02-26-20

APPROVED _____ STATE HIGHWAY ENGINEER — DATE 02-26-20

25° SKEW VARIABLE BRIDGE WIDTH 2:1 FILL SLOPES WINGS PARALLEL TO ROADWAY

ABUTMENT SKEW CORRECTION FACTOR (SCF) = 1.103

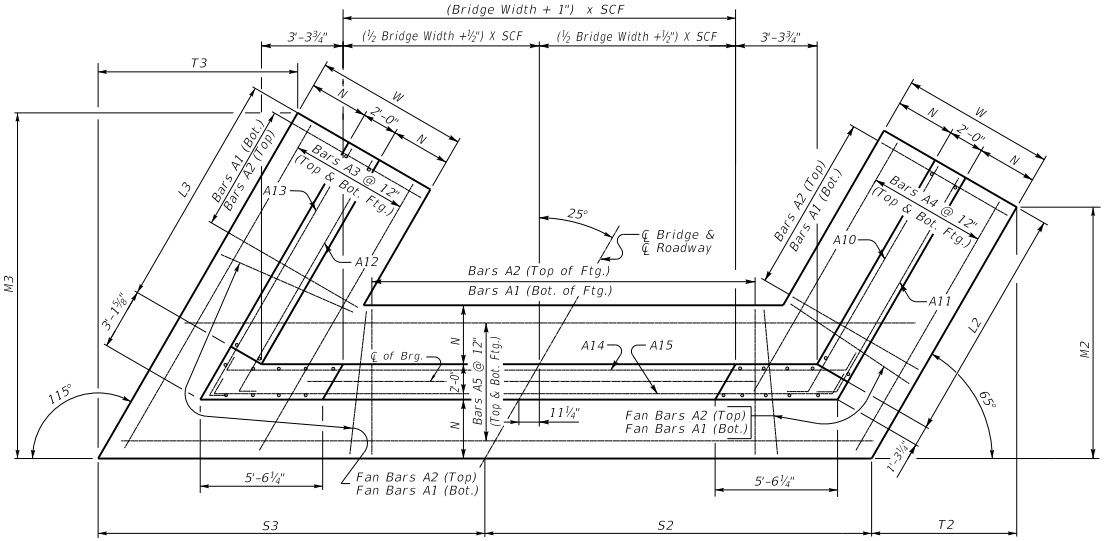

(Left Skew as shown;right skew opp. hand)

PLAN

NOTE: Trim A16 & A17 bars if necessary
Trim A3 bars as necessary

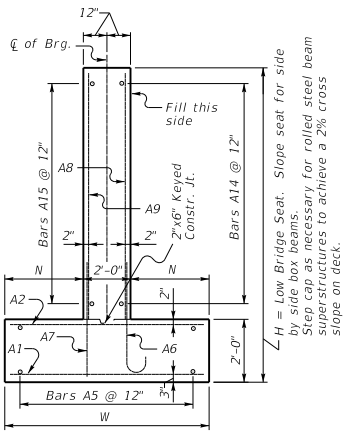

WALL SECTION

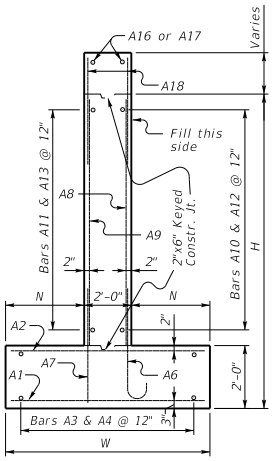

WING SECTION

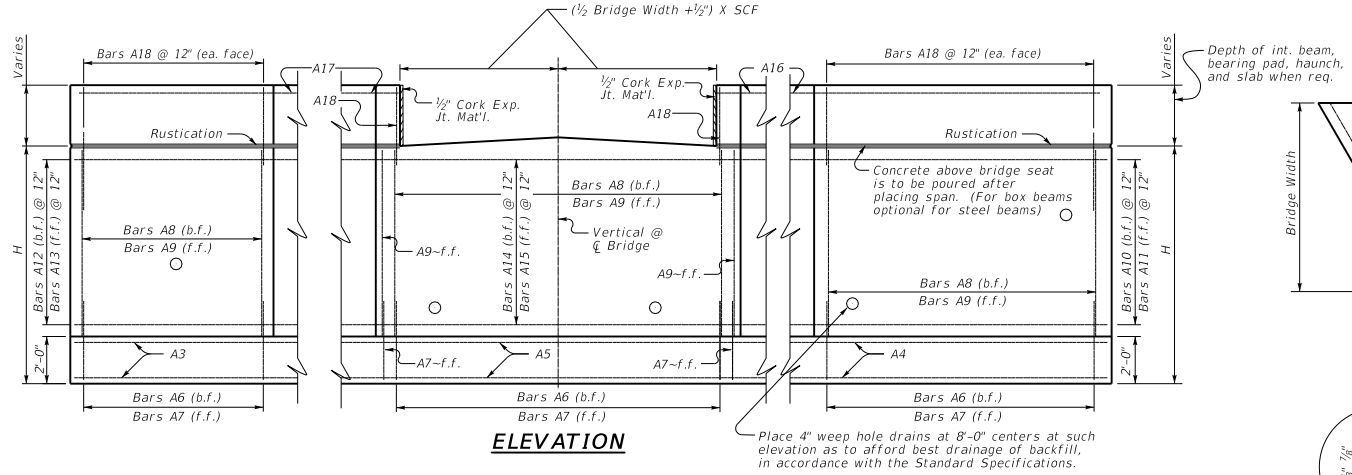

ELEVATION

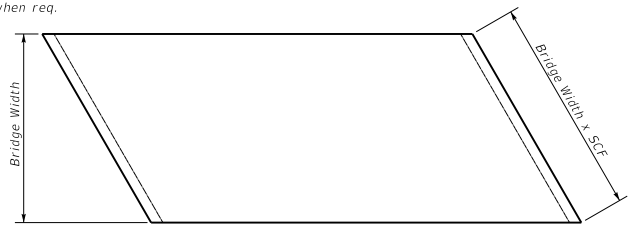

PLAN OF SUPERSTRUCTURE SLAB

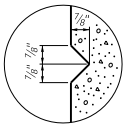

RUSTICATION GROOVE

KENTUCKY
DEPARTMENT OF HIGHWAYS

25° SKEW VARIABLE WIDTH ABUTMENT PARALLEL WINGS

STANDARD DRAWING NO. BSA-051

SUBMITTED _____ DIRECTOR DIVISION OF STRUCTURAL DESIGN — DATE 02-26-20

APPROVED _____ STATE HIGHWAY ENGINEER — DATE 02-26-20

25° SKEW VARIABLE BRIDGE WIDTH 2:1 FILL SLOPES WINGS PARALLEL TO ROADWAY

Bill of Reinforcement

MARK	A1					A2					A3			A4			A5					
TYPE	Str.					Str.					Str.			Str.			Str.					
SIZE											#5			#5			#5					
H	No.	Size	Length ft.	Length in.	Spacing	No.	Size	Length ft.	Length in.	Spacing	No.	Length ft.	Length in.	No.	Length ft.	Length in.	No.	Length ft.	Length in.	+Lb =	Length ft.	Length in.
15-16	103+Nb=	10	11	8	12	103+Nb=	7	11	8	12	24	42	5	24	36	4	24	21	4	+Lb=		
13-14	93+Nb=	9	10	8	12	93+Nb=	7	10	8	12	22	37	8	22	32	0	22	20	3	+Lb=		
11-12	82+Nb=	8	9	8	12	82+Nb=	6	9	8	12	20	32	10	20	27	8	20	19	2	+Lb=		
9-10	70+Nb=	7	8	8	12	70+Nb=	5	8	8	12	18	27	1	18	22	4	18	18	0	+Lb=		
7-8	59+Nb=	6	7	2	12	59+Nb=	5	7	2	12	16	22	0	16	17	9	16	16	7	+Lb=		
5-6	49+Nb=	5	6	2	12	49+Nb=	5	6	2	12	14	17	3	14	13	6	14	15	6	+Lb=		

MARK	A6													A7					A8					A9			
TYPE	4													Str.					Str.					Str.			
SIZE																								#5			
H	No.	Size	Length ft.	Length in.	Spacing	A ft.	A in.	B ft.	B in.	C ft.	C in.	D ft.	D in.	No.	Size	Length ft.	Length in.	Spacing	No.	Size	Length ft.	Length in.	Spacing	No.	Length ft.	Length in.	Spacing
15-16	71+Nb=	9	9	11	12	8	⅛	1	10	0	11¾	8	6	80+Nb=	5	4	11	12	71+Nb=	6	12	10	12	80+Nb=	12	10	12
13-14	63+Nb=	8	8	3	12	6	11	1	3	0	8	7	3	72+Nb=	5	4	11	12	63+Nb=	6	10	10	12	72+Nb=	10	10	12
11-12	55+Nb=	7	7	1	12	5	10½	1	2	0	7	6	2	64+Nb=	5	4	11	12	55+Nb=	5	8	10	12	64+Nb=	8	10	12
9-10	45+Nb=	6	6	1	12	5	1	1	0	0	6	5	4	54+Nb=	5	4	11	12	45+Nb=	5	6	10	12	54+Nb=	6	10	12
7-8	37+Nb=	5	5	7	12	4	8½	0	10	0	5	4	11	46+Nb=	5	4	11	12	37+Nb=	5	4	10	12	46+Nb=	4	10	12
5-6	29+Nb=	5	5	7	12	4	8½	0	10	0	5	4	11	38+Nb=	5	4	11	12	29+Nb=	5	2	10	12	38+Nb=	2	10	12

MARK	A10			A11			A12			A13			A14						A15						A16			A17			A18		
TYPE	8			8			8			8			7						7						Str.			Str.			Str.		
SIZE	#5			#5			#5			#5			#5						#5						#5			#5			#5		
H	No.	Length ft.	Length in.	No.	Length ft.	Length in.	No.	Length ft.	Length in.	No.	Length ft.	Length in.	No.	Length ft.	Length in.	+Lb =	Length ft.	Length in.	No.	Length ft.	Length in.	+Lb =	Length ft.	Length in.	No.	Length ft.	Length in.	No.	Length ft.	Length in.	No.	Length ft.	Length in.
15-16	14	34	6	14	34	0	14	34	8	14	35	8	14	12	4	+Lb=			14	12	4	+Lb=			2	38	8	2	40	7	156	5	9
13-14	12	30	6	12	30	0	12	30	8	12	31	8	12	12	4	+Lb=			12	12	4	+Lb=			2	34	8	2	36	7	140	5	9
11-12	10	26	6	10	26	0	10	26	8	10	27	8	10	12	4	+Lb=			10	12	4	+Lb=			2	30	8	2	32	7	124	5	9
9-10	8	21	7	8	21	0	8	21	8	8	22	8	8	12	4	+Lb=			8	12	4	+Lb=			2	25	8	2	27	7	104	5	9
7-8	6	17	7	6	17	0	6	17	8	6	18	8	6	12	4	+Lb=			6	12	4	+Lb=			2	21	8	2	23	7	88	5	9
5-6	4	13	7	4	13	0	4	13	8	4	14	8	4	12	4	+Lb=			4	12	4	+Lb=			2	17	8	2	19	7	72	5	9

Table of Dimensions

H	W Length ft.	W Length in.	N Length ft.	N Length in.	M2 Length ft.	M2 Length in.	M3 Length ft.	M3 Length in.	T2 Length ft.	T2 Length in.	T3 Length ft.	T3 Length in.	L2 Length ft.	L3 Length ft.	S2 Length ft.	S2 Length in.	S2 + Lb/2 =	S2 Length ft.	S2 Length in.	S3 Length ft.	S3 Length in.	S3 + Lb/2 =	S3 Length ft.	S3 Length in.
15-16	12	0	5	0	33	½	38	11½	15	4⅞	18	2	32	32	11	1	+0.5Lb=			11	1	+0.5Lb=		
13-14	11	0	4	6	29	1½	34	7½	13	7	16	1¾	28	28	10	6⅜	+0.5Lb=			10	6⅜	+0.5Lb=		
11-12	10	0	4	0	25	2⅝	30	3½	11	9⅛	14	1½	24	24	9	11¾	+0.5Lb=			9	11¾	+0.5Lb=		
9-10	9	0	3	6	20	4¾	25	½	9	6⅛	11	8⅛	19	19	9	5⅛	+0.5Lb=			9	5⅛	+0.5Lb=		
7-8	7	6	2	9	16	4	20	4¼	7	7⅜	9	5⅞	15	15	8	7⅛	+0.5Lb=			8	7⅛	+0.5Lb=		
5-6	6	6	2	3	12	5⅛	16	⅛	5	9½	7	5⅝	11	11	8	½	+0.5Lb=			8	½	+0.5Lb=		

Reinforcement Details

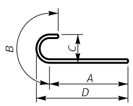

TYPE ④

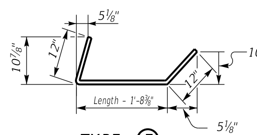

TYPE ⑦

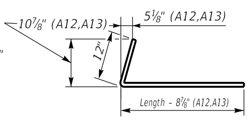

TYPE ⑧

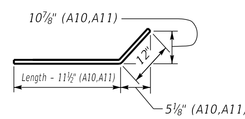

TYPE ⑧

Quantities

H	Concrete* C.Y.	Reinforcement LBS.
5	28.92+(0.71xLb) =	2717+(52.8xLb) =
6	31.37+(0.78xLb) =	2717+(52.8xLb) =
7	45.02+(0.93xLb) =	4118+(68.7xLb) =
8	48.07+(1.01xLb) =	4118+(68.7xLb) =
9	66.5+(1.19xLb) =	6216+(91xLb) =
10	70.14+(1.27xLb) =	6216+(91xLb) =
11	93.16+(1.41xLb) =	9465+(120.4xLb) =
12	97.54+(1.49xLb) =	9465+(120.4xLb) =
13	120.67+(1.64xLb) =	13914+(161xLb) =
14	125.64+(1.71xLb) =	13914+(161xLb) =
15	151.73+(1.86xLb) =	18748+(198.6xLb) =
16	157.3+(1.93xLb) =	18748+(198.6xLb) =

*Concrete quantities computed using 21" beam depth on ½" pad & Variable Bridge Width

ABUTMENT SKEW CORRECTION FACTOR (SCF) = 1.103

NUMBER OF BARS TO ADD (Nb) = Bridge Width (feet) x SCF (round up to nearest whole number)

LENGTH OF ABUTMENT TO ADD (Lb) = Bridge Width (feet) x SCF (convert decimal to architectural)

GENERAL NOTES

SPECIFICATIONS: Construct abutments according to the current edition of the Kentucky Department of Highways Standard Specifications for Road and Bridge Construction. Abutments are designed for side by side box beams as detailed in Standard Drawings BDP-001 through BDP-012, current edition. Dimensions may be adjusted to allow for any out to out bridge width. Abutments are also adequate for Std. Dwg. slabs or steel beam superstructures.

FOUNDATION PRESSURE: Construct abutment footings on solid rock bearing material that can support a pressure of 8000 psf service or 10,800 psf strength factored as recommended by a geotechnical engineer.

WING LENGTHS: Calculated assuming 21" superstructure depth and stream bank elevation at top of footing.

FOOTING ELEVATION: Construct bottom of footing below the anticipated scour elevation. (This typically entails embedding the footings 1'-0" to 2'-0" into rock and pouring concrete directly against cut rock faces. as recommended by geotechnical engineer.)

NOTE: Distances to bars shown are clear dimensions unless otherwise noted.

MATERIAL SPECIFICATIONS:
Concrete, Class "A" = 3500 psi
Steel Reinforcement = Grade 60

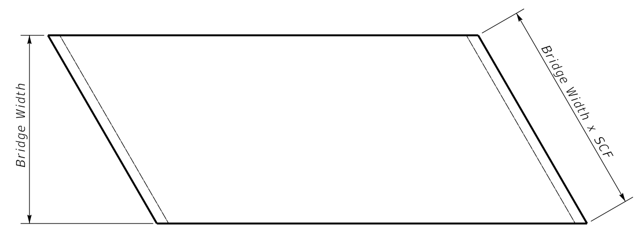

PLAN OF SUPERSTRUCTURE SLAB

KENTUCKY
DEPARTMENT OF HIGHWAYS

25° SKEW VARIABLE WIDTH ABUTMENT PARALLEL WINGS

STANDARD DRAWING NO. BSA-052

SUBMITTED ______ DIRECTOR DIVISION OF STRUCTURAL DESIGN 02-26-20 DATE

APPROVED ______ STATE HIGHWAY ENGINEER 02-26-20 DATE

30° SKEW VARIABLE BRIDGE WIDTH 2:1 FILL SLOPES WINGS PARALLEL TO ROADWAY

ABUTMENT SKEW CORRECTION FACTOR (SCF) = 1.155

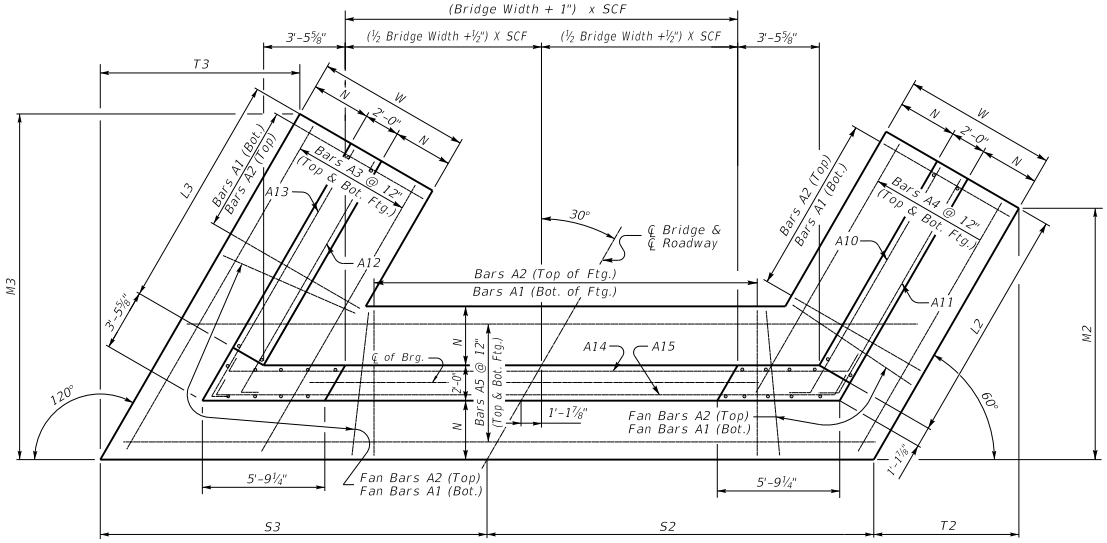

(Left Skew as shown;right skew opp. hand)

PLAN

NOTE: Trim A16 & A17 bars if necessary
Trim A3 bars as necessary

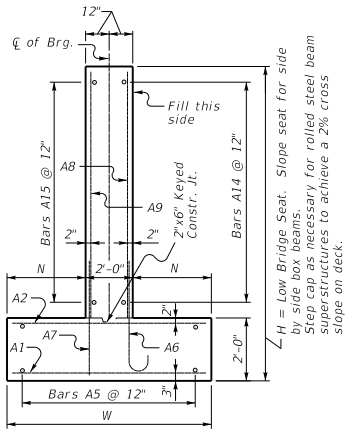

WALL SECTION

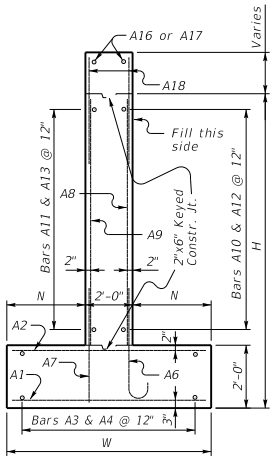

WING SECTION

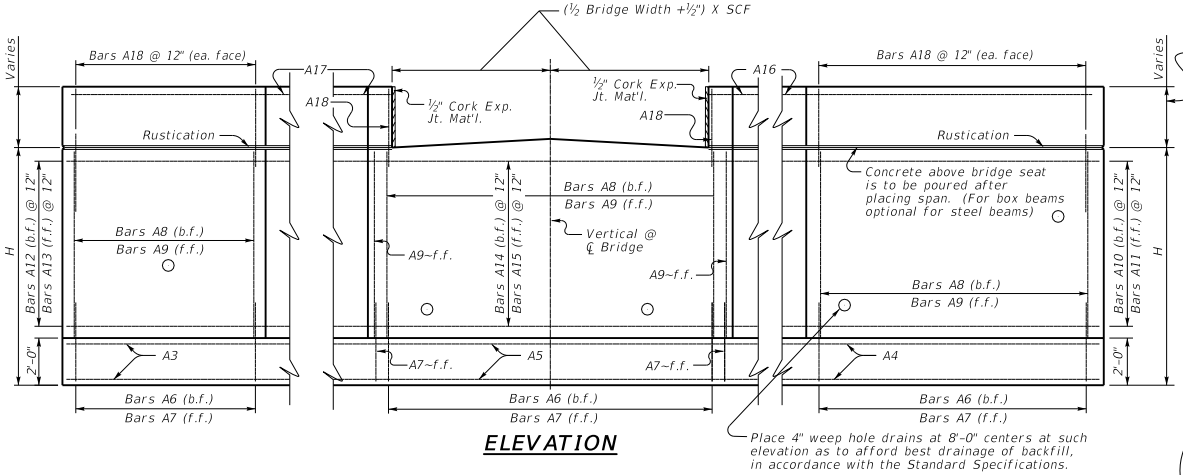

ELEVATION

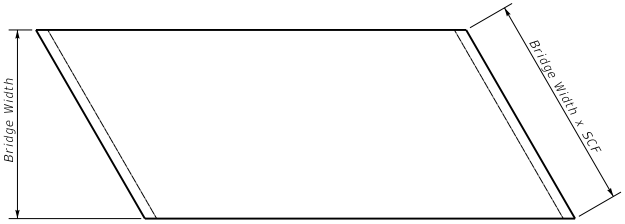

PLAN OF SUPERSTRUCTURE SLAB

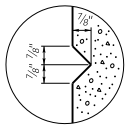

RUSTICATION GROOVE

KENTUCKY
DEPARTMENT OF HIGHWAYS

30° SKEW VARIABLE WIDTH ABUTMENT PARALLEL WINGS

STANDARD DRAWING NO. BSA-053

SUBMITTED _____ DIRECTOR DIVISION OF STRUCTURAL DESIGN — DATE 02-26-20

APPROVED _____ STATE HIGHWAY ENGINEER — DATE 02-26-20

30° SKEW VARIABLE BRIDGE WIDTH 2:1 FILL SLOPES WINGS PARALLEL TO ROADWAY

Bill of Reinforcement

MARK	A1					A2					A3			A4			A5					
TYPE	Str.					Str.					Str.			Str.			Str.					
SIZE											#5			#5			#5					
H	No.	Size	Length ft.	Length in.	Spacing	No.	Size	Length ft.	Length in.	Spacing	No.	Length ft.	Length in.	No.	Length ft.	Length in.	No.	Length ft.	Length in.	+Lb =	Length ft.	Length in.
15-16	108+Nb=	10	11	8	12	108+Nb=	7	11	8	12	24	45	6	24	37	11	24	22	3	+Lb=		
13-14	96+Nb=	9	10	8	12	96+Nb=	7	10	8	12	22	39	8	22	32	8	22	21	1	+Lb=		
11-12	86+Nb=	8	9	8	12	86+Nb=	6	9	8	12	20	34	9	20	28	5	20	19	11	+Lb=		
9-10	73+Nb=	7	8	8	12	73+Nb=	5	8	8	12	18	28	11	18	23	1	18	18	10	+Lb=		
7-8	62+Nb=	6	7	2	12	62+Nb=	5	7	2	12	16	23	9	16	18	6	16	17	4	+Lb=		
5-6	50+Nb=	5	6	2	12	50+Nb=	5	6	2	12	14	17	10	14	13	3	14	16	2	+Lb=		

MARK	A6												
TYPE	4												
SIZE													
H	No.	Size	Length ft.	Length in.	Spacing	A ft.	A in.	B ft.	B in.	C ft.	C in.	D ft.	D in.
15-16	76+Nb=	9	9	11	12	8	1/8	1	10	0	11 3/4	8	6
13-14	66+Nb=	8	8	3	12	6	11	1	3	0	8	7	3
11-12	58+Nb=	7	7	1	12	5	10 1/2	1	2	0	7	6	2
9-10	48+Nb=	6	6	1	12	5	1	1	0	0	6	5	4
7-8	40+Nb=	5	5	7	12	4	8 1/2	0	10	0	5	4	11
5-6	30+Nb=	5	5	7	12	4	8 1/2	0	10	0	5	4	11

MARK	A7					A8					A9			
TYPE	Str.					Str.					Str.			
SIZE											#5			
H	No.	Size	Length ft.	Length in.	Spacing	No.	Size	Length ft.	Length in.	Spacing	No.	Length ft.	Length in.	Spacing
15-16	85+Nb=	5	4	11	12	76+Nb=	6	12	10	12	85+Nb=	12	10	12
13-14	75+Nb=	5	4	11	12	66+Nb=	6	10	10	12	75+Nb=	10	10	12
11-12	67+Nb=	5	4	11	12	58+Nb=	5	8	10	12	67+Nb=	8	10	12
9-10	57+Nb=	5	4	11	12	48+Nb=	5	6	10	12	57+Nb=	6	10	12
7-8	49+Nb=	5	4	11	12	40+Nb=	5	4	10	12	49+Nb=	4	10	12
5-6	39+Nb=	5	4	11	12	30+Nb=	5	2	10	12	39+Nb=	2	10	12

MARK	A10			A11			A12			A13			A14						A15						A16			A17			A18		
TYPE	8			8			8			8			7						7						Str.			Str.			Str.		
SIZE	#5			#5			#5			#5			#5						#5						#5			#5			#5		
H	No.	Length ft.	Length in.	No.	Length ft.	Length in.	No.	Length ft.	Length in.	No.	Length ft.	Length in.	No.	Length ft.	Length in.	+Lb =	Length ft.	Length in.	No.	Length ft.	Length in.	+Lb =	Length ft.	Length in.	No.	Length ft.	Length in.	No.	Length ft.	Length in.	No.	Length ft.	Length in.
15-16	14	36	8	14	35	11	14	36	8	14	37	11	14	12	9	+Lb=			14	12	9	+Lb=			2	40	10	2	43	2	165	5	9
13-14	12	31	8	12	30	11	12	31	8	12	32	11	12	12	9	+Lb=			12	12	9	+Lb=			2	35	10	2	38	2	145	5	9
11-12	10	27	8	10	26	11	10	27	8	10	28	11	10	12	9	+Lb=			10	12	9	+Lb=			2	31	10	2	34	2	129	5	9
9-10	8	22	8	8	21	11	8	22	8	8	23	11	8	12	9	+Lb=			8	12	9	+Lb=			2	26	10	2	29	2	109	5	9
7-8	6	18	8	6	17	11	6	18	8	6	19	11	6	12	9	+Lb=			6	12	9	+Lb=			2	22	10	2	25	2	93	5	9
5-6	4	13	8	4	12	11	4	13	8	4	14	11	4	12	9	+Lb=			4	12	9	+Lb=			2	17	10	2	20	2	73	5	9

Table of Dimensions

H	W Length ft.	W Length in.	N Length ft.	N Length in.	M2 Length ft.	M2 Length in.	M3 Length ft.	M3 Length in.	T2 Length ft.	T2 Length in.	T3 Length ft.	T3 Length in.	L2 Length ft.	L3 Length ft.	S2 Length ft.	S2 Length in.	S2 + Lb/2 =	S2 Length ft.	S2 Length in.	S3 Length ft.	S3 Length in.	S3 + Lb/2 =	S3 Length ft.	S3 Length in.
15-16	12	0	5	0	32	11 3/8	39	11 3/8	19	1/4	23	3/4	34	34	11	7 1/8	+0.5Lb=			11	7 1/8	+0.5Lb=		
13-14	11	0	4	6	28	4 3/8	34	10 3/8	16	4 1/2	20	1 1/2	29	29	11	1/4	+0.5Lb=			11	1/4	+0.5Lb=		
11-12	10	0	4	0	24	7 3/4	30	7 3/4	14	2 3/4	17	8 3/8	25	25	10	5 1/4	+0.5Lb=			10	5 1/4	+0.5Lb=		
9-10	9	0	3	6	20	7/8	25	6 7/8	11	7	14	9 1/8	20	20	9	10 3/8	+0.5Lb=			9	10 3/8	+0.5Lb=		
7-8	7	6	2	9	16	2 3/4	20	11 3/4	9	4 1/2	12	1 3/8	16	16	9	0	+0.5Lb=			9	0	+0.5Lb=		
5-6	6	6	2	3	11	7 7/8	15	10 7/8	6	8 3/4	9	2 1/8	11	11	8	5	+0.5Lb=			8	5	+0.5Lb=		

Reinforcement Details

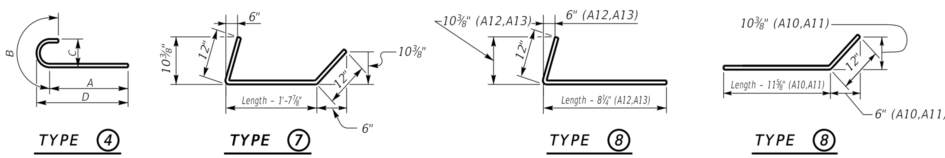

Quantities

H	Concrete* C.Y.	Reinforcement LBS.
5	29.38+(0.71xLb) =	2774+(52.8xLb) =
6	31.87+(0.78xLb) =	2774+(52.8xLb) =
7	47.78+(0.93xLb) =	4359+(68.7xLb) =
8	51.01+(1.01xLb) =	4359+(68.7xLb) =
9	69.91+(1.19xLb) =	6526+(91xLb) =
10	73.73+(1.27xLb) =	6526+(91xLb) =
11	97.12+(1.41xLb) =	9903+(120.4xLb) =
12	101.69+(1.49xLb) =	9903+(120.4xLb) =
13	125.19+(1.64xLb) =	14434+(161xLb) =
14	130.35+(1.71xLb) =	14434+(161xLb) =
15	160.85+(1.86xLb) =	19807+(198.6xLb) =
16	166.75+(1.93xLb) =	19807+(198.6xLb) =

*Concrete quantities computed using 21" beam depth on 1/2" pad & Variable Bridge Width

ABUTMENT SKEW CORRECTION FACTOR (SCF) = 1.155

NUMBER OF BARS TO ADD (Nb) = Bridge Width (feet) x SCF (round up to nearest whole number)

LENGTH OF ABUTMENT TO ADD (Lb) = Bridge Width (feet) x SCF (convert decimal to architectural)

GENERAL NOTES

SPECIFICATIONS: Construct abutments according to the current edition of the Kentucky Department of Highways Standard Specifications for Road and Bridge Construction. Abutments are designed for side by side box beams as detailed in Standard Drawings BDP-001 through BDP-012, current edition. Dimensions may be adjusted to allow for any out to out bridge width. Abutments are also adequate for Std. Dwg. slabs or steel beam superstructures.

FOUNDATION PRESSURE: Construct abutment footings on solid rock bearing material that can support a pressure of 8000 psf service or 10,800 psf strength factored as recommended by a geotechnical engineer.

WING LENGTHS: Calculated assuming 21" superstructure depth and stream bank elevation at top of footing.

FOOTING ELEVATION: Construct bottom of footing below the anticipated scour elevation. (This typically entails embedding the footings 1'-0" to 2'-0" into rock and pouring concrete directly against cut rock faces. as recommended by geotechnical engineer.)

NOTE: Distances to bars shown are clear dimensions unless otherwise noted.

MATERIAL SPECIFICATIONS:
Concrete, Class "A" = 3500 psi
Steel Reinforcement = Grade 60

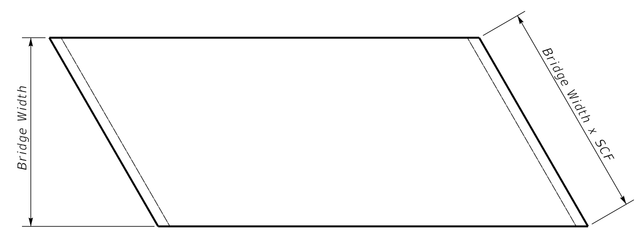

PLAN OF SUPERSTRUCTURE SLAB

KENTUCKY
DEPARTMENT OF HIGHWAYS

30° SKEW VARIABLE WIDTH ABUTMENT PARALLEL WINGS

STANDARD DRAWING NO. BSA-054

SUBMITTED ______ DIRECTOR DIVISION OF STRUCTURAL DESIGN 02-26-20 DATE

APPROVED ______ STATE HIGHWAY ENGINEER 02-26-20 DATE

35° SKEW VARIABLE BRIDGE WIDTH 2:1 FILL SLOPES WINGS PARALLEL TO ROADWAY

ABUTMENT SKEW CORRECTION FACTOR (SCF) = 1.221

For fanning A1 & A2 bars with an acute angle, space @ 12" at face of toe, then as you get closer to the corner start pulling every other bar back toward the heel. (Similar to as shown)

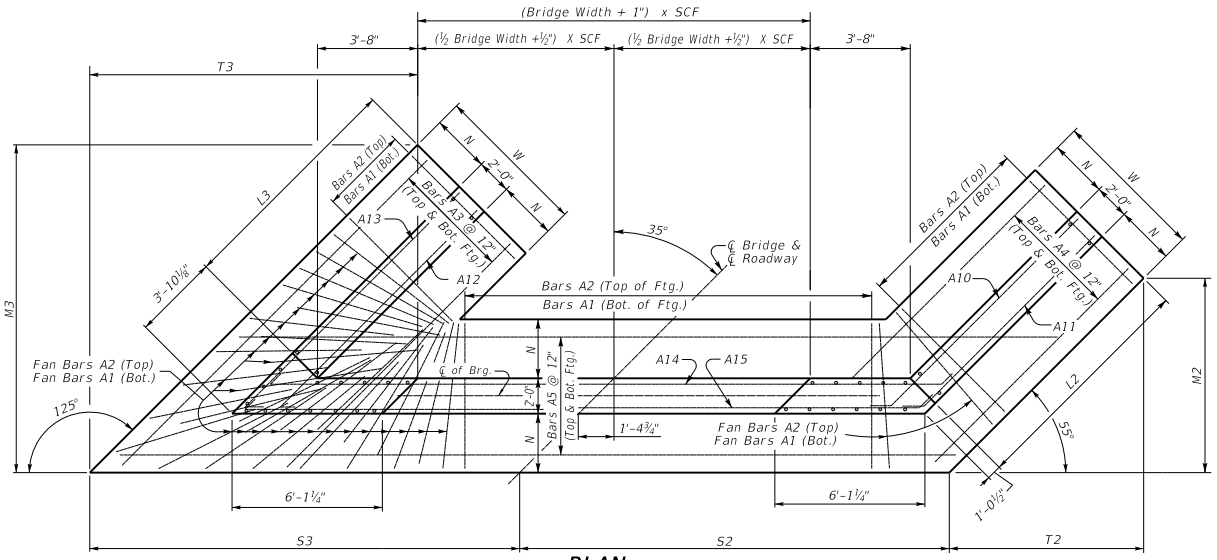

(Left Skew as shown;right skew opp. hand)

PLAN

NOTE: Trim A16 & A17 bars if necessary
Trim A3 bars as necessary

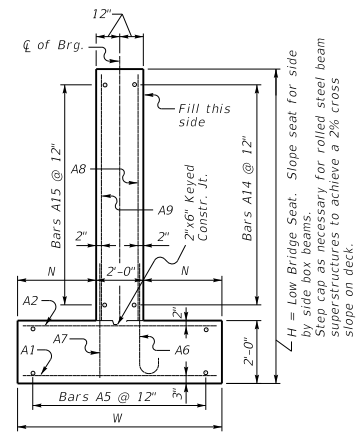

WALL SECTION

H = Low Bridge Seat. Slope seat for side by side box beams. Step cap as necessary for rolled steel beam superstructures to achieve a 2% cross slope on deck.

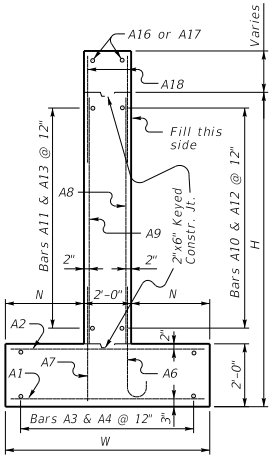

WING SECTION

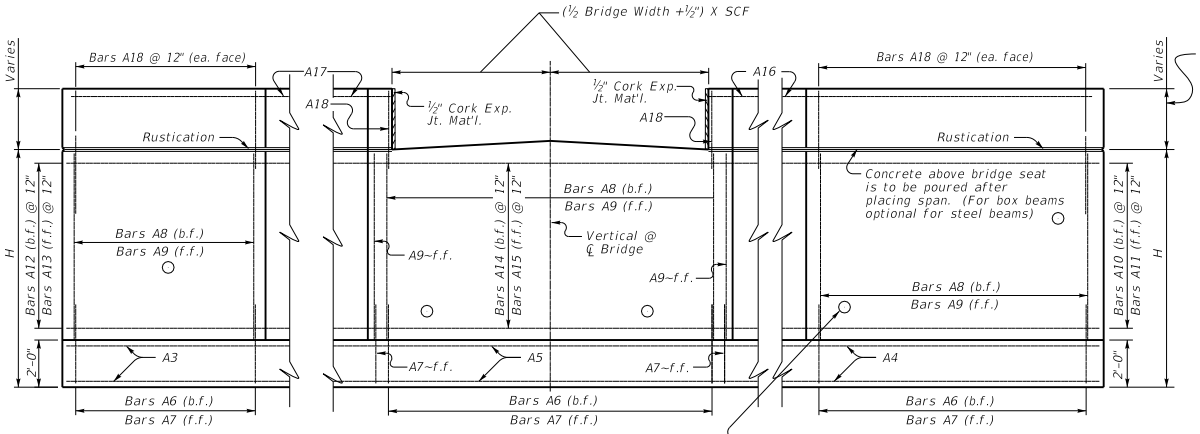

ELEVATION

Place 4" weep hole drains at 8'-0" centers at such elevation as to afford best drainage of backfill, in accordance with the Standard Specifications.

Depth of int. beam, bearing pad, haunch, and slab when req.

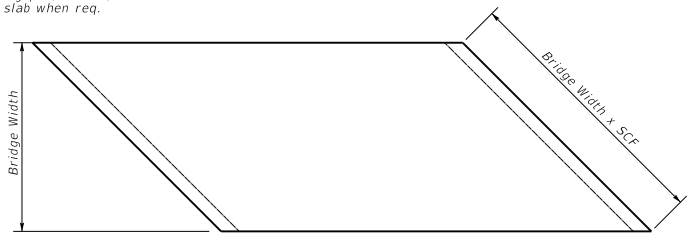

PLAN OF SUPERSTRUCTURE SLAB

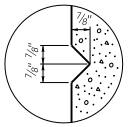

RUSTICATION GROOVE

KENTUCKY
DEPARTMENT OF HIGHWAYS

35° SKEW VARIABLE WIDTH ABUTMENT PARALLEL WINGS

STANDARD DRAWING NO. BSA-055

SUBMITTED _____ DIRECTOR DIVISION OF STRUCTURAL DESIGN — DATE 02-26-20

APPROVED _____ STATE HIGHWAY ENGINEER — DATE 02-26-20

35° SKEW VARIABLE BRIDGE WIDTH 2:1 FILL SLOPES WINGS PARALLEL TO ROADWAY

Bill of Reinforcement

MARK	A1					A2					A3			A4			A5					
TYPE	Str.					Str.					Str.			Str.			Str.					
SIZE											#5			#5			#5					
H	No.	Size	Length ft.	Length in.	Spacing	No.	Size	Length ft.	Length in.	Spacing	No.	Length ft.	Length in.	No.	Length ft.	Length in.	No.	Length ft.	Length in.	+Lb =	Length ft.	Length in.
15-16	115+Nb=	10	11	8	12	115+Nb=	7	11	8	12	24	48	9	24	39	7	24	23	5	+Lb=		
13-14	102+Nb=	9	10	8	12	102+Nb=	7	10	8	12	22	42	9	22	34	4	22	22	3	+Lb=		
11-12	90+Nb=	8	9	8	12	90+Nb=	6	9	8	12	20	36	10	20	29	1	20	21	0	+Lb=		
9-10	77+Nb=	7	8	8	12	77+Nb=	5	8	8	12	18	30	10	18	23	10	18	19	9	+Lb=		
7-8	66+Nb=	6	7	2	12	66+Nb=	5	7	2	12	16	25	7	16	19	3	16	18	4	+Lb=		
5-6	53+Nb=	5	6	2	12	53+Nb=	5	6	2	12	14	19	8	14	14	0	14	17	1	+Lb=		

MARK	A6													A7					A8				
TYPE	4													Str.					Str.				
SIZE																							
H	No.	Size	Length ft.	Length in.	Spacing	A ft.	A in.	B ft.	B in.	C ft.	C in.	D ft.	D in.	No.	Size	Length ft.	Length in.	Spacing	No.	Size	Length ft.	Length in.	Spacing
15-16	80+Nb=	9	9	11	12	8	⅛	1	10	0	11¾	8	6	90+Nb=	5	4	11	12	80+Nb=	6	12	10	12
13-14	70+Nb=	8	8	3	12	6	11	1	3	0	8	7	3	80+Nb=	5	4	11	12	70+Nb=	6	10	10	12
11-12	60+Nb=	7	7	1	12	5	10½	1	2	0	7	6	2	70+Nb=	5	4	11	12	60+Nb=	5	8	10	12
9-10	50+Nb=	6	6	1	12	5	1	1	0	0	6	5	4	60+Nb=	5	4	11	12	50+Nb=	5	6	10	12
7-8	42+Nb=	5	5	7	12	4	8½	0	10	0	5	4	11	52+Nb=	5	4	11	12	42+Nb=	5	4	10	12
5-6	32+Nb=	5	5	7	12	4	8½	0	10	0	5	4	11	42+Nb=	5	4	11	12	32+Nb=	5	2	10	12

MARK	A9				A10			A11			A12			A13		
TYPE	Str.				8			8			8			8		
SIZE	#5				#5			#5			#5			#5		
H	No.	Length ft.	Length in.	Spacing	No.	Length ft.	Length in.	No.	Length ft.	Length in.	No.	Length ft.	Length in.	No.	Length ft.	Length in.
15-16	90+Nb=	12	10	12	14	38	9	14	37	10	14	38	10	14	40	4
13-14	80+Nb=	10	10	12	12	33	9	12	32	10	12	33	10	12	35	4
11-12	70+Nb=	8	10	12	10	28	9	10	27	10	10	28	10	10	30	4
9-10	60+Nb=	6	10	12	8	23	9	8	22	10	8	23	10	8	25	4
7-8	52+Nb=	4	10	12	6	19	9	6	18	10	6	19	10	6	21	4
5-6	42+Nb=	2	10	12	4	14	9	4	13	10	4	14	10	4	16	4

MARK	A14						A15						A16			A17			A18		
TYPE	7						7						Str.			Str.			Str.		
SIZE	#5						#5						#5			#5			#5		
H	No.	Length ft.	Length in.	+Lb =	Length ft.	Length in.	No.	Length ft.	Length in.	+Lb =	Length ft.	Length in.	No.	Length ft.	Length in.	No.	Length ft.	Length in.	No.	Length ft.	Length in.
15-16	14	13	4	+Lb=			14	13	4	+Lb=			2	43	1	2	45	10	175	5	9
13-14	12	13	4	+Lb=			12	13	4	+Lb=			2	38	1	2	40	10	155	5	9
11-12	10	13	4	+Lb=			10	13	4	+Lb=			2	33	1	2	35	10	135	5	9
9-10	8	13	4	+Lb=			8	13	4	+Lb=			2	28	1	2	30	10	115	5	9
7-8	6	13	4	+Lb=			6	13	4	+Lb=			2	24	1	2	26	10	99	5	9
5-6	4	13	4	+Lb=			4	13	4	+Lb=			2	19	1	2	21	10	79	5	9

Table of Dimensions

H	W		N		M2		M3		T2		T3		L2	L3	S2					S3				
	Length ft.	Length in.	Length ft.	Length in.	Length ft.	Length in.	Length ft.	Length in.	Length ft.	Length in.	Length ft.	Length in.	Length ft.	Length ft.	Length ft.	Length in.	+ Lb/2 =	Length ft.	Length in.	Length ft.	Length in.	+ Lb/2 =	Length ft.	Length in.
15-16	12	0	5	0	32	5¾	40	6	22	8⅞	28	4⅜	36	36	12	3⅛	+0.5Lb=			12	3⅛	+0.5Lb=		
13-14	11	0	4	6	28	2	35	7½	19	8⅝	24	11⅜	31	31	11	7¾	+0.5Lb=			11	7¾	+0.5Lb=		
11-12	10	0	4	0	23	10¼	30	8⅞	16	8½	21	6¼	26	26	11	½	+0.5Lb=			11	½	+0.5Lb=		
9-10	9	0	3	6	19	6⅝	25	10¼	13	8¼	18	1¼	21	21	10	5⅛	+0.5Lb=			10	5⅛	+0.5Lb=		
7-8	7	6	2	9	15	11⅜	21	4¾	11	2	14	11⅞	17	17	9	6⅛	+0.5Lb=			9	6⅛	+0.5Lb=		
5-6	6	6	2	3	11	7¾	16	6¼	8	1⅞	11	6¾	12	12	8	10⅞	+0.5Lb=			8	10⅞	+0.5Lb=		

Reinforcement Details

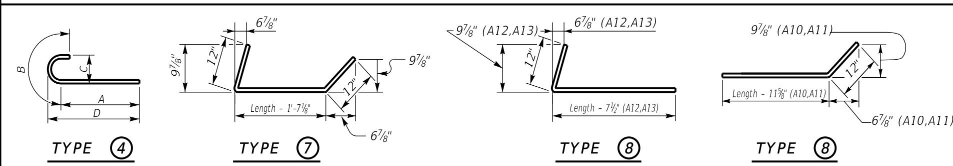

Quantities

H	Concrete* C.Y.	Reinforcement LBS.
5	31.7+(0.71xLb) =	2972+(52.8xLb) =
6	34.39+(0.78xLb) =	2972+(52.8xLb) =
7	50.7+(0.93xLb) =	4623+(68.7xLb) =
8	54.13+(1.01xLb) =	4623+(68.7xLb) =
9	73.52+(1.19xLb) =	6860+(91xLb) =
10	77.54+(1.27xLb) =	6860+(91xLb) =
11	101.33+(1.41xLb) =	10338+(120.4xLb) =
12	106.09+(1.49xLb) =	10338+(120.4xLb) =
13	133.58+(1.64xLb) =	15348+(161xLb) =
14	139.09+(1.71xLb) =	15348+(161xLb) =
15	170.28+(1.86xLb) =	20987+(198.6xLb) =
16	176.52+(1.93xLb) =	20987+(198.6xLb) =

*Concrete quantities computed using 21" beam depth on ½" pad & Variable Bridge Width

ABUTMENT SKEW CORRECTION FACTOR (SCF) = 1.221

NUMBER OF BARS TO ADD (Nb) = Bridge Width (feet) x SCF (round up to nearest whole number)

LENGTH OF ABUTMENT TO ADD (Lb) = Bridge Width (feet) x SCF (convert decimal to architectural)

GENERAL NOTES

SPECIFICATIONS: Construct abutments according to the current edition of the Kentucky Department of Highways Standard Specifications for Road and Bridge Construction. Abutments are designed for side by side box beams as detailed in Standard Drawings BDP-001 through BDP-012, current edition. Dimensions may be adjusted to allow for any out to out bridge width. Abutments are also adequate for Std. Dwg. slabs or steel beam superstructures.

FOUNDATION PRESSURE: Construct abutment footings on solid rock bearing material that can support a pressure of 8000 psf service or 10,800 psf strength factored as recommended by a geotechnical engineer.

WING LENGTHS: Calculated assuming 21" superstructure depth and stream bank elevation at top of footing.

FOOTING ELEVATION: Construct bottom of footing below the anticipated scour elevation. (This typically entails embedding the footings 1'-0" to 2'-0" into rock and pouring concrete directly against cut rock faces. as recommended by geotechnical engineer.)

NOTE: Distances to bars shown are clear dimensions unless otherwise noted.

MATERIAL SPECIFICATIONS:
Concrete, Class "A" = 3500 psi
Steel Reinforcement = Grade 60

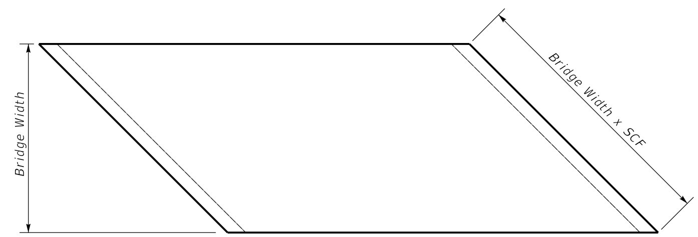

PLAN OF SUPERSTRUCTURE SLAB

KENTUCKY
DEPARTMENT OF HIGHWAYS

35° SKEW VARIABLE WIDTH ABUTMENT PARALLEL WINGS

STANDARD DRAWING NO. BSA-056

SUBMITTED ______ DIRECTOR DIVISION OF STRUCTURAL DESIGN 02-26-20 DATE

APPROVED ______ STATE HIGHWAY ENGINEER 02-26-20 DATE

40° SKEW VARIABLE BRIDGE WIDTH 2:1 FILL SLOPES WINGS PARALLEL TO ROADWAY

ABUTMENT SKEW CORRECTION FACTOR (SCF) = 1.305

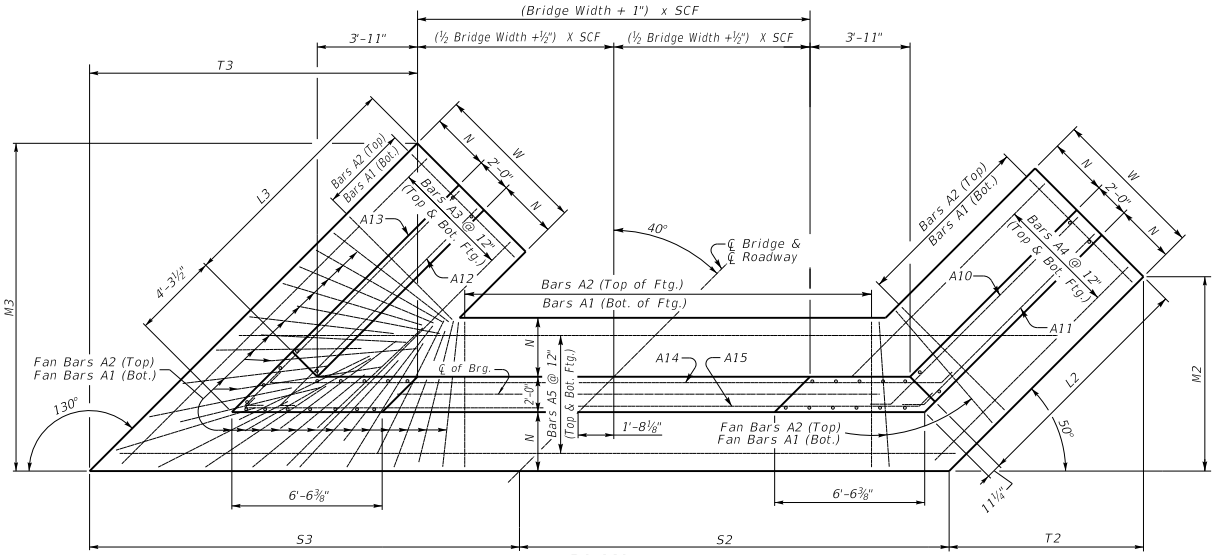

(Left Skew as shown;right skew opp. hand)

PLAN

NOTE: Trim A16 & A17 bars if necessary
Trim A3 bars as necessary

For fanning A1 & A2 bars with an acute angle, space @ 12" at face of toe, then as you get closer to the corner start pulling every other bar back toward the heel. (Similar to as shown)

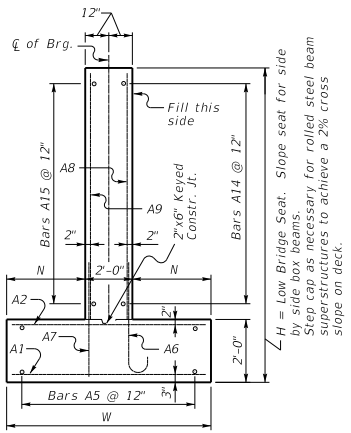

WALL SECTION

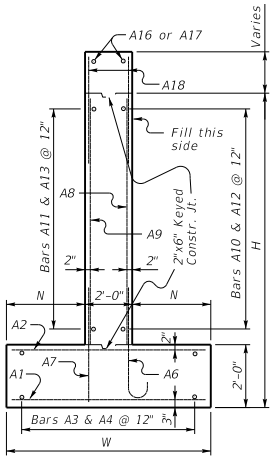

WING SECTION

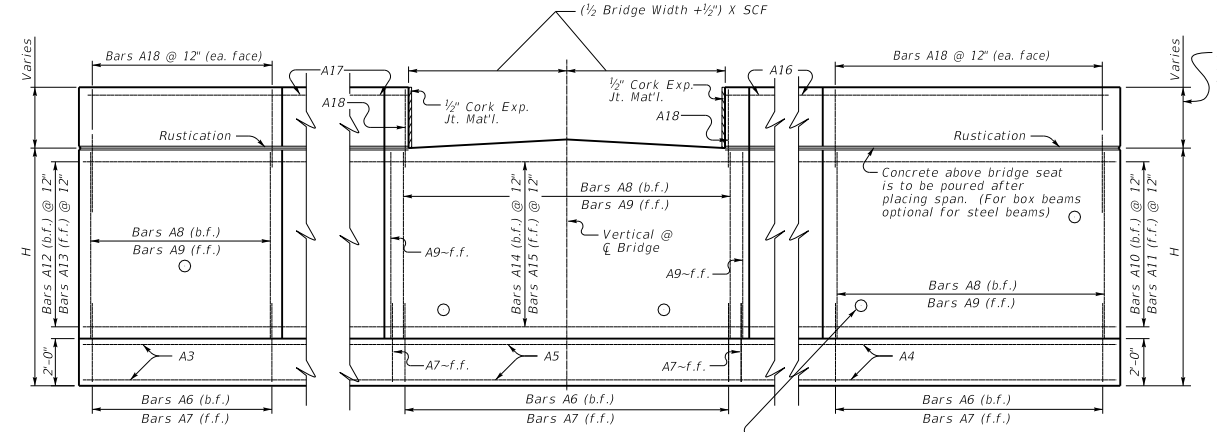

ELEVATION

Place 4" weep hole drains at 8'-0" centers at such elevation as to afford best drainage of backfill, in accordance with the Standard Specifications.

Depth of int. beam, bearing pad, haunch, and slab when req.

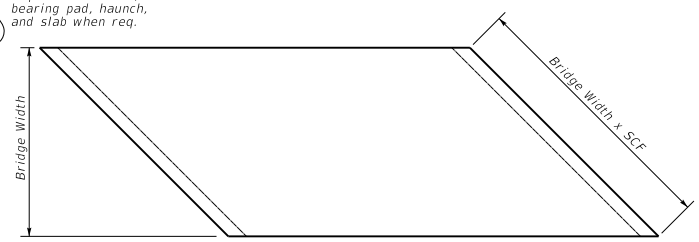

PLAN OF SUPERSTRUCTURE SLAB

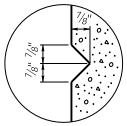

RUSTICATION GROOVE

KENTUCKY
DEPARTMENT OF HIGHWAYS

40° SKEW VARIABLE WIDTH ABUTMENT PARALLEL WINGS

STANDARD DRAWING NO. BSA-057

SUBMITTED _____ DIRECTOR DIVISION OF STRUCTURAL DESIGN — DATE 02-26-20

APPROVED _____ STATE HIGHWAY ENGINEER — DATE 02-26-20

40° SKEW VARIABLE BRIDGE WIDTH 2:1 FILL SLOPES WINGS PARALLEL TO ROADWAY

Bill of Reinforcement

MARK	A1					A2					A3			A4			A5					
TYPE	Str.					Str.					Str.			Str.			Str.					
SIZE											#5			#5			#5					
H	No.	Size	Length ft.	Length in.	Spacing	No.	Size	Length ft.	Length in.	Spacing	No.	Length ft.	Length in.	No.	Length ft.	Length in.	No.	Length ft.	Length in.	+Lb =	Length ft.	Length in.
15-16	122+Nb=	10	11	8	12	122+Nb=	7	11	8	12	24	52	3	24	41	3	24	25	0	+Lb=		
13-14	109+Nb=	9	10	8	12	109+Nb=	7	10	8	12	22	46	2	22	36	1	22	23	8	+Lb=		
11-12	97+Nb=	8	9	8	12	97+Nb=	6	9	8	12	20	40	1	20	30	10	20	22	5	+Lb=		
9-10	84+Nb=	7	8	8	12	84+Nb=	5	8	8	12	18	34	0	18	25	7	18	21	1	+Lb=		
7-8	70+Nb=	6	7	2	12	70+Nb=	5	7	2	12	16	27	7	16	20	0	16	19	6	+Lb=		
5-6	58+Nb=	5	6	2	12	58+Nb=	5	6	2	12	14	21	7	14	14	9	14	18	3	+Lb=		

MARK	A6													A7					A8				
TYPE	4													Str.					Str.				
SIZE																							
H	No.	Size	Length ft.	Length in.	Spacing	A ft.	A in.	B ft.	B in.	C ft.	C in.	D ft.	D in.	No.	Size	Length ft.	Length in.	Spacing	No.	Size	Length ft.	Length in.	Spacing
15-16	84+Nb=	9	9	11	12	8	⅛	1	10	0	11¾	8	6	95+Nb=	5	4	11	12	84+Nb=	6	12	10	12
13-14	74+Nb=	8	8	3	12	6	11	1	3	0	8	7	3	85+Nb=	5	4	11	12	74+Nb=	6	10	10	12
11-12	64+Nb=	7	7	1	12	5	10½	1	2	0	7	6	2	75+Nb=	5	4	11	12	64+Nb=	5	8	10	12
9-10	54+Nb=	6	6	1	12	5	1	1	0	0	6	5	4	65+Nb=	5	4	11	12	54+Nb=	5	6	10	12
7-8	44+Nb=	5	5	7	12	4	8½	0	10	0	5	4	11	55+Nb=	5	4	11	12	44+Nb=	5	4	10	12
5-6	34+Nb=	5	5	7	12	4	8½	0	10	0	5	4	11	45+Nb=	5	4	11	12	34+Nb=	5	2	10	12

MARK	A9				A10			A11			A12			A13			A14						A15						A16			A17			A18		
TYPE	Str.				8			8			8			8			7						7						Str.			Str.			Str.		
SIZE	#5				#5			#5			#5			#5			#5						#5						#5			#5			#5		
H	No.	Length ft.	Length in.	Spacing	No.	Length ft.	Length in.	No.	Length ft.	Length in.	No.	Length ft.	Length in.	No.	Length ft.	Length in.	No.	Length ft.	Length in.	+Lb =	Length ft.	Length in.	No.	Length ft.	Length in.	+Lb =	Length ft.	Length in.	No.	Length ft.	Length in.	No.	Length ft.	Length in.	No.	Length ft.	Length in.
15-16	95+Nb=	12	10	12	14	40	10	14	39	9	14	41	0	14	42	8	14	14	1	+Lb=			14	14	1	+Lb=			2	45	5	2	48	9	185	5	9
13-14	85+Nb=	10	10	12	12	35	10	12	34	9	12	35	11	12	37	8	12	14	1	+Lb=			12	14	1	+Lb=			2	40	5	2	43	9	165	5	9
11-12	75+Nb=	8	10	12	10	30	10	10	29	9	10	30	11	10	32	8	10	14	1	+Lb=			10	14	1	+Lb=			2	35	5	2	38	9	145	5	9
9-10	65+Nb=	6	10	12	8	25	11	8	24	9	8	25	11	8	27	8	8	14	1	+Lb=			8	14	1	+Lb=			2	30	5	2	33	9	125	5	9
7-8	55+Nb=	4	10	12	6	20	11	6	19	9	6	20	11	6	22	8	6	14	1	+Lb=			6	14	1	+Lb=			2	25	5	2	28	9	105	5	9
5-6	45+Nb=	2	10	12	4	15	11	4	14	9	4	15	11	4	17	8	4	14	1	+Lb=			4	14	1	+Lb=			2	20	5	2	23	9	85	5	9

Table of Dimensions

H	W Length ft.	W Length in.	N Length ft.	N Length in.	M2 Length ft.	M2 Length in.	M3 Length ft.	M3 Length in.	T2 Length ft.	T2 Length in.	T3 Length ft.	T3 Length in.	L2 Length ft.	L3 Length ft.	S2 Length ft.	S2 Length in.	S2 + Lb/2 =	S2 Length ft.	S2 Length in.	S3 Length ft.	S3 Length in.	S3 + Lb/2 =	S3 Length ft.	S3 Length in.
15-16	12	0	5	0	31	7⅜	40	7¼	26	6¼	34	⅞	38	38	13	1¼	+0.5Lb=			13	1¼	+0.5Lb=		
13-14	11	0	4	6	27	7¼	35	11½	23	1⅞	30	2⅛	33	33	12	5½	+0.5Lb=			12	5½	+0.5Lb=		
11-12	10	0	4	0	23	7⅛	31	3⅝	19	9½	26	3¼	28	28	11	9⅝	+0.5Lb=			11	9⅝	+0.5Lb=		
9-10	9	0	3	6	19	7	26	7⅞	16	5¼	22	4⅜	23	23	11	1¾	+0.5Lb=			11	1¾	+0.5Lb=		
7-8	7	6	2	9	15	5⅞	21	7⅛	12	11⅞	18	1⅜	18	18	10	2	+0.5Lb=			10	2	+0.5Lb=		
5-6	6	6	2	3	11	5¾	16	11¼	9	7½	14	2⅝	13	13	9	6¼	+0.5Lb=			9	6¼	+0.5Lb=		

Reinforcement Details

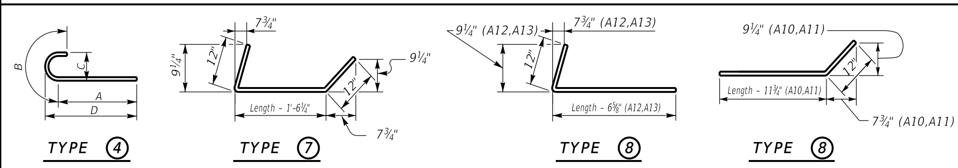

Quantities

H	Concrete* C.Y.	Reinforcement LBS.
5	34.19+(0.71xLb) =	3202+(52.8xLb) =
6	37.09+(0.78xLb) =	3202+(52.8xLb) =
7	53.82+(0.93xLb) =	4894+(68.7xLb) =
8	57.46+(1.01xLb) =	4894+(68.7xLb) =
9	80.09+(1.19xLb) =	7447+(91xLb) =
10	84.47+(1.27xLb) =	7447+(91xLb) =
11	108.97+(1.41xLb) =	11097+(120.4xLb) =
12	114.1+(1.49xLb) =	11097+(120.4xLb) =
13	142.31+(1.64xLb) =	16337+(161xLb) =
14	148.17+(1.71xLb) =	16337+(161xLb) =
15	180.08+(1.86xLb) =	22188+(198.6xLb) =
16	186.69+(1.93xLb) =	22188+(198.6xLb) =

*Concrete quantities computed using 21" beam depth on ½" pad & Variable Bridge Width

ABUTMENT SKEW CORRECTION FACTOR (SCF) = 1.305

NUMBER OF BARS TO ADD (Nb) = Bridge Width (feet) x SCF (round up to nearest whole number)

LENGTH OF ABUTMENT TO ADD (Lb) = Bridge Width (feet) x SCF (convert decimal to architectural)

GENERAL NOTES

SPECIFICATIONS: Construct abutments according to the current edition of the Kentucky Department of Highways Standard Specifications for Road and Bridge Construction. Abutments are designed for side by side box beams as detailed in Standard Drawings BDP-001 through BDP-012, current edition. Dimensions may be adjusted to allow for any out to out bridge width. Abutments are also adequate for Std. Dwg. slabs or steel beam superstructures.

FOUNDATION PRESSURE: Construct abutment footings on solid rock bearing material that can support a pressure of 8000 psf service or 10,800 psf strength factored as recommended by a geotechnical engineer.

WING LENGTHS: Calculated assuming 21" superstructure depth and stream bank elevation at top of footing.

FOOTING ELEVATION: Construct bottom of footing below the anticipated scour elevation. (This typically entails embedding the footings 1'-0" to 2'-0" into rock and pouring concrete directly against cut rock faces. as recommended by geotechnical engineer.)

NOTE: Distances to bars shown are clear dimensions unless otherwise noted.

MATERIAL SPECIFICATIONS:
Concrete, Class "A" = 3500 psi
Steel Reinforcement = Grade 60

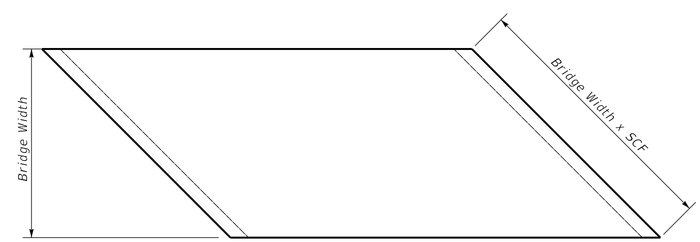

PLAN OF SUPERSTRUCTURE SLAB

KENTUCKY
DEPARTMENT OF HIGHWAYS

40° SKEW VARIABLE WIDTH ABUTMENT PARALLEL WINGS

STANDARD DRAWING NO. BSA-058

SUBMITTED ________ DIRECTOR DIVISION OF STRUCTURAL DESIGN 02-26-20 DATE

APPROVED ________ STATE HIGHWAY ENGINEER 02-26-20 DATE

45° SKEW VARIABLE BRIDGE WIDTH 2:1 FILL SLOPES WINGS PARALLEL TO ROADWAY

ABUTMENT SKEW CORRECTION FACTOR (SCF) = 1.414

For fanning A1 & A2 bars with an acute angle, space @ 12" at face of toe, then as you get closer to the corner start pulling every other bar back toward the heel. (Similar to as shown)

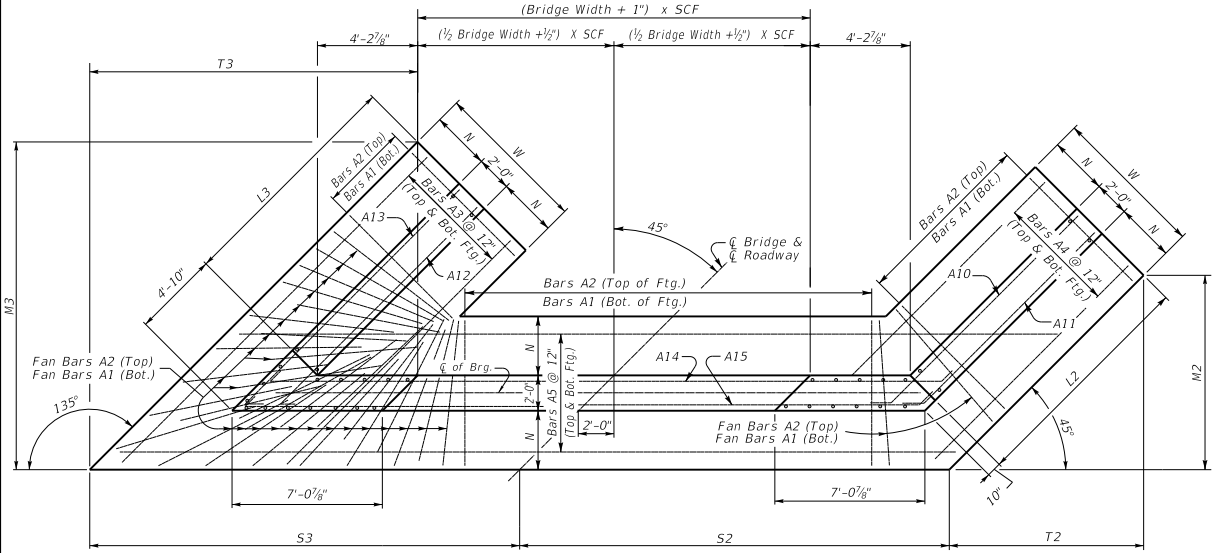

PLAN

(Left Skew as shown;right skew opp. hand)

NOTE: Trim A16 & A17 bars if necessary
Trim A3 bars as necessary

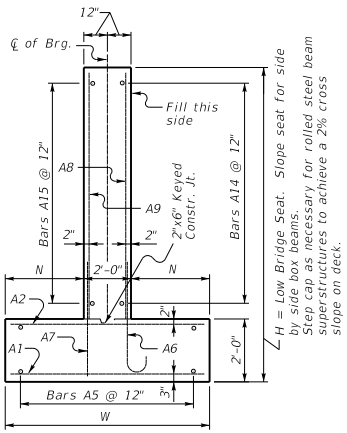

WALL SECTION

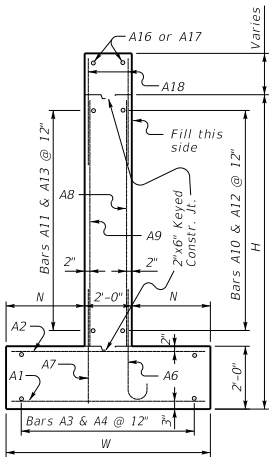

WING SECTION

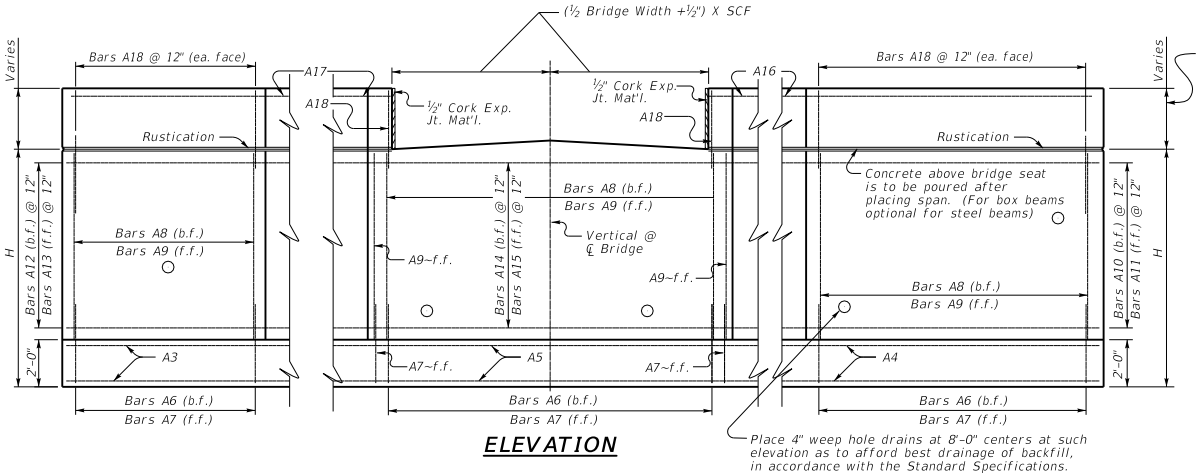

ELEVATION

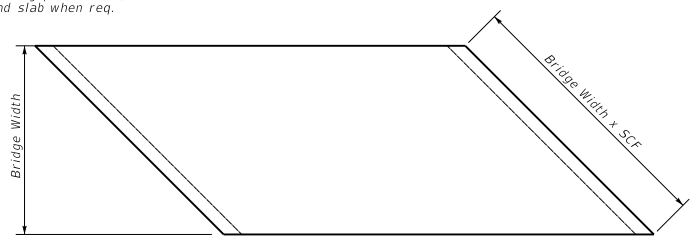

PLAN OF SUPERSTRUCTURE SLAB

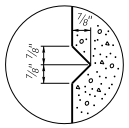

RUSTICATION GROOVE

KENTUCKY
DEPARTMENT OF HIGHWAYS

45° SKEW VARIABLE WIDTH ABUTMENT PARALLEL WINGS

STANDARD DRAWING NO. BSA-059

SUBMITTED _____ DIRECTOR DIVISION OF STRUCTURAL DESIGN — DATE 02-26-20

APPROVED _____ STATE HIGHWAY ENGINEER — DATE 02-26-20

45° SKEW VARIABLE BRIDGE WIDTH 2:1 FILL SLOPES WINGS PARALLEL TO ROADWAY

Bill of Reinforcement

MARK	A1					A2					A3			A4			A5					
TYPE	Str.					Str.					Str.			Str.			Str.					
SIZE											#5			#5			#5					
H	No.	Size	Length ft.	Length in.	Spacing	No.	Size	Length ft.	Length in.	Spacing	No.	Length ft.	Length in.	No.	Length ft.	Length in.	No.	Length ft.	Length in.	+Lb =	Length ft.	Length in.
15-16	131+Nb=	10	11	8	12	131+Nb=	7	11	8	12	24	57	0	24	44	0	24	27	0	+Lb=		
13-14	119+Nb=	9	10	8	12	119+Nb=	7	10	8	12	22	50	10	22	38	9	22	25	7	+Lb=		
11-12	104+Nb=	8	9	8	12	104+Nb=	6	9	8	12	20	43	7	20	32	7	20	24	2	+Lb=		
9-10	91+Nb=	7	8	8	12	91+Nb=	5	8	8	12	18	37	5	18	27	4	18	22	9	+Lb=		
7-8	75+Nb=	6	7	2	12	75+Nb=	5	7	2	12	16	29	10	16	20	9	16	21	1	+Lb=		
5-6	62+Nb=	5	6	2	12	62+Nb=	5	6	2	12	14	23	8	14	15	7	14	19	8	+Lb=		

MARK	A6													A7					A8				
TYPE	4													Str.					Str.				
SIZE																							
H	No.	Size	Length ft.	Length in.	Spacing	A ft.	A in.	B ft.	B in.	C ft.	C in.	D ft.	D in.	No.	Size	Length ft.	Length in.	Spacing	No.	Size	Length ft.	Length in.	Spacing
15-16	91+Nb=	9	9	11	12	8	⅛	1	10	0	11¾	8	6	102+Nb=	5	4	11	12	91+Nb=	6	12	10	12
13-14	81+Nb=	8	8	3	12	6	11	1	3	0	8	7	3	92+Nb=	5	4	11	12	81+Nb=	6	10	10	12
11-12	69+Nb=	7	7	1	12	5	10½	1	2	0	7	6	2	80+Nb=	5	4	11	12	69+Nb=	5	8	10	12
9-10	59+Nb=	6	6	1	12	5	1	1	0	0	6	5	4	70+Nb=	5	4	11	12	59+Nb=	5	6	10	12
7-8	47+Nb=	5	5	7	12	4	8½	0	10	0	5	4	11	58+Nb=	5	4	11	12	47+Nb=	5	4	10	12
5-6	37+Nb=	5	5	7	12	4	8½	0	10	0	5	4	11	48+Nb=	5	4	11	12	37+Nb=	5	2	10	12

MARK	A9				A10			A11			A12			A13			A14						A15						A16			A17			A18		
TYPE	Str.				8			8			8			8			7						7						Str.			Str.			Str.		
SIZE	#5				#5			#5			#5			#5			#5						#5						#5			#5			#5		
H	No.	Length ft.	Length in.	Spacing	No.	Length ft.	Length in.	No.	Length ft.	Length in.	No.	Length ft.	Length in.	No.	Length ft.	Length in.	No.	Length ft.	Length in.	+Lb =	Length ft.	Length in.	No.	Length ft.	Length in.	+Lb =	Length ft.	Length in.	No.	Length ft.	Length in.	No.	Length ft.	Length in.	No.	Length ft.	Length in.
15-16	102+Nb=	12	10	12	14	44	0	14	42	7	14	44	0	14	46	0	14	15	0	+Lb=			14	15	0	+Lb=			2	48	10	2	52	10	200	5	9
13-14	92+Nb=	10	10	12	12	39	0	12	37	7	12	39	0	12	41	0	12	15	0	+Lb=			12	15	0	+Lb=			2	43	10	2	47	10	180	5	9
11-12	80+Nb=	8	10	12	10	33	0	10	31	7	10	33	0	10	35	0	10	15	0	+Lb=			10	15	0	+Lb=			2	37	10	2	41	10	156	5	9
9-10	70+Nb=	6	10	12	8	28	0	8	26	7	8	28	0	8	30	0	8	15	0	+Lb=			8	15	0	+Lb=			2	32	10	2	36	10	136	5	9
7-8	58+Nb=	4	10	12	6	22	0	6	20	7	6	22	0	6	24	0	6	15	0	+Lb=			6	15	0	+Lb=			2	26	10	2	30	10	112	5	9
5-6	48+Nb=	2	10	12	4	17	0	4	15	7	4	17	0	4	19	0	4	15	0	+Lb=			4	15	0	+Lb=			2	21	10	2	25	10	92	5	9

Table of Dimensions

H	W		N		M2		M3		T2		T3		L2	L3	S2					S3				
	Length ft.	Length in.	Length ft.	Length in.	Length ft.	Length in.	Length ft.	Length in.	Length ft.	Length in.	Length ft.	Length in.	Length ft.	Length ft.	Length ft.	Length in.	$+\frac{Lb}{2}=$	Length ft.	Length in.	Length ft.	Length in.	$+\frac{Lb}{2}=$	Length ft.	Length in.
15-16	12	0	5	0	31	½	40	11¼	31	½	40	11¼	41	41	14	2⅜	+0.5Lb=			14	2⅜	+0.5Lb=		
13-14	11	0	4	6	27	4⅜	36	6⅝	27	4⅜	36	6⅝	36	36	13	5⅞	+0.5Lb=			13	5⅞	+0.5Lb=		
11-12	10	0	4	0	22	11⅝	31	5½	22	11⅝	31	5½	30	30	12	9½	+0.5Lb=			12	9½	+0.5Lb=		
9-10	9	0	3	6	19	3½	27	¾	19	3½	27	¾	25	25	12	1	+0.5Lb=			12	1	+0.5Lb=		
7-8	7	6	2	9	14	9⅞	21	6½	14	9⅞	21	6½	19	19	11	¼	+0.5Lb=			11	¼	+0.5Lb=		
5-6	6	6	2	3	11	1¾	17	1⅞	11	1¾	17	1⅞	14	14	10	3¾	+0.5Lb=			10	3¾	+0.5Lb=		

Reinforcement Details

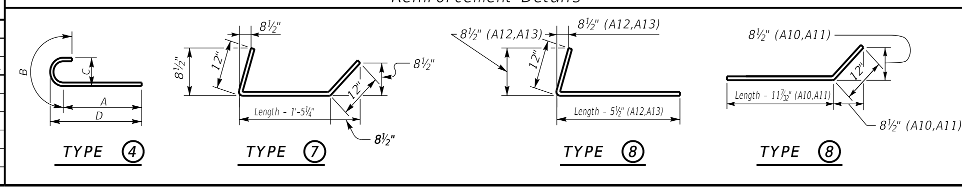

Quantities

H	Concrete* C.Y.	Reinforcement LBS.
5	36.9+(0.71xLb) =	3443+(52.8xLb) =
6	40.03+(0.78xLb) =	3443+(52.8xLb) =
7	57.21+(0.93xLb) =	5214+(68.7xLb) =
8	61.08+(1.01xLb) =	5214+(68.7xLb) =
9	86.98+(1.19xLb) =	8069+(91xLb) =
10	91.74+(1.27xLb) =	8069+(91xLb) =
11	117.01+(1.41xLb) =	11902+(120.4xLb) =
12	122.51+(1.49xLb) =	11902+(120.4xLb) =
13	155.06+(1.64xLb) =	17799+(161xLb) =
14	161.45+(1.71xLb) =	17799+(161xLb) =
15	194.42+(1.86xLb) =	23895+(198.6xLb) =
16	201.55+(1.93xLb) =	23895+(198.6xLb) =

*Concrete quantities computed using 21" beam depth on ½" pad & Variable Bridge Width

ABUTMENT SKEW CORRECTION FACTOR (SCF) = 1.414

NUMBER OF BARS TO ADD (Nb) = Bridge Width (feet) x SCF (round up to nearest whole number)

LENGTH OF ABUTMENT TO ADD (Lb) = Bridge Width (feet) x SCF (convert decimal to architectural)

GENERAL NOTES

SPECIFICATIONS: Construct abutments according to the current edition of the Kentucky Department of Highways Standard Specifications for Road and Bridge Construction. Abutments are designed for side by side box beams as detailed in Standard Drawings BDP-001 through BDP-012, current edition. Dimensions may be adjusted to allow for any out to out bridge width. Abutments are also adequate for Std. Dwg. slabs or steel beam superstructures.

FOUNDATION PRESSURE: Construct abutment footings on solid rock bearing material that can support a pressure of 8000 psf service or 10,800 psf strength factored as recommended by a geotechnical engineer.

WING LENGTHS: Calculated assuming 21" superstructure depth and stream bank elevation at top of footing.

FOOTING ELEVATION: Construct bottom of footing below the anticipated scour elevation. (This typically entails embedding the footings 1'-0" to 2'-0" into rock and pouring concrete directly against cut rock faces. as recommended by geotechnical engineer.)

NOTE: Distances to bars shown are clear dimensions unless otherwise noted.

MATERIAL SPECIFICATIONS:
Concrete, Class "A" = 3500 psi
Steel Reinforcement = Grade 60

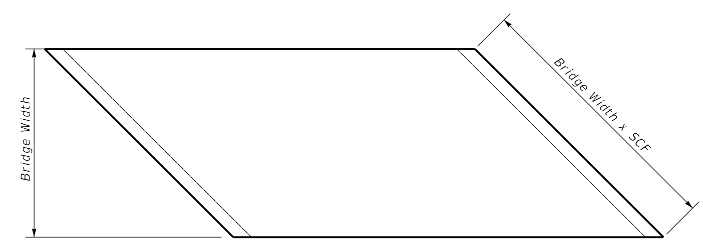

PLAN OF SUPERSTRUCTURE SLAB

KENTUCKY
DEPARTMENT OF HIGHWAYS

45° SKEW VARIABLE WIDTH ABUTMENT PARALLEL WINGS

STANDARD DRAWING NO. BSA-060

SUBMITTED ________ DIRECTOR DIVISION OF STRUCTURAL DESIGN 02-26-20 DATE

APPROVED ________ STATE HIGHWAY ENGINEER 02-26-20 DATE

0° SKEW 16'-0" - 17'-6" BRIDGE WIDTH 2:1 FILL SLOPES

Bill of Reinforcement

MARK	A1	A2	A3	A4	A5	A6	A7	A8	A9	A10	A11	A12	A13	A14	A15	A16	A17	A18
TYPE	Str.	Str.	Str.	Str.	Str.	4	Str.	Str.	Str.	8	8	8	8	7	7	Str.	Str.	Str.
SIZE			#5	#5	#5				#5	#5	#5	#5	#5	#5	#5	#5	#5	#5

H	A1 No.	A1 Size	A1 Length ft.	A1 Length in.	A1 Spacing	A2 No.	A2 Size	A2 Length ft.	A2 Length in.	A2 Spacing	A3 No.	A3 Length ft.	A3 Length in.	A4 No.	A4 Length ft.	A4 Length in.	A5 No.	A5 Length ft.	A5 Length in.
15-16	68	10	11	8	12	68	7	11	8	12	24	24	0	24	24	0	24	29	10
13-14	64	9	10	8	12	64	7	10	8	12	22	20	9	22	20	9	22	29	5
11-12	61	8	9	8	12	61	6	9	8	12	20	18	7	20	18	7	20	29	0
9-10	57	7	8	8	12	57	5	8	8	12	18	16	4	18	16	4	18	28	7
7-8	50	6	7	2	12	50	5	7	2	12	16	11	9	16	11	9	16	27	6
5-6	48	5	6	2	12	48	5	6	2	12	14	9	7	14	9	7	14	27	1

H	A6 No.	A6 Size	A6 Length ft.	A6 Length in.	A6 Spacing	A6 A ft.	A6 A in.	A6 B ft.	A6 B in.	A6 C ft.	A6 C in.	A6 D ft.	A6 D in.	A7 No.	A7 Length ft.	A7 Length in.	A7 Spacing	A8 No.	A8 Length ft.	A8 Length in.	A8 Spacing
15-16	66	9	9	11	12	8	⅛	1	10	0	11¾	8	6	69	5	4	11	12	66	6	12
13-14	60	8	8	3	12	6	11	1	3	0	8	7	3	63	5	4	11	12	60	6	10
11-12	56	7	7	1	12	5	10½	1	2	0	7	6	2	59	5	4	11	12	56	5	8
9-10	52	6	6	1	12	5	1	1	0	0	6	5	4	55	5	4	11	12	52	5	6
7-8	44	5	5	7	12	4	8½	0	10	0	5	4	11	47	5	4	11	12	44	5	4
5-6	40	5	5	7	12	4	8½	0	10	0	5	4	11	43	5	4	11	12	40	5	2

H	A9 No.	A9 Length ft.	A9 Length in.	A9 Spacing	A10 No.	A10 Length ft.	A10 Length in.	A11 No.	A11 Length ft.	A11 Length in.	A12 No.	A12 Length ft.	A12 Length in.	A13 No.	A13 Length ft.	A13 Length in.	A14 No.	A14 Length ft.	A14 Length in.	A15 No.	A15 Length ft.	A15 Length in.	A16 No.	A16 Length ft.	A16 Length in.	A17 No.	A17 Length ft.	A17 Length in.	A18 No.	A18 Length ft.	A18 Length in.
15-16	69	12	10	12	14	24	0	14	22	7	14	24	0	14	22	7	14	29	11	14	27	0	2	26	4	2	26	4	108	5	9
13-14	63	10	10	12	12	21	0	12	19	7	12	21	0	12	19	7	12	29	11	12	27	0	2	23	4	2	23	4	96	5	9
11-12	59	8	10	12	10	19	0	10	17	7	10	19	0	10	17	7	10	29	11	10	27	0	2	21	4	2	21	4	88	5	9
9-10	55	6	10	12	8	17	0	8	15	7	8	17	0	8	15	7	8	30	0	8	27	0	2	19	4	2	19	4	80	5	9
7-8	47	4	10	12	6	13	0	6	11	7	6	13	0	6	11	7	6	30	0	6	27	0	2	15	4	2	15	4	64	5	9
5-6	43	2	10	12	4	11	0	4	9	7	4	11	0	4	9	7	4	30	0	4	27	0	2	13	4	2	13	4	56	5	9

Reinforcement Details

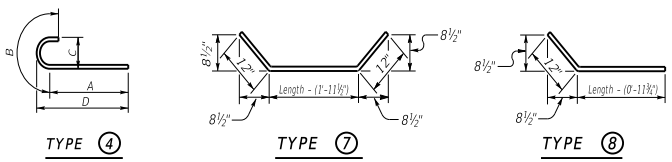

Table of Dimensions

H	W Length ft.	W Length in.	N Length ft.	N Length in.	M1 Length ft.	M1 Length in.	S1 Length ft.	S1 Length in.	T1 Length ft.	T1 Length in.	L1 Length ft.
15-16	12	0	5	0	16	10¾	14	8½	16	10¾	21
13-14	11	0	4	6	14	7⅝	14	5⅞	14	7⅝	18
11-12	10	0	4	0	13	⅞	14	3⅜	13	¾	16
9-10	9	0	3	6	11	6⅛	14	⅞	11	6⅛	14
7-8	7	6	2	9	8	5½	13	9⅝	8	5½	10
5-6	6	6	2	3	6	10⅞	13	6⅝	6	10⅞	8

4 foot min. shoulder

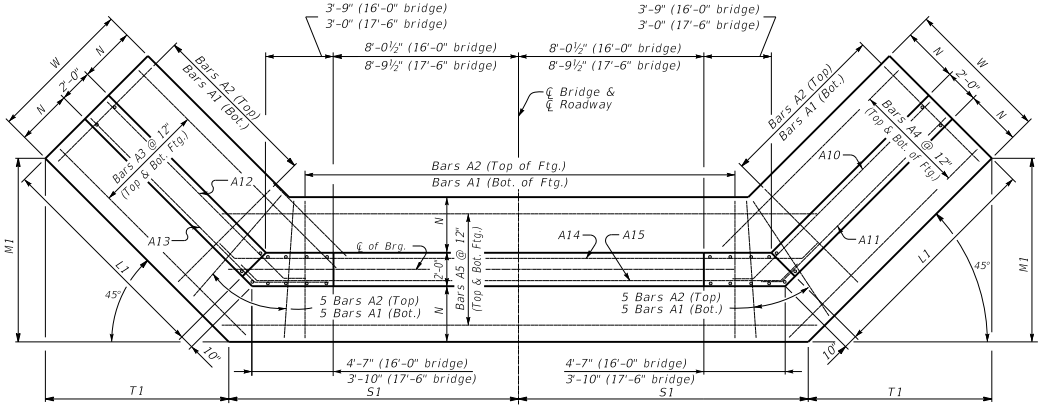

PLAN

NOTE: Trim A16 & A17 bars if necessary

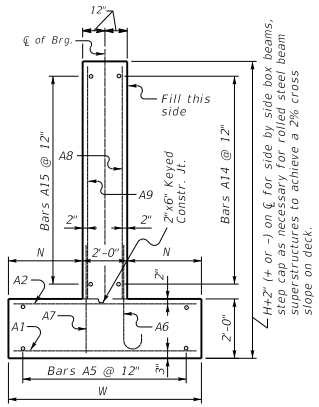

WALL SECTION

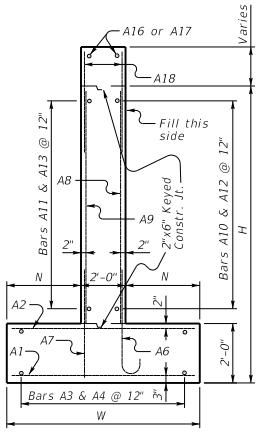

WING SECTION

Quantities

H	Concrete* C.Y.	Reinforcement LBS.
5	32.3	2801
6	35.3	2801
7	45.5	3843
8	48.9	3843
9	67.6	5792
10	71.5	5792
11	85.4	8010
12	89.7	8010
13	105.1	11097
14	109.6	11097
15	130.4	14634
16	135.4	14634

*Concrete quantities computed using 21" beam depth on ½" pad & 16'-0" Bridge Width

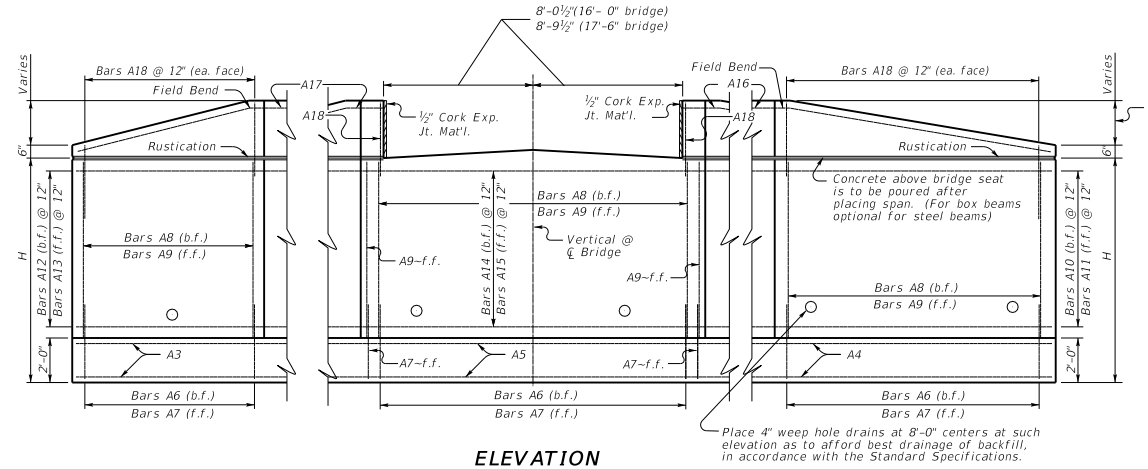

ELEVATION

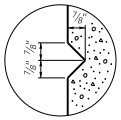

RUSTICATION GROOVE

GENERAL NOTES

SPECIFICATIONS: Construct abutments according to the current edition of the Kentucky Department of Highways Standard Specifications for Road and Bridge Construction. Abutments are designed for side by side box beams as detailed in Standard Drawings BDP-001 through BDP-012, current edition. Dimensions may be adjusted to allow for 17'-6" rolled steel beam bridge width.

FOUNDATION PRESSURE: Construct abutment footings on solid rock bearing material that can support a pressure of 8000 psf service or 10,800 psf strength factored as recommended by a geotechnical engineer.

WING LENGTHS: Calculated assuming 21" superstructure depth and stream bank elevation at top of footing.

FOOTING ELEVATION: Construct bottom of footing below the anticipated scour elevation. (This typically entails embedding the footings 1'-0" to 2'-0" into rock and pouring concrete directly against cut rock faces as recommended by geotechnical engineer.)

NOTE: Distances to bars shown are clear dimensions unless otherwise noted.

MATERIAL SPECIFICATIONS:
Concrete, Class "A" = 3500 psi
Steel Reinforcement = Grade 60

KENTUCKY
DEPARTMENT OF HIGHWAYS

0° SKEW
16'-0"-17'-6" BRIDGE WIDTH
2:1 FILL SLP, 4' MIN. SHLDR.

STANDARD DRAWING NO. BSA-101

SUBMITTED _____ DIRECTOR DIVISION OF STRUCTURAL DESIGN — DATE 02-26-20

APPROVED _____ STATE HIGHWAY ENGINEER — DATE 02-26-20

0° SKEW 24'-0" – 25'-6" BRIDGE WIDTH 2:1 FILL SLOPES

Bill of Reinforcement

MARK	A1				A2				A3	A4	A5	A6								A7				A8				A9				A10		A11		A12		A13		A14		A15		A16		A17		A18	
TYPE	Str.				Str.				Str.	Str.	Str.	4								Str.				Str.				Str.				8		8		8		8		7		7		Str.		Str.		Str.	
SIZE									#5	#5	#5																	#5				#5		#5		#5		#5		#5		#5		#5		#5		#5	
H	No.	Size	Length ft.	Length in.	No.	Size	Length ft.	Length in.	No.	No.	No.	No.	Size	Length ft.	Length in.	A ft.	A in.	B ft.	B in.	C ft.	C in.	D ft.	D in.	No.	Size	Length ft.	Length in.	No.	Size	Length ft.	Length in.	No.	Length ft.	Length in.	No.	Length ft.	Length in.	No.	Length ft.	Length in.	No.	Length ft.	Length in.	No.	Length ft.	Length in.	No.	Length ft.	Length in.	No.	Length ft.	Length in.
15-16	76	10	11	8	12	76	7	11	8	12	24	24	0	24	24	0	24	37	10	74	9	9	11	12	8	⅛	1	10	0	11¾	8	6	77	5	4	11	12	74	6	12	10	12	77	12	10	12	14	24	0	14	22	7	14	24	0	14	22	7	14	37	11	14	35	0	2	26	4	2	26	4	108	5	9
13-14	72	9	10	8	12	72	7	10	8	12	22	20	9	22	20	9	22	37	5	68	8	8	3	12	6	11	1	3	0	8	7	3	71	5	4	11	12	68	6	10	10	12	71	10	10	12	12	21	0	12	19	7	12	21	0	12	19	7	12	37	11	12	35	0	2	23	4	2	23	4	96	5	9
11-12	69	8	9	8	12	69	6	9	8	12	20	18	7	20	18	7	20	37	0	64	7	7	1	12	5	10½	1	2	0	7	6	2	67	5	4	11	12	64	5	8	10	12	67	8	10	12	10	19	0	10	17	7	10	19	0	10	17	7	10	37	11	10	35	0	2	21	4	2	21	4	88	5	9
9-10	65	7	8	8	12	65	5	8	8	12	18	16	4	18	16	4	18	36	7	60	6	6	1	12	5	1	1	0	0	6	5	4	63	5	4	11	12	60	5	6	10	12	63	6	10	12	8	17	0	8	15	7	8	17	0	8	15	7	8	38	0	8	35	0	2	19	4	2	19	4	80	5	9
7-8	58	6	7	2	12	58	5	7	2	12	16	13	9	16	13	9	16	35	6	52	5	5	7	12	4	8½	0	10	0	5	4	11	55	5	4	11	12	52	5	4	10	12	55	4	10	12	6	13	0	6	13	7	6	13	0	6	13	7	6	38	0	6	35	0	2	15	4	2	15	4	64	5	9
5-6	56	5	6	2	12	56	5	6	2	12	14	9	7	14	9	7	14	35	1	48	5	5	7	12	4	8½	0	10	0	5	4	11	51	5	4	11	12	48	5	2	10	12	51	2	10	12	4	11	0	4	9	7	4	11	0	4	9	7	4	38	0	4	35	0	2	13	4	2	13	4	56	5	9

Reinforcement Details

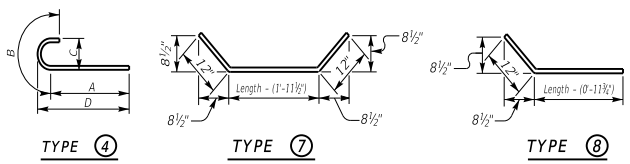

Table of Dimensions

H	W Length ft.	W Length in.	N Length ft.	N Length in.	M1 Length ft.	M1 Length in.	S1 Length ft.	S1 Length in.	T1 Length ft.	T1 Length in.	L1 Length ft.
15-16	12	0	5	0	16	10¾	18	8¼	16	10¾	21
13-14	11	0	4	6	14	7⅞	18	5¾	14	7⅞	18
11-12	10	0	4	0	13	⅞	18	3⅜	13	⅞	16
9-10	9	0	3	6	11	6⅛	18	⅞	11	6⅛	14
7-8	7	6	2	9	8	5½	17	9⅛	8	5½	10
5-6	6	6	2	3	6	10⅞	17	6⅜	6	10⅞	8

4 foot min. shoulder

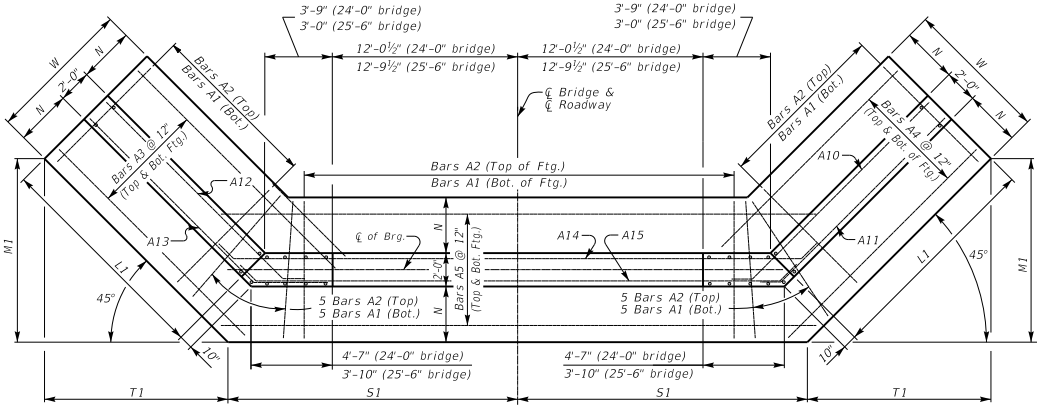

PLAN

NOTE: Trim A16 & A17 bars if necessary

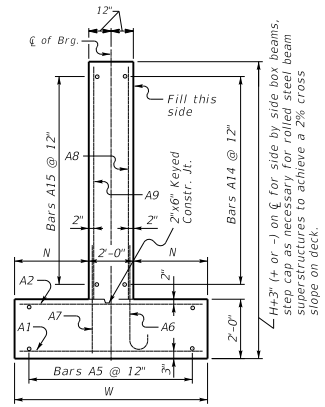

WALL SECTION

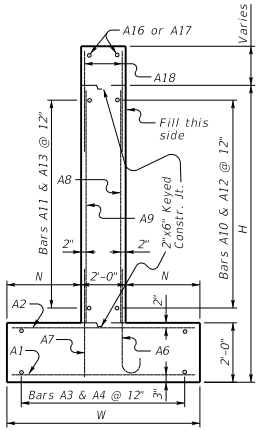

WING SECTION

Quantities

H	Concrete* C.Y.	Reinforcement LBS.
5	38	3223
6	41.7	3223
7	53.1	4392
8	57	4392
9	77.2	6520
10	81.7	6520
11	96.8	8974
12	101.7	8974
13	118.2	12385
14	123.4	12385
15	145.4	16223
16	150.9	16223

*Concrete quantities computed using 21" beam depth on ½" pad & 24'-0" Bridge Width

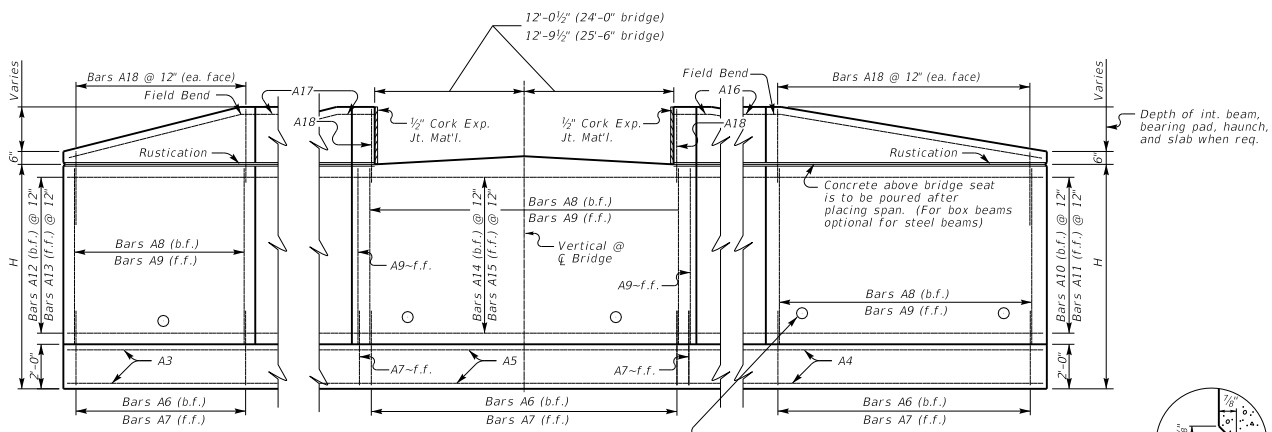

ELEVATION

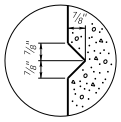

RUSTICATION GROOVE

GENERAL NOTES

SPECIFICATIONS: *Construct abutments according to the current edition of the Kentucky Department of Highways Standard Specifications for Road and Bridge Construction. Abutments are designed for side by side box beams as detailed in Standard Drawings BDP-001 through BDP-012, current edition. Dimensions may be adjusted to allow for 25'-6" rolled steel beam bridge width.*

FOUNDATION PRESSURE: *Construct abutment footings on solid rock bearing material that can support a pressure of 8000 psf service or 10,800 psf strength factored as recommended by a geotechnical engineer.*

WING LENGTHS: *Calculated assuming 21" superstructure depth and stream bank elevation at top of footing.*

FOOTING ELEVATION: *Construct bottom of footing below the anticipated scour elevation. (This typically entails embedding the footings 1'-0" to 2'-0" into rock and pouring concrete directly against cut rock faces as recommended by geotechnical engineer.)*

NOTE: *Distances to bars shown are clear dimensions unless otherwise noted.*

MATERIAL SPECIFICATIONS:
Concrete, Class "A" = 3500 psi
Steel Reinforcement = Grade 60

KENTUCKY
DEPARTMENT OF HIGHWAYS

0° SKEW
24'-0"-25'-6" BRIDGE WIDTH
2:1 FILL SLP, 4' MIN. SHLDR.

STANDARD DRAWING NO. BSA-102

SUBMITTED _____ DIRECTOR DIVISION OF STRUCTURAL DESIGN — DATE 02-26-20

APPROVED _____ STATE HIGHWAY ENGINEER — DATE 02-26-20

0° SKEW 32'-0" - 33'-6" BRIDGE WIDTH 2:1 FILL SLOPES

Bill of Reinforcement

MARK	A1				A2				A3				A4				A5				A6												A7				A8				A9				A10				A11				A12				A13				A14				A15				A16				A17				A18			
TYPE	Str.				Str.				Str.				Str.				Str.				4												Str.				Str.				Str.				8				8				8				8				7				7				Str.				Str.				Str.			
SIZE									#5				#5				#5																								#5				#5				#5				#5				#5				#5				#5				#5				#5			
H	No.	Size	Length ft.	Length in.	No.	Size	Length ft.	Length in.	No.	Size	Length ft.	Length in.	No.	Size	Length ft.	Length in.	No.	Size	Length ft.	Length in.	No.	Size	Length ft.	Length in.	A in.	B in.	C in.	D in.	No.	Size	Length ft.	Length in.	No.	Size	Length ft.	Length in.	No.	Size	Length ft.	Length in.	No.	Size	Length ft.	Length in.	No.	Size	Length ft.	Length in.	No.	Size	Length ft.	Length in.	No.	Size	Length ft.	Length in.	No.	Size	Length ft.	Length in.	No.	Size	Length ft.	Length in.	No.	Size	Length ft.	Length in.	No.	Size	Length ft.	Length in.	No.	Size	Length ft.	Length in.
15-16	84	10	11	8	12	84	7	11	8	12	24	24	0	24	24	0	24	45	10	82	9	9	11	12	8	⅛	1	10	0	1	1⅜	8	6	85	5	4	11	12	85	12	10	12	12	14	24	0	14	22	7	14	24	0	14	22	7	14	45	11	14	43	0	2	26	4	2	26	4	108	5	9
13-14	80	9	10	8	12	80	7	10	8	12	22	20	9	22	20	9	22	45	5	76	8	8	3	12	6	11	1	3	0	8	7	3	79	5	4	11	12	76	6	10	10	12	79	10	10	12	12	21	0	12	19	7	12	21	0	12	19	7	12	45	11	12	43	0	2	23	4	2	23	4	96	5	9
11-12	77	8	9	8	12	77	6	9	8	12	20	18	7	20	18	7	20	45	0	72	7	7	1	12	5	10½	1	2	0	7	6	2	75	5	4	11	12	72	5	8	10	12	75	8	10	12	10	19	0	10	17	7	10	19	0	10	17	7	10	45	11	10	43	0	2	21	4	2	21	4	88	5	9
9-10	73	7	8	8	12	73	5	8	8	12	18	16	4	18	16	4	18	44	7	68	6	6	1	12	5	1	1	0	0	6	5	4	71	5	4	11	12	68	5	6	10	12	71	6	10	12	8	17	0	8	15	7	8	17	0	8	15	7	8	46	0	8	43	0	2	19	4	2	19	4	80	5	9
7-8	66	6	7	2	12	66	5	7	2	12	16	11	9	16	11	9	16	43	6	60	5	5	7	12	4	8½	0	10	0	5	4	11	63	5	4	11	12	60	5	4	10	12	63	4	10	12	6	13	0	6	11	7	6	13	0	6	11	7	6	46	0	6	43	0	2	15	4	2	15	4	64	5	9
5-6	64	5	6	2	12	64	5	6	2	12	14	9	7	14	9	7	14	43	1	56	5	5	7	12	4	8½	0	10	0	5	4	11	59	5	4	11	12	56	5	2	10	12	59	2	10	12	4	11	0	4	9	7	4	11	0	4	9	7	4	46	0	4	43	0	2	13	4	2	13	4	56	5	9

Reinforcement Details

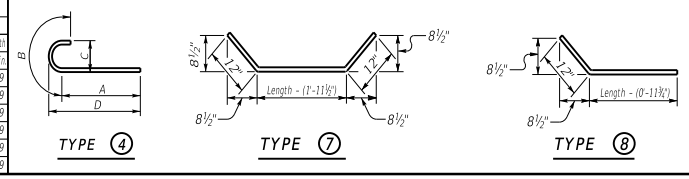

Table of Dimensions

H	W Length ft.	W Length in.	N Length ft.	N Length in.	M1 Length ft.	M1 Length in.	S1 Length ft.	S1 Length in.	T1 Length ft.	T1 Length in.	L1 Length ft.
15-16	12	0	5	0	16	10¾	22	8¼	16	10¾	21
13-14	11	0	4	6	14	7⅝	22	5¾	14	7⅝	18
11-12	10	0	4	0	13	⅞	22	3⅜	13	⅞	16
9-10	9	0	3	6	11	6⅛	22	⅞	11	6⅛	14
7-8	7	6	2	9	8	5½	21	9⅛	8	5½	10
5-6	6	6	2	3	6	10⅞	21	6⅝	6	10⅞	8

4 foot min. shoulder

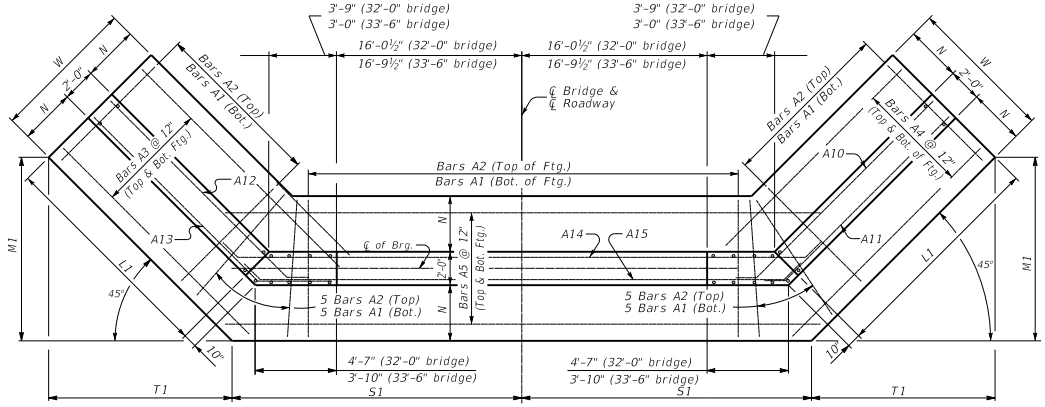

PLAN

Note: Trim A16 & A17 bars if necessary

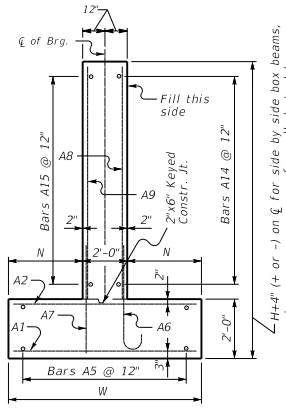

WALL SECTION

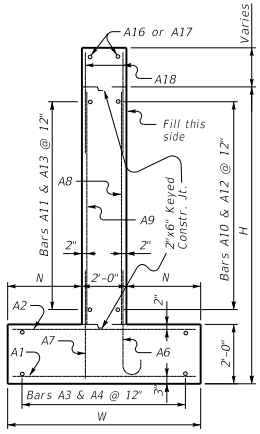

WING SECTION

Quantities

H	Concrete* C.Y.	Reinforcement LBS.
5	43.8	3646
6	48.1	3646
7	60.6	4941
8	65.2	4941
9	86.8	7248
10	91.9	7248
11	108.2	9938
12	113.7	9938
13	131.4	13673
14	137.2	13673
15	160.3	17812
16	166.5	17812

*Concrete quantities computed using 21" beam depth on ½" pad & 32'-0" Bridge Width

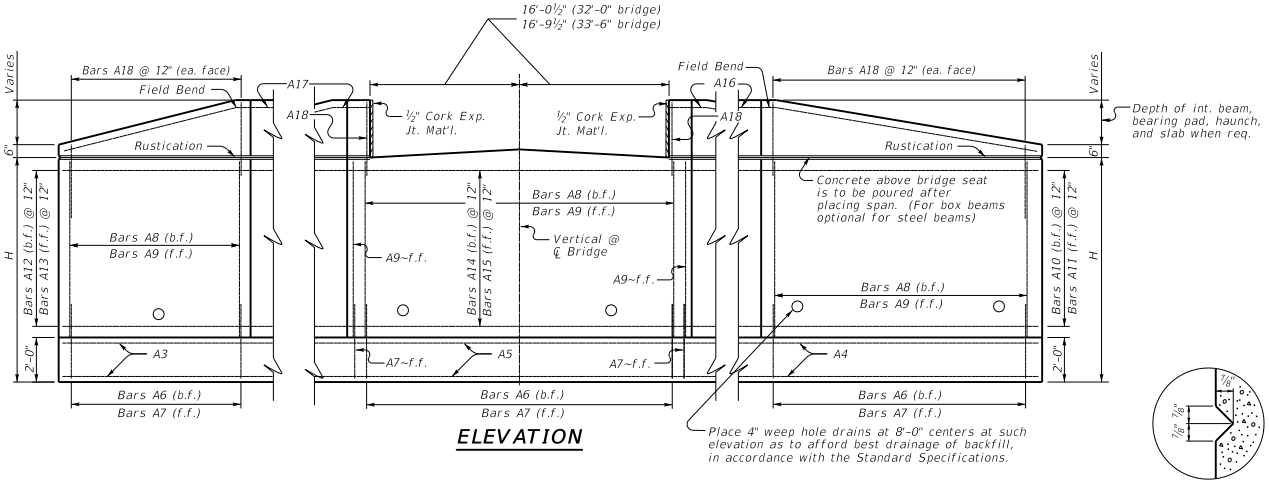

ELEVATION

RUSTICATION GROOVE

GENERAL NOTES

SPECIFICATIONS: Construct abutments according to the current edition of the Kentucky Department of Highways Standard Specifications for Road and Bridge Construction. Abutments are designed for side by side box beams as detailed in Standard Drawings BDP-001 through BDP-012, current edition. Dimensions may be adjusted to allow for 33'-6" rolled steel beam bridge width.

FOUNDATION PRESSURE: Construct abutment footings on solid rock bearing material that can support a pressure of 8000 psf service or 10,800 psf strength factored as recommended by a geotechnical engineer.

WING LENGTHS: Calculated assuming 21" superstructure depth and stream bank elevation at top of footing.

FOOTING ELEVATION: Construct bottom of footing below the anticipated scour elevation. (This typically entails embedding the footings 1'-0" to 2'-0" into rock and pouring concrete directly against cut rock faces as recommended by geotechnical engineer.)

NOTE: Distances to bars shown are clear dimensions unless otherwise noted.

MATERIAL SPECIFICATIONS:
Concrete, Class "A" = 3500 psi
Steel Reinforcement = Grade 60

KENTUCKY
DEPARTMENT OF HIGHWAYS

0° SKEW
32'-0"-33'-6" BRIDGE WIDTH
2:1 FILL SLP, 4' MIN. SHLDR.

STANDARD DRAWING NO. BSA-103

SUBMITTED _____ DIRECTOR DIVISION OF STRUCTURAL DESIGN — DATE 02-26-20

APPROVED _____ STATE HIGHWAY ENGINEER — DATE 02-26-20

15° SKEW 16'-0" – 17'-6" BRIDGE WIDTH 2:1 FILL SLOPES

Bill of Reinforcement

MARK	A1				A2				A3				A4				A5				A6												A7				A8				A9				A10				A11				A12				A13				A14				A15				A16				A17				A18			
TYPE	Str.				Str.				Str.				Str.				Str.				4												Str.				Str.				Str.				8				8				8				8				7				7				Str.				Str.				Str.			
SIZE									#5				#5				#5																								#5				#5				#5				#5				#5				#5				#5				#5				#5			
H	No.	Size	Length Ft.	Length In.	No.	Size	Length Ft.	Length In.	No.	Size	Length Ft.	Length In.	No.	Size	Length Ft.	Length In.	No.	Size	Length Ft.	Length In.	No.	Size	Length Ft.	Length In.	A In.	B Ft.	B In.	C Ft.	C In.	D Ft.	D In.	No.	Size	Length Ft.	Length In.	No.	Size	Length Ft.	Length In.	No.	Size	Length Ft.	Length In.	No.	Size	Length Ft.	Length In.	No.	Size	Length Ft.	Length In.	No.	Size	Length Ft.	Length In.	No.	Size	Length Ft.	Length In.	No.	Size	Length Ft.	Length In.	No.	Size	Length Ft.	Length In.	No.	Size	Length Ft.	Length In.	No.	Size	Length Ft.	Length In.
15-16	70	10	11	8	12	70	7	11	8	12	24	21	5	24	26	7	24	30	7	67	9	9	11	12	8	⅜	1	10	0	1⅞	8	6	70	5	4	11	12	67	6	12	10	12	70	12	10	12	27	4	14	25	6	14	20	10	14	19	9	14	30	10	14	27	10	2	29	8	2	23	3	110	5	9
13-14	65	9	10	8	12	65	7	10	8	12	22	19	2	22	23	5	22	30	2	62	8	8	3	12	6	11	1	3	0	8	7	3	65	5	4	11	12	62	6	10	10	12	65	10	10	12	24	4	12	22	6	12	18	10	12	17	9	12	30	11	12	27	10	2	26	8	2	21	3	100	5	9
11-12	62	8	9	8	12	62	6	9	8	12	20	16	11	20	20	3	20	29	9	57	7	7	1	12	5	10½	1	2	0	7	6	2	60	5	4	11	12	57	5	8	10	12	60	8	10	12	21	4	10	19	6	10	16	10	10	15	9	10	30	11	10	27	10	2	23	8	2	19	3	90	5	9
9-10	56	7	8	8	12	56	5	8	8	12	18	13	8	18	17	1	18	29	4	51	6	6	1	12	5	1	1	0	0	6	5	4	54	5	4	11	12	51	5	6	10	12	54	6	10	12	8	18	4	8	16	6	8	13	10	8	12	9	8	30	11	8	27	10	2	20	8	2	16	3	78	5	9
7-8	52	6	7	2	12	52	5	7	2	12	16	11	2	16	12	6	16	28	4	45	5	5	7	12	4	8½	0	10	0	5	4	11	48	5	4	11	12	45	5	4	10	12	48	4	10	12	6	14	4	6	12	6	6	11	10	6	10	9	6	30	11	6	27	10	2	16	8	2	14	3	66	5	9
5-6	48	5	6	2	12	48	5	6	2	12	14	8	11	14	10	4	14	27	11	41	5	5	7	12	4	8½	0	10	0	5	4	11	44	5	4	11	12	41	5	2	10	12	44	2	10	12	4	12	4	4	10	6	4	9	10	4	8	9	4	30	11	4	27	10	2	14	8	2	12	3	58	5	9

Reinforcement Details

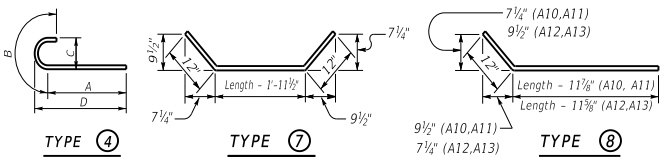

Table of Dimensions

H	W Length Ft.	W Length In.	N Length Ft.	N Length In.	M6 Length Ft.	M6 Length In.	M7 Length Ft.	M7 Length In.	S6 Length Ft.	S6 Length In.	S7 Length Ft.	S7 Length In.	T6 Length Ft.	T6 Length In.	T7 Length Ft.	T7 Length In.	L6 Length Ft.	L6 Length In.	L7 Length Ft.
15-16	12	0	5	0	16	⅜	17	¼	16	5½	13	9⅝	20	1⅛	13	¾	24		18
13-14	11	0	4	6	14	1½	15	2⅞	16	1⅞	13	8	18	4⅛	11	8¼	21		16
11-12	10	0	4	0	12	2⅜	13	5½	15	10½	13	6⅞	15	10⅞	10	3⅛	18		14
9-10	9	0	3	6	10	3½	10	10½	15	6⅝	13	5⅝	13	4⅝	8	4⅛	15		11
7-8	7	6	2	9	7	8⅛	9	0	15	1⅞	13	3⅜	10	⅛	6	10⅞	11		9
5-6	6	6	2	3	6	4½	7	2⅝	14	9½	13	2	8	3⅜	5	6½	9		7

4 foot min. shoulder

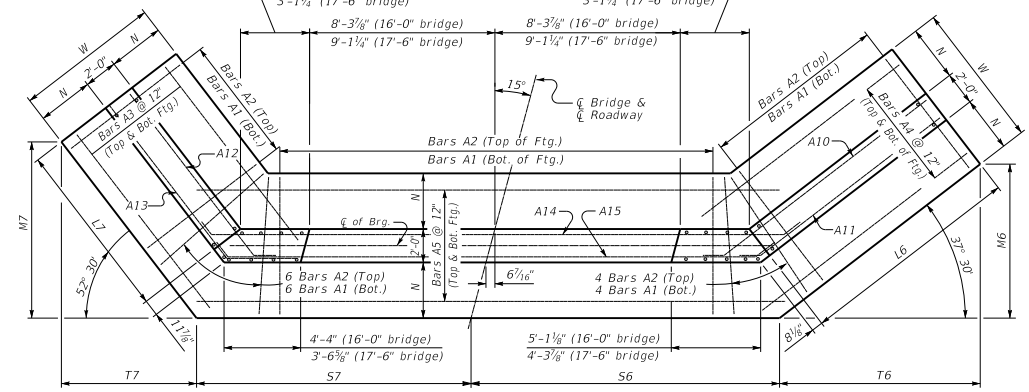

(Left Skew as shown;right skew opp. hand)

PLAN

NOTE: Trim A16 & A17 bars if necessary

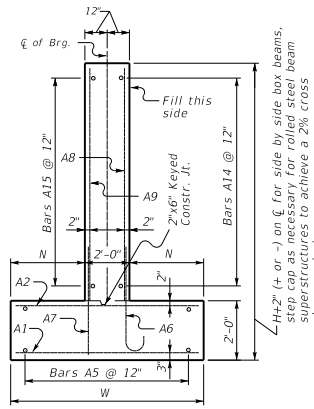

WALL SECTION

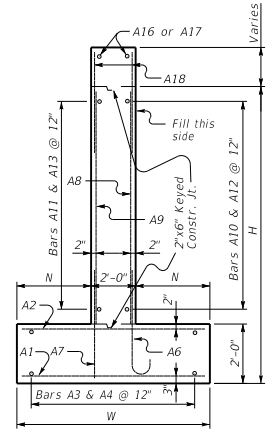

WING SECTION

Quantities		
H	Concrete* C.Y.	Reinforcement LBS.
5	32.9	2852
6	36	2852
7	46.4	3942
8	49.8	3942
9	66	5682
10	69.9	5682
11	86.7	8139
12	91	8139
13	108.2	11385
14	112.9	11385
15	132	14911
16	137.1	14911

*Concrete quantities computed using 21" beam depth on ½" pad & 16'-0" Bridge Width

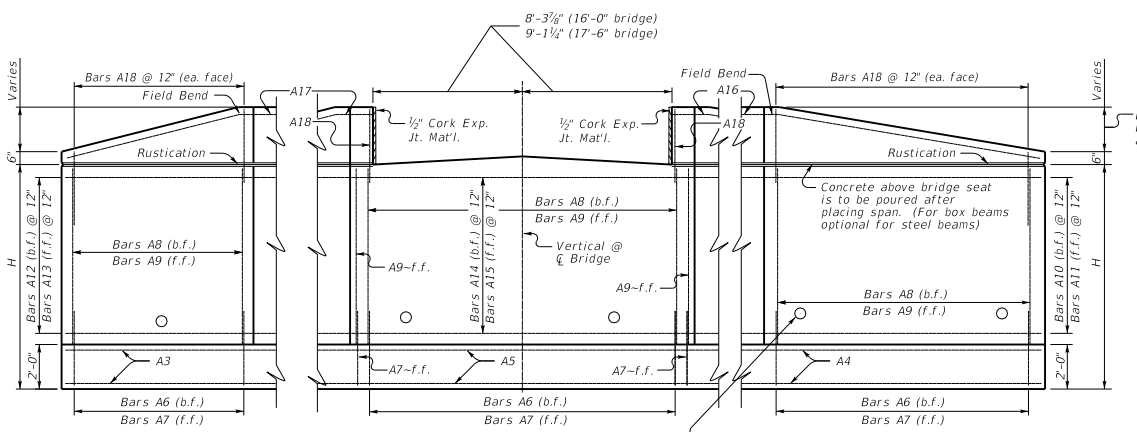

ELEVATION

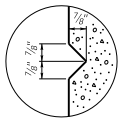

RUSTICATION GROOVE

GENERAL NOTES

SPECIFICATIONS: Construct abutments according to the current edition of the Kentucky Department of Highways Standard Specifications for Road and Bridge Construction. Abutments are designed for side by side box beams as detailed in Standard Drawings BDP-001 through BDP-012, current edition. Dimensions may be adjusted to allow for 17'-6" rolled steel beam bridge width.

FOUNDATION PRESSURE: Construct abutment footings on solid rock bearing material that can support a pressure of 8000 psf service or 10,800 psf strength factored as recommended by a geotechnical engineer.

WING LENGTHS: Calculated assuming 21" superstructure depth and stream bank elevation at top of footing.

FOOTING ELEVATION: Construct bottom of footing below the anticipated scour elevation. (This typically entails embedding the footings 1'-0" to 2'-0" into rock and pouring concrete directly against cut rock faces as recommended by geotechnical engineer.)

NOTE: Distances to bars shown are clear dimensions unless otherwise noted.

MATERIAL SPECIFICATIONS:
Concrete, Class "A" = 3500 psi
Steel Reinforcement = Grade 60

KENTUCKY
DEPARTMENT OF HIGHWAYS

15° SKEW
16'-0"-17'-6" BRIDGE WIDTH
2:1 FILL SLP. 4' MIN. SHLDR.

STANDARD DRAWING NO. BSA-104

SUBMITTED _____ DIRECTOR DIVISION OF STRUCTURAL DESIGN — DATE 02-26-20

APPROVED _____ STATE HIGHWAY ENGINEER — DATE 02-26-20

15° SKEW 24'-0" - 25'-6" BRIDGE WIDTH 2:1 FILL SLOPES

Bill of Reinforcement

MARK	A1				A2				A3			A4			A5			A6										A7				A8				A9				A10				A11				A12				A13				A14				A15				A16				A17				A18			
TYPE	Str.				Str.				Str.			Str.			Str.			4										Str.				Str.				Str.				8				8				8				8				7				7				Str.				Str.				Str.			
SIZE									#5			#5			#5																					#5				#5				#5				#5				#5				#5				#5				#5				#5			
H	No.	Size	Length Ft.	Length In.	No.	Size	Length Ft.	Length In.	No.	Length Ft.	Length In.	No.	Length Ft.	Length In.	No.	Length Ft.	Length In.	No.	Size	Length Ft.	Length In.	Shaping	A In.	B Ft.	C Ft.	D In.	No.	Size	Length Ft.	Length In.	Shaping	No.	Size	Length Ft.	Length In.	No.	Length Ft.	Length In.	No.	Length Ft.	Length In.	No.	Length Ft.	Length In.	No.	Length Ft.	Length In.	No.	Length Ft.	Length In.	No.	Length Ft.	Length In.	No.	Length Ft.	Length In.	No.	Length Ft.	Length In.	No.	Length Ft.	Length In.	No.	Length Ft.	Length In.	No.	Length Ft.	Length In.	No.	Length Ft.	Length In.
15-16	78	10	11	8	12	78	7	11	8	12	24	21	5	24	26	7	24	38	10	75	9	9	11	12	8	⅛	1	10	0	1 13/16	8	6	79	5	4	11	12	75	6	12	10	12	79	12	10	12	14	27	4	14	25	6	14	20	10	14	19	9	14	39	2	14	36	1	2	29	8	2	23	3	1	10	5	9
13-14	73	9	10	8	12	73	7	10	8	12	22	19	2	22	23	5	22	38	5	70	8	8	3	12	6	11	1	3	0	8	7	3	74	5	4	11	12	70	6	10	10	12	74	10	10	12	12	24	4	12	22	6	12	18	10	12	17	9	12	39	2	12	36	1	2	26	8	2	21	3	1	00	5	9
11-12	70	8	9	8	12	70	6	9	8	12	20	16	11	20	20	3	20	38	0	65	7	7	1	12	5	10½	1	2	0	7	6	2	69	5	4	11	12	65	5	8	10	12	69	8	10	10	21	4	10	19	6	10	16	10	10	15	9	10	39	2	10	36	1	2	23	8	2	19	3	90	5	9
9-10	64	7	8	8	12	64	5	8	8	12	18	13	8	18	17	1	18	37	7	59	6	6	1	12	5	1	1	0	0	6	5	4	63	5	4	11	12	59	5	6	10	12	63	6	10	12	8	18	4	8	16	6	8	13	10	8	12	9	8	39	2	8	36	1	2	20	8	2	16	3	78	5	9
7-8	60	6	7	2	12	60	5	7	2	12	16	11	2	16	12	6	16	36	7	53	5	5	7	12	4	8½	0	10	0	5	4	11	57	5	4	11	12	53	5	4	10	12	57	4	10	12	6	14	4	6	12	6	6	11	10	6	10	9	6	39	3	6	36	1	2	16	8	2	14	3	66	5	9
5-6	56	5	6	2	12	56	5	6	2	12	14	8	11	14	10	4	14	36	2	49	5	5	7	12	4	8½	0	10	0	5	4	11	53	5	4	11	12	49	5	2	10	12	53	2	10	12	4	12	4	4	10	6	4	9	10	4	8	9	4	39	3	4	36	1	2	14	8	2	12	3	58	5	9

Reinforcement Details

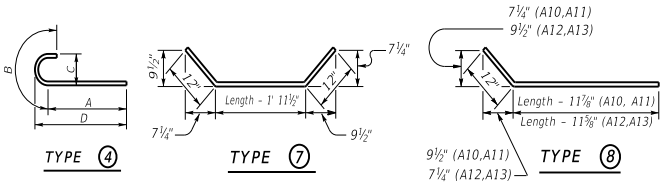

Table of Dimensions

H	W Length Ft.	W Length In.	N Length Ft.	N Length In.	M6 Length Ft.	M6 Length In.	M7 Length Ft.	M7 Length In.	S6 Length Ft.	S6 Length In.	S7 Length Ft.	S7 Length In.	T6 Length Ft.	T6 Length In.	T7 Length Ft.	T7 Length In.	L6 Length Ft.	L6 Length In.	L7 Length Ft.	L7 Length In.
15-16	12	0	5	0	16	⅜	17	¼	20	7¼	17	1¼	20	11¼	13	¾	24	18
13-14	11	0	4	6	14	1½	15	2⅞	20	3½	17	9¾	18	4⅛	11	8⅛	21	16
11-12	10	0	4	0	12	2⅜	13	5½	19	11⅞	17	8⅜	15	10¾	10	3⅛	18	14
9-10	9	0	3	6	10	3½	10	10¾	19	8¼	17	7	13	4⅝	8	4⅛	15	11
7-8	7	6	2	9	7	8⅛	9	0	19	2¾	17	5	10	⅛	6	10⅞	11	9
5-6	6	6	2	3	6	4½	7	2⅝	18	11¼	17	3⅜	8	3⅜	5	6½	9	7

4 foot min. shoulder

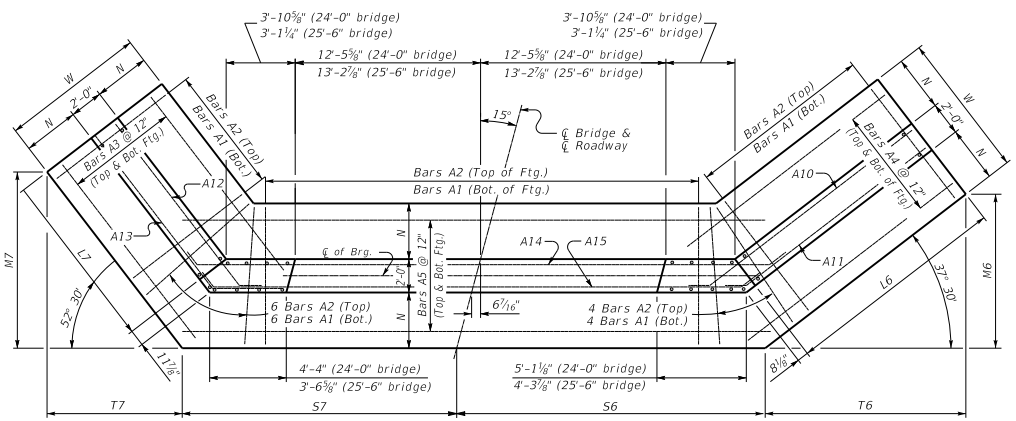

(Left Skew as shown;right skew opp. hand)

PLAN

NOTE: Trim A16 & A17 bars if necessary

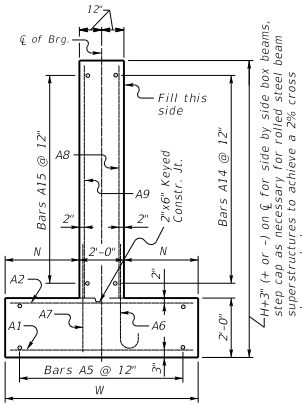

WALL SECTION

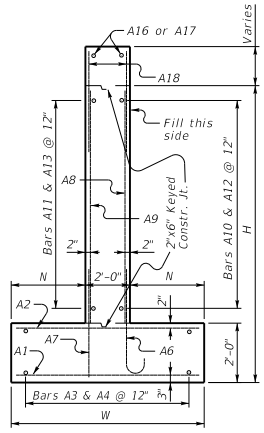

WING SECTION

Quantities		
H	Concrete* C.Y.	Reinforcement LBS.
5	38.9	3289
6	42.6	3289
7	54.2	4510
8	58.2	4510
9	76	6431
10	80.5	6431
11	98.5	9127
12	103.4	9127
13	121.9	12701
14	127.1	12701
15	147.5	16534
16	153.1	16534

*Concrete quantities computed using 21" beam depth on ½" pad & 24'-0" Bridge Width

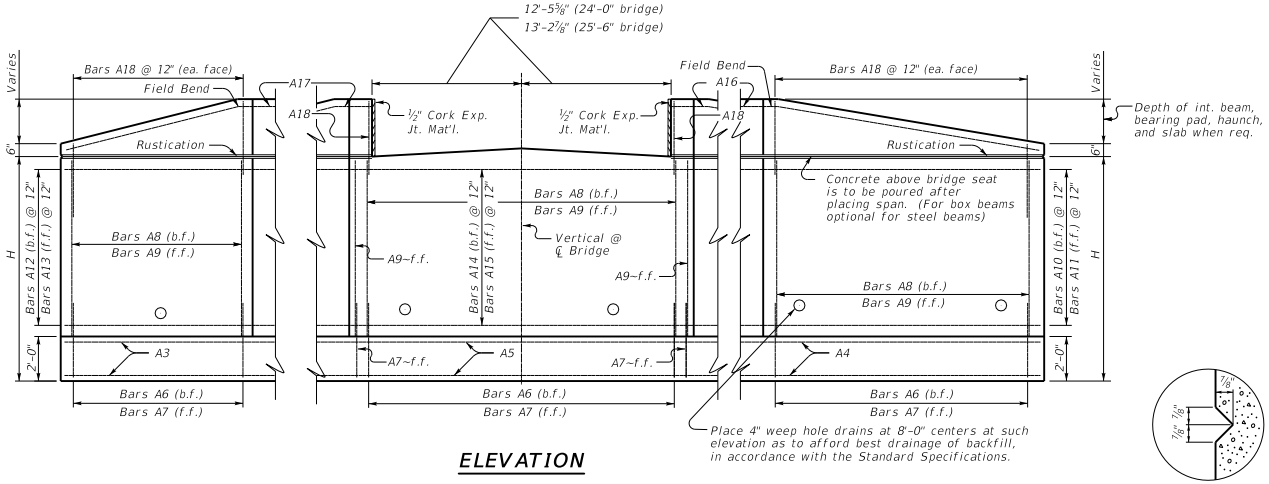

ELEVATION

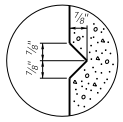

RUSTICATION GROOVE

GENERAL NOTES

SPECIFICATIONS: Construct abutments according to the current edition of the Kentucky Department of Highways Standard Specifications for Road and Bridge Construction. Abutments are designed for side by side box beams as detailed in Standard Drawings BDP-001 through BDP-012, current edition. Dimensions may be adjusted to allow for 25'-6" rolled steel beam bridge width.

FOUNDATION PRESSURE: Construct abutment footings on solid rock bearing material that can support a pressure of 8000 psf service or 10,800 psf strength factored as recommended by a geotechnical engineer.

WING LENGTHS: Calculated assuming 21" superstructure depth and stream bank elevation at top of footing.

FOOTING ELEVATION: Construct bottom of footing below the anticipated scour elevation. (This typically entails embedding the footings 1'-0" to 2'-0" into rock and pouring concrete directly against cut rock faces as recommended by geotechnical engineer.)

NOTE: Distances to bars shown are clear dimensions unless otherwise noted.

MATERIAL SPECIFICATIONS:
Concrete, Class "A" = 3500 psi
Steel Reinforcement = Grade 60

KENTUCKY
DEPARTMENT OF HIGHWAYS

15° SKEW
24'-0"-25'-6" BRIDGE WIDTH
2:1 FILL SLP. 4' MIN. SHLDR.

STANDARD DRAWING NO. BSA-105

SUBMITTED _____ DIRECTOR DIVISION OF STRUCTURAL DESIGN — DATE 02-26-20

APPROVED _____ STATE HIGHWAY ENGINEER — DATE 02-26-20

15° SKEW 32'-0" - 33'-6" BRIDGE WIDTH 2:1 FILL SLOPES

Bill of Reinforcement

MARK	A1				A2				A3			A4			A5			A6										A7				A8				A9				A10			A11			A12			A13			A14			A15			A16			A17			A18		
TYPE	Str.				Str.				Str.			Str.			Str.			4										Str.				Str.				Str.				8			8			8			8			7			7			Str.			Str.			Str.		
SIZE									#5			#5			#5																					#5				#5			#5			#5			#5			#5			#5			#5			#5			#5		
H	No.	Size	Length Ft.	Length In.	No.	Size	Length Ft.	Length In.	No.	Size	Length Ft.	No.	Size	Length Ft.	No.	Size	Length Ft.	No.	Size	Length Ft.	Spacing	A Ft.	A In.	B Ft.	B In.	C Ft.	C In.	D Ft.	D In.	No.	Size	Length Ft.	Length In.	No.	Size	Length Ft.	Length In.	No.	Size	Length Ft.	Length In.	No.	Size	Length Ft.	Length In.	No.	Size	Length Ft.	Length In.	No.	Size	Length Ft.	Length In.	No.	Size	Length Ft.	Length In.	No.	Size	Length Ft.	Length In.	No.	Size	Length Ft.	Length In.	No.	Size	Length Ft.	Length In.
15-16	86	10	11	8	12	86	7	11	8	12	24	21	5	24	26	7	24	47	1	83	9	9	11	12	8	⅞	1	10	0	11⅞	8	6	87	5	4	11	12	83	6	12	10	12	87	12	10	12	14	27	4	14	25	6	14	20	10	14	19	9	14	47	5	14	44	5	2	29	8	2	23	3	110	5	9
13-14	82	9	10	8	12	82	7	10	8	12	22	19	2	22	23	5	22	46	8	78	8	8	3	12	6	11	1	3	0	8	7	3	82	5	4	11	12	78	6	10	10	12	82	10	10	12	12	24	4	12	22	6	12	18	10	12	17	9	12	47	5	12	44	5	2	26	8	2	21	3	100	5	9
11-12	78	8	9	8	12	78	6	9	8	12	20	16	11	20	20	3	20	46	3	73	7	7	1	12	5	10¼	1	2	0	7	6	2	77	5	4	11	12	73	5	8	10	12	77	8	10	10	12	21	4	10	19	6	10	16	10	10	15	9	10	47	6	10	44	5	2	23	8	2	19	3	90	5	9
9-10	73	7	8	8	12	73	5	8	8	12	18	13	8	18	17	1	18	45	10	67	6	6	1	12	5	1	1	0	0	6	5	4	71	5	4	11	12	67	5	6	10	12	71	6	10	12	8	18	4	8	16	6	8	13	10	8	12	9	8	47	6	8	44	5	2	20	8	2	16	3	78	5	9
7-8	68	6	7	2	12	68	5	7	2	12	16	11	2	16	12	6	16	44	10	61	5	5	7	12	4	8½	0	10	0	5	4	11	65	5	4	11	12	61	5	4	10	12	65	4	10	12	6	14	4	6	12	6	6	11	10	6	10	9	6	47	6	6	44	5	2	16	8	2	14	3	66	5	9
5-6	65	5	6	2	12	65	5	6	2	12	14	8	11	14	10	4	14	44	5	57	5	5	7	12	4	8½	0	10	0	5	4	11	61	5	4	11	12	57	5	2	10	12	61	2	10	12	4	12	4	4	10	6	4	9	10	4	8	9	4	47	6	4	44	5	2	14	8	2	12	3	58	5	9

Reinforcement Details

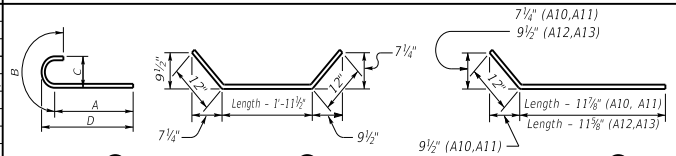

Table of Dimensions

H	W Length Ft.	W Length In.	N Length Ft.	N Length In.	M6 Length Ft.	M6 Length In.	M7 Length Ft.	M7 Length In.	S6 Length Ft.	S6 Length In.	S7 Length Ft.	S7 Length In.	T6 Length Ft.	T6 Length In.	T7 Length Ft.	T7 Length In.	L6 Length Ft.	L6 Length In.	L7 Length Ft.
15-16	12	0	5	0	16	⅜	17	⅞	24	8⅞	22	⅜	20	11⅛	13	¾	24	18	
13-14	11	0	4	6	14	1½	15	2⅞	24	5½	21	11½	18	4⅞	11	8¼	21	16	
11-12	10	0	4	0	12	2⅜	13	5½	24	1⅜	21	10⅝	15	10⅞	10	3⅞	18	14	
9-10	9	0	3	6	10	3½	10	10½	23	10	21	8¾	13	4⅝	8	4⅛	15	11	
7-8	7	6	2	9	7	8⅛	9	0	23	4½	21	6⅜	10	⅛	6	10⅞	11	9	
5-6	6	6	2	3	6	4½	7	2⅝	23	⅞	21	5⅜	8	3⅜	5	6½	9	7	

4 foot min. shoulder

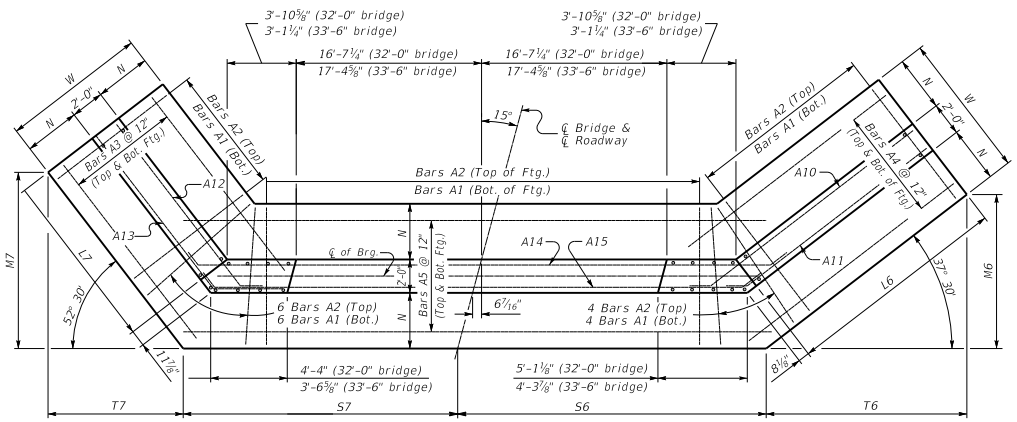

(Left Skew as shown;right skew opp. hand)

PLAN

NOTE: Trim A16 & A17 bars if necessary

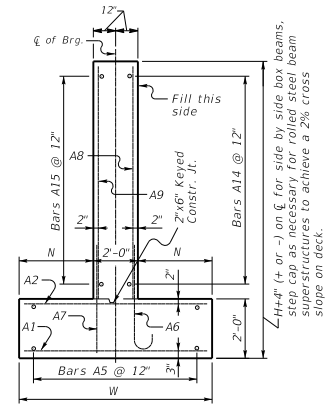

WALL SECTION

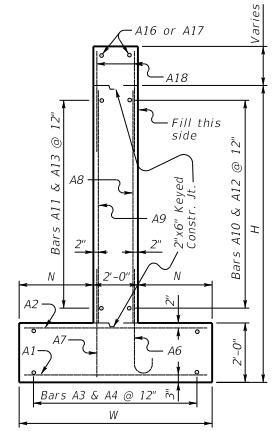

WING SECTION

Quantities		
H	Concrete* C.Y.	Reinforcement LBS.
5	44.9	3731
6	49.2	3731
7	62	5067
8	66.6	5067
9	86	7196
10	91.1	7196
11	110.3	10103
12	115.8	10103
13	135.5	14061
14	141.4	14061
15	163	18138
16	169.3	18138

*Concrete quantities computed using 21" beam depth on ½" pad & 32'-0" Bridge Width

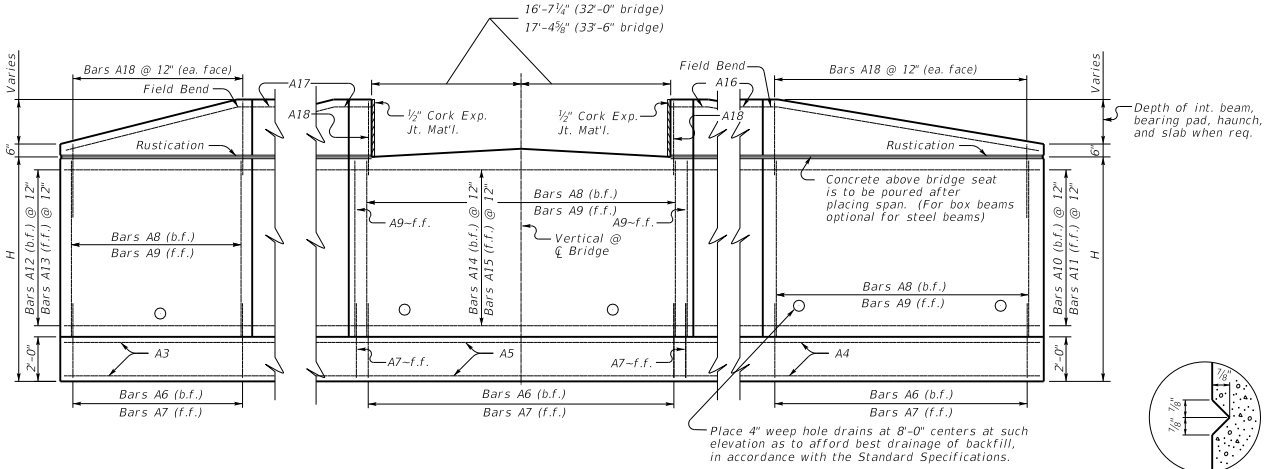

ELEVATION

RUSTICATION GROOVE

GENERAL NOTES

SPECIFICATIONS: *Construct abutments according to the current edition of the Kentucky Department of Highways Standard Specifications for Road and Bridge Construction. Abutments are designed for side by side box beams as detailed in Standard Drawings BDP-001 through BDP-012, current edition. Dimensions may be adjusted to allow for 33'-6" rolled steel beam bridge width.*

FOUNDATION PRESSURE: *Construct abutment footings on solid rock bearing material that can support a pressure of 8000 psf service or 10,800 psf strength factored as recommended by a geotechnical engineer.*

WING LENGTHS: *Calculated assuming 21" superstructure depth and stream bank elevation at top of footing.*

FOOTING ELEVATION: *Construct bottom of footing below the anticipated scour elevation. (This typically entails embedding the footings 1'-0" to 2'-0" into rock and pouring concrete directly against cut rock faces as recommended by geotechnical engineer.)*

NOTE: *Distances to bars shown are clear dimensions unless otherwise noted.*

MATERIAL SPECIFICATIONS:
Concrete, Class "A" = 3500 psi
Steel Reinforcement = Grade 60

KENTUCKY
DEPARTMENT OF HIGHWAYS

15° SKEW
32'-0"-33'-6" NRIDGE WIDTH
2:1 FILL SLP. 4' MIN. SHLDR.

STANDARD DRAWING NO. BSA-106

SUBMITTED _____ DIRECTOR DIVISION OF STRUCTURAL DESIGN — DATE 02-26-20

APPROVED _____ STATE HIGHWAY ENGINEER — DATE 02-26-20

30° SKEW 16'-0" – 17'-6" BRIDGE WIDTH 2:1 FILL SLOPES

Bill of Reinforcement

MARK	A1			A2			A3			A4			A5			A6									A7			A8			A9			A10			A11			A12			A13			A14			A15			A16			A17			A18		
TYPE	Str.			Str.			Str.			Str.			Str.			4									Str.			Str.			Str.			8			8			8			8			7			7			Str.			Str.			Str.		
SIZE							#5			#5			#5																		#5			#5			#5			#5			#5			#5			#5			#5			#5			#5		
H	No.	Size	Length ft.	in.	No.	Size	Length ft.	in.	Spacing	No.	Size	Length ft.	in.	Spacing	No.	Size	Length ft.	in.	Spacing	A ft.	in.	B ft.	in.	C ft.	in.	D ft.	in.	No.	Size	Length ft.	in.	Spacing	No.	Size	Length ft.	in.	Spacing	No.	Size	Length ft.	in.	Spacing	No.	Size	Length ft.	in.	Spacing	No.	Size	Length ft.	in.	Spacing	No.	Size	Length ft.	in.	Spacing	No.	Size	Length ft.	in.	Spacing
15–16	77	10	11	8	12	77	7	11	8	12	24	20	11	24	31	2	24	33	4	74	9	9	11	12	8	⅛	1	10	0	11⅜	8	6	77	5	4	11	12	74	6	12	10	12	77	12	10	12	4	32	10	14	30	4	14	19	8	14	18	11	14	34	1	14	30	8	2	35	6	2	22	5	121	5	9
13–14	70	9	10	8	12	70	7	10	8	12	22	17	8	22	27	1	22	32	11	67	8	8	3	12	6	11	1	3	0	8	7	3	70	5	4	11	12	67	6	10	10	12	70	10	10	12	24	10	10	22	4	10	14	8	10	13	11	10	34	1	10	30	8	2	31	6	2	19	5	107	5	9
11–12	64	8	9	8	12	64	6	9	8	12	20	15	5	20	22	11	20	32	6	61	7	7	1	12	5	10½	1	2	0	7	6	2	64	5	4	11	12	61	5	8	10	12	64	8	10	12	10	24	10	10	22	4	10	14	8	10	13	11	10	34	1	10	30	8	2	27	6	2	17	5	95	5	9
9–10	61	7	8	8	12	61	5	8	8	12	18	13	1	18	19	10	18	32	1	56	6	6	1	12	5	1	1	0	0	6	5	4	59	5	4	11	12	56	5	6	10	12	59	6	10	12	8	21	10	8	19	4	8	12	8	8	11	11	8	34	1	8	30	8	2	24	6	2	15	5	85	5	9
7–8	55	6	7	2	12	55	5	7	2	12	16	10	6	16	14	2	16	31	1	49	5	5	7	12	4	8½	0	10	0	5	4	11	52	5	4	11	12	49	5	4	10	12	52	4	10	12	6	16	11	6	14	4	6	10	8	6	9	11	6	34	2	6	30	8	2	19	6	2	13	5	71	5	9
5–6	51	5	6	2	12	51	5	6	2	12	14	8	3	14	11	0	14	30	8	44	5	5	7	12	4	8½	0	10	0	5	4	11	47	5	4	11	12	44	5	2	10	12	47	2	10	12	4	13	11	4	11	4	4	8	8	4	7	11	4	34	2	4	30	8	2	16	6	2	11	5	61	5	9

Reinforcement Details

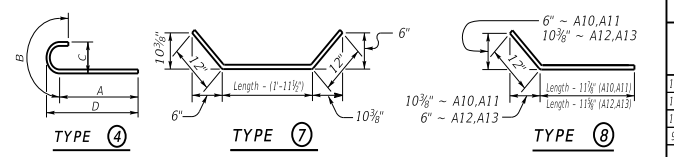

Table of Dimensions

H	W Length ft.	in.	N Length ft.	in.	M2 Length ft.	in.	M3 Length ft.	in.	S2 Length ft.	in.	S3 Length ft.	in.	T2 Length ft.	in.	T3 Length ft.	in.	L2 Length ft.	L3 Length ft.
15–16	12	0	5	0	15	5¼	18	2⅝	19	6⅜	13	7⅜	26	8⅞	10	6¼	29	17
13–14	11	0	4	6	13	4½	15	4½	19	7⅜	13	7⅜	23	7⅞	8	10½	25	14
11–12	10	0	4	0	11	3⅝	13	4⅜	18	8⅜	13	7⅜	19	7	7	8¾	21	12
9–10	9	0	3	6	9	8⅞	11	4⅞	18	3⅜	13	7⅜	16	10⅜	6	7	18	10
7–8	7	6	2	9	7	1⅞	9	3⅝	17	7⅜	13	7⅜	12	4⅝	5	4½	13	8
5–6	6	6	2	3	5	6⅞	7	3⅞	17	2½	13	7⅜	9	7¾	4	2¾	10	6

4 foot min. shoulder

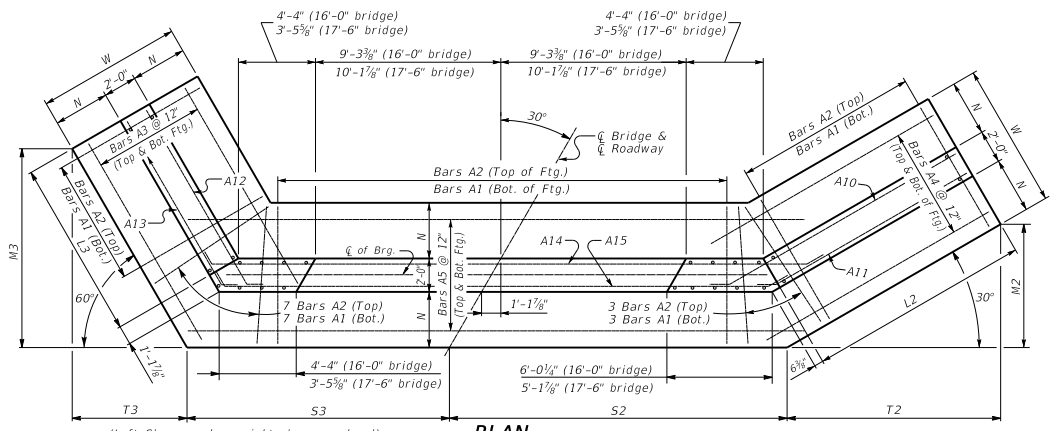

(Left Skew as shown;right skew opp. hand)

PLAN

NOTE: Trim A16 & A17 bars if necessary

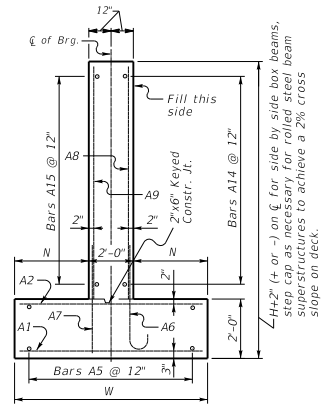

WALL SECTION

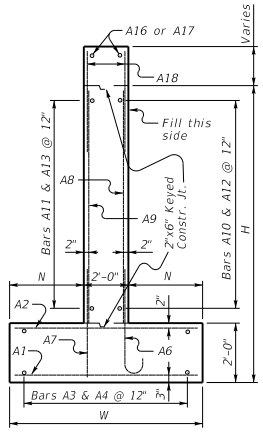

WING SECTION

Quantities

H	Concrete* C.Y.	Reinforcement LBS.
5	35.1	3029
6	38.4	3029
7	50.2	4232
8	53.9	4232
9	72.1	6186
10	76.4	6186
11	92.3	8576
12	96.9	8576
13	116.5	12240
14	121.5	12240
15	145.3	16380
16	150.8	16380

*Concrete quantities computed using 21" beam depth on ½" pad & 16'-0" Bridge Width

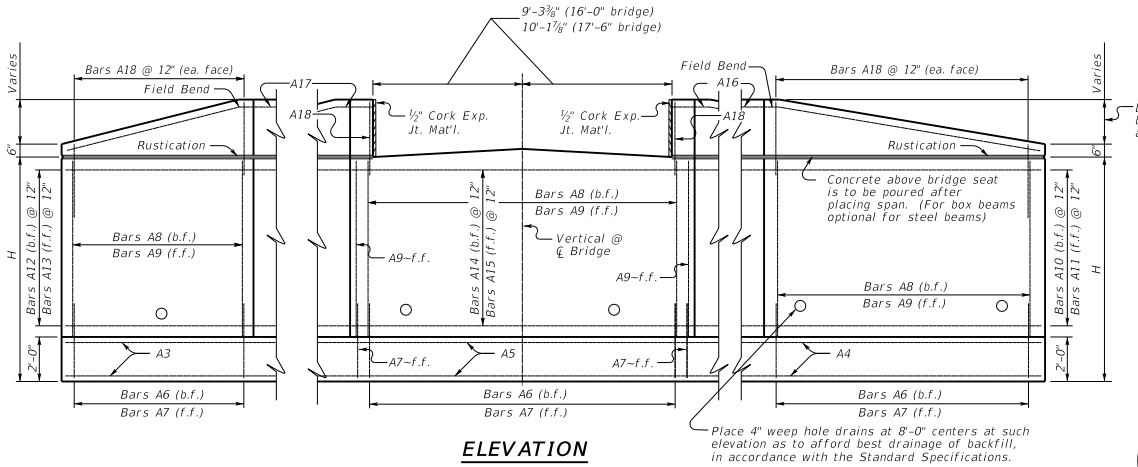

ELEVATION

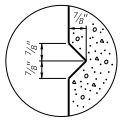

RUSTICATION GROOVE

GENERAL NOTES

SPECIFICATIONS: Construct abutments according to the current edition of the Kentucky Department of Highways Standard Specifications for Road and Bridge Construction. Abutments are designed for side by side box beams as detailed in Standard Drawings BDP-001 through BDP-012, current edition. Dimensions may be adjusted to allow for 17'-6" rolled steel beam bridge width.

FOUNDATION PRESSURE: Construct abutment footings on solid rock bearing material that can support a pressure of 8000 psf service or 10,800 psf strength factored as recommended by a geotechnical engineer.

WING LENGTHS: Calculated assuming 21" superstructure depth and stream bank elevation at top of footing.

FOOTING ELEVATION: Construct bottom of footing below the anticipated scour elevation. (This typically entails embedding the footings 1'-0" to 2'-0" into rock and pouring concrete directly against cut rock faces as recommended by geotechnical engineer.)

NOTE: Distances to bars shown are clear dimensions unless otherwise noted.

MATERIAL SPECIFICATIONS:
Concrete, Class "A" = 3500 psi
Steel Reinforcement = Grade 60

KENTUCKY
DEPARTMENT OF HIGHWAYS

30° SKEW
16'-0"–17'-6" BRIDGE WIDTH
2:1 FILL SLP, 4' MIN. SHLDR.

STANDARD DRAWING NO. BSA-107

SUBMITTED _____ DIRECTOR DIVISION OF STRUCTURAL DESIGN — DATE 02-26-20

APPROVED _____ STATE HIGHWAY ENGINEER — DATE 02-26-20

30° SKEW 24'-0" – 25'-6" BRIDGE WIDTH 2:1 FILL SLOPES

Bill of Reinforcement

MARK	A1				A2				A3				A4				A5				A6								A7				A8				A9				A10				A11				A12				A13				A14				A15				A16				A17				A18			
TYPE	Str.				Str.				Str.				Str.				Str.				4								Str.				Str.				Str.				8				8				8				8				7				7				Str.				Str.				Str.			
SIZE									#5				#5				#5																				#5				#5				#5				#5				#5				#5				#5				#5				#5			
H	No.	Size	Length ft.	Length in.	No.	Size	Length ft.	Length in.	No.	Size	Length ft.	Length in.	No.	Size	Length ft.	Length in.	No.	Size	Length ft.	Length in.	No.	Size	Length ft.	Length in.	A in.	A ft.	B in.	B ft.	C in.	C ft.	D in.	D ft.	No.	Size	Length ft.	Length in.	Spacing	No.	Size	Length ft.	Length in.	Spacing	No.	Length ft.	Length in.	Spacing	No.	Length ft.	Length in.	Spacing	No.	Length ft.	Length in.	Spacing	No.	Length ft.	Length in.	Spacing	No.	Length ft.	Length in.	Spacing	No.	Length ft.	Length in.	Spacing	No.	Length ft.	Length in.	Spacing	No.	Length ft.	Length in.	Spacing
15-16	86	10	11	8	12	86	7	11	8	12	24	20	11	24	31	2	24	42	2	7	83	9	9	11	12	8	⅞	1	10	0	11¾	8	6	86	5	4	11	12	83	6	12	10	12	86	12	10	12	14	32	10	14	30	4	14	19	8	14	18	11	14	43	3	14	39	11	2	35	6	2	22	5	121	5	9
13-14	79	9	10	8	12	79	7	10	8	12	22	17	8	22	27	1	22	42	2	7	76	8	8	3	12	6	11	1	3	0	8	7	3	79	5	4	11	12	76	6	10	10	12	79	10	10	12	12	28	10	12	26	4	12	16	8	12	15	11	12	43	4	12	39	11	2	31	6	2	19	5	107	5	9
11-12	74	8	9	8	12	74	6	9	8	12	20	15	5	20	22	1	20	41	8	70	7	7	1	12	5	10¼	1	2	0	7	6	2	73	5	4	11	12	70	5	8	10	12	73	8	10	12	10	24	10	10	22	4	10	14	8	10	13	11	10	43	4	10	39	11	2	27	6	2	17	5	95	5	9
9-10	70	7	8	8	12	70	5	8	8	12	18	13	1	18	19	10	18	41	3	65	6	6	1	12	5	1	1	0	0	6	5	4	68	5	4	11	12	65	5	6	10	12	68	6	10	12	8	21	10	8	19	4	8	12	8	8	11	11	8	43	4	8	39	11	2	24	6	2	15	5	85	5	9
7-8	65	6	7	2	12	65	5	7	2	12	16	10	6	16	14	2	16	40	4	58	5	5	7	12	4	8½	0	10	0	5	4	11	61	5	4	11	12	58	5	4	10	12	61	4	10	12	6	16	11	6	14	4	6	10	8	6	9	11	6	43	5	6	39	11	2	19	6	2	13	5	71	5	9
5-6	60	5	6	2	12	60	5	6	2	12	14	8	3	14	11	0	14	39	11	53	5	5	7	12	4	8½	0	10	0	5	4	11	56	5	4	11	12	53	5	2	10	12	56	2	10	12	4	13	11	4	11	4	4	8	8	4	7	11	4	43	5	4	39	11	2	16	6	2	11	5	61	5	9

Reinforcement Details

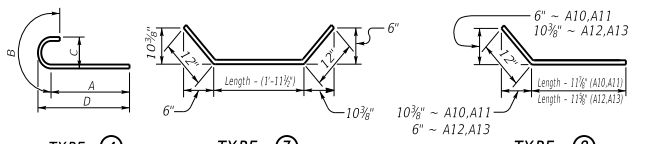

Table of Dimensions

H	W Length ft.	W Length in.	N Length ft.	N Length in.	M2 Length ft.	M2 Length in.	M3 Length ft.	M3 Length in.	S2 Length ft.	S2 Length in.	S3 Length ft.	S3 Length in.	T2 Length ft.	T2 Length in.	T3 Length ft.	T3 Length in.	L2 Length ft.	L3 Length ft.
15-16	12	0	5	0	15	5¼	18	2⅝	24	1⅞	18	2⅞	26	8⅝	10	6¼	29	17
13-14	11	0	4	6	13	4½	15	4½	23	8⅞	18	2⅞	23	1⅞	8	10½	25	14
11-12	10	0	4	0	11	3⅝	13	4¾	23	3⅝	18	2⅞	19	7	7	8¾	21	12
9-10	9	0	3	6	9	8⅞	11	4⅞	22	10⅝	18	2⅞	16	10⅜	6	7	18	10
7-8	7	6	2	9	7	1⅞	9	3⅝	22	3	18	2⅞	12	4⅝	5	4½	13	8
5-6	6	6	2	3	5	6⅞	7	3⅞	21	9⅞	18	2⅞	9	7¾	4	2¾	10	6

4 foot min. shoulder

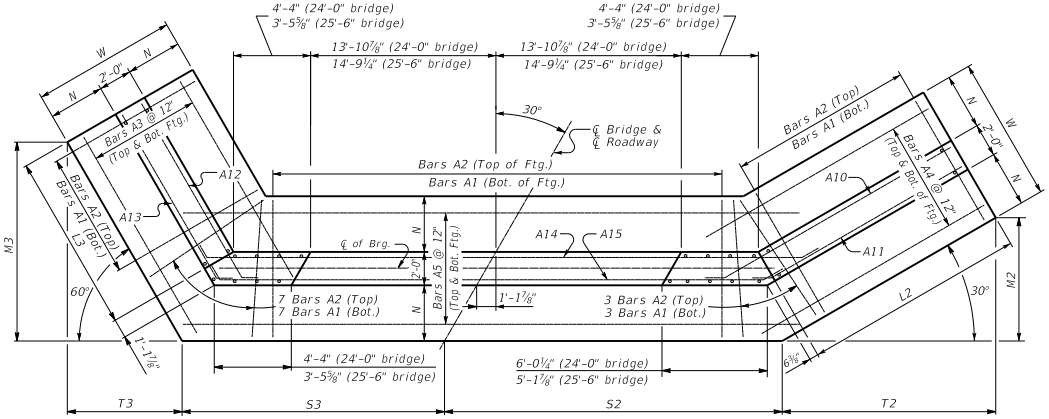

(Left Skew as shown;right skew opp. hand)

PLAN

NOTE: Trim A16 & A17 bars if necessary

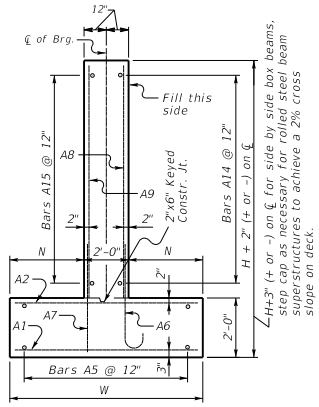

WALL SECTION

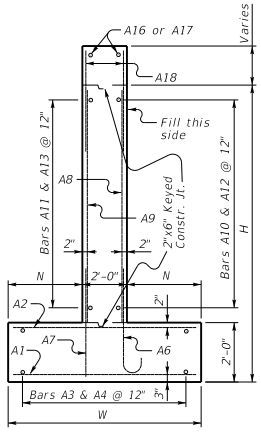

WING SECTION

Quantities

H	Concrete* C.Y.	Reinforcement LBS.
5	41.7	3510
6	45.7	3510
7	58.9	4875
8	63.3	4875
9	83.2	7013
10	88.1	7013
11	105.5	9709
12	110.8	9709
13	131.7	13702
14	137.4	13702
15	162.5	18180
16	168.7	18180

*Concrete quantities computed using 21" beam depth on ½" pad & 24'-0" Bridge Width

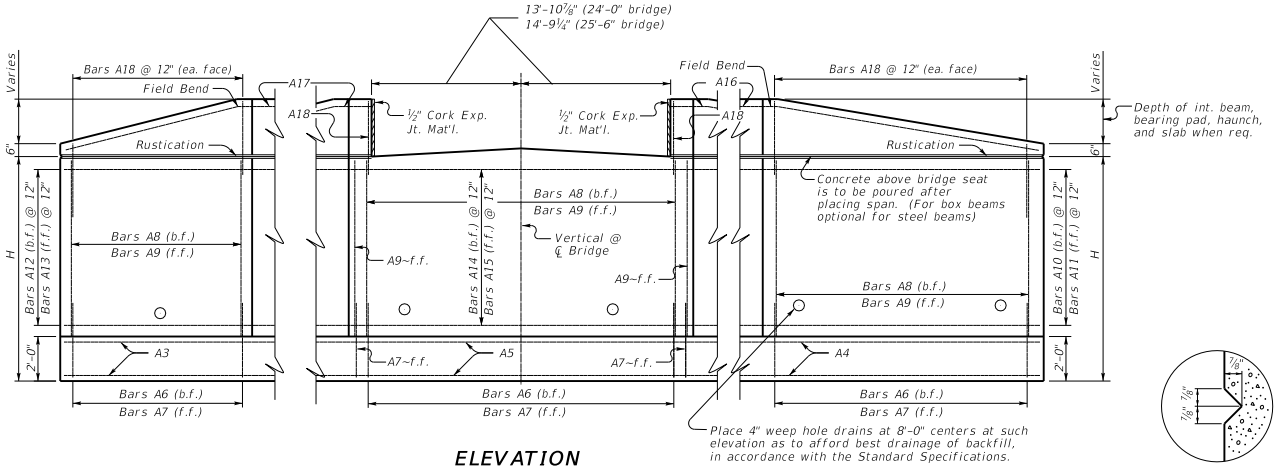

ELEVATION

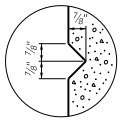

RUSTICATION GROOVE

GENERAL NOTES

SPECIFICATIONS: *Construct abutments according to the current edition of the Kentucky Department of Highways Standard Specifications for Road and Bridge Construction. Abutments are designed for side by side box beams as detailed in Standard Drawings BDP-001 through BDP-012, current edition. Dimensions may be adjusted to allow for 25'-6" rolled steel beam bridge width.*

FOUNDATION PRESSURE: *Construct abutment footings on solid rock bearing material that can support a pressure of 8000 psf service or 10,800 psf strength factored as recommended by a geotechnical engineer.*

WING LENGTHS: *Calculated assuming 21" superstructure depth and stream bank elevation at top of footing.*

FOOTING ELEVATION: *Construct bottom of footing below the anticipated scour elevation. (This typically entails embedding the footings 1'-0" to 2'-0" into rock and pouring concrete directly against cut rock faces as recommended by geotechnical engineer.)*

NOTE: *Distances to bars shown are clear dimensions unless otherwise noted.*

MATERIAL SPECIFICATIONS:
Concrete, Class "A" = 3500 psi
Steel Reinforcement = Grade 60

KENTUCKY
DEPARTMENT OF HIGHWAYS

30° SKEW
24'-0"-25'-6" BRIDGE WIDTH
2:1 FILL SLP, 4' MIN. SHLDR.

STANDARD DRAWING NO. BSA-108

SUBMITTED _____ DIRECTOR DIVISION OF STRUCTURAL DESIGN — DATE 02-26-20

APPROVED _____ STATE HIGHWAY ENGINEER — DATE 02-26-20

30° SKEW 32'-0" - 33'-6" BRIDGE WIDTH 2:1 FILL SLOPES

Bill of Reinforcement

MARK	A1				A2				A3			A4			A5			A6										A7				A8				A9				A10			A11			A12			A13			A14			A15			A16			A17			A18		
TYPE	Str.				Str.				Str.			Str.			Str.			4										Str.				Str.				Str.				8			8			8			8			7			7			Str.			Str.			Str.		
SIZE									#5			#5			#5																					#5				#5			#5			#5			#5			#5			#5			#5			#5			#5		
H	No.	Size	Length ft.	Length in.	No.	Size	Length ft.	Length in.	No.	Length ft.	Length in.	No.	Length ft.	Length in.	No.	Length ft.	Length in.	No.	Size	Length ft.	Length in.	Spacing	A in.	A ft.	B in.	B ft.	C in.	C ft.	D in.	D ft.	No.	Size	Length ft.	Length in.	Spacing	No.	Size	Length ft.	Length in.	Spacing	No.	Length ft.	Length in.	Spacing	No.	Length ft.	Length in.	Spacing	No.	Length ft.	Length in.	Spacing	No.	Length ft.	Length in.	Spacing	No.	Length ft.	Length in.	No.	Length ft.	Length in.	No.	Length ft.	Length in.
15-16	95	10	11	8	12	95	7	11	8	12	24	20	11	24	31	2	24	51	9	92	9	9	11	12	8	⅞	1	10	0	11⅜	8	6	96	5	4	11	12	92	6	12	10	12	96	12	10	12	14	32	10	14	30	4	14	19	8	14	18	11	14	52	6	14	49	2	2	35	6	2	22	5	121	5	9
13-14	88	9	10	8	12	88	7	10	8	12	22	17	8	22	27	1	22	51	4	85	8	8	3	12	6	11	1	3	0	8	7	3	89	5	4	11	12	85	6	10	10	12	89	10	10	12	12	28	10	12	26	4	12	16	8	12	15	11	12	52	6	12	49	2	2	31	6	2	19	5	107	5	9
11-12	83	8	9	8	12	83	6	9	8	12	20	15	5	20	22	1	20	50	11	79	7	7	1	12	5	10½	1	2	0	7	6	2	83	5	4	11	12	79	5	8	10	12	83	8	10	12	10	24	10	10	22	4	10	14	8	10	13	11	10	52	7	10	49	2	2	27	6	2	17	5	95	5	9
9-10	79	7	8	8	12	79	5	8	8	12	18	13	1	18	19	0	18	50	6	74	6	6	1	12	5	1	1	0	0	6	5	4	78	5	4	11	12	74	5	6	10	12	78	6	10	12	8	21	10	8	19	4	8	12	8	8	11	11	8	52	7	8	49	2	2	24	6	2	15	5	85	5	9
7-8	74	6	7	2	12	74	5	7	2	12	16	10	6	16	14	2	16	49	7	67	5	5	7	12	4	8½	0	10	0	5	4	11	71	5	4	11	12	67	5	4	10	12	71	4	10	12	6	16	11	6	14	4	6	10	8	6	9	11	6	52	7	6	49	2	2	19	6	2	13	5	71	5	9
5-6	69	5	6	2	12	69	5	6	2	12	14	8	3	14	11	0	14	49	2	62	5	5	7	12	4	8½	0	10	0	5	4	11	66	5	4	11	12	62	5	2	10	12	66	2	10	12	4	13	11	4	11	4	4	8	8	4	7	11	4	52	7	4	49	2	2	16	6	2	11	5	61	5	9

Reinforcement Details

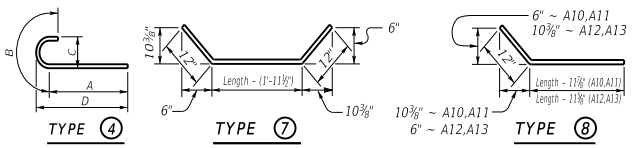

Table of Dimensions

H	W	N	M2	M3	S2	S3	T2	T3	L2	L3
	Length ft. in.	Length ft. in.	Length ft. in.	Length ft. in.	Length ft. in.	Length ft. in.	Length ft. in.	Length ft. in.	Length ft.	Length ft.
15-16	12 0	5 0	15 5¼	18 2⅝	28 9½	22 10¼	26 8⅞	10 6¼	29	17
13-14	11 0	4 6	13 4½	15 4½	28 4½	22 10¼	23 1⅞	8 10½	25	14
11-12	10 0	4 0	11 3⅝	13 4⅜	27 11½	22 10¼	19 7	7 8⅝	21	12
9-10	9 0	3 6	9 8⅝	11 4⅜	27 6	22 10¼	16 10⅜	6 7	18	10
7-8	7 6	2 9	7 1⅝	9 3⅝	26 10¾	22 10¼	12 4⅜	5 4½	13	8
5-6	6 6	2 3	5 6⅞	7 3⅞	26 5⅝	22 10¼	9 7¾	4 2¾	10	6

4 foot min. shoulder

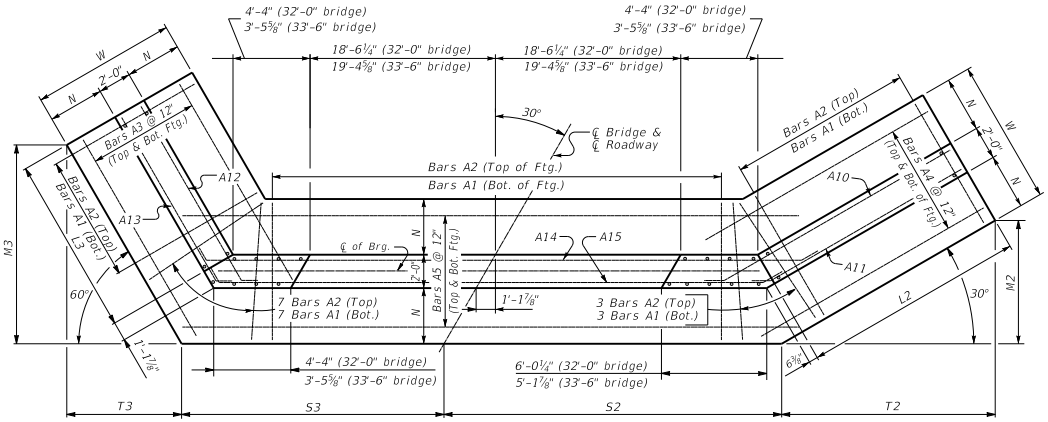

(Left Skew as shown;right skew opp. hand)

PLAN

NOTE: Trim A16 & A17 bars if necessary

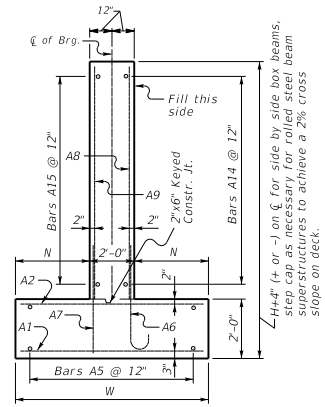

WALL SECTION

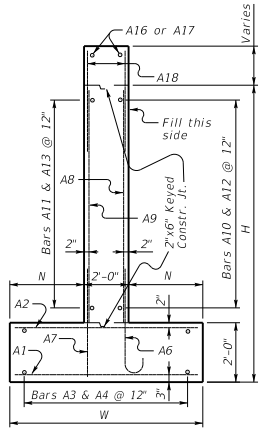

WING SECTION

Quantities		
H	Concrete* C.Y.	Reinforcement LBS.
5	48.4	3999
6	53.1	3999
7	67.6	5511
8	72.7	5511
9	94.4	7853
10	100	7853
11	118.7	10818
12	124.6	10818
13	146.9	15177
14	153.3	15177
15	179.8	19998
16	186.7	19998

*Concrete quantities computed using 21" beam depth on ½" pad & 32'-0" Bridge Width

NOTE: Bars A18 may be field bent to place superstructure.

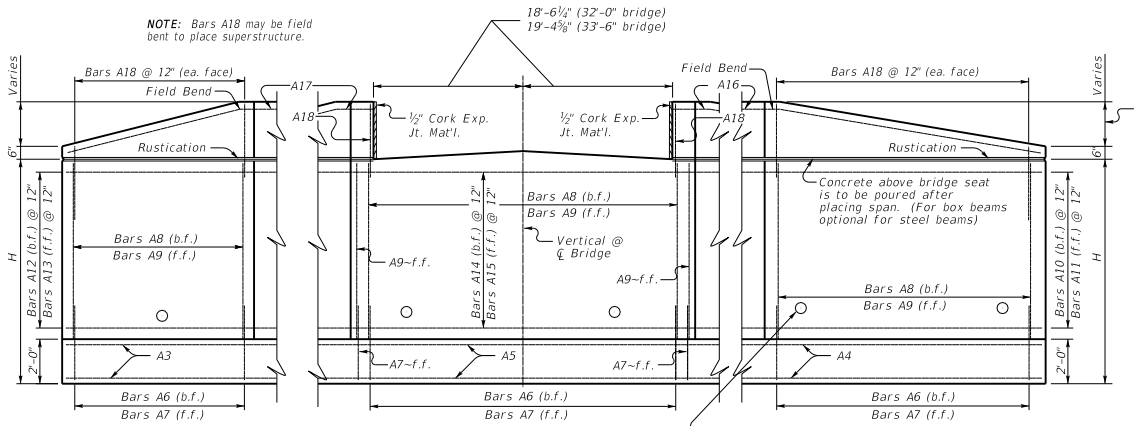

ELEVATION

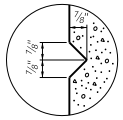

RUSTICATION GROOVE

GENERAL NOTES

SPECIFICATIONS: Construct abutments according to the current edition of the Kentucky Department of Highways Standard Specifications for Road and Bridge Construction. Abutments are designed for side by side box beams as detailed in Standard Drawings BDP-001 through BDP-012, current edition. Dimensions may be adjusted to allow for 33'-6" rolled steel beam bridge width.

FOUNDATION PRESSURE: Construct abutment footings on solid rock bearing material that can support a pressure of 8000 psf service or 10,800 psf strength factored as recommended by a geotechnical engineer.

WING LENGTHS: Calculated assuming 21" superstructure depth and stream bank elevation at top of footing.

FOOTING ELEVATION: Construct bottom of footing below the anticipated scour elevation. (This typically entails embedding the footings 1'-0" to 2'-0" into rock and pouring concrete directly against cut rock faces as recommended by geotechnical engineer.)

NOTE: Distances to bars shown are clear dimensions unless otherwise noted.

MATERIAL SPECIFICATIONS:
Concrete, Class "A" = 3500 psi
Steel Reinforcement = Grade 60

KENTUCKY
DEPARTMENT OF HIGHWAYS

30° SKEW
32'-0"-33'-6" BRIDGE WIDTH
2:1 FILL SLP, 4' MIN. SHLDR.

STANDARD DRAWING NO. BSA-109

SUBMITTED _____ DIRECTOR DIVISION OF STRUCTURAL DESIGN — 02-26-20 DATE

APPROVED _____ STATE HIGHWAY ENGINEER — 02-26-20 DATE

45° SKEW 16'-0" – 17'-6" BRIDGE WIDTH 2:1 FILL SLOPES

Bill of Reinforcement

MARK	A1				A2				A3	A4	A5	A6									A7				A8				A9				A10				A11				A12				A13				A14				A15				A16				A17				A18			
TYPE	Str.				Str.				Str.	Str.	Str.	4									Str.				Str.				Str.				8				8				8				8				7				7				Str.				Str.				Str.			
SIZE									#5	#5	#5																		#5				#5				#5				#5				#5				#5				#5				#5				#5			
H	No.	Size	Length ft.	Length in.	No.	Size	Length ft.	Length in.	Spacing	No.	Size	No.	Size	Length ft.	Length in.	Spacing	A ft.	A in.	B ft.	B in.	C ft.	C in.	D ft.	D in.	No.	Size	Length ft.	Length in.	Spacing	No.	Size	Length ft.	Length in.	No.	Size	Length ft.	Length in.	No.	Size	Length ft.	Length in.	No.	Size	Length ft.	Length in.	No.	Size	Length ft.	Length in.	No.	Size	Length ft.	Length in.	No.	Size	Length ft.	Length in.	No.	Size	Length ft.	Length in.	No.	Size	Length ft.	Length in.	No.	Size	Length ft.	Length in.
15-16	90	10	11	8	12	90	7	11	8	12	24	20	6	24	38	11	24	39	5	87	9	9	11	12	8	⅛	1	10	0	11⅞	8	6	90	5	4	11	12	87	6	12	10	12	90	12	10	12	14	41	8	14	38	2	14	18	6	14	18	1	14	40	11	14	36	10	2	45	0	2	21	11	140	5	9
13-14	84	9	10	8	12	84	7	10	8	12	22	18	2	22	34	10	22	39	0	81	8	8	3	12	6	11	1	3	0	8	7	3	84	5	4	11	12	81	6	10	10	12	84	10	10	12	12	37	9	12	34	2	12	16	6	12	16	1	12	41	0	12	36	10	2	41	0	2	19	11	128	5	9
11-12	78	8	9	8	12	78	6	9	8	12	20	15	10	20	29	9	20	38	7	74	7	7	1	12	5	10½	1	2	0	7	6	2	77	5	4	11	12	74	5	8	10	12	77	8	10	12	10	32	9	10	29	2	10	14	6	10	14	1	10	41	0	10	36	10	2	36	0	2	17	11	114	5	9
9-10	72	7	8	8	12	72	5	8	8	12	18	13	6	18	24	8	18	38	2	67	6	6	1	12	5	1	1	0	0	6	5	4	70	5	4	11	12	67	5	6	10	12	70	6	10	12	8	27	9	8	24	2	8	12	6	8	12	1	8	41	1	8	36	10	2	31	0	2	15	11	100	5	9
7-8	66	6	7	2	12	66	5	7	2	12	16	10	11	16	18	11	16	37	4	60	5	5	7	12	4	8½	0	10	0	5	4	11	63	5	4	11	12	60	5	4	10	12	63	4	10	12	6	22	10	6	19	2	6	10	6	6	10	1	6	41	1	6	36	10	2	26	0	2	13	11	86	5	9
5-6	60	5	6	2	12	60	5	6	2	12	14	8	7	14	13	9	14	36	10	53	5	5	7	12	4	8½	0	10	0	5	4	11	56	5	4	11	12	53	5	2	10	12	56	2	10	12	4	17	10	4	14	2	4	8	6	4	8	1	4	41	1	4	36	10	2	21	0	2	11	11	72	5	9

Reinforcement Details

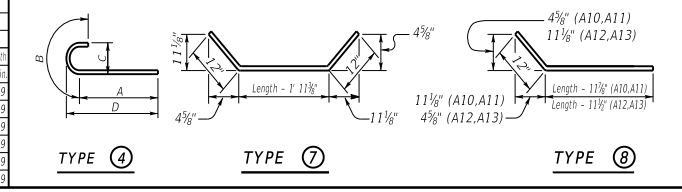

Table of Dimensions

H	W Length ft.	W Length in.	N Length ft.	N Length in.	M4 Length ft.	M4 Length in.	M5 Length ft.	M5 Length in.	S4 Length ft.	S4 Length in.	S5 Length ft.	S5 Length in.	T4 Length ft.	T4 Length in.	T5 Length ft.	T5 Length in.	L4 Length ft.	L5 Length ft.
15-16	12	0	5	0	14	8½	19	1½	25	⅞	14	4½	35	5⅝	7	11	37	16
13-14	11	0	4	6	13	1½	16	11¾	24	5⅝	14	6½	33	8¼	7	½	33	14
11-12	10	0	4	0	11	2	14	9½	23	10¾	14	8½	28	11⅜	6	1½	28	12
9-10	9	0	3	6	9	2⅝	12	7⅜	23	3½	14	10½	23	3⅛	5	2¾	23	10
7-8	7	6	2	9	7	3	10	3⅞	22	4½	15	1½	17	6	4	3⅜	18	8
5-6	6	6	2	3	5	3⅝	8	2	21	9½	15	3½	12	9½	3	4⅜	13	6

4 foot min. shoulder

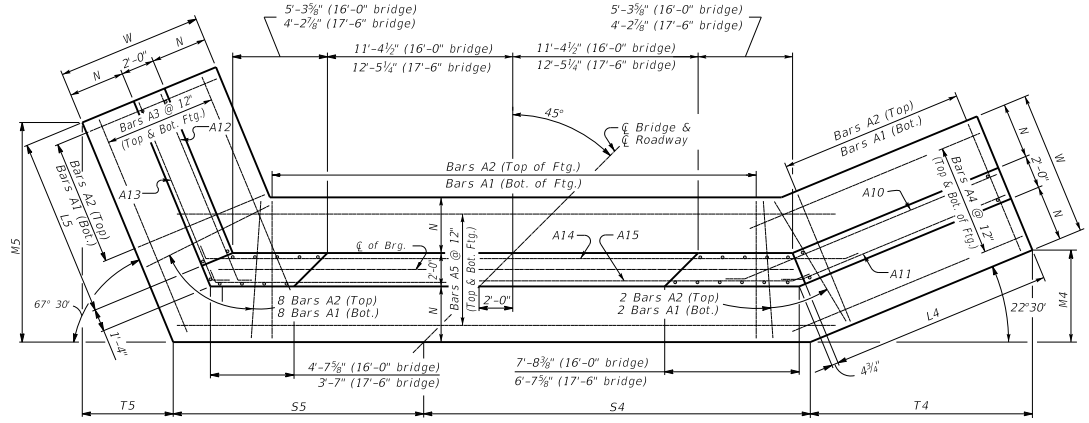

(Left Skew as shown;right skew opp. hand)

PLAN

NOTE: Trim A16 & A17 bars if necessary

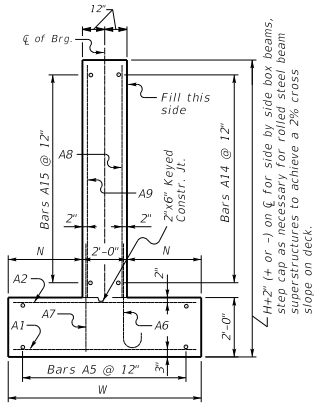

WALL SECTION

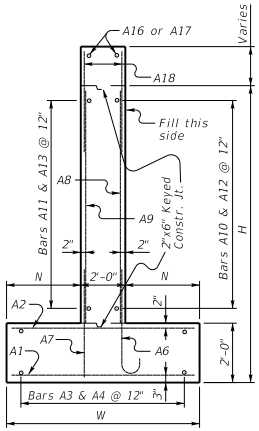

WING SECTION

Quantities

H	Concrete* C.Y.	Reinforcement LBS.
5	42.2	3593
6	46.2	3593
7	61.4	5111
8	65.9	5111
9	86.2	7315
10	91.3	7315
11	111.9	10341
12	117.5	10341
13	140.7	14673
14	146.8	14673
15	170.7	19131
16	177.2	19131

*Concrete quantities computed using 21" beam depth on ½" pad & 16'-0" Bridge Width

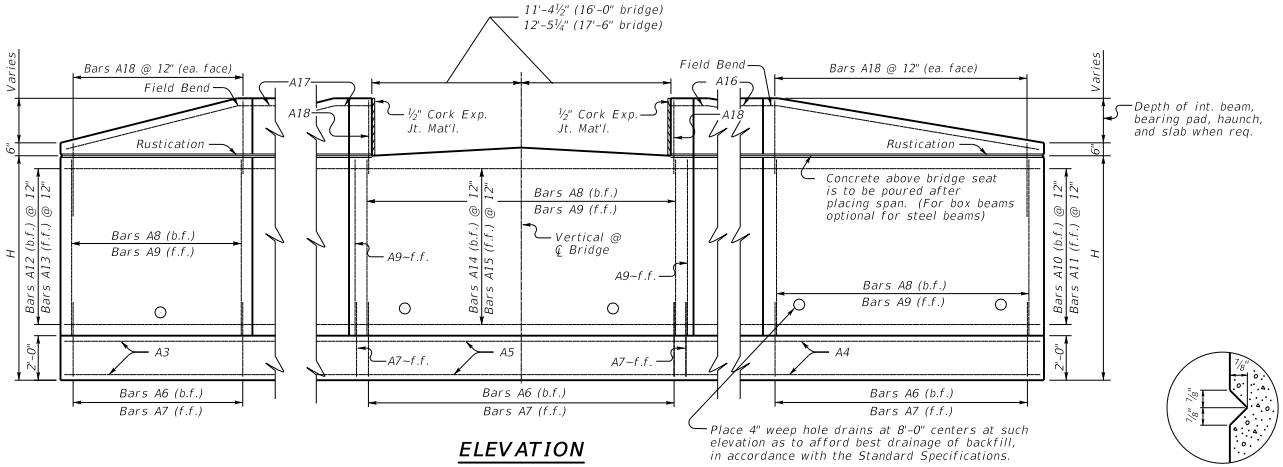

ELEVATION

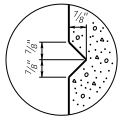

RUSTICATION GROOVE

GENERAL NOTES

SPECIFICATIONS: Construct abutments according to the current edition of the Kentucky Department of Highways Standard Specifications for Road and Bridge Construction. Abutments are designed for side by side box beams as detailed in Standard Drawings BDP-001 through BDP-012, current edition. Dimensions may be adjusted to allow for 17'-6" rolled steel beam bridge width.

FOUNDATION PRESSURE: Construct abutment footings on solid rock bearing material that can support a pressure of 8000 psf service or 10,800 psf strength factored as recommended by a geotechnical engineer.

WING LENGTHS: Calculated assuming 21" superstructure depth and stream bank elevation at top of footing.

FOOTING ELEVATION: Construct bottom of footing below the anticipated scour elevation. (This typically entails embedding the footings 1'-0" to 2'-0" into rock and pouring concrete directly against cut rock faces as recommended by geotechnical engineer.)

NOTE: Distances to bars shown are clear dimensions unless otherwise noted.

MATERIAL SPECIFICATIONS:
Concrete, Class "A" = 3500 psi
Steel Reinforcement = Grade 60

KENTUCKY
DEPARTMENT OF HIGHWAYS

45° SKEW
16'-0"-17'-6" BRIDGE WIDTH
2:1 FILL SLP, 4' MIN. SHLDR.

STANDARD DRAWING NO. BSA-110

SUBMITTED _____ DIRECTOR DIVISION OF STRUCTURAL DESIGN — DATE 02-26-20

APPROVED _____ STATE HIGHWAY ENGINEER — DATE 02-26-20

45° SKEW 24'-0" – 25'-6" BRIDGE WIDTH 2:1 FILL SLOPES

Bill of Reinforcement

MARK	A1				A2				A3				A4				A5				A6								A7				A8				A9				A10				A11				A12				A13				A14				A15				A16				A17				A18			
TYPE	Str.				Str.				Str.				Str.				Str.				4								Str.				Str.				Str.				8				8				8				8				7				7				Str.				Str.				Str.			
SIZE									#5				#5				#5																				#5				#5				#5				#5				#5				#5				#5				#5				#5			
H	No.	Size	Length ft.	Length in.	No.	Size	Length ft.	Length in.	No.	Size	Length ft.	Length in.	No.	Size	Length ft.	Length in.	No.	Size	Length ft.	Length in.	No.	Size	Length ft.	Length in.	A ft.	A in.	B ft.	B in.	C ft.	C in.	D ft.	D in.	No.	Size	Length ft.	Length in.	Staining	No.	Size	Length ft.	Length in.	Staining	No.	Length ft.	Length in.	Staining	No.	Length ft.	Length in.	Staining	No.	Length ft.	Length in.	Staining	No.	Length ft.	Length in.	Staining	No.	Length ft.	Length in.	Staining	No.	Length ft.	Length in.	Staining	No.	Length ft.	Length in.	Staining	No.	Length ft.	Length in.	Staining
15-16	101	10	11	8	12	101	7	11	8	12	24	20	6	24	38	11	24	50	9	98	9	9	11	12	8	⅛	1	10	0	11⅞	8	6	102	5	4	11	12	98	6	12	10	12	102	12	10	12	14	41	8	14	38	2	14	18	6	14	18	1	14	52	3	14	48	1	2	45	0	2	21	11	140	5	9
13-14	95	9	10	8	12	95	7	10	8	12	22	18	2	22	34	10	22	50	4	92	8	8	3	12	6	11	1	3	0	8	7	3	96	5	4	11	12	92	6	10	10	12	96	10	10	12	12	37	9	12	34	2	12	16	6	12	16	1	12	52	4	12	48	1	2	41	0	2	19	11	128	5	9
11-12	90	8	9	8	12	90	6	9	8	12	20	15	10	20	29	9	20	49	11	85	7	7	1	12	5	10½	1	2	0	7	6	2	89	5	4	11	12	85	5	8	10	12	89	8	10	12	10	32	9	10	29	2	10	14	6	10	14	1	10	52	4	10	48	1	2	36	0	2	17	11	114	5	9
9-10	83	7	8	8	12	83	5	8	8	12	18	13	6	18	24	8	18	49	6	78	6	6	1	12	5	1	1	0	0	6	5	4	82	5	4	11	12	78	5	6	10	12	82	6	10	12	8	27	9	8	24	2	8	12	6	8	12	1	8	52	4	8	48	1	2	31	0	2	15	11	100	5	9
7-8	78	6	7	2	12	78	5	7	2	12	16	10	11	16	18	11	16	48	7	71	5	5	7	12	4	8½	0	10	0	5	4	11	75	5	4	11	12	71	5	4	10	12	75	4	10	12	6	22	10	6	19	2	6	10	6	6	10	1	6	52	5	6	48	1	2	26	0	2	13	11	86	5	9
5-6	71	5	6	2	12	71	5	6	2	12	14	8	7	14	13	9	14	48	2	64	5	5	7	12	4	8½	0	10	0	5	4	11	68	5	4	11	12	64	5	2	10	12	68	2	10	12	4	17	10	4	14	2	4	8	6	4	8	1	4	52	5	4	48	1	2	21	0	2	11	11	72	5	9

Reinforcement Details

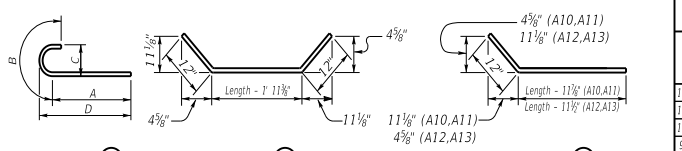

Table of Dimensions

H	W Length ft.	W Length in.	N Length ft.	N Length in.	M4 Length ft.	M4 Length in.	M5 Length ft.	M5 Length in.	S4 Length ft.	S4 Length in.	S5 Length ft.	S5 Length in.	T4 Length ft.	T4 Length in.	T5 Length ft.	T5 Length in.	L4 Length ft.	L5 Length ft.
15-16	12	0	5	0	14	8¼	19	1¼	30	8⅞	20	⅛	35	5⅝	7	11	37	16
13-14	11	0	4	6	13	1½	16	11⅜	30	1½	20	2⅞	33	8¼	7	¼	33	14
11-12	10	0	4	0	11	2	14	9½	29	6⅝	20	4⅛	28	11⅞	6	1½	28	12
9-10	9	0	3	6	9	2⅝	12	7⅞	28	11⅛	20	6⅛	22	3⅛	5	2¾	23	10
7-8	7	6	2	9	7	3	10	3⅞	28	⅜	20	9⅛	17	6	4	3⅜	18	8
5-6	6	6	2	3	5	3⅜	8	2	27	5⅛	20	11¼	13	9½	3	4⅜	13	6

4 foot min. shoulder

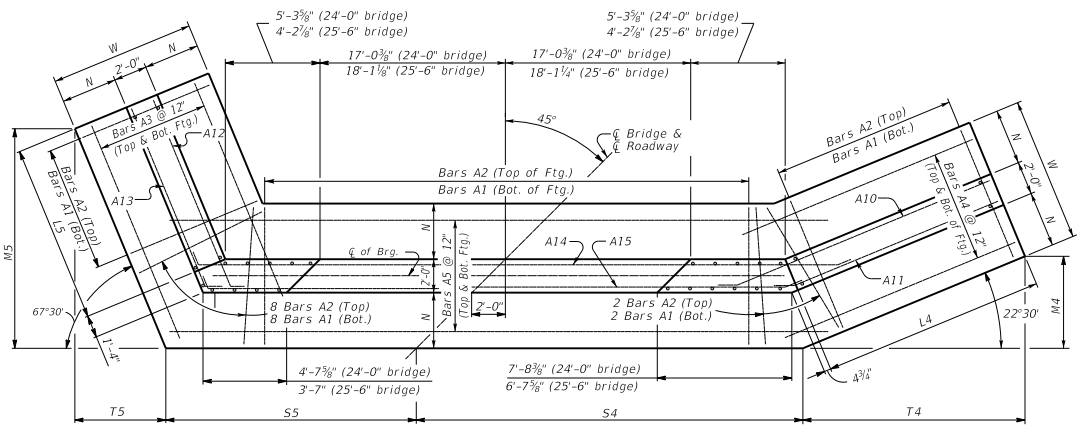

(Left Skew as shown;right skew opp. hand)

PLAN

NOTE: Trim A16 & A17 bars if necessary

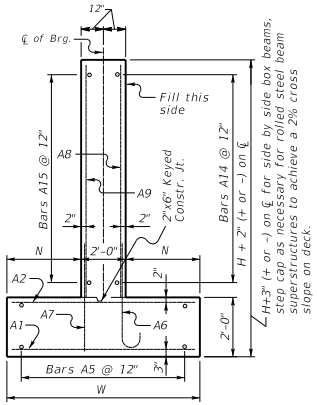

WALL SECTION

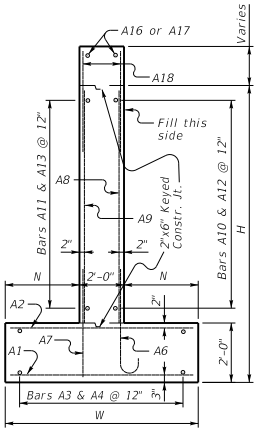

WING SECTION

Quantities		
H	Concrete* C.Y.	Reinforcement LBS.
5	50.3	4189
6	55.2	4189
7	72	5902
8	77.4	5902
9	99.8	8339
10	105.7	8339
11	128	11734
12	134.4	11734
13	159.4	16476
14	166.3	16476
15	191.8	21351
16	199.2	21351

*Concrete quantities computed using 21" beam depth on ½" pad & 24'-0" Bridge Width

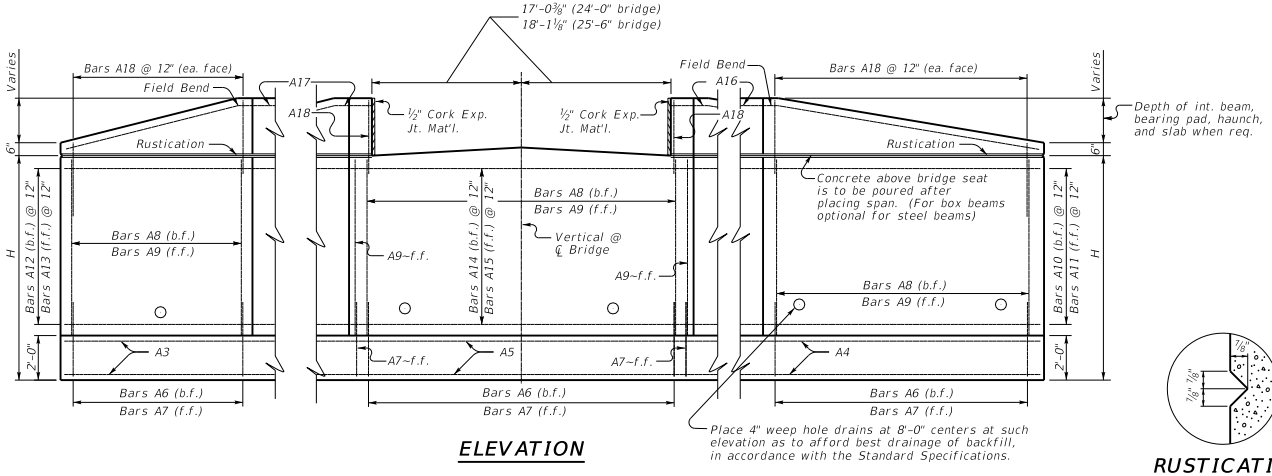

ELEVATION

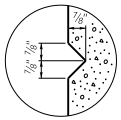

RUSTICATION GROOVE

GENERAL NOTES

SPECIFICATIONS: Construct abutments according to the current edition of the Kentucky Department of Highways Standard Specifications for Road and Bridge Construction. Abutments are designed for side by side box beams as detailed in Standard Drawings BDP-001 through BDP-012, current edition. Dimensions may be adjusted to allow for 25'-6" rolled steel beam bridge width.

FOUNDATION PRESSURE: Construct abutment footings on solid rock bearing material that can support a pressure of 8000 psf service or 10,800 psf strength factored as recommended by a geotechnical engineer.

WING LENGTHS: Calculated assuming 21" superstructure depth and stream bank elevation at top of footing.

FOOTING ELEVATION: Construct bottom of footing below the anticipated scour elevation. (This typically entails embedding the footings 1'-0" to 2'-0" into rock and pouring concrete directly against cut rock faces as recommended by geotechnical engineer.)

NOTE: Distances to bars shown are clear dimensions unless otherwise noted.

MATERIAL SPECIFICATIONS:
Concrete, Class "A" = 3500 psi
Steel Reinforcement = Grade 60

KENTUCKY
DEPARTMENT OF HIGHWAYS

45° SKEW
24'-0"-25'-6" BRIDGE WIDTH
2:1 FILL SLP, 4' MIN. SHLDR.

STANDARD DRAWING NO. BSA-111

SUBMITTED _____ DIRECTOR DIVISION OF STRUCTURAL DESIGN — DATE 02-26-20

APPROVED _____ STATE HIGHWAY ENGINEER — DATE 02-26-20

45° SKEW 32'-0" - 33'-6" BRIDGE WIDTH 2:1 FILL SLOPES

Bill of Reinforcement

MARK	A1			A2			A3	A4	A5*	A6							A7			A8			A9			A10			A11			A12			A13			A14*			A15			A16			A17			A18		
TYPE	Str.			Str.			Str.	Str.	Str.	4							Str.			Str.			Str.			8			8			8			8			7			7			Str.			Str.			Str.		
SIZE							#5	#5	#5														#5			#5			#5			#5			#5			#5			#5			#5			#5			#5		
H	No.	Size	Length ft. in.	No.	Size	Length ft. in.	Spacing	No.	Size	Length ft. in.	Spacing	No.	Size	Length ft. in.	A ft. in.	B ft. in.	C ft. in.	D ft. in.	No.	Size	Length ft. in.	Spacing	No.	Size	Length ft. in.	Spacing	No.	Length ft. in.	Spacing	No.	Length ft. in.	Spacing	No.	Length ft. in.	Spacing	No.	Length ft. in.	Spacing	No.	Length ft. in.	Spacing	No.	Length ft. in.	Spacing	No.	Length ft. in.	Spacing	No.	Length ft. in.	Spacing	No.	Length ft. in.	Spacing
15-16	112	10	11 8	12	112	7	11 8	12	24	20	6	24	38	11	24	62	1	109	9	9	11	12	8	⅞	1	10	0	11⅞	8	6	113	5	4	11	12	109	6	12	10	12	113	12	10	12	14	42	8	14	38	2	14	18	6	14	18	1	14	63	7	14	59	5	2	45	0	2	21	11	140	5	9
13-14	107	9	10 8	12	107	7	10 8	12	22	18	2	22	34	10	22	61	8	103	8	8	3	12	6	11	1	3	0	8	7	3	107	5	4	11	12	103	6	10	10	12	107	10	10	12	37	9	12	34	2	12	16	6	12	16	1	12	63	7	12	59	5	2	41	0	2	19	11	128	5	9
11-12	101	8	9 8	12	101	6	9 8	12	20	15	10	20	29	9	20	61	3	96	7	7	1	12	5	10½	1	2	0	7	6	2	100	5	4	11	12	96	5	8	10	12	100	8	10	12	30	32	9	10	29	2	10	14	6	10	14	1	10	63	8	10	59	5	2	36	0	2	17	11	114	5	9
9-10	94	7	8 8	12	94	5	8 8	12	18	13	6	18	24	8	18	60	9	89	6	6	1	12	5	1	1	0	0	6	5	4	93	5	4	11	12	89	5	6	10	12	93	6	10	12	8	27	9	8	24	2	8	12	6	8	12	1	8	63	8	8	59	5	2	31	0	2	15	11	100	5	9
7-8	89	6	7 2	12	89	5	7 2	12	16	10	11	16	18	11	16	59	11	82	5	5	7	12	4	8½	0	10	0	5	4	11	86	5	4	11	12	82	5	4	10	12	86	4	10	12	6	22	10	6	19	2	6	10	6	6	10	1	6	63	8	6	59	5	2	26	0	2	13	11	86	5	9
5-6	83	5	6 2	12	83	5	6 2	12	14	8	7	14	13	9	14	59	6	75	5	5	7	12	4	8½	0	10	0	5	4	11	79	5	4	11	12	75	5	2	10	12	79	2	10	12	4	17	10	4	14	2	4	8	6	4	8	1	4	63	8	4	59	5	2	21	0	2	11	11	72	5	9

Reinforcement Details

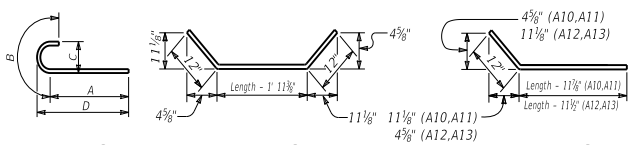

TYPE 4 TYPE 7 TYPE 8

Table of Dimensions

H	W	N	M4	M5	S4	S5	T4	T5	L4	L5
	Length ft. in.	Length ft. in.	Length ft. in.	Length ft. in.	Length ft. in.	Length ft. in.	Length ft. in.	Length ft. in.	Length ft.	Length ft.
15-16	12 0	5 0	14 8½	19 1¼	36 4⅝	23 8	35 5⅝	7 11	37	16
13-14	11 0	4 6	13 1½	16 11⅜	35 9⅝	25 10	33 8¼	7 ¼	33	14
11-12	10 0	4 0	11 2	14 9½	35 2¼	26 0	28 11⅜	6 1½	28	12
9-10	9 0	3 6	9 2⅝	12 7⅝	34 7	26 2	23 3⅛	5 2⅝	23	10
7-8	7 6	2 9	7 3	10 3⅞	33 8¼	26 5	17 6	4 3⅜	18	8
5-6	6 6	2 3	5 3⅞	8 2	33 1	26 7	12 9½	3 4⅝	13	6

NOTE: Bars with * next to mark may have lengths over 60 ft and may require a lap splice of 2'-2". The contractor shall determine the lap location and include the extra length necessary for the lap when ordering the steel reinforcement. This extra length is not included in the quantities and shall be incidental to the rebar.

4 foot min. shoulder

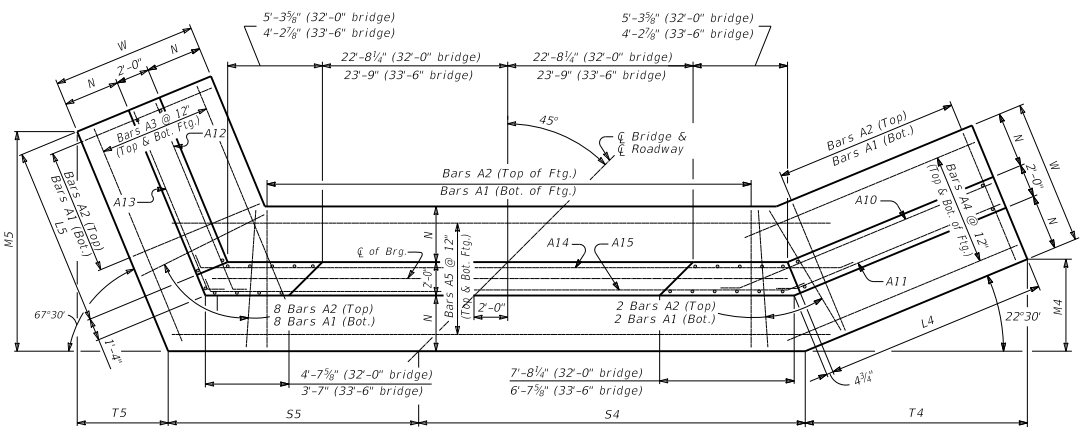

(Left Skew as shown;right skew opp. hand)

PLAN

NOTE: Trim A16 & A17 bars if necessary

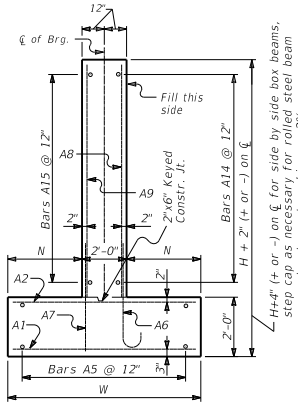

WALL SECTION

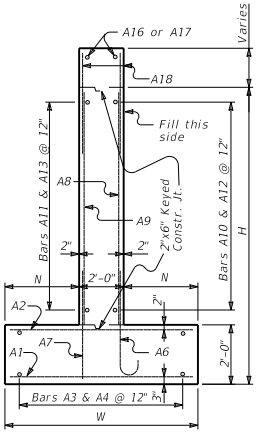

WING SECTION

Quantities		
H	Concrete* C.Y.	Reinforcement LBS.
5	58.5	4790
6	64.2	4790
7	82.8	6667
8	89	6667
9	113.5	9350
10	120.2	9350
11	144.2	13073
12	151.4	13073
13	178	18320
14	185.8	18320
15	213	23554
16	221.2	23554

*Concrete quantities computed using 21" beam depth on ½" pad & 32'-0" Bridge Width

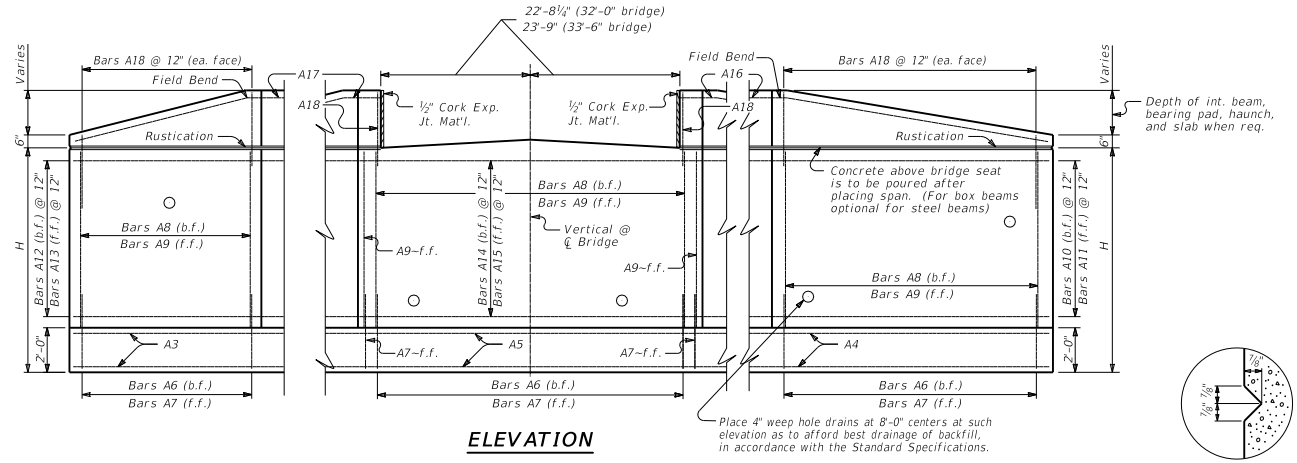

ELEVATION

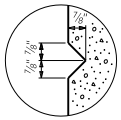

RUSTICATION GROOVE

GENERAL NOTES

SPECIFICATIONS: Construct abutments according to the current edition of the Kentucky Department of Highways Standard Specifications for Road and Bridge Construction. Abutments are designed for side by side box beams as detailed in Standard Drawings BDP-001 through BDP-012, current edition. Dimensions may be adjusted to allow for 33'-6" rolled steel beam bridge width.

FOUNDATION PRESSURE: Construct abutment footings on solid rock bearing material that can support a pressure of 8000 psf service or 10,800 psf strength factored as recommended by a geotechnical engineer.

WING LENGTHS: Calculated assuming 21" superstructure depth and stream bank elevation at top of footing.

FOOTING ELEVATION: Construct bottom of footing below the anticipated scour elevation. (This typically entails embedding the footings 1'-0" to 2'-0" into rock and pouring concrete directly against cut rock faces as recommended by geotechnical engineer.)

NOTE: Distances to bars shown are clear dimensions unless otherwise noted.

MATERIAL SPECIFICATIONS:
Concrete, Class "A" = 3500 psi
Steel Reinforcement = Grade 60

KENTUCKY
DEPARTMENT OF HIGHWAYS

45° SKEW
32'-0"-33'-6" BRIDGE WIDTH
2:1 FILL SLP, 4' MIN. SHLDR.

STANDARD DRAWING NO. BSA-112

SUBMITTED _____ DIRECTOR DIVISION OF STRUCTURAL DESIGN — DATE 02-26-20

APPROVED _____ STATE HIGHWAY ENGINEER — DATE 02-26-20

General Notes

SPECIFICATIONS: All references to the standard Specifications are to the current edition of the Kentucky Department of Highways Standard Specifications for Road and Bridge Construction, with current supplemental specifications. All references to the AASHTO Specifications are to the current edition of the AASHTO LRFD Bridge Design Specifications, with interims.

DESIGN LOADS: Beam sections are designed for H20 Live Load. The fatigue truck is also set at H20.

DESIGN LOAD DISTRIBUTION: Contrary to AASHTO LRFD Bridge Design Specification, the design moment and shear distribution for all beams is 0.6 lanes.

FUTURE WEARING SURFACE: These beams are designed for a 15 PSF future wearing surface load.

SUBSTRUCTURE DESIGN LOADS: Unfactored design reaction forces per beam end.

DC (kips): Beam, Slab, and assumed Type III railing dead loads.
DW (kips): Future wearing surface.
LL+I (kips): LL with Dynamic load allowance.

MATERIAL DESIGN SPECIFICATIONS:

for Beam Steel	FY = 50000 PSI
for Steel Reinforcement	FY = 60000 PSI
for Class "AA" Deck Concrete	F'C = 4000 PSI

MATERIAL STEEL	A.S.T.M	AASHTO
High Strength Low Alloy Structural Steel	*A709 GR 50	*M270 GR 50

High strength bolts, nuts, and washers F3125 Grade A325 M-164 Type 1

Sheet lead and Pig lead B29-79

All steel in longitudinal rolled wide flange beams shall meet the longitudinal Charpy V-Notch toughness test for non-fracture critical components Zone 2 in accordance with the following:

M270 GR 50 (up to 2" thickness) of 15 ft-lbs at 40°F.

Sampling and testing procedures shall be in accordance with AASHTO T243 current edition, utilizing (H) frequency testing. When plate thickness exceeds 1½", frequency of testing shall be (P).

HIGH STRENGTH BOLT CONNECTIONS: Unless otherwise specified on the plans, all bolted connnections shall be ASTM F3125 Grade A325 ¾" diameter high strength bolts, nuts, and washers. Open holes shall be 13/16" diameter. Type 1 galvanized bolts shall be used as described in AASHTO M164. All high strength bolted field connections are to be installed with "direct tension indicators" (DTI's) in accordance with the Standard Specifications and ASTM F959. All DTI's shall be manufactured from a steel conforming to the chemical requirements of ASTM A325 for Type 1 galvanized steel. DTI's shall be installed under the bolt head with the bumps facing the underside of the bolt head. Put a hardened washer under the nut and tension from the nut.

BEVELED EDGES: Bevel all exposed edges ¾".

REINFORCEMENT: Dimensions shown from the face of concrete to reinforcement are clear distances. Spacing of reinforcement is from center to center of reinforcement. All steel reinforcement is to be epoxy coated in accordance with Section 811.10 of the Specifications.

CORROSION PROTECTION: These beams and all steel components are to be hot dip galvanized. If hot dip galvanizing is cost prohibitive then all steel components must be painted. Unpainted weathering steel is not recommended within 10 feet of moving water. Additionally these beams do not meet fatigue design requirements of unpainted weathering steel.

BRIDGE DECK: A galvanized steel metal grid deck may be substituted for the 8" concrete deck. This will improve the load rating, but smaller beams are not to be used.

TABLE OF BEAM SIZES AND DESIGN DATA (4 FT. MAX. BEAM SPACING)

BEAM SPAN	ROLLED BEAM		DEFLECTION IN INCHES		UNFACTORED BEAM END REACTION		
	BEAM MEMBER	BEAM DEPTH (IN.)	STEEL ONLY	TOTAL DL	DC (kips)	DW (kips)	LL+I (kips)
15' Max.	W16x40	16.0	0.00	0.06	5.39	0.45	25.96
	W14x43	13.7	0.01	0.07	5.42		
	W12x50	12.2	0.01	0.08	5.48		
	W10x60	10.2	0.01	0.08	5.56		
20' Max.	W18x50	18.0	0.01	0.12	7.17	0.60	27.45
	W16x57	16.4	0.01	0.12	7.25		
	W14x61	13.9	0.02	0.15	7.29		
	W12x65	12.1	0.02	0.18	7.34		
	W10x77	10.6	0.03	0.21	7.47		
25' Max.	W21x55	20.8	0.02	0.20	8.94	0.75	28.34
	W18x65	18.4	0.02	0.21	9.07		
	W16x67	16.3	0.03	0.24	9.10		
	W14x74	14.2	0.04	0.29	9.19		
	W12x79	12.4	0.05	0.35	9.26		
30' Max.	W21x73	21.2	0.04	0.30	10.93	0.90	28.94
	W18x76	18.2	0.05	0.36	10.98		
	W16x77	16.5	0.06	0.43	11.00		
	W14x90	14.0	0.07	0.49	11.20		
	W12x96	12.7	0.09	0.59	11.30		
35' Max.	W24x94	24.3	0.05	0.34	13.07	1.05	29.37
	W21x101	21.4	0.06	0.38	13.20		
	W18x97	18.6	0.08	0.52	13.13		
	W14x109	14.3	0.12	0.75	13.35		
40' Max.	W24x104	24.1	0.08	0.51	15.09	1.20	29.69
	W21x111	21.5	0.10	0.60	15.23		
	W18x130	19.3	0.12	0.66	15.63		
	W14x145	14.8	0.19	0.97	15.94		
45' Max.	W27x102	27.1	0.11	0.70	16.87	1.35	29.93
	W24x104	24.1	0.13	0.81	16.92		
	W21x122	21.7	0.15	0.87	17.34		
	W18x143	19.5	0.19	0.96	17.83		
	W14x159	15.0	0.30	1.42	18.20		
50' Max.	W30x116	30.0	0.13	0.79	19.06	1.50	30.13
	W27x129	27.6	0.15	0.83	19.40		
	W24x131	24.5	0.18	0.99	19.45		
	W21x147	22.1	0.22	1.12	19.86		
	W18x175	20.0	0.27	1.22	20.58		
55' Max.	W33x130	33.1	0.16	0.87	21.32	1.65	30.29
	W30x148	30.7	0.18	0.89	21.83		
	W27x146	27.4	0.21	1.05	21.77		
	W24x146	24.7	0.26	1.30	21.77		
	W21x166	22.5	0.31	1.42	22.34		
60' Max.	W33x152	33.5	0.21	1.04	23.90	1.80	30.43
	W30x173	30.4	0.24	1.05	24.54		
	W27x161	27.6	0.29	1.36	24.17		
	W24x176	25.2	0.35	1.53	24.63		
	W21x201	23.0	0.42	1.69	25.40		

H-20 DESIGN LOAD

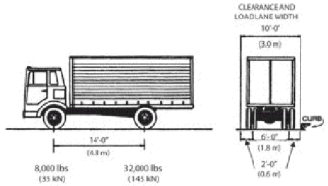

These beams were sized according to H-20 truck design. This does not meet federal minimum design HL-93 nor KY minimum KYHL-93.

Use of these beams will limit the loaded size of trucks allowed to cross the bridge.

This is suitable for very low volume roads with little potential for future development. These beams can handle a loaded school bus, but are not suitable for a loaded gravel truck or concrete truck. They are not suitable for typical trucks associated with construction, agriculture, or coal.

KENTUCKY
DEPARTMENT OF HIGHWAYS

H20 STEEL
BEAM
STANDARDS

STANDARD DRAWING NO. BSB-001

SUBMITTED _____ 02-26-20
DIRECTOR DIVISION OF STRUCTURAL DESIGN — DATE

APPROVED _____ 02-26-20
STATE HIGHWAY ENGINEER — DATE

General Notes

SPECIFICATIONS: All references to the standard Specifications are to the current edition of the Kentucky Department of Highways Standard Specifications for Road and Bridge Construction, with current supplemental specifications. All references to the AASHTO Specifications are to the current edition of the AASHTO LRFD Bridge Design Specifications, with interims.

DESIGN LOADS: Beam sections are designed for 1.25*HL93 (KYHL93) Live Load.

DESIGN LOAD DISTRIBUTION: Contrary to AASHTO LRFD Bridge Design Specification, the design moment and shear distribution for all beams is 0.6 lanes.

FUTURE WEARING SURFACE: These beams are designed for a 15 PSF future wearing surface load.

SUBSTRUCTURE DESIGN LOADS: Unfactored design reaction forces per beam end.

DC (kips): Beam, Slab, and assumed Type III railing dead loads.
DW (kips): Future wearing surface.
LL+I (kips): LL with Dynamic load allowance.

MATERIAL DESIGN SPECIFICATIONS:

for Beam Steel	FY = 50000 PSI
for Steel Reinforcement	FY = 60000 PSI
for Class "AA" Deck Concrete	F'C = 4000 PSI

MATERIAL STEEL	A.S.T.M	AASHTO
High Strength Low Alloy Structural Steel	*A709 GR 50	*M270 GR 50

High strength bolts, nuts, and washers F3125 Grade A325 M-164 Type 1

Sheet lead and Pig lead B29-79

All steel in longitudinal rolled wide flange beams shall meet the longitudinal Charpy V-Notch toughness test for non-fracture critical components Zone 2 in accordance with the following:

M270 GR 50 (up to 2" thickness) of 15 ft-lbs at 40°F.

Sampling and testing procedures shall be in accordance with AASHTO T243 current edition, utilizing (H) frequency testing. When plate thickness exceeds 1½", frequency of testing shall be (P).

HIGH STRENGTH BOLT CONNECTIONS: Unless otherwise specified on the plans, all bolted connnections shall be ASTM F3125 Grade A325 ¾" diameter high strength bolts, nuts, and washers. Open holes shall be 13/16" diameter. Type 1 galvanized bolts shall be used as described in AASHTO M164. All high strength bolted field connections are to be installed with "direct tension indicators" (DTI's) in accordance with the Standard Specifications and ASTM F959. All DTI's shall be manufactured from a steel conforming to the chemical requirements of ASTM A325 for Type 1 galvanized steel. DTI's shall be installed under the bolt head with the bumps facing the underside of the bolt head. Put a hardened washer under the nut and tension from the nut.

BEVELED EDGES: Bevel all exposed edges ¾".

REINFORCEMENT: Dimensions shown from the face of concrete to reinforcement are clear distances. Spacing of reinforcement is from center to center of reinforcement. All steel reinforcement is to be epoxy coated in accordance with Section 811.10 of the Specifications.

CORROSION PROTECTION: These beams and all steel components are to be hot dip galvanized. If hot dip galvanizing is cost prohibitive then all steel components must be painted. Unpainted weathering steel is not recommended within 10 feet of moving water. Additionally these beams do not meet fatigue design requirements of unpainted weathering steel.

BRIDGE DECK: A galvanized steel metal grid deck may be substituted for the 8" concrete deck. This will improve the load rating, but smaller beams are not to be used.

TABLE OF BEAM SIZES AND DESIGN DATA (4 FT. MAX. BEAM SPACING)

BEAM SPAN	ROLLED BEAM		DEFLECTION IN INCHES		UNFACTORED BEAM END REACTION		
	BEAM MEMBER	BEAM DEPTH (IN.)	STEEL ONLY	TOTAL DL	DC (kips)	DW (kips)	LL+I (kips)
15' Max.	W18x50	18.0	0.00	0.03	5.54	0.45	46.82
	W16x50	16.3	0.00	0.03	5.54		
	W14x53	13.9	0.01	0.06	5.56		
	W12x58	12.2	0.01	0.06	5.60		
	W10x77	10.6	0.01	0.07	5.76		
20' Max.	W18x65	18.2	0.00	0.08	7.41	0.60	49.69
	W16x67	16.3	0.00	0.09	7.44		
	W14x74	14.2	0.00	0.11	7.51		
	W12x79	12.4	0.00	0.13	7.56		
	W10x100	11.1	0.00	0.14	7.79		
25' Max.	W24x76	23.9	0.02	0.11	9.29	0.75	51.96
	W21x93	21.6	0.02	0.11	9.52		
	W18x76	18.2	0.02	0.18	9.29		
	W16x89	16.8	0.03	0.18	9.47		
	W14x99	14.2	0.03	0.21	9.59		
30' Max.	W24x103	24.5	0.03	0.16	11.49	0.90	56.68
	W21x101	21.4	0.03	0.20	11.46		
	W18x97	18.6	0.04	0.28	11.39		
	W14x145	14.8	0.06	0.31	12.16		
35' Max.	W27x129	27.6	0.04	0.20	13.79	1.05	61.07
	W24x117	24.3	0.05	0.26	13.57		
	W21x122	21.7	0.06	0.32	13.67		
	W18x143	19.5	0.07	0.35	14.05		
	W14x176	15.2	0.10	0.47	18.33		
40' Max.	W30x148	30.7	0.05	0.25	16.09	1.20	64.66
	W27x146	27.4	0.06	0.30	16.06		
	W24x146	24.7	0.07	0.36	16.06		
	W21x147	22.1	0.09	0.46	16.07		
	W18x192	20.4	0.11	0.45	17.01		
45' Max.	W33x130	33.1	0.07	0.39	17.63	1.35	67.72
	W30x132	30.3	0.08	0.45	17.68		
	W27x129	27.6	0.10	0.54	17.59		
	W24x146	24.7	0.11	0.58	18.00		
	W21x166	22.5	0.14	0.63	18.46		
50' Max.	W36x150	35.9	0.10	0.45	20.05	1.50	70.41
	W33x152	33.5	0.10	0.50	20.1		
	W30x148	30.7	0.12	0.60	19.98		
	W27x146	27.4	0.14	0.71	19.95		
	W24x162	25.0	0.17	0.80	20.35		
55' Max.	W36x160	36.0	0.13	0.62	22.27	1.65	72.83
	W33x169	33.8	0.14	0.65	22.51		
	W30x173	30.4	0.17	0.74	22.66		
	W27x178	27.8	0.20	0.87	22.80		
	W24x192	25.5	0.24	0.99	23.17		
60' Max.	W36x194	36.5	0.18	0.73	25.3	1.80	75.05
	W33x201	33.7	0.19	0.77	25.52		
	W30x173	30.4	0.24	1.05	24.66		
	W27x194	28.1	0.28	1.13	25.31		

KY-HL93 (1.25XHL93) DESIGN LOAD

From AASHTO design code -> Vehicular Live Loading designated HL-93 shall consist of design truck or design tandem plus design lane load.

DESIGN TRUCK

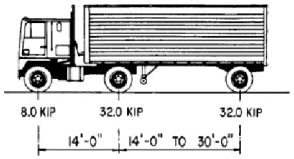

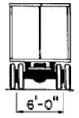

DESIGN TANDEM

Shall consist of a pair of 25,000 pound axles spaced at 4'-0" apart. Transverse wheel spacing is 6'-0".

DESIGN LANE LOAD

The design lane load shall consist of a load of 640 pound/ foot uniformly distributed in the longitudinal direction. Transversely the load is to be uniformly distributed over a 10'-0" width.

The current KY design standard for state roads is to increase the federal minimum (HL-93) by 25% (KY-HL93).

KENTUCKY
DEPARTMENT OF HIGHWAYS

KYHL-93 STEEL
BEAM
STANDARDS

STANDARD DRAWING NO. BSB-002

SUBMITTED _____ DIRECTOR DIVISION OF STRUCTURAL DESIGN — DATE 02-26-20

APPROVED _____ STATE HIGHWAY ENGINEER — DATE 02-26-20

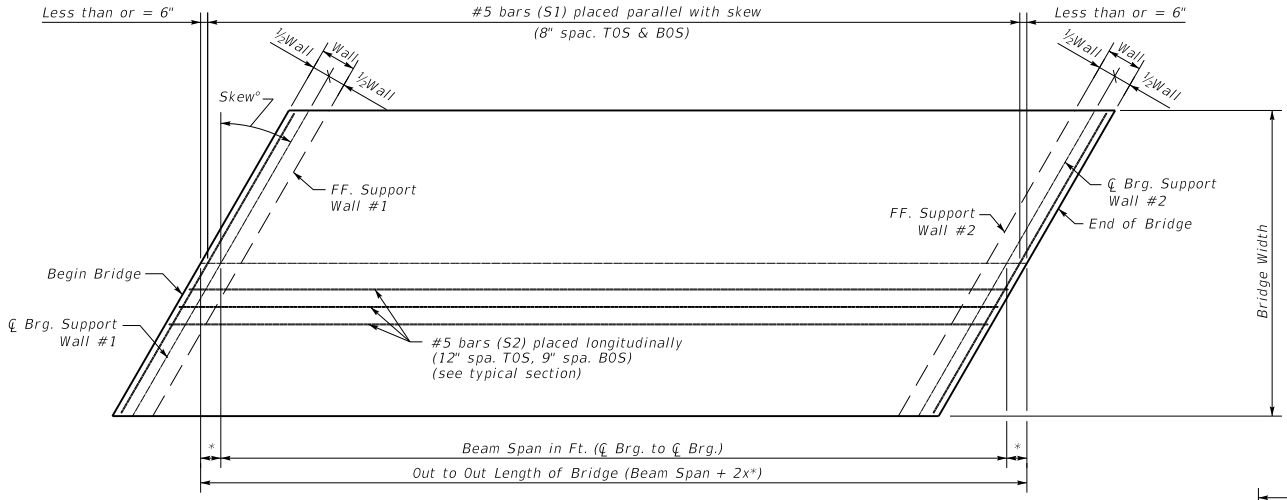

PLAN OF SLAB

NOTE: All reinforcing steel shall be epoxy coated.

#5 Skewed Transverse Bar (S1) Length

0° Skew -> Bridge Width - 4"
15° Skew -> ((Bridge Width - 4"))x 1.035)
30° Skew -> ((Bridge Width - 4") x 1.155) - ⅜"
45° Skew -> ((Bridge Width - 4") x 1.414) - ⅝"

* 0° skew, ½Wall
15° skew, ½Wall x 1.035
30° skew, ½Wall x 1.155
45° skew, ½Wall x 1.414

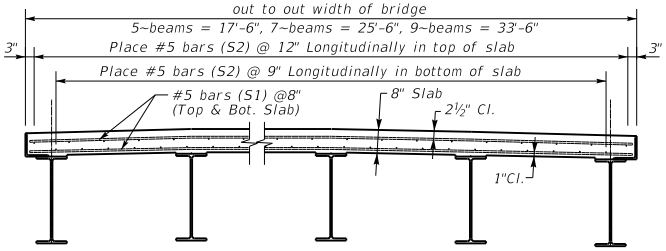

TYPICAL SECTION

NOTE: It is recommended a crash tested barrier be attached to the Superstructure to contain all vehicles within the roadway. Recommended barriers include the Type T631 guardrail, Type 3, or 32" Vertical Face railing.

NOTES: 1.) Diaphragm stirrups are to project into the slab regardless of slab forming method.

2.) Place stirrup bars parallel to face of beams.

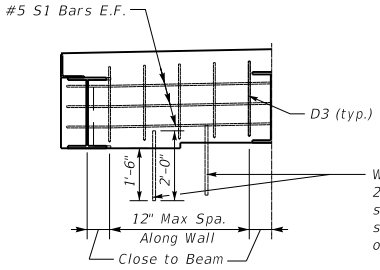

When required Place 2~#8 bars 2'-0" Long (D4) between beams spaced equally. Embed 1'-6" into support wall. (Note: Only one end of bridge to be fixed with dowels).

DIAPHRAGM

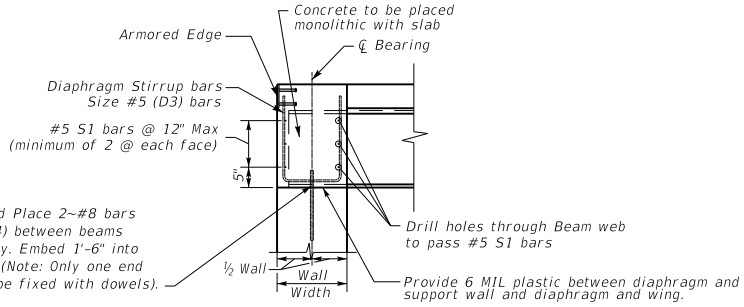

DIAPHRAGM X-SECTION

(Perpendicular to Diaphragm)

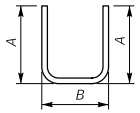

D3 BARS

Dim. "A" = Beam Depth + 4" for Slab
Dim. "A" = Beam Depth - 4" for Grid Deck.

Dim. "B" = 0° Skew -> (Wall Width - 4")
15° Skew -> (Wall Width - 4") x 1.035
30° Skew -> (Wall Width - 4") x 1.155
45° Skew -> (Wall Width - 4") x 1.414

NOTE: End Diaphragms are required on both Grid Deck and Slabs.

KENTUCKY
DEPARTMENT OF HIGHWAYS

SLAB AND END DIAPHRAGM DETAILS

STANDARD DRAWING NO. BSB-003

SUBMITTED _____ DIRECTOR DIVISION OF STRUCTURAL DESIGN 02-26-20 DATE

APPROVED _____ STATE HIGHWAY ENGINEER 02-26-20 DATE

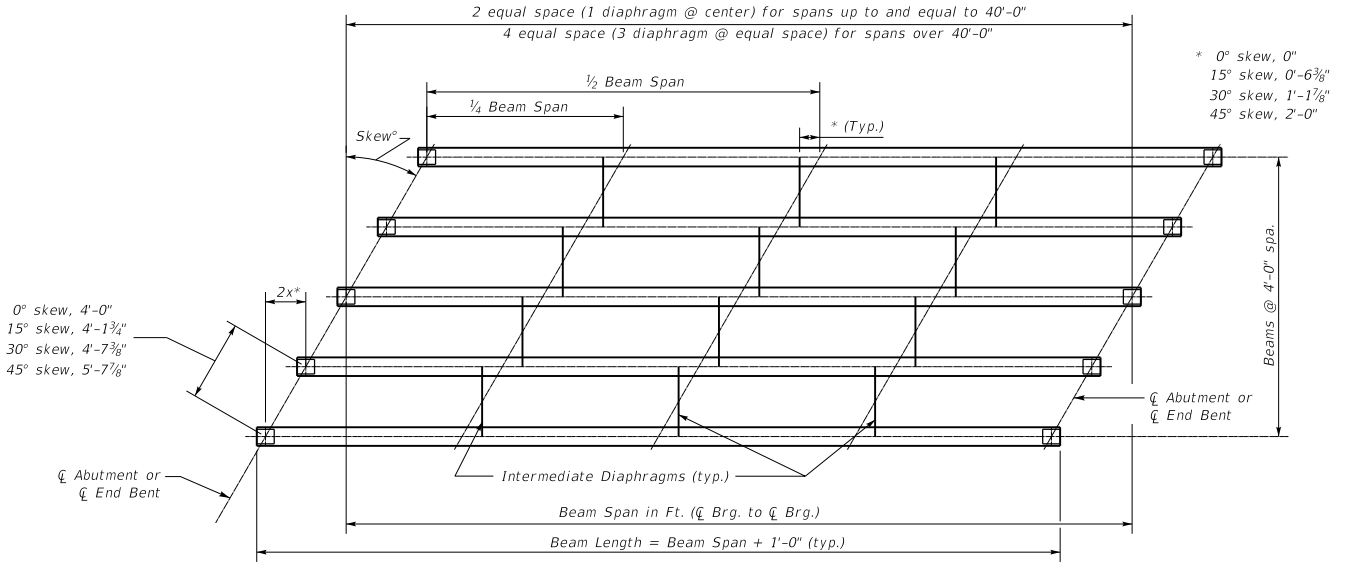

FRAMING PLAN

NOTE: Place girders with any mill or shop camber bowed up in the middle. Heat cambering is not required.

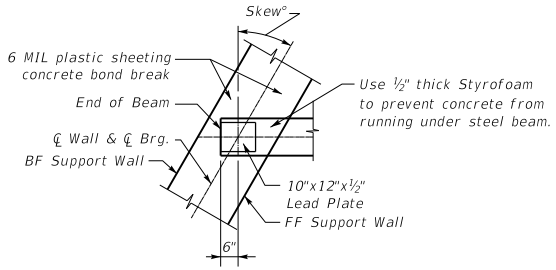

END OF BEAM DETAIL @ SUPPORTS

NOTE: Use ¾" ∅ Bolts with 13/16" ∅ Holes Throughout.

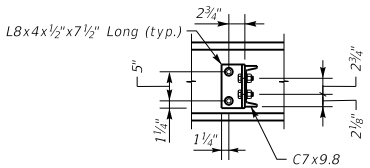

SECTION A-A

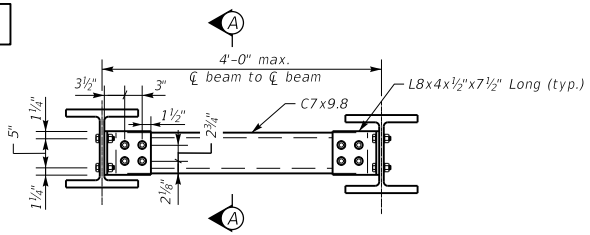

INTERMEDIATE DIAPHRAGM

(for up to 14" beam depth)

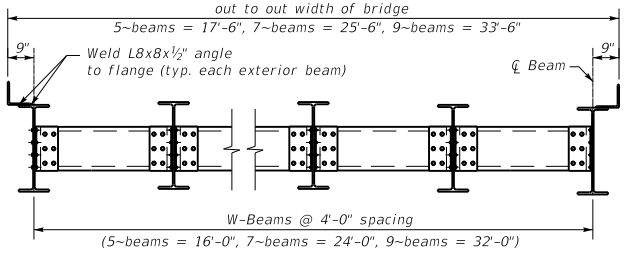

FRAMING TYPICAL

NOTE: Use ¾" ∅ Bolts with 13/16" ∅ Holes Throughout.

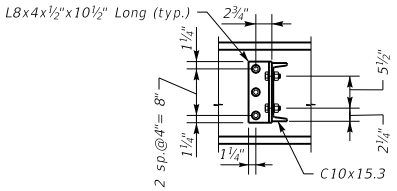

SECTION A-A

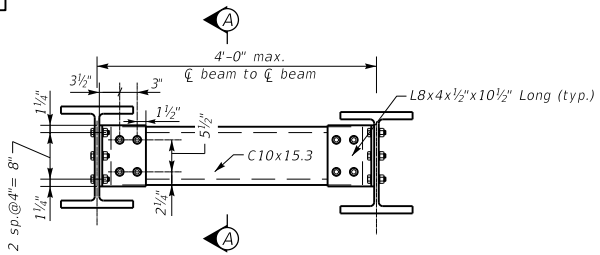

INTERMEDIATE DIAPHRAGM

(for up to 20" beam depth)

KENTUCKY
DEPARTMENT OF HIGHWAYS

ROLLED STEEL
DIAPHRAGM
DETAILS

STANDARD DRAWING NO. BSB-004

SUBMITTED _____ DIRECTOR DIVISION OF STRUCTURAL DESIGN — DATE 02-26-20

APPROVED _____ STATE HIGHWAY ENGINEER — DATE 02-26-20

NOTE: Use ¾" ∅ Bolts with 13/16" ∅ Holes Throughout.

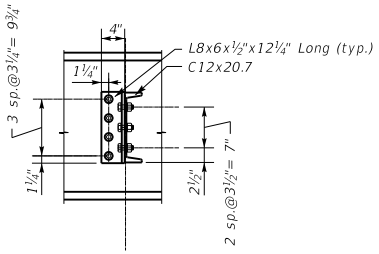

SECTION A-A

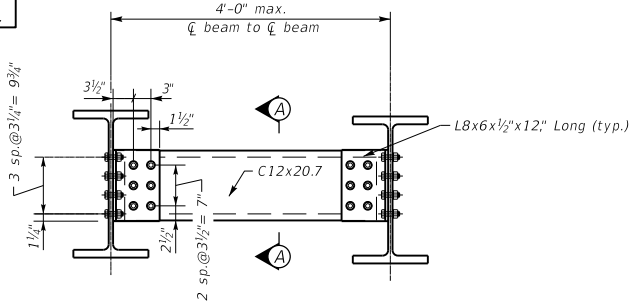

INTERMEDIATE DIAPHRAGM

(for up to 24" beam depth)

NOTE: Use ¾" ∅ Bolts with 13/16" ∅ Holes Throughout.

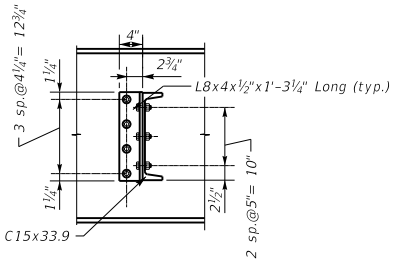

SECTION A-A

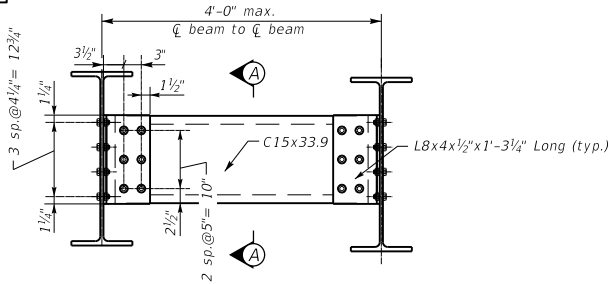

INTERMEDIATE DIAPHRAGM

(for up to 30" beam depth)

NOTE: Use ¾" ∅ Bolts with 13/16" ∅ Holes Throughout.

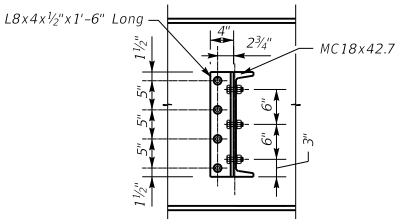

SECTION A-A

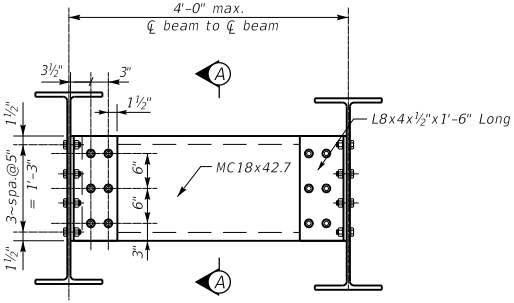

INTERMEDIATE DIAPHRAGM

(for up to 36" beam depth)

KENTUCKY
DEPARTMENT OF HIGHWAYS

ROLLED STEEL
DIAPHRAGM
DETAILS

STANDARD DRAWING NO. BSB-005

SUBMITTED _____ DIRECTOR DIVISION OF STRUCTURAL DESIGN — 02-26-20 DATE

APPROVED _____ STATE HIGHWAY ENGINEER — 02-26-20 DATE

NOTE: Use ¾" ∅ Bolts with 13/16" ∅ Holes Throughout.

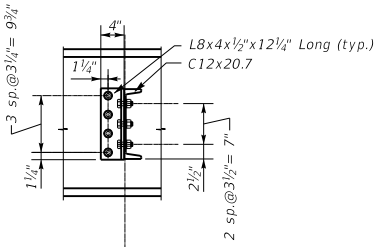

SECTION A-A

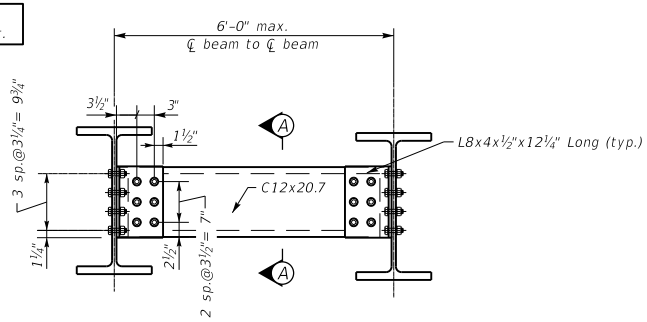

INTERMEDIATE DIAPHRAGM

(for up to 24" beam depth)

NOTE: Use ¾" ∅ Bolts with 13/16" ∅ Holes Throughout.

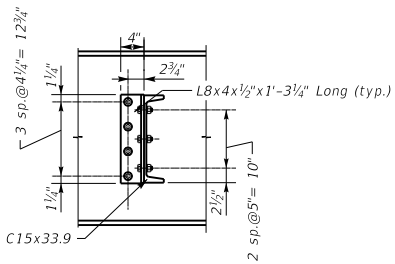

SECTION A-A

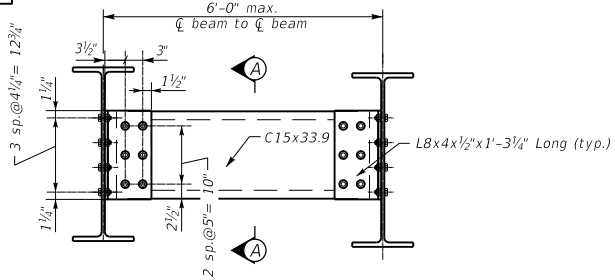

INTERMEDIATE DIAPHRAGM

(for up to 30" beam depth)

NOTE: Use ¾" ∅ Bolts with 13/16" ∅ Holes Throughout.

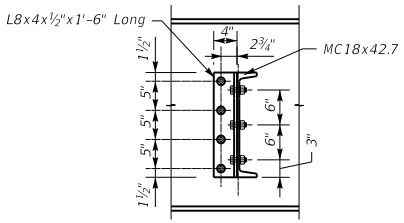

SECTION A-A

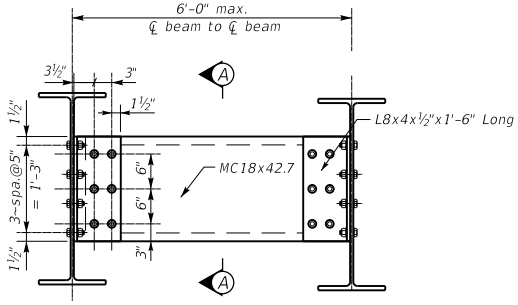

INTERMEDIATE DIAPHRAGM

(for up to 36" beam depth)

KENTUCKY
DEPARTMENT OF HIGHWAYS

COMPOSITE STEEL BEAM
SUPERSTRUCTURES
DIAPHRAGMS CONTINUED

STANDARD DRAWING NO. BSB-006

SUBMITTED _____ DIRECTOR DIVISION OF STRUCTURAL DESIGN — DATE 02-26-20

APPROVED _____ STATE HIGHWAY ENGINEER — DATE 02-26-20

General Notes

SPECIFICATIONS: All references to the standard Specifications are to the current edition of the Kentucky Department of Highways Standard Specifications for Road and Bridge Construction, with current supplemental specifications. All references to the AASHTO Specifications are to the current edition of the AASHTO LRFD Bridge Design Specifications, with interims.

DESIGN LOADS: Beam & Slab sections are designed for 1.25*HL93 (KYHL93) Live Load.

DESIGN LOAD DISTRIBUTION: Beams are designed according to the AASHTO LRFD Bridge Design Specifications for beam spacings up to 6ft and overhangs up to 3'-0" with a 9" wide barrier.

FUTURE WEARING SURFACE: These beams are designed for a 15 PSF future wearing surface load.

SUBSTRUCTURE DESIGN LOADS: Unfactored design reaction forces per beam end.

DC (kips): Beam, Slab, Diaphragms, SIP Forms, and assumed railing dead loads of 533 lbs/ft.
DW (kips): Future wearing surface.
LL+I (kips): LL with Dynamic load allowance.

MATERIAL DESIGN SPECIFICATIONS:

for Beam Steel	FY	=	50000 PSI
for Steel Reinforcement	FY	=	60000 PSI
for Class "AA" Deck Concrete	FY	=	4000 PSI

MATERIAL STEEL	A.S.T.M	AASHTO
High Strength Low Alloy Structural Steel	A709 GR 50	M270 GR 50
Shear Stud Connectors	UNS G 1018	M-169
Sheet lead and Pig Lead	B29-79	
High strength bolts, nuts, and washers	F3125 Grade A325	M-164 Type 1

All steel in longitudinal rolled wide flange beams shall meet the longitudinal Charpy V-Notch toughness test for non-fracture critical components Zone 2 in accordance with the following:

M270 GR 50 (up to 2" thickness) of 15 ft-lbs at 40°F.

Sampling and testing procedures shall be in accordance with AASHTO T243 current edition, utilizing (H) frequency testing. When plate thickness exceeds 1½" frequency of testing shall be (P).

HIGH STRENGTH BOLT CONNECTIONS: Unless otherwise specified on the plans, all bolted connnections shall be ASTM F3125 Grade A325 ¾" diameter high strength bolts, nuts, and washers. Open holes shall be 13/16" diameter. Type 1 galvanized bolts shall be used as described in AASHTO M164. All high strength bolted field connections are to be installed with "direct tension indicators" (DTI's) in accordance with the Standard Specifications and ASTM F959. All DTI's shall be manufactured from a steel conforming to the chemical requirements of ASTM A325 for Type 1 galvanized steel. DTI's shall be installed under the bolt head with the bumps facing the underside of the bolt head. Put a hardened washer under the nut and tension from the nut.

BEVELED EDGES: Bevel all exposed edges ¾".

REINFORCEMENT: Dimensions shown from the face of concrete to reinforcement are to center of bars unless otherwise shown. Spacing of bars is from center to center of bars. Clear distance to face of concrete is 2" unless otherwise noted. Epoxy coat all bars. Use stirrup bend diameters for all bent bars.

CORROSION PROTECTION: These beams and all steel components are to be hot dip galvanized according to ASTM A123. Weathering Steel is not allowed.

SHEAR CONNECTORS: The minimum length of studs is 6". Provide the necessary length to penetrate at least 2" above bottom of slab.

Include all costs for shear connectors with the price of the steel beams. Including shear connectors, welding and welding material, and materials necessary to field weld or shop weld the shear connectors in place according to the plans and specifications.

If the Contractor wishes to use something other than the stud shear connectors shown on the plans, the proposed arrangement shall be submitted for approval with the shop plans.

Studs shall be welded in accordance with AWS Specifications.

MILL TEST REPORTS: Notarized mill test reports shall be furnished in triplicate to the Department, showing that all material used in the structural steel conform to the requirements of the specifications.

PROHIBITED WELDING: No welding of any nature, other than indicated on the plans, is to be performed without the written consent of the designer, and then only in the manner and at the locations designated in the authorization.

SLAB: Ensure the entire superstructure slab and diaphragms are poured continuously, out to out, before allowing any concrete to set.

SHOP DRAWINGS: The fabricator shall submit all required shop plans, by email, to the design engineer for review. These submissions shall depict the shop plans in .pdf format. As either 11"x17" or 22"x36" sheets. Designers will make review comments on these electronic submissions as needed and shall return them to the fabricator. Upon reconciliation of the designers comments, files shall be returned to the designer and plans will be forwarded to the Division of Structural Designs Shop Plan coordinator for distribution. Only plans submitted directly to the shop plan coordinator will be distributed and only plans electronically stamped "Distributed by The Division of Structural Design" are to be used for fabrication. While this process does not require the submission of paper copies, The Division of Structural Design reserves the right to require such copies on a case by case basis.

When any changes to the design plans are proposed by the Fabricator or Supplier, the shop drawings reflecting these changes shall be submitted to the Design Engineer through the contractor.

KENTUCKY
DEPARTMENT OF HIGHWAYS

COMPOSITE STEEL BEAM
SUPERSTRUCTURES
GENERAL NOTES

STANDARD DRAWING NO. BSB-101

SUBMITTED _____ DIRECTOR DIVISION OF STRUCTURAL DESIGN 02-26-20 DATE

APPROVED _____ STATE HIGHWAY ENGINEER 02-26-20 DATE

TABLE OF BEAM SIZES AND DESIGN DATA (6 FT. MAX. BEAM SPACING WITH 3 FT. MAX. OVERHANG)

BEAM SPAN	ROLLED BEAM		DEFLECTION IN INCHES		SHEAR CONNECTORS				UNFACTORED BEAM END REACTION			LL DIST. FACT. (LANES)	
	BEAM MEMBER	BEAM DEPTH (IN.)	STEEL ONLY	TOTAL DL	#Per Row	Spa. @ Ea. End of Beam	Middle Spacing	ADTT	DC (kips)	DW (kips)	LL+I (kips)	LLDFM	LLDFV
20' Max.	W18x55	18.1	0.00	0.11	2	10 Spa. @ 5¼"	5¾" Spa.	300	11.85	0.90	72.65		.877
	W16x77	16.5	0.00	0.09	3	5 Spa. @ 5¾"	6" Spa.	Inf.	12.10		71.61		.865
	W14x82	14.3	0.00	0.11	3	14 Spa. @ 5¼"	6" Spa.	450	12.14		72.36		.874
	W12x106	12.9	0.00	0.11	3	14 Spa. @ 5¼"	6" Spa.	400	12.40		71.78		.867
25' Max.	W24x62	23.7	0.02	0.17	2	23 Spa. @ 5¼"	6" Spa.	400	14.75	1.13	74.47		.860
	W21x62	21.0	0.03	0.21	2	23 Spa. @ 5¼"	6" Spa.	350	14.75		75.31		.870
	W18x71	18.5	0.03	0.24	2	23 Spa. @ 5¼"	6" Spa.	290	14.86		75.67		.874
	W16x77	16.5	0.04	0.25	3	11 Spa. @ 5½"	6" Spa.	Inf.	14.96		76.05		.878
	W14x82	14.3	0.05	0.31	3	23 Spa. @ 5¼"	6" Spa.	425	15.01		76.89		.888
	W12x106	12.9	0.05	0.31	3	23 Spa. @ 5¼"	6" Spa.	385	15.33		76.25		.880
30' Max.	W24x76	23.9	0.04	0.28	2	28 Spa. @ 5¼"	6" Spa.	415	17.78	1.35	80.90		.856
	W21x83	21.4	0.05	0.32	2	28 Spa. @ 5¼"	6" Spa.	350	17.89		81.41		.862
	W18x86	18.4	0.06	0.39	3	7 Spa. @ 5¾"	6" Spa.	Inf.	17.94		82.40		.872
	W16x100	17.0	0.06	0.40	3	14 Spa. @ 5½"	6" Spa.	Inf.	18.18		82.26		.871
	W14x120	14.5	0.08	0.45	3	28 Spa. @ 5¼"	6" Spa.	440	18.48		82.48		.873
	W12x120	13.1	0.10	0.57	3	28 Spa. @ 5¼"	6" Spa.	375	18.48		83.41		.883
35' Max.	W27x84	26.7	0.06	0.39	3	6 Spa. @ 7¾"	8" Spa.	Inf.	20.79	1.58	86.49		.850
	W24x94	24.3	0.06	0.41	2	24 Spa. @ 5¼"	6" Spa.	420	20.97		86.69		.852
	W21x101	21.4	0.07	0.47	3	7 Spa. @ 6½"	7" Spa.	Inf.	21.10		87.33		.858
	W18x119	19.0	0.09	0.52	3	7 Spa. @ 6"	6½" Spa.	Inf.	21.43		87.50		.860
	W14x132	14.7	0.14	0.76	3	24 Spa. @ 5¼"	6" Spa.	425	21.66		89.15		.876
	W12x152	13.7	0.17	0.82	3	24 Spa. @ 5⅜"	6" Spa.	375	22.03		89.00		.874
40' Max.	W30x99	29.7	0.07	0.48	3	12 Spa. @ 8"	9" Spa.	Inf.	23.97	1.80	90.47		.840
	W27x102	27.1	0.08	0.53	3	20 Spa. @ 7½"	9" Spa.	Inf.	24.03		91.07		.845
	W24x117	24.3	0.09	0.56	3	14 Spa. @ 7"	8" Spa.	Inf.	24.35		91.22		.846
	W21x122	21.7	0.12	0.67	3	16 Spa. @ 6"	7" Spa.	Inf.	24.45		92.04	0.65	.854
	W18x130	19.3	0.15	0.81	3	9 Spa. @ 5½"	6" Spa.	Inf.	24.62		92.79		.861
	W14x176	15.2	0.21	0.98	3	19 Spa. @ 5¼"	6" Spa.	425	25.58		93.11		.864
	W12x190	14.4	0.25	1.12	3	19 Spa. @ 5¼"	6" Spa.	375	25.86		93.25		.865
45' Max.	W33x118	32.9	0.09	0.54	3	12 Spa. @ 9"	10" Spa.	Inf.	27.33	2.03	93.45		.828
	W30x116	30.0	0.11	0.64	3	21 Spa. @ 8"	10" Spa.	Inf.	27.29		94.36		.836
	W27x129	27.6	0.12	0.68	3	15 Spa. @ 7½"	9" Spa.	Inf.	27.57		94.53		.838
	W24x131	24.5	0.14	0.80	3	16 Spa. @ 7"	8" Spa.	Inf.	27.63		95.48		.846
	W21x147	22.1	0.17	0.91	3	17 Spa. @ 6½"	7" Spa.	Inf.	28.00		95.83		.849
	W18x158	19.7	0.22	1.08	3	10 Spa. @ 5½"	6" Spa.	Inf.	28.25		96.54		.855
50' Max.	W33x130	33.1	0.13	0.74	3	23 Spa. @ 8"	10" Spa.	Inf.	30.60	2.25	97.11		.828
	W30x132	30.3	0.15	0.86	3	24 Spa. @ 7½"	9" Spa.	Inf.	30.65		97.86		.834
	W27x146	27.4	0.17	0.89	3	18 Spa. @ 7"	8" Spa.	Inf.	31.02		98.11		.836
	W24x162	25.0	0.20	0.99	3	28 Spa. @ 6½"	8" Spa.	Inf.	31.43		98.43		.839
	W21x182	22.7	0.24	1.11	3	20 Spa. @ 6"	7" Spa.	Inf.	31.95		98.70		.841
	W18x192	20.4	0.30	1.36	3	35 Spa. @ 5¼"	7" Spa.	Inf.	32.19		99.51		.848
55' Max.	W36x135	35.6	0.17	0.93	3	16 Spa. @ 8¼"	10" Spa.	Inf.	33.73	2.48	100.10		.825
	W33x141	33.3	0.18	0.99	3	25 Spa. @ 8"	10" Spa.	Inf.	33.91		100.45		.828
	W30x148	30.7	0.21	1.11	3	28 Spa. @ 7¼"	9" Spa.	Inf.	34.09		100.97		.832
	W27x178	27.8	0.23	1.10	3	19 Spa. @ 7"	8" Spa.	Inf.	34.96		100.75		.830
	W24x192	25.5	0.27	1.25	3	31 Spa. @ 6½"	8" Spa.	Inf.	35.33		101.20		.834
	W21x223	23.4	0.33	1.35	3	33 Spa. @ 6"	8" Spa.	Inf.	36.21		101.10		.833
	W18x258	21.5	0.40	1.51	3	35 Spa. @ 5¾"	7" Spa.	Inf.	37.22		101.21		.834
60' Max.	W36x150	35.9	0.22	1.17	3	27 Spa. @ 8¼"	10" Spa.	Inf.	37.20	2.70	102.92		.823
	W33x169	33.8	0.24	1.16	3	18 Spa. @ 8"	9" Spa.	Inf.	37.76		102.82		.822
	W30x173	30.4	0.27	1.32	3	30 Spa. @ 7¼"	9" Spa.	Inf.	37.91		103.60		.828
	W27x194	28.1	0.31	1.42	3	21 Spa. @ 7"	8" Spa.	Inf.	38.56		103.72		.829
	W24x229	26.0	0.37	1.51	3	34 Spa. @ 6½"	8" Spa.	Inf.	39.61		103.58		.828

KENTUCKY
DEPARTMENT OF HIGHWAYS

COMPOSITE STEEL BEAM SUPERSTRUCTURES BEAM TABLES

STANDARD DRAWING NO. BSB-102

SUBMITTED _____ DIRECTOR DIVISION OF STRUCTURAL DESIGN — DATE 02-26-20

APPROVED _____ STATE HIGHWAY ENGINEER — DATE 02-26-20

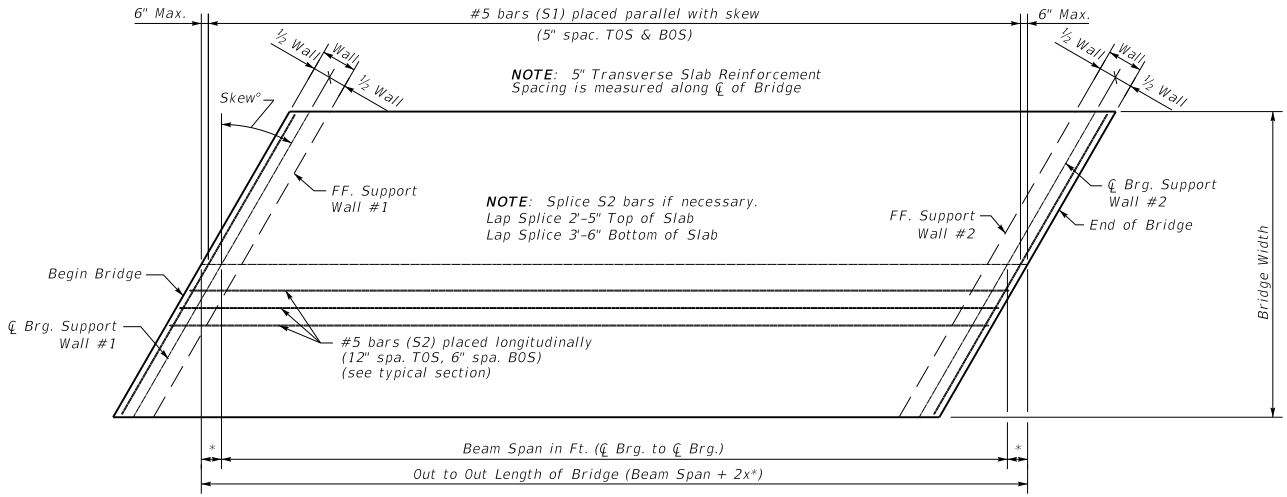

PLAN OF SLAB

NOTE: All reinforcing steel shall be epoxy coated.

$$\#5 \text{ Skewed Transverse Bar (S1) Length} = \frac{\text{Bridge Width} - 4''}{SF}$$

$$* = \frac{\frac{1}{2}\text{ Wall}}{SF}$$

Skew Factors	
Skew	SF
0°	1.000
5°	0.996
10°	0.985
15°	0.966
20°	0.940
25°	0.906
30°	0.866
35°	0.819
40°	0.766
45°	0.707

NOTE: It is recommended a crash tested barrier be attached to the Superstructure to contain all vehicles within the roadway. Recommended barriers include the Type T631 guardrail, Type 3, or 32" Vertical Face railing. See contract documents for required railing and railing drawings for additional reinforcement that may be required to be cast in deck.

NOTES:
1.) Diaphragm stirrups are to project into the slab regardless of slab forming method.
2.) Place stirrup bars parallel to face of beams.

$$\text{Estimate of Steel Quantities} = (\text{Bridge Length}-4\text{in})*(\text{Bridge Width}-4\text{in}) * \frac{(3.129 \text{ lb/sq. ft.} + 5.006 \text{ lb/sq. ft.})}{SF}$$

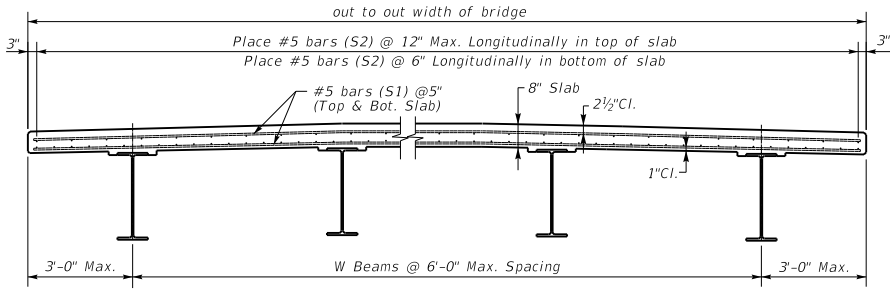

TYPICAL SECTION

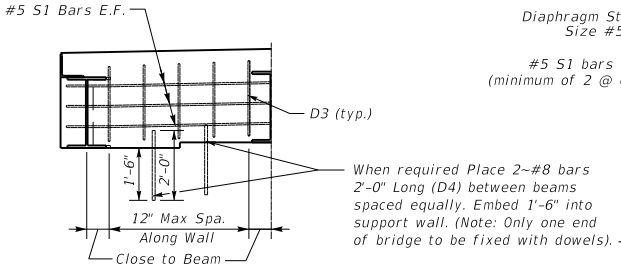

DIAPHRAGM

NOTE: End Diaphragms are required on both ends of Slabs.

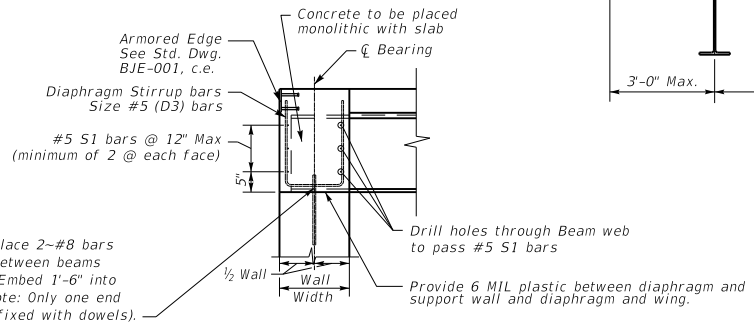

DIAPHRAGM X-SECTION

(Perpendicular to Diaphragm)

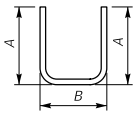

D3 BARS

$$\text{Dim. "A"} = \text{Beam Depth} + 4''$$

$$\text{Dim. "B"} = \frac{(\text{Wall Width} - 4'')}{SF}$$

KENTUCKY
DEPARTMENT OF HIGHWAYS

COMPOSITE STEEL BEAM
SUPERSTRUCTURES
SLAB DETAILS

STANDARD DRAWING NO. BSB-103

SUBMITTED _____ DIRECTOR DIVISION OF STRUCTURAL DESIGN — DATE 02-26-20

APPROVED _____ STATE HIGHWAY ENGINEER — DATE 02-26-20

Skew Factors		
Skew	SF	DM
0°	1.000	0.000
5°	0.996	0.087
10°	0.985	0.176
15°	0.966	0.268
20°	0.940	0.364
25°	0.906	0.466
30°	0.866	0.577
35°	0.819	0.700
40°	0.766	0.839
45°	0.707	1.000

NOTE: Place girders with any mill or shop camber bowed up in the middle. Heat cambering is not required.

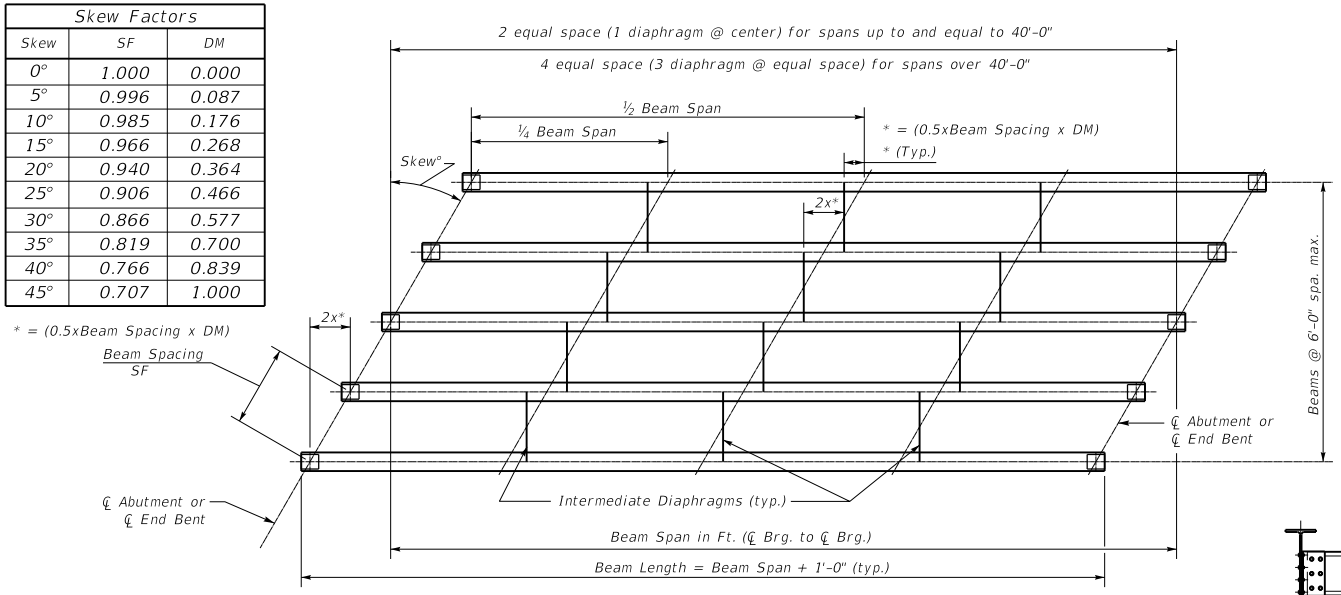

FRAMING PLAN

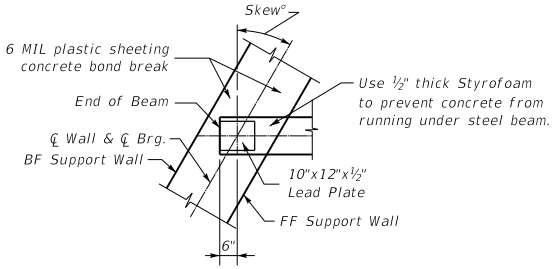

END OF BEAM DETAIL @ SUPPORTS

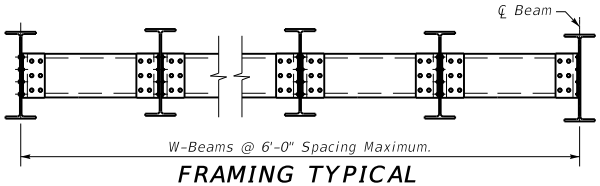

FRAMING TYPICAL

NOTE: Use ¾" ∅ Bolts with 13/16" ∅ Holes Throughout.

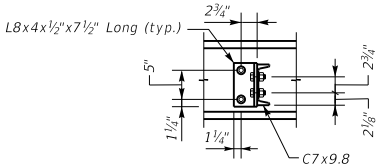

SECTION A-A

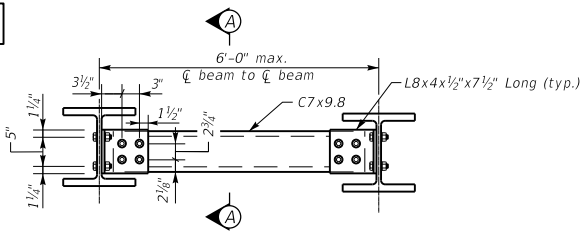

INTERMEDIATE DIAPHRAGM

(for up to 14" beam depth)

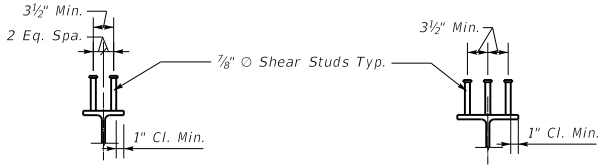

BEAM SECTION - 2 SHEAR STUDS PER ROW

BEAM SECTION - 3 SHEAR STUDS PER ROW

NOTE: Use ¾" ∅ Bolts with 13/16" ∅ Holes Throughout.

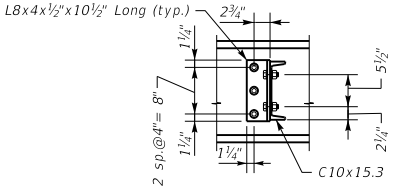

SECTION A-A

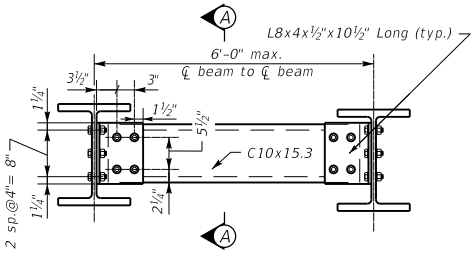

INTERMEDIATE DIAPHRAGM

(for up to 20" beam depth)

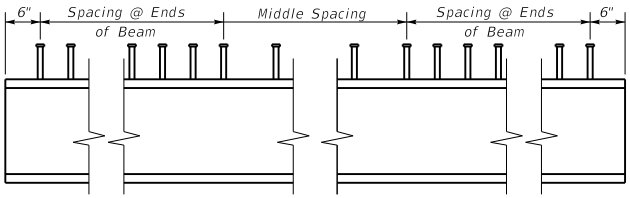

SHEAR CONNECTOR LAYOUT

(See Beam Tables for Spacings required and number of shear connectors per row)

KENTUCKY
DEPARTMENT OF HIGHWAYS

COMPOSITE STEEL BEAM
SUPERSTRUCTURES
FRAMING PLAN/DIAPHRAGMS

STANDARD DRAWING NO. BSB-104

SUBMITTED _____ DIRECTOR DIVISION OF STRUCTURAL DESIGN — DATE 02-26-20

APPROVED _____ STATE HIGHWAY ENGINEER — DATE 02-26-20

NOTE: Use ¾" ∅ Bolts with 13/16" ∅ Holes Throughout.

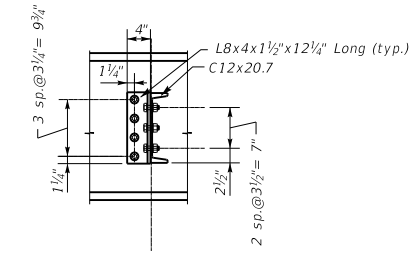

SECTION A-A

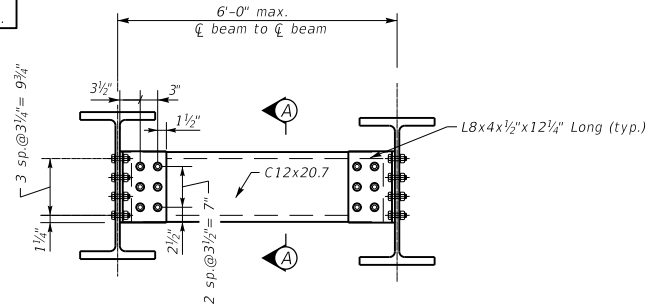

INTERMEDIATE DIAPHRAGM

(for up to 24" beam depth)

NOTE: Use ¾" ∅ Bolts with 13/16" ∅ Holes Throughout.

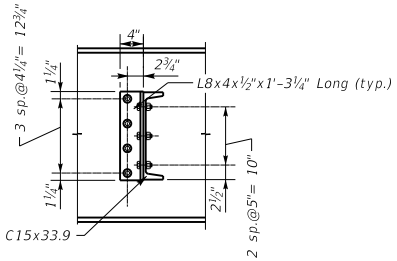

SECTION A-A

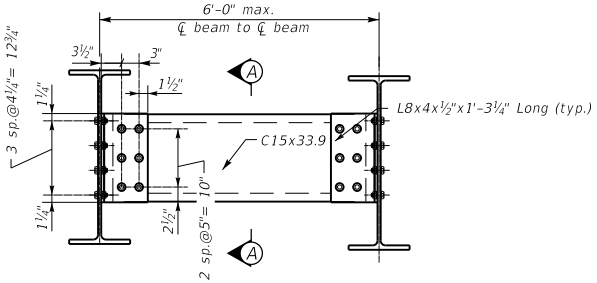

INTERMEDIATE DIAPHRAGM

(for up to 30" beam depth)

NOTE: Use ¾" ∅ Bolts with 13/16" ∅ Holes Throughout.

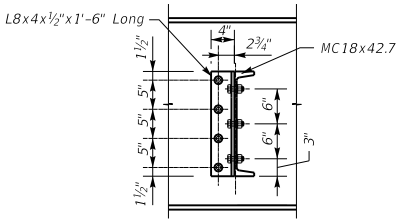

SECTION A-A

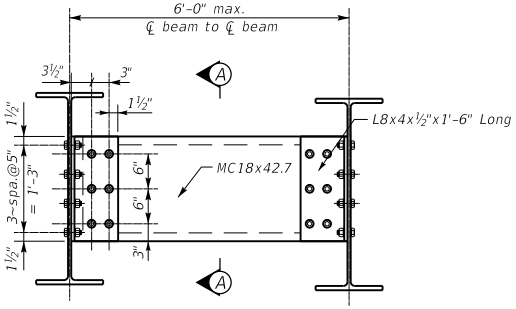

INTERMEDIATE DIAPHRAGM

(for up to 36" beam depth)

KENTUCKY
DEPARTMENT OF HIGHWAYS

COMPOSITE STEEL BEAM
SUPERSTRUCTURES
DIAPHRAGMS CONTINUED

STANDARD DRAWING NO. BSB-105

SUBMITTED _____ 02-26-20
DIRECTOR DIVISION OF STRUCTURAL DESIGN — DATE

APPROVED _____ 02-26-20
STATE HIGHWAY ENGINEER — DATE

4'-0" Width x 4'-0" Height

Fill Height (Ft.)	Top Slab										Bottom Slab										Sidewall						Mark "E" Distribution				Quantities	
	TS	J	K	Mark	Type	Length	A	B	C	D	BS	M	N	Mark	Type	Length	A	B	C	D	SW	P	R	Mark	Type	Length	W	X	Y	Z	Concrete CY/LF	Steel LBS/LF
0-2	8"	5	6"	A	1	6- 7	4- 11	0- 10	0- 5	5- 4	9"	5	6"	B	1	7- 7	5- 11	0- 10	0- 5	6- 4	10"	5	12"	C	Str	5- 0	10"	5	12"	12"	0.58	61
2.01-5	8"	5	7"	A	1	6- 7	4- 11	0- 10	0- 5	5- 4	9"	5	7"	B	1	7- 7	5- 11	0- 10	0- 5	6- 4	10"	5	12"	C	Str	5- 0	10"	5	12"	12"	0.58	57
5-10	8"	5	9"	A	1	6- 7	4- 11	0- 10	0- 5	5- 4	9"	5	9"	B	1	7- 7	5- 11	0- 10	0- 5	6- 4	10"	5	12"	C	Str	5- 0	10"	5	12"	12"	0.58	52
10-15	8"	5	7"	A	1	6- 7	4- 11	0- 10	0- 5	5- 4	9"	5	7"	B	1	7- 7	5- 11	0- 10	0- 5	6- 4	10"	5	12"	C	Str	5- 0	10"	5	12"	12"	0.58	57
15-20	8"	5	6"	A	1	6- 7	4- 11	0- 10	0- 5	5- 4	9"	5	6"	B	1	7- 7	5- 11	0- 10	0- 5	6- 4	10"	5	12"	C	Str	5- 0	10"	5	12"	12"	0.58	61
20-25	8"	5	5"	A	1	6- 7	4- 11	0- 10	0- 5	5- 4	9"	5	5"	B	1	7- 7	5- 11	0- 10	0- 5	6- 4	10"	5	12"	C	Str	5- 0	10"	5	12"	12"	0.58	67
25-30	9"	5	5"	A	1	6- 7	4- 11	0- 10	0- 5	5- 4	10"	5	5"	B	1	7- 7	5- 11	0- 10	0- 5	6- 4	10"	5	12"	C	Str	5- 2	10"	5	12"	12"	0.62	68
30-35	9"	6	5"	A	1	6- 10	4- 10	1- 0	0- 6	5- 4	10"	6	5"	B	1	7- 10	5- 10	1- 0	0- 6	6- 4	10"	5	12"	C	Str	5- 2	10"	5	12"	12"	0.62	85
35-40	10"	6	5"	A	1	6- 10	4- 10	1- 0	0- 6	5- 4	11"	6	5"	B	1	7- 10	5- 10	1- 0	0- 6	6- 4	10"	5	12"	C	Str	5- 4	10"	5	12"	12"	0.65	85

NOTE:
Bar Dimensions are per bar.

NOTE:
A & B bars may need to be rotated to maintain shown clearances.

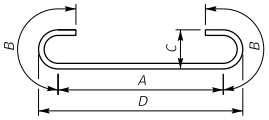

TYPE 1

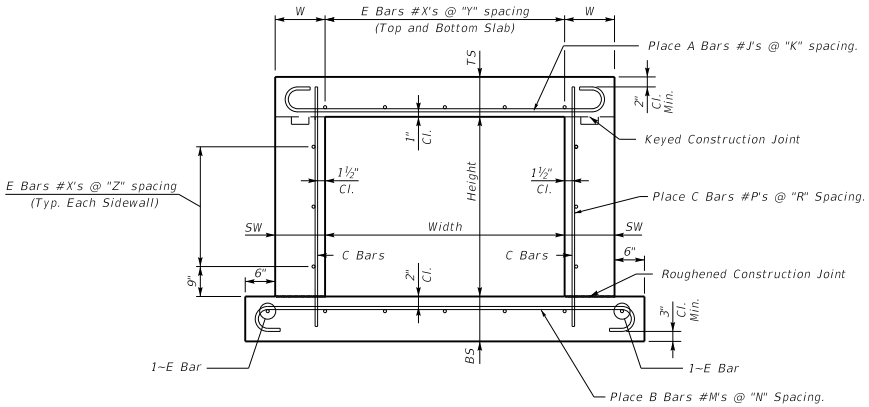

TYPICAL BARREL SECTION

KENTUCKY
DEPARTMENT OF HIGHWAYS

STANDARD CULVERT
4' - 0" WIDTH

STANDARD DRAWING NO. BSC-001

SUBMITTED _____ DIRECTOR DIVISION OF STRUCTURAL DESIGN — 02-26-20 DATE

APPROVED _____ STATE HIGHWAY ENGINEER — 02-26-20 DATE

6'-0" Width x 4'-0" Height

Fill Height (Ft.)	Top Slab										Bottom Slab										Sidewall						Mark "E" Distribution				Quantities	
	TS	J	K	Mark	Type	Length	A	B	C	D	BS	M	N	Mark	Type	Length	A	B	C	D	SW	P	R	Mark	Type	Length	W	X	Y	Z	Concrete CY/LF	Steel LBS/LF
0–2	9"	5	5"	A	1	8– 7	6–11	0–10	0– 5	7– 4	10"	5	5"	B	1	9– 7	7–11	0–10	0– 5	8– 4	10"	5	12"	C	Str	5– 2	10"	5	12"	12"	0.73	82
2.01–5	9"	5	5"	A	1	8– 7	6–11	0–10	0– 5	7– 4	10"	5	5"	B	1	9– 7	7–11	0–10	0– 5	8– 4	10"	5	12"	C	Str	5– 2	10"	5	12"	12"	0.73	82
5–10	8"	5	6"	A	1	8– 7	6–11	0–10	0– 5	7– 4	9"	5	6"	B	1	9– 7	7–11	0–10	0– 5	8– 4	10"	5	12"	C	Str	5– 0	10"	5	12"	12"	0.68	74
10–15	9"	5	5"	A	1	8– 7	6–11	0–10	0– 5	7– 4	10"	5	5"	B	1	9– 7	7–11	0–10	0– 5	8– 4	10"	5	12"	C	Str	5– 2	10"	5	12"	12"	0.73	82
15–20	9"	6	5"	A	1	8–10	6–10	1– 0	0– 6	7– 4	10"	6	5"	B	1	9–10	7–10	1– 0	0– 6	8– 4	10"	5	12"	C	Str	5– 2	10"	5	12"	12"	0.73	104
20–25	10"	6	5"	A	1	8–10	6–10	1– 0	0– 6	7– 4	11"	6	5"	B	1	9–10	7–10	1– 0	0– 6	8– 4	10"	5	12"	C	Str	5– 4	10"	5	12"	12"	0.78	104
25–30	11"	7	6"	A	1	9– 1	6– 9	1– 2	0– 7	7– 4	12"	7	6"	B	1	10– 1	7– 9	1– 2	0– 7	8– 4	10"	5	12"	C	Str	5– 6	10"	5	12"	12"	0.83	115
30–35	12"	8	6"	A	1	9– 2	6– 8	1– 3	0– 8	7– 4	13"	8	6"	B	1	10– 2	7– 8	1– 3	0– 8	8– 4	10"	5	12"	C	Str	5– 8	10"	5	12"	12"	0.88	141
35–40	13"	8	5"	A	1	9– 2	6– 8	1– 3	0– 8	7– 4	14"	8	5"	B	1	10– 2	7– 8	1– 3	0– 8	8– 4	10"	5	12"	C	Str	5–10	10"	5	12"	12"	0.93	162

6'-0" Width x 6'-0" Height

Fill Height (Ft.)	Top Slab										Bottom Slab										Sidewall						Mark "E" Distribution				Quantities	
	TS	J	K	Mark	Type	Length	A	B	C	D	BS	M	N	Mark	Type	Length	A	B	C	D	SW	P	R	Mark	Type	Length	W	X	Y	Z	Concrete CY/LF	Steel LBS/LF
0–2	9"	5	5"	A	1	8– 7	6–11	0–10	0– 5	7– 4	10"	5	5"	B	1	9– 7	7–11	0–10	0– 5	8– 4	10"	5	12"	C	Str	7– 2	10"	5	12"	12"	0.86	90
2.01–5	9"	5	5"	A	1	8– 7	6–11	0–10	0– 5	7– 4	10"	5	5"	B	1	9– 7	7–11	0–10	0– 5	8– 4	10"	5	12"	C	Str	7– 2	10"	5	12"	12"	0.86	90
5–10	8"	5	6"	A	1	8– 7	6–11	0–10	0– 5	7– 4	9"	5	6"	B	1	9– 7	7–11	0–10	0– 5	8– 4	10"	5	12"	C	Str	7– 0	10"	5	12"	12"	0.81	82
10–15	9"	5	5"	A	1	8– 7	6–11	0–10	0– 5	7– 4	10"	5	5"	B	1	9– 7	7–11	0–10	0– 5	8– 4	10"	5	12"	C	Str	7– 2	10"	5	12"	12"	0.86	90
15–20	9"	6	5"	A	1	8–10	6–10	1– 0	0– 6	7– 4	10"	6	5"	B	1	9–10	7–10	1– 0	0– 6	8– 4	10"	5	11"	C	Str	7– 2	10"	5	12"	12"	0.86	113
20–25	10"	6	5"	A	1	8–10	6–10	1– 0	0– 6	7– 4	11"	6	5"	B	1	9–10	7–10	1– 0	0– 6	8– 4	10"	5	10"	C	Str	7– 4	10"	5	12"	12"	0.91	115
25–30	11"	7	5"	A	1	9– 1	6– 9	1– 2	0– 7	7– 4	12"	7	5"	B	1	10– 1	7– 9	1– 2	0– 7	8– 4	10"	5	9"	C	Str	7– 6	10"	5	12"	12"	0.96	145
30–35	12"	8	5"	A	1	9– 2	6– 8	1– 3	0– 8	7– 4	13"	8	5"	B	1	10– 2	7– 8	1– 3	0– 8	8– 4	10"	5	8"	C	Str	7– 8	10"	5	12"	12"	1.01	178
35–40	14"	7	5"	A	1	9– 1	6– 9	1– 2	0– 7	7– 4	15"	7	5"	B	1	10– 1	7– 9	1– 2	0– 7	8– 4	10"	5	7"	C	Str	8– 0	10"	5	12"	12"	1.11	152

6'-0" Width x 8'-0" Height

Fill Height (Ft.)	Top Slab										Bottom Slab										Sidewall						Mark "E" Distribution				Quantities	
	TS	J	K	Mark	Type	Length	A	B	C	D	BS	M	N	Mark	Type	Length	A	B	C	D	SW	P	R	Mark	Type	Length	W	X	Y	Z	Concrete CY/LF	Steel LBS/LF
0–2	9"	5	5"	A	1	8– 7	6–11	0–10	0– 5	7– 4	10"	5	5"	B	1	9– 7	7–11	0–10	0– 5	8– 4	10"	5	12"	C	Str	9– 2	10"	5	12"	12"	0.98	99
2.01–5	9"	5	5"	A	1	8– 7	6–11	0–10	0– 5	7– 4	10"	5	5"	B	1	9– 7	7–11	0–10	0– 5	8– 4	10"	5	12"	C	Str	9– 2	10"	5	12"	12"	0.98	99
5–10	8"	5	5"	A	1	8– 7	6–11	0–10	0– 5	7– 4	9"	5	5"	B	1	9– 7	7–11	0–10	0– 5	8– 4	10"	5	10"	C	Str	9– 0	10"	5	12"	12"	0.93	102
10–15	9"	5	5"	A	1	8– 7	6–11	0–10	0– 5	7– 4	10"	5	5"	B	1	9– 7	7–11	0–10	0– 5	8– 4	10"	5	9"	C	Str	9– 2	10"	5	12"	12"	0.98	105
15–20	9"	6	5"	A	1	8–10	6–10	1– 0	0– 6	7– 4	10"	6	5"	B	1	9–10	7–10	1– 0	0– 6	8– 4	10"	5	8"	C	Str	9– 2	10"	5	12"	12"	0.98	130
20–25	10"	6	5"	A	1	8–10	6–10	1– 0	0– 6	7– 4	11"	6	5"	B	1	9–10	7–10	1– 0	0– 6	8– 4	10"	5	7"	C	Str	9– 4	10"	5	12"	12"	1.03	135
25–30	11"	8	6"	A	1	9– 2	6– 8	1– 3	0– 8	7– 4	12"	8	6"	B	1	10– 2	7– 8	1– 3	0– 8	8– 4	10"	5	6"	C	Str	9– 6	10"	5	12"	12"	1.08	177
30–35	12"	8	5"	A	1	9– 2	6– 8	1– 3	0– 8	7– 4	13"	8	5"	B	1	10– 2	7– 8	1– 3	0– 8	8– 4	10"	5	5"	C	Str	9– 8	10"	5	12"	12"	1.13	206
35–40	14"	8	5"	A	1	9– 2	6– 8	1– 3	0– 8	7– 4	15"	8	5"	B	1	10– 2	7– 8	1– 3	0– 8	8– 4	10"	6	6"	C	Str	10– 0	10"	5	12"	12"	1.23	218

NOTE:
A & B bars may need to be rotated to maintain shown clearances.

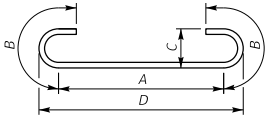

TYPE 1

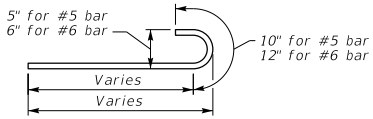

TYPE 4

NOTE:
Bar Dimensions are per bar.

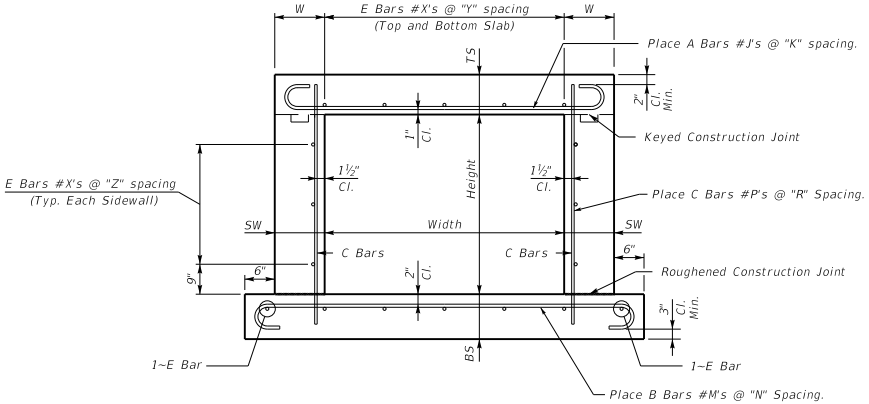

TYPICAL BARREL SECTION

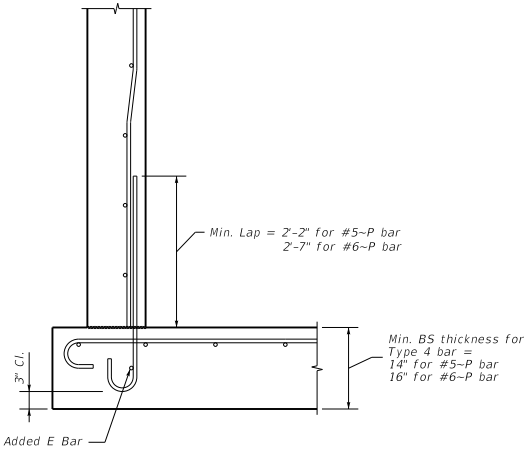

OPTIONAL HOOK DETAIL

NOTE:
The contractor will not be paid additionally if optional hook detail is used.

KENTUCKY
DEPARTMENT OF HIGHWAYS

STANDARD CULVERT
6' - 0" WIDTH

STANDARD DRAWING NO. BSC-002

SUBMITTED _____ 02-26-20
DIRECTOR DIVISION OF STRUCTURAL DESIGN — DATE

APPROVED _____ 02-26-20
STATE HIGHWAY ENGINEER — DATE

8'-0" Width x 4'-0" Height

Fill Height (Ft.)	Top Slab										Bottom Slab										Sidewall						Mark "E" Distribution				Quantities	
	TS	J	K	Mark	Type	Length	A	B	C	D	BS	M	N	Mark	Type	Length	A	B	C	D	SW	P	R	Mark	Type	Length	W	X	Y	Z	Concrete CY/LF	Steel LBS/LF
0–2	10"	6	6"	A	1	10–10	8–10	1– 0	0– 6	9– 4	11"	6	6"	B	1	11–10	9–10	1– 0	0– 6	10– 4	10"	5	12"	C	Str	5– 4	10"	5	12"	12"	0.91	109
2.01–5	10"	6	5"	A	1	10–10	8–10	1– 0	0– 6	9– 4	11"	6	5"	B	1	11–10	9–10	1– 0	0– 6	10– 4	10"	5	12"	C	Str	5– 4	10"	5	12"	12"	0.91	123
5–10	10"	5	5"	A	1	10– 7	8–11	0–10	0– 5	9– 4	11"	5	5"	B	1	11– 7	9–11	0–10	0– 5	10– 4	10"	5	12"	C	Str	5– 4	10"	5	12"	12"	0.91	96
10–15	10"	6	5"	A	1	10–10	8–10	1– 0	0– 6	9– 4	11"	6	5"	B	1	11–10	9–10	1– 0	0– 6	10– 4	10"	5	12"	C	Str	5– 4	10"	5	12"	12"	0.91	123
15–20	10"	7	5"	A	1	11– 1	8– 9	1– 2	0– 7	9– 4	11"	7	5"	B	1	12– 1	9– 9	1– 2	0– 7	10– 4	10"	5	12"	C	Str	5– 4	10"	5	12"	12"	0.91	155
20–25	12"	7	5"	A	1	11– 1	8– 9	1– 2	0– 7	9– 4	13"	7	5"	B	1	12– 1	9– 9	1– 2	0– 7	10– 4	10"	5	12"	C	Str	5– 8	10"	5	12"	12"	1.04	155
25–30	13"	8	5"	A	1	11– 2	8– 8	1– 3	0– 8	9– 4	14"	8	5"	B	1	12– 2	9– 8	1– 3	0– 8	10– 4	10"	5	12"	C	Str	5–10	10"	5	12"	12"	1.10	192
30–35	15"	8	5"	A	1	11– 2	8– 8	1– 3	0– 8	9– 4	16"	8	5"	B	1	12– 2	9– 8	1– 3	0– 8	10– 4	10"	5	12"	C	Str	6– 2	10"	5	12"	12"	1.23	192
35–40	16"	9	5"	A	1	12– 2	8– 4¼	1–11	0–11¾	9– 4	17"	9	5"	B	1	13– 2	9– 4¼	1–11	0–11¾	10– 4	10"	5	11"	C	Str	6– 4	10"	5	12"	12"	1.29	251

8'-0" Width x 6'-0" Height

Fill Height (Ft.)	Top Slab										Bottom Slab										Sidewall						Mark "E" Distribution				Quantities	
	TS	J	K	Mark	Type	Length	A	B	C	D	BS	M	N	Mark	Type	Length	A	B	C	D	SW	P	R	Mark	Type	Length	W	X	Y	Z	Concrete CY/LF	Steel LBS/LF
0–2	10"	6	6"	A	1	10–10	8–10	1– 0	0– 6	9– 4	11"	6	6"	B	1	11–10	9–10	1– 0	0– 6	10– 4	10"	5	12"	C	Str	7– 4	10"	5	12"	12"	1.04	117
2.01–5	10"	6	5"	A	1	10–10	8–10	1– 0	0– 6	9– 4	11"	6	5"	B	1	11–10	9–10	1– 0	0– 6	10– 4	10"	5	12"	C	Str	7– 4	10"	5	12"	12"	1.04	131
5–10	10"	5	5"	A	1	10– 7	8–11	0–10	0– 5	9– 4	11"	5	5"	B	1	11– 7	9–11	0–10	0– 5	10– 4	10"	5	12"	C	Str	7– 4	10"	5	12"	12"	1.04	105
10–15	10"	6	5"	A	1	10–10	8–10	1– 0	0– 6	9– 4	11"	6	5"	B	1	11–10	9–10	1– 0	0– 6	10– 4	10"	5	12"	C	Str	7– 4	10"	5	12"	12"	1.04	131
15–20	10"	7	5"	A	1	11– 1	8– 9	1– 2	0– 7	9– 4	11"	7	5"	B	1	12– 1	9– 9	1– 2	0– 7	10– 4	10"	5	11"	C	Str	7– 4	10"	5	12"	12"	1.04	164
20–25	12"	7	5"	A	1	11– 1	8– 9	1– 2	0– 7	9– 4	13"	7	5"	B	1	12– 1	9– 9	1– 2	0– 7	10– 4	10"	5	9"	C	Str	7– 8	10"	5	12"	12"	1.16	169
25–30	14"	8	6"	A	1	11– 2	8– 8	1– 3	0– 8	9– 4	15"	8	6"	B	1	12– 2	9– 8	1– 3	0– 8	10– 4	10"	5	8"	C	Str	8– 0	10"	5	12"	12"	1.29	184
30–35	15"	9	5"	A	1	12– 2	8– 4¼	1–11	0–11¾	9– 4	16"	9	5"	B	1	13– 2	9– 4¼	1–11	0–11¾	10– 4	10"	5	8"	C	Str	8– 2	10"	5	12"	12"	1.35	266
35–40	17"	10	7"	A	1	12– 7	8– 2¾	2– 2	1– 1¼	9– 4	18"	10	7"	B	1	13– 7	9– 2¾	2– 2	1– 1¼	10– 4	10"	5	7"	C	Str	8– 6	10"	5	12"	12"	1.48	258

8'-0" Width x 8'-0" Height

Fill Height (Ft.)	Top Slab										Bottom Slab										Sidewall						Mark "E" Distribution				Quantities	
	TS	J	K	Mark	Type	Length	A	B	C	D	BS	M	N	Mark	Type	Length	A	B	C	D	SW	P	R	Mark	Type	Length	W	X	Y	Z	Concrete CY/LF	Steel LBS/LF
0–2	10"	6	6"	A	1	10–10	8–10	1– 0	0– 6	9– 4	11"	6	6"	B	1	11–10	9–10	1– 0	0– 6	10– 4	10"	5	12"	C	Str	9– 4	10"	5	12"	12"	1.16	126
2.01–5	10"	6	5"	A	1	10–10	8–10	1– 0	0– 6	9– 4	11"	6	5"	B	1	11–10	9–10	1– 0	0– 6	10– 4	10"	5	12"	C	Str	9– 4	10"	5	12"	12"	1.16	139
5–10	10"	5	5"	A	1	10– 7	8–11	0–10	0– 5	9– 4	11"	5	5"	B	1	11– 7	9–11	0–10	0– 5	10– 4	10"	5	10"	C	Str	9– 4	10"	5	12"	12"	1.16	117
10–15	10"	6	5"	A	1	10–10	8–10	1– 0	0– 6	9– 4	11"	6	5"	B	1	11–10	9–10	1– 0	0– 6	10– 4	10"	5	9"	C	Str	9– 4	10"	5	12"	12"	1.16	146
15–20	11"	7	5"	A	1	11– 1	8– 9	1– 2	0– 7	9– 4	12"	7	5"	B	1	12– 1	9– 9	1– 2	0– 7	10– 4	10"	5	7"	C	Str	9– 6	10"	5	12"	12"	1.22	186
20–25	12"	8	5"	A	1	11– 2	8– 8	1– 3	0– 8	9– 4	13"	8	5"	B	1	12– 2	9– 8	1– 3	0– 8	10– 4	10"	5	7"	C	Str	9– 8	10"	5	12"	12"	1.28	222
25–30	14"	8	5"	A	1	11– 2	8– 8	1– 3	0– 8	9– 4	15"	8	5"	B	1	12– 2	9– 8	1– 3	0– 8	10– 4	10"	5	5"	C	Str	10– 0	10"	5	12"	12"	1.41	238
30–35	15"	9	5"	A	1	12– 2	8– 4¼	1–11	0–11¾	9– 4	16"	9	5"	B	1	13– 2	9– 4¼	1–11	0–11¾	10– 4	10"	6	6"	C	Str	10– 2	10"	5	12"	12"	1.47	306
35–40	17"	9	5"	A	1	12– 2	8– 4¼	1–11	0–11¾	9– 4	18"	9	5"	B	1	13– 2	9– 4¼	1–11	0–11¾	10– 4	10"	6	5"	C	Str	10– 6	10"	5	12"	12"	1.60	321

NOTE:
A & B bars may need to be rotated to maintain shown clearances.

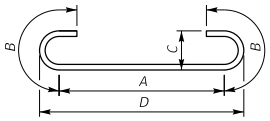

TYPE 1

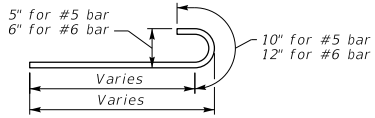

TYPE 4

NOTE:
Bar Dimensions are per bar.

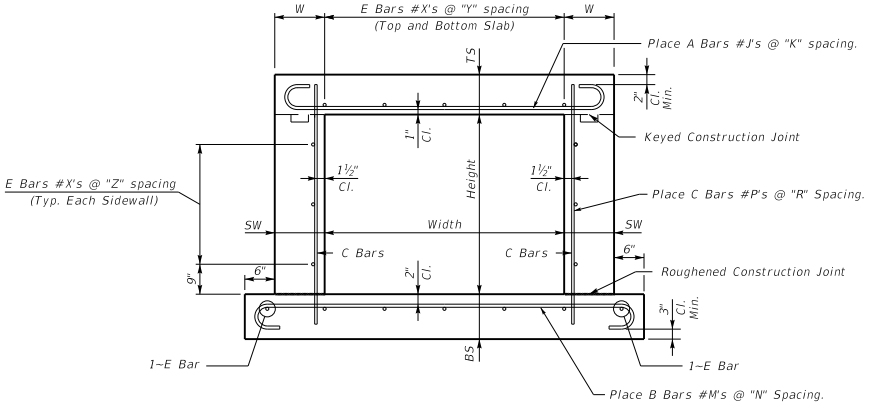

TYPICAL BARREL SECTION

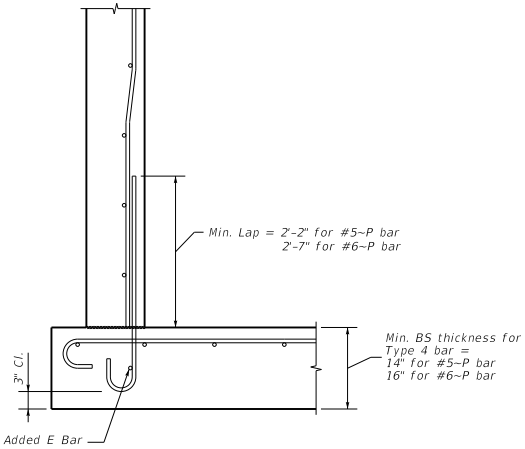

OPTIONAL HOOK DETAIL

NOTE:
The contractor will not be paid additionally if optional hook detail is used.

KENTUCKY
DEPARTMENT OF HIGHWAYS

STANDARD CULVERT
8' - 0" WIDTH

STANDARD DRAWING NO. BSC-003

SUBMITTED _____ DIRECTOR DIVISION OF STRUCTURAL DESIGN — DATE 02-26-20

APPROVED _____ STATE HIGHWAY ENGINEER — DATE 02-26-20

10'-0" Width x 4'-0" Height

Fill Height (Ft.)	Top Slab										Bottom Slab										Sidewall						Mark "E" Distribution				Quantities	
	TS	J	K	Mark	Type	Length	A	B	C	D	BS	M	N	Mark	Type	Length	A	B	C	D	SW	P	R	Mark	Type	Length	W	X	Y	Z	Concrete CY/LF	Steel LBS/LF
0-2	10"	7	6"	A	1	13- 1	10- 9	1- 2	0- 7	11- 4	11"	7	6"	B	1	14- 1	11- 9	1- 2	0- 7	12- 4	10"	5	12"	C	Str	5- 4	10"	5	10"	12"	1.04	160
2.01-5	10"	7	5"	A	1	13- 1	10- 9	1- 2	0- 7	11- 4	11"	7	5"	B	1	14- 1	11- 9	1- 2	0- 7	12- 4	10"	5	12"	C	Str	5- 4	10"	5	12"	12"	1.04	178
5-10	10"	7	5"	A	1	13- 1	10- 9	1- 2	0- 7	11- 4	11"	7	5"	B	1	14- 1	11- 9	1- 2	0- 7	12- 4	10"	5	12"	C	Str	5- 4	10"	5	12"	12"	1.04	178
10-15	10"	7	5"	A	1	13- 1	10- 9	1- 2	0- 7	11- 4	11"	7	5"	B	1	14- 1	11- 9	1- 2	0- 7	12- 4	10"	5	12"	C	Str	5- 4	10"	5	12"	12"	1.04	178
15-20	12"	7	5"	A	1	13- 1	10- 9	1- 2	0- 7	11- 4	13"	7	5"	B	1	14- 1	11- 9	1- 2	0- 7	12- 4	10"	5	12"	C	Str	5- 8	10"	5	12"	12"	1.19	179
20-25	14"	8	5"	A	1	13- 2	10- 8	1- 3	0- 8	11- 4	15"	8	5"	B	1	14- 2	11- 8	1- 3	0- 8	12- 4	10"	5	12"	C	Str	6- 0	10"	5	12"	12"	1.34	222
25-30	16"	9	6"	A	1	14- 2	10- 4¼	1-11	0-11¾	11- 4	17"	9	6"	B	1	15- 2	11- 4¼	1-11	0-11¾	12- 4	10"	5	12"	C	Str	6- 4	10"	5	12"	12"	1.49	247
30-35	17"	10	5"	A	1	14- 7	10- 2¾	2- 2	1- 1¼	11- 4	18"	10	5"	B	1	15- 7	11- 2¾	2- 2	1- 1¼	12- 4	10"	5	12"	C	Str	6- 6	10"	5	12"	12"	1.57	360
35-40	18"	11	5"	A	1	15- 3	10- 5¼	2- 5	1- 2¾	11- 8	19"	11	5"	B	1	16- 3	11- 5¼	2- 5	1- 2¾	12- 8	12"	5	12"	C	Str	6- 8	12"	5	12"	12"	1.73	449

10'-0" Width x 6'-0" Height

Fill Height (Ft.)	Top Slab										Bottom Slab										Sidewall						Mark "E" Distribution				Quantities	
	TS	J	K	Mark	Type	Length	A	B	C	D	BS	M	N	Mark	Type	Length	A	B	C	D	SW	P	R	Mark	Type	Length	W	X	Y	Z	Concrete CY/LF	Steel LBS/LF
0-2	10"	7	6"	A	1	13- 1	10- 9	1- 2	0- 7	11- 4	11"	7	6"	B	1	14- 1	11- 9	1- 2	0- 7	12- 4	10"	5	12"	C	Str	7- 4	10"	5	10"	12"	1.17	169
2.01-5	10"	7	5"	A	1	13- 1	10- 9	1- 2	0- 7	11- 4	11"	7	5"	B	1	14- 1	11- 9	1- 2	0- 7	12- 4	10"	5	12"	C	Str	7- 4	10"	5	12"	12"	1.17	187
5-10	10"	7	5"	A	1	13- 1	10- 9	1- 2	0- 7	11- 4	11"	7	5"	B	1	14- 1	11- 9	1- 2	0- 7	12- 4	10"	5	12"	C	Str	7- 4	10"	5	12"	12"	1.17	187
10-15	10"	7	5"	A	1	13- 1	10- 9	1- 2	0- 7	11- 4	11"	7	5"	B	1	14- 1	11- 9	1- 2	0- 7	12- 4	10"	5	12"	C	Str	7- 4	10"	5	12"	12"	1.17	187
15-20	12"	8	5"	A	1	13- 2	10- 8	1- 3	0- 8	11- 4	13"	8	5"	B	1	14- 2	11- 8	1- 3	0- 8	12- 4	10"	5	11"	C	Str	7- 8	10"	5	12"	12"	1.32	231
20-25	14"	8	5"	A	1	13- 2	10- 8	1- 3	0- 8	11- 4	15"	8	5"	B	1	14- 2	11- 8	1- 3	0- 8	12- 4	10"	5	9"	C	Str	8- 0	10"	5	12"	12"	1.47	236
25-30	16"	9	5"	A	1	14- 2	10- 4¼	1-11	0-11¾	11- 4	17"	9	5"	B	1	15- 2	11- 4¼	1-11	0-11¾	12- 4	10"	5	8"	C	Str	8- 4	10"	5	12"	12"	1.62	304
30-35	17"	10	5"	A	1	14- 7	10- 2¾	2- 2	1- 1¼	11- 4	18"	10	5"	B	1	15- 7	11- 2¾	2- 2	1- 1¼	12- 4	10"	5	7"	C	Str	8- 6	10"	5	12"	12"	1.69	381
35-40	19"	11	5"	A	1	15- 3	10- 5¾	2- 5	1- 2¾	11- 8	20"	11	5"	B	1	16- 3	11- 5¼	2- 5	1- 2¾	12- 8	12"	5	8"	C	Str	8-10	12"	5	12"	12"	1.96	467

10'-0" Width x 8'-0" Height

Fill Height (Ft.)	Top Slab										Bottom Slab										Sidewall						Mark "E" Distribution				Quantities	
	TS	J	K	Mark	Type	Length	A	B	C	D	BS	M	N	Mark	Type	Length	A	B	C	D	SW	P	R	Mark	Type	Length	W	X	Y	Z	Concrete CY/LF	Steel LBS/LF
0-2	10"	7	6"	A	1	13- 1	10- 9	1- 2	0- 7	11- 4	11"	7	6"	B	1	14- 1	11- 9	1- 2	0- 7	12- 4	10"	5	12"	C	Str	9- 4	10"	5	10"	12"	1.29	177
2.01-5	10"	7	5"	A	1	13- 1	10- 9	1- 2	0- 7	11- 4	11"	7	5"	B	1	14- 1	11- 9	1- 2	0- 7	12- 4	10"	5	12"	C	Str	9- 4	10"	5	12"	12"	1.29	195
5-10	10"	7	5"	A	1	13- 1	10- 9	1- 2	0- 7	11- 4	11"	7	5"	B	1	14- 1	11- 9	1- 2	0- 7	12- 4	10"	5	10"	C	Str	9- 4	10"	5	12"	12"	1.29	199
10-15	10"	7	5"	A	1	13- 1	10- 9	1- 2	0- 7	11- 4	11"	7	5"	B	1	14- 1	11- 9	1- 2	0- 7	12- 4	10"	5	9"	C	Str	9- 4	10"	5	12"	12"	1.29	202
15-20	12"	8	5"	A	1	13- 2	10- 8	1- 3	0- 8	11- 4	13"	8	5"	B	1	14- 2	11- 8	1- 3	0- 8	12- 4	10"	5	8"	C	Str	9- 8	10"	5	12"	12"	1.44	248
20-25	15"	8	6"	A	1	13- 2	10- 8	1- 3	0- 8	11- 4	16"	8	6"	B	1	14- 2	11- 8	1- 3	0- 8	12- 4	10"	5	7"	C	Str	10- 2	10"	5	12"	12"	1.66	225
25-30	16"	9	5"	A	1	14- 2	10- 4¼	1-11	0-11¾	11- 4	17"	9	5"	B	1	15- 2	11- 4¼	1-11	0-11¾	12- 4	10"	5	5"	C	Str	10- 4	10"	5	12"	12"	1.74	333
30-35	18"	10	5"	A	1	14-11	10- 6¾	2- 2	1- 1¼	11- 8	19"	10	5"	B	1	15-11	11- 6¾	2- 2	1- 1¼	12- 8	12"	5	6"	C	Str	10- 8	12"	5	12"	12"	2.03	406
35-40	19"	11	5"	A	1	15- 3	10- 5¼	2- 5	1- 2¾	11- 8	20"	11	5"	B	1	16- 3	11- 5¼	2- 5	1- 2¾	12- 8	12"	5	5"	C	Str	10-10	12"	5	12"	12"	2.10	498

10'-0" Width x 10'-0" Height

Fill Height (Ft.)	Top Slab										Bottom Slab										Sidewall						Mark "E" Distribution				Quantities	
	TS	J	K	Mark	Type	Length	A	B	C	D	BS	M	N	Mark	Type	Length	A	B	C	D	SW	P	R	Mark	Type	Length	W	X	Y	Z	Concrete CY/LF	Steel LBS/LF
0-2	10"	7	6"	A	1	13- 1	10- 9	1- 2	0- 7	11- 4	11"	7	6"	B	1	14- 1	11- 9	1- 2	0- 7	12- 4	10"	5	11"	C	Str	11- 4	10"	5	10"	12"	1.41	188
2.01-5	10"	7	5"	A	1	13- 1	10- 9	1- 2	0- 7	11- 4	11"	7	5"	B	1	14- 1	11- 9	1- 2	0- 7	12- 4	10"	5	9"	C	Str	11- 4	10"	5	12"	12"	1.41	211
5-10	10"	7	5"	A	1	13- 1	10- 9	1- 2	0- 7	11- 4	11"	7	5"	B	1	14- 1	11- 9	1- 2	0- 7	12- 4	10"	5	7"	C	Str	11- 4	10"	5	12"	12"	1.41	220
10-15	11"	7	5"	A	1	13- 1	10- 9	1- 2	0- 7	11- 4	12"	7	5"	B	1	14- 1	11- 9	1- 2	0- 7	12- 4	10"	5	6"	C	Str	11- 6	10"	5	12"	12"	1.49	228
15-20	13"	7	5"	A	1	13- 1	10- 9	1- 2	0- 7	11- 4	14"	7	5"	B	1	14- 1	11- 9	1- 2	0- 7	12- 4	10"	6	7"	C	Str	11-10	10"	5	12"	12"	1.64	241
20-25	15"	8	5"	A	1	13- 6	11- 0	1- 3	0- 8	11- 8	16"	8	5"	B	1	14- 6	12- 0	1- 3	0- 8	12- 8	12"	6	7"	C	Str	12- 2	12"	5	12"	12"	1.94	289
25-30	17"	10	7"	A	1	14-11	10- 6¾	2- 2	1- 1¼	11- 8	18"	10	7"	B	1	15-11	11- 6¾	2- 2	1- 1¼	12- 8	12"	6	6"	C	Str	12- 6	12"	5	12"	12"	2.10	349
30-35	18"	10	5"	A	1	15- 5	11- 0¾	2- 2	1- 1¼	12- 2	19"	10	5"	B	1	16- 5	12- 0¾	2- 2	1- 1¼	13- 2	15"	6	7"	C	Str	12- 8	15"	5	12"	12"	2.42	441
35-40	20"	11	5"	A	1	15- 9	10-11¼	2- 5	1- 2¾	12- 2	21"	11	5"	B	1	16- 9	11-11¼	2- 5	1- 2¾	13- 2	15"	6	6"	C	Str	13- 0	15"	5	12"	12"	2.58	539

NOTE:
Bar Dimensions are per bar.

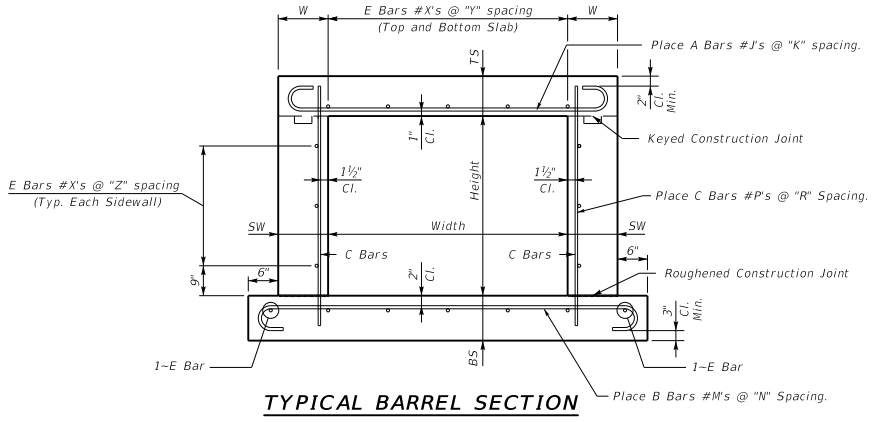

TYPICAL BARREL SECTION

NOTE:
A & B bars may need to be rotated to maintain shown clearances.

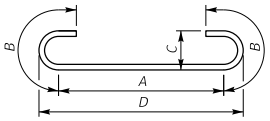

TYPE 1

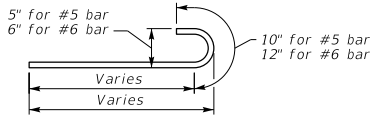

TYPE 4

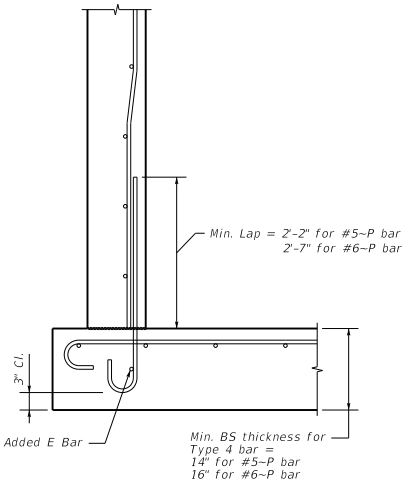

OPTIONAL HOOK DETAIL

NOTE:
The contractor will not be paid additionally if optional hook detail is used.

KENTUCKY
DEPARTMENT OF HIGHWAYS

STANDARD CULVERT
10' - 0" WIDTH

STANDARD DRAWING NO. BSC-004

SUBMITTED _____ DIRECTOR DIVISION OF STRUCTURAL DESIGN — DATE 02-26-20

APPROVED _____ STATE HIGHWAY ENGINEER — DATE 02-26-20

12'-0" Width x 4'-0" Height

Fill Height (Ft.)	Top Slab										Bottom Slab										Sidewall						Mark "E" Distribution				Quantities	
	TS	J	K	Mark	Type	Length	A	B	C	D	BS	M	N	Mark	Type	Length	A	B	C	D	SW	P	R	Mark	Type	Length	W	X	Y	Z	Concrete CY/LF	Steel LBS/LF
0-2	11"	7	5"	A	1	15- 1	12- 9	1- 2	0- 7	13- 4	12"	7	5"	B	1	16- 1	13- 9	1- 2	0- 7	14- 4	10"	5	12"	C	Str	5- 6	12"	5	10"	12"	1.26	207
2.01-5	11"	7	5"	A	1	15- 1	12- 9	1- 2	0- 7	13- 4	12"	7	5"	B	1	16- 1	13- 9	1- 2	0- 7	14- 4	10"	5	12"	C	Str	5- 6	10"	5	12"	12"	1.26	203
5-10	11"	8	5"	A	1	15- 2	12- 8	1- 3	0- 8	13- 4	12"	8	5"	B	1	16- 2	13- 8	1- 3	0- 8	14- 4	10"	5	12"	C	Str	5- 6	10"	5	12"	12"	1.26	250
10-15	11"	8	5"	A	1	15- 2	12- 8	1- 3	0- 8	13- 4	12"	8	5"	B	1	16- 2	13- 8	1- 3	0- 8	14- 4	10"	5	12"	C	Str	5- 6	10"	5	12"	12"	1.26	250
15-20	14"	8	5"	A	1	15- 2	12- 8	1- 3	0- 8	13- 4	15"	8	5"	B	1	16- 2	13- 8	1- 3	0- 8	14- 4	10"	5	12"	C	Str	6- 0	10"	5	12"	12"	1.52	252
20-25	16"	9	6"	A	1	16- 2	12- 4¼	1-11	0-11¾	13- 4	17"	9	6"	B	1	17- 2	13- 4¼	1-11	0-11¾	14- 4	10"	5	12"	C	Str	6- 4	10"	5	12"	12"	1.70	278
25-30	17"	10	5"	A	1	16- 7	12- 2¾	2- 2	1- 1¼	13- 4	18"	10	5"	B	1	17- 7	13- 2¾	2- 2	1- 1¼	14- 4	10"	5	12"	C	Str	6- 6	10"	5	12"	12"	1.78	405
30-35	19"	11	5"	A	1	17- 3	12- 5¼	2- 5	1- 2¾	13- 8	20"	11	5"	B	1	18- 3	13- 5¼	2- 5	1- 2¾	14- 8	12"	5	12"	C	Str	6-10	12"	5	12"	12"	2.05	505
35-40	22"	11	5"	A	1	17- 9	12-11¼	2- 5	1- 2¾	14- 2	23"	11	5"	B	1	18- 9	13-11¼	2- 5	1- 2¾	15- 2	15"	5	12"	C	Str	7- 4	15"	5	12"	12"	2.46	519

12'-0" Width x 6'-0" Height

Fill Height (Ft.)	Top Slab										Bottom Slab										Sidewall						Mark "E" Distribution				Quantities	
	TS	J	K	Mark	Type	Length	A	B	C	D	BS	M	N	Mark	Type	Length	A	B	C	D	SW	P	R	Mark	Type	Length	W	X	Y	Z	Concrete CY/LF	Steel LBS/LF
0-2	11"	7	5"	A	1	15- 1	12- 9	1- 2	0- 7	13- 4	12"	7	5"	B	1	16- 1	13- 9	1- 2	0- 7	14- 4	10"	5	12"	C	Str	7- 6	12"	5	10"	12"	1.38	215
2.01-5	11"	7	5"	A	1	15- 1	12- 9	1- 2	0- 7	13- 4	12"	7	5"	B	1	16- 1	13- 9	1- 2	0- 7	14- 4	10"	5	12"	C	Str	7- 6	10"	5	12"	12"	1.38	211
5-10	11"	8	5"	A	1	15- 2	12- 8	1- 3	0- 8	13- 4	12"	8	5"	B	1	16- 2	13- 8	1- 3	0- 8	14- 4	10"	5	12"	C	Str	7- 6	10"	5	12"	12"	1.38	259
10-15	11"	8	5"	A	1	15- 2	12- 8	1- 3	0- 8	13- 4	12"	8	5"	B	1	16- 2	13- 8	1- 3	0- 8	14- 4	10"	5	12"	C	Str	7- 6	10"	5	12"	12"	1.38	259
15-20	14"	8	5"	A	1	15- 2	12- 8	1- 3	0- 8	13- 4	15"	8	5"	B	1	16- 2	13- 8	1- 3	0- 8	14- 4	10"	5	10"	C	Str	8- 0	10"	5	12"	12"	1.64	263
20-25	16"	9	5"	A	1	16- 2	12- 4¼	1-11	0-11¾	13- 4	17"	9	5"	B	1	17- 2	13- 4¼	1-11	0-11¾	14- 4	10"	5	9"	C	Str	8- 4	10"	5	12"	12"	1.82	337
25-30	18"	10	5"	A	1	16-11	12- 6¾	2- 2	1- 1¼	13- 8	19"	10	5"	B	1	17-11	13- 6¾	2- 2	1- 1¼	14- 8	12"	5	9"	C	Str	8- 8	12"	5	12"	12"	2.11	427
30-35	20"	11	5"	A	1	17- 3	12- 5¼	2- 5	1- 2¾	13- 8	21"	11	5"	B	1	18- 3	13- 5¼	2- 5	1- 2¾	14- 8	12"	5	8"	C	Str	9- 0	12"	5	12"	12"	2.29	523
35-40	23"	11	5"	A	1	17- 9	12-11¼	2- 5	1- 2¾	14- 2	24"	11	5"	B	1	18- 9	13-11¼	2- 5	1- 2¾	15- 2	15"	5	8"	C	Str	9- 6	15"	5	12"	12"	2.74	537

12'-0" Width x 8'-0" Height

Fill Height (Ft.)	Top Slab										Bottom Slab										Sidewall						Mark "E" Distribution				Quantities	
	TS	J	K	Mark	Type	Length	A	B	C	D	BS	M	N	Mark	Type	Length	A	B	C	D	SW	P	R	Mark	Type	Length	W	X	Y	Z	Concrete CY/LF	Steel LBS/LF
0-2	11"	7	5"	A	1	15- 1	12- 9	1- 2	0- 7	13- 4	12"	7	5"	B	1	16- 1	13- 9	1- 2	0- 7	14- 4	10"	5	12"	C	Str	9- 6	12"	5	10"	12"	1.51	223
2.01-5	11"	7	5"	A	1	15- 1	12- 9	1- 2	0- 7	13- 4	12"	7	5"	B	1	16- 1	13- 9	1- 2	0- 7	14- 4	10"	5	12"	C	Str	9- 6	10"	5	12"	12"	1.51	219
5-10	11"	8	5"	A	1	15- 2	12- 8	1- 3	0- 8	13- 4	12"	8	5"	B	1	16- 2	13- 8	1- 3	0- 8	14- 4	10"	5	10"	C	Str	9- 6	10"	5	12"	12"	1.51	271
10-15	11"	8	5"	A	1	15- 2	12- 8	1- 3	0- 8	13- 4	12"	8	5"	B	1	16- 2	13- 8	1- 3	0- 8	14- 4	10"	5	9"	C	Str	9- 6	10"	5	12"	12"	1.51	274
15-20	14"	8	5"	A	1	15- 2	12- 8	1- 3	0- 8	13- 4	15"	8	5"	B	1	16- 2	13- 8	1- 3	0- 8	14- 4	10"	5	7"	C	Str	10- 0	10"	5	12"	12"	1.77	283
20-25	17"	8	5"	A	1	15- 2	12- 8	1- 3	0- 8	13- 4	18"	8	5"	B	1	16- 2	13- 8	1- 3	0- 8	14- 4	10"	5	6"	C	Str	10- 6	10"	5	12"	12"	2.03	291
25-30	18"	11	5"	A	1	17- 3	12- 5¼	2- 5	1- 2¾	13- 8	19"	11	5"	B	1	18- 3	13- 5¼	2- 5	1- 2¾	14- 8	12"	5	7"	C	Str	10- 8	12"	5	12"	12"	2.25	537
30-35	20"	11	5"	A	1	17- 3	12- 5¼	2- 5	1- 2¾	13- 8	21"	11	5"	B	1	18- 3	13- 5¼	2- 5	1- 2¾	14- 8	12"	5	5"	C	Str	11- 0	12"	5	12"	12"	2.43	554
35-40	23"	11	5"	A	1	17- 9	12-11¼	2- 5	1- 2¾	14- 2	24"	11	5"	B	1	18- 9	13-11¼	2- 5	1- 2¾	15- 2	15"	5	6"	C	Str	11- 6	15"	5	12"	12"	2.92	560

12'-0" Width x 10'-0" Height

Fill Height (Ft.)	Top Slab										Bottom Slab										Sidewall						Mark "E" Distribution				Quantities	
	TS	J	K	Mark	Type	Length	A	B	C	D	BS	M	N	Mark	Type	Length	A	B	C	D	SW	P	R	Mark	Type	Length	W	X	Y	Z	Concrete CY/LF	Steel LBS/LF
0-2	11"	7	5"	A	1	15- 1	12- 9	1- 2	0- 7	13- 4	12"	7	5"	B	1	16- 1	13- 9	1- 2	0- 7	14- 4	10"	5	11"	C	Str	11- 6	12"	5	10"	12"	1.63	234
2.01-5	11"	7	5"	A	1	15- 1	12- 9	1- 2	0- 7	13- 4	12"	7	5"	B	1	16- 1	13- 9	1- 2	0- 7	14- 4	10"	5	9"	C	Str	11- 6	10"	5	12"	12"	1.63	236
5-10	11"	8	5"	A	1	15- 2	12- 8	1- 3	0- 8	13- 4	12"	8	5"	B	1	16- 2	13- 8	1- 3	0- 8	14- 4	10"	5	7"	C	Str	11- 6	10"	5	12"	12"	1.63	293
10-15	12"	8	5"	A	1	15- 2	12- 8	1- 3	0- 8	13- 4	13"	8	5"	B	1	16- 2	13- 8	1- 3	0- 8	14- 4	10"	5	6"	C	Str	11- 8	10"	5	12"	12"	1.72	300
15-20	15"	8	5"	A	1	15- 6	13- 0	1- 3	0- 8	13- 8	16"	8	5"	B	1	16- 6	14- 0	1- 3	0- 8	14- 8	12"	6	8"	C	Str	12- 2	12"	5	12"	12"	2.13	311
20-25	17"	10	7"	A	1	16-11	12- 6¾	2- 2	1- 1¼	13- 8	18"	10	7"	B	1	17-11	13- 6¾	2- 2	1- 1¼	14- 8	12"	6	7"	C	Str	12- 6	12"	5	12"	12"	2.31	372
25-30	18"	11	5"	A	1	17- 9	12-11¼	2- 5	1- 2¾	14- 2	19"	11	5"	B	1	18- 9	13-11¼	2- 5	1- 2¾	15- 2	15"	6	8"	C	Str	12- 8	15"	5	12"	12"	2.65	573
30-35	21"	11	5"	A	1	17- 9	12-11¼	2- 5	1- 2¾	14- 2	22"	11	5"	B	1	18- 9	13-11¼	2- 5	1- 2¾	15- 2	15"	6	7"	C	Str	13- 2	15"	5	12"	12"	2.92	584
35-40	24"	11	5"	A	1	18- 3	13- 5¼	2- 5	1- 2¾	14- 8	25"	11	5"	B	1	19- 3	14- 5¼	2- 5	1- 2¾	15- 8	18"	6	7"	C	Str	13- 8	18"	5	12"	12"	3.46	599

NOTE:
A & B bars may need to be rotated to maintain shown clearances.

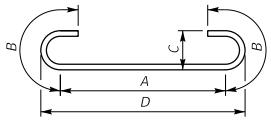

TYPE 1

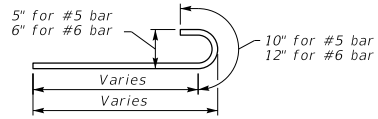

TYPE 4

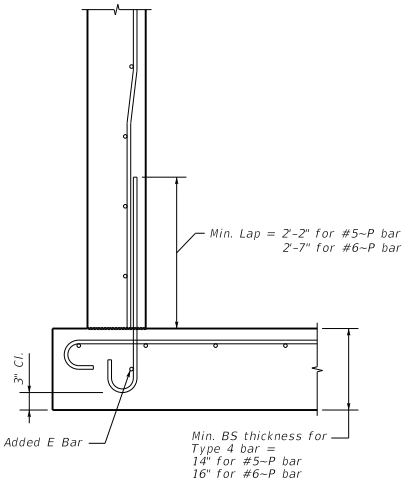

OPTIONAL HOOK DETAIL

NOTE:
The contractor will not be paid additionally if optional hook detail is used.

NOTE:
Bar Dimensions are per bar.

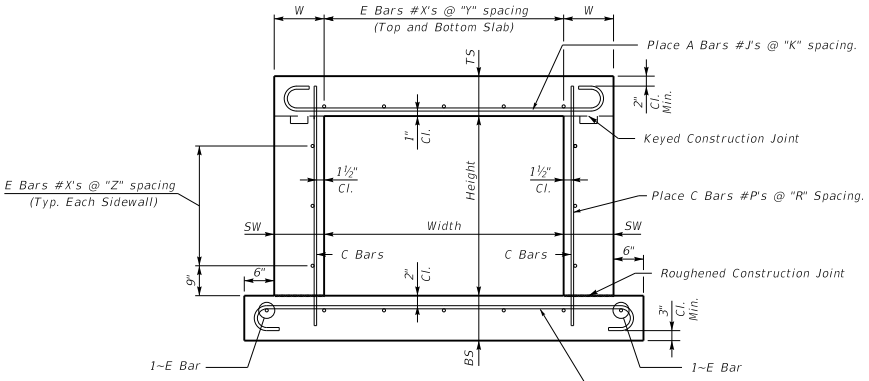

TYPICAL BARREL SECTION

KENTUCKY
DEPARTMENT OF HIGHWAYS

STANDARD CULVERT
12' - 0" WIDTH

STANDARD DRAWING NO. BSC-005

SUBMITTED _____ DIRECTOR DIVISION OF STRUCTURAL DESIGN — DATE 02-26-20

APPROVED _____ STATE HIGHWAY ENGINEER — DATE 02-26-20

14'-0" Width x 4'-0" Height

Fill Height (Ft.)	Top Slab										Bottom Slab										Sidewall						Mark "E" Distribution				Quantities	
	TS	J	K	Mark	Type	Length	A	B	C	D	BS	M	N	Mark	Type	Length	A	B	C	D	SW	P	R	Mark	Type	Length	W	X	Y	Z	Concrete CY/LF	Steel LBS/LF
0-2	12"	7	5"	A	1	17- 1	14- 9	1- 2	0- 7	15- 4	13"	7	5"	B	1	18- 1	15- 9	1- 2	0- 7	16- 4	10"	5	12"	C	Str	5- 8	13"	5	9"	12"	1.50	235
2.01-5	12"	8	6"	A	1	17- 2	14- 8	1- 3	0- 8	15- 4	13"	8	6"	B	1	18- 2	15- 8	1- 3	0- 8	16- 4	10"	5	12"	C	Str	5- 8	10"	5	12"	12"	1.50	243
5-10	12"	8	5"	A	1	17- 2	14- 8	1- 3	0- 8	15- 4	13"	8	5"	B	1	18- 2	15- 8	1- 3	0- 8	16- 4	10"	5	12"	C	Str	5- 8	10"	5	12"	12"	1.50	281
10-15	13"	8	5"	A	1	17- 2	14- 8	1- 3	0- 8	15- 4	14"	8	5"	B	1	18- 2	15- 8	1- 3	0- 8	16- 4	10"	5	12"	C	Str	5-10	10"	5	12"	12"	1.60	281
15-20	15"	9	5"	A	1	18- 2	14- 4¼	1-11	0-11¾	15- 4	16"	9	5"	B	1	19- 2	15- 4¼	1-11	0-11¾	16- 4	10"	5	12"	C	Str	6- 2	10"	5	12"	12"	1.80	360
20-25	17"	10	5"	A	1	18- 7	14- 2¾	2- 2	1- 1¼	15- 4	18"	10	5"	B	1	19- 7	15- 2¾	2- 2	1- 1¼	16- 4	10"	5	12"	C	Str	6- 6	10"	5	12"	12"	2.00	451
25-30	19"	11	5"	A	1	19- 3	14- 5¼	2- 5	1- 2¾	15- 8	20"	11	5"	B	1	20- 3	15- 5¼	2- 5	1- 2¾	16- 8	12"	5	12"	C	Str	6-10	12"	5	12"	12"	2.29	560
30-35	23"	11	5"	A	1	19- 9	14-11¼	2- 5	1- 2¾	16- 2	24"	11	5"	B	1	20- 9	15-11¼	2- 5	1- 2¾	17- 2	15"	5	12"	C	Str	7- 6	15"	5	12"	12"	2.84	574
35-40	26"	11	5"	A	1	20- 3	15- 5¼	2- 5	1- 2¾	16- 8	27"	11	5"	B	1	21- 3	16- 5¼	2- 5	1- 2¾	17- 8	18"	5	12"	C	Str	8- 0	18"	5	12"	12"	3.31	588

14'-0" Width x 6'-0" Height

Fill Height (Ft.)	Top Slab										Bottom Slab										Sidewall						Mark "E" Distribution				Quantities	
	TS	J	K	Mark	Type	Length	A	B	C	D	BS	M	N	Mark	Type	Length	A	B	C	D	SW	P	R	Mark	Type	Length	W	X	Y	Z	Concrete CY/LF	Steel LBS/LF
0-2	12"	7	5"	A	1	17- 1	14- 9	1- 2	0- 7	15- 4	13"	7	5"	B	1	18- 1	15- 9	1- 2	0- 7	16- 4	10"	5	12"	C	Str	7- 8	13"	5	9"	12"	1.62	243
2.01-5	12"	8	6"	A	1	17- 2	14- 8	1- 3	0- 8	15- 4	13"	8	6"	B	1	18- 2	15- 8	1- 3	0- 8	16- 4	10"	5	12"	C	Str	7- 8	10"	5	12"	12"	1.62	251
5-10	12"	8	5"	A	1	17- 2	14- 8	1- 3	0- 8	15- 4	13"	8	5"	B	1	18- 2	15- 8	1- 3	0- 8	16- 4	10"	5	12"	C	Str	7- 8	10"	5	12"	12"	1.62	289
10-15	13"	8	5"	A	1	17- 2	14- 8	1- 3	0- 8	15- 4	14"	8	5"	B	1	18- 2	15- 8	1- 3	0- 8	16- 4	10"	5	12"	C	Str	7-10	10"	5	12"	12"	1.72	289
15-20	15"	9	5"	A	1	18- 2	14- 4¼	1-11	0-11¾	15- 4	16"	9	5"	B	1	19- 2	15- 4¼	1-11	0-11¾	16- 4	10"	5	10"	C	Str	8- 2	10"	5	12"	12"	1.92	372
20-25	18"	10	5"	A	1	18-11	14- 6¾	2- 2	1- 1¼	15- 8	19"	10	5"	B	1	19-11	15- 6¾	2- 2	1- 1¼	16- 8	12"	5	10"	C	Str	8- 8	12"	5	12"	12"	2.33	470
25-30	20"	11	5"	A	1	19- 3	14- 5¼	2- 5	1- 2¾	15- 8	21"	11	5"	B	1	20- 3	15- 5¼	2- 5	1- 2¾	16- 8	12"	5	8"	C	Str	9- 0	12"	5	12"	12"	2.54	578
30-35	23"	11	5"	A	1	19- 9	14-11¼	2- 5	1- 2¾	16- 2	24"	11	5"	B	1	20- 9	15-11¼	2- 5	1- 2¾	17- 2	15"	5	9"	C	Str	9- 6	15"	5	12"	12"	3.03	589
35-40	27"	11	5"	A	1	20- 3	15- 5¼	2- 5	1- 2¾	16- 8	28"	11	5"	B	1	21- 3	16- 5¼	2- 5	1- 2¾	17- 8	18"	5	10"	C	Str	10- 2	18"	5	12"	12"	3.64	601

14'-0" Width x 8'-0" Height

Fill Height (Ft.)	Top Slab										Bottom Slab										Sidewall						Mark "E" Distribution				Quantities	
	TS	J	K	Mark	Type	Length	A	B	C	D	BS	M	N	Mark	Type	Length	A	B	C	D	SW	P	R	Mark	Type	Length	W	X	Y	Z	Concrete CY/LF	Steel LBS/LF
0-2	12"	8	6"	A	1	17- 2	14- 8	1- 3	0- 8	15- 4	13"	8	6"	B	1	18- 2	15- 8	1- 3	0- 8	16- 4	10"	5	12"	C	Str	9- 8	13"	5	9"	12"	1.75	268
2.01-5	12"	8	6"	A	1	17- 2	14- 8	1- 3	0- 8	15- 4	13"	8	6"	B	1	18- 2	15- 8	1- 3	0- 8	16- 4	10"	5	12"	C	Str	9- 8	10"	5	12"	12"	1.75	260
5-10	12"	8	5"	A	1	17- 2	14- 8	1- 3	0- 8	15- 4	13"	8	5"	B	1	18- 2	15- 8	1- 3	0- 8	16- 4	10"	5	10"	C	Str	9- 8	10"	5	12"	12"	1.75	301
10-15	13"	8	5"	A	1	17- 2	14- 8	1- 3	0- 8	15- 4	14"	8	5"	B	1	18- 2	15- 8	1- 3	0- 8	16- 4	10"	5	8"	C	Str	9-10	10"	5	12"	12"	1.85	308
15-20	16"	8	5"	A	1	17- 2	14- 8	1- 3	0- 8	15- 4	17"	8	5"	B	1	18- 2	15- 8	1- 3	0- 8	16- 4	10"	5	7"	C	Str	10- 4	10"	5	12"	12"	2.15	314
20-25	18"	10	5"	A	1	18-11	14- 6¾	2- 2	1- 1¼	15- 8	19"	10	5"	B	1	19-11	15- 6¾	2- 2	1- 1¼	16- 8	12"	5	7"	C	Str	10- 8	12"	5	12"	12"	2.48	491
25-30	20"	11	5"	A	1	19- 3	14- 5¼	2- 5	1- 2¾	15- 8	21"	11	5"	B	1	20- 3	15- 5¼	2- 5	1- 2¾	16- 8	12"	5	6"	C	Str	11- 0	12"	5	12"	12"	2.69	600
30-35	24"	11	5"	A	1	20- 3	15- 5¼	2- 5	1- 2¾	16- 8	25"	11	5"	B	1	21- 3	16- 5¼	2- 5	1- 2¾	17- 8	18"	6	9"	C	Str	11- 8	18"	5	12"	12"	3.54	627
35-40	28"	11	5"	A	1	20- 3	15- 5¼	2- 5	1- 2¾	16- 8	29"	11	5"	B	1	21- 3	16- 5¼	2- 5	1- 2¾	17- 8	18"	6	8"	C	Str	12- 4	18"	5	12"	12"	3.97	635

14'-0" Width x 10'-0" Height

Fill Height (Ft.)	Top Slab										Bottom Slab										Sidewall						Mark "E" Distribution				Quantities	
	TS	J	K	Mark	Type	Length	A	B	C	D	BS	M	N	Mark	Type	Length	A	B	C	D	SW	P	R	Mark	Type	Length	W	X	Y	Z	Concrete CY/LF	Steel LBS/LF
0-2	12"	8	6"	A	1	17- 2	14- 8	1- 3	0- 8	15- 4	13"	8	6"	B	1	18- 2	15- 8	1- 3	0- 8	16- 4	10"	5	11"	C	Str	11- 8	13"	5	9"	12"	1.87	279
2.01-5	12"	8	6"	A	1	17- 2	14- 8	1- 3	0- 8	15- 4	13"	8	6"	B	1	18- 2	15- 8	1- 3	0- 8	16- 4	10"	5	9"	C	Str	11- 8	10"	5	12"	12"	1.87	276
5-10	12"	8	5"	A	1	17- 2	14- 8	1- 3	0- 8	15- 4	13"	8	5"	B	1	18- 2	15- 8	1- 3	0- 8	16- 4	10"	5	7"	C	Str	11- 8	10"	5	12"	12"	1.87	323
10-15	13"	8	5"	A	1	17- 2	14- 8	1- 3	0- 8	15- 4	14"	8	5"	B	1	18- 2	15- 8	1- 3	0- 8	16- 4	10"	5	6"	C	Str	11-10	10"	5	12"	12"	1.97	331
15-20	16"	9	5"	A	1	18- 6	14- 8¼	1-11	0-11¾	15- 8	17"	9	5"	B	1	19- 6	15- 8¼	1-11	0-11¾	16- 8	12"	6	8"	C	Str	12- 4	12"	5	12"	12"	2.43	421
20-25	18"	11	5"	A	1	19- 9	14-11¼	2- 5	1- 2¾	16- 2	19"	11	5"	B	1	20- 9	15-11¼	2- 5	1- 2¾	17- 2	15"	5	6"	C	Str	12- 8	15"	5	12"	12"	2.87	624
25-30	21"	11	5"	A	1	19- 9	14-11¼	2- 5	1- 2¾	16- 2	22"	11	5"	B	1	20- 9	15-11¼	2- 5	1- 2¾	17- 2	15"	5	5"	C	Str	13- 2	15"	5	12"	12"	3.19	637
30-35	25"	11	5"	A	1	20- 3	15- 5¼	2- 5	1- 2¾	16- 8	26"	11	5"	B	1	21- 3	16- 5¼	2- 5	1- 2¾	17- 8	18"	6	8"	C	Str	13-10	18"	5	12"	12"	3.87	646
35-40	28"	11	5"	A	1	20- 3	15- 5¼	2- 5	1- 2¾	16- 8	29"	11	5"	B	1	21- 3	16- 5¼	2- 5	1- 2¾	17- 8	18"	6	7"	C	Str	14- 4	18"	5	12"	12"	4.20	658

NOTE:
A & B bars may need to be rotated to maintain shown clearances.

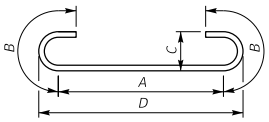

TYPE 1

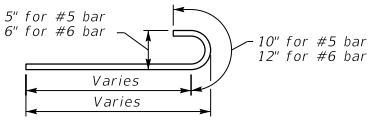

TYPE 4

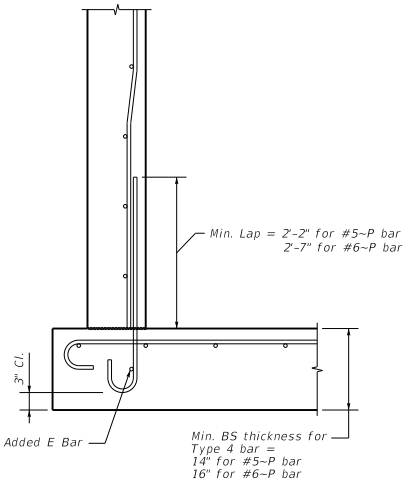

OPTIONAL HOOK DETAIL

NOTE:
The contractor will not be paid additionally if optional hook detail is used.

NOTE:
Bar Dimensions are per bar.

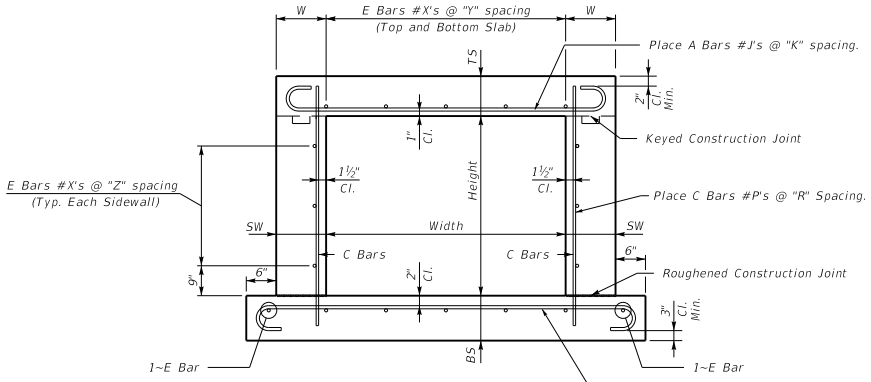

TYPICAL BARREL SECTION

KENTUCKY
DEPARTMENT OF HIGHWAYS

STANDARD CULVERT
14' - 0" WIDTH

STANDARD DRAWING NO. BSC-006

SUBMITTED _____ DIRECTOR DIVISION OF STRUCTURAL DESIGN — DATE 02-26-20

APPROVED _____ STATE HIGHWAY ENGINEER — DATE 02-26-20

16'-0" Width x 4'-0" Height

Fill Height (Ft.)	Top Slab										Bottom Slab										Sidewall						Mark "E" Distribution				Quantities	
	TS	J	K	Mark	Type	Length	A	B	C	D	BS	M	N	Mark	Type	Length	A	B	C	D	SW	P	R	Mark	Type	Length	W	X	Y	Z	Concrete CY/LF	Steel LBS/LF
0-2	13"	8	5"	A	1	19- 2	16- 8	1- 3	0- 8	17- 4	14"	8	5"	B	1	20- 2	17- 8	1- 3	0- 8	18- 4	10"	5	12"	C	Str	5-10	11½"	5	9"	12"	1.77	321
2.01-5	13"	8	5"	A	1	19- 2	16- 8	1- 3	0- 8	17- 4	14"	8	5"	B	1	20- 2	17- 8	1- 3	0- 8	18- 4	10"	5	12"	C	Str	5-10	10"	5	12"	12"	1.77	311
5-10	14"	8	5"	A	1	19- 2	16- 8	1- 3	0- 8	17- 4	15"	8	5"	B	1	20- 2	17- 8	1- 3	0- 8	18- 4	10"	5	12"	C	Str	6- 0	10"	5	12"	12"	1.88	311
10-15	15"	9	5"	A	1	20- 2	16- 4¼	1-11	0-11¾	17- 4	16"	9	5"	B	1	21- 2	17- 4¼	1-11	0-11¾	18- 4	10"	5	12"	C	Str	6- 2	10"	5	12"	12"	1.99	397
15-20	17"	9	5"	A	1	20- 2	16- 4¼	1-11	0-11¾	17- 4	18"	9	5"	B	1	21- 2	17- 4¼	1-11	0-11¾	18- 4	10"	5	12"	C	Str	6- 6	10"	5	12"	12"	2.22	397
20-25	19"	11	5"	A	1	21- 3	16- 5¼	2- 5	1- 2¾	17- 8	20"	11	5"	B	1	22- 3	17- 5¼	2- 5	1- 2¾	18- 8	12"	5	12"	C	Str	6-10	12"	5	12"	12"	2.53	615
25-30	23"	11	5"	A	1	21- 9	16-11¼	2- 5	1- 2¾	18- 2	24"	11	5"	B	1	22- 9	17-11¼	2- 5	1- 2¾	19- 2	15"	5	12"	C	Str	7- 6	15"	5	12"	12"	3.13	630
30-35	26"	11	5"	A	1	22- 3	17- 5¼	2- 5	1- 2¾	18- 8	27"	11	5"	B	1	23- 3	18- 5¼	2- 5	1- 2¾	19- 8	18"	5	12"	C	Str	8- 0	18"	5	12"	12"	3.64	643
35-40	30"	11	5"	A	1	22- 3	17- 5¼	2- 5	1- 2¾	18- 8	31"	11	5"	B	1	23- 3	18- 5¼	2- 5	1- 2¾	19- 8	18"	5	12"	C	Str	8- 8	18"	5	12"	12"	4.12	645

16'-0" Width x 6'-0" Height

Fill Height (Ft.)	Top Slab										Bottom Slab										Sidewall						Mark "E" Distribution				Quantities	
	TS	J	K	Mark	Type	Length	A	B	C	D	BS	M	N	Mark	Type	Length	A	B	C	D	SW	P	R	Mark	Type	Length	W	X	Y	Z	Concrete CY/LF	Steel LBS/LF
0-2	13"	8	5"	A	1	19- 2	16- 8	1- 3	0- 8	17- 4	14"	8	5"	B	1	20- 2	17- 8	1- 3	0- 8	18- 4	10"	5	12"	C	Str	7-10	11½"	5	9"	12"	1.89	330
2.01-5	13"	8	5"	A	1	19- 2	16- 8	1- 3	0- 8	17- 4	14"	8	5"	B	1	20- 2	17- 8	1- 3	0- 8	18- 4	10"	5	12"	C	Str	7-10	10"	5	12"	12"	1.89	319
5-10	14"	8	5"	A	1	19- 2	16- 8	1- 3	0- 8	17- 4	15"	8	5"	B	1	20- 2	17- 8	1- 3	0- 8	18- 4	10"	5	12"	C	Str	8- 0	10"	5	12"	12"	2.00	320
10-15	15"	9	5"	A	1	20- 2	16- 4¼	1-11	0-11¾	17- 4	16"	9	5"	B	1	21- 2	17- 4¼	1-11	0-11¾	18- 4	10"	5	12"	C	Str	8- 2	10"	5	12"	12"	2.12	405
15-20	17"	9	5"	A	1	20- 2	16- 4¼	1-11	0-11¾	17- 4	18"	9	5"	B	1	21- 2	17- 4¼	1-11	0-11¾	18- 4	10"	5	10"	C	Str	8- 6	10"	5	12"	12"	2.34	409
20-25	19"	11	5"	A	1	21- 3	16- 5¼	2- 5	1- 2¾	17- 8	20"	11	5"	B	1	22- 3	17- 5¼	2- 5	1- 2¾	18- 8	12"	5	10"	C	Str	8-10	12"	5	12"	12"	2.68	627
25-30	23"	11	5"	A	1	21- 9	16-11¼	2- 5	1- 2¾	18- 2	24"	11	5"	B	1	22- 9	17-11¼	2- 5	1- 2¾	19- 2	15"	5	11"	C	Str	9- 6	15"	5	12"	12"	3.32	640
30-35	27"	11	5"	A	1	22- 3	17- 5¼	2- 5	1- 2¾	18- 8	28"	11	5"	B	1	23- 3	18- 5¼	2- 5	1- 2¾	19- 8	18"	5	11"	C	Str	10- 2	18"	5	12"	12"	3.98	654
35-40	31"	11	5"	A	1	22- 3	17- 5¼	2- 5	1- 2¾	18- 8	32"	11	5"	B	1	23- 3	18- 5¼	2- 5	1- 2¾	19- 8	18"	5	9"	C	Str	10-10	18"	5	12"	12"	4.46	661

16'-0" Width x 8'-0" Height

Fill Height (Ft.)	Top Slab										Bottom Slab										Sidewall						Mark "E" Distribution				Quantities	
	TS	J	K	Mark	Type	Length	A	B	C	D	BS	M	N	Mark	Type	Length	A	B	C	D	SW	P	R	Mark	Type	Length	W	X	Y	Z	Concrete CY/LF	Steel LBS/LF
0-2	13"	8	5"	A	1	19- 2	16- 8	1- 3	0- 8	17- 4	14"	8	5"	B	1	20- 2	17- 8	1- 3	0- 8	18- 4	10"	5	12"	C	Str	9-10	11½"	5	9"	12"	2.01	338
2.01-5	13"	8	5"	A	1	19- 2	16- 8	1- 3	0- 8	17- 4	14"	8	5"	B	1	20- 2	17- 8	1- 3	0- 8	18- 4	10"	5	12"	C	Str	9-10	10"	5	12"	12"	2.01	328
5-10	14"	8	5"	A	1	19- 2	16- 8	1- 3	0- 8	17- 4	15"	8	5"	B	1	20- 2	17- 8	1- 3	0- 8	18- 4	10"	5	10"	C	Str	10- 0	10"	5	12"	12"	2.13	332
10-15	15"	9	5"	A	1	20- 2	16- 4¼	1-11	0-11¾	17- 4	16"	9	5"	B	1	21- 2	17- 4¼	1-11	0-11¾	18- 4	10"	5	8"	C	Str	10- 2	10"	5	12"	12"	2.24	424
15-20	17"	10	5"	A	1	20- 7	16- 2¾	2- 2	1- 1¼	17- 4	18"	10	5"	B	1	21- 7	17- 2¾	2- 2	1- 1¼	18- 4	10"	5	7"	C	Str	10- 6	10"	5	12"	12"	2.46	529
20-25	20"	11	5"	A	1	21- 3	16- 5¼	2- 5	1- 2¾	17- 8	21"	11	5"	B	1	22- 3	17- 5¼	2- 5	1- 2¾	18- 8	12"	5	7"	C	Str	11- 0	12"	5	12"	12"	2.94	649
25-30	24"	11	5"	A	1	22- 3	17- 5¼	2- 5	1- 2¾	18- 8	25"	11	5"	B	1	23- 3	18- 5¼	2- 5	1- 2¾	19- 8	18"	5	8"	C	Str	11- 8	18"	5	12"	12"	3.84	672
30-35	28"	11	5"	A	1	22- 3	17- 5¼	2- 5	1- 2¾	18- 8	29"	11	5"	B	1	23- 3	18- 5¼	2- 5	1- 2¾	19- 8	18"	6	9"	C	Str	12- 4	18"	5	12"	12"	4.33	684
35-40	31"	11	5"	A	1	22- 3	17- 5¼	2- 5	1- 2¾	18- 8	32"	11	5"	B	1	23- 3	18- 5¼	2- 5	1- 2¾	19- 8	18"	6	8"	C	Str	12-10	18"	5	12"	12"	4.69	693

16'-0" Width x 10'-0" Height

Fill Height (Ft.)	Top Slab										Bottom Slab										Sidewall						Mark "E" Distribution				Quantities	
	TS	J	K	Mark	Type	Length	A	B	C	D	BS	M	N	Mark	Type	Length	A	B	C	D	SW	P	R	Mark	Type	Length	W	X	Y	Z	Concrete CY/LF	Steel LBS/LF
0-2	13"	8	5"	A	1	19- 2	16- 8	1- 3	0- 8	17- 4	14"	8	5"	B	1	20- 2	17- 8	1- 3	0- 8	18- 4	10"	5	11"	C	Str	11-10	11½"	5	9"	12"	2.14	349
2.01-5	13"	8	5"	A	1	19- 2	16- 8	1- 3	0- 8	17- 4	14"	8	5"	B	1	20- 2	17- 8	1- 3	0- 8	18- 4	10"	5	9"	C	Str	11-10	10"	5	12"	12"	2.14	344
5-10	14"	8	5"	A	1	19- 2	16- 8	1- 3	0- 8	17- 4	15"	8	5"	B	1	20- 2	17- 8	1- 3	0- 8	18- 4	10"	5	7"	C	Str	12- 0	10"	5	12"	12"	2.25	354
10-15	16"	9	5"	A	1	20- 2	16- 4¼	1-11	0-11¾	17- 4	17"	9	5"	B	1	21- 2	17- 4¼	1-11	0-11¾	18- 4	10"	5	6"	C	Str	12- 4	10"	5	12"	12"	2.47	448
15-20	17"	10	5"	A	1	20-11	16- 6¾	2- 2	1- 1¼	17- 8	18"	10	5"	B	1	21-11	17- 6¾	2- 2	1- 1¼	18- 8	12"	5	6"	C	Str	12- 6	12"	5	12"	12"	2.75	554
20-25	20"	11	5"	A	1	21- 3	16- 5¼	2- 5	1- 2¾	17- 8	21"	11	5"	B	1	22- 3	17- 5¼	2- 5	1- 2¾	18- 8	12"	5	5"	C	Str	13- 0	12"	5	12"	12"	3.09	679
25-30	25"	11	5"	A	1	22- 3	17- 5¼	2- 5	1- 2¾	18- 8	26"	11	5"	B	1	23- 3	18- 5¼	2- 5	1- 2¾	19- 8	18"	5	5"	C	Str	13-10	18"	5	12"	12"	4.19	709
30-35	28"	11	5"	A	1	22- 3	17- 5¼	2- 5	1- 2¾	18- 8	29"	11	5"	B	1	23- 3	18- 5¼	2- 5	1- 2¾	19- 8	18"	6	8"	C	Str	14- 4	18"	5	12"	12"	4.55	704
35-40	32"	11	5"	A	1	22- 3	17- 5¼	2- 5	1- 2¾	18- 8	33"	11	5"	B	1	23- 3	18- 5¼	2- 5	1- 2¾	19- 8	18"	6	7"	C	Str	15- 0	18"	5	12"	12"	5.03	716

NOTE:
A & B bars may need to be rotated to maintain shown clearances.

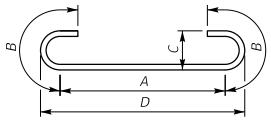

TYPE 1

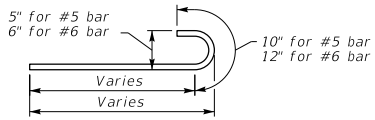

TYPE 4

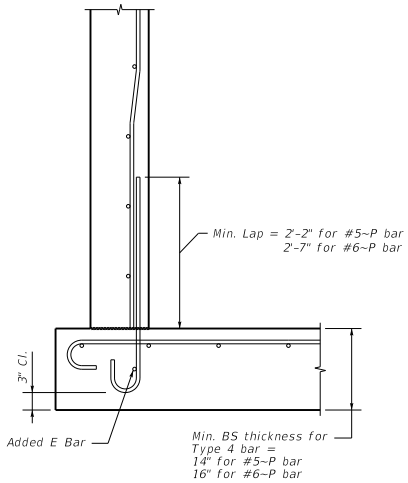

OPTIONAL HOOK DETAIL

NOTE:
The contractor will not be paid additionally if optional hook detail is used.

NOTE:
Bar Dimensions are per bar.

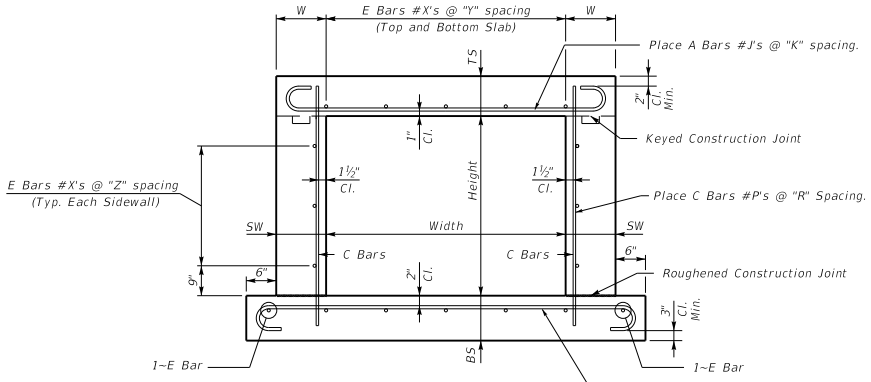

TYPICAL BARREL SECTION

KENTUCKY
DEPARTMENT OF HIGHWAYS

STANDARD CULVERT
16' - 0" WIDTH

STANDARD DRAWING NO. BSC-007

SUBMITTED _____ DIRECTOR DIVISION OF STRUCTURAL DESIGN — 02-26-20 DATE

APPROVED _____ STATE HIGHWAY ENGINEER — 02-26-20 DATE

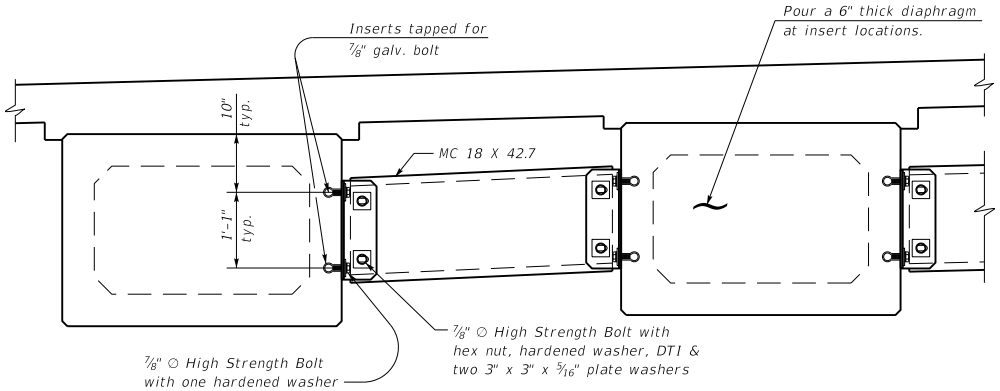

INTERMEDIATE DIAPHRAGM

~Typical for SB-33 Beams~

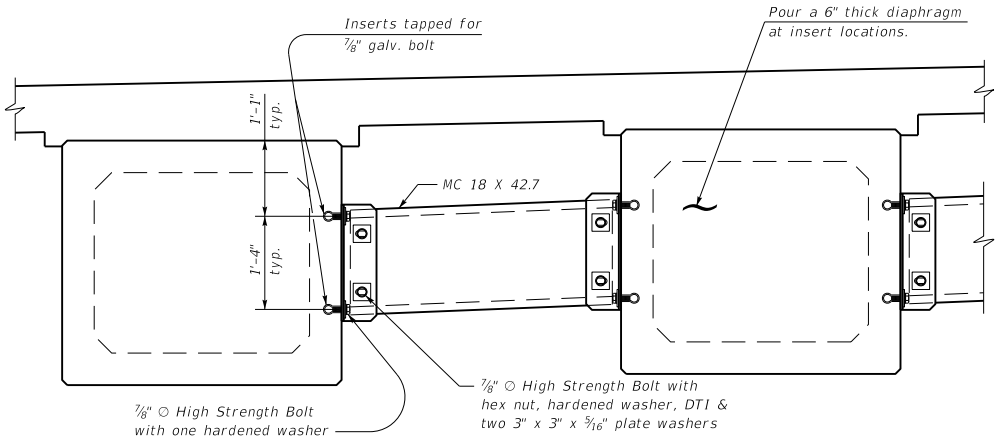

INTERMEDIATE DIAPHRAGM

~Typical for SB-42 Beams~

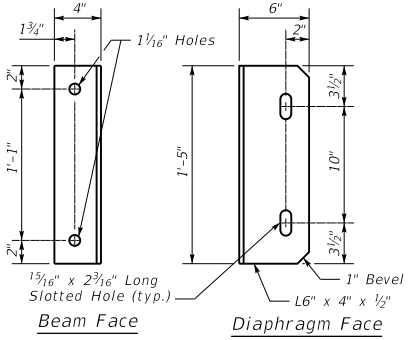

CLIP ANGLE

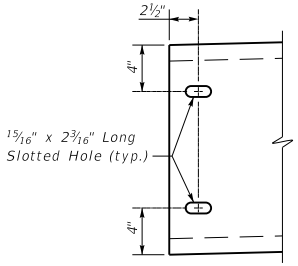

CHANNEL END

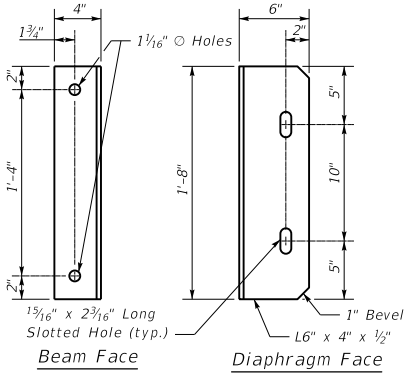

CLIP ANGLE

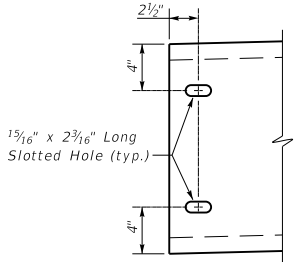

CHANNEL END

Diaphragm Notes

CONNECTIONS: *Ensure all bolted connections are ASTM A325, 7/8 inch diameter high strength bolts, nuts, and washers, mechanically zinc coated in accordance with AASHTO M298, for Class 50. Install all high strength bolted field connections using "direct tension indicators" (DTI's) in accordance with the Standard Specificationsand ASTM F959. Ensure all DTI's are mechanically zinc coated. Show installation details of the DTI's on the shop plans. Place DTI's under the bolt head.*

STRUCTURAL STEEL: *Ensure plates, angles, and channels conform to ASTM A36 or A572 and galvanized after fabrication.*

SHOP DRAWINGS: *Show the location of all inserts and holes on the precast beam shop drawings. Submit shop drawings for the steel diaphragms to the Division of Structural Design for approval.*

DIAPHRAGMS: *Erect the diaphragms the same day that the precast beams are placed on the substructure. Include the cost of all materials and labor required to fabricate and erect the diaphragms in the bid for Precast Beams.*

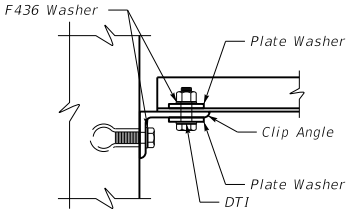

CONNECTION DETAILS

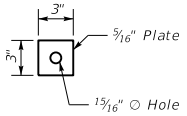

PLATE WASHER

KENTUCKY
DEPARTMENT OF HIGHWAYS

BOX BEAM
DIAPHRAGMS

STANDARD DRAWING NO. BSD-001

SUBMITTED _____ 02-26-20
DIRECTOR DIVISION OF STRUCTURAL DESIGN — DATE

APPROVED _____ 02-26-20
STATE HIGHWAY ENGINEER — DATE

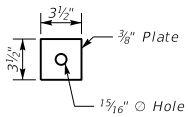

BACKING PLATE

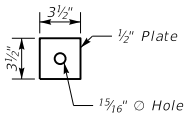

FILLER PLATE

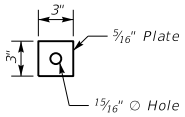

PLATE WASHER

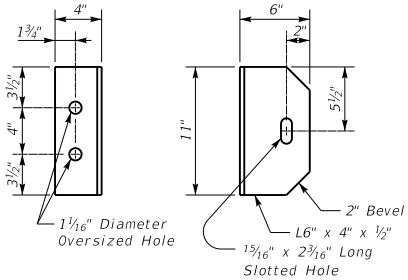

CLIP ANGLE - L1

CROSS FRAME NOTES

CONNECTIONS: Ensure all bolted connections are ASTM A325, ⅞ inch diameter high strength bolts, nuts, and washers, mechanically zinc coated in accordance with AASHTO M298, for Class 50. Install all high strength bolted field connections using "direct tension indicators" (DTI's) in accordance with the Standard Specifications and ASTM F959. Ensure all DTI's are mechanically zinc coated. Show installation details of the DTI's on the shop plans. Place DTI's under the bolt head. ASTM A449 bolts may be used in lieu of A325 for the bolts carried through the girder webs only.

STRUCTURAL STEEL: Ensure plates and angles conform to ASTM A36 or A572 and galvanized after fabrication.

SHOP DRAWINGS: Show the location of all inserts and holes on the precast beam shop drawings. Submit shop drawings for the steel diaphragms to the Division of Structural Design for approval.

DIAPHRAGMS: Erect the diaphragms the same day that the precast beams are placed on the substructure. Include the cost of all materials and labor required to fabricate and erect the diaphragms in the bid for Precast Beams.

BEAMS: This crossframe is to be used on PPC I-Beams with heights of 60 inches or greater such as Type 5-8 and HN60 to HN84.

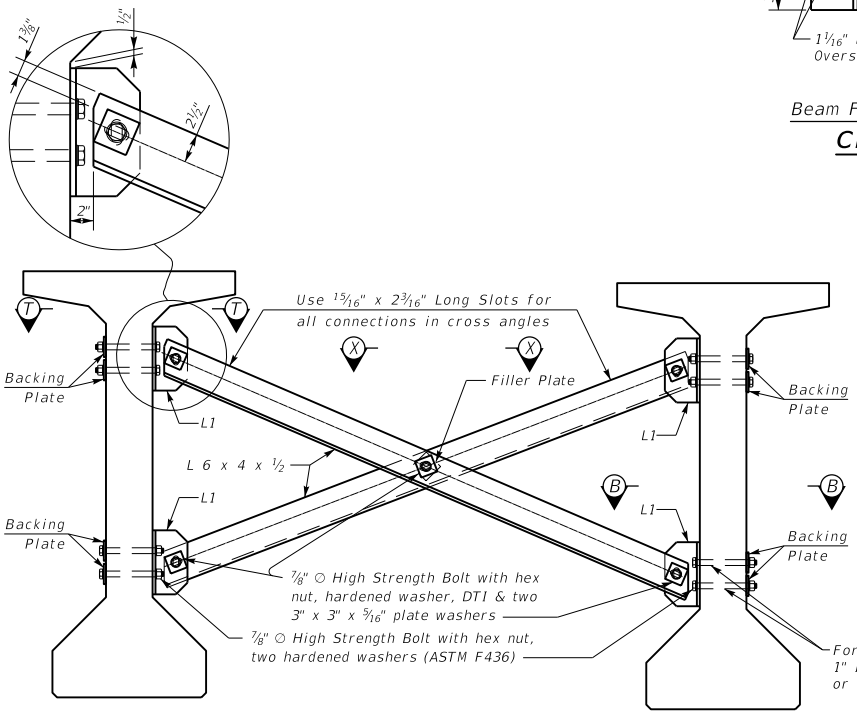

INTERMEDIATE DIAPHRAGM DETAILS BETWEEN INTERIOR BEAMS

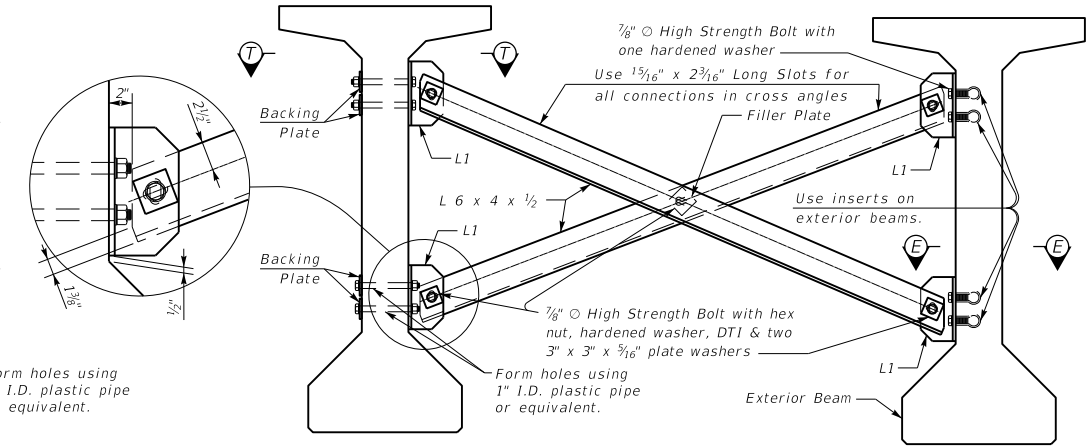

INTERMEDIATE DIAPHRAGM DETAILS BETWEEN OUTMOST BEAMS

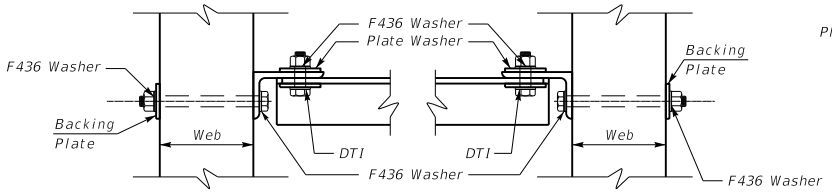

SECTION T-T **SECTION B-B**

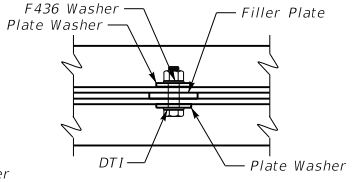

SECTION X-X

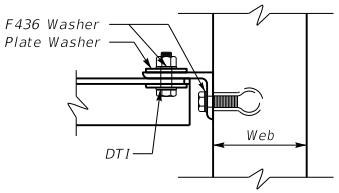

SECTION E-E

KENTUCKY
DEPARTMENT OF HIGHWAYS

PPC I-BEAM
SKEWED STEEL
CROSS FRAME DETAILS

STANDARD DRAWING NO. BSD-002

SUBMITTED _____ DIRECTOR DIVISION OF STRUCTURAL DESIGN — 02-26-20 DATE

APPROVED _____ STATE HIGHWAY ENGINEER — 02-26-20 DATE

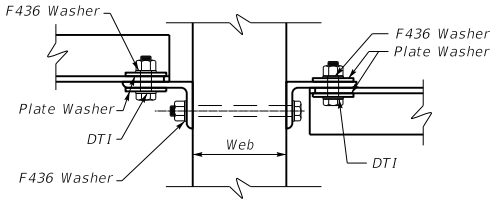

SECTION T-T

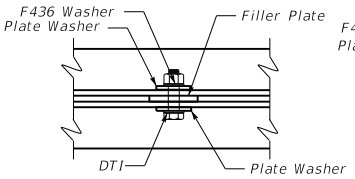

SECTION X-X

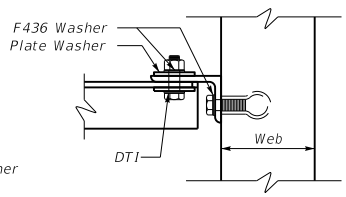

SECTION E-E

CROSS FRAME NOTES

CONNECTIONS: Ensure all bolted connections are ASTM A325, 7/8 inch diameter high strength bolts, nuts, and washers, mechanically zinc coated in accordance with AASHTO M298, for Class 50. Install all high strength bolted field connections using "direct tension indicators" (DTI's) in accordance with the Standard Specifications and ASTM F959. Ensure all DTI's are mechanically zinc coated. Show installation details of the DTI's on the shop plans. Place DTI's under the bolt head. ASTM A449 bolts may be used in lieu of A325 for the bolts carried through the girder webs only.

STRUCTURAL STEEL: Ensure plates and angles conform to ASTM A36 or A572 and galvanized after fabrication.

SHOP DRAWINGS: Show the location of all inserts and holes on the precast beam shop drawings. Submit shop drawings for the steel diaphragms to the Division of Structural Design for approval.

DIAPHRAGMS: Erect the diaphragms the same day that the precast beams are placed on the substructure. Include the cost of all materials and labor required to fabricate and erect the diaphragms in the bid for Precast Beams.

BEAMS: This crossframe is to be used on PPC I-Beams with heights of 60 inches or greater such as Type 5-8 and HN60 to HN84.

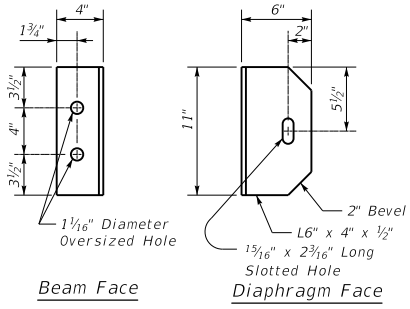

CLIP ANGLE - L1

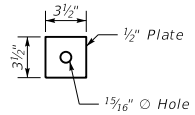

FILLER PLATE

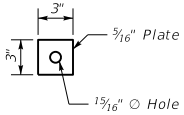

PLATE WASHER

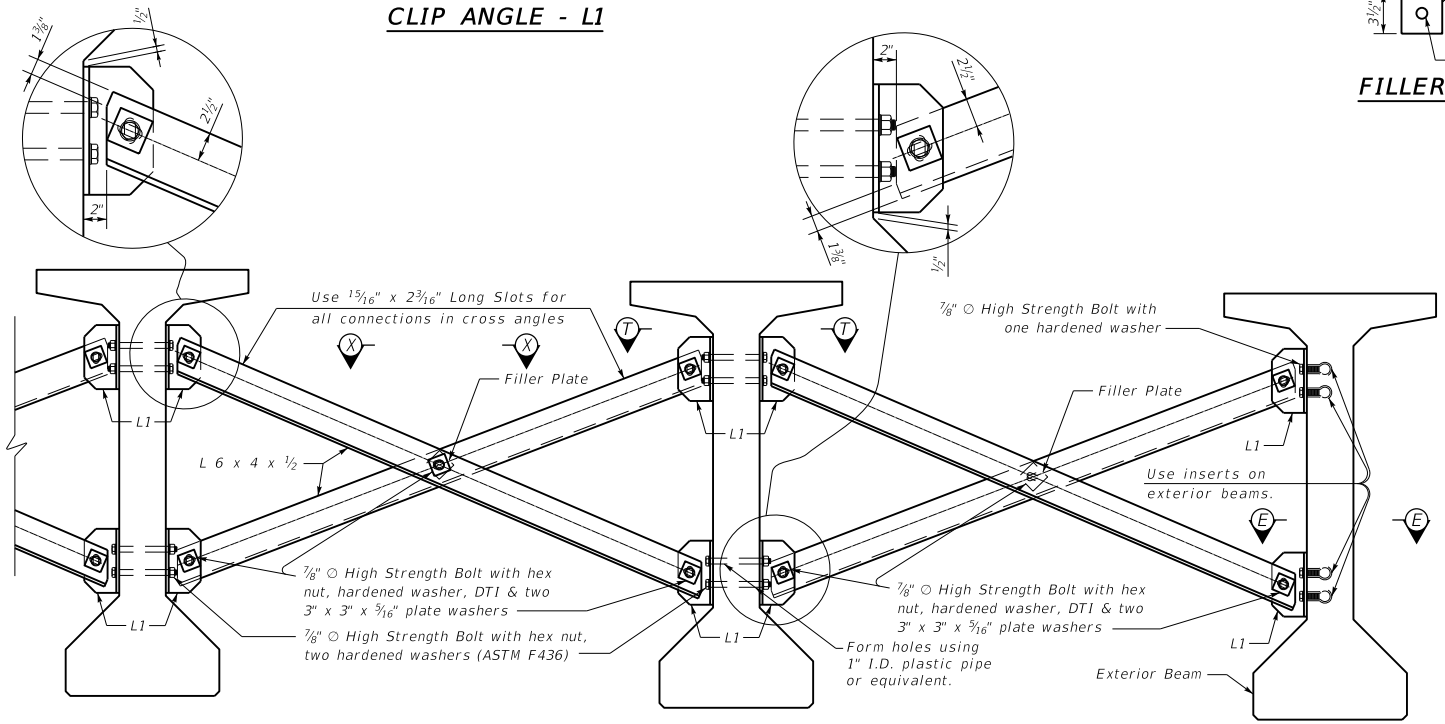

INTERMEDIATE DIAPHRAGM DETAILS

KENTUCKY
DEPARTMENT OF HIGHWAYS

PPC I-BEAM
0° SKEW STEEL
CROSS FRAME DETAILS

STANDARD DRAWING NO. BSD-003

SUBMITTED _____ DIRECTOR DIVISION OF STRUCTURAL DESIGN — DATE 02-26-20

APPROVED _____ STATE HIGHWAY ENGINEER — DATE 02-26-20

DIAPHRAGM NOTES

CONNECTIONS: Ensure all bolted connections are ASTM A325, 7/8 inch diameter high strength bolts, nuts, and washers, mechanically zinc coated in accordance with AASHTO M298, for Class 50. Install all high strength bolted field connections using "direct tension indicators" (DTI's) in accordance with the Standard Specifications and ASTM F959. Ensure all DTI's are mechanically zinc coated. Show installation details of the DTI's on the shop plans. Place DTI's under the bolt head. ASTM A449 bolts may be used in lieu of A325 for the bolts carried through the girder webs only.

STRUCTURAL STEEL: Ensure plates, angles, and channels conform to ASTM A36 or A572 and galvanized after fabrication.

SHOP DRAWINGS: Show the location of all inserts and holes on the precast beam shop drawings. Submit shop drawings for the steel diaphragms to the Division of Structural Design for approval.

DIAPHRAGMS: Erect the diaphragms the same day that the precast beams are placed on the substructure. Include the cost of all materials and labor required to fabricate and erect the diaphragms in the bid for Precast Beams.

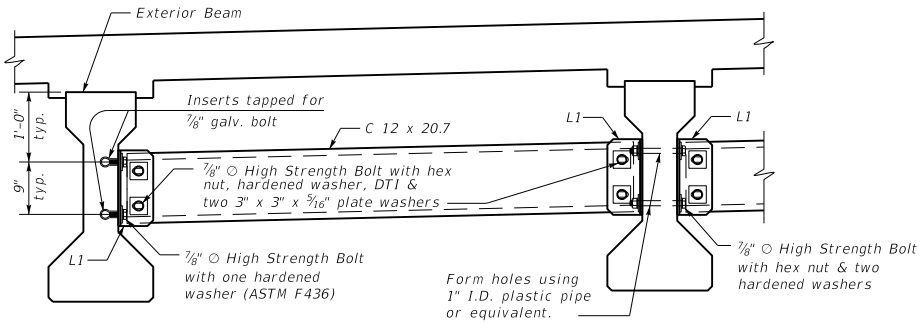

INTERMEDIATE DIAPHRAGM

~Typical for 0° Skew PCI, Type 2 Beams~

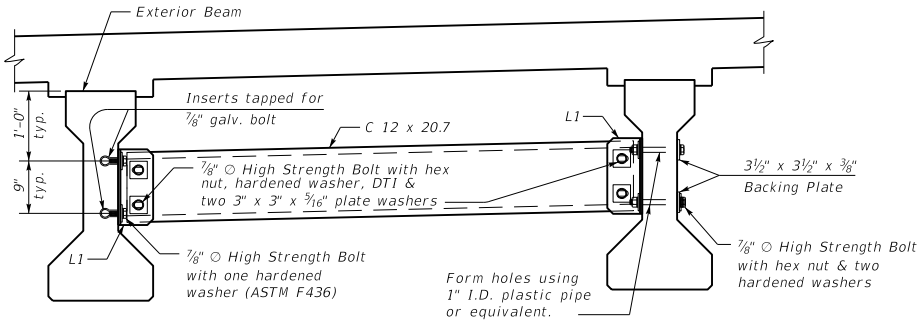

INTERMEDIATE DIAPHRAGM

~Typical for Skewed PCI, Type 2 Beams~

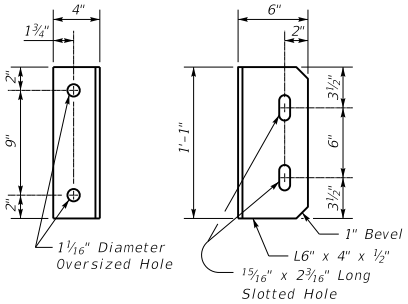

Beam Face

Diaphragm Face

CLIP ANGLE - L1

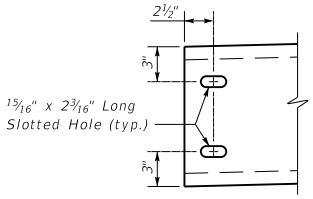

CHANNEL END

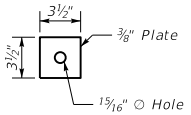

BACKING PLATE

Skewed Spans, Only

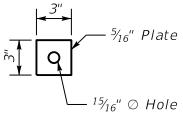

PLATE WASHER

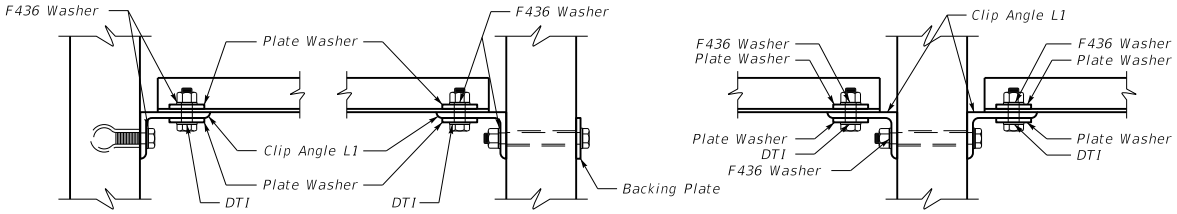

Exterior Beam

Interior Beam, Skewed

Interior Beam, Straight

CONNECTION DETAILS

KENTUCKY
DEPARTMENT OF HIGHWAYS

PPC I-BEAM
TYPE 2
DIAPHRAGM DETAILS

STANDARD DRAWING NO. BSD-004

SUBMITTED _____ DIRECTOR DIVISION OF STRUCTURAL DESIGN — DATE 02-26-20

APPROVED _____ STATE HIGHWAY ENGINEER — DATE 02-26-20

DIAPHRAGM NOTES

CONNECTIONS: Ensure all bolted connections are ASTM A325, 7/8 inch diameter high strength bolts, nuts, and washers, mechanically zinc coated in accordance with AASHTO M298, for Class 50. Install all high strength bolted field connections using "direct tension indicators" (DTI's) in accordance with the Standard Specifications and ASTM F959. Ensure all DTI's are mechanically zinc coated. Show installation details of the DTI's on the shop plans. Place DTI's under the bolt head. ASTM A449 bolts may be used in lieu of A325 for the bolts carried through the girder webs only.

STRUCTURAL STEEL: Ensure plates, angles, and channels conform to ASTM A36 or A572 and galvanized after fabrication.

SHOP DRAWINGS: Show the location of all inserts and holes on the precast beam shop drawings. Submit shop drawings for the steel diaphragms to the Division of Structural Design for approval.

DIAPHRAGMS: Erect the diaphragms the same day that the precast beams are placed on the substructure. Include the cost of all materials and labor required to fabricate and erect the diaphragms in the bid for Precast Beams.

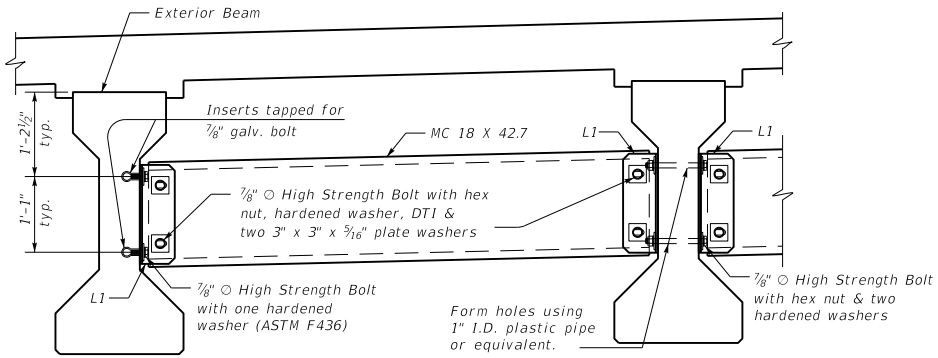

INTERMEDIATE DIAPHRAGM

~Typical for 0° Skew PCI, Type 3 Beams~

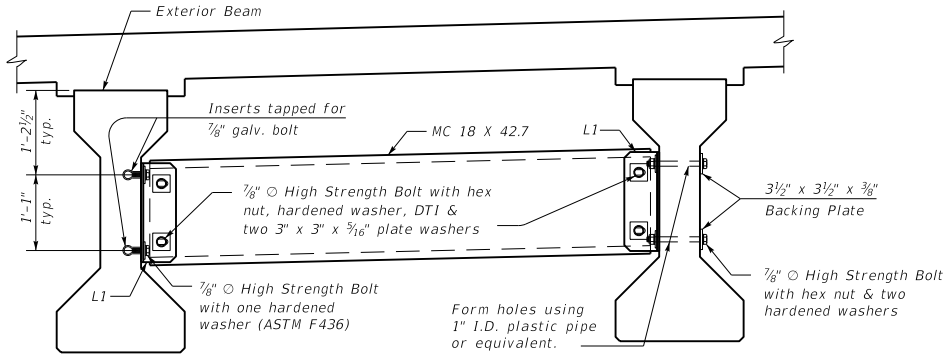

INTERMEDIATE DIAPHRAGM

~Typical for Skewed PCI, Type 3 Beams~

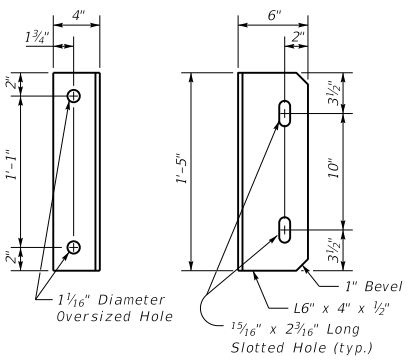

CLIP ANGLE - L1

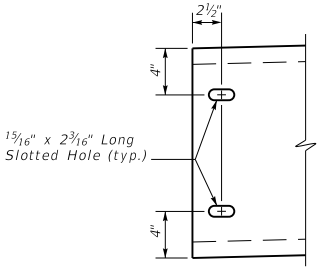

CHANNEL END

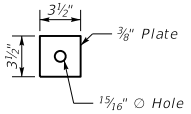

BACKING PLATE

Skewed Spans, Only

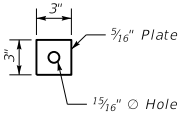

PLATE WASHER

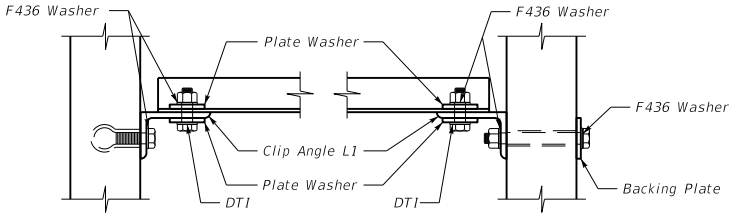

Exterior Beam

Interior Beam, Skewed

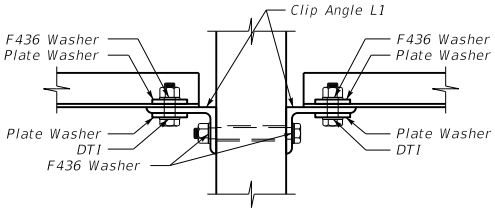

Interior Beam, Straight

CONNECTION DETAILS

KENTUCKY
DEPARTMENT OF HIGHWAYS

PPC I-BEAM
TYPE 3
DIAPHRAGM DETAILS

STANDARD DRAWING NO. BSD-005

SUBMITTED _____ DIRECTOR DIVISION OF STRUCTURAL DESIGN — DATE 02-26-20

APPROVED _____ STATE HIGHWAY ENGINEER — DATE 02-26-20

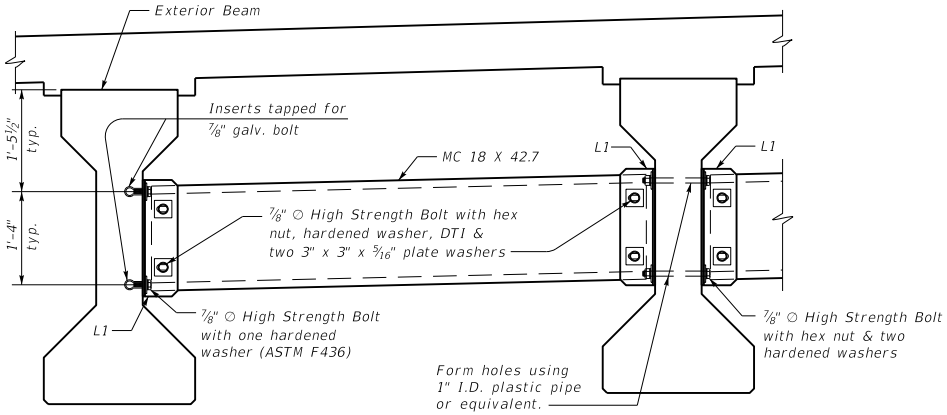

INTERMEDIATE DIAPHRAGM

~Typical for 0° Skew PCI, Type 4 Beams~

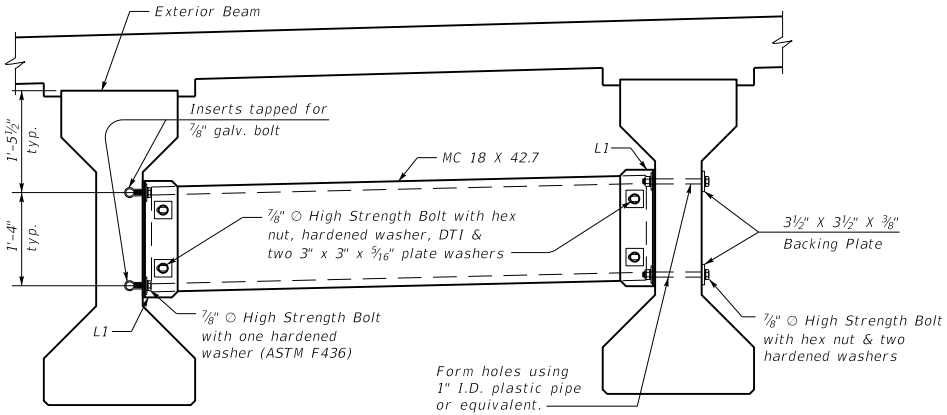

INTERMEDIATE DIAPHRAGM

~Typical for Skewed PCI, Type 4 Beams~

DIAPHRAGM NOTES

CONNECTIONS: Ensure all bolted connections are ASTM A325, 7/8 inch diameter high strength bolts, nuts, and washers, mechanically zinc coated in accordance with AASHTO M298, for Class 50. Install all high strength bolted field connections using "direct tension indicators" (DTI's) in accordance with the Standard Specifications and ASTM F959. Ensure all DTI's are mechanically zinc coated. Show installation details of the DTI's on the shop plans. Place DTI's under the bolt head. ASTM A449 bolts may be used in lieu of A325 for the bolts carried through the girder webs only.

STRUCTURAL STEEL: Ensure plates, angles, and channels conform to ASTM A36 or A572 and galvanized after fabrication.

SHOP DRAWINGS: Show the location of all inserts and holes on the precast beam shop drawings. Submit shop drawings for the steel diaphragms to the Division of Structural Design for approval.

DIAPHRAGMS: Erect the diaphragms the same day that the precast beams are placed on the substructure. Include the cost of all materials and labor required to fabricate and erect the diaphragms in the bid for Precast Beams.

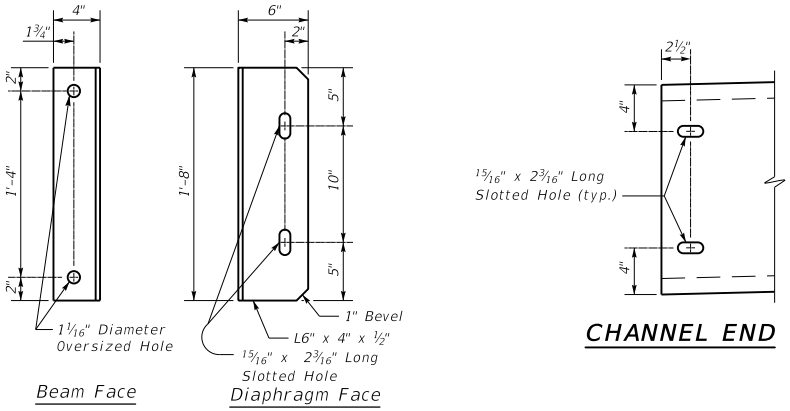

CHANNEL END

CLIP ANGLE - L1

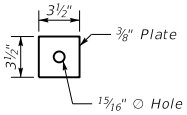

BACKING PLATE

Skewed Spans, Only

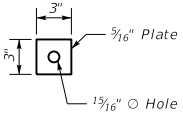

PLATE WASHER

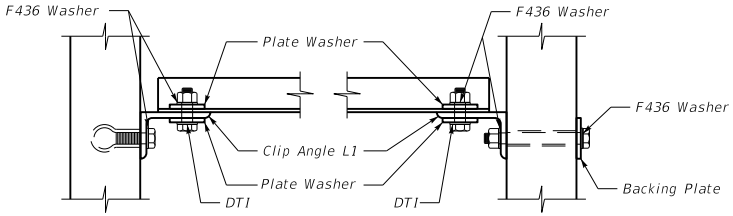

Exterior Beam

Interior Beam, Skewed

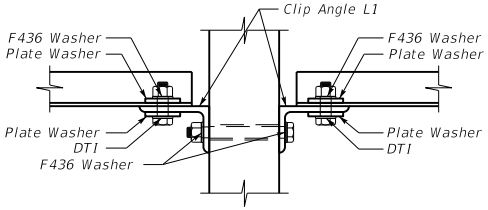

Interior Beam, Straight

CONNECTION DETAILS

KENTUCKY
DEPARTMENT OF HIGHWAYS

PRESTRESSED PREFORMED CONCRETE I-BEAM TYPE 4 DIAPHRAGM DETAILS

STANDARD DRAWING NO. BSD-006

SUBMITTED _____ DIRECTOR DIVISION OF STRUCTURAL DESIGN — DATE 02-26-20

APPROVED _____ STATE HIGHWAY ENGINEER — DATE 02-26-20

DIAPHRAGM NOTES

CONNECTIONS: Ensure all bolted connections are ASTM A325, 7/8 inch diameter high strength bolts, nuts, and washers, mechanically zinc coated in accordance with AASHTO M298, for Class 50. Install all high strength bolted field connections using "direct tension indicators" (DTI's) in accordance with the Standard Specifications and ASTM F959. Ensure all DTI's are mechanically zinc coated. Show installation details of the DTI's on the shop plans. Place DTI's under the bolt head. ASTM A449 bolts may be used in lieu of A325 for the bolts carried through the girder webs only.

STRUCTURAL STEEL: Ensure plates, angles, and channels conform to ASTM A36 or A572 and galvanized after fabrication.

SHOP DRAWINGS: Show the location of all inserts and holes on the precast beam shop drawings. Submit shop drawings for the steel diaphragms to the Division of Structural Design for approval.

DIAPHRAGMS: Erect the diaphragms the same day that the precast beams are placed on the substructure. Include the cost of all materials and labor required to fabricate and erect the diaphragms in the bid for Precast Beams.

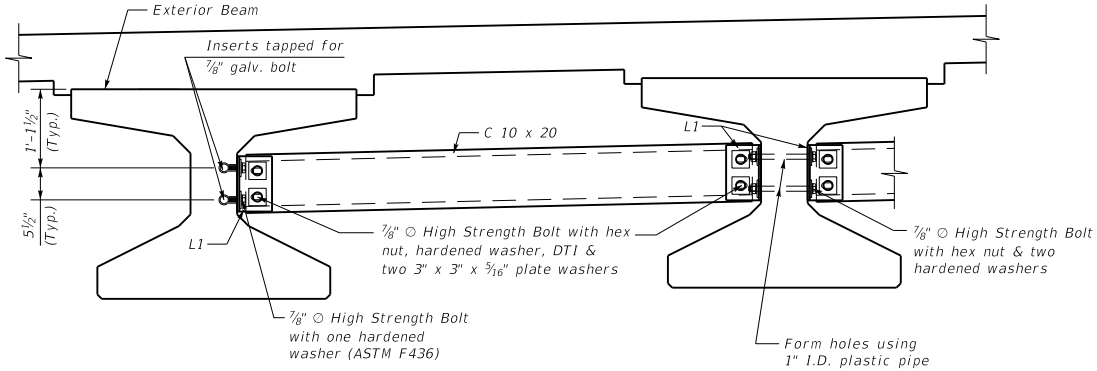

INTERMEDIATE DIAPHRAGM

~Typical for 0° Skew~

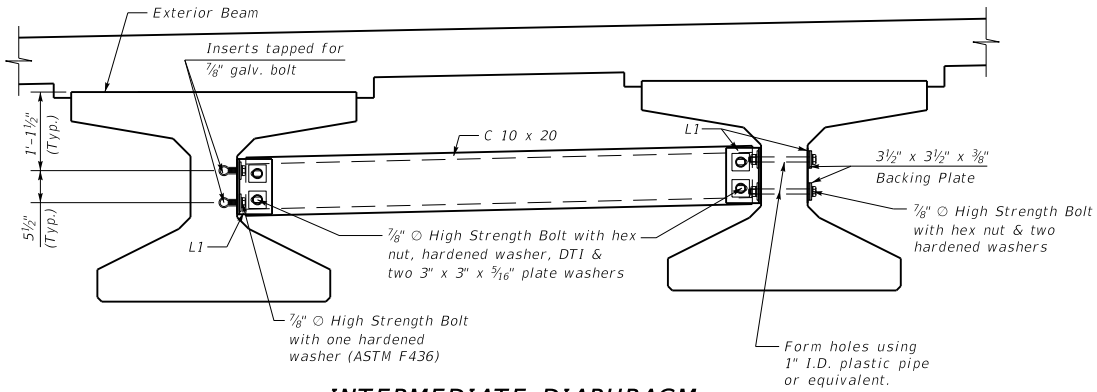

INTERMEDIATE DIAPHRAGM

~Typical for Skewed~

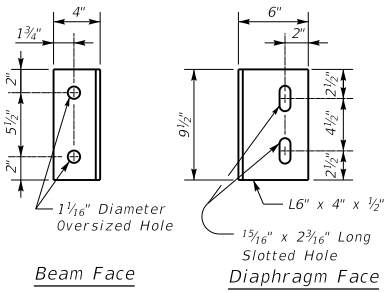

CLIP ANGLE - L1

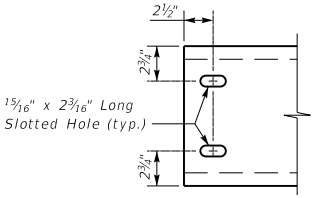

CHANNEL END

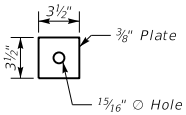

BACKING PLATE

Skewed Spans, Only

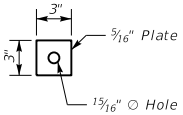

PLATE WASHER

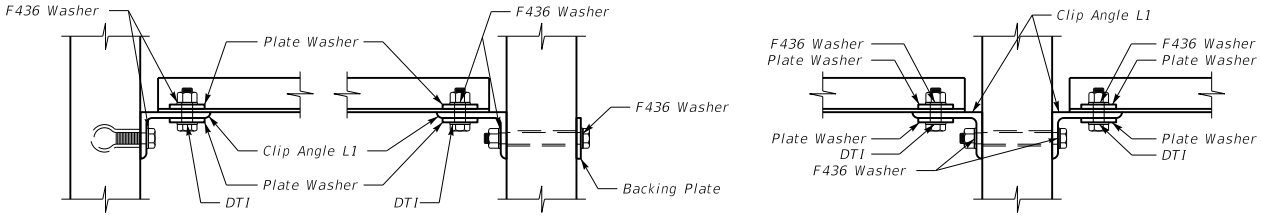

Exterior Beam | Interior Beam, Skewed | Interior Beam, Straight

CONNECTION DETAILS

KENTUCKY
DEPARTMENT OF HIGHWAYS

PPC I-BEAM HN36
DIAPHRAGM DETAILS

STANDARD DRAWING NO. BSD-007

SUBMITTED _____ DIRECTOR DIVISION OF STRUCTURAL DESIGN — DATE 02-26-20

APPROVED _____ STATE HIGHWAY ENGINEER — DATE 02-26-20

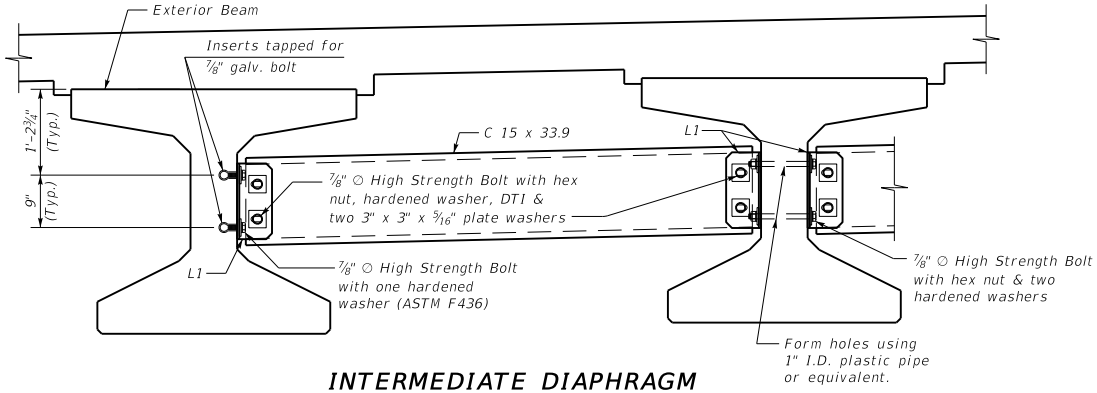

INTERMEDIATE DIAPHRAGM

~Typical for 0° Skew~

DIAPHRAGM NOTES

CONNECTIONS: Ensure all bolted connections are ASTM A325, 7/8 inch diameter high strength bolts, nuts, and washers, mechanically zinc coated in accordance with AASHTO M298, for Class 50. Install all high strength bolted field connections using "direct tension indicators" (DTI's) in accordance with the Standard Specifications and ASTM F959. Ensure all DTI's are mechanically zinc coated. Show installation details of the DTI's on the shop plans. Place DTI's under the bolt head. ASTM A449 bolts may be used in lieu of A325 for the bolts carried through the girder webs only.

STRUCTURAL STEEL: Ensure plates, angles, and channels conform to ASTM A36 or A572 and galvanized after fabrication.

SHOP DRAWINGS: Show the location of all inserts and holes on the precast beam shop drawings. Submit shop drawings for the steel diaphragms to the Division of Structural Design for approval.

DIAPHRAGMS: Erect the diaphragms the same day that the precast beams are placed on the substructure. Include the cost of all materials and labor required to fabricate and erect the diaphragms in the bid for Precast Beams.

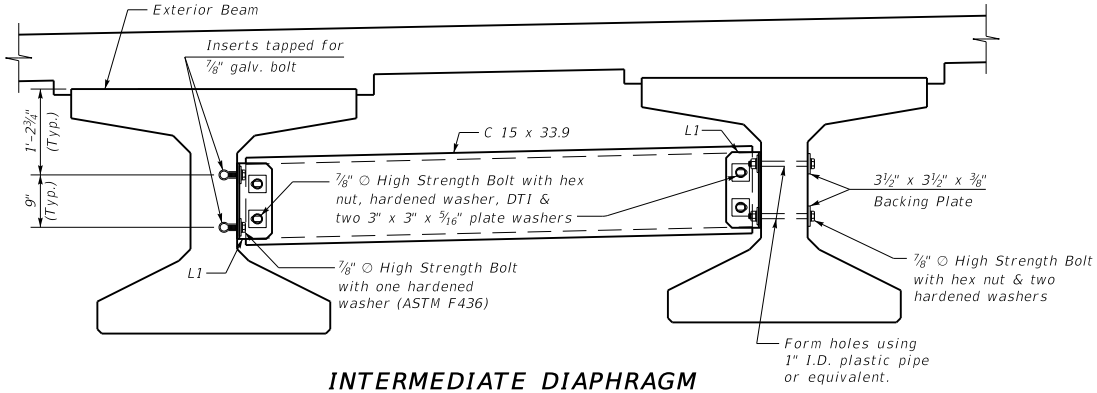

INTERMEDIATE DIAPHRAGM

~Typical for Skewed~

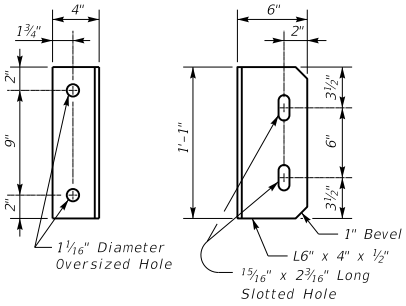

CLIP ANGLE - L1

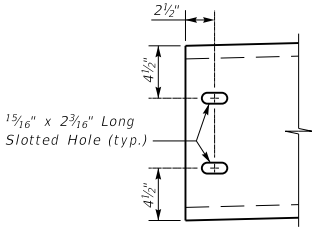

CHANNEL END

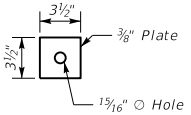

BACKING PLATE

Skewed Spans, Only

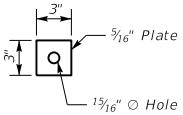

PLATE WASHER

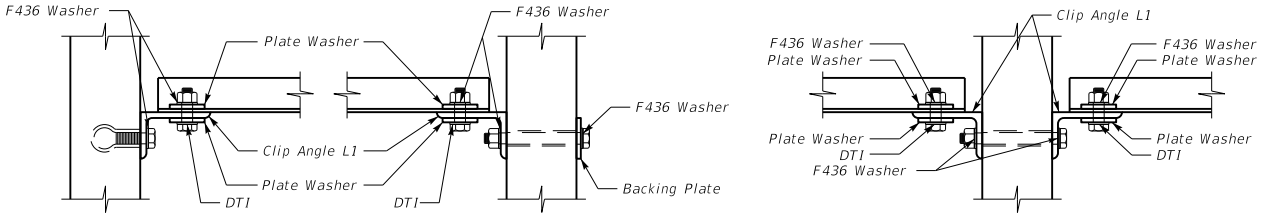

Exterior Beam | Interior Beam, Skewed | Interior Beam, Straight

CONNECTION DETAILS

KENTUCKY
DEPARTMENT OF HIGHWAYS

PPC I-BEAM HN42
DIAPHRAGM DETAILS

STANDARD DRAWING NO. BSD-008

SUBMITTED _____ DIRECTOR DIVISION OF STRUCTURAL DESIGN — DATE 02-26-20

APPROVED _____ STATE HIGHWAY ENGINEER — DATE 02-26-20

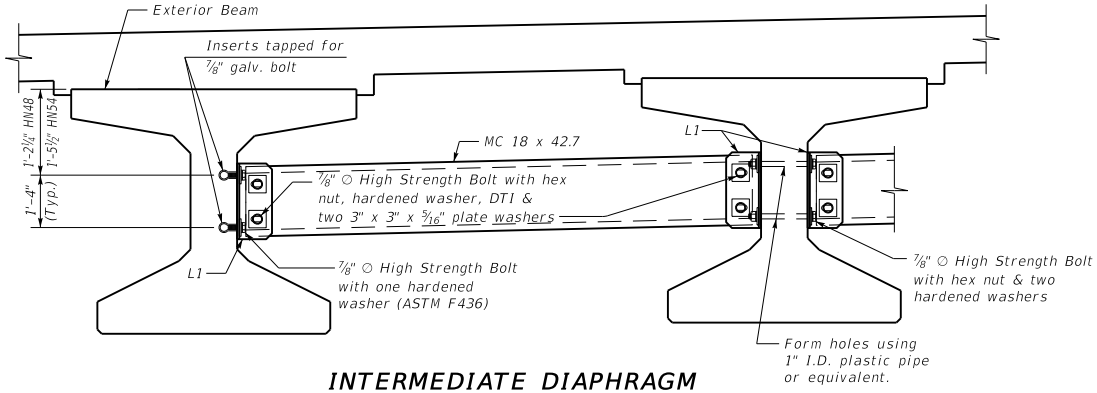

INTERMEDIATE DIAPHRAGM

~Typical for 0° Skew~

DIAPHRAGM NOTES

CONNECTIONS: Ensure all bolted connections are ASTM A325, 7/8 inch diameter high strength bolts, nuts, and washers, mechanically zinc coated in accordance with AASHTO M298, for Class 50. Install all high strength bolted field connections using "direct tension indicators" (DTI's) in accordance with the Standard Specifications and ASTM F959. Ensure all DTI's are mechanically zinc coated. Show installation details of the DTI's on the shop plans. Place DTI's under the bolt head. ASTM A449 bolts may be used in lieu of A325 for the bolts carried through the girder webs only.

STRUCTURAL STEEL: Ensure plates, angles, and channels conform to ASTM A36 or A572 and galvanized after fabrication.

SHOP DRAWINGS: Show the location of all inserts and holes on the precast beam shop drawings. Submit shop drawings for the steel diaphragms to the Division of Structural Design for approval.

DIAPHRAGMS: Erect the diaphragms the same day that the precast beams are placed on the substructure. Include the cost of all materials and labor required to fabricate and erect the diaphragms in the bid for Precast Beams.

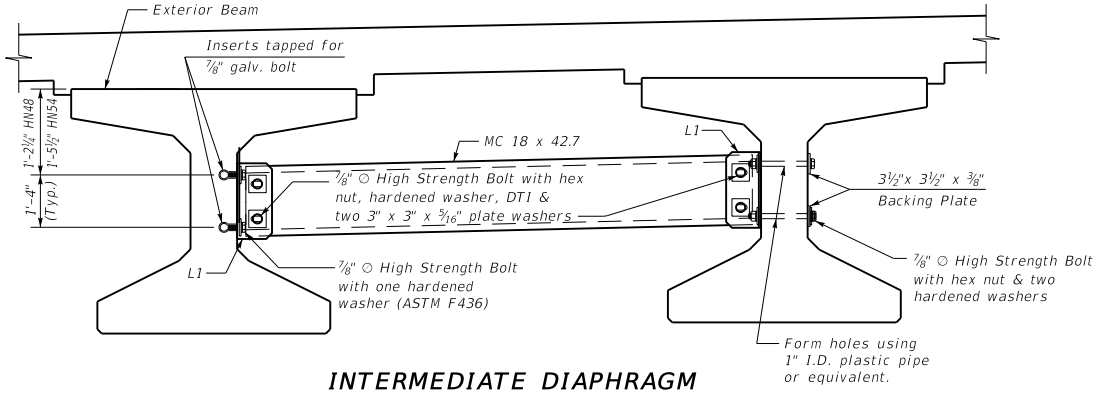

INTERMEDIATE DIAPHRAGM

~Typical for Skewed~

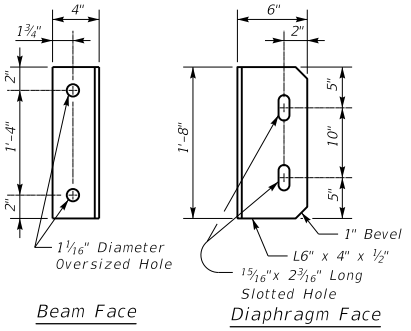

CLIP ANGLE - L1

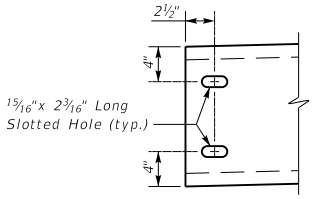

CHANNEL END

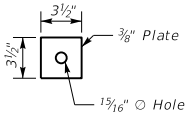

BACKING PLATE

Skewed Spans, Only

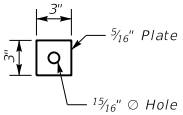

PLATE WASHER

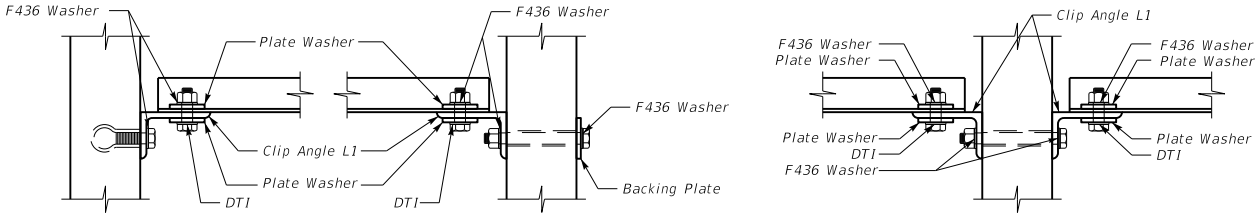

Exterior Beam | Interior Beam, Skewed | Interior Beam, Straight

CONNECTION DETAILS

KENTUCKY
DEPARTMENT OF HIGHWAYS

PPC I-BEAM
HN48 AND HN54
DIAPHRAGM DETAILS

STANDARD DRAWING NO. BSD-009

SUBMITTED _____ DIRECTOR DIVISION OF STRUCTURAL DESIGN — DATE 02-26-20

APPROVED _____ STATE HIGHWAY ENGINEER — DATE 02-26-20

CAP BILL OF REINFORCEMENT

SUPERSTRUCTURE HEIGHT SDH = Beam+Pad Height +(haunch+slab) [if applicable]		16'-0" BRIDGE WIDTH					24'-0" BRIDGE WIDTH					32'-0" BRIDGE WIDTH				
		MARK	TYPE	NO.	SIZE	LENGTH	MARK	TYPE	NO.	SIZE	LENGTH	MARK	TYPE	NO.	SIZE	LENGTH
H1	12" ≤SDH≤27"	A1e	14s	22	5	11- 0	A1e	14s	29	5	11- 0	A1e	14s	36	5	11- 0
		A2e	Str.	9	8	22- 9	A2e	Str.	9	8	30- 9	A2e	Str.	9	8	38- 9
		A3e	Str.	4	5	22- 9	A3e	Str.	4	5	30- 9	A3e	Str.	4	5	38- 9
H2	27" <SDH≤35"	A1e	14s	24	5	11- 0	A1e	14s	30	5	11- 0	A1e	14s	38	5	11- 0
		A2e	Str.	9	8	25- 5	A2e	Str.	9	8	33- 5	A2e	Str.	9	8	41- 5
		A3e	Str.	4	5	25- 5	A3e	Str.	4	5	33- 5	A3e	Str.	4	5	41- 5
H3	35" <SDH≤50"	A1e	14s	29	5	11- 0	A1e	14s	36	5	11- 0	A1e	14s	43	5	11- 0
		A2e	Str.	9	8	30- 5	A2e	Str.	9	8	38- 5	A2e	Str.	9	8	46- 5
		A3e	Str.	4	5	30- 5	A3e	Str.	4	5	38- 5	A3e	Str.	4	5	46- 5

WING BILL OF REINFORCEMENT

MARK	TYPE	NO.	SIZE	LENGTH
A4e	Str.	12	5	4- 0
A5e	Str.	8	5	3- 2
A6e	Str.	4	6	3- 2
A4e	Str.	20	5	4- 8
A5e	Str.	12	5	4- 6
A6e	Str.	4	6	4- 6
A4e	Str.	28	5	5-11
A5e	Str.	16	5	7- 0
A6e	Str.	4	6	7- 5

BRIDGE WIDTH	PILE LOAD		PILES				DIMENSIONS														QUANTITIES	
	SIZE	TONS	NO.	PE	PS	PL	A	B	C	D	E	F	G	H	J	L	WL	WU	WV	WX	CONCRETE (C.Y.)	STEEL (LBS.)
16	H1	92	3	3'-6½"	8'-0"	16'-0"	3½"	4	9"	2'-3"	7	6'-0"	3	2'-0"	2	23'-1"	3'-6"	3'-6"	0	0	9.8	991
	H2	87	4	2'-4½"	7'-0"	21'-0"	2½"	3	7"	1'-2"	6	5'-0"	5	4'-0"	3	25'-9"	4'-10"	4'-10"	0	0	12.2	1175
	H3	107	4	3'-4½"	8'-0"	24'-0"	4½"	4	8"	2'-0"	7	6'-0"	7	6'-0"	4	30'-9"	7'-4"	3'-3"	4'-1"	2'-1"	16.8	1527
24	H1	97	4	3'-6½"	8'-0"	24'-0"	3½"	4	9"	2'-3"	7	6'-0"	3	2'-0"	2	31'-1"	3'-6"	3'-6"	0	0	12.4	1297
	H2	99	5	2'-10½"	7'-0"	28'-0"	2½"	3	10"	1'-8"	6	5'-0"	5	4'-0"	3	33'-9"	4'-10"	4'-10"	0	0	14.8	1469
	H3	122	5	3'-4½"	8'-0"	32'-0"	4½"	4	8"	2'-0"	7	6'-0"	7	6'-0"	4	38'-9"	7'-4"	3'-3"	4'-1"	2'-1"	19.4	1833
32	H1	103	5	3'-6½"	8'-0"	32'-0"	3½"	4	9"	2'-3"	7	6'-0"	3	2'-0"	2	39'-1"	3'-6"	3'-6"	0	0	15.1	1604
	H2	109	6	3'-4½"	7'-0"	35'-0"	4½"	4	8"	2'-0"	6	5'-0"	5	4'-0"	3	41'-9"	4'-10"	4'-10"	0	0	17.5	1787
	H3	133	6	3'-4½"	8'-0"	40'-0"	4½"	4	8"	2'-0"	7	6'-0"	7	6'-0"	4	46'-9"	7'-4"	3'-3"	4'-1"	2'-1"	22.1	2139

NOTES:

1) Conform to KYTC, Standard Specifications, Current Edition.
2) Concrete to be Class "A", 3500 psi.
3) Rebar to be epoxy coated A615, Grade 60.
4) Maintain 2" clear cover to reinforcement unless otherwise noted.
5) End Bents are designed for the maximum span of the following steel and concrete beams as shown in the current standards:
   H1 - B12, CB12, B17, CB17, B21 or rolled steel beams up to 16" nominal depth.
   H2 - CB21, B27, CB27, B33 or rolled steel beams up to 24" nominal depth.
   H3 - CB33, B42, CB42 or rolled steel beams up to 36" nominal depth.
6) Piles may be HP12x53 or 16" Steel Pipes with ½" wall thickness.
7) Piles driven to rock must be driven to Refusal. Friction Piles must be driven to (Pile Load/0.4) using the Gates Method.
8) Pile load given is Factored Strength Load.
9) Piles must be driven 10' into existing ground or to refusal on bedrock. Piles at wet crossings must be driven to 10' below stream bed or to refusal on bedrock. A minimum pile length of 10' is required in all circumstances.
10) Contractor shall provide a hammer capable of driving the piling to refusal or capacity without encountering excessive blow counts or damaging the pile. Contractor shall be responsible for all damaged piling.

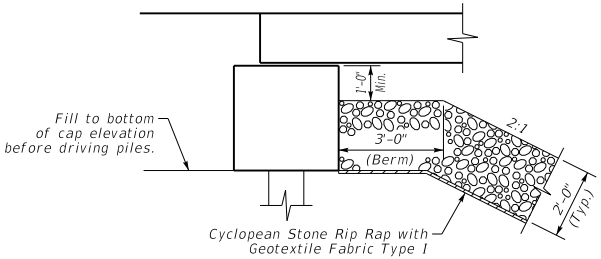

SECTION THRU END BENT

(Showing berm and fill slope)

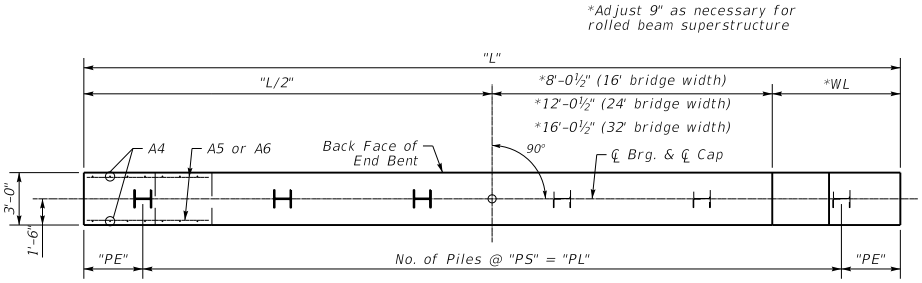

PLAN

NOTE:
Slope cap as necessary with side by side box beams and step cap seats with rolled steel beams to maintain proper roadway slope.

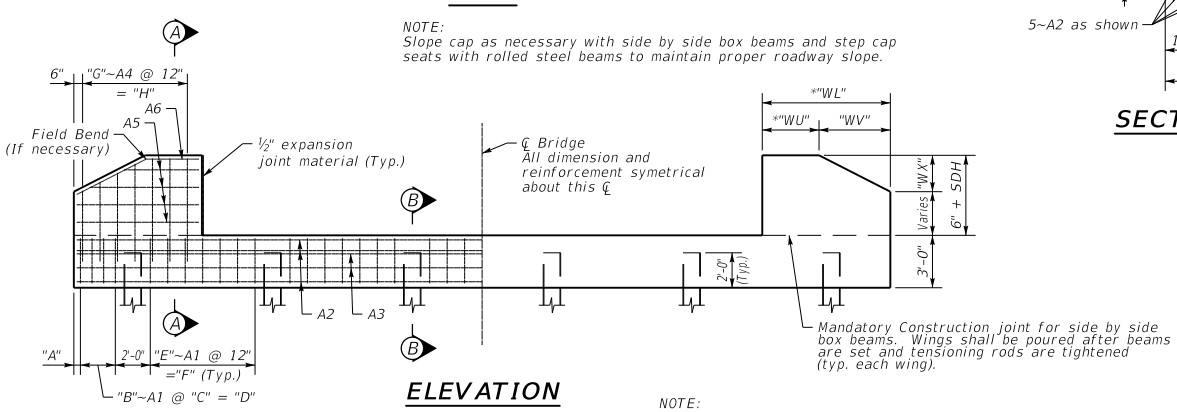

ELEVATION

NOTE:
Trim A4-A6 bars as necessary.

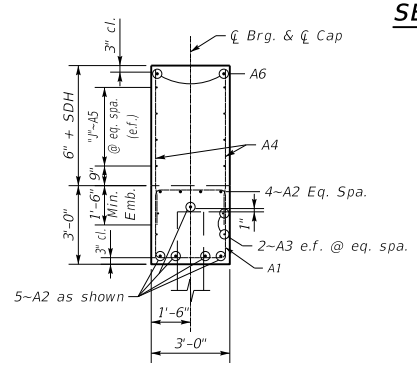

SECTION A-A

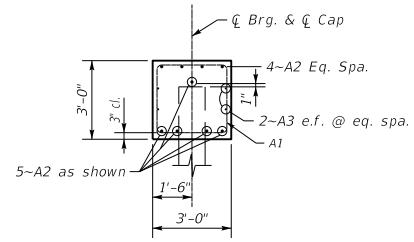

SECTION B-B

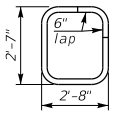

A1 Bar

~Size #5~

KENTUCKY
DEPARTMENT OF HIGHWAYS

PILE END BENT
0° SKEW

STANDARD DRAWING NO. BSE-001

SUBMITTED _____ DIRECTOR DIVISION OF STRUCTURAL DESIGN — DATE 02-26-20

APPROVED _____ STATE HIGHWAY ENGINEER — DATE 02-26-20

CAP BILL OF REINFORCEMENT

SUPERSTRUCTURE HEIGHT SDH=Beam Height +pad height +(haunch+slab) [if applicable]	16'-0" BRIDGE WIDTH					24'-0" BRIDGE WIDTH					32'-0" BRIDGE WIDTH				
	MARK	TYPE	NO.	SIZE	LENGTH	MARK	TYPE	NO.	SIZE	LENGTH	MARK	TYPE	NO.	SIZE	LENGTH
H1 12" ≤SDH≤27"	A1e	14s	22	5	11-0	A1e	14s	29	5	11-0	A1e	14s	36	5	11-0
	A2e	Str.	9	8	23-7	A2e	Str.	9	8	31-11	A2e	Str.	9	8	40-2
	A3e	Str.	4	5	23-7	A3e	Str.	4	5	31-11	A3e	Str.	4	5	40-2
H2 27" <SDH≤35"	A1e	14s	24	5	11-0	A1e	14s	34	5	11-0	A1e	14s	41	5	11-0
	A2e	Str.	9	8	26-4	A2e	Str.	9	8	34-8	A2e	Str.	9	8	42-11
	A3e	Str.	4	5	26-4	A3e	Str.	4	5	34-8	A3e	Str.	4	5	42-11
H3 35" <SDH≤50"	A1e	14s	29	5	11-0	A1e	14s	36	5	11-0	A1e	14s	44	5	11-0
	A2e	Str.	9	8	31-7	A2e	Str.	9	8	39-11	A2e	Str.	9	8	48-2
	A3e	Str.	4	5	31-7	A3e	Str.	4	5	39-11	A3e	Str.	4	5	48-2

WING BILL OF REINFORCEMENT

MARK	TYPE	NO.	SIZE	LENGTH	MARK	TYPE	NO.	SIZE	LENGTH	MARK	TYPE	NO.	SIZE	LENGTH
A4e	Str.	14	5	4-0	A7e	Str.	2	5	3-4	A10e	Str.	1	6	2-6
A5e	Str.	2	5	3-2	A8e	Str.	2	5	4-1	A11e	Str.	1	6	3-4
A6e	Str.	2	5	2-6	A9e	Str.	1	6	3-2	A12e	Str.	1	6	4-1
A4e	Str.	20	5	4-8	A7e	Str.	3	5	4-8	A10e	Str.	1	6	3-11
A5e	Str.	3	5	4-7	A8e	Str.	3	5	5-4	A11e	Str.	1	6	4-8
A6e	Str.	3	5	3-11	A9e	Str.	1	6	4-7	A12e	Str.	1	6	5-4
A4e	Str.	30	5	5-11	A7e	Str.	4	5	7-4	A10e	Str.	1	6	7-0
A5e	Str.	4	5	7-2	A8e	Str.	4	5	8-0	A11e	Str.	1	6	7-10
A6e	Str.	4	5	6-6	A9e	Str.	1	6	7-8	A12e	Str.	1	6	8-6

BRIDGE WIDTH	PILE LOAD		PILES				DIMENSIONS										WING A												WING B												QUANTITIES	
							Geometry			Reinforcement							Back Face						Front Face						Back Face						Front Face							
	SIZE	TONS	NO.	PE	PS	PL	L	L1	L2	A	B	C	D	E	F	G	H	WALB	WAUB	WV	WX	J	K	WALF	WAUF	WV	WX	J	K	WBLB	WBUB	WV	WX	J	K	WBLF	WBUF	WV	WX	J	K	CONC. (C.Y.)	STEEL (LBS.)
16	H1	95	3	3'-11⅞"	8'-0"	16'-0"	23'-11¾"	11'-6⅞"	12'-4⅞"	2⅞"	4	1"	2'-9"	7	12"	6'-0"	2	3'-7⅞"	0	0	0	3	2'-0"	2'-10⅛"	0	0	0	3	2'-0"	3'-8⅛"	0	0	0	4	3'-0"	4'-5⅞"	0	0	0	4	3'-0"	10.2	1024
	H2	87	4	2'-10⅜"	7'-0"	21'-0"	26'-8¾"	12'-11⅞"	13'-8⅞"	4⅜"	3	9"	1'-6"	6	12"	5'-0"	3	5'-0⅞"	0	0	0	5	4'-0"	4'-3⅛"	0	0	0	4	3'-0"	5'-0⅛"	0	0	0	5	4'-0"	5'-9⅞"	0	0	0	6	5'-0"	12.6	1203
	H3	108	4	3'-11⅞"	8'-0"	24'-0"	31'-11¾"	15'-6⅞"	16'-4⅞"	2⅞"	4	1"	2'-9"	7	12"	6'-0"	4	7'-7⅞"	3'-4⅞"	4'-3"	2'-1"	7	6'-0"	6'-10⅛"	2'-7⅛"	4'-3"	2'-1"	7	6'-0"	7'-8⅛"	3'-5⅛"	4'-3"	2'-1"	8	7'-0"	8'-5⅞"	4'-2⅞"	4'-3"	2'-1"	8	7'-0"	17.5	1578
24	H1	99	4	4'-1⅝"	8'-0"	24'-0"	32'-3¼"	15'-8⅜"	16'-6⅝"	4⅜"	4	1"	2'-9"	7	12"	6'-0"	2	3'-7⅞"	0	0	0	3	2'-0"	2'-10⅛"	0	0	0	3	2'-0"	3'-8⅛"	0	0	0	4	3'-0"	4'-5⅞"	0	0	0	4	3'-0"	12.9	1340
	H2	98	5	2'-6⅛"	7'-6"	30'-0"	35'-0¼"	17'-1⅜"	17'-10⅝"	4⅛"	3	7"	1'-2"	7	11"	5'-6"	3	5'-0⅞"	0	0	0	5	4'-0"	4'-3⅛"	0	0	0	4	3'-0"	5'-0⅛"	0	0	0	5	4'-0"	5'-9⅞"	0	0	0	6	5'-0"	15.4	1553
	H3	123	5	4'-1⅝"	8'-0"	32'-0"	40'-3¼"	19'-8⅜"	20'-6⅝"	4⅜"	4	1"	2'-9"	7	12"	6'-0"	4	7'-7⅞"	3'-4⅞"	4'-3"	2'-1"	7	6'-0"	6'-10⅛"	2'-7⅛"	4'-3"	2'-1"	7	6'-0"	7'-8⅛"	3'-5⅛"	4'-3"	2'-1"	8	7'-0"	8'-5⅞"	4'-2⅞"	4'-3"	2'-1"	8	7'-0"	20.2	1887
32	H1	87	6	2'-9¼"	7'-0"	35'-0"	40'-6½"	19'-10¼"	20'-8¼"	3¼"	3	9"	1'-6"	6	12"	5'-0"	2	3'-7⅞"	0	0	0	3	2'-0"	2'-10⅛"	0	0	0	3	2'-0"	3'-8⅛"	0	0	0	4	3'-0"	4'-5⅞"	0	0	0	4	3'-0"	15.7	1653
	H2	108	6	2'-10¾"	7'-6"	37'-6"	43'-3½"	21'-3¼"	22'-0¼"	2¾"	3	10"	1'-8"	7	11"	5'-6"	3	5'-0⅞"	0	0	0	5	4'-0"	4'-3⅛"	0	0	0	4	3'-0"	5'-0⅛"	0	0	0	5	4'-0"	5'-9⅞"	0	0	0	6	5'-0"	18.2	1866
	H3	115	7	3'-3¼"	7'-0"	42'-0"	48'-6½"	23'-10¼"	24'-8¼"	3¼"	4	8"	2'-0"	6	12"	5'-0"	4	7'-7⅞"	3'-4⅞"	4'-3"	2'-1"	7	6'-0"	6'-10⅛"	2'-7⅛"	4'-3"	2'-1"	7	6'-0"	7'-8⅛"	3'-5⅛"	4'-3"	2'-1"	8	7'-0"	8'-5⅞"	4'-2⅞"	4'-3"	2'-1"	8	7'-0"	23.0	2219

NOTES:

1) Conform to KYTC, Standard Specifications, Current Edition.
2) Concrete to be Class "A", 3500 psi.
3) Rebar to be epoxy coated A615, Grade 60.
4) Maintain 2" clear cover to reinforcement unless otherwise noted.
5) End Bents are designed for the maximum span of the following steel and concrete beams as shown in the current standards:
   H1 - B12, CB12, B17, CB17, B21 or rolled steel beams up to 16" nominal depth.
   H2 - CB21, B27, CB27, B33 or rolled steel beams up to 24" nominal depth.
   H3 - CB33, B42, CB42 or rolled steel beams up to 36" nominal depth.
6) Piles may be HP12x53 or 16" Steel Pipes with ½" wall thickness.
7) Piles driven to rock must be driven to Refusal. Friction Piles must be driven to (Pile Load/0.4) using the Gates Method.
8) Pile load given is Factored Strength Load.
9) Piles must be driven 10' into existing ground or to refusal on bedrock. Piles at wet crossings must be driven to 10' below stream bed or to refusal on bedrock. A minimum pile length of 10' is required in all circumstances.
10) Contractor shall provide a hammer capable of driving the piling to refusal or capacity without encountering excessive blow counts or damaging the pile. Contractor shall be responsible for all damaged piling.

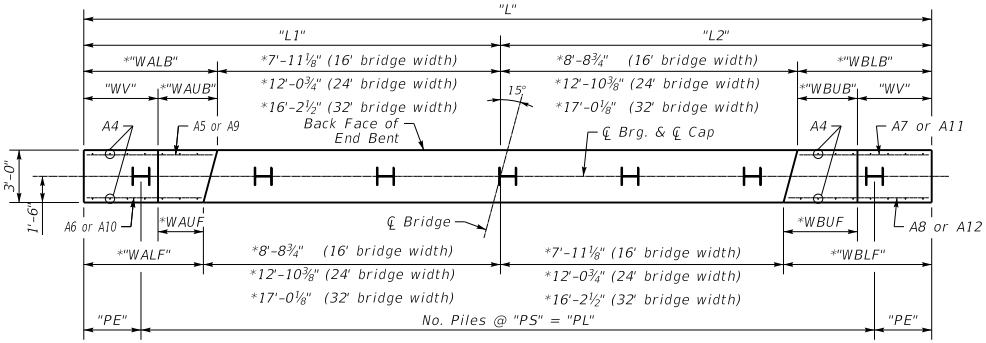

PLAN

(Left skew shown, right skew opposite hand)

*Adjust 9⅜" as necessary for rolled beam superstructure

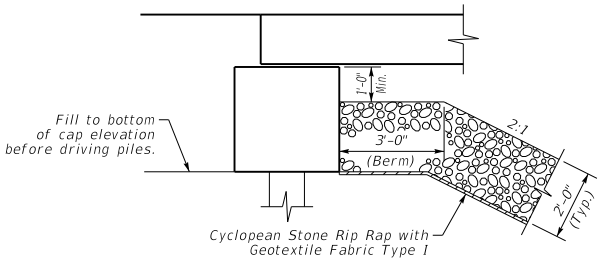

SECTION THRU END BENT

(Showing berm and fill slope)

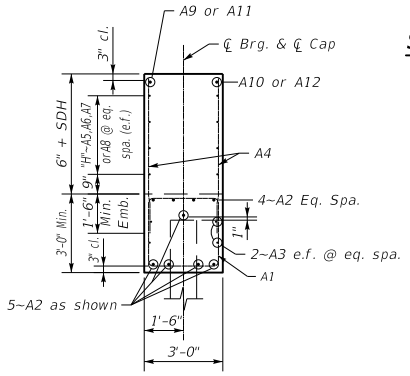

SECTION A-A

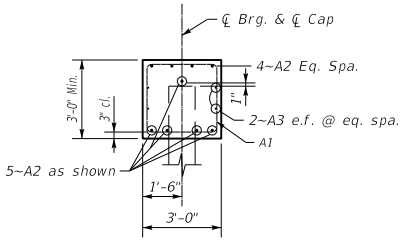

SECTION B-B

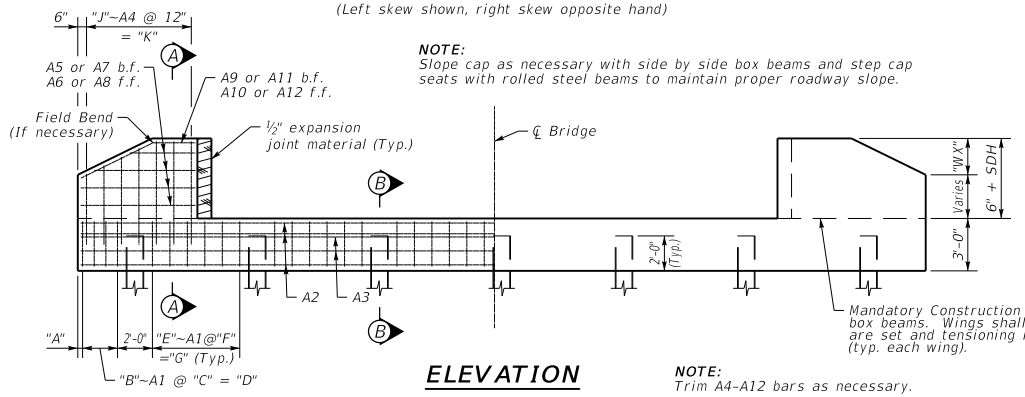

NOTE:
Slope cap as necessary with side by side box beams and step cap seats with rolled steel beams to maintain proper roadway slope.

ELEVATION

Mandatory Construction joint for side by side box beams. Wings shall be poured after beams are set and tensioning rods are tightened (typ. each wing).

NOTE:
Trim A4-A12 bars as necessary.

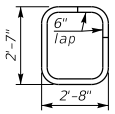

A1 Bar

~Size #5~

KENTUCKY
DEPARTMENT OF HIGHWAYS

PILE END BENT
15° SKEW

STANDARD DRAWING NO. BSE-002

SUBMITTED _____ DIRECTOR DIVISION OF STRUCTURAL DESIGN — DATE 02-26-20

APPROVED _____ STATE HIGHWAY ENGINEER — DATE 02-26-20

SUPERSTRUCTURE HEIGHT SDH=Beam Height +pad height +(haunch+slab) [if applicable]		CAP BILL OF REINFORCEMENT 16'-0" BRIDGE WIDTH					24'-0" BRIDGE WIDTH					32'-0" BRIDGE WIDTH				
		MARK	TYPE	NO.	SIZE	LENGTH	MARK	TYPE	NO.	SIZE	LENGTH	MARK	TYPE	NO.	SIZE	LENGTH
H1	12" ≤SDH≤27"	A1e	14s	24	5	11'-0"	A1e	14s	34	5	11'-0"	A1e	14s	41	5	11'-0"
		A2e	Str.	9	8	26'-3"	A2e	Str.	9	8	35'-6"	A2e	Str.	9	8	44'-9"
		A3e	Str.	4	5	26'-3"	A3e	Str.	4	5	35'-6"	A3e	Str.	4	5	44'-9"
H2	27" <SDH≤35"	A1e	14s	27	5	11'-0"	A1e	14s	36	5	11'-0"	A1e	14s	43	5	11'-0"
		A2e	Str.	9	8	29'-5"	A2e	Str.	9	8	38'-8"	A2e	Str.	9	8	47'-11"
		A3e	Str.	4	5	29'-5"	A3e	Str.	4	5	38'-8"	A3e	Str.	4	5	47'-11"
H3	35" <SDH≤50"	A1e	14s	34	5	11'-0"	A1e	14s	41	5	11'-0"	A1e	14s	48	5	11'-0"
		A2e	Str.	9	8	35'-3"	A2e	Str.	9	8	44'-6"	A2e	Str.	9	8	53'-9"
		A3e	Str.	4	5	35'-3"	A3e	Str.	4	5	44'-6"	A3e	Str.	4	5	53'-9"

WING BILL OF REINFORCEMENT															
MARK	TYPE	NO.	SIZE	LENGTH	MARK	TYPE	NO.	SIZE	LENGTH	MARK	TYPE	NO.	SIZE	LENGTH
A4e	Str.	15	5	4'-0"	A7e	Str.	2	5	3'-9"	A10e	Str.	1	6	2'-0"
A5e	Str.	2	5	3'-6"	A8e	Str.	2	5	5'-3"	A11e	Str.	1	6	3'-9"
A6e	Str.	2	5	2'-0"	A9e	Str.	1	6	3'-6"	A12e	Str.	1	6	5'-3"
A4e	Str.	22	5	4'-8"	A7e	Str.	3	5	5'-4"	A10e	Str.	1	6	3'-7"
A5e	Str.	3	5	5'-1"	A8e	Str.	3	5	6'-10"	A11e	Str.	1	6	5'-4"
A6e	Str.	3	5	3'-7"	A9e	Str.	1	6	5'-1"	A12e	Str.	1	6	6'-10"
A4e	Str.	33	5	5'-11"	A7e	Str.	4	5	8'-3"	A10e	Str.	1	6	6'-11"
A5e	Str.	4	5	8'-0"	A8e	Str.	4	5	9'-9"	A11e	Str.	1	6	8'-9"
A6e	Str.	4	5	6'-6"	A9e	Str.	1	6	8'-5"	A12e	Str.	1	6	10'-2"

BRIDGE WIDTH	PILE LOAD		PILES				DIMENSIONS										WING A												WING B												QUANTITIES	
							Geometry			Reinforcement							Back Face						Front Face						Back Face						Front Face							
	SIZE	TONS	NO.	PE	PS	PL	L	L1	L2	A	B	C	D	E	F	G	H	WALB	WAUB	WV	WX	J	K	WALF	WAUF	WV	WX	J	K	WBLB	WBUB	WV	WX	J	K	WBLF	WBUF	WV	WX	J	K	CONC. (C.Y.)	STEEL (LBS.)
16	H1	73	4	2'-9⅞"	7'-0"	21'-0"	26'-7⅞"	12'-5½"	14'-2⅜"	3⅞"	3	9"	1'-6"	6	12"	5'-0"	2	4'-0⅜"	0	0	0	4	3'-0"	2'-3⅝"	0	0	0	2	1'-0"	4'-0⅝"	0	0	0	4	3'-0"	5'-9⅜"	0	0	0	5	4'-0"	11.3	1132
	H2	87	4	2'-10⅞"	8'-0"	24'-0"	29'-9⅞"	14'-0½"	15'-9⅜"	2⅞"	3	10"	1'-8"	7	12"	6'-0"	3	5'-7⅜"	0	0	0	5	4'-0"	3'-10⅝"	0	0	0	4	3'-0"	5'-7⅝"	0	0	0	6	5'-0"	7'-4⅜"	0	0	0	7	6'-0"	14.1	1345
	H3	88	5	2'-9⅞"	7'-6"	30'-0"	35'-7⅞"	16'-11½"	18'-8⅜"	3⅞"	3	9"	1'-6"	7	11"	5'-6"	4	8'-6⅜"	3'-9⅜"	4'-9"	2'-1"	8	7'-0"	6'-9⅝"	2'-0⅝"	4'-9"	2'-1"	7	6'-0"	8'-6⅝"	3'-9⅝"	4'-9"	2'-1"	8	7'-0"	10'-3⅜"	5'-6⅜"	4'-9"	2'-1"	10	9'-0"	19.5	1777
24	H1	80	5	2'-11⅜"	7'-6"	30'-0"	35'-10¾"	17'-0⅞"	18'-9⅞"	3⅜"	3	10"	1'-8"	7	11"	5'-6"	2	4'-0⅜"	0	0	0	4	3'-0"	2'-3⅝"	0	0	0	2	1'-0"	4'-0⅝"	0	0	0	4	3'-0"	5'-9⅜"	0	0	0	5	4'-0"	14.4	1508
	H2	99	5	3'-6⅜"	8'-0"	32'-0"	39'-0¾"	18'-7⅞"	20'-4⅛"	3⅜"	4	9"	2'-3"	7	12"	6'-0"	3	5'-7⅜"	0	0	0	5	4'-0"	3'-10⅝"	0	0	0	4	3'-0"	5'-7⅝"	0	0	0	6	5'-0"	7'-4⅜"	0	0	0	7	6'-0"	17.2	1709
	H3	103	6	2'-5⅜"	8'-0"	40'-0"	44'-10¾"	21'-6⅞"	23'-3⅞"	3⅜"	3	7"	1'-2"	7	12"	6'-0"	4	8'-6⅜"	3'-9⅜"	4'-9"	2'-1"	7	6'-0"	6'-9⅝"	2'-0⅝"	4'-9"	2'-1"	7	6'-0"	8'-6⅝"	3'-9⅝"	4'-9"	2'-1"	8	7'-0"	10'-3⅜"	5'-6⅜"	4'-9"	2'-1"	10	9'-0"	22.6	2119
32	H1	88	6	2'-6¾"	8'-0"	40'-0"	45'-1½"	21'-8¼"	23'-5¼"	2¾"	3	8"	1'-4"	7	12"	6'-0"	2	4'-0⅜"	0	0	0	4	3'-0"	2'-3⅝"	0	0	0	2	1'-0"	4'-0⅝"	0	0	0	4	3'-0"	5'-9⅜"	0	0	0	5	4'-0"	17.4	1850
	H2	109	6	4'-1¾"	8'-0"	40'-0"	48'-3½"	23'-3¼"	25'-0¼"	4¾"	4	11"	2'-9"	7	12"	6'-0"	3	5'-7⅜"	0	0	0	5	4'-0"	3'-10⅝"	0	0	0	4	3'-0"	5'-7⅝"	0	0	0	6	5'-0"	7'-4⅜"	0	0	0	7	6'-0"	20.3	2051
	H3	116	7	3'-3¾"	8'-0"	48'-0"	54'-1½"	26'-2¼"	27'-11¼"	2¾"	3	11"	1'-10"	7	12"	6'-0"	4	8'-6⅜"	3'-9⅜"	4'-9"	2'-1"	8	7'-0"	6'-9⅝"	2'-0⅝"	4'-9"	2'-1"	7	6'-0"	8'-6⅝"	3'-9⅝"	4'-9"	2'-1"	8	7'-0"	10'-3⅜"	5'-6⅜"	4'-9"	2'-1"	10	9'-0"	25.6	2460

NOTES:

1) Conform to KYTC, Standard Specifications, Current Edition.
2) Concrete to be Class "A", 3500 psi.
3) Rebar to be epoxy coated A615, Grade 60.
4) Maintain 2" clear cover to reinforcement unless otherwise noted.
5) End Bents are designed for the maximum span of the following steel and concrete beams as shown in the current standards:
   H1 - B12, CB12, B17, CB17, B21 or rolled steel beams up to 16" nominal depth.
   H2 - CB21, B27, CB27, B33 or rolled steel beams up to 24" nominal depth.
   H3 - CB33, B42, CB42 or rolled steel beams up to 36" nominal depth.
6) Piles may be HP12x53 or 16" Steel Pipes with ½" wall thickness.
7) Piles driven to rock must be driven to Refusal. Friction Piles must be driven to (Pile Load/0.4) using the Gates Method.
8) Pile load given is Factored Strength Load.
9) Piles must be driven 10' into existing ground or to refusal on bedrock. Piles at wet crossings must be driven to 10' below stream bed or to refusal on bedrock. A minimum pile length of 10' is required in all circumstances.
10) Contractor shall provide a hammer capable of driving the piling to refusal or capacity without encountering excessive blow counts or damaging the pile. Contractor shall be responsible for all damaged piling.

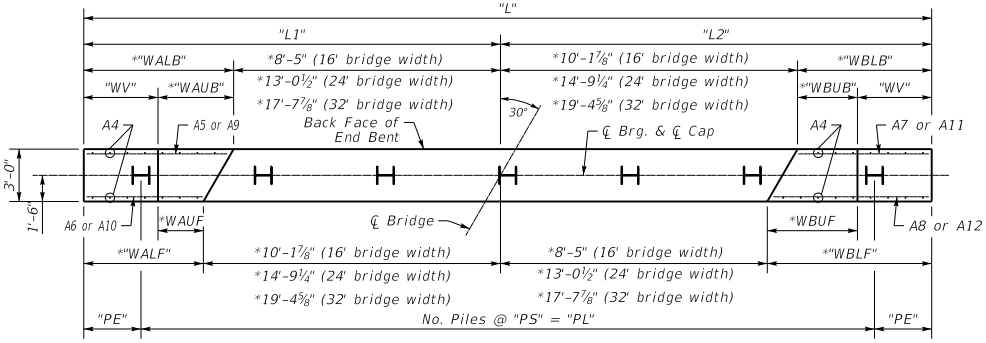

PLAN

(Left skew shown, right skew opposite hand)

*Adjust 10⅜" as necessary for rolled beam superstructure

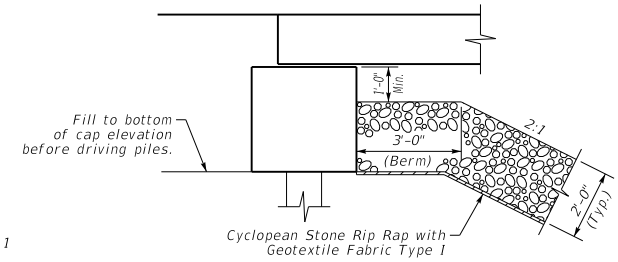

SECTION THRU END BENT

(Showing berm and fill slope)

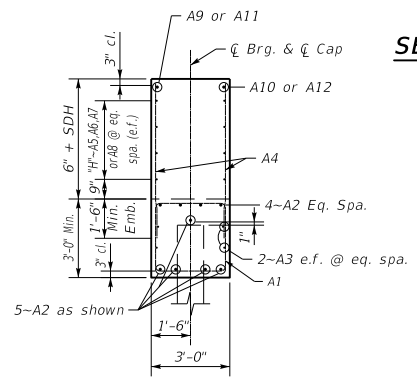

SECTION A-A

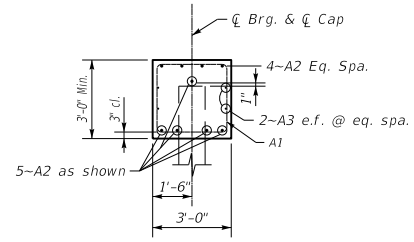

SECTION B-B

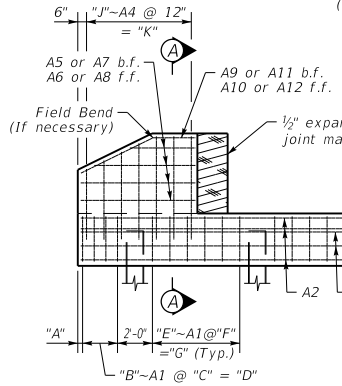

NOTE:
Slope cap as necessary with side by side box beams and step cap seats with rolled steel beams to maintain proper roadway slope.

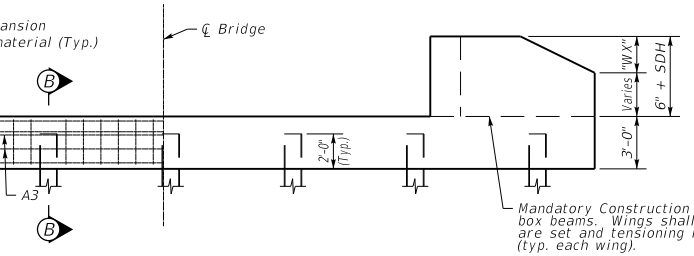

ELEVATION

NOTE:
Trim A4-A12 bars as necessary.

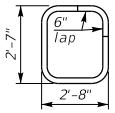

A1 Bar

~Size #5~

KENTUCKY
DEPARTMENT OF HIGHWAYS

PILE END BENT
30° SKEW

STANDARD DRAWING NO. BSE-003

SUBMITTED _____ DIRECTOR DIVISION OF STRUCTURAL DESIGN — DATE 02-26-20

APPROVED _____ STATE HIGHWAY ENGINEER — DATE 02-26-20

CAP BILL OF REINFORCEMENT

SUPERSTRUCTURE HEIGHT SDH=Beam Height +pad height +(haunch+slab) [if applicable]		16'-0" BRIDGE WIDTH					24'-0" BRIDGE WIDTH					32'-0" BRIDGE WIDTH				
		MARK	TYPE	NO.	SIZE	LENGTH	MARK	TYPE	NO.	SIZE	LENGTH	MARK	TYPE	NO.	SIZE	LENGTH
H1	12" ≤SDH≤27"	A1e	14s	30	5	11- 0	A1e	14s	43	5	11- 0	A1e	14s	50	5	11- 0
		A2e	Str.	9	8	32- 5	A2e	Str.	9	8	43- 8	A2e	Str.	9	8	55- 0
		A3e	Str.	4	5	32- 5	A3e	Str.	4	5	43- 8	A3e	Str.	4	5	55- 0
H2	27" <SDH≤35"	A1e	14s	34	5	11- 0	A1e	14s	43	5	11- 0	A1e	14s	57	5	11- 0
		A2e	Str.	9	8	36- 1	A2e	Str.	9	8	47- 4	A2e	Str.	9	8	58- 8
		A3e	Str.	4	5	36- 1	A3e	Str.	4	5	47- 4	A3e	Str.	4	5	58- 8
H3	35" <SDH≤50"	A1e	14s	41	5	11- 0	A1e	14s	50	5	11- 0	A1e	14s	62	5	11- 0
		A2e	Str.	9	8	43- 3	A2e	Str.	9	8	54- 6	A2e	Str.	18	8	35- 8
		A3e	Str.	4	5	43- 3	A3e	Str.	4	5	54- 6	A3e	Str.	8	5	34- 3

WING BILL OF REINFORCEMENT

MARK	TYPE	NO.	SIZE	LENGTH	MARK	TYPE	NO.	SIZE	LENGTH	MARK	TYPE	NO.	SIZE	LENGTH
A4e	Str.	20	5	4- 0	A7e	Str.	2	5	4-10	A10e	Str.	1	6	1-10
A5e	Str.	2	5	4- 4	A8e	Str.	2	5	7- 4	A11e	Str.	1	6	4-10
A6e	Str.	2	5	1-10	A9e	Str.	1	6	4- 4	A12e	Str.	1	6	7- 4
A4e	Str.	26	5	4- 8	A7e	Str.	3	5	6- 8	A10e	Str.	1	6	3- 8
A5e	Str.	3	5	6- 2	A8e	Str.	3	5	9- 2	A11e	Str.	1	6	6- 8
A6e	Str.	3	5	3- 8	A9e	Str.	1	6	6- 2	A12e	Str.	1	6	9- 2
A4e	Str.	40	5	5-11	A7e	Str.	4	5	10- 2	A10e	Str.	1	6	7- 5
A5e	Str.	4	5	9- 9	A8e	Str.	4	5	12- 9	A11e	Str.	1	6	10- 6
A6e	Str.	4	5	7- 2	A9e	Str.	1	6	10- 0	A12e	Str.	1	6	13- 0

BRIDGE WIDTH	PILE LOAD		PILES				DIMENSIONS										WING A												WING B												QUANTITIES	
							Geometry			Reinforcement							Back Face							Front Face						Back Face							Front Face							
	SIZE	TONS	NO.	PE	PS	PL	L	L1	L2	A	B	C	D	E	F	G	H	WALB	WAUB	WV	WX	J	K	WALF	WAUF	WV	WX	J	K	WBLB	WBUB	WV	WX	J	K	WBLF	WBUF	WV	WX	J	K	CONC. (C.Y.)	STEEL (LBS.)
16	H1	60	5	2'-4½"	7'-0"	28'-0"	32'-9"	14'-10½"	17'-10½"	4½"	3	6"	1'-0"	6	12"	5'-0"	2	5'-0"	0	0	0	5	4'-0"	2'-0"	0	0	0	2	1'-0"	5'-0"	0	0	0	5	4'-0"	8'-0"	0	0	0	8	7'-0"	13.9	1410
	H2	71	5	3'-2½"	7'-6"	30'-0"	36'-5"	16'-8½"	19'-8½"	4½"	3	11"	1'-10"	7	11"	5'-6"	3	6'-10"	0	0	0	6	5'-0"	3'-10"	0	0	0	4	3'-0"	6'-10"	0	0	0	7	6'-0"	9'-10"	0	0	0	9	8'-0"	17.2	1655
	H3	76	6	3'-0½"	7'-6"	37'-6"	43'-7"	20'-3½"	23'-3½"	4½"	3	10"	1'-8"	7	11"	5'-6"	4	10'-5"	4'-8"	5'-9"	2'-0"	10	9'-0"	7'-5"	1'-8"	5'-9"	2'-0"	7	6'-0"	10'-5"	4'-8"	5'-9"	2'-0"	10	9'-0"	13'-5"	7'-8"	5'-9"	2'-0"	13	12'-0"	23.9	2167
24	H1	69	6	3'-3⅜"	7'-6"	37'-6"	44'-0¾"	20'-6⅜"	23'-6⅜"	3⅜"	4	8"	2'-0"	7	11"	5'-6"	2	5'-0"	0	0	0	5	4'-0"	2'-0"	0	0	0	2	1'-0"	5'-0"	0	0	0	5	4'-0"	8'-0"	0	0	0	8	7'-0"	17.7	1877
	H2	85	6	3'-10⅜"	8'-0"	40'-0"	47'-8¾"	22'-4⅜"	25'-4⅜"	4⅜"	4	10"	2'-6"	7	12"	6'-0"	3	6'-10"	0	0	0	6	5'-0"	3'-10"	0	0	0	4	3'-0"	6'-10"	0	0	0	7	6'-0"	9'-10"	0	0	0	9	8'-0"	21.0	2076
	H3	91	7	3'-5⅜"	8'-0"	48'-0"	54'-10¾"	25'-11⅜"	28'-11⅜"	5⅜"	4	8"	2'-0"	7	12"	6'-0"	4	10'-5"	4'-8"	5'-9"	2'-0"	10	9'-0"	7'-5"	1'-8"	5'-9"	2'-0"	7	6'-0"	10'-5"	4'-8"	5'-9"	2'-0"	10	9'-0"	13'-5"	7'-8"	5'-9"	2'-0"	13	12'-0"	27.6	2588
32	H1	79	7	3'-8¼"	8'-0"	48'-0"	55'-4½"	26'-2¼"	29'-2¼"	5¼"	4	9"	2'-3"	7	12"	6'-0"	2	5'-0"	0	0	0	5	4'-0"	2'-0"	0	0	0	2	1'-0"	5'-0"	0	0	0	5	4'-0"	8'-0"	0	0	0	8	7'-0"	21.4	2277
	H2	84	8	3'-3¼"	7'-6"	52'-6"	59'-0½"	28'-0¼"	31'-0¼"	3¼"	4	8"	2'-0"	7	11"	5'-6"	3	6'-10"	0	0	0	6	5'-0"	3'-10"	0	0	0	4	3'-0"	6'-10"	0	0	0	7	6'-0"	9'-10"	0	0	0	9	8'-0"	24.7	2557
	H3	93	9	3'-1¼"	7'-6"	60'-0"	66'-2½"	31'-7¼"	34'-7¼"	3¼"	3	11"	1'-10"	7	11"	5'-6"	4	10'-5"	4'-8"	5'-9"	2'-0"	10	9'-0"	7'-5"	1'-8"	5'-9"	2'-0"	7	6'-0"	10'-5"	4'-8"	5'-9"	2'-0"	10	9'-0"	13'-5"	7'-8"	5'-9"	2'-0"	13	12'-0"	31.4	3190

NOTES:

1) Conform to KYTC, Standard Specifications, Current Edition.
2) Concrete to be Class "A", 3500 psi.
3) Rebar to be epoxy coated A615, Grade 60.
4) Maintain 2" clear cover to reinforcement unless otherwise noted.
5) End Bents are designed for the maximum span of the following steel and concrete beams as shown in the current standards:
   H1 - B12, CB12, B17, CB17, B21 or rolled steel beams up to 16" nominal depth.
   H2 - CB21, B27, CB27, B33 or rolled steel beams up to 24" nominal depth.
   H3 - CB33, B42, CB42 or rolled steel beams up to 36" nominal depth.
6) Piles may be HP12x53 or 16" Steel Pipes with ½" wall thickness.
7) Piles driven to rock must be driven to Refusal. Friction Piles must be driven to (Pile Load/0.4) using the Gates Method.
8) Pile load given is Factored Strength Load.
9) Piles must be driven 10' into existing ground or to refusal on bedrock. Piles at wet crossings must be driven to 10' below stream bed or to refusal on bedrock. A minimum pile length of 10' is required in all circumstances.
10) Contractor shall provide a hammer capable of driving the piling to refusal or capacity without encountering excessive blow counts or damaging the pile. Contractor shall be responsible for all damaged piling.

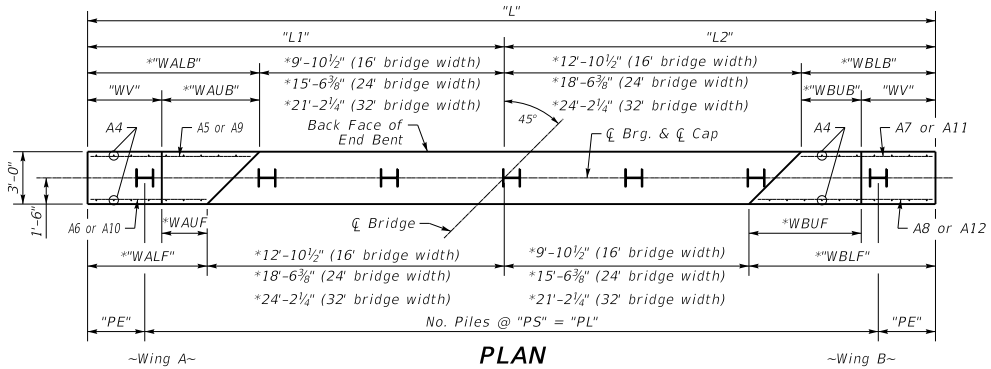

PLAN

(Left skew shown, right skew opposite hand)

*Adjust 1'-0¾" as necessary for rolled beam superstructure

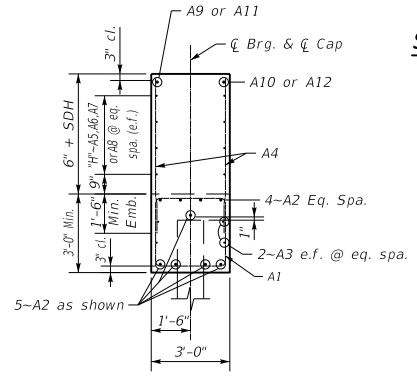

SECTION A-A

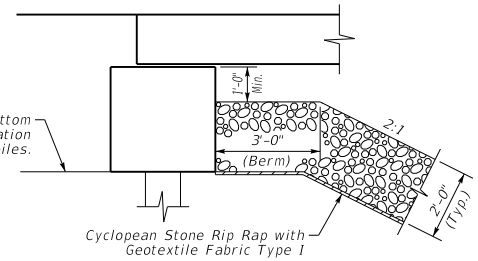

SECTION THRU END BENT

(Showing berm and fill slope)

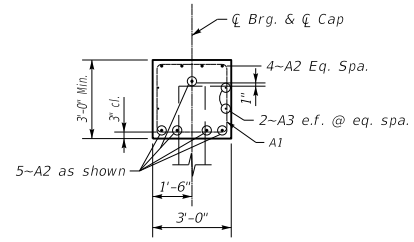

SECTION B-B

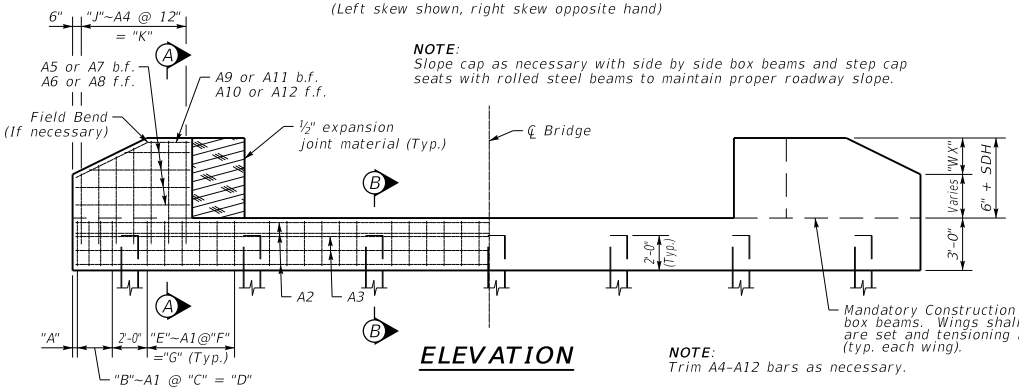

NOTE:
Slope cap as necessary with side by side box beams and step cap seats with rolled steel beams to maintain proper roadway slope.

ELEVATION

NOTE:
Trim A4-A12 bars as necessary.

Mandatory Construction joint for side by side box beams. Wings shall be poured after beams are set and tensioning rods are tightened (typ. each wing).

NOTE:
A2 bars (#8), 5'-6" min. lap if required
A3 bars (#5), 2'-8" min. lap if required

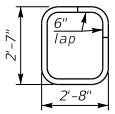

A1 Bar

~Size #5~

KENTUCKY
DEPARTMENT OF HIGHWAYS

PILE END BENT
45° SKEW

STANDARD DRAWING NO. BSE-004

SUBMITTED _____ DIRECTOR DIVISION OF STRUCTURAL DESIGN — DATE 02-26-20

APPROVED _____ STATE HIGHWAY ENGINEER — DATE 02-26-20

0° SKEW 16'-0" - 17'-6" BRIDGE WIDTH (No Seismic Load)

Bill of Reinforcement

MARK	P1				P2				P3				P4								P5								P6				P7				P8				P9(e)				P10(e)				P11(e)			
TYPE	Str.				Str.				Str.				Type 4								Type 10								Str.				Type 31				Str.				Str.				Str.				Type 14			
SIZE																																	#4								#8				#5				#5			
H	No.	Size	Length ft.	Length in.	No.	Size	Length ft.	Length in.	Spacing	No.	Size	Length ft.	Length in.	Spacing	A ft.	A in.	B ft.	B in.	C ft.	C in.	D ft.	D in.	No.	Size	Length ft.	Length in.	Spacing	A ft.	A in.	No.	Size	Length ft.	Length in.	No.	Length ft.	Length in.	No.	Size	Length ft.	Length in.	Spacing	No.	Length ft.	Length in.	No.	Length ft.	Length in.	No.	Length ft.	Length in.	No.	Length ft.	Length in.
10-11	30	8	12	8	8	26	5	19	8	12	30	5	12	8	8	42	8	8	10	8	7	5	1	5	0	8	7	9	10	5	7	5	12	2	6	10	5	13	0	12	35	2	5	42	8	8	0	8	8	18	8	4	18	8	19	13	2
12-13	30	8	12	8	8	26	5	19	8	12	30	5	12	8	8	42	8	8	10	8	7	5	1	5	0	8	7	9	14	5	7	5	12	2	6	14	5	13	0	12	49	2	5	42	8	10	0	8	8	18	8	4	18	8	19	13	2
14-15	30	8	12	8	8	26	5	19	8	12	30	5	12	8	8	42	8	8	10	8	7	5	1	5	0	8	7	9	18	5	7	5	12	2	6	18	5	13	0	12	63	2	5	42	8	12	0	8	8	18	8	4	18	8	19	13	2
16-17	30	8	12	8	8	26	5	19	8	12	30	5	12	8	8	42	8	8	10	8	7	5	1	5	0	8	7	9	22	5	7	5	12	2	6	22	5	13	0	12	77	2	5	42	8	14	0	8	8	18	8	4	18	8	19	13	2
18-19	30	8	12	8	8	26	5	19	8	12	30	5	12	8	8	42	8	8	10	8	7	5	1	5	0	8	7	9	26	5	7	5	12	2	6	26	5	13	0	12	91	2	5	42	8	16	0	8	8	18	8	4	18	8	19	13	2
20-21	30	8	12	8	8	26	5	19	8	12	30	5	12	8	8	42	8	8	10	8	7	5	1	5	0	8	7	9	30	5	7	5	12	2	6	30	5	13	0	12	105	2	5	42	8	18	0	8	8	18	8	4	18	8	19	13	2
22-23	30	8	12	8	8	26	5	19	8	12	30	5	12	8	8	42	8	8	10	8	7	5	1	5	0	8	7	9	34	5	7	5	12	2	6	34	5	13	0	12	119	2	5	42	8	20	0	8	8	18	8	4	18	8	19	13	2
24-25	30	8	12	8	8	26	5	19	8	12	30	5	12	8	8	42	8	8	10	8	7	5	1	5	0	8	7	9	38	5	7	5	12	2	6	38	5	13	0	12	133	2	5	42	8	22	0	8	8	18	8	4	18	8	19	13	2

Reinforcement Details

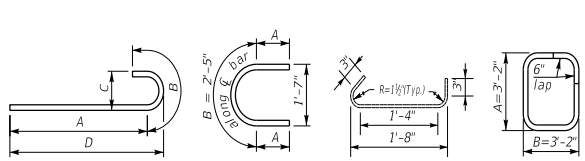

TYPE 4 — TYPE 10 (#5 bar) — TYPE 31 (#4 bar) — TYPE 14 (#5 bar)

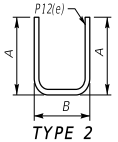

TYPE 2

(For Stepped Cap)
A=Ht. diff.-2" Cl. +2'-0"emb.
B=1'-2½"

DIMENSIONS TABLE

H	A ft.	A in.	B ft.	B in.	C ft.	C in.	D ft.	D in.
10-11	2	6	2	6	10	0	5	6
12-13	2	6	2	6	10	0	5	6
14-15	2	6	2	6	10	0	5	6
16-17	2	6	2	6	10	0	5	6
18-19	2	6	2	6	10	0	5	6
20-21	2	6	2	6	10	0	5	6
22-23	2	6	2	6	10	0	5	6
24-25	2	6	2	6	10	0	5	6

QUANTITIES

H	CONCRETE CLASS "A" CU. YDS. (1)	STEEL REINFORCEMENT EPOXY COATED LBS.	STEEL REINFORCEMENT LBS.
10-11	38.3	740	4113
12-13	40.5	740	4446
14-15	42.6	740	4779
16-17	44.8	740	5112
18-19	47	740	5445
20-21	49.1	740	5778
22-23	51.3	740	6111
24-25	53.4	740	6444

Note: All bars in cap shall be epoxy coated.

Note: All concrete shall be Class "A"

(1) Quantity is based on taller height. Reduce by 1.0 cubic yd. for shorter height.

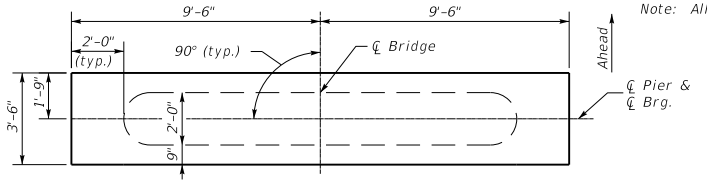

PLAN OF CAP

Note: Grade cap to roadway grade for box beams. Step cap if necessary for steel beams.

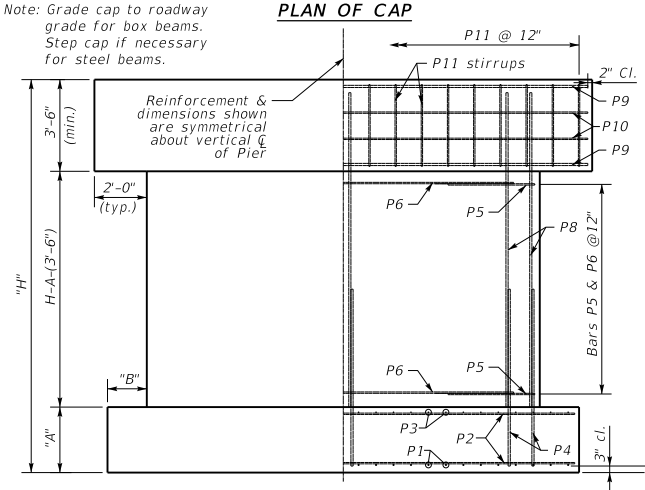

ELEVATION

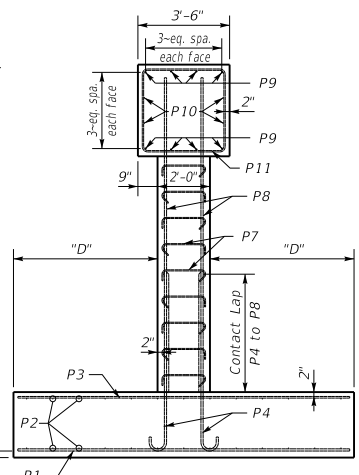

END ELEVATION

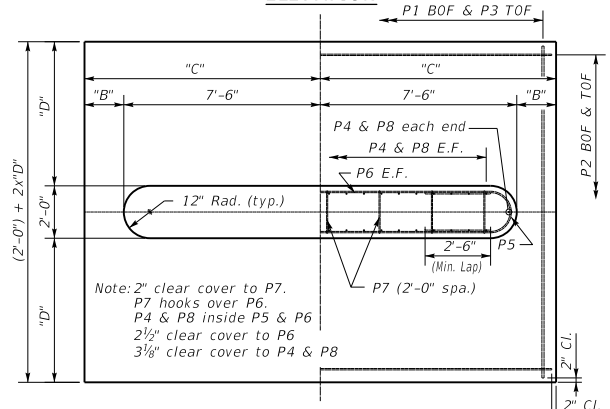

PLAN OF FOOTING

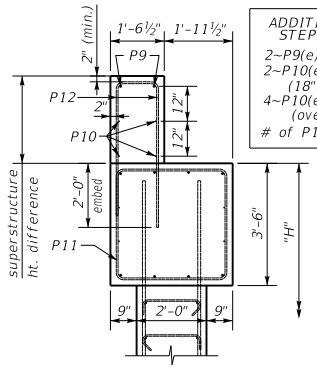

STEPPED CAP
(if necessary)

ADDITIONAL BARS FOR STEPPED PIER CAP
2~P9(e)'s
2~P10(e)'s
(18" to 28" ht. diff.)
4~P10(e)'s
(over 28" ht. diff.)
# of P12(e)=# of P11(e)

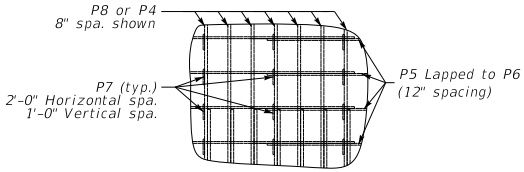

P7 BAR PLACEMENT
(alternate 90° & 135° bar ends)

GENERAL NOTES

SPECIFICATIONS: Construct piers according to the current edition of the Kentucky Department of Highways Standard Specifications for Road and Bridge Construction. Piers are designed for side by side box beams as detailed in Standard Drawings BDP-001 through BDP-012, current edition. They may be slightly modified to allow for 17'-6" rolled steel beam bridge width.

FOUNDATION PRESSURE: Construct pier footings on solid rock bearing material that can support a pressure of 8000 psf service or 10,800 psf strength factored as recommended by a geotechnical engineer.

DESIGN LOADS: Pier is designed for the CB42 beam superstructure with 3~97 foot spans. Pier is designed to handle a half a 97 foot span for thermal load with expansion bearings under the beams. Pier is designed for 100 mph wind. Wind on superstructure is for 1~97' span longitudinal and transverse. Pier is designed for stream flow of 10 ft./sec. up to the top of the pier. It is not designed for flow acting on the superstructure. Pier is not designed for earthquake loading.

DESIGN APPLICABILITY: Consult with a structural engineer to determine if these details are applicable for any particular project.

FOOTING ELEVATION: Construct bottom of footing below the anticipated scour elevation. (This typically entails embedding the footings 1'-0" to 2'-0" into rock and pouring concrete directly against cut rock faces as recommended by geotechnical engineer.)

NOTE: Distances to bars shown are clear dimensions unless otherwise noted.

MATERIAL SPECIFICATIONS:
Concrete, Class "A" = 3500 psi
Steel Reinforcement = Grade 60

KENTUCKY
DEPARTMENT OF HIGHWAYS

Standard Pier
0° Skew
16'-0"-17'-6" Bridge Width

STANDARD DRAWING NO. BSP-001

SUBMITTED _____ DIRECTOR DIVISION OF STRUCTURAL DESIGN — DATE 02-26-20

APPROVED _____ STATE HIGHWAY ENGINEER — DATE 02-26-20

0° SKEW 24'-0" - 25'-6" BRIDGE WIDTH (No Seismic Load)

Bill of Reinforcement

MARK	P1					P2					P3					P4										P5					P6					P7			P8					P9(e)			P10(e)			P11(e)		
TYPE	Str.					Str.					Str.					Type 4										Type 10					Str.					Type 31			Str.					Str.			Str.			Type 14		
SIZE																																			#4								#8			#5			#5		
H	No.	Size	Length ft.	Length in.	Spacing	No.	Size	Length ft.	Length in.	Spacing	No.	Size	Length ft.	Length in.	Spacing	No.	Size	Length ft.	Length in.	Spacing	A ft.	A in.	B ft.	B in.	C ft.	C in.	D ft.	D in.	No.	Size	Length ft.	Length in.	Spacing	A ft.	A in.	No.	Size	Length ft.	Length in.	No.	Size	Length ft.	Length in.	Spacing	No.	Length ft.	Length in.	No.	Length ft.	Length in.	No.	Length ft.	Length in.
10-11	40	8	12	8	8	26	6	26	2	12	40	5	12	8	8	60	8	8	10	8	7	5	1	5	0	8	7	9	10	5	7	5	12	2	6	10	5	19	0	12	50	2	5	60	8	8	0	8	8	26	8	4	26	8	27	13	2
12-13	40	8	12	8	8	26	6	26	2	12	40	5	12	8	8	60	8	8	10	8	7	5	1	5	0	8	7	9	14	5	7	5	12	2	6	14	5	19	0	12	70	2	5	60	8	10	0	8	8	26	8	4	26	8	27	13	2
14-15	40	8	12	8	8	26	6	26	2	12	40	5	12	8	8	60	8	8	10	8	7	5	1	5	0	8	7	9	18	5	7	5	12	2	6	18	5	19	0	12	90	2	5	60	8	12	0	8	8	26	8	4	26	8	27	13	2
16-17	40	8	12	8	8	26	6	26	2	12	40	5	12	8	8	60	8	8	10	8	7	5	1	5	0	8	7	9	22	5	7	5	12	2	6	22	5	19	0	12	110	2	5	60	8	14	0	8	8	26	8	4	26	8	27	13	2
18-19	40	8	12	8	8	26	6	26	2	12	40	5	12	8	8	60	8	8	10	8	7	5	1	5	0	8	7	9	26	5	7	5	12	2	6	26	5	19	0	12	130	2	5	60	8	16	0	8	8	26	8	4	26	8	27	13	2
20-21	40	8	12	8	8	26	6	26	2	12	40	5	12	8	8	60	8	8	10	8	7	5	1	5	0	8	7	9	30	5	7	5	12	2	6	30	5	19	0	12	150	2	5	60	8	18	0	8	8	26	8	4	26	8	27	13	2
22-23	40	8	12	8	8	26	6	26	2	12	40	5	12	8	8	60	8	8	10	8	7	5	1	5	0	8	7	9	34	5	7	5	12	2	6	34	5	19	0	12	170	2	5	60	8	20	0	8	8	26	8	4	26	8	27	13	2
24-25	40	8	12	8	8	26	6	26	2	12	40	5	12	8	8	60	8	8	10	8	7	5	1	5	0	8	7	9	38	5	7	5	12	2	6	38	5	19	0	12	190	2	5	60	8	22	0	8	8	26	8	4	26	8	27	13	2

Reinforcement Details

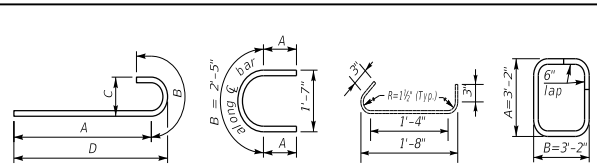

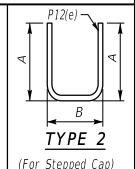

DIMENSIONS TABLE

H	A ft.	A in.	B ft.	B in.	C ft.	C in.	D ft.	D in.
10-11	2	6	2	9	13	3	5	6
12-13	2	6	2	9	13	3	5	6
14-15	2	6	2	9	13	3	5	6
16-17	2	6	2	9	13	3	5	6
18-19	2	6	2	9	13	3	5	6
20-21	2	6	2	9	13	3	5	6
22-23	2	6	2	9	13	3	5	6
24-25	2	6	2	9	13	3	5	6

QUANTITIES

H	CONCRETE CLASS "A" CU. YDS. (1)	STEEL REINFORCEMENT EPOXY COATED LBS.	STEEL REINFORCEMENT LBS.
10-11	52.2	1055	5973
12-13	55.3	1055	6438
14-15	58.3	1055	6902
16-17	61.4	1055	7366
18-19	64.4	1055	7830
20-21	67.5	1055	8295
22-23	70.5	1055	8759
24-25	73.6	1055	9223

Note: All bars in cap shall be epoxy coated.

Note: All concrete shall be Class "A"

(1) Quantity is based on taller height. Reduce by 1.5 cubic yard for shorter height.

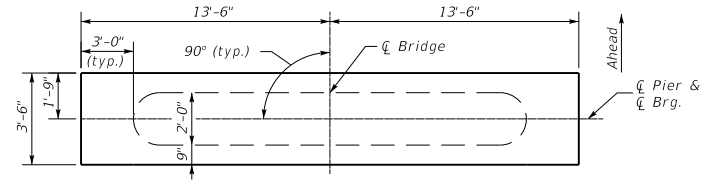

PLAN OF CAP

Note: Grade cap to roadway grade for box beams. Step cap if necessary for steel beams.

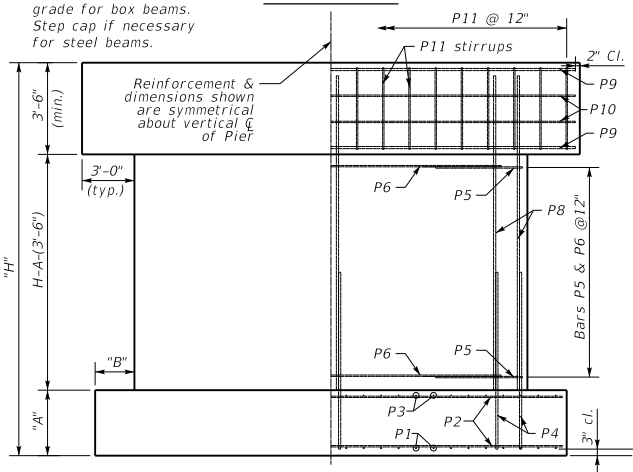

ELEVATION

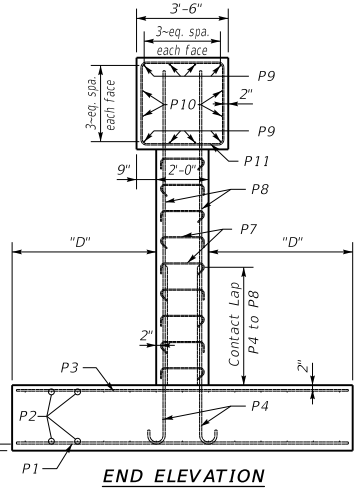

END ELEVATION

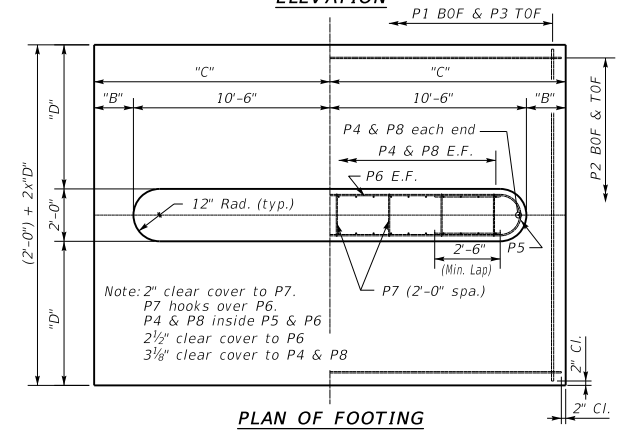

PLAN OF FOOTING

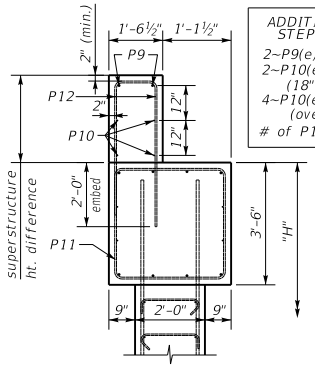

STEPPED CAP

(if necessary)

ADDITIONAL BARS FOR STEPPED PIER CAP

2~P9(e)'s
2~P10(e)'s
(18" to 28" ht. diff.)
4~P10(e)'s
(over 28" ht. diff.)
# of P12(e)=# of P11(e)

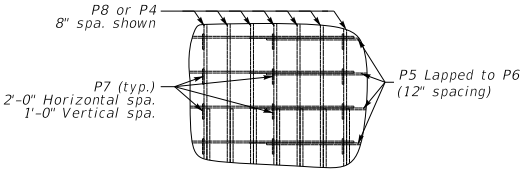

P7 BAR PLACEMENT

(alternate 90° & 135° bar ends)

GENERAL NOTES

SPECIFICATIONS: Construct piers according to the current edition of the Kentucky Department of Highways Standard Specifications for Road and Bridge Construction. Piers are designed for side by side box beams as detailed in Standard Drawings BDP-001 through BDP-012, current edition. They may be slightly modified to allow for 25'-6" rolled steel beam bridge width.

FOUNDATION PRESSURE: Construct pier footings on solid rock bearing material that can support a pressure of 8000 psf service or 10,800 psf strength factored as recommended by a geotechnical engineer.

DESIGN LOADS: Pier is designed for the CB42 beam superstructure with 3~97 foot spans. Pier is designed to handle a half a 97 foot span for thermal load with expansion bearings under the beams. Pier is designed for 100 mph wind. Wind on superstructure is for 1~97' span longitudinal and transverse. Pier is designed for stream flow of 10 ft./sec. up to the top of the pier. It is not designed for flow acting on the superstructure. Pier is not designed for earthquake loading.

DESIGN APPLICABILITY: Consult with a structural engineer to determine if these details are applicable for any particular project.

FOOTING ELEVATION: Construct bottom of footing below the anticipated scour elevation. (This typically entails embedding the footings 1'-0" to 2'-0" into rock and pouring concrete directly against cut rock faces as recommended by geotechnical engineer.)

NOTE: Distances to bars shown are clear dimensions unless otherwise noted.

MATERIAL SPECIFICATIONS:
Concrete, Class "A" = 3500 psi
Steel Reinforcement = Grade 60

KENTUCKY
DEPARTMENT OF HIGHWAYS

Standard Pier
0° Skew
24'-0"-25'-6" Bridge Width

STANDARD DRAWING NO. BSP-002

SUBMITTED _____ DIRECTOR DIVISION OF STRUCTURAL DESIGN — DATE 02-26-20

APPROVED _____ STATE HIGHWAY ENGINEER — DATE 02-26-20

0° SKEW 32'-0" - 33'-6" BRIDGE WIDTH (No Seismic Load)

Bill of Reinforcement

MARK	P1				P2				P3				P4								P5								P6				P7		P8				P9(e)		P10(e)		P11(e)	
TYPE	Str.				Str.				Str.				Type 4								Type 10								Str.				Type 31		Str.				Str.		Str.		Type 14	
SIZE																																	#4						#8		#5		#5	
H	No.	Size	Length ft.	Length in.	No.	Size	Length ft.	Length in.	No.	Size	Length ft.	Length in.	No.	Size	Length ft.	Length in.	A ft.	A in.	B ft.	B in.	C ft.	C in.	D ft.	D in.	No.	Size	Length ft.	Length in.	A ft.	A in.	No.	Size	Length ft.	Length in.	No.	Size	Length ft.	Length in.	No.	Length ft.	Length in.	No.	Length ft.	No.	Length ft.	Length in.
10-11	52	8	12	8	26	6	34	2	52	5	12	8	84	8	10	8	7	5	1	5	0	8	7	9	10	5	7	5	12	2	6	10	5	27	0	12	70	2	5	84	8	8	0	8	8	34	8	4	34	8	35	13	2
12-13	52	8	12	8	26	6	34	2	52	5	12	8	84	8	8	10	8	7	5	1	0	8	7	9	14	5	7	5	12	2	6	14	5	27	0	12	98	2	5	84	8	10	0	8	8	34	8	4	34	8	35	13	2
14-15	52	8	12	8	26	6	34	2	52	5	12	8	84	8	8	10	8	7	5	1	5	0	8	7	9	18	5	7	5	12	2	6	18	5	27	0	12	126	2	5	84	8	12	0	8	8	34	8	4	34	8	35	13	2
16-17	52	8	12	8	26	6	34	2	52	5	12	8	84	8	8	10	8	7	5	1	5	0	8	7	9	22	5	7	5	12	2	6	22	5	27	0	12	154	2	5	84	8	14	0	8	8	34	8	4	34	8	35	13	2
18-19	52	8	12	8	26	6	34	2	52	5	12	8	84	8	8	10	8	7	5	1	5	0	8	7	9	26	5	7	5	12	2	6	26	5	27	0	12	182	2	5	84	8	16	0	8	8	34	8	4	34	8	35	13	2
20-21	52	8	12	8	26	6	34	2	52	5	12	8	84	8	8	10	8	7	5	1	5	0	8	7	9	30	5	7	5	12	2	6	30	5	27	0	12	210	2	5	84	8	18	0	8	8	34	8	4	34	8	35	13	2
22-23	52	8	12	8	26	6	34	2	52	5	12	8	84	8	8	10	8	7	5	1	5	0	8	7	9	34	5	7	5	12	2	6	34	5	27	0	12	238	2	5	84	8	20	0	8	8	34	8	4	34	8	35	13	2
24-25	52	8	12	8	26	6	34	2	52	5	12	8	84	8	8	10	8	7	5	1	5	0	8	7	9	38	5	7	5	12	2	6	38	5	27	0	12	266	2	5	84	8	22	0	8	8	34	8	4	34	8	35	13	2

Reinforcement Details

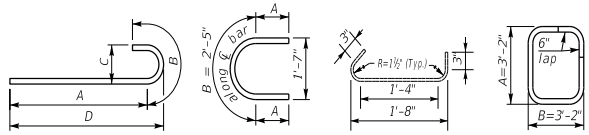

TYPE 4 — TYPE 10 (#5 bar) — TYPE 31 (#4 bar) — TYPE 14 (#5 bar)

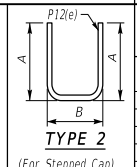

TYPE 2

(For Stepped Cap)
A=Ht. diff.-2" Cl.
+2'-0"emb.
B=1'-2½"

DIMENSIONS TABLE

H	A ft.	A in.	B ft.	B in.	C ft.	C in.	D ft.	D in.
10-11	2	6	2	9	17	3	5	6
12-13	2	6	2	9	17	3	5	6
14-15	2	6	2	9	17	3	5	6
16-17	2	6	2	9	17	3	5	6
18-19	2	6	2	9	17	3	5	6
20-21	2	6	2	9	17	3	5	6
22-23	2	6	2	9	17	3	5	6
24-25	2	6	2	9	17	3	5	6

QUANTITIES

H	CONCRETE CLASS "A" CU. YDS. (1)	STEEL REINFORCEMENT EPOXY COATED LBS.	STEEL REINFORCEMENT LBS.
10-11	68.8	1370	8051
12-13	73	1370	8691
14-15	77.2	1370	9330
16-17	81.5	1370	9969
18-19	85.7	1370	10608
20-21	89.9	1370	11247
22-23	94.2	1370	11887
24-25	98.4	1370	12526

Note: All bars in cap shall be epoxy coated.

Note: All concrete shall be Class "A"

(1) Quantity is based on taller height. Reduce by 2.1 cubic yard for shorter height.

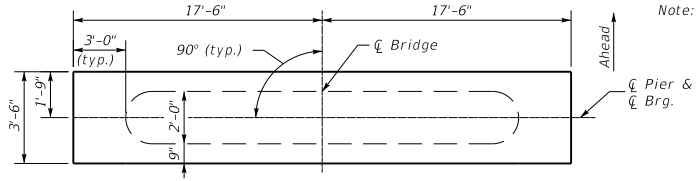

PLAN OF CAP

Note: Grade cap to roadway grade for box beams. Step cap if necessary for steel beams.

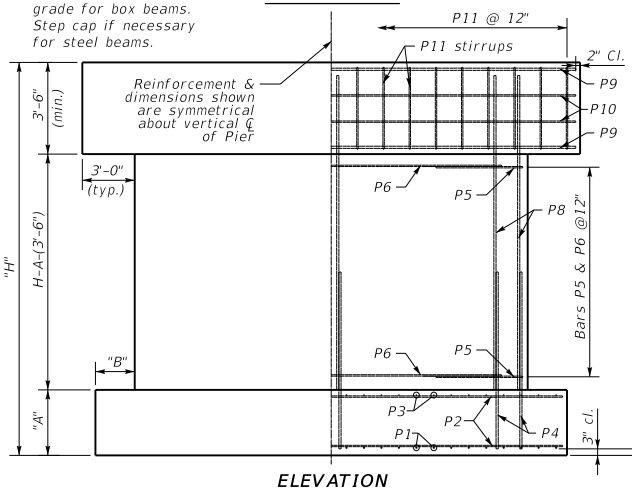

ELEVATION

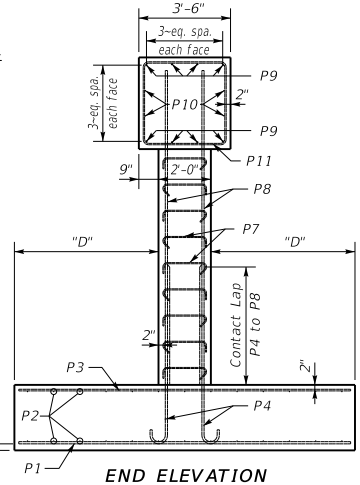

END ELEVATION

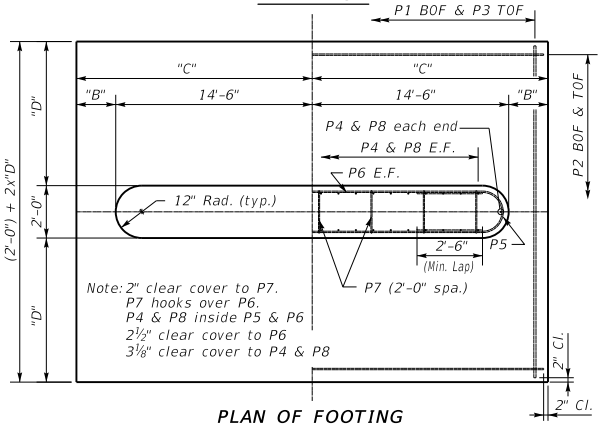

Note: 2" clear cover to P7.
P7 hooks over P6.
P4 & P8 inside P5 & P6
2½" clear cover to P6
3⅛" clear cover to P4 & P8

PLAN OF FOOTING

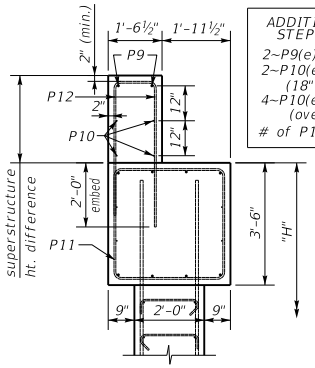

STEPPED CAP
(if necessary)

ADDITIONAL BARS FOR STEPPED PIER CAP
2~P9(e)'s
2~P10(e)'s
(18" to 28" ht. diff.)
4~P10(e)'s
(over 28" ht. diff.)
# of P12(e)=# of P11(e)

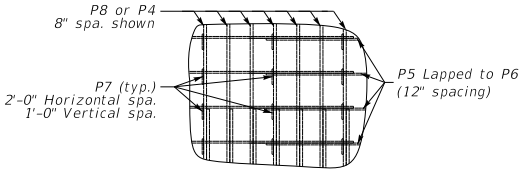

P7 BAR PLACEMENT
(alternate 90° & 135° bar ends)

GENERAL NOTES

SPECIFICATIONS: Construct piers according to the current edition of the Kentucky Department of Highways Standard Specifications for Road and Bridge Construction. Piers are designed for side by side box beams as detailed in Standard Drawings BDP-001 through BDP-012, current edition. They may be slightly modified to allow for 33'-6" rolled steel beam bridge width.

FOUNDATION PRESSURE: Construct pier footings on solid rock bearing material that can support a pressure of 8000 psf service or 10,800 psf strength factored as recommended by a geotechnical engineer.

DESIGN LOADS: Pier is designed for the CB42 beam superstructure with 3~97 foot spans. Pier is designed to handle a half a 97 foot span for thermal load with expansion bearings under the beams. Pier is designed for 100 mph wind. Wind on superstructure is for 1~97' span longitudinal and transverse. Pier is designed for stream flow of 10 ft./sec. up to the top of the pier. It is not designed for flow acting on the superstructure. Pier is not designed for earthquake loading.

DESIGN APPLICABILITY: Consult with a structural engineer to determine if these details are applicable for any particular project.

FOOTING ELEVATION: Construct bottom of footing below the anticipated scour elevation. (This typically entails embedding the footings 1'-0" to 2'-0" into rock and pouring concrete directly against cut rock faces as recommended by geotechnical engineer.)

NOTE: Distances to bars shown are clear dimensions unless otherwise noted.

MATERIAL SPECIFICATIONS:
Concrete, Class "A" = 3500 psi
Steel Reinforcement = Grade 60

KENTUCKY
DEPARTMENT OF HIGHWAYS

Standard Pier
0° Skew
32'-0"-33'-6" Bridge Width

STANDARD DRAWING NO. BSP-003

SUBMITTED _____ DIRECTOR DIVISION OF STRUCTURAL DESIGN — DATE 02-26-20

APPROVED _____ STATE HIGHWAY ENGINEER — DATE 02-26-20

15° SKEW 16'-0" - 17'-6" BRIDGE WIDTH (No Seismic Load)

Bill of Reinforcement

MARK	P1				P2				P3				P4								P5								P6				P7				P8				P9(e)				P10(e)				P11(e)			
TYPE	Str.				Str.				Str.				Type 4								Type 10								Str.				Type 31				Str.				Str.				Str.				Type 14			
SIZE																																	#4								#8				#5				#5			
H	No.	Size	Length ft.	Length in.	No.	Size	Length ft.	Length in.	No.	Size	Length ft.	Length in.	No.	Size	Length ft.	Length in.	Spacing	A ft.	A in.	B ft.	B in.	C ft.	C in.	D ft.	D in.	No.	Size	Length ft.	Length in.	Spacing	A in.	No.	Size	Length ft.	Length in.	No.	Size	Length ft.	Length in.	No.	Size	Length ft.	Length in.	No.	Size	Length ft.	Length in.	No.	Size	Length ft.	Length in.
10-11	29	8	12	2	8	26	5	19	2	12	29	5	12	2	8	42	8	8	10	8	7	5	1	5	0	8	7	9	10	5	7	5	12	2	6	10	5	13	0	12	35	2	5	42	8	8	0	8	8	20	2	4	20	2	20	13	2
12-13	29	8	12	2	8	26	5	19	2	12	29	5	12	2	8	42	8	8	10	8	7	5	1	5	0	8	7	9	14	5	7	5	12	2	6	14	5	13	0	12	49	2	5	42	8	10	0	8	8	20	2	4	20	2	20	13	2
14-15	29	8	12	2	8	26	5	19	2	12	29	5	12	2	8	42	8	8	10	8	7	5	1	5	0	8	7	9	18	5	7	5	12	2	6	18	5	13	0	12	63	2	5	42	8	12	0	8	8	20	2	4	20	2	20	13	2
16-17	29	8	12	2	8	26	5	19	2	12	29	5	12	2	8	42	8	8	10	8	7	5	1	5	0	8	7	9	22	5	7	5	12	2	6	22	5	13	0	12	77	2	5	42	8	14	0	8	8	20	2	4	20	2	20	13	2
18-19	29	8	12	2	8	26	5	19	2	12	29	5	12	2	8	42	8	8	10	8	7	5	1	5	0	8	7	9	26	5	7	5	12	2	6	26	5	13	0	12	91	2	5	42	8	16	0	8	8	20	2	4	20	2	20	13	2
20-21	29	8	12	2	8	26	5	19	2	12	29	5	12	2	8	42	8	8	10	8	7	5	1	5	0	8	7	9	30	5	7	5	12	2	6	30	5	13	0	12	105	2	5	42	8	18	0	8	8	20	2	4	20	2	20	13	2
22-23	29	8	12	2	8	26	5	19	2	12	29	5	12	2	8	42	8	8	10	8	7	5	1	5	0	8	7	9	34	5	7	5	12	2	6	34	5	13	0	12	119	2	5	42	8	20	0	8	8	20	2	4	20	2	20	13	2
24-25	29	8	12	2	8	26	5	19	2	12	29	5	12	2	8	42	8	8	10	8	7	5	1	5	0	8	7	9	38	5	7	5	12	2	6	38	5	13	0	12	133	2	5	42	8	22	0	8	8	20	2	4	20	2	20	13	2

Reinforcement Details

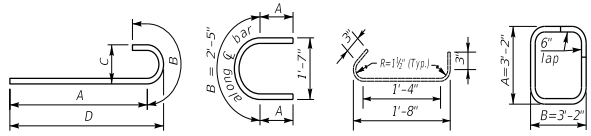

TYPE 4 — TYPE 10 (#5 bar) — TYPE 31 (#4 bar) — TYPE 14 (#5 bar)

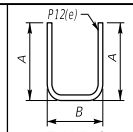

TYPE 2

(For Stepped Cap)
A=Ht. diff.-2" Cl. +2'-0"emb.
B=1'-2½"

DIMENSIONS TABLE

H	A ft.	A in.	B ft.	B in.	C ft.	C in.	D ft.	D in.
10-11	2	6	2	3	9	9	5	3
12-13	2	6	2	3	9	9	5	3
14-15	2	6	2	3	9	9	5	3
16-17	2	6	2	3	9	9	5	3
18-19	2	6	2	3	9	9	5	3
20-21	2	6	2	3	9	9	5	3
22-23	2	6	2	3	9	9	5	3
24-25	2	6	2	3	9	9	5	3

QUANTITIES

H	CONCRETE CLASS "A" CU. YDS. (1)	STEEL REINFORCEMENT EPOXY COATED LBS.	STEEL REINFORCEMENT LBS.
10-11	37.5	792	3998
12-13	39.7	792	4331
14-15	41.8	792	4665
16-17	44	792	4998
18-19	46.2	792	5331
20-21	48.3	792	5664
22-23	50.5	792	5997
24-25	52.6	792	6330

Note: All bars in cap shall be epoxy coated.

Note: All concrete shall be Class "A"

(1) Quantity is based on taller height. Reduce by 1.0 cubic yd. for shorter height.

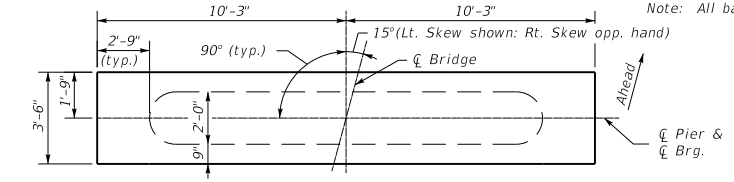

PLAN OF CAP

Note: Grade cap to roadway grade for box beams. Step cap if necessary for steel beams.

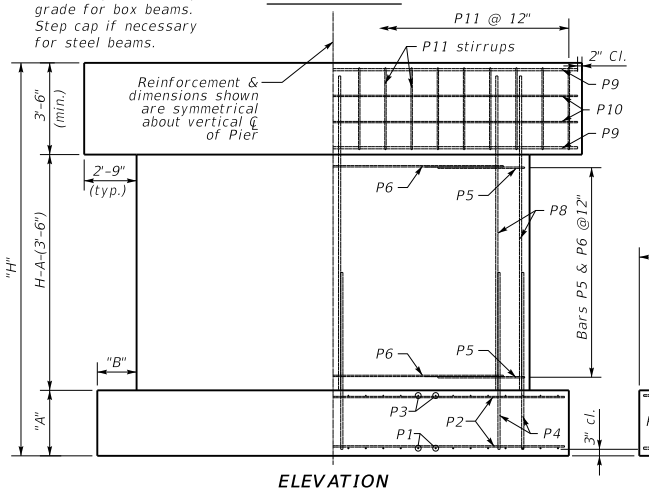

ELEVATION

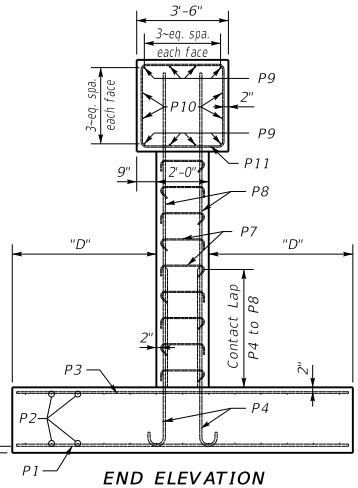

END ELEVATION

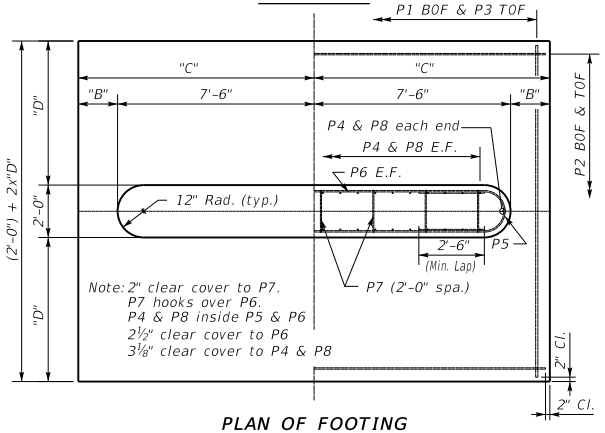

Note: 2" clear cover to P7.
P7 hooks over P6.
P4 & P8 inside P5 & P6
2½" clear cover to P6
3⅛" clear cover to P4 & P8

PLAN OF FOOTING

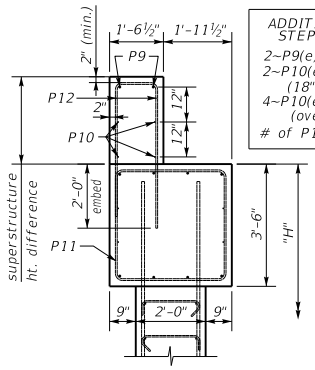

STEPPED CAP
(if necessary)

ADDITIONAL BARS FOR STEPPED PIER CAP
2~P9(e)'s
2~P10(e)'s
(18" to 28" ht. diff.)
4~P10(e)'s
(over 28" ht. diff.)
# of P12(e)=# of P11(e)

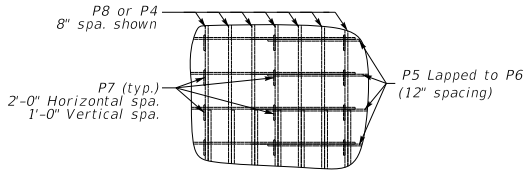

P7 BAR PLACEMENT
(alternate 90° & 135° bar ends)

GENERAL NOTES

SPECIFICATIONS: Construct piers according to the current edition of the Kentucky Department of Highways Standard Specifications for Road and Bridge Construction. Piers are designed for side by side box beams as detailed in Standard Drawings BDP-001 through BDP-012, current edition. They may be slightly modified to allow for 17'-6" rolled steel beam bridge width.

FOUNDATION PRESSURE: Construct pier footings on solid rock bearing material that can support a pressure of 8000 psf service or 10,800 psf strength factored as recommended by a geotechnical engineer.

DESIGN LOADS: Pier is designed for the CB42 beam superstructure with 3~97 foot spans. Pier is designed to handle a half a 97 foot span for thermal load with expansion bearings under the beams. Pier is designed for 100 mph wind. Wind on superstructure is for 1~97' span longitudinal and transverse. Pier is designed for stream flow of 10 ft./sec. up to the top of the pier. It is not designed for flow acting on the superstructure. Pier is not designed for earthquake loading.

DESIGN APPLICABILITY: Consult with a structural engineer to determine if these details are applicable for any particular project.

FOOTING ELEVATION: Construct bottom of footing below the anticipated scour elevation. (This typically entails embedding the footings 1'-0" to 2'-0" into rock and pouring concrete directly against cut rock faces as recommended by geotechnical engineer.)

NOTE: Distances to bars shown are clear dimensions unless otherwise noted.

MATERIAL SPECIFICATIONS:
Concrete, Class "A" = 3500 psi
Steel Reinforcement = Grade 60

KENTUCKY
DEPARTMENT OF HIGHWAYS

Standard Pier
15° Skew
16'-0"-17'-6" Bridge Width

STANDARD DRAWING NO. BSP-004

SUBMITTED _____ DIRECTOR DIVISION OF STRUCTURAL DESIGN — DATE 02-26-20

APPROVED _____ STATE HIGHWAY ENGINEER — DATE 02-26-20

15° SKEW 24'-0" - 25'-6" BRIDGE WIDTH (No Seismic Load)

Bill of Reinforcement

MARK	P1				P2				P3				P4								P5								P6				P7				P8				P9(e)				P10(e)				P11(e)			
TYPE	Str.				Str.				Str.				Type 4								Type 10								Str.				Type 31				Str.				Str.				Str.				Type 14			
SIZE																																	#4								#8				#5				#5			
H	No.	Size	Length ft.	Length in.	No.	Size	Length ft.	Length in.	No.	Size	Length ft.	Length in.	No.	Size	Length ft.	Length in.	Spacing	A ft.	A in.	B ft.	B in.	C ft.	C in.	D ft.	D in.	No.	Size	Length ft.	Length in.	Spacing	A ft.	A in.	No.	Size	Length ft.	Length in.	No.	Size	Length ft.	Length in.	No.	Size	Length ft.	Length in.	No.	Size	Length ft.	Length in.	No.	Size	Length ft.	Length in.
10-11	43	8	12	8	26	5	28	2	12	43	5	12	8	8	64	8	8	10	8	7	5	1	5	0	8	7	9	10	5	7	5	12	2	6	10	5	20	6	12	55	2	5	64	8	8	0	0	8	8	28	2	4	28	2	28	13	2
12-13	43	8	12	8	26	5	28	2	12	43	5	12	8	8	64	8	8	10	8	7	5	1	5	0	8	7	9	14	5	7	5	12	2	6	14	5	20	6	12	77	2	5	64	8	10	0	0	8	8	28	2	4	28	2	28	13	2
14-15	43	8	12	8	26	5	28	2	12	43	5	12	8	8	64	8	8	10	8	7	5	1	5	0	8	7	9	18	5	7	5	12	2	6	18	5	20	6	12	99	2	5	64	8	12	0	0	8	8	28	2	4	28	2	28	13	2
16-17	43	8	12	8	26	5	28	2	12	43	5	12	8	8	64	8	8	10	8	7	5	1	5	0	8	7	9	22	5	7	5	12	2	6	22	5	20	6	12	121	2	5	64	8	14	0	0	8	8	28	2	4	28	2	28	13	2
18-19	43	8	12	8	26	5	28	2	12	43	5	12	8	8	64	8	8	10	8	7	5	1	5	0	8	7	9	26	5	7	5	12	2	6	26	5	20	6	12	143	2	5	64	8	16	0	0	8	8	28	2	4	28	2	28	13	2
20-21	43	8	12	8	26	5	28	2	12	43	5	12	8	8	64	8	8	10	8	7	5	1	5	0	8	7	9	30	5	7	5	12	2	6	30	5	20	6	12	165	2	5	64	8	18	0	0	8	8	28	2	4	28	2	28	13	2
22-23	43	8	12	8	26	5	28	2	12	43	5	12	8	8	64	8	8	10	8	7	5	1	5	0	8	7	9	34	5	7	5	12	2	6	34	5	20	6	12	187	2	5	64	8	20	0	0	8	8	28	2	4	28	2	28	13	2
24-25	43	8	12	8	26	5	28	2	12	43	5	12	8	8	64	8	8	10	8	7	5	1	5	0	8	7	9	38	5	7	5	12	2	6	38	5	20	6	12	209	2	5	64	8	22	0	0	8	8	28	2	4	28	2	28	13	2

Reinforcement Details

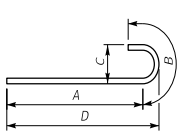

TYPE 4

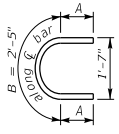

TYPE 10
(#5 bar)

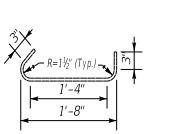

TYPE 31
(#4 bar)

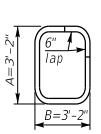

TYPE 14
(#5 bar)

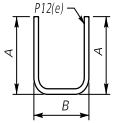

TYPE 2
(For Stepped Cap)
A=Ht. diff.-2" Cl. +2'-0"emb.
B=1'-2½"

DIMENSIONS TABLE / QUANTITIES

H	A ft.	A in.	B ft.	B in.	C ft.	C in.	D ft.	D in.	H	CONCRETE CLASS "A" CU. YDS. (1)	STEEL REINFORCEMENT EPOXY COATED LBS.	STEEL REINFORCEMENT LBS.
10-11	2	6	3	0	14	3	5	6	10-11	55.9	1107	6060
12-13	2	6	3	0	14	3	5	6	12-13	59.2	1107	6555
14-15	2	6	3	0	14	3	5	6	14-15	62.5	1107	7051
16-17	2	6	3	0	14	3	5	6	16-17	65.7	1107	7546
18-19	2	6	3	0	14	3	5	6	18-19	69	1107	8041
20-21	2	6	3	0	14	3	5	6	20-21	72.3	1107	8536
22-23	2	6	3	0	14	3	5	6	22-23	75.5	1107	9031
24-25	2	6	3	0	14	3	5	6	24-25	78.8	1107	9527

Note: All bars in cap shall be epoxy coated.

Note: All concrete shall be Class "A"

(1) Quantity is based on taller height. Reduce by 1.6 cubic yard for shorter height.

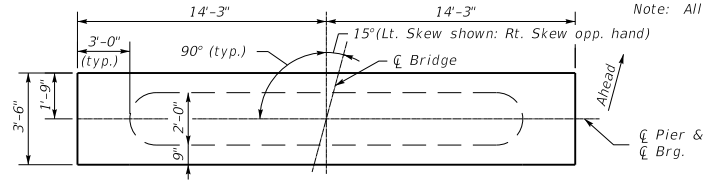

PLAN OF CAP

Note: Grade cap to roadway grade for box beams. Step cap if necessary for steel beams.

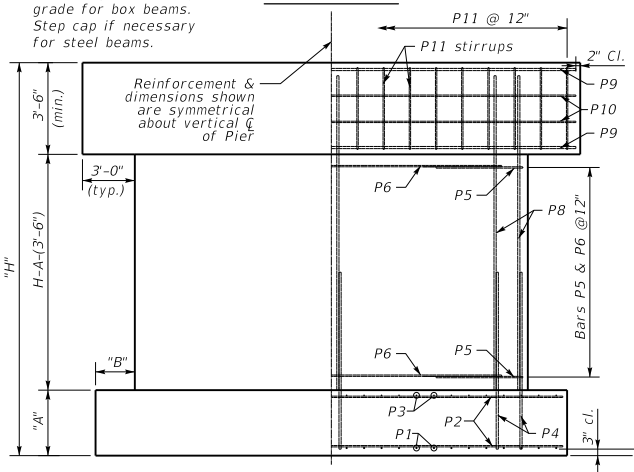

ELEVATION

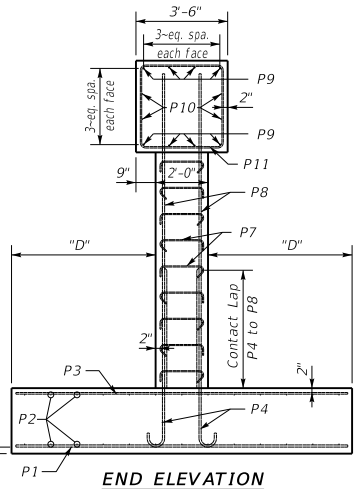

END ELEVATION

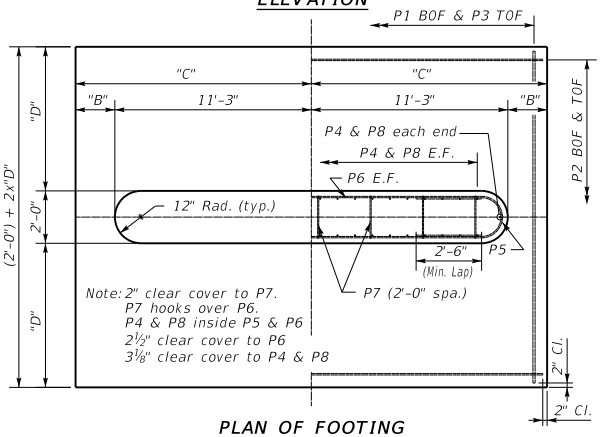

PLAN OF FOOTING

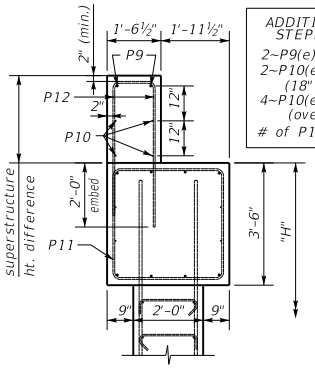

STEPPED CAP
(if necessary)

ADDITIONAL BARS FOR STEPPED PIER CAP
2~P9(e)'s
2~P10(e)'s
(18" to 28" ht. diff.)
4~P10(e)'s
(over 28" ht. diff.)
# of P12(e)=# of P11(e)

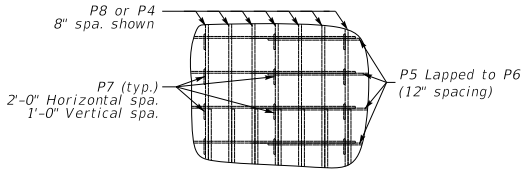

P7 BAR PLACEMENT
(alternate 90° & 135° bar ends)

GENERAL NOTES

SPECIFICATIONS: Construct piers according to the current edition of the Kentucky Department of Highways Standard Specifications for Road and Bridge Construction. Piers are designed for side by side box beams as detailed in Standard Drawings BDP-001 through BDP-012, current edition. They may be slightly modified to allow for 25'-6" rolled steel beam bridge width.

FOUNDATION PRESSURE: Construct pier footings on solid rock bearing material that can support a pressure of 8000 psf service or 10,800 psf strength factored as recommended by a geotechnical engineer.

DESIGN LOADS: Pier is designed for the CB42 beam superstructure with 3~97 foot spans. Pier is designed to handle a half a 97 foot span for thermal load with expansion bearings under the beams. Pier is designed for 100 mph wind. Wind on superstructure is for 1~97' span longitudinal and transverse. Pier is designed for stream flow of 10 ft./sec. up to the top of the pier. It is not designed for flow acting on the superstructure. Pier is not designed for earthquake loading.

DESIGN APPLICABILITY: Consult with a structural engineer to determine if these details are applicable for any particular project.

FOOTING ELEVATION: Construct bottom of footing below the anticipated scour elevation. (This typically entails embedding the footings 1'-0" to 2'-0" into rock and pouring concrete directly against cut rock faces as recommended by geotechnical engineer.)

NOTE: Distances to bars shown are clear dimensions unless otherwise noted.

MATERIAL SPECIFICATIONS:
Concrete, Class "A" = 3500 psi
Steel Reinforcement = Grade 60

KENTUCKY
DEPARTMENT OF HIGHWAYS

Standard Pier
15° Skew
24'-0"-25'-6" Bridge Width

STANDARD DRAWING NO. BSP-005

SUBMITTED _____ DIRECTOR DIVISION OF STRUCTURAL DESIGN — DATE 02-26-20

APPROVED _____ STATE HIGHWAY ENGINEER — DATE 02-26-20

15° SKEW 32'-0" - 33'-6" BRIDGE WIDTH (No Seismic Load)

Bill of Reinforcement

MARK	P1				P2				P3				P4								P5								P6				P7				P8				P9(e)				P10(e)				P11(e)			
TYPE	Str.				Str.				Str.				Type 4								Type 10								Str.				Type 31				Str.				Str.				Str.				Type 14			
SIZE																																	#4								#8				#5				#5			
H	No.	Size	Length ft.	Length in.	No.	Size	Length ft.	Length in.	No.	Size	Length ft.	Length in.	No.	Size	Length ft.	Length in.	Spacing	A ft.	A in.	B ft.	C ft.	C in.	D ft.	D in.	No.	Size	Length ft.	Length in.	Spacing	A ft.	A in.	No.	Size	Length ft.	Length in.	No.	Size	Length ft.	Length in.	No.	Size	Length ft.	Length in.	No.	Size	Length ft.	Length in.	No.	Size	Length ft.	Length in.
10-11	55	8	12	8	8	26	6	36	2	12	55	5	12	8	8	90	8	8	10	8	7	5	1	5	0	8	7	9	10	5	7	5	12	2	6	10	5	29	0	12	75	2	5	90	8	8	0	8	8	36	8	4	36	8	37	13	2
12-13	55	8	12	8	8	26	6	36	2	12	55	5	12	8	8	90	8	8	10	8	7	5	1	5	0	8	7	9	14	5	7	5	12	2	6	14	5	29	0	12	105	2	5	90	8	10	0	8	8	36	8	4	36	8	37	13	2
14-15	55	8	12	8	8	26	6	36	2	12	55	5	12	8	8	90	8	8	10	8	7	5	1	5	0	8	7	9	18	5	7	5	12	2	6	18	5	29	0	12	135	2	5	90	8	12	0	8	8	36	8	4	36	8	37	13	2
16-17	55	8	12	8	8	26	6	36	2	12	55	5	12	8	8	90	8	8	10	8	7	5	1	5	0	8	7	9	22	5	7	5	12	2	6	22	5	29	0	12	165	2	5	90	8	14	0	8	8	36	8	4	36	8	37	13	2
18-19	55	8	12	8	8	26	6	36	2	12	55	5	12	8	8	90	8	8	10	8	7	5	1	5	0	8	7	9	26	5	7	5	12	2	6	26	5	29	0	12	195	2	5	90	8	16	0	8	8	36	8	4	36	8	37	13	2
20-21	55	8	12	8	8	26	6	36	2	12	55	5	12	8	8	90	8	8	10	8	7	5	1	5	0	8	7	9	30	5	7	5	12	2	6	30	5	29	0	12	225	2	5	90	8	18	0	8	8	36	8	4	36	8	37	13	2
22-23	55	8	12	8	8	26	6	36	2	12	55	5	12	8	8	90	8	8	10	8	7	5	1	5	0	8	7	9	34	5	7	5	12	2	6	34	5	29	0	12	255	2	5	90	8	20	0	8	8	36	8	4	36	8	37	13	2
24-25	55	8	12	8	8	26	6	36	2	12	55	5	12	8	8	90	8	8	10	8	7	5	1	5	0	8	7	9	38	5	7	5	12	2	6	38	5	29	0	12	285	2	5	90	8	22	0	8	8	36	8	4	36	8	37	13	2

Reinforcement Details

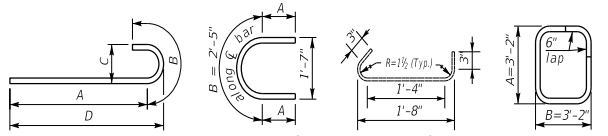

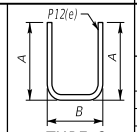

TYPE 2

(For Stepped Cap)
A=Ht. diff.-2" Cl.
+2'-0"emb.
B=1'-2½"

DIMENSIONS TABLE

H	A ft.	A in.	B ft.	B in.	C ft.	C in.	D ft.	D in.
10-11	2	6	2	9	18	3	5	6
12-13	2	6	2	9	18	3	5	6
14-15	2	6	2	9	18	3	5	6
16-17	2	6	2	9	18	3	5	6
18-19	2	6	2	9	18	3	5	6
20-21	2	6	2	9	18	3	5	6
22-23	2	6	2	9	18	3	5	6
24-25	2	6	2	9	18	3	5	6

QUANTITIES

H	CONCRETE CLASS "A" CU. YDS. (1)	STEEL REINFORCEMENT EPOXY COATED LBS.	STEEL REINFORCEMENT LBS.
10-11	72.9	1449	8570
12-13	77.4	1449	9253
14-15	82	1449	9936
16-17	86.5	1449	10619
18-19	91	1449	11302
20-21	95.5	1449	11985
22-23	100.1	1449	12668
24-25	104.6	1449	13351

Note: All bars in cap shall be epoxy coated.

Note: All concrete shall be Class "A"

(1) Quantity is based on taller height.
Reduce by 2.2 cubic yard for shorter height.

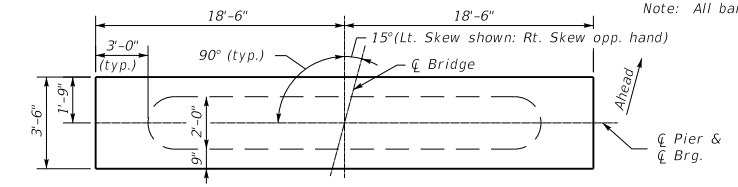

PLAN OF CAP

Note: Grade cap to roadway grade for box beams. Step cap if necessary for steel beams.

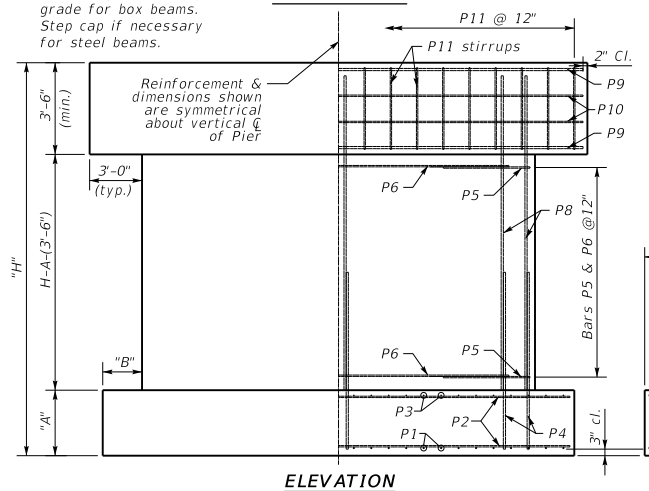

ELEVATION

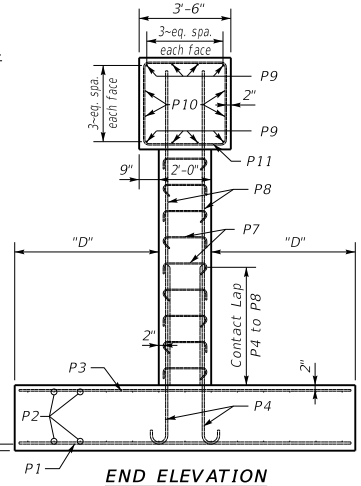

END ELEVATION

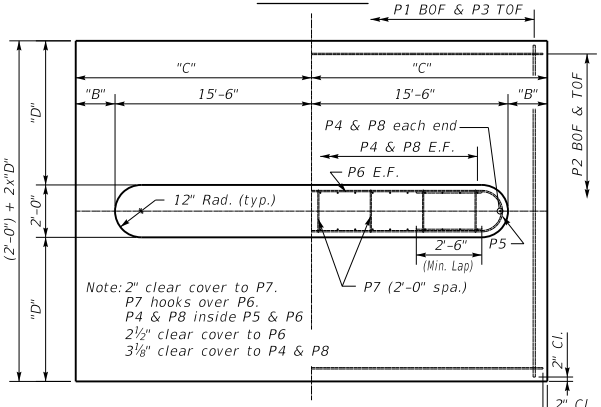

PLAN OF FOOTING

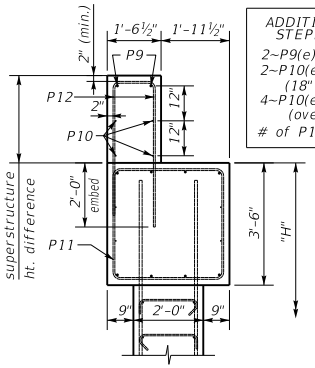

STEPPED CAP
(if necessary)

ADDITIONAL BARS FOR STEPPED PIER CAP
2~P9(e)'s
2~P10(e)'s
(18" to 28" ht. diff.)
4~P10(e)'s
(over 28" ht. diff.)
# of P12(e)=# of P11(e)

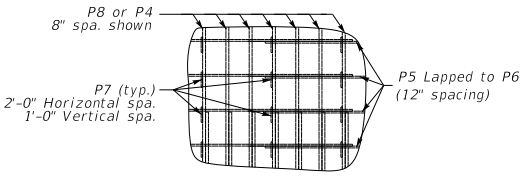

P7 BAR PLACEMENT
(alternate 90° & 135° bar ends)

GENERAL NOTES

SPECIFICATIONS: Construct piers according to the current edition of the Kentucky Department of Highways Standard Specifications for Road and Bridge Construction. Piers are designed for side by side box beams as detailed in Standard Drawings BDP-001 through BDP-012, current edition. They may be slightly modified to allow for 33'-6" rolled steel beam bridge width.

FOUNDATION PRESSURE: Construct pier footings on solid rock bearing material that can support a pressure of 8000 psf service or 10,800 psf strength factored as recommended by a geotechnical engineer.

DESIGN LOADS: Pier is designed for the CB42 beam superstructure with 3~97 foot spans. Pier is designed to handle a half a 97 foot span for thermal load with expansion bearings under the beams. Pier is designed for 100 mph wind. Wind on superstructure is for 1~97' span longitudinal and transverse. Pier is designed for stream flow of 10 ft./sec. up to the top of the pier. It is not designed for flow acting on the superstructure. Pier is not designed for earthquake loading.

DESIGN APPLICABILITY: Consult with a structural engineer to determine if these details are applicable for any particular project.

FOOTING ELEVATION: Construct bottom of footing below the anticipated scour elevation. (This typically entails embedding the footings 1'-0" to 2'-0" into rock and pouring concrete directly against cut rock faces as recommended by geotechnical engineer.)

NOTE: Distances to bars shown are clear dimensions unless otherwise noted.

MATERIAL SPECIFICATIONS:
Concrete, Class "A" = 3500 psi
Steel Reinforcement = Grade 60

KENTUCKY
DEPARTMENT OF HIGHWAYS

Standard Pier
15° Skew
32'-0"-33'-6" Bridge Width

STANDARD DRAWING NO. BSP-006

SUBMITTED _____ DIRECTOR DIVISION OF STRUCTURAL DESIGN — DATE 02-26-20

APPROVED _____ STATE HIGHWAY ENGINEER — DATE 02-26-20

30° SKEW 16'-0" - 17'-6" BRIDGE WIDTH (No Seismic Load)

Bill of Reinforcement

MARK	P1				P2				P3				P4								P5								P6				P7				P8				P9(e)				P10(e)				P11(e)			
TYPE	Str.				Str.				Str.				Type 4								Type 10								Str.				Type 31				Str.				Str.				Str.				Type 14			
SIZE																																	#4								#8				#5				#5			
H	No.	Size	Length ft.	Length in.	No.	Size	Length ft.	Length in.	No.	Size	Length ft.	Length in.	No.	Size	Length ft.	Length in.	A in.	B ft.	B in.	C ft.	C in.	D ft.	D in.	No.	Size	Length ft.	Length in.	A in.	No.	Size	Length ft.	Length in.	No.	Size	Length ft.	Length in.	No.	Size	Length ft.	Length in.	No.	Size	Length ft.	Length in.	No.	Size	Length ft.	Length in.	No.	Size	Length ft.	Length in.
10-11	32	8	12	2	8	26	5	21	2	12	32	5	12	2	8	48	8	8	10	8	7	5	1	5	0	8	7	9	10	5	7	5	12	2	6	10	5	15	0	12	40	2	5	48	8	8	0	8	8	23	8	4	23	8	24	13	2
12-13	32	8	12	2	8	26	5	21	2	12	32	5	12	2	8	48	8	8	10	8	7	5	1	5	0	8	7	9	14	5	7	5	12	2	6	14	5	15	0	12	56	2	5	48	8	10	0	8	8	23	8	4	23	8	24	13	2
14-15	32	8	12	2	8	26	5	21	2	12	32	5	12	2	8	48	8	8	10	8	7	5	1	5	0	8	7	9	18	5	7	5	12	2	6	18	5	15	0	12	72	2	5	48	8	12	0	8	8	23	8	4	23	8	24	13	2
16-17	32	8	12	2	8	26	5	21	2	12	32	5	12	2	8	48	8	8	10	8	7	5	1	5	0	8	7	9	22	5	7	5	12	2	6	22	5	15	0	12	88	2	5	48	8	14	0	8	8	23	8	4	23	8	24	13	2
18-19	32	8	12	2	8	26	5	21	2	12	32	5	12	2	8	48	8	8	10	8	7	5	1	5	0	8	7	9	26	5	7	5	12	2	6	26	5	15	0	12	104	2	5	48	8	16	0	8	8	23	8	4	23	8	24	13	2
20-21	32	8	12	2	8	26	5	21	2	12	32	5	12	2	8	48	8	8	10	8	7	5	1	5	0	8	7	9	30	5	7	5	12	2	6	30	5	15	0	12	120	2	5	48	8	18	0	8	8	23	8	4	23	8	24	13	2
22-23	32	8	12	2	8	26	5	21	2	12	32	5	12	2	8	48	8	8	10	8	7	5	1	5	0	8	7	9	34	5	7	5	12	2	6	34	5	15	0	12	136	2	5	48	8	20	0	8	8	23	8	4	23	8	24	13	2
24-25	32	8	12	2	8	26	5	21	2	12	32	5	12	2	8	48	8	8	10	8	7	5	1	5	0	8	7	9	38	5	7	5	12	2	6	38	5	15	0	12	152	2	5	48	8	22	0	8	8	23	8	4	23	8	24	13	2

Reinforcement Details

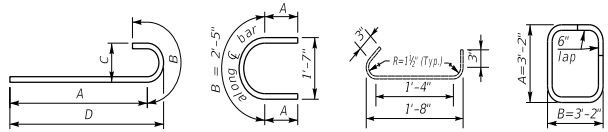

TYPE 4 — TYPE 10 (#5 bar) — TYPE 31 (#4 bar) — TYPE 14 (#5 bar)

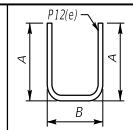

TYPE 2

(For Stepped Cap)
A=Ht. diff.-2" Cl. +2'-0"emb.
B=1'-2½"

DIMENSIONS TABLE

H	A ft.	A in.	B ft.	B in.	C ft.	C in.	D ft.	D in.
10-11	2	6	2	3	10	9	5	3
12-13	2	6	2	3	10	9	5	3
14-15	2	6	2	3	10	9	5	3
16-17	2	6	2	3	10	9	5	3
18-19	2	6	2	3	10	9	5	3
20-21	2	6	2	3	10	9	5	3
22-23	2	6	2	3	10	9	5	3
24-25	2	6	2	3	10	9	5	3

QUANTITIES

H	CONCRETE CLASS "A" CU. YDS. (1)	STEEL REINFORCEMENT EPOXY COATED LBS.	STEEL REINFORCEMENT LBS.
10-11	42.2	937	4489
12-13	44.7	937	4866
14-15	47.1	937	5242
16-17	49.6	937	5619
18-19	52.1	937	5996
20-21	54.5	937	6373
22-23	57	937	6750
24-25	59.4	937	7126

Note: All bars in cap shall be epoxy coated.

Note: All concrete shall be Class "A"

(1) Quantity is based on taller height. Reduce by 1.2 cubic yd. for shorter height.

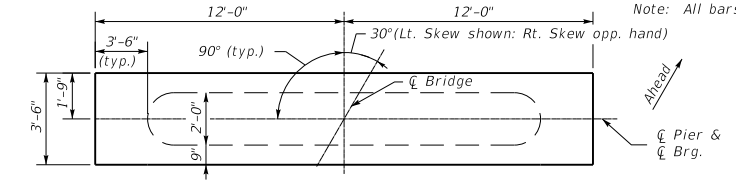

Note: Grade cap to roadway grade for box beams. Step cap if necessary for steel beams.

PLAN OF CAP

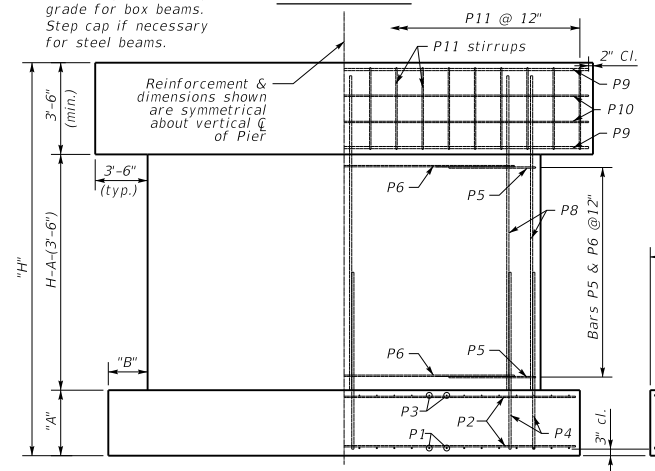

ELEVATION

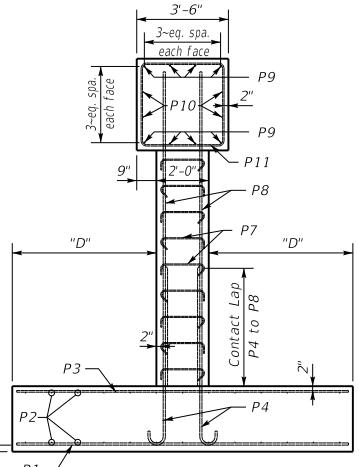

END ELEVATION

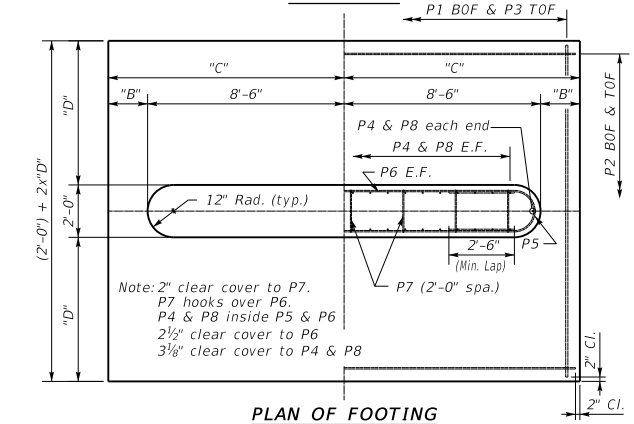

PLAN OF FOOTING

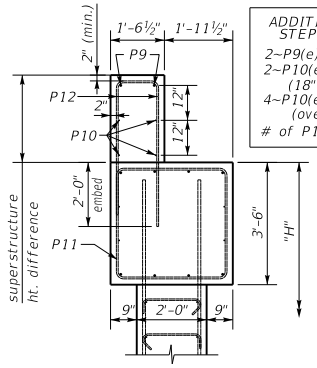

ADDITIONAL BARS FOR STEPPED PIER CAP
2~P9(e)'s
2~P10(e)'s
(18" to 28" ht. diff.)
4~P10(e)'s
(over 28" ht. diff.)
# of P12(e)=# of P11(e)

STEPPED CAP
(if necessary)

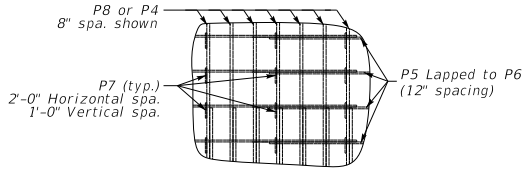

P7 BAR PLACEMENT
(alternate 90° & 135° bar ends)

GENERAL NOTES

SPECIFICATIONS: Construct piers according to the current edition of the Kentucky Department of Highways Standard Specifications for Road and Bridge Construction. Piers are designed for side by side box beams as detailed in Standard Drawings BDP-001 through BDP-012, current edition. They may be slightly modified to allow for 17'-6" rolled steel beam bridge width.

FOUNDATION PRESSURE: Construct pier footings on solid rock bearing material that can support a pressure of 8000 psf service or 10,800 psf strength factored as recommended by a geotechnical engineer.

DESIGN LOADS: Pier is designed for the CB42 beam superstructure with 3~97 foot spans. Pier is designed to handle a half a 97 foot span for thermal load with expansion bearings under the beams. Pier is designed for 100 mph wind. Wind on superstructure is for 1~97' span longitudinal and transverse. Pier is designed for stream flow of 10 ft./sec. up to the top of the pier. It is not designed for flow acting on the superstructure. Pier is not designed for earthquake loading.

DESIGN APPLICABILITY: Consult with a structural engineer to determine if these details are applicable for any particular project.

FOOTING ELEVATION: Construct bottom of footing below the anticipated scour elevation. (This typically entails embedding the footings 1'-0" to 2'-0" into rock and pouring concrete directly against cut rock faces as recommended by geotechnical engineer.)

NOTE: Distances to bars shown are clear dimensions unless otherwise noted.

MATERIAL SPECIFICATIONS:
Concrete, Class "A" = 3500 psi
Steel Reinforcement = Grade 60

KENTUCKY
DEPARTMENT OF HIGHWAYS

Standard Pier
30° Skew
16'-0"-17'-6" Bridge Width

STANDARD DRAWING NO. BSP-007

SUBMITTED _____ DIRECTOR DIVISION OF STRUCTURAL DESIGN — DATE 02-26-20

APPROVED _____ STATE HIGHWAY ENGINEER — DATE 02-26-20

30° SKEW 24'-0" - 25'-6" BRIDGE WIDTH (No Seismic Load)

Bill of Reinforcement

MARK	P1				P2				P3				P4								P5								P6				P7		P8			P9(e)		P10(e)		P11(e)	
TYPE	Str.				Str.				Str.				Type 4								Type 10								Str.				Type 31		Str.			Str.		Str.		Type 14	
SIZE																																	#4					#8		#5		#5	
H	No.	Size	Length ft.	Length in.	No.	Size	Length ft.	Length in.	No.	Size	Length ft.	Length in.	No.	Size	Length ft.	Length in.	A ft.	A in.	B ft.	B in.	C ft.	C in.	D ft.	D in.	No.	Size	Length ft.	Length in.	No.	Size	Length ft.	Length in.	No.	Length ft.	No.	Size	Length ft.	Spacing	No.	Length ft.	No.	Length ft.	No.	Length ft.
10-11	47	8	12	8	8	26	6	31	2	12	47	5	12	8	8	76	8	8	10	8	7	5	1	5	0	8	7	9	10	5	7	5	12	2	6	10	5	24	0	12	65	2	5	76	8	8	0	8	8	32	8	4	32	8	33	13	2
12-13	47	8	12	8	8	26	6	31	2	12	47	5	12	8	8	76	8	8	10	8	7	5	1	5	0	8	7	9	14	5	7	5	12	2	6	14	5	24	0	12	91	2	5	76	8	10	0	8	8	32	8	4	32	8	33	13	2
14-15	47	8	12	8	8	26	6	31	2	12	47	5	12	8	8	76	8	8	10	8	7	5	1	5	0	8	7	9	18	5	7	5	12	2	6	18	5	24	0	12	117	2	5	76	8	12	0	8	8	32	8	4	32	8	33	13	2
16-17	47	8	12	8	8	26	6	31	2	12	47	5	12	8	8	76	8	8	10	8	7	5	1	5	0	8	7	9	22	5	7	5	12	2	6	22	5	24	0	12	143	2	5	76	8	14	0	8	8	32	8	4	32	8	33	13	2
18-19	47	8	12	8	8	26	6	31	2	12	47	5	12	8	8	76	8	8	10	8	7	5	1	5	0	8	7	9	26	5	7	5	12	2	6	26	5	24	0	12	169	2	5	76	8	16	0	8	8	32	8	4	32	8	33	13	2
20-21	47	8	12	8	8	26	6	31	2	12	47	5	12	8	8	76	8	8	10	8	7	5	1	5	0	8	7	9	30	5	7	5	12	2	6	30	5	24	0	12	195	2	5	76	8	18	0	8	8	32	8	4	32	8	33	13	2
22-23	47	8	12	8	8	26	6	31	2	12	47	5	12	8	8	76	8	8	10	8	7	5	1	5	0	8	7	9	34	5	7	5	12	2	6	34	5	24	0	12	221	2	5	76	8	20	0	8	8	32	8	4	32	8	33	13	2
24-25	47	8	12	8	8	26	6	31	2	12	47	5	12	8	8	76	8	8	10	8	7	5	1	5	0	8	7	9	38	5	7	5	12	2	6	38	5	24	0	12	247	2	5	76	8	22	0	8	8	32	8	4	32	8	33	13	2

Reinforcement Details

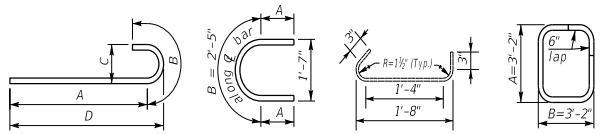

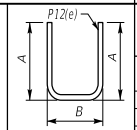

TYPE 2

(For Stepped Cap)
A=Ht. diff.-2" Cl.
+2'-0"emb.
B=1'-2½"

DIMENSIONS TABLE

H	A ft.	A in.	B ft.	B in.	C ft.	C in.	D ft.	D in.
10-11	2	6	2	9	15	9	5	6
12-13	2	6	2	9	15	9	5	6
14-15	2	6	2	9	15	9	5	6
16-17	2	6	2	9	15	9	5	6
18-19	2	6	2	9	15	9	5	6
20-21	2	6	2	9	15	9	5	6
22-23	2	6	2	9	15	9	5	6
24-25	2	6	2	9	15	9	5	6

QUANTITIES

H	CONCRETE CLASS "A" CU. YDS. (1)	STEEL REINFORCEMENT EPOXY COATED LBS.	STEEL REINFORCEMENT LBS.
10-11	63	1291	7298
12-13	66.8	1291	7878
14-15	70.5	1291	8459
16-17	74.3	1291	9039
18-19	78.1	1291	9620
20-21	81.9	1291	10200
22-23	85.7	1291	10781
24-25	89.5	1291	11362

Note: All bars in cap shall be epoxy coated.

Note: All concrete shall be Class "A"

(1) Quantity is based on taller height.
Reduce by 1.9 cubic yd. for shorter height.

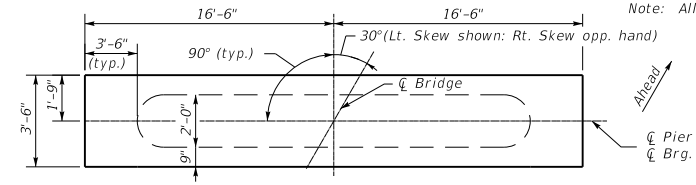

PLAN OF CAP

Note: Grade cap to roadway grade for box beams. Step cap if necessary for steel beams.

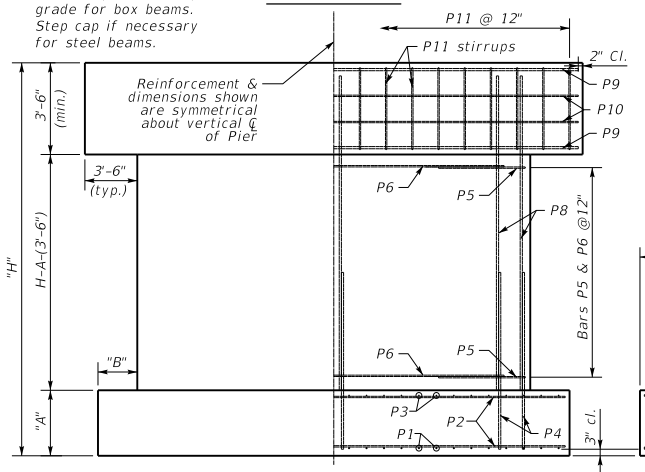

ELEVATION

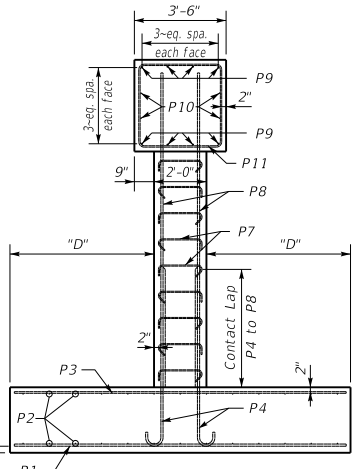

END ELEVATION

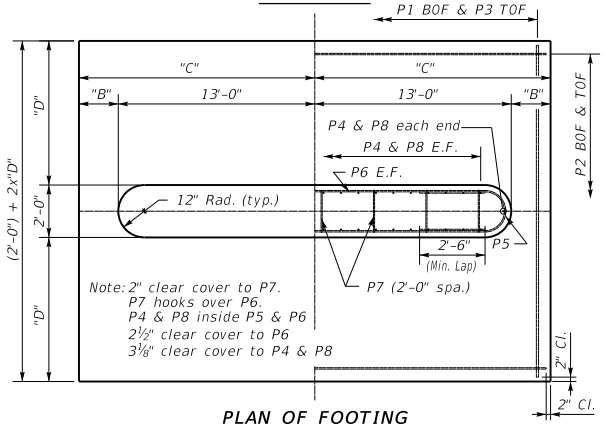

PLAN OF FOOTING

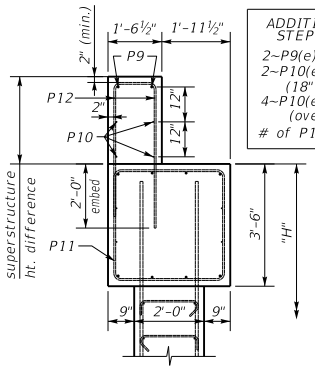

STEPPED CAP
(if necessary)

ADDITIONAL BARS FOR STEPPED PIER CAP
2~P9(e)'s
2~P10(e)'s
(18" to 28" ht. diff.)
4~P10(e)'s
(over 28" ht. diff.)
# of P12(e)=# of P11(e)

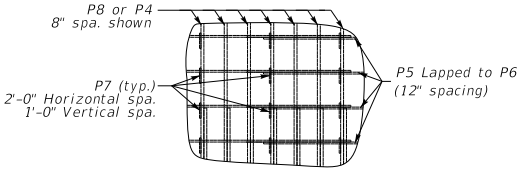

P7 BAR PLACEMENT
(alternate 90° & 135° bar ends)

GENERAL NOTES

SPECIFICATIONS: Construct piers according to the current edition of the Kentucky Department of Highways Standard Specifications for Road and Bridge Construction. Piers are designed for side by side box beams as detailed in Standard Drawings BDP-001 through BDP-012, current edition. They may be slightly modified to allow for 25'-6" rolled steel beam bridge width.

FOUNDATION PRESSURE: Construct pier footings on solid rock bearing material that can support a pressure of 8000 psf service or 10,800 psf strength factored as recommended by a geotechnical engineer.

DESIGN LOADS: Pier is designed for the CB42 beam superstructure with 3~97 foot spans. Pier is designed to handle a half a 97 foot span for thermal load with expansion bearings under the beams. Pier is designed for 100 mph wind. Wind on superstructure is for 1~97' span longitudinal and transverse. Pier is designed for stream flow of 10 ft./sec. up to the top of the pier. It is not designed for flow acting on the superstructure. Pier is not designed for earthquake loading.

DESIGN APPLICABILITY: Consult with a structural engineer to determine if these details are applicable for any particular project.

FOOTING ELEVATION: Construct bottom of footing below the anticipated scour elevation. (This typically entails embedding the footings 1'-0" to 2'-0" into rock and pouring concrete directly against cut rock faces as recommended by geotechnical engineer.)

NOTE: Distances to bars shown are clear dimensions unless otherwise noted.

MATERIAL SPECIFICATIONS:
Concrete, Class "A" = 3500 psi
Steel Reinforcement = Grade 60

KENTUCKY
DEPARTMENT OF HIGHWAYS

Standard Pier
30° Skew
24'-0"-25'-6" Bridge Width

STANDARD DRAWING NO. BSP-008

SUBMITTED _____ DIRECTOR DIVISION OF STRUCTURAL DESIGN — DATE 02-26-20

APPROVED _____ STATE HIGHWAY ENGINEER — DATE 02-26-20

30° SKEW 32'-0" - 33'-6" BRIDGE WIDTH (No Seismic Load)

Bill of Reinforcement

MARK	P1				P2				P3				P4								P5								P6				P7				P8				P9(e)				P10(e)				P11(e)			
TYPE	Str.				Str.				Str.				Type 4								Type 10								Str.				Type 31				Str.				Str.				Str.				Type 14			
SIZE																																	#4								#8				#5				#5			
H	No.	Size	Length ft.	Length in.	No.	Size	Length ft.	Length in.	No.	Size	Length ft.	Length in.	No.	Size	Length ft.	Length in.	A ft.	A in.	B ft.	B in.	C ft.	C in.	D ft.	D in.	No.	Size	Length ft.	Length in.	A ft.	A in.	No.	Size	Length ft.	Length in.	No.	Size	Length ft.	Length in.	No.	Size	Length ft.	Length in.	No.	Size	Length ft.	Length in.	No.	Size	Length ft.	Length in.	No.	Size	Length ft.	Length in.
10-11	61	8	12	8	8	26	6	40	2	12	61	5	12	8	8	104	8	8	10	8	7	5	1	5	0	8	7	9	10	5	7	5	12	2	6	10	5	33	6	12	85	2	5	104	8	8	0	8	8	42	2	4	42	2	42	13	2
12-13	61	8	12	8	8	26	6	40	2	12	61	5	12	8	8	104	8	8	10	8	7	5	1	5	0	8	7	9	14	5	7	5	12	2	6	14	5	33	6	12	119	2	5	104	8	10	0	8	8	42	2	4	42	2	42	13	2
14-15	61	8	12	8	8	26	6	40	2	12	61	5	12	8	8	104	8	8	10	8	7	5	1	5	0	8	7	9	18	5	7	5	12	2	6	18	5	33	6	12	153	2	5	104	8	12	0	8	8	42	2	4	42	2	42	13	2
16-17	61	8	12	8	8	26	6	40	2	12	61	5	12	8	8	104	8	8	10	8	7	5	1	5	0	8	7	9	22	5	7	5	12	2	6	22	5	33	6	12	187	2	5	104	8	14	0	8	8	42	2	4	42	2	42	13	2
18-19	61	8	12	8	8	26	6	40	2	12	61	5	12	8	8	104	8	8	10	8	7	5	1	5	0	8	7	9	26	5	7	5	12	2	6	26	5	33	6	12	221	2	5	104	8	16	0	8	8	42	2	4	42	2	42	13	2
20-21	61	8	12	8	8	26	6	40	2	12	61	5	12	8	8	104	8	8	10	8	7	5	1	5	0	8	7	9	30	5	7	5	12	2	6	30	5	33	6	12	255	2	5	104	8	18	0	8	8	42	2	4	42	2	42	13	2
22-23	61	8	12	8	8	26	6	40	2	12	61	5	12	8	8	104	8	8	10	8	7	5	1	5	0	8	7	9	34	5	7	5	12	2	6	34	5	33	6	12	289	2	5	104	8	20	0	8	8	42	2	4	42	2	42	13	2
24-25	61	8	12	8	8	26	6	40	2	12	61	5	12	8	8	104	8	8	10	8	7	5	1	5	0	8	7	9	38	5	7	5	12	2	6	38	5	33	6	12	323	2	5	104	8	22	0	8	8	42	2	4	42	2	42	13	2

Reinforcement Details

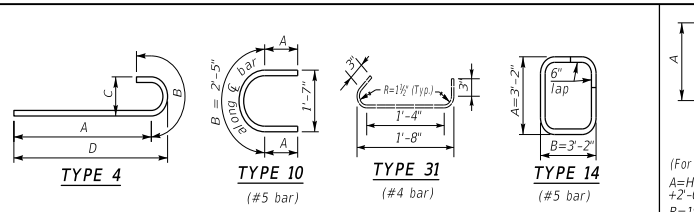

DIMENSIONS TABLE

H	A ft.	A in.	B ft.	B in.	C ft.	C in.	D ft.	D in.	H
10-11	2	6	2	6	20	3	5	6	10-11
12-13	2	6	2	6	20	3	5	6	12-13
14-15	2	6	2	6	20	3	5	6	14-15
16-17	2	6	2	6	20	3	5	6	16-17
18-19	2	6	2	6	20	3	5	6	18-19
20-21	2	6	2	6	20	3	5	6	20-21
22-23	2	6	2	6	20	3	5	6	22-23
24-25	2	6	2	6	20	3	5	6	24-25

QUANTITIES

H	CONCRETE CLASS "A" CU. YDS. (1)	STEEL REINFORCEMENT EPOXY COATED LBS.	STEEL REINFORCEMENT LBS.
10-11	82	1658	9704
12-13	87.2	1658	10487
14-15	92.4	1658	11271
16-17	97.6	1658	12054
18-19	102.8	1658	12837
20-21	108	1658	13620
22-23	113.2	1658	14404
24-25	118.4	1658	15187

Note: All bars in cap shall be epoxy coated.

Note: All concrete shall be Class "A"

(1) Quantity is based on taller height. Reduce by 2.6 cubic yd. for shorter height.

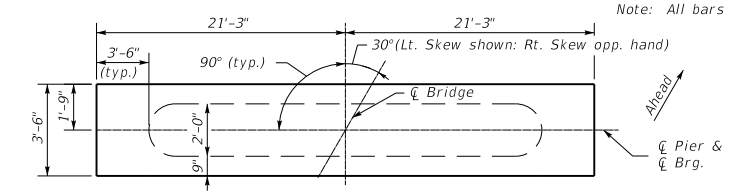

PLAN OF CAP

Note: Grade cap to roadway grade for box beams. Step cap if necessary for steel beams.

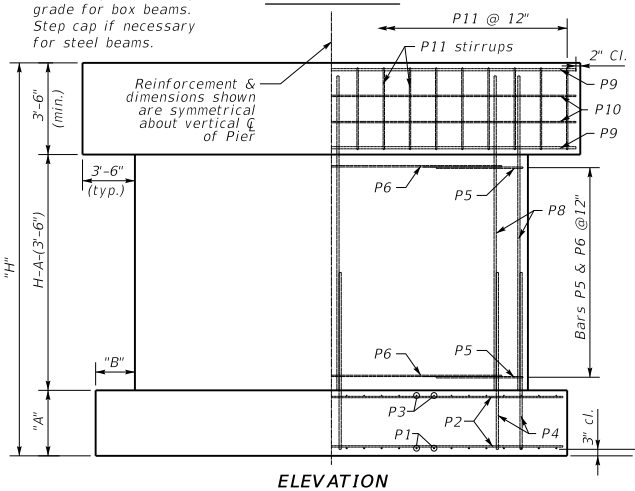

ELEVATION

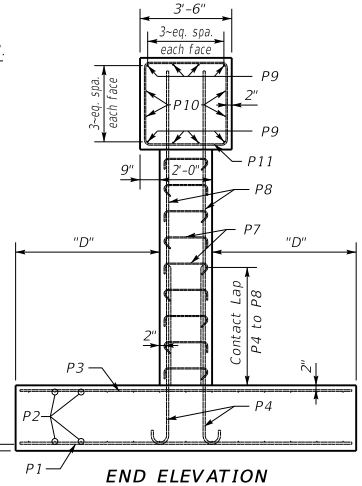

END ELEVATION

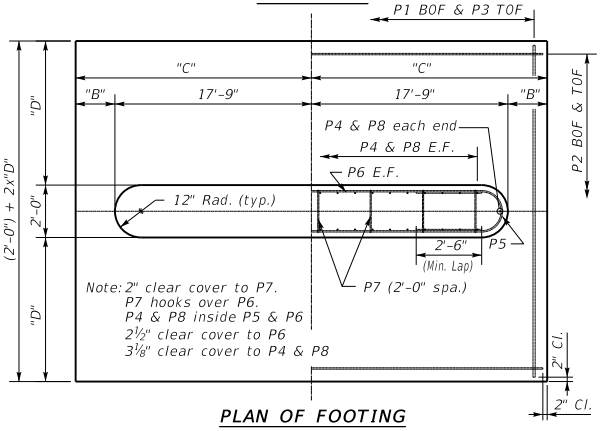

PLAN OF FOOTING

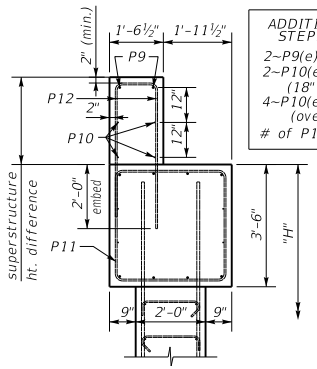

STEPPED CAP
(if necessary)

ADDITIONAL BARS FOR STEPPED PIER CAP
2~P9(e)'s
2~P10(e)'s
(18" to 28" ht. diff.)
4~P10(e)'s
(over 28" ht. diff.)
# of P12(e)=# of P11(e)

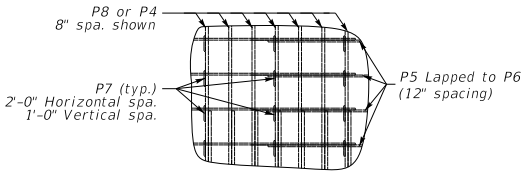

P7 BAR PLACEMENT
(alternate 90° & 135° bar ends)

GENERAL NOTES

SPECIFICATIONS: Construct piers according to the current edition of the Kentucky Department of Highways Standard Specifications for Road and Bridge Construction. Piers are designed for side by side box beams as detailed in Standard Drawings BDP-001 through BDP-012, current edition. They may be slightly modified to allow for 33'-6" rolled steel beam bridge width.

FOUNDATION PRESSURE: Construct pier footings on solid rock bearing material that can support a pressure of 8000 psf service or 10,800 psf strength factored as recommended by a geotechnical engineer.

DESIGN LOADS: Pier is designed for the CB42 beam superstructure with 3~97 foot spans. Pier is designed to handle a half a 97 foot span for thermal load with expansion bearings under the beams. Pier is designed for 100 mph wind. Wind on superstructure is for 1~97' span longitudinal and transverse. Pier is designed for stream flow of 10 ft./sec. up to the top of the pier. It is not designed for flow acting on the superstructure. Pier is not designed for earthquake loading.

DESIGN APPLICABILITY: Consult with a structural engineer to determine if these details are applicable for any particular project.

FOOTING ELEVATION: Construct bottom of footing below the anticipated scour elevation. (This typically entails embedding the footings 1'-0" to 2'-0" into rock and pouring concrete directly against cut rock faces as recommended by geotechnical engineer.)

NOTE: Distances to bars shown are clear dimensions unless otherwise noted.

MATERIAL SPECIFICATIONS:
Concrete, Class "A" = 3500 psi
Steel Reinforcement = Grade 60

KENTUCKY
DEPARTMENT OF HIGHWAYS

Standard Pier
30° Skew
32'-0"-33'-6" Bridge Width

STANDARD DRAWING NO. BSP-009

SUBMITTED _____ DIRECTOR DIVISION OF STRUCTURAL DESIGN — DATE 02-26-20

APPROVED _____ STATE HIGHWAY ENGINEER — DATE 02-26-20

45° SKEW 16'-0" - 17'-6" BRIDGE WIDTH (No Seismic Load)

Bill of Reinforcement

MARK	P1				P2				P3				P4								P5								P6				P7		P8				P9(e)		P10(e)		P11(e)	
TYPE	Str.				Str.				Str.				Type 4								Type 10								Str.				Type 31		Str.				Str.		Str.		Type 14	
SIZE																																	#4						#8		#5		#5	
H	No.	Size	Length ft.	Length in.	No.	Size	Length ft.	Length in.	No.	Size	Length ft.	Length in.	No.	Size	Length ft.	Length in.	A in.	B ft.	B in.	C ft.	C in.	D ft.	D in.	No.	Size	Length ft.	Length in.	A in.	No.	Size	Length ft.	Length in.	No.	Size	Length ft.	Length in.	No.	Size	Length ft.	Length in.	No.	Length ft.	Length in.	No.	Length ft.	Length in.
10-11	40	7	10	8	8	22	6	26	8	12	40	5	10	8	8	62	8	8	10	8	7	5	1	5	0	8	7	9	10	5	7	5	12	2	6	50	2	5	62	8	8	0	8	8	29	2	4	29	2	29	13	2
12-13	40	7	10	8	8	22	6	26	8	12	40	5	10	8	8	62	8	8	10	8	7	5	1	5	0	8	7	9	14	5	7	5	12	2	6	70	2	5	62	8	10	0	8	8	29	2	4	29	2	29	13	2
14-15	40	7	10	8	8	22	6	26	8	12	40	5	10	8	8	62	8	8	10	8	7	5	1	5	0	8	7	9	18	5	7	5	12	2	6	90	2	5	62	8	12	0	8	8	29	2	4	29	2	29	13	2
16-17	40	7	10	8	8	22	6	26	8	12	40	5	10	8	8	62	8	8	10	8	7	5	1	5	0	8	7	9	22	5	7	5	12	2	6	110	2	5	62	8	14	0	8	8	29	2	4	29	2	29	13	2
18-19	40	7	10	8	8	22	6	26	8	12	40	5	10	8	8	62	8	8	10	8	7	5	1	5	0	8	7	9	26	5	7	5	12	2	6	130	2	5	62	8	16	0	8	8	29	2	4	29	2	29	13	2
20-21	40	7	10	8	8	22	6	26	8	12	40	5	10	8	8	62	8	8	10	8	7	5	1	5	0	8	7	9	30	5	7	5	12	2	6	150	2	5	62	8	18	0	8	8	29	2	4	29	2	29	13	2
22-23	40	7	10	8	8	22	6	26	8	12	40	5	10	8	8	62	8	8	10	8	7	5	1	5	0	8	7	9	34	5	7	5	12	2	6	34	5	19	6	12	170	2	5	62	8	20	0	8	8	29	2	4	29	2	29	13	2
24-25	40	7	10	8	8	22	6	26	8	12	40	5	10	8	8	62	8	8	10	8	7	5	1	5	0	8	7	9	38	5	7	5	12	2	6	38	5	19	6	12	190	2	5	62	8	22	0	8	8	29	2	4	29	2	29	13	2

Reinforcement Details

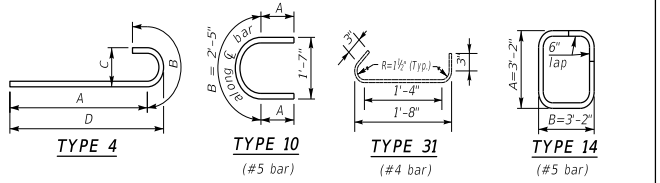

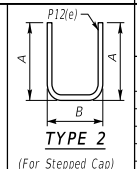

DIMENSIONS TABLE

H	A ft.	A in.	B ft.	B in.	C ft.	C in.	D ft.	D in.
10-11	2	6	2	9	13	6	4	6
12-13	2	6	2	9	13	6	4	6
14-15	2	6	2	9	13	6	4	6
16-17	2	6	2	9	13	6	4	6
18-19	2	6	2	9	13	6	4	6
20-21	2	6	2	9	13	6	4	6
22-23	2	6	2	9	13	6	4	6
24-25	2	6	2	9	13	6	4	6

QUANTITIES

H	CONCRETE CLASS "A" CU. YDS. (1)	STEEL REINFORCEMENT EPOXY COATED LBS.	STEEL REINFORCEMENT LBS.
10-11	49.1	1146	5362
12-13	52.2	1146	5839
14-15	55.3	1146	6317
16-17	58.5	1146	6794
18-19	61.6	1146	7271
20-21	64.7	1146	7748
22-23	67.8	1146	8225
24-25	70.9	1146	8692

Note: All bars in cap shall be epoxy coated.

Note: All concrete shall be Class "A"

(1) Quantity is based on taller height. Reduce by 1.5 cubic yd. for shorter height.

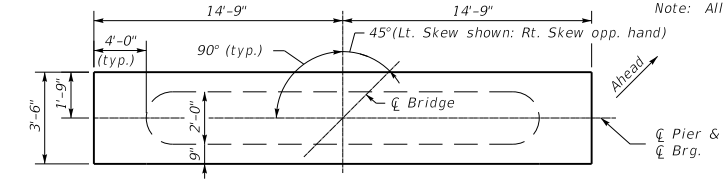

PLAN OF CAP

Note: Grade cap to roadway grade for box beams. Step cap if necessary for steel beams.

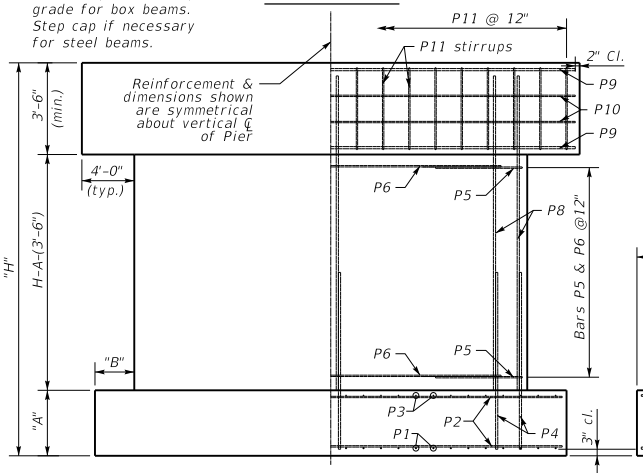

ELEVATION

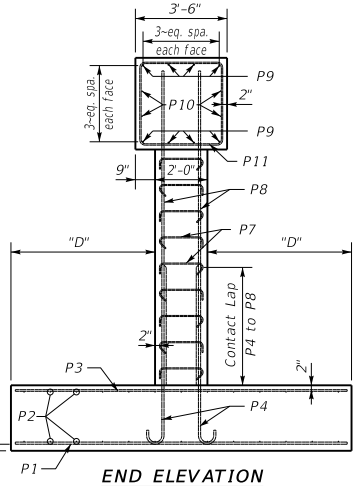

END ELEVATION

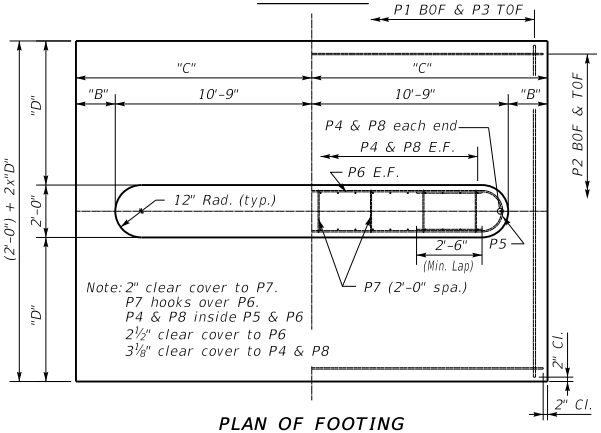

PLAN OF FOOTING

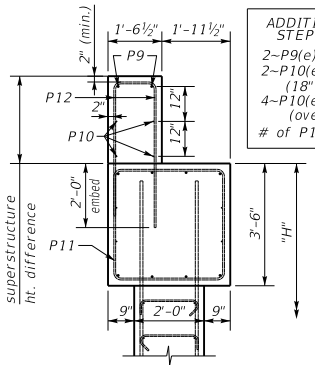

STEPPED CAP
(if necessary)

ADDITIONAL BARS FOR STEPPED PIER CAP
2~P9(e)'s
2~P10(e)'s
(18" to 28" ht. diff.)
4~P10(e)'s
(over 28" ht. diff.)
# of P12(e)=# of P11(e)

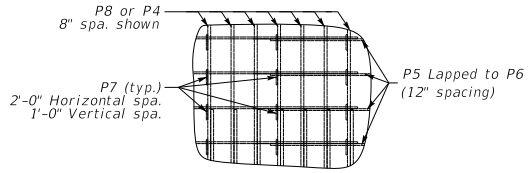

P7 BAR PLACEMENT
(alternate 90° & 135° bar ends)

GENERAL NOTES

SPECIFICATIONS: Construct piers according to the current edition of the Kentucky Department of Highways Standard Specifications for Road and Bridge Construction. Piers are designed for side by side box beams as detailed in Standard Drawings BDP-001 through BDP-012, current edition. They may be slightly modified to allow for 17'-6" rolled steel beam bridge width.

FOUNDATION PRESSURE: Construct pier footings on solid rock bearing material that can support a pressure of 8000 psf service or 10,800 psf strength factored as recommended by a geotechnical engineer.

DESIGN LOADS: Pier is designed for the CB42 beam superstructure with 3~97 foot spans. Pier is designed to handle a half a 97 foot span for thermal load with expansion bearings under the beams. Pier is designed for 100 mph wind. Wind on superstructure is for 1~97' span longitudinal and transverse. Pier is designed for stream flow of 10 ft./sec. up to the top of the pier. It is not designed for flow acting on the superstructure. Pier is not designed for earthquake loading.

DESIGN APPLICABILITY: Consult with a structural engineer to determine if these details are applicable for any particular project.

FOOTING ELEVATION: Construct bottom of footing below the anticipated scour elevation. (This typically entails embedding the footings 1'-0" to 2'-0" into rock and pouring concrete directly against cut rock faces as recommended by geotechnical engineer.)

NOTE: Distances to bars shown are clear dimensions unless otherwise noted.

MATERIAL SPECIFICATIONS:
Concrete, Class "A" = 3500 psi
Steel Reinforcement = Grade 60

KENTUCKY
DEPARTMENT OF HIGHWAYS

Standard Pier
45° Skew
16'-0"-17'-6" Bridge Width

STANDARD DRAWING NO. BSP-010

SUBMITTED _____ DIRECTOR DIVISION OF STRUCTURAL DESIGN — DATE 02-26-20

APPROVED _____ STATE HIGHWAY ENGINEER — DATE 02-26-20

45° SKEW 24'-0" - 25'-6" BRIDGE WIDTH (No Seismic Load)

Bill of Reinforcement

MARK	P1				P2				P3				P4								P5								P6				P7				P8				P9(e)				P10(e)				P11(e)			
TYPE	Str.				Str.				Str.				Type 4								Type 10								Str.				Type 31				Str.				Str.				Str.				Type 14			
SIZE																																	#4								#8				#5				#5			
H	No.	Size	Length ft.	Length in.	No.	Size	Length ft.	Length in.	No.	Size	Length ft.	Length in.	No.	Size	Length ft.	Length in.	Spacing	A ft.	A in.	B ft.	B in.	C ft.	C in.	D ft.	D in.	No.	Size	Length ft.	Length in.	Spacing	A in.	No.	Size	Length ft.	Length in.	No.	Size	Length ft.	Length in.	No.	Size	Length ft.	Length in.	No.	Size	Length ft.	Length in.	No.	Size	Length ft.	Length in.
10-11	56	7	12	2	8	26	6	37	2	12	56	5	12	2	8	94	8	8	10	8	7	5	1	5	0	8	7	9	10	5	7	5	12	2	6	10	5	30	6	12	80	2	5	94	8	8	0	8	8	40	2	4	40	2	40	13	2
12-13	56	7	12	2	8	26	6	37	2	12	56	5	12	2	8	94	8	8	10	8	7	5	1	5	0	8	7	9	14	5	7	5	12	2	6	14	5	30	6	12	112	2	5	94	8	10	0	8	8	40	2	4	40	2	40	13	2
14-15	56	7	12	2	8	26	6	37	2	12	56	5	12	2	8	94	8	8	10	8	7	5	1	5	0	8	7	9	18	5	7	5	12	2	6	18	5	30	6	12	144	2	5	94	8	12	0	8	8	40	2	4	40	2	40	13	2
16-17	56	7	12	2	8	26	6	37	2	12	56	5	12	2	8	94	8	8	10	8	7	5	1	5	0	8	7	9	22	5	7	5	12	2	6	22	5	30	6	12	176	2	5	94	8	14	0	8	8	40	2	4	40	2	40	13	2
18-19	56	7	12	2	8	26	6	37	2	12	56	5	12	2	8	94	8	8	10	8	7	5	1	5	0	8	7	9	26	5	7	5	12	2	6	26	5	30	6	12	208	2	5	94	8	16	0	8	8	40	2	4	40	2	40	13	2
20-21	56	7	12	2	8	26	6	37	2	12	56	5	12	2	8	94	8	8	10	8	7	5	1	5	0	8	7	9	30	5	7	5	12	2	6	30	5	30	6	12	240	2	5	94	8	18	0	8	8	40	2	4	40	2	40	13	2
22-23	56	7	12	2	8	26	6	37	2	12	56	5	12	2	8	94	8	8	10	8	7	5	1	5	0	8	7	9	34	5	7	5	12	2	6	34	5	30	6	12	272	2	5	94	8	20	0	8	8	40	2	4	40	2	40	13	2
24-25	56	7	12	2	8	26	6	37	2	12	56	5	12	2	8	94	8	8	10	8	7	5	1	5	0	8	7	9	38	5	7	5	12	2	6	38	5	30	6	12	304	2	5	94	8	22	0	8	8	40	2	4	40	2	40	13	2

Reinforcement Details

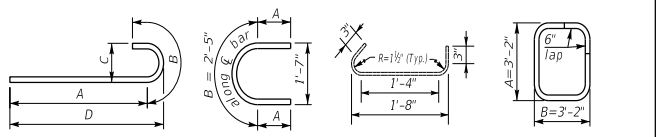

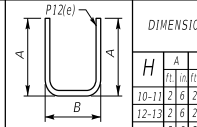

DIMENSIONS TABLE

H	A ft.	A in.	B ft.	B in.	C ft.	C in.	D ft.	D in.
10-11	2	6	2	6	18	9	5	3
12-13	2	6	2	6	18	9	5	3
14-15	2	6	2	6	18	9	5	3
16-17	2	6	2	6	18	9	5	3
18-19	2	6	2	6	18	9	5	3
20-21	2	6	2	6	18	9	5	3
22-23	2	6	2	6	18	9	5	3
24-25	2	6	2	6	18	9	5	3

QUANTITIES

H	CONCRETE CLASS "A" CU. YDS. (1)	STEEL REINFORCEMENT EPOXY COATED LBS.	STEEL REINFORCEMENT LBS.
10-11	74.4	1580	8329
12-13	79.2	1580	9049
14-15	83.9	1580	9757
16-17	88.7	1580	10471
18-19	93.4	1580	11184
20-21	98.2	1580	11898
22-23	102.9	1580	12612
24-25	107.7	1580	13326

Note: All bars in cap shall be epoxy coated.

Note: All concrete shall be Class "A"

(1) Quantity is based on taller height. Reduce by 2.3 cubic yd. for shorter height.

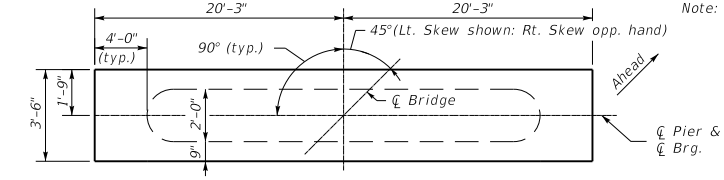

PLAN OF CAP

Note: Grade cap to roadway grade for box beams. Step cap if necessary for steel beams.

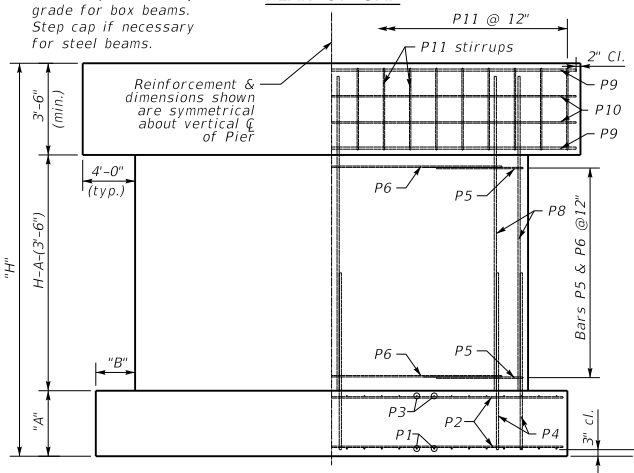

ELEVATION

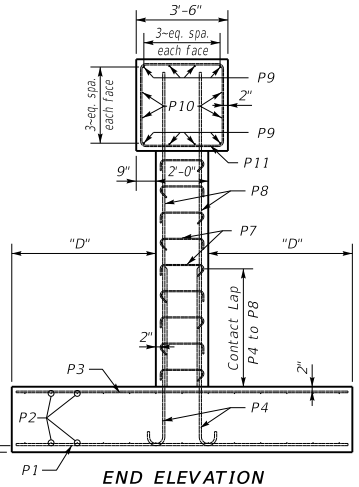

END ELEVATION

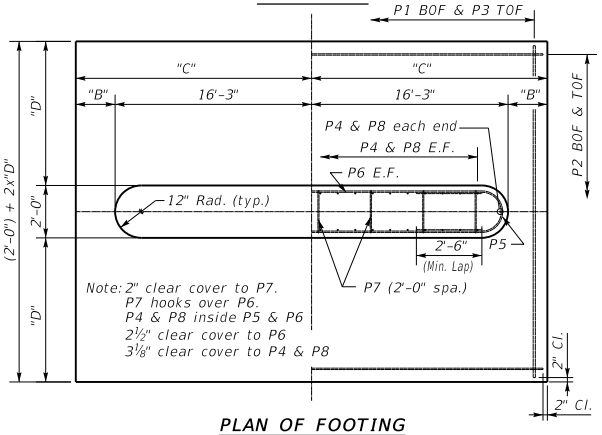

PLAN OF FOOTING

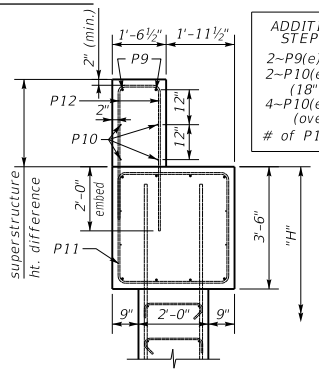

STEPPED CAP
(if necessary)

ADDITIONAL BARS FOR STEPPED PIER CAP
2~P9(e)'s
2~P10(e)'s
(18" to 28" ht. diff.)
4~P10(e)'s
(over 28" ht. diff.)
# of P12(e)=# of P11(e)

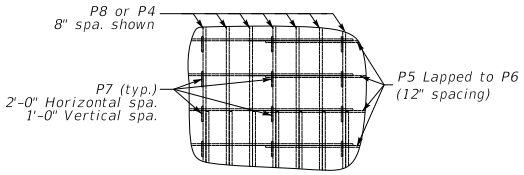

P7 BAR PLACEMENT
(alternate 90° & 135° bar ends)

GENERAL NOTES

SPECIFICATIONS: Construct piers according to the current edition of the Kentucky Department of Highways Standard Specifications for Road and Bridge Construction. Piers are designed for side by side box beams as detailed in Standard Drawings BDP-001 through BDP-012, current edition. They may be slightly modified to allow for 25'-6" rolled steel beam bridge width.

FOUNDATION PRESSURE: Construct pier footings on solid rock bearing material that can support a pressure of 8000 psf service or 10,800 psf strength factored as recommended by a geotechnical engineer.

DESIGN LOADS: Pier is designed for the CB42 beam superstructure with 3~97 foot spans. Pier is designed to handle a half a 97 foot span for thermal load with expansion bearings under the beams. Pier is designed for 100 mph wind. Wind on superstructure is for 1~97' span longitudinal and transverse. Pier is designed for stream flow of 10 ft./sec. up to the top of the pier. It is not designed for flow acting on the superstructure. Pier is not designed for earthquake loading.

DESIGN APPLICABILITY: Consult with a structural engineer to determine if these details are applicable for any particular project.

FOOTING ELEVATION: Construct bottom of footing below the anticipated scour elevation. (This typically entails embedding the footings 1'-0" to 2'-0" into rock and pouring concrete directly against cut rock faces as recommended by geotechnical engineer.)

NOTE: Distances to bars shown are clear dimensions unless otherwise noted.

MATERIAL SPECIFICATIONS:
Concrete, Class "A" = 3500 psi
Steel Reinforcement = Grade 60

KENTUCKY
DEPARTMENT OF HIGHWAYS

Standard Pier
45° Skew
24'-0"-25'-6" Bridge Width

STANDARD DRAWING NO. BSP-011

SUBMITTED _____ DIRECTOR DIVISION OF STRUCTURAL DESIGN — DATE 02-26-20

APPROVED _____ STATE HIGHWAY ENGINEER — DATE 02-26-20

45° SKEW 32'-0" - 33'-6" BRIDGE WIDTH (No Seismic Load)

Bill of Reinforcement

MARK	P1				P2				P3				P4								P5								P6				P7		P8				P9(e)		P10(e)		P11(e)	
TYPE	Str.				Str.				Str.				Type 4								Type 10								Str.				Type 31		Str.				Str.		Str.		Type 14	
SIZE																																	#4						#8		#5		#5	
H	No.	Size	Length ft.	Length in.	No.	Size	Length ft.	Length in.	No.	Size	Length ft.	Length in.	No.	Size	Length ft.	Length in.	Spacing	A ft.	A in.	B ft.	C ft.	C in.	D ft.	D in.	No.	Size	Length ft.	Length in.	Spacing	A ft.	A in.	No.	Size	Length ft.	Length in.	No.	Size	Length ft.	Length in.	No.	Length ft.	Length in.	No.	Length ft.	Length in.
10-11	72	7	12	8	26	5	47	8	12	72	5	12	8	8	126	8	10	8	7	5	1	5	0	8	7	9	10	5	7	5	12	2	6	10	5	41	0	12	105	2	5	126	8	8	0	8	8	51	2	4	51	2	51	13	2
12-13	72	7	12	8	26	5	47	8	12	72	5	12	8	8	126	8	10	8	7	5	1	5	0	8	7	9	14	5	7	5	12	2	6	14	5	41	0	12	147	2	5	126	8	10	0	8	8	51	2	4	51	2	51	13	2
14-15	72	7	12	8	26	5	47	8	12	72	5	12	8	8	126	8	10	8	7	5	1	5	0	8	7	9	18	5	7	5	12	2	6	18	5	41	0	12	189	2	5	126	8	12	0	8	8	51	2	4	51	2	51	13	2
16-17	72	7	12	8	26	5	47	8	12	72	5	12	8	8	126	8	10	8	7	5	1	5	0	8	7	9	22	5	7	5	12	2	6	22	5	41	0	12	231	2	5	126	8	14	0	8	8	51	2	4	51	2	51	13	2
18-19	72	7	12	8	26	5	47	8	12	72	5	12	8	8	126	8	10	8	7	5	1	5	0	8	7	9	26	5	7	5	12	2	6	26	5	41	0	12	273	2	5	126	8	16	0	8	8	51	2	4	51	2	51	13	2
20-21	72	7	12	8	26	5	47	8	12	72	5	12	8	8	126	8	10	8	7	5	1	5	0	8	7	9	30	5	7	5	12	2	6	30	5	41	0	12	315	2	5	126	8	18	0	8	8	51	2	4	51	2	51	13	2
22-23	72	7	12	8	26	5	47	8	12	72	5	12	8	8	126	8	10	8	7	5	1	5	0	8	7	9	34	5	7	5	12	2	6	34	5	41	0	12	357	2	5	126	8	20	0	8	8	51	2	4	51	2	51	13	2
24-25	72	7	12	8	26	5	47	8	12	72	5	12	8	8	126	8	10	8	7	5	1	5	0	8	7	9	38	5	7	5	12	2	6	38	5	41	0	12	399	2	5	126	8	22	0	8	8	51	2	4	51	2	51	13	2

Reinforcement Details

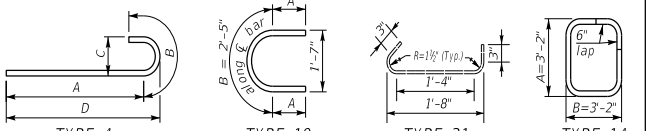

TYPE 4 — TYPE 10 (#5 bar) — TYPE 31 (#4 bar) — TYPE 14 (#5 bar)

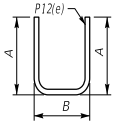

TYPE 2

(For Stepped Cap)
A=Ht. diff.-2" Cl. +2'-0"emb.
B=1'-2½"

DIMENSIONS TABLE

H	A ft.	A in.	B ft.	B in.	C ft.	C in.	D ft.	D in.
10-11	2	6	2	6	24	0	5	6
12-13	2	6	2	6	24	0	5	6
14-15	2	6	2	6	24	0	5	6
16-17	2	6	2	6	24	0	5	6
18-19	2	6	2	6	24	0	5	6
20-21	2	6	2	6	24	0	5	6
22-23	2	6	2	6	24	0	5	6
24-25	2	6	2	6	24	0	5	6

QUANTITIES

H	CONCRETE CLASS "A" CU. YDS. (1)	STEEL REINFORCEMENT EPOXY COATED LBS.	STEEL REINFORCEMENT LBS.
10-11	98.1	2013	10477
12-13	104.4	2013	11422
14-15	110.7	2013	12367
16-17	117	2013	13313
18-19	123.4	2013	14278
20-21	129.7	2013	15204
22-23	136	2013	16149
24-25	142.3	2013	17094

Note: All bars in cap shall be epoxy coated.

Note: All concrete shall be Class "A"

(1) Quantity is based on taller height. Reduce by 3.1 cubic yd. for shorter height.

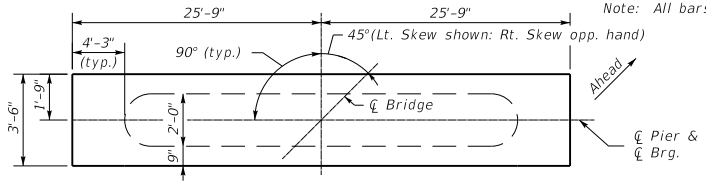

PLAN OF CAP

Note: Grade cap to roadway grade for box beams. Step cap if necessary for steel beams.

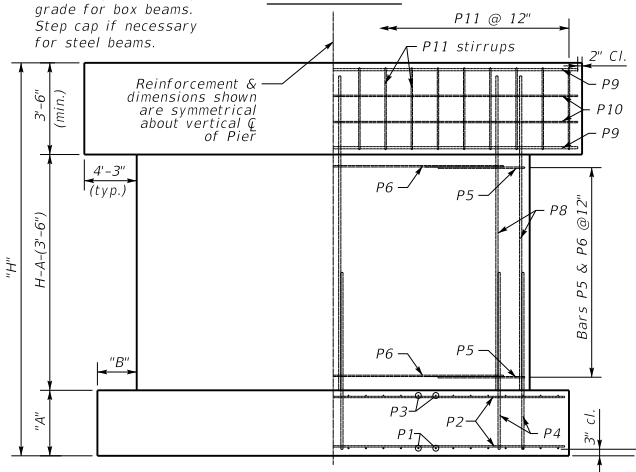

ELEVATION

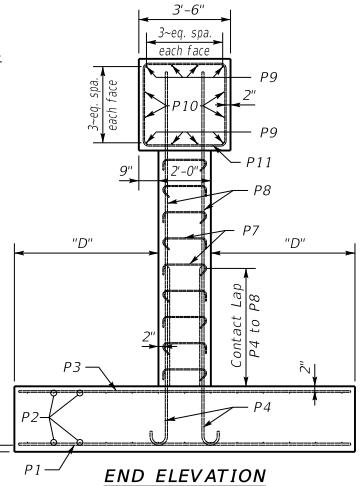

END ELEVATION

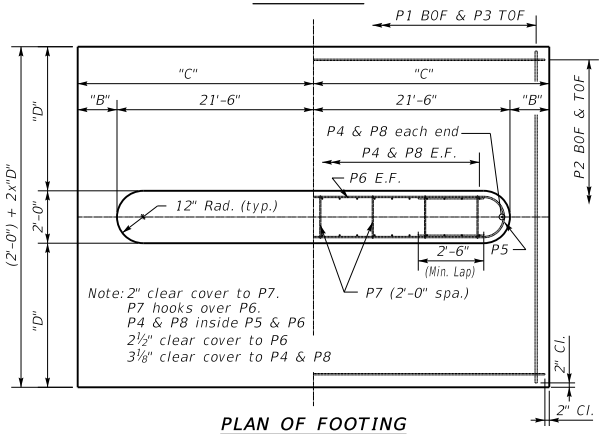

PLAN OF FOOTING

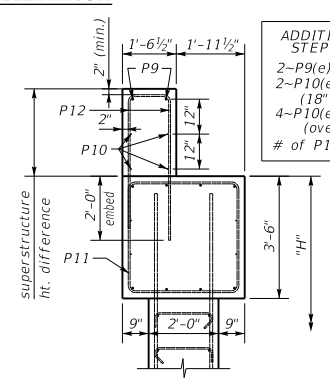

STEPPED CAP
(if necessary)

ADDITIONAL BARS FOR STEPPED PIER CAP
2~P9(e)'s
2~P10(e)'s
(18" to 28" ht. diff.)
4~P10(e)'s
(over 28" ht. diff.)
# of P12(e)=# of P11(e)

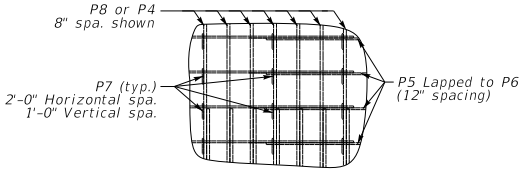

P7 BAR PLACEMENT
(alternate 90° & 135° bar ends)

GENERAL NOTES

SPECIFICATIONS: Construct piers according to the current edition of the Kentucky Department of Highways Standard Specifications for Road and Bridge Construction. Piers are designed for side by side box beams as detailed in Standard Drawings BDP-001 through BDP-012, current edition. They may be slightly modified to allow for 33'-6" rolled steel beam bridge width.

FOUNDATION PRESSURE: Construct pier footings on solid rock bearing material that can support a pressure of 8000 psf service or 10,800 psf strength factored as recommended by a geotechnical engineer.

DESIGN LOADS: Pier is designed for the CB42 beam superstructure with 3~97 foot spans. Pier is designed to handle a half a 97 foot span for thermal load with expansion bearings under the beams. Pier is designed for 100 mph wind. Wind on superstructure is for 1~97' span longitudinal and transverse. Pier is designed for stream flow of 10 ft./sec. up to the top of the pier. It is not designed for flow acting on the superstructure. Pier is not designed for earthquake loading.

DESIGN APPLICABILITY: Consult with a structural engineer to determine if these details are applicable for any particular project.

FOOTING ELEVATION: Construct bottom of footing below the anticipated scour elevation. (This typically entails embedding the footings 1'-0" to 2'-0" into rock and pouring concrete directly against cut rock faces as recommended by geotechnical engineer.)

NOTE: Distances to bars shown are clear dimensions unless otherwise noted.

MATERIAL SPECIFICATIONS:
Concrete, Class "A" = 3500 psi
Steel Reinforcement = Grade 60

KENTUCKY
DEPARTMENT OF HIGHWAYS

Standard Pier
45° Skew
32'-0"-33'-6" Bridge Width

STANDARD DRAWING NO. BSP-012

SUBMITTED _____ DIRECTOR DIVISION OF STRUCTURAL DESIGN — DATE 02-26-20

APPROVED _____ STATE HIGHWAY ENGINEER — DATE 02-26-20