COUNTY OF	ITEM NO.	SHEET NO.

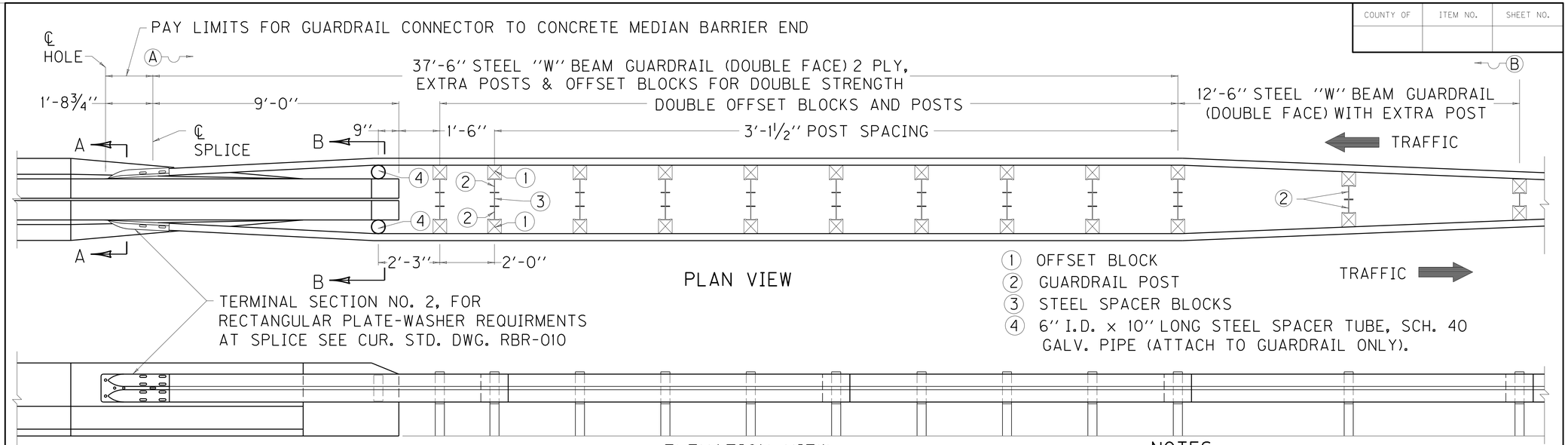

1. OFFSET BLOCK
2. GUARDRAIL POST
3. STEEL SPACER BLOCKS
4. 6'' I.D. x 10'' LONG STEEL SPACER TUBE, SCH. 40 GALV. PIPE (ATTACH TO GUARDRAIL ONLY).

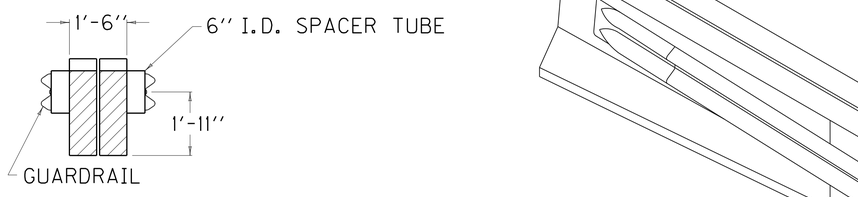

SECTION B-B

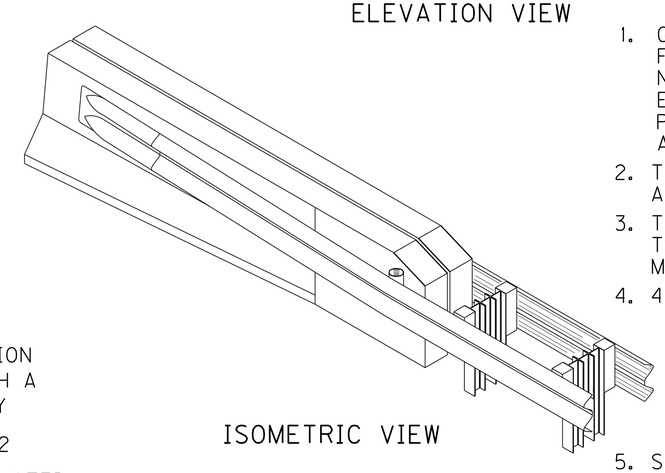

ISOMETRIC VIEW

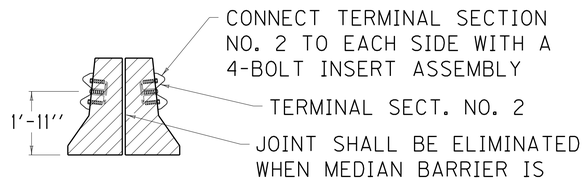

SECTION A-A

FOUR BOLT INSERT ASSEMBLY

NOTES

1. GUARDRAIL CONNECTOR TO CONCRETE MEDIAN BARRIER END SHALL BE PAID FOR AT THE CONTRACT UNIT PRICE EACH AND INCLUDES TERMINAL SECTION NO. 2, ADDITIONAL POSTS, ADDITIONAL OFFSET BLOCKS, ADDITIONAL RAIL ELEMENTS, HARDWARE, ETC., AND OTHER INCIDENTALS AS SHOWN BETWEEN POINTS (A) AND (B) NECESSARY TO COMPLETE THE INSTALLATION AS DETAILED.
2. THE STEEL ''W'' BEAM GUARDRAIL (DOUBLE FACE), IS A SEPARATE BID ITEM AND SHALL BEGIN PAYMENT AT POINT (A).
3. THE 4-BOLT INSERT ASSEMBLY INSTALLATION SHALL BE INCIDENTAL TO THE COST OF THE BRIDGE SUPERSTRUCTURE CONCRETE OR CONCRETE MEDIAN BARRIER END AS APPLICABLE.
4. 4-BOLT ASSEMBLIES:
   (a) THE ⅞'' x 2'' CAP SCREWS WITH STANDARD STEEL WASHERS SHALL BE GALVANIZED AND CONFORM TO ASTM A-325.
   (b) NO. W-8 GAGE WIRE, COLD DRAWN CONFORMING TO ASTM A-82.
   (c) STEEL INSERTS SHALL CONFORM TO ASTM A-108 GRADES C1008 AND C1010 OR B1113.
5. SEE CUR. STD. DWGS. IN THE RBI, RBE, AND RBR-SERIES AS APPLICABLE.
6. BACK UP PLATES ARE NOT REQUIRED WITHIN THE 2 PLY GUARDRAIL SECTION.
7. ▨ SEE BRIDGE PLANS FOR CONSTRUCTION DETAILS WHEN APPLICABLE.

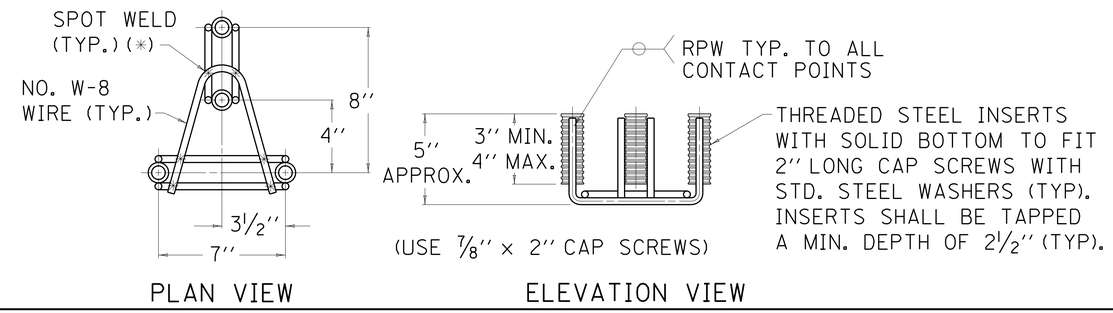

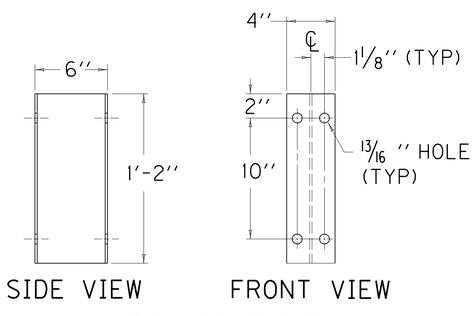

SPACER BLOCK
(W6 X 9.0)

KENTUCKY
DEPARTMENT OF HIGHWAYS

GUARDRAIL CONNECTOR TO CONCRETE MEDIAN BARRIER END

SUBMITTED Jeff Lapes 5-14-13
DATE

015

FILE NAME: C:\PWWORK\JEFF.LAIL\D0512631\SEP1A 015.DGN
USER: Jeff.Lail
DATE PLOTTED: May 14, 2013
E-SHEET NAME:
MicroStation v8.11.7.180