KENTUCKY STANDARD DRAWINGS

- ROADWAY
  - BARRIERS
    - GUARDRAIL AND BRIDGE END DRAINAGE RBB-SERIES
    - GUARDRAIL CONNECTORS TO BRIDGE ENDS RBC-SERIES
    - ENERGY ABSORPTION DEVICES RBE-SERIES
    - TYPICAL BARRIER INSTALLATIONS RBI-SERIES
    - CONCRETE MEDIAN BARRIERS RBM-SERIES
    - GUARDRAIL HARDWARE RBR-SERIES
  - DRAINAGE
    - BOX INLETS AND OUTLETS RDB-SERIES
    - PAVED DITCHES, FLUME INLETS & CHANNEL LINNING RDD-SERIES
    - HEADWALLS RDH-SERIES
    - TYPICAL DRAINAGE INSTALLATIONS RDI-SERIES
    - MANHOLES RDM-SERIES
    - PERFORATED PIPE RDP-SERIES
    - MISCELLANEOUS DRAINAGE RDX-SERIES
  - FENCES AND GRATES
    - CHAIN LINK FENCE RFC-SERIES
    - GATES RFG-SERIES
    - WOVEN WIRE FENCE RFW-SERIES
  - GENERAL
    - SUPERELEVATION AND CURVE WIDENING RGS-SERIES
    - MISCELLANEOUS STANDARDS RGX-SERIES
  - PAVEMENT
    - MEDIANS, CURBS, APPROACHES, ETC. RPM-SERIES
    - NON-REINFORCED CONC. PAVEMENT RPN-SERIES
    - STANDARD REINF. CONC. PAVEMENT RPS-SERIES
    - MISCELLANEOUS PAVING RPX-SERIES
  - ROADSIDE DEVELOPMENT
    - EROSION CONTROL RRE-SERIES
    - PLANTS RRP-SERIES
- TRAFFIC
  - PERMANENT
    - MARKERS TPM-SERIES
  - TEMPORARY
    - TRAFFIC CONTROL TTC-SERIES
    - DEVICES TTD-SERIES
    - STRIPING OPERATIONS TTS-SERIES
- BRIDGES
  - SEE OVERLEAF

~ DRAWING NUMBER EXPLANATION ~

R F G - 0 0 1

- DIVISION HEADING (ROADWAY)
- SECTION HEADING (FENCES & GRATES)
- SUB-SECTION (GATES)
- THREE OR FOUR DIGIT NUMBER

R G X - 0 0 1 - 0 1

- MISCELLANEOUS
- NO. OF TIMES DRAWING REVISED

KENTUCKY DEPARTMENT OF HIGHWAYS

LAYOUT CHART FOR KENTUCKY STANDARD DRAWINGS

2003

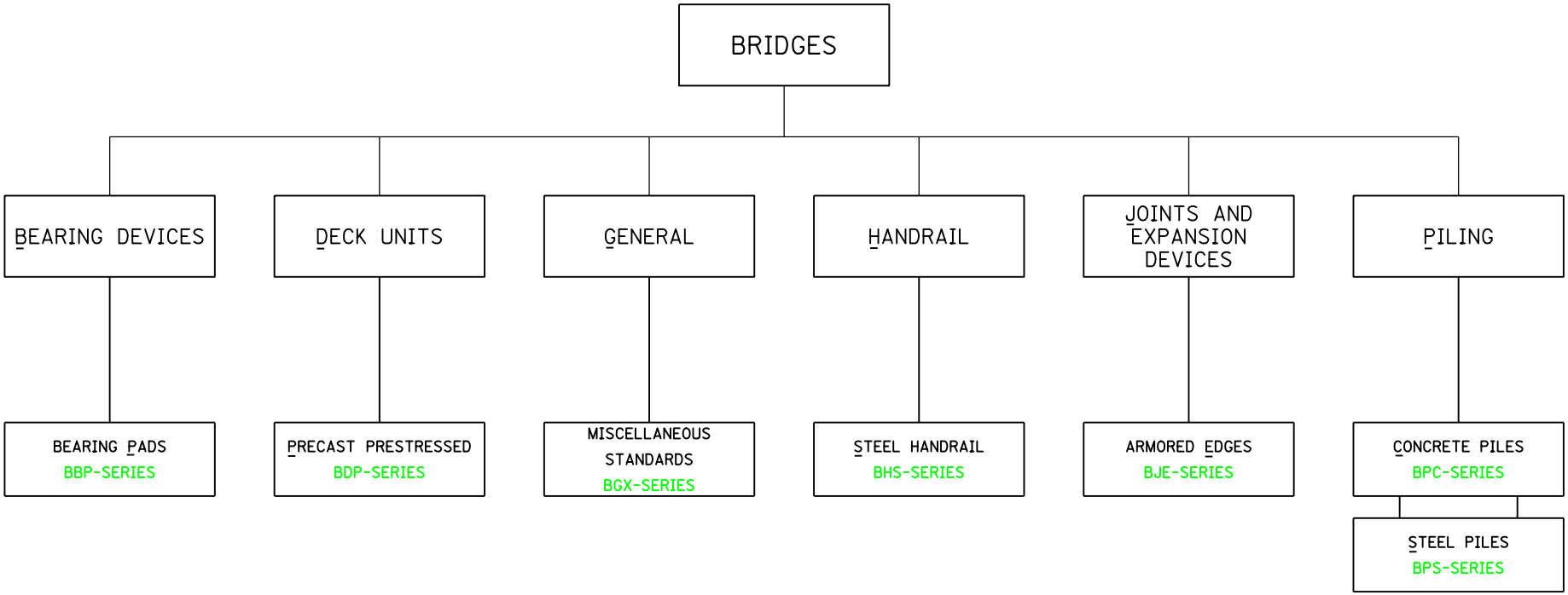

~ DRAWING NUMBER EXPLANATION ~

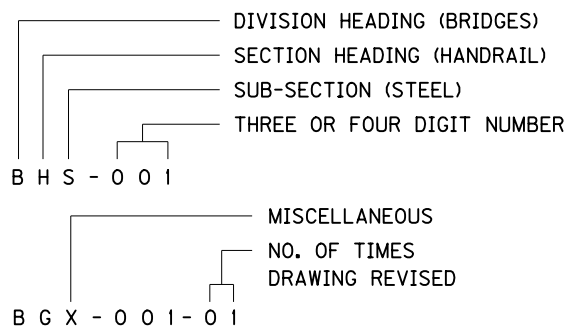

KENTUCKY
DEPARTMENT OF HIGHWAYS

LAYOUT CHART FOR
KENTUCKY
STANDARD DRAWINGS

2003

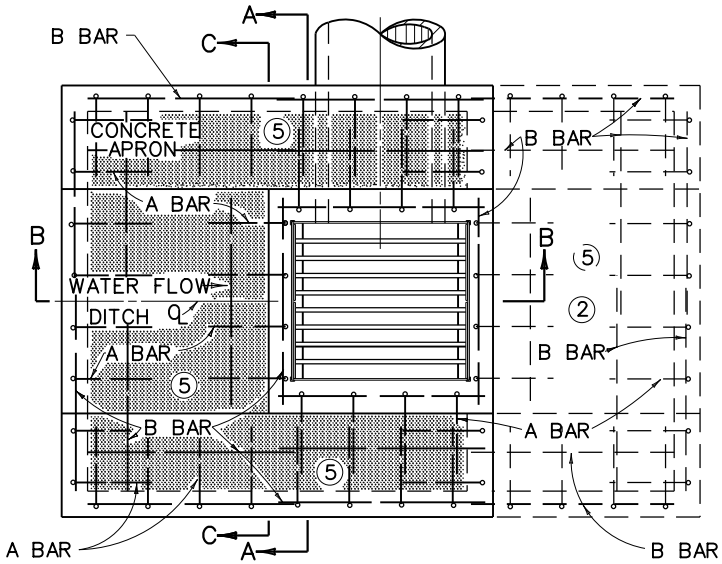

PLAN VIEW

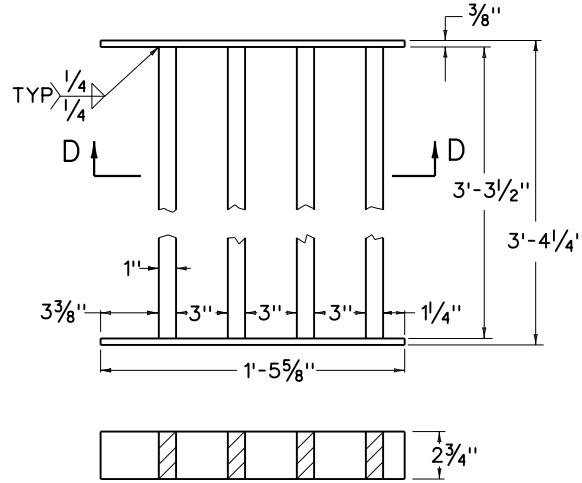

SECTION D-D

DETAIL OF GRATE

(TWO REQUIRED)

STR. STEEL WTS.		
1 GRATE	TOTAL	FRAME
132.5 LBS	265 LBS	51 LBS

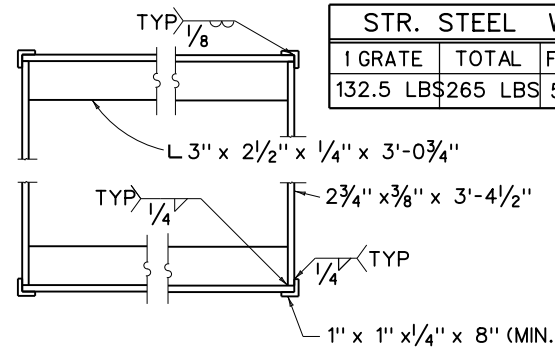

DETAIL OF FRAME

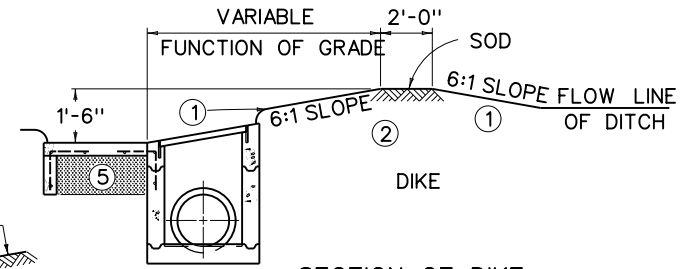

SECTION OF DIKE

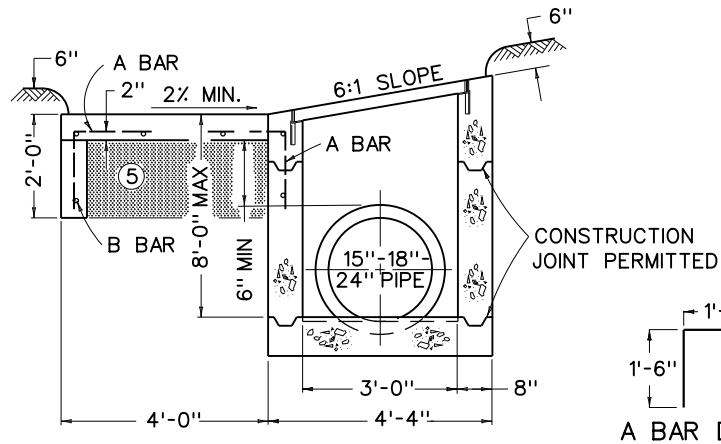

SECTION B-B

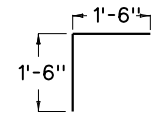

A BAR DETAIL

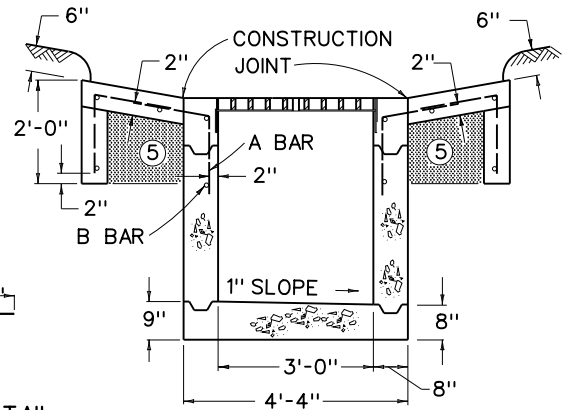

SECTION A-A

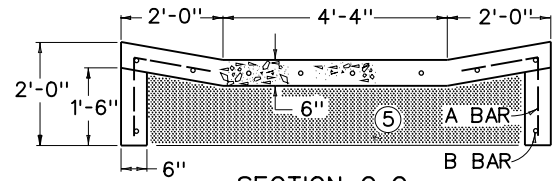

SECTION C-C

BILL OF REINFORCEMENT

BAR	NO. OF BARS	SIZE	LENGTH	APPROX. SPACING
A	40 OR 56	#5	3'-0"	1'-0" C TO C
B	25 OR 40	#4	4'-0"	AS SHOWN

NOTE: PRIMARY USE (ROADSIDE DITCH LOCATION)

NOTES

BASIS OF PAYMENT

DOWNSTREAM DIKE COMPLETE AND IN PLACE IS INCLUDED IN THE CONTRACT UNIT PRICE OF THE INLET. SODDING IS NOT INCLUDED.

CONSTRUCTION REQUIREMENTS

1. 6:1 SLOPES ARE WITH REFERENCE TO DITCH GRADE.
2. WHEN A BOX INLET IS PLACED IN A SAG, OMIT THE EARTH DIKE AND LONGITUDINAL SLOPE OF THE GRATE AND PROVIDE A CONCRETE APRON ON EACH SIDE OF THE INLET.
3. RATE OF INCREASE OR DECREASE 0.36 CU. YD. PER FOOT IN HEIGHT.
4. DEDUCT APPROX. 0.1 CU. YD. OF CONCRETE PER PIPE.
5. COMPACT THIS VOLUME WITH D.G.A. BASE OR GRAVEL BASE AND INCLUDE IN THE UNIT PRICE OF THE BOX.

APPROX. QUANTITIES

TYPE	CONCRETE 3'-9" ③ BOX	REINF. STEEL
SAG	4.4 CU. YD.④	282 LBS
GRADE	3.4 CU. YD.④	192 LBS

KENTUCKY DEPARTMENT OF HIGHWAYS

DROP BOX INLET TYPE 1

STANDARD DRAWING NO. RDB-001-11

SUBMITTED John B. Sachstede, DIRECTOR DIVISION OF DESIGN — DATE 12-1-99

APPROVED F. N. Newell, STATE HIGHWAY ENGINEER — DATE 12-1-99

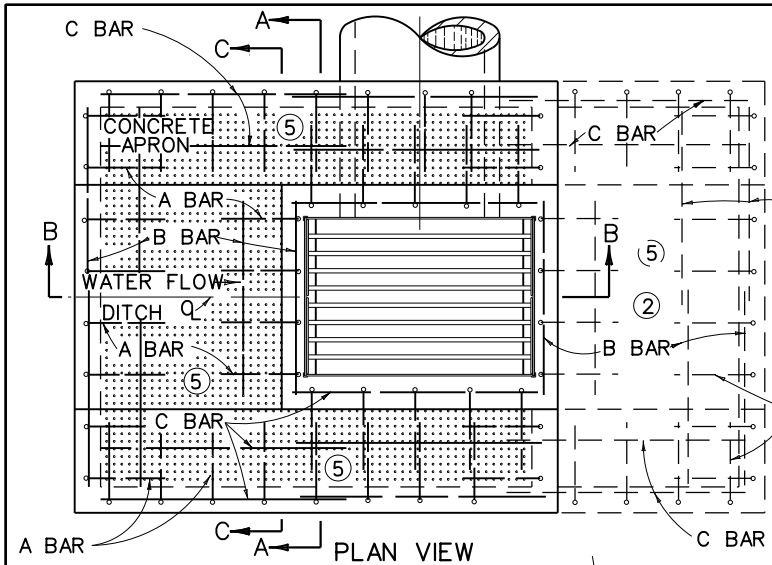

PLAN VIEW

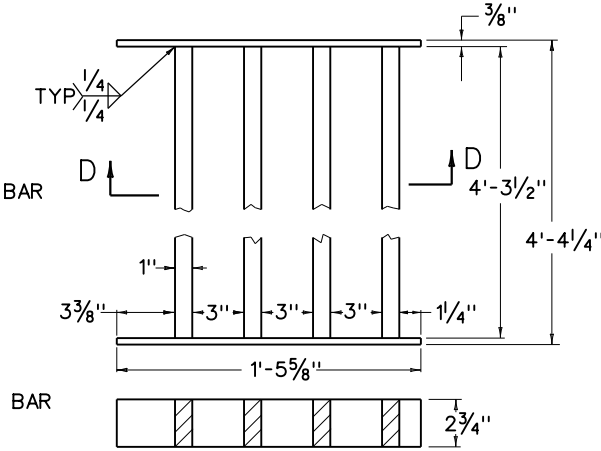

SECTION D-D
DETAIL OF GRATE
(TWO REQUIRED)

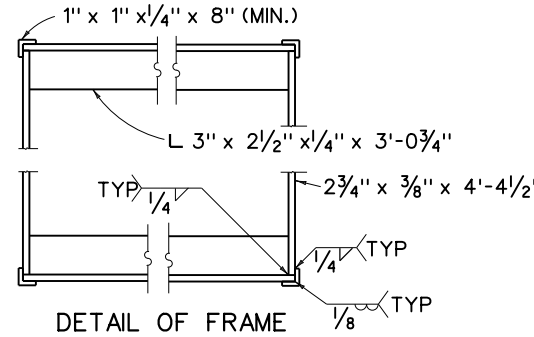

DETAIL OF FRAME

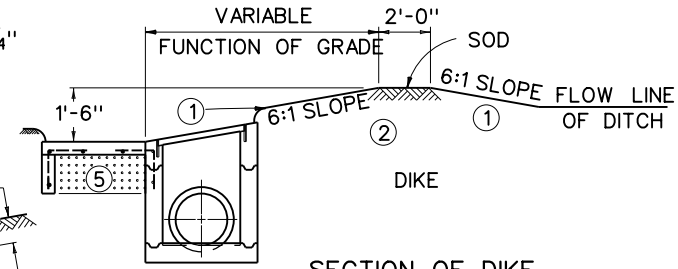

SECTION OF DIKE

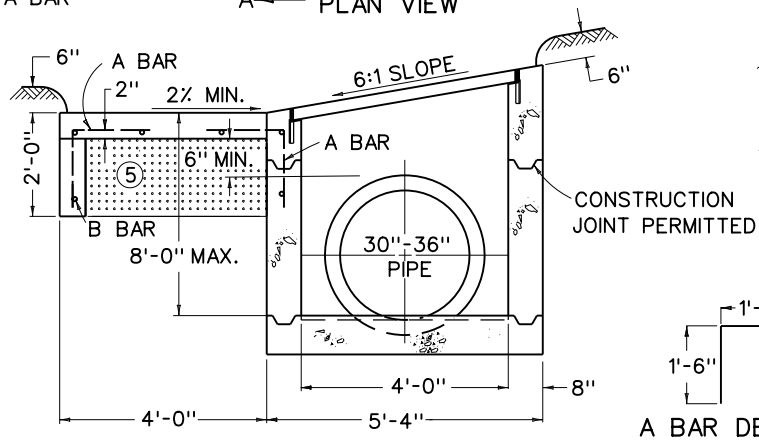

SECTION B-B

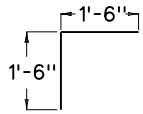

A BAR DETAIL

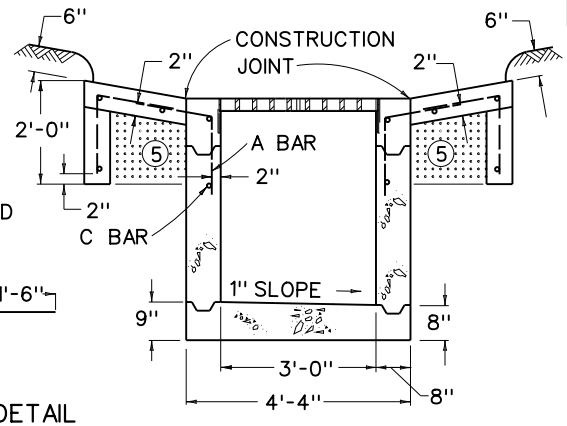

SECTION A-A

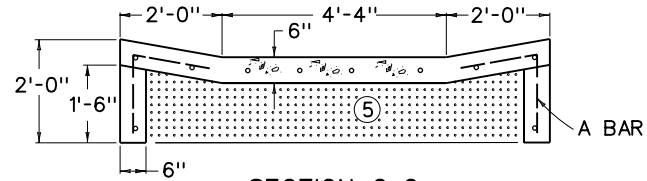

SECTION C-C

BILL OF REINFORCEMENT

BAR	NO. OF BARS	SIZE	LENGTH	APPROX. SPACING
A	44 OR 60	#5	3'-0"	1'-0" C TO C
B	9 OR 18	#4	3'-9"	AS SHOWN
C	16 OR 22	#4	4'-9"	AS SHOWN

NOTES

BASIS OF PAYMENT

DOWNSTREAM DIKE COMPLETE AND IN PLACE IS INCLUDED IN THE CONTRACT UNIT PRICE OF THE INLET. SODDING IS NOT INCLUDED.

CONSTRUCTION REQUIREMENTS

1. 6:1 SLOPES ARE WITH REFERENCE TO DITCH GRADE.
2. WHEN A BOX INLET IS PLACED IN A SAG, OMIT THE EARTH DIKE AND LONGITUDINAL SLOPE OF THE GRATE, AND PROVIDE A CONCRETE APRON ON EACH SIDE OF THE INLET.
3. RATE OF INCREASE OR DECREASE 0.41 CU. YD. PER FOOT IN HEIGHT.
4. DEDUCT APPROX. 0.2 CU. YD. OF CONCRETE FOR A 30" PIPE AND 0.3 CU. YD. OF CONCRETE FOR A 36" PIPE.
5. COMPACT THIS VOLUME WITH D.G.A. BASE OR GRAVEL BASE AND INCLUDE IN THE UNIT PRICE OF THE BOX.

NOTE: PRIMARY USE (ROADSIDE DITCH LOCATION)

STR. STEEL WTS.		
1 GRATE	TOTAL	FRAME
170 LBS	340 LBS	58 LBS

APPROX. QUANTITIES

TYPE	CONCRETE 3'-9" ③ BOX	REINF. STEEL
SAG	4.8 CU. YD. ④	303 LBS
GRADE	3.9 CU. YD. ④	212 LBS

KENTUCKY
DEPARTMENT OF HIGHWAYS

DROP BOX INLET TYPE 2

STANDARD DRAWING NO. RDB-002-11

SUBMITTED John B. Sachatello, DIRECTOR DIVISION OF DESIGN — 12-1-99 DATE

APPROVED J. M. Yancell, STATE HIGHWAY ENGINEER — 12-1-99 DATE

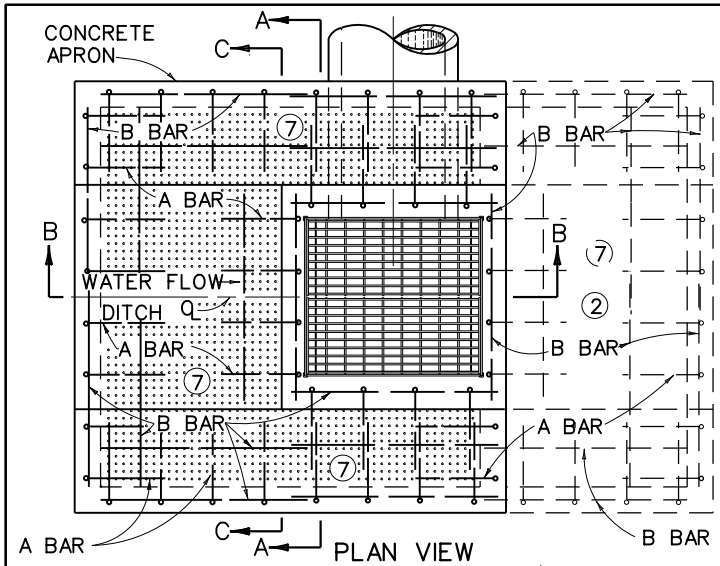

PLAN VIEW

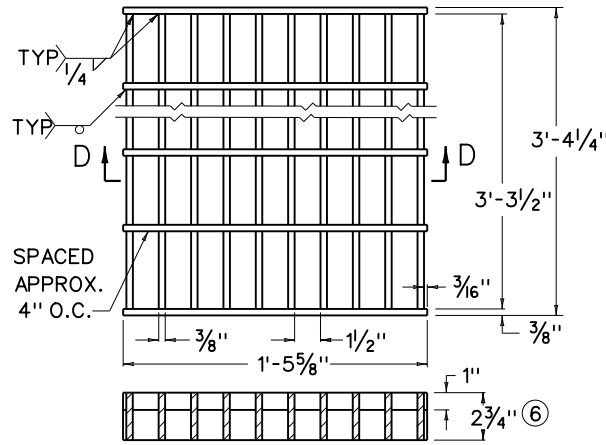

SECTION D-D
DETAIL OF GRATE
(TWO REQUIRED)

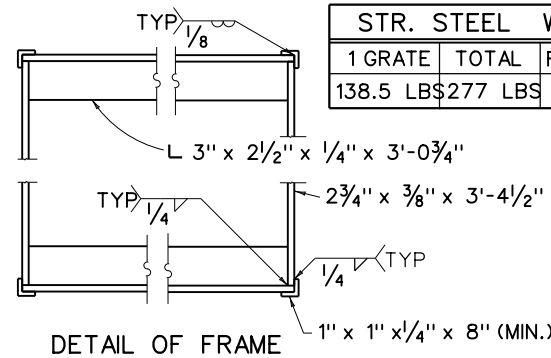

DETAIL OF FRAME

STR. STEEL WTS.		
1 GRATE	TOTAL	FRAME
138.5 LBS	277 LBS	51 LBS

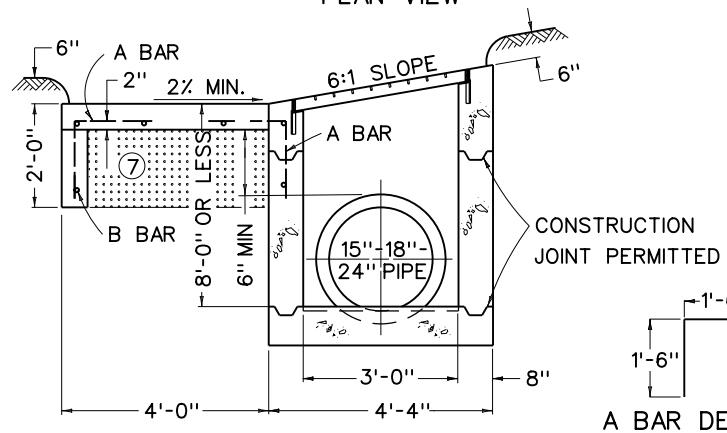

SECTION B-B

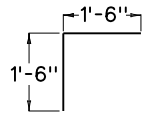

A BAR DETAIL

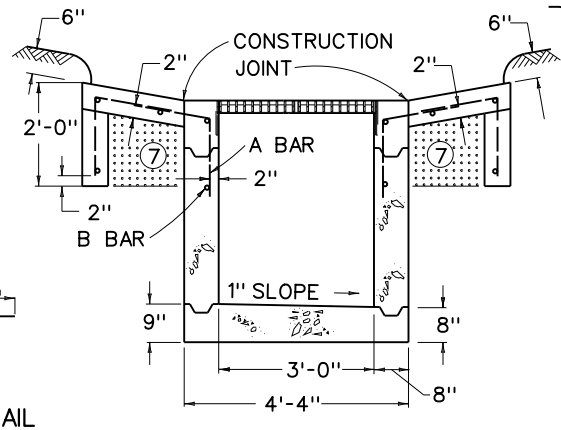

SECTION A-A

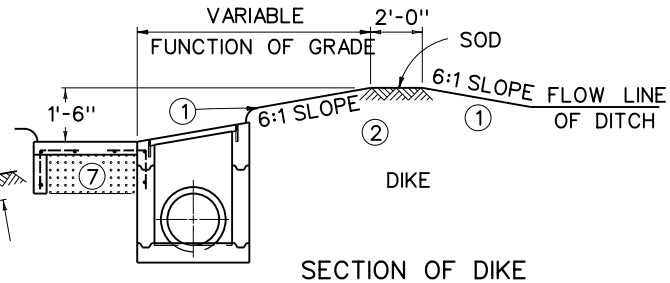

SECTION OF DIKE

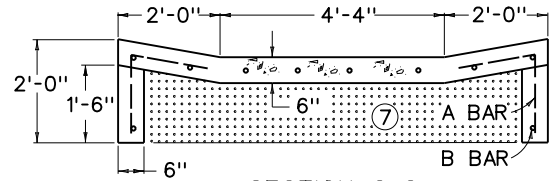

SECTION C-C

BILL OF REINFORCEMENT

BAR	NO. OF BARS	SIZE	LENGTH	APPROX. SPACING
A	40 OR 56	#5	3'-0"	1'-0" C TO C
B	25 OR 40	#4	4'-0"	AS SHOWN

NOTES

BASIS OF PAYMENT

DOWNSTREAM DIKE COMPLETE AND IN PLACE IS INCLUDED IN THE CONTRACT UNIT PRICE OF THE INLET. SODDING IS NOT INCLUDED.

CONSTRUCTION REQUIREMENTS

① 6:1 SLOPES ARE WITH REFERENCE TO DITCH GRADE.

② WHEN A BOX INLET IS PLACED IN A SAG, OMIT THE EARTH DIKE AND LONGITUDINAL SLOPE OF THE GRATE, AND PROVIDE A CONCRETE APRON ON EACH SIDE OF THE INLET.

③ RATE OF INCREASE OR DECREASE 0.36 CU. YD. PER FOOT IN HEIGHT.

④ DEDUCT APPROX. 0.1 CU. YD. OF CONCRETE PER PIPE.

⑤ RELIANCE STEEL (CAT. NO. H2-12D) AND GARY STEEL (CAT. NO. HW3-D-300) ARE ACCEPTABLE ALTERNATES PROVIDED MATCHED GRATES ARE SUPPLIED.

⑥ THE 2 3/4" BAR SHALL BE NOTCHED TO RECEIVE THE 1" BAR.

⑦ COMPACT THIS VOLUME WITH D.G.A. BASE OR GRAVEL BASE AND INCLUDE IN THE UNIT PRICE OF THE BOX.

APPROX. QUANTITIES

TYPE	CONCRETE 3'-9" ③ BOX	REINF. STEEL
SAG	4.4 CU. YD.④	282 LBS
GRADE	3.4 CU. YD.④	192 LBS

NOTE: PRIMARY USE (ROADSIDE DITCH LOCATION)

KENTUCKY
DEPARTMENT OF HIGHWAYS

DROP BOX INLET TYPE 3

STANDARD DRAWING NO. RDB-003-07

SUBMITTED: David Kratt, DIRECTOR DIVISION OF DESIGN — 11-21-07 DATE

APPROVED: Marcelyn Mathews, STATE HIGHWAY ENGINEER — 11-21-07 DATE

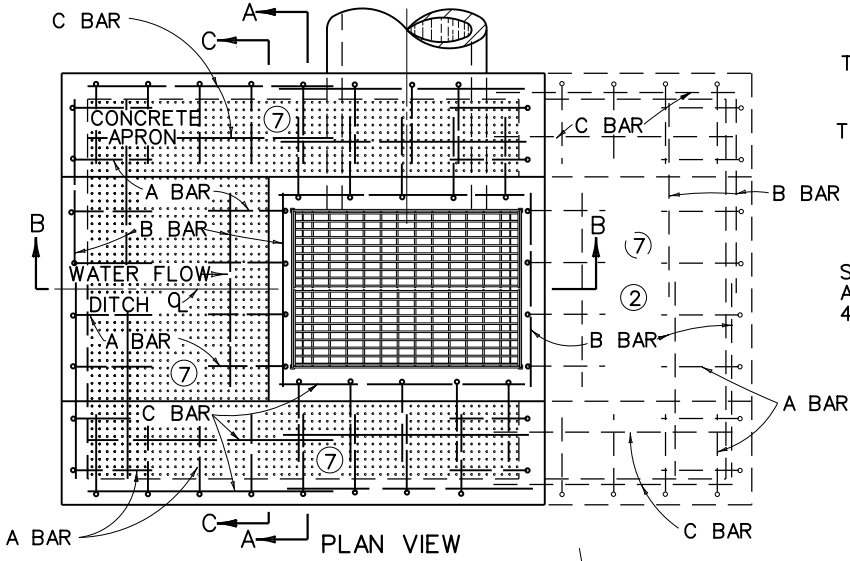

PLAN VIEW

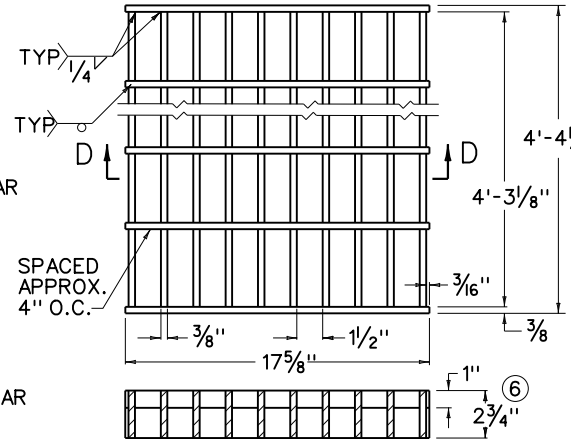

SECTION D-D
DETAIL OF GRATE
(TWO REQUIRED)

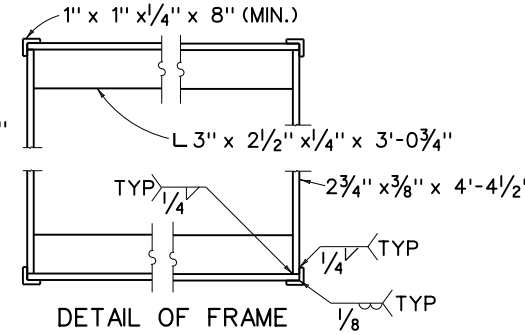

DETAIL OF FRAME

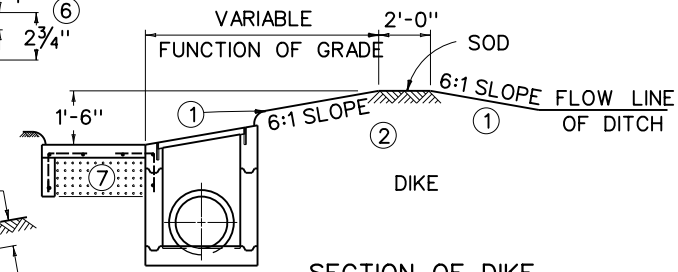

SECTION OF DIKE

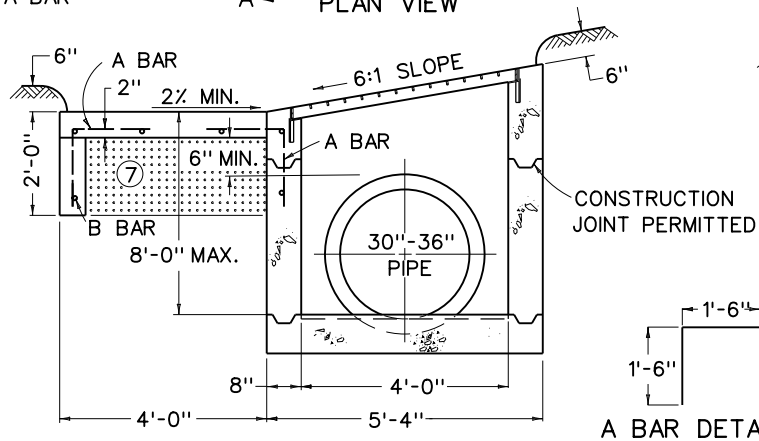

SECTION B-B

A BAR DETAIL

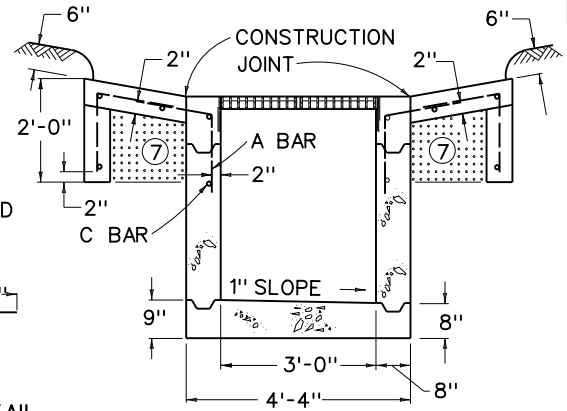

SECTION A-A

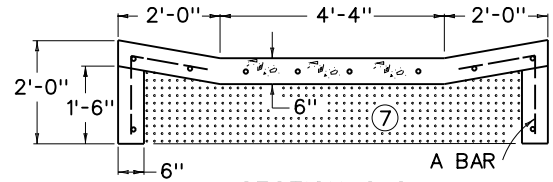

SECTION C-C

NOTES

BASIS OF PAYMENT

DOWNSTREAM DIKE COMPLETE AND IN PLACE IS INCLUDED IN THE CONTRACT UNIT PRICE OF THE INLET. SODDING IS NOT INCLUDED.

CONSTRUCTION REQUIREMENTS

① 6:1 SLOPES ARE WITH REFERENCE TO DITCH GRADE.
② WHEN A BOX INLET IS PLACED IN A SAG, OMIT THE EARTH DIKE AND LONGITUDINAL SLOPE OF THE GRATE, AND PROVIDE A CONCRETE APRON ON EACH SIDE OF THE INLET.
③ RATE OF INCREASE OR DECREASE 0.41 CU. YD. PER FOOT IN HEIGHT.
④ DEDUCT APPROX. 0.2 CU. YD OF CONCRETE OR A 30" PIPE AND 0.3 CU. YD. OF CONCRETE FOR A 36" PIPE.
⑤ RELIANCE STEEL (CAT. NO. H2-12D) AND GARY STEEL (CAT. NO. HW3-D-300) ARE ACCEPTABLE ALTERNATES PROVIDED MATCHED GRATES ARE SUPPLIED.
⑥ THE 2 3/4" BAR SHALL BE NOTCHED TO RECEIVE THE 1" BAR.
⑦ ⊡ COMPACT THIS VOLUME WITH D.G.A. BASE OR GRAVEL BASE AND INCLUDE IN THE UNIT PRICE OF THE BOX

BILL OF REINFORCEMENT

BAR	NO. OF BARS	SIZE	LENGTH	APPROX. SPACING
A	44 OR 60	#5	3'-0"	1'-0" C TO C
B	9 OR 18	#4	3'-9"	AS SHOWN
C	16 OR 20	#4	4'-9"	AS SHOWN

NOTE: PRIMARY USE (ROADSIDE DITCH LOCATION)

STR. STEEL WTS.		
1 GRATE	TOTAL	FRAME
176 LBS	352 LBS	58 LBS

APPROX. QUANTITIES

TYPE	CONCRETE 3'-9" ③ BOX	REINF. STEEL
SAG	4.8 CU. YD. ④	303 LBS
GRADE	3.9 CU. YD. ④	212 LBS

KENTUCKY
DEPARTMENT OF HIGHWAYS

DROP BOX INLET TYPE 4

STANDARD DRAWING NO. RDB-004-09

SUBMITTED David Kratt, DIRECTOR DIVISION OF DESIGN — 11-21-07 DATE

APPROVED Marvelyn Mathews, STATE HIGHWAY ENGINEER — 11-21-07 DATE

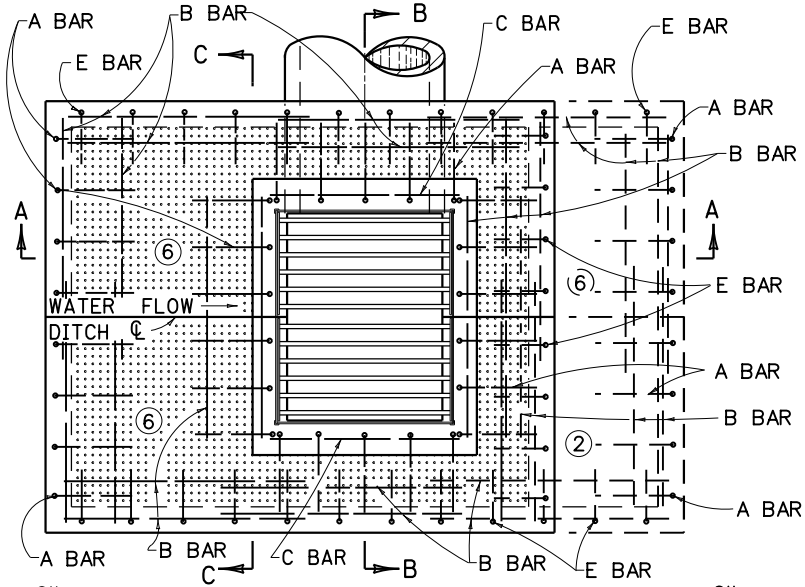

PLAN VIEW

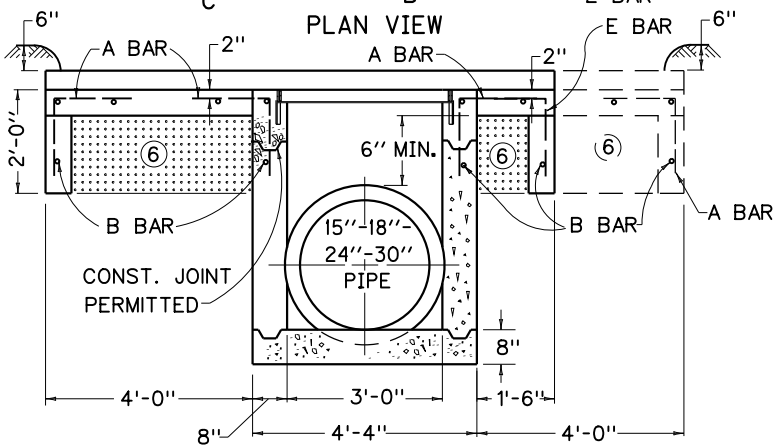

SECTION A-A

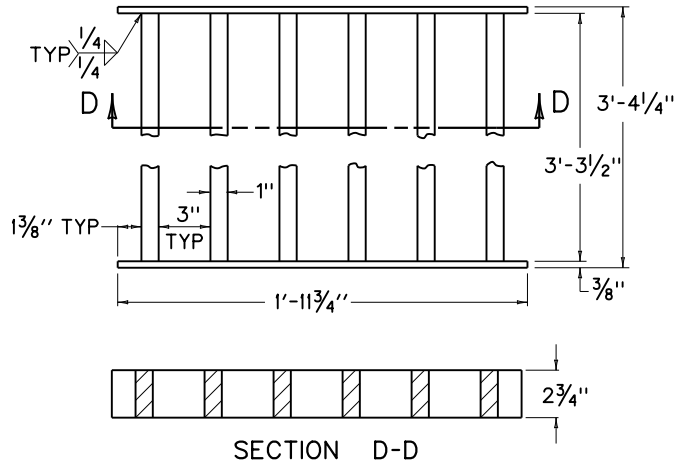

SECTION D-D
DETAIL OF GRATE
(TWO REQUIRED)

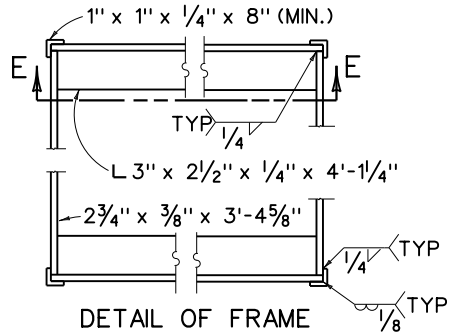

DETAIL OF FRAME

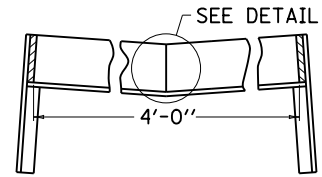

SECTION E-E
DETAIL OF FRAME

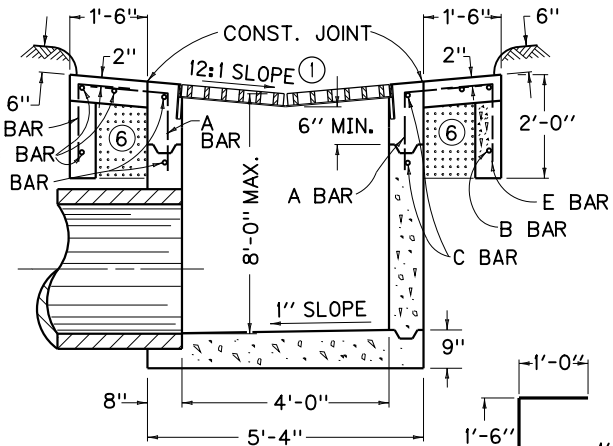

SECTION B-B

DETAIL "A"

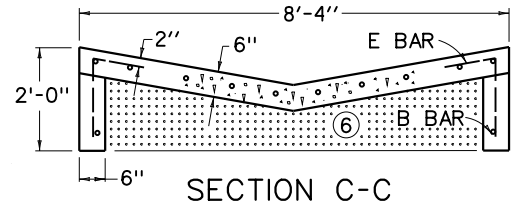

SECTION C-C

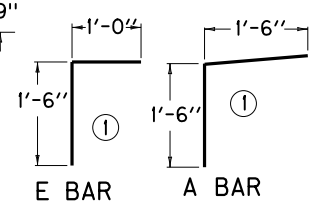

BILL OF REINFORCEMENT

BAR	NO. OF BARS	SIZE	LENGTH
A	30 OR 38	#5	3'-0"
B	29 OR 36	#4	4'-8"
C	4	#4	3'-8"
E	26 OR 24	#5	2'-6"

NOTE: PRIMARY USE (DEPRESSED MEDIAN)

NOTES:

1. RELATES TO MEDIAN CROSS SLOPE - 5A=12:1, 5B=6:1, 5C=5:1, 5D=4:1, 5E=3:1, 5F EQUALS ANY ADDITIONAL SLOPE AS SPECIFIED BY THE ENGINEER.
2. WHEN A BOX INLET IS PLACED IN A SAG CONSTRUCT APRON 4'-0" ON EACH SIDE AS SHOWN.
3. RATE OF INCREASE OR DECREASE 0.41 CU. YD. PER FOOT IN HEIGHT.
4. DEDUCT APPROX. 0.10 CU. YD OF CONCRETE FOR 15", 18", 24" PIPE AND 0.20 CU. YD. OF CONCRETE FOR A 30" PIPE.
5. DETAILS ARE SHOWN FOR A TYPE 5A . IT IS NECESSARY TO REVISE VARIOUS DETAILS INCLUDING FRAME FOR TYPES B, C, D, E, AND F.
6. COMPACT THIS VOLUME WITH D.G.A. BASE OR GRAVEL BASE AND INCLUDE IN THE UNIT PRICE OF THE BOX.
7. WHEN D.B.I. TYPE 5 IS CONSTRUCTED IN CONJUNCTION WITH PAVED DITCH TYPE 3, SEE PAVED DITCH TYPE 3 DETAIL FOR ADDITIONAL STEEL REQUIREMENTS.
8. STEEL REINFORCEMENT SPACED AS SHOWN.

STR. STEEL WTS.		
1 GRATE	TOTAL	FRAME
198 LBS	396 LBS	64 LBS

APPROX. QUANTITIES

TYPE	CONCRETE 3'-6" ③ BOX	REINF. STEEL
SAG	4.0 CU. YD.④	304 LBS
GRADE	3.4 CU. YD.④	262 LBS

KENTUCKY
DEPARTMENT OF HIGHWAYS

DROP BOX
INLET TYPE
5A-5B-5C-5D-5E & 5F

STANDARD DRAWING NO. RDB-005-08

SUBMITTED John B. Sachatello 12-1-99
DIRECTOR DIVISION OF DESIGN DATE

APPROVED J. M. Yowell 12-1-99
STATE HIGHWAY ENGINEER DATE

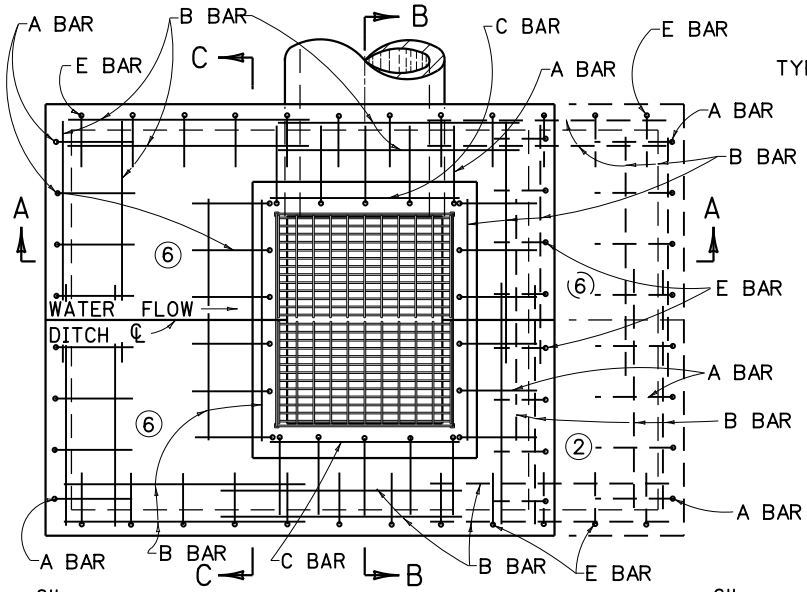

PLAN VIEW

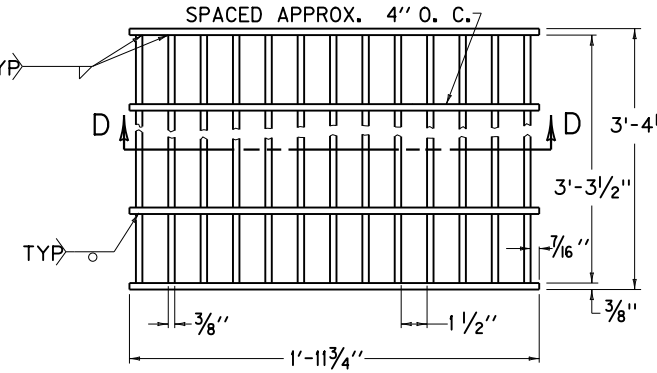

SECTION D-D
DETAIL OF GRATE 7
(TWO REQUIRED)

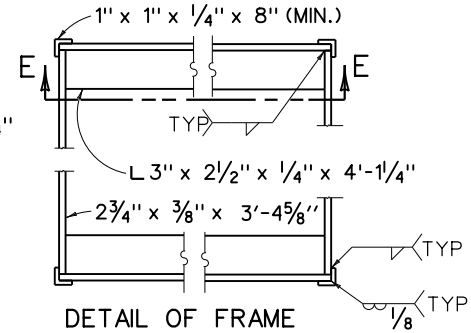

DETAIL OF FRAME

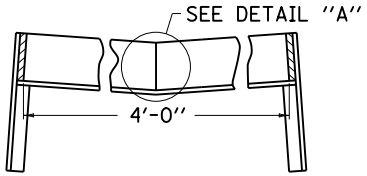

SECTION E-E
DETAIL OF FRAME

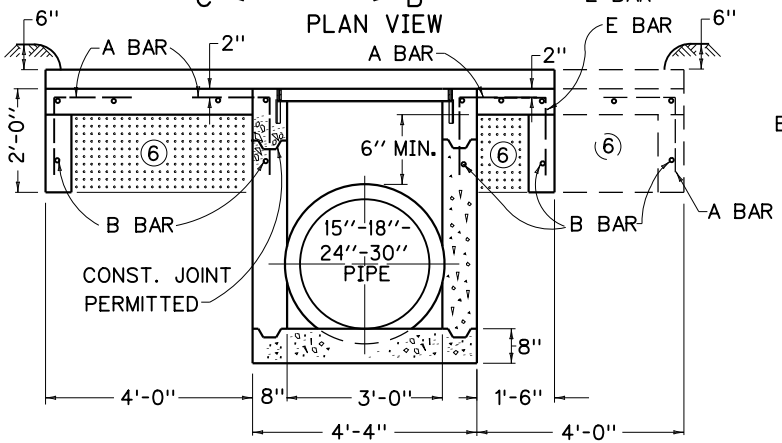

SECTION A-A

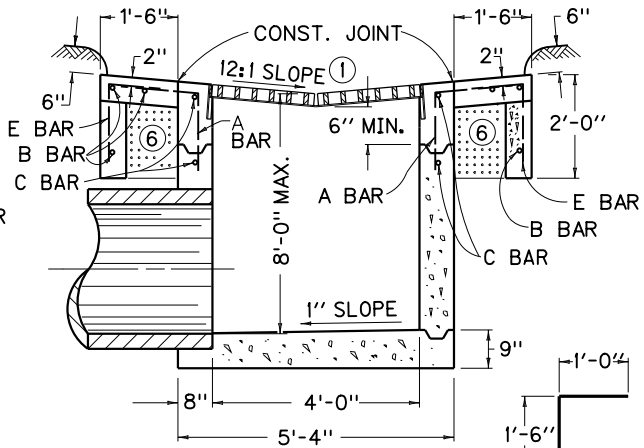

SECTION B-B

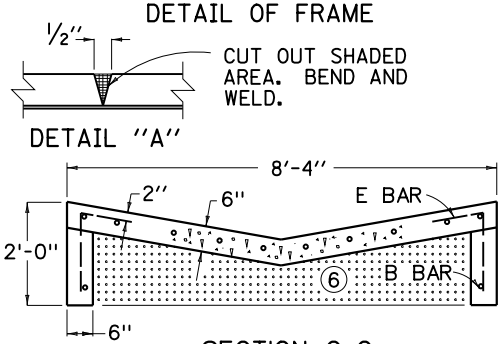

DETAIL ''A''

SECTION C-C

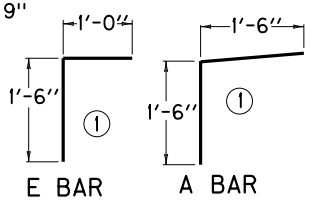

BILL OF REINFORCEMENT

BAR	NO. OF BARS	SIZE	LENGTH
A	30 OR 38	#5	3'-0''
B	29 OR 36	#4	4'-8''
C	4	#4	3'-8''
E	26 OR 24	#5	2'-6''

NOTE: PRIMARY USE (DEPRESSED MEDIAN)

NOTES:

1. RELATES TO MEDIAN CROSS SLOPE - 6A=12:1, 6B=6:1, 6C=5:1, 6D=4:1, 6E=3:1, 6F EQUALS ANY ADDITIONAL SLOPE AS SPECIFIED BY THE ENGINEER.
2. WHEN A BOX INLET IS PLACED IN A SAG CONSTRUCT APRON 4'-0'' ON EACH SIDE AS SHOWN.
3. RATE OF INCREASE OR DECREASE 0.41 CU. YD. PER FOOT IN HEIGHT.
4. DEDUCT APPROX. 0.1 CU. YD. OF CONCRETE FOR 15''-18''-24'' PIPE AND 0.2 CU. YD. OF CONCRETE FOR A 30'' PIPE.
5. DETAILS ARE SHOWN FOR A TYPE 6A . IT IS NECESSARY TO REVISE VARIOUS DETAILS INCLUDING FRAME FOR TYPES B, C, D, E, AND F.
6. COMPACT THIS VOLUME WITH D.G.A. BASE OR GRAVEL BASE AND INCLUDE IN THE UNIT PRICE OF THE BOX.
7. RELIANCE STEEL (CAT. NO. H2-12D) AND GARY STEEL (CAT. NO. HW3-D-300) ARE ACCEPTABLE ALTERNATES PROVIDED MATCHED GRATES ARE SUPPLIED.
8. THE 2¾'' BAR SHALL BE NOTCHED TO RECEIVE THE 1'' CROSS BAR.
9. STEEL REINFORCEMENT SPACED AS SHOWN.

STR. STEEL WTS.		
1 GRATE	TOTAL	FRAME
181 LBS.	362 LBS	64 LBS.

APPROX. QUANTITIES

TYPE	CONCRETE 3'-6'' 3 BOX	REINF. STEEL
SAG	4.0 CU. YD. 4	304 LBS.
GRADE	3.4 CU. YD. 4	262 LBS

KENTUCKY
DEPARTMENT OF HIGHWAYS

DROP BOX
INLET TYPE
6A-6B-6C-6D-6E & 6F

STANDARD DRAWING NO. RDB-006-07

SUBMITTED David Kratt DIRECTOR DIVISION OF DESIGN 11-21-07 DATE

APPROVED Marvelyn Mathews STATE HIGHWAY ENGINEER 11-21-07 DATE

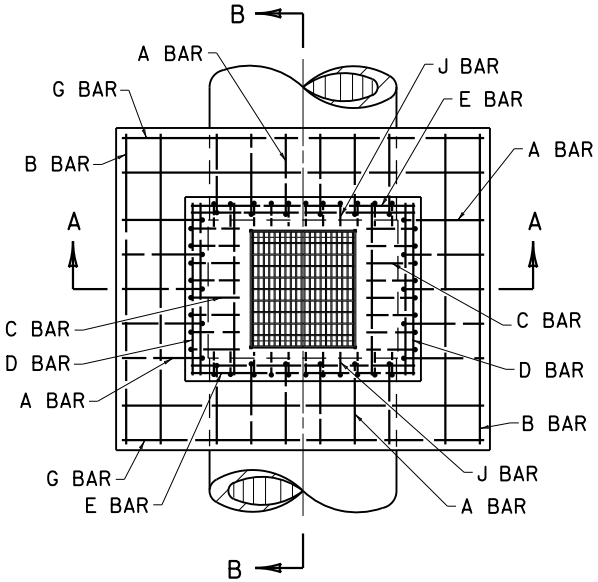

PLAN VIEW

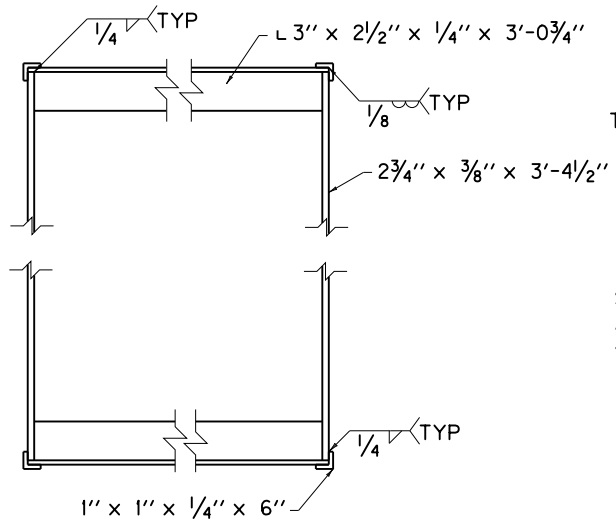

FRAME DETAIL

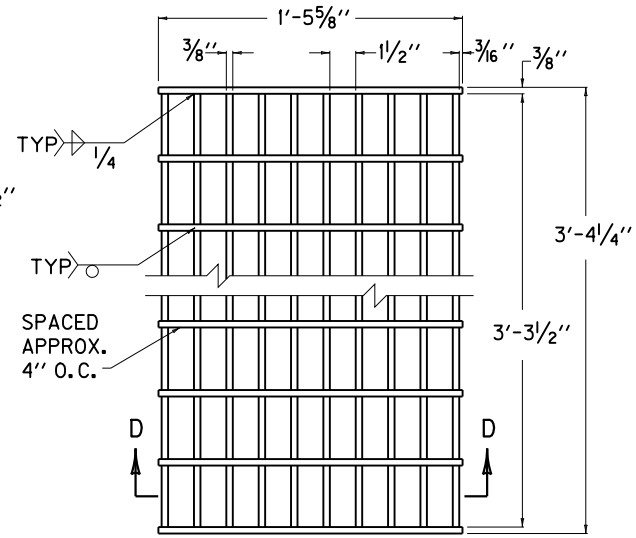

① GRATE DETAIL
(TWO GRATES REQD.)

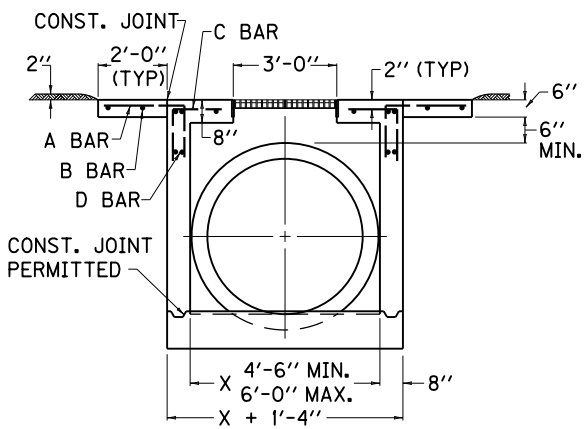

SECTION A-A

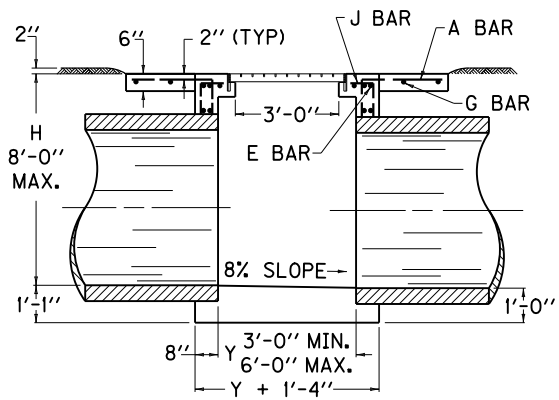

SECTION B-B

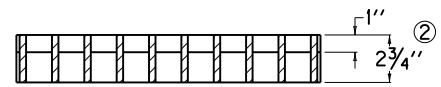

SECTION D-D

USE WITH CURRENT STD. DWG.
RDB-008

NOTES

① RELIANCE STEEL (CAT. NO. H2-12D) AND GARY STEEL (CAT. NO. HW3-D-300) ARE ACCEPTABLE ALTERNATES PROVIDED MATCHED GRATES ARE SUPPLIED.

② THE 2 3/4'' BAR SHALL BE NOTCHED TO RECEIVE THE 1'' CROSS BAR.

3. REINFORCEMENT SHALL HAVE A CLEAR DISTANCE OF 2'' FROM OUTSIDE FACE UNLESS OTHERWISE SHOWN.
4. THIS BOX IS TO BE USED PRIMARILY FOR SUMP CONDITIONS WHERE A GRATED INLET IS REQUIRED FOR PIPE SIZES 42'' THRU 60''.
5. SEE CURRENT STANDARD DRAWING RDB-008 FOR DIMENSIONS AND STEEL CHARTS.

KENTUCKY
DEPARTMENT OF HIGHWAYS

DROP BOX INLET
TYPE 7

(LAYOUT AND STEEL PATTERN)

STANDARD DRAWING NO. RDB-007-02

SUBMITTED John B. Lackstrom — DIRECTOR DIVISION OF DESIGN — 12-1-99 DATE

APPROVED F. M. Yowell — STATE HIGHWAY ENGINEER — 12-1-99 DATE

DIMENSIONS AND ESTIMATE OF QUANTITIES

INLET SIZE			PIPE		④	CONCRETE		REINF. STEEL
NO.	X	Y	MAX. DIA.	SIDE	H	CUBIC YARDS	⑥ Q	LBS.
1	4′-6″	3′-0″	42″	X	5′-1½″	4.3	0.4	240
2		3′-6″				4.7	0.5	252
3		4′-0″				5.0		348
4		4′-6″		X OR Y		5.3		365
5	5′-0″	3′-0″	48″	X	5′-7″	4.9	0.5	255
6		3′-6″				5.2		268
7		4′-0″				5.6		372
8		4′-6″				5.9		390
9		5′-0″		X OR Y		6.3	0.6	416
10	5′-6″	3′-0″	54″	X	6′-1½″	5.4	0.5	262
11		3′-6″				5.8		276
12		4′-0″				6.2		388
13		4′-6″				6.6	0.6	407
14		5′-0″				7.0		434
15		5′-6″		X OR Y		7.4		453
16	6′-0″	3′-0″	60″	X	6′-8″	6.0	0.5	278
17		3′-6″				6.4		292
18		4′-0″				6.8	0.6	412
19		4′-6″				7.3		432
20		5′-0″				7.7		460
21		5′-6″				8.1		480
22		6′-0″		X OR Y		8.5	0.7	508

REFERENCE CHART

DIA. OF PIPE	D.B.I. TYPE 7 PIPE ON ″X″ SIDE OF INLET	D.B.I. TYPE 7 PIPE ON ″Y″ SIDE OF INLET	CONCRETE TO DEDUCT FOR EACH PIPE CUBIC YARDS
0	⑤	3′-0″	—
12″			0.1
15″-18″			
21″-24″			
27″			0.2
30″-33″		3′-6″	
36″		4′-0″	0.3
42″	4′-6″	4′-6″	0.4
48″	5′-0″	5′-0″	0.5
54″	5′-6″	5′-6″	0.6
60″	6′-0″	6′-0″	0.7

BILL OF REINFORCEMENT

NUMBER 5 REINFORCEMENT BARS

MARK	NO. ①	LGTH. FT.	LGTH. IN.	K FT.	K IN.
4′-6″ × 3′-0″					
A	18	3	10	2	4
B	4	8	0		
C	12	2	5	0	11
D	10	4	0		
E	4	5	6		
G	4	9	6		
4′-6″ × 3′-6″					
A	18	3	10	2	4
B	4	8	0		
C	14	2	5	0	11
D	10	4	0		
E	4	5	6		
G	4	9	6		
4′-6″ × 4′-0″					
A	20	3	10	2	4
B	4	9	0		
C	16	2	5	0	11
D	10	5	0		
E	10	5	6		
G	4	9	6		
J	18	2	2	0	8
4′-6″ × 4′-6″					
A	20	3	10	2	4
B	4	9	6		
C	18	2	5	0	11
D	10	5	6		
E	10	5	6		
G	4	9	6		
J	18	2	5	0	11
5′-0″ × 3′-0″					
A	20	3	10	2	4
B	4	8	0		
C	12	2	8	1	2
D	10	4	0		
E	4	6	0		
G	4	10	0		
5′-0″ × 3′-6″					
A	20	3	10	2	4
B	4	8	6		
C	14	2	8	1	2
D	10	4	6		
E	4	6	0		
G	4	10	0		
5′-0″ × 4′-0″					
A	22	3	10	2	4
B	4	9	0		
C	16	2	8	1	2
D	10	5	0		
E	10	6	0		
G	4	10	0		
J	20	2	2	0	8
5′-0″ × 4′-6″					
A	22	3	10	2	4
B	4	9	6		
C	18	2	8	1	2
D	10	5	6		
E	10	6	0		
G	4	10	0		
J	20	2	5	0	11
5′-0″ × 5′-0″					
A	24	3	10	2	4
B	4	10	0		
C	20	2	8	1	2
D	10	6	0		
E	10	6	0		
G	4	10	0		
J	20	2	8	1	2
5′-6″ × 3′-0″					
A	20	3	10	2	4
B	4	8	0		
C	12	2	11	1	5
D	10	4	0		
E	4	6	0		
G	4	10	6		
5′-6″ × 3′-6″					
A	20	3	10	2	4
B	4	8	6		
C	14	2	11	1	5
D	10	4	6		
E	4	6	6		
G	4	10	6		
5′-6″ × 4′-0″					
A	22	3	10	2	4
B	4	9	0		
C	16	2	11	1	5
D	10	5	0		
E	10	6	6		
G	4	10	6		
J	22	2	2	0	8
5′-6″ × 4′-6″					
A	22	3	10	2	4
B	4	9	6		
C	18	2	11	1	5
D	10	5	6		
E	10	6	6		
G	4	10	6		
J	22	2	5	0	11
5′-6″ × 5′-0″					
A	24	3	10	2	4
B	4	10	0		
C	20	2	11	1	5
D	10	6	0		
E	10	6	6		
G	4	10	6		
J	22	2	8	1	2
5′-6″ × 5′-6″					
A	24	3	10	2	4
B	4	10	6		
C	22	2	11	1	5
D	10	6	6		
E	10	6	6		
G	4	10	6		
J	22	2	11	1	5
6′-0″ × 3′-0″					
A	22	3	10	2	4
B	4	8	0		
C	12	3	2	1	8
D	10	4	0		
E	4	7	0		
G	4	11	0		
6′-0″ × 3′-6″					
A	22	3	10	2	4
B	4	8	6		
C	14	3	2	1	8
D	10	4	6		
E	4	7	0		
G	4	11	0		
6′-0″ × 4′-0″					
A	24	3	10	2	4
B	4	9	0		
C	16	3	2	1	8
D	10	5	0		
E	10	7	0		
G	4	11	0		
J	24	2	2	0	8
6′-0″ × 4′-6″					
A	24	3	10	2	4
B	4	9	6		
C	18	3	2	1	8
D	10	5	6		
E	10	7	0		
G	4	11	0		
J	24	2	5	0	11
6′-0″ × 5′-0″					
A	26	3	10	2	4
B	4	10	0		
C	20	3	2	1	8
D	10	6	0		
E	10	7	0		
G	4	11	0		
J	24	2	8	1	2
6′-0″ × 5′-6″					
A	26	3	10	2	4
B	4	10	6		
C	22	3	2	1	8
D	10	6	6		
E	10	7	0		
G	4	11	0		
J	24	2	11	1	5
6′-0″ × 6′-0″					
A	28	3	10	2	4
B	4	11	0		
C	24	3	2	1	8
D	10	7	0		
E	10	7	0		
G	4	11	0		
J	24	3	2	1	8

~ BAR NOTES ~

1. ① NUMBER OF BARS IN ONE D.B.I. TYPE 7.
2. DIMENSIONS ARE O. TO O. OF BARS.
3. ALL BARS ARE STRAIGHT EXCEPT THOSE SHOWN BELOW.

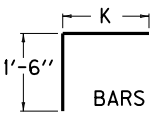

BARS A, C AND J

BENT BAR SHAPES

NOTES

④ BASED ON H AS EQUAL TO D+T+1′-2″.
⑤ FOR PIPE SIZES LESS THAN 42″ USE APPLICABLE CURRENT RDB-SERIES.
⑥ Q=CUBIC YARDS OF CONCRETE PER FOOT INCREASE OR DECREASE WHEN ″H″ VARIES FROM D+T+1′-2″.
7. NO DEDUCTIONS HAVE BEEN MADE FOR PIPE, SEE REFERENCE CHART FOR QUANTITIES TO DEDUCT.
8. ″T″ IS CONCRETE PIPE WALL THICKNESS OR METAL PIPE CORRUGATION DEPTH.
9. D=INSIDE DIAMETER OF PIPE.
10. A, B AND G BARS SPACED 1′-0″ O.C., C AND J BARS SPACED 6″ O.C., ALL OTHER BARS SPACED AS SHOWN.

USE WITH CUR. STD. DWG. RDB-007

KENTUCKY DEPARTMENT OF HIGHWAYS

DROP BOX INLET TYPE 7

(DIMENSION & STEEL CHARTS)

STANDARD DRAWING NO. RDB-008-03

SUBMITTED John B. Lockridge, DIRECTOR DIVISION OF DESIGN — DATE 12-1-99

APPROVED J. M. Yowell, STATE HIGHWAY ENGINEER — DATE 12-1-99

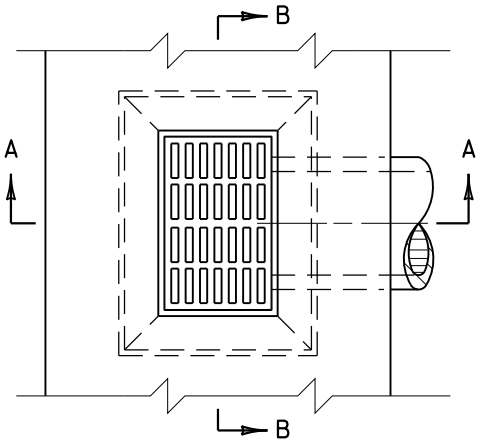

PLAN VIEW

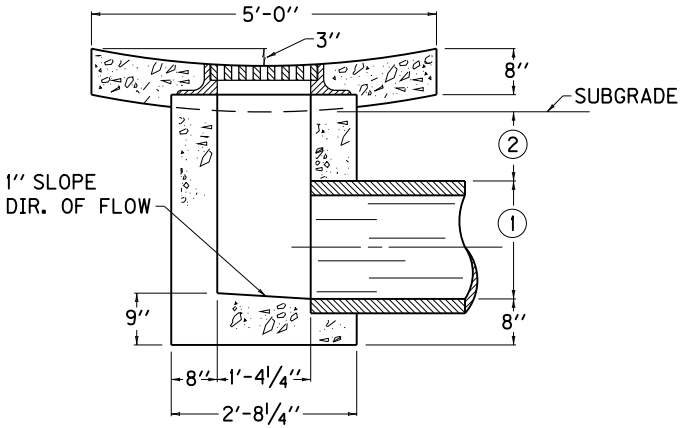

SECTION A-A

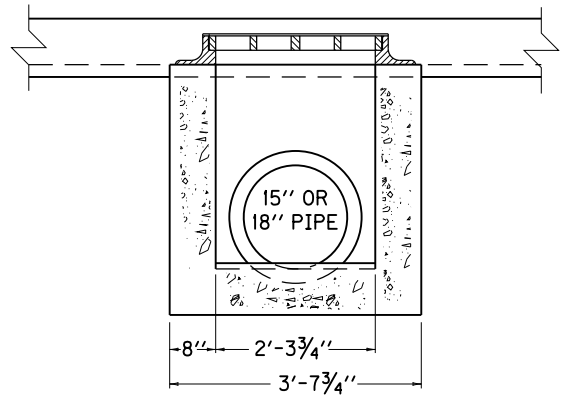

SECTION B-B

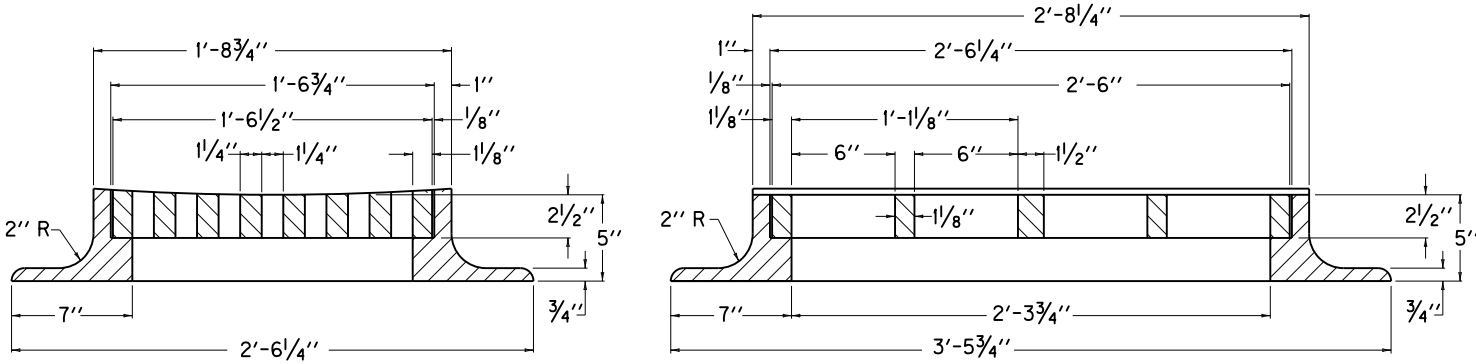

SECTIONAL VIEW OF FRAME AND GRATE

NOTES

PRIMARY USE: VALLEY GUTTER LOCATION

CONSTRUCT VALLEY GUTTER IN ACCORDANCE WITH CURRENT STD. DWG. RPM-100.

(1) 1'-5 1/4" FOR 15" PIPE
1'-8 1/2" FOR 18" PIPE

(2) 1'-0" MINIMUM COVER BELOW SUBGRADE.

APPROX. CONCRETE QUANTITIES

PIPE SIZE	MIN. HEIGHT	CU. YDS. CONC.
15"	3'-4"	0.90
18"	3'-8"	0.97
APPROXIMATE WEIGHTS		
FRAME 365 LBS.		
GRATE 185 LBS.		

NO DEDUCTIONS HAVE BEEN MADE FOR PIPE.

KENTUCKY
DEPARTMENT OF HIGHWAYS

DROP BOX INLET
TYPE 10

STANDARD DRAWING NO. RDB-010-06

SUBMITTED John B. Lachstrom — DIRECTOR DIVISION OF DESIGN — 12-1-99 DATE

APPROVED [signature] — STATE HIGHWAY ENGINEER — 12-1-99 DATE

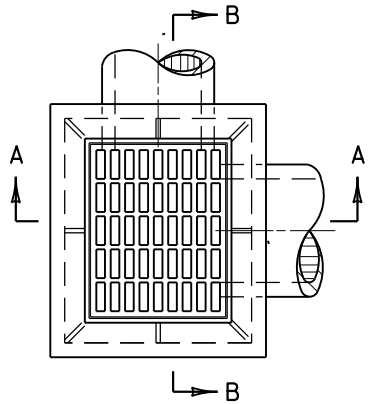

PLAN VIEW

APPROX. CONCRETE QUANTITIES

PIPE SIZE	MIN. HEIGHT	CU. YDS. CONC.
15''	2'-11''	0.89
18''	3'-3''	0.97
24''	4'-9''	1.38

APPROXIMATE WEIGHTS
FRAME 195 LBS.
GRATE 265 LBS.

NO DEDUCTIONS HAVE BEEN MADE FOR PIPE.

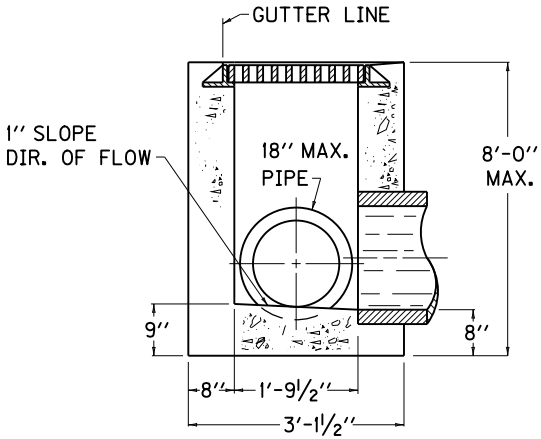

SECTION A-A

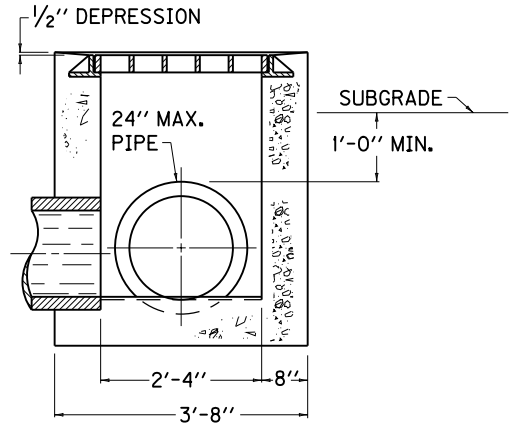

SECTION B-B

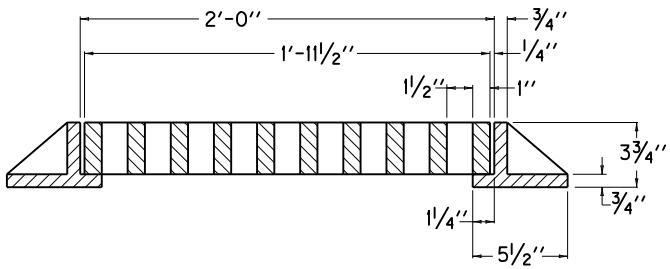

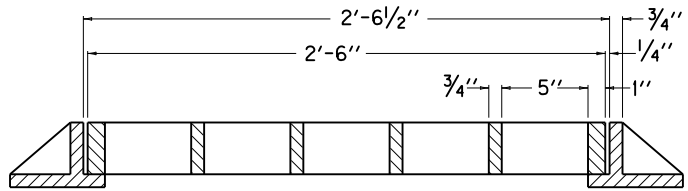

SECTIONAL VIEW OF FRAME AND GRATE

KENTUCKY
DEPARTMENT OF HIGHWAYS

DROP BOX
INLET TYPE 11

STANDARD DRAWING NO. RDB-011-07

SUBMITTED John B. Sachatzke — DIRECTOR DIVISION OF DESIGN — 12-1-99 DATE

APPROVED F. M. Yowell — STATE HIGHWAY ENGINEER — 12-1-99 DATE

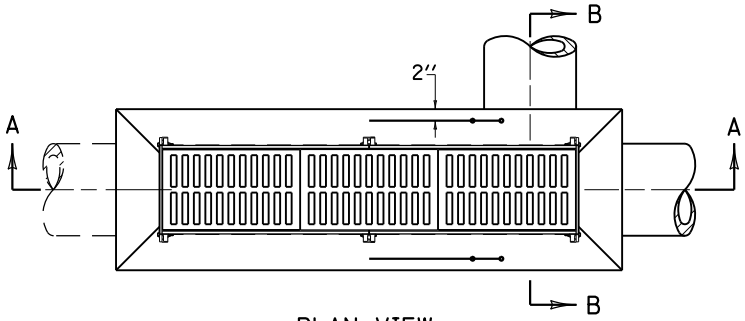

PLAN VIEW

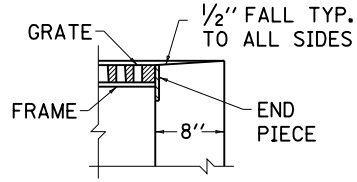

DETAIL ''A''

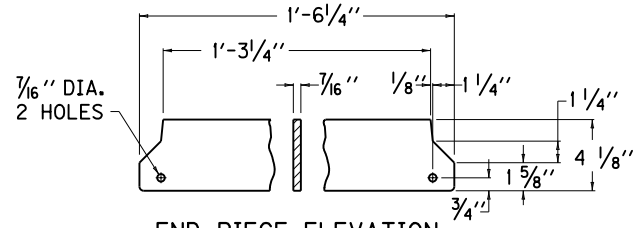

END PIECE ELEVATION

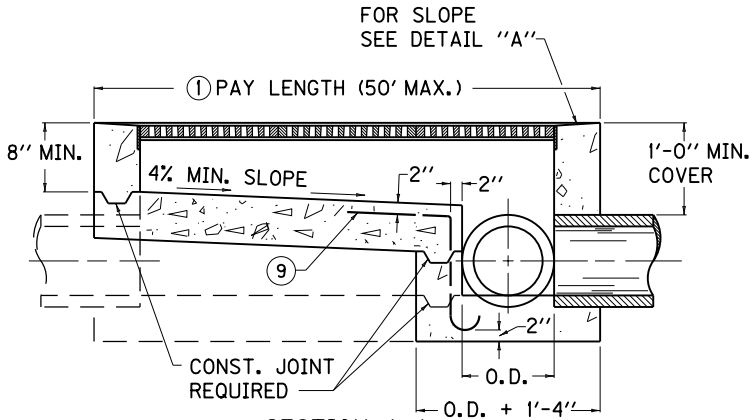

SECTION A-A

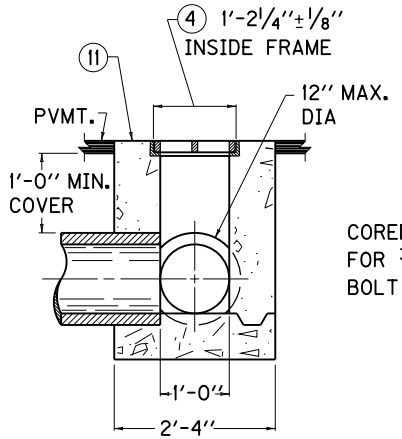

SECTION B-B

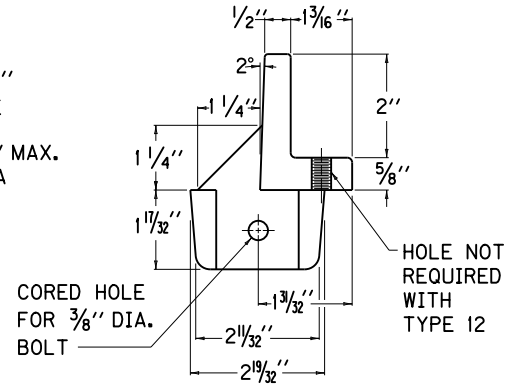

FRAME ELEVATION

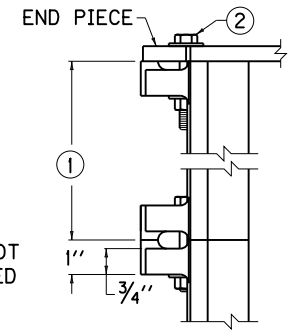

FRAME & END PIECE
PLAN VIEW

VARIATIONS OF
DRAINAGE PATTERNS

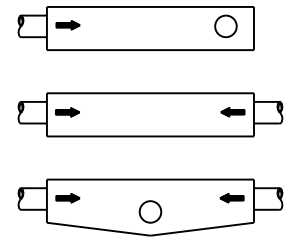

COMBINATIONS OF THE
ABOVE MAY BE REQUIRED
(SEE PIPE SECTIONS FOR
APPROPRIATE DETAILS)

~ NOTES ~

THE BID ITEM PER LIN. FT. SHALL BE: ''DROP BOX INLET TYPE ☆ ''.

☆ 12 WHEN THE GRATES ARE NOT TO BE BOLTED TO THE FRAME.
12A WHEN THE GRATES ARE TO BE BOLTED TO THE FRAME.

1 THE UNIT LENGTHS ARE 3'-0'' FOR THE FRAMES AND 1'-11 7/8'' FOR THE GRATES AND ARE TO BE CONSTRUCTED IN MULTIPLE LENGTHS OF 6'-0'' FOR TYPE 12 INLET.
THE UNIT LENGTHS ARE 2'-0'' FOR THE FRAMES AND 1'-11 7/8'' FOR THE GRATES AND ARE TO BE CONSTRUCTED IN MULTIPLE LENGTHS OF 2'-0'' FOR TYPE 12A INLET.

2 THE FRAME AND END PIECES SHALL BE ASSEMBLED WITH 3/8'' X 2 1/2'' HEX HEAD BOLTS, NUTS AND FLAT WASHERS (COMMERCIAL QUALITY).

3 WHEN DROP BOX INLET TYPE 12A IS A BID ITEM, THE GRATES SHALL BE BOLTED TO THE FRAME WITH FOUR 3/8''-16 X 2'' STAINLESS STEEL HEX BOLTS AND FLAT WASHERS (COMMERCIAL QUALITY).

4 THIS IS A CONTROL DIMENSION TO PREVENT FRAME FROM SPREADING.

5. THE WALLS AND BASE OF THE STRUCTURE SHALL BE 8'' THICK.

6. SEE PIPE SECTIONS IN THE PLANS FOR FLOW LINE ELEVATIONS, PIPE SIZES, AND OTHER PERTINENT DETAILS.

7. SECURITY DEVICES ARE REQUIRED FOR TYPE 12 ONLY.

8. APPROXIMATE WEIGHT OF CASTINGS:
FRAME 15 LBS. PER FOOT (BOTH SIDES)
GRATE 50 LBS. PER FOOT

11 TOP SLOPE OF INLET SHALL BE CONSTRUCTED TO MATCH SLOPE OF ADJACENT PAVEMENT.

12. THESE GRATES ARE BICYCLE FRIENDLY.

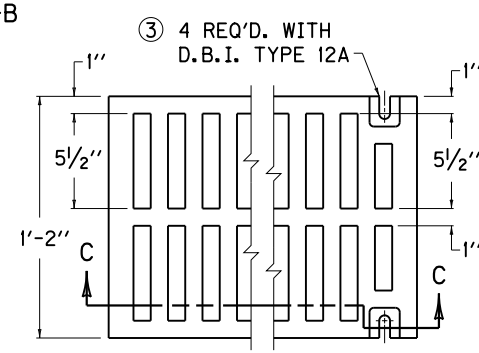

GRATE PLAN VIEW

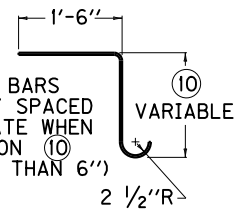

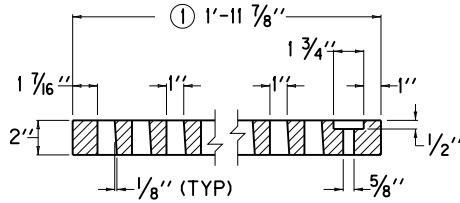

SECTION C-C

KENTUCKY
DEPARTMENT OF HIGHWAYS

DROP BOX INLET
TYPE 12 OR 12A

STANDARD DRAWING NO. RDB-012-09

SUBMITTED David Kratt — DIRECTOR DIVISION OF DESIGN — 11-21-07 DATE

APPROVED Marcelyn Mathews — STATE HIGHWAY ENGINEER — 11-21-07 DATE

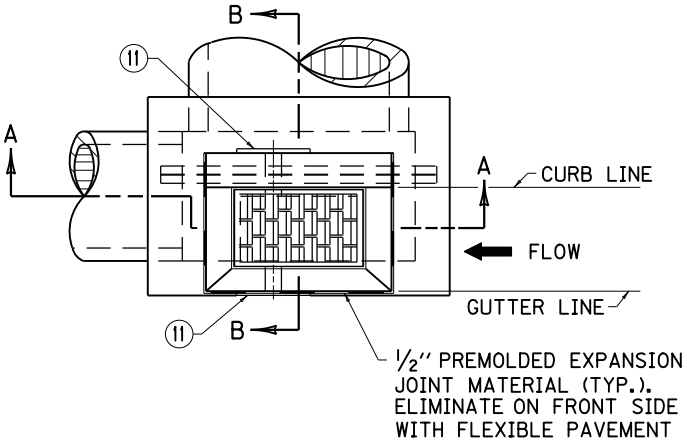

PLAN VIEW

NOTES

1. BOX INLET SHALL BE CONSTRUCTED IN TWO PHASES (BOTTOM AND TOP) AND MAY BE CONSTRUCTED IN A SAG VERTICAL CURVE OR ON GRADE.

   BID ITEM: DROP BOX INLET TYPE 13 (△) (✳)
   (△) = "S" (SAG CONDITION)
   (△) = "G" (GRADE CONDITION)
   (✳) = "T" (TOP PHASE)
   (✳) = "B" (BOTTOM PHASE)

   WITH NO "T" OR "B" SUFFIX A COMPLETE INLET IS REQUIRED.

2. FOR ILLUSTRATION PURPOSES THIS DRAWING DEPICTS A BOX LOCATED ON A GRADE CONDITION. SEE CURRENT STD. DWG. RDB-014, FOR DETAILS OF SAG AND GRADE CONDITIONS.
3. DIMENSION VARIES DEPENDING UPON LOCATION OF BOX; GRADE CONDITION = 2'-3", SAG CONDITION = 4'-11".
4. GRADE CONDITION: X = 2'-3" MIN. TO 5'-0" MAX., SAG CONDITION: X = 4'-11".
5. 2'-0" DESIRED COVER, 1'-0" MINIMUM COVER OVER PIPE AND/OR LID.
6. "t" IS CONCRETE PIPE WALL THICKNESS OR METAL CORRUGATION DEPTH.
7. ALL WALLS AND SLABS ARE 8" THICK UNLESS OTHERWISE SHOWN.
8. THICKNESS = CURB WIDTH + 2" (MINIMUM WIDTH 8" WITHOUT CURB). INLET MAY BE CONSTRUCTED WITH OR WITHOUT A CURB. THE CURB ON THE BOX SHALL BE CONSTRUCTED TO MATCH THE ADJOINING CURB WITH THE SAME CONSTRUCTION AND MATERIAL DETAILS (SEE CURRENT STD. DWG. RPM-100). THIS DRAWING DEPICTS A LIP CURB APPLICATION.
9. THE TOP PHASE SHALL BE CAST AFTER THE ADJOINING CURB AND GUTTER HAVE BEEN CAST.
10. SEE CURRENT STD. DWG. RDB-014, 015, 016, 018 AND RDB-019 FOR FRAME AND GRATE DETAIL, STEEL PATTERN, DIMENSIONS AND QUANTITIES.
11. FABRIC WRAPPED BACKFILL DRAIN, (ONE PER WEEP HOLE).
12. THIS GRATE IS BICYCLE FRIENDLY.

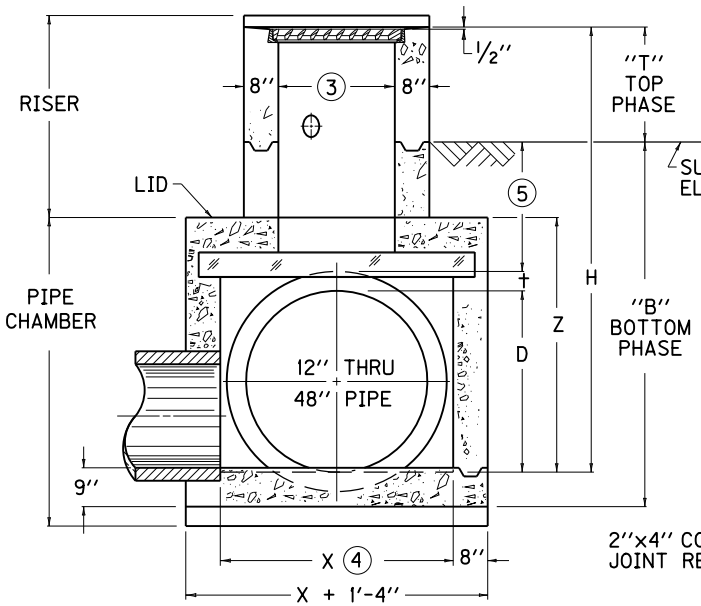

SECTION A-A

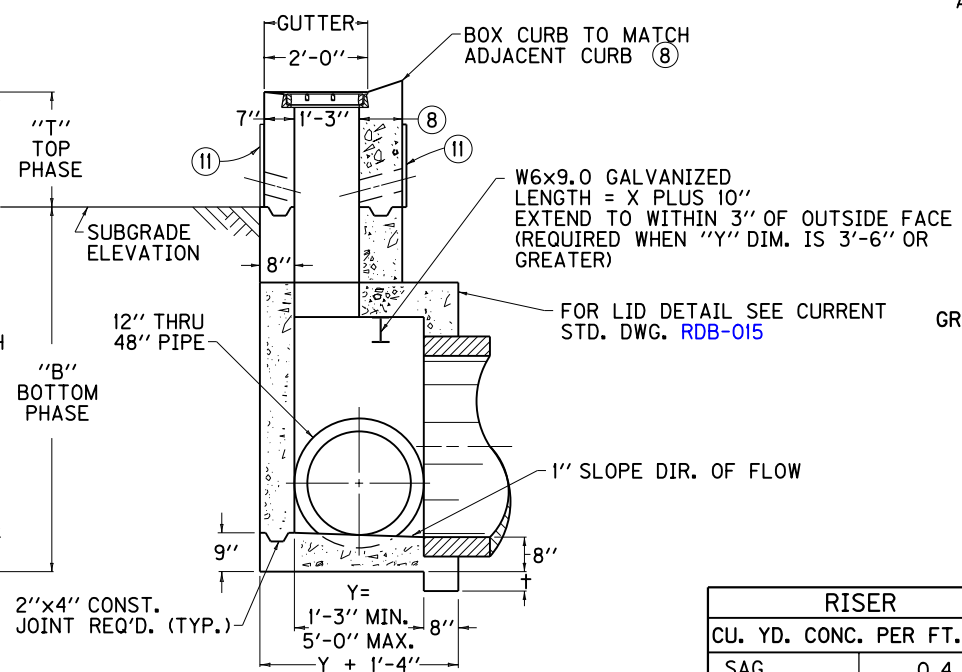

SECTION B-B

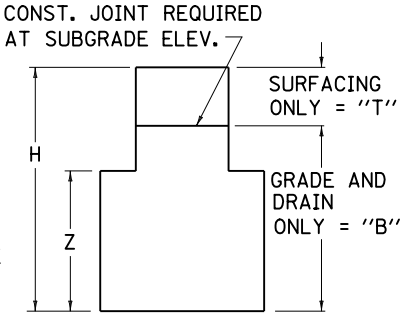

CONSTRUCTION SEQUENCE FOR GRADE & DRAIN AND/OR SURFACING

RISER	
CU. YD. CONC. PER FT. HT.	
SAG	0.4
GRADE	0.2

USE WITH CUR. STD. DWGS.: RDB-014, 015, 016, 017, 018, AND RDB-019

KENTUCKY DEPARTMENT OF HIGHWAYS

DROP BOX INLET TYPE 13

(DETAIL SHEET)

STANDARD DRAWING NO. RDB-013-06

SUBMITTED: DIRECTOR DIVISION OF DESIGN — DATE 11-21-07

APPROVED: STATE HIGHWAY ENGINEER — DATE 11-21-07

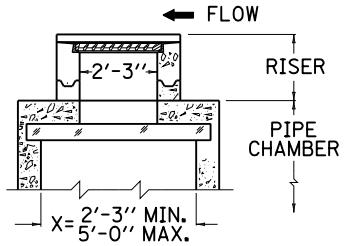

GRADE CONDITION
(1 GRATE & 1 FRAME REQ'D.)

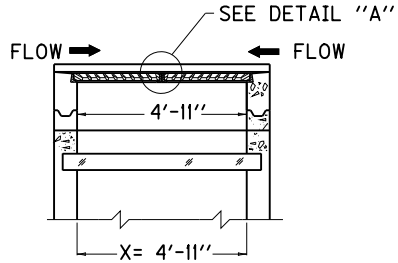

SAG CONDITION
(2 GRATES & 2 FRAMES REQ'D.)

NOTES

1. ALL FILLETS AND ROUNDS SHALL BE 1/8" R.
2. THE FRAME AND GRATE SHALL BE MANUFACTURED OF CAST GRAY IRON CONFORMING TO ASTM A-48 CLASS 35B.

APPROX. WEIGHT	
1 GRATE	160 LBS.
1 FRAME	70 LBS.

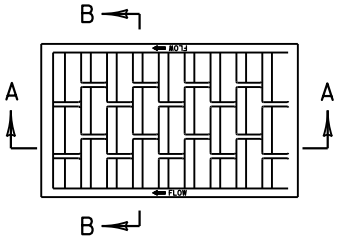

GRATE PLAN VIEW

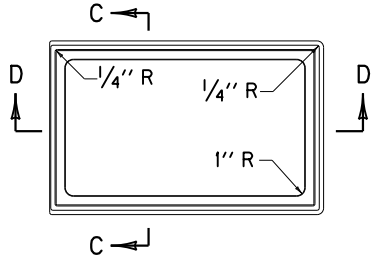

FRAME PLAN VIEW

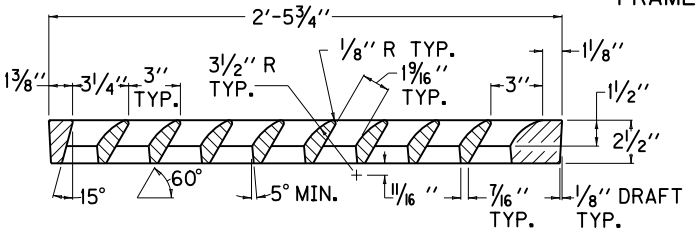

SECTION A-A

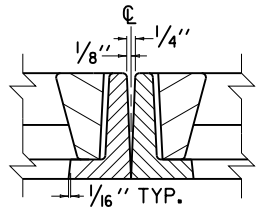

DETAIL "A"

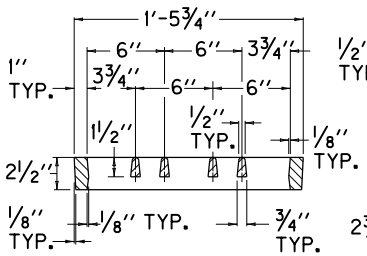

SECTION B-B

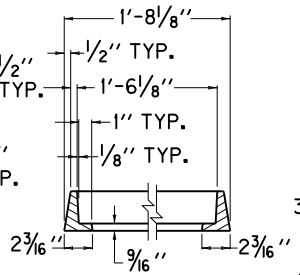

SECTION C-C

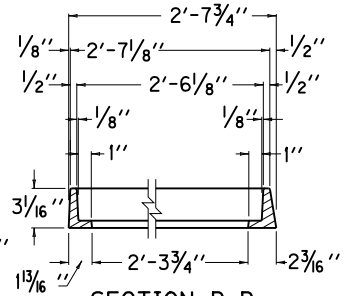

SECTION D-D

GRAY IRON CASTING

NOTES

1. THE 2 3/4" BAR SHALL BE NOTCHED TO RECEIVE THE 1" BAR.
2. THE FRAME AND GRATE SHALL BE ASSEMBLED WITH 2 (TWO) 1/2" X 2 1/4" STAINLESS HEX HEAD BOLTS AND NUTS (COMMERICAL QUALITY).
3. ALL STRUCTURAL STEEL SHALL CONFORM TO ASTM A-36.

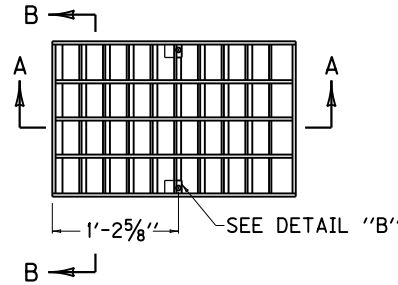

GRATE PLAN VIEW

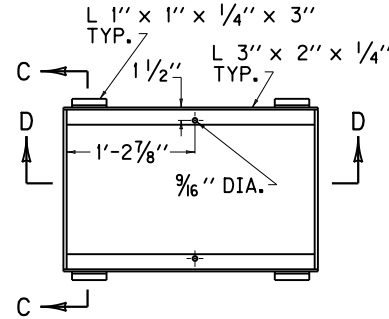

FRAME PLAN VIEW

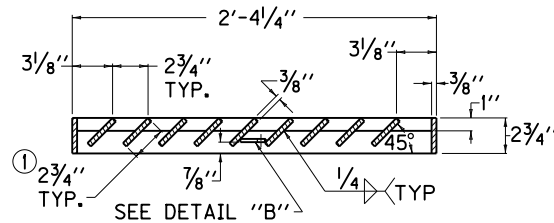

SECTION A-A

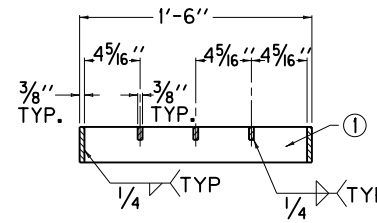

SECTION B-B

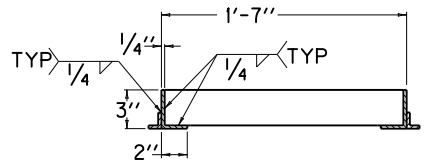

SECTION C-C

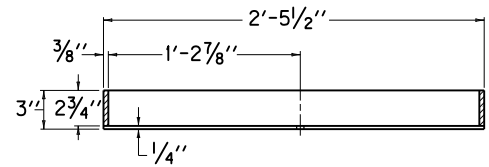

SECTION D-D

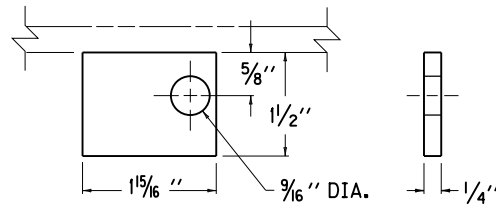

DETAIL "B"

3 STR. STEEL WTS.		
1 GRATE	TOTAL	1 FRAME
82 LBS.	126 LBS.	44 LBS.

STRUCTURAL STEEL

USE WITH CURRENT STD. DWGS. RDB-013, 015, 016, 017, 018, AND RDB-019 OR RDB-030, 031, 032, 033, 034 AND RDB-035

KENTUCKY
DEPARTMENT OF HIGHWAYS

DROP BOX INLET
TYPE 13 AND TYPE 16
(FRAME AND GRATE DETAILS)

STANDARD DRAWING NO. RDB-014-05

SUBMITTED John B. Lochstrie — DIRECTOR DIVISION OF DESIGN — 12-1-99 DATE

APPROVED F. M. Powell — STATE HIGHWAY ENGINEER — 12-1-99 DATE

REINFORCEMENT STEEL FOR 8″ LID

(GRADE CONDITION)

SIZE		NO. 5 STEEL BARS								
X	Y	BAR s		BAR †		BAR u		BAR v		LBS.
		QTY.	LIN. FT.	QTY.	LIN. FT.	QTY.	LIN. FT.	QTY.	LIN. FT.	
2′-3″	1′-3″	--	--	--	--	--	--	--	--	7
	2′-0″	4	3′-0″	8	3′-3″	--	--	10	1′-0″	57
	2′-6″		3′-6″	10					1′-6″	71
	3′-0″		4′-0″	12					2′-0″	85
	3′-6″		4′-6″	14					2′-6″	99
	4′-0″		5′-0″	16					3′-0″	113
	4′-6″		5′-6″	18					3′-6″	127
	5′-0″		6′-0″	20					4′-0″	142
2′-6″	1′-3″	8	2′-3″	4	3′-6″	--	--	--	--	40
	2′-0″		3′-0″	8				8	1′-0″	70
	2′-6″		3′-6″	10					1′-6″	85
	3′-0″		4′-0″	12					2′-0″	101
	3′-6″		4′-6″	14					2′-6″	116
	4′-0″		5′-0″	16					3′-0″	132
	4′-6″		5′-6″	18					3′-6″	148
	5′-0″		6′-0″	20					4′-0″	163
3′-0″	1′-3″	8	2′-3″	4	4′-0″	--	--	--	--	42
	2′-0″		3′-0″	8				10	1′-0″	76
	2′-6″		3′-6″	10					1′-6″	94
	3′-0″		4′-0″	12					2′-0″	111
	3′-6″		4′-6″	14					2′-6″	129
	4′-0″		5′-0″	16					3′-0″	147
	4′-6″		5′-6″	18					3′-6″	164
	5′-0″		6′-0″	20					4′-0″	182
3′-6″	1′-3″	12	2′-3″	4	4′-6″	12	0′-11″	--	--	65
	2′-0″		3′-0″	8				8	1′-0″	102
	2′-6″		3′-6″	10					1′-6″	122
	3′-0″		4′-0″	12					2′-0″	142
	3′-6″		4′-6″	14					2′-6″	161
	4′-0″		5′-0″	16					3′-0″	181
	4′-6″		5′-6″	18					3′-6″	201
	5′-0″		6′-0″	20					4′-0″	221
4′-0″	1′-3″	12	2′-3″	4	5′-0″	12	1′-2″	--	--	71
	2′-0″		3′-0″	8				10	1′-0″	111
	2′-6″		3′-6″	10					1′-6″	133
	3′-0″		4′-0″	12					2′-0″	155
	3′-6″		4′-6″	14					2′-6″	177
	4′-0″		5′-0″	16					3′-0″	199
	4′-6″		5′-6″	18					3′-6″	221
	5′-0″		6′-0″	20					4′-0″	243
4′-6″	1′-3″	16	2′-3″	4	5′-6″	12	1′-5″	--	--	85
	2′-0″		3′-0″	8				8	1′-0″	129
	2′-6″		3′-6″	10					1′-6″	153
	3′-0″		4′-0″	12					2′-0″	177
	3′-6″		4′-6″	14					2′-6″	201
	4′-0″		5′-0″	16					3′-0″	225
	4′-6″		5′-6″	18					3′-6″	249
	5′-0″		6′-0″	20					4′-0″	273

(GRADE CONDITION)

SIZE		NO. 5 STEEL BARS								
X	Y	BAR s		BAR †		BAR u		BAR v		LBS.
		QTY.	LIN. FT.	QTY.	LIN. FT.	QTY.	LIN. FT.	QTY.	LIN. FT.	
5′-0″	1′-3″	16	2′-3″	4	6′-0″	12	1′-8″	--	--	90
	2′-0″		3′-0″	8				10	1′-0″	138
	2′-6″		3′-6″	10					1′-6″	164
	3′-0″		4′-0″	12					2′-0″	191
	3′-6″		4′-6″	14					2′-6″	217
	4′-0″		5′-0″	16					3′-0″	243
	4′-6″		5′-6″	18					3′-6″	269
	5′-0″		6′-0″	20					4′-0″	295

REINFORCEMENT STEEL FOR 8″ LID

(SAG CONDITION)

SIZE		NO. 5 STEEL BARS								
X	Y	BAR s		BAR †		BAR u		BAR v		LBS.
		QTY.	LIN. FT.	QTY.	LIN. FT.	QTY.	LIN. FT.	QTY.	LIN. FT.	
4′-11″	1′-3″	--	--	--	--	--	--	--	--	7
	2′-0″	4	3′-0″	8	5′-11″	--	--	22	1′-0″	92
	2′-6″		3′-6″	10					1′-6″	118
	3′-0″		4′-0″	12					2′-0″	144
	3′-6″		4′-6″	14					2′-6″	169
	4′-0″		5′-0″	16					3′-0″	195
	4′-6″		5′-6″	18					3′-6″	221
	5′-0″		6′-0″	20					4′-0″	247

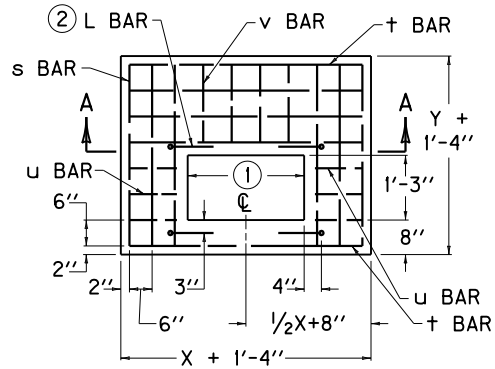

PLAN VIEW OF 8″ LID

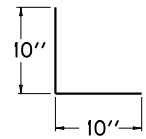

L BAR DETAIL

SECTION A-A

NOTES:

1. DIMENSION VARIES DEPENDING UPON LOCATION OF BOX : GRADE CONDITION= 2′-3″ SAG CONDITION= 4′-11″
2. IN ADDITION TO THE CHARTED STEEL, FOUR L BARS ARE REQUIRED IN THE LID AND ARE INCLUDED IN THE TOTALS.
3. CONCRETE QUANTITIES FOR LID ARE INCLUDED ON ″ DIMENSIONS AND ESTIMATE OF QUANTITIES FOR D.B.I. TYPE 13″. SEE CUR. STD. DWGS. RDB-016 AND RDB-017.
4. REINFORCEMENT SHALL HAVE A CLEAR DISTANCE OF 2″ FROM THE OUTSIDE FACE UNLESS OTHERWISE SHOWN.

USE WITH CUR. STD. DWGS.: RDB-013, 014, 016, 017, 018, AND RDB-019

KENTUCKY
DEPARTMENT OF HIGHWAYS

DROP BOX INLET
TYPE 13

(DETAIL & BAR CHART FOR LID)

STANDARD DRAWING NO. RDB-015-03

SUBMITTED John B. Lockstrom — DIRECTOR DIVISION OF DESIGN — 12-1-99 DATE

APPROVED J. M. Yowell — STATE HIGHWAY ENGINEER — 12-1-99 DATE

DIMENSIONS AND ESTIMATE OF QUANTITIES

(PIPE CHAMBER-GRADE CONDITION)

INLET SIZE ④ NO. ⑥	X	Y	MAX. PIPE DIA.	PIPE LOCATION	Z ①	CONCRETE CU. YD. ①②	CONCRETE Q ③
1	2'-3"	1'-3"	12"	X OR Y	2'-2"	0.8	0.2
2			15"	X	2'-5"		
3		2'-0"		X OR Y		1.0	0.3
4		1'-3"	18"	X	2'-9"	0.9	0.2
5		2'-0"		X OR Y		1.1	0.3
6		1'-3"	21"	X	3'-0"	1.0	0.2
7		2'-0"				1.2	0.3
8		2'-6"		X OR Y		1.3	
9			24"	Y	3'-3"	1.4	
10	2'-6"	1'-3"		X		1.1	
11		2'-0"				1.3	
12		2'-6"		X OR Y		1.5	
13	2'-3"	3'-0"	27"	Y	3'-6"	1.6	
14	2'-6"					1.7	
15	3'-0"	1'-3"		X		1.3	
16		2'-0"				1.6	
17		2'-6"				1.7	
18		3'-0"		X OR Y		1.9	0.4
19	2'-3"	3'-6"	30"	Y	4'-1"	2.0	0.3
20	2'-6"					2.1	0.4
21	3'-0"					2.3	
22	3'-6"	1'-3"		X	3'-10"	1.5	0.3
23		2'-0"				1.8	
24		2'-6"				2.0	0.4
25		3'-0"				2.2	
26		3'-6"		X OR Y	4'-1"	2.5	
27	2'-3"		33"	Y	4'-4"	2.1	0.3
28	2'-6"					2.2	0.4
29	3'-0"					2.4	
30	3'-6"	1'-3"		X	4'-1"	1.6	0.3
31		2'-0"				1.9	
32		2'-6"				2.1	0.4
33		3'-0"				2.3	
34		3'-6"		X OR Y	4'-4"	2.6	
35	2'-3"	4'-0"	36"	Y	4'-7"	2.4	
36	2'-6"					2.5	
37	3'-0"					2.7	
38	3'-6"					3.0	
39	4'-0"	1'-3"		X	4'-4"	1.8	0.3
40		2'-0"				2.2	0.4
41		2'-6"				2.4	
42		3'-0"				2.6	
43		3'-6"			4'-7"	3.0	
44		4'-0"		X OR Y		3.2	0.5
45	2'-3"	4'-6"	42"	Y	5'-2"	2.8	0.4
46	2'-6"					2.9	
47	3'-0"	4'-6"	42"	Y	5'-2"	3.2	0.4
48	3'-6"					3.4	0.5
49	4'-0"					3.7	
50	4'-6"	1'-3"		X	4'-11"	2.2	0.3
51		2'-0"				2.6	0.4
52		2'-6"				2.8	
53		3'-0"				3.1	
54		3'-6"			5'-2"	3.4	0.5
55		4'-0"				3.7	
56		4'-6"		X OR Y		4.0	
57	2'-3"	5'-0"	48"	Y	5'-8"	3.2	0.4
58	2'-6"					3.3	
59	3'-0"					3.6	0.5
60	3'-6"					3.9	
61	4'-0"					4.2	
62	4'-6"					4.5	
63	5'-0"	1'-3"		X	5'-5"	2.5	0.4
64		2'-0"				3.0	
65		2'-6"				3.2	
66		3'-0"				3.5	0.5
67		3'-6"			5'-8"	3.9	
68		4'-0"				4.2	
69		4'-6"				4.5	
70		5'-0"		X OR Y		4.8	0.6

REFERENCE CHART

DIA. OF PIPE	D.B.I. TYPE 13 PIPE ON "X" SIDE OF INLET	D.B.I. TYPE 13 PIPE ON "Y" SIDE OF INLET	CONCRETE TO DEDUCT FOR EACH PIPE CUBIC YARDS
0	2'-3"	1'-3"	----
12"			0.1
15"-18"		2'-0"	
21"		2'-6"	
24"	2'-6"		
27"	3'-0"	3'-0"	0.2
30"-33"	3'-6"	3'-6"	
36"	4'-0"	4'-0"	0.3
42"	4'-6"	4'-6"	0.4
48"	5'-0"	5'-0"	0.5

NOTES

① BASED ON Z AS EQUAL TO D++1'-0" WHEN "Y" DIMENSION IS LESS THAN 3'-6".
BASED ON Z AS EQUAL TO D++1'-3" WHEN "Y" DIMENSION IS 3'-6" OR GREATER.

② SEE REFERENCE CHART FOR QUANTITIES TO DEDUCT FOR PIPE.

③ Q = CU. YD. PER FOOT INCREASE OR DECREASE WHEN Z VARIES.

④ SEE CURRENT STD. DWGS. RDB-013 AND RDB-014 FOR DIMENSIONS.

5. SEE CUR. STD. DWG. RDB-018 AND RDB-019 FOR STEEL REINFORCEMENT IN PIPE CHAMBER AND RISER WHEN H = 8'-0" OR GREATER.

⑥ INLET IS SHOWN ON PLANS AS "DROP BOX INLET TYPE 13". FOLLOWING THIS IS A NUMBER AND A BOX HEIGHT. USE THIS NUMBER WITH THIS CHART.

7. SEE CURRENT STD. DWG. RDB-017 FOR DIMENSIONS AND ESTIMATE OF QUANTITIES WHEN BOXES ARE LOCATED IN A SAG CONDITION.

USE WITH CURRENT STD. DWGS. RDB-013, 014, 015, 017, 018, AND RDB-019

KENTUCKY
DEPARTMENT OF HIGHWAYS

DROP BOX INLET
TYPE 13
(PIPE CHAMBER-GRADE CONDTN.)

STANDARD DRAWING NO. RDB-016-02

SUBMITTED John B. Sachatello, DIRECTOR DIVISION OF DESIGN — DATE 12-1-99

APPROVED F. N. Powell, STATE HIGHWAY ENGINEER — DATE 12-1-99

DIMENSIONS AND ESTIMATE OF QUANTITIES
(PIPE CHAMBER-SAG CONDITION)

INLET SIZE ④			MAX. PIPE DIA.	PIPE LOCATION	Z ①	CONCRETE	
NO. ⑥	X	Y				CU. YD. ①②	Q ③
71	4'-11"	1'-3"	12"	X OR Y	2'-2"	1.2	0.4
72			15"	X	2'-5"	1.3	
73		2'-0"		X OR Y		1.6	
74		1'-3"	18"	X	2'-9"	1.4	
75		2'-0"		X OR Y		1.8	
76		1'-3"	21"	X	3'-0"	1.5	
77		2'-0"				1.9	
78		2'-6"		X OR Y		2.1	
79		1'-3"	24"	X	3'-3"	1.6	
80		2'-0"				2.0	
81		2'-6"		X OR Y		2.2	
82		1'-3"	27"	X	3'-6"	1.7	
83		2'-0"				2.1	
84		2'-6"				2.3	
85		3'-0"		X OR Y		2.5	0.5
86		1'-3"	30"	X	3'-10"	1.8	0.4
87		2'-0"				2.2	
88		2'-6"				2.4	
89		3'-0"				2.7	0.5
90		3'-6"		X OR Y	4'-1"	3.0	
91		1'-3"	33"	X		1.9	0.4
92		2'-0"				2.3	
93		2'-6"				2.5	
94		3'-0"				2.8	0.5
95		3'-6"		X OR Y	4'-4"	3.2	
96		1'-3"	36"	X		2.0	0.4
97		2'-0"				2.4	
98		2'-6"				2.7	
99		3'-0"				2.9	0.5
100		3'-6"			4'-7"	3.3	
101		4'-0"		X OR Y		3.5	
102		1'-3"	42"	X	4'-11"	2.2	0.4
103		2'-0"				2.6	
104		2'-6"				2.9	
105		3'-0"				3.2	0.5
106		3'-6"			5'-2"	3.6	
107		4'-0"				3.8	
108		4'-6"		X OR Y		4.1	
109		1'-3"	48"	X	5'-5"	2.4	0.4
110		2'-0"				2.8	
111		2'-6"				3.1	
112		3'-0"				3.4	0.5
113		3'-6"			5'-8"	3.8	
114		4'-0"				4.1	
115		4'-6"				4.4	
116		5'-0"		X OR Y		4.6	0.6

REFERENCE CHART

DIA. OF PIPE	D.B.I. TYPE 13		CONCRETE TO DEDUCT FOR EACH PIPE
	PIPE ON "X" SIDE OF INLET	PIPE ON "Y" SIDE OF INLET	CUBIC YARDS
0	4'-11"	1'-3"	----
12"			0.1
15"-18"		2'-0"	
21"		2'-6"	
24"			
27"		3'-0"	0.2
30"-33"		3'-6"	
36"		4'-0"	0.3
42"		4'-6"	0.4
48"		5'-0"	0.5

NOTES

① BASED ON Z AS EQUAL TO D+†+1'-0" WHEN "Y" DIMENSION IS LESS THAN 3'-6".
BASED ON Z AS EQUAL TO D+†+1'-3" WHEN "Y" DIMENSION IS 3'-6" OR GREATER.

② SEE REFERENCE CHART FOR QUANTITIES TO DEDUCT FOR PIPE .

③ Q = CU. YD. PER FOOT INCREASE OR DECREASE WHEN Z VARIES .

④ SEE CURRENT STD. DWGS. RDB-013 AND RDB-014 FOR DIMENSIONS.

5. SEE CUR. STD. DWG. RDB-018 AND RDB-019 FOR STEEL REINFORCEMENT IN PIPE CHAMBER AND RISER WHEN H = 8'-0" OR GREATER .

⑥ INLET IS SHOWN ON PLANS AS "DROP BOX INLET TYPE 13". FOLLOWING THIS IS A NUMBER AND A BOX HEIGHT. USE THIS NUMBER WITH THIS CHART .

7. SEE CURRENT STD. DWG. RDB-016 FOR DIMENSIONS AND ESTIMATE OF QUANTITIES WHEN BOXES ARE LOCATED IN A GRADE CONDITION.

USE WITH CURRENT STD. DWGS. RDB-013, 014, 015, 016, 018, AND RDB-019

KENTUCKY
DEPARTMENT OF HIGHWAYS

DROP BOX INLET
TYPE 13
(PIPE CHAMBER-SAG CONDITION)

STANDARD DRAWING NO. RDB-017-02

SUBMITTED John B. Lackstrom — DIRECTOR DIVISION OF DESIGN — 12-1-99 DATE

APPROVED F. M. Yowell — STATE HIGHWAY ENGINEER — 12-1-99 DATE

ADDITIONAL STEEL REINFORCEMENT REQUIREMENTS
(RISER, H = 8'-0'' TO 15'-0'', GRADE AND SAG CONDITION)

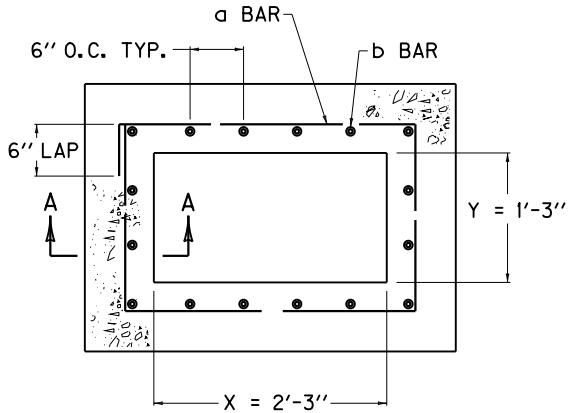

GRADE CONDITION

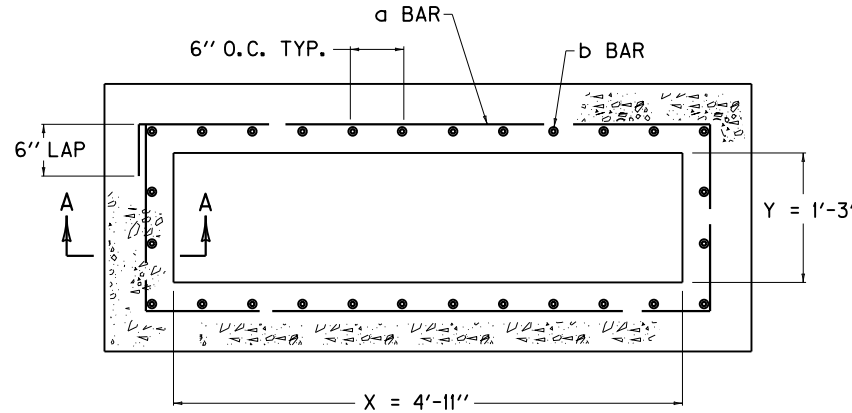

SAG CONDITION

NOTES

1. STEEL REINFORCEMENT SHALL HAVE A CLEAR DISTANCE OF 2'' FROM THE FACE UNLESS OTHERWISE SHOWN.
2. ALL STEEL REINFORCEMENT SHALL BE NO. 5 BARS.

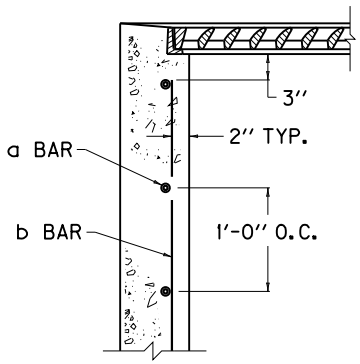

SECTION A-A

APPROXIMATE RISER QUANTITIES PER ONE FOOT IN HEIGHT							
COND-ITION	SIZE		BAR a		BAR b		LBS STEEL
	X	Y	QTY.	LIN. FT.	QTY.	LIN. FT.	
GRADE	2'-3''	1'-3''	3	9'-3''	16	1'-0''	26
SAG	4'-11''		3	14'-7''	28		44

USE WITH CURRENT STD. DWGS. RDB-013, 014, 015, 016, 017, AND RDB-019

KENTUCKY
DEPARTMENT OF HIGHWAYS

DROP BOX INLET
TYPE 13
(ADDITIONAL STEEL - RISER)

STANDARD DRAWING NO. RDB-018-03

SUBMITTED John B. Lachstrom — DIRECTOR DIVISION OF DESIGN — 12-1-99 DATE

APPROVED F. M. Yowell — STATE HIGHWAY ENGINEER — 12-1-99 DATE

① ADDITIONAL STEEL REINFORCEMENT REQUIRMENTS
(PIPE CHAMBER, H = 8' TO 15', GRADE CONDITION)

SIZE ②		NO. 5 STEEL BARS									
		③ BAR n		④ BAR p		BAR q		BAR r		LBS. ⑤	
X	Y	QTY.	LIN. FT.	QTY.	LIN. FT.	QTY.	LIN. FT.	QTY.	LIN. FT.	TOTAL	⑥
2'-3"	1'-3"	16	6'-0"	6	9'-3"	4	1'-9"	3	2'-9"	174	26
	2'-0"	20			10'-9"		2'-6"	4		214	32
	2'-6"	22			11'-9"		3'-0"	5		238	35
	3'-0"	24			12'-9"		3'-6"	6		262	38
	3'-6"	26			13'-9"		4'-0"	7		286	41
	4'-0"	28			14'-9"		4'-6"	8		309	45
	4'-6"	30			15'-9"		5'-0"	9		333	48
	5'-0"	32			16'-9"		5'-6"	10		357	51
2'-6"	1'-3"	20	6'-0"	6	9'-9"	5	1'-9"	3	3'-0"	205	31
	2'-0"	22			11'-3"		2'-6"	4		234	35
	2'-6"	24			12'-3"		3'-0"	5		258	38
	3'-0"	26			13'-3"		3'-6"	6		283	41
	3'-6"	28			14'-3"		4'-0"	7		307	44
	4'-0"	30			15'-3"		4'-6"	8		332	47
	4'-6"	32			16'-3"		5'-0"	9		356	50
	5'-0"	34			17'-3"		5'-6"	10		381	53
3'-0"	1'-3"	22	6'-0"	6	10'-9"	6	1'-9"	3	3'-6"	227	34
	2'-0"	24			12'-3"		2'-6"	4		257	38
	2'-6"	26			13'-3"		3'-0"	5		283	41
	3'-0"	28			14'-3"		3'-6"	6		308	44
	3'-6"	30			15'-3"		4'-0"	7		334	47
	4'-0"	32			16'-3"		4'-6"	8		359	50
	4'-6"	34			17'-3"		5'-0"	9		385	53
	5'-0"	36			18'-3"		5'-6"	10		410	57
3'-6"	1'-3"	24	6'-0"	6	11'-9"	7	1'-9"	3	4'-0"	249	37
	2'-0"	26			13'-3"		2'-6"	4		281	41
	2'-6"	28			14'-3"		3'-0"	5		307	44
	3'-0"	30			15'-3"		3'-6"	6		334	47
	3'-6"	32			16'-3"		4'-0"	7		360	50
	4'-0"	34			17'-3"		4'-6"	8		387	53
	4'-6"	36			18'-3"		5'-0"	9		414	57
	5'-0"	38			19'-3"		5'-6"	10		440	60
4'-0"	1'-3"	26	6'-0"	6	12'-9"	8	1'-9"	3	4'-6"	271	40
	2'-0"	28			14'-3"		2'-6"	4		304	44
	2'-6"	30			15'-3"		3'-0"	5		332	47
	3'-0"	32			16'-3"		3'-6"	6		359	50
	3'-6"	34			17'-3"		4'-0"	7		387	53
	4'-0"	36			18'-3"		4'-6"	8		415	57
	4'-6"	38			19'-3"		5'-0"	9		442	60
	5'-0"	40			20'-3"		5'-6"	10		470	63
4'-6"	1'-3"	28	6'-0"	6	13'-9"	9	1'-9"	3	5'-0"	293	44
	2'-0"	30			15'-3"		2'-6"	4		328	47
	2'-6"	32			16'-3"		3'-0"	5		356	50
	3'-0"	34			17'-3"		3'-6"	6		385	53
	3'-6"	36			18'-3"		4'-0"	7		414	57
	4'-0"	38			19'-3"		4'-6"	8		442	60
	4'-6"	40			20'-3"		5'-0"	9		471	63
	5'-0"	42			21'-3"		5'-6"	10		500	66

SIZE ②		NO. 5 STEEL BARS									
		③ BAR n		④ BAR p		BAR q		BAR r		LBS. ⑤	
X	Y	QTY.	LIN. FT.	QTY.	LIN. FT.	QTY.	LIN. FT.	QTY.	LIN. FT.	TOTAL	⑥
5'-0"	1'-3"	30	6'-0"	6	14'-9"	10	1'-9"	3	5'-6"	316	47
	2'-0"	32			16'-3"		2'-6"	4		351	50
	2'-6"	34			17'-3"		3'-0"	5		381	53
	3'-0"	36			18'-3"		3'-6"	6		410	57
	3'-6"	38			19'-3"		4'-0"	7		440	60
	4'-0"	40			20'-3"		4'-6"	8		470	63
	4'-6"	42			21'-3"		5'-0"	9		500	66
	5'-0"	44			22'-3"		5'-6"	10		529	69

① ADDITIONAL STEEL REINFORCEMENT REQUIRMENTS
(PIPE CHAMBER, H = 8' TO 15', SAG CONDITION)

SIZE ②		NO. 5 STEEL BARS									
		③ BAR n		④ BAR p		BAR q		BAR r		LBS. ⑤	
X	Y	QTY.	LIN. FT.	QTY.	LIN. FT.	QTY.	LIN. FT.	QTY.	LIN. FT.	TOTAL	⑥
4'-11"	1'-3"	28	6'-0"	6	14'-7"	10	1'-9"	3	5'-5"	302	44
	2'-0"	32			16'-1"		2'-6"	4		350	50
	2'-6"	34			17'-1"		3'-0"	5		379	53
	3'-0"	36			18'-1"		3'-6"	6		409	56
	3'-6"	38			19'-1"		4'-0"	7		438	60
	4'-0"	40			20'-1"		4'-6"	8		468	63
	4'-6"	42			21'-1"		5'-0"	9		498	66
	5'-0"	44			22'-1"		5'-6"	10		527	69

NOTES

① BASED ON "Z" AS EQUAL TO 6'-0".
② SEE CURRENT. STD. DWG. RDB-013 AND RDB-014 FOR LOCATION AND DIMENSIONS.
③ LENGTH OF n BAR IS ALWAYS SAME AS "Z" DIMENSION.
④ ADD OR SUBTRACT ONE p BAR PER EVEN FOOT VARIANCE FROM 6'-0" Z.
⑤ NO DEDUCTIONS HAVE BEEN MADE FOR PIPE.
⑥ ADD OR SUBTRACT LBS. STEEL PER FOOT VARIANCE FROM 6'-0" Z.
7. REINFORCEMENT SHALL HAVE A CLEAR DISTANCE OF 2" FROM THE FACE UNLESS OTHERWISE SHOWN.

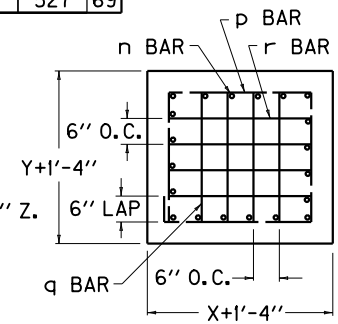

SECTION B-B

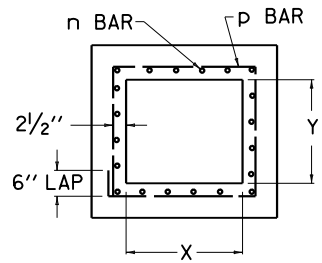

SECTION C-C

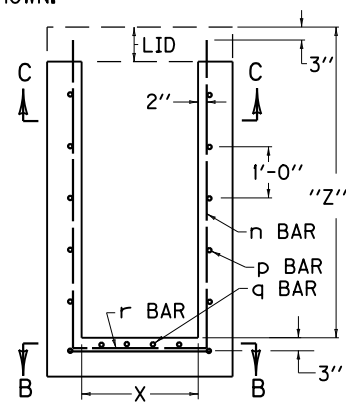

SECTION A-A

USE WITH CUR. STD. DWGS.: RDB-013, 014, 015, 016, 017, AND RDB-018

KENTUCKY
DEPARTMENT OF HIGHWAYS

DROP BOX INLET TYPE 13
(ADDITIONAL STEEL - CHAMBER)

STANDARD DRAWING NO. RDB-019-03

SUBMITTED John B. Lockstrom DIRECTOR DIVISION OF DESIGN 12-1-99 DATE
APPROVED J. M. Yowell STATE HIGHWAY ENGINEER 12-1-99 DATE

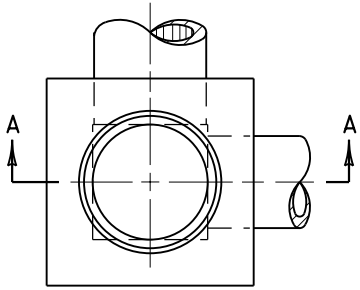

PLAN VIEW

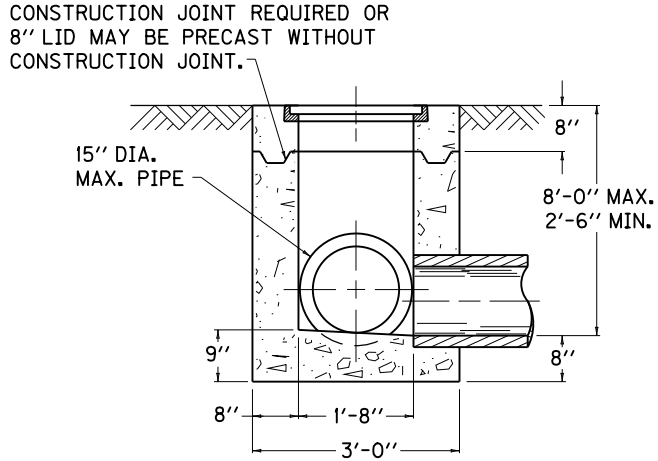

SECTION A-A

NOTES

1. TYPE 14 RADIAL GRATE HAS APPROXIMATELY 140 SQ. INCH OF TOTAL OPENING AREA.
2. APPROX. WEIGHT OF TYPE 14 ---- 95 LBS.
   APPROX. WEIGHT OF TYPE 15 ---- 120 LBS.
   APPROX. WEIGHT OF FRAME ------ 95 LBS.

BID ITEM SHALL BE:
DROP BOX INLET TYPE 14
OR
DROP BOX INLET TYPE 15

LIMITATIONS:
TYPE 14 -- FLUSH GRATE AND IS TRAVERSABLE.
TYPE 15 -- NON-TRAVERSABLE WITH MAXIMUM RESISTANCE TO CLOGGING.

PRIMARY USE:
(YARD SUMP)

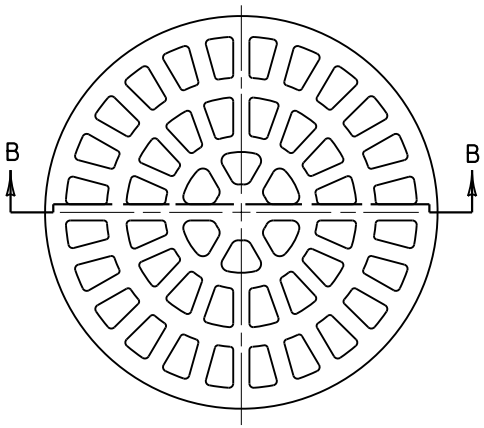

PLAN VIEW

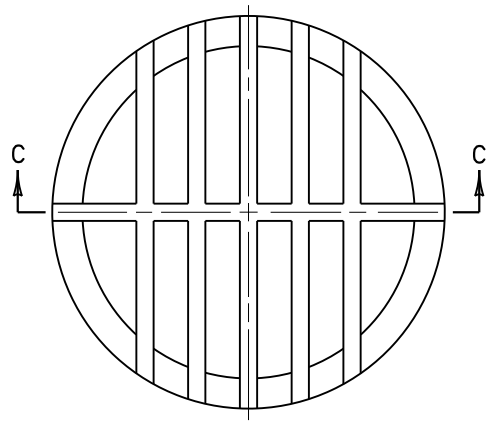

PLAN VIEW

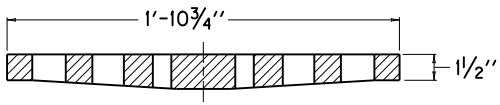

SECTION B-B TYPE 14
(RADIAL)

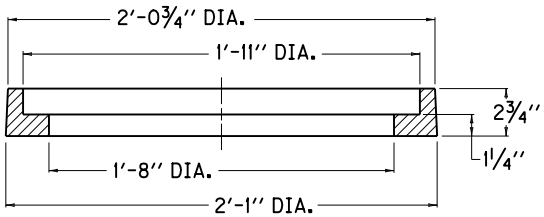

SECTIONAL DETAIL OF FRAME

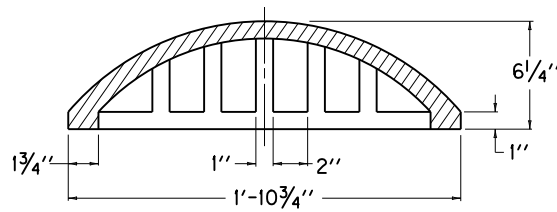

SECTION C-C TYPE 15
(BEEHIVE)

KENTUCKY
DEPARTMENT OF HIGHWAYS

DROP BOX INLET
TYPE 14 AND 15

STANDARD DRAWING NO. RDB-020-04

SUBMITTED John B. Lockstrida — DIRECTOR DIVISION OF DESIGN — 12-1-99 DATE

APPROVED F. M. Yowell — STATE HIGHWAY ENGINEER — 12-1-99 DATE

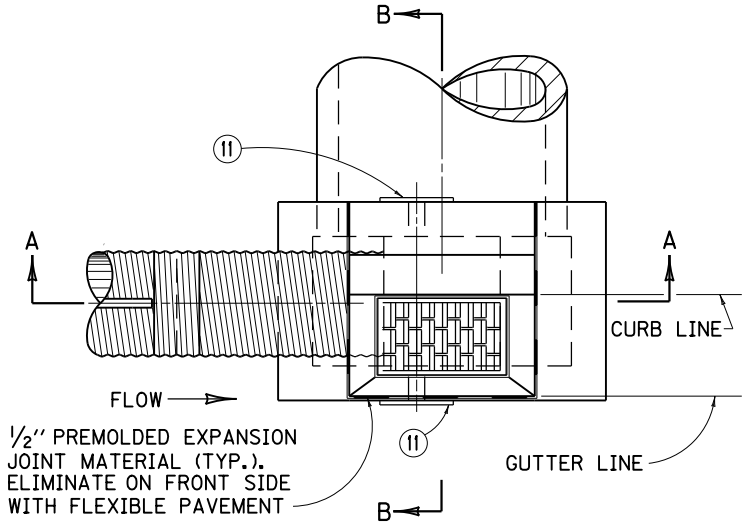

PLAN VIEW

NOTES

1. BOX INLET MAY BE CONSTRUCTED IN TWO PHASES (BOTTOM AND TOP) AND MAY BE CONSTRUCTED IN A SAG VERTICAL CURVE OR ON GRADE.

   BID ITEM: DROP BOX INLET TYPE 16 (△) (✳)

   (△) = "S" (SAG CONDITION)
   (△) = "G" (GRADE CONDITION)
   (✳) = "T" (TOP PHASE)
   (✳) = "B" (BOTTOM PHASE)

   WITH NO "T" OR "B" SUFFIX A COMPLETE INLET IS REQUIRED.

2. FOR ILLUSTRATION PURPOSES THIS DRAWING DEPICTS A BOX LOCATED ON A GRADE CONDITION. SEE CURRENT STD. DWG. RDB-014, FOR DETAILS OF SAG AND GRADE CONDITIONS.
3. DIMENSION VARIES DEPENDING UPON LOCATION OF BOX: GRADE CONDITION = 2'-3", SAG CONDITION = 4'-11".
4. GRADE CONDITION: X = 2'-3" MIN. TO 5'-0" MAX. , SAG CONDITION: X = 4'-11".
5. 2'-0" DESIRED COVER, 1'-0" MIN. COVER OVER PIPE AND/OR LID.
6. "t" IS CONCRETE PIPE WALL THICKNESS OR METAL CORRUGATION DEPTH.
7. ALL WALLS AND SLABS ARE 8" THICK UNLESS OTHERWISE SHOWN.
8. THE CURB ON THE BOX SHALL BE CONSTRUCTED TO MATCH THE ADJOINING CURB WITH THE SAME CONSTRUCTION AND MATERIAL DETAILS (SEE CURRENT STD. DWG. RPM-100). THIS DRAWING DEPICTS A LIP CURB APPLICATION.
9. THE TOP PHASE SHALL BE CAST AFTER THE ADJOINING CURB AND GUTTER HAVE BEEN CAST.
10. SEE CURRENT STD. DWG. RDB-014 FOR FRAME AND GRATE DETAIL. SEE CUR. STD. DWG. RDB-031 FOR STEEL PATTERN. SEE CUR. STD. DWG. RDB-033 FOR DIMENSIONS AND QUANTITIES.
11. FABRIC WRAPPED BACKFILL DRAIN, (ONE PER WEEP HOLE).
12. 2'-0" FOR 12", 15", AND 18" OR 2'-6" FOR 24" SLOTTED DRAIN PIPE.
13. MINIMUM HEIGHT FOR LONGITUDINAL PIPE SHALL BE H = 11" + INSIDE DIAMETER OF PIPE.
14. THIS GRATE IS BICYCLE FRIENDLY.

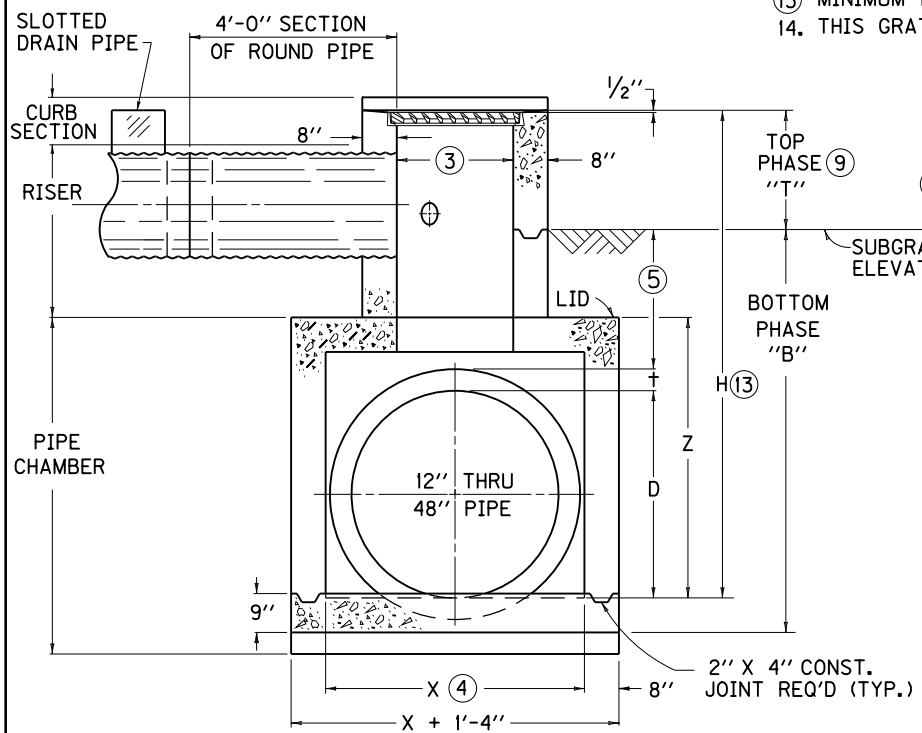

SECTION A-A

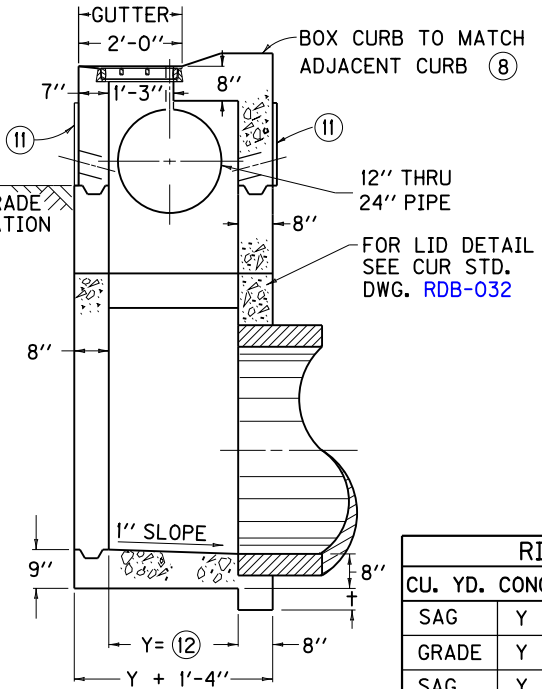

SECTION B-B

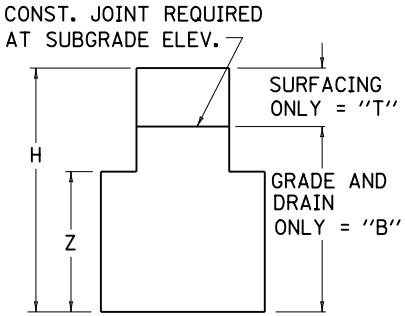

CONSTRUCTION SEQUENCE FOR GRADE & DRAIN AND/OR SURFACING

USE WITH CUR. STD. DWGS.: RDI-200, RDB-014, RDB-031, RDB-032, RDB-033, RDB-034, RDB-035

RISER		
CU. YD. CONC. PER FT. HT.		
SAG	Y = 2'-0"	0.4
GRADE	Y = 2'-0"	0.3
SAG	Y = 2'-6"	0.4
GRADE	Y = 2'-6"	0.3

KENTUCKY DEPARTMENT OF HIGHWAYS

DROP BOX INLET TYPE 16

(DETAIL SHEET)

STANDARD DRAWING NO. RDB-030-03

SUBMITTED: DIRECTOR DIVISION OF DESIGN — DATE 11-21-07

APPROVED: STATE HIGHWAY ENGINEER — DATE 11-21-07

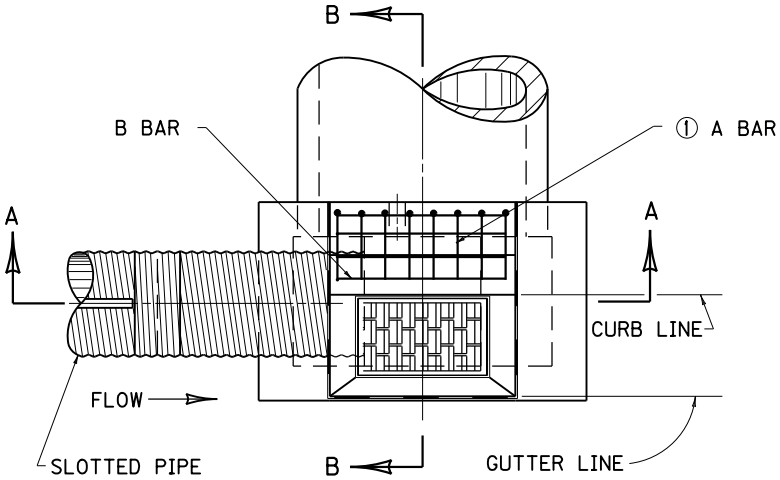

PLAN VIEW

NOTES

1. ① SLOTTED PIPE SIZE DENOTES WHICH A BAR TO USE, SEE STEEL CHART THIS DRAWING.
2. SEE CUR. STD. DWG. RDB-032 FOR LID REINFORCEMENT.
3. REINFORCEMENT SHALL HAVE A CLEAR DISTANCE OF 2'' FROM THE OUTSIDE FACE UNLESS OTHERWISE SHOWN.
4. SPACE A BARS APPROXIMATELY 6'' CENTER TO CENTER.
5. SPACE B BARS AS SHOWN.

STEEL REINFORCEMENT CHART

NO. 5 BAR	SLOTTED PIPE SIZE	CONDITION	QTY.	LGTH.	TOTAL LBS
A BAR	12'' THRU 18''	GRADE	8	2'-7''	22
B BAR			6	3'-3''	20
A BAR		SAGE	13	2'-7''	35
B BAR			6	5'-11''	37
A BAR	24''	GRADE	8	3'-10''	32
B BAR			6	3'-3''	20
A BAR		SAGE	13	3'-10''	52
B BAR			6	5'-11''	37

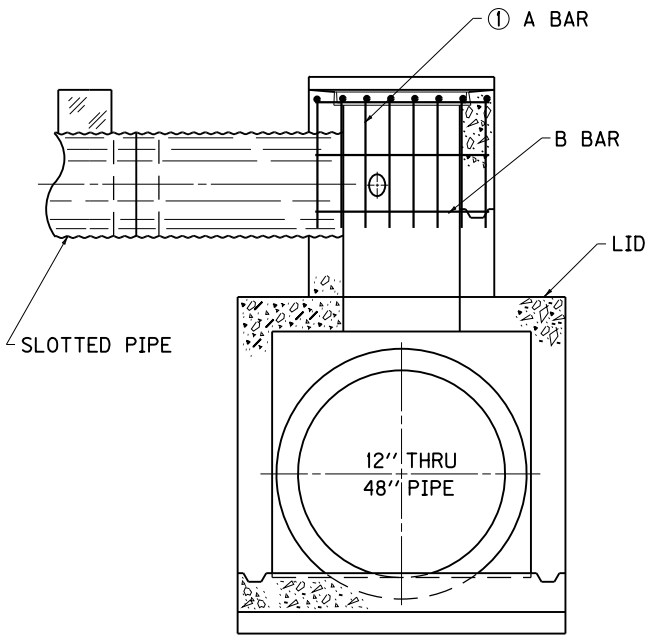

SECTION A-A

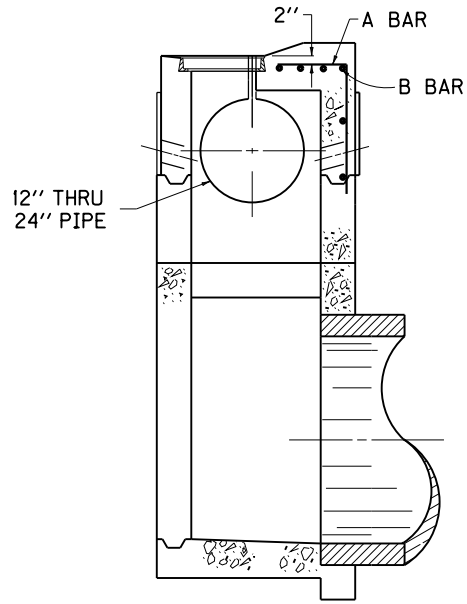

SECTION B-B

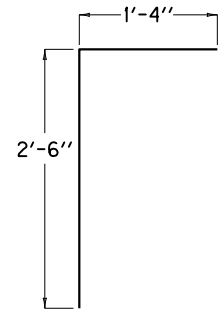

A BAR DETAIL
24'' PIPE

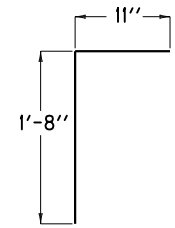

A BAR DETAIL
12'' - 18'' PIPE

USE WITH CUR. STD. DWGS.:
RDI-200, RDB-014, RDB-030, RDB-032, RDB-033, RDB-034, RDB-035

KENTUCKY
DEPARTMENT OF HIGHWAYS

DROP BOX INLET
TYPE 16
(STEEL SHEET)

STANDARD DRAWING NO. RDB-031-03

SUBMITTED John B. Lachstrom — DIRECTOR DIVISION OF DESIGN — 12-1-99 DATE

APPROVED F. M. Yowell — STATE HIGHWAY ENGINEER — 12-1-99 DATE

REINFORCEMENT STEEL FOR 8'' LID

(GRADE CONDITION)

SIZE		NO. 5 STEEL BARS						
X	Y	BAR s		BAR t		BAR u		LBS.
		QTY.	LIN. FT.	QTY.	LIN. FT.	QTY.	LIN. FT.	
2'-3''	2'-0''	4	3'-0''	4	3'-3''	--	--	33
	2'-6''		3'-6''			--	--	35
2'-6''	2'-0''	8	3'-0''		3'-6''	--	--	47
	2'-6''		3'-6''			--	--	51
3'-0''	2'-0''		3'-0''		4'-0''	--	--	49
	2'-6''		3'-6''			--	--	53
3'-6''	2'-0''	12	3'-0''		4'-6''	20	0'-11''	82
	2'-6''		3'-6''			24		89
4'-0''	2'-0''		3'-0''		5'-0''	20	1'-2''	86
	2'-6''		3'-6''			24		101
4'-6''	2'-0''	16	3'-0''		5'-6''	20	1'-5''	110
	2'-6''		3'-6''			24		124
5'-0''	2'-0''		3'-0''		6'-0''	20	1'-8''	117
	2'-6''		3'-6''			24		132

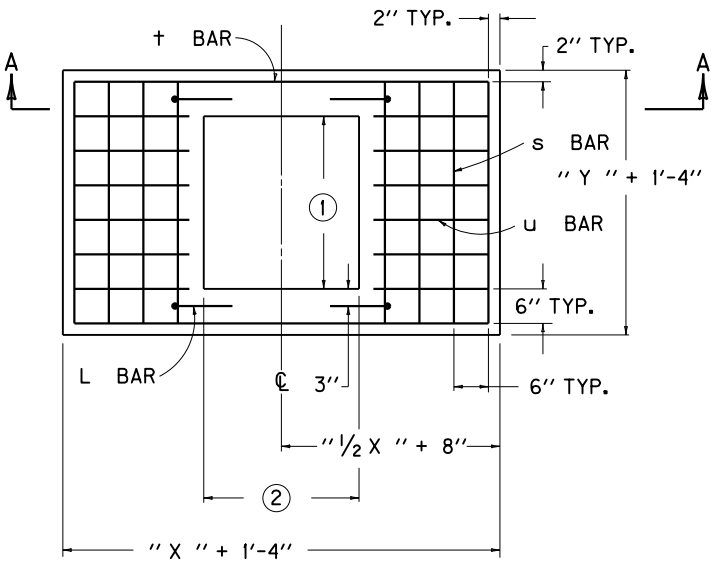

DETAIL OF 8'' LID
PLAN VIEW

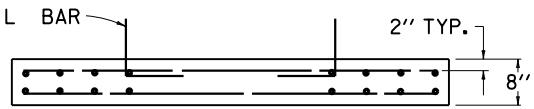

SECTION A-A

NOTES

1. 2'-0'' FOR 12'', 15'', AND 18'' OR 2'-6'' FOR 24'' SLOTTED DRAIN PIPE.
2. DIMENSION VARIES DEPENDING UPON LOCATION OF BOX :
   GRADE CONDITION = 2'-3''
   SAG CONDITION = 4'-11''
3. IN ADDITION TO THE CHARTED STEEL, FOUR L BARS ARE REQUIRED IN THE LID AND ARE INCLUDED IN THE TOTALS.
4. CONCRETE QUANTITIES FOR LID ARE INCLUDED ON '' DIMENSIONS AND ESTIMATE OF QUANTITIES FOR D.B.I. TYPE 16''. SEE CUR. STD. DWG. RDB-033
5. LID REINFORCING STEEL NOT REQUIRED IN SAG LOCATION.
6. REINFORCEMENT SHALL HAVE A CLEAR DISTANCE OF 2'' FROM THE OUTSIDE FACE UNLESS OTHERWISE SHOWN.

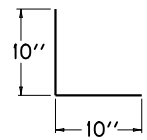

L BAR DETAIL

USE WITH CUR. STD. DWGS.:
RDI-200, RDB-014, RDB-030, RDB-031, RDB-033, RDB-034, RDB-035

KENTUCKY
DEPARTMENT OF HIGHWAYS

DROP BOX INLET
TYPE 16
(DETAIL & BAR CHART FOR LID)

STANDARD DRAWING NO. RDB-032-03

SUBMITTED John B. Lockstrike, DIRECTOR DIVISION OF DESIGN — DATE 12-1-99

APPROVED F. N. Yowell, STATE HIGHWAY ENGINEER — DATE 12-1-99

DIMENSIONS AND ESTIMATE OF QUANTITIES
(GRADE CONDITION)

INLET SIZE ④			MAX. PIPE DIA.	LOCATION	Z ①	CONCRETE	
NO. ⑥	X	Y				CU. YD. ①②	Q ③
1	2′-3″	2′-0″	12″	X OR Y	2′-2″	0.9	0.3
2			15″		2′-5″	1.0	
3			18″		2′-9″	1.1	
4			21″	X	3′-0″		
5		2′-6″		X OR Y		1.3	
6			24″	Y	3′-3″		
7	2′-6″	2′-0″		X			
8		2′-6″		X OR Y		1.4	
9	3′-0″	2′-0″	27″	X	3′-6″	1.5	
10		2′-6″				1.7	
11	3′-6″	2′-0″	30″		3′-10″	1.8	
12		2′-6″				2.0	0.4
13		2′-0″	33″		4′-1″	1.9	0.3
14		2′-6″				2.0	0.4
15	4′-0″	2′-0″	36″		4′-4″	2.1	
16		2′-6″				2.3	
17	4′-6″	2′-0″	42″		4′-11″	2.5	
18		2′-6″				2.7	
19	5′-0″	2′-0″	48″		5′-5″	2.9	
20		2′-6″				3.2	

DIMENSIONS AND ESTIMATE OF QUANTITIES
(SAG CONDITION)

INLET SIZE ④			MAX. PIPE DIA.	LOCATION	Z ①	CONCRETE	
NO. ⑥	X	Y				CU. YD. ①②	Q ③
21	4′-11″	2′-0″	12″	X OR Y	2′-2″	1.4	0.4
22			15″		2′-5″	1.5	
23			18″		2′-9″	1.7	
24			21″	X	3′-0″	1.8	
25		2′-6″		X OR Y		1.9	
26		2′-0″	24″	X	3′-3″		
27		2′-6″		X OR Y		2.0	
28		2′-0″	27″	X	3′-6″		
29		2′-6″				2.1	
30		2′-0″	30″		3′-10″		
31		2′-6″				2.3	
32		2′-0″	33″		4′-1″	2.2	
33		2′-6″				2.4	
34		2′-0″	36″		4′-4″	2.3	
35		2′-6″				2.5	
36		2′-0″	42″		4′-11″		
37		2′-6″				2.8	
38		2′-0″	48″		5′-5″		
39		2′-6″				3.0	

NOTES

① BASED ON Z AS EQUAL TO D+++12″ .
② SEE REFERENCE CHART FOR QUANTITIES TO DEDUCT FOR PIPE .
③ Q = CU. YD. PER FOOT INCREASE OR DECREASE WHEN Z VARIES .
④ SEE CUR. STD. DWG. RDB-030 FOR DIMENSIONS.
5. SEE CUR. STD. DWG. RDB-034 AND RDB-035 FOR STEEL REINFORCEMENT IN PIPE CHAMBER AND RISER WHEN H = 8′-0″ OR GREATER .
⑥ INLET IS SHOWN ON PLANS AS ″DROP BOX INLET TYPE 16″. FOLLOWING THIS IS A NUMBER AND A BOX HEIGHT. USE THIS NUMBER WITH THIS CHART .

REFERENCE CHART
(GRADE CONDITION)

DIA. OF PIPE	D.B.I. TYPE 16		CONCRETE TO DEDUCT FOR EACH PIPE
	PIPE ON ″X″ SIDE OF INLET	PIPE ON ″Y″ SIDE OF INLET	CUBIC YARDS
0	2′-3″	2′-0″	----
12″			0.1
15″-18″			
21″		2′-6″	
24″	2′-6″		
27″	3′-0″	----	0.2
30″-33″	3′-6″		
36″	4′-0″		0.3
42″	4′-6″		0.4
48″	5′-0″		0.5

REFERENCE CHART
(SAG CONDITION)

DIA. OF PIPE	D.B.I. TYPE 16		CONCRETE TO DEDUCT FOR EACH PIPE
	PIPE ON ″X″ SIDE OF INLET	PIPE ON ″Y″ SIDE OF INLET	CUBIC YARDS
0	4′-11″	2′-0″	----
12″			0.1
15″-18″			
21″		2′-6″	
24″			
27″		----	0.2
30″-33″			
36″			0.3
42″			0.4
48″			0.5

USE WITH CUR. STD. DWGS.:
RDI-200, RDB-014, RDB-030, RDB-031, RDB-032, RDB-034, RDB-035

KENTUCKY
DEPARTMENT OF HIGHWAYS

DROP BOX INLET
TYPE 16
(DIMENSIONS & ESTIMATE OF QUANTITIES)

STANDARD DRAWING NO. RDB-033-02

SUBMITTED John B. Sachatello — DIRECTOR DIVISION OF DESIGN — DATE 12-1-99
APPROVED F. M. Newell — STATE HIGHWAY ENGINEER — DATE 12-1-99

ADDITIONAL STEEL REINFORCEMENT REQUIREMENTS

(RISER, H = 8'-0" TO 15'-0", GRADE AND SAG CONDITION)

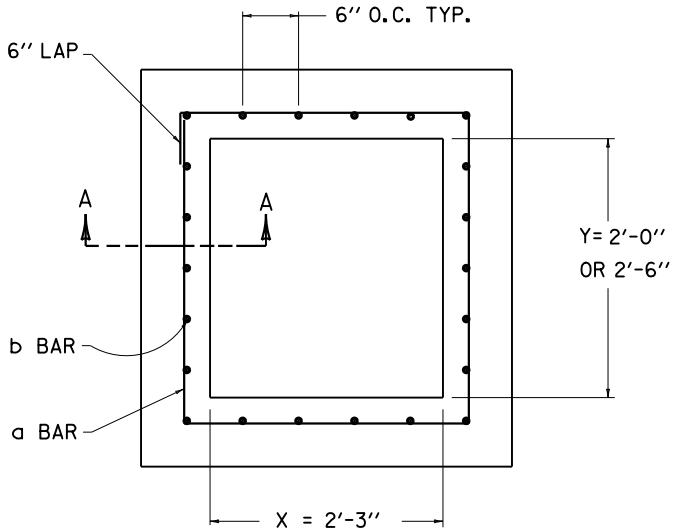

GRADE CONDITION

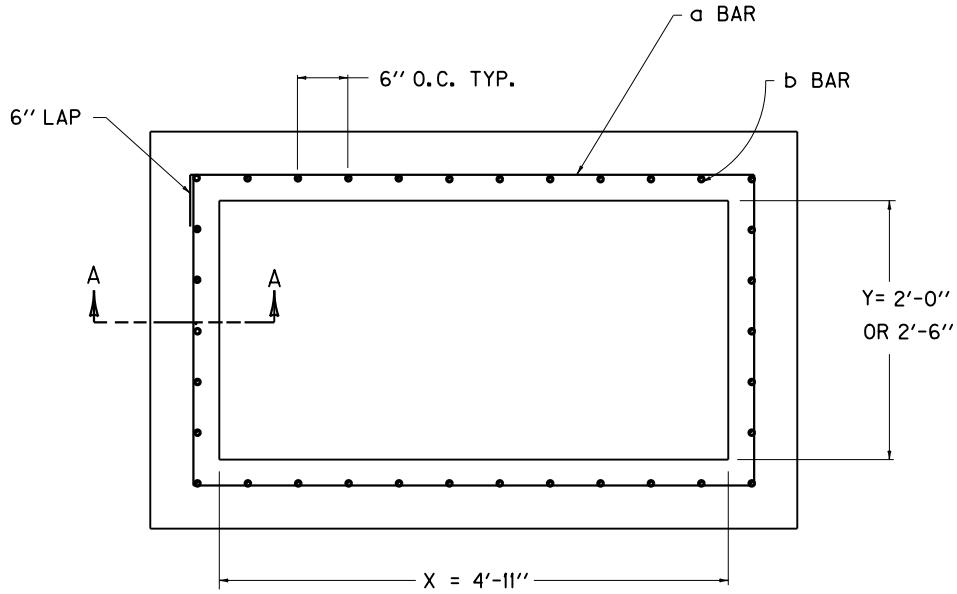

SAG CONDITION

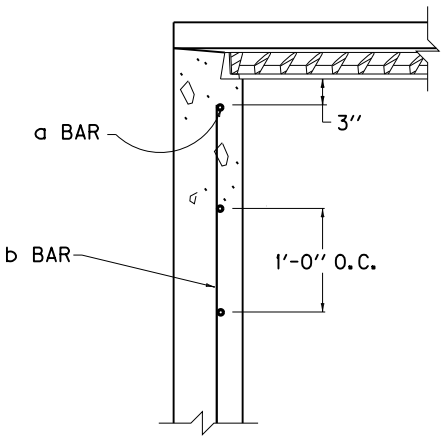

SECTION A-A

APPROXIMATE RISER QUANTITIES PER FOOT IN HEIGHT-NO. 5 BARS							
COND-ITION	SIZE		BAR a		BAR b		LBS STEEL
	X	Y	QTY.	LIN. FT.	QTY.	LIN. FT.	
GRADE	2'-3"	2'-0"	1	10'-9"	20	1'-0"	32
		2'-6"	1	11'-6"	22		35
SAG	4'-11"	2'-0"	1	16'-1"	32		50
		2'-6"	1	17'-1"	34		53

USE WITH CUR. STD. DWGS.:
RDI-200, RDB-014, RDB-030, RDB-031, RDB-032, RDB-033, RDB-035

KENTUCKY
DEPARTMENT OF HIGHWAYS

DROP BOX INLET
TYPE 16
(ADDITIONAL STEEL- RISER)

STANDARD DRAWING NO. RDB-034-03

SUBMITTED John B. Lochstrube — DIRECTOR DIVISION OF DESIGN — 12-1-99 DATE

APPROVED J. M. Yowell — STATE HIGHWAY ENGINEER — 12-1-99 DATE

① ADDITIONAL STEEL REINFORCEMENT FOR PIPE CHAMBER

(H = 8′ TO 15′, GRADE CONDITION)

SIZE ②		NO. 5 STEEL BARS									
X	Y	BAR n ③		BAR p ④		BAR q		BAR r		LBS. ⑤	
		QTY.	LIN. FT.	QTY.	LIN. FT.	QTY.	LIN. FT.	QTY.	LIN. FT.	TOTAL	⑥
2′-3″	2′-0″	20	6′-0″	6	10′-9″	4	2′-6″	4	2′-9″	214	32
	2′-6″	22			11′-9″		3′-0″	5		238	35
2′-6″	2′-0″				11′-3″	5	2′-6″	4	3′-0″	234	
	2′-6″	24			12′-3″		3′-0″	5		258	38
3′-0″	2′-0″					6	2′-6″	4	3′-6″	257	
	2′-6″	26			13′-3″		3′-0″	5		283	41
3′-6″	2′-0″					7	2′-6″	4	4′-0″	281	
	2′-6″	28			14′-3″		3′-0″	5		307	44
4′-0″	2′-0″					8	2′-6″	4	4′-6″	304	
	2′-6″	30			15′-3″		3′-0″	5		332	47
4′-6″	2′-0″					9	2′-6″	4	5′-0″	328	
	2′-6″	32			16′-3″		3′-0″	5		356	50
5′-0″	2′-0″					10	2′-6″	4	5′-6″	351	
	2′-6″	34			17′-3″		3′-0″	5		381	53

① ADDITIONAL STEEL REINFORCEMENT FOR PIPE CHAMBER

(H = 8′ TO 15′, SAG CONDITION)

SIZE ②		NO. 5 STEEL BARS									
X	Y	BAR n ③		BAR p ④		BAR q		BAR r		LBS. ⑤	
		QTY.	LIN. FT.	QTY.	LIN. FT.	QTY.	LIN. FT.	QTY.	LIN. FT.	TOTAL	⑥
4′-11″	2′-0″	32	6′-0″	6	16′-1″	10	2′-6″	4	5′-5″	350	50
	2′-6″	34			17′-1″		3′-0″	5		379	53

NOTES

1. BASED ON "Z" AS EQUAL TO 6′-0″.
2. SEE CUR. STD. DWG. RDB-030 FOR LOCATION AND DIMENSIONS.
3. LENGTH OF n BAR IS ALWAYS SAME AS "Z" DIMENSION.
4. ADD OR SUBTRACT ONE p BAR PER EVEN FOOT VARIANCE FROM 6′-0″ Z .
5. NO DEDUCTIONS HAVE BEEN MADE FOR PIPE .
6. ADD OR SUBTRACT LBS. STEEL PER FT. VARIANCE FROM 6′-0″ Z .
7. REINFORCEMENT SHALL HAVE A CLEAR DISTANCE OF 2″ FROM THE FACE UNLESS OTHERWISE SHOWN .

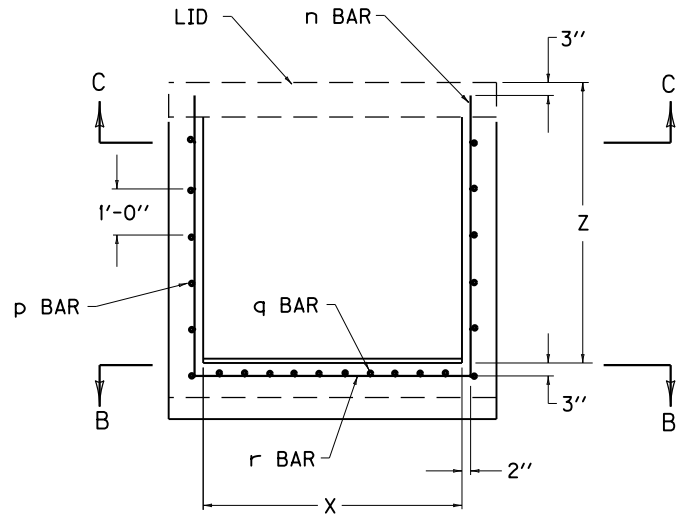

SECTION A-A

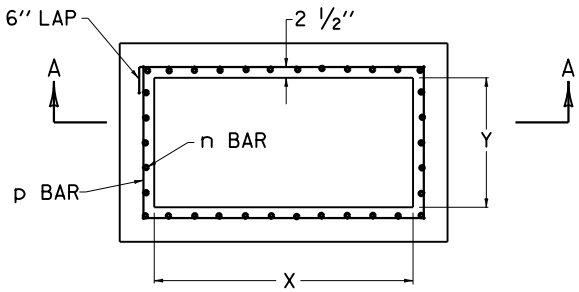

SECTION C-C

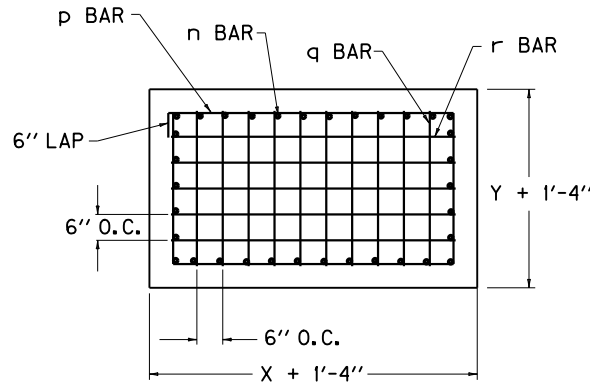

SECTION B-B

USE WITH CUR. STD. DWGS.:
RDI-200, RDB-014, RDB-030, RDB-031, RDB-032, RDB-033, RDB-034

KENTUCKY
DEPARTMENT OF HIGHWAYS

DROP BOX INLET
TYPE 16
(ADDITIONAL STEEL- CHAMBER)

STANDARD DRAWING NO. RDB-035-03

SUBMITTED John B. Lockstrike — DIRECTOR DIVISION OF DESIGN — 12-1-99 DATE

APPROVED F. N. Newell — STATE HIGHWAY ENGINEER — 12-1-99 DATE

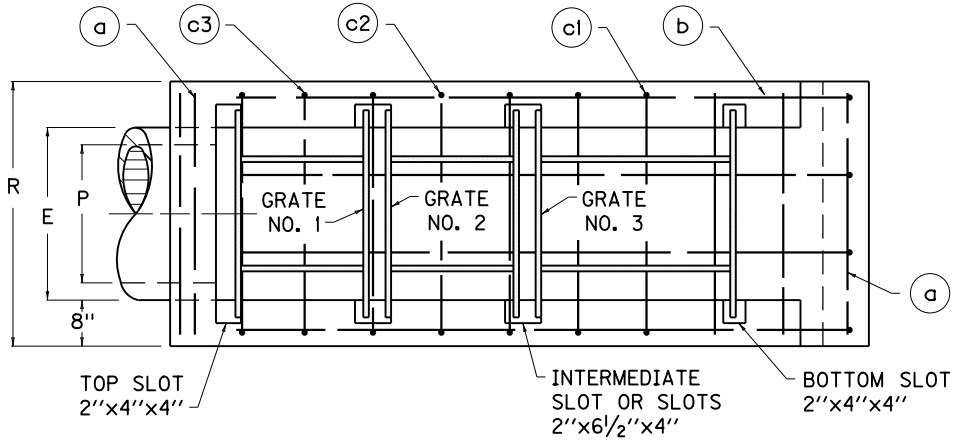

PLAN VIEW

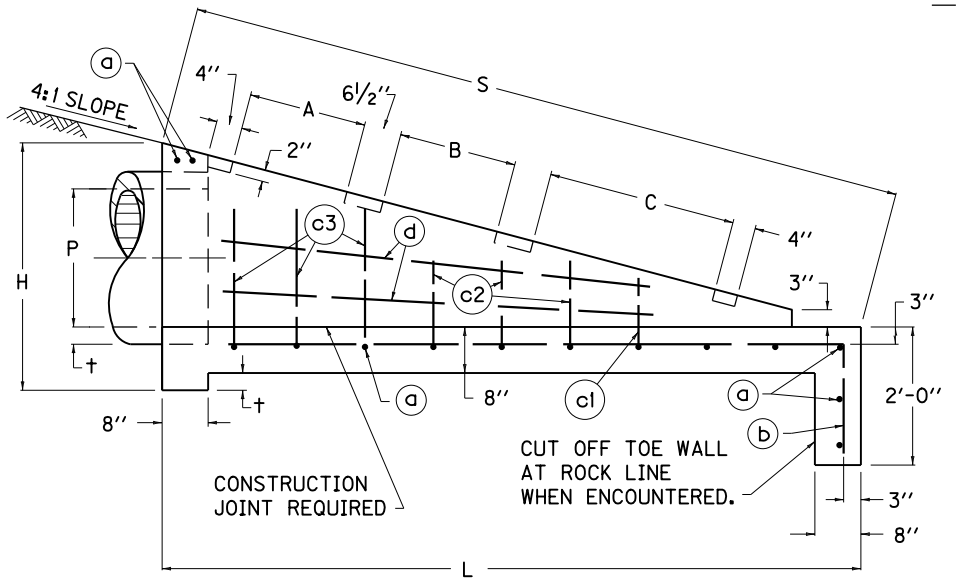

ELEVATION VIEW

NOTES

1. THE BID ITEM SHALL BE: "(★) SLOPED BOX OUTLET TYPE 1"
   ★ SIZE OF PIPE
2. THE MINIMUM REQUIREMENT FOR REINFORCING STEEL SHALL BE GRADE 40. FIELD BENDING WILL BE PERMITTED.
3. ONE ADDITIONAL ⓐ BAR WILL BE REQUIRED FOR EACH 15° SKEW.
4. t IS THE CONCRETE PIPE WALL THICKNESS OR METAL PIPE CORRUGATION DEPTH.
5. SEE CURRENT STD. DWG. RDB-101 FOR REINFORCING STEEL AND GRATE DETAILS.

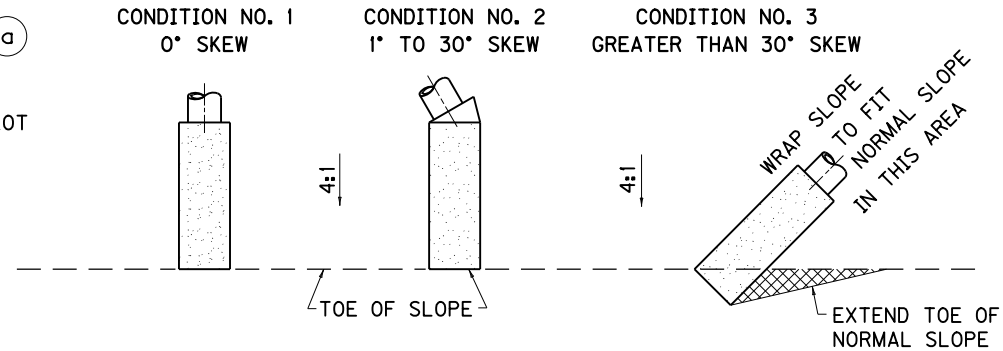

PLAN VIEW OF STRUCTURE LOCATIONS

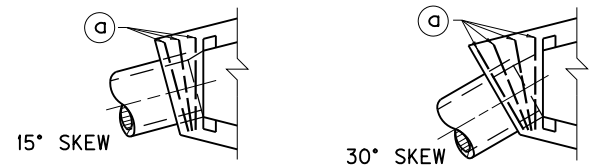

3 ⓐ BAR DETAIL FOR 15° AND 30° SKEW

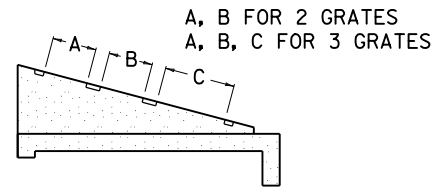

DETAIL SHOWING LOCATION OF SLOTS FOR GRATES

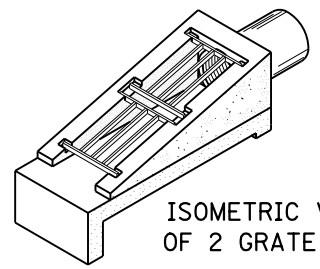

ISOMETRIC VIEW OF 2 GRATE BOX

DIMENSIONS									NO. OF GRATES REQ'D.	
P	H	L	S	R	E	A	B	C	2'	3'
15"	3'-0"	8'-2"	8'-5½"	3'-3"	1'-11"	1'-8½"	2'-8¾"	-----	1	1
18"										
24"	3'-7"	10'-1½"	10'-5⅝"	3'-10"	2'-6"		1'-8½"	2'-8¾"	2	1

USE WITH CUR. STD. DWG. RDB-101

KENTUCKY DEPARTMENT OF HIGHWAYS

SLOPED BOX OUTLET TYPE 1

STANDARD DRAWING NO. RDB-100-04

SUBMITTED John B. Lockstrike, DIRECTOR DIVISION OF DESIGN — DATE 12-1-99

APPROVED F. N. Newell, STATE HIGHWAY ENGINEER — DATE 12-1-99

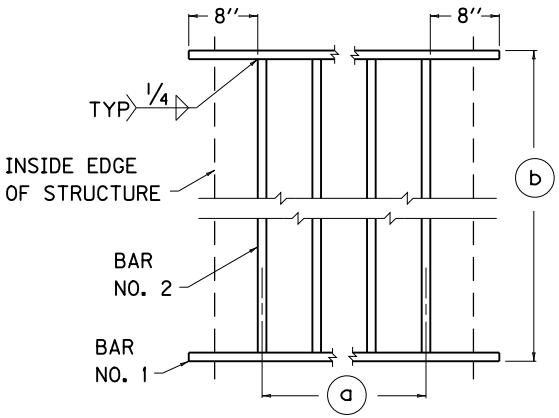

TYPICAL GRATE

~ NOTES ~

ALL COMPONENTS ARE 1'' X 2'' STRUCTURAL STEEL BARS.

(a) EQUALLY SPACE BARS NO. 2.

(b) LENGTH OF GRATE SHALL BE EITHER 2'-0'' OR 3'-0''.

(1) ADDITIONAL a BARS: 1 REQUIRED FOR 15° SKEW, 2 REQUIRED FOR 30° SKEW.

1'' X 2'' STRUCTURAL STEEL BARS

BOX SIZE	GRATE		BAR NO. 1	BAR NO. 2		LBS STRUCTURAL STEEL	
	NO.	LG.	LENGTH	NO. BARS	LENGTH	EACH GRATE	TOTAL
15'' - 18''	1	2'-0''	2'-5''	3	1'-10''	70	161
	2	3'-0''			2'-10''	91	
24''	1	2'-0''	3'-0''	4	1'-10''	91	300
	2						
	3	3'-0''			2'-10''	118	

NO. 4 REINFORCEMENT BARS

PIPE SIZE	(1) BAR a		BAR b		BAR c1		BAR c2		BAR c3		BAR d		TOTAL STEEL	CLASS A CONC.
	NO.	LG.	NO.	LG.	NO.	LG.	NO.	LG.	NO.	LG.	NO.	LG.	LBS.	CU. YD.
15'' 18''	12	2'-5''	4	8'-6''	0	0	6	1'-0''	4	1'-6''	4	4'-3''	62	1.2
24''	14	3'-0''	4	10'-6''	2	1'-0''	6	1'-3''	6	2'-0''	4	6'-3''	87	1.83

FOR BOX DETAIL SEE CUR. STD. DWG. RDB-100

KENTUCKY DEPARTMENT OF HIGHWAYS

GRATES FOR SLOPED BOX OUTLET TYPE 1

STANDARD DRAWING NO. RDB-101-04

SUBMITTED John B. Lackstrom DIRECTOR DIVISION OF DESIGN 12-1-99 DATE

APPROVED J. M. Yowell STATE HIGHWAY ENGINEER 12-1-99 DATE

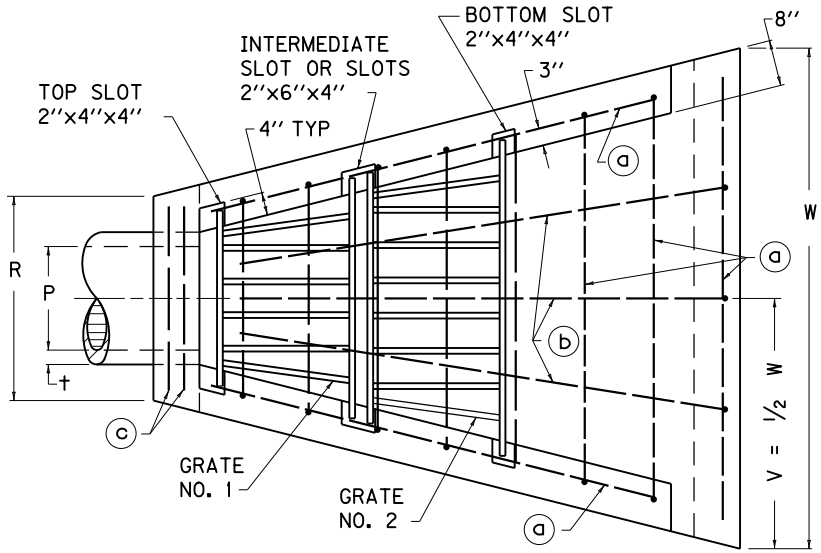

PLAN VIEW

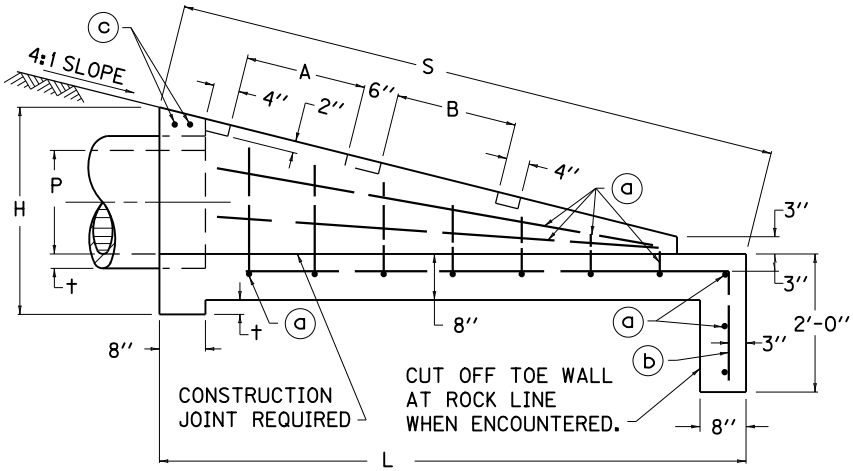

ELEVATION VIEW

NOTES

1. THE BID ITEM SHALL BE: ''S & F BOX INLET-OUTLET- ★ INCH
   ★ SIZE OF PIPE
2. THE MINIMUM REQUIREMENT FOR REINFORCING STEEL SHALL BE GRADE 40. FIELD BENDING WILL BE PERMITTED.
3. ONE ADDITIONAL (c) BAR WILL BE REQUIRED FOR EACH 15° SKEW.
4. † IS THE CONCRETE PIPE WALL THICKNESS OR METAL PIPE CORRUGATION DEPTH.

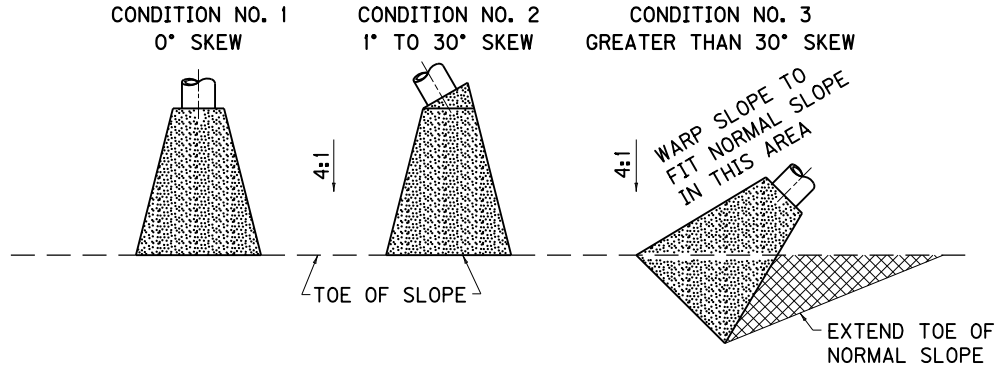

PLAN VIEW OF STRUCTURE LOCATIONS

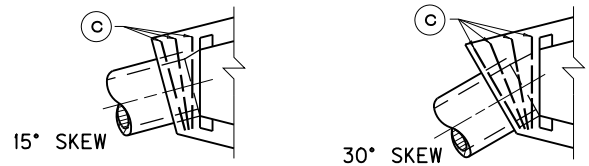

3 (c) BAR DETAIL FOR 15° AND 30° SKEW

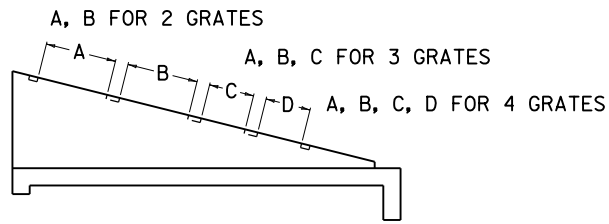

DETAIL SHOWING LOCATION
OF SLOTS FOR GRATES

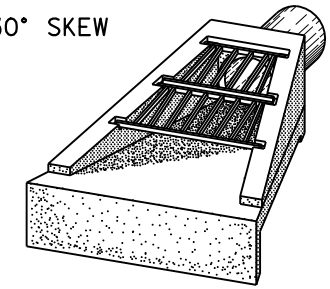

PICTORIAL VIEW
OF 18'' OR 24'' STRUCTURE

DIMENSIONS											NO. OF GRATES REQ'D.		NO. 4 REINFORCEMENT BARS NUMBER - LENGTH AND WEIGHT				CLASS A CONC.
P	H	L	S	R	V	W	A	B	C	D	2'	3'	(a)	(b)	3 (c)	LBS.	CU. YD.
18''	3'-0''	8'-6''	8'-9 1/8''	2'-11 1/2''	3'-7 1/2''	7'-3''	1'-9''	1'-9''	-----	-----	2	--	14 @ 6'-5''	3 @ 8'-6''	2 @ 2'-8''	81	1.8
24''	3'-7''	10'-8''	11'-0''	3'-6 1/2''	4'-5 1/2''	8'-11''	2'-9''	2'-9''	-----	-----	--	2	16 @ 8'-0''	3 @ 10'-6''	2 @ 3'-3''	111	2.7
30''	4'-2''	12'-10''	13'-2 3/4''	4'-1 1/2''	5'-3 1/2''	10'-7''	2'-9''	2'-9''	1'-9''	-----	1	2	18 @ 9'-7''	3 @ 12'-9''	2 @ 3'-10''	146	3.8
36''	4'-9''	15'-0''	15'-5 1/2''	4'-8 1/2''	6'-1 1/2''	12'-3''	2'-9''	2'-9''	1'-9''	1'-9''	2	2	20 @ 11'-4''	3 @ 15'-0''	2 @ 4'-5''	187	5.1

USE WITH CUR. STD. DWG.
RDB-106

KENTUCKY
DEPARTMENT OF HIGHWAYS

SLOPED AND FLARED
BOX INLET - OUTLET
18'' - 24'' - 30'' - 36''
ALL SKEWS

STANDARD DRAWING NO. RDB-105-05

SUBMITTED John B. Lachstrom — DIRECTOR DIVISION OF DESIGN — 12-1-99 DATE

APPROVED F. M. Newell — STATE HIGHWAY ENGINEER — 12-1-99 DATE

BOX INLET - OUTLET SIZE	GRATE		BAR NO. 1	BAR NO. 2	BARS NO. 3		BARS NO. 4	LBS. STRUCTURAL STEEL	
	NO.	SIZE	LENGTH	LENGTH	NO. BARS	LENGTH	LENGTH	EACH GRATE	TOTAL
18''	1	2'-0''	2'-6½''	3'-5¾''	4	1'-10''	1'-10¼''	116	272
	2	2'-0''	3'-7⅝''	4'-6⅞''	6	1'-10''	1'-10¼''	156	
24''	1	3'-0''	3'-1½''	4'-6⅝''	5	2'-10''	2'-10⅜''	187	454
	2	3'-0''	4'-8½''	6'-1⅝''	8	2'-10''	2'-10⅜''	267	
30''	1	3'-0''	3'-8½''	5'-1½''	6	2'-10''	2'-10⅜''	215	796
	2	3'-0''	5'-3½''	6'-8⅝''	9	2'-10''	2'-10⅜''	294	
	3	2'-0''	6'-10½''	7'-9¾''	13	1'-10''	1'-10¼''	287	
36''	1	3'-0''	4'-3½''	5'-8½''	7	2'-10''	2'-10⅜''	242	1218
	2	3'-0''	5'-10½''	7'-3⅝''	10	2'-10''	2'-10⅜''	321	
	3	2'-0''	7'-5½''	8'-4¾''	14	1'-10''	1'-10¼''	308	
	4	2'-0''	8'-6¾''	9'-5⅞''	16	1'-10''	1'-10¼''	347	

~ NOTES ~

1. ALL COMPONENTS ARE 1'' X 2'' STRUCTURAL STEEL BARS.
2. (a) EQUALLY SPACE BARS NO. 3.
   (b) SIZE OF GRATE EITHER 2'-0'' OR 3'-0''.
   (c) 5½'' FOR 2'-0'' GRATE, 7'' FOR 3'-0'' GRATE.

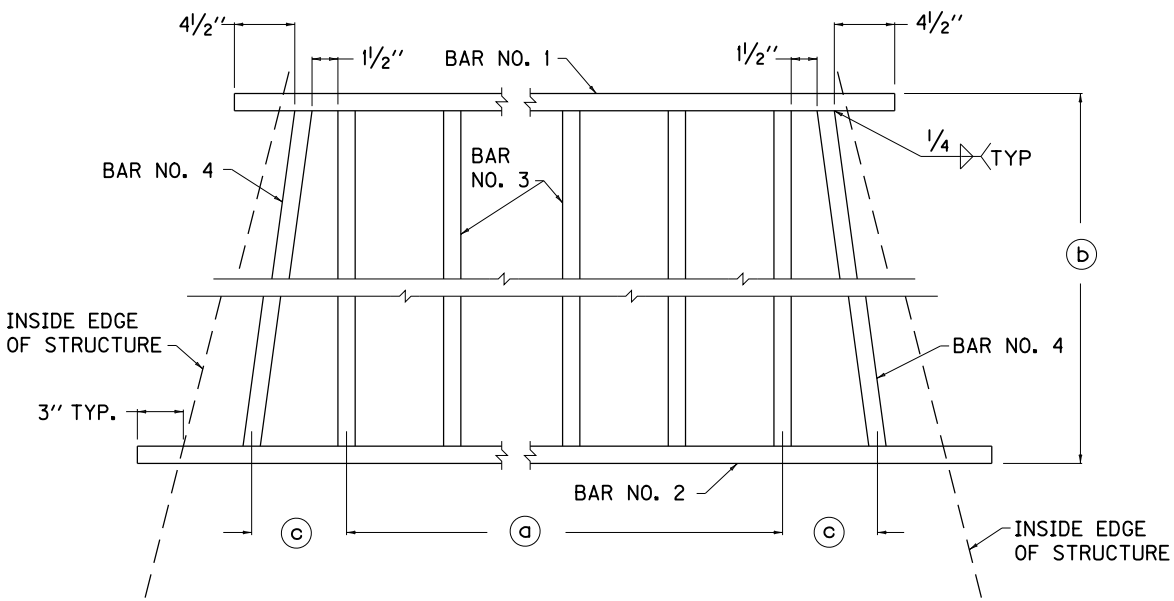

TYPICAL GRATE

USE WITH CUR. STD. DWG.
RDB-105

KENTUCKY
DEPARTMENT OF HIGHWAYS

GRATES FOR
SLOPED AND FLARED
BOX INLET - OUTLET

STANDARD DRAWING NO. RDB-106-04

SUBMITTED John B. Lackstrom — DIRECTOR DIVISION OF DESIGN — 12-1-99 DATE

APPROVED F. M. Powell — STATE HIGHWAY ENGINEER — 12-1-99 DATE

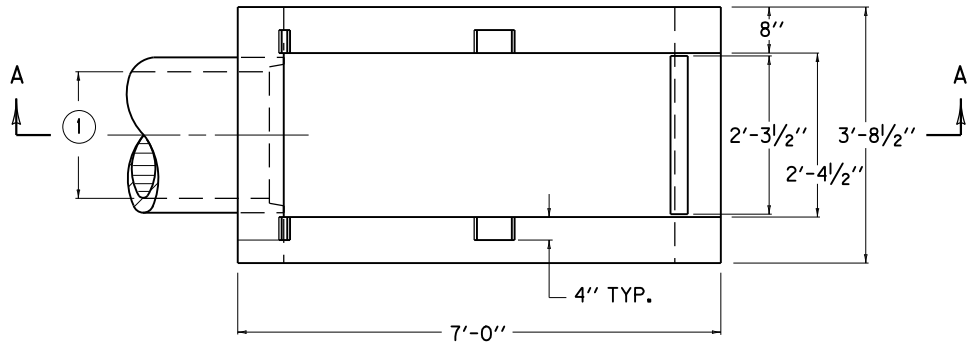

PLAN VIEW

NOTES

1. INTERIOR SPAN
2. INTERIOR RISE
3. THE UNIT PRICE BID FOR EACH STRUCTURE SHALL INCLUDE CONCRETE, STRUCTURAL STEEL GRATINGS, EXCAVATION, LABOR AND ALL INCIDENTALS NECESSARY FOR ITS CONSTRUCTION AS DETAILED ON THIS SHEET.
4. SIZE AND LOCATION OF PIPE SHALL BE SHOWN ON PLANS.
5. SLOPED BOX INLET OR OUTLET TYPE 1 IS INTENDED TO BE USED WITH THE FOLLOWING PIPE SIZES:
   - METAL PIPE ARCH - (15'' EQUIV. ROUND)
   - METAL PIPE ARCH - (18'' EQUIV. ROUND)
   - CONCRETE ELLIPTICAL PIPE - (18'' EQUIV. ROUND)

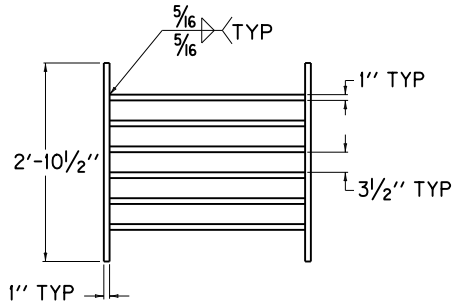

GRATE NO. 1
PLAN VIEW

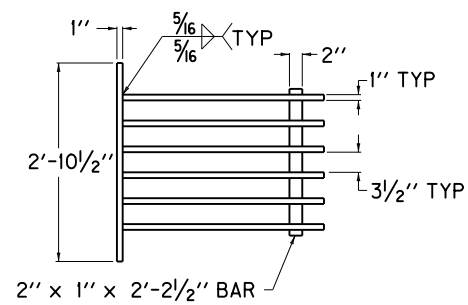

GRATE NO. 2
PLAN VIEW

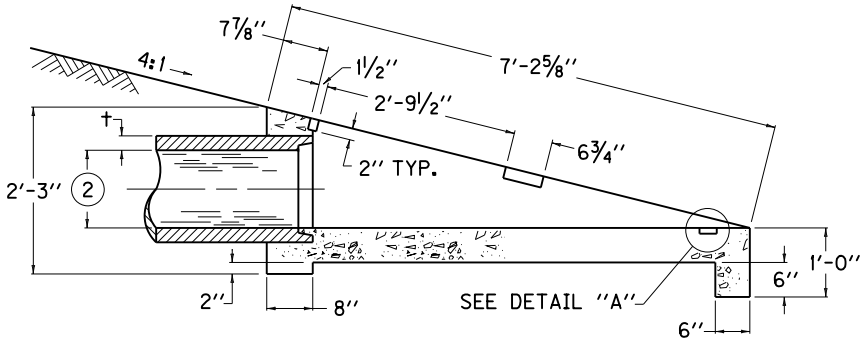

SECTION A-A

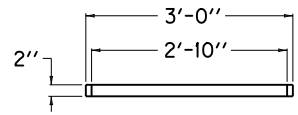

GRATE NO. 1
SIDE ELEVATION

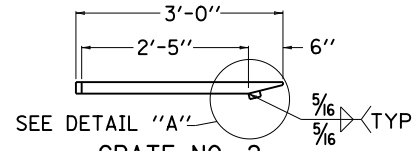

GRATE NO. 2
SIDE ELEVATION

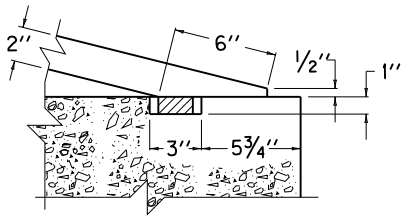

DETAIL ''A''

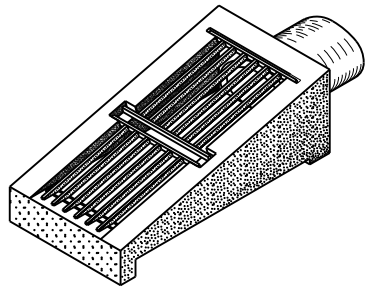

ISOMETRIC VIEW

APPROXIMATE QUANTITIES			
CLASS ''A'' CONC.	GRATE	LBS STRUCTURAL STEEL	
CUBIC YDS.	NUMBER	EACH GRATE	TOTAL LBS
0.9	1	155	298
	2	143	

KENTUCKY
DEPARTMENT OF HIGHWAYS

SLOPED BOX
INLET OR OUTLET
TYPE 1

STANDARD DRAWING NO. RDB-110-07

SUBMITTED John B. Sachatzke — DIRECTOR DIVISION OF DESIGN — 12-1-99 DATE

APPROVED F. M. Powell — STATE HIGHWAY ENGINEER — 12-1-99 DATE

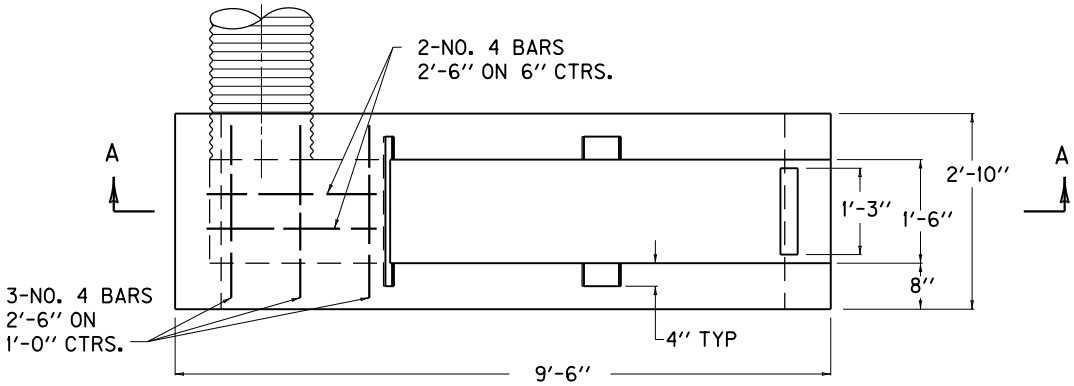

PLAN VIEW

NOTES

1. THE UNIT PRICE BID FOR EACH STRUCTURE SHALL INCLUDE ALL CONCRETE, STRUCTURAL STEEL GRATINGS, STEEL REINFORCEMENT, EXCAVATION, LABOR, AND ALL OTHER INCIDENTIALS NECESSARY FOR ITS CONSTRUCTION AS DETAILED ON THIS SHEET.
2. PRIMARY USE 6:1 DEPRESSED MEDIAN LOCATION.
3. PIPE SHALL BE METAL PIPE ARCH (15" EQUIV. ROUND).

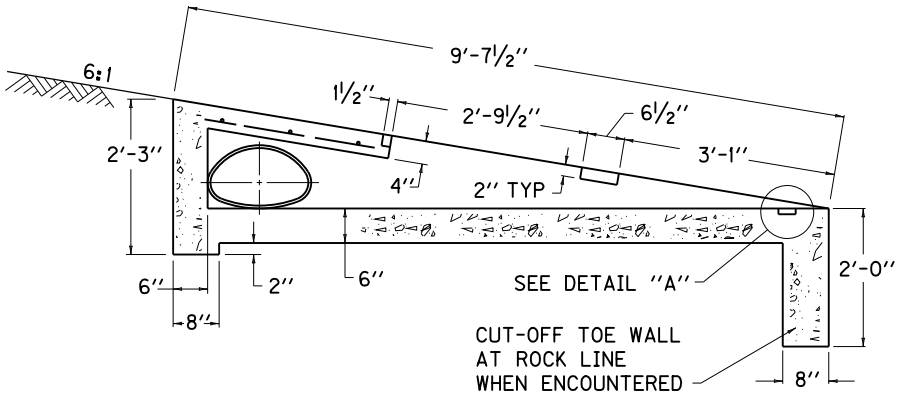

SECTION A-A

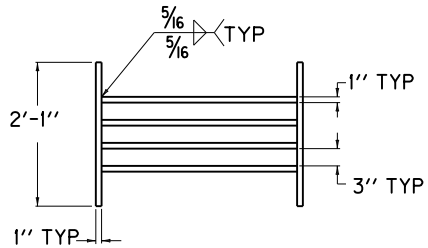

GRATE NO. 1
PLAN VIEW

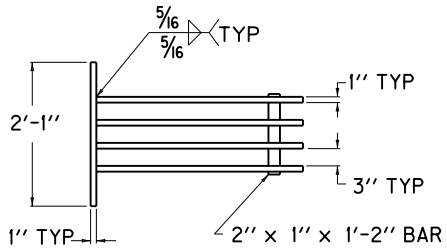

GRATE NO. 2
PLAN VIEW

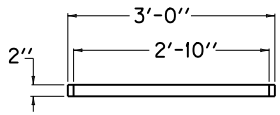

GRATE NO. 1
SIDE ELEVATION

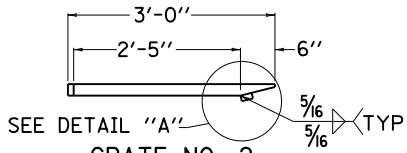

GRATE NO. 2
SIDE ELEVATION

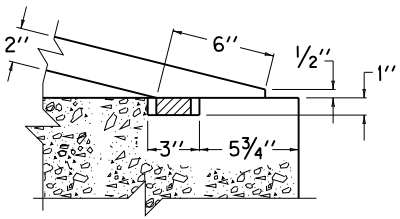

DETAIL "A"

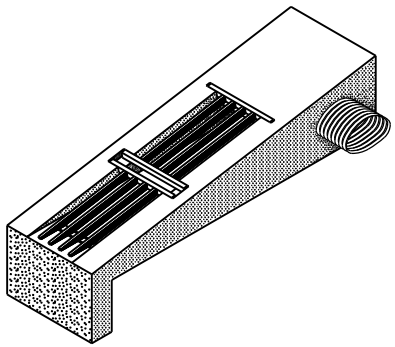

ISOMETRIC VIEW

APPROXIMATE QUANTITIES				
CLASS "A" CONC.	GRATE	LBS. STRUCTURAL STEEL		STEEL REINF.
CUBIC YARDS	NUMBER	EACH GRATE	TOTAL POUNDS	LBS.
1.1	1	106	206	8
	2	100		

KENTUCKY
DEPARTMENT OF HIGHWAYS

SLOPED BOX
INLET OR OUTLET
TYPE 2

STANDARD DRAWING NO. RDB-111-07

SUBMITTED John B. Sachstede — DIRECTOR DIVISION OF DESIGN — 12-1-99 DATE

APPROVED F. M. Powell — STATE HIGHWAY ENGINEER — 12-1-99 DATE

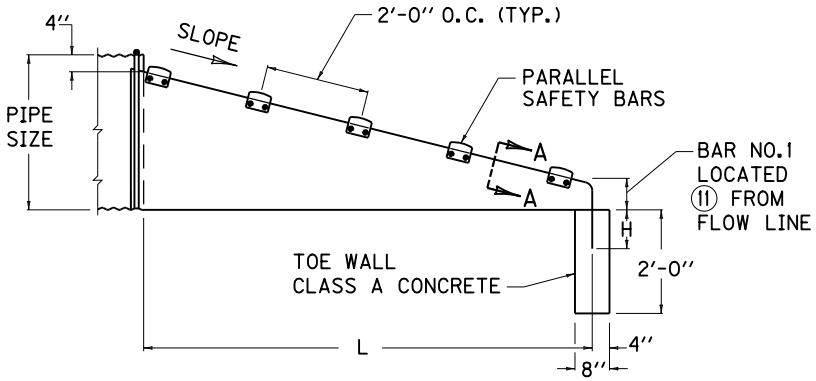

SIDE ELEVATION

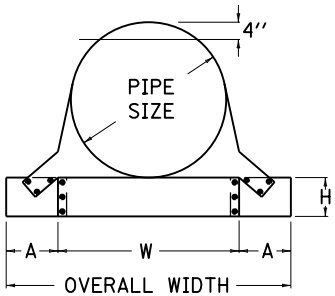

END SECT. FRONT VIEW
CIRCULAR PIPE

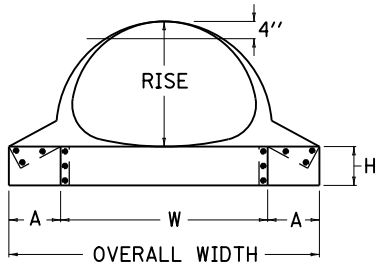

END SECT. FRONT VIEW
ARCHED PIPE

NOTES

BID ITEM:
METAL END SECT. TY. ⊗ - △ INCH
⊗ 1 = PARALLEL STRUCTURE ON 6:1 SLOPE, 2 = PARALLEL STRUCTURE ON 10:1 SLOPE
△ SIZE IN INCHES
BID ITEM EXAMPLE: METAL END SECT. TY. 1 - 15 INCH.
THE CONTRACT UNIT PRICE EACH FOR METAL END SECTION SHALL INCLUDE CLASS A CONCRETE, EXCAVATION, AND ALL INCIDENTALS NECESSARY TO COMPLETE ONE INSTALLATION AS DETAILED.

1. METAL END SECTIONS SHALL BE FABRICATED FROM GALVANIZED SHEETS, CONFORMING TO AASHTO M218.
2. METAL END SECTIONS & TAPERED SLEEVES SHALL BE ASPHALT COATED IN ACCORDANCE WITH SECTION 806 OF THE CURRENT KENTUCKY STANDARD SPECIFICATIONS FOR ROAD AND BRIDGE CONSTRUCTION. ASPHALT COATING IS NOT REQUIRED ON SAFETY BARS.
3. SAFETY BARS SHALL BE REQUIRED ON ALL METAL END SECTIONS CONSTRUCTED PARALLEL TO THE ROADWAY.
4. SAFETY BARS SHALL BE CONSTRUCTED OF SCHEDULE 40 GALVANIZED STEEL PIPE (COMMERCIAL GRADE).
5. THE TAPERED SLEEVE SHALL BE GALVANIZED SMOOTH METAL CONFORMING TO AASHTO M218, WITH A WALL THICKNESS AS FOLLOWS: 18" DIA. OR LESS = .079", 21" DIA. OR LARGER = .109".

(6) SLOTTED HOLES FOR SAFETY GRATE ATTACHMENT SHALL BE PUNCHED PRIOR TO GALVANIZING. FIELD DRILLING OF HOLES SHALL NOT BE PERMITTED.

(7) WATERPROOF MASTIC CONFORMING TO 807.02.03 OF THE STD. SPECS. SHALL BE PLACED IN THE VOID BETWEEN THE TAPERED SLEEVE AND CONCRETE PIPE.

(8) FORM 1/2" x 2 2/3" CORRUGATIONS. MAINTAIN INSIDE DIAMETER OF SLEEVE. FINISHED END TO BE THE SAME DIAMETER AS CORRUGATED STEEL PIPE DIAMETER.

9. ALL MISCELLANEOUS HARDWARE SHALL COMPLY WITH AASHTO M36.
10. THE WELDS USED IN THE MANUFACTURE OF THE TAPERED SLEEVE FOR ELLIPTICAL CONC. PIPE SHALL BE REPAIRED IN ACCORDANCE WITH AASHTO M36 USING ZINC OXIDE-ZINC DUST PRIMER, FEDERAL SPECIFICATION TT-P-641, TYPE II, NO COLOR ADDED.

(11) TYPE 1 = 6", TYPE 2 = 4"

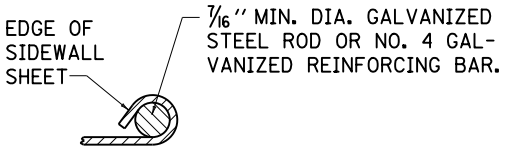

SECTION A-A

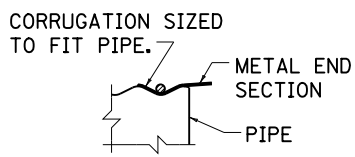

SECTION B-B

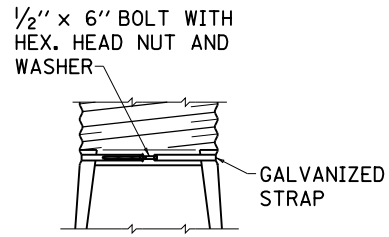

TYPE 1 CONNECTOR

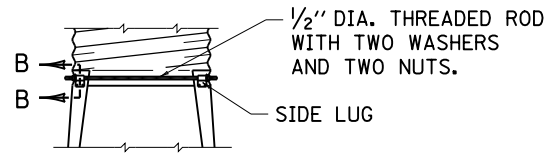

TYPE 2 CONNECTOR

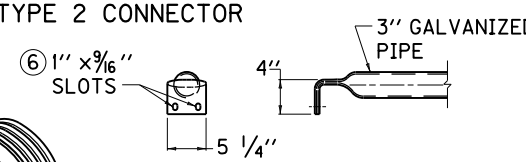

PARALLEL SAFETY BAR

USE WITH CUR. STD. DWG.
RDB-160

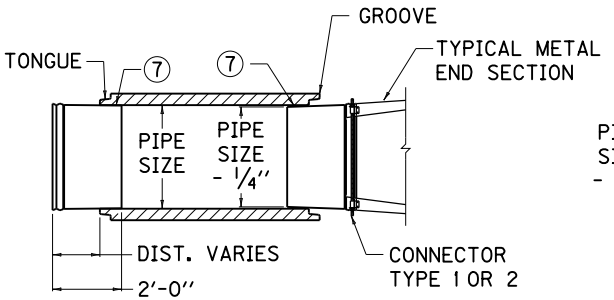

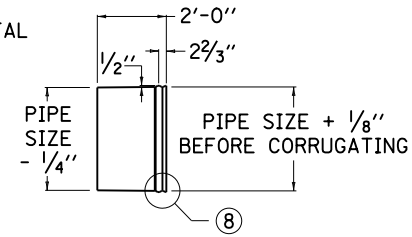

SMOOTH TAPERED SLEEVE FOR USE WITH CONCRETE PIPE

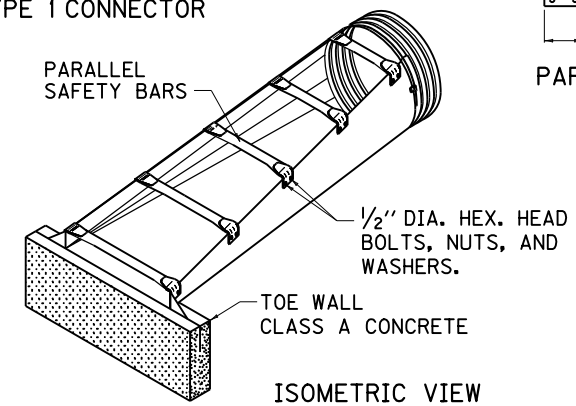

ISOMETRIC VIEW

KENTUCKY
DEPARTMENT OF HIGHWAYS

METAL END SECTION
TYPE 1 AND 2
(PARALLEL STRUCTURES)

STANDARD DRAWING NO. RDB-150-01

SUBMITTED John B. Lockridge, DIRECTOR DIVISION OF DESIGN — 12-1-99 DATE
APPROVED F. M. Yowell, STATE HIGHWAY ENGINEER — 12-1-99 DATE

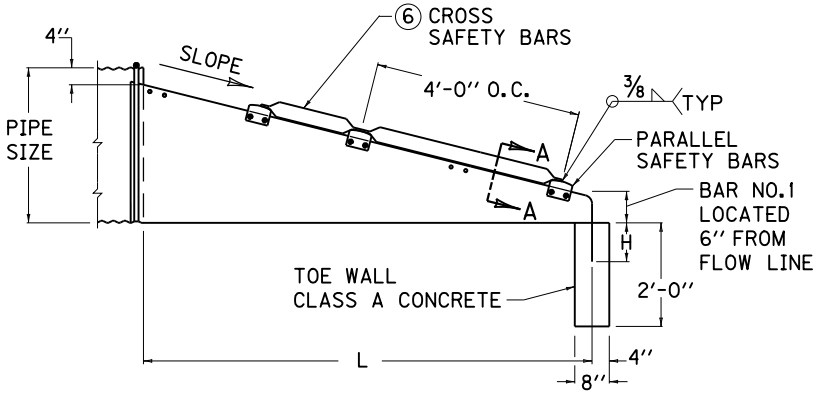

SIDE ELEVATION

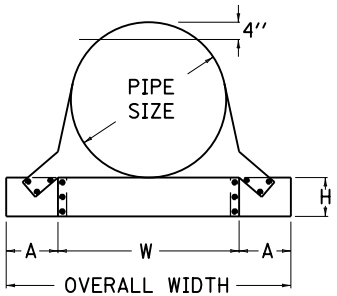

END SECT. FRONT VIEW CIRCULAR PIPE

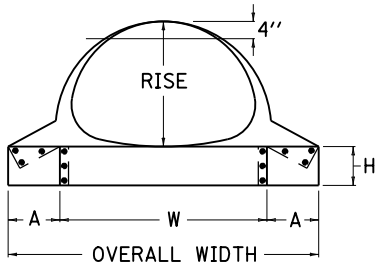

END SECT. FRONT VIEW ARCHED PIPE

NOTES

BID ITEM:
METAL END SECT. TY. ⊗ - △ INCH
⊗ 3 = CROSSDRAIN STRUCTURE ON 4:1 SLOPE, 4 = CROSSDRAIN STRUCTURE ON 6:1 SLOPE
△ SIZE IN INCHES
BID ITEM EXAMPLE: METAL END SECT. TY. 3 - 15 INCH.

THE CONTRACT UNIT PRICE EACH FOR METAL END SECTION SHALL INCLUDE CLASS A CONCRETE, EXCAVATION, AND ALL INCIDENTALS NECESSARY TO COMPLETE ONE INSTALLATION AS DETAILED.

1. FABRICATE METAL END SECTIONS FROM GALVANIZED SHEETS CONFORMING TO AASHTO M218.
2. METAL END SECTIONS & TAPERED SLEEVES SHALL BE ASPHALT COATED IN ACCORDANCE WITH SECT. 806 OF THE CUR. KENTUCKY STD. SPECIFICATIONS FOR ROAD & BRIDGE CONSTRUCTION. ASPHALT COATING IS NOT REQUIRED ON SAFETY BARS.
3. SAFETY BARS SHALL BE REQUIRED ON ALL 30" ROUND PIPE AND LARGER.
4. SAFETY BARS SHALL BE REQUIRED ON ALL 24" ELLIPTICAL EQUIVALENT PIPE AND LARGER.
5. SAFETY BARS SHALL BE CONSTRUCTED OF SCHEDULE 40 GALVANIZED STEEL PIPE (COML. GRADE).

⑥ CROSS SAFETY BARS SHALL BE SPACED A MAXIMUM OF 30" O.C. AND WELDED TO PARALLEL SAFETY BARS. GALVANIZING REQUIRED AFTER FABRICATION.

7. THE TAPERED SLEEVE SHALL BE GALVANIZED SMOOTH METAL CONFORMING TO AASHTO M218, WITH A WALL THICKNESS AS FOLLOWS: 18" DIA. OR LESS = .079", 21" DIA. OR LARGER = .109".

⑧ SLOTTED HOLES FOR SAFETY BAR ATTACHMENT SHALL BE PUNCHED PRIOR TO GALVANIZING. FIELD DRILLING OF HOLES SHALL NOT BE PERMITTED.

⑨ WATERPROOF MASTIC CONFORMING TO 807.02.03 OF THE STD. SPECS. SHALL BE PLACED IN THE VOID BETWEEN THE TAPERED SLEEVE AND CONCRETE PIPE.

⑩ FORM 1/2" x 2 2/3" CORRUGATIONS. MAINTAIN INSIDE DIAMETER OF SLEEVE. FINISHED END TO BE THE SAME DIAMETER AS CORRUGATED STEEL PIPE DIAMETER.

11. ALL MISCELLANEOUS HARDWARE SHALL COMPLY WITH AASHTO M36.
12. THE WELDS USED IN THE MANUFACTURE OF THE TAPERED SLEEVE FOR ELLIPTICAL CONCRETE PIPE SHALL BE REPAIRED IN ACCORDANCE WITH AASHTO M36 USING ZINC OXIDE-ZINC DUST PRIMER, FEDERAL SPECIFICATION TT-P-641, TYPE II, NO COLOR ADDED.

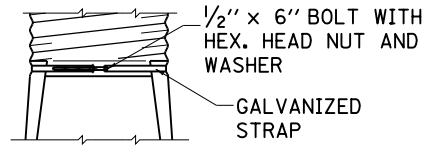

TYPE 1 CONNECTOR

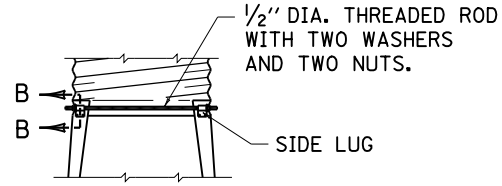

TYPE 2 CONNECTOR

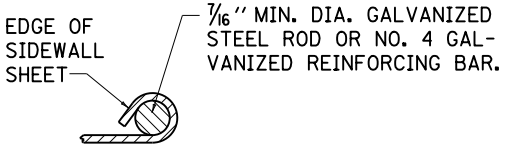

SECTION A-A

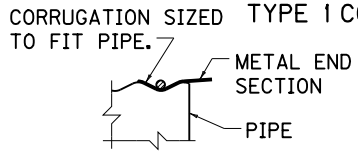

SECTION B-B

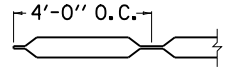

CROSS SAFETY BAR

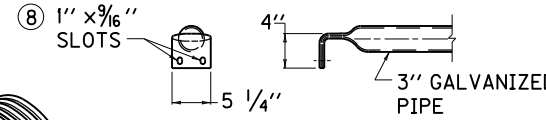

PARALLEL SAFETY BAR

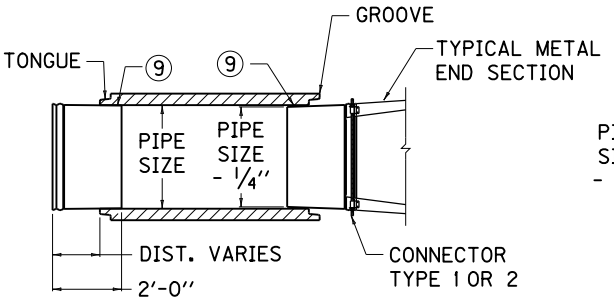

SMOOTH TAPERED SLEEVE FOR USE WITH CONCRETE PIPE

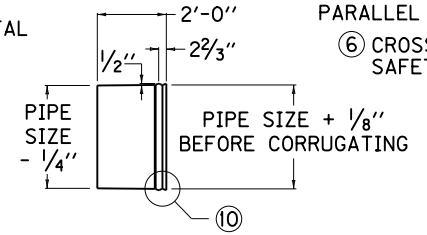

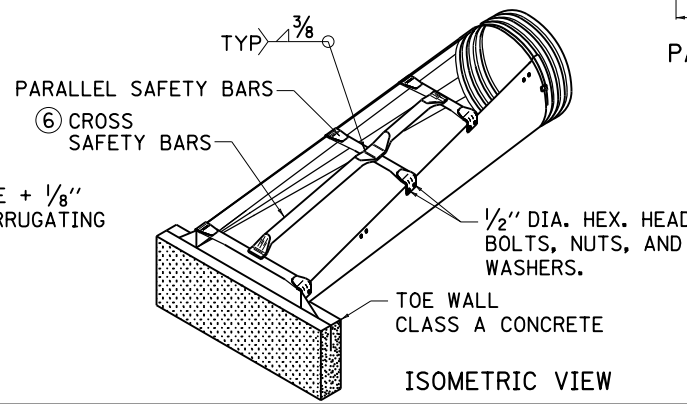

ISOMETRIC VIEW

USE WITH CUR. STD. DWG. RDB-160

KENTUCKY DEPARTMENT OF HIGHWAYS

METAL END SECTION TYPE 3 AND 4 (CROSS STRUCTURES)

STANDARD DRAWING NO. RDB-155-01

SUBMITTED John B. Sachstede DIRECTOR DIVISION OF DESIGN 12-1-99 DATE

APPROVED F. M. Powell STATE HIGHWAY ENGINEER 12-1-99 DATE

METAL END SECTIONS FOR CONC. OR METAL CIRCULAR PIPE

PIPE DIA. (IN.)	MIN. THICK. IN INCHES	DIMENSIONS				L DIMENSIONS ①						CONCRETE
		A	H	W	OVERALL WIDTH	SLOPE	LENGTH	SLOPE	LENGTH	SLOPE	LENGTH	CU. YD.
15 ②	0.064	8″	6″	21″	3′-1″	4:1	1′-8″	6:1	2′-6″	10:1	5′-10″	0.15
18 ②	0.064	8″	6″	24″	3′-4″	4:1	2′-8″	6:1	4′-0″	10:1	8′-4″	0.16
21 ②	0.064	8″	6″	27″	3′-7″	4:1	3′-8″	6:1	5′-6″	10:1	10′-10″	0.18
24 ②	0.064	8″	6″	30″	3′-10″	4:1	4′-8″	6:1	7′-0″	10:1	13′-4″	0.19
30	0.109	12″	9″	36″	5′-0″	4:1	6′-8″	6:1	10′-0″			0.25
36	0.109	12″	9″	42″	5′-6″	4:1	8′-8″	6:1	13′-0″			0.27
42	0.109	16″	12″	48″	6′-8″	4:1	10′-8″	6:1	16′-0″			0.33
48	0.109	16″	12″	54″	7′-2″	4:1	12′-8″	6:1	19′-0″			0.35
54	0.109	16″	12″	60″	7′-8″	4:1	14′-8″	6:1	22′-0″			0.38
60	0.109	16″	12″	66″	8′-2″	4:1	16′-8″	6:1	25′-0″			0.40

CONC. OR METAL CIRCULAR PIPE

NOTES

① DIMENSIONAL TOLERANCE +1″ -0″

② FOR METAL END SECTIONS WITH A SLOPE OF 10:1 USE A METAL THICKNESS OF .109″ MIN.

METAL END SECTIONS FOR METAL ARCHED PIPE

EQUV. DIA. (IN.)	SPAN (IN.)	RISE (IN.)	MIN. THICK. IN INCHES	DIMENSIONS				L DIMENSIONS ①						CONCRETE
				A	H	W	OVERALL WIDTH	SLOPE	LENGTH	SLOPE	LENGTH	SLOPE	LENGTH	CU. YD.
18 ②	21	15	.064	8″	6″	27″	3′-7″	4:1	1′-8″	6:1	2′-6″	10:1	5′-10″	0.18
21 ②	24	18	.064	8″	6″	30″	3′-10″	4:1	2′-8″	6:1	4′-0″	10:1	8′-4″	0.19
24 ②	28	20	.064	8″	6″	34″	4′-2″	4:1	3′-4″	6:1	5′-0″	10:1	10′-0″	0.21
30	35	24	.079	12″	9″	41″	5′-5″	4:1	4′-8″	6:1	7′-0″			0.27
36	42	29	.109	12″	9″	48″	6′-0″	4:1	6′-4″	6:1	9′-6″			0.30
42	49	33	.109	16″	12″	55″	7′-3″	4:1	7′-8″	6:1	11′-6″			0.36
48	57	38	.109	16″	12″	63″	7′-11″	4:1	9′-4″	6:1	14′-0″			0.39
54	64	43	.109	16″	12″	70″	8′-6″	4:1	11′-0″	6:1	16′-6″			0.42
60	71	47	.109	16″	12″	77″	9′-1″	4:1	12′-4″	6:1	18′-6″			0.45
72	83	57	.109	16″	12″	89″	10′-1″	4:1	15′-8″	6:1	23′-6″			0.50

METAL ARCHED PIPE

METAL END SECTIONS FOR CONCRETE ELLIPTICAL PIPE

EQUV. DIA. (IN.)	SPAN (IN.)	RISE (IN.)	MIN. THICK. IN INCHES	DIMENSIONS				L DIMENSIONS				CONCRETE
				A	H	W	OVERALL WIDTH	SLOPE	LENGTH	SLOPE	LENGTH	CU. YD.
18	23	14	.064	8″	6″	29″	3′-9″	4:1	1′-4″	6:1	2′-0″	0.19
24	30	19	.064	8″	6″	36″	4′-4″	4:1	3′-0″	6:1	4′-6″	0.21
30	38	24	.079	12″	9″	44″	5′-8″	4:1	4′-8″	6:1	7′-0″	0.28
36	45	29	.109	16″	12″	51″	6′-11″	4:1	6′-4″	6:1	9′-6″	0.34
42	53	34	.109	16″	12″	59″	7′-7″	4:1	8′-0″	6:1	12′-0″	0.37
48	60	38	.109	16″	12″	66″	8′-2″	4:1	9′-4″	6:1	14′-0″	0.40
54	68	43	.109	16″	12″	74″	8′-10″	4:1	11′-0″	6:1	16′-6″	0.44
60	76	48	.109	16″	12″	80″	9′-4″	4:1	12′-8″	6:1	19′-0″	0.46

CONCRETE ELLIPTICAL PIPE

USE WITH CUR. STD. DWGS RDB-150 AND RDB-155

KENTUCKY DEPARTMENT OF HIGHWAYS

DIMENSIONS FOR METAL END SECTIONS

STANDARD DRAWING NO. RDB-160-01

SUBMITTED John B. Lockstrike DIRECTOR DIVISION OF DESIGN 12-1-99 DATE

APPROVED F. M. Newell STATE HIGHWAY ENGINEER 12-1-99 DATE

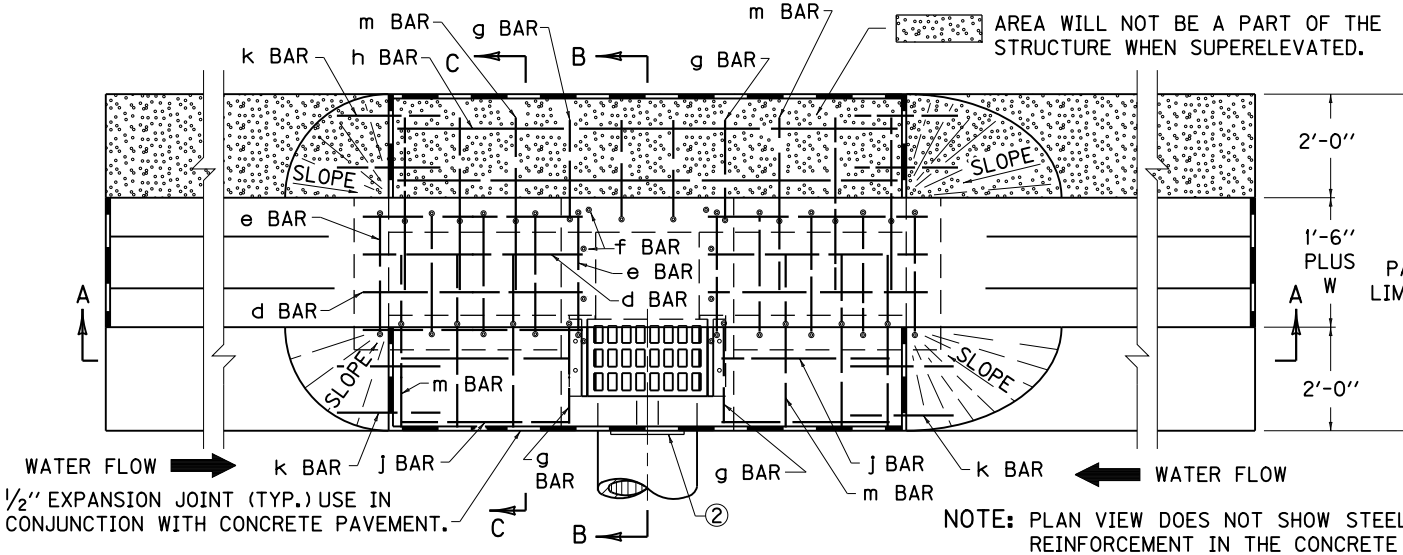

PLAN VIEW (BOX INLET TYPE A)

NOTE: PLAN VIEW DOES NOT SHOW STEEL REINFORCEMENT IN THE CONCRETE MEDIAN BARRIER.

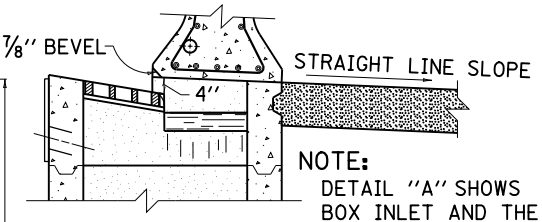

DETAIL "A"

NOTE: DETAIL "A" SHOWS BOX INLET AND THE 25' CONCRETE MEDIAN BARRIER IN SUPERELEVATION.

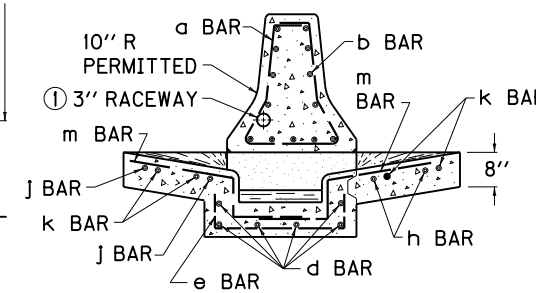

SECTION C-C

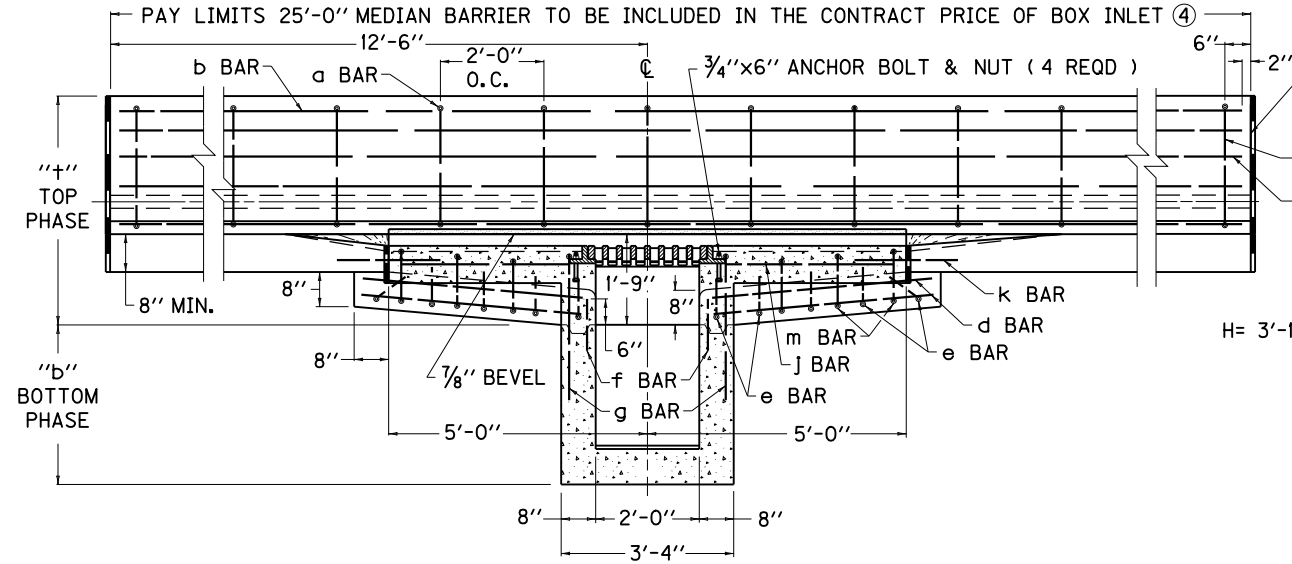

SECTION A-A

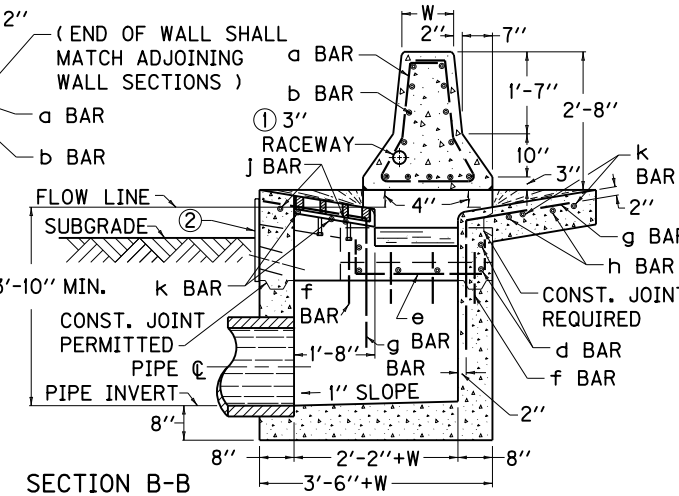

SECTION B-B

USE WITH CUR. STD. DWGS. RBM-001 AND RDB-231

NOTES

1. SEE PLANS FOR SIZE, LOCATION AND PAYMENT FOR RACEWAY WHEN REQUIRED.
2. FABRIC WRAPPED BACKFILL DRAIN, (ONE PER WEEP HOLE).
3. ALL WALLS AND SLABS ARE 8" THICK UNLESS OTHERWISE SHOWN.
4. MEDIAN BARRIER WALL MAY BE CAST-IN-PLACE, FIXED OR SLIP-FORMED, CONTRACTOR'S OPTION.
5. WALL REINFORCEMENT IS DETAILED FOR CAST-IN-PLACE WALLS. FOR SLIP-FORMED WALLS SEE CURRENT STANDARD DRAWING RDB-231 FOR STEEL DETAIL.

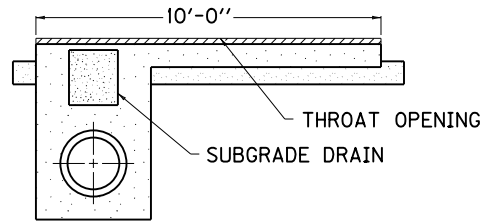

BOX INLET TYPE B

KENTUCKY DEPARTMENT OF HIGHWAYS

CONCRETE MEDIAN BARRIER BOX INLET

STANDARD DRAWING NO. RDB-230-08

SUBMITTED David Kratt DIRECTOR DIVISION OF DESIGN 11-21-07 DATE

APPROVED Marcelyn Mathews STATE HIGHWAY ENGINEER 11-21-07 DATE

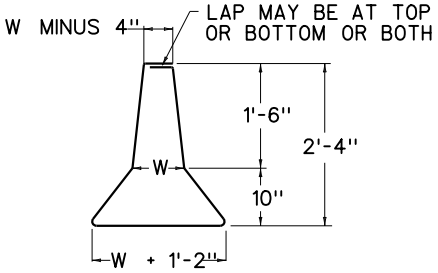

a BAR

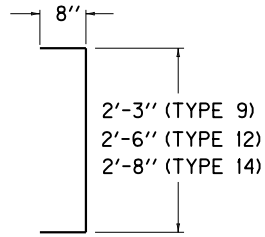

e BAR

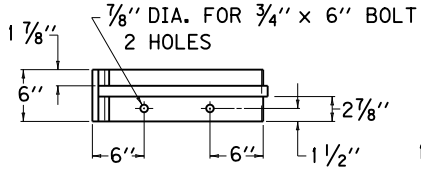

FRAME PLAN VIEW
(LEFT HALF)

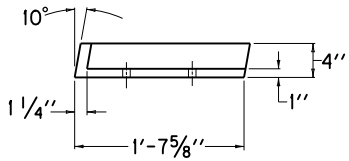

FRAME ELEVATION

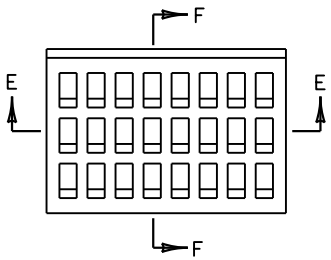

GRATE PLAN VIEW

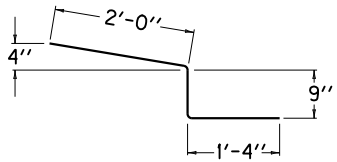

m BAR

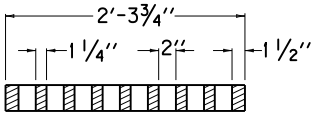

SECTION E-E

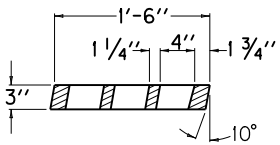

SECTION F-F

APPROX. QTYS. FOR 25' CONC. MEDIAN BARRIER

INLET	W	BAR a		BAR b		STEEL	CONC.
		QTY.	LENGTH	QTY.	LENGTH	LBS. ②	CU. YDS.
TYPE 9	9"	13	7'-4 1/4"	13	24'-8"	434	3.15
TYPE 12	12"	13	8'-1"	13	24'-8"	444	3.77
TYPE 14	14"	13	8'-7 1/2"	13	24'-8"	451	4.18

② STEEL QUANTITIES ARE FOR CAST-IN-PLACE WALL.

NOTES

METHOD OF MEASUREMENT AND BASIS OF PAYMENT

THE BID ITEM SHALL BE :
CONCRETE MEDIAN BARRIER BOX INLET TYPE ☆ ⊗ ⊕ △

☆ 9, 12, OR 14 DEPENDING ON W WIDTH

⊗ = A FOR SAG VERTICALS
B FOR STRAIGHT GRADE

⊕ = 1 FOR OPENING ON ONE SIDE OF BOX INLET
2 FOR OPENING ON BOTH SIDES OF BOX INLET

△ (b) = BOTTOM PHASE (t) = TOP PHASE
NO (b) OR (t) SUFFIX INDICATES COMPLETE INLET.

MATERIAL REQUIREMENTS

ALL STEEL REINFORCEMENT BARS SHALL BE NO. 5 BARS.

THE RATE OF INCREASE OF ADDITIONAL CLASS "A" CONCRETE PER FOOT OF HEIGHT ABOVE THE MINIMUM 3'-10" SHALL BE 0.32 CUBIC YARDS FOR A TYPE 9 BOX INLET AND 0.35 CUBIC YARDS FOR A TYPE 12 AND 0.37 CUBIC YARDS FOR A TYPE 14 BOX INLET.

CONSTRUCTION REQUIREMENTS

PLACE ALL STEEL REINFORCEMENT 2" MINIMUM FROM OUTSIDE FACE OF WALL, EXCEPT AS OTHERWISE SHOWN.

SEE CURRENT STD. DWG. RDB-420 FOR STEEL REINFORCEMENT IN BOTTOM OF BOX WHEN H = 8'-0" TO 15'-0".

USE CHAMBER DIMENSIONS TO BEST FIT AND EQUALLY SPACE REINFORCEMENT STEEL.

A SYMMETRICAL WALL IS DETAILED, AN ASYMMETRICAL WALL MAY BE REQUIRED (SEE PLANS).

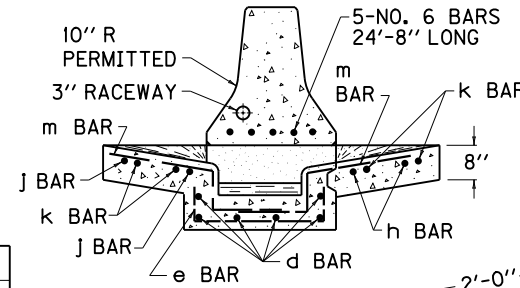

SECTION C-C
(SLIP-FORM WALL)

REINFORCEMENT BARS FOR BOX INLET

BAR	QTY.		LIN. FT.		QTY.		LIN. FT.	
	A1	A2	A1	A2	B1	B2	B1	B2
TYPE 9								
e	10		3'-6"		9		3'-6"	
TYPE 12								
e	10		3'-9"		9		3'-9"	
TYPE 14								
e	10		3'-11"		9		3'-11"	
ALL TYPES								
d	12		4'-3"		6		7'-5"	
f	8		1'-0"		8		1'-0"	
g	2	6	4'-6"		1	5	4'-6"	
h	0	2	0	9'-8"	0	2	0	9'-8"
j	4		3'-3"		2		7'-0"	
k	4	8	2'-0"		4	8	2'-0"	
m	6	12	4'-1"		6	12	4'-1"	

APPROX. QUANTITIES FOR INLET

TYPE	CLASS "A" CONC.	STEEL
	CU. YD.	LBS.
9A 1	3.76	155
9B 1	3.72	141
12A 1	3.96	158
12B 1	3.89	143
14A 1	4.09	159
14B 1	3.98	145

FOR APPROX. QUANTITIES FOR TYPE A2 OR B2 (ALL "W" WIDTHS) ADD 1.48 CU. YDS. CONCRETE AND 73 LBS. STEEL.

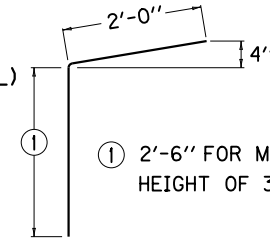

g BAR

USE WITH CURRENT STD. DWGS.
RBM-001 AND RDB-230

KENTUCKY
DEPARTMENT OF HIGHWAYS

CONCRETE MEDIAN BARRIER BOX INLET

STANDARD DRAWING NO. RDB-231-10

SUBMITTED David Kratt DIRECTOR DIVISION OF DESIGN 11-21-07 DATE

APPROVED Marcelyn Mathews STATE HIGHWAY ENGINEER 11-21-07 DATE

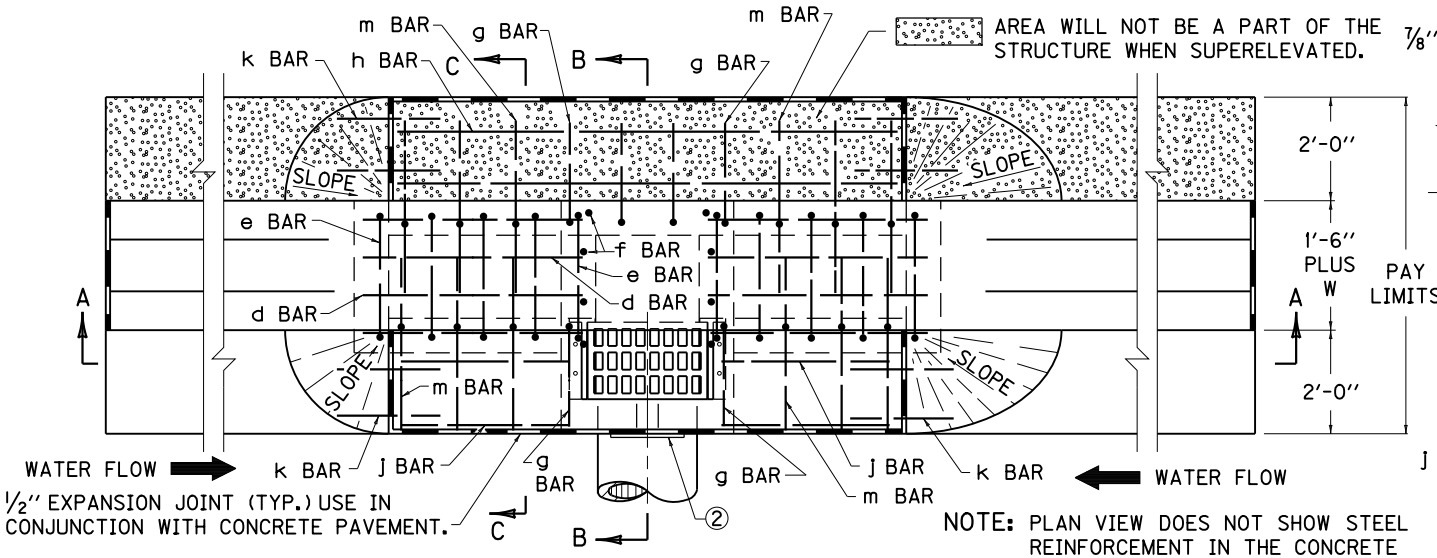

PLAN VIEW (BOX INLET TYPE A)

NOTE: PLAN VIEW DOES NOT SHOW STEEL REINFORCEMENT IN THE CONCRETE MEDIAN BARRIER.

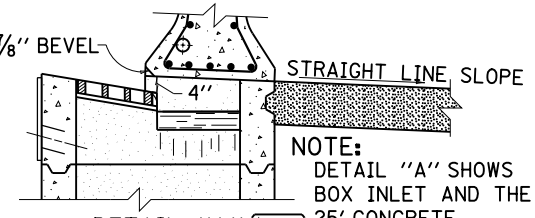

DETAIL "A"

NOTE: DETAIL "A" SHOWS BOX INLET AND THE 25' CONCRETE MEDIAN BARRIER IN SUPERELEVATION.

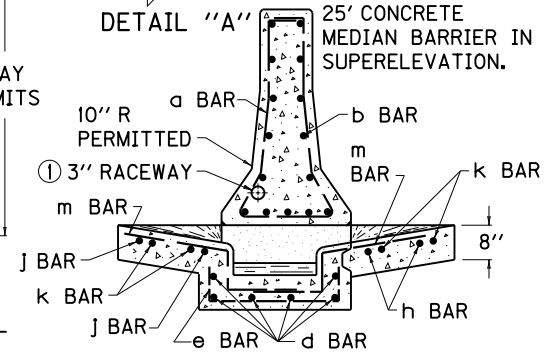

SECTION C-C

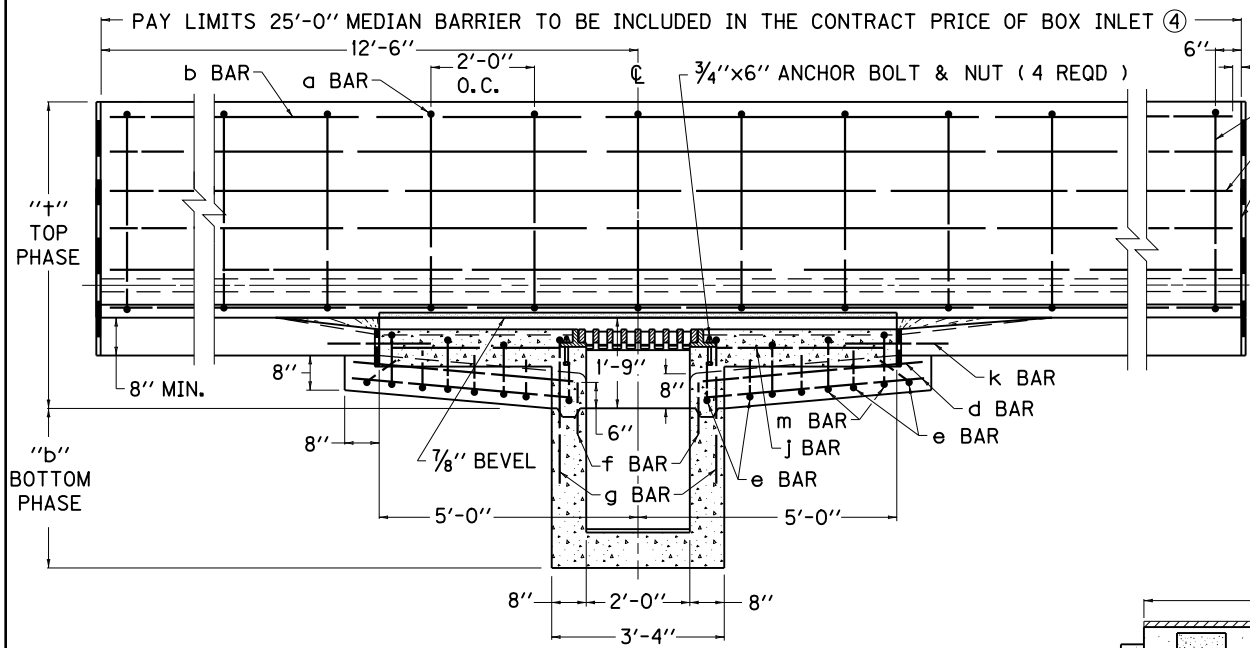

SECTION A-A

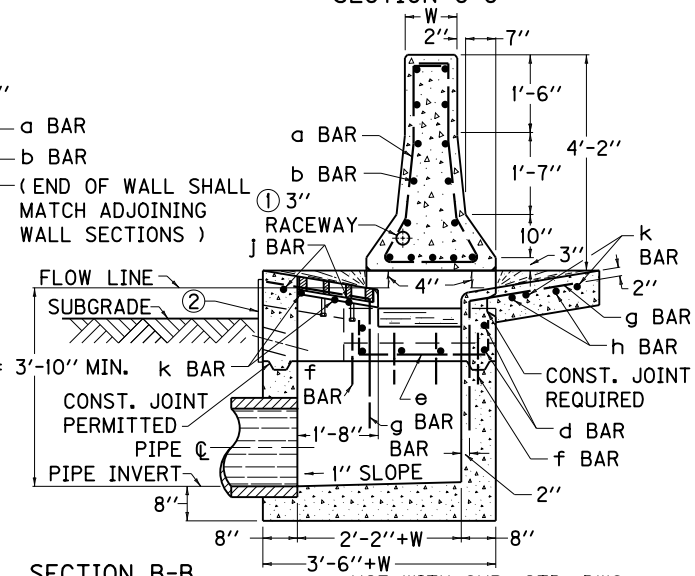

SECTION B-B

USE WITH CUR. STD. DWG. RBM-050, RBM-053 & RDB-241

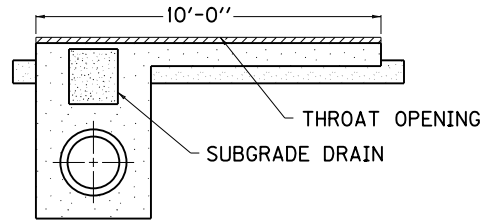

BOX INLET TYPE B

NOTES

① SEE PLANS FOR SIZE, LOCATION AND PAYMENT FOR RACEWAY WHEN REQUIRED.
② FABRIC WRAPPED BACKFILL DRAIN, (ONE PER WEEP HOLE).
3. ALL WALLS AND SLABS ARE 8" THICK UNLESS OTHERWISE SHOWN.
④ MEDIAN BARRIER WALL MAY BE CAST-IN-PLACE, FIXED OR SLIP-FORMED, CONTRACTOR'S OPTION.
5. WALL REINFORCEMENT IS DETAILED FOR CAST-IN-PLACE WALLS. FOR SLIP-FORMED WALLS SEE CURRENT STANDARD DRAWING RDB-241 FOR STEEL DETAIL.

KENTUCKY DEPARTMENT OF HIGHWAYS

CONCRETE MEDIAN BARRIER BOX INLET (50" TALL WALL)

STANDARD DRAWING NO. RDB-240-01

SUBMITTED: David Kratt, DIRECTOR DIVISION OF DESIGN — 11-21-07 DATE

APPROVED: Marcelyn Mathews, STATE HIGHWAY ENGINEER — 11-21-07 DATE

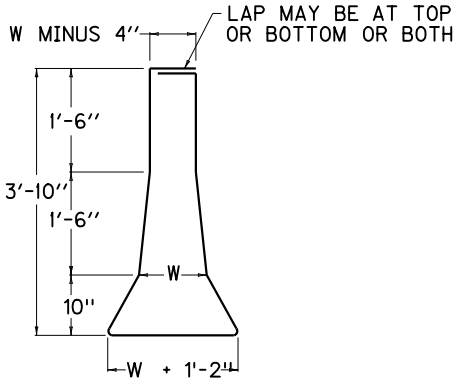

a BAR

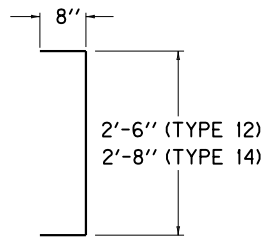

e BAR

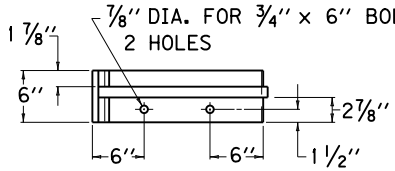

FRAME PLAN VIEW
(LEFT HALF)

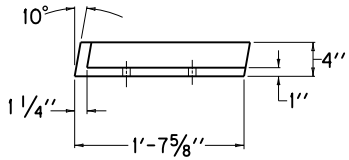

FRAME ELEVATION

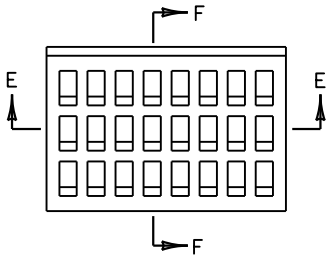

GRATE PLAN VIEW

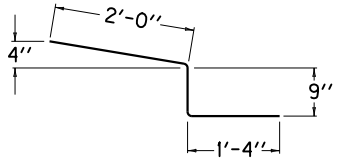

m BAR

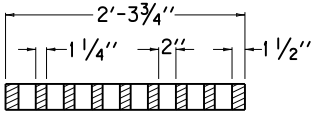

SECTION E-E

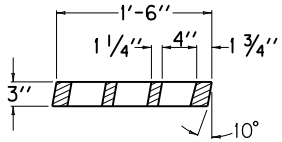

SECTION F-F

NOTES

METHOD OF MEASUREMENT AND BASIS OF PAYMENT

THE BID ITEM SHALL BE :
CONCRETE MEDIAN BARRIER INLET TYPE ☆ ⊗ ⊕ △ - 50

☆ 12 OR 14 DEPENDING ON W WIDTH

⊗ = A FOR SAG VERTICALS
B FOR STRAIGHT GRADE

⊕ = 1 FOR OPENING ON ONE SIDE OF BOX INLET
2 FOR OPENING ON BOTH SIDES OF BOX INLET

△ (b) = BOTTOM PHASE (†) = TOP PHASE
NO (b) OR (†) SUFFIX INDICATES COMPLETE INLET.

MATERIAL REQUIREMENTS

ALL STEEL REINFORCEMENT BARS SHALL BE NO. 5 BARS.

THE RATE OF INCREASE OF ADDITIONAL CLASS "A" CONCRETE PER FOOT OF HEIGHT ABOVE THE MINIMUM 3'-10" SHALL BE 0.35 CUBIC YARDS FOR A TYPE 12 AND 0.37 CUBIC YARDS FOR A TYPE 14 BOX INLET.

CONSTRUCTION REQUIREMENTS

PLACE ALL STEEL REINFORCEMENT 2" MINIMUM FROM OUTSIDE FACE OF WALL, EXCEPT AS OTHERWISE SHOWN.

SEE CURRENT STD. DWG. RDB-420 FOR STEEL REINFORCEMENT IN BOTTOM OF BOX WHEN H = 8'-0" TO 15'-0".

USE CHAMBER DIMENSIONS TO BEST FIT AND EQUALLY SPACE REINFORCEMENT STEEL.

A SYMMETRICAL WALL IS DETAILED, AN ASYMMETRICAL WALL MAY BE REQUIRED (SEE PLANS).

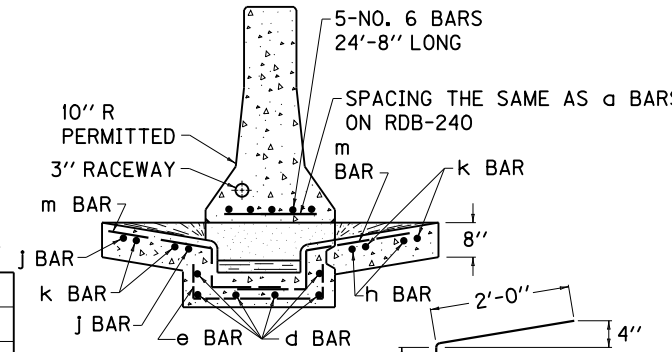

SECTION C-C
(SLIP-FORM WALL)

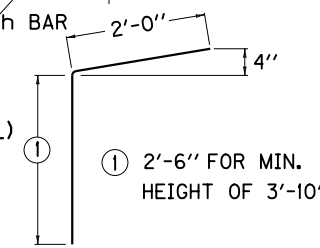

1 2'-6'' FOR MIN. HEIGHT OF 3'-10''

g BAR

REINFORCEMENT BARS FOR BOX INLET

BAR	BOX TYPE							
	A1	A2	A1	A2	B1	B2	B1	B2
	QTY.		LENGTH		QTY.		LENGTH	
TYPE 12								
e	10		3'-9''		9		3'-9''	
TYPE 14								
e	10		3'-11''		9		3'-11''	
ALL TYPES								
d	12		4'-3''		6		7'-5''	
f	8		1'-0''		8		1'-0''	
g	2	6	4'-6''		1	5	4'-6''	
h	0	2	0	9'-8''	0	2	0	9'-8''
j	4		3'-3''		2		7'-0''	
k	4	8	2'-0''		4	8	2'-0''	
m	6	12	4'-1''		6	12	4'-1''	

APPROX. QTYS. FOR 25' CONC. MEDIAN BARRIER

INLET	W	BAR a		BAR b		STEEL	CONC.
		QTY.	LENGTH	QTY.	LENGTH	LBS. 2	CU. YDS.
TYPE 12	12''	13	11'-6''	15	24'-8''	542	5.16
TYPE 14	14''	13	12'-0''	15	24'-8''	549	5.8

2 STEEL QUANTITIES ARE FOR CAST-IN-PLACE WALL.

APPROX. QUANTITIES FOR INLET

TYPE	CLASS "A" CONC.	STEEL
	CU. YD.	LBS.
12A 1	3.96	158
12B 1	3.89	143
14A 1	4.09	159
14B 1	3.98	145

FOR APPROX. QUANTITIES FOR TYPE A2 OR B2 (ALL "W" WIDTHS) ADD 1.48 CU. YDS. CONCRETE AND 73 LBS. STEEL.

KENTUCKY
DEPARTMENT OF HIGHWAYS

CONCRETE MEDIAN BARRIER BOX INLET (50" TALL WALL)

STANDARD DRAWING NO. RDB-241-01

SUBMITTED [signature] DIRECTOR DIVISION OF DESIGN 11-21-07 DATE

APPROVED [signature] STATE HIGHWAY ENGINEER 11-21-07 DATE

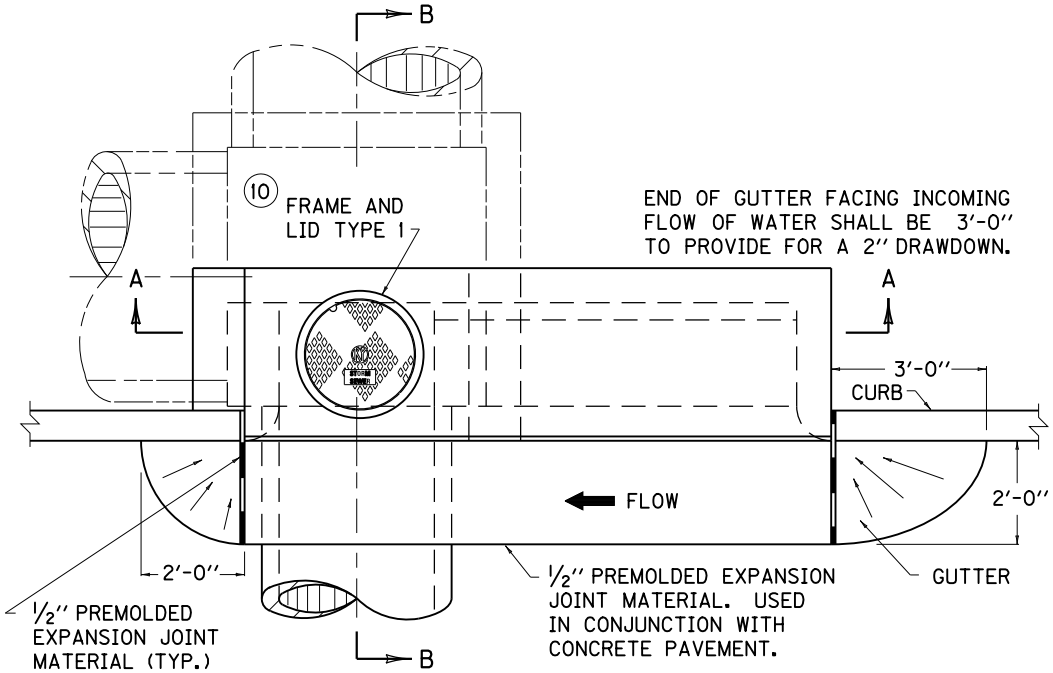

PLAN VIEW

~ NOTES ~

1. INLET SHALL BE CONSTRUCTED IN TWO PHASES (BOTTOM AND TOP)
   BID ITEM: CURB BOX INLET TYPE A (Δ)
   Δ (B) = BOTTOM PHASE ONLY, Δ (T) = TOP PHASE ONLY
   NO SUFFIX INDICATES COMPLETE INLET.
2. SEE CUR. STD. DWG. RDB-271, RDB-272, RDB-273, RDB-400, RDB-410 AND RDB-420 FOR STEEL PATTERN, DIMENSIONS AND QUANTITIES.
3. ALL WALLS, SLABS AND GUTTERS ARE 8" THICK UNLESS OTHERWISE INDICATED.

(4) 2'-0" DESIRED COVER, 1'-0" MINIMUM COVER.

(5) SPALLS OR CRUSHED STONE AROUND END OF 4" OR 6" PIPE FOR SUBGRADE DRAINAGE.

(6) 2" MINIMUM DRAWDOWN.

(7) GUTTER CROSS SLOPE.

(8) FLOW LINE (2" BELOW NORMAL GUTTERLINE ELEVATION).

(9) LID MAY BE RAISED OR LOWERED IF APPROVED BY THE ENGINEER.

(10) SEE CUR. STD. DWG. RDM-100 FOR FRAME AND LID TYPE 1.

11. NOTE: "†" IS CONCRETE PIPE WALL THICKNESS OR METAL PIPE CORRUGATION DEPTH.

(12) MINIMUM HEIGHTS
   H = Z + 1'-8" FOR STANDARD CURB
   H = Z + 1'-10" FOR ISLAND CURB
   H = Z + 1'-5" FOR BARRIER CURB

(13) CHAMBER MAY BE SHIFTED TO ROADWAY SIDE OF BOX PROVIDED THERE IS 1'-0" MINIMUM COVER BETWEEN SUBGRADE ELEVATION AND TOP OF PIPE.

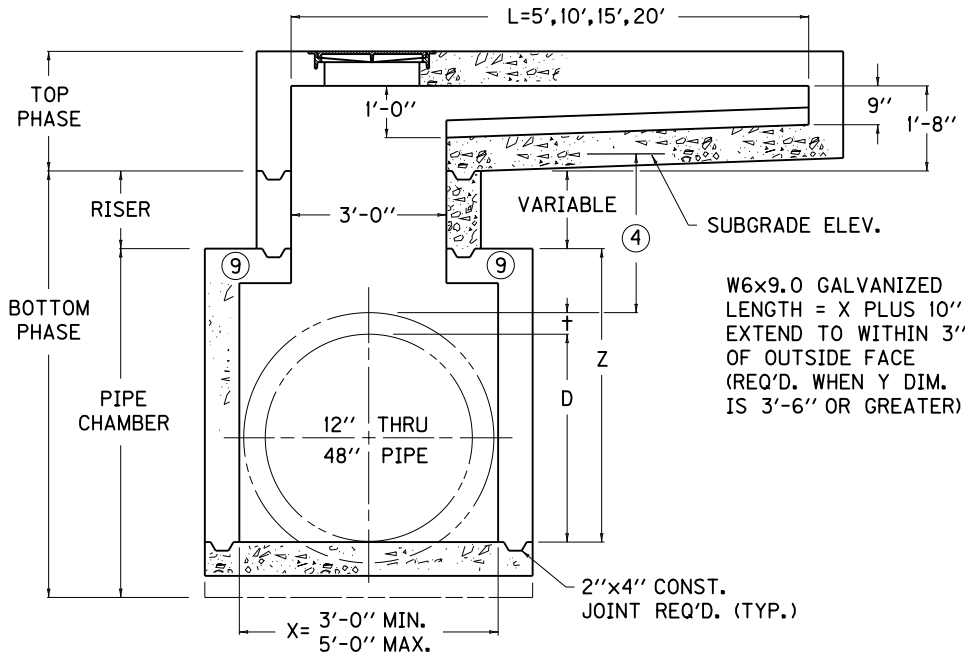

SECTION A-A

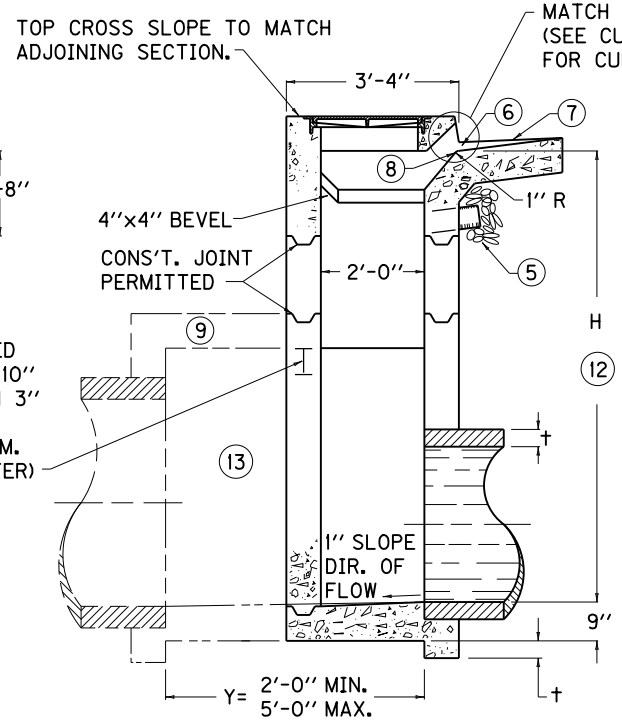

SECTION B-B

RISER
CU. YD. CONC. PER FT. HT.
0.3

USE WITH CUR. STD. DRAWINGS, RDB-271, RDB-272, RDB-273, RDB-400, RDB-410, RDB-420 AND RDM-100.

KENTUCKY
DEPARTMENT OF HIGHWAYS

CURB BOX INLET
TYPE A
(DETAIL DRAWING)

STANDARD DRAWING NO. RDB-270-08

SUBMITTED David Kratt DIRECTOR DIVISION OF DESIGN 11-21-07 DATE

APPROVED Marcelyn Mathews STATE HIGHWAY ENGINEER 11-21-07 DATE

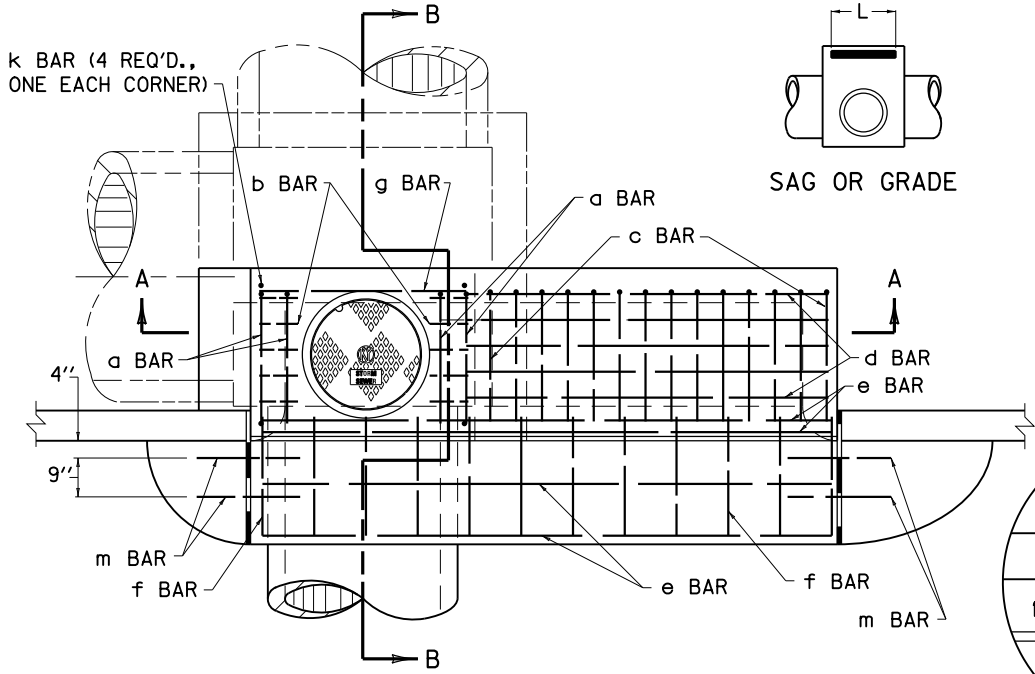

PLAN VIEW

SAG OR GRADE

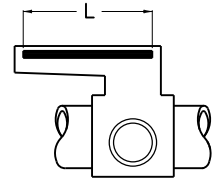

GRADE

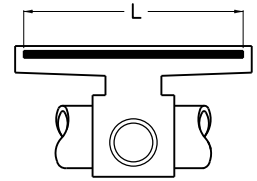

SAG

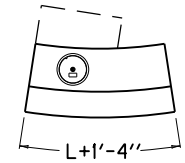

CURVE LAYOUT

~ NOTES ~

1. SEE CURRENT STD. DWG. RDB-273 FOR LID REINFORCEMENT.
2. e, f, AND g BARS SPACED 1'-0'' O.C. ALL OTHER BARS SPACED 6'' O.C. EXCEPT WHERE OTHERWISE SPECIFIED.
3. PLACE ALL STEEL REINFORCEMENT 2'' FROM INSIDE OF INLET WALL EXCEPT WHERE OTHERWISE SPECIFIED.

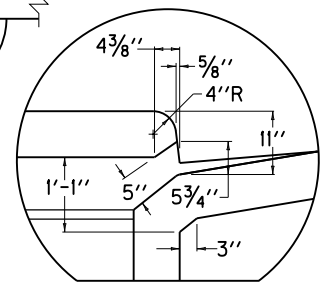

BARRIER CURB

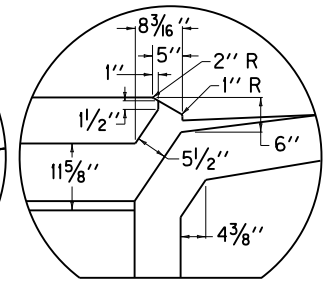

ISLAND CURB

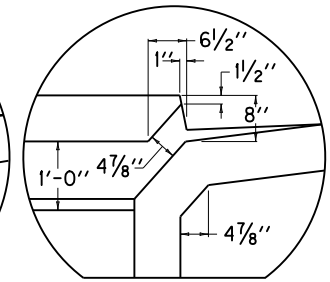

STANDARD CURB

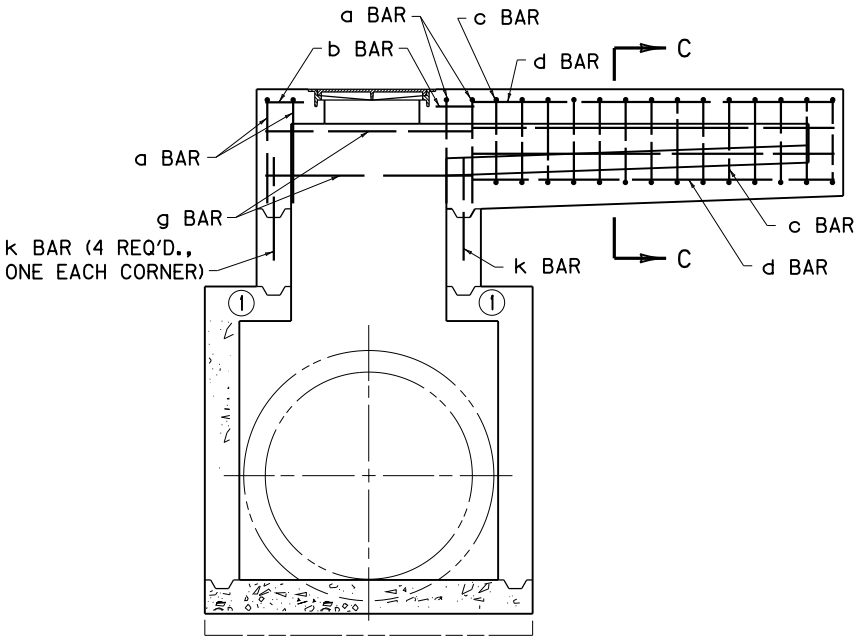

SECTION A-A

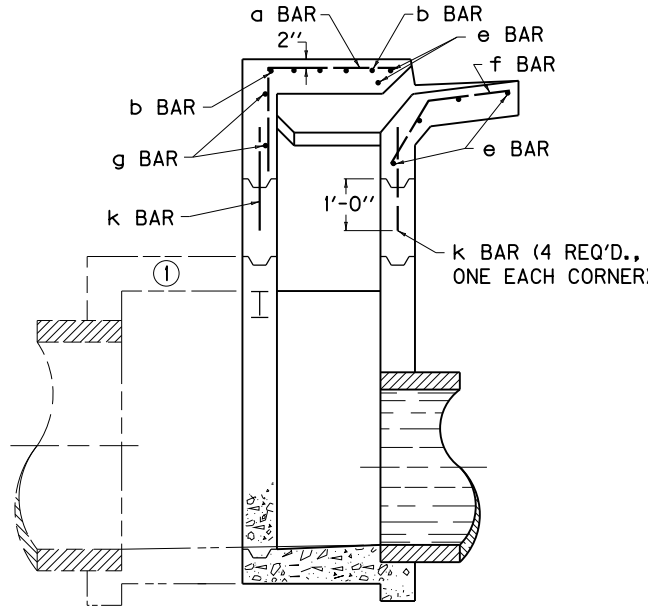

SECTION B-B

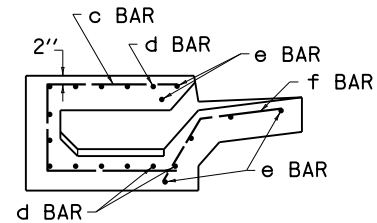

SECTION C-C

USE WITH CUR. STD. DRGS, RDB-270, RDB-272, RDB-273, RDB-400, RDB-410, RDB-420.

KENTUCKY
DEPARTMENT OF HIGHWAYS

CURB BOX INLET
TYPE A
(STEEL DRAWING)

STANDARD DRAWING NO. RDB-271-04

SUBMITTED David Kratt DIRECTOR DIVISION OF DESIGN 11-21-07 DATE

APPROVED Marcelyn Mathews STATE HIGHWAY ENGINEER 11-21-07 DATE

DIMENSIONS AND ESTIMATE OF QUANTITIES (TOP PHASE)

③ SIZE NO.		THROAT "L"	CONC.	NO. 5 STEEL BARS																				
				BAR a		BAR b		BAR c		BAR d ④		BAR d ⑤		BAR e		BAR f		BAR g		BAR k ①		BAR m		LBS.
GRADE	SAG	FT.	CU. YD.	QTY.	LIN. FT.	QTY.	LIN. FT.	QTY.	LIN. FT.	QTY.	LIN. FT.	QTY.	LIN. FT.	QTY.	LIN. FT.	QTY.	LIN. FT.	QTY.	LIN. FT.	QTY.	LIN. FT.	QTY.	LIN. FT.	
1	5	5'-0"	1.4	4	4'-6"	10	0'-9"	4	6'-7"	13	2'-0"	26	1'-0"	6	6'-0"	7	3'-0"	2	4'-0"	4	2'-0"	4	2'-0"	165
2	6	10'-0"	2.7					14			7'-0"		3'-6"		11'-0"	12								349
3	7	15'-0"	3.9					24			12'-0"		6'-0"		16'-0"	17								532
4	8	20'-0"	5.1					34			17'-0"		8'-6"		21'-0"	22								716

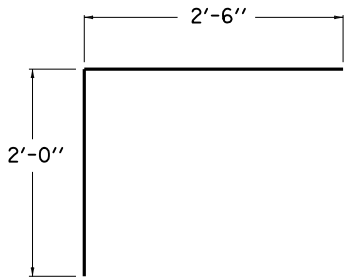

a BAR

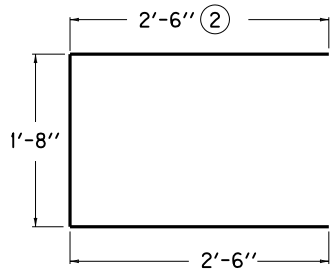

c BAR

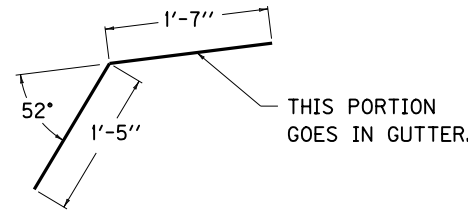

f BAR

USE WITH CURRENT STD. DWGS.
RDB-270, RDB-271, RDB-273,
RDB-400, RDB-410, RDB-420

~NOTES~

① USE k BARS ONLY IN CONJUNCTION WITH THE RISER.
② 2'-3" FOR ISLAND CURB.
③ INLETS ARE SHOWN ON PLANS AS "CURB BOX INLET TYPE A". FOLLOWING THIS ON THE PLANS ARE TWO NUMBERS AND A BOX HEIGHT. USE SECOND NUMBER WITH THIS CHART.
④ THIS SET OF d BARS ARE TO BE USED ONLY WHEN THE BOX INLET IS BUILT ON GRADE.
⑤ THIS SET OF d BARS ARE TO BE USED ONLY WHEN THE BOX INLET IS BUILT IN A SAG.
6. b, d, e, g, k, AND m BARS ARE ALL STRAIGHT BARS.
7. THE ENGINEER MAY REQUIRE ADDITIONAL REINFORCEMENT TO ELIMINATE SETTLEMENT OF ADJOINING SIDEWALK WHEN APPLICABLE. THIS WORK SHALL BE INCIDENTAL TO THE COST OF THE CURB BOX.

KENTUCKY
DEPARTMENT OF HIGHWAYS

CURB BOX INLET
TYPE A
(TOP PHASE TABLES)

STANDARD DRAWING NO. RDB-272-06

SUBMITTED John B. Lockstrike, DIRECTOR DIVISION OF DESIGN — 12-1-99 DATE
APPROVED F. M. Newell, STATE HIGHWAY ENGINEER — 12-1-99 DATE

REINFORCEMENT STEEL FOR 8'' LID

SIZE		NO. 5 STEEL BARS								
		BAR s		BAR †		BAR u		BAR v		LBS.
X	Y	QTY.	LIN. FT.	QTY.	LIN. FT.	QTY.	LIN. FT.	QTY.	LIN. FT.	
3'-0''	2'-0''	-	-	-	-	-	-	-	-	7
	2'-6''	4	3'-6''	6	4'-0''			14	0'-10''	59
	3'-0''		4'-0''	8					1'-4''	77
	3'-6''		4'-6''	10					1'-10''	94
	4'-0''		5'-0''	12					2'-4''	112
	4'-6''		5'-6''	14					2'-10''	130
	5'-0''		6'-0''	16					3'-4''	147
3'-6''	2'-0''	4	3'-0''	4	4'-6''	-	-	-	-	38
	2'-6''		3'-6''	6				14	0'-10''	62
	3'-0''		4'-0''	8					1'-4''	81
	3'-6''		4'-6''	10					1'-10''	100
	4'-0''		5'-0''	12					2'-4''	118
	4'-6''		5'-6''	14					2'-10''	137
	5'-0''		6'-0''	16					3'-4''	156
4'-0''	2'-0''	8	3'-0''	4	5'-0''	20	0'-10''	-	-	70
	2'-6''		3'-6''	6				14	0'-10''	97
	3'-0''		4'-0''	8					1'-4''	119
	3'-6''		4'-6''	10					1'-10''	141
	4'-0''		5'-0''	12					2'-4''	163
	4'-6''		5'-6''	14					2'-10''	185
	5'-0''		6'-0''	16					3'-4''	207
4'-6''	2'-0''	8	3'-0''	4	5'-6''	20	1'-1''	-	-	78
	2'-6''		3'-6''	6				14	0'-10''	105
	3'-0''		4'-0''	8					1'-4''	128
	3'-6''		4'-6''	10					1'-10''	151
	4'-0''		5'-0''	12					2'-4''	174
	4'-6''		5'-6''	14					2'-10''	197
	5'-0''		6'-0''	16					3'-4''	220
5'-0''	2'-0''	12	3'-0''	4	6'-0''	20	1'-4''	-	-	97
	2'-6''		3'-6''	6				14	0'-10''	127
	3'-0''		4'-0''	8					1'-4''	154
	3'-6''		4'-6''	10					1'-10''	180
	4'-0''		5'-0''	12					2'-4''	207
	4'-6''		5'-6''	14					2'-10''	233
	5'-0''		6'-0''	16					3'-4''	259

~NOTES~

1. IN ADDITION TO THE CHARTED STEEL, FOUR L BARS ARE REQUIRED IN THE LID AND ARE INCLUDED IN THE TOTALS.
2. CONCRETE QUANTITIES FOR LID ARE INCLUDED ON ''DIMENSIONS AND ESTIMATE OF QUANTITIES (PIPE CHAMBER)'', SEE CUR. STD. DWG. RDB-410.
3. REINFORCEMENT SHALL HAVE A CLEAR DISTANCE OF 2'' FROM THE OUTSIDE FACE UNLESS OTHERWISE SHOWN.

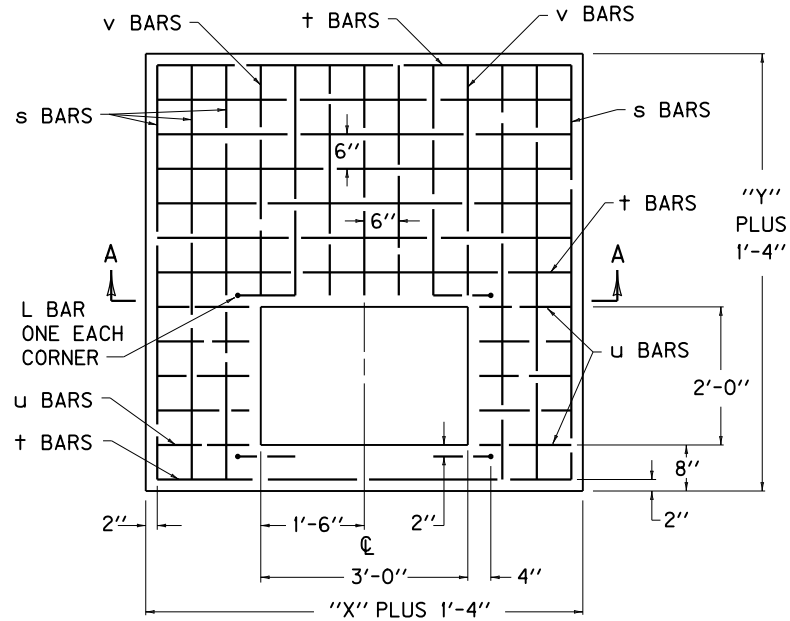

DETAIL OF 8'' LID
PLAN VIEW

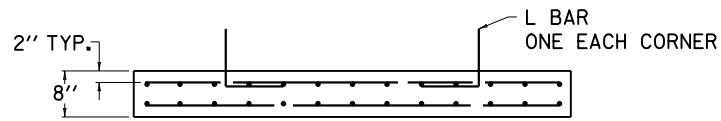

SECTION A-A

USE WITH CURRENT STD. DWGS.
RDB-271, RDB-272, RDB-400,
RDB-410, RDB-420, RDB-270.

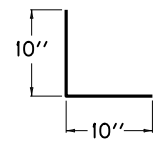

L BAR DETAIL

KENTUCKY
DEPARTMENT OF HIGHWAYS

CURB BOX INLET
TYPE A

(DETAIL & BAR CHART FOR 8'' LID)

STANDARD DRAWING NO. RDB-273-05

SUBMITTED John B. Lachstrom — DIRECTOR DIVISION OF DESIGN — 12-1-99 DATE

APPROVED J. M. Yowell — STATE HIGHWAY ENGINEER — 12-1-99 DATE

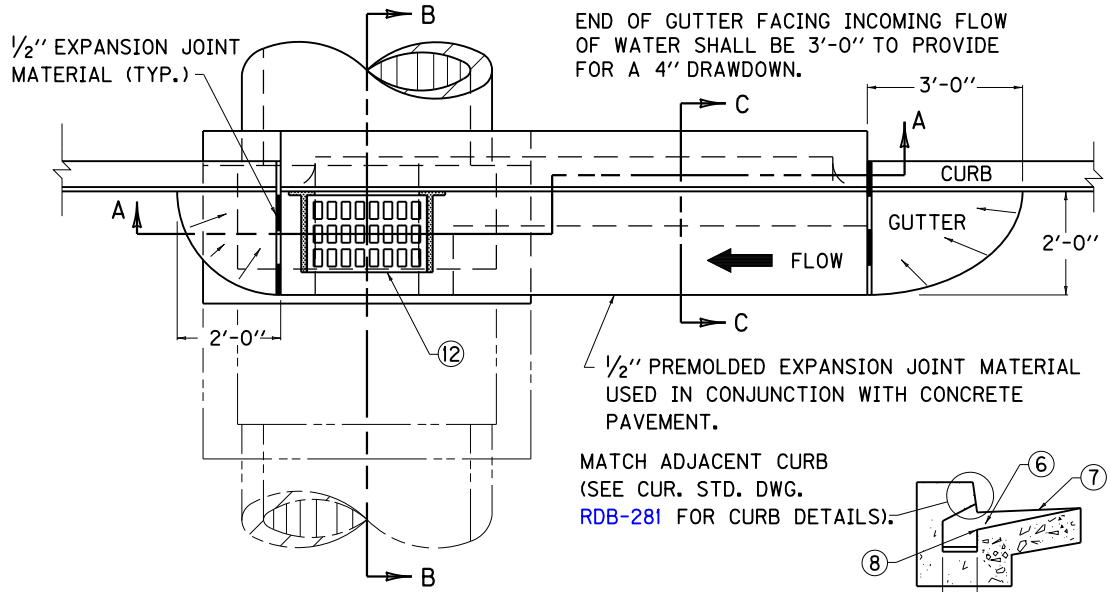

PLAN VIEW

SECTION C-C

NOTES

1. INLET SHALL BE CONSTRUCTED IN TWO PHASES (BOTTOM AND TOP)
   BID ITEM: CURB BOX INLET TYPE B (△)
   △ (B) = BOTTOM PHASE ONLY
   △ (T) = TOP PHASE ONLY
   NO SUFFIX INDICATES COMPLETE INLET.
2. SEE CUR. STD. DWGS. RDB-281, RDB-282, RDB-283, RDB-400, RDB-410, AND RDB-420 FOR STEEL PATTERN, DIMENSIONS AND QUANTITIES.
3. ALL WALLS , SLABS AND GUTTERS ARE 8" THICK UNLESS OTHERWISE INDICATED.

④ 24" DESIRED COVER, 12" MINIMUM COVER.
⑤ SPALLS OR CRUSHED STONE AROUND END OF A 4" OR 6" PIPE FOR SUBGRADE DRAINAGE.
⑥ 4" MINIMUM DRAWDOWN.
⑦ GUTTER CROSS SLOPE.
⑧ FLOW LINE (4" BELOW NORMAL GUTTERLINE ELEVATION).
⑨ LID MAY BE RAISED OR LOWERED IF APPROVED BY THE ENGINEER.
⑩ NOTE: "†" IS CONCRETE PIPE WALL THICKNESS OR METAL PIPE CORRUGATION DEPTH.
⑪ MINIMUM HEIGHT
H = Z + 1'-4" FOR ALL CURB TYPES
⑫ SEE CUR. STD. DWG. RDB-282 FOR FRAME AND GRATE DETAIL.

RISER
CU. YD. CONC. PER FT. HT.
0.3

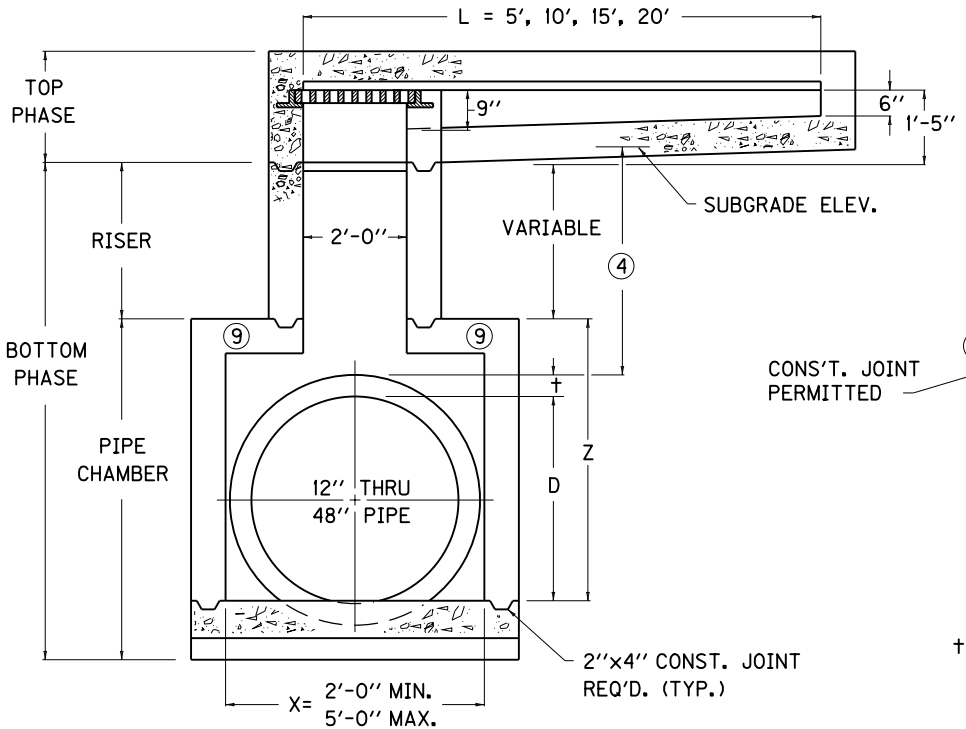

SECTION A-A

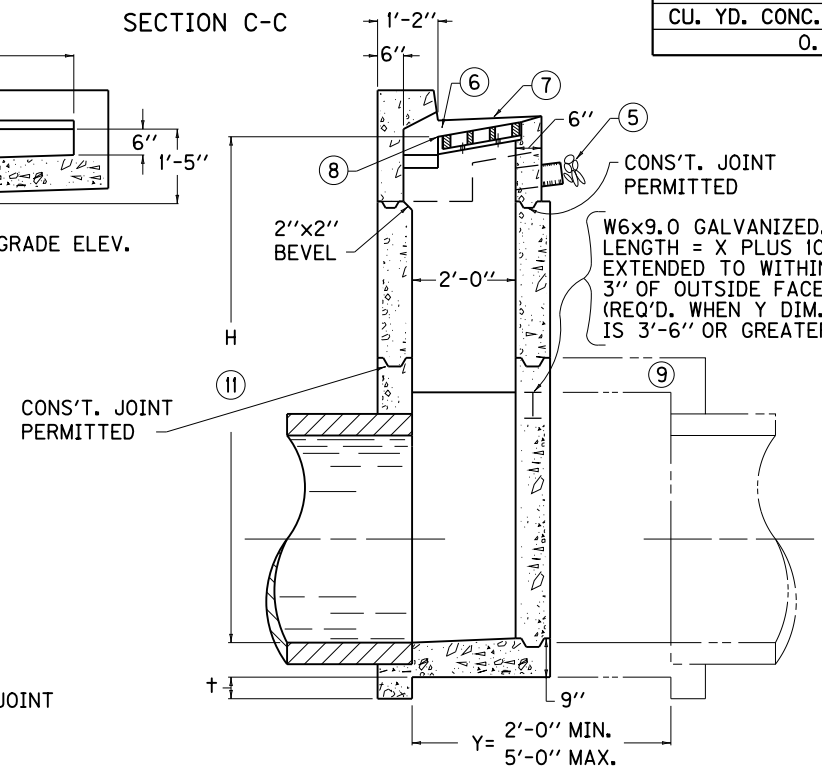

SECTION B-B

STEEL BEAM GUARDRAIL LOCATION (WHEN REQ'D.)

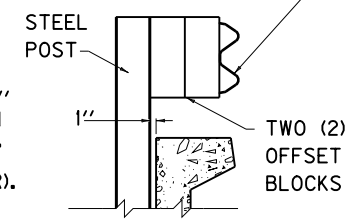

GUARDRAIL DETAIL

USE WITH CUR. STD. DWGS.:
RDB-281, RDB-282, RDB-283,
RDB-400, RDB-410, RDB-420.

KENTUCKY
DEPARTMENT OF HIGHWAYS

CURB BOX INLET
TYPE B
(DETAIL DRAWING)

STANDARD DRAWING NO. RDB-280-05

SUBMITTED David Kratt — DIRECTOR DIVISION OF DESIGN — 11-21-07 DATE

APPROVED Marcelyn Mathews — STATE HIGHWAY ENGINEER — 11-21-07 DATE

~ NOTES ~

1. SEE CURRENT STD. DWG. RDB-283 FOR LID REINFORCEMENT.
2. e and d BARS SPACED 1'-0" O.C. ALL OTHER BARS SPACED 6" O.C. EXCEPT WHERE OTHERWISE SPECIFIED.
3. PLACE ALL STEEL REINFORCEMENT 2" FROM INSIDE OF INLET WALL EXCEPT WHERE OTHERWISE SPECIFIED.

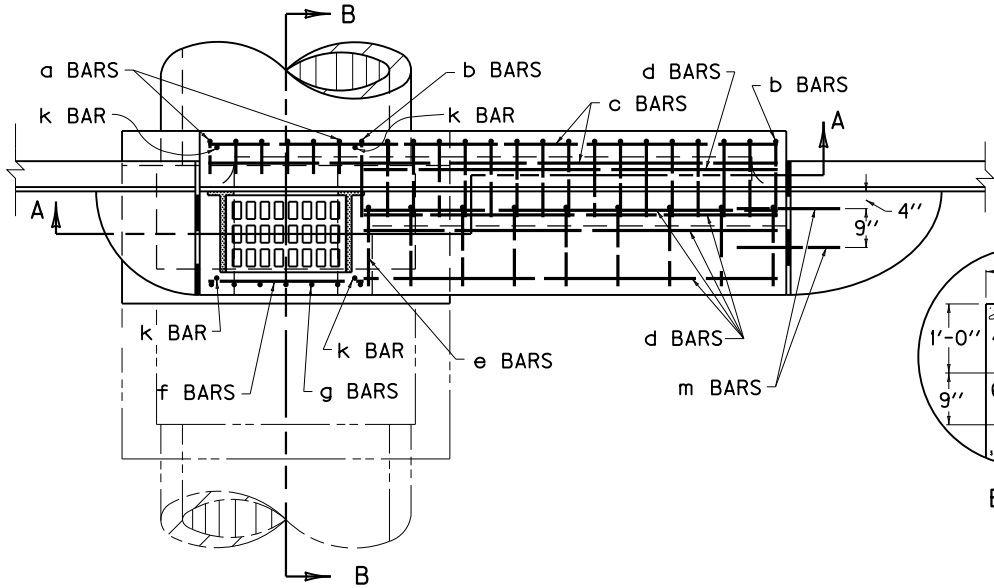

PLAN VIEW

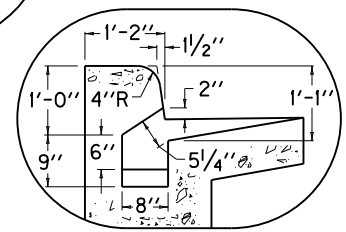

BARRIER CURB

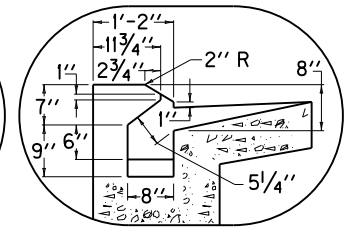

ISLAND CURB

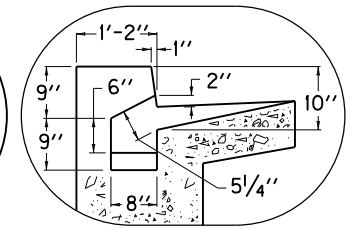

STANDARD CURB

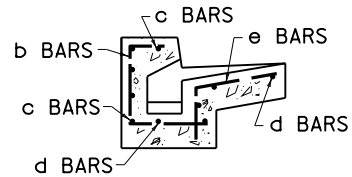

SECTION C-C

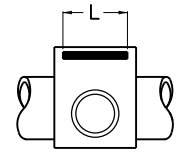

SAG OR GRADE

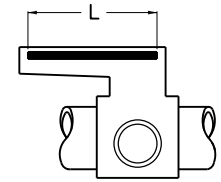

GRADE

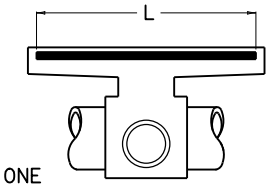

SAG

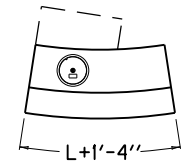

CURVE LAYOUT

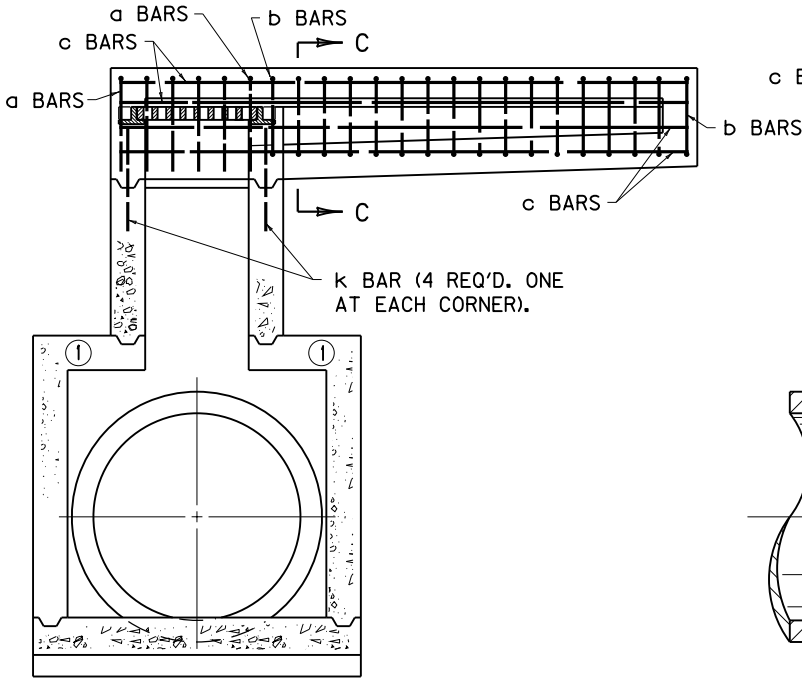

SECTION A-A

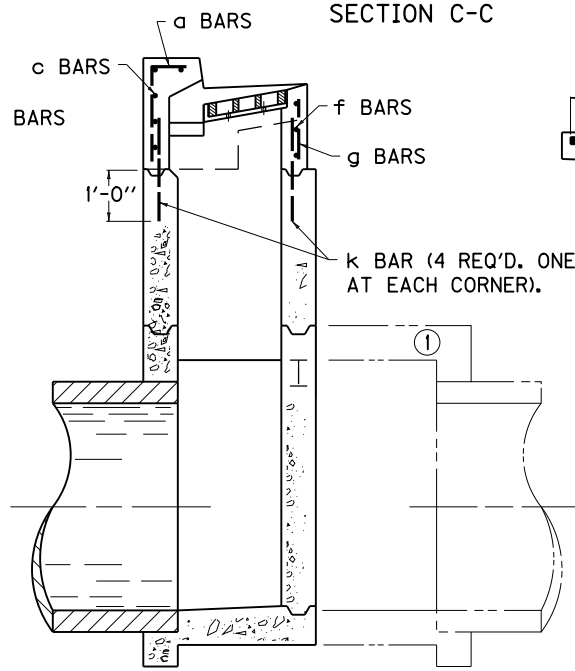

SECTION B-B

USE WITH CUR. STD. DWGS.:
RDB-280, RDB-282, RDB-283,
RDB-400, RDB-410, RDB-420.

KENTUCKY
DEPARTMENT OF HIGHWAYS

CURB BOX INLET
TYPE B
(STEEL DRAWING)

STANDARD DRAWING NO. RDB-281-02

SUBMITTED John B. Lackstrom — DIRECTOR DIVISION OF DESIGN — 12-1-99 DATE

APPROVED J. M. Yowell — STATE HIGHWAY ENGINEER — 12-1-99 DATE

DIMENSIONS AND ESTIMATE OF QUANTITIES (TOP PHASE)

② SIZE NO.		THROAT "L"	CONC.	NO. 5 STEEL BARS																				
				BAR a		BAR b		BAR c		BAR d ④		BAR d ⑤		BAR e		BAR f		BAR g		BAR k ①		BAR m		LBS.
GRADE	SAG	FT.	CU. YD.	QTY.	LIN. FT.	QTY.	LIN. FT.	QTY.	LIN. FT.	QTY.	LIN. FT.	QTY.	LIN. FT.	QTY.	LIN. FT.	QTY.	LIN. FT.	QTY.	LIN. FT.	QTY.	LIN. FT.	QTY.	LIN. FT.	
1	5	5'-0"	0.8	6	2'-6"	7	3'-7"	5	6'-0"	5	3'-0"	10	1'-6"	4	2'-7"	3	3'-0"	7	1'-2"	4	2'-0"	4	2'-0"	127
2	6	10'-0"	1.5			17			11'-0"		8'-0"		4'-0"	10										233
3	7	15'-0"	2.1			27			16'-0"		13'-0"		6'-6"	14										333
4	8	20'-0"	2.8			37			21'-0"		18'-0"		9'-0"	20										439

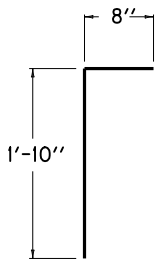

a BAR

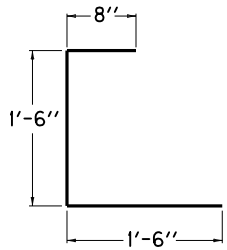

b BAR

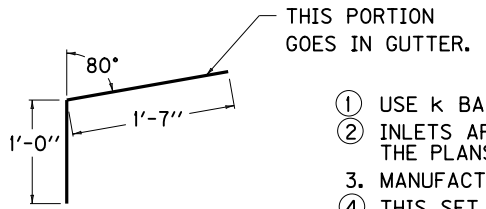

e BAR

~NOTES~

1. USE k BARS ONLY IN CONJUNCTION WITH THE RISER.
2. INLETS ARE SHOWN ON PLANS AS "CURB BOX INLET TYPE B". FOLLOWING THIS ON THE PLANS ARE TWO NUMBERS AND A BOX HEIGHT. USE SECOND NUMBER WITH THIS CHART.
3. MANUFACTURES' DRAFT WILL BE ACCEPTED ON ALL CASTINGS.
4. THIS SET OF d BARS ARE TO BE USED ONLY WHEN THE BOX INLET IS BUILT ON GRADE.
5. THIS SET OF d BARS ARE TO BE USED ONLY WHEN THE BOX INLET IS BUILT IN A SAG.
6. c, d, f, g, k, AND m BARS ARE ALL STRAIGHT BARS.
7. THE ENGINEER MAY REQUIRE ADDITIONAL REINFORCEMENT, TO ELIMINATE SETTLEMENT OF ADJOINING SIDEWALK WHEN APPLICABLE. THIS WORK SHALL BE INCIDENTAL TO THE COST OF THE CURB BOX.

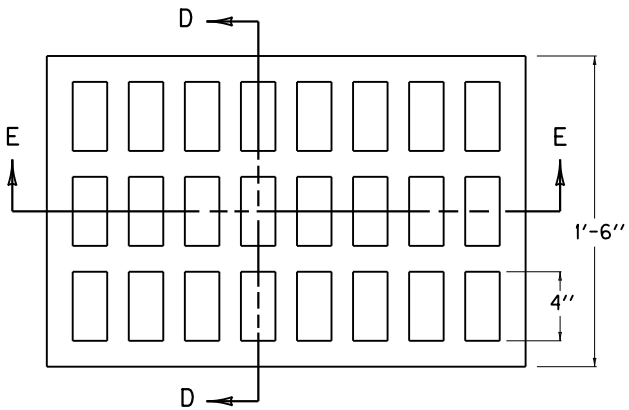

GRATE PLAN VIEW

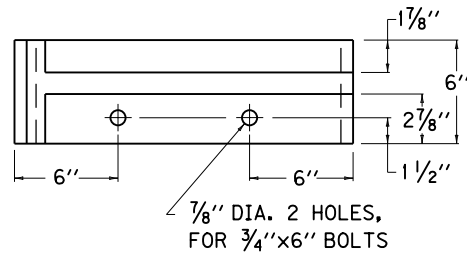

FRAME PLAN VIEW
(LEFT HALF)

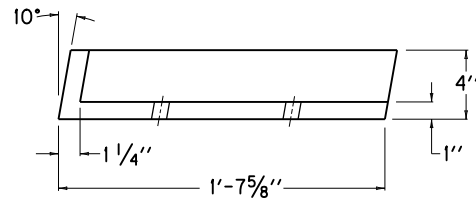

FRAME ELEVATION

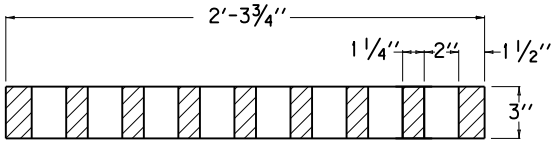

SECTION E-E

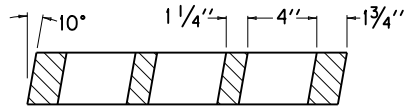

SECTION D-D

USE WITH CURRENT STD. DWGS.
RDB-280 , RDB-281 , RDB-283
RDB-400 , RDB-410 , RDB-420

KENTUCKY
DEPARTMENT OF HIGHWAYS

CURB BOX INLET
TYPE B
(TOP PHASE TABLES)

STANDARD DRAWING NO. RDB-282-03

SUBMITTED John B. Sachatello — DIRECTOR DIVISION OF DESIGN — 12-1-99 DATE

APPROVED F. M. Newell — STATE HIGHWAY ENGINEER — 12-1-99 DATE

REINFORCEMENT STEEL FOR 8'' LID

SIZE		NO. 5 STEEL BARS								
		BAR s		BAR †		BAR u		BAR v		LBS.
X	Y	QTY.	LIN. FT.	QTY.	LIN. FT.	QTY.	LIN. FT.	QTY.	LIN. FT.	
2'-0''	2'-0''	-	-	-	-	-	-	-	-	7
	2'-6''	4	3'-6''	6	3'-0''	-	-	10	0'-10''	49
	3'-0''		4'-0''	8					1'-4''	63
	3'-6''		4'-6''	10					1'-10''	76
	4'-0''		5'-0''	12					2'-4''	90
	4'-6''		5'-6''	14					2'-10''	103
	5'-0''		6'-0''	16					3'-4''	117
2'-6''	2'-0''	4	3'-0''	4	3'-6''	-	-	-	-	34
	2'-6''		3'-6''	6				10	0'-10''	52
	3'-0''		4'-0''	8					1'-4''	67
	3'-6''		4'-6''	10					1'-10''	81
	4'-0''		5'-0''	12					2'-4''	96
	4'-6''		5'-6''	14					2'-10''	111
	5'-0''		6'-0''	16					3'-4''	125
3'-0''	2'-0''	8	3'-0''	4	4'-0''	20	0'-10''	-	-	66
	2'-6''		3'-6''	6				10	0'-10''	87
	3'-0''		4'-0''	8					1'-4''	105
	3'-6''		4'-6''	10					1'-10''	123
	4'-0''		5'-0''	12					2'-4''	141
	4'-6''		5'-6''	14					2'-10''	158
	5'-0''		6'-0''	16					3'-4''	178
3'-6''	2'-0''	8	3'-0''	4	4'-6''	20	1'-1''	-	-	73
	2'-6''		3'-6''	6				10	0'-10''	96
	3'-0''		4'-0''	8					1'-4''	114
	3'-6''		4'-6''	10					1'-10''	133
	4'-0''		5'-0''	12					2'-4''	152
	4'-6''		5'-6''	14					2'-10''	171
	5'-0''		6'-0''	16					3'-4''	190
4'-0''	2'-0''	12	3'-0''	4	5'-0''	20	1'-4''	-	-	93
	2'-6''		3'-6''	6				10	0'-10''	119
	3'-0''		4'-0''	8					1'-4''	141
	3'-6''		4'-6''	10					1'-10''	162
	4'-0''		5'-0''	12					2'-4''	184
	4'-6''		5'-6''	14					2'-10''	206
	5'-0''		6'-0''	16					3'-4''	228
4'-6''	2'-0''	12	3'-0''	4	5'-6''	20	1'-7''	-	-	101
	2'-6''		3'-6''	6				10	0'-10''	127
	3'-0''		4'-0''	8					1'-4''	150
	3'-6''		4'-6''	10					1'-10''	173
	4'-0''		5'-0''	12					2'-4''	196
	4'-6''		5'-6''	14					2'-10''	219
	5'-0''		6'-0''	16					3'-4''	242
5'-0''	2'-0''	16	3'-0''	4	6'-0''	20	1'-10''	-	-	120
	2'-6''		3'-6''	6				10	0'-10''	150
	3'-0''		4'-0''	8					1'-4''	176
	3'-6''		4'-6''	10					1'-10''	202
	4'-0''		5'-0''	12					2'-4''	228
	4'-6''		5'-6''	14					2'-10''	254
	5'-0''		6'-0''	16					3'-4''	280

~NOTES~

1. IN ADDITION TO THE CHARTED STEEL, FOUR L BARS ARE REQUIRED IN THE LID AND ARE INCLUDED IN THE TOTALS.
2. CONCRETE QUANTITIES FOR LID ARE INCLUDED ON "DIMENSIONS AND ESTIMATE OF QUANTITIES (PIPE CHAMBER)", SEE CUR. STD. DWG. RDB-410.
3. REINFORCEMENT SHALL HAVE A CLEAR DISTANCE OF 2'' FROM THE OUTSIDE FACE UNLESS OTHERWISE SHOWN.

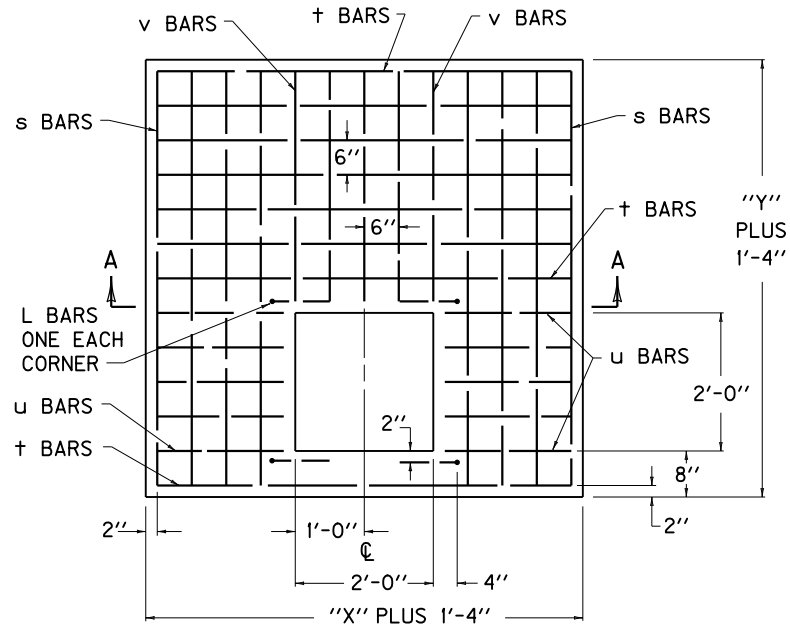

DETAIL OF 8'' LID
PLAN VIEW

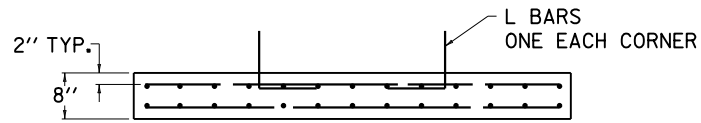

SECTION A-A

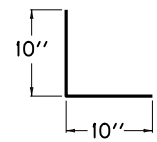

L BAR DETAIL

USE WITH CUR. STD. DWGS, RDB-280, RDB-281, RDB-282, RDB-400, RDB-410, RDB-420.

KENTUCKY
DEPARTMENT OF HIGHWAYS

CURB BOX INLET
TYPE B

(DETAIL & BAR CHART FOR 8'' LID)

STANDARD DRAWING NO. RDB-283-03

SUBMITTED John B. Lackstrom, DIRECTOR DIVISION OF DESIGN — DATE 12-1-99

APPROVED F. M. Yowell, STATE HIGHWAY ENGINEER — DATE 12-1-99

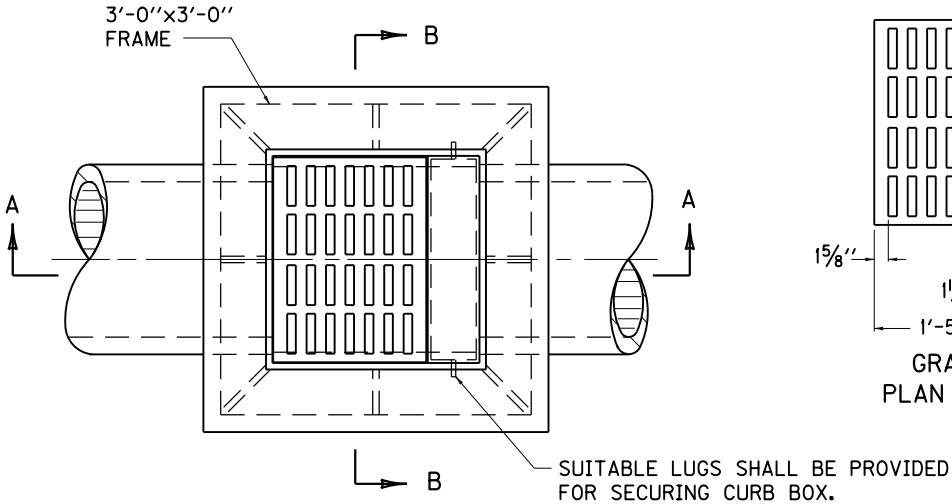

PLAN VIEW

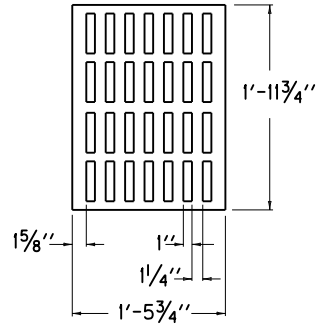

GRATE
PLAN VIEW

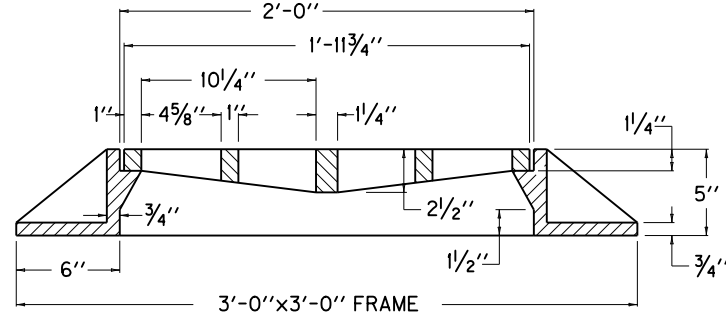

DETAIL OF FRAME & GRATE
AT SECTION A-A

APPROXIMATE QUANTITIES

PIPE SIZE	MIN. HEIGHT	CU. YDS. CONC.
15"	4'-0"	1.15
18"	4'-3"	1.22
CURB FRAME WEIGHT = 61 LBS.		
FRAME WEIGHT = 277 LBS.		
GRATE WEIGHT = 127 LBS.		

NO DEDUCTIONS HAVE BEEN MADE FOR PIPE.

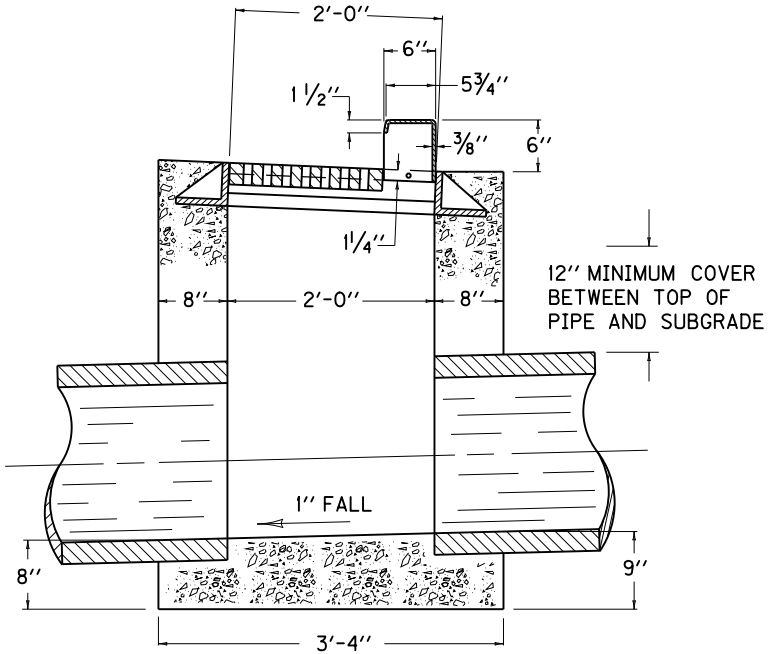

SECTION A-A

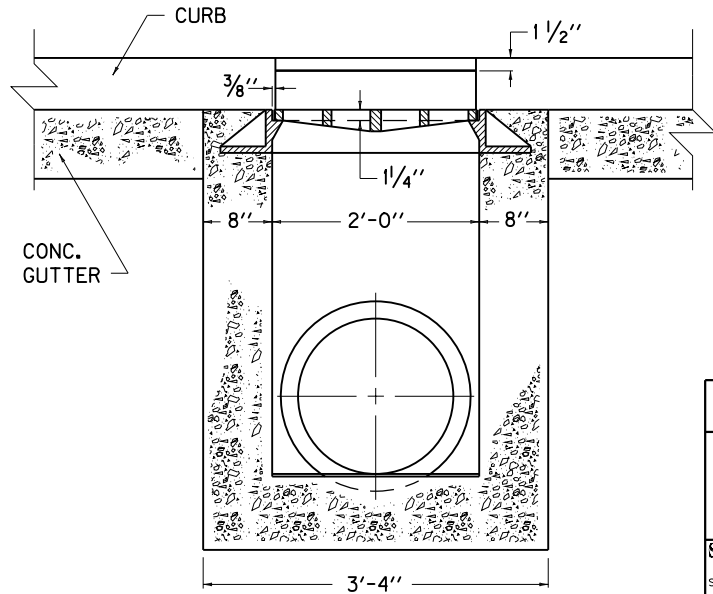

SECTION B-B

KENTUCKY
DEPARTMENT OF HIGHWAYS

STANDARD CURB
BOX INLET
TYPE F

STANDARD DRAWING NO. RDB-320-05

SUBMITTED John B. Sachatzke — DIRECTOR DIVISION OF DESIGN — 12-1-99 DATE

APPROVED F. M. Yowell — STATE HIGHWAY ENGINEER — 12-1-99 DATE

ADDITIONAL STEEL REQUIREMENTS FOR RISER

(WHEN H = 8′ TO 15′)

NOTES

ALL REINFORCEMENT SHALL BE NO. 5 STEEL BARS.

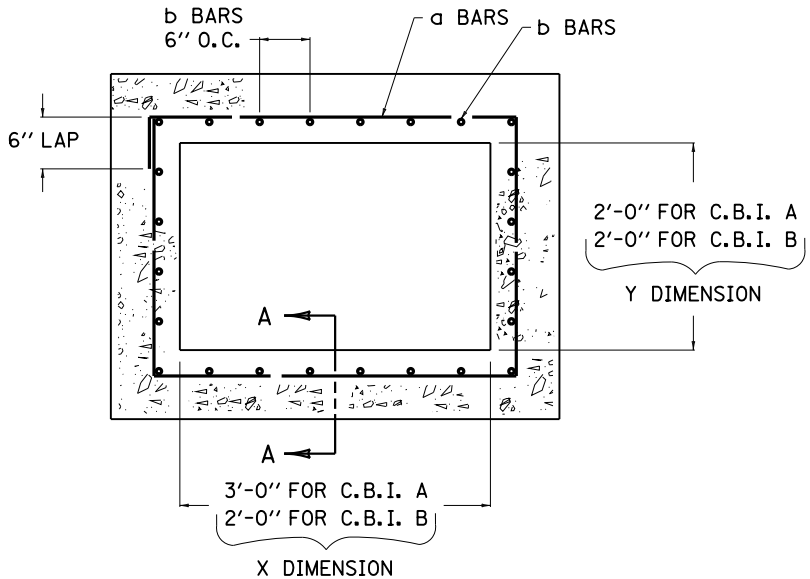

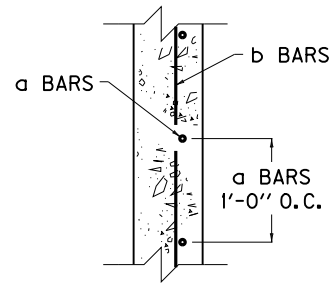

SECTION A-A
CURB BOX INLET TYPE A
AND
CURB BOX INLET TYPE B

(USE WITH C.B.I. A & C.B.I. B
WHEN H = 8′ TO 15′)

(1) APPROXIMATE QUANTITIES PER ONE FOOT IN HEIGHT	
C.B.I. A	C.B.I. B
LBS. STEEL	LBS. STEEL
38	31

(1) USE WHEN H EXCEEDS 8′-0″

KENTUCKY
DEPARTMENT OF HIGHWAYS

BOX INLET RISER

STANDARD DRAWING NO. RDB-400-04

SUBMITTED John B. Sachatello — DIRECTOR DIVISION OF DESIGN — 12-1-99 DATE

APPROVED J. M. Yowell — STATE HIGHWAY ENGINEER — 12-1-99 DATE

DIMENSIONS AND ESTIMATE OF QUANTITIES
(PIPE CHAMBER)

INLET SIZE (4)			PIPE		Z	CONCRETE	
NO. (6)	X	Y	MAX. DIA.	LOCA-TION	(1)	CU. YD. (1) (2)	Q (3)
1	2'-0"	2'-0"	12"	X OR Y	2'-2"	0.9	0.3
2	3'-0"					1.1	
3	2'-0"		15"		2'-5"	0.9	
4	3'-0"					1.2	
5	2'-0"		18"		2'-9"	1.0	
6	3'-0"					1.3	
7	2'-0"	2'-6"	21"	Y	3'-0"	1.2	
8	2'-6"	2'-0"		X			
9		2'-6"		X OR Y		1.4	
10	3'-0"	2'-0"		X			
11		2'-6"		X OR Y		1.5	
12	2'-0"		24"	Y	3'-3"	1.3	
13	2'-6"	2'-0"		X			
14		2'-6"		X OR Y		1.5	
15	3'-0"	2'-0"		X		1.4	
16		2'-6"		X OR Y		1.6	
17	2'-0"	3'-0"	27"	Y	3'-6"	1.5	
18	2'-6"					1.7	
19	3'-0"	2'-0"		X		1.5	
20		2'-6"				1.7	
21		3'-0"		X OR Y		1.9	0.4
22	2'-0"	3'-6"	30"	Y	4'-1"		0.3
23	2'-6"					2.1	0.4
24	3'-0"					2.3	
25	3'-6"	2'-0"		X	3'-10"	1.8	0.3
26		2'-6"				2.0	0.4
27		3'-0"				2.2	
28		3'-6"		X OR Y	4'-1"	2.5	
29	2'-0"		33"	Y	4'-4"	2.0	0.3
30	2'-6"					2.2	0.4
31	3'-0"					2.4	
32	3'-6"	2'-0"		X	4'-1"	1.9	0.3
33		2'-6"				2.1	0.4
34		3'-0"				2.3	
35		3'-6"		X OR Y	4'-4"	2.6	
36	2'-0"	4'-0"	36"	Y	4'-7"	2.2	
37	2'-6"					2.5	
38	3'-0"					2.7	
39	3'-6"					2.9	
40	4'-0"	2'-0"		X	4'-4"	2.1	
41		2'-6"				2.4	
42		3'-0"				2.6	
43		3'-6"			4'-7"	2.9	
44		4'-0"		X OR Y		3.2	0.5
45	2'-0"	4'-6"	42"	Y	5'-2"	2.6	0.4
46	2'-6"					2.9	
47	3'-0"					3.2	
48	3'-6"	4'-6"	42"	Y	5'-2"	3.4	0.5
49	4'-0"					3.7	
50	4'-6"	2'-0"		X	4'-11"	2.5	0.4
51		2'-6"				2.8	
52		3'-0"				3.0	
53		3'-6"			5'-2"	3.4	0.5
54		4'-0"				3.5	
55		4'-6"		X OR Y		3.9	
56	2'-0"	5'-0"	48"	Y	5'-8"	3.0	0.4
57	2'-6"					3.3	
58	3'-0"					3.6	0.5
59	3'-6"					3.9	
60	4'-0"					4.2	
61	4'-6"					4.5	
62	5'-0"	2'-0"		X	5'-5"	2.9	0.4
63		2'-6"				3.2	
64		3'-0"			5'-8"	3.5	0.5
65		3'-6"				3.9	
66		4'-0"				4.2	
67		4'-6"				4.5	
68		5'-0"		X OR Y		4.7	0.6

~NOTES~

1. BASED ON Z AS EQUAL TO D++12" WHEN "Y" DIMENSION IS LESS THAN 3'-6". BASED ON Z AS EQUAL TO D++15" WHEN "Y" DIMENSION IS 3'-6" OR GREATER.
2. SEE REFERENCE CHART FOR QUANTITIES TO DEDUCT FOR PIPE.
3. Q = CU. YD. PER FOOT INCREASE OR DECREASE WHEN Z VARIES.
4. SEE THE FOLLOWING CUR. STD. DWGS. FOR STEEL PATTERN AND DIMENSIONS:
   CURB BOX INLET TYPE A - RDB-270 AND RDB-271
   CURB BOX INLET TYPE B - RDB-280 AND RDB-281
5. SEE CUR. STD. DWGS. RDB-400 AND RDB-420 FOR REINFORCEMENT IN PIPE CHAMBER AND RISER WHEN H = 8'-0" OR GREATER.
6. INLETS ARE SHOWN ON PLANS AS CURB BOX INLET TYPE "A" OR CURB BOX INLET TYPE "B". FOLLOWING THIS ON THE PLANS ARE TWO NUMBERS AND A BOX HEIGHT. USE FIRST NUMBER WITH THIS CHART.

REFERENCE CHART

DIA. OF PIPE	C.B.I. TYPE A		C.B.I. TYPE B		CONCRETE TO DEDUCT FOR EACH PIPE
	PIPE ON "X" SIDE OF INLET	PIPE ON "Y" SIDE OF INLET	PIPE ON "X" SIDE OF INLET	PIPE ON "Y" SIDE OF INLET	CUBIC YARDS
0	3'-0"	2'-0"	2'-0"	2'-0"	-
12"					0.1
15"-18"					
21"-24"		2'-6"	2'-6"	2'-6"	
27"		3'-0"	3'-0"	3'-0"	0.2
30"-33"	3'-6"	3'-6"	3'-6"	3'-6"	
36"	4'-0"	4'-0"	4'-0"	4'-0"	0.3
42"	4'-6"	4'-6"	4'-6"	4'-6"	0.4
48"	5'-0"	5'-0"	5'-0"	5'-0"	0.5

USE THIS DRAWING FOR BOTTOM PHASE AND COMPLETE INLET WITH C.B.I. A AND C.B.I. B.

KENTUCKY
DEPARTMENT OF HIGHWAYS

BOX INLET
PIPE CHAMBER

STANDARD DRAWING NO. RDB-410-05

SUBMITTED John B. Lockstrike, DIRECTOR DIVISION OF DESIGN — DATE 12-1-99

APPROVED F. M. Yowell, STATE HIGHWAY ENGINEER — DATE 12-1-99

① ADDITIONAL STEEL REINFORCEMENT REQUIREMENTS

(PIPE CHAMBER, H = 8′ TO 15′)

SIZE ②		NO. 5 STEEL BARS									
		③ BAR n		④ BAR p		BAR q		BAR r		LBS. ⑤	
X	Y	QTY.	LIN. FT.	QTY.	LIN. FT.	QTY.	LIN. FT.	QTY.	LIN. FT.	TOTAL	⑥
2′-0″	2′-0″	20	6′-0″	7	10′-2″	4	2′-6″	4	2′-6″	220	31
	2′-6″	22			11′-2″		3′-0″	5		245	35
	3′-0″	24			12′-2″		3′-6″	6		269	38
	3′-6″	26			13′-2″		4′-0″	7		294	41
	4′-0″	28			14′-2″		4′-6″	8		318	44
	4′-6″	30			15′-2″		5′-0″	9		343	47
	5′-0″	32			16′-2″		5′-6″	10		367	50
2′-6″	2′-0″	22	6′-0″	7	11′-2″	5	2′-6″	4	3′-0″	245	35
	2′-6″	24			12′-2″		3′-0″	5		270	38
	3′-0″	26			13′-2″		3′-6″	6		296	41
	3′-6″	28			14′-2″		4′-0″	7		321	44
	4′-0″	30			15′-2″		4′-6″	8		347	47
	4′-6″	32			16′-2″		5′-0″	9		373	50
	5′-0″	34			17′-2″		5′-6″	10		398	53
3′-0″	2′-0″	24	6′-0″	7	12′-2″	6	2′-6″	4	3′-6″	268	38
	2′-6″	26			13′-2″		3′-0″	5		295	41
	3′-0″	28			14′-2″		3′-6″	6		321	44
	3′-6″	30			15′-2″		4′-0″	7		348	47
	4′-0″	32			16′-2″		4′-6″	8		374	50
	4′-6″	34			17′-2″		5′-0″	9		401	53
	5′-0″	36			18′-2″		5′-6″	10		427	57
3′-6″	2′-0″	26	6′-0″	7	13′-2″	7	2′-6″	4	4′-0″	293	41
	2′-6″	28			14′-2″		3′-0″	5		320	44
	3′-0″	30			15′-2″		3′-6″	6		348	47
	3′-6″	32			16′-2″		4′-0″	7		376	50
	4′-0″	34			17′-2″		4′-6″	8		404	53
	4′-6″	36			18′-2″		5′-0″	9		431	56
	5′-0″	38			19′-2″		5′-6″	10		459	60
4′-0″	2′-0″	28	6′-0″	7	14′-2″	8	2′-6″	4	4′-6″	317	44
	2′-6″	30			15′-2″		3′-0″	5		346	47
	3′-0″	32			16′-2″		3′-6″	6		374	50
	3′-6″	34			17′-2″		4′-0″	7		404	53
	4′-0″	36			18′-2″		4′-6″	8		432	56
	4′-6″	38			19′-2″		5′-0″	9		460	60
	5′-0″	40			20′-2″		5′-6″	10		490	63
4′-6″	2′-0″	30	6′-0″	7	15′-2″	9	2′-6″	4	5′-0″	342	47
	2′-6″	32			16′-2″		3′-0″	5		371	50
	3′-0″	34			17′-2″		3′-6″	6		401	53
	3′-6″	36			18′-2″		4′-0″	7		431	56
	4′-0″	38			19′-2″		4′-6″	8		460	60
	4′-6″	40			20′-2″		5′-0″	9		490	63
	5′-0″	42			21′-2″		5′-6″	10		519	66

SIZE ②		NO. 5 STEEL BARS									
		③ BAR n		④ BAR p		BAR q		BAR r		LBS. ⑤	
X	Y	QTY.	LIN. FT.	QTY.	LIN. FT.	QTY.	LIN. FT.	QTY.	LIN. FT.	TOTAL	⑥
5′-0″	2′-0″	32	6′-0″	7	16′-2″	10	2′-6″	4	5′-6″	367	50
	2′-6″	34			17′-2″		3′-0″	5		398	53
	3′-0″	36			18′-2″		3′-6″	6		427	56
	3′-6″	38			19′-2″		4′-0″	7		459	60
	4′-0″	40			20′-2″		4′-6″	8		490	63
	4′-6″	42			21′-2″		5′-0″	9		519	66
	5′-0″	44			22′-2″		5′-6″	10		551	69

NOTES

① BASED ON ″Z″ AS EQUAL TO 6′-0″.
② SEE CURRENT STD. DWG. RDB-270 AND RDB-280 FOR LOCATION AND DIMENSIONS.
③ LENGTH OF n BAR IS ALWAYS SAME AS ″Z″ DIMENSION.
④ ADD OR SUBTRACT ONE p BAR PER EVEN FOOT VARIANCE FROM 6′-0″ Z.
⑤ NO DEDUCTIONS HAVE BEEN MADE FOR PIPE.
⑥ ADD OR SUBTRACT LBS. STEEL PER FT. VARIANCE FROM 6′-0″ Z.
7. REINFORCEMENT SHALL HAVE A CLEAR DISTANCE OF 2″ FROM THE FACE UNLESS OTHERWISE SHOWN.

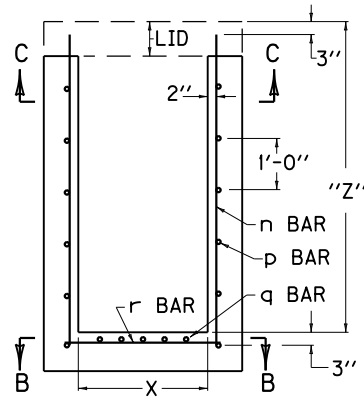

SECTION A-A

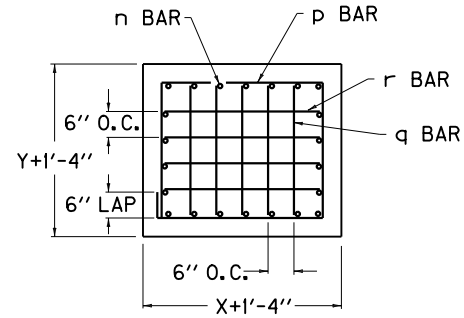

SECTION B-B

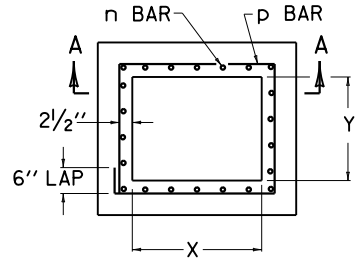

SECTION C-C

(USE WITH C.B.I. A and C.B.I. B WHEN H = 8′ to 15′)

DEPARTMENT OF HIGHWAYS

BOX INLET
PIPE CHAMBER
(ADDITIONAL STEEL)

STANDARD DRAWING NO. RDB-420-04

SUBMITTED John B. Sachatello DIRECTOR DIVISION OF DESIGN 12-1-99 DATE

APPROVED J. M. Yowell STATE HIGHWAY ENGINEER 12-1-99 DATE

NOTES

1. STEPS SHALL BE ASPHALT COATED CAST IRON OR POLYPROPYLENE PLASTIC COATED STEEL ROD OR OF A TYPE AND SIZE APPROVED BY THE ENGINEER.
2. STEPS SHALL BE SPACED APPROXIMATELY 12" TO 16" O.C. VERTICALLY SO AS TO FORM A CONTINUOUS LADDER.
3. STEPS SHALL BE REQUIRED IN MANHOLES WHEN THE STRUCTURE IS 4 FEET AND GREATER IN DEPTH. (MEASURE FROM FLOW LINE OF LOWEST PIPE TO TOP OF STRUCTURE).
4. THE TREADS OF ALL STEPS SHALL HAVE ANTI-SKID PROPERTIES FOR HAND AND FOOT GRIPS.

MANHOLE:

USE TYPE 1 OR TYPE 3 STEPS FOR MANHOLE PIPE CHAMBER AND STEP TYPE 2 OR TYPE 4 FOR MANHOLE TOWER.

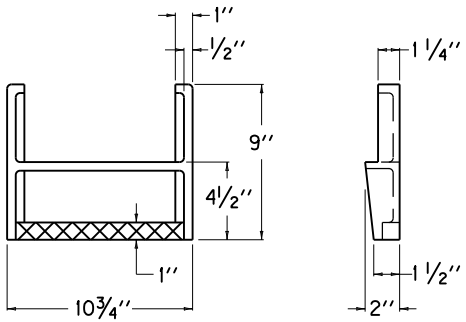

STEP TYPE NO. 1

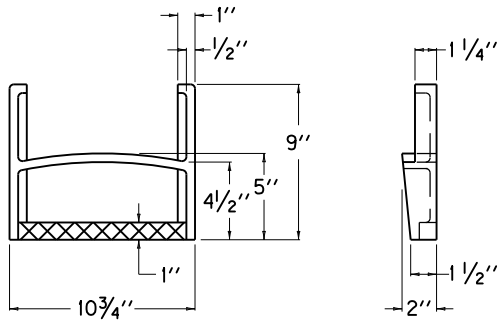

STEP TYPE NO. 2

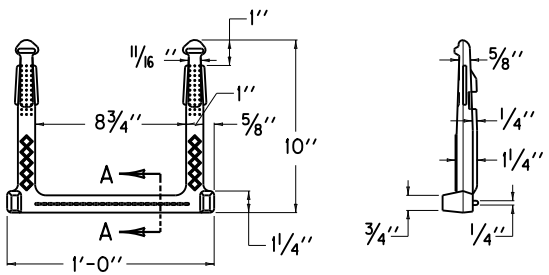

STEP TYPE NO. 3

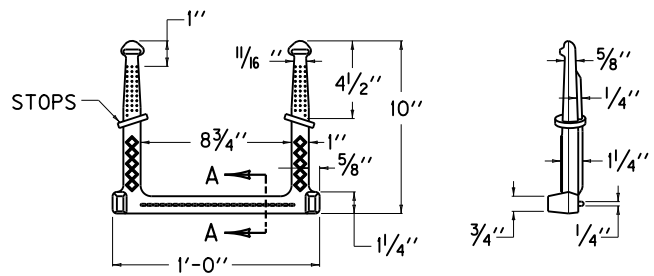

STEP TYPE NO. 4

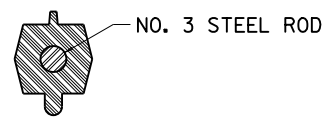

SECTION A-A

KENTUCKY
DEPARTMENT OF HIGHWAYS

MANHOLE
STEPS

STANDARD DRAWING NO. RDB-430-04

SUBMITTED John B. Lachstrom — DIRECTOR DIVISION OF DESIGN — 12-1-99 DATE

APPROVED F. M. Yowell — STATE HIGHWAY ENGINEER — 12-1-99 DATE

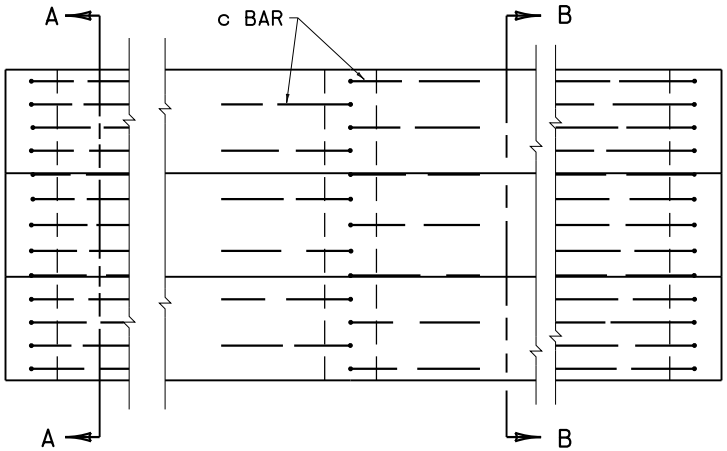

PLAN VIEW

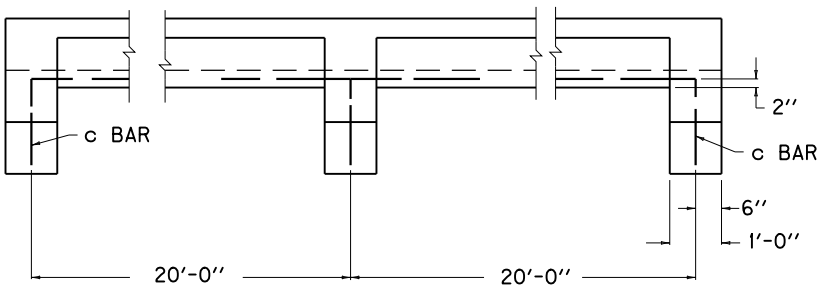

ELEVATION VIEW

NOTES

1. ROADWAY EXCAVATION SHALL BE PAID FROM THE TOP OF THE PAVED DITCH SLAB TO THE ORIGINAL GROUND. THE EXCAVATION FROM THE TOP OF THE CONCRETE OF THE PAVED DITCH DOWN, WILL BE INCLUDED IN THE PRICE PAID FOR THE PAVED DITCH INCLUDING THE EXCAVATION FOR THE INTERMEDIATE AND END ANCHORS, AND NO DIRECT PAYMENT WILL BE MADE FOR THIS EXCAVATION.
2. ESTIMATE 0.080 CU. YDS. CLASS A CONCRETE PER LINEAR FOOT OF PAVED DITCH AND 0.398 CU. YDS. CLASS A CONCRETE PER ANCHOR BASED ON MINIMUM DIMENSIONS SHOWN ON THIS DRAWING.
3. THE SECTION SHOWN WITHIN THE MINIMUM DIMENSION IS ESTIMATED AT 0.72 SQ. YD. PER LIN. FT.
4. COMPACTION, FINISHING AND CURING SHALL BE THE SAME AS REQUIRED FOR CONCRETE SIDEWALK.
5. IF THE CONTRACTOR ELECTS TO USE A CONSTRUCTION JOINT IN THE POURING OF THE PAVED DITCH, IT SHALL BE CONSTRUCTED AS DETAILED.
6. ANY LENGTH OF LONGITUDINAL REINFORCING STEEL WILL BE PERMITTED PROVIDED A 1'-0'' LAP IS USED IN THE SPLICE. ADEQUATE TIES AT THE SPLICE SHALL BE REQUIRED.

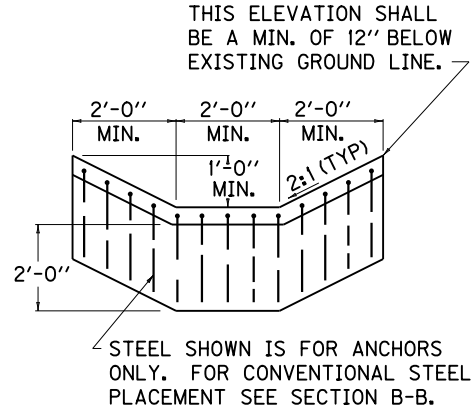

SECTION A-A

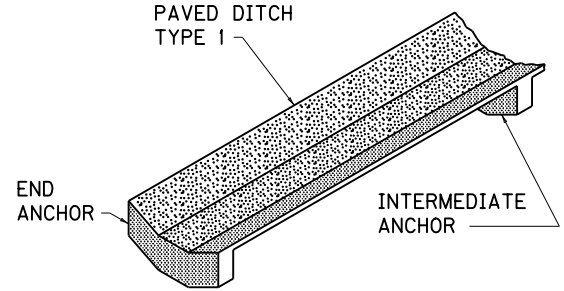

ISOMETRIC VIEW

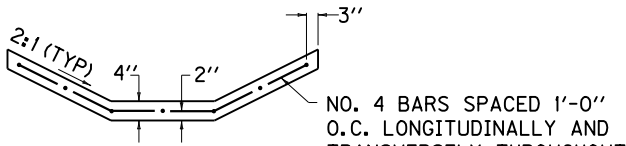

SECTION B-B

NO. 4 BARS SPACED 1'-0'' O.C. LONGITUDINALLY AND TRANSVERSELY THROUGHOUT THE SECTION. (IN ADDITION TO ANCHOR STEEL).

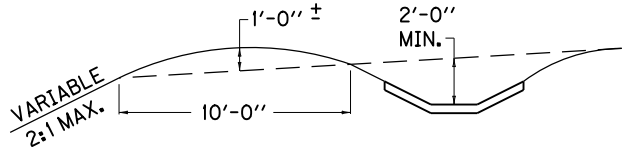

TYPICAL PAVED DITCH
(INTERCEPTOR DITCH)

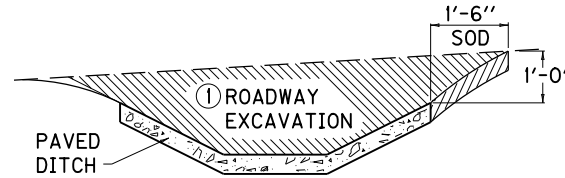

SHOULD THE TERRAIN OF THE EXISTING GROUND BE SO THAT WATER WOULD DRAIN INTO THE DITCH FROM BOTH SIDES, THEN SODDING WILL BE REQUIRED ON BOTH SIDES OF THE DITCH.

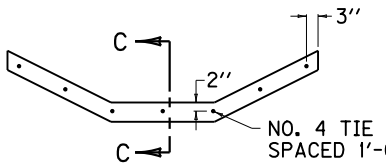

TIE BAR SECTIONAL VIEW

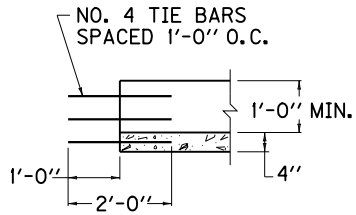

SECTION C-C

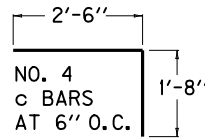

c BAR DETAIL

APPROX. STEEL QUANTITIES FOR MINIMUM SECTION SHOWN	
END ANCHORS (EACH)	36.19 LBS.
INTERMEDIATE ANCHORS (EACH)	36.19 LBS.
CONSTRUCTION JOINTS (EACH)	9.352 LBS.
BARS PER SQ. YD. OF DITCH	12.047 LBS.

KENTUCKY
DEPARTMENT OF HIGHWAYS

PAVED DITCH
TYPE 1

STANDARD DRAWING NO. RDD-001-05

SUBMITTED John B. Sachatzke — DIRECTOR DIVISION OF DESIGN — 12-1-99 DATE

APPROVED J. M. Yowell — STATE HIGHWAY ENGINEER — 12-1-99 DATE

NOTES

1. ROADWAY EXCAVATION SHALL BE PAID FROM THE TOP OF THE PAVED DITCH SLAB TO THE ORIGINAL GROUND. THE EXCAVATION FROM THE TOP OF THE CONCRETE OF THE PAVED DITCH DOWN, WILL BE INCLUDED IN THE PRICE PAID FOR THE PAVED DITCH INCLUDING THE EXCAVATION FOR THE INTERMEDIATE AND END ANCHORS, AND NO DIRECT PAYMENT WILL BE MADE FOR THIS EXCAVATION.
2. ESTIMATE 0.032 CU. YDS. CLASS A CONCRETE PER LINEAR FOOT OF PAVED DITCH AND 0.060 CU. YDS. CLASS A CONCRETE PER ANCHOR BASED ON MINIMUM DIMENSIONS SHOWN ON THIS DRAWING.
3. THE SECTION SHOWN WITHIN THE MINIMUM DIMENSION IS ESTIMATED AT 0.27 SQ. YD. PER LIN. FT.
4. COMPACTION, FINISHING AND CURING SHALL BE THE SAME AS REQUIRED FOR CONCRETE SIDEWALK.
5. IF THE CONTRACTOR ELECTS TO USE A CONSTRUCTION JOINT IN THE POURING OF THE PAVED DITCH, IT SHALL BE CONSTRUCTED AS DETAILED.
6. ANY LENGTH OF LONGITUDINAL REINFORCING STEEL WILL BE PERMITTED PROVIDED A 1'-0" LAP IS USED IN THE SPLICE. ADEQUATE TIES AT THE SPLICE SHALL BE REQUIRED.

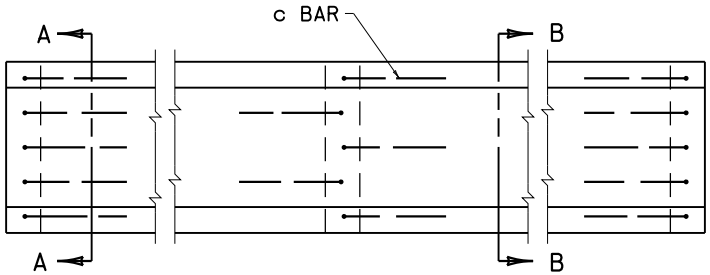

PLAN VIEW

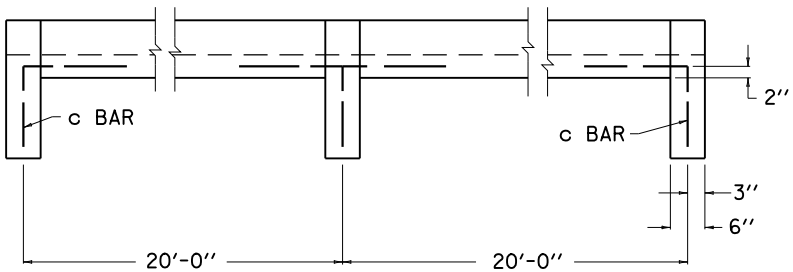

ELEVATION VIEW

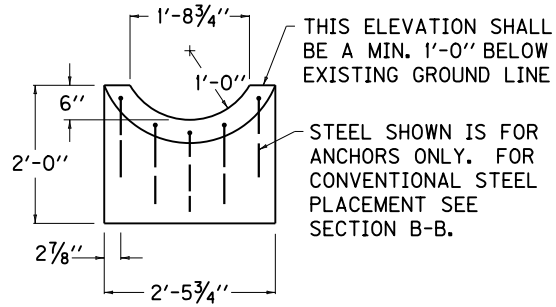

SECTION A-A

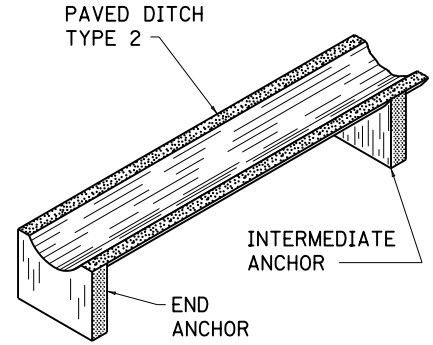

ISOMETRIC VIEW

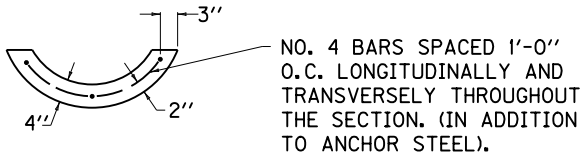

SECTION B-B

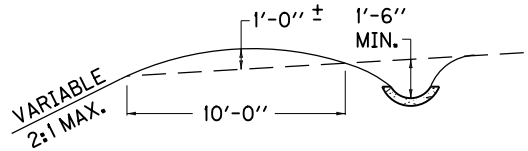

TYPICAL PAVED DITCH
(INTERCEPTOR DITCH)

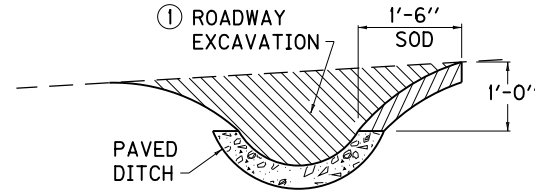

SHOULD THE TERRAIN OF THE EXISTING GROUND BE SO THAT WATER WOULD DRAIN INTO THE DITCH FROM BOTH SIDES, THEN SODDING WILL BE REQUIRED ON BOTH SIDES OF THE DITCH.

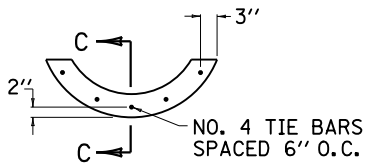

TIE BAR SECTIONAL VIEW

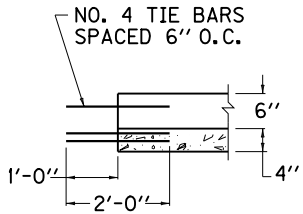

SECTION C-C

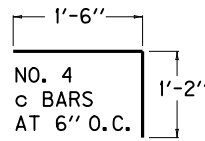

c BAR DETAIL

APPROX. STEEL QUANTITIES FOR MINIMUM SECTION SHOWN	
END ANCHORS (EACH)	8.90 LBS.
INTERMEDIATE ANCHORS (EACH)	8.90 LBS.
CONSTRUCTION JOINTS (EACH)	6.68 LBS.
BARS PER SQ. YD. OF DITCH	12.47 LBS.

KENTUCKY
DEPARTMENT OF HIGHWAYS

PAVED DITCH
TYPE 2

STANDARD DRAWING NO. RDD-002-06

SUBMITTED John B. Sachatello, DIRECTOR DIVISION OF DESIGN — DATE 12-1-99

APPROVED F. M. Yowell, STATE HIGHWAY ENGINEER — DATE 12-1-99

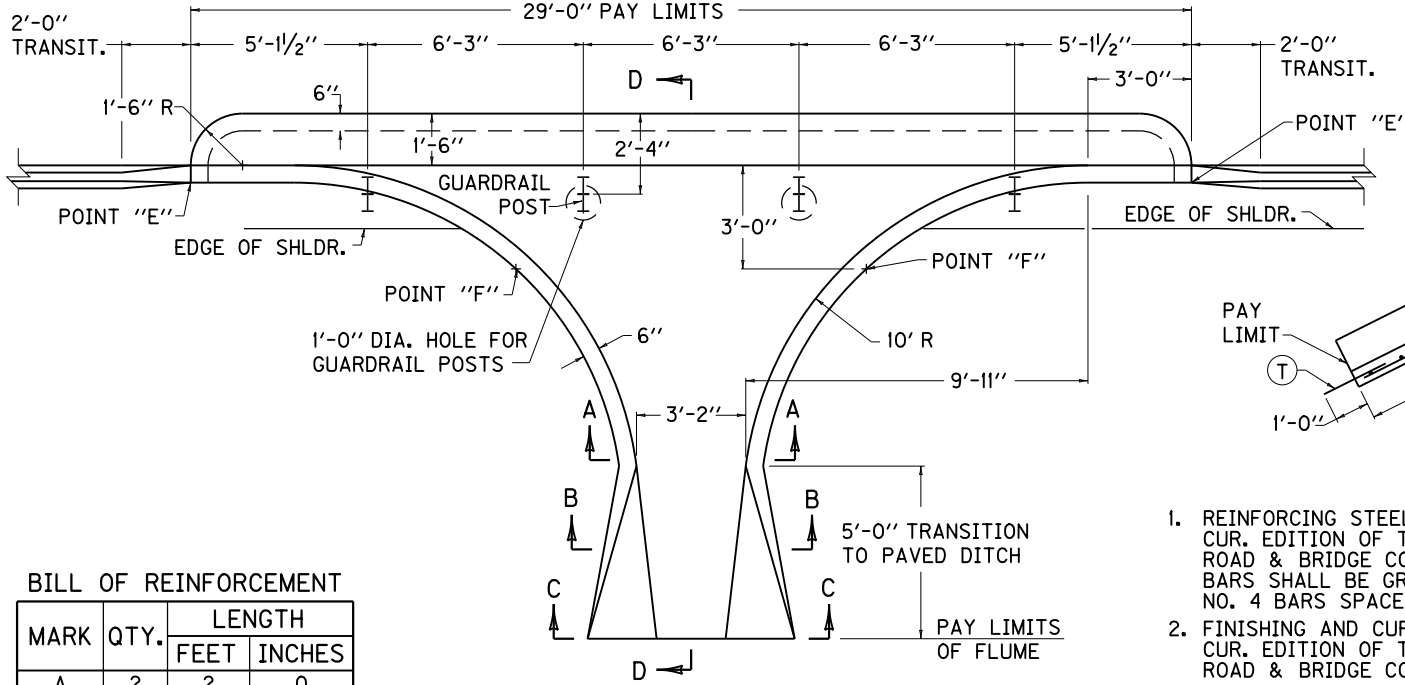

PLAN VIEW

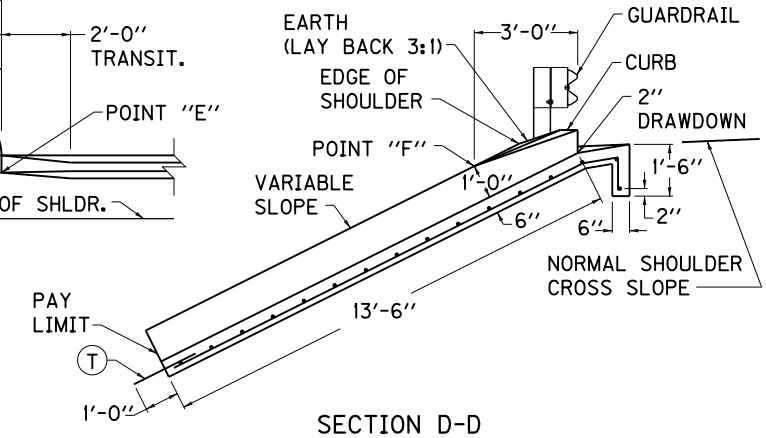

SECTION D-D

NOTES

1. REINFORCING STEEL SHALL MEET THE REQUIREMENTS OF THE CUR. EDITION OF THE DEPARTMENT'S STD. SPECIFICATIONS FOR ROAD & BRIDGE CONST. THE MIN. REQUIREMENT FOR REINFORCING BARS SHALL BE GRADE 40. ALL REINFORCEMENT SHALL BE NO. 4 BARS SPACED 12" O.C.
2. FINISHING AND CURING SHALL MEET THE REQUIREMENTS OF THE CUR. EDITION OF THE DEPARTMENT'S STD. SPECIFICATIONS FOR ROAD & BRIDGE CONSTRUCTION.
3. QUANTITIES WERE CALCULATED FOR APPLICATIONS ON A 2:1 FILL SLOPE. IT MAY BE NECESSARY TO ADJUST THE STEEL IN THE FIELD FOR APPLICATIONS OTHER THAN 2:1 SLOPE.
4. THE FLOW LINE OF THE FLUME AND THE NORMAL PAVED DITCH FROM POINT "F" ON THE FLUME TO THE LOWER END OF THE NORMAL PAVED DITCH SHALL BE A STRIGHT LINE GRADE.
5. TRANSITION 6" HIGH CURB FROM POINT "E" TO 12" HIGH CURB AT POINT "F".

BILL OF REINFORCEMENT

MARK	QTY.	LENGTH	
		FEET	INCHES
A	2	2	0
B	6	2	7
C	2	2	7
D	2	3	3
E	2	3	2
F	2	3	8
G	2	4	3
H	2	5	0
J	2	6	0
K	2	7	6
L	2	10	0
M	3	15	7
N	2	21	7
AA	2	26	6
BB	1	28	4
CC	1	16	2
DD	1	12	3
EE	1	9	9
FF	1	8	0
GG	1	6	5
HH	1	5	4
JJ	1	4	4
KK	1	3	10
LL	1	3	10
MM	1	4	3
NN	1	4	7
OO	1	4	11
PP	1	5	4
T	5	2	0

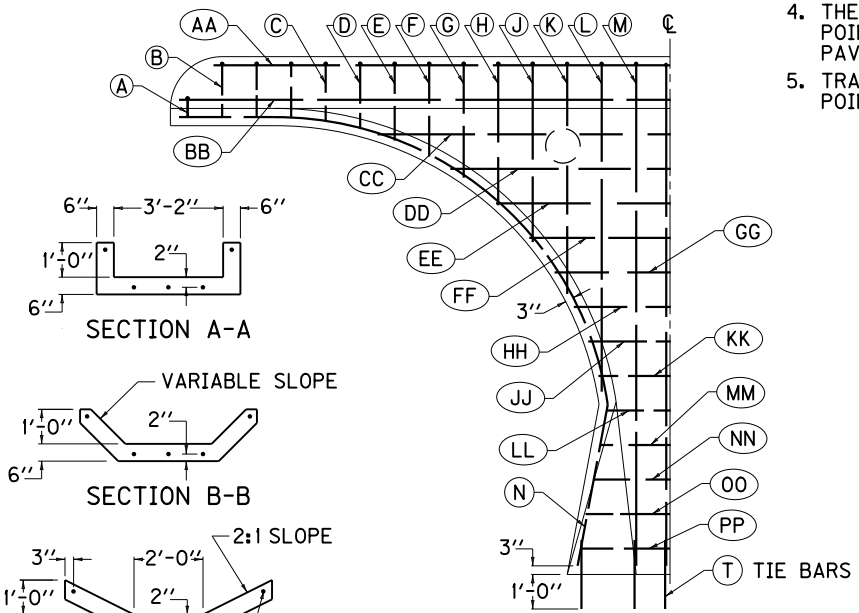

STEEL DIAGRAM
(STEEL SYMMETRICAL ABOUT CENTERLINE

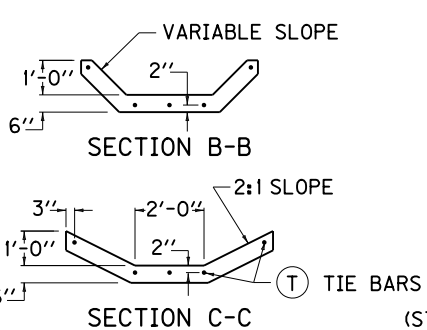

SECTION A-A

SECTION B-B

SECTION C-C

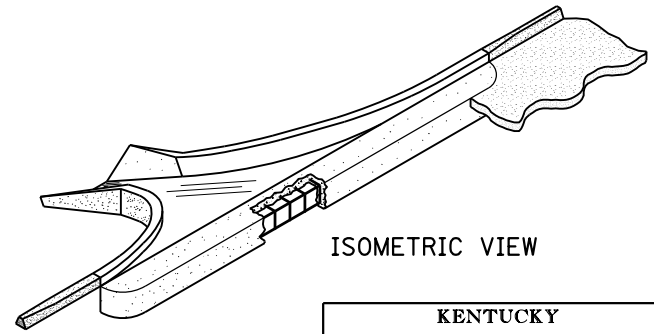

ISOMETRIC VIEW

APPROX. QUANTITIES	
CLASS "A" CONC.	3.9 CU. YDS.
STEEL REINF.	255 LBS.

KENTUCKY
DEPARTMENT OF HIGHWAYS

FLUME INLET
TYPE 1

STANDARD DRAWING NO. RDD-020-06

SUBMITTED John B. Lockstrike, DIRECTOR DIVISION OF DESIGN — 12-1-99 DATE

APPROVED F. M. Powell, STATE HIGHWAY ENGINEER — 12-1-99 DATE

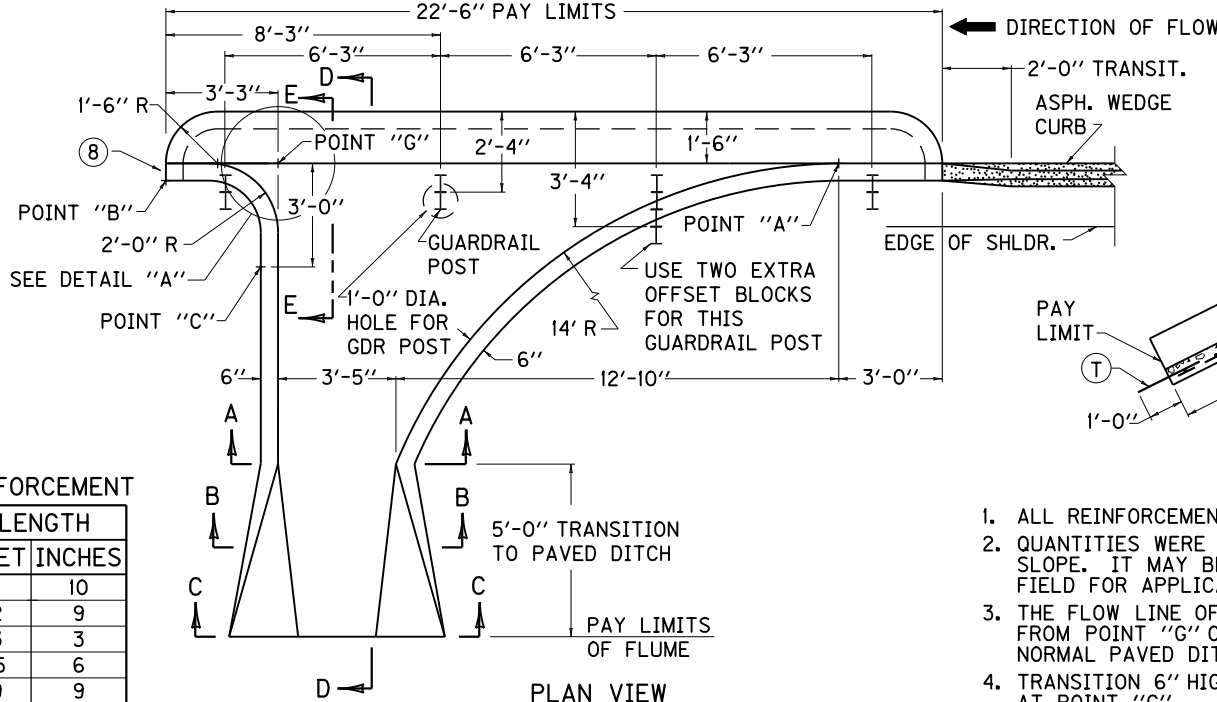

PLAN VIEW

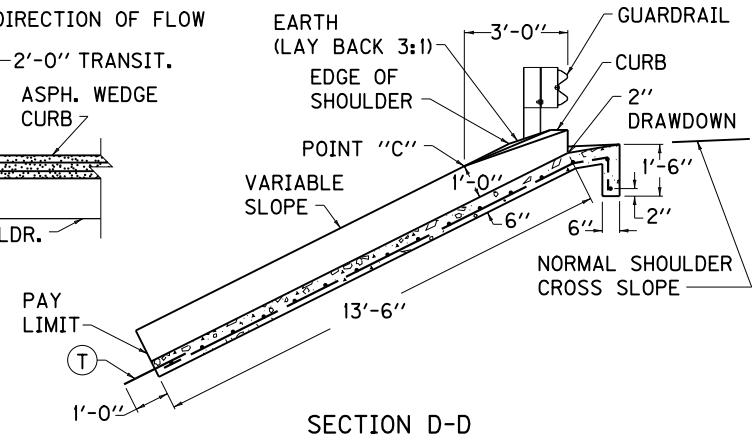

SECTION D-D

BILL OF REINFORCEMENT

MARK	QTY.	LENGTH	
		FEET	INCHES
A	2	1	10
B	5	2	9
C	1	3	3
D	4	15	6
E	1	9	9
F	1	8	2
G	1	7	0
H	1	6	0
J	1	5	0
K	1	4	6
L	1	4	0
M	1	3	8
N	1	3	5
O	1	3	0
P	1	2	10
Q	1	24	5
R	1	15	7
AA	2	19	7
BB	1	22	0
CC	1	14	2
DD	1	10	6
EE	1	8	6
FF	1	7	2
GG	1	6	3
HH	1	5	5
JJ	1	4	9
KK	1	4	0
LL	1	4	0
MM	1	4	2
NN	1	4	6
OO	1	4	10
PP	1	5	0
T	5	2	0

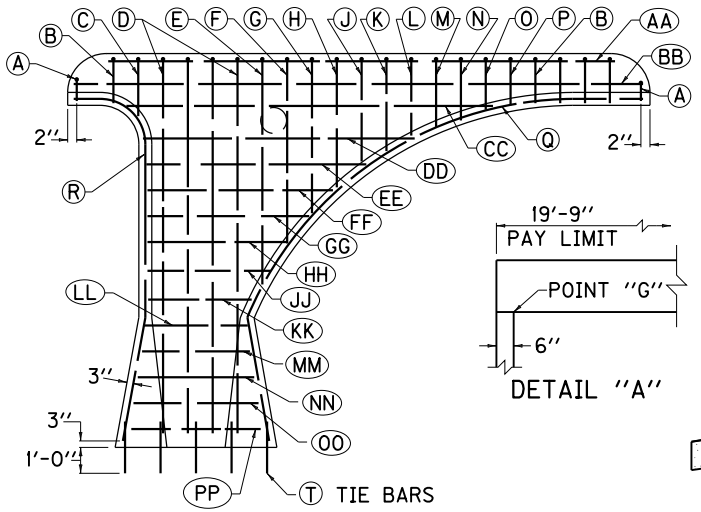

STEEL DIAGRAM

DETAIL "A"

NOTES

1. ALL REINFORCEMENT SHALL BE NO. 4 BARS SPACED 1'-0" O.C.
2. QUANTITIES WERE CALCULATED FOR APPLICATION ON A 2:1 FILL SLOPE. IT MAY BE NECESSARY TO ADJUST THE STEEL IN THE FIELD FOR APPLICATION OTHER THAN 2:1 SLOPE.
3. THE FLOW LINE OF THE FLUME AND THE NORMAL PAVED DITCH FROM POINT "G" ON THE FLUME TO THE LOWER END OF THE NORMAL PAVED DITCH SHALL BE A STRAIGHT LINE GRADE.
4. TRANSITION 6" HIGH CURB FROM POINT "B" TO 1'-0" HIGH CURB AT POINT "C".
5. TRANSITION 6" HIGH CURB FROM POINT "A" TO 1'-0" HIGH CURB AT SECTION A-A.
6. WHEN FLUME IS LAST ON A DOWN GRADE, SHORT RADIUS BETWEEN POINTS "B" AND "C" IS NOT NECESSARY. SIDE WALL CAN BE EXTENDED STRAIGHT AND TRANSITIONED FROM 1'-0" AT POINT "C" TO 1/2" HIGH AT POINT "G".
7. WHEN FLUME IS SHORTENED AS DETAIL "A", STEEL REINFORCEMENT BARS A AND B DECREASED ONE BAR EACH. SHORTEN BAR AA TO 18'-3", BAR BB TO 19'-3", AND BAR CC TO 13'-6".

(8) IF CURB IS CONTINUED USE 2'-0" TRANSITION TO BIT. WEDGE CURB.

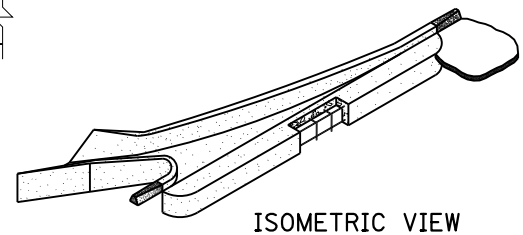

ISOMETRIC VIEW

APPROX. QUANTITIES	
CLASS "A" CONC.	3.7 CU. YDS.
STEEL REINF.	225 LBS.

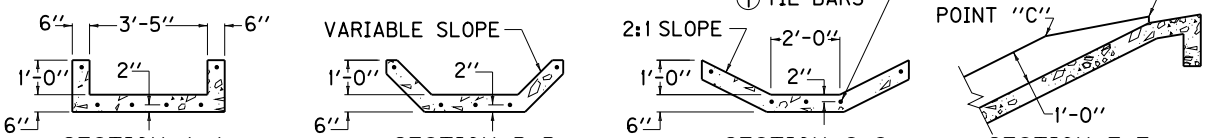

SECTION A-A SECTION B-B SECTION C-C SECTION E-E

KENTUCKY
DEPARTMENT OF HIGHWAYS

FLUME INLET
TYPE 2

STANDARD DRAWING NO. RDD-021-06

SUBMITTED John B. Sachatello DIRECTOR DIVISION OF DESIGN 12-1-99 DATE

APPROVED J. M. Yowell STATE HIGHWAY ENGINEER 12-1-99 DATE

~ NOTES ~

1. ROADWAY EXCAVATION SHALL BE PAID FROM THE TOP OF LINING TO THE ORIGINAL GROUND LINE.
2. ANCHORS REQUIRED WHEN LINING IS PLACED ON 5% GRADE OR GREATER.
3. SECURE THE LACING WIRE AT THE CORNER OF THE BASKET BY LOOPING AND TWISTING, CONTINUE LACING THROUGHOUT WITH DOUBLE LOOPS AT APPROXIMATELY 5'' INTERVALS. EACH UNIT SHALL CONSIST OF LININGS SUPPLIED IN WIDTHS OF 6'-0'' AS SHOWN AND LENGTHS IN MULTIPLES OF 3'-0''. EACH UNIT SHALL BE SUBDIVIDED INTO COMPARTMENTS A MAXIMUM OF 3'-0'' LONG.
4. AGGREGATE ESTIMATED ON THE BASIS OF 0.50 TON PER SQ. YD. PER FOOT OF DEPTH.

5. T= MATTRESS THICKNESS, D= DEPTH TO PROTECT. SEE PLAN NOTES FOR THESE VALUES.

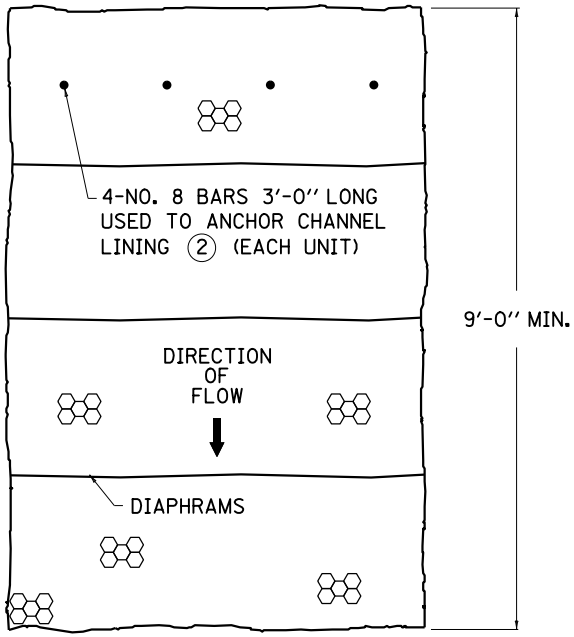

PLAN VIEW

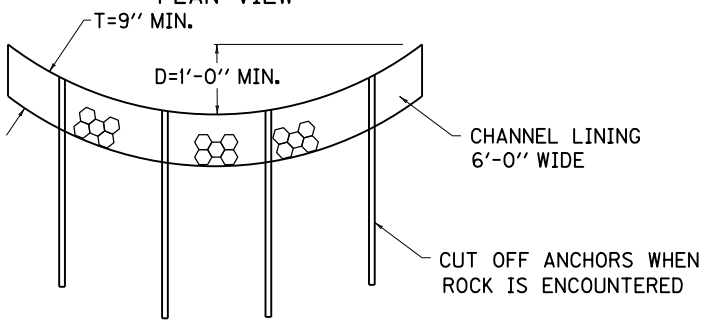

ELEVATION VIEW 5

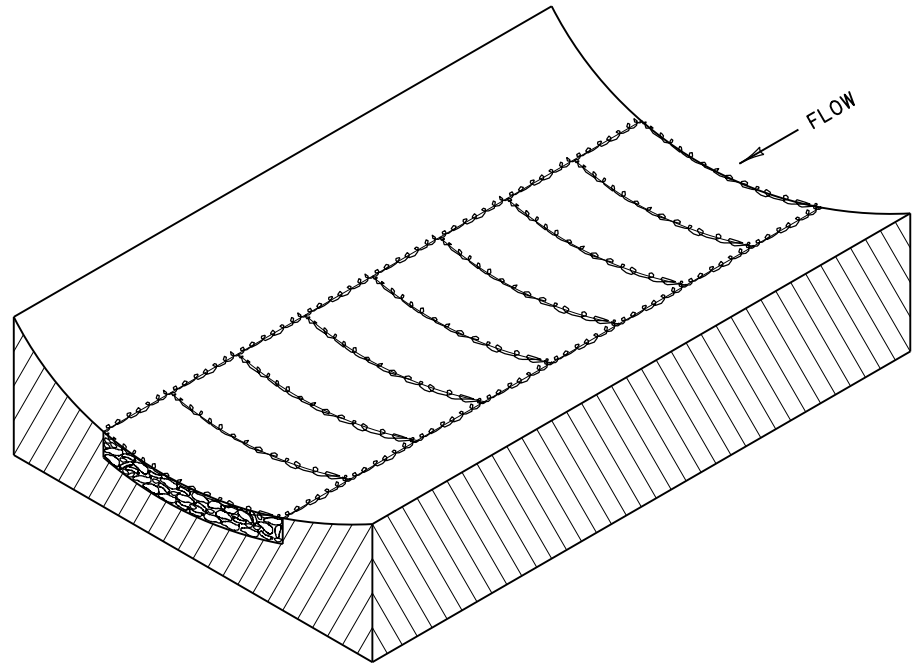

CHANNEL LINING
ISOMETRIC VIEW

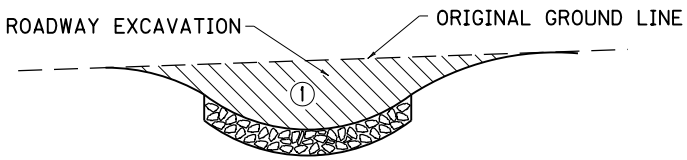

ROADWAY EXCAVATION 1

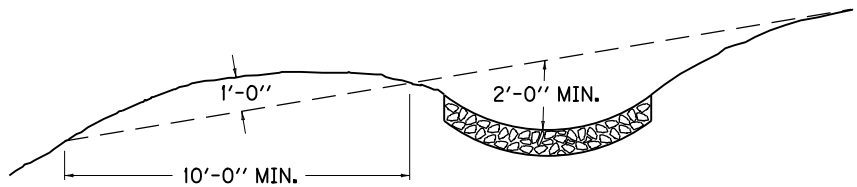

TYPICAL INTERCEPTOR DITCH

KENTUCKY
DEPARTMENT OF HIGHWAYS

CHANNEL LINING
CLASS I A
(MATTRESS UNITS)

STANDARD DRAWING NO. RDD-030-07

SUBMITTED David Kratt DIRECTOR DIVISION OF DESIGN — 11-21-07 DATE

APPROVED Marvin Mathews STATE HIGHWAY ENGINEER — 11-21-07 DATE

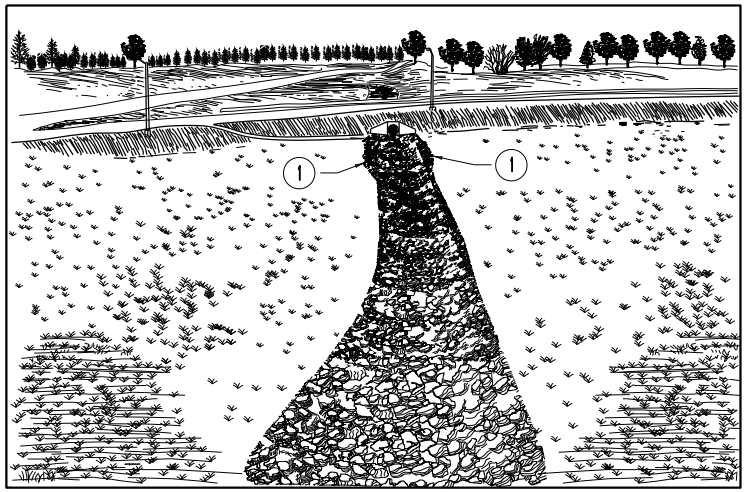

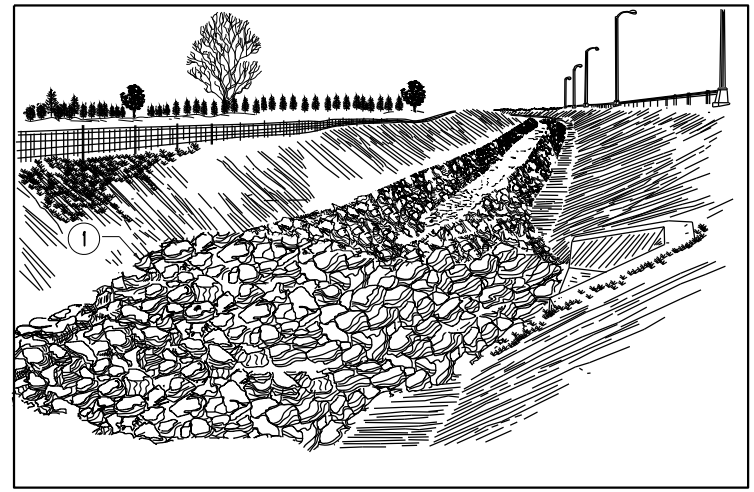

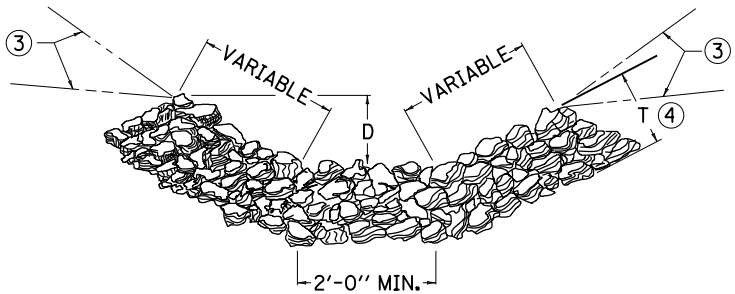

TYPICAL SECTION

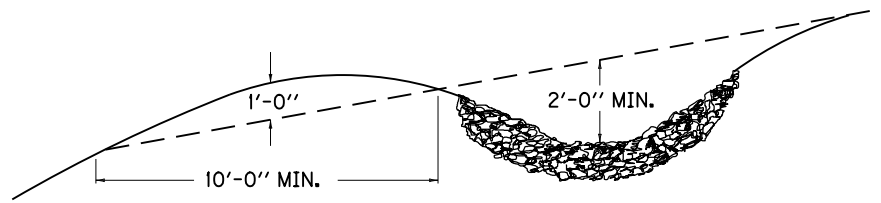

TYPICAL INTERCEPTOR DITCH

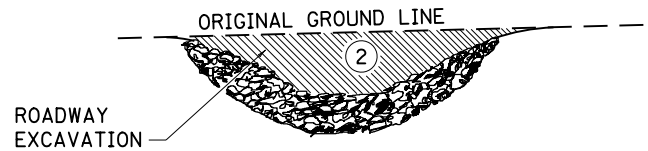

NOTES

CHANNEL LINING WILL BE PAID FOR AT THE CONTRACT UNIT PRICE PER TON FOR EACH CLASS.
CHANNEL LINING WILL NOT BE REQUIRED IN THE BOTTOM OF THE DITCH WHERE SOLID ROCK IS ENCOUNTERED.
CHANNEL LINING ESTIMATED ON THE BASIS OF 0.50 TON PER SQ. YD. PER FOOT OF DEPTH.

1. WIDEN CHANNEL LINING NEAR OUTLET END OF STRUCTURE AS DIRECTED BY THE ENGINEER.
2. FROM THE TOP OF THE LINING TO THE ORIGINAL GROUNDLINE.
3. ALTERNATE LOCATION OF GROUNDLINE.
4. 15'' MIN. CLASS II, OR 24'' MIN. CLASS III.
5. D = DEPTH TO PROTECT, T = THICKNESS, (SEE PLAN NOTES FOR THESE VALUES)

KENTUCKY
DEPARTMENT OF HIGHWAYS

CHANNEL LINING
CLASS II AND III

STANDARD DRAWING NO. RDD-040-04

SUBMITTED John B. Lockstrike — DIRECTOR DIVISION OF DESIGN — 12-1-99 DATE

APPROVED J. M. Yowell — STATE HIGHWAY ENGINEER — 12-1-99 DATE

PIPE DIA. (IN)	PIPE TYPE	CIRCULAR PIPE COVER HEIGHTS IN FEET					
		2-5	5-10	10-15	15-20	20-25	25-30
12 & 15	2⅔"×½" CSPHS (1)	16 GA.					
	2⅔"×½" CSPLS (1)	16 GA.					
	2⅔"×½" CAPHS	16 GA.					
	PVC (11)	SMOOTH WALL (SOLID WALL)					
	HDPE (11)					FF	
	RCP (12)						
18	2⅔"×½" CSPHS (1)	16 GA.					
	2⅔"×½" CSPLS (1)	16 GA.					
	2⅔"×½" CAPHS	16 GA.					
	SRS (1)	16 GA.					
	SRA	16 GA.					
	PVC (11)	RIBBED (PROFILE WALL)					
	HDPE (11)					FF	
	RCP (12)						
		2-5	5-10	10-15	15-20	20-25	25-30

PIPE DIA. (IN)	PIPE TYPE	CIRCULAR PIPE COVER HEIGHTS IN FEET												
		2-5	5-10	10-15	15-20	20-25	25-30	30-35	35-40	40-45	45-50	50-55	55-60	60-65
21	2⅔"×½" CSPHS (1)	16 GA.												
	2⅔"×½" CSPLS (1)	16 GA.					10 GA.							
	2⅔"×½" CAPHS	16 GA.												
	SRS (1)	16 GA.												
	SRA	16 GA.				14 GA.								
	PVC (11)	RIBBED (PROFILE WALL)												
	HDPE (11)					FF								
	RCP (12)													
24 (6)	2⅔"×½" CSPHS (1)	16 GA.											14 GA.	
	2⅔"×½" CSPLS (1)	16 GA.					10 GA.							
	2⅔"×½" CAPHS	16 GA.							14 GA.		12 GA.			
	SRS (1)	16 GA.						14 GA.			12 GA.			
	SRA	16 GA.				14 GA.		12 GA.			10 GA.			
	PVC (11)	RIBBED (PROFILE WALL)												
	HDPE (11)					FF								
	RCP (12)													
		2-5	5-10	10-15	15-20	20-25	25-30	30-35	35-40	40-45	45-50	50-55	55-60	60-65

NOTES

(1) GAGES FOR CORRUGATED STEEL PIPE ITEMS SHOWN ARE BASED ON ALUMINUM-COATED TYPE 2 STEEL AS PER AASHTO M-274. ALUMINUM COATED TYPE 2 STEEL IS ONLY PERMITTED IN Ph RANGES OF 5 TO 9

2. WHEN CORRUGATED STEEL PIPE IS ZINC COATED (GALVANIZED) THE GAGE SHALL BE ONE GAGE HEAVIER THAN SHOWN IN THE TABLES.
3. CSP, CAP, SRS AND SRA ARE SHOWN IN GAGE.
4. MAXIMUM COVER HEIGHT MEASURED FROM TOP OF PIPE TO SUBGRADE ELEVATION SHALL GOVERN GAGE OF PIPE TO BE USED FOR ENTIRE LENGTH OF PIPE INSTALLATION.
5. MINIMUM COVER HEIGHTS FOR PIPE SHALL BE 2 FEET. GAGE OF PIPE FOR COVER HEIGHTS LESS THAN 2 FEET SHALL BE THAT SHOWN FOR COVER HEIGHTS OF 30 FEET (SEE STD. SPECIFICATIONS FOR BACKFILL). HDPE AND PVC SHALL NOT BE PERMITTED FOR COVER HEIGHTS LESS THAN 2 FEET.

(6) 24" DIA. PIPE IS MINIMUM SIZE FOR COVER HEIGHTS FROM 30 FEET TO 65 FEET.

7. MINIMUM COVER HEIGHT FOR ENTRANCE PIPE SHALL BE 0.5 FEET.
8. GAGE OF ENTRANCE PIPE FOR COVER HEIGHTS LESS THAN 2 FEET SHALL MEET THE FOLLOWING REQUIREMENTS:
   a. GAGE OF CSP SHALL BE THAT SHOWN FOR HEIGHTS OF 30 FEET.
   b. GAGE OF CAP SHALL BE ONE GAGE HEAVIER THAN SHOWN IN THE TABLE.
9. ALL CIRCULAR STRUCTURAL PLATE SHALL BE 5% VERTICALLY ELONGATED.
10. SEE CURRENT STANDARD DRAWING RDI-035 FOR COATINGS, LININGS AND PAVINGS FOR NON-STRUCTURAL PIPE.

(11) PVC AND HDPE PIPE ARE NOT PERMITTED ON THE NATIONAL HIGHWAY SYSTEM OR FOR STORM SEWER INSTALLATIONS.

(12) SEE DETAIL SHEET "PIPE BEDDING FOR CULVERTS, ENTRANCE, AND STORM SEWER REINFORCED CONC. PIPE" AND DETAIL SHEET "PIPE BEDDING TRENCH CONDITION REINFORCED CONC. PIPE" FOR RCP COVER HEIGHT AND BEDDING REQUIREMENTS.

LEGEND

CSPHS: CORRUGATED STEEL PIPE WITH HELICAL LOCK SEAM OR HELICAL WELDED SEAM (HELICAL CORR.)

CSPLS: CORRUGATED STEEL PIPE WITH LONGITUDINAL RIVETED OR SPOT WELDED SEAM (ANNULAR CORR.)

CAPHS: CORRUGATED ALUMINUM ALLOY PIPE WITH HELICAL LOCK SEAM (HELICAL CORR.)

HDPE: HIGH DENSITY POLYETHYLENE PIPE

PVC: POLYVINYL CHLORIDE

SRS: SPIRAL RIB STEEL

SRA: SPIRAL RIB ALUMINUM

RCP: CIRCULAR REINFORCED CONCRETE PIPE

FF: FLOWABLE FILL REQUIRED

12" PIPE - 24" PIPE

KENTUCKY
DEPARTMENT OF HIGHWAYS

CULVERT, ENTRANCE & STORM SEWER PIPE TYPES & COVER HEIGHTS

STANDARD DRAWING NO. RDI-001-08

SUBMITTED: DIRECTOR DIVISION OF DESIGN — DATE 11-21-07

APPROVED: STATE HIGHWAY ENGINEER — DATE 11-21-07

PIPE DIA. (IN)	PIPE TYPE	CIRCULAR PIPE COVER HEIGHTS IN FEET (3)												
		2-5	5-10	10-15	15-20	20-25	25-30	30-35	35-40	40-45	45-50	50-55	55-60	60-65
27 & 30 (8)	2⅔"x½" CSPHS (1)	16 GA.								14 GA.			12 GA.	
	2⅔"x½" CSPLS (1)	16 GA.				12 GA.								
	2⅔"x½" CAPHS	14 GA.								12 GA.			10 GA.	
	SRS (1)	16 GA.						14 GA.		12 GA.				
	SRA	16 GA.			14 GA.		12 GA.		10 GA.					
	PVC (10)	RIBBED (PROFILE WALL)												
	HDPE (10)					FF								
	RCP (11)													
36	2⅔"x½" CSPHS (1)	14 GA.									12 GA.			10 GA.
	2⅔"x½" CSPLS (1)	14 GA.			12 GA.	10 GA.								
	2⅔"x½" CAPHS	14 GA.						12 GA.			10 GA.			8 GA.
	SRS (1)	14 GA.							12 GA.					
	SRA	14 GA.				12 GA.		10 GA.						
	PVC (10)	RIBBED (PROFILE WALL)												
	HDPE (10)					FF								
	RCP (11)													
42	2⅔"x½" CSPHS (1)	14 GA.								12 GA.			10 GA.	
	2⅔"x½" CSPLS (1)	14 GA.					12 GA.		10 GA.					
	2⅔"x½" CAPHS	12 GA.								10 GA.		8 GA.		
	SRS (1)	14 GA.						12 GA.						
	SRA	12 GA.					10 GA.							
	PVC (10)	RIBBED (PROFILE WALL)												
	HDPE (10)													
	RCP (11)													
		2-5	5-10	10-15	15-20	20-25	25-30	30-35	35-40	40-45	45-50	50-55	55-60	60-65

LEGEND

CSPHS: CORRUGATED STEEL PIPE WITH HELICAL LOCK SEAM OR HELICAL WELDED SEAM (HELICAL CORR.)

CSPLS: CORRUGATED STEEL PIPE WITH LONGITUDINAL RIVETED OR SPOT WELDED SEAM (ANNULAR CORR.)

CAPHS: CORRUGATED ALUMINUM ALLOY PIPE WITH HELICAL LOCK SEAM (HELICAL CORR.)

HDPE: HIGH DENSITY POLYETHYLENE PIPE

PVC: POLYVINYL CHLORIDE

SRS: SPIRAL RIB STEEL

SRA: SPIRAL RIB ALUMINUM

RCP: CIRCULAR REINFORCED CONCRETE PIPE

FF: FLOWABLE FILL REQUIRED

NOTES CONTINUED

(11) SEE DETAIL SHEET "PIPE BEDDING FOR CULVERTS, ENTRANCE, AND STORM SEWER REINFORCED CONC. PIPE" AND DETAIL SHEET "PIPE BEDDING TRENCH CONDITION REINFORCED CONC. PIPE" FOR RCP COVER HEIGHT AND BEDDING REQUIREMENTS.

NOTES

(1) GAGES FOR CORRUGATED STEEL PIPE ITEMS SHOWN ARE BASED ON ALUMINUM-COATED TYPE 2 STEEL AS PER AASHTO M-274. ALUMINUM COATED TYPE 2 STEEL IS ONLY PERMITTED IN Ph RANGES OF 5 TO 9.

2. WHEN CORRUGATED STEEL PIPE IS ZINC COATED (GALVANIZED) THE GAGE SHALL BE ONE GAGE HEAVIER THAN SHOWN IN THE TABLES.

(3) SEE CURRENT STANDARD DRAWING RDI-001 FOR EXPLANATION OF COVER HEIGHTS LESS THAN 2 FEET.

4. CSP, CAP, SRS AND SRA ARE SHOWN IN GAGE.

5. MAXIMUM COVER HEIGHT MEASURED FROM TOP OF PIPE TO SUB GRADE ELEVATION SHALL GOVERN GAGE OF PIPE TO BE USED FOR ENTIRE LENGTH OF PIPE INSTALLATION.

6. MINIMUM COVER HEIGHT FOR ENTRANCE PIPE SHALL BE 0.5 FEET.

7. ALL CIRCULAR STRUCTURAL PLATE SHALL BE 5% VERTICALLY ELONGATED.

(8) ENTRANCE PIPE GREATER THAN 30" DIA. SHALL BE CULVERT PIPE.

9. SEE CURRENT STANDARD DRAWING RDI-035 FOR COATINGS, LININGS AND PAVINGS FOR NON-STRUCTURAL PIPE.

(10) PVC AND HDPE PIPE ARE NOT PERMITTED ON THE NATIONAL HIGHWAY SYSTEM OR FOR STORM SEWER INSTALLATIONS.

27" PIPE - 42" PIPE

KENTUCKY DEPARTMENT OF HIGHWAYS

CULVERT, ENTRANCE & STORM SEWER PIPE TYPES & COVER HEIGHTS

STANDARD DRAWING NO. RDI-002-03

SUBMITTED: DIRECTOR DIVISION OF DESIGN — DATE 11-21-07

APPROVED: STATE HIGHWAY ENGINEER — DATE 11-21-07

CIRCULAR PIPE COVER HEIGHTS IN FEET (3)

PIPE DIA. (IN)	PIPE TYPE	2-5	5-10	10-15	15-20	20-25	25-30	30-35	35-40	40-45	45-50	50-55	55-60	60-65	65-70	70-75	75-80	80-85	85-90	90-95	95-100	100-105	105-110	110-115	115-120
48	2⅔"x½" CSPHS (1)	14 GA.							12 GA.			10 GA.													
	2⅔"x½" CSPLS (1)	14 GA.				12 GA.																			
	2⅔"x½" CAPHS	12 GA.							10 GA.			8 GA.													
	SRS (1)	14 GA.					12 GA.																		
	SRA	12 GA.					10 GA.																		
	PVC (9)	RIBBED (PROFILE WALL)																							
	HDPE (9)																								
	RCP (10)																								
54 (7)	2⅔"x½" CSPHS (1)	14 GA.						12 GA.			10 GA.														
	2⅔"x½" CSPLS (1)	14 GA.				12 GA.																			
	3"x1" CSPHS (1)	14 GA.							12 GA.			10 GA.													
	3"x1" CSPLS (1)	14 GA.			12 GA.			10 GA.			8 GA.														
	5"x1" CSPHS (1)	14 GA.						12 GA.			10 GA.														
	2⅔"x½" CAPHS	12 GA.					10 GA.			8 GA.															
	3"x1" CAPHS	14 GA.					12 GA.		10 GA.			8 GA.													
	SRS (1)	14 GA.				12 GA.																			
	SRA	12 GA.				10 GA.																			
	RCP (10)																								
		2-5	5-10	10-15	15-20	20-25	25-30	30-35	35-40	40-45	45-50	50-55	55-60	60-65	65-70	70-75	75-80	80-85	85-90	90-95	95-100	100-105	105-110	110-115	115-120

NOTES

(1) GAGES FOR CORRUGATED STEEL PIPE ITEMS SHOWN ARE BASED ON ALUMINUM-COATED TYPE 2 STEEL AS PER AASHTO M-274. ALUMINUM COATED TYPE 2 STEEL IS ONLY PERMITTED IN Ph RANGES OF 5 TO 9.

2. WHEN CORRUGATED STEEL PIPE IS ZINC COATED (GALVANIZED) THE GAGE SHALL BE ONE GAGE HEAVIER THAN SHOWN IN THE TABLES.

(3) SEE CURRENT STANDARD DRAWING RDI-001 FOR EXPLANATION OF COVER HEIGHTS LESS THAN 2 FEET.

4. CSP, CAP, SRS AND SRA ARE SHOWN IN GAGE.

5. MAXIMUM COVER HEIGHT MEASURED FROM TOP OF PIPE TO SUBGRADE ELEVATION SHALL GOVERN GAGE OF PIPE TO BE USED FOR ENTIRE LENGTH OF PIPE INSTALLATION.

6. ALL CIRCULAR STRUCTURAL PLATE SHALL BE 5% VERTICALLY ELONGATED.

(7) 54" DIA. PIPE IS MINIMUM SIZE FOR COVER HEIGHTS GREATER THAN 65 FEET.

8. SEE CURRENT STANDARD DRAWING RDI-035 FOR COATINGS, LININGS AND PAVINGS FOR NON-STRUCTURAL PIPE.

(9) PVC AND HDPE PIPE ARE NOT PERMITTED ON THE NATIONAL HIGHWAY SYSTEM OR FOR STORM SEWER INSTALLATIONS.

(10) SEE DETAIL SHEET "PIPE BEDDING FOR CULVERTS, ENTRANCE, AND STORM SEWER REINFORCED CONC. PIPE" AND DETAIL SHEET "PIPE BEDDING TRENCH CONDITION REINFORCED CONC. PIPE" FOR RCP COVER HEIGHT AND BEDDING REQUIREMENTS.

LEGEND

CSPHS: CORRUGATED STEEL PIPE WITH HELICAL LOCK SEAM OR HELICAL WELDED SEAM (HELICAL CORR.)

CSPLS: CORRUGATED STEEL PIPE WITH LONGITUDINAL RIVETED OR SPOT WELDED SEAM (ANNULAR CORR.)

CAPHS: CORRUGATED ALUMINUM ALLOY PIPE WITH HELICAL LOCK SEAM (HELICAL CORR.)

HDPE: HIGH DENSITY POLYETHYLENE PIPE

PVC: POLYVINYL CHLORIDE

SRS: SPIRAL RIB STEEL

SRA: SPIRAL RIB ALUMINUM

RCP: CIRCULAR REINFORCED CONCRETE PIPE

48" PIPE - 54" PIPE

KENTUCKY DEPARTMENT OF HIGHWAYS

CULVERT & STORM SEWER PIPE TYPES & COVER HEIGHTS

STANDARD DRAWING NO. RDI-003-03

SUBMITTED: DIRECTOR DIVISION OF DESIGN — DATE 11-21-07

APPROVED: STATE HIGHWAY ENGINEER — DATE 11-21-07

CIRCULAR PIPE COVER HEIGHTS IN FEET (4)

PIPE DIA. (IN)	PIPE TYPE	2-5	5-10	10-15	15-20	20-25	25-30	30-35	35-40	40-45	45-50	50-55	55-60	60-65	65-70	70-75	75-80	80-85	85-90	90-95	95-100	100-105	105-110	110-115	115-120
60	2⅔"x½" CSPHS (1)	12 GA.							10 GA.																
	2⅔"x½" CSPLS (1)	12 GA.																							
	3"x1" CSPHS (1)	14 GA.					12 GA.					10 GA.													
	3"x1" CSPLS (1)		14 GA.			12 GA.			10 GA.																
	5"x1" CSPHS (1)			14 GA.				12 GA.				10 GA.													
	6"x2" CSPLSSB (1)				10 GA.				8 GA.			7 GA.			5 GA.		3 GA.				1 GA.				
	2⅔"x½" CAPHS			10 GA.					8 GA.																
	3"x1" CAPHS			14 GA.			12 GA.		10 GA.			8 GA.													
	9"x2½" CAPLSSB				10 GA.				8 GA.		7 GA.	5 GA.		3 GA.			1 GA.								
	SRS (1)						12 GA.																		
	SRA					10 GA.																			
	RCP (9)																								
66	2⅔"x½" CSPHS (1)									10 GA.															
	2⅔"x½" CSPLS (1)					10 GA.																			
	3"x1" CSPHS (1)			14 GA.				12 GA.					10 GA.												
	3"x1" CSPLS (1)			14 GA.		12 GA.			10 GA.																
	5"x1" CSPHS (1)				14 GA.			12 GA.				10 GA.													
	6"x2" CSPLSSB (1)					10 GA.			8 GA.			7 GA.			5 GA.		3 GA.				1 GA.				
	2⅔"x½" CAPHS						8 GA.																		
	3"x1" CAPHS			14 GA.			12 GA.		10 GA.					8 GA.											
	9"x2½" CAPLSSB				10 GA.				8 GA.		7 GA.	5 GA.		3 GA.			1 GA.								
	SRS (1)						12 GA.																		
	SRA					10 GA.																			
	RCP (9)																								
		2-5	5-10	10-15	15-20	20-25	25-30	30-35	35-40	40-45	45-50	50-55	55-60	60-65	65-70	70-75	75-80	80-85	85-90	90-95	95-100	100-105	105-110	110-115	115-120

NOTES

(1) GAGES FOR CORRUGATED STEEL PIPE ITEMS SHOWN ARE BASED ON ALUMINUM-COATED TYPE 2 STEEL AS PER AASHTO M-274. ALUMINUM COATED TYPE 2 STEEL IS ONLY PERMITTED IN Ph RANGES OF 5 TO 9.

2. WHEN CORRUGATED STEEL PIPE IS ZINC COATED (GALVANIZED) THE GAGE SHALL BE ONE GAGE HEAVIER THAN SHOWN IN THE TABLES.

3. CONTRARY TO NOTE 2, GAGES FOR 6"X2" CSPLSSB ARE SHOWN FOR ZINC COATED (GALVANIZED).

(4) SEE CURRENT STANDARD DRAWING RDI-001 FOR EXPLANATION OF COVER HEIGHTS LESS THAN 2 FEET.

5. CSP, CAP, SRS AND SRA ARE SHOWN IN GAGE.

6. MAXIMUM COVER HEIGHT MEASURED FROM TOP OF PIPE TO SUBGRADE ELEVATION SHALL GOVERN GAGE OF PIPE TO BE USED FOR ENTIRE LENGTH OF PIPE INSTALLATION.

7. ALL CIRCULAR STRUCTURAL PLATE SHALL BE 5% VERTICALLY ELONGATED.

8. SEE CURRENT STANDARD DRAWING RDI-035 FOR COATINGS, LININGS AND PAVINGS FOR NON-STRUCTURAL PIPE.

(9) SEE DETAIL SHEET "PIPE BEDDING FOR CULVERTS, ENTRANCE, AND STORM SEWER REINFORCED CONC. PIPE" AND DETAIL SHEET "PIPE BEDDING TRENCH CONDITION REINFORCED CONC. PIPE" FOR RCP COVER HEIGHT AND BEDDING REQUIREMENTS.

LEGEND

CSPHS: CORRUGATED STEEL PIPE WITH HELICAL LOCK SEAM OR HELICAL WELDED SEAM (HELICAL CORR.)

CSPLS: CORRUGATED STEEL PIPE WITH LONGITUDINAL RIVETED OR SPOT WELDED SEAM (ANNULAR CORR.)

CSPLSSB: CORRUGATED STEEL PIPE WITH LONGITUDINAL SEAMS WITH STEEL BOLTS (ANNULAR CORR.)

CAPHS: CORRUGATED ALUMINUM ALLOY PIPE WITH HELICAL LOCK SEAM (HELICAL CORR.)

CAPLSSB: CORRUGATED ALUMINUM ALLOY PIPE WITH LONGITUDINAL SEAMS WITH STEEL BOLTS (ANNULAR CORR.)

SRS: SPIRAL RIB STEEL

SRA: SPIRAL RIB ALUMINUM

RCP: CIRCULAR REINFORCED CONCRETE PIPE

SHEET 4 OF 8

60" PIPE - 66" PIPE

KENTUCKY DEPARTMENT OF HIGHWAYS

CULVERT & STORM SEWER PIPE TYPES & COVER HEIGHTS

STANDARD DRAWING NO. RDI-004-03

SUBMITTED: DIRECTOR DIVISION OF DESIGN — DATE 11-21-07

APPROVED: STATE HIGHWAY ENGINEER — DATE 11-21-07

PIPE DIA. (IN)	PIPE TYPE	CIRCULAR PIPE COVER HEIGHTS IN FEET (4)																						
		2-5	5-10	10-15	15-20	20-25	25-30	30-35	35-40	40-45	45-50	50-55	55-60	60-65	65-70	70-75	75-80	80-85	85-90	90-95	95-100	100-105	105-110	110-115	115-120
72	2⅔"x½" CSPHS (1)	10 GA.																							
	2⅔"x½" CSPLS (1)	10 GA.																							
	3"x1" CSPHS (1)	14 GA.					12 GA.		10 GA.																
	3"x1" CSPLS (1)	14 GA.			12 GA.			10 GA.																	
	5"x1" CSPHS (1)	14 GA.				12 GA.						10 GA.													
	6"x2" CSPLSSB (1)	10 GA.						8 GA.			7 GA.		5 GA.		3 GA.		1 GA.								
	2⅔"x½" CAPHS	8 GA.																							
	3"x1" CAPHS	14 GA.				12 GA.	10 GA.		8 GA.																
	9"x2½" CAPLSSB	10 GA.						8 GA.		7 GA.	5 GA.	3 GA.		1 GA.											
	SRS (1)	12 GA.																							
	RCP (9)																								
78	3"x1" CSPHS (1)	12 GA.							10 GA.																
	3"x1" CSPLS (1)	12 GA.				10 GA.																			
	5"x1" CSPHS (1)	12 GA.						10 GA.																	
	6"x2" CSPLSSB (1)	10 GA.					8 GA.			7 GA.		5 GA.		3 GA.		1 GA.									
	3"x1" CAPHS	12 GA.					10 GA.		8 GA.																
	9"x2½" CAPLSSB	10 GA.					8 GA.		7 GA.	5 GA.	3 GA.		1 GA.												
	SRS (1)	12 GA.																							
	RCP (9)																								
		2-5	5-10	10-15	15-20	20-25	25-30	30-35	35-40	40-45	45-50	50-55	55-60	60-65	65-70	70-75	75-80	80-85	85-90	90-95	95-100	100-105	105-110	110-115	115-120

NOTES

(1) GAGES FOR CORRUGATED STEEL PIPE ITEMS SHOWN ARE BASED ON ALUMINUM-COATED TYPE 2 STEEL AS PER AASHTO M-274. ALUMINUM COATED TYPE 2 STEEL IS ONLY PERMITTED IN Ph RANGES OF 5 TO 9.

2. WHEN CORRUGATED STEEL PIPE IS ZINC COATED (GALVANIZED) THE GAGE SHALL BE ONE GAGE HEAVIER THAN SHOWN IN THE TABLES.

3. CONTRARY TO NOTE 2, GAGES FOR 6"X2" CSPLSSB ARE SHOWN FOR ZINC COATED (GALVANIZED).

(4) SEE CURRENT STANDARD DRAWING RDI-001 FOR EXPLANATION OF COVER HEIGHTS LESS THAN 2 FEET.

5. CSP, CAP, SRS AND SRA ARE SHOWN IN GAGE.

6. MAXIMUM COVER HEIGHT MEASURED FROM TOP OF PIPE TO SUBGRADE ELEVATION SHALL GOVERN GAGE OF PIPE TO BE USED FOR ENTIRE LENGTH OF PIPE INSTALLATION.

7. ALL CIRCULAR STRUCTURAL PLATE SHALL BE 5% VERTICALLY ELONGATED.

8. SEE CURRENT STANDARD DRAWING RDI-035 FOR COATINGS, LININGS AND PAVINGS FOR NON-STRUCTURAL PIPE.

(9) SEE DETAIL SHEET "PIPE BEDDING FOR CULVERTS, ENTRANCE, AND STORM SEWER REINFORCED CONC. PIPE" AND DETAIL SHEET "PIPE BEDDING TRENCH CONDITION REINFORCED CONC. PIPE" FOR RCP COVER HEIGHT AND BEDDING REQUIREMENTS.

LEGEND

CSPHS: CORRUGATED STEEL PIPE WITH HELICAL LOCK SEAM OR HELICAL WELDED SEAM (HELICAL CORR.)

CSPLS: CORRUGATED STEEL PIPE WITH LONGITUDINAL RIVETED OR SPOT WELDED SEAM (ANNULAR CORR.)

CSPLSSB: CORRUGATED STEEL PIPE WITH LONGITUDINAL SEAMS WITH STEEL BOLTS (ANNULAR CORR.)

CAPHS: CORRUGATED ALUMINUM ALLOY PIPE WITH HELICAL LOCK SEAM (HELICAL CORR.)

CAPLSSB: CORRUGATED ALUMINUM ALLOY PIPE WITH LONGITUDINAL SEAMS WITH STEEL BOLTS (ANNULAR CORR.)

SRS: SPIRAL RIB STEEL

RCP: CIRCULAR REINFORCED CONCRETE PIPE

SHEET 5 OF 8

72" PIPE - 78" PIPE

KENTUCKY DEPARTMENT OF HIGHWAYS

CULVERT & STORM SEWER PIPE TYPES & COVER HEIGHTS

STANDARD DRAWING NO. RDI-005-03

SUBMITTED: DIRECTOR DIVISION OF DESIGN — DATE 11-21-07

APPROVED: STATE HIGHWAY ENGINEER — DATE 11-21-07

PIPE DIA. (IN)	PIPE TYPE	CIRCULAR PIPE COVER HEIGHTS IN FEET (4)																						
		2-5	5-10	10-15	15-20	20-25	25-30	30-35	35-40	40-45	45-50	50-55	55-60	60-65	65-70	70-75	75-80	80-85	85-90	90-95	95-100	100-105	105-110	110-115	115-120
84	3"x1" CSPHS (1)	12 GA.						10 GA.																	
	3"x1" CSPLS (1)	12 GA.				10 GA.																			
	5"x1" CSPHS (1)	12 GA.					10 GA.																		
	6"x2" CSPLSSB (1)	10 GA.					8 GA.		7 GA.			5 GA.	3 GA.	1 GA.											
	3"x1" CAPHS	12 GA.				10 GA.		8 GA.																	
	9"x2½" CAPLSSB	10 GA.					8 GA.	7 GA.		5 GA.	3 GA.	1 GA.													
	RCP (9)																								
90	3"x1" CSPHS (1)	12 GA.						10 GA.																	
	3"x1" CSPLS (1)	12 GA.				10 GA.																			
	5"x1" CSPHS (1)	12 GA.					10 GA.																		
	6"x2" CSPLSSB (1)	10 GA.					8 GA.		7 GA.		5 GA.	3 GA.		1 GA.											
	3"x1" CAPHS	12 GA.				10 GA.		8 GA.																	
	9"x2½" CAPLSSB	10 GA.					8 GA.	7 GA.	5 GA.	3 GA.	1 GA.														
	RCP (9)																								
96	3"x1" CSPHS (1)	12 GA.					10 GA.																		
	3"x1" CSPLS (1)	12 GA.																							
	5"x1" CSPHS (1)	12 GA.					10 GA.																		
	6"x2" CSPLSSB (1)	10 GA.				8 GA.		7 GA.		5 GA.		3 GA.		1 GA.											
	3"x1" CAPHS	12 GA.				10 GA.		8 GA.																	
	9"x2½" CAPLSSB	10 GA.				8 GA.		7 GA.	5 GA.	3 GA.	1 GA.														
	RCP (9)																								
		2-5	5-10	10-15	15-20	20-25	25-30	30-35	35-40	40-45	45-50	50-55	55-60	60-65	65-70	70-75	75-80	80-85	85-90	90-95	95-100	100-105	105-110	110-115	115-120

NOTES

(1) GAGES FOR CORRUGATED STEEL PIPE ITEMS SHOWN ARE BASED ON ALUMINUM-COATED TYPE 2 STEEL AS PER AASHTO M-274. ALUMINUM COATED TYPE 2 STEEL IS ONLY PERMITTED IN Ph RANGES OF 5 TO 9.

2. WHEN CORRUGATED STEEL PIPE IS ZINC COATED (GALVANIZED) THE GAGE SHALL BE ONE GAGE HEAVIER THAN SHOWN IN THE TABLES.

3. CONTRARY TO NOTE 2, GAGES FOR 6"X2" CSPLSSB ARE SHOWN FOR ZINC COATED (GALVANIZED).

(4) SEE CURRENT STANDARD DRAWING RDI-001 FOR EXPLANATION OF COVER HEIGHTS LESS THAN 2 FEET.

5. CSP, CAP, SRS AND SRA ARE SHOWN IN GAGE.

6. MAXIMUM COVER HEIGHT MEASURED FROM TOP OF PIPE TO SUBGRADE ELEVATION SHALL GOVERN GAGE OF PIPE TO BE USED FOR ENTIRE LENGTH OF PIPE INSTALLATION.

7. ALL CIRCULAR STRUCTURAL PLATE SHALL BE 5% VERTICALLY ELONGATED.

8. SEE CURRENT STANDARD DRAWING RDI-035 FOR COATINGS, LININGS AND PAVINGS FOR NON-STRUCTURAL PIPE.

(9) SEE DETAIL SHEET "PIPE BEDDING FOR CULVERTS, ENTRANCE, AND STORM SEWER REINFORCED CONC. PIPE" AND DETAIL SHEET "PIPE BEDDING TRENCH CONDITION REINFORCED CONC. PIPE" FOR RCP COVER HEIGHT AND BEDDING REQUIREMENTS.

LEGEND

CSPHS: CORRUGATED STEEL PIPE WITH HELICAL LOCK SEAM OR HELICAL WELDED SEAM (HELICAL CORR.)

CSPLS: CORRUGATED STEEL PIPE WITH LONGITUDINAL RIVETED OR SPOT WELDED SEAM (ANNULAR CORR.)

CSPLSSB: CORRUGATED STEEL PIPE WITH LONGITUDINAL SEAMS WITH STEEL BOLTS (ANNULAR CORR.)

CAPHS: CORRUGATED ALUMINUM ALLOY PIPE WITH HELICAL LOCK SEAM (HELICAL CORR.)

CAPLSSB: CORRUGATED ALUMINUM ALLOY PIPE WITH LONGITUDINAL SEAMS WITH STEEL BOLTS (ANNULAR CORR.)

RCP: CIRCULAR REINFORCED CONCRETE PIPE

SHEET 6 OF 8

84" PIPE - 96" PIPE

KENTUCKY DEPARTMENT OF HIGHWAYS

CULVERT & STORM SEWER PIPE TYPES & COVER HEIGHTS

STANDARD DRAWING NO. RDI-006-03

SUBMITTED: DIRECTOR DIVISION OF DESIGN — DATE 11-21-07

APPROVED: STATE HIGHWAY ENGINEER — DATE 11-21-07

CIRCULAR PIPE COVER HEIGHTS IN FEET (4)

PIPE DIA. (IN)	PIPE TYPE	2-5	5-10	10-15	15-20	20-25	25-30	30-35	35-40	40-45	45-50	50-55	55-60	60-65	65-70	70-75	75-80	80-85	85-90	90-95	95-100	100-105	105-110	110-115	115-120
102	3"x1" CSPHS (1)	12 GA.					10 GA.																		
	3"x1" CSPLS (1)	12 GA.			10 GA.																				
	5"x1" CSPHS (1)	12 GA.				10 GA.																			
	6"x2" CSPLSSB (1)	10 GA.				8 GA.		7 GA.		5 GA.	3 GA.		1 GA.												
	3"x1" CAPHS	10 GA.				8 GA.																			
	9"x2½" CAPLSSB	10 GA.				8 GA.	7 GA.	5 GA.	3 GA.	1 GA.															
	RCP (9)																								
108	3"x1" CSPHS (1)	12 GA.					10 GA.																		
	3"x1" CSPLS (1)	12 GA.			10 GA.																				
	5"x1" CSPHS (1)	12 GA.				10 GA.																			
	6"x2" CSPLSSB (1)	10 GA.				8 GA.		7 GA.		5 GA.	3 GA.	1 GA.													
	3"x1" CAPHS	10 GA.				8 GA.																			
	9"x2½" CAPLSSB	10 GA.				8 GA.	7 GA.	5 GA.	3 GA.	1 GA.															
	RCP (9)																								
114	3"x1" CSPHS (1)	10 GA.																							
	3"x1" CSPLS (1)	10 GA.																							
	5"x1" CSPHS (1)	10 GA.																							
	6"x2" CSPLSSB (1)	10 GA.				8 GA.	7 GA.		5 GA.	3 GA.	1 GA.														
	3"x1" CAPHS	8 GA.																							
	9"x2½" CAPLSSB	10 GA.			8 GA.		7 GA.	3 GA.	1 GA.																
	RCP (9)																								
		2-5	5-10	10-15	15-20	20-25	25-30	30-35	35-40	40-45	45-50	50-55	55-60	60-65	65-70	70-75	75-80	80-85	85-90	90-95	95-100	100-105	105-110	110-115	115-120

NOTES

(1) GAGES FOR CORRUGATED STEEL PIPE ITEMS SHOWN ARE BASED ON ALUMINUM-COATED TYPE 2 STEEL AS PER AASHTO M-274. ALUMINUM COATED TYPE 2 STEEL IS ONLY PERMITTED IN Ph RANGES OF 5 TO 9.

2. WHEN CORRUGATED STEEL PIPE IS ZINC COATED (GALVANIZED) THE GAGE SHALL BE ONE GAGE HEAVIER THAN SHOWN IN THE TABLES.

3. CONTRARY TO NOTE 2, GAGES FOR 6"X2" CSPLSSB ARE SHOWN FOR ZINC COATED (GALVANIZED).

(4) SEE CURRENT STANDARD DRAWING RDI-001 FOR EXPLANATION OF COVER HEIGHTS LESS THAN 2 FEET.

5. CSP, CAP, SRS AND SRA ARE SHOWN IN GAGE.

6. MAXIMUM COVER HEIGHT MEASURED FROM TOP OF PIPE TO SUBGRADE ELEVATION SHALL GOVERN GAGE OF PIPE TO BE USED FOR ENTIRE LENGTH OF PIPE INSTALLATION.

7. ALL CIRCULAR STRUCTURAL PLATE SHALL BE 5% VERTICALLY ELONGATED.

8. SEE CURRENT STANDARD DRAWING RDI-035 FOR COATINGS, LININGS AND PAVINGS FOR NON-STRUCTURAL PIPE.

(9) SEE DETAIL SHEET "PIPE BEDDING FOR CULVERTS, ENTRANCE, AND STORM SEWER REINFORCED CONC. PIPE" AND DETAIL SHEET "PIPE BEDDING TRENCH CONDITION REINFORCED CONC. PIPE" FOR RCP COVER HEIGHT AND BEDDING REQUIREMENTS.

LEGEND

CSPHS: CORRUGATED STEEL PIPE WITH HELICAL LOCK SEAM OR HELICAL WELDED SEAM (HELICAL CORR.)

CSPLS: CORRUGATED STEEL PIPE WITH LONGITUDINAL RIVETED OR SPOT WELDED SEAM (ANNULAR CORR.)

CSPLSSB: CORRUGATED STEEL PIPE WITH LONGITUDINAL SEAMS WITH STEEL BOLTS (ANNULAR CORR.)

CAPHS: CORRUGATED ALUMINUM ALLOY PIPE WITH HELICAL LOCK SEAM (HELICAL CORR.)

CAPLSSB: CORRUGATED ALUMINUM ALLOY PIPE WITH LONGITUDINAL SEAMS WITH STEEL BOLTS (ANNULAR CORR.)

RCP: CIRCULAR REINFORCED CONCRETE PIPE

SHEET 7 of 8

102" PIPE - 114" PIPE

KENTUCKY DEPARTMENT OF HIGHWAYS

CULVERT & STORM SEWER PIPE TYPES & COVER HEIGHTS

STANDARD DRAWING NO. RDI-007-03

SUBMITTED: DIRECTOR DIVISION OF DESIGN — DATE 11-21-07

APPROVED: STATE HIGHWAY ENGINEER — DATE 11-21-07

PIPE DIA. (IN)	PIPE TYPE	CIRCULAR PIPE COVER HEIGHTS IN FEET (4)																							
		2-5	5-10	10-15	15-20	20-25	25-30	30-35	35-40	40-45	45-50	50-55	55-60	60-65	65-70	70-75	75-80	80-85	85-90	90-95	95-100	100-105	105-110	110-115	115-120
120	3"x1" CSPHS (1)	10 GA.																							
	3"x1" CSPLS (1)	10 GA.																							
	5"x1" CSPHS (1)	10 GA.																							
	6"x2" CSPLSSB (1)	10 GA.			8 GA.		7 GA.		5 GA.	3 GA.			1 GA.												
	3"x1" CAPHS	8 GA.																							
	9"x2½" CAPLSSB	10 GA.			8 GA.	7 GA.	5 GA.	3 GA.	1 GA.																
	RCP (9)																								
		2-5	5-10	10-15	15-20	20-25	25-30	30-35	35-40	40-45	45-50	50-55	55-60	60-65	65-70	70-75	75-80	80-85	85-90	90-95	95-100	100-105	105-110	110-115	115-120

NOTES

(1) GAGES FOR CORRUGATED STEEL PIPE ITEMS SHOWN ARE BASED ON ALUMINUM-COATED TYPE 2 STEEL AS PER AASHTO M-274. ALUMINUM COATED TYPE 2 STEEL IS ONLY PERMITTED IN Ph RANGES OF 5 TO 9.

2. WHEN CORRUGATED STEEL PIPE IS ZINC COATED (GALVANIZED) THE GAGE SHALL BE ONE GAGE HEAVIER THAN SHOWN IN THE TABLES.

3. CONTRARY TO NOTE 2, GAGES FOR 6"X2" CSPLSSB ARE SHOWN FOR ZINC COATED (GALVANIZED).

(4) SEE CURRENT STANDARD DRAWING RDI-001 FOR EXPLANATION OF COVER HEIGHTS LESS THAN 2 FEET.

5. CSP, CAP, SRS AND SRA ARE SHOWN IN GAGE.

6. MAXIMUM COVER HEIGHT MEASURED FROM TOP OF PIPE TO SUBGRADE ELEVATION SHALL GOVERN GAGE OF PIPE TO BE USED FOR ENTIRE LENGTH OF PIPE INSTALLATION.

7. ALL CIRCULAR STRUCTURAL PLATE SHALL BE 5% VERTICALLY ELONGATED.

8. SEE CURRENT STANDARD DRAWING RDI-035 FOR COATINGS, LININGS AND PAVINGS FOR NON-STRUCTURAL PIPE.

(9) SEE DETAIL SHEET "PIPE BEDDING FOR CULVERTS, ENTRANCE, AND STORM SEWER REINFORCED CONC. PIPE" AND DETAIL SHEET "PIPE BEDDING TRENCH CONDITION REINFORCED CONC. PIPE" FOR RCP COVER HEIGHT AND BEDDING REQUIREMENTS.

LEGEND

CSPHS: CORRUGATED STEEL PIPE WITH HELICAL LOCK SEAM OR HELICAL WELDED SEAM (HELICAL CORR.)

CSPLS: CORRUGATED STEEL PIPE WITH LONGITUDINAL RIVETED OR SPOT WELDED SEAM (ANNULAR CORR.)

CSPLSSB: CORRUGATED STEEL PIPE WITH LONGITUDINAL SEAMS WITH STEEL BOLTS (ANNULAR CORR.)

CAPHS: CORRUGATED ALUMINUM ALLOY PIPE WITH HELICAL LOCK SEAM (HELICAL CORR.)

CAPLSSB: CORRUGATED ALUMINUM ALLOY PIPE WITH LONGITUDINAL SEAMS WITH STEEL BOLTS (ANNULAR CORR.)

RCP: CIRCULAR REINFORCED CONCRETE PIPE

SHEET 8 OF 8

120" PIPE

KENTUCKY
DEPARTMENT OF HIGHWAYS

CULVERT &
STORM SEWER PIPE TYPES
& COVER HEIGHTS

STANDARD DRAWING NO. RDI-008-03

SUBMITTED: DIRECTOR DIVISION OF DESIGN — DATE 11-21-07

APPROVED: STATE HIGHWAY ENGINEER — DATE 11-21-07

EQUI. PIPE DIA. (IN)	PIPE TYPE	NON-CIRCULAR PIPE COVER HEIGHTS IN FEET					
		2 - 5	6	7	8	9	10
15	2⅔"x½" CSPA (1)	16 GA.					
	2⅔"x½" CAPA	16 GA.					
18	2⅔"x½" CSPA (1)	16 GA.					
	2⅔"x½" CAPA	16 GA.					
	SRSA (1)	16 GA.					
	SRAA	16 GA.					
	RCHEP (12)						
21	2⅔"x½" CSPA (1)	16 GA.					
	2⅔"x½" CAPA	16 GA.					
	SRSA (1)	16 GA.					
	SRAA	16 GA.					
24	2⅔"x½" CSPA (1)	16 GA.					
	2⅔"x½" CAPA	14 GA.					
	SRSA (1)	16 GA.					
	SRAA	14 GA.					
	RCHEP (12)						
		2 - 5	6	7	8	9	10

EQUI. PIPE DIA. (IN)	PIPE TYPE	NON-CIRCULAR PIPE COVER HEIGHTS IN FEET					
		2 - 5	6	7	8	9	10
30 (9)	2⅔"x½" CSPA (1)	16 GA.					
	2⅔"x½" CAPA	14 GA.					
	SRSA (1)	16 GA.					
	SRAA	14 GA.					
	RCHEP (12)						
36	2⅔"x½" CSPA (1)	14 GA.					
	2⅔"x½" CAPA	12 GA.					
	SRSA (1)	14 GA.					
	SRAA	12 GA.					
	RCHEP (12)						
42	2⅔"x½" CSPA (1)	14 GA.					
	2⅔"x½" CAPA	12 GA.					
	SRSA (1)	14 GA.					
	SRAA	12 GA.					
	RCHEP (12)						
		2 - 5	6	7	8	9	10

EQUI. PIPE DIA. (IN)	PIPE TYPE	NON-CIRCULAR PIPE COVER HEIGHTS IN FEET					
		2 - 5	6	7	8	9	10
48	2⅔"x½" CSPA (1)	12 GA.					
	2⅔"x½" CAPA	10 GA.					
	SRSA (1)	14 GA.					
	SRAA	12 GA.					
	RCHEP (12)						
54	2⅔"x½" CSPA (1)	12 GA.					
	(3) CSPA (1)	14 GA.					
	2⅔"x½" CAPA	10 GA.					
	3"x1" CAPA	14 GA.					
	SRSA (1)	14 GA.					
	SRAA	12 GA.					
	RCHEP (12)						
60	2⅔"x½" CSPA (1)	10 GA.					
	(3) CSPA (1)	14 GA.					
	2⅔"x½" CAPA	8 GA.					
	3"x1" CAPA	14 GA.					
	SRSA (1)	12 GA.					
	SRAA	10 GA.					
	RCHEP (12)						
		2 - 5	6	7	8	9	10

(1) GAGES FOR CORRUGATED STEEL PIPE ITEMS SHOWN ARE BASED ON ALUMINUM-COATED TYPE 2 STEEL AS PER AASHTO M-274. ALUMINUM COATED TYPE 2 STEEL IS ONLY PERMITTED IN Ph RANGES OF 5 TO 9.

2. WHEN CORRUGATED STEEL PIPE IS ZINC COATED (GALVANIZED) THE GAGE SHALL BE ONE GAGE HEAVIER THAN SHOWN IN THE TABLES.

(3) 3"x1" OR 5"x1"

4. CSPA, CAPA, SRSA AND SRAA ARE SHOWN IN GAGE.

5. MAXIMUM COVER HEIGHT MEASURED FROM TOP OF PIPE TO SUBGRADE ELEVATION SHALL GOVERN GAGE OF PIPE TO BE USED FOR ENTIRE LENGTH OF PIPE INSTALLATION.

6. MINIMUM COVER HEIGHTS FOR PIPE SHALL BE 2 FEET. GAGE OF PIPE FOR COVER HEIGHTS LESS THAN 2 FEET SHALL BE THAT SHOWN FOR COVER HEIGHTS OF 10 FEET. (SEE STANDARD SPECIFICATIONS FOR BACKFILL)

7. MAXIMUM COVER HEIGHT FOR NON-CIRCULAR PIPE IS 10 FEET. NON-CIRCULAR PIPE SHALL ONLY BE USED WHERE COVER LIMITATIONS EXIST.

8. GAGE OF ENTRANCE PIPE FOR COVER HEIGHTS LESS THAN 2 FEET SHALL MEET THE FOLLOWING REQUIREMENTS:
   a. GAGE OF CAPA SHALL BE ONE GAGE HEAVIER THAN SHOWN IN THE TABLE.
   b. GAGE OF CSPA SHALL BE THAT SHOWN IN TABLE.

(9) ENTRANCE PIPE GREATER THAN 30" DIA. SHALL BE CULVERT PIPE.

10. SEE CURRENT STANDARD DRAWING RDI-016 FOR NON-CIRCULAR PIPE ALTERNATES.

11. SEE CURRENT STANDARD DRAWING RDI-035 FOR COATINGS, LININGS AND PAVINGS FOR NON-STRUCTURAL PIPE.

LEGEND

CSPA: CORRUGATED STEEL PIPE ARCH
CAPA: CORRUGATED ALUMINUM ALLOY PIPE ARCH
SRSA: SPIRAL RIB STEEL ARCH
SRAA: SPIRAL RIB ALUMINUM ARCH
RCHEP: REINFORCED CONCRETE HORIZONTAL ELLIPTICAL PIPE

(12) SEE DETAIL SHEET "PIPE BEDDING FOR CULVERTS, ENTRANCE, AND STORM SEWER REINFORCED CONC. PIPE" AND DETAIL SHEET "PIPE BEDDING TRENCH CONDITION REINFORCED CONC. PIPE FOR RCHEP COVER HEIGHT AND BEDDING REQUIREMENTS.

15" PIPE - 60" PIPE
NON-CIRCULAR

KENTUCKY
DEPARTMENT OF HIGHWAYS

CULVERT, ENTRANCE & STORM SEWER PIPE TYPES & COVER HEIGHTS

STANDARD DRAWING NO. RDI-011-02

SUBMITTED: DIRECTOR DIVISION OF DESIGN — DATE 11-21-07
APPROVED: STATE HIGHWAY ENGINEER — DATE 11-21-07

SHEET 1 OF 2

EQUI. PIPE DIA. (IN)	PIPE TYPE	NON-CIRCULAR PIPE COVER HEIGHTS IN FEET (4)					
		2 - 5	6	7	8	9	10
66	(3) CSPA (1)	14 GA.					
	6''x2'' CSPA (1)	12 GA.					
	3''x1'' CAPA	14 GA.					
	RCHEP (11)						
72	(3) CSPA (1)	14 GA.					
	6''x2'' CSPA (1)	12 GA.					
	3''x1'' CAPA	12 GA.					
	RCHEP (11)						
78	(3) CSPA (1)	12 GA.					
	6''x2'' CSPA (1)	12 GA.					
	3''x1'' CAPA	12 GA.					
	9''x2½'' CAPAASB	12 GA.					
	RCHEP (11)						
		2 - 5	6	7	8	9	10

EQUI. PIPE DIA. (IN)	PIPE TYPE	NON-CIRCULAR PIPE COVER HEIGHTS IN FEET (4)					
		2 - 5	6	7	8	9	10
84	(3) CSPA (1)	12 GA.					
	6''x2'' CSPA (1)	12 GA.					
	3''x1'' CAPA	12 GA.					
	9''x2½'' CAPAASB	12 GA.					
	RCHEP (11)						
90	(3) CSPA (1)	12 GA.					
	6''x2'' CSPA (1)	12 GA.					
	3''x1'' CAPA	10 GA.					
	9''x2½'' CAPAASB	12 GA.					
	RCHEP (11)						
96	(3) CSPA (1)	12 GA.					
	6''x2'' CSPA (1)	12 GA.					
	3''x1'' CAPA	8 GA.					
	9''x2½'' CAPAASB	12 GA.					
	RCHEP (11)						
		2 - 5	6	7	8	9	10

EQUI. PIPE DIA. (IN)	PIPE TYPE	NON-CIRCULAR PIPE COVER HEIGHTS IN FEET (4)					
		2 - 5	6	7	8	9	10
102	(3) CSPA (1)	12 GA.					
	6''x2'' CSPA (1)	12 GA.					
	3''x1'' CAPA	8 GA.					
	9''x2½'' CAPAASB	12 GA.					
	RCHEP (11)						
108	(3) CSPA (1)	10 GA.					
	6''x2'' CSPA (1)	12 GA.					
	9''x2½'' CAPAASB	12 GA.					
	RCHEP (11)						
114	(3) CSPA (1)	10 GA.					
	6''x2'' CSPA (1)	12 GA.					
	9''x2½'' CAPAASB	12 GA.					
	RCHEP (11)						
120	6''x2'' CSPA (1)	12 GA.					
	9''x2½'' CAPAASB	12 GA.					
	RCHEP (11)						
		2 - 5	6	7	8	9	10

(1) GAGES FOR CORRUGATED STEEL PIPE ITEMS SHOWN ARE BASED ON ALUMINUM-COATED TYPE 2 STEEL AS PER AASHTO M-274. ALUMINUM COATED TYPE 2 STEEL IS ONLY PERMITTED IN Ph RANGES OF 5 TO 9.

2. WHEN CORRUGATED STEEL PIPE IS ZINC COATED (GALVANIZED) THE GAGE SHALL BE ONE GAGE HEAVIER THAN SHOWN IN THE TABLES.

(3) 3''x1'' OR 5''x1''

(4) SEE CURRENT STANDARD DRAWING RDI-011 FOR EXPLANATION OF COVER HEIGHTS LESS THAN 2 FEET.

5. CSPA AND CAPA ARE SHOWN IN GAGE.

6. MAXIMUM COVER HEIGHT FROM TOP OF PIPE TO SUBGRADE ELEVATION SHALL GOVERN GAGE OF PIPE TO BE USED FOR ENTIRE LENGTH OF PIPE INSTALLATION.

7. MAXIMUM COVER HEIGHT FOR NON-CIRCULAR PIPE IS 10 FEET. NON-CIRCULAR PIPE SHALL ONLY BE USED WHERE COVER LIMITATIONS EXIST.

8. NON-CIRCULAR CMP HAVING AN EQUIVALENT ROUND DIAMETER GREATER THAN 84'' SHALL BE SUPPLIED AS STRUCTURAL PLATE.

9. SEE CURRENT STANDARD DRAWING RDI-016 FOR NON-CIRCULAR PIPE ALTERNATES.

10. SEE CURRENT STANDARD DRAWING RDI-035 FOR COATINGS, LININGS AND PAVINGS FOR NON-STRUCTURAL PIPE.

LEGEND

CSPA: CORRUGATED STEEL PIPE ARCH (ANNULAR CORR.)

CAPA: CORRUGATED ALUMINUM ALLOY PIPE ARCH (ANNULAR CORR.)

CAPAASB: CORRUGATED ALUMINUM ALLOY PIPE ARCH WITH ALUMINUM OR STEEL BOLTS (ANNULAR CORR.)

RCHEP: REINFORCED CONCRETE HORIZONTAL ELLIPTICAL PIPE

(11) SEE DETAIL SHEET ''PIPE BEDDING FOR CULVERTS, ENTRANCE, AND STORM SEWER REINFORCED CONC. PIPE'' AND DETAIL SHEET ''PIPE BEDDING TRENCH CONDITION REINFORCED CONC. PIPE FOR RCHEP COVER HEIGHT AND BEDDING REQUIREMENTS.

66'' PIPE - 120'' PIPE
NON-CIRCULAR

KENTUCKY
DEPARTMENT OF HIGHWAYS

CULVERT &
STORM SEWER PIPE TYPES
& COVER HEIGHTS

STANDARD DRAWING NO. RDI-012-02

SUBMITTED: DIRECTOR DIVISION OF DESIGN — DATE 11-21-07

APPROVED: STATE HIGHWAY ENGINEER — DATE 11-21-07

EQUIVALENT CIRCULAR PIPE DIAMETER	2⅔'' x ½'' CSPA & CAPA		(1) CSPA AND 3'' x 1'' CAPA		6'' x 2'' CSPA		9''x2½'' CAPAASB		RCHEP	
	SPAN (INCH)	RISE (INCH)	SPAN (INCH)	RISE (INCH)	SPAN	RISE	SPAN	RISE	SPAN (INCH)	RISE (INCH)
15''	17	13								
18''	21	15							23	14
21''	24	18								
24''	28	20							30	19
30''	35	24							38	24
36''	42	29							45	29
42''	49	33							53	34
48''	57	38							60	38
54''	64	43	60	46					68	43
60''	71	47	66	51					76	48
66''			73	55	6'-1''	4'-7''			83	53
72''			81	59	6'-9''	4'-11''			91	58
78''			87	63	7'-3''	5'-3''	6'-11''	5'-9''	98	63
84''			95	67	7'-11''	5'-7''	7'-9''	6'-0''	106	68
90''			103	71	8'-7''	5'-11''	8'-5''	6'-3''	113	72
96''			112	75	9'-4''	6'-3''	9'-3''	6'-5''	121	77
102''			117	79	9'-9''	6'-7''	9'-11''	6'-8''	128	82
108''			128	83	10'-8''	6'-11''	10'-9''	6'-10''	136	87
114''			137	87	11'-5''	7'-3''	11'-5''	7'-1''	143	92
120''			142	91	11'-10''	7'-7''	12'-3''	7'-3''	151	97

CHART KEY

2⅔''x½'' CSPA: CORRUGATED STEEL PIPE ARCH
3''x1'' OR 5''x1'' CSPA: CORRUGATED STEEL PIPE ARCH
6''x2'' CSPA: CORRUGATED STEEL PIPE ARCH
2⅔''x½'' CAPA: CORRUGATED ALUMINUM ALLOY PIPE ARCH
3''x1'' CAPA: CORRUGATED ALUMINUM ALLOY PIPE ARCH
9''x2½'' CAPAASB: CORRUGATED ALUMINUM ALLOY PIPE ARCH WITH ALUMINUM OR STEEL BOLTS
RCHEP: REINFORCED CONCRETE HORIZONTAL ELLIPTICAL PIPE

NOTES

(1) 3''x1'' OR 5''x1''

KENTUCKY
DEPARTMENT OF HIGHWAYS

NON-CIRCULAR PIPE ALTERNATES

STANDARD DRAWING NO. RDI-016-02

SUBMITTED: DIRECTOR DIVISION OF DESIGN — DATE 11-21-07
APPROVED: STATE HIGHWAY ENGINEER — DATE 11-21-07

STEP 1

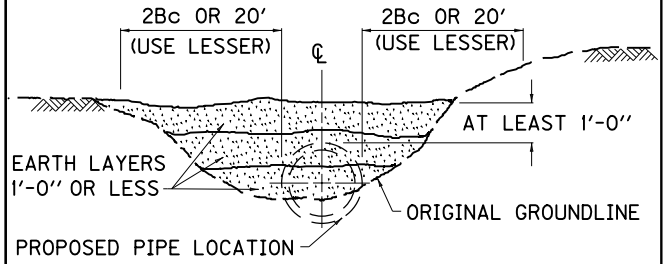

a. IF THE ORIGINAL GROUNDLINE IS AT LEAST 1'-0" ABOVE TOP OF PROPOSED PIPE FOR WIDTH OF 2Bc OR 20' (WHICHEVER IS LESS) ON EACH SIDE OF THE PIPE, GO DIRECTLY TO "STEP 2".

b. IF ORIGINAL GROUNDLINE IS NOT AT LEAST 1'-0" ABOVE TOP OF PROPOSED PIPE, COMPACT EMBANKMENT IN LAYERS 1'-0" OR LESS TO ELEVATION AND WIDTH SHOWN. ▒ MEET DENSITY REQUIREMENTS FOR PROPOSED EMBANKMENT .

STEP 2

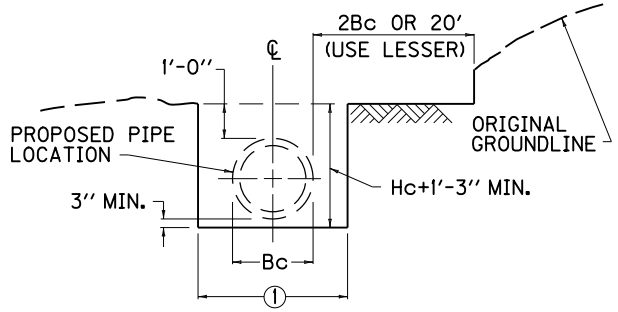

a. EXCAVATE TO WITHIN 1'-0" ABOVE TOP OF PROPOSED PIPE A WIDTH OF 2Bc OR 20' (USE LESSER) ON EACH SIDE OF PIPE.

b. EXCAVATE TRENCH TO WIDTH AND DEPTH SHOWN.

1 Bc + 24" FOR PIPE 36" DIA. OR LESS.
Bc + 48" FOR PIPE GREATER THAN 36" DIA.

ROCK FOUNDATION DETAILS — STEP 3

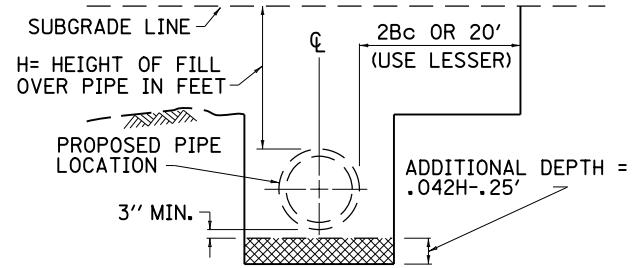

a. IF ROCK FOUNDATION IS NOT ENCOUNTERED, GO DIRECTLY TO "STEP 4".

b. IF ROCK FOUNDATION IS ENCOUNTERED, EXCAVATE TRENCH ADDITIONAL DEPTH USING FORMULA GIVEN. THIS ADDITIONAL DEPTH ▒ SHALL BE A MIN. OF 4" AND SHALL NOT EXCEED 24"

c. BACKFILL ADDITIONAL EXCAVATION AREA WITH COMPACTED BEDDING MATERIAL IN LAYERS 6" OR LESS.

STEP 4

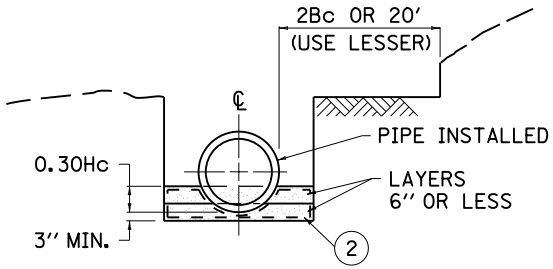

a. COMPACT BEDDING IN TRENCH IN LAYERS 6" OR LESS TO WIDTH AND ELEVATION SHOWN. ▭

b. EXCAVATE A GROOVE IN THE COMPACTED BEDDING TO CONFORM TO THE OUTSIDE OF THE PIPE. AFTER EXCAVATION OF THE GROOVE, APPROXIMATELY 4" OF BEDDING SHOULD REMAIN BELOW THE OUTSIDE INVERT OF THE PIPE. THE CRADLE SHALL BE GAGED FOR SHAPE AND SLOPE BY STRIKING OR DRAWING A TEMPLATE THROUGH THE GROOVE IMMEDIATELY BEFORE PLACING EACH SECTION OF PIPE.

c. INSTALL PIPE AT CORRECT ALIGNMENT AND ELEVATION. RECOMPACT ANY LOOSE BEDDING DISTURBED DURING INSTALLATION.

2 WRAP BEDDING MATERIAL IN GEOTEXTILE FABRIC WHEN THE STANDARD SPECIFICATIONS SPECIFIES.

STEP 5

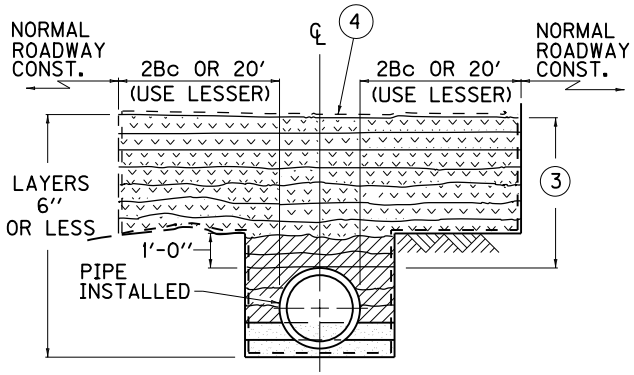

3 4'-0" REQUIRED FOR CONSTRUCTION LOADING IF COVER HEIGHT PERMITS.

a. COMPACT REQUIRED BACKFILL MATERIAL IN LAYERS 6" OR LESS TO 1'-0" ABOVE TOP OF PIPE. ▨

b. COMPACT REQUIRED BACKFILL MATERIAL TO ELEV. 3 ABOVE TOP OF PIPE IN LAYERS OF 6" OR LESS. ▽

c. PROCEED WITH NORMAL ROADWAY CONSTRUCTION.

4 WRAP BEDDING MATERIAL IN GEOTEXTILE FABRIC WHEN THE STANDARD SPECIFICATIONS SPECIFIES.

~ PIPE SHAPES ~

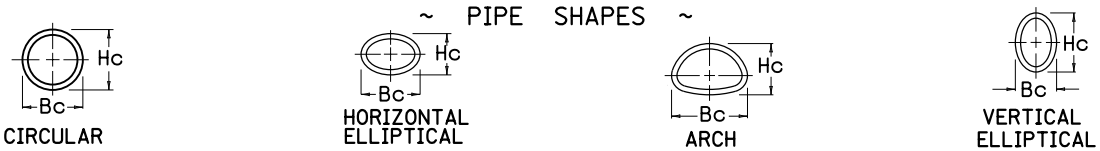

SEE CUR. STD. DWG. RDI-025 FOR TRENCH CONDITIONS

KENTUCKY
DEPARTMENT OF HIGHWAYS

PIPE BEDDING FOR CULVERTS, ENTRANCE AND STORM SEWER PIPE

STANDARD DRAWING NO. RDI-020-08

SUBMITTED Gary L. Sharp — DIRECTOR DIVISION OF DESIGN — 12-2-02 DATE

APPROVED J. M. Yowell — STATE HIGHWAY ENGINEER — 12-2-02 DATE

STEP 1

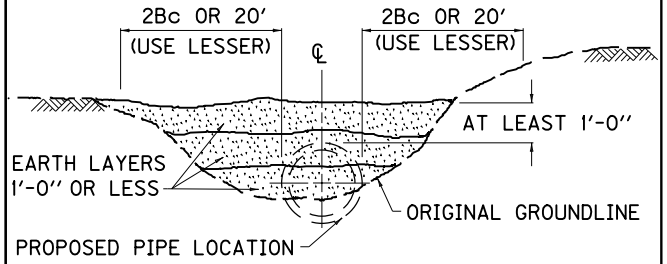

a. IF THE ORIGINAL GROUNDLINE IS AT LEAST 1'-0" ABOVE TOP OF PROPOSED PIPE FOR WIDTH OF 2Bc OR 20' (WHICHEVER IS LESS) ON EACH SIDE OF THE PIPE, GO DIRECTLY TO "STEP 2".

b. IF ORIGINAL GROUNDLINE IS NOT AT LEAST 1'-0" ABOVE TOP OF PROPOSED PIPE, COMPACT EMBANKMENT IN LAYERS 1'-0" OR LESS TO ELEVATION AND WIDTH SHOWN. ▒ MEET DENSITY REQUIREMENTS FOR PROPOSED EMBANKMENT .

STEP 2

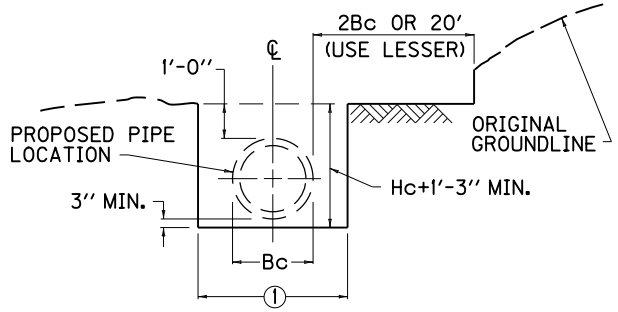

a. EXCAVATE TO WITHIN 1'-0" ABOVE TOP OF PROPOSED PIPE A WIDTH OF 2Bc OR 20' (USE LESSER) ON EACH SIDE OF PIPE.

b. EXCAVATE TRENCH TO WIDTH AND DEPTH SHOWN.

1 Bc + 24" FOR PIPE 36" DIA. OR LESS.
Bc + 48" FOR PIPE GREATER THAN 36" DIA.

STEP 3

ROCK FOUNDATION DETAILS

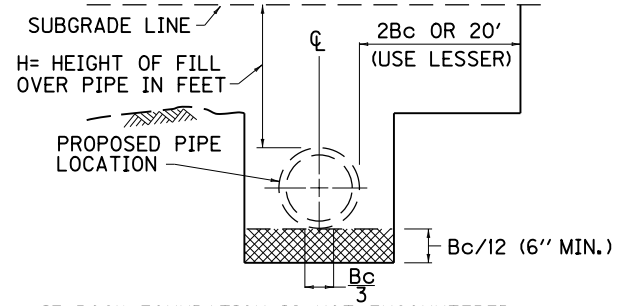

a. IF ROCK FOUNDATION IS NOT ENCOUNTERED, GO DIRECTLY TO "STEP 4".

b. IF ROCK FOUNDATION IS ENCOUNTERED, EXCAVATE TRENCH DEPTH USING FORMULA GIVEN. THIS DEPTH ▒ SHALL BE A MIN. OF 6" AND SHALL NOT EXCEED 24".

c. BACKFILL WITH COMPACTED BEDDING MATERIAL IN LAYERS 6" OR LESS LEAVING Bc/3 UNCOMPACTED IN THE FINAL LAYER.

STEP 4

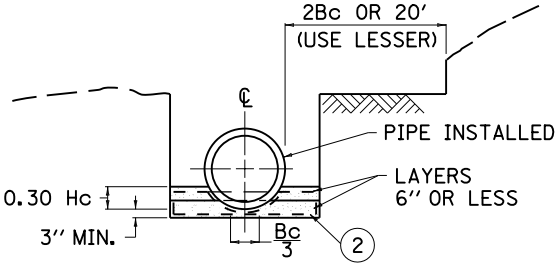

a. UNCOMPACTED 4" BEDDING IN SUBTRENCH. FOR TYPE 1 INSTALLATION COMPACT BEDDING IN LAYERS 6" OR LESS TO AN ELEVATION 0.30 Hc. ▭
LEAVE CENTER THIRD OF OUTSIDE PIPE DIA. (Bc/3) BEDDING UNCOMPACTED.

b. EXCAVATE A GROOVE IN THE COMPACTED BEDDING TO CONFORM TO THE OUTSIDE OF THE PIPE. AFTER EXCAVATION OF THE GROOVE, A MINIMUM 3" OF BEDDING SHOULD REMAIN BELOW THE OUTSIDE INVERT OF THE PIPE. THE CRADLE SHALL BE GAGED FOR SHAPE AND SLOPE BY STRIKING OR DRAWING A TEMPLATE THROUGH THE GROOVE IMMEDIATELY BEFORE PLACING EACH SECTION OF PIPE.

c. INSTALL PIPE AT CORRECT ALIGNMENT AND ELEVATION. RECOMPACT ANY LOOSE BEDDING DISTURBED DURING INSTALLATION.

2 WRAP BEDDING MATERIAL IN GEOTEXTILE FABRIC WHEN THE STANDARD SPECIFICATIONS SPECIFIES.

STEP 5

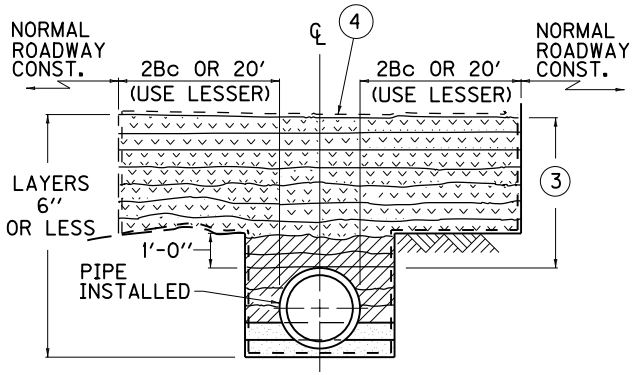

3 4'-0" REQUIRED FOR CONSTRUCTION LOADING.

a. COMPACT REQUIRED BACKFILL MATERIAL IN LAYERS 6" OR LESS TO 1'-0" ABOVE TOP OF PIPE. ▨

b. COMPACT REQUIRED BACKFILL MATERIAL TO ELEV. 3 ABOVE TOP OF PIPE IN LAYERS OF 6" OR LESS. ▽▽

c. PROCEED WITH NORMAL ROADWAY CONSTRUCTION.

4 WRAP BEDDING MATERIAL IN GEOTEXTILE FABRIC WHEN THE STANDARD SPECIFICATIONS SPECIFIES.

MAX. COVER HEIGHT		
CLASS	TYPE 1	TYPE 4
III	25'	9'
IV	38'	15'
V	57'	23'

2' OF COVER OR LESS	
CLASS	PIPE DIA.
V	12"-15"-18"
IV	21"-24"
III	27" & LARGER

~ PIPE SHAPES ~

NOTE:

10' MAXIMUM COVER HEIGHT FOR HORIZONTAL ELLIPTICAL CLASS HE III PIPE.

COVER HEIGHTS EXCEEDING THOSE SHOWN IN TABLES REQUIRE SPECIAL DESIGNS.

FOR TYPE 4 INSTALLATION PLACE EMBANKMENT MATERIAL ACCORDING TO SECTION 701.03.06A OF THE CURRENT SPEC. BOOK.

FOR TYPE 1 INSTALLATION, WHEN THE TOP OF PIPE IS NOT WITHIN ONE PIPE DIAMETER OF THE SUBGRADE, INSTALL ACCORDING TO SECTION 701.03.06A OF THE CURRENT SPEC. BOOK.

SEE SHEET 2 OF 2 FOR TRENCH CONDITIONS

KENTUCKY
DEPARTMENT OF HIGHWAYS

PIPE BEDDING FOR CULVERTS, ENTRANCE, AND STORM SEWER REINFORCED CONC. PIPE

STANDARD DRAWING NO. RDI-021

SUBMITTED David Kratt — DIRECTOR DIVISION OF DESIGN — 11-21-07 DATE

APPROVED Marcelyn Mathews — STATE HIGHWAY ENGINEER — 11-21-07 DATE

STEP 1

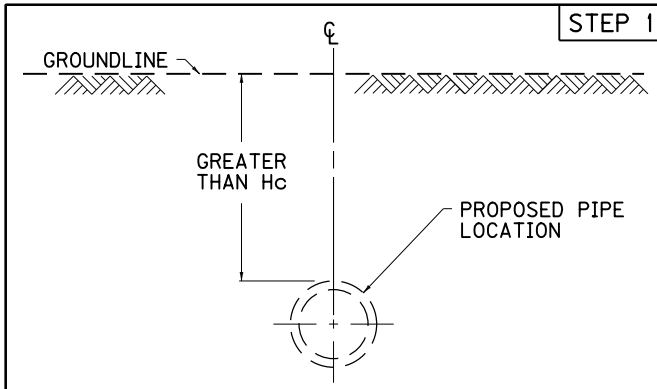

a. TRENCH CONDITION IS WHEN GROUNDLINE ELEVATION IS GREATER THAN Hc ABOVE TOP OF PROPOSED PIPE.

NOTE:
GROUNDLINE MAY BE (a) EXISTING OR ORIGINAL
(b) EXCAVATED SURFACE OR
(c) EMBANKMENT SURFACE.

STEP 2

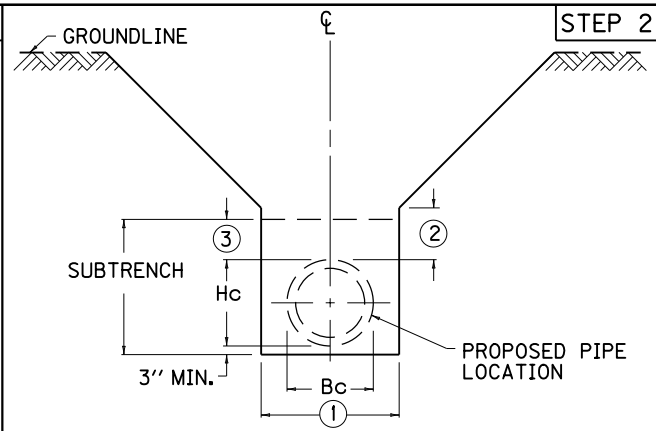

a. EXCAVATE SUBTRENCH TO WIDTH AND DEPTH SHOWN.
b. TRENCH WALLS MAY BE CONSTRUCTED VERTICAL. FOR ILLUSTRATION PURPOSES THE DETAIL DEPICTS A SLOPING WALL TRENCH. WHICHEVER METHOD IS USED, THE TRENCH WALLS SHALL REMAIN SYMMETRICAL ABOUT THE CENTERLINE OF THE PIPE.

(1) Bc + 24" FOR PIPE 36" DIA. OR LESS.
Bc + 48" FOR PIPE GREATER THAN 36" DIA.

(2) SLOPING OF TRENCH WALLS MAY BEGIN AT ANY ELEVATION GREATER THAN 1'-0" ABOVE TOP OF PIPE. THE SUBTRENCH SHALL ALWAYS BE REQUIRED.

(3) 1'-0" MINIMUM TO Hc MAXIMUM.

ROCK FOUNDATION DETAILS — STEP 3

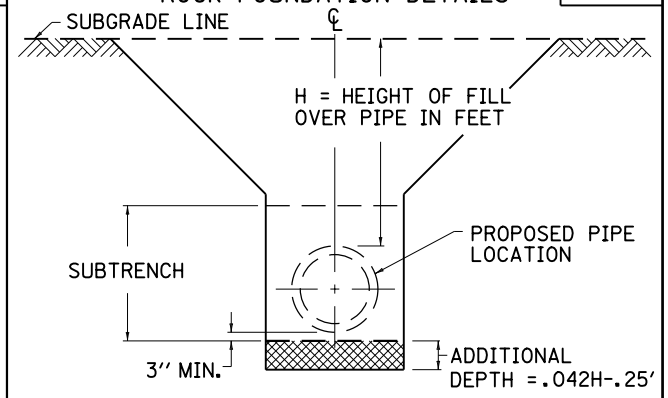

a. IF ROCK FOUNDATION IS NOT ENCOUNTERED, GO DIRECTLY TO "STEP 4".
b. IF ROCK FOUNDATION IS ENCOUNTERED, EXCAVATE TRENCH ADDITIONAL DEPTH USING FORMULA GIVEN. THIS ADDITIONAL DEPTH ▩ SHALL BE A MIN. OF 4" AND SHALL NOT EXCEED 24"
c. BACKFILL ADDITIONAL EXCAVATION AREA WITH COMPACTED BEDDING MATERIAL IN LAYERS 6" OR LESS.

STEP 4

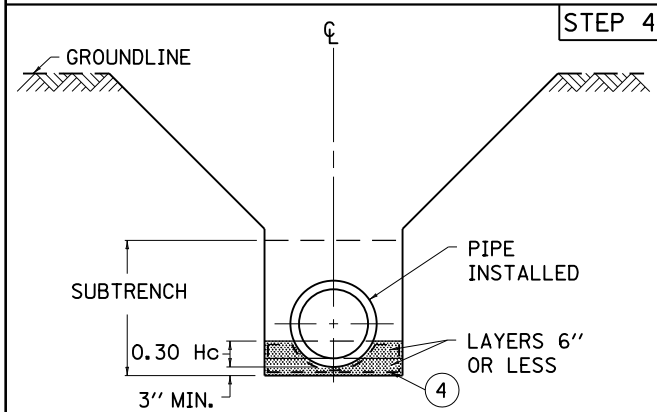

a. COMPACT BEDDING IN SUBTRENCH IN LAYERS 6" OR LESS TO WIDTH AND ELEVATION SHOWN. ▩
b. EXCAVATE A GROOVE IN THE COMPACTED BEDDING TO CONFORM TO THE OUTSIDE OF THE PIPE. AFTER EXCAVATION OF THE GROOVE, APPROXIMATELY 4" OF BEDDING SHOULD REMAIN BELOW THE OUTSIDE INVERT OF THE PIPE. THE CRADLE SHALL BE GAGED FOR SHAPE AND SLOPE BY STRIKING OR DRAWING A TEMPLATE THROUGH THE GROOVE IMMEDIATELY BEFORE PLACING EACH SECTION OF PIPE.
c. INSTALL PIPE AT CORRECT ALIGNMENT AND ELEVATION. RECOMPACT ANY LOOSE BEDDING DISTURBED DURING INSTALLATION.

(4) WRAP BEDDING MATERIAL IN GEOTEXTILE FABRIC WHEN THE STANDARD SPECIFICATIONS SPECIFIES.

STEP 5

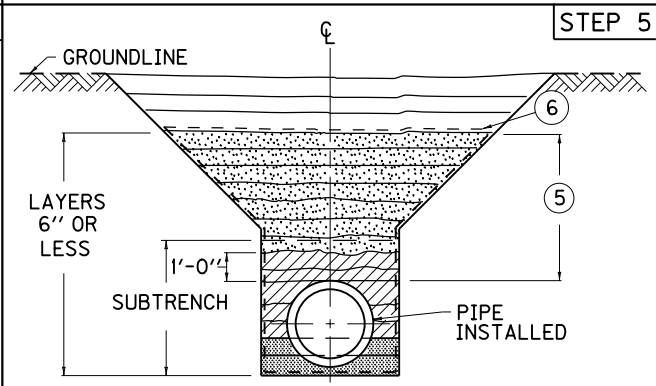

(5) 4'-0" REQUIRED FOR CONSTRUCTION LOADING IF COVER HEIGHT PERMITS.

a. COMPACT REQUIRED BACKFILL MATERIAL IN LAYERS 6" OR LESS TO 1'-0" ABOVE TOP OF PIPE. ▨
b. IN A UNIFORM SYMMETRICAL MANNER COMPACT REQUIRED BACKFILL MATERIAL TO ELEVATION (5) ABOVE TOP OF PIPE IN LAYERS OF 6" OR LESS. ▩
c. PROCEED WITH TRENCH BACKFILL IN A SYMMETRICAL MANNER IN LAYERS 1'-0" OR LESS TO THE ORIGINAL GROUND AS DEFINED IN STEP 1.

(6) WRAP BEDDING MATERIAL IN GEOTEXTILE FABRIC WHEN THE STANDARD SPECIFICATIONS SPECIFIES.

~ PIPE SHAPES ~

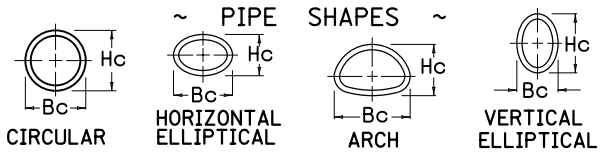

NOTE:
FOR CLASSES AND GAGES OF PIPE SEE CURRENT STANDARD DRAWINGS RDI-001 THRU RDI-008 AND RDI-011 AND RDI-012.

KENTUCKY
DEPARTMENT OF HIGHWAYS

PIPE BEDDING
TRENCH
CONDITION

STANDARD DRAWING NO. RDI-025-04

SUBMITTED Gary L. Sharp 12-2-02
DIRECTOR DIVISION OF DESIGN DATE

APPROVED J. M. Yowell 12-2-02
STATE HIGHWAY ENGINEER DATE

STEP 1

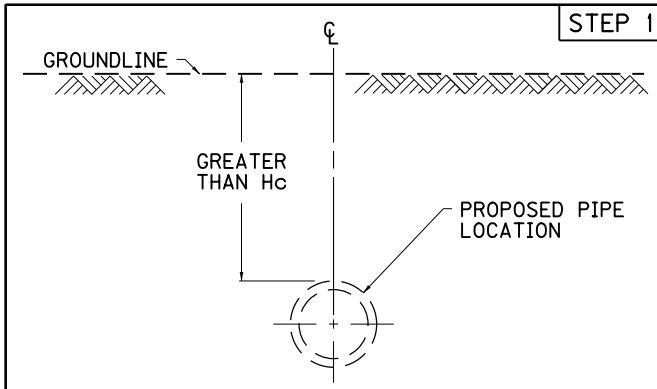

a. TRENCH CONDITION IS WHEN GROUNDLINE ELEVATION IS GREATER THAN Hc ABOVE TOP OF PROPOSED PIPE.

NOTE:
GROUNDLINE MAY BE (a) EXISTING OR ORIGINAL
(b) EXCAVATED SURFACE OR
(c) EMBANKMENT SURFACE.

STEP 2

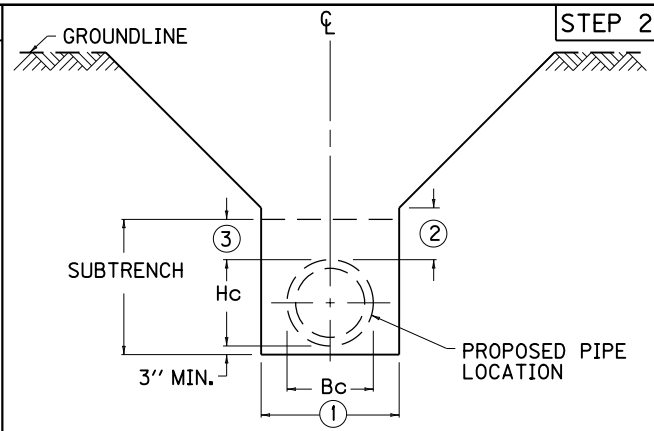

a. EXCAVATE SUBTRENCH TO WIDTH AND DEPTH SHOWN.
b. TRENCH WALLS MAY BE CONSTRUCTED VERTICAL. FOR ILLUSTRATION PURPOSES THE DETAIL DEPICTS A SLOPING WALL TRENCH. WHICHEVER METHOD IS USED, THE TRENCH WALLS SHALL REMAIN SYMMETRICAL ABOUT THE CENTERLINE OF THE PIPE.

(1) Bc + 24'' FOR PIPE 36'' DIA. OR LESS.
Bc + 48'' FOR PIPE GREATER THAN 36'' DIA.

(2) SLOPING OF TRENCH WALLS MAY BEGIN AT ANY ELEVATION GREATER THAN 1'-0'' ABOVE TOP OF PIPE. THE SUBTRENCH SHALL ALWAYS BE REQUIRED.

(3) 1'-0'' MINIMUM TO Hc MAXIMUM.

STEP 3

ROCK FOUNDATION DETAILS

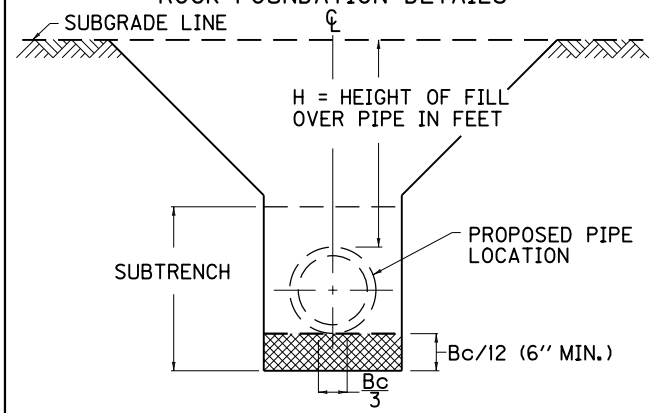

a. IF ROCK FOUNDATION IS NOT ENCOUNTERED, GO DIRECTLY TO "STEP 4".
b. IF ROCK FOUNDATION IS ENCOUNTERED, EXCAVATE TRENCH DEPTH USING FORMULA GIVEN. THIS DEPTH ▨ SHALL BE A MIN. OF 6'' AND SHALL NOT EXCEED 24''
c. BACKFILL WITH COMPACTED BEDDING MATERIAL IN LAYERS 6'' OR LESS LEAVING Bc/3 UNCOMPACTED IN THE FINAL LAYER.

STEP 4

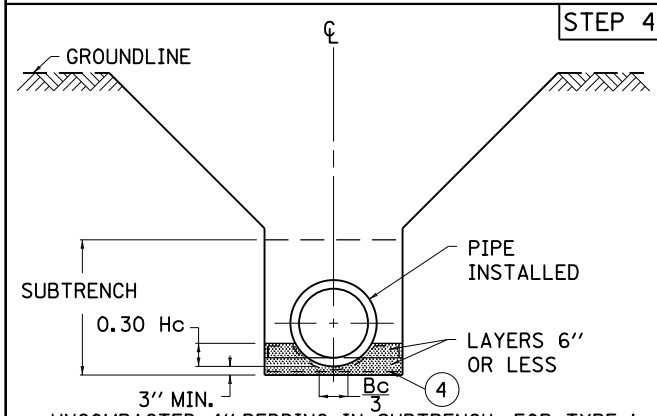

a. UNCOMPACTED 4'' BEDDING IN SUBTRENCH. FOR TYPE 1 INSTALLATION COMPACT BEDDING IN LAYERS 6'' OR LESS TO AN ELEVATION 0.30 Hc. ▨
LEAVE CENTER THIRD OF OUTSIDE PIPE DIA. (Bc/3) BEDDING UNCOMPACTED.
b. EXCAVATE A GROOVE IN THE BEDDING TO CONFORM TO THE OUTSIDE OF THE PIPE. AFTER EXCAVATION OF THE GROOVE, A MINIMUM 3'' OF BEDDING SHOULD REMAIN BELOW THE OUTSIDE INVERT OF THE PIPE. THE CRADLE SHALL BE GAGED FOR SHAPE AND SLOPE BY STRIKING OR DRAWING A TEMPLATE THROUGH THE GROOVE IMMEDIATELY BEFORE PLACING EACH SECTION OF PIPE.
c. INSTALL PIPE AT CORRECT ALIGNMENT AND ELEVATION. RECOMPACT ANY LOOSE BEDDING DISTURBED DURING INSTALLATION.

(4) WRAP BEDDING MATERIAL IN GEOTEXTILE FABRIC WHEN THE STANDARD SPECIFICATIONS SPECIFIES.

STEP 5

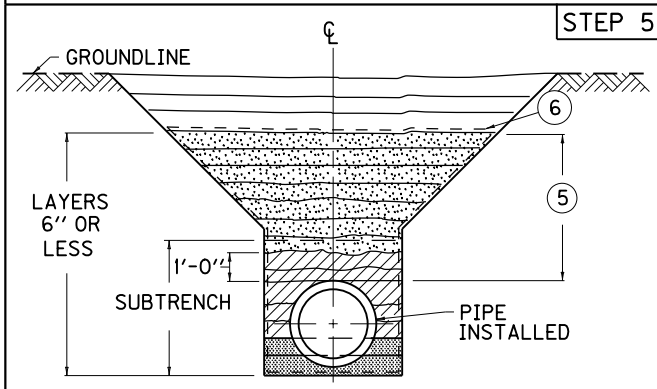

(5) 4'-0'' REQUIRED FOR CONSTRUCTION LOADING.

a. COMPACT REQUIRED BACKFILL MATERIAL IN LAYERS 6'' OR LESS TO 1'-0'' ABOVE TOP OF PIPE. ▨
b. IN A UNIFORM SYMMETRICAL MANNER COMPACT REQUIRED BACKFILL MATERIAL TO ELEVATION (5) ABOVE TOP OF PIPE IN LAYERS OF 6'' OR LESS. ▨
c. PROCEED WITH TRENCH BACKFILL IN A SYMMETRICAL MANNER IN LAYERS 1'-0'' OR LESS TO THE ORIGINAL GROUND AS DEFINED IN STEP 1.

(6) WRAP BEDDING MATERIAL IN GEOTEXTILE FABRIC WHEN THE STANDARD SPECIFICATIONS SPECIFIES.

MAX. COVER HEIGHT		
CLASS	TYPE 1	TYPE 4
III	25'	9'
IV	38'	15'
V	57'	23'

2' OF COVER OR LESS	
CLASS	PIPE DIA.
V	12''-15''-18''
IV	21''-24''
III	27'' & LARGER

NOTE:
10' MAXIMUM COVER HEIGHT FOR HORIZONTAL ELLIPTICAL CLASS HE III PIPE.
COVER HEIGHTS EXCEEDING THOSE SHOWN IN TABLES REQUIRE SPECIAL DESIGNS.
FOR TYPE 4 INSTALLATION PLACE EMBANKMENT MATERIAL ACCORDING TO SECTION 701.03.06A OF CURRENT SPEC. BOOK.
FOR TYPE 1 INSTALLATION, WHEN THE TOP OF PIPE IS NOT WITHIN ONE PIPE DIAMETER OF THE SUBGRADE, INSTALL ACCORDING TO SECTION 701.03.06A OF THE CURRENT SPEC. BOOK.

~ PIPE SHAPES ~

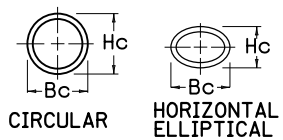

SHEET 2 OF 2

KENTUCKY
DEPARTMENT OF HIGHWAYS

PIPE BEDDING
TRENCH CONDITION
REINFORCED CONC. PIPE

STANDARD DRAWING NO. RDI-026

SUBMITTED David Kratt DIRECTOR DIVISION OF DESIGN 11-21-07 DATE
APPROVED Marcelyn Mathews STATE HIGHWAY ENGINEER 11-21-07 DATE

PIPE MATERIAL	pH RANGE ③					
	(ACID) L (< 5)		M (5 - 9) ④		(BASE) H (> 9)	
	COATING	PAVING	COATING	PAVING	COATING	PAVING
STEEL GALVANIZED	P	I	BP	I	P	I
ALUMINUM-COATED TYPE 2 STEEL	-	-	HB	I	-	-
ALUMINUM ALLOY	B	I	HB	I	B	I
REINFORCED CONCRETE	-	EP	-	-	-	EP
PLASTIC	-	-	-	-	-	-

HB - HALF ASPHALT COATED
B - FULLY ASPHALT COATED
BP - FULLY ASPHALT COATED OR POLYMERIC COATED
P - POLYMERIC COATED (PRECOATED GALVANIZED)
EP - EXTRA PROTECTION
I - PAVED INVERT

NOTES

1. EXCEPTIONS FOR STORM SEWERS:
   a. ANNULAR CORRUGATED PIPE SHALL BE FULLY LINED.
   b. HELICAL CORRUGATED PIPE > 24" DIA. SHALL BE FULLY LINED.
   c. HELICAL CORRUGATED PIPE ≤ 24" DIA. SHALL NOT REQUIRE COATING, PAVING, OR LINING.
   d. SPIRAL RIB PIPE SHALL NOT REQUIRE COATING, PAVED INVERT, OR LINING.
2. EXCEPTIONS FOR ENTRANCE PIPE:
   a. COATINGS REQUIRED FOR LOW pH LEVELS.
   b. PAVED INVERTS SHALL NOT BE REQUIRED FOR ENTRANCE PIPE.
   c. ENTRANCE PIPE GREATER THAN 30" DIA. SHALL BE CULVERT PIPE.

③ L = LOW pH RANGE (ACID)
M = MEDIUM pH RANGE
H = HIGH pH RANGE (BASE)

④ ALUMINUM COATED TYPE 2 STEEL IS ONLY PERMITTED IN Ph RANGES OF 5 TO 9

KENTUCKY
DEPARTMENT OF HIGHWAYS

COATINGS, LININGS AND PAVINGS FOR NON-STRUCTURAL PLATE PIPE

STANDARD DRAWING NO. RDI-035-01

SUBMITTED John B. Sackstuder — DIRECTOR DIVISION OF DESIGN — 12-1-99 DATE

APPROVED F. M. Yowell — STATE HIGHWAY ENGINEER — 12-1-99 DATE

NOTES

(1) JUNCTION BOX PERMITTED, HOWEVER, SHALL BE INCIDENTAL TO THE WORK IF USED (SEE CURRENT STD. DWG. RDX-001)

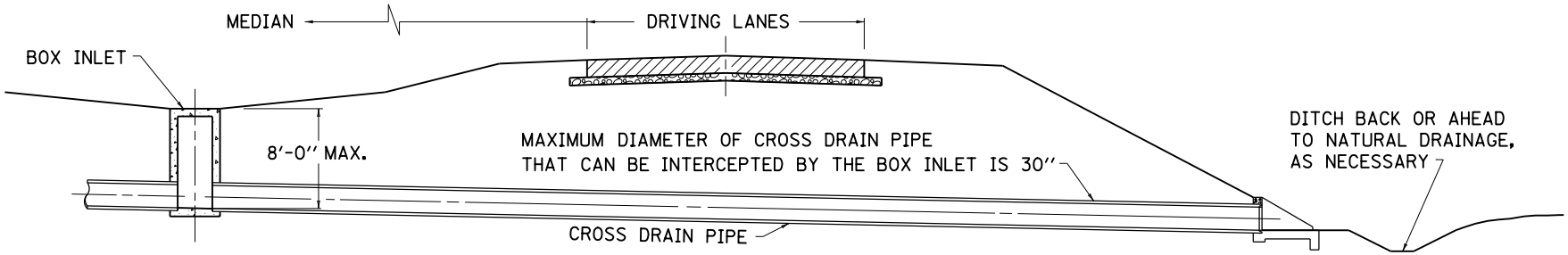

TYPICAL WHEN CROSS DRAINAGE PIPE IS 30" OR LESS
IN DIAMETER AND FILL IS 8'-0" OR LESS IN DEPTH

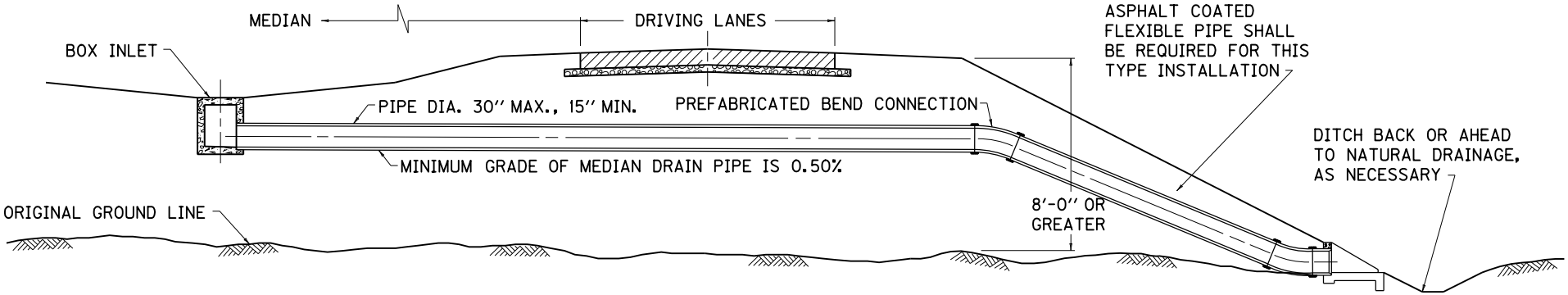

TYPICAL WHEN CROSS DRAINAGE PIPE IS 30" OR LESS
IN DIAMETER AND FILL IS MORE THAN 8'-0" IN DEPTH

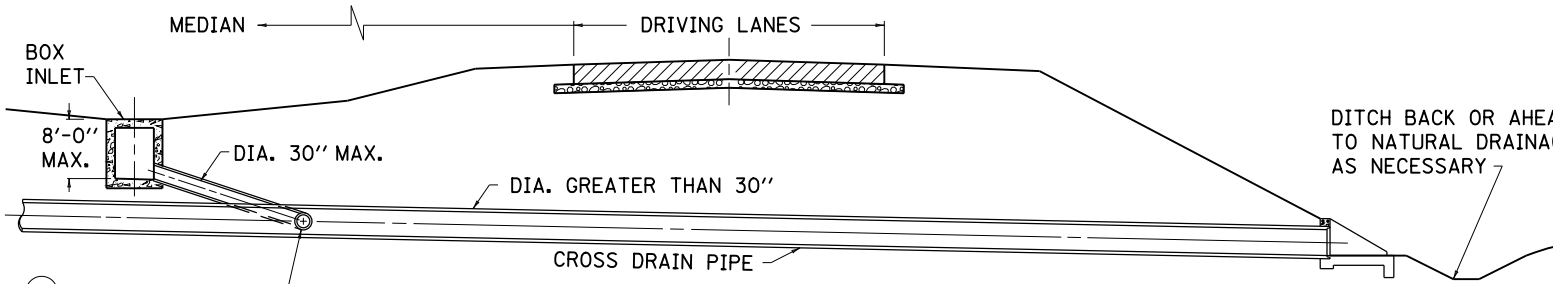

(1) PREFABRICATED OR PRECAST WYE OR TEE CONNECTION

TYPICAL WHEN CROSS DRAINAGE PIPE IS
GREATER THAN 30" IN DIAMETER

KENTUCKY
DEPARTMENT OF HIGHWAYS

TYPICAL MEDIAN
DRAIN INSTALLATIONS

STANDARD DRAWING NO. RDI-045-01

SUBMITTED John B. Lackstrom — DIRECTOR DIVISION OF DESIGN — 12-1-99 DATE

APPROVED F. M. Yowell — STATE HIGHWAY ENGINEER — 12-1-99 DATE

BOX SIZES	① TABLE 1 MAXIMUM FILL HEIGHT (FEET)											
	2	3	4	5	6	8	10	12	14	16	18	20
3 X 2												
3 X 3												
4 X 2												
4 X 3												
4 X 4												
5 X 3												
5 X 4												
5 X 5												
6 X 3												
6 X 4												
6 X 5												
6 X 6												
7 X 4												
7 X 5												
7 X 6												
7 X 7												
8 X 4												
8 X 5												
8 X 6												
8 X 7												
8 X 8												
9 X 5												
9 X 6												
9 X 7												
9 X 8												
9 X 9												
10 X 5												
10 X 6												
10 X 7												
10 X 8												
10 X 9												
10 X 10												
11 X 4												
11 X 6												
11 X 8												
11 X 10												
11 X 11												
12 X 4												
12 X 6												
12 X 8												
12 X 10												
12 X 12												

BOX SIZES	② TABLE 2 MAXIMUM FILL HEIGHT (FEET)											
	2	3	4	5	6	8	10	12	14	16	18	20
3 X 2												
3 X 3												
4 X 2												
4 X 3												
4 X 4												
5 X 3												
5 X 4												
5 X 5												
6 X 3												
6 X 4												
6 X 5												
6 X 6												
7 X 4												
7 X 5												
7 X 6												
7 X 7												
8 X 4												
8 X 5												
8 X 6												
8 X 7												
8 X 8												
9 X 5												
9 X 6												
9 X 7												
9 X 8												
9 X 9												
10 X 5												
10 X 6												
10 X 7												
10 X 8												
10 X 9												
10 X 10												
11 X 4												
11 X 6												
11 X 8												
11 X 10												
11 X 11												
12 X 4												
12 X 6												
12 X 8												
12 X 10												
12 X 12												

BOX SIZES	③ TABLE 3 MAXIMUM FILL HEIGHT (FEET)												
	0	2	3	4	5	6	8	10	12	14	16	18	20	22
3 X 2														
3 X 3														
4 X 2														
4 X 3														
4 X 4														
5 X 3														
5 X 4														
5 X 5														
6 X 3														
6 X 4														
6 X 5														
6 X 6														
7 X 4														
7 X 5														
7 X 6														
7 X 7														
8 X 4														
8 X 5														
8 X 6														
8 X 7														
8 X 8														
9 X 5														
9 X 6														
9 X 7														
9 X 8														
9 X 9														
10 X 5														
10 X 6														
10 X 7														
10 X 8														
10 X 9														
10 X 10														
11 X 4														
11 X 6														
11 X 8														
11 X 10														
11 X 11														
12 X 4														
12 X 6														
12 X 8														
12 X 10														
12 X 12														

BOX SIZES	TABLE 1 ④ LESS THAN 2′ FILL	TABLE 2 ⑤ LESS THAN 2′ FILL
3 X 2		
3 X 3		
4 X 2		
4 X 3		
4 X 4		
5 X 3		
5 X 4		
5 X 5		
6 X 3		
6 X 4		
6 X 5		
6 X 6		
7 X 4		
7 X 5		
7 X 6		
7 X 7		
8 X 4		
8 X 5		
8 X 6		
8 X 7		
8 X 8		
9 X 5		
9 X 6		
9 X 7		
9 X 8		
9 X 9		
10 X 5		
10 X 6		
10 X 7		
10 X 8		
10 X 9		
10 X 10		
11 X 4		
11 X 6		
11 X 8		
11 X 10		
11 X 11		
12 X 4		
12 X 6		
12 X 8		
12 X 10		
12 X 12		

~ NOTES ~

① HS 25 LIVE LOAD + EARTH DEAD LOAD, AASHTO M259 OR ASTM C789.
② INTERSTATE LIVE LOAD + EARTH DEAD LOAD, AASHTO M259 OR ASTM C789.
③ EARTH DEAD LOAD, AASHTO M259 OR ASTM C789.
④ HS 20 LOADING, AASHTO M273 OR ASTM C850.
⑤ INTERSTATE LOADING, AASHTO M273 OR ASTM C850.

KENTUCKY
DEPARTMENT OF HIGHWAYS

FILL HEIGHTS FOR PRECAST REINF. CONC. BOX CULVERTS

STANDARD DRAWING NO. RDI-100-04

SUBMITTED: DIRECTOR DIVISION OF DESIGN — DATE 11-21-07

APPROVED: STATE HIGHWAY ENGINEER — DATE 11-21-07

POSITIVE PROJECTION

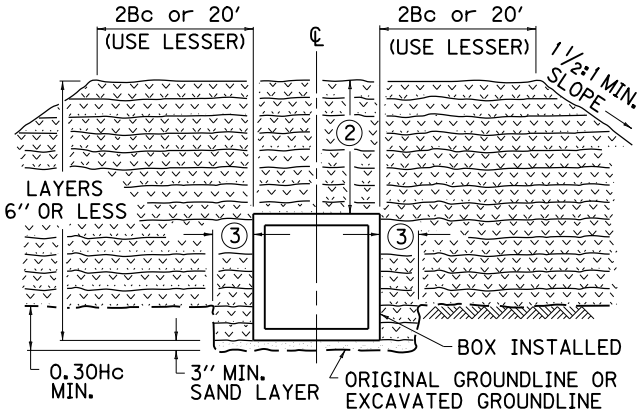

a. IF ROCK FOUNDATION IS ENCOUNTERED, GO TO PARTS b. AND c. OF STEP 3 ZERO PROJECTION AND THEN PROCEED WITH PARTS b. AND c. OF THIS STEP .

b. UNIFORMLY COMPACT SAND IN TRENCH WITH APPROXIMATELY 3'' OF SAND BELOW BOTTOM OF BOX. LEVEL COMPACTED SAND WITH A TEMPLATE TO INSURE UNIFORM SUPPORT THROUGHOUT ENTIRE WIDTH AND LENGTH .

c. COMPACT SELECTED FINE SOIL TO ELEVATION ② IN LAYERS 6'' OR LESS TO MEET SAME DENSITY REQUIREMENTS SPECIFIED FOR ADJACENT EMBANKMENT .

② 48'' REQUIRED, IF FILL HEIGHT PERMITS .

③ 0.3 Bc OR 1'-0'' (USE MAX.)

STEP 1 ZERO PROJECTION

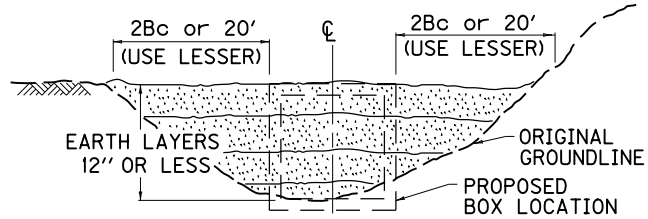

a. IF ORIGINAL GROUNDLINE IS AT OR ABOVE THE TOP OF PROPOSED BOX FOR WIDTH OF 2Bc OR 20' (WHICHEVER IS LESS) ON EACH SIDE OF THE BOX, GO DIRECTLY TO STEP 2.

b. IF ORIGINAL GROUNDLINE IS BELOW THE TOP OF PROPOSED BOX, COMPACT EMBANKMENT IN LAYERS 12'' OR LESS TO ELEVATION AND WIDTH SHOWN. MEET DENSITY REQUIREMENTS FOR ADJACENT EMBANKMENT.

STEP 2 ZERO PROJECTION

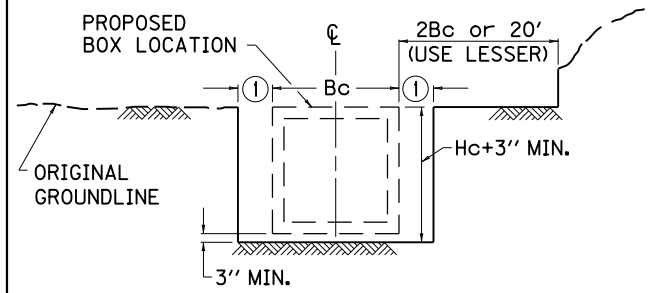

a. EXCAVATE TO TOP OF PROPOSED BOX A WIDTH OF 2Bc OR 20' (USE LESSER) ON EACH SIDE OF BOX.

b. EXCAVATE TRENCH TO WIDTH AND DEPTH SHOWN.

① AT LEAST 12'', BUT NOT MORE THAN 15''.

STEP 3 ZERO PROJECTION

ROCK FOUNDATION DETAILS

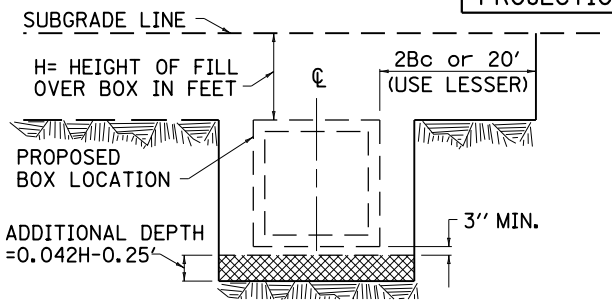

a. IF ROCK FOUNDATION IS NOT ENCOUNTERED, GO DIRECTLY TO STEP 4.

b. IF ROCK FOUNDATION IS ENCOUNTERED, EXCAVATE ADDITIONAL TRENCH DEPTH USING FORMULA GIVEN. THIS ADDITIONAL DEPTH SHALL ALWAYS BE AT LEAST 0.75' AND WILL NOT BE REQUIRED TO BE MORE THAN 0.75HC-0.25', REGARDLESS OF ABOVE FORMULA RESULT.

c. BACKFILL ADDITIONAL EXCAVATED AREA WITH EARTH CUSHION OF FIRMLY COMPACTED FINE SOILS IN LAYERS 6'' OR LESS.

STEP 4 ZERO PROJECTION

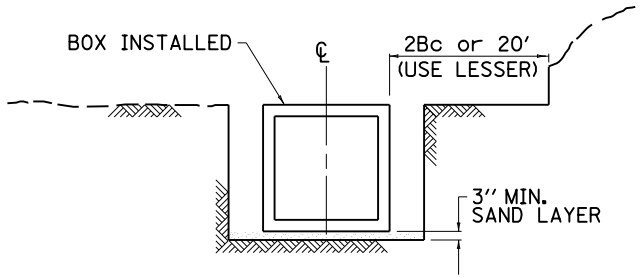

a. UNIFORMLY COMPACT SAND IN TRENCH WITH APPROXIMATELY 3'' OF SAND BELOW BOTTOM OF BOX. LEVEL COMPACTED SAND WITH A TEMPLATE TO INSURE UNIFORM SUPPORT THROUGHOUT ENTIRE WIDTH AND LENGTH.

b. INSTALL BOX AT CORRECT ALIGNMENT AND ELEVATION. RECOMPACT ANY LOOSE SAND DISTURBED DURING INSTALLATION.

STEP 5 ZERO PROJECTION

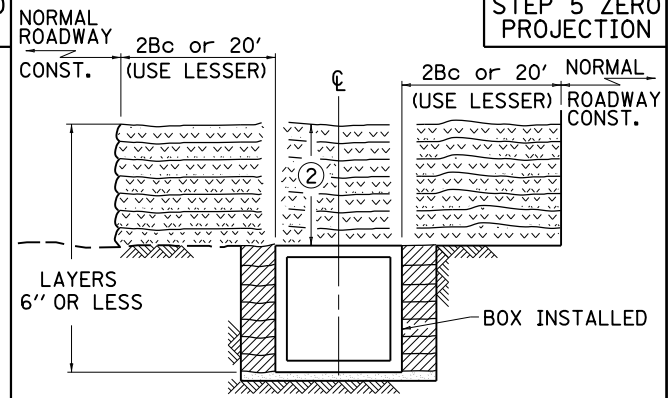

a. COMPACT SELECTED FINE SOIL, NATURAL SAND, OR NO. 10 COARSE AGGREGATE IN LAYERS 6'' OR LESS TO TOP OF THE BOX. THEN COMPACT SELECTED FINE SOIL TO ELEVATION ② ABOVE TOP OF BOX. MEET DENSITY REQUIREMENTS FOR ADJACENT EMBANKMENT.

b. PROCEED WITH NORMAL ROADWAY CONSTRUCTION.

② 48'' REQUIRED, IF FILL HEIGHT PERMITS.

NOTE: THE CONTRACTOR HAS THE OPTION TO, EITHER BED AND BACKFILL THE PRECAST BOX IN POSITIVE PROJECTION AS DESCRIBED ABOVE, OR MAY BED AND BACKFILL TO ZERO PROJECTION AS DETAILED AND DESCRIBED IN STEPS 1 THRU 5. IN EITHER CASE PARTS b. AND c. OF STEP 3 ZERO PROJECTION MUST BE PERFORMED IN THE EVENT ROCK FOUNDATION IS ENCOUNTERED.

~BOX SHAPES~

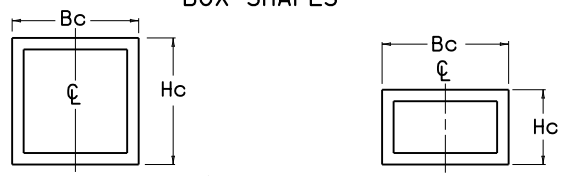

KENTUCKY
DEPARTMENT OF HIGHWAYS

BEDDING FOR PRECAST BOX CULVERTS, SEWERS, STORM DRAINS, AND THEIR COMBINATIONS

STANDARD DRAWING NO. RDI-120-03

SUBMITTED John B. Lackstrom — DIRECTOR DIVISION OF DESIGN — 12-1-99 DATE

APPROVED J. M. Yowell — STATE HIGHWAY ENGINEER — 12-1-99 DATE

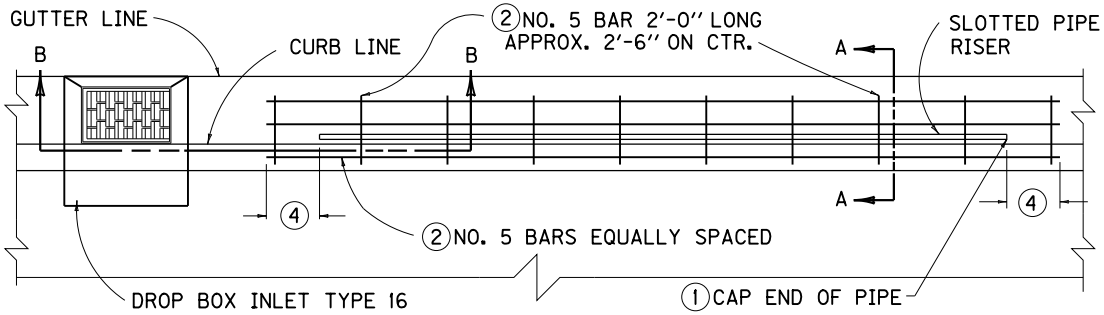

PLAN VIEW

- NOTES -

1. THE CAP SHALL BE A STANDARD MANUFACTURED ITEM FURNISHED BY THE PIPE SUPPLIER.
2. ALL REINFORCING STEEL SHALL BE INCLUDED IN THE CONTRACT UNIT PRICE PER LINEAR FOOT OF SLOTTED DRAIN PIPE. ALL REINFORCING STEEL SHALL BE EPOXY COATED IN ACCORDANCE WITH THE DEPARTMENTS STANDARD SPECIFICATIONS.
3. USE DROP BOX INLET TYPE 10 WITH VALLEY GUTTER (LIMITED TO 24" METAL PIPE SIZE).
4. EXTEND LONGITUDINAL BAR APPROXIMATELY 1'-6" PAST END OF SLOTTED DRAIN PIPE.
5. MINIMUM THROAT DEPTH FOR SLOTTED DRAIN PIPE SHALL BE 10".

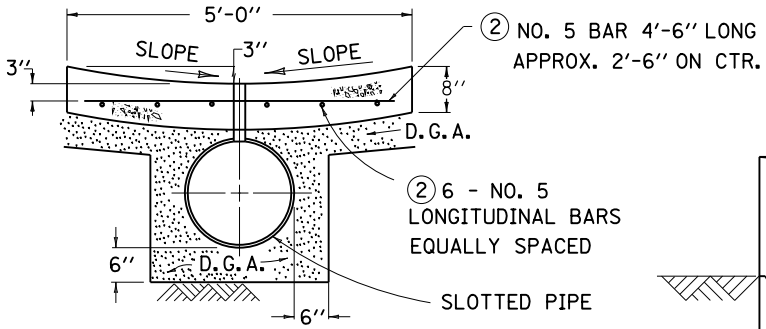

VALLEY GUTTER SECTION (3)

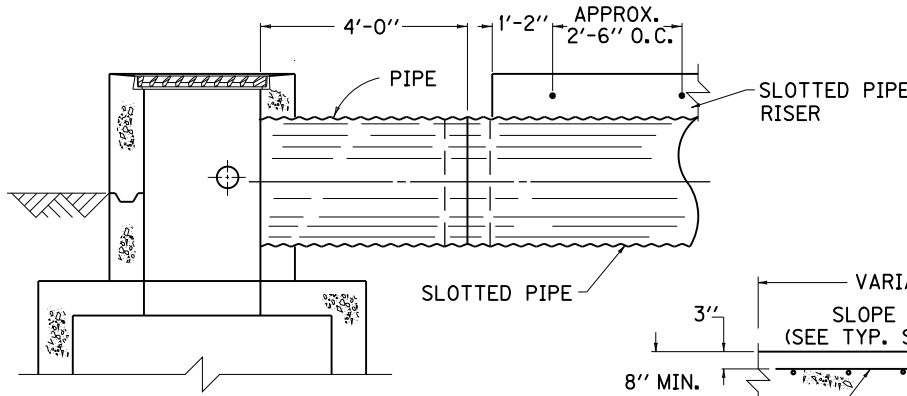

SECTION B-B

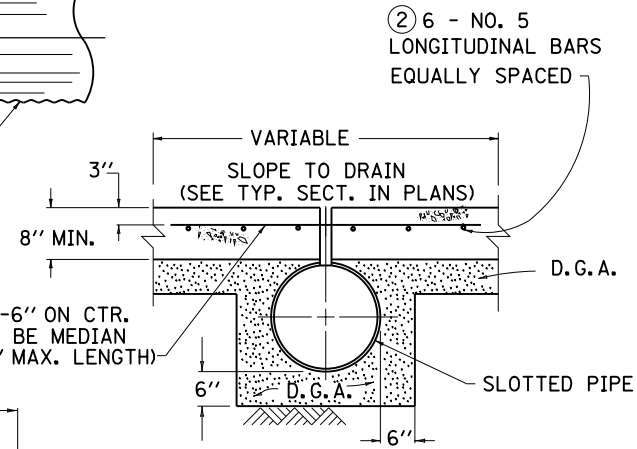

FLUSH MEDIAN SECTION

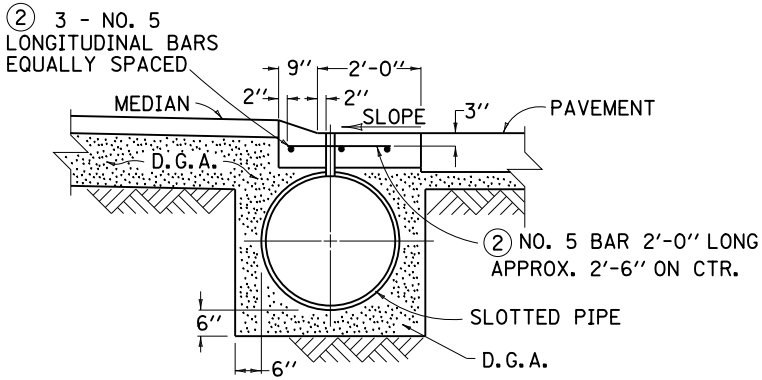

SECTION A-A
LIP CURB SECTION

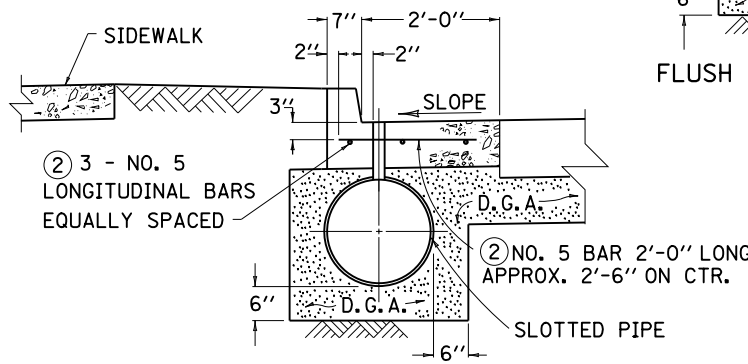

STD. CURB SECTION

USE WITH CUR. STD. DWGS.:
RDB-014, RDB-030, RDB-031, RDB-032, RDB-033, RDB-034, RDB-035

KENTUCKY
DEPARTMENT OF HIGHWAYS

SLOTTED DRAIN PIPE

(DETAIL SHEET)

STANDARD DRAWING NO. RDI-200-04

SUBMITTED John B. Lockstrike — DIRECTOR DIVISION OF DESIGN — 12-1-99 DATE

APPROVED F. N. Newell — STATE HIGHWAY ENGINEER — 12-1-99 DATE

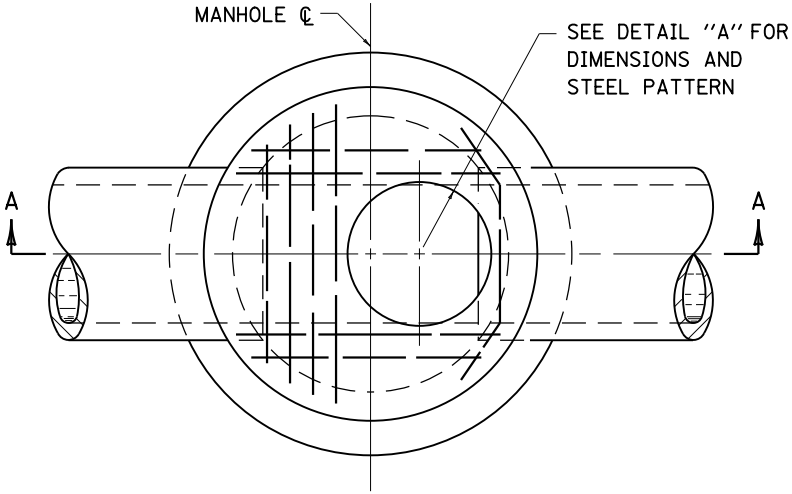

PLAN VIEW

NOTES

1. SEE CURRENT STD. DWG. RDM-105 FOR CASTINGS TO BE USED IN TRAFFIC AREAS AND CURRENT STD. DWG. RDM-100 FOR CASTINGS TO BE USED IN NON-TRAFFIC AREAS.
2. THE RISER SECTION MAY BE PRECAST CONCRETE PIPE OR CAST-IN-PLACE CONCRETE. A CONCENTRIC CAST-IN-PLACE CONE OR PRECAST CONCRETE CONE MAY BE PERMITTED, PROVIDED HEIGHT LIMITATIONS WOULD PERMIT.
3. THE MAXIMUM SIZE OF INTERCEPTED PIPE SHALL BE 27".
4. COVER OVER HIGHEST PIPE, EXCLUSIVE OF PAVEMENT, SHALL BE 2'-0".
5. CAST-IN-PLACE CONCRETE MANHOLES SHALL HAVE 8" THICK WALLS.
6. SEE PROPOSAL NOTES OR STANDARD SPECIFICATIONS FOR ADDITIONAL REQUIREMENTS.
7. SEE CURRENT STD. DWG. RDB-430 FOR STEP TYPE, SPACING AND DETAIL.

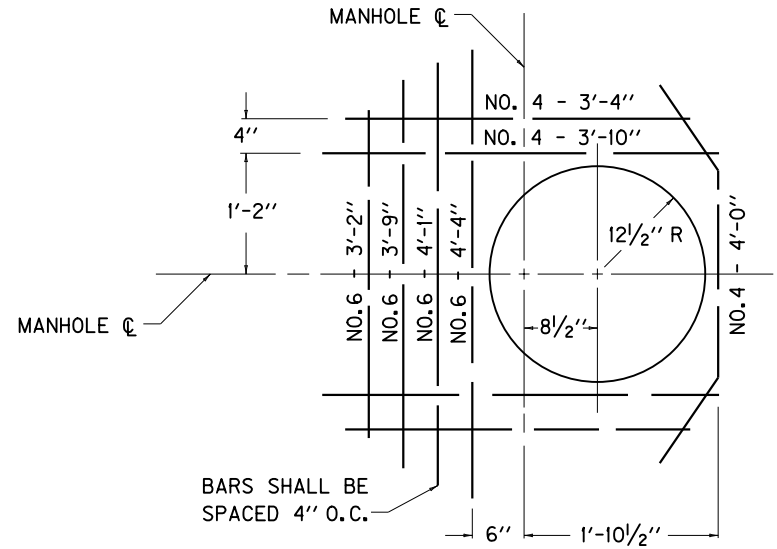

DETAIL "A"
DIMENSIONS AND
STEEL PATTERN

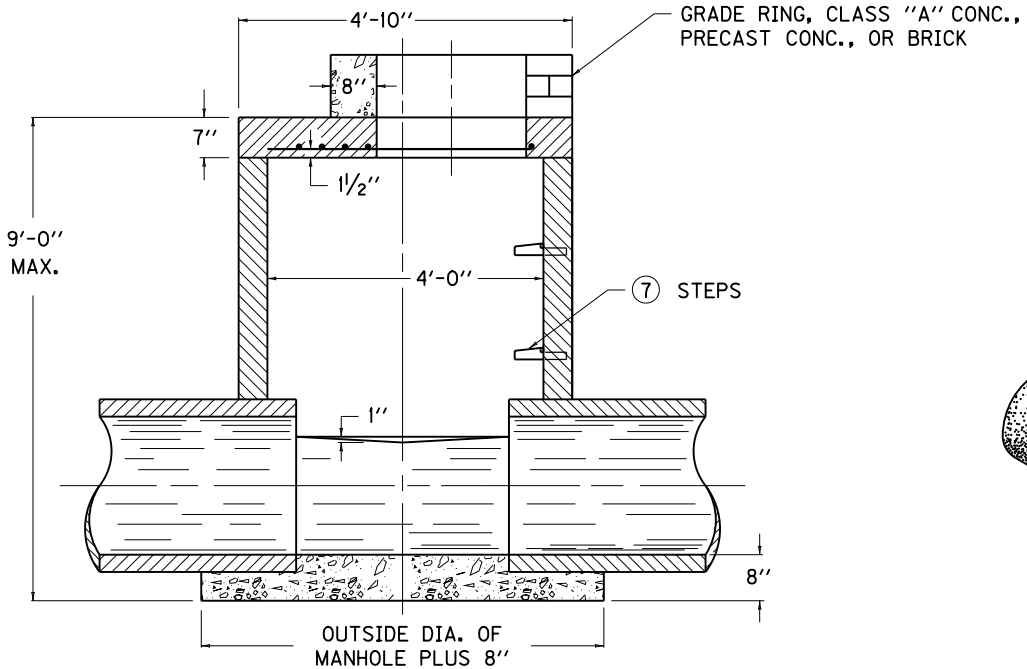

SECTION A-A

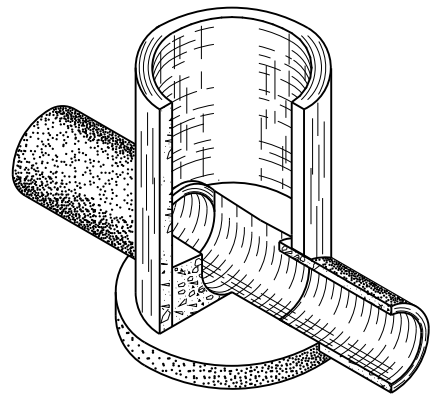

ISOMETRIC OF BASE

KENTUCKY
DEPARTMENT OF HIGHWAYS

MANHOLE
TYPE A

STANDARD DRAWING NO. RDM-001-06

SUBMITTED John B. Sachatzke — DIRECTOR DIVISION OF DESIGN — 12-1-99 DATE

APPROVED F. M. Newell — STATE HIGHWAY ENGINEER — 12-1-99 DATE

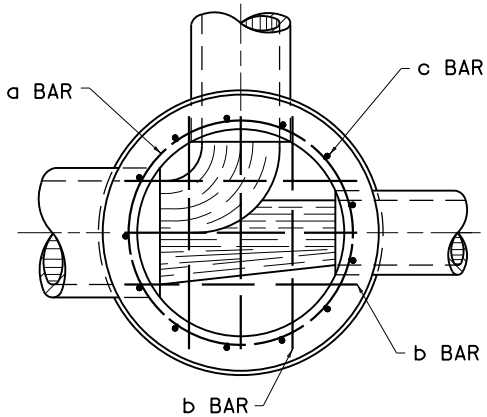

SECTION A-A

NOTES

SEE CURRENT STD. DWG. RDM-105 FOR CASTINGS TO BE USED IN TRAFFIC AREAS AND CURRENT STD. DWG. RDM-100 FOR CASTINGS TO BE USED IN NON-TRAFFIC AREAS. THE MANHOLE MAY BE PRECAST CONCRETE PIPE SECTIONS OR CAST-IN-PLACE CONCRETE (5).

(1) WHEN THE MANHOLE HEIGHT IS 25'-1" OR GREATER A CAST-IN-PLACE BASE WILL BE REQUIRED AS DETAILED. THIS PORTION OF CAST-IN-PLACE BASE ALWAYS REQUIRED. REINFORCEMENT BARS ARE NOT REQUIRED WHEN MANHOLE HEIGHT IS LESS THAN 12'-0".

(2) THE NUMBER OF BARS DEPEND UPON HEIGHT OF BASE.

(3) LENGTH OF BARS DEPEND UPON HEIGHT. BAR LOCATIONS SHALL BE BENT AND/OR SHIFTED TO MISS PIPE.

4. SEE PROPOSAL NOTES OR STANDARD SPECIFICATIONS FOR ADDITIONAL REQUIREMENTS.

(5) CAST-IN-PLACE MANHOLE LIMITATIONS: FROM 9'-1" TO 16'-0" USE 8" WALL THICKNESS, FROM 16'-1" TO 25'-0" USE 12" THICK WALLS.

6. THE MAXIMUM SIZE OF INTERCEPTED PIPE SHALL BE 27".

(7) SEE CURRENT STD. DWG. RDB-430 FOR STEP TYPE, SPACING AND DETAILS.

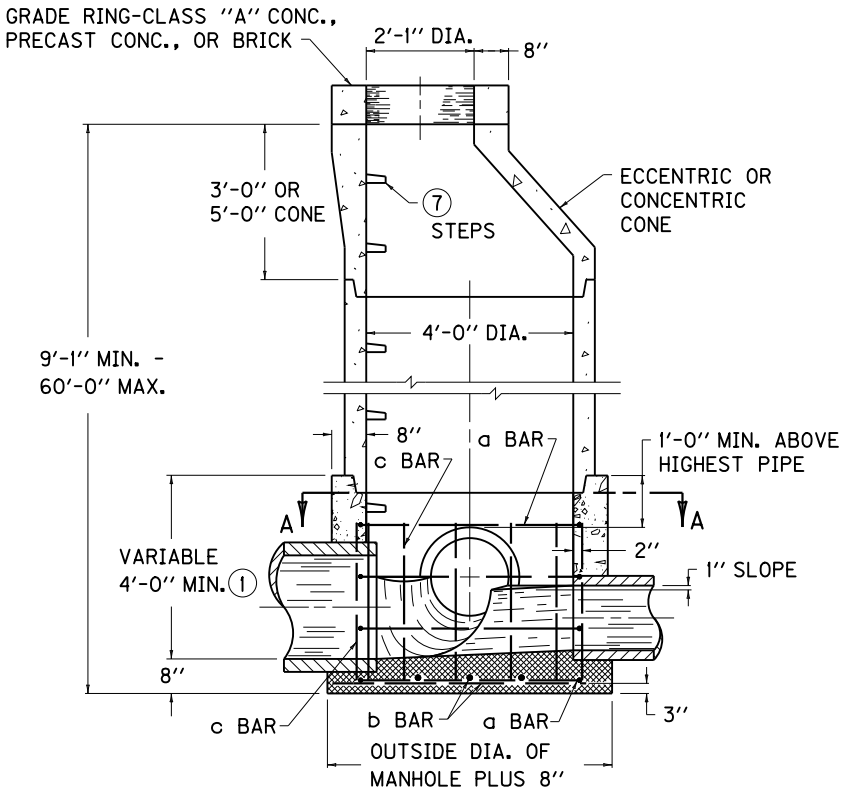

SECTIONAL ELEVATION

STEEL REINFORCEMENT

NO. 4 BAR	QTY.	LENGTH	SPACING	TYPE
a	(2)	13'-8"	APPROX. 1'-0" O.C.	CIR. 4'-4" DIA.
b	6	4'-6"		STR.
c	13	(3)		STR.

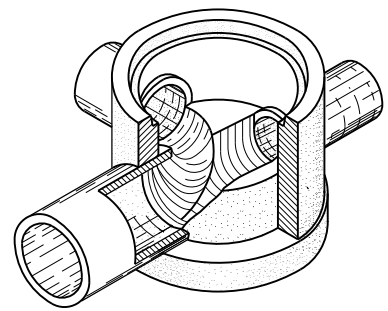

ISOMETRIC OF BASE

USE WITH CUR. STD. DWG. RDB-430

KENTUCKY DEPARTMENT OF HIGHWAYS

MANHOLE TYPE B

STANDARD DRAWING NO. RDM-005-05

SUBMITTED John B. Lachstrom DIRECTOR DIVISION OF DESIGN 12-1-99 DATE

APPROVED F. M. Powell STATE HIGHWAY ENGINEER 12-1-99 DATE

NOTES

1. SEE CURRENT STD. DWG. RDM-105 FOR CASTINGS TO BE USED IN TRAFFIC AREAS AND CURRENT STD. SWG. RDM-100 FOR CASTINGS TO BE USED IN NON-TRAFFIC AREAS.
2. THE CHAMBER SHALL BE CONSTRUCTED OF CLASS "A" CONCRETE. USE CLASS "A" OR CLASS "B" TOWER AS HEIGHT DICTATES. THE CLASS "A" TOWER MAY BE CONSTRUCTED OF PRECAST CONCRETE PIPE SECTIONS OR CAST-IN -PLACE CONCRETE.
3. REINFORCEMENT USED IN THE CHAMBER SHALL BE REQUIRED WHEN THE MANHOLE HEIGHT EXCEEDS 8'-0".
4. ALL CHAMBER WALLS AND SLABS ARE 8" THICK, EXCEPT WHERE OTHERWISE SHOWN.
5. THE CHAMBER SHALL BE CONSTRUCTED AT RIGHT ANGLES TO THE CENTERLINE OF THE LARGEST INTERCEPTED PIPE.
6. THE CONTRACT UNIT PRICE BID FOR MANHOLE TYPE C SHALL INCLUDE ALL CONCRETE, STEEL REINFORCEMENT, STRUCTURAL STEEL, FRAME AND LID, TOWER, STEPS AND ALL INCIDENTALS NECESSARY TO COMPLETE THE STRUCTURE.
7. FOR CIRCULAR AND ELLIPTICAL PIPE SIZES OF 30" TO 72".
8. SEE CURRENT STD. DWG. RDB-430 FOR STEP TYPE, SPACING AND DETAILS.

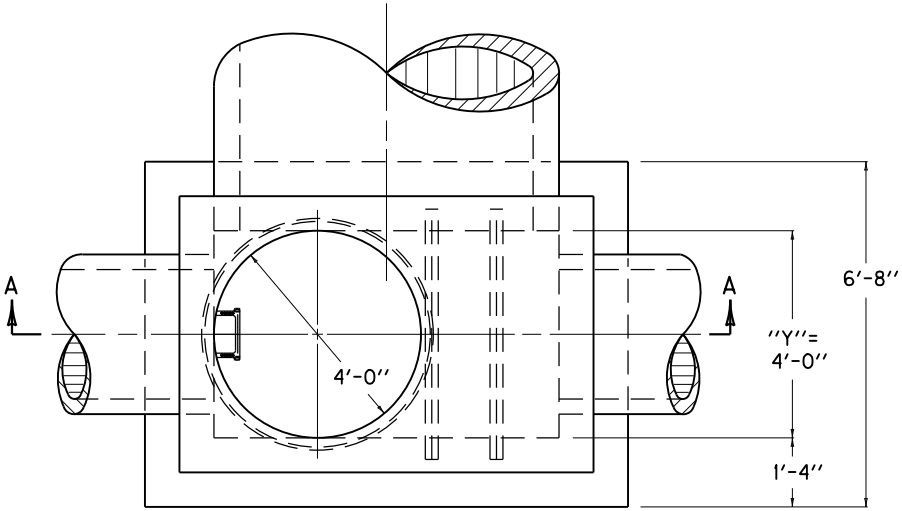

PLAN VIEW

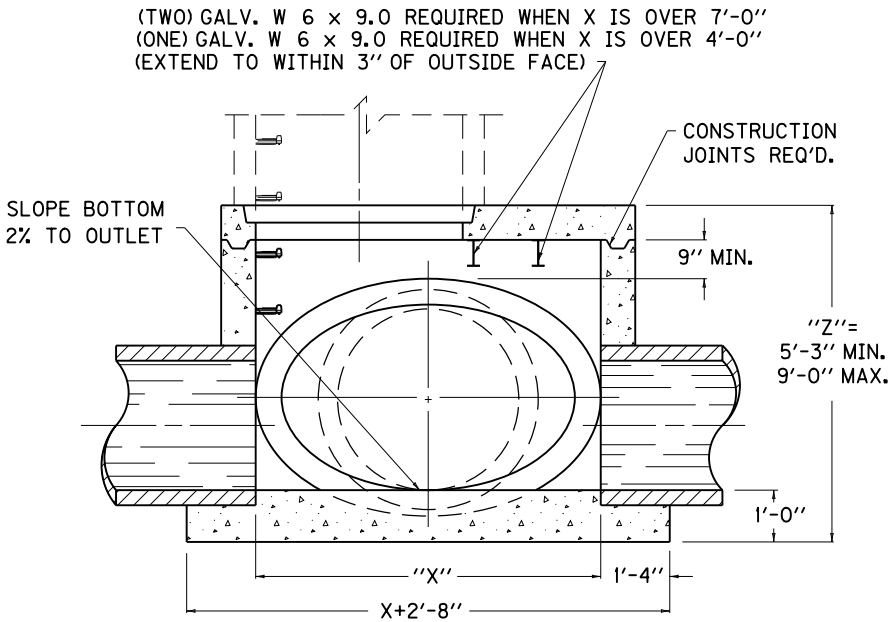

SECTION A-A

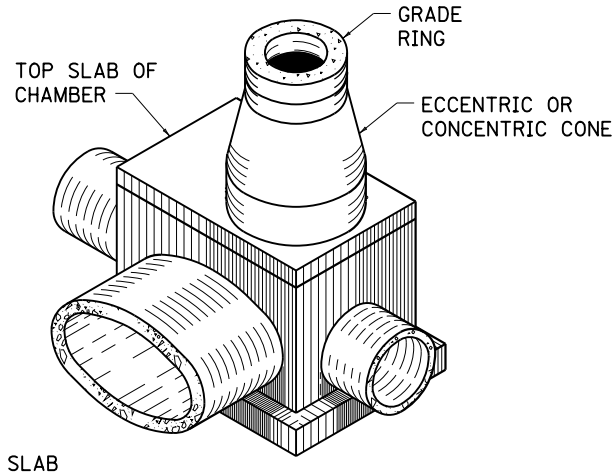

CLASS "A" TOWER
ISOMETRIC VIEW

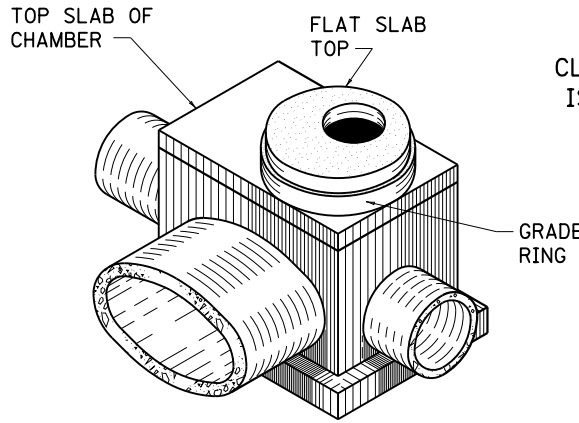

CLASS "B" TOWER
ISOMETRIC VIEW

USE WITH CURRENT STD. DWG. RDM-011, RDM-012, AND RDM-013

KENTUCKY
DEPARTMENT OF HIGHWAYS

MANHOLE TYPE C
(CHAMBER LAYOUT)

STANDARD DRAWING NO. RDM-010-05

SUBMITTED John B. Sachatello — DIRECTOR DIVISION OF DESIGN — 12-1-99 DATE

APPROVED J. M. Yowell — STATE HIGHWAY ENGINEER — 12-1-99 DATE

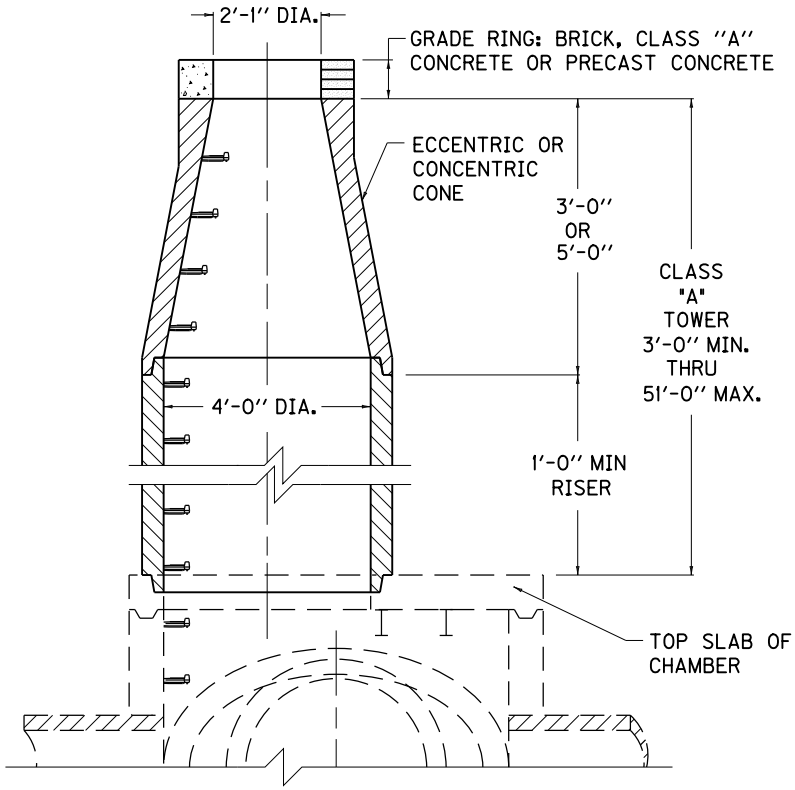

CLASS "A" TOWER DETAIL

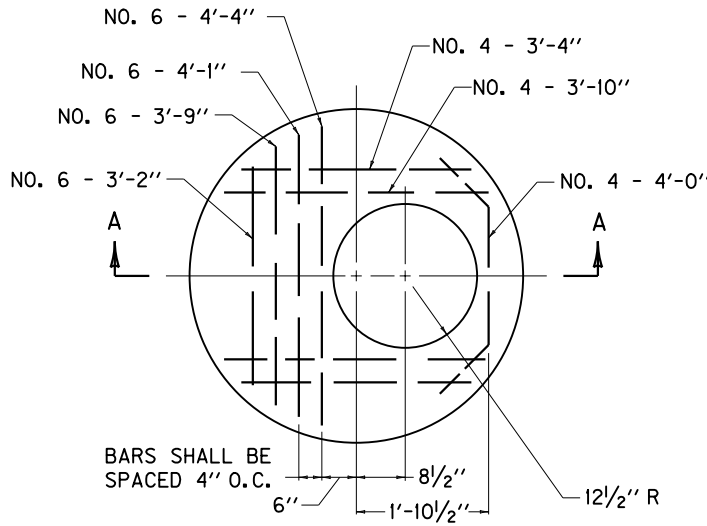

PLAN VIEW
FLAT SLAB TOP DETAIL

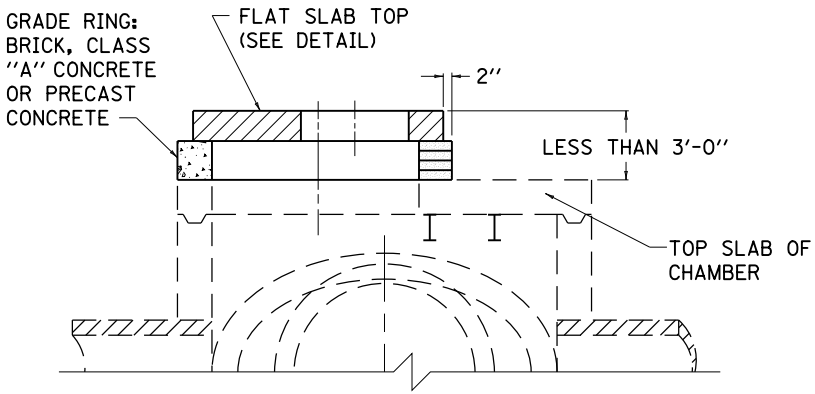

CLASS "B" TOWER DETAIL

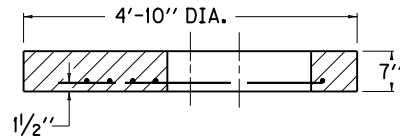

SECTION A-A
FLAT SLAB TOP DETAIL

USE WITH CURRENT STD. DWG.
RDM-010, RDM-012, AND RDM-013

KENTUCKY
DEPARTMENT OF HIGHWAYS

MANHOLE TYPE C
(TOWER APPLICATIONS)

STANDARD DRAWING NO. RDM-011-04

SUBMITTED John B. Lockstrike — DIRECTOR DIVISION OF DESIGN — 12-1-99 DATE

APPROVED F. M. Newell — STATE HIGHWAY ENGINEER — 12-1-99 DATE

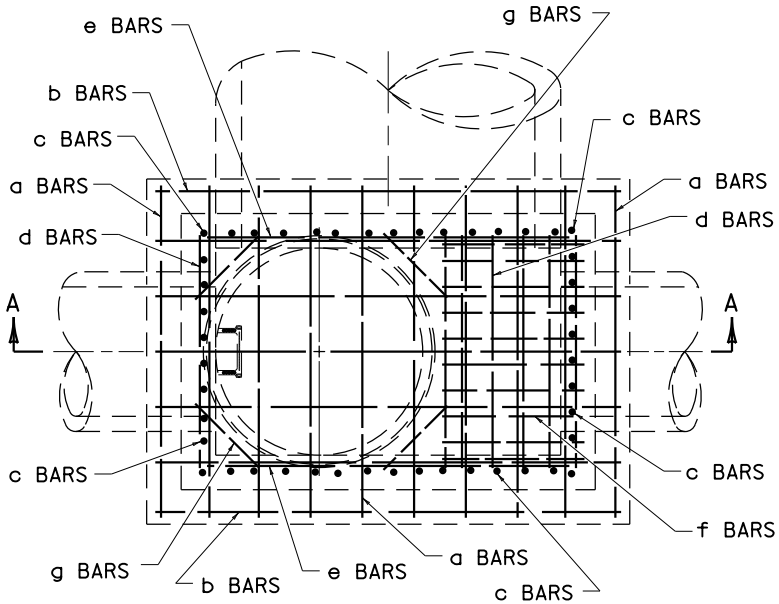

PLAN VIEW

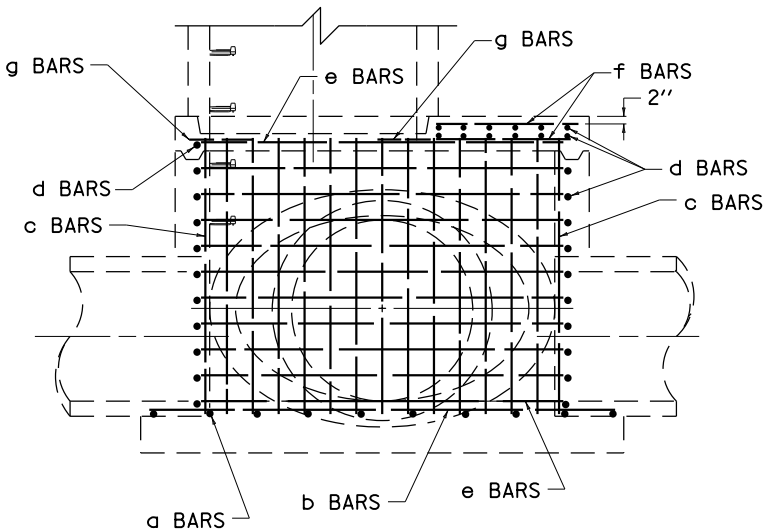

SECTION A-A

NOTES

1. PLACE ALL STEEL REINFORCEMENT 2'' FROM INSIDE OF CHAMBER WALL EXCEPT WHERE OTHERWISE SPECIFIED.
2. ALL a AND b BARS SPACED 1'-0'' ON CENTER.
3. ALL c, d, e, AND f BARS SPACED 6'' ON CENTER.

USE WITH CURRENT STD. DWG. RDM-010, RDM-011, AND RDM-013

KENTUCKY
DEPARTMENT OF HIGHWAYS

MANHOLE TYPE C
(STEEL PATTERN)

STANDARD DRAWING NO. RDM-012-02

SUBMITTED John B. Lockstrider — DIRECTOR DIVISION OF DESIGN — 12-1-99 DATE

APPROVED [signature] — STATE HIGHWAY ENGINEER — 12-1-99 DATE

DIMENSIONS AND ESTIMATE OF QUANTITIES

SIZE (1)		PIPE		Z (1)	CONCRETE CU. YDS.		(4) REINFORCEMENT												LBS.	(5)
							BAR a		BAR b		BAR c		BAR d		BAR e		BAR f			
X	Y	SIZE	LOCATION		(2)	(3)	QTY.	LIN. FT.	QTY.	LIN. FT.	QTY.	LIN. FT.	QTY.	LIN. FT.	QTY.	LIN. FT.	QTY.	LIN. FT.		
FOR CIRCULAR PIPE																				
4'-0"	4'-0"	30"	X OR Y	5'-3"	3.7	0.5	7	6'-5"	7	6'-4"	36	4'-1"	17	4'-6"	16	4'-4"	0	—	406	74
		36"		5'-9"	3.9							4'-7"	19		18				444	
4'-3"		42"	X	6'-4"	4.3					6'-7"	38	5'-2"	23		20	4'-7"	20	0'-3"	515	78
4'-10"		48"		6'-10"	4.9		8			7'-2"	40	5'-8"	27		22	5'-2"		0'-10"	612	81
5'-5"		54"		7'-5"	5.6					7'-9"	42	6'-3"	31		24	5'-9"		1'-5"	710	84
6'-0"		60"		7'-11"	6.3	0.6	9			8'-3"	44	6'-9"	35		26	6'-3"		2'-0"	813	91
6'-7"		66"		8'-6"	7.0		10			8'-10"	46	7'-4"	39		28	6'-10"		2'-7"	927	95
7'-2"		72"		9'-0"	7.8					9'-5"	48	7'-10"	41		30	7'-5"		3'-2"	1025	100
FOR ELLIPTICAL PIPE																				
4'-0"	4'-0"	24"x38"	X OR Y	4'-9"	3.5	0.5	7	6'-5"	7	6'-4"	36	3'-7"	15	4'-6"	14	4'-4"	0	—	367	74
4'-6"		29"x45"	X	5'-3"	4.0		8			6'-10"	38	4'-1"	21		16	4'-10"	20	0'-7"	464	79
5'-3"		34"x53"		5'-8"	4.6					7'-7"	40	4'-6"	25		18	5'-7"		1'-4"	554	84
5'-11"		38"x60"		6'-1"	5.2	0.6	9			8'-3"	44	4'-11"	29		20	6'-3"		2'-0"	661	91
6'-8"		43"x68"		6'-6"	5.9		10			9'-0"	46	5'-4"	33		22	7'-0"		2'-9"	767	96
7'-5"		48"x76"		7'-0"	6.7		11			9'-9"	50	5'-10"	39		24	7'-9"		3'-6"	906	103
8'-1"		53"x83"		7'-5"	7.4	0.7				10'-5"	52	6'-3"	43		26	8'-5"		4'-2"	1013	108
8'-10"		58"x91"		7'-11"	8.2		12			11'-2"	56	6'-9"	49		28	9'-2"		4'-11"	1105	115

NOTES

(1) SEE CURRENT STD. DWG. RDM-010 FOR LOCATION OF "X", "Y" AND "Z" DIMENSIONS.
(2) CONCRETE REQUIRED FOR ONE MANHOLE CHAMBER. NO DEDUCTIONS FOR PIPE HAVE BEEN MADE.
(3) CU. YDS. PER FOOT INCREASE IN "Z".
(4) ALL REINFORCEMENT SHALL BE NO. 5 BARS. 4 - g BARS 1'-9", REQUIRED IN TOP SLAB.
(5) LBS. PER FOOT INCREASE IN "Z".

CONCRETE DISPLACED BY ONE CONCRETE PIPE

SIZE		CONC. CU. YD.
CIR.	ELLIP.	
30"	24"x38"	0.2
36"	29"x45"	0.3
42"	34"x53"	0.4
48"	38"x60"	0.5
54"	43"x68"	0.6
60"	48"x76"	0.7
66"	—	0.8
—	53"x83"	0.9
72"	58"x91"	1.0

USE WITH CURRENT STD. DWG.
RDM-010, RDM-011, RDM-012

KENTUCKY
DEPARTMENT OF HIGHWAYS

MANHOLE TYPE C
(TABLE OF QUANTITIES)

STANDARD DRAWING NO. RDM-013-03

SUBMITTED John B. Lackstrom — DIRECTOR DIVISION OF DESIGN — 12-1-99 DATE
APPROVED F. M. Yowell — STATE HIGHWAY ENGINEER — 12-1-99 DATE

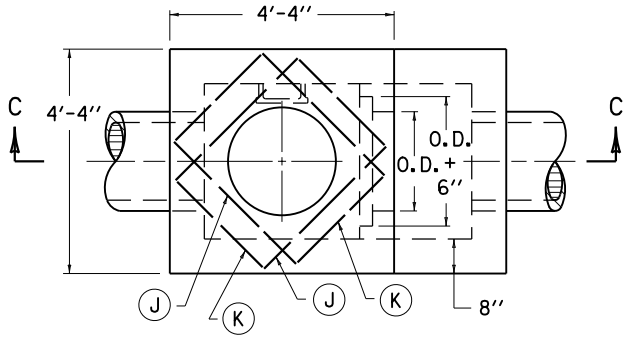

PLAN VIEW

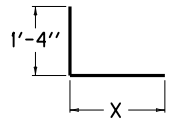

A AND M BARS

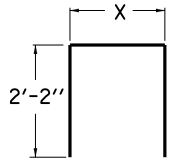

B AND F BARS

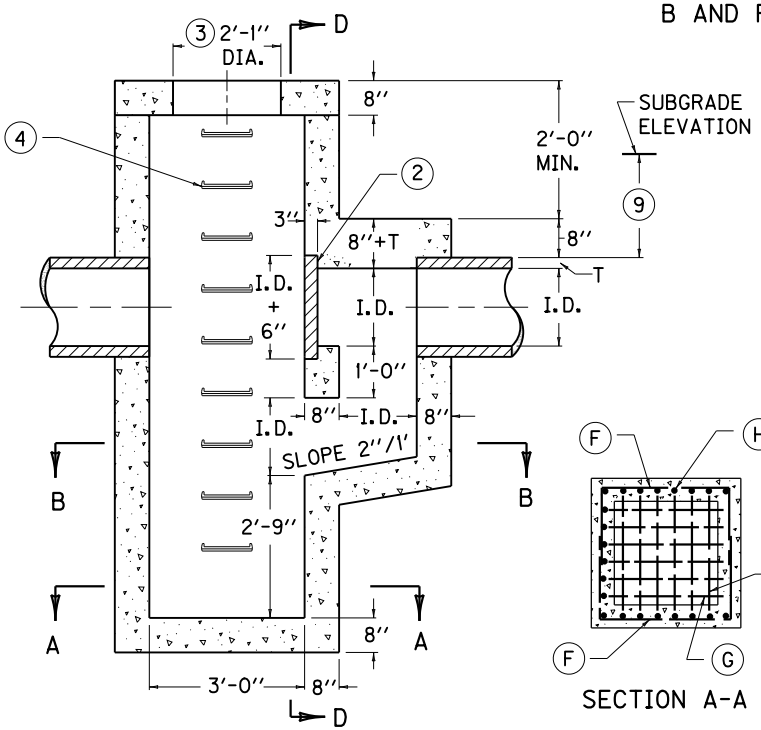

SECTION C-C

10 BILL OF REINFORCEMENT (NO. 5 BARS)

PIPE	15"			18"			21"			24"		
NO. 5 BARS	QTY.	TOTAL LG.	X DIM.	QTY.	TOTAL LG.	X DIM.	QTY.	TOTAL LG.	X DIM.	QTY.	TOTAL LG.	X DIM.
A	8	2'-11"	1'-7"	8	3'-2"	1'-10"	8	3'-5"	2'-1"	8	3'-8"	2'-4"
B	10	9'-6"	5'-3"	10	9'-9"	5'-6"	12	10'-0"	5'-9"	12	10'-4"	6'-0"
C	7	3'-4"	-	7	3'-4"	-	7	3'-4"	-	9	3'-4"	-
D	4	3'-11"	-	4	4'-4"	-	4	4'-10"	-	6	5'-4"	-
E	2	6'-6"	-	2	7'-0"	-	2	7'-6"	-	2	8'-0"	-
F	10	7'-7"	3'-4"	10	7'-7"	3'-4"	10	7'-7"	3'-4"	10	7'-7"	3'-4"
G	12	3'-4"	-	12	3'-4"	-	12	3'-4"	-	12	3'-4"	-
H	22	9'-1"	-	22	9'-8"	-	22	10'-2"	-	22	10'-8"	-
J	8	3'-4"	-	8	3'-4"	-	8	3'-4"	-	8	3'-4"	-
K	8	2'-4"	-	8	2'-4"	-	8	2'-4"	-	8	2'-4"	-
M	4	3'-7"	2'-3"	4	3'-10"	2'-6"	4	4'-1"	2'-9"	4	4'-4"	3'-0"
569 LBS.				591 LBS.			632 LBS.			672 LBS.		

CU. YDS. CLASS "A" CONC.

4.73	5.07	5.43	5.79
0.36 1			

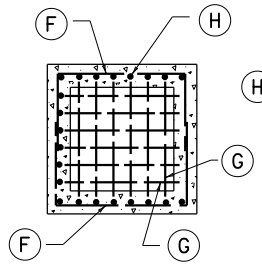

SECTION A-A

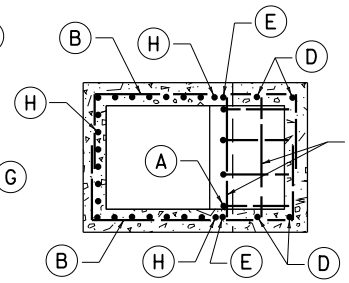

SECTION B-B

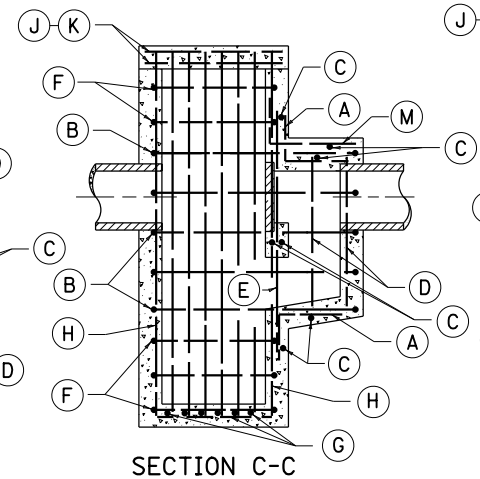

SECTION C-C

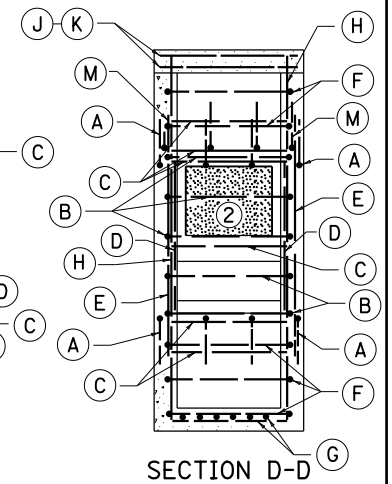

SECTION D-D

NOTES

1. CU. YD. PER FOOT INCREASE OR DECREASE WHEN MANHOLE HEIGHT VARIES FROM 7'-1" + 2 I.D. + T.
2. REMOVABLE STOPPER-MASONRY, CAST IRON OR OTHER TYPES OF STOPPERS WILL BE PERMITTED IF APPROVED BY THE ENGINEER.
3. SEE CUR. STD. DWG. RDM-100 FOR CASTINGS TO BE USED IN NON-TRAFFIC AREAS AND CUR. STD. DWG. RDM-105 FOR CASTINGS TO BE USED IN TRAFFIC AREAS.
4. SEE CUR. STD. DWG. RDB-430 FOR STEP TYPE, SPACING AND DETAIL.
5. G & H BARS SPACED APPROXIMATELY 6" O.C. ALL OTHER BARS SPACED APPROXIMATELY 1'-0" O.C.
6. CONSTRUCTION JOINT NOT PERMITTED BELOW FLOW LINE ELEVATION.
7. ENCIRCLED LETTERS, ◯, INDICATE STEEL BAR LOCATIONS.
8. T= PIPE THICKNESS, I.D.= INSIDE DIA. OF PIPE, O.D.= OUTSIDE DIA. OF PIPE.
9. 2'-0" DESIRED COVER, 1'-0" MINIMUM COVER OVER PIPE.
10. THE H BAR SHALL BE INCREASED INCH FOR INCH WHEN BOX EXCEEDS MINIMUM HEIGHT. ADD TWO F BARS FOR EACH 1'-0" INCREASE ABOVE MINIMUM HEIGHT.
11. DIMENSIONS FROM FACE OF CONCRETE TO STEEL SHALL BE 2" CLEAR DISTANCE.

KENTUCKY
DEPARTMENT OF HIGHWAYS

TRAPPED MANHOLE

STANDARD DRAWING NO. RDM-050-06

SUBMITTED John B. Lochstrie — DIRECTOR DIVISION OF DESIGN — DATE 12-1-99

APPROVED F. M. Newell — STATE HIGHWAY ENGINEER — DATE 12-1-99

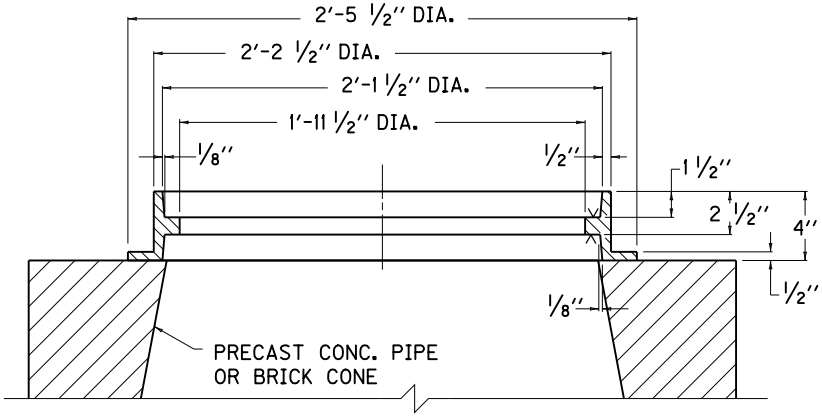

SECTION OF FRAME
WHEN USED WITH MANHOLES

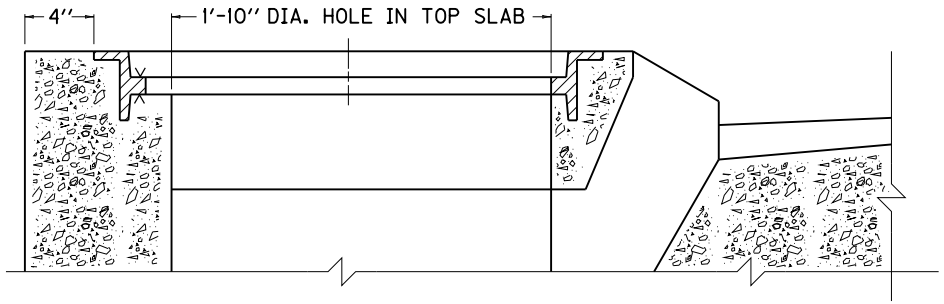

SECTION OF FRAME WHEN
USED WITH CURB BOX INLET

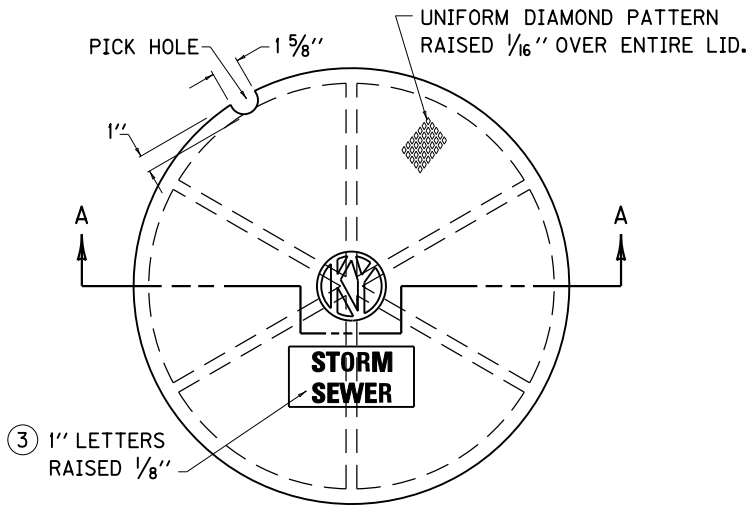

PLAN VIEW

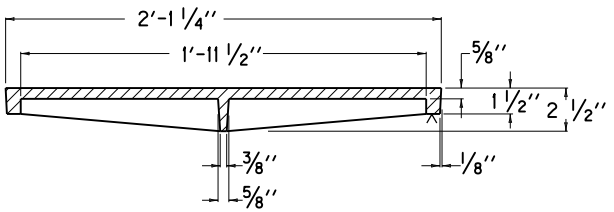

SECTION A-A

NOTES

1. THE FRAME IS REVERSIBLE AND IS TO BE USED ON MANHOLES IN NON-VEHICULAR TRAFFIC AREAS, AND ON BOX INLETS AS SPECIFIED.
2. APPLICATIONS SHOWN ARE FOR ILLUSTRATION PURPOSES ONLY.
3. VARIATION IN LID LETTERING (SEE PIPE SUMMARY) DENOTES SEWER TYPES:
   (A) STORM SEWER
   (B) SANITARY SEWER
   (C) SANITARY AND STORM SEWER
4. THE "KY" SYMBOL SHALL APPEAR ON ALL LIDS.

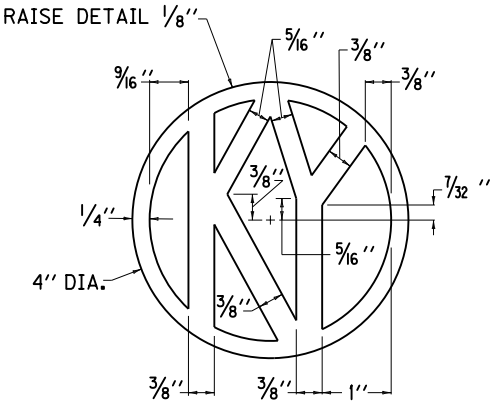

DETAIL OF "KY"

APPROX. WEIGHT	
FRAME	90 LBS.
LID	116 LBS.

KENTUCKY
DEPARTMENT OF HIGHWAYS

FRAME AND LID
TYPE 1

STANDARD DRAWING NO. RDM-100-02

SUBMITTED John B. Sachatzke — DIRECTOR DIVISION OF DESIGN — 12-1-99 DATE

APPROVED J. M. Yowell — STATE HIGHWAY ENGINEER — 12-1-99 DATE

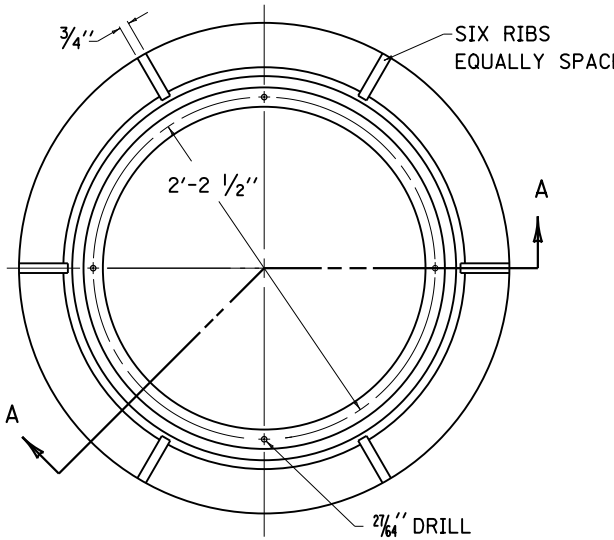

PLAN VIEW

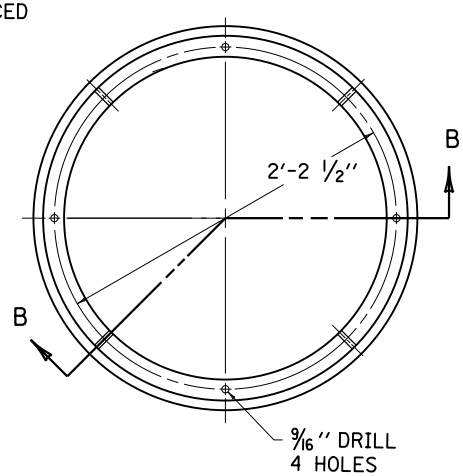

PLAN VIEW

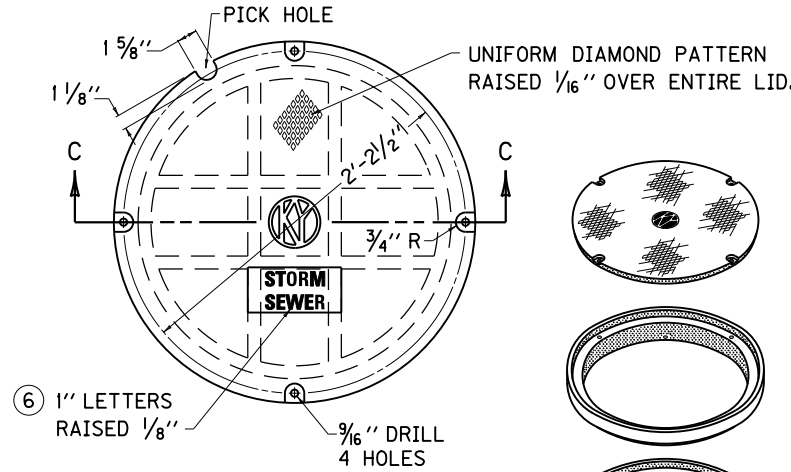

PLAN VIEW

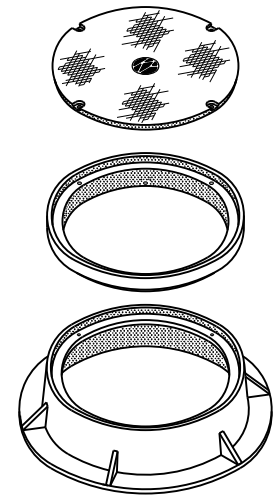

ISOMETRIC
EXPLODED VIEW

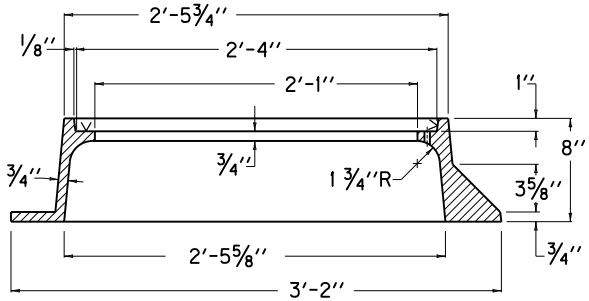

FRAME
SECTION A-A

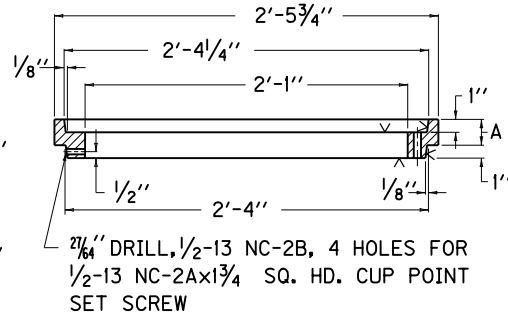

ADJUSTING RING
SECTION B-B

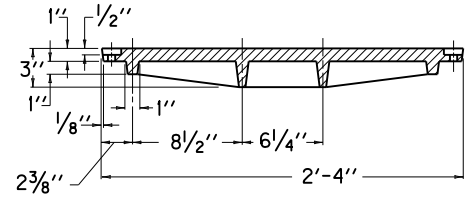

LID
SECTION C-C

DIMENSION A 8
1 1/2''
2''
2 1/2''
3''

APPROX. WEIGHT	
FRAME	270 LBS.
LID	240 LBS.

~ NOTES ~

1. THE LID SHALL BE FASTENED WITH 1/2-13 NC-2A x 2 HEXAGON CAP SCREW. WHEN THE ADJUSTING RING IS USED ADD DIMENSION (A) SHOWN IN SECTION B-B TO THE LENGTH OF THE CAP SCREW.
2. THE CAP SCREWS AND SET SCREWS SHALL BE STAINLESS STEEL, TYPES 302, 304, AND 430 CONFORMING TO ASTM A276.
3. MANUFACTURER'S TOLERANCES WILL BE ACCEPTED ON ALL DIMENSIONS.
4. ADJUSTING RINGS WHEN REQUIRED SHALL BE PAID FOR AT THE CONTRACT UNIT PRICE EACH AND SHALL INCLUDE THE NECESSARY HEX HEAD BOLTS AND SET SCREWS.
5. THE "v" DENOTES MACHINED SURFACE.
6. VARIATION IN LID LETTERING (SEE PIPE SUMMARY) DENOTES SEWER TYPE:
   (A) STORM SEWER
   (B) SANITARY SEWER
   (C) SANITARY AND STORM SEWER
7. THE "KY" SYMBOL SHALL APPEAR ON ALL LIDS.
8. NET HEIGHT OF ADJUSTING RING (AS SPECIFIED IN CONTRACT).
9. FRAME AND LID TYPE 2 SHALL BE USED IN VEHICULAR TRAFFIC AREAS.

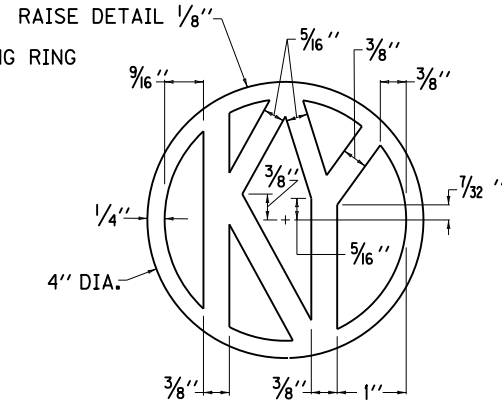

DETAIL OF "KY" SYMBOL

KENTUCKY
DEPARTMENT OF HIGHWAYS

FRAME AND LID
TYPE 2

STANDARD DRAWING NO. RDM-105-02

SUBMITTED John B. Sachatello — DIRECTOR DIVISION OF DESIGN — 12-1-99 DATE

APPROVED F. M. Newell — STATE HIGHWAY ENGINEER — 12-1-99 DATE

MAXIMUM COVER HEIGHTS FOR VARIOUS TYPES OF PERFORATED PIPE

SIZE OF PIPE	STANDARD STRENGTH CLAY	EXTRA STRENGTH CLAY	18 GAGE STEEL PIPE (3)	16 GAGE STEEL PIPE (3)	ALUMINUM PIPE (3)	POLYETHYLENE
4''	14'	17'	---	---	---	43'
6''	9'	15'	55'	---	50'	43'
8''	7'	10'	---	63'	50'	43'
10''	6'	9'	---	60'	40'	---
12''	5'	8'	---	55'	35'	---
15''	5'	8'	---	50'	30'	---
18''	5'	8'	---	40'	25'	---
21''	5'	8'	---	35'	20'	---
24''	5'	8'	---	---	---	---

~ NOTES ~

1. 2'-0'' SHALL BE THE MINIMUM COVER HEIGHT OVER TOP OF PIPE, MEASURED FROM TOP OF PIPE TO SUBGRADE ELEVATION, EXCEPT 1'-0'' COVER HEIGHT WILL BE PERMITTED ONLY WHERE THE 2'-0'' COVER HEIGHT WOULD NOT PERMIT PROPER DRAINAGE OF THE PIPE.
2. THE COMBINING OF MORE THAN ONE TYPE OF PIPE ON CONSTRUCTION OF A CONTINUOUS LINE OF PIPE AT ANY ONE INSTALLATION WILL NOT BE PERMITTED.

(3) SEE CURRENT STANDARD DRAWING RDI-035 FOR PIPE COATINGS.

KENTUCKY
DEPARTMENT OF HIGHWAYS

PERFORATED PIPE TYPES AND COVER HEIGHTS

STANDARD DRAWING NO. RDP-001-05

SUBMITTED John B. Lackstrom — DIRECTOR DIVISION OF DESIGN — 12-1-99 DATE

APPROVED [illegible] — STATE HIGHWAY ENGINEER — 12-1-99 DATE

TYPICAL SUBGRADE DRAINAGE LOCATIONS

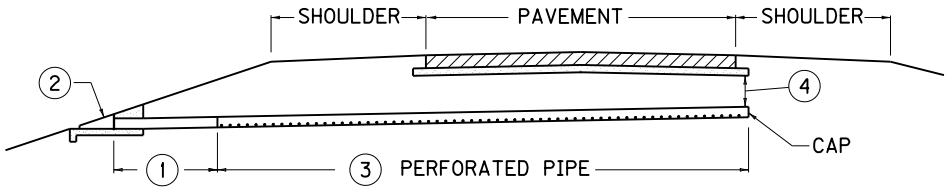

TANGENT SECTION - TWO LANE

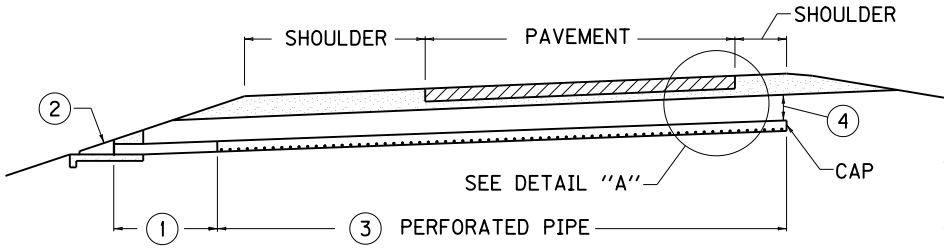

TANGENT SECTION - MULTI LANE

NOTES

SUBGRADE DRAINAGE, AS DEPICTED, IS INTENDED FOR USE WITH THE SURFACING PHASE OF CONSTRUCTION, AND SHALL BE INSTALLED ONLY AFTER THE SUBGRADE HAS BEEN COMPLETED, AND PRIOR TO CONSTRUCTING PAVING MATERIALS.

SUBGRADE DRAINAGE WILL NOT BE REQUIRED WHEN:

a. ROCK SUBGRADE OR NATURAL BANK GRAVEL IS SPECIFIED.
b. POROUS OR FREE DRAINING SUBGRADES ARE EVIDENT.
c. DIRECTED BY THE ENGINEER.

THE CAP SHALL BE A STANDARD MANUFACTURED ITEM FURNISHED BY PIPE SUPPLIER.

1. APPROXIMATELY 8 TO 12 FEET OF PIPE AT THE OUTLET SHALL BE NON-PERFORATED PIPE MEETING THE REQUIREMENTS OF THE PERFORATED PIPE, EXCEPT FOR PERFORATIONS.
2. PERFORATED PIPE HEADWALL REQUIRED AT OUTLET. SEE CUR. STD. DWG. RDP-010.
3. SEE CURRENT STANDARD DRAWING RDP-001 FOR ALTERNATES.
4. PIPE COVER: 2'-0" DESIREABLE MINIMUM, 1'-0" ABSOLUTE MINIMUM.

FLOW SHALL BE DIRECTED TOWARD THE FILL SIDE OF THE ROADWAY WHEN POSSIBLE.

5. SUBGRADE ELEVATION.

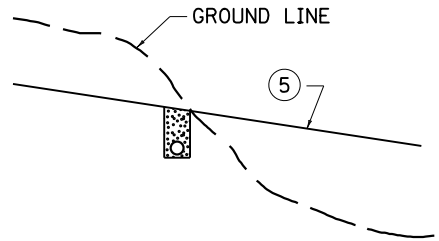

CUT TO FILL

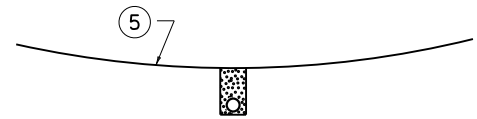

SAG VERTICAL CURVES

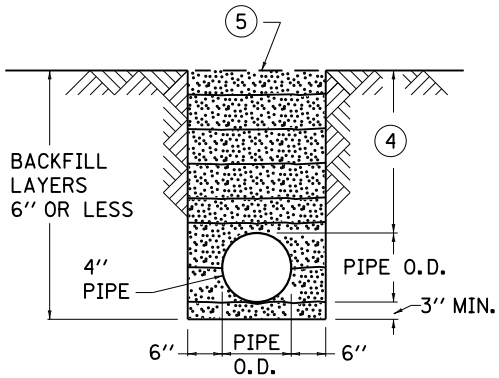

TRENCH DETAIL

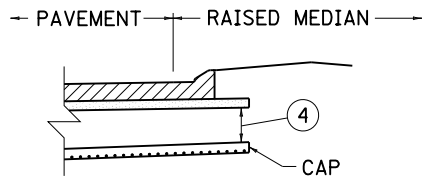

RAISED MEDIAN
DETAIL "A"

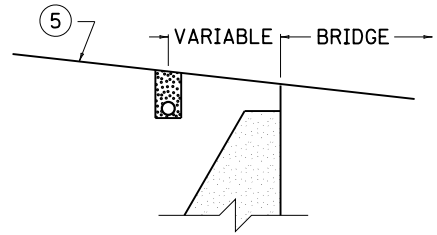

SUBGRADE DRAINAGE SHALL BE INSTALLED AT UPGRADE END OF BRIDGE ONLY.

BRIDGES

USE WITH CUR. STD. DWG. RDP-001
AND CUR. STD. DWG. RDP-010

KENTUCKY
DEPARTMENT OF HIGHWAYS

PERFORATED PIPE FOR SUBGRADE DRAINAGE ON TWO-LANE (CLASS 2) AND MULTI-LANE ROADS

STANDARD DRAWING NO. RDP-005-04

SUBMITTED John B. Lackstrom — DIRECTOR DIVISION OF DESIGN — 12-1-99 DATE

APPROVED [signature] — STATE HIGHWAY ENGINEER — 12-1-99 DATE

DETAIL FOR LONGITUDINAL UNDERDRAINS

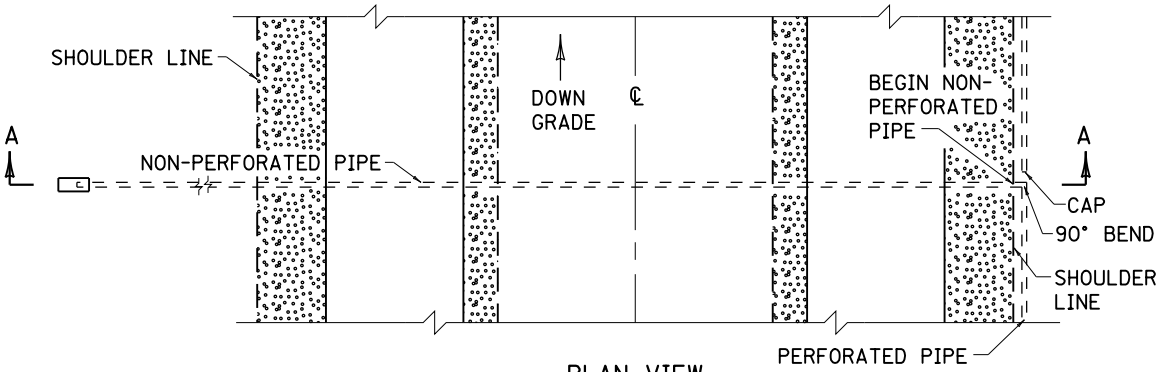

PLAN VIEW

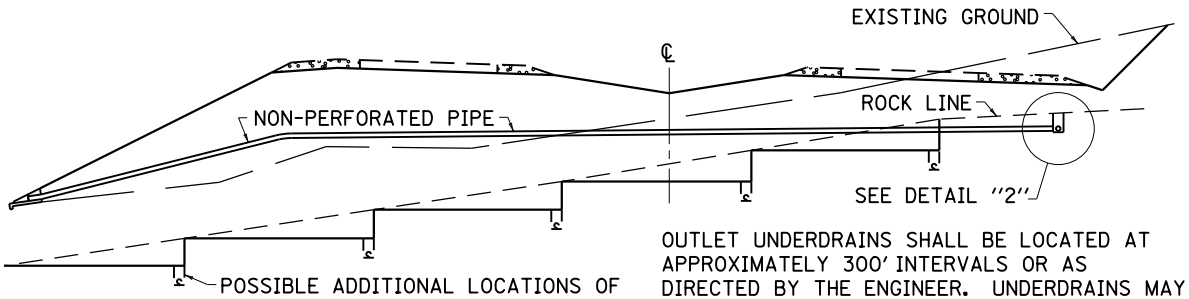

POSSIBLE ADDITIONAL LOCATIONS OF PERFORATED PIPE AS DETERMINED BY THE ENGINEER ON CONSTRUCTION.

OUTLET UNDERDRAINS SHALL BE LOCATED AT APPROXIMATELY 300' INTERVALS OR AS DIRECTED BY THE ENGINEER. UNDERDRAINS MAY BE CONNECTED TO CROSS DRAINS.

SECTION A-A

DETAIL FOR TRANSVERSE UNDERDRAIN CUT TO FILL CONDITION

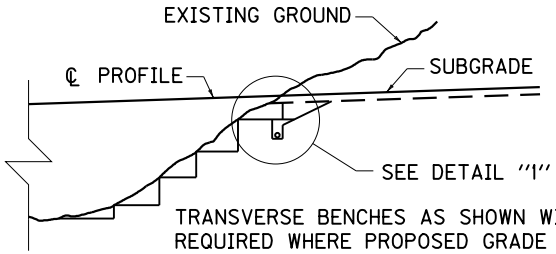

TRANSVERSE BENCHES AS SHOWN WILL BE REQUIRED WHERE PROPOSED GRADE INTERSECTS EXISTING GROUND.

THE EXCAVATION NECESSARY TO FORM THE BENCHES SHALL BE PAID FOR AT THE CONTRACT UNIT PRICE BID FOR ROADWAY EXCAVATION.

UNDERDRAINS WILL BE REQUIRED ON UPGRADE BENCH. THIS PERFORATED PIPE UNDERDRAIN SHOULD BE PLACED IN ROCK OR SHALE FORMATIONS IF POSSIBLE. PLAN LOCATIONS ARE FOR ESTIMATING PURPOSES ONLY. EXACT LOCATIONS TO BE DETERMINED BY THE ENGINEER ON CONSTRUCTION. THE FOOTAGE THUS INSTALLED SHALL BE PAID FOR AT THE CONTRACT UNIT PRICE PER LINEAR FOOT FOR PERFORATED PIPE WHICH SHALL CONSTITUTE FULL COMPENSATION FOR FURNISHING AND INSTALLING PIPE INCLUDING ALL CONNECTIONS, FITTINGS, FURNISHING AND PLACING AGGREGATE, PLACING BACKFILL, AND FURNISHING ALL LABOR AND TOOLS NECESSARY TO COMPLETE THE WORK.

EXCAVATION FOR BOTH THE PERFORATED AND NON-PERFORATED PIPE SHALL BE MEASURED AND PAID FOR AT THE UNIT PRICE AS SET FORTH IN THE STANDARD SPECIFICATIONS.

BENCHING SHALL BE REQUIRED AT ALL TRANSITIONS FROM ROCK CUTS TO FILL WHETHER OR NOT UNDERDRAIN IS REQUIRED.

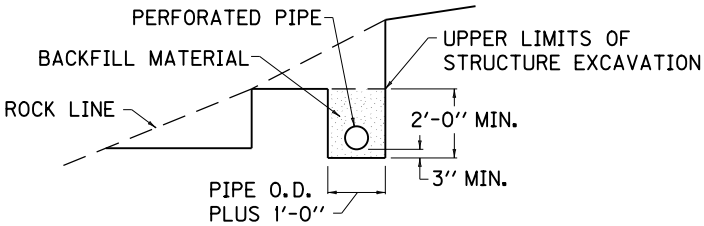

DETAIL "2"

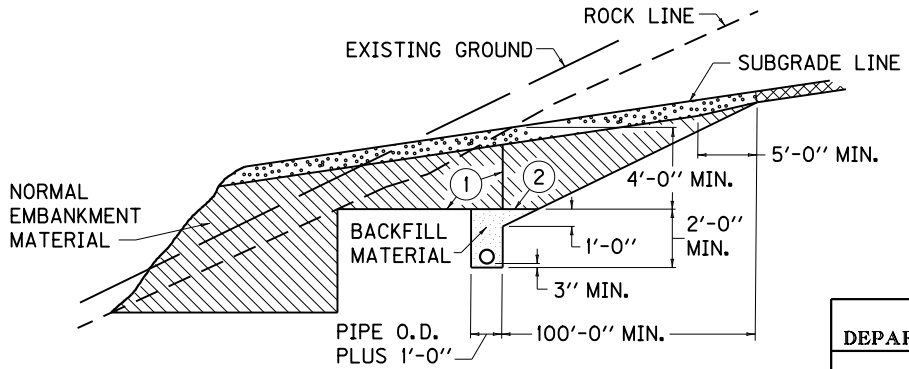

DETAIL "1"

NOTES

1. LIMITS OF FIRST BENCH.
2. UPPER LIMITS OF STRUCTURE EXCAVATION.

ALL PERFORATED PIPE SHALL COMPLY WITH THE STANDARD SPECIFICATIONS.

ALL NON-PERFORATED PIPE SHALL BE THE SAME TYPE AS THE PERFORATED PIPE, EXCEPT WITHOUT PERFORATIONS.

KENTUCKY DEPARTMENT OF HIGHWAYS

PERFORATED PIPE UNDERDRAINS

STANDARD DRAWING NO. RDP-006-03

SUBMITTED: DIRECTOR DIVISION OF DESIGN — DATE 11-21-07

APPROVED: STATE HIGHWAY ENGINEER — DATE 11-21-07

SECTIONS IN SOLID ROCK CUTS

DEPRESSED MEDIAN 36 FEET AND OVER

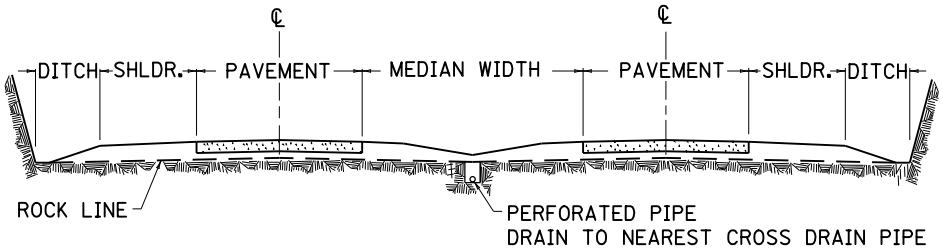

NORMAL SECTION

RAISED MEDIAN UNDER 36 FEET

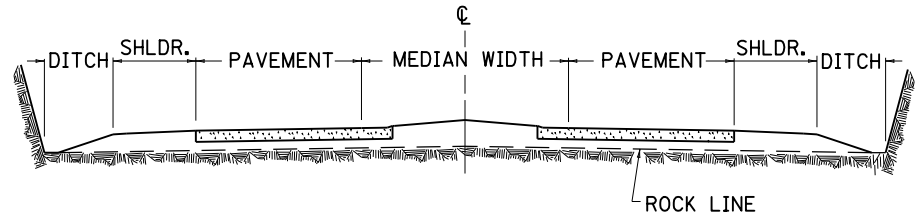

NORMAL SECTION

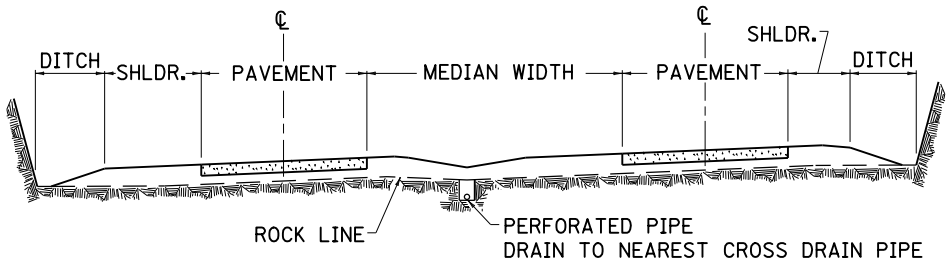

SUPERELEVATED SECTION

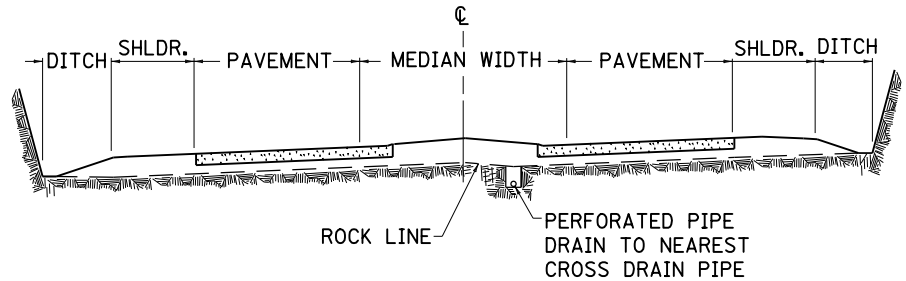

SUPERELEVATED SECTION

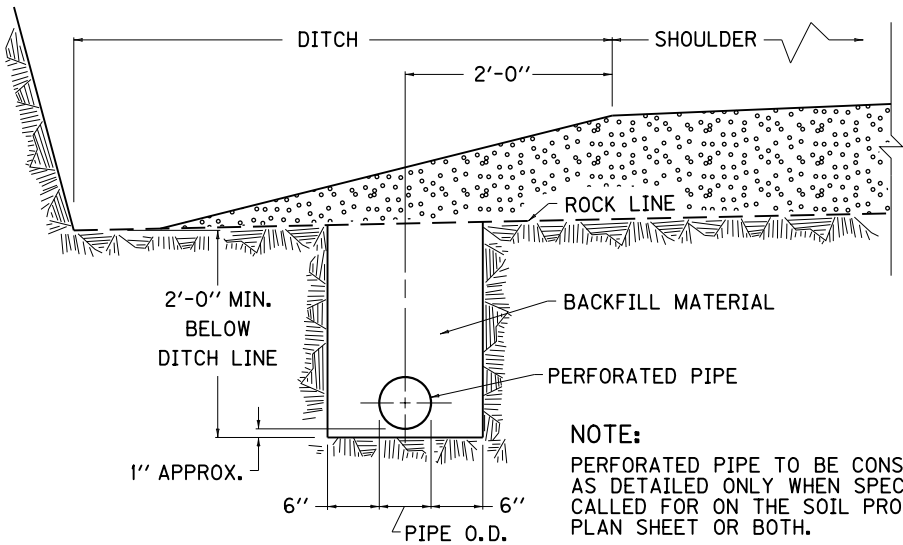

NOTE:

PERFORATED PIPE TO BE CONSTRUCTED AS DETAILED ONLY WHEN SPECIFICALLY CALLED FOR ON THE SOIL PROFILE, PLAN SHEET OR BOTH.

PERFORATED PIPE AT DITCH-SHOULDER LOCATION

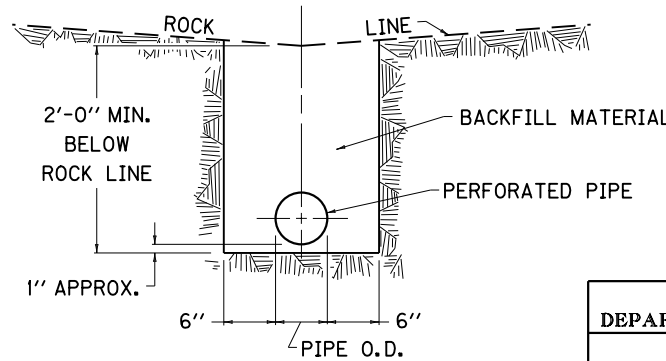

DETAIL OF PERFORATED PIPE AT LOCATIONS AS SHOWN ON THE SECTIONS

KENTUCKY
DEPARTMENT OF HIGHWAYS

PERFORATED
PIPE DETAILS
(SOLID ROCK)

STANDARD DRAWING NO. RDP-007-03

SUBMITTED John B. Lackstrom — DIRECTOR DIVISION OF DESIGN — 12-1-99 DATE

APPROVED F. M. Yowell — STATE HIGHWAY ENGINEER — 12-1-99 DATE

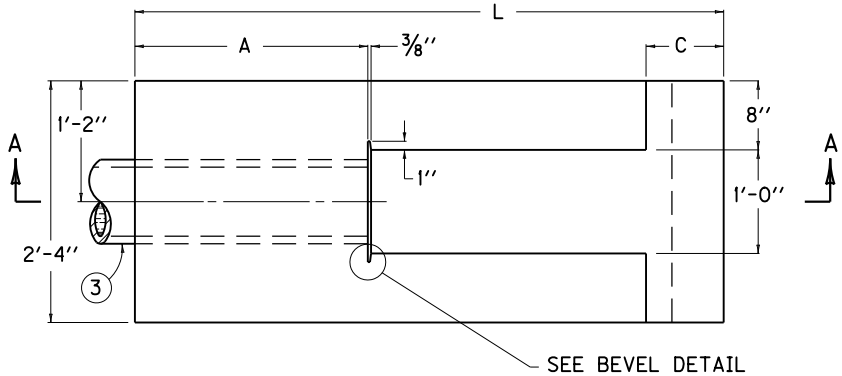

PLAN VIEW

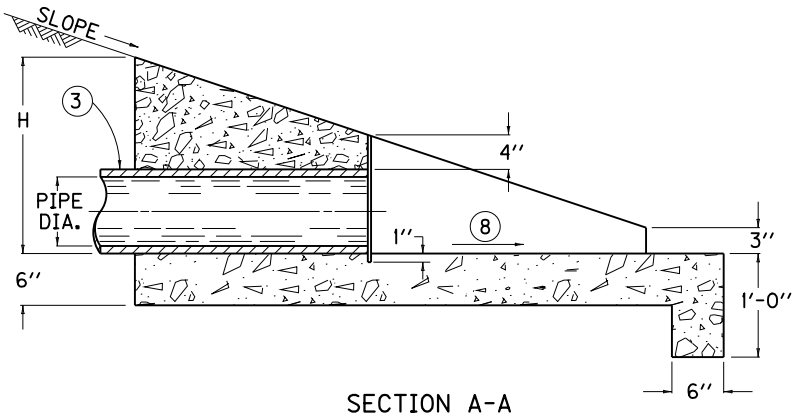

SECTION A-A

PIPE DIA.	SLOPE	DIMENSIONS				CLASS "A" CONCRETE
		L	H	A	C	CU. YD.
4'' AND 6''	2 : 1	3'-4 7/8''	1'-8 7/16''	1'-6''	6''	0.38
	3 : 1	5'-1 5/16''		2'-3''	9''	0.56
	4 : 1	6'-9 3/4''		3'-0''	1'-0''	0.74
	6 : 1	7'-2 5/8''	1'-2 7/16''	1'-6''	1'-6''	0.62
8''	2 : 1	3'-9 1/2''	1'-10 3/4''	1'-6''	6''	0.43
	3 : 1	5'-8 1/4''		2'-3''	9''	0.63
	4 : 1	7'-7''		3'-0''	1'-0''	0.83
	6 : 1	8'-4 1/2''	1'-4 3/4''	1'-6''	1'-6''	0.73
10''	2 : 1	4'-2''	2'-1''	1'-6''	6''	0.47
	3 : 1	6'-3''		2'-3''	9''	0.69
	4 : 1	8'-4''		3'-0''	1'-0''	0.91
	6 : 1	9'-6''	1'-7''	1'-6''	1'-6''	0.83

~NOTES~

1. BID ITEMS AND UNIT TO BID:
   A. CRUSHED AGGREGATE SIZE NO. 2 - TON
   B. PERF PIPE HWALL TY ⊗ - △ INCH - EACH
      ⊗ 1 = 2:1 SLOPE
      2 = 3:1 SLOPE
      3 = 4:1 SLOPE
      4 = 6:1 SLOPE
      △ = PIPE DIA. IN INCHES
      BID ITEM EXAMPLE: PERF PIPE HWALL TY 2 - 6 INCH
      THE CONTRACT UNIT PRICE FOR PERF. PIPE HEADWALLS INCLUDES ALL LABOR, EXCAVATION, FORMS, CLASS "A" CONCRETE AND INCIDENTALS NECESSARY TO COMPLETE ONE INSTALLATION.
2. THIS HEADWALL IS TO BE USED AT THE OUTLET END OF PERFORATED PIPE INSTALLATIONS.
3. APPROXIMATELY 8'-0" TO 12'-0" OF PIPE AT THE OUTLET SHALL BE NON-PERFORATED PIPE MEETING THE REQUIREMENTS OF THE PERFORATED PIPE, EXCEPT FOR PERFORATIONS. IF VITRIFIED CLAY PIPE IS USED, ALL JOINTS WHICH LIE WITHIN THE ABOVE LIMITS AND NOT ENCASED IN CONCRETE (SEE NOTE 4) SHALL BE IN ACCORDANCE WITH THE CURRENT ASTM C-443.
4. ANY PIPE WHICH HAS LESS THAN 1'-0" OF COVER OVER ITS TOP SHALL BE INCASED IN 6" OF CONCRETE ON ALL SIDES.
5. RODENT SCREEN OF 2x2 MESH 16 GAUGE (0.063 IN. DIA.) STEEL HEAVY (MAX.) HOT DIP GALVANIZED WOVEN WIRE CLOTH. THE MESH SHALL EXTEND A MINIMUM OF 1" ABOVE THE O.D. OF THE PIPE.
6. THE SLOT IS TO BE CONSTRUCTED SO THAT THE MESH CAN BE REMOVED FOR CLEANOUT PURPOSES.
7. BEVEL PERMITTED FOR EASY FORM REMOVAL.
8. INSTALL OR CONSTRUCT HEADWALL TO SLOPE 4% TO INSURE POSITIVE OUTLET FLOW.
9. CRUSHED AGGREGATE SIZE NO. 2 PLACED A MIN. DEPTH OF 4". (APPROX. 1 TON PER HEADWALL)

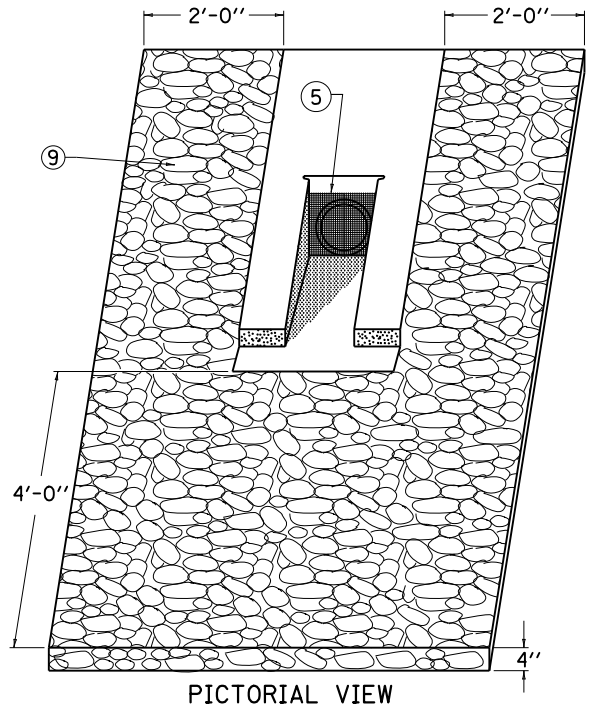

PICTORIAL VIEW

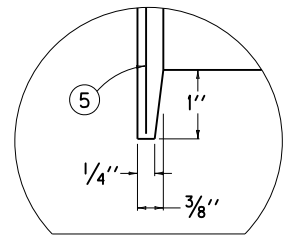

7 BEVEL DETAIL

KENTUCKY
DEPARTMENT OF HIGHWAYS

PERFORATED PIPE HEADWALLS

STANDARD DRAWING NO. RDP-010-08

SUBMITTED David Kratt DIRECTOR DIVISION OF DESIGN 11-21-07 DATE

APPROVED Marvelyn Mathews STATE HIGHWAY ENGINEER 11-21-07 DATE

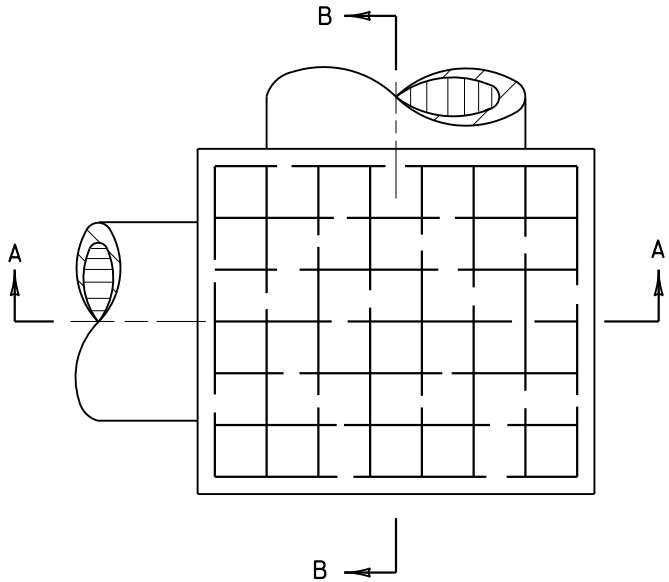

PLAN VIEW

NOTES

1. THE CONTRACT UNIT PRICE EACH SHALL INCLUDE PAYMENT IN FULL FOR ALL MATERIALS, EXCAVATION, LABOR AND INCIDENTALS NECESSARY TO COMPLETE THE WORK.
2. H = D + t + 1'-0" FOR THE LARGEST PIPE INVOLVED.
3. STEEL REINFORCEMENT SHALL BE NO. 4 BARS PLACED 6" O.C.
4. THE MAXIMUM DEPTH OF BOX FROM FINAL GRADE TO FLOW LINE OF PIPE SHALL BE 8'-0". ANY BOXES DEEPER THAN 8'-0" SHALL BE SPECIFICALLY DESIGNED.
5. SEE CURRENT STD. DWG. RDX-002 FOR DIMENSIONS AND QUANTITIES.
6. FOR THIS APPLICATION THE "X" DIMENSION IS ASSUMED TO BE EQUAL TO OR GREATER THAN THE "Y" DIMENSION.
7. THE BOX SIZE NUMBER TO BE SHOWN ON THE PLANS SHALL BE DETERMINED BY THE LARGEST PIPE IN THE "X" OR "Y" DIMENSION.
8. TO ELIMINATE FORM REMOVAL, THE TOP SHALL BE PRECAST.

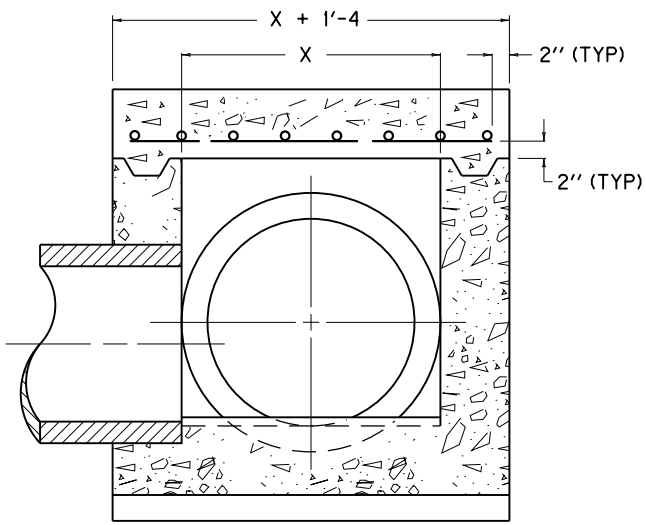

SECTION A-A

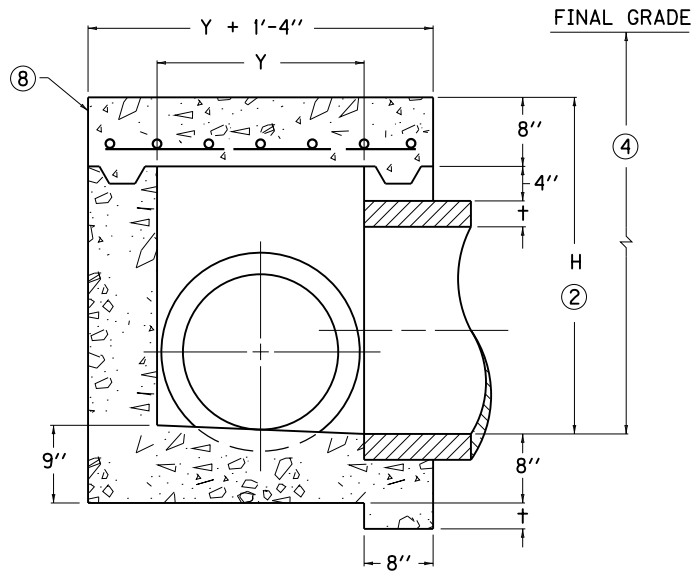

SECTION B-B

USE WITH
CURRENT STD. DWG. RDX-002

KENTUCKY
DEPARTMENT OF HIGHWAYS

JUNCTION BOX

STANDARD DRAWING NO. RDX-001-05

SUBMITTED John B. Sachstede — DIRECTOR DIVISION OF DESIGN — 12-1-99 DATE

APPROVED F. M. Yowell — STATE HIGHWAY ENGINEER — 12-1-99 DATE

DIMENSIONS AND ESTIMATE OF QUANTITIES

INLET SIZE			PIPE	①	CONCRETE		REINF. STEEL
NO.	X	Y	MAX. DIA.	H	CUBIC YARDS	② Q	LBS.
1	2′-0″	2′-0″	12″	2′-2″	0.99	0.3	28
2			15″	2′-5″	1.06		
3			18″	2′-9″	1.13		
4	2′-6″		21″	3′-0″	1.35		32
5		2′-6″			1.51		37
6		2′-0″	24″	3′-3″	1.44		32
7		2′-6″			1.60		37
8	3′-0″	2′-0″	27″	3′-6″	1.68		
9		2′-6″			1.86		42
10		3′-0″			2.04	0.4	48
11	3′-6″	2′-0″	30″	3′-10″	1.93	0.3	41
12		2′-6″			2.13	0.4	47
13		3′-0″			2.34		54
14		3′-6″			2.54		60
15		2′-0″	33″	4′-1″	2.02	0.3	41
16		2′-6″			2.24	0.4	47
17		3′-0″			2.45		54
18		3′-6″			2.66		60
19	4′-0″	2′-0″	36″	4′-4″	2.30		45
20		2′-6″			2.53		52
21		3′-0″			2.76		59
22		3′-6″			2.99		66
23		4′-0″			3.22	0.5	73
24	4′-6″	2′-0″	42″	4′-11″	2.70	0.4	50
25		2′-6″			2.95		57
26		3′-0″			3.21		65
27		3′-6″			3.47	0.5	73
28		4′-0″			3.73		80
29		4′-6″			3.98		88
30	5′-0″	2′-0″	48″	5′-5″	3.12	0.4	54
31		2′-6″			3.41		62
32		3′-0″			3.69	0.5	71
33		3′-6″			3.97		79
34		4′-0″			4.26		88
35		4′-6″			4.54		96
36		5′-0″			4.83	0.6	104
37	5′-6″	2′-0″	54″	6′-0″	3.58	0.4	58
38		2′-6″			3.89	0.5	67
39		3′-0″			4.20		76
40		3′-6″			4.51		86
41		4′-0″			4.82		95
42		4′-6″			5.13	0.6	104
43		5′-0″			5.44		113
44		5′-6″			5.75		122
45	6′-0″	2′-0″	60″	6′-6″	4.06	0.5	63
46		2′-6″			4.39		72
47		3′-0″			4.73		82
48		3′-6″			5.07		92

INLET SIZE			PIPE	①	CONCRETE		REINF. STEEL
NO.	X	Y	MAX. DIA.	H	CUBIC YARDS	② Q	LBS.
49	6′-0″	4′-0″	60″	6′-6″	5.40	0.6	102
50		4′-6″			5.74		111
51		5′-0″			6.08		121
52		5′-6″			6.42		131
53		6′-0″			6.75	0.7	140
54	7′-0″	2′-0″	66″	7′-1″	4.81	0.5	71
55		2′-6″			5.19		83
56		3′-0″			5.57	0.6	94
57		3′-6″			5.94		105
58		4′-0″			6.32		116
59		4′-6″			6.70		127
60		5′-0″			7.07	0.7	138
61		5′-6″			7.45		149
62		6′-0″			7.83		160
63		7′-0″			8.58	0.8	182
64	7′-6″	2′-0″	72″	7′-7″	5.37	0.5	76
65		2′-6″			5.77	0.6	88
66		3′-0″			6.17		99
67		3′-6″			6.57		111
68		4′-0″			6.98		123
69		4′-6″			7.38	0.7	134
70		5′-0″			7.78		146
71		5′-6″			8.19		158
72		6′-0″			8.59		169
73		7′-0″			9.39	0.8	193
74		7′-6″			9.80		204

REFERENCE CHART

DIA. OF PIPE	JUNCTION BOX		CONCRETE TO DEDUCT FOR EACH PIPE
	PIPE ON ″X″ SIDE OF BOX	PIPE ON ″Y″ SIDE OF BOX	CUBIC YARDS
0	2′-0″	2′-0″	---
12″			0.1
15″-18″			
21″-24″	2′-6″	2′-6″	
27″	3′-0″	3′-0″	0.2
30″-33″	3′-6″	3′-6″	
36″	4′-0″	4′-0″	0.3
42″	4′-6″	4′-6″	0.4
48″	5′-0″	5′-0″	0.5
54″	5′-6″	5′-6″	0.6
60″	6′-0″	6′-0″	0.7
66″	7′-0″	7′-0″	0.8
72″	7′-6″	7′-6″	1.0

NOTES

① BASED ON H AS EQUAL TO D++1′-0″.

② Q = CUBIC YARDS OF CONCRETE PER FOOT INCREASE OR DECREASE WHEN H VARIES FROM D++1′-0″.

3. NO DEDUCTIONS HAVE BEEN MADE FOR PIPE, SEE REFERENCE CHART FOR QUANTITIES TO DEDUCT.

4. THE DIMENSIONS AND QUANTITIES HAVE BEEN CALCULATED FOR ROUND CONCRETE PIPE. WHEN NON-CIRCULAR PIPE IS USED THE BOX SIZE SHALL BE DETERMINED BY CONTROLLING DIMENSIONS OF THE PIPE.

USE WITH
CURRENT STD. DWG. RDX-001

KENTUCKY
DEPARTMENT OF HIGHWAYS

JUNCTION BOX
(DIMENSIONS & QUANTITIES)

STANDARD DRAWING NO. RDX-002-03

SUBMITTED John B. Lockstrida — DIRECTOR DIVISION OF DESIGN — 12-1-99 DATE

APPROVED F. M. Powell — STATE HIGHWAY ENGINEER — 12-1-99 DATE

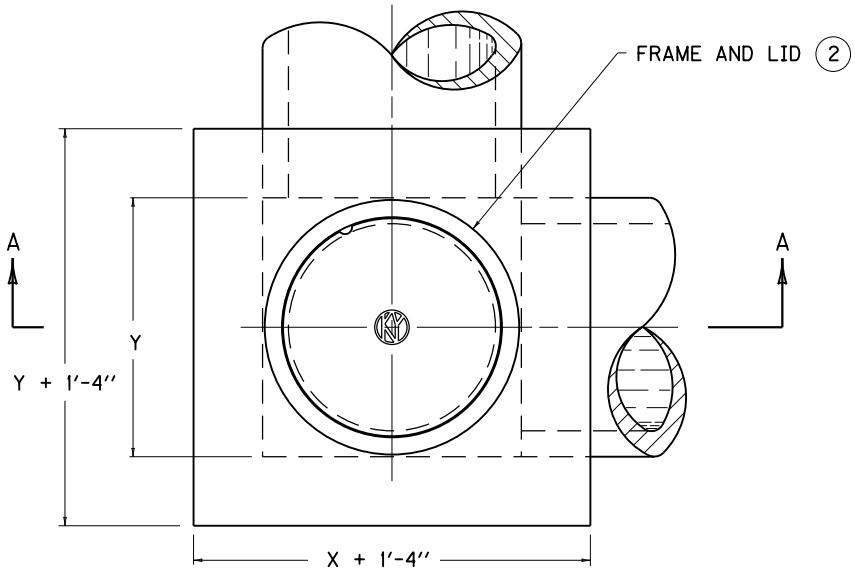

PLAN VIEW

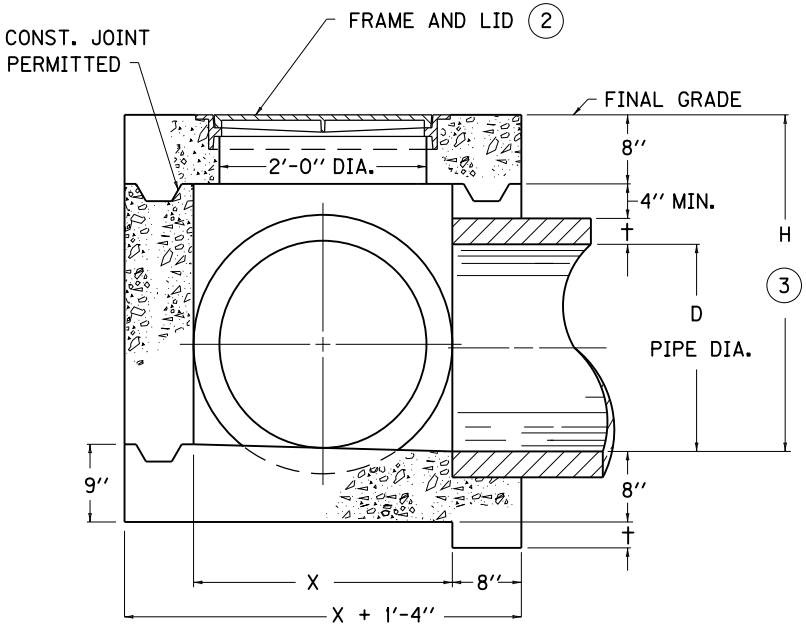

SECTION A-A

~ NOTES ~

1. THE CONTRACT UNIT PRICE EACH SHALL INCLUDE PAYMENT IN FULL FOR EXCAVATION, LABOR, FRAME AND LID, CONCRETE, AND ALL OTHER INCIDENTALS NECESSARY TO COMPLETE THE WORK.
   BID ITEM: JUNCTION BOX TYPE B (☆)
   (☆) = "1" (FRAME AND LID TYPE 1)
   (☆) = "2" (FRAME AND LID TYPE 2)

2. WHEN THIS BOX IS TO BE USED IN NON-VEHICULAR TRAFFIC AREAS SEE CURRENT STD. DWG. RDM-100 "FRAME AND LID TYPE 1".
   WHEN THIS BOX IS TO BE USED IN VEHICULAR TRAFFIC AREAS SEE CURRENT STD. DWG. RDM-105 "FRAME AND LID TYPE 2".

3. THE MAXIMUM DEPTH OF BOX FROM FINAL GRADE TO FLOW LINE OF PIPE SHALL BE 8'-0". ANY BOXES DEEPER THAN 8'-0" SHALL BE SPECIFICALLY DESIGNED.

4. BASED ON H AS EQUAL TO D + † + 1'-0".

5. Q = CUBIC YARDS OF CONCRETE PER FOOT INCREASE OR DECREASE WHEN H VARIES FROM D + † + 1'-0".

6. NO DEDUCTIONS HAVE BEEN MADE FOR PIPE, SEE REFERENCE CHART FOR QUANTITIES TO DEDUCT.

7. THE DIMENSIONS AND QUANTITIES HAVE BEEN CALCULATED FOR ROUND CONCRETE PIPE. WHEN NON-CIRCULAR PIPE IS USED THE BOX SIZE SHALL BE DETERMINED BY CONTROLLING DIMENSIONS OF THE PIPE.

8. FOR THIS APPLICATION THE "X" DIMENSION IS ASSUMED TO BE EQUAL TO OR GREATER THAN THE "Y" DIMENSION.

9. THE BOX SIZE NUMBER TO BE SHOWN ON THE PLANS SHALL BE DETERMINED BY THE LARGEST PIPE IN THE "X" AND "Y" DIMENSION.

DIMENSIONS & ESTIMATE OF QUANTITIES

INLET SIZE			PIPE	4	CONCRETE	
NO.	X	Y	MAX. DIA.	H	CUBIC YARDS	5 Q
1	2'-0"	2'-0"	12"	2'-2"	0.91	0.3
2			15"	2'-5"	0.98	
3			18"	2'-9"	1.05	
4	2'-6"		21"	3'-0"	1.27	
5		2'-6"			1.43	
6		2'-0"	24"	3'-3"	1.36	
7		2'-6"			1.52	

REFERENCE CHART			
DIA. OF PIPE	JUNCTION BOX		CONCRETE TO DEDUCT FOR EACH PIPE
	PIPE ON "X" SIDE OF BOX	PIPE ON "Y" SIDE OF BOX	CUBIC YARDS
0	2'-0"	2'-0"	---
12"			0.1
15"-18"			
21"-24"	2'-6"	2'-6"	

KENTUCKY
DEPARTMENT OF HIGHWAYS

JUNCTION BOX
TYPE B ☆

STANDARD DRAWING NO. RDX-005-02

SUBMITTED John B. Sachatzke — DIRECTOR DIVISION OF DESIGN — 12-1-99 DATE

APPROVED F. N. Newell — STATE HIGHWAY ENGINEER — 12-1-99 DATE

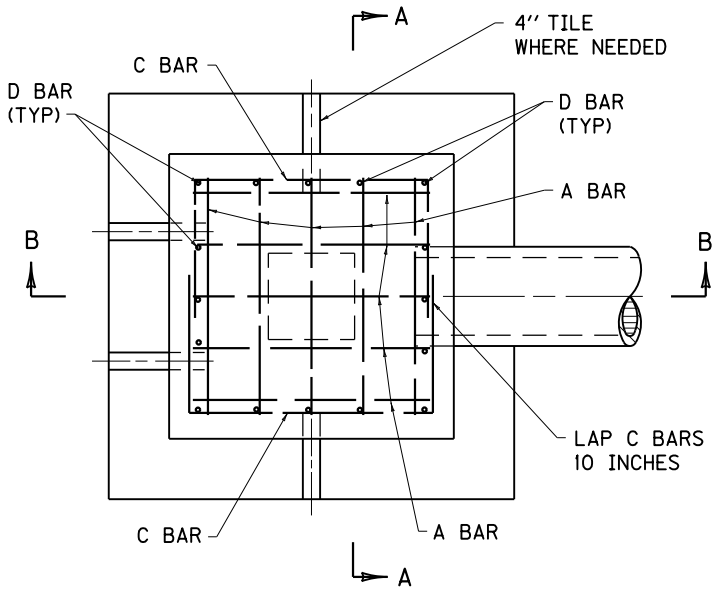

PLAN VIEW

NOTES

LOCATION OF OPENING MAY BE DETERMINED IN THE FIELD FOR A SIDE OR BOTTOM SPRING INLET.

SPRING INLET TYPE "A" SHALL BE USED WHEN FILL OVER TOP IS 10' OR MORE.

STEEL REINFORCEMENT

NO. 4 STEEL BARS			TOTAL LBS.
BAR	QTY.	LIN. FT.	
A	10	4'-7''	105
C	6	9'-9''	
D	16	3'-4''	

CLASS "A" CONCRETE

PIPE DIA.	CU. YDS. CONCRETE
12''	4.61
15''	4.59
18''	4.58

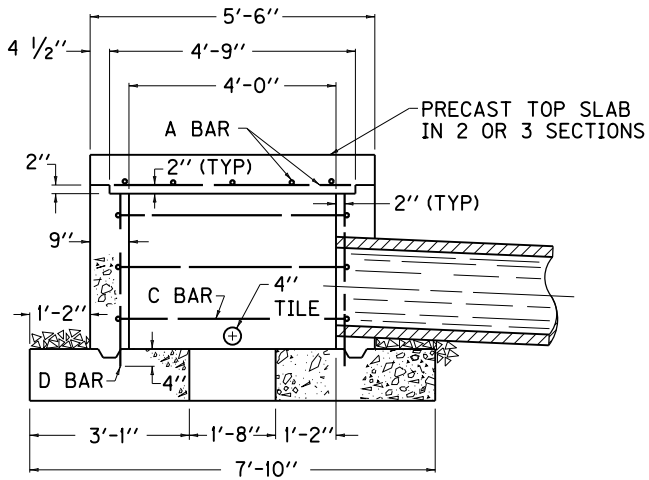

SECTION B-B

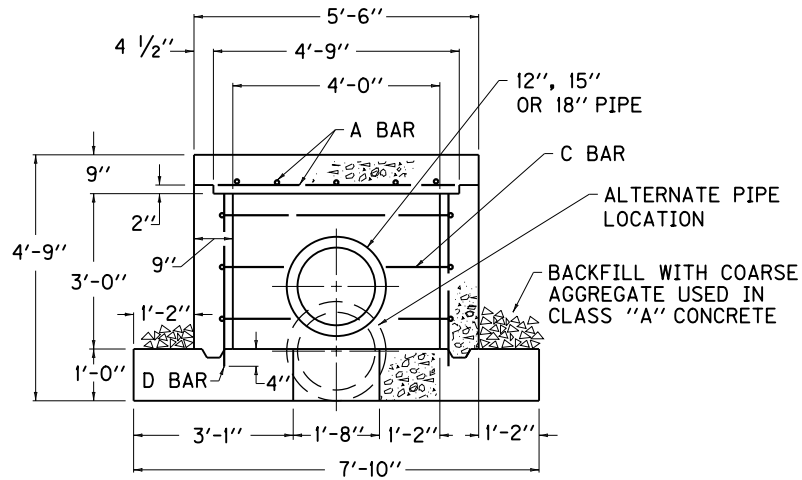

SECTION A-A

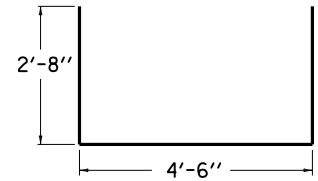

C BAR DETAIL

KENTUCKY
DEPARTMENT OF HIGHWAYS

SPRING BOX
INLET
TYPE "A"

STANDARD DRAWING NO. RDX-010-04

SUBMITTED John B. Lackstrom — DIRECTOR DIVISION OF DESIGN — 12-1-99 DATE

APPROVED F. M. Yowell — STATE HIGHWAY ENGINEER — 12-1-99 DATE

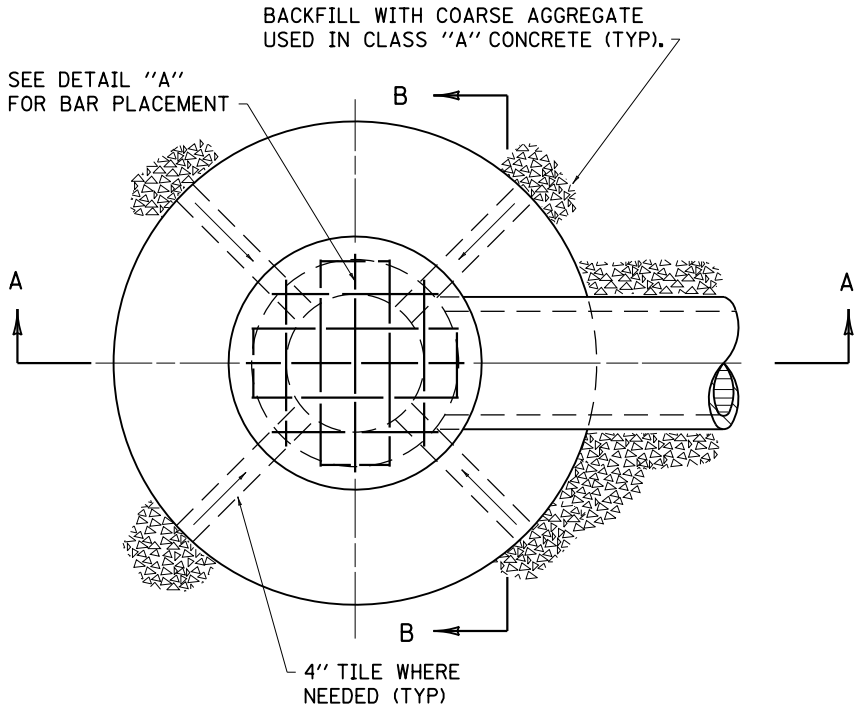

PLAN VIEW

NOTES

1. 12", 15", OR 18" DIAMETER PIPE OUTLET (SEE PIPE SECTIONS FOR SIZE AND TYPE) MORTAR AROUND PIPE TO PREVENT SEEPAGE.
2. SPRING BOX INLET TYPE "B" MAY BE USED WHEN FILL OVER TOP IS LESS THAN 10'-0".
3. STEEL REINFORCEMENT PLACED 6" ON CENTERS.
4. "t" IS CONCRETE PIPE WALL THICKNESS OR METAL PIPE CORRUGATION DEPTH.

STEEL REINFORCEMENT FOR CONCRETE COVER

NO. 3 STEEL BARS			TOTAL LBS.
BAR	QTY.	LGTH.	
A	4	1'-0"	13
B	4	2'-5"	
C	4	3'-0"	
D	2	3'-2"	

CLASS "A" CONCRETE

PIPE DIA.	CU. YD. CONCRETE
12"	1.54
15"	
18"	

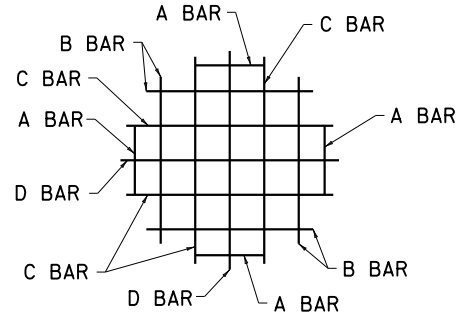

DETAIL "A"

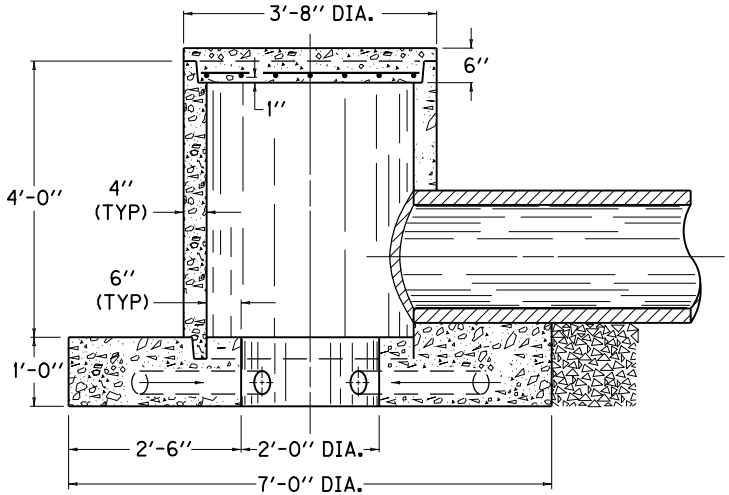

SECTION A-A

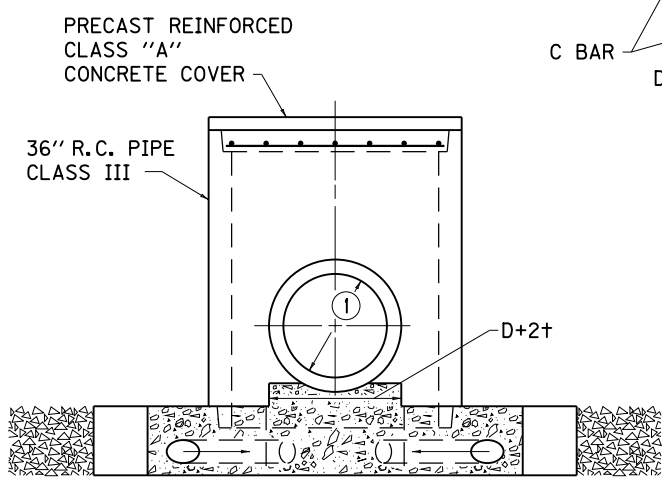

SECTION B-B

KENTUCKY
DEPARTMENT OF HIGHWAYS

SPRING BOX INLET
TYPE "B"

STANDARD DRAWING NO. RDX-011-04

SUBMITTED John B. Lockstrider — DIRECTOR DIVISION OF DESIGN — 12-1-99 DATE

APPROVED F. M. Yowell — STATE HIGHWAY ENGINEER — 12-1-99 DATE

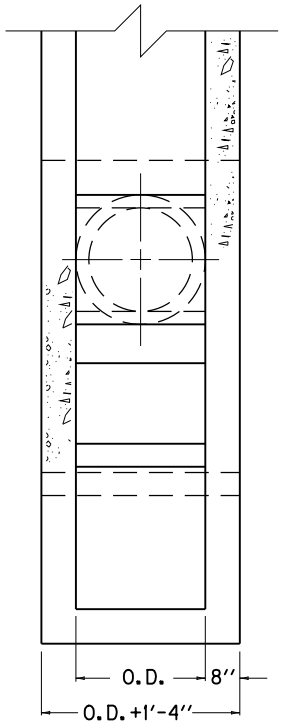

FRONT ELEVATION

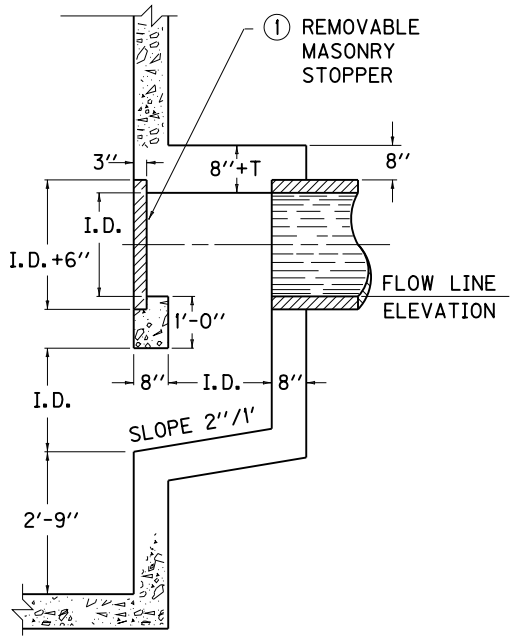

RIGHT SECTIONAL ELEVATION

PIPE SIZE	NO. 5 REINFORCEMENT BARS QUANTITY - LENGTH AND WEIGHT											CLASS A CONC.
	a		b		c		d		e		LBS.	
	QTY.	LENGTH	QTY.	LENGTH	QTY.	LENGTH	QTY.	LENGTH	QTY.	LENGTH		CU. YD.
12''	6	2'-10''	8	1'-4''	11	1'-8''	4	3'-4''	4	6'-4''	88	0.52
15''	6	3'-1''	10	1'-7''	12	2'-0''	4	3'-10''	4	6'-10''	105	0.69
18''	8	3'-4''	10	1'-10''	13	2'-3''	6	4'-4''	4	7'-4''	135	0.87
21''	8	3'-7''	12	2'-1''	14	2'-7''	6	4'-10''	4	7'-10''	157	1.09
24''	8	3'-10''	12	2'-4''	15	2'-10''	6	5'-4''	4	8'-4''	174	1.32
30''	10	4'-4''	14	2'-10''	17	3'-5''	8	6'-4''	4	9'-4''	239	1.87
36''	10	4'-10''	16	3'-4''	19	4'-0''	8	7'-4''	4	10'-4''	290	2.52
42''	12	5'-4''	18	3'-10''	21	4'-7''	10	8'-4''	4	11'-4''	373	3.28
48''	12	5'-10''	20	4'-4''	23	5'-2''	10	9'-4''	4	12'-4''	436	4.15

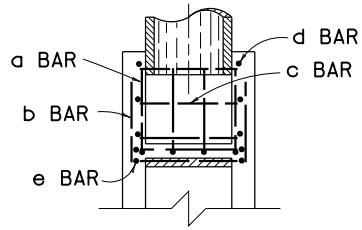

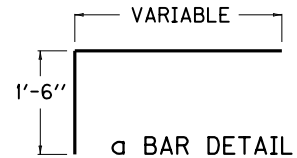

a BAR DETAIL

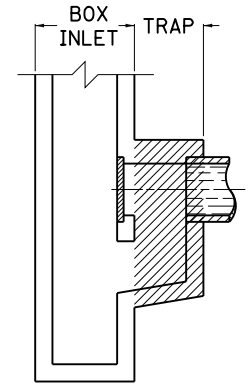

TYPICAL TRAPPED BOX INLET

NOTES

QUANTITIES SHOWN FOR STEEL AND CONCRETE ARE FOR INFORMATIONAL PURPOSES ONLY, AND ARE INCLUDED IN THE BID ITEM. FOR EXAMPLE: "CURB BOX INLET TYPE AA TRAPPED".

STEEL BARS SPACED APPROXIMATELY 12" O.C. THE MINIMUM REQUIREMENT FOR REINFORCING STEEL SHALL BE GRADE 40.

NO CONSTRUCTION JOINTS PERMITTED BELOW FLOW LINE ELEVATION.

▨ THIS INLET TRAP MAY BE APPLIED TO ANY BOX INLET WITH A FLAT VERTICAL FACE.

(1) CAST IRON OR OTHER TYPES OF STOPPERS WILL BE PERMITTED IF APPROVED BY THE ENGINEER.

T = PIPE THICKNESS.

I.D. = INSIDE DIAMETER OF PIPE.

O.D. = OUTSIDE DIAMETER OF PIPE.

▨ DRAWING IS FOR TRAP PORTION OF INLET ONLY AND MUST BE CONSTRUCTED AS AN INTEGRAL PART OF THE BOX INLET.

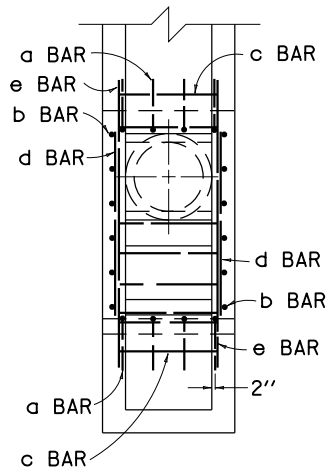

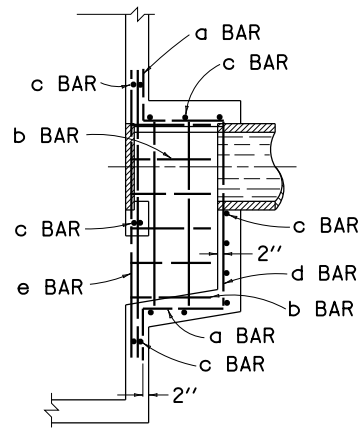

STEEL PATTERN

KENTUCKY
DEPARTMENT OF HIGHWAYS

TRAP FOR
BOX INLETS

STANDARD DRAWING NO. RDX-020-04

SUBMITTED John B. Sachatzke, DIRECTOR DIVISION OF DESIGN — DATE 12-1-99

APPROVED J. M. Yowell, STATE HIGHWAY ENGINEER — DATE 12-1-99

TYPICAL LATERAL SHOULDER DRAINS

FOUR LANE DIVIDED

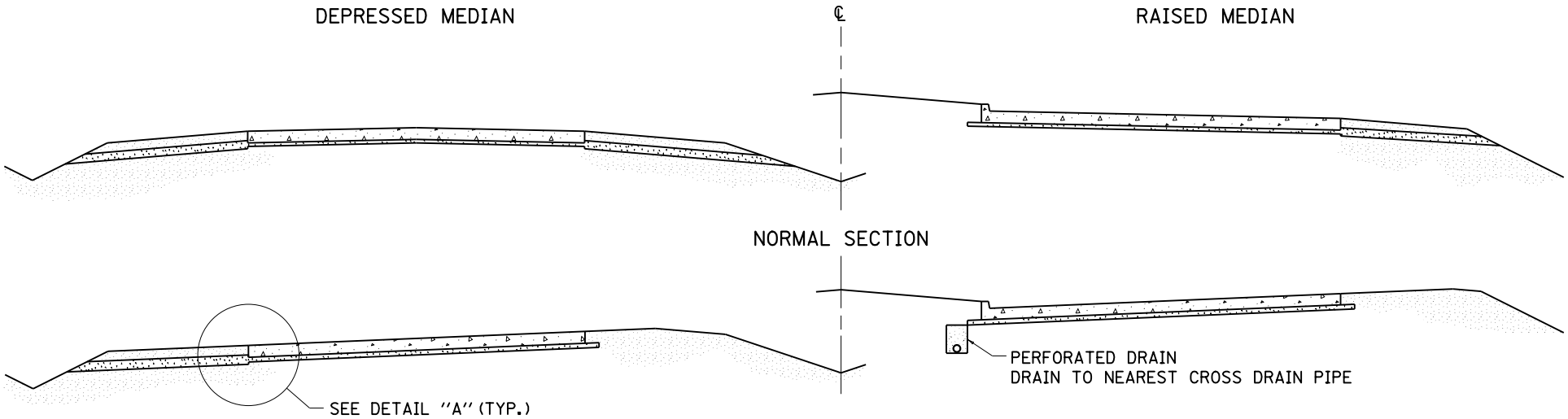

MUNICIPAL TYPE

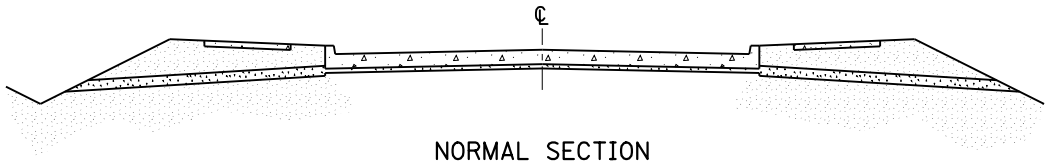

NORMAL SECTION

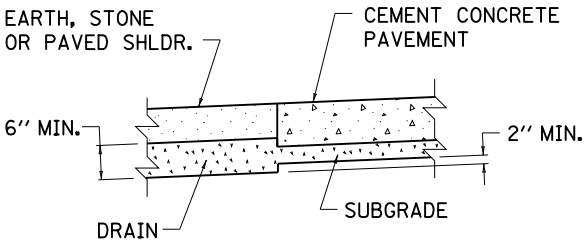

DETAIL "A"

NOTES

SHOULDER DRAINS SHALL BE:

- REQUIRED FOR EARTH SHOULDERS OR WHERE THE SHOULDER AGGREGATE IS LESS THAN PAVEMENT THICKNESS.
- REQUIRED FOR TWO-LANE, MULTI-LANE AND BIFURCATED FACILITES.
- SPACED OPPOSITE TRANSVERSE JOINTS EXCEPT AT BRIDGE ENDS, AND ON LOW SIDE OF SUPERELEVATED CURVES AT MID-POINT OF 50 FOOT TRANSVERSE JOINT SPACING.
- CONSTRUCTED, MEASURED, AND PAID FOR IN ACCORDANCE WITH STANDARD SPECIFICATIONS.
- ELIMINATED IF APPROVED IN WRITING BY THE ENGINEER, PROVIDED POROUS ROCK OR POROUS BANK GRAVEL IS USED IN SHOULDERS.

KENTUCKY
DEPARTMENT OF HIGHWAYS

SUBGRADE DRAINAGE
CONCRETE PAVEMENT

STANDARD DRAWING NO. RDX-050-04

SUBMITTED John B. Sachatzke — DIRECTOR DIVISION OF DESIGN — 12-1-99 DATE

APPROVED F. M. Yowell — STATE HIGHWAY ENGINEER — 12-1-99 DATE

INTERMEDIATE ANCHOR FOR PIPE (CLASS "A" CONCRETE)

		DIAMETER OF PIPE IN INCHES															
	% GRADE	12"	15"	18"	21"	24"	27"	30"	36"	42"	48"	54"	60"	66"	72"	78"	84"
VOLUME IN CU. YDS. OF CLASS "A" CONC. FOR ONE ANCHOR	0	0.68	0.86	1.07	1.31	1.59	1.90	2.25	3.06	5.91	7.41	9.30	11.28	14.99	18.34	22.15	25.64
	10	0.72	0.91	1.13	1.38	1.68	2.01	2.38	3.24	6.23	7.83	9.70	11.79	15.77	19.27	23.24	26.88
	20	0.75	0.96	1.19	1.44	1.78	2.14	2.52	3.43	6.59	8.28	10.07	12.24	16.48	20.11	24.22	27.98
	30	0.79	1.01	1.26	1.53	1.88	2.27	2.67	3.65	6.97	8.78	10.40	12.64	17.12	20.87	25.10	28.95
	40	0.84	1.07	1.33	1.62	1.99	2.41	2.83	3.88	7.39	9.31	10.69	12.99	17.70	21.53	25.88	29.79
	50	0.88	1.13	1.41	1.72	2.11	2.56	3.01	4.12	7.83	9.87	10.95	13.30	18.22	22.13	26.55	30.51
	60	0.93	1.19	1.49	1.82	2.24	2.71	3.19	4.38	8.29	10.47	11.12	13.57	18.69	22.66	27.15	31.15
	70	0.98	1.25	1.57	1.94	2.37	2.87	3.38	4.65	8.77	11.10	11.40	13.81	19.12	23.14	27.69	31.70
	80	1.03	1.32	1.66	2.08	2.50	3.07	3.58	4.93	9.28	11.58	11.74	14.02	19.51	23.57	28.16	32.17
	90	1.08	1.39	1.75	2.19	2.64	3.25	3.79	5.22	9.79	11.75	12.41	14.21	19.79	23.87	28.46	32.42
	100	1.13	1.46	1.84	2.31	2.78	3.43	4.00	5.52	10.32	11.91	13.10	14.38	20.20	24.31	28.95	32.92
DIMENSIONS	L	3'-4"	3'-7½"	3'-11"	4'-2½"	4'-6"	4'-9½"	5'-1"	5'-8"	6'-11"	7'-6"	8'-1"	8'-8"	9'-7"	10'-2"	10'-9"	11'-4"
	W	2'-4"	2'-7½"	2'-11"	3'-2½"	3'-6"	3'-9½"	4'-1"	4'-8"	5'-7"	6'-2"	6'-9"	7'-4"	8'-1"	8'-8"	9'-3"	9'-10"
	H	1'-8"	1'-11¼"	2'-2½"	2'-5¾"	2'-9"	3'-0¼"	3'-3½"	3'-10"	4'-6½"	5'-1"	5'-7½"	6'-2"	6'-9½"	7'-4"	7'-10½"	8'-5"
	D	1'-0"	1'-0"	1'-0"	1'-0"	1'-0"	1'-0"	1'-0"	1'-0"	1'-6"	1'-6"	1'-6"	1'-8"	1'-8"	1'-8"	2'-0"	2'-0"
	T	6"	6"	6"	6"	6"	6"	6"	6"	8"	8"	8"	8"	9"	9"	9"	9"

END ANCHOR FOR PIPE OUTLET (CLASS "A" CONCRETE)

DIMENSIONS	L	2'-4"	2'-8"	2'-9"	3'-3"	3'-6"	3'-10"	4'-1"	4'-0"	5'-3"	5'-10"	6'-5"	7'-0"	7'-7"	8'-2"	8'-9"	9'-4"
	H ON EARTH	1'-6"	1'-6"	1'-6"	1'-6"	1'-6"	1'-6"	1'-6"	1'-6"	2'-0"	2'-0"	2'-0"	2'-0"	2'-0"	2'-0"	2'-0"	2'-0"
	H ON ROCK	1'-0"	1'-0"	1'-0"	1'-0"	1'-0"	1'-0"	1'-0"	1'-0"	1'-0"	1'-0"	1'-0"	1'-0"	1'-0"	1'-0"	1'-0"	1'-0"
VOLUME CU. YD.	ON EARTH	0.13	0.15	0.16	0.18	0.19	0.21	0.23	0.26	0.39	0.43	0.48	0.52	0.56	0.61	0.65	0.69
	ON ROCK	0.09	0.10	0.10	0.12	0.13	0.14	0.15	0.17	0.19	0.22	0.24	0.26	0.28	0.31	0.33	0.35

NOTES

CIRCULAR PIPE INCLUDES SLIGHTLY ELLIPTICAL CONCRETE PIPE WITH CIRCULAR REINFORCEMENT.
VOLUME DISPLACED BY BARREL OF PIPE HAS BEEN COMPUTED USING INSIDE DIMENSION OF PIPE.
THE UNIT PRICE BID PER CU. YD. FOR CLASS "A" CONCRETE SHALL INCLUDE ALL FORMS, MATERIAL, LABOR, ETC. INCIDENTAL TO CONSTRUCTION.
FOR GRADE BREAKS IN PIPE, USE AVERAGE GRADE TO CALCULATE VOLUMES.

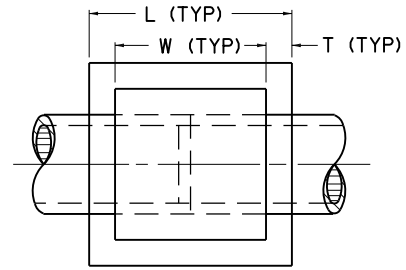

PLAN VIEW

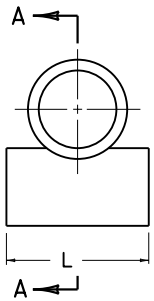

END ELEVATION

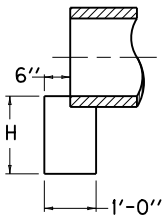

SECTION A-A

END ANCHOR FOR PIPE OUTLET

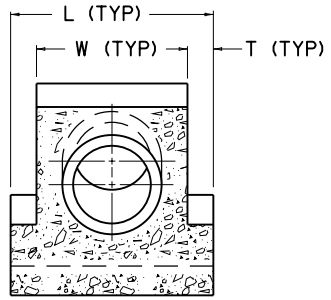

SECTION X-X

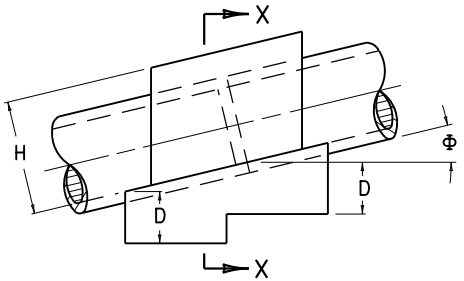

ELEVATION VIEW

INTERMEDIATE ANCHOR

KENTUCKY
DEPARTMENT OF HIGHWAYS

INTERMEDIATE
AND END ANCHORS
FOR CIRCULAR PIPE

STANDARD DRAWING NO. RDX-060-03

SUBMITTED John B. Sachatello — DIRECTOR DIVISION OF DESIGN — 12-1-99 DATE

APPROVED F. N. Powell — STATE HIGHWAY ENGINEER — 12-1-99 DATE

~INTERMEDIATE ANCHOR~

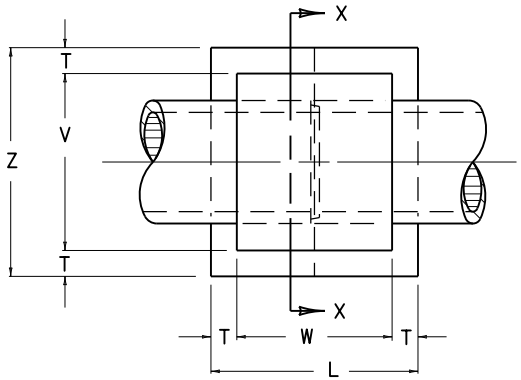

PLAN

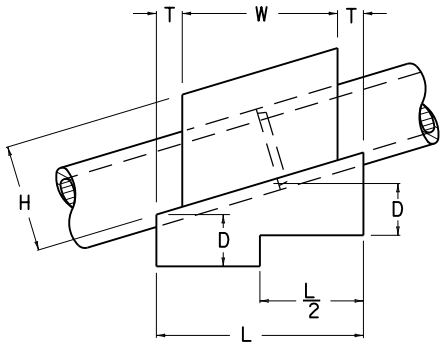

ELEVATION

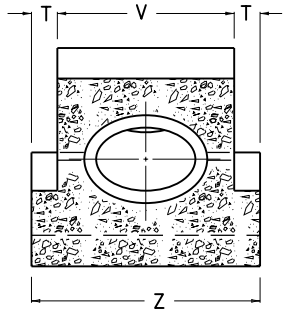

SECTION X-X

~END ANCHOR~

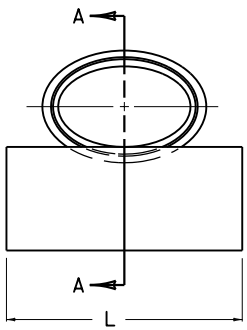

END ELEVATION

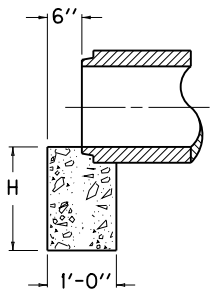

SECTION A-A

NOTES

1. THE UNIT PRICE BID PER CU. YD. FOR CLASS "A" CONCRETE SHALL INCLUDE ALL FORMS, MATERIALS, LABOR, ETC. INCIDENTAL TO CONSTRUCTION.
2. VOLUME DISPLACED BY BARREL OF PIPE HAS BEEN COMPUTED USING DIMENSION OF PIPE.
3. FOR GRADE BREAKS IN PIPE, USE AVERAGE GRADE TO CALCULATE VOLUMES.

~INTERMEDIATE ANCHOR FOR PIPE~

NON-CIRCULAR PIPE: EQUIVALENT ROUND SIZES

	% GRADE	15''	18''	24''	27''	30''	33''	36''	39''	42''	48''	54''	60''
VOLUME IN CU. YDS. OF CLASS "A" CONCRETE FOR ONE ANCHOR	0	.98	1.22	1.80	2.18	2.57	2.98	3.54	4.60	6.65	8.04	10.66	8.23
	10	1.08	1.27	1.88	2.28	2.69	3.12	3.70	4.83	6.86	8.42	11.20	9.20
	20	1.16	1.32	1.95	2.36	2.80	3.25	3.85	5.04	7.13	8.77	11.70	10.00
	30	1.24	1.36	2.02	2.44	2.90	3.37	3.99	5.23	7.39	9.10	12.16	10.72
	40	1.32	1.40	2.08	2.53	2.99	3.47	4.12	5.41	7.69	9.39	12.59	11.37
	50	1.40	1.45	2.14	2.60	3.08	3.58	4.23	5.57	7.84	9.67	12.97	11.94
	60	1.42	1.49	2.20	2.67	3.14	3.67	4.34	5.72	8.05	9.92	13.33	12.47
	70	1.47	1.53	2.26	2.72	3.24	3.76	4.44	5.86	8.24	10.16	13.67	12.94
	80	1.51	1.57	2.31	2.76	3.31	3.84	4.53	5.99	8.41	10.38	13.98	13.37
	90	1.54	1.60	2.37	2.83	3.39	3.92	4.62	6.12	8.58	10.58	14.27	13.75
	100	1.58	1.64	2.42	2.92	3.45	4.00	4.70	6.23	8.74	10.78	14.54	14.11
DIMENSIONS	L	3'-9''	4'-0''	4'-7''	4'-11''	5'-3''	5'-6''	5'-10''	6'-6''	7'-2''	7'-8''	9'-2''	9'-10''
	W	2'-9''	3'-0''	3'-7''	3'-11''	4'-3''	4'-6''	4'-10''	5'-4''	5'-10''	6'-4''	7'-8''	7'-6''
	H	1'-9''	2'-2''	2'-7''	2'-10''	3'-2''	3'-3''	3'-6''	3'-9''	4'-2''	4'-4''	4'-9''	5'-4''
	D	1'-0''								1'-6''			
	V	3'-0''	3'-5''	4'-1''	4'-5''	4'-10''	5'-2''	5'-6''	6'-1''	6'-7''	7'-3''	8'-2''	7'-6''
	T	6''							7''	8''		9''	8''
	Z	4'-0''	4'-5''	5'-1''	5'-5''	5'-10''	6'-2''	6'-6''	7'-3''	7'-11''	8'-7''	9'-8''	8'-10''

~END ANCHOR FOR PIPE OUTLET~

(CLASS "A" CONCRETE)

DIMENSIONS	L	3'-0''	3'-5''	4'-1''	4'-5''	4'-10''	5'-2''	5'-6''	6'-0''	6'-6''	7'-2''	7'-10''	7'-10''
	H ON EARTH	1'-6''								2'-0''			
	H ON ROCK	1'-0''											
VOLUME CU. YDS. (ONE ANCHOR)	EARTH	0.17	0.19	0.23	0.25	0.27	0.29	0.31	0.33	0.48	0.53	0.58	0.58
	ROCK	0.11	0.13	0.15	0.16	0.18	0.19	0.20	0.22	0.24	0.27	0.29	0.29

KENTUCKY
DEPARTMENT OF HIGHWAYS

INTERMEDIATE AND
END ANCHORS FOR
NON CIRCULAR PIPE

STANDARD DRAWING NO. RDX-065-03

SUBMITTED John B. Sachatzke — DIRECTOR DIVISION OF DESIGN — 12-1-99 DATE

APPROVED J. M. Yowell — STATE HIGHWAY ENGINEER — 12-1-99 DATE

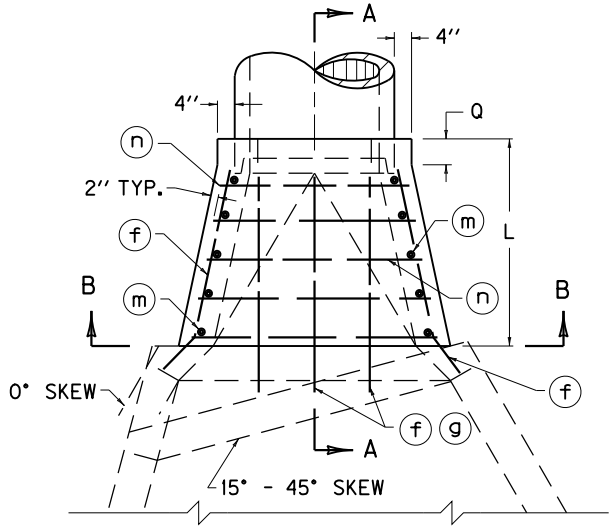

PLAN VIEW

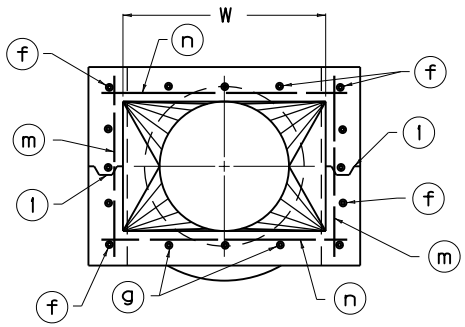

SECTION B-B

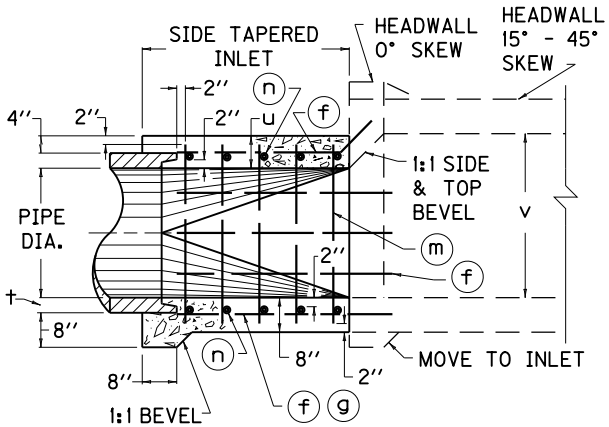

SECTION A-A

DIMENSIONS AND QUANTITIES												
PIPE DIA.	30''		36''		42''		48''		54''		60''	
ELLIPT. EQUIV. HDWL. TO USE	42''		48''		54''		60''		66''		72''	
NO. 5 BARS	QTY.	LENGTH	QTY.	LENGTH	QTY.	LENGTH	QTY.	LENGTH	QTY.	LENGTH	QTY.	LENGTH
f	13	4'-2''	14	4'-2''	16	5'-2''	17	5'-2''	19	5'-2''	22	6'-2''
g	3	4'-2''	4	4'-2''	4	5'-2''	5	5'-2''	5	5'-2''	6	6'-2''
m	10	3'-6''	10	4'-0''	12	4'-6''	12	5'-0''	12	5'-8''	14	6'-2''
n1	2	3'-8''	2	4'-2''	2	4'-8''	2	5'-2''	2	5'-8''	2	6'-0''
n2	2	3'-11''	2	4'-6''	2	5'-0''	2	5'-6''	2	6'-0''	2	6'-4''
n3	2	4'-2''	2	4'-10''	2	5'-4''	2	5'-10''	2	6'-4''	2	6'-8''
n4	2	4'-6''	2	5'-2''	2	5'-8''	2	6'-2''	2	6'-8''	2	7'-0''
n5	2	4'-9''	2	5'-6''	2	6'-0''	2	6'-6''	2	7'-0''	2	7'-4''
n6	-	-	-	-	2	6'-4''	2	6'-10''	2	7'-4''	2	7'-8''
n7	-	-	-	-	-	-	-	-	-	-	2	8'-0''
LBS. STEEL	150		170		233		256		282		372	
CU. YD. CONC.	1.38		1.66		2.48		2.87		3.28		4.47	
L	4'-0''		4'-0''		5'-0''		5'-0''		5'-0''		6'-0''	
W	3'-11''		4'-7''		5'-4''		6'-1''		6'-9''		7'-6''	
Q	0'-6''		0'-8''		0'-10''		1'-0''		1'-2''		1'-6''	
u	0'-7½''		0'-8''		0'-8½''		0'-9''		0'-9½''		0'-10''	
v	3'-2''		3'-8''		4'-2''		4'-8''		5'-2''		5'-8''	
t	0'-3½''		0'-4''		0'-4½''		0'-5''		0'-5½''		0'-6''	

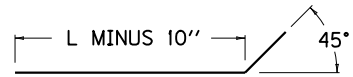

f BAR DETAIL

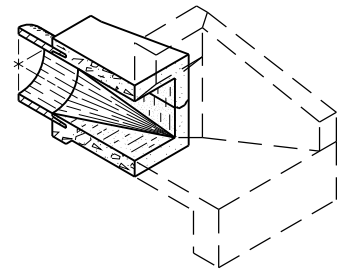

ISOMETRIC OF SECTION A-A
(0° SKEW HEADWALL SHOWN)

NOTES

1. CONSTRUCTION JOINT PERMITTED.
2. THIS INLET SHALL BE CONSTRUCTED IN ACCORDANCE WITH THE CURRENT STANDARD SPECIFICATIONS, AS APPLICABLE.
3. SHOULD INLET DIMENSIONS CONFLICT WITH THOSE OF THE HEADWALL, THE INLET SHALL GOVERN.
4. INLET QUANTITIES SHALL BE COMBINED WITH HEADWALL QUANTITIES. NOTES SHALL APPEAR ON THE PIPE DRAINAGE SUMMARY INDICATING THIS INCLUSION.
5. THE INLET INTERIOR SHALL TAPER FROM A RECTANGULAR OPENING AT THE HEADWALL JUNCTION TO A CIRCULAR CONFIGURATION AT THE PIPE. (NOTE THE 1:1 TOP AND SIDE BEVELS TO BE CONSTRUCTED ON THE HEADWALL PORTION.
6. MINOR MODIFICATIONS IN THIS DESIGN, SUCH AS TRANSITIONING FROM ELLIPTICAL TO CIRCULAR, MAY BE MADE IF APPROVED IN WRITING BY THE ENGINEER.
7. ENCIRCLED LETTERS, ◯, INDICATE STEEL REINFORCING BAR LOCATIONS.
8. FIVE PERCENT (5%) VERTICAL ELONGATION OF METAL PIPE SHALL BE ELIMINATED AND MADE ROUND FOR 48'', 54'', AND 60'' PIPE WHERE IT JOINS THE INLET.

KENTUCKY
DEPARTMENT OF HIGHWAYS

SIDE TAPERED INLETS
30'' TO 60'' DIA.
ALL SLOPES - ALL SKEWS

STANDARD DRAWING NO. RDX-150-05

SUBMITTED Gary L. Sharp — DIRECTOR DIVISION OF DESIGN — 12-2-02 DATE

APPROVED J. M. Yowell — STATE HIGHWAY ENGINEER — 12-2-02 DATE

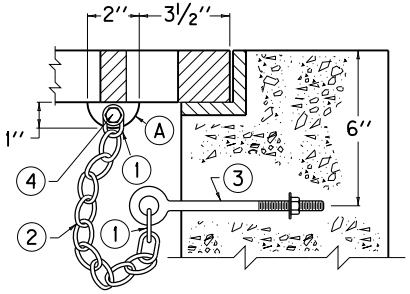

GRATE CONNECTED TO WALL

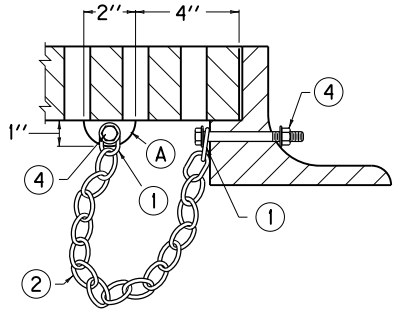

GRATE CONNECTED TO FRAME

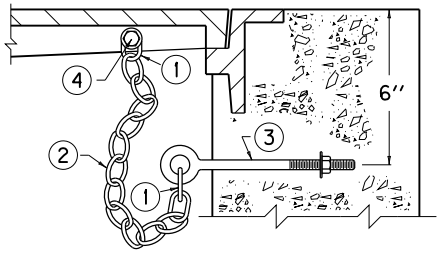

LID CONNECTED TO WALL

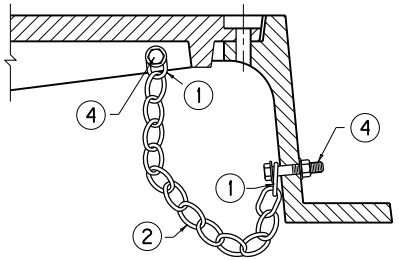

LID CONNECTED TO FRAME

TYPICAL ILLUSTRATIONS FOR CASTINGS

NOTES

1. CHAIN SHACKLE, OR COLD SHUT OF AN APPROVED TYPE.
2. 3/16'' PROOF COIL CHAIN OF SUFFICIENT LENGTH TO ALLOW REMOVAL AND DISPLACEMENT OF GRATE OR LID.
3. 3/8'' × 6'' EYE BOLT, NUT, AND WASHER.
4. 3/8'' HEX HEAD CAP SCREW (GRADE 2), NUT AND WASHERS. LENGTH DETERMINED BY THICKNESS OF FRAME OR GRATE. 7/16'' DIA. HOLE FOR CAP SCREW. BATTER THREADS ON CAP SCREW TO PREVENT REMOVAL OF NUT.
5. 3/8'' EYE BOLT (LENGTH DETERMINED BY THE FRAME DIMENSION).
6. ALL EYE BOLTS SHALL HAVE A CONTINUOUS OR SOLID EYE.
7. ALL HARDWARE SHALL BE GALVANIZED AND OF COMMERICAL QUALITY AND SHALL BE APPROVED BY THE ENGINEER.
8. THE COST OF THE COMPLETE SECURITY DEVICE, INSTALLED, SHALL BE INCIDENTAL TO THE COST OF THE STRUCTURE.
9. THE DESIGNS SHOWN ARE ACCEPTABLE; HOWEVER ARE SUBJECT TO CHANGE IF APPROVED IN WRITING BY THE ENGINEER.

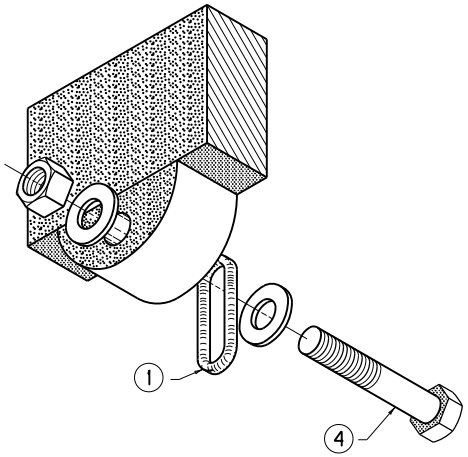

(A)

LUG ON CENTER CROSS MEMBER
AND BOLT ASSEMBLY
(AXONOMETRIC VIEW)

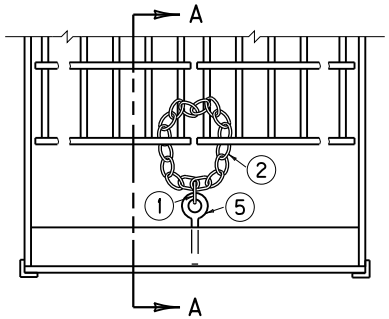

PLAN VIEW

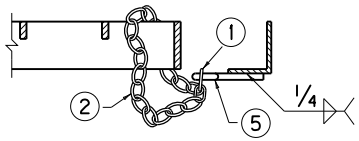

SECTION A-A
GRATE CONNECTED TO FRAME

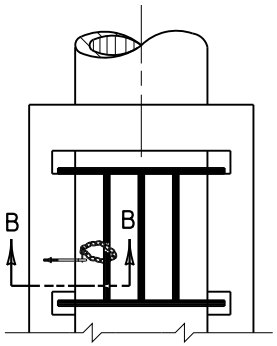

PLAN VIEW

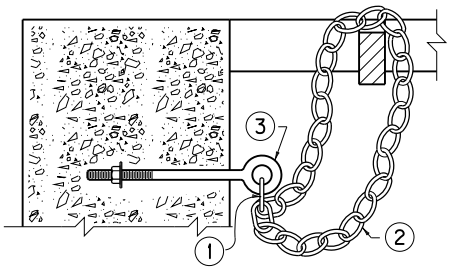

SECTION B-B

GRATE CONNECTED TO WALL

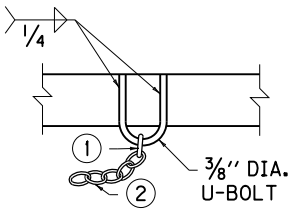

ALTERNATE FOR
STRUCTURAL STEEL
MEMBERS

TYPICAL ILLUSTRATIONS FOR STRUCTURAL STEEL UNITS

KENTUCKY
DEPARTMENT OF HIGHWAYS

SECURITY DEVICES FOR
FRAMES, GRATES
AND LIDS

STANDARD DRAWING NO. RDX-160-05

SUBMITTED John B. Lockstrike — DIRECTOR DIVISION OF DESIGN — 12-1-99 DATE

APPROVED F. M. Newell — STATE HIGHWAY ENGINEER — 12-1-99 DATE

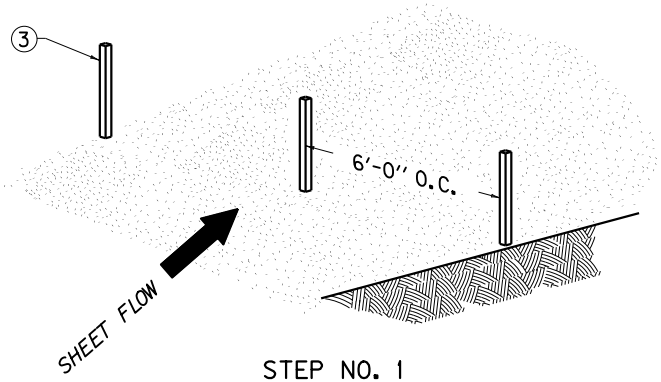

STEP NO. 1

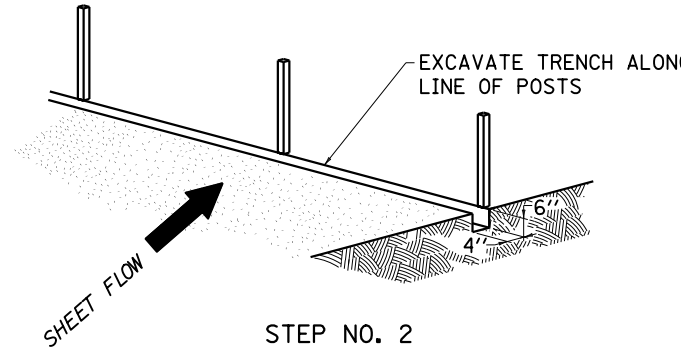

STEP NO. 2

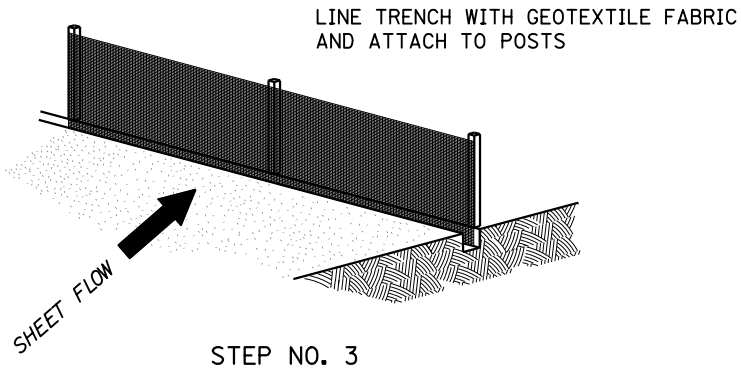

STEP NO. 3

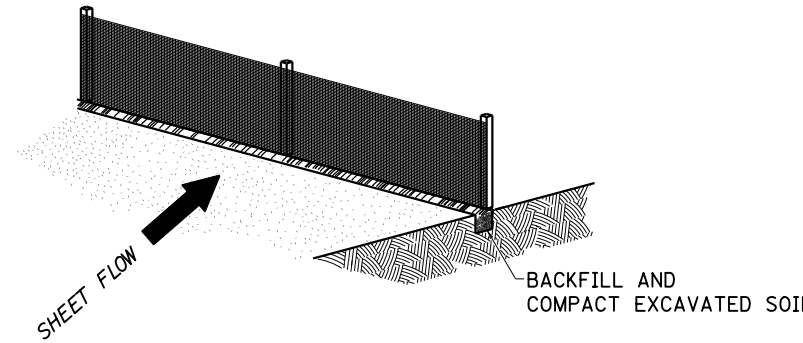

STEP NO. 4

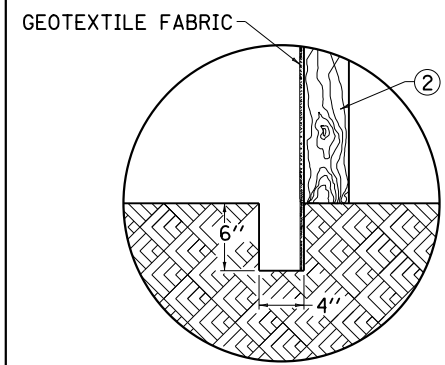

SECTIONAL DETAIL

NOTES

1. SEE STANDARD SPECIFICATIONS FOR POST SIZE, GEOTEXTILE FABRIC, WIRE STAPLES AND ALL OTHER PERTINENT INFORMATION.

(2) POSTS MAY BE WOODEN OR METAL T-SECTION.

(3) POSTS SHALL BE SET 1'-4" DEEP.

KENTUCKY
DEPARTMENT OF HIGHWAYS

TEMPORARY
SILT FENCE

STANDARD DRAWING NO. RDX-210-02

SUBMITTED John B. Sachatzka — ASST. DIRECTOR DIVISION OF DESIGN — 12-1-99 DATE

APPROVED J. M. Yancell — STATE HIGHWAY ENGINEER — 12-1-99 DATE

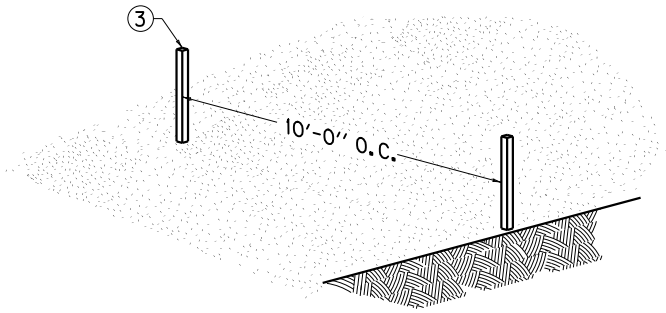

STEP NO. 1

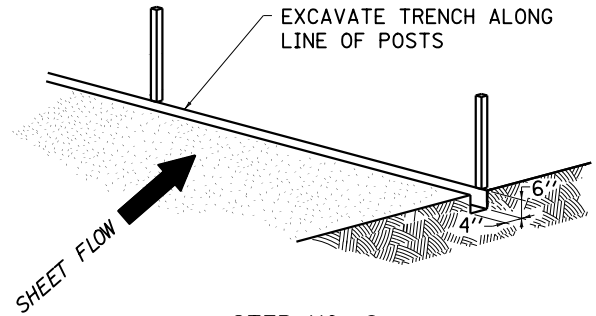

STEP NO. 2

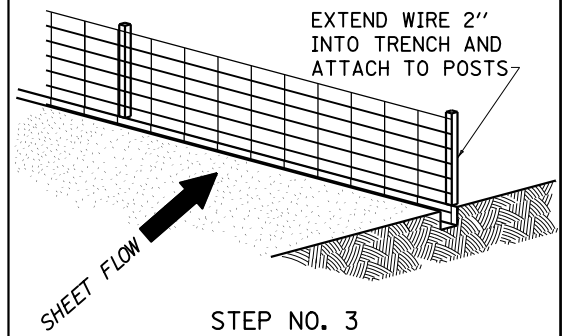

STEP NO. 3

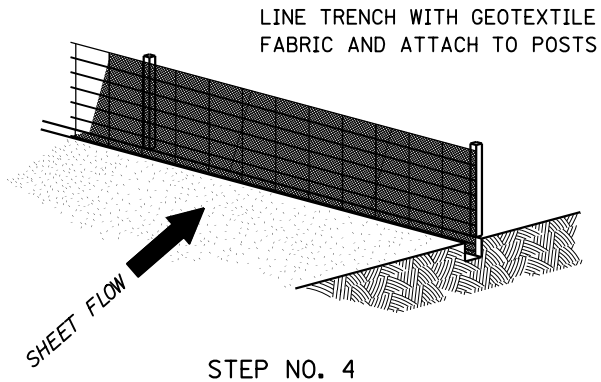

STEP NO. 4

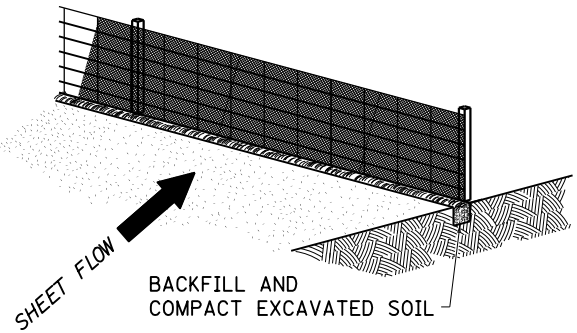

STEP NO. 5

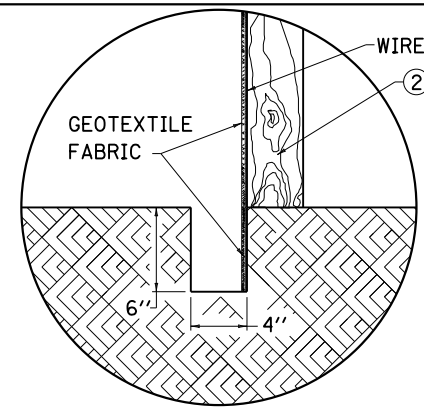

SECTIONAL DETAIL

NOTES

1. SEE STANDARD SPECIFICATIONS FOR POST SIZE, WOVEN WIRE FENCE FABRIC, GEOTEXTILE FABRIC, WIRE STAPLE AND ALL OTHER PERTINENT INFORMATION.

(2) POSTS MAY BE WOODEN OR METAL T-SECTION.

(3) POSTS SHALL BE SET 1'-4" DEEP.

KENTUCKY
DEPARTMENT OF HIGHWAYS

TEMPORARY SILT FENCE
WITH
WOVEN WIRE FENCE FABRIC

STANDARD DRAWING NO. RDX-215

SUBMITTED John B. Lockstrider — DIRECTOR DIVISION OF DESIGN — 12-1-99 DATE

APPROVED F. M. Newell — STATE HIGHWAY ENGINEER — 12-1-99 DATE

ALTERNATE NO. 1

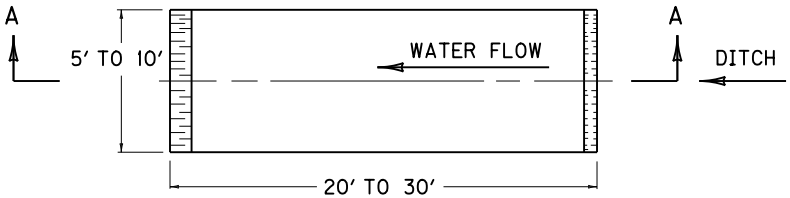

PLAN VIEW

SECTION A-A

ALTERNATE NO. 2

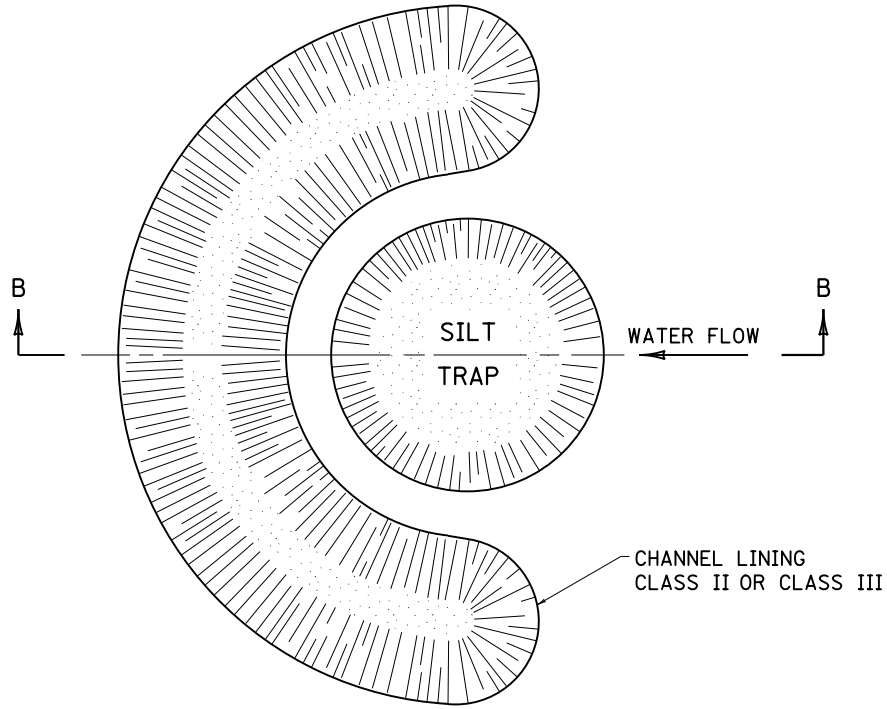

PLAN VIEW

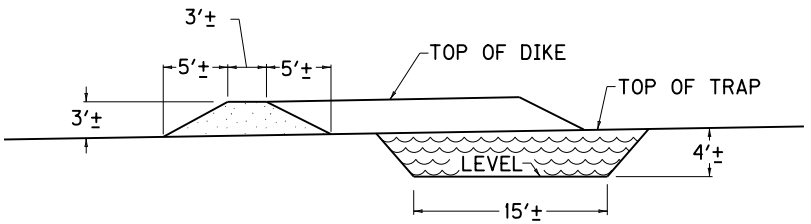

SECTION B-B

~NOTES~

BID ITEM AND UNIT TO BID:

CODE	PAY ITEM	PAY UNIT
2703	SILT TRAP TYPE A	EACH
2706	CLEAN SILT TRAP TYPE A	EACH

THE SIZE, SHAPE AND LOCATION OF TRAP MAY BE ADJUSTED FROM THAT SHOWN IN THE PLANS, AS DIRECTED BY THE ENGINEER.

THE SILT TRAP SHALL BE CONSTRUCTED AS DIRECTED BY THE ENGINEER TO MEET VOLUME REQUIREMENTS INDICATED ON THE PLANS.

MATERIAL REMOVED IN THE PROCESS OF CONSTRUCTING SILT TRAP TYPE A SHALL BE WASTED ON SITE AT NO ADDITIONAL COST.

KENTUCKY
DEPARTMENT OF HIGHWAYS

SILT TRAP
TYPE A

STANDARD DRAWING NO. RDX-220-04

SUBMITTED: DIRECTOR DIVISION OF DESIGN — DATE 11-21-07

APPROVED: STATE HIGHWAY ENGINEER — DATE 11-21-07

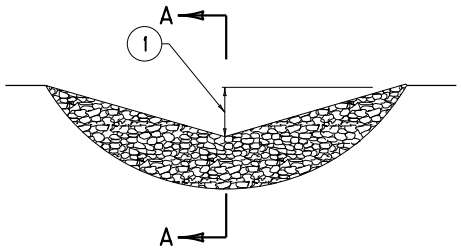

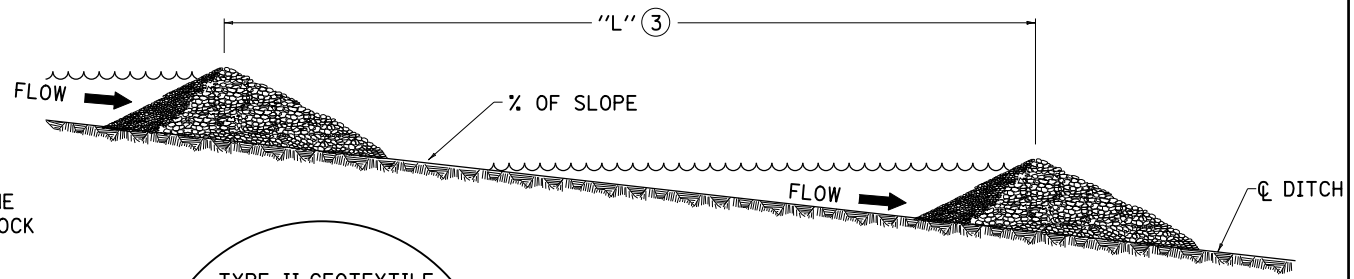

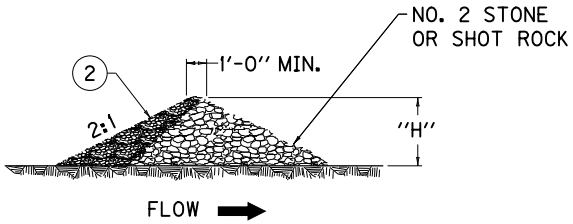

SECTION "A~A"

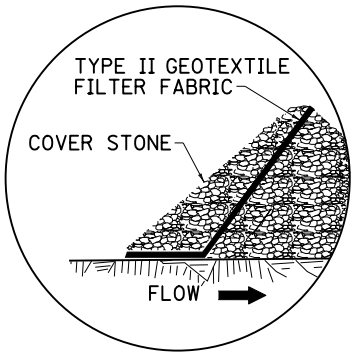

DETAIL "A"

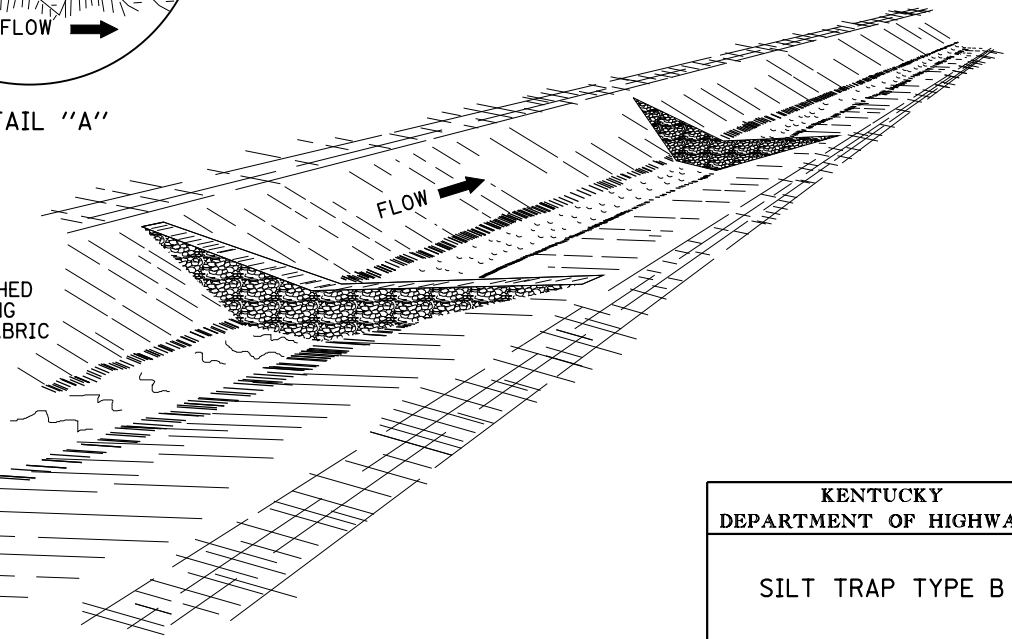

~NOTES~

BID ITEM AND UNIT TO BID:

CODE	PAY ITEM	PAY UNIT
2704	SILT TRAP TYPE B	EACH
2707	CLEAN SILT TRAP TYPE B	EACH

1. MIDDLE OF SILT TRAP SHALL BE A MINIMUM OF 1'-0" LOWER THAN SIDES SO FLOW WILL NOT BYPASS TRAP OR ERODE BANKS.
2. UPSTREAM FACE OF SILT TRAP SHALL BE A FOUR INCH MIN. LAYER OF CRUSHED AGGREGATE HAVING 100% PASSING A 3" SIEVE AND NO MORE THAN 5% PASSING A NO. 8 SIEVE (SEE SECTION "A-A"). LINE UPSTREAM FACE WITH FILTER FABRIC UP TO BOTTOM OF THE V AND COVER FABRIC WITH STONE TO HOLD IN PLACE (SEE DETAIL "A").
3. $\text{"L"} = \dfrac{\text{"H"}}{\text{SLOPE OF DITCH}}$
4. SPACE SILT TRAPS AT LOCATIONS AS SHOWN ON THE PLANS OR AS DIRECTED BY THE ENGINEER.

5. SILT TRAP TYPE B SHALL BE USED ON ALL SLOPES GREATER THAN 2%.
6. SILT TRAP TYPE B MAY BE USED ON ALL SLOPES LESS THAN 2%.

KENTUCKY
DEPARTMENT OF HIGHWAYS

SILT TRAP TYPE B

STANDARD DRAWING NO. RDX-225

SUBMITTED: DIRECTOR DIVISION OF DESIGN — DATE 11-21-07

APPROVED: STATE HIGHWAY ENGINEER — DATE 11-21-07

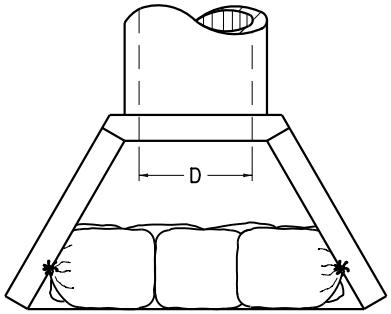

PLAN VIEW

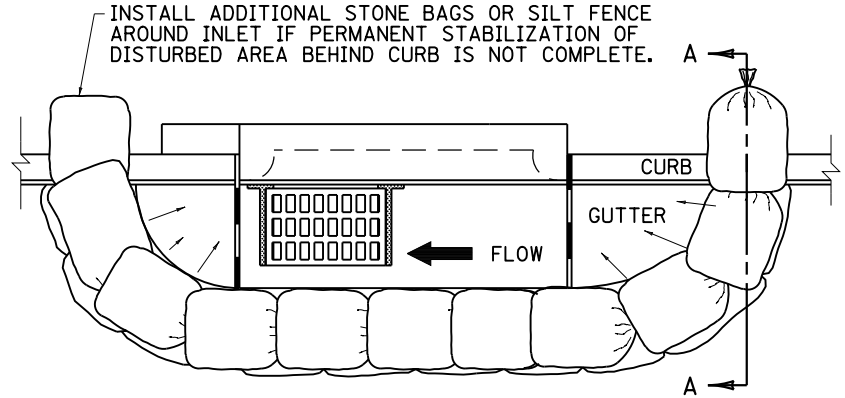

PLAN VIEW

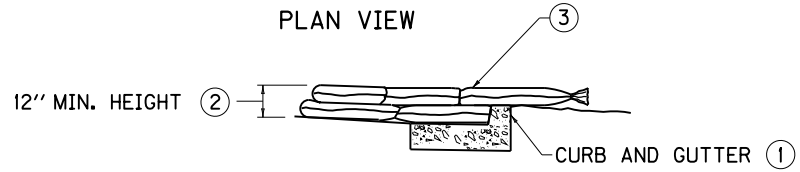

SECTION A~A

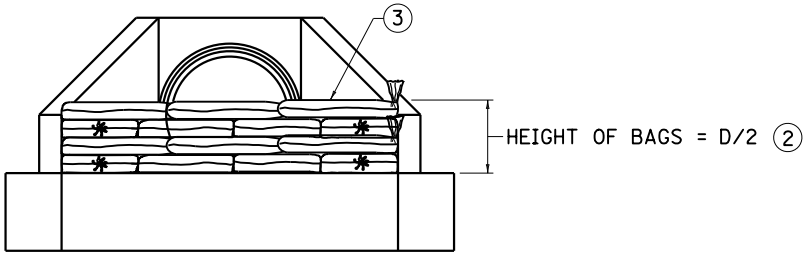

FRONT ELEVATION

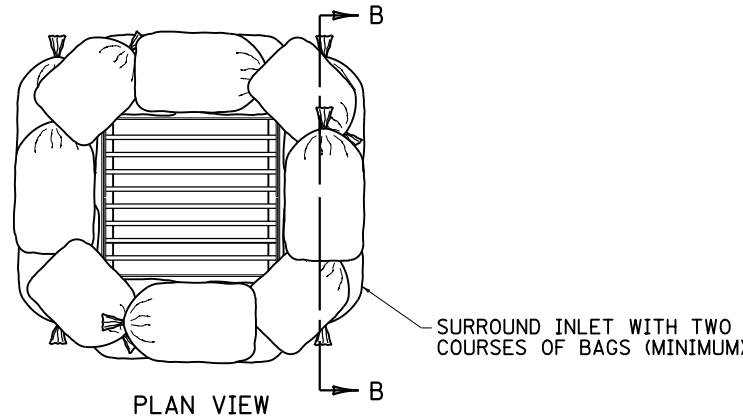

PLAN VIEW

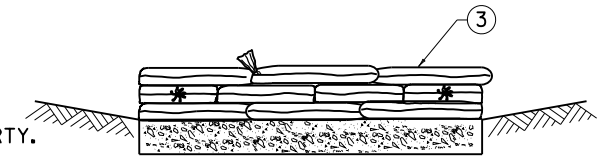

SECTION B~B

~NOTES~

SILT TRAP TYPE C SHALL INCLUDE GEOTEXTILE FABRIC BAGS, NO. 57 STONE, LABOR AND ALL INCIDENTALS NECESSARY FOR ONE COMPLETE INSTALLATION.

BID ITEM AND UNIT TO BID:

CODE	PAY ITEM	PAY UNIT
2705	SILT TRAP TYPE C	EACH
2708	CLEAN SILT TRAP TYPE C	EACH

1. INLET PROTECTION IS SUITABLE FOR USE IN BOTH PAVED AND UNPAVED AREAS.
2. THE HEIGHT REQUIREMENT IS WAIVED IN CASES WHERE IT WILL CREATE AN UNACCEPTABLE PONDING SITUTATION ON THE PAVEMENT OR ON AN ADJACENT PROPERTY.
3. INTERWEAVE BAG ENDS TO FILL GAPS BETWEEN BAGS.
4. CONSTRUCT 18" X 30" BAGS OF NON-WOVEN TYPE II GEOTEXTILE FABRIC CONFORMING TO SECTION 843 OF THE STANDARD SPECIFICATIONS. DOUBLE STITCH BAG SEAMS WITH 1 LB. POLYESTER THREAD. ATTACH ONE (1) TIE STRING TO EACH BAG. BAG OPENING SHALL BE ON 18" SIDE.
5. FILL BAGS WITH NO. 57 STONE BETWEEN 1/2 TO 2/3 FULL (50 LB TO 60 LB).
6. SILT TRAP TYPE C SHALL NOT BE USED IN BLUE LINE STREAMS.

KENTUCKY
DEPARTMENT OF HIGHWAYS

SILT TRAP TYPE C

STANDARD DRAWING NO. RDX-230

SUBMITTED David Kratt DIRECTOR DIVISION OF DESIGN 11-21-07 DATE

APPROVED Marcelyn Mathews STATE HIGHWAY ENGINEER 11-21-07 DATE

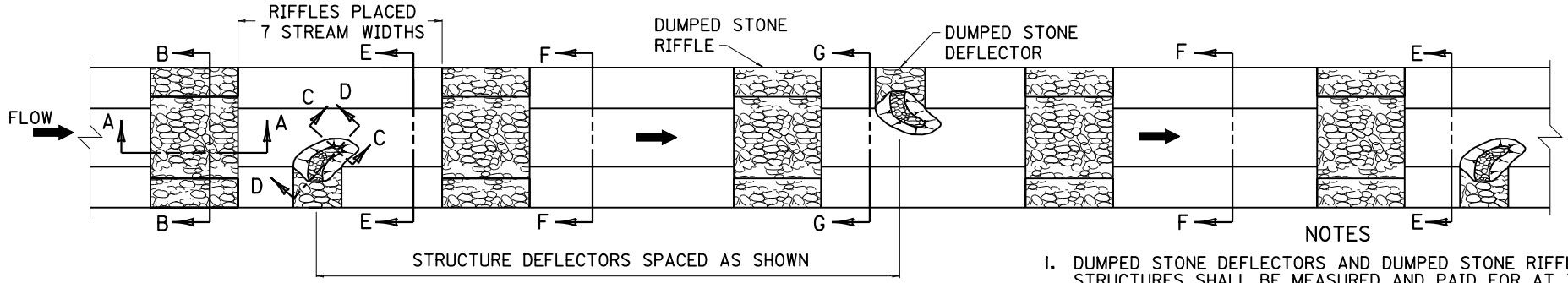

PLAN VIEW

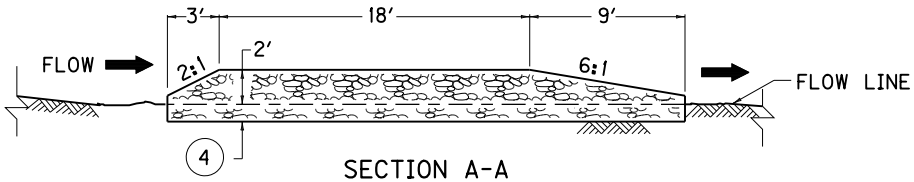

SECTION A-A

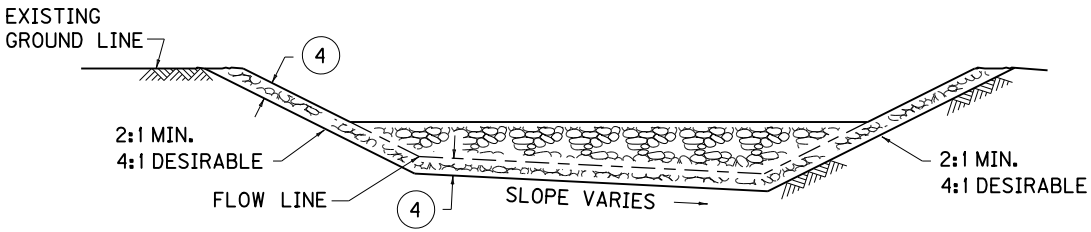

SECTION B-B

NOTES

1. DUMPED STONE DEFLECTORS AND DUMPED STONE RIFFLE STRUCTURES SHALL BE MEASURED AND PAID FOR AT THE CONTRACT UNIT PRICE PER TON, AND SHALL INCLUDE ROCK, LABOR AND ALL INCIDENTALS NECESSARY FOR ONE COMPLETE INSTALLATION.

ITEM CODE	PAY ITEM	PAY UNIT
2617	DEFLECTOR - DUMPED STONE	TON
2738	RIFFLE STRUCTURE - DUMPED STONE	TON

2. LOCATION OF STRUCTURES ARE AS NOTED IN THE PLANS. MINOR ADJUSTMENTS ARE PERMITTED UPON APPROVAL BY THE ENGINEER.
3. ROCK USED TO CONSTRUCT RIFFLE STRUCTURES AND DUMP STONE DEFLECTORS SHALL CONSIST OF 80% IN THE RANGE OF FOUR (4) TO EIGHT (8) CUBIC FEET AND 20% SMALLER STONE TO FILL VOIDS.
4. ROCK SHALL BE KEYED ONE (1) TO TWO (2) FEET BELOW THE PROPOSED CHANNEL FLOW LINE AND/OR CHANNEL BANK.
5. DUMPED STONE DEFLECTORS AND DUMPED STONE RIFFLE STRUCTURES SHALL BE REQUIRED ON BLUELINE STREAM CHANNEL CHANGES WHEN THE CHANNEL CHANGE FLOW LINE IS EQUAL TO OR LESS THAN 3%, AND THE CHANNEL CHANGE IS 200 LINEAR FEET OR GREATER.
6. SEE PLANS FOR CHANNEL MITIGATION LOCATIONS.
7. WHEN PIPES ARE INVOLVED IN CHANNEL CHANGES CUT THE CHANNEL TO CONFORM WITH SECTION F-F, A DISTANCE OF 20 FEET FROM THE INLET AND OUTLET ENDS OF PIPE.

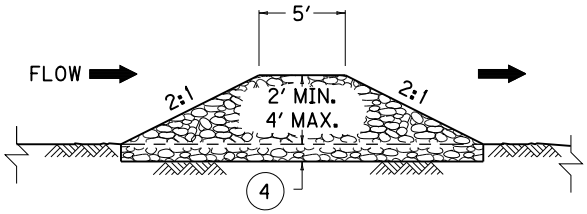

SECTION C-C

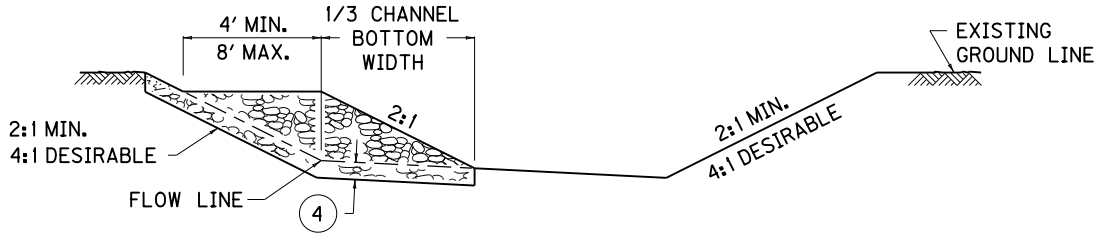

SECTION D-D

DRAWING NOT TO SCALE

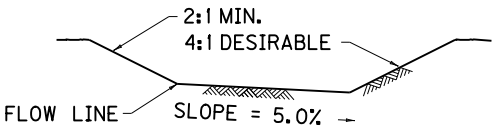

SECTION E-E

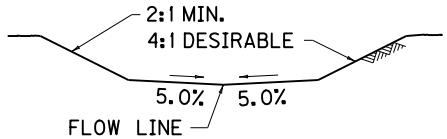

SECTION F-F

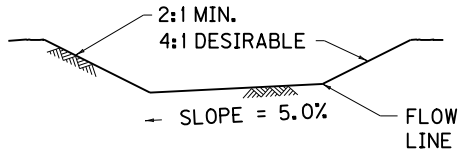

SECTION G-G

KENTUCKY
DEPARTMENT OF HIGHWAYS

CHANNEL HABITAT
IMPROVEMENT STRUCTURES
(DUMPED STONE)

STANDARD DRAWING NO. RDX-240-03

SUBMITTED John B. Sachatello — DIRECTOR DIVISION OF DESIGN — DATE 12-1-99

APPROVED F. M. Newell — STATE HIGHWAY ENGINEER — DATE 12-1-99

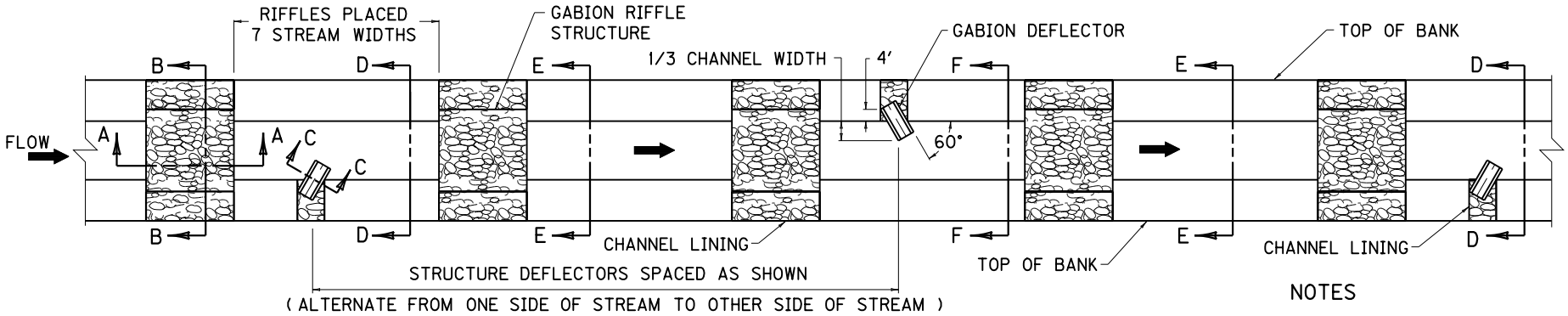

PLAN VIEW

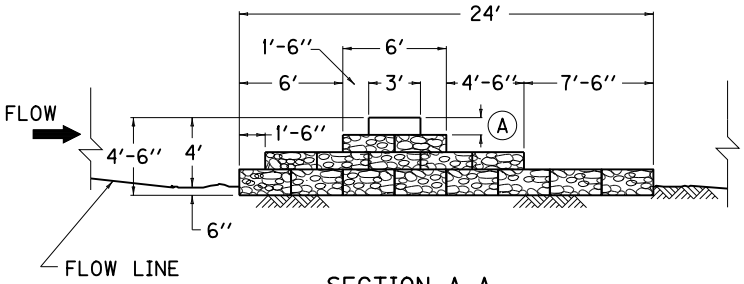

SECTION A-A

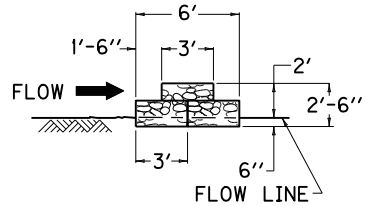

SECTION C-C

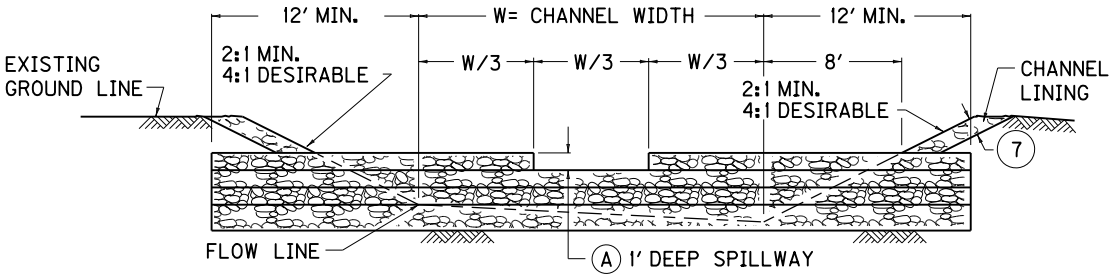

SECTION B-B

NOTES

1. GABION DEFLECTORS AND GABION RIFFLE STRUCTURES SHALL BE MEASURED AND PAID FOR AT THE CONTRACT UNIT PRICE EACH, AND SHALL INCLUDE GABION BASKETS, AGGREGATE, LABOR AND ALL INCIDENTALS NECESSARY FOR ONE COMPLETE INSTALLATION.

ITEM CODE	PAY ITEM	PAY UNIT
2618	DEFLECTOR - GABION	EACH
2622	RIFFLE STRUCTURE - GABION	EACH
2484	CHANNEL LINING CLASS III	TON

2. LOCATION OF STRUCTURES ARE AS NOTED IN THE PLANS. MINOR ADJUSTMENTS ARE PERMITTED UPON APPROVAL BY THE ENGINEER.
3. AGGREGATE USED TO FILL THE GABION BASKETS SHALL MEET THE REQUIREMENTS OF SECTION 805.13.06 OF THE CURRENT "STANDARD SPECIFICATIONS FOR ROAD AND BRIDGE CONSTRUCTION".
4. GABION BASKETS SHALL BE CONSTRUCTED IN ACCORDANCE WITH SECTION 618.03.05 OF THE CURRENT "STANDARD SPECIFICATIONS FOR ROAD AND BRIDGE CONSTRUCTION".
5. GABION DEFLECTORS AND GABION RIFFLE STRUCTURES SHALL BE REQUIRED ON BLUELINE STREAM CHANNEL CHANGES WHEN THE CHANNEL CHANGE FLOW LINE IS EQUAL TO OR LESS THAN 3%, AND THE CHANNEL CHANGE IS 200 LINEAR FEET OR GREATER.
6. GABIONS BASKETS SHALL COMPLY WITH SECTION 813.14 OF THE CURRENT "STANDARD SPECIFICATIONS FOR ROAD AND BRIDGE CONSTRUCTION".
7. ROCK SHALL BE KEYED ONE (1) TO TWO (2) FEET BELOW THE PROPOSED CHANNEL FLOW LINE AND/OR CHANNEL BANK.
8. SEE PLANS FOR CHANNEL MITIGATION LOCATIONS.
9. WHEN PIPES ARE INVOLVED IN CHANNEL CHANGES CUT THE CHANNEL TO CONFORM WITH SECTION E-E, A DISTANCE OF 20 FEET FROM THE INLET AND OUTLET ENDS OF PIPE.

DRAWING NOT TO SCALE

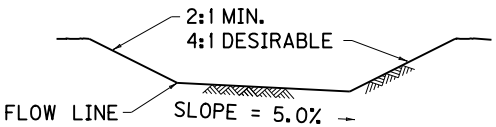

SECTION D-D

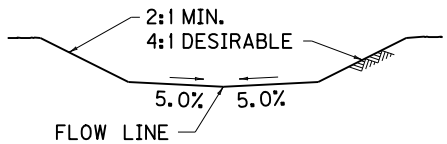

SECTION E-E

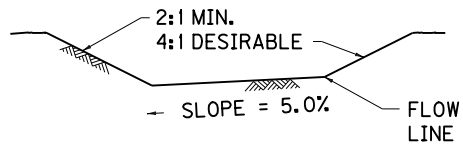

SECTION F-F

KENTUCKY
DEPARTMENT OF HIGHWAYS

CHANNEL HABITAT
IMPROVEMENT STRUCTURES
(GABIONS)

STANDARD DRAWING NO. RDX-245-03

SUBMITTED John B. Sachatello — DIRECTOR DIVISION OF DESIGN — 12-1-99 DATE

APPROVED J. M. Yowell — STATE HIGHWAY ENGINEER — 12-1-99 DATE

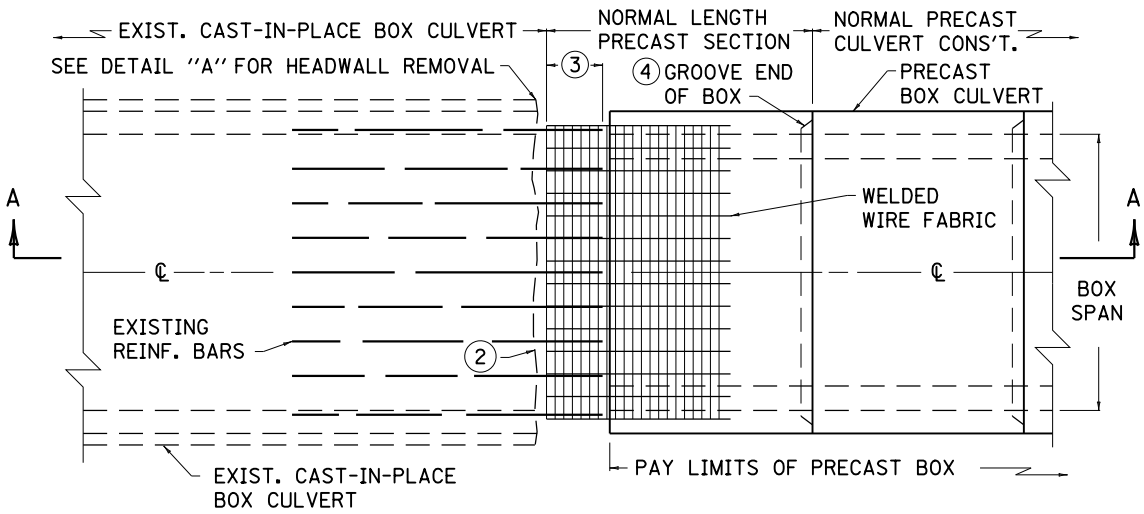

PLAN VIEW

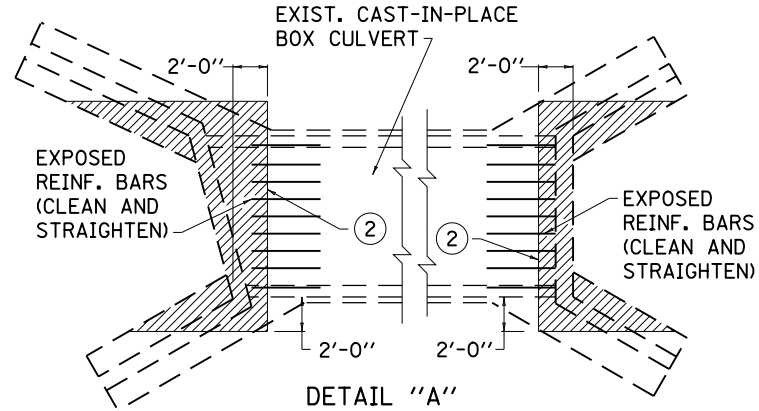

DETAIL "A"

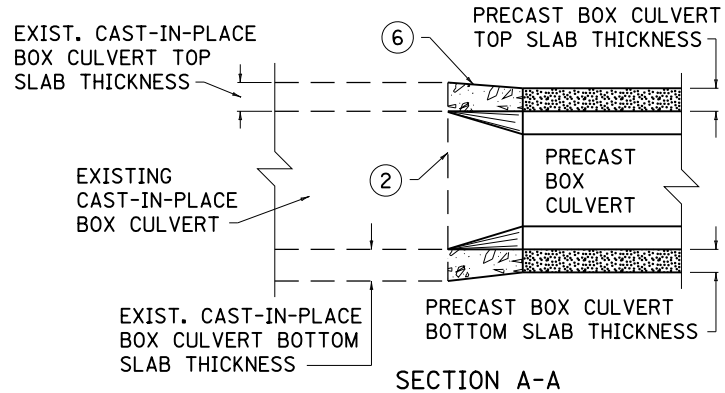

SECTION A-A
(SHOWING CAST-IN-PLACE SECTION)

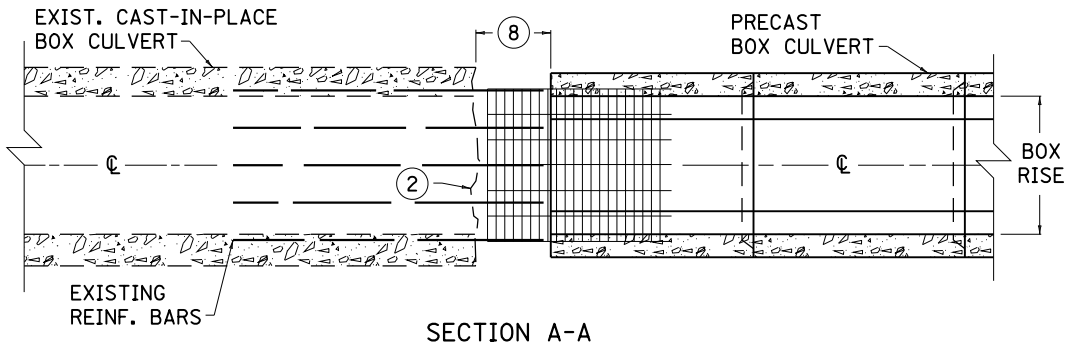

SECTION A-A
(SHOWING STEEL LAP)

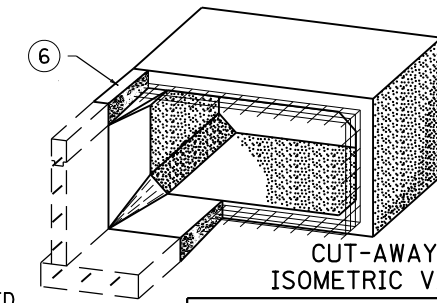

CUT-AWAY ISOMETRIC VIEW

NOTES

1. ▨ CONCRETE TO BE REMOVED BEFORE ATTACHING CULVERT EXTENSION.
2. BEFORE REMOVING ANY EXISTING CONCRETE, SAW AROUND THE PERIMETER OF REMOVAL AREA ON THE INTERIOR AND EXTERIOR OF THE CULVERT BARREL A DEPTH OF 1".
3. EXPOSED LONGITUDINAL STEEL IN EXISTING CULVERT LAPPED 1'-8" MIN. WITH EXPOSED MESH IN PRE-CAST BOX CULVERT. EXPOSED STEEL SHALL NOT BE KINKED OR BENT BY REMOVAL OPERATIONS. ANY STEEL THAT IS DAMAGED SHALL BE REPAIRED.
4. REINFORCING MESH IN THE PRE-CAST BOX CULVERT SHALL BE EXPOSED ON THE TONGUE END OF THE BOX. CONTRARY TO CURRENT SPECIFICATIONS THE GROOVE END OF THE BOX MAY BE LAID UPSTREAM OR DOWNSTREAM AS NECESSARY TO COMPLETE THE INSTALLATION.
5. EXISTING REMOVED CONCRETE SHALL BE PAID PER CU. YD. "REMOVING CONCRETE MASONRY".
6. CLASS D MODIFIED CONCRETE (MAX. SLUMP OF 3½") IN THE SPLICE SHALL BE PAID PER CU. YD. OF "CONCRETE-CLASS D MODIFIED".
7. EXPOSED LONGITUDINAL STEEL IN EXISTING CULVERT AND EXPOSED MESH IN PRE-CAST BOX CULVERT SHALL BE INCIDENTAL TO THE UNIT PRICE BID FOR "CONCRETE-CLASS D MODIFIED".
8. THE PRE-CAST BOX CULVERT EXTENSION SHALL BE PAID PER LINEAR FOOT OF "PRECAST CONC. BOX SECT. (SIZE)", WHICH SHALL NOT INCLUDE THE SPLICE.

KENTUCKY
DEPARTMENT OF HIGHWAYS

PRECAST BOX CULVERT EXTENSION

STANDARD DRAWING NO. RDX-300-03

SUBMITTED John B. Sachstede — DIRECTOR DIVISION OF DESIGN — 12-1-99 DATE

APPROVED J. M. Yowell — STATE HIGHWAY ENGINEER — 12-1-99 DATE