CALL NO. 401

CONTRACT ID. 263088

CAMPBELL COUNTY

FED/STATE PROJECT NUMBER 019GR26R032-CB06

DESCRIPTION VARIOUS ROADS IN CAMPBELL COUNTY

WORK TYPE ASPHALT RESURFACING

PRIMARY COMPLETION DATE 11/30/2027

LETTING DATE: December 10,2026

Sealed Bids will be received electronically through the Bid Express bidding service until 10:00 AM EASTERN STANDARD TIME December 10,2026. Bids will be publicly announced at 10:00 AM EASTERN STANDARD TIME.

NO PLANS ASSOCIATED WITH THIS PROJECT.

REQUIRED BID PROPOSAL GUARANTY: Not less than 5% of the total bid.

TABLE OF CONTENTS

PART I SCOPE OF WORK
- PROJECT(S), COMPLETION DATE(S), & LIQUIDATED DAMAGES
- CONTRACT NOTES
- STATE CONTRACT NOTES
- ASPHALT MIXTURE
- INCIDENTAL SURFACING
- FUEL AND ASPHALT PAY ADJUSTMENT
- COMPACTION OPTION B
- SPECIAL NOTE(S) APPLICABLE TO PROJECT
- WASTE AND BORROW SITES
- ASPHALT MILLING AND TEXTURING
- BASE FAILURE REPAIR
- TYPICAL SECTION DIMENSIONS
- TRAFFIC CONTROL PLAN 2 LANE
- DURABLE PAVEMENT EDGE DETAILS
- SKETCH MAP(S)
- MATERIAL SUMMARY
- SUMMARY SHEET(S)
- TYPICAL SECTION(S)
- BRIDGE DETAIL FOR PAVING PROJECT

PART II SPECIFICATIONS AND STANDARD DRAWINGS
- STANDARD AND SUPPLEMENTAL SPECIFICATIONS
- STANDARD DRAWINGS THAT APPLY

PART III EMPLOYMENT, WAGE AND RECORD REQUIREMENTS
- LABOR AND WAGE REQUIREMENTS
- EXECUTIVE BRANCH CODE OF ETHICS
- KENTUCKY EQUAL EMPLOYMENT OPPORTUNITY ACT OF 1978 LOCALITY / STATE
- PROJECT WAGE RATES / STATE FUNDED

PART IV BID ITEMS

PART I

SCOPE OF WORK

ADMINISTRATIVE DISTRICT - 06

CONTRACT ID - 263088

019GR26R032-CB06

COUNTY - CAMPBELL

PCN - 0601908242601
CB06 019 0824 000-002

RACE TRACK ROAD (KY-824) (MP 0) FROM US-27; EXTENDING EASTERLY TO PR-1020 (MP 1.504), A DISTANCE OF 01.50 MILES.ASPHALT RESURFACING

GEOGRAPHIC COORDINATES LATITUDE 38:53:37.83 LONGITUDE 84:22:29.04

ADT 1,060

PCN - 0601919962601
CB06 019 1996 000-001

STEVENS BRANCH (KY-1996) (MP 0) FROM KY-1121; EXTENDING EASTERLY TO KY-10 (MP .997), A DISTANCE OF 0.99 MILES.ASPHALT RESURFACING

GEOGRAPHIC COORDINATES LATITUDE 38:55:15.12 LONGITUDE 84:20:49.22

ADT 192

COMPLETION DATE(S):

COMPLETED BY 11/30/2027 APPLIES TO ENTIRE CONTRACT

CONTRACT NOTES

INSURANCE
Refer to Kentucky Standard Specifications for Road and Bridge Construction, current edition.

PROPOSAL ADDENDA
All addenda to this proposal must be applied when calculating bid and certified in the bid packet submitted to the Kentucky Department of Highways. Failure to use the correct and most recent addenda may result in the bid being rejected.

BID SUBMITTAL
Bidder must use the Department's electronic bidding software. The Bidder must download the bid file located on the Bid Express website (www.bidx.com) to prepare a bid packet for submission to the Department. The bidder must submit electronically using Bid Express.

JOINT VENTURE BIDDING
Joint venture bidding is permissible. All companies in the joint venture must be prequalified in one of the work types in the Qualifications for Bidders for the project. The bidders must get a vendor ID for the joint venture from the Division of Construction Procurement and register the joint venture as a bidder on the project. Also, the joint venture must obtain a digital ID from Bid Express to submit a bid. A joint bid bond of 5% may be submitted for both companies or each company may submit a separate bond of 5%.

UNDERGROUND FACILITY DAMAGE PROTECTION
The contractor shall make every effort to protect underground facilities from damage as prescribed in the Underground Facility Damage Protection Act of 1994, Kentucky Revised Statute KRS 367.4901 to 367.4917. It is the contractor's responsibility to determine and take steps necessary to be in compliance with federal and state damage prevention directives. When prescribed in said directives, the contractor shall submit Excavation Locate Requests to the Kentucky Contact Center (KY811) via web ticket entry. The submission of this request does not relieve the contractor from the responsibility of contacting non-member facility owners, whom shall be contacted through their individual Protection Notification Center. Non-compliance with these directives can result in the enforcement of penalties.

REGISTRATION WITH THE SECRETARY OF STATE BY A FOREIGN ENTITY
Pursuant to KRS 176.085(1)(b), an agency, department, office, or political subdivision of the Commonwealth of Kentucky shall not award a state contract to a person that is a foreign entity required by KRS 14A.9-010 to obtain a certificate of authority to transact business in the Commonwealth ("certificate") from the Secretary of State under KRS 14A.9-030 unless the person produces the certificate within fourteen (14) days of the bid or proposal opening. If the

foreign entity is not required to obtain a certificate as provided in KRS 14A.9-010, the foreign entity should identify the applicable exception. Foreign entity is defined within KRS 14A.1-070.

For all foreign entities required to obtain a certificate of authority to transact business in the Commonwealth, if a copy of the certificate is not received by the contracting agency within the time frame identified above, the foreign entity's solicitation response shall be deemed non-responsive or the awarded contract shall be cancelled.

Businesses can register with the Secretary of State at https://secure.kentucky.gov/sos/ftbr/welcome.aspx .

SPECIAL NOTE FOR PROJECT QUESTIONS DURING ADVERTISEMENT

Questions about projects during the advertisement should be submitted in writing to the Division of Construction Procurement. This may be done by email to kytc.projectquestions@ky.gov. The Department will attempt to answer all submitted questions. The Department reserves the right not to answer if the question is not pertinent or does not aid in clarifying the project intent.

The deadline for posting answers will be 3:00 pm Eastern Daylight Time, the day preceding the Letting. Questions may be submitted until this deadline with the understanding that the later a question is submitted, the less likely an answer will be able to be provided.

The questions and answers will be posted for each Letting under the heading "Questions & Answers" on the Construction Procurement website (www.transportation.ky.gov/construction-procurement). The answers provided shall be considered part of this Special Note and, in case of a discrepancy, will govern over all other bidding documents.

HARDWOOD REMOVAL RESTRICTIONS

The US Department of Agriculture has imposed a quarantine in Kentucky and several surrounding states, to prevent the spread of an invasive insect, the emerald ash borer. Hardwood cut in conjunction with the project may not be removed from the state. Chipping or burning on site is the preferred method of disposal.

INSTRUCTIONS FOR EXCESS MATERIAL SITES AND BORROW SITES

Identification of excess material sites and borrow sites shall be the responsibility of the Contractor. The Contractor shall be responsible for compliance with all applicable state and federal laws and may wish to consult with the US Fish and Wildlife Service to seek protection under Section 10 of the Endangered Species Act for these activities.

ACCESS TO RECORDS

The state agency certifies that it is in compliance with the provisions of KRS 45A.150, "Access to contractor's books, documents, papers, records, or other evidence directly pertinent to the contract." The Contractor, as defined in KRS 45A.030, agrees that the contracting agency, the

Finance and Administration Cabinet, the Auditor of Public Accounts, and the Legislative Research Commission, or their duly authorized representatives, shall have access to any books, documents, papers, records, or other evidence, which are directly pertinent to this agreement for the purpose of financial audit or program review. The Contractor also recognizes that any books, documents, papers, records, or other evidence, received during a financial audit or program review shall be subject to the Kentucky Open Records Act, KRS 61.870 to 61.884. Records and other prequalification information confidentially disclosed as part of the bid process shall not be deemed as directly pertinent to the agreement and shall be exempt from disclosure as provided in KRS 61.878(1)(c).

BOYCOTT PROVISIONS

If applicable, the contractor represents that, pursuant to KRS 45A.607, they are not currently engaged in, and will not for the duration of the contract engage in, the boycott of a person or an entity based in or doing business with a jurisdiction with which Kentucky can enjoy open trade. **Note:** The term Boycott does not include actions taken for bona fide business or economic reasons, or actions specifically required by federal or state law.

If applicable, the contractor verifies that, pursuant to KRS 41.480, they do not engage in, and will not for the duration of the contract engage in, in energy company boycotts as defined by KRS 41.472.

LOBBYING PROHIBITIONS

The contractor represents that they, and any subcontractor performing work under the contract, have not violated the agency restrictions contained in KRS 11A.236 during the previous ten (10) years, and pledges to abide by the restrictions set forth in such statute for the duration of the contract awarded.

The contractor further represents that, pursuant to KRS 45A.328, they have not procured an original, subsequent, or similar contract while employing an executive agency lobbyist who was convicted of a crime related to the original, subsequent, or similar contract within five (5) years of the conviction of the lobbyist.

SPECIAL NOTE FOR RECIPROCAL PREFERENCE

RECIPROCAL PREFERENCE TO BE GIVEN BY PUBLIC AGENCIES TO RESIDENT BIDDERS

By reference, KRS 45A.490 to 45A.494 are incorporated herein and in compliance regarding the bidders residency. Bidders who want to claim resident bidder status should complete the Affidavit for Claiming Resident Bidder Status along with their bid in the electronic bidding software. Submittal of the Affidavit should be done along the bid in Bid Express.

April 30, 2018

ASPHALT MIXTURE

Unless otherwise noted, the Department estimates the rate of application for all asphalt mixtures to be 110 lbs/sy per inch of depth.

INCIDENTAL SURFACING

The Department has included in the quantities of asphalt mixtures established in the proposal estimated quantities required for resurfacing or surfacing mailbox turnouts, farm field entrances, residential and commercial entrances, curve widening, ramp gores and tapers, and road and street approaches, as applicable. Pave these areas to the limits as shown on Standard Drawing RPM-110-06 or as directed by the Engineer. In the event signal detectors are present in the intersecting streets or roads, pave the crossroads to the right of way limit or back of the signal detector, whichever is the farthest back of the mainline. Surface or resurface these areas as directed by the Engineer. The Department will not measure placing and compacting for separate payment but shall be incidental to the Contract unit price for the asphalt mixtures.

FUEL AND ASPHALT PAY ADJUSTMENT

The Department has included the Contract items Asphalt Adjustment and Fuel Adjustment for possible future payments at an established Contract unit price of $1.00. The Department will calculate actual adjustment quantities after work is completed. If existing Contract amount is insufficient to pay all items on the contract with the adjustments, the Department will establish additional monies with a change order.

OPTION B

Be advised that the Department will control and accept compaction of asphalt mixtures furnished on this project under OPTION B in accordance with Sections 402 and 403.

SPECIAL NOTE FOR THERMOPLASTIC MARKINGS

CAMPBELL COUNTY
CB06 019 0824 000-002

The intent of the Kentucky Specifications for Road and Bridge Construction is that all markings are to be in place within 24 hours of being removed, and this can be accomplished by installing the permanent markings (unless they will be driven over with construction activities) or temporary painted markings that meet specifications for coverage and reflectivity. This includes all thermoplastic markings. Unless approved by the project engineer, any location(s) where these markings are not installed in accordance with the specifications is subject to Liquidated Damages as outlined in Section 112.03.15 of the Standard Specifications.

SPECIAL NOTE FOR THERMOPLASTIC MARKINGS

CAMPBELL COUNTY
CB06 019 1996 000-001

The intent of the Kentucky Specifications for Road and Bridge Construction is that all markings are to be in place within 24 hours of being removed, and this can be accomplished by installing the permanent markings (unless they will be driven over with construction activities) or temporary painted markings that meet specifications for coverage and reflectivity. This includes all thermoplastic markings. Unless approved by the project engineer, any location(s) where these markings are not installed in accordance with the specifications is subject to Liquidated Damages as outlined in Section 112.03.15 of the Standard Specifications.

SPECIAL PROVISION FOR WASTE AND BORROW SITES

Obtain U.S. Army Corps of Engineer's approval before utilizing a waste or borrow site that involves "Waters of the United States". The Corps of Engineers defines "Waters of the United States" as perennial or intermittent streams, ponds or wetlands. The Corps of Engineers also considers ephemeral streams, typically dry except during rainfall but having a defined drainage channel, to be jurisdictional waters. Direct questions concerning any potential impacts to "Waters of the United States" to the attention of the appropriate District Office for the Corps of Engineers for a determination prior to disturbance. Be responsible for any fees associated with obtaining approval for waste and borrow sites from the U.S. Army Corps of Engineer or other appropriate regulatory agencies.

1-296 Waste & Borrow Sites
01/02/2012

SPECIAL NOTE FOR
ASPHALT MILLING AND TEXTURING

Begin paving operations within **48 hours** of commencement of the milling operation. Continue paving operations continuously until completed. If paving operations are not begun within this time period, the Department will assess liquidated damages at the rate prescribed by Section 108.09 until such time as paving operations are begun.

Take possession of the millings and recycle the millings or dispose of the millings off the Right-of-Way at sites obtained by the Contractor at no additional cost to the Department.

1-3520 48 hours Contractor keeps millings
01/2/2012

SPECIAL NOTE FOR BASE FAILURE REPAIR

Repair locations listed on the summary are approximate only. The Engineer will determine actual repair locations and dimensions at the time of construction. Prior to overall milling and/or leveling and wedging, excavate the designated base failure areas to a depth 9 inches below the existing asphalt pavement surface level. Dispose of the excavated materials at waste sites off the Right-of-Way obtained by the Contractor at no additional cost to the Department. See Special Note for Waste and Borrow.

Backfill the excavated areas with Class 2 Asphalt Base 1.00D PG64-22. Compact the asphalt base to the compaction required in Section 403.03.10. Seal the asphalt base with leveling and wedging. Perform all base failure repairs in such a manner that removal and replacement are completed on the same day. Do this work as one of the Contractor's first operations in order to allow further compaction by traffic. Do not mill or place new asphalt surface over repaired base failure areas until a minimum of 7 calendar days have elapsed after placement of the asphalt base. After a minimum of 7 calendar days and when the Engineer determines the base failure repair areas have sufficiently stabilized, begin milling and/or resurfacing operations. Prior to milling and/or constructing the new asphalt surface, level and wedge any settlement of the repair areas.

The bidder must draw conclusions as to the conditions encountered. The Department does not give any guarantee as to the accuracy of the data and will not consider any claim for additional compensation if the materials encountered that are not in accord with the classification shown.

Accept payment at the Contract unit prices per square yard for Base Failure repair and per ton for Leveling and Wedging as full compensation for all labor, materials, equipment, and incidentals for removing pavement and disposing of the materials, furnishing and placing asphalt base, leveling and wedging, and all other items necessary to complete the work according to these notes to the satisfaction of the Engineer.

1-3606basefailurerepairmillinlaypaybysy
01/02/2012

SPECIAL NOTE FOR TYPICAL SECTION DIMENSIONS

Consider the dimensions shown on the typical sections for pavement and shoulder widths and thickness' to be nominal or typical dimensions. The Engineer may direct or approve varying the actual dimensions to be constructed to fit existing conditions. Do not widen existing pavement or shoulders unless specified elsewhere in this proposal or directed by the engineer.

1-3725 Typical Section Dimensions
01/02/2012

TRAFFIC CONTROL PLAN

TRAFFIC CONTROL GENERAL

Except as provided herein, maintain and control traffic in accordance with the Standard and Supplemental Specifications and the Standard and Sepia Drawings, current editions. Except for the roadway and traffic control bid items listed, all items of work necessary to maintain and control traffic will be paid at the lump sum bid price to "Maintain and Control Traffic".

Contrary to Section 106.01, furnish new, or used in like new condition, traffic control devices at the beginning of the work and maintain in like new condition until completion of the work.

PROJECT PHASING & CONSTRUCTION PROCEDURES

The Engineer may specify days and hours when lane closures will not be allowed.

Maintain alternating one way traffic during construction. Provide a minimum clear lane width of 9 feet; however, provide for passage of vehicles of up to 16 feet in width. If traffic should be stopped due to construction operations, and a school bus on an official run arrives on the scene, make provisions for the passage of the bus as quickly as possible.

LANE CLOSURES

Do not leave lane closures in place during non-working hours.

SIGNS

Sign posts and splices shall be compliant with NCHRP 350 or MASH. Manufacturer's documentation validating this compliance shall be provided to the Engineer prior to installation. Signs, including any splices, shall be installed according to manufacturer's specifications and installation recommendations. Contrary to section 112.04.02, only long-term signs (signs intended to be continuously in place for more than 3 days) will be measured for payment. Short-term signs (signs intended to be left in place for 3 days or less) will not be measured for payment but will be incidental to Maintain and Control Traffic.

CHANGEABLE MESSAGE SIGNS

If deemed necessary by the Engineer, the Department will furnish, operate, and maintain Changeable Message Signs.

TEMPORARY ENTRANCES

The Engineer will not require the Contractor to provide continuous access to farms, single family, duplex, or triplex residential properties during working hours; however, provide reasonable egress

and ingress to each such property when actual operations are not in progress at that location. Limit the time during which a farm or residential entrance is blocked to the minimum length of time required for actual operations, not extended for the Contractor's convenience, and in no case exceeding six (6) hours. Notify all residents twenty-four hours in advance of any driveway or entrance closings and make any accommodations necessary to meet the access needs of disabled residents.

Except as allowed by the Phasing as specified above, maintain direct access to all side streets and roads, schools, churches, commercial properties and apartments or apartment complexes of four or more units at all times.

The Department will measure asphalt materials required to construct and maintain any temporary entrances which may be necessary to provide temporary access; however, the Department will not measure aggregates, excavation, and/or embankment, but shall be incidental to Maintain and Control Traffic. The Engineer will determine the type of surfacing material, asphalt or aggregate, to be used at each entrance.

THERMOPLASTIC INTERSECTION MARKINGS

Consider the locations listed on the summary as approximate only. Prior to milling and/or resurfacing, locate and document the locations of the existing markings. After resurfacing, replace the markings at their approximate existing locations or as directed by Engineer. Place markings not existing prior to resurfacing as directed by the Engineer.

BARRICADES

The Department will not measure barricades used in lieu of barrels and cones for channelization or delineation, but shall be incidental to Maintain and Control Traffic according to Section 112.04.01.

The Department will measure barricades used to protect pavement removal areas in individual units Each. The Department will measure for payment the maximum number of barricades in concurrent use at the same time on a single day on all sections of the contract. The Department will measure individual barricades only once for payment, regardless of how many times they are set, reset, removed, and relocated during the duration of the project. The Department will not measure replacements for damaged barricades the Engineer directs to be replaced due to poor condition or reflectivity. Retain possession of the Barricades upon completion of construction.

PAVEMENT MARKINGS

If there is to be a deviation from the existing striping plan, the Engineer will furnish the Contractor a striping plan prior to placement of the final surface course.

Install Temporary Striping according to Section 112 with the following exception:

If the Contractor's operations or phasing requires temporary markings that must subsequently be removed from the final surface course, use an approved removable lane tape; however, the Department will not measure removable lane tape for separate payment, but will measure and pay for removable lane tape as temporary striping.

PAVEMENT EDGE DROP-OFFS

Do not allow a pavement edge between opposing directions of traffic or lanes that traffic is expected to cross in a lane change situation with an elevation difference greater than 1½". Place Warning signs (MUTCD W8-11 or W8-9A) in advance of and at 1500' intervals throughout the drop-off area. Dual post the signs on both sides of the traveled way. Wedge all transverse transitions between resurfaced and unresurfaced areas which traffic may cross with asphalt mixture for leveling and wedging. Remove the wedges prior to placement of the final surface course.

Protect pavement edges that traffic is not expected to cross, except accidentally, as follows:

Less than 2" - No protection required.

2" to 4" - Place plastic drums, vertical panels, or barricades every 50 feet. During daylight working hours only, the Engineer will allow the Contractor to use cones in lieu of plastic drums, panels, and barricades. Wedge the drop-off with DGA or asphalt mixture for leveling and wedging with a 1:1 or flatter slope in daylight hours, or 3:1 or flatter slope during nighttime hours, when work is not active in the drop-off area.

Greater than 4" - Protect drop-offs greater than 4 inches within 10 feet of traffic by placing drums, vertical panels, or barricades every 25 feet. The Engineer will not allow the use of cones in lieu of drums, vertical panels, or barricades for drop-offs greater than 4". Place Type III Barricades directly in front of the drop-off facing on coming traffic in both directions of travel. Provide warning signs as shown on the Standard Drawings or as directed by the Engineer

Pedestrians & Bicycles - Protect pedestrian and bicycle traffic as directed by the engineer.

DURABLE PAVEMENT EDGE DETAIL

(Resurfacing adjacent to low shoulder with dropoff of 5 inches or less)

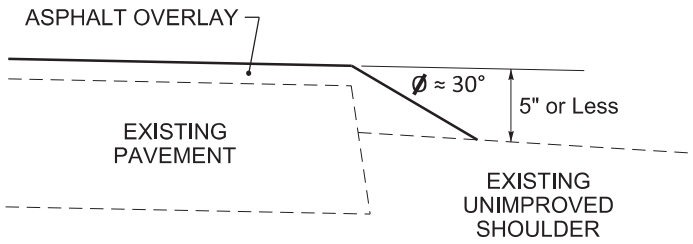

DURABLE PAVEMENT EDGE DETAIL

(Resurfacing adjacent to low shoulder with dropoff of more than 5 inches)

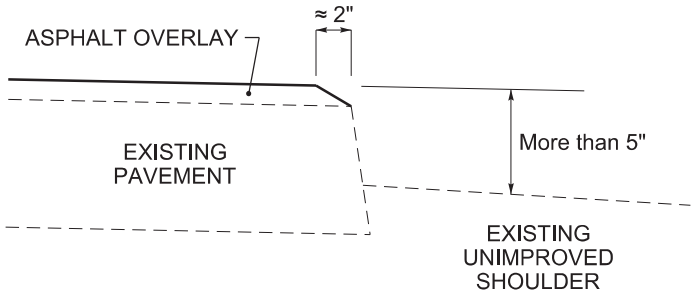

DURABLE PAVEMENT EDGE DETAIL

(Resurfacing adjacent to an obstruction, such as an existing headwall)

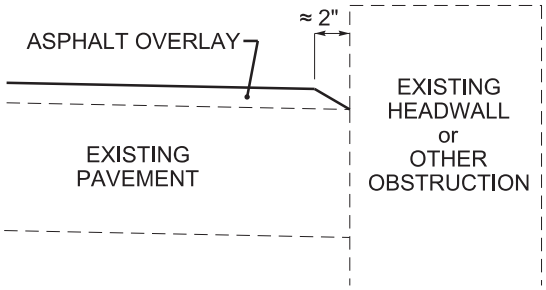

DURABLE PAVEMENT EDGE DETAIL

(Resurfacing adjacent to fill slope or ditch foreslope that is 3:1 or less)

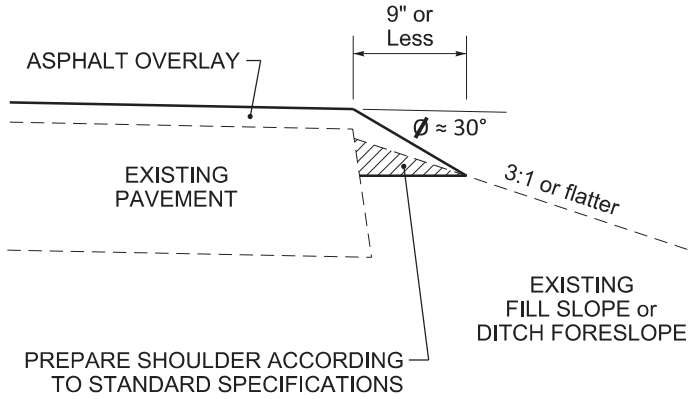

DURABLE PAVEMENT EDGE DETAIL

(Resurfacing adjacent to fill slope or ditch foreslope that is steeper than 3:1)

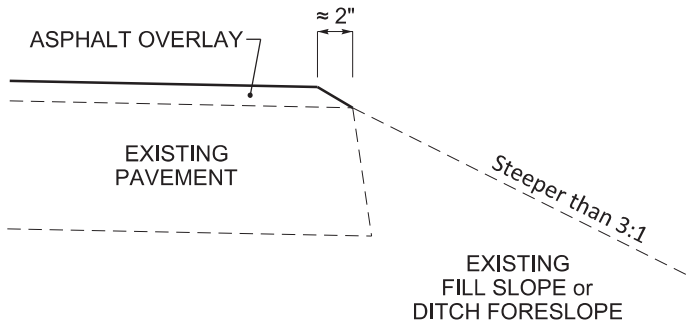

NOTES

1. DETAILS DO NOT APPLY TO OVERLAYS LESS THAN 1 INCH THICK.
2. THE DURABLE PAVEMENT EDGE DEVICE MAY BE DISENGAGED AT DRIVEWAYS, SIDE STREETS, HIGH SHOULDERS, AND OTHER LOCATIONS NOT FEASIBLE TO CONSTRUCT, AS APROVED BY THE ENGINEER.

DRAWING NOT TO SCALE

DURABLE PAVEMENT EDGE DETAILS

Kentucky
UNBRIDLED SPIRIT

DEPARTMENT OF HIGHWAYS
MAP OF
CAMPBELL COUNTY



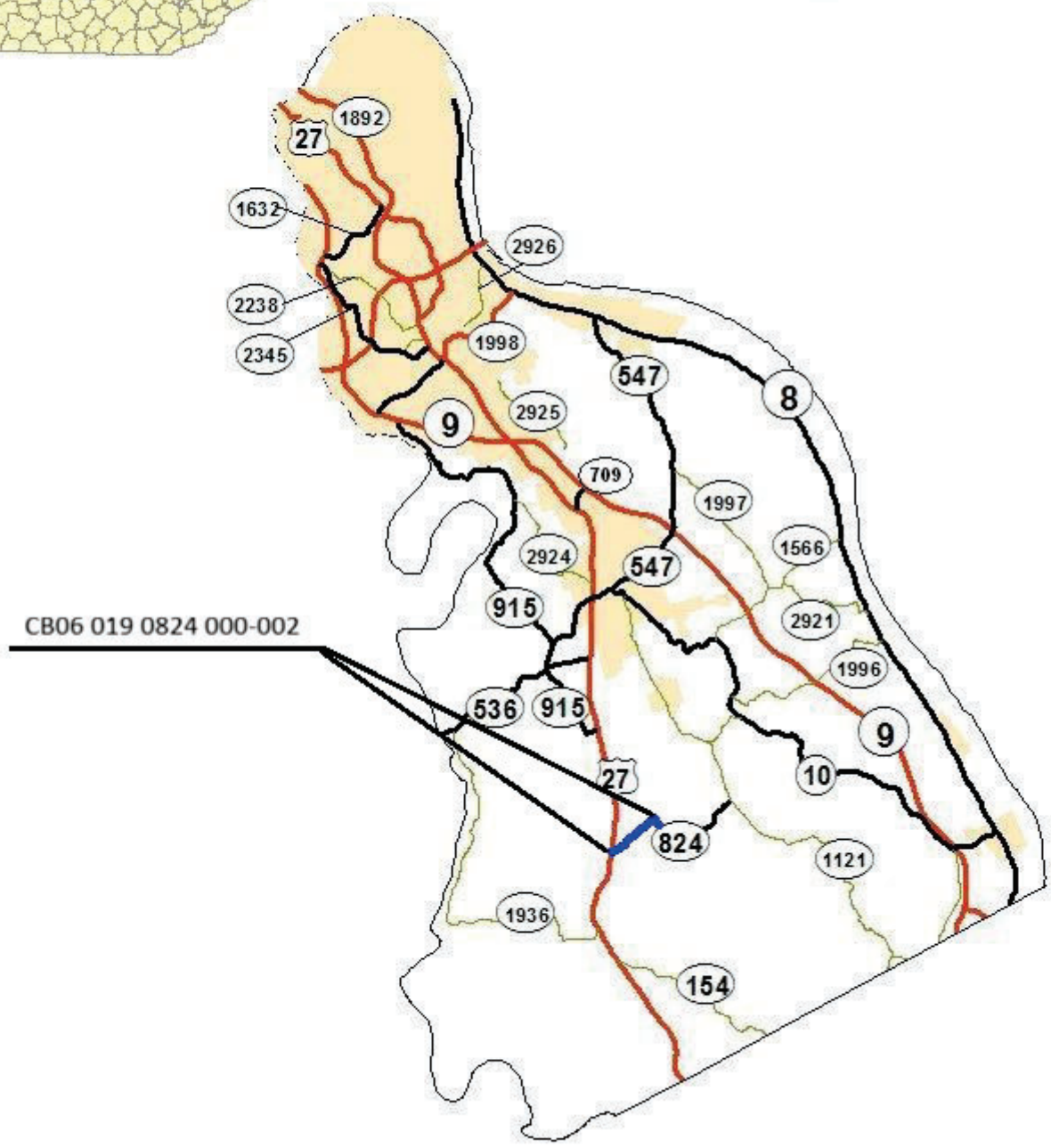



Kentucky
UNBRIDLED SPIRIT

DEPARTMENT OF HIGHWAYS
MAP OF
CAMPBELL COUNTY



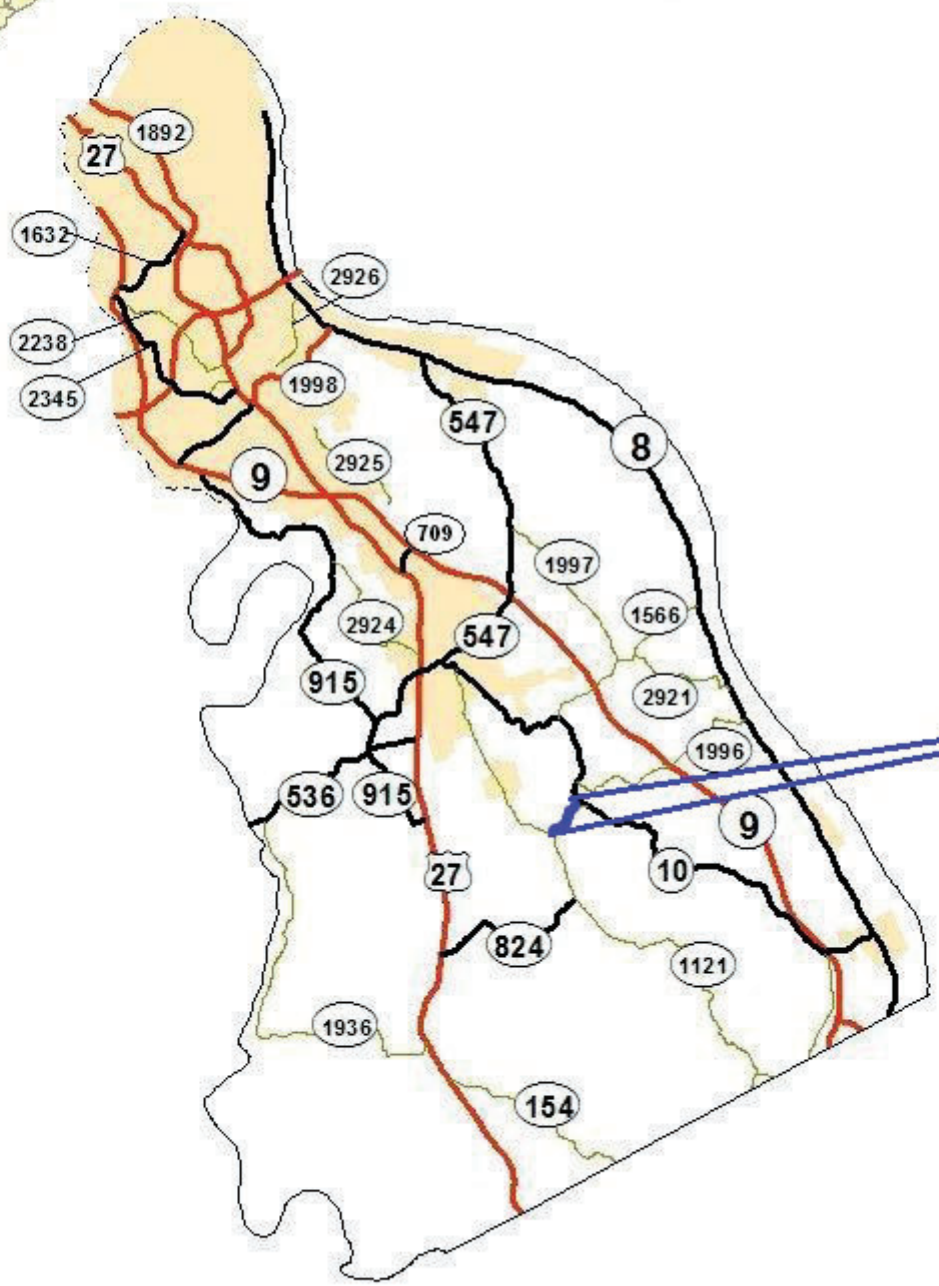

CB06 019 1996 000-001



MATERIAL SUMMARY

CONTRACT ID: 263088 **019GR26R032-CB06** **0601908242601**

RACE TRACK ROAD (KY-824) FROM US-27; EXTENDING EASTERLY TO PR-1020 ASPHALT RESURFACING, A DISTANCE OF 1.5 MILES.

Project Line No	Bid Code	DESCRIPTION	Quantity	Unit
0005	00190	LEVELING & WEDGING PG64-22	22.00	TON
0010	00301	CL2 ASPH SURF 0.38D PG64-22	1,260.00	TON
0015	00356	ASPHALT MATERIAL FOR TACK	10.00	TON
0020	02562	TEMPORARY SIGNS	270.00	SQFT
0025	02650	MAINTAIN & CONTROL TRAFFIC - KY-824	1.00	LS
0030	02676	MOBILIZATION FOR MILL & TEXT - KY-824	1.00	LS
0035	02677	ASPHALT PAVE MILLING & TEXTURING	1,260.00	TON
0040	03240	BASE FAILURE REPAIR	135.00	SQYD
0045	06511	PAVE STRIPING-TEMP PAINT-6 IN	15,880.00	LF
0050	06515	PAVE STRIPING-PERM PAINT-6 IN	31,760.00	LF
0055	06565	PAVE MARKING-THERMO X-WALK-6 IN	54.00	LF
0060	06566	PAVE MARKING-THERMO X-WALK-12 IN	40.00	LF
0065	06568	PAVE MARKING-THERMO STOP BAR-24IN	30.00	LF
0070	06568	PAVE MARKING-THERMO STOP BAR-24IN	30.00	LF
0075	06574	PAVE MARKING-THERMO CURV ARROW	2.00	EACH
0080	06576	PAVE MARKING-THERMO ONLY	2.00	EACH
0085	10030NS	ASPHALT ADJUSTMENT	5,012.00	DOLL
0090	02569	DEMOBILIZATION	1.00	LS

CONTRACT ID: 263088 **019GR26R032-CB06** **0601919962601**

STEVENS BRANCH (KY-1996) FROM KY-1121; EXTENDING EASTERLY TO KY-10 ASPHALT RESURFACING, A DISTANCE OF .99 MILES.

Project Line No	Bid Code	DESCRIPTION	Quantity	Unit
0095	00190	LEVELING & WEDGING PG64-22	21.00	TON
0100	00301	CL2 ASPH SURF 0.38D PG64-22	605.00	TON
0105	00356	ASPHALT MATERIAL FOR TACK	5.00	TON
0110	02562	TEMPORARY SIGNS	150.00	SQFT
0115	02650	MAINTAIN & CONTROL TRAFFIC - KY-1996	1.00	LS
0120	02676	MOBILIZATION FOR MILL & TEXT - KY-1996	1.00	LS
0125	02677	ASPHALT PAVE MILLING & TEXTURING	605.00	TON
0130	06510	PAVE STRIPING-TEMP PAINT-4 IN	10,530.00	LF
0135	06514	PAVE STRIPING-PERM PAINT-4 IN	10,530.00	LF
0140	06568	PAVE MARKING-THERMO STOP BAR-24IN	28.00	LF
0145	06568	PAVE MARKING-THERMO STOP BAR-24IN	28.00	LF
0150	02569	DEMOBILIZATION	1.00	LS

Base Failure
Repair Summary
CB06 019 0824 000-002

			Total	135	65
Milepoint	**Lane**	**Length**	**Width**	**SQYD**	**Tons**
0.43	**WEST**	**30**	**4**	13.33	6.60
0.47	**WEST**	**120**	**4**	53.33	26.40
0.70	**EAST**	**100**	**4**	44.44	22.00
MISC				20.00	9.90

Campbell County
THERMOPLASTIC INTERSECTION PAVEMENT MARKINGS SUMMARY
CB06 019 0824 000-002

MPT.	INTERSECTION	X-WALKS 6 INCH LF	STP BARS 24 INCH LF	ARROWS CURVE EA	ARROWS STR EA	ARROWS COMB EA	"ONLY" EA	"STOP" EA	X-WALK 12 INCH LF	NOTES	
0.000	US 27		30	2			2				
0.779	SUGARMILL DR	54							40	PIANO KEY CROSSWALK	
TOTAL		54	30	2	0	0	2	0	40	0	0

Campbell County
THERMOPLASTIC INTERSECTION PAVEMENT MARKINGS SUMMARY
CB06 019 1996 000-001

MPT.	INTERSECTION	X-WALKS 6 INCH LF	STP BARS 24 INCH LF	ARROWS CURVE EA	ARROWS STR EA	ARROWS COMB EA	"ONLY" EA	"STOP" EA	CATRAXX 6 INCH LF	NOTES	
0.000	KY 1121		15								
0.997	KY 10		13								
TOTAL		0	28	0	0	0	0	0	0	0	0

CAMPBELL COUNTY
CB06 019 0824 000-002
TYPICAL SECTION

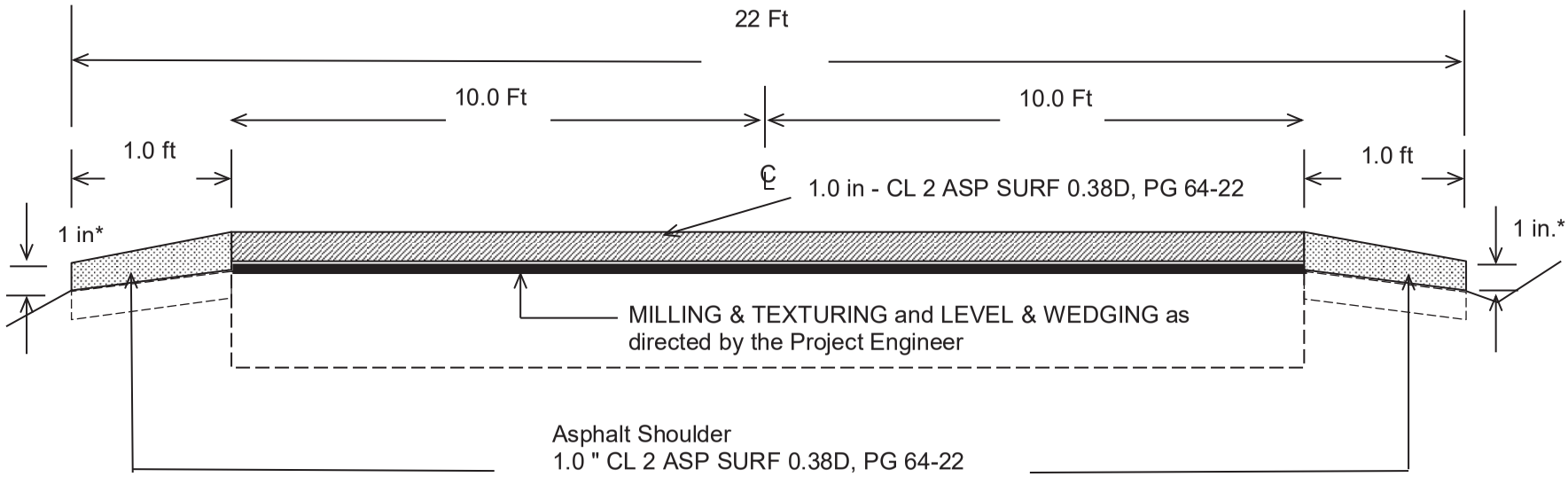

***Where Existing Site Conditions Permit**

TYPICAL SECTION

CAMPBELL COUNTY

CB06 019 1996 000-001

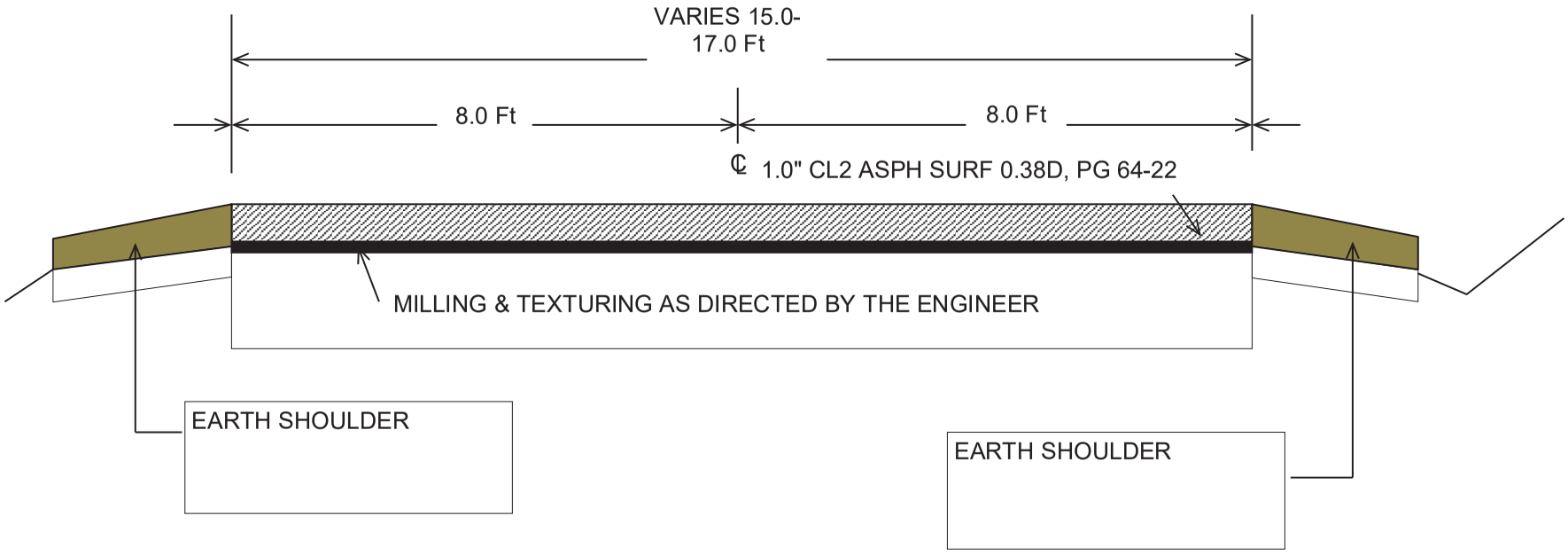

BRIDGE DETAIL FOR PAVING PROJECT

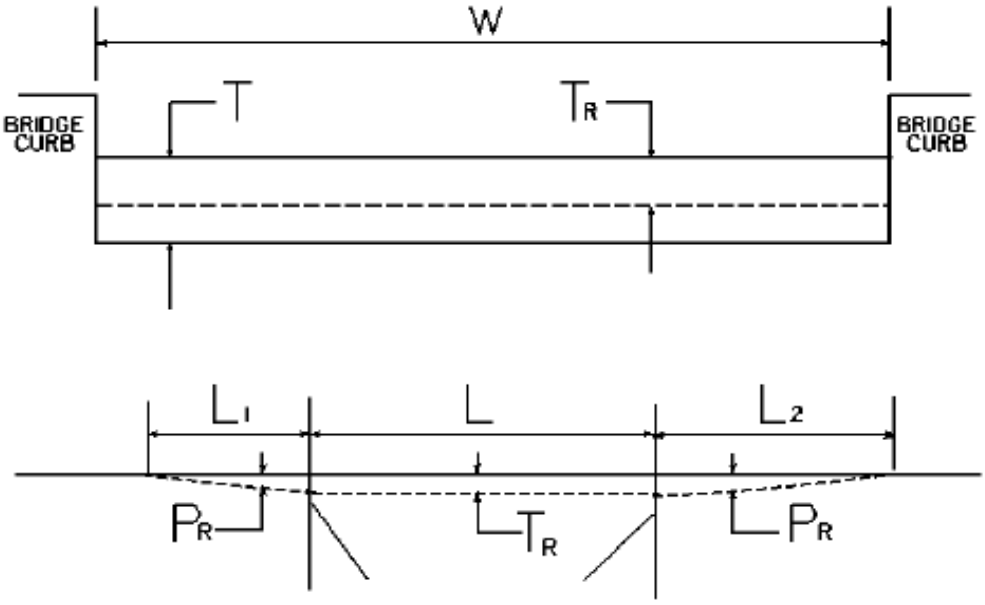

W = bridge width curb to curb
T = thickness of existing asphalt overlay
L = length of bridge
L_1 & L_2 = length of approach pavement to be removed
T_R = thickness to be removed and replaced on bridge
P_R = thickness to be removed and replaced on pavement
Note: L_1 & L_2 lengths shall be determined by using a transition rate of 100 ft/in of thickness

Route	Bridge No.	MP	W (ft)	T (in)	L_1 (ft)	L_2 (ft)	T_R (in)	L (ft)	P_R (in)
	B00090N	0.259	16.00	3.00	100.00	100.00	1.00	42.00	1.00
	B00081N	0.332	19.00	3.00	100.00	100.00	1.00	22.00	1.00
	B00075N	0.962	22.00	0.00	100.00	100.00	0.00	74.00	1.00

01/01/2009

PART II

SPECIFICATIONS AND STANDARD DRAWINGS

STANDARD SPECIFICATIONS

Any reference in the plans or proposal to previous editions of the *Standard Specifications for Road and Bridge Construction* and *Standard Drawings* are superseded by *Standard Specifications for Road and Bridge Construction, Edition of 2026* and *Standard Drawings, Edition of 2025.*

SUPPLEMENTAL SPECIFICATIONS

The contractor shall use the Supplemental Specifications that are effective at the time of letting. The Supplemental Specifications can be found at the following link:
http://transportation.ky.gov/Construction/Pages/Kentucky-Standard-Specifications.aspx

2025 STANDARD DRAWINGS THAT APPLY

ROADWAY

~GENERAL~

MISCELLANEOUS STANDARDS

MISCELLANEOUS STANDARDS PART 1……RGX-001-06

~PAVEMENT~

MEDIANS, CURBS, APPROACHES, ENTRANCES, ETC.

APPROACHES, ENTRANCES, AND MAILBOX TURNOUT……RPM-110-07

TRAFFIC

~TEMPORARY~

DEVICES

LANE CLOSURE TWO-LANE HIGHWAY ……..TTC-100-05

PART III

EMPLOYMENT, WAGE AND RECORD REQUIREMENTS

TRANSPORTATION CABINET
DEPARTMENT OF HIGHWAYS

LABOR AND WAGE REQUIREMENTS
APPLICABLE TO OTHER THAN FEDERAL-AID SYSTEM PROJECTS

I. Application
II. Nondiscrimination of Employees (KRS 344)

I. APPLICATION

1. These contract provisions shall apply to all work performed on the contract by the contractor with his own organization and with the assistance of workmen under his immediate superintendence and to all work performed on the contract by piecework, station work or by subcontract. The contractor's organization shall be construed to include only workmen employed and paid directly by the contractor and equipment owned or rented by him, with or without operators.

2. The contractor shall insert in each of his subcontracts all of the stipulations contained in these Required Provisions and such other stipulations as may be required.

3. A breach of any of the stipulations contained in these Required Provisions may be grounds for termination of the contract.

II. NONDISCRIMINATION OF EMPLOYEES

AN ACT OF THE KENTUCKY
GENERAL ASSEMBLY TO PREVENT
DISCRIMINATION IN EMPLOYMENT
KRS CHAPTER 344
EFFECTIVE JUNE 16, 1972

The contract on this project, in accordance with KRS Chapter 344, provides that during the performance of this contract, the contractor agrees as follows:

1. The contractor shall not fail or refuse to hire, or shall not discharge any individual, or otherwise discriminate against an individual with respect to his compensation, terms, conditions, or privileges of employment, because of such individual's race, color, religion, national origin, sex, disability or age (forty and above); or limit, segregate, or classify his employees in any way which would deprive or tend to deprive an individual of employment opportunities or otherwise adversely affect his status as an employee, because of such individual's race, color, religion, national origin, sex, disability or age forty (40) and over. The contractor agrees to post in conspicuous places, available to employees and applicants for employment, notices to be provided setting forth the provisions of this nondiscrimination clause.

2. The contractor shall not print or publish or cause to be printed or published a notice or advertisement relating to employment by such an employer or membership in or any classification or referral for employment by the employment agency, indicating any preference, limitation, specification, or discrimination, based on race, color, religion, national origin, sex, or age forty (40) and over, or because the person is a qualified individual with a disability, except that such a notice or advertisement may indicate a preference, limitation, or specification based on religion, national origin, sex, or age forty (40) and over, or because the person is a qualified individual with a disability, when religion, national origin, sex, or age forty (40) and over, or because the person is a qualified individual with a disability, is a bona fide occupational qualification for employment.

3. If the contractor is in control of apprenticeship or other training or retraining, including on-the-job training programs, he shall not discriminate against an individual because of his race, color, religion, national origin, sex, disability or age forty (40) and over, in admission to, or employment in any program established to provide apprenticeship or other training.

4. The contractor will send to each labor union or representative of workers with which he has a collective bargaining agreement or other contract or understanding, a notice to be provided advising the said labor union or workers' representative of the contractor's commitments under this section, and shall post copies of the notice in conspicuous places available to employees and applicants for employment. The contractor will take such action with respect to any subcontract or purchase order as the administrating agency may direct as a means of enforcing such provisions, including sanctions for non-compliance.

Revised: January 25, 2017

EXECUTIVE BRANCH CODE OF ETHICS

The Executive Branch Code of Ethics created by Kentucky Revised Statutes (KRS) Chapter 11A, effective July 14, 1992, establishes the ethical standards that govern the conduct of all executive branch employees. The Executive Branch Code of Ethics, which states, in part:

KRS 11A.040 (7) provides:

A present or former public servant listed in KRS 11A.010(9)(a) to (g) shall not, within one (1) year following termination of his or her office or employment, accept employment, compensation, or other economic benefit from any person or business that contracts or does business with, or is regulated by, the state in matters in which he was directly involved during the last thirty-six (36) months of his tenure. This provision shall not prohibit an individual from returning to the same business, firm, occupation, or profession in which he was involved prior to taking office or beginning his term of employment, or for which he received, prior to his state employment, a professional degree or license, provided that, for a period of one (1) year, he or she personally refrains from working on any matter in which he was directly involved during the last thirty-six (36) months of his or her tenure in state government. This subsection shall not prohibit the performance of ministerial functions, including but not limited to filing tax returns, filing applications for permits or licenses, or filing incorporation papers, nor shall it prohibit the former officer or public servant from receiving public funds disbursed through entitlement programs.

KRS 11A.040 (9) states:

A former public servant shall not represent a person or business before a state agency in a matter in which the former public servant was directly involved during the last thirty-six (36) months of his tenure, for a period of one (1) year after the latter of:

a) The date of leaving office or termination of employment; or
b) The date the term of office expires to which the public servant was elected.

This law is intended to promote public confidence in the integrity of state government and to declare as public policy the idea that state employees should view their work as a public trust and not to obtain private benefits.

If you have worked for the executive branch of state government within the past year, you may be subject to the law's prohibitions. The law's applicability may be different if you hold elected office or are contemplating representation of another before a state agency.

Also, if you are affiliated with a firm which does business with the state and which employs former state executive-branch employees, you should be aware that the law may apply to them.

In case of doubt, the law permits you to request an advisory opinion from the Executive Branch Ethics Commission, 1025 Capital Center Drive, Suite 105, Frankfort, Kentucky 40601; telephone (502) 564-7954.

Revised: March 11, 2025

Kentucky Equal Employment Opportunity Act of 1978

The requirements of the Kentucky Equal Employment Opportunity Act of 1978 (KRS 45.560-45.640) shall apply to this Contract. The apparent low Bidder will be required to submit EEO forms to the Division of Construction Procurement, which will then forward to the Finance and Administration Cabinet for review and approval. No award will become effective until all forms are submitted and EEO/CC has certified compliance. The required EEO forms are as follows:

- EEO-1: Employer Information Report
- Affidavit of Intent to Comply
- Employee Data Sheet
- Subcontractor Report

These forms are available on the Finance and Administration's web page under ***Vendor Information, Standard Attachments and General Terms*** at the following address: **https://www.eProcurement.ky.gov**.

Bidders currently certified as being in compliance by the Finance and Administration Cabinet may submit a copy of their approval letter in lieu of the referenced EEO forms.

For questions or assistance please contact the Finance and Administration Cabinet by email at **finance.contractcompliance@ky.gov** or by phone at 502-564-2874.

EMPLOYEE RIGHTS
UNDER THE FAIR LABOR STANDARDS ACT

THE UNITED STATES DEPARTMENT OF LABOR WAGE AND HOUR DIVISION

FEDERAL MINIMUM WAGE
$7.25 PER HOUR
BEGINNING JULY 24, 2009

OVERTIME PAY

At least 1½ times your regular rate of pay for all hours worked over 40 in a workweek.

CHILD LABOR

An employee must be at least **16** years old to work in most non-farm jobs and at least **18** to work in non-farm jobs declared hazardous by the Secretary of Labor.

Youths **14** and **15** years old may work outside school hours in various non-manufacturing, non-mining, non-hazardous jobs under the following conditions:

No more than
- **3** hours on a school day or **18** hours in a school week;
- **8** hours on a non-school day or **40** hours in a non-school week.

Also, work may not begin before **7 a.m.** or end after **7 p.m.**, except from June 1 through Labor Day, when evening hours are extended to **9 p.m.** Different rules apply in agricultural employment.

TIP CREDIT

Employers of "tipped employees" must pay a cash wage of at least $2.13 per hour if they claim a tip credit against their minimum wage obligation. If an employee's tips combined with the employer's cash wage of at least $2.13 per hour do not equal the minimum hourly wage, the employer must make up the difference. Certain other conditions must also be met.

ENFORCEMENT

The Department of Labor may recover back wages either administratively or through court action, for the employees that have been underpaid in violation of the law. Violations may result in civil or criminal action.

Employers may be assessed civil money penalties of up to $1,100 for each willful or repeated violation of the minimum wage or overtime pay provisions of the law and up to $11,000 for each employee who is the subject of a violation of the Act's child labor provisions. In addition, a civil money penalty of up to $50,000 may be assessed for each child labor violation that causes the death or serious injury of any minor employee, and such assessments may be doubled, up to $100,000, when the violations are determined to be willful or repeated. The law also prohibits discriminating against or discharging workers who file a complaint or participate in any proceeding under the Act.

ADDITIONAL INFORMATION

- Certain occupations and establishments are exempt from the minimum wage and/or overtime pay provisions.
- Special provisions apply to workers in American Samoa and the Commonwealth of the Northern Mariana Islands.
- Some state laws provide greater employee protections; employers must comply with both.
- The law requires employers to display this poster where employees can readily see it.
- Employees under 20 years of age may be paid $4.25 per hour during their first 90 consecutive calendar days of employment with an employer.
- Certain full-time students, student learners, apprentices, and workers with disabilities may be paid less than the minimum wage under special certificates issued by the Department of Labor.

For additional information:

1-866-4-USWAGE

(1-866-487-9243) TTY: 1-877-889-5627

WHD U.S. Wage and Hour Division

WWW.WAGEHOUR.DOL.GOV

U.S. Department of Labor | Wage and Hour Division

WHD Publication 1088 (Revised July 2009)

PART IV

BID ITEMS

263088

PROPOSAL BID ITEMS

Report Date 11/5/26

263088

Section: 0001 - ROADWAY

LINE	BID CODE	ALT	DESCRIPTION	QUANTITY	UNIT	UNIT PRIC	FP	AMOUNT
0010	00190		LEVELING & WEDGING PG64-22	43.00	TON		$	
0020	00301		CL2 ASPH SURF 0.38D PG64-22	1,865.00	TON		$	
0030	00356		ASPHALT MATERIAL FOR TACK	15.00	TON		$	
0040	02562		TEMPORARY SIGNS	420.00	SQFT		$	
0050	02650		MAINTAIN & CONTROL TRAFFIC KY-1996	1.00	LS		$	
0060	02650		MAINTAIN & CONTROL TRAFFIC KY-824	1.00	LS		$	
0070	02676		MOBILIZATION FOR MILL & TEXT KY-1996	1.00	LS		$	
0080	02676		MOBILIZATION FOR MILL & TEXT KY-824	1.00	LS		$	
0090	02677		ASPHALT PAVE MILLING & TEXTURING	1,865.00	TON		$	
0100	03240		BASE FAILURE REPAIR	135.00	SQYD		$	
0110	06510		PAVE STRIPING-TEMP PAINT-4 IN	10,530.00	LF		$	
0120	06511		PAVE STRIPING-TEMP PAINT-6 IN	15,880.00	LF		$	
0130	06514		PAVE STRIPING-PERM PAINT-4 IN	10,530.00	LF		$	
0140	06515		PAVE STRIPING-PERM PAINT-6 IN	31,760.00	LF		$	
0150	06565		PAVE MARKING-THERMO X-WALK-6 IN	54.00	LF		$	
0160	06566		PAVE MARKING-THERMO X-WALK-12 IN	40.00	LF		$	
0170	06568		PAVE MARKING-THERMO STOP BAR-24IN	116.00	LF		$	
0180	06574		PAVE MARKING-THERMO CURV ARROW	2.00	EACH		$	
0190	06576		PAVE MARKING-THERMO ONLY	2.00	EACH		$	
0200	10030NS		ASPHALT ADJUSTMENT	5,012.00	DOLL	$1.00	$	$5,012.00

Section: 0002 - DEMOBILIZATION

LINE	BID CODE	ALT	DESCRIPTION	QUANTITY	UNIT	UNIT PRIC	FP	AMOUNT
0210	02569		DEMOBILIZATION	1.00	LS		$	