CALL NO. 337

CONTRACT ID. 172606

HART COUNTY

FED/STATE PROJECT NUMBER FE02 050 1214 B00022N

DESCRIPTION BRIDGE OVER NOLIN RIVER (MP 2.59).

WORK TYPE BRIDGE REPAIRS

PRIMARY COMPLETION DATE 8/15/2017

LETTING DATE: April 28,2017

Sealed Bids will be received electronically through the Bid Express bidding service until 10:00 AM EASTERN DAYLIGHT TIME April 28,2017. Bids will be publicly announced at 10:00 AM EASTERN DAYLIGHT TIME.

NO PLANS ASSOCIATED WITH THIS PROJECT.

REQUIRED BID PROPOSAL GUARANTY: Not less than 5% of the total bid.

TABLE OF CONTENTS

PART I SCOPE OF WORK

- PROJECT(S), COMPLETION DATE(S), & LIQUIDATED DAMAGES
- CONTRACT NOTES
- STATE CONTRACT NOTES
- SPECIAL NOTE(S) APPLICABLE TO PROJECT
- LIQUIDATED DAMAGES
- TRAFFIC CONTROL PLAN
- SKETCH MAP(S)
- BRIDGE DRAWINGS

PART II SPECIFICATIONS AND STANDARD DRAWINGS

- SPECIFICATIONS REFERENCE
- SUPPLEMENTAL SPECIFICATION
- STANDARD DRAWINGS THAT APPLY

PART III EMPLOYMENT, WAGE AND RECORD REQUIREMENTS

- LABOR AND WAGE REQUIREMENTS
- EXECUTIVE BRANCH CODE OF ETHICS
- KENTUCKY EQUAL EMPLOYMENT OPPORTUNITY ACT OF 1978 LOCALITY / STATE
- PROJECT WAGE RATES / STATE

PART IV INSURANCE

PART V BID ITEMS

PART I

SCOPE OF WORK

ADMINISTRATIVE DISTRICT - 04

CONTRACT ID - 172606

FE02 050 1214 B00022N

COUNTY - HART

PCN - MB05012141701
FE02 050 1214 B00022N

KY-1214 (MP 2.59). BRIDGE OVER NOLIN RIVERBRIDGE REPAIRS
GEOGRAPHIC COORDINATES LATITUDE 37:22:52.00 LONGITUDE 86:04:20.00

COMPLETION DATE(S):

COMPLETED BY 08/15/2017	APPLIES TO ENTIRE CONTRACT
45 CALENDAR Days	APPLIES TO 050B00022N

CONTRACT NOTES

PROPOSAL ADDENDA

All addenda to this proposal must be applied when calculating bid and certified in the bid packet submitted to the Kentucky Department of Highways. Failure to use the correct and most recent addenda may result in the bid being rejected.

BID SUBMITTAL

Bidder must use the Department's Expedite Bidding Program available on the Internet web site of the Department of Highways, Division of Construction Procurement. (www.transportation.ky.gov/construction-procurement)

The Bidder must download the bid file located on the Bid Express website (www.bidx.com) to prepare a bid packet for submission to the Department. The bidder must submit electronically using Bid Express.

JOINT VENTURE BIDDING

Joint venture bidding is permissible. All companies in the joint venture must be prequalified in one of the work types in the Qualifications for Bidders for the project. The bidders must get a vendor ID for the joint venture from the Division of Construction Procurement and register the joint venture as a bidder on the project. Also, the joint venture must obtain a digital ID from Bid Express to submit a bid. A joint bid bond of 5% may be submitted for both companies or each company may submit a separate bond of 5%.

UNDERGROUND FACILITY DAMAGE PROTECTION

The contractor shall make every effort to protect underground facilities from damage as prescribed in the Underground Facility Damage Protection Act of 1994, Kentucky Revised Statute KRS 367.4901 to 367.4917. It is the contractor's responsibility to determine and take steps necessary to be in compliance with federal and state damage prevention directives. When prescribed in said directives, the contractor shall submit Excavation Locate Requests to the Kentucky Contact Center (KY811) via web ticket entry. The submission of this request does not relieve the contractor from the responsibility of contacting non-member facility owners, whom shall be contacted through their individual Protection Notification Center. Non-compliance with these directives can result in the enforcement of penalties.

SPECIAL NOTE FOR COMPOSITE OFFSET BLOCKS

Contrary to the Standard Drawings (2016 edition) the Cabinet will allow 6" composite offset blocks in lieu of wooden offset blocks, except as specified on proprietary end treatments and crash cushions. The composite blocks shall be selected from the Cabinet's List of Approved Materials.

REGISTRATION WITH THE SECRETARY OF STATE BY A FOREIGN ENTITY

Pursuant to KRS 176.085(1)(b), an agency, department, office, or political subdivision of the Commonwealth of Kentucky shall not award a state contract to a person that is a foreign entity required by KRS 14A.9-010 to obtain a certificate of authority to transact business in the Commonwealth ("certificate") from the Secretary of State under KRS 14A.9-030 unless the person produces the certificate within fourteen (14) days of the bid or proposal opening. If the foreign entity is not required to obtain a certificate as provided in KRS 14A.9-010, the foreign entity should identify the applicable exception. Foreign entity is defined within KRS 14A.1-070.

For all foreign entities required to obtain a certificate of authority to transact business in the Commonwealth, if a copy of the certificate is not received by the contracting agency within the time frame identified above, the foreign entity's solicitation response shall be deemed non-responsive or the awarded contract shall be cancelled.

Businesses can register with the Secretary of State at https://secure.kentucky.gov/sos/ftbr/welcome.aspx .

SPECIAL NOTE FOR PROJECT QUESTIONS DURING ADVERTISEMENT

Questions about projects during the advertisement should be submitted in writing to the Division of Construction Procurement. This may be done by fax (502) 564-7299 or email to kytc.projectquestions@ky.gov. The Department will attempt to answer all submitted questions. The Department reserves the right not to answer if the question is not pertinent or does not aid in clarifying the project intent.

The deadline for posting answers will be 3:00 pm Eastern Daylight Time, the day preceding the Letting. Questions may be submitted until this deadline with the understanding that the later a question is submitted, the less likely an answer will be able to be provided.

The questions and answers will be posted for each Letting under the heading "Questions & Answers" on the Construction Procurement website (www.transportation.ky.gov/contract). The answers provided shall be considered part of this Special Note and, in case of a discrepancy, will govern over all other bidding documents.

HARDWOOD REMOVAL RESTRICTIONS

The US Department of Agriculture has imposed a quarantine in Kentucky and several surrounding states, to prevent the spread of an invasive insect, the emerald ash borer. Hardwood cut in conjunction with the project may not be removed from the state. Chipping or burning on site is the preferred method of disposal.

INSTRUCTIONS FOR EXCESS MATERIAL SITES AND BORROW SITES

Identification of excess material sites and borrow sites shall be the responsibility of the Contractor. The Contractor shall be responsible for compliance with all applicable state and federal laws and may wish to consult with the US Fish and Wildlife Service to seek protection under Section 10 of the Endangered Species Act for these activities.

ACCESS TO RECORDS

The contractor, as defined in KRS 45A.030 (9) agrees that the contracting agency, the Finance and Administration Cabinet, the Auditor of Public Accounts, and the Legislative Research Commission, or their duly authorized representatives, shall have access to any books, documents, papers, records, or other evidence, which are directly pertinent to this contract for the purpose of financial audit or program review. Records and other prequalification information confidentially disclosed as part of the bid process shall not be deemed as directly pertinent to the contract and shall be exempt from disclosure as provided in KRS 61.878(1)(c). The contractor also recognizes that any books, documents, papers, records, or other evidence, received during a financial audit or program review shall be subject to the Kentucky Open Records Act, KRS 61.870 to 61.884.

In the event of a dispute between the contractor and the contracting agency, Attorney General, or the Auditor of Public Accounts over documents that are eligible for production and review, the Finance and Administration Cabinet shall review the dispute and issue a determination, in accordance with Secretary's Order 11-004.

06/01/16

SPECIAL NOTE FOR RECIPROCAL PREFERENCE

Reciprocal preference to be given by public agencies to resident bidders

By reference, KRS 45A.490 to 45A.494 are incorporated herein and in compliance regarding the bidders residency. Bidders who want to claim resident bidder status should complete the Affidavit for Claiming Resident Bidder Status along with their bid in the Expedite Bidding Program. Submittal of the Affidavit should be done along with the bid in Bid Express.

SPECIAL NOTE FOR REPLACING EXPANSION DAMS AND/OR INSTALLING ARMORED EDGES FOR CONCRETE ON BRIDGES

I. DESCRIPTION. Perform all work in accordance with the Kentucky Transportation Cabinet, Department of Highway's 2012 Standard Specifications for Road and Bridge Construction and applicable Supplemental Specifications, the Standard Drawings, this Note, and the attached detail drawings. Section references are to the Standard Specifications.

This work consists of the following: (1) Furnish all labor, materials, tools, and equipment; (2) Remove existing concrete and expansion device(s) and/or bridge ends; (3) Install armored edges and new concrete as specified and in accordance with the attached detail drawings; (4) Install new joint seals (where required); (5) Maintain and control traffic; and (6) Any other work specified as part of this contract.

II. MATERIALS.

A. Class "M" Concrete. Use either "M1" or "M2". See Section 601.

B. Structural Steel. Use new, commercial grade steel suitable for welding. The Engineer will base acceptance on visual inspection. For armored edges that make up the 4" neoperene joint, use Steelflex Strip Seal expansion joint by DS Brown, or approved equal. To be approved, armored edge extrusions must be embedded.

C. Stud Anchors. The armored edge stud anchors are ¾" embedded stud shear connectors conforming to ASTM A108, Grade 1015 (Nelson Studs or equal).

D. Steel Reinforcement. Use Grade 60. See Section 602.

E. Epoxy Bond Coat. See Section 511.

F. Neoprene Strip Seals. See attached detail drawings and Section 807.

III. EQUIPMENT.

A. Hammers. See Section 606.02.10 B.

B. Sawing Equipment. See Section 606.02.10 C.

C. Hydraulic Impact Equipment. See Section 606.02.10 D.

IV. CONSTRUCTION.

A. Remove Existing Materials. Remove existing Expansion Dam, Bridge End, Armored Edges and specified areas of concrete as shown on the attached sketches. Remove debris and/or expansion joint filler as directed by the Engineer. Clean and leave all existing steel reinforcement encountered in place. Damaged steel reinforcement will be repaired/replaced as directed by the Engineer at no additional cost to the Department.

Dispose of all removed material entirely away from the job site. This work is incidental to the contract unit price for "Expansion Joint Replacement" or "Armored Edge for Concrete".

B. Place New Concrete and Armored Edges. After all specified existing materials have been removed; place new armored edges to match the grade of the proposed overlay or to match the original grade (See attached detail drawings). Place the new Class "M" concrete to the scarified grade and finish to receive the new overlay or place the new

Class “M” concrete to the original grade and finish with broom strokes drawn transversely from curb to curb.

All new structural steel shall be cleaned and painted in accordance with requirements of Section 607.03.23, except that surfaces to come in contact with concrete are not to be painted.

Blast clean all areas of existing concrete and structural steel to come in contact with new concrete until free of all laitance and deleterious substances immediately prior to the placement of the Class "M" Concrete. The surface areas of existing concrete to come in contact with the new Class "M" Concrete are to be coated with an epoxy bond coat immediately prior to placing new concrete in accordance with Section 511. The interfaces of the new and old concrete shall be as nearly vertical and horizontal as possible.

C. Additional Steel Reinforcement. Furnish for replacement, as directed by the Engineer, 200 linear feet of #4 steel reinforcing bars in 20’ lengths. Place these bars in areas deemed by the Engineer to require additional reinforcement. Field cutting and bending is permitted. Do not place any additional steel reinforcement above the height of the top row of Nelson Studs on the armored edges. Ensure that all exposed steel reinforcement is tied in accordance with Section 602.03.04 prior to pouring the new Class “M” concrete. Deliver unused bars to the Local County Maintenance Barn. Payment will be made in accordance with Section 602.

D. Stage Construction. Installation of concrete and armored edges in two (or more if specified) stages is necessary. Join the armored edges at or near the centerline of the roadway or lane line, field weld and grind smooth.

E. Preformed Neoprene Strip Seal. Place the preformed joint seal in one continuous, unbroken length. Place neoprene strip seals as recommended by the manufacturer and in accordance with Section 609.03.04 - FOR 4” STRIP SEAL ONLY

F. Shop Plans. Shop plans will <u>not</u> be required. The Contractor is responsible for obtaining field measurements and supplying properly sized materials to complete the work.

V. MEASUREMENT.

A. Expansion Joint Replacement – 4". The Department will measure the quantity in linear feet from gutterline to gutterline along the centerline of the joint.

B. Armored Edge for Concrete. The Department will measure the quantity in linear feet from gutterline to gutterline along the face of the bridge end.

C. Steel Reinforcement. See Section 602.

VI. PAYMENT.

A. Expansion Joint Replacement –4". Payment at the contract unit price per linear foot is full compensation for removing specified existing materials, furnishing and installing the new armored edges, concrete, neoprene strip seal or pre-compressed horizontal expansion joint system, and all incidental items necessary to complete the work (except the overlay material) within the specified pay limits as specified by this note and as shown on the attached detail drawings.

B. Armored Edge for Concrete. Payment at the contract unit price per linear foot is full compensation for removing specified existing materials, furnishing and installing the

new armored edges, concrete and all incidental items necessary to complete the work (except the overlay material) within the specified pay limits as specified by this note and as shown on the attached detail drawings.

C. **Steel Reinforcement (Bid Item # 08150).** See Section 602.

Residual lead paint may still be on bridge. The Contractor is advised to take all necessary protective measures including worker safety and environmental regulations when executing this work. The Department will not consider any claims based on residual lead paint.

SPECIAL NOTE FOR CONTRACT COMPLETION DATE AND LIQUIDATED DAMAGES ON BRIDGE REPAIR CONTRACTS

I. **COMPLETION DATE.** The Contractor has the option of selecting the starting date for this Contract. Once selected, notify the Department in writing of the date selected at least two weeks prior to beginning work. All work is to be completed by August 15, 2017. An allotted number of Calendar days are assigned to each structure in this contract as shown below.

STRUCTURE	NO. OF CALENDAR DAYS	COMPLETION DATE
050B00022N	45	August 15, 2017

Contrary to Section 108.07.02, the Engineer will begin charging calendar days for a structure on the day the Contractor starts work or sets up traffic control on that particular structure.

II. **LIQUIDATED DAMAGES**. Liquidated damages will be assessed the Contractor in accordance with the Transportation Cabinet, Department of Highway's 2012 Standard Specifications for Road and Bridge Construction, Section 108.09, when either the allotted number of calendar days or the August 15, 2017 date is exceeded.

Contrary to the Standard Specifications, liquidated damages will be assessed the Contractor during the months of December, January, February and March when the contract time has expired on any individual bridge or bridges. Contract time will be charged during these months.

All construction must be completed in accordance with the weather limitations specified in Section 606 and/or Section 601 as applicable. No extension of Contract time will be granted due to inclement weather or temperature limitations that occur due to starting work on the Contract or a structure late in the construction season.

SPECIAL NOTE FOR TRAFFIC CONTROL ON BRIDGE REPAIR CONTRACTS

I. TRAFFIC CONTROL GENERAL

Except as provided herein, traffic shall be maintained in accordance with the 2012 Standard Specifications, Section 112. Except for the roadway and traffic control bid items listed, all items of work necessary to maintain and control traffic will be paid at the lump sum bid price to "Maintain and Control Traffic".

Type III Barricades shall be placed in accordance with the MUTCD and the 2012 Standard Specifications, Section 112. Barricades will be paid per each used under the bid item "BARRICADE – TYPE III".

Contrary to Section 106.01, traffic control devices used on this project may be new or used in new condition, at the beginning of the work and maintained in like new condition until completion of the work.

II. TRAFFIC COORDINATOR

Furnish a Traffic Coordinator as per Section 112. The Traffic Coordinator shall inspect the project maintenance of traffic, at least three times daily, or as directed by the Engineer, during the Contractor's operations and at any time a lane closure is in place. The personnel shall have access on the project to a radio or telephone to be used in case of emergencies or accidents.

The Traffic Coordinator shall report all incidents throughout the work zone to the Engineer on the project. The Contractor shall furnish the name and telephone number where the Traffic Coordinator can be contacted at all times.

III. SIGNS

Contrary to Section 112.04.02, only long term signs (sign intended to be continuously in place for more than 3 days) will be measured for payment; short term signs (signs intended to be left in place for 3 days or less) will not be measured for payment but will be incidental to Maintain and Control Traffic.

IV. DETOUR

The detour shall be signed by the contractor in coordination with district KYTC officials and in accordance with the MUTCD.

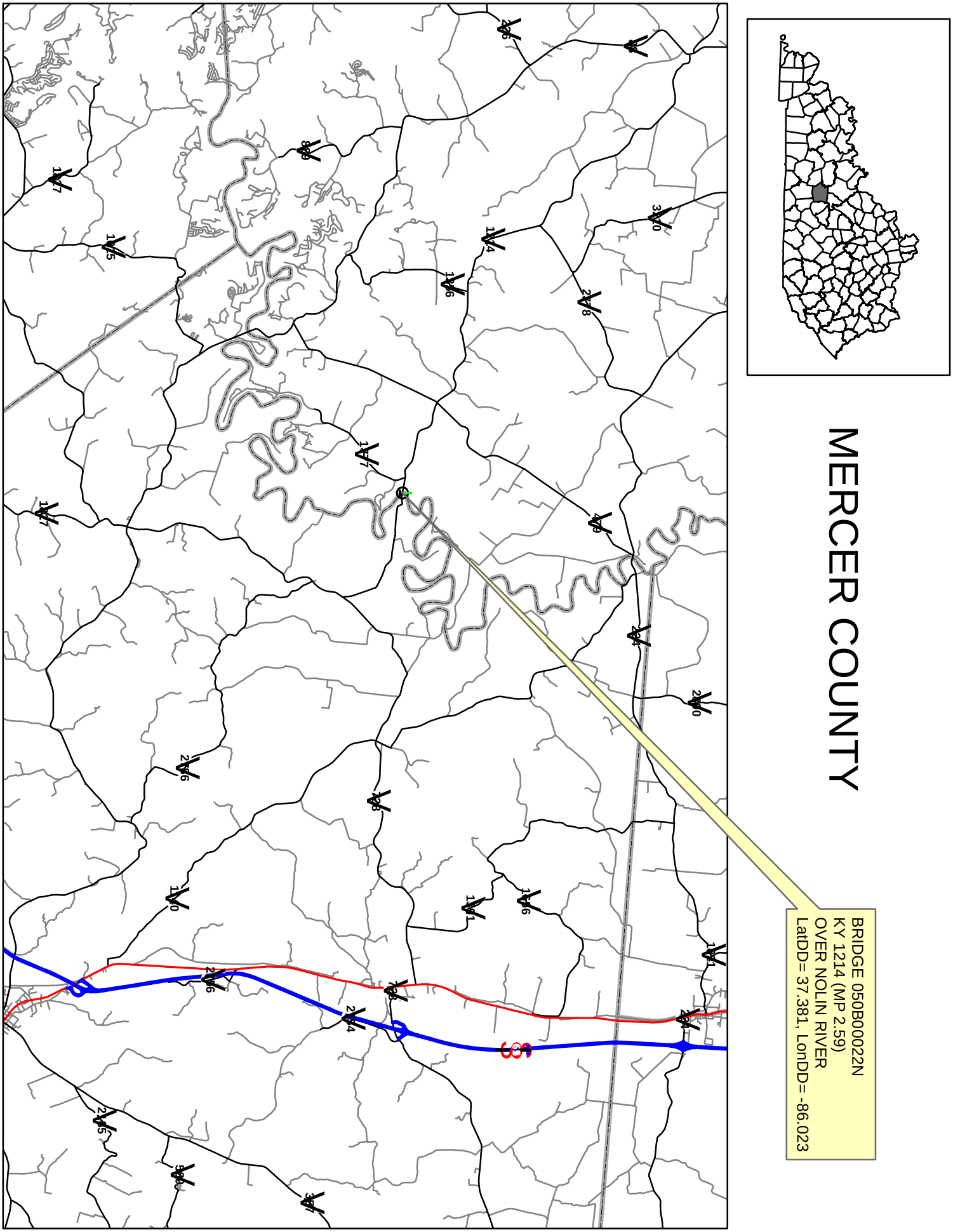
MERCER COUNTY
BRIDGE 050B00022N
KY 1214 (MP 2.59)
OVER NOLIN RIVER
LatDD= 37.381, LonDD= -86.023
69

TRANSPORTATION CABINET
DEPARTMENT OF HIGHWAYS

HART COUNTY
GRAYSON SPRINGS ROAD
KY 1214 OVER NOLIN RIVER

ESTIMATE OF QUANTITIES

BID ITEM CODE		08104	08151	02231	02403	08160	03299	22146EN	08170	23380EC	8820	08301	08811	08191
BID ITEM		Concrete Class "AA"	Steel Reinforcement, Epoxy Coated	Structure Granular Backfill	Remove Concrete Masonry	Structural Steel (1)	Armored Edge for Concrete	Concrete Patching Repair	Shear Connectors (2)	Bearing Pads	Drain Pipe 6"	Remove Superstructure	Remove Bridge Rail	Replace Bridge Rail
UNIT		C.Y.	LBS.	C.Y.	C.Y.	L.S.	L.F.	S.F.	L.S.	Each	L.F.	L.S.	L.F.	L.F.
Substructure	Pier #3	0.4	74					30		5				
	Abutment #2	2.2	218	6	2.4					5				
Superstructure		49.4	12473		1.5	1	22.0		1		12	1	95.2	95.2
BRIDGE TOTALS		52.0	12765	6	3.9	1	22.0	30	1	10	12	1	95.2	95.2

(1) Estimated Weight of Structural Steel = 25920 lbs.
(2) Approximate Number of Shear Connectors = 730

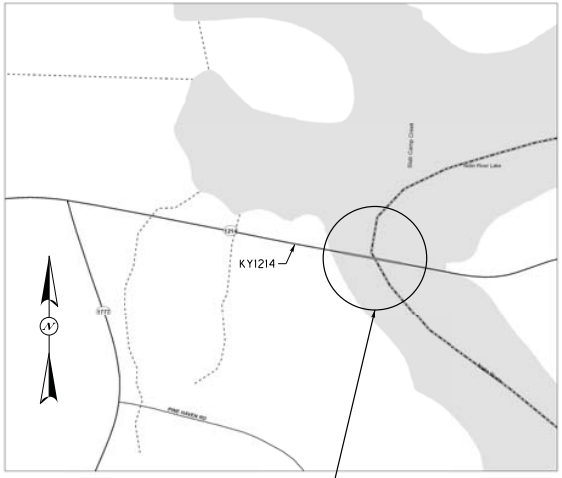

Project Location

SITE MAP

INDEX OF SHEETS

Sheet No.	Description
S1	Title Sheet
S2	General Notes
S3	Layout
S4	Removal and Repair Details
S5	Pier 3 Details
S6	Abutment 2
S7-S8	Framing Plan
S9-S10	Superstructure
S11	Construction Elevations
S12-S13	Aluminum Handrail
S14	Elastomeric Bearing Pads

SPECIAL NOTES

SPECIAL PROVISIONS

STANDARD DRAWINGS

BGX-006-10	Stencils for Structures
BJE-001-13	Neoprene Expansion Dams and Armored Edges

SPECIFICATIONS

2012 Standard Specifications for Road and Bridge Construction.

2014 AASHTO LRFD Bridge Design Specifications 7th Edition with Current Interims.

REVISION	DATE

DATE: February 2017	CHECKED BY
DESIGNED BY: M. Wolfe	JC Pyles
DETAILED BY: E. Downey	M. Wolfe

ITEM NO.
PROJECT NUMBER: FE02 050 1214 B00022N
LETTING DATE:

RECOMMENDED BY _____ PROJECT MANAGER _____ DATE
PLAN APPROVED BY _____ STATE HIGHWAY ENGINEER _____ DATE

Commonwealth of Kentucky
DEPARTMENT OF HIGHWAYS

COUNTY: HART
ROUTE: KY 1214
CROSSING: Nolin River

TITLE SHEET

PREPARED BY
Division of Structural Design

SHEET NO. S1
DRAWING NO. 27664

LETTING DATE
CONSTRUCTION PROJECT NO.
FILE NAME: J:\District04\RS & M\Hart\Co-050B00022-NolinRiver\27664.dgn
USER: eariw.downey
DATE PLOTTED: 10-MAR-2017
E-SHEET NAME:
MicroStation v8.11.7.443

GENERAL NOTES

SPECIFICATIONS: All references to the Specifications are to the current edition of the Kentucky Department of Highways Standard Specifications for Road and Bridge Construction with current Supplemental Specifications. All references to the AASHTO Specifications are to the current edition of the AASHTO LRFD Bridge Design Specs, with interims.

DESIGN LOAD: This bridge is designed for a KYHL-93 live load. The KYHL-93 live load is arrived at by increasing the standard HL-93 truck and lane loads as specified in the AASHTO Specifications by 25%.

FUTURE WEARING SURFACE: This Structure is designed for a 15 PSF future wearing surface load.

DESIGN STRESSES:

Concrete Class "M1" ~ 4000 psi
Concrete Class "AA" ~ 4000 psi
Steel Reinforcement ~ 60,000 psi
Structural Steel Yield Strength ~ 50,000 psi

DESIGN METHOD: All reinforced concrete members are designed by the load and resistance factor method as specified in the current AASHTO Specifications.

WIND LOAD: This bridge is designed for a wind load based on a wind velocity of 100 mph.

REINFORCEMENT: Dimensions shown from the face of concrete to bars are to center of bars unless otherwise shown. Spacing of bars is from center to center of bars. Clear distance to face of concrete is 2", unless otherwise noted. Any reinforcing bars designated by suffix (e) in the plans shall be epoxy coated in accordance with section 811.10 of the Standard Specifications. Any reinforcing bars designated by suffix (s) in a bill of reinforcement shall be considered a stirrup for purposes of bend diameters.

BEVELED EDGES: Bevel all exposed edges ¾", unless otherwise noted.

COMPLETION OF THE STRUCTURE: The Contractor is required to complete the structure in accordance with the plans and specifications. Material, labor or construction operations, not otherwise specified, are to be included in the bid item most appropriate to the work involved. This may include cofferdams, shoring, excavations, backfilling, removal of all or parts of existing structures, phase construction, incidental materials, labor or anything else required to complete the structure.

SHOP DRAWINGS: Submit shop drawings that are required by the plans and specifications directly to the Division of Structural Design. If any changes in the design plans are proposed by a fabricator or supplier, submit those changes to the Department through the Contractor.

DIMENSIONS: Dimensions are for a normal temperature of 60 degrees Fahrenheit. Layout dimensions are horizontal dimensions.

SUPERSTRUCTURE SLAB: Ensure the entire superstructure slab is poured continuously, out to out, before allowing any concrete to set.

MATERIALS: ASTM or AASHTO Specifications as designated below govern the materials funished.

MATERIAL	A.S.T.M.	AASHTO
High Strength Low Alloy Structural Steel	•A709 GR 50W	•M270 GR 50W

• Use this equivalent specification with the AASHTO/AWS D1.5 welding code and welding notes.

Pintles and Stud Shear Connectors	UNS G1018	M-169
High Strength Bolts, Nuts, and Washers	A325	M-164M Type 3
Sheet Lead and Pig Lead	B29-79	

All steel in longitudinal girders shall meet the longitudinal charpy V-Notch toughness test applicable to fracture critical components Zone 2.

Sampling and testing procedures shall be in accordance with AASHTO T243, current edition, utilizing (H) frequency testing. When plate thickness exceeds 1½", frequency of testing shall be (P).

FABRICATION AND ERECTION: Since it is important that the finished structure weather to a uniform dark russet color, special precautions must be taken to assure that all exposed surfaces are keep free of grease, dirt, concrete stains, paint, or other foreign substances. Care should be taken to avoid gouges, scratches and dents. The use of acids to remove scale and stains in the field will not be permitted. No element of the structure, except for the armored edges and expansion device plates shall be painted unless otherwise noted. It is mandatory that all exposed surfaces in the completed structure be free of any type of shop markings or identification. Scale discoloration produced by welding shall be removed. Any foreign material which adheres to the steel that would inhibit formation of the oxide film shall be removed as soon as practicable.

HIGH STRENGTH BOLT CONNECTIONS: Unless otherwise shown on the plans, all bolted connections shall be ASTM F3125 Grade A325 ⅞" diameter high strength bolts, nuts, and washers. Open holes shall be 15/16" diameter or as noted. Type 3 bolts suitable for use with weathering steel shall be used as described in AASHTO M164. All high strength bolted field connections are to be installed using "direct tension connectors" (DTI's) in accordance with the Standard Specifications and ASTM F959. All DTI's shall be manufactured from steel conforming to the chemical requirements of ASTM F3125 for Type 3 weathering steel. Installation details of the DTI's shall be shown on the shop plans.

PROHIBITED FIELD WELDING: Except as shown on the plans, no welding of any nature shall be preformed on the bridge without the written consent of the bridge designer, and then only in the manner and at the location designated in the authorization.

SUBSTRUCTURE PROTECTION: The contractor shall protect the substructure from staining during construction. Any concrete staining will be removed by the contractor at no cost to the Department. The cost of protecting the substructures shall be included in the lump sum bid for structural steel.

PAYMENT FOR STRUCTURAL STEEL: The lump sum bid for structural steel shall be full payment for all structural steel, bolts, washers, DTI's, welding and welding materials, floor drains, and all labor and materials necessary to erect the steel in accordance with plans and specifications. The approximate weight of structural shown in the estimate of quantities does not include overrun or weld material.

MILL TEST REPORTS: Notarized mill test reports shall be funished in triplicate to the Department, showing that all material used in the structural steel conform to the requirements of the specifications.

BEARING PADS: The unit price for "Bearing Pads" includes all cost to provide and install bearing pads as detailed.

SHEAR CONNECTORS: The "Lump Sum Bid" for shear connectors shall be full payment for all shear connectors, welding and welding material, and materials necessary to field weld the shear connectors in place according to the Plans and Specifications. Studs shall be welded in accordance with AWS Specifications.

ON-SITE INSPECTION: Each contractor submitting a bid for this work shall make a thorough inspection of the project site prior to submitting a bid and shall be thoroughly familiarized with existing conditions so that work can be expeditiously performed after a contract is awarded. Submission of a bid will be considered evidence of this inspection having been made. Any claims resulting from site conditions will not be honored by the Department of Highway.

DAMAGE TO THE SUBSTRUCTURES: The contractor is responsible for any and all damages to the existing structure during reconstruction even to the replacement of the entire structure, should they be damaged due to his actions.

CORK: The cost for the ½" cork up the sides of the slab and abutment wings is incidental to the unit price bid for "AA" Concrete.

RESIDUAL LEAD PAINT: Residual lead paint may still be on bridge. The Contractor is advised to take all necessary protective measures to conform with worker safety and environmental regulations. The Department will not consider any claims based on residual lead paint.

MASONRY COATING: Masonry coating is not used on this project.

REMOVE AND REPLACE BRIDGE RAIL: Salvage the Aluminum Railing, posts & other hardware and re-use in the new superstructure. Provide new anchor bolts and replacements for damaged material with the approval of the Engineer as necessary. All costs to remove clean and store Bridge Rail, post, etc., shall be included in the unit price bid for Remove Bridge Rail. Include all cost to replace Bridge Rail in the unit price bid for Replace Bridge Rail.

REMOVE SUPERSTRUCTURE: Include in the lump sum bid for Remove Superstructure all costs (materials, labor, equipment) associated with removing and disposing of the existing superstructure (span 4 only) as detailed herein in accordance with Section 203 of the Specifications. Also include in this lump sum bid the cost of any excavation and subsequent backfilling behind the abutments, wings and new superstructure construction.

FIELD MEASUREMENTS: All dimensions and elevations given in these plans are based on field measurements. Prior to beginning work or ordering any materials, the contractor shall verify all dimensions and elevations. No claim regarding site conditions will be honored by the Department.

SAWCUTTING EXISTING CONCRETE: Prior to the removal of the existing concrete masonry, cut the surface with a concrete saw to a depth of one inch to facilitate a neat line. The cost of cutting concrete or cutting, bending, and cleaning existing steel reinforcement is to be incidental to the unit bid price for Remove Concrete Masonry or Remove Superstructure as applicable.

BONDING TO EXISTING CONCRETE USING STRUCTURAL ADHESIVES: Bond proposed plastic concrete to existing hardened concrete using a Type V Epoxy Resin or other approved Structural Adhesive as prescribed in section 826 of the specifications. Follow the manufacturer's recommended application instructions. This work and material is incidental to the unit price bid for concrete class "AA".

CONCRETE PATCHING: Patch areas shown in the plans as directed by the Engineer and following the procedure below. Include all costs associated with this item in the price bid for Concrete Patching.

1. Saw cut patch boundaries 1 inch deep maximum. Do not cut through existing reinforcement.
2. Remove loose or unsound concrete with pneumatic hammers not exceeding 20 pounds or chisels. Preserve sound concrete and existing reinforcement.
3. Rout all cracks and cavities to sound concrete.
4. Chip all patch boundaries to form a sound, mechanical edge.
5. Extend the patch depth at any point at least 1 inch behind existing reinforcement.
6. Replace damaged steel reinforcement and supplement in kind as needed.
7. Blast clean all surfaces with compressed air to remove dust and loose material not more 12 hours prior to placing the patch.
8. Apply epoxy bond coat in accordance with the Standard Specifications section 511.03.02.
9. Form to original dimensions.
10. Place Class "M1" Concrete and cure in accordance with the Standard Specifications.

EXISTING STRUCTURE: See Army Corps. of Engineers drawings G183-12.3/32 thru G183-12.3/37 for Existing Structure details. Department makes no warranty regarding applicability of accuracy of existing plans. Existing drawings are to be used at the contractors sole risk.

REVISION	DATE

DATE: February 2017	CHECKED BY
DESIGNED BY: M. Wolfe	JC Pyles
DETAILED BY: E. Downey	M. Wolfe

Commonwealth of Kentucky
DEPARTMENT OF HIGHWAYS

COUNTY: HART

ROUTE: KY 1214 | CROSSING: Nolin River

GENERAL NOTES

ITEM NUMBER

PREPARED BY: Division of Structural Design

SHEET NO. S2

DRAWING NO. 27664

FILE NAME: J:\District04\RS & M\Hart-Co-050B00022-NolinRiver\27664.dgn
USER: eariw.downey
DATE PLOTTED: 10-MAR-2017
E-SHEET NAME:
MicroStation v8.11.7.443

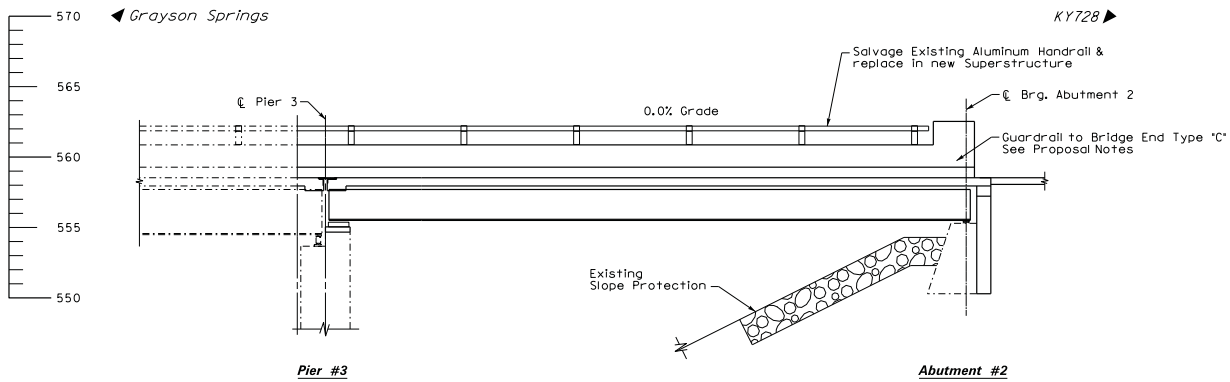

ELEVATION

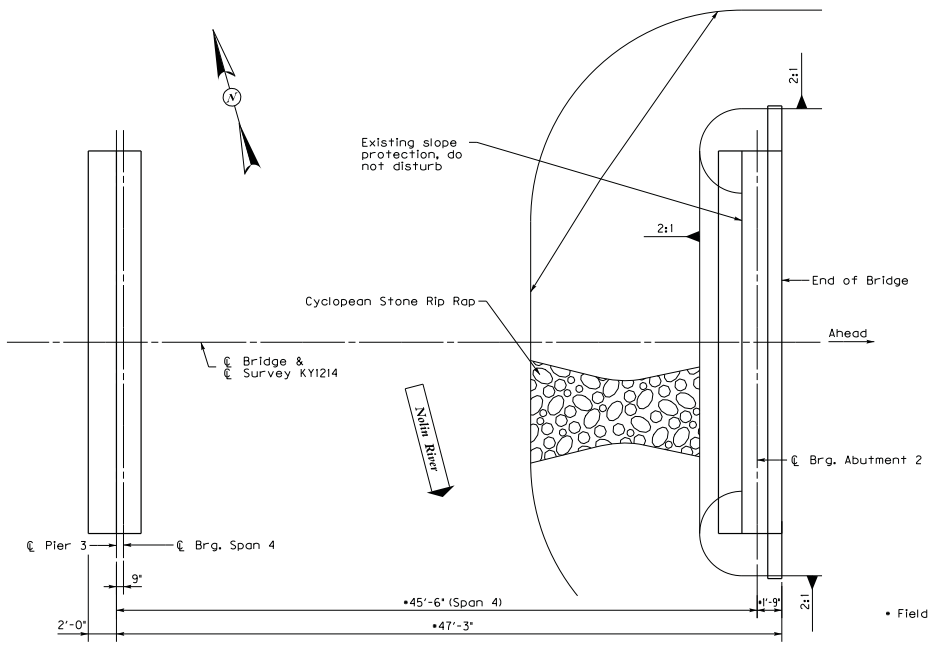

PLAN

~Superstructure Not Shown~

• Field verify all existing dimensions

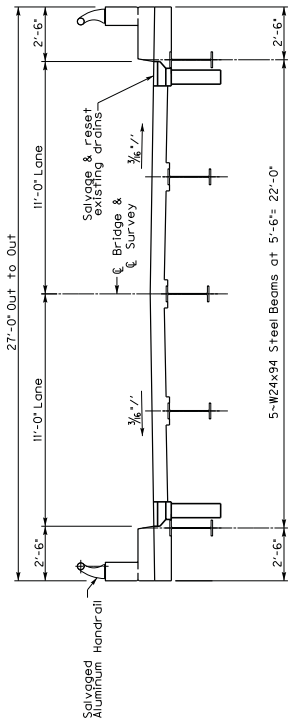

TYPICAL SECTION

REVISION	DATE

DATE: February 2017	CHECKED BY
DESIGNED BY: M. Wolfe	JC Pyles
DETAILED BY: B. Miller	M. Wolfe

Commonwealth of Kentucky
DEPARTMENT OF HIGHWAYS

COUNTY: **HART**

ROUTE: KY 1214 — CROSSING: The Nolin River

LAYOUT

PREPARED BY: **Division of Structural Design**

SHEET NO. S3

DRAWING NO. 27664

ITEM NUMBER

MicroStation v8.11.7.180 | E-SHEET NAME: | USER: earlw.downey DATE PLOTTED: 10-MAR-2017 | FILE NAME: J:\District04\RS & M\HartCo-050B00022-NolinRiver\27664.dgn

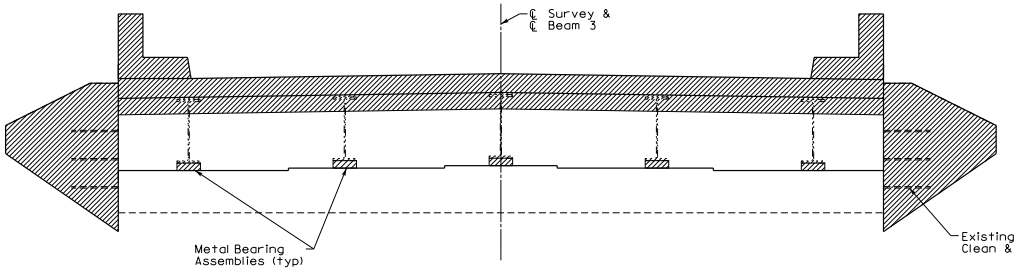

For Existing Structure Details see Corps of Engineers drawing numbers G183-12.3/32 thru G183-12.3/37.

EXISTING ABUTMENT REMOVAL

REMOVAL NOTES

Remove to sound concrete.
Clean and straighten existing reinforcement.
Cut at least to 2" below bottom of new 8" slab.

Excavation and backfill included in bid for Remove Superstructure, see general notes.

Field Verify dimension before ordering pads and shims.

Remove Existing deck as shown.
Clean and Straighten existing longitudinal bars for use in new deck slab.

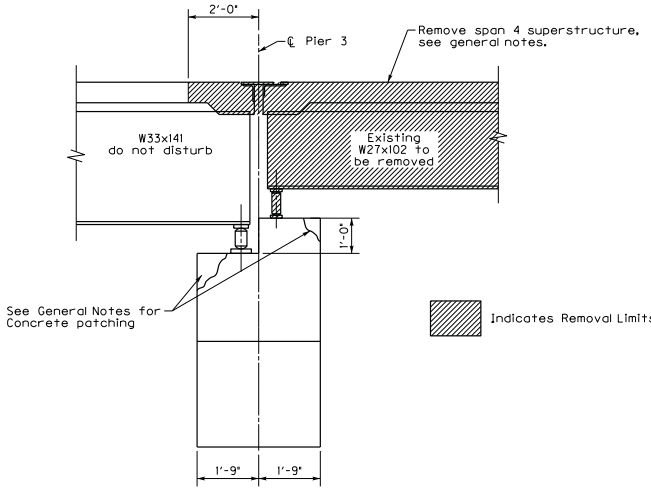

PIER 3

Indicates Removal Limits

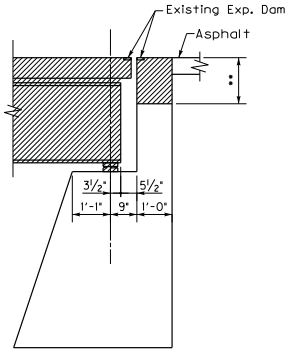

ABUTMENT 2

Dimensions shown are from Field Measurements. Field Verify all Dimensions.

EXISTING SPAN 4 REMOVAL

REVISION	DATE

DATE: February 2017	CHECKED BY
DESIGNED BY: M. Wolfe	JC Pyles
DETAILED BY: B. Miller	M. Wolfe

Commonwealth of Kentucky
DEPARTMENT OF HIGHWAYS

COUNTY: HART

ROUTE: KY 1214 — CROSSING: The Nolin River

REMOVAL AND REPAIR DETAILS

ITEM NUMBER

PREPARED BY: Division of Structural Design

SHEET NO. S4

DRAWING NO. 27664

FILE NAME: J:\District04\RS & M\HartCo-050B00022-NolinRiver\27664.dgn
USER: earlw.downey
DATE PLOTTED: 10-MAR-2017
E-SHEET NAME:
MicroStation v8.11.7.180

BILL OF REINFORCEMENT

MARK	TYPE	NO.	SIZE	LENGTH	LOCATION	A	B
P1	2	15	5	3- 6	Pier Pedestal	1- 2	1- 5
P2	Str.	15	5	1- 2	Pier Pedestal		

TYPE 2

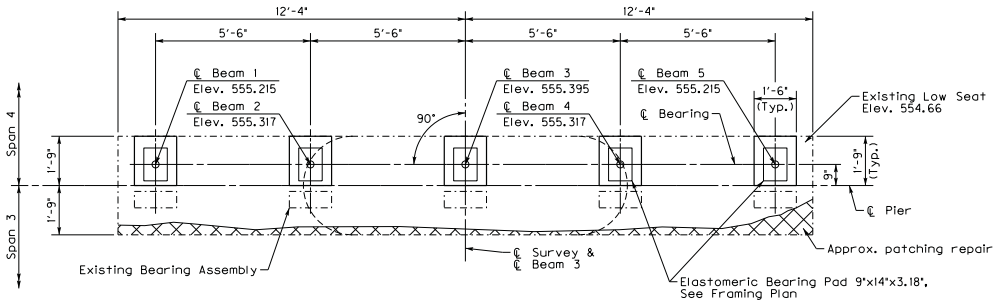

PLAN OF CAP

• Field Verify all existing dimensions
& adjust construction accordingly.

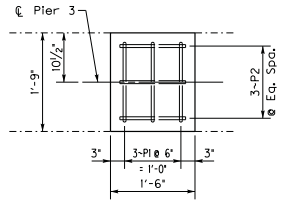

PLAN

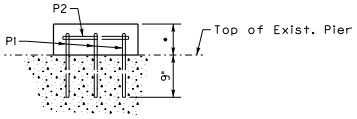

ELEVATION

PEDESTAL DETAILS

NOTE:
Drill and epoxy grout P1 bars into existing a minimum of 9"

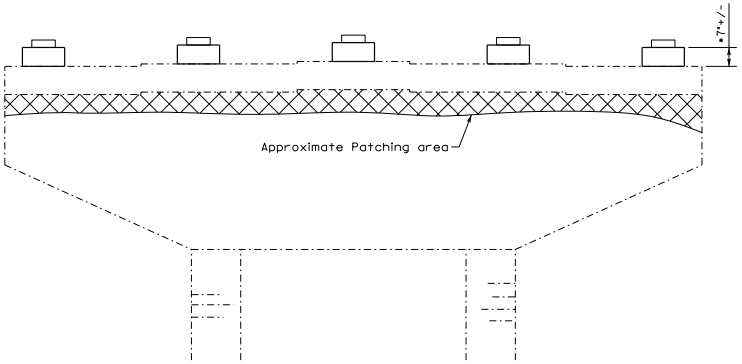

ELEVATION

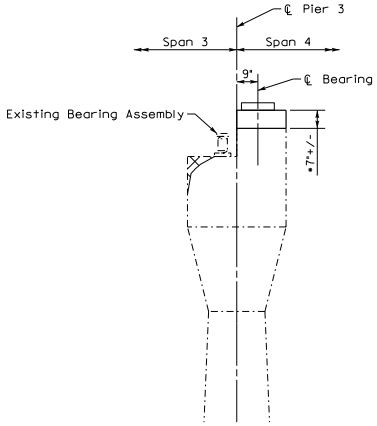

END ELEVATION

REVISION	DATE

DATE: February 2017	CHECKED BY
DESIGNED BY: M. Wolfe	JC Pyles
DETAILED BY: E. Downey	M. Wolfe

Commonwealth of Kentucky
DEPARTMENT OF HIGHWAYS

COUNTY: HART

ROUTE: KY 1214 — CROSSING: Nolin River

PIER 3 DETAILS

ITEM NUMBER

PREPARED BY
Division of Structural Design

SHEET NO. S5
DRAWING NO. 27664

FILE NAME: J:\District04\RS & M\HartCo-050B00022-NolinRiver\27664.dgn
USER: eariw.downey
DATE PLOTTED: 10-MAR-2017
E-SHEET NAME:
MicroStation v8.11.7.443

BILL OF REINFORCEMENT

MARK	TYPE	NO.	SIZE	LENGTH	LOCATION	A/E	B/F	C/G	D/H
B1e	Str.	16	5	3-10	Wings				
B2e	Str.	4	5	6- 2	Wings				
B3e	Str.	4	5	5-10	Wings				
B4e	Str.	4	5	5- 4	Wings				
B5e	7	4	5	8- 7	Wings	3- 2	4- 9	0- 9	4- 3
						2- 1½	0- 4	0- 8	
B6e	Str.	2	5	21- 8	Endwall				

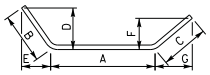

TYPE 7

NOTES:

Deck slab extends over endwall.

Remove damaged or deteriorated End Wall concrete (10" min.) taking care to clean and straighten existing bars to be used in new construction.

Place Class "AA" Concrete and give endwall a smooth trowel finish.

Place two Layers of 30# Felt on End Wall as shown.

Note to Contractor: Verify field measurements & confirm pad height required to provide 1" min. haunch above beam.

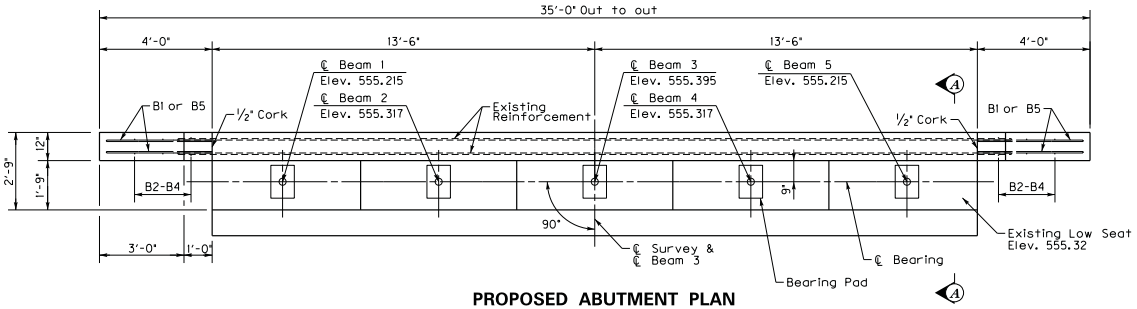

PROPOSED ABUTMENT PLAN

• Match spacing of existing reinforcement extending from cap.

•• Field Measured

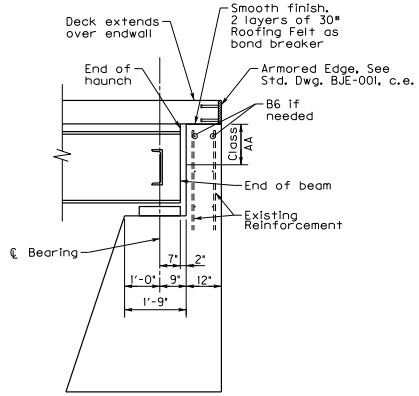

SECTION A–A

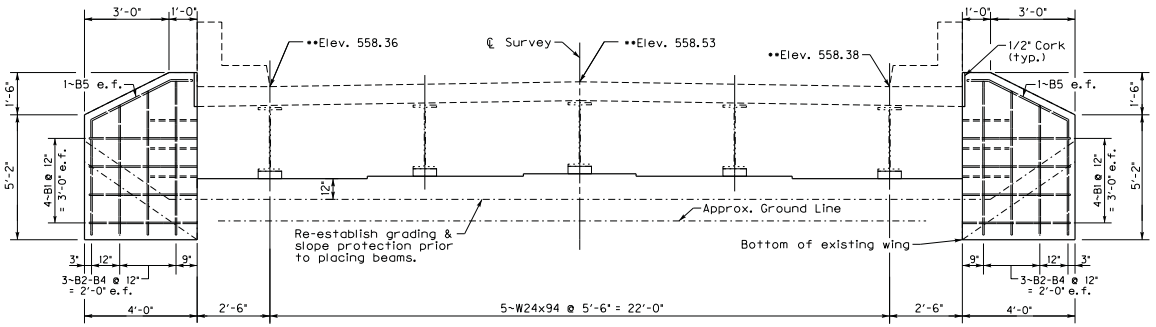

PROPOSED ABUTMENT ELEVATION

Horizontal Bars:
Clean & Straighten horizontal existing bars.
Match spacing of existing bars.

REVISION		DATE
DATE: February 2017	CHECKED BY	
DESIGNED BY: M. Wolfe	JC Pyles	
DETAILED BY: B. Miller	M. Wolfe	

Commonwealth of Kentucky
DEPARTMENT OF HIGHWAYS

COUNTY: HART

ROUTE: KY 1214 — CROSSING: The Nolin River

ABUTMENT 2

ITEM NUMBER

PREPARED BY: Division of Structural Design

SHEET NO. S6

DRAWING NO. 27664

FILE NAME: J:\District04\RS & M\Hart Co-050B00022-NolinRiver\27664.dgn
USER: earlw.downey
DATE PLOTTED: 10-MAR-2017
E-SHEET NAME:
MicroStation v8.11.7.180

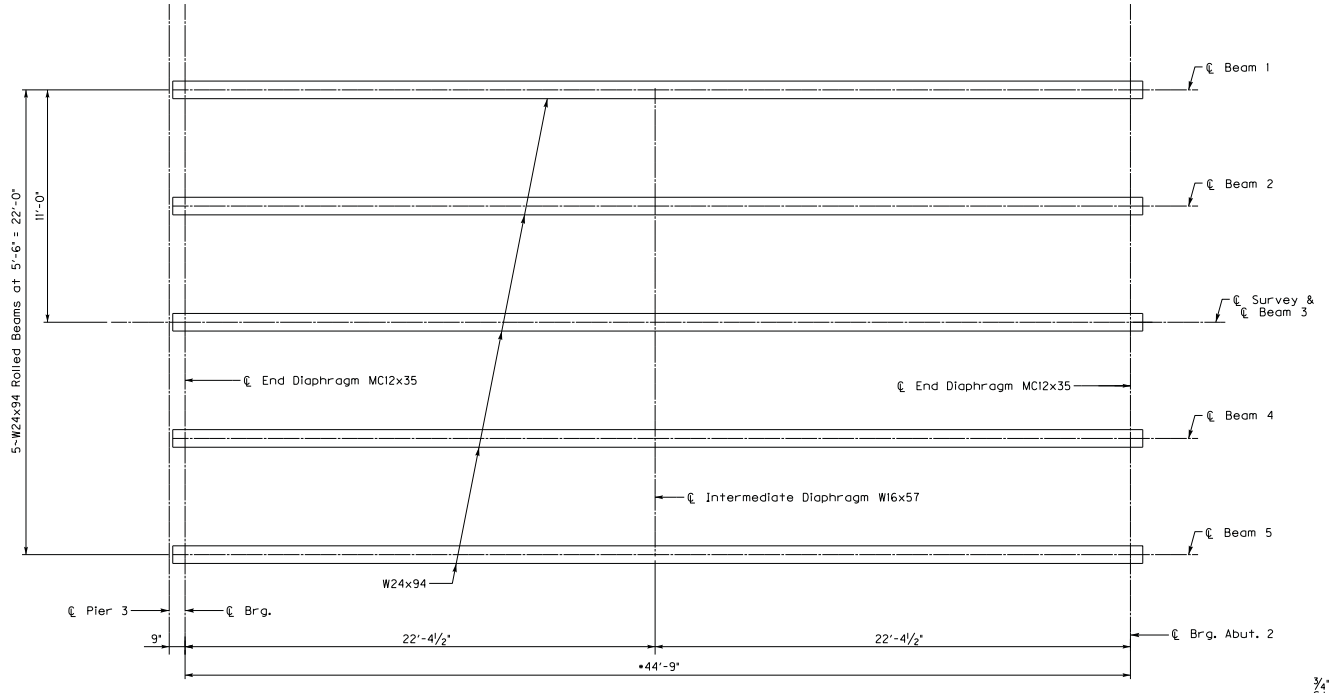

FRAMING PLAN

•Field verify & adjust as necessary before submitting shop plans or ordering material.

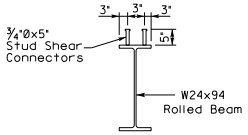

SECTION A–A

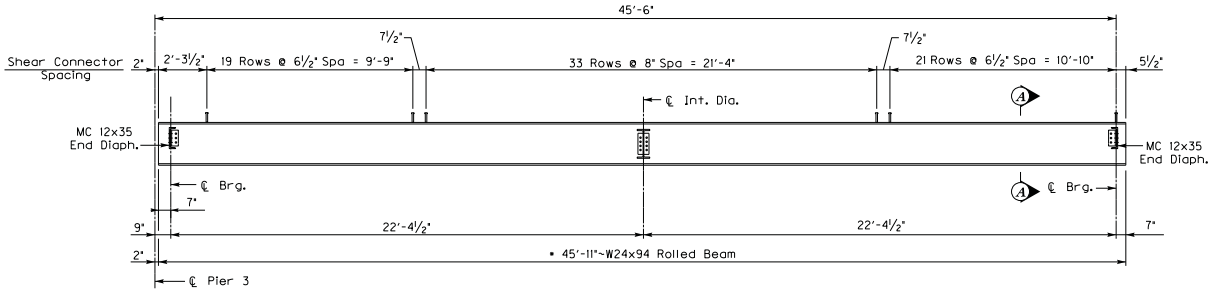

GIRDER ELEVATION

REVISION	DATE

DATE: February 2017	CHECKED BY
DESIGNED BY: M. Wolfe	JC Pyles
DETAILED BY: M. Pinson	M. Wolfe

Commonwealth of Kentucky
DEPARTMENT OF HIGHWAYS

COUNTY: **HART**

ROUTE: KY 1214 — CROSSING: Nolin River

FRAMING PLAN

PREPARED BY: **Division of Structural Design**

SHEET NO. S7

DRAWING NO. 27664

ITEM NUMBER

FILE NAME: J:\District04\RS & M\HartCo-050B00022-NolinRiver\27664.dgn
USER: earlw.downey
DATE PLOTTED: 10-MAR-2017
E-SHEET NAME:
MicroStation v8.11.7.443

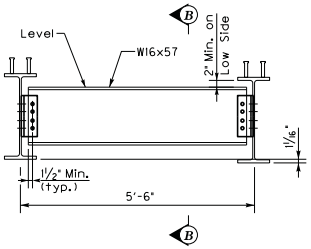

~Intermediate Diaphragm~

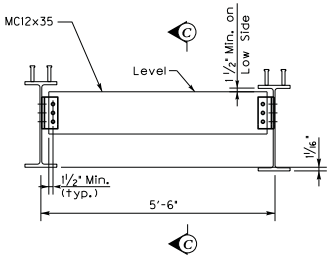

~End Diaphragm~

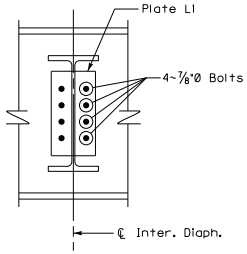

SECTION B–B

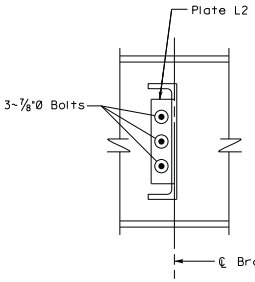

SECTION C–C

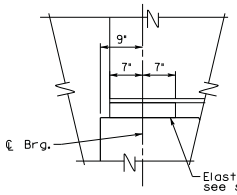

BEARING DETAIL
@ PIER 3

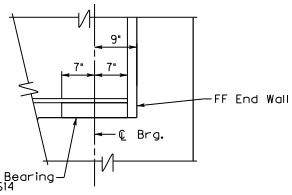

BEARING DETAIL
@ ABUT. 2

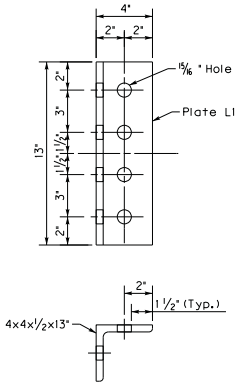

PLATE L1
16 Required

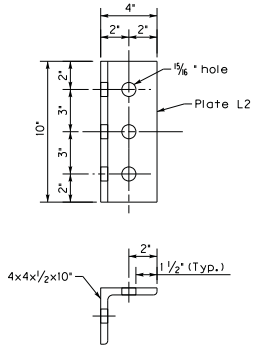

PLATE L2
16 Required

REVISION		DATE
DATE: February 2017	CHECKED BY	
DESIGNED BY: M. Wolfe	JC Pyles	
DETAILED BY: M. Pinson	M. Wolfe	

Commonwealth of Kentucky
DEPARTMENT OF HIGHWAYS

COUNTY: HART

ROUTE: KY 1214 — CROSSING: Nolin River

FRAMING PLAN

PREPARED BY: Division of Structural Design

SHEET NO. S8

DRAWING NO. 27664

ITEM NUMBER

FILE NAME: J:\District04\RS & M\Hart Co-050B00022-NolinRiver\27664.dgn
USER: earlw.downey
DATE PLOTTED: 10-MAR-2017
E-SHEET NAME:
MicroStation v8.11.7.443

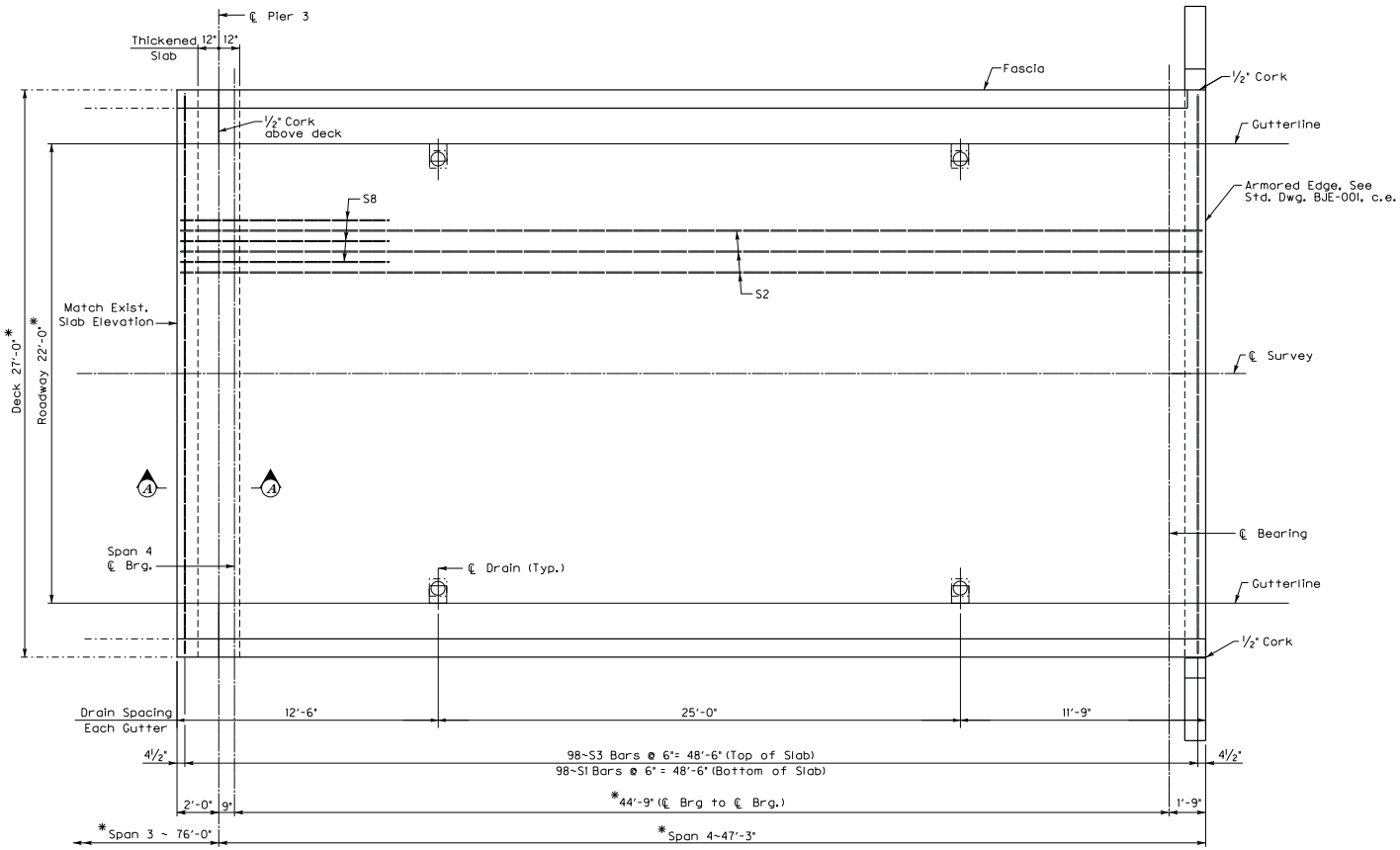

PLAN

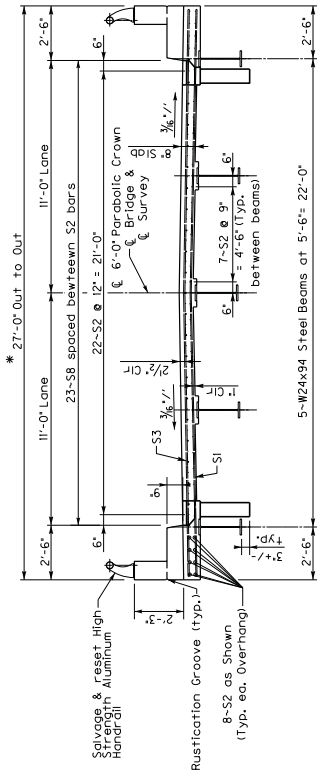

TYPICAL SECTION

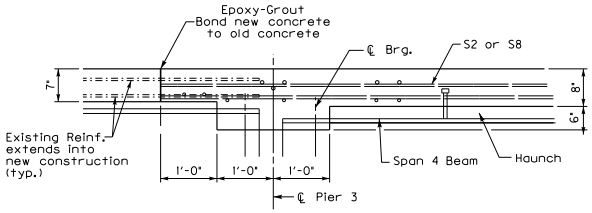

SECTION A–A
(Thickened Slab @ Pier)

Note: Salvage and reuse drain scuppers or provide new offset drains, fabricated from 1/4" plate. Cost is included in lump sum bid for Structural Steel.

* Verify dimensions in the field and adjust as necessary for existing substructure locations and dimensions.

REVISION	DATE

DATE: February 2017	CHECKED BY
DESIGNED BY: M. Wolfe	JC Pyles
DETAILED BY: M. Pinson	M. Wolfe

Commonwealth of Kentucky
DEPARTMENT OF HIGHWAYS

COUNTY: HART

ROUTE: KY 1214 — CROSSING: Nolin River

SUPERSTRUCTURE

ITEM NUMBER

PREPARED BY: Division of Structural Design

SHEET NO. S9

DRAWING NO. 27664

FILE NAME: J:\District04\RS & M\Hart Co-050B00022-NolinRiver\27664.dgn
USER: eariw.downey
DATE PLOTTED: 10-MAR-2017
E-SHEET NAME:
MicroStation v8.11.7.443

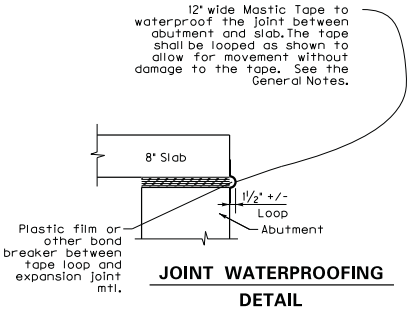

JOINT WATERPROOFING DETAIL

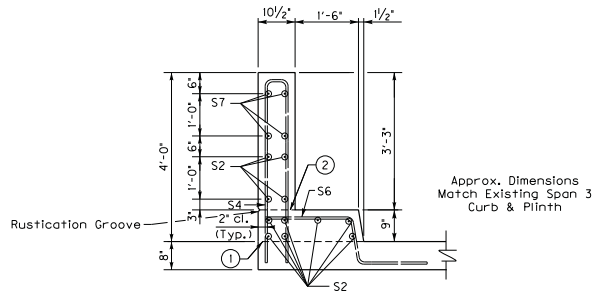

SECTION A–A

1. Level mandatory roughened construction joint. Concrete above this joint to be placed after the slab has been properly cured.
2. Permissible construction joint. "V-Groove" rustication joint is required if construction joint is used.

BILL OF REINFORCEMENT

MARK	TYPE	NO.	SIZE	LENGTH	LOCATION	A/E	B/F	C/G	D/H
S1e	Str.	98	5	26-10	Bottom of Slab				
S2e	Str.	88	5	46-11	Top & Bottom of Slab				
S3e	Str.	98	6	26-10	Top of Slab				
S4e	2s	16	5	9- 0	Barrier	4- 4	0- 6½		
S5e	2s	90	5	5- 8	Barrier	2- 8	0- 6½		
S6e	21	106	5	4- 7	Barrier	2- 0¼	1- 0¼	1- 7¾	0- 2
						1- 0¾			
S7e	Str.	8	5	3- 8	Barrier				
S8e	Str.	23	5	10- 0	Top of Slab				

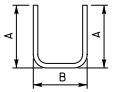

TYPE 2

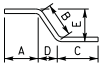

TYPE 21

NOTE:
See Aluminum Railing Sheets S12 & S13 for more information.

Notes:

MASTIC TAPE: Mastic Tape used to seal joints is to meet the requirements of ASTM C-877 Type I, II, or III. The joint is to be covered with 12-inch wide mastic tape. Prior to application, the joint surface shall be clean and free of dirt, debris, or deleterious material. Primer, if required by the tape mfgr., shall be applied for a minimum width of nine inches on each side of the joint.

Mastic Tape shall be either:

EZ-WRAP RUBBER by PRESS-SEAL GASKET CORPORATION,
SEAL WRAP by MAR MAC MANUFACTURING CO. INC. ,
CADILLOC by the UP RUBBER CO. INC.
or approved equal.

Mastic Tape shall cover the joint continuously unless otherwise shown in the plans. Mastic Tape shall be spliced by lapping a minimum of six inches and in accordance with the mfgrs. recommendations with the overlap running downhill.

The cost of labor, materials, and incidental items for furnishing and installing Mastic Tape shall be considered incidental to the unit price bid for Concrete Class 'AA' and no separate measurement or payment shall be made.

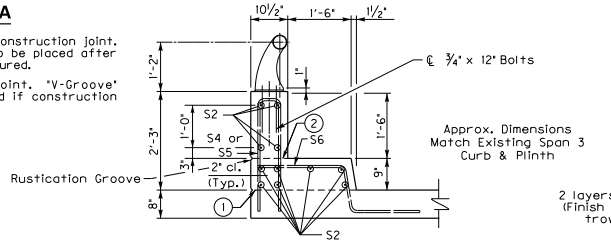

SECTION B–B

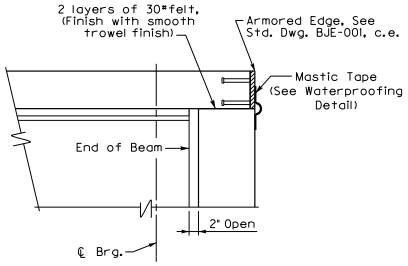

END OF SLAB

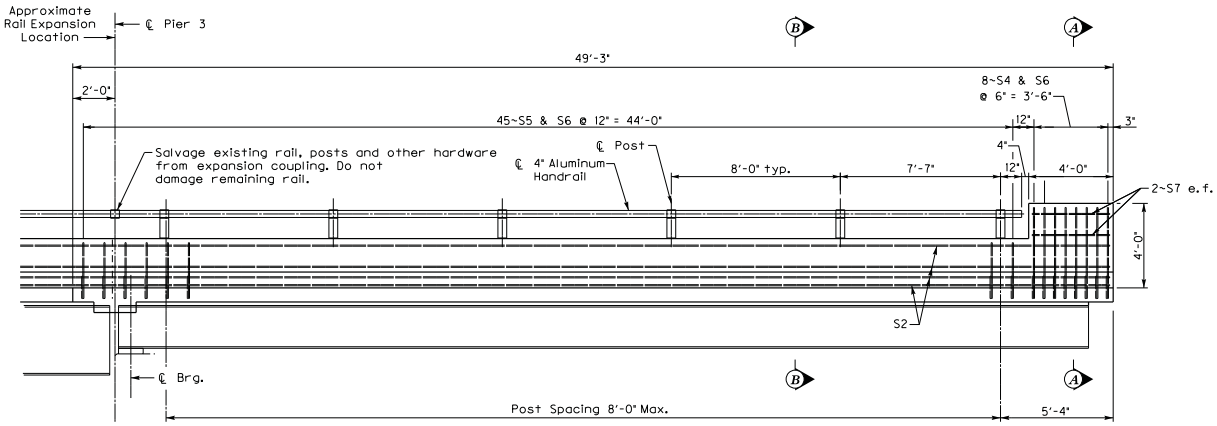

BARRIER

Plinth Reinforcement

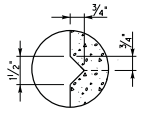

"V–Groove" Rustication

REVISION	DATE

DATE: February 2017	CHECKED BY
DESIGNED BY: M. Wolfe	JC Pyles
DETAILED BY: M. Pinson	M. Wolfe

Commonwealth of Kentucky
DEPARTMENT OF HIGHWAYS

COUNTY: HART

ROUTE: KY 1214 — CROSSING: Nolin River

SUPERSTRUCTURE

ITEM NUMBER

PREPARED BY
Division of Structural Design

SHEET NO. S10
DRAWING NO. 27664

FILE NAME: J:\District04\RS & M\HartCo-050B00022-NolinRiver\27664.dgn
USER: earlw.downey
DATE PLOTTED: 10-MAR-2017
E-SHEET NAME:
MicroStation v8.11.7.443

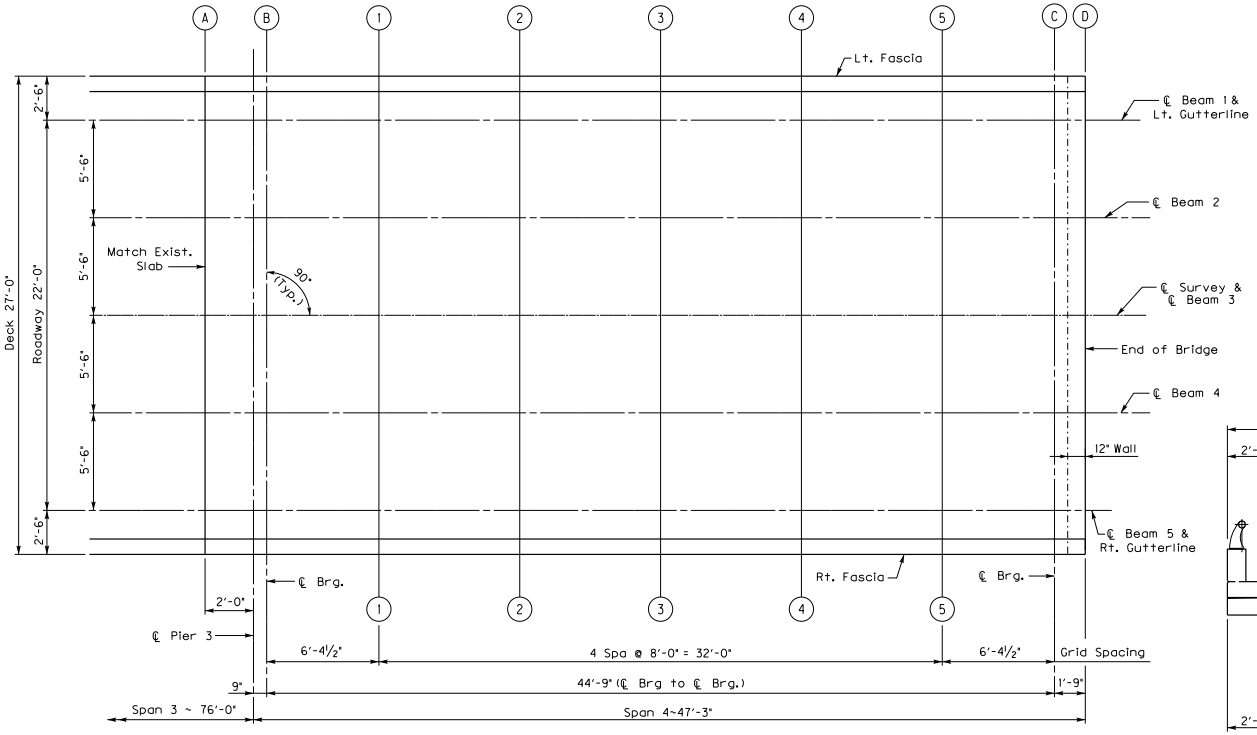

Existing elevations along Line A-A control.
Adjust span 4 construction elevations to
match existing span 3.

NOTES FOR ELEVATIONS TAKEN ON STEEL BEAMS

Take elevations on top of beam at points indicated by the grid layout. The beam elevations are to be read to three decimals, and entered in tables under "Top of Beam" elevations.

Compute dimension "X" as follows: "Construction Elevation" minus "Top of Beam" elevation equals dimension "X". Construction Elevations include camber due to weight of the concrete slab and barrier. Measuring of dimension "X" gives the final check on beam tolerances for camber, beam damage, and errors in erection that produce reverse cambers, sags, and unsightly fascia beams.

For setting templates, measure dimension "X" above top of beams for top of template. Do not set template by elevations.

Temporary supports or shoring will not be permitted under the girders when pouring the concrete floor slab or when taking "Top of Beam" elevations.

Construct barrier to roadway grade. Do not add camber to the barrier.

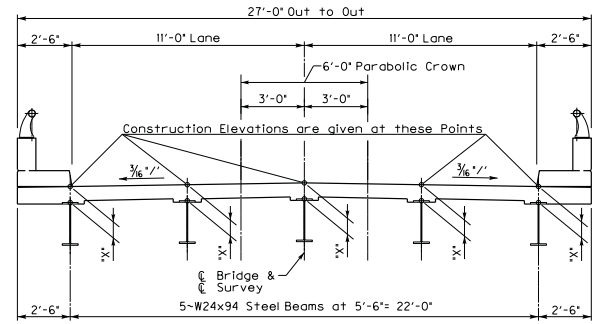

TYPICAL SECTION

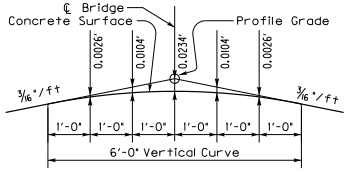

PARABOLIC CROWN

CONSTRUCTION ELEVATIONS

LOCATION	LEFT GUTTER	BEAM 1			BEAM 2			℄ BRIDGE & BEAM 3			BEAM 4			BEAM 5			RIGHT GUTTER
		CONSTR. ELEV.	TOP OF BEAM	DIM. "X"	CONSTR. ELEV.	TOP OF BEAM	DIM. "X"	CONSTR. ELEV.	TOP OF BEAM	DIM. "X"	CONSTR. ELEV.	TOP OF BEAM	DIM. "X"	CONSTR. ELEV.	TOP OF BEAM	DIM. "X"	
Skew Line AA	558.350	558.350			558.452			558.530			558.452			558.350			558.350
Skew Line BB	558.350	558.350			558.452			558.530			558.452			558.350			558.350
Skew Line CC	558.350	558.350			558.452			558.530			558.452			558.350			558.350
Skew Line DD	558.350	558.350			558.452			558.530			558.452			558.350			558.350
Grid Line 1	558.383	558.383			558.484			558.563			558.484			558.383			558.383
Grid Line 2	558.408	558.408			558.510			558.588			558.510			558.408			558.408
Grid Line 3	558.417	558.417			558.518			558.597			558.518			558.417			558.417
Grid Line 4	558.408	558.408			558.510			558.588			558.510			558.408			558.408
Grid Line 5	558.383	558.383			558.484			558.563			558.484			558.383			558.383

REVISION	DATE

DATE: February 2017	CHECKED BY
DESIGNED BY: M. Wolfe	JC Pyles
DETAILED BY: M. Pinson	M. Wolfe

Commonwealth of Kentucky
DEPARTMENT OF HIGHWAYS

COUNTY: HART

ROUTE: KY 1214 — CROSSING: Nolin River

CONSTRUCTION ELEVATIONS

ITEM NUMBER

PREPARED BY: Division of Structural Design

SHEET NO. S11

DRAWING NO. 27664

FILE NAME: J:\District04\RS & M\HartCo-050B00022-NolinRiver\27664.dgn
USER: earlw.downey
DATE PLOTTED: 10-MAR-2017
E-SHEET NAME:
MicroStation v8.11.7.443

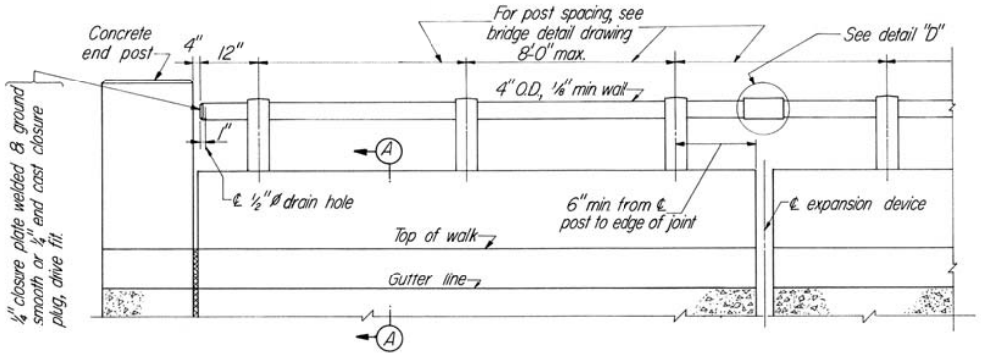

INSIDE ELEVATION OF ERECTED HANDRAIL

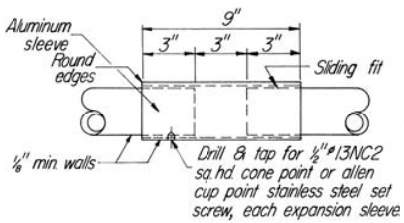

DETAIL "D"
(to be used at exp. dam only)

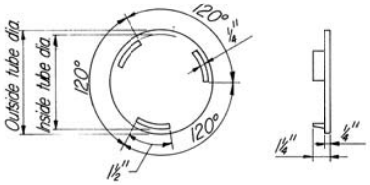

END CAST CLOSURE PLUG

SPECIFICATIONS: Kentucky Department of Highways Standard Specifications for Road & Bridge Construction current edition with revisions.

GENERAL: See Detail Drawings for exact spacing of posts. The Contractor shall furnish the Department of Highways with complete shop detail plans of Handrail for approval.

APPEARANCE: Scoring or marring of surfaces sufficient to cause objectionable appearance shall be cause for rejection of damaged piece.

ERECTION: Handrail Posts shall be set at right angles to fascia line. Tubing shall be erected on a line parallel to the fascia line. Washer shims (maximum thickness 1/8") may be used between concrete and post base for post and/or tubing alignment. The void space under the post base shall be filled with an alumilastic compound or approved equal and unshimmed post bases shall be coated with an alumilastic compound or approved equal so as to completely insulate the aluminium from the concrete.

PAYMENT: Payment will be made on the basis of the measured length of handrail between ends. Payment will be made at the contract unit price per linear foot for "Replace Bridge Rail", including Anchor Bolts and shall be complete compensation for all materials, equipment, tools and labor incidental to the manufacture, fabrication and erection of the handrail.

ANCHOR BOLTS: 3/4"Ø x 12" Square Head Machine Bolts threaded 2". Furnish with one(1) Hex Nut and one (1) washer each. All to conform to ASTM A-276, Type 302 or 304 or ASTM A-307 for low-carbon steel machine bolts and nuts galvanized in accordance with ASTM A-153.

SET SCREWS: 1/2"Ø-13NC2 Square Head Cone Point, Square Head or Allen Cup Point Stainless Steel Set Screws, ASTM A-276, type 302 or 304.

WASHER SHIMS: Washer shims shall meet the requirements of ASTM B209 alloy alclad 2024-T3 or alloy 1100.

NOTE: Handrail and Post details shown for information only. Damaged rail and posts not damaged by the contractor's actions may be replaced at the Direction of the Engineer by previously salvaged rail and posts from the Bailey Bridge Yard, Wilkinson Blvd, Frankfort, KY. Rail and posts damaged by the contractor are to be replaced at the contractor's sole expense.

Work this drawing with sheet S13

REVISION	DATE

DATE: February 2017	CHECKED BY
DESIGNED BY: M. Wolfe	JC Pyles
DETAILED BY: M. Pinson	M. Wolfe

Commonwealth of Kentucky
DEPARTMENT OF HIGHWAYS

COUNTY: HART

ROUTE: KY 1214 | CROSSING: Nolin River

ALUMINUM HANDRAIL

ITEM NUMBER

PREPARED BY: Division of Structural Design

SHEET NO. S12

DRAWING NO. 27664

MicroStation v8.11.7.443 | E-SHEET NAME: | USER: gerik.downey DATE PLOTTED: 10-MAR-2017 | FILE NAME: J:\District04\RS & M\Hart-Co-050B00022-NolinRiver\27664.dgn

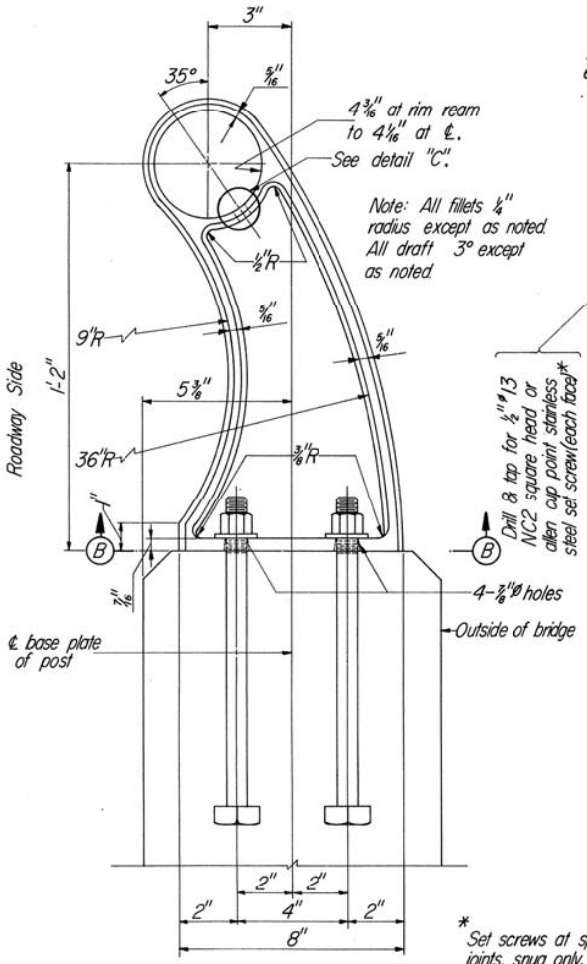

SIDE ELEVATION

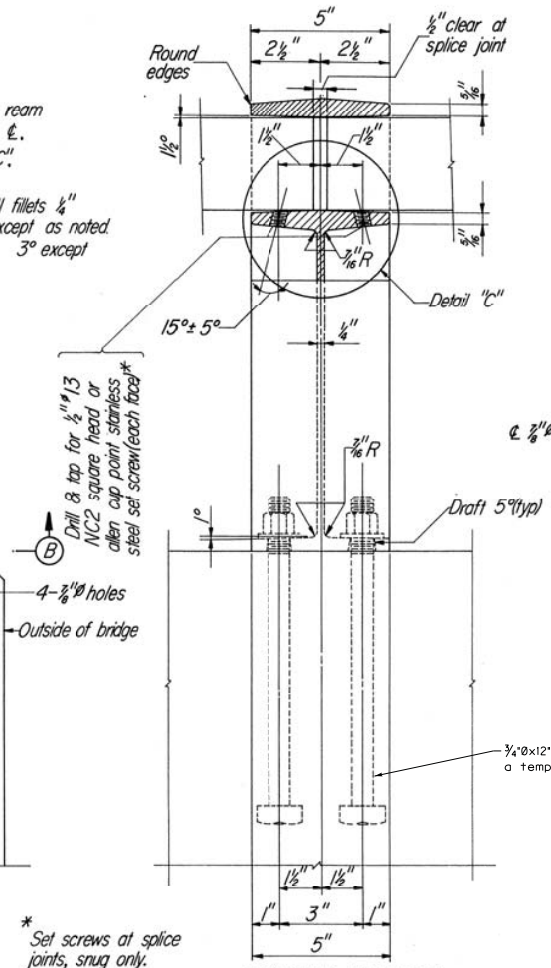

SECTIONAL ELEVATION

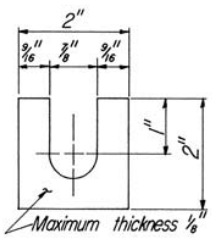

DETAIL OF WASHER SHIM

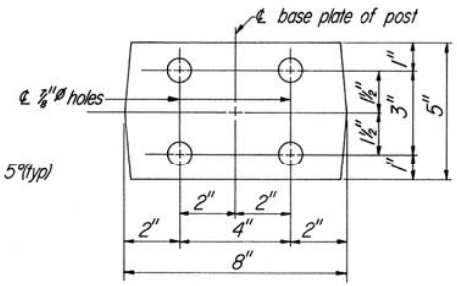

ELEVATION B-B

* Set screws at splice joints, snug only.

3/4"Ø x 12" Anchor Bolts set accurately with a template before pouring plinth.

POST DETAILS

Work this drawing with sheet S12

REVISION	DATE

DATE: February 2017	CHECKED BY
DESIGNED BY: M. Wolfe	JC Pyles
DETAILED BY: M. Pinson	M. Wolfe

Commonwealth of Kentucky
DEPARTMENT OF HIGHWAYS

COUNTY: HART

ROUTE: KY 1214 | CROSSING: Nolin River

ALUMINUM HANDRAIL

ITEM NUMBER

PREPARED BY: Division of Structural Design

SHEET NO. S13

DRAWING NO. 27664

MicroStation v8.11.7.443 | E-SHEET NAME: | USER: garrw.downey DATE PLOTTED: 10-MAR-2017 | FILE NAME: J:\District04\RS & M\Hart-Co-050B00022-NolinRiver\27664.dgn

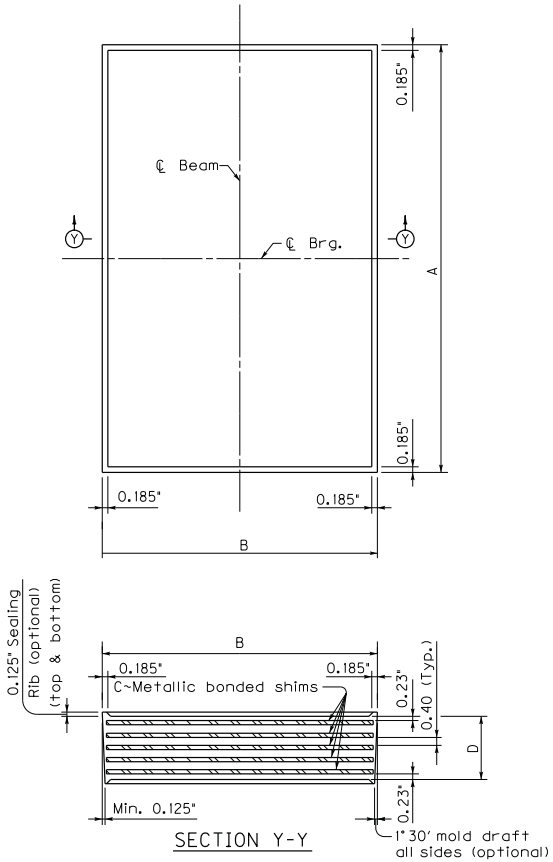

DIMENSIONS FOR ELASTOMERIC BEARING PADS						
PAD	A	B	C	D	*MAXIMUM REACTION	MAXIMUM MOVEMENT (One Direction)
SPCL	14"	9"	6~0.12" x 13.630" x 8.630"	3.18"	140 Kips	1.22"

* These reactions are based on service loads, use actual reactions to determine anchorage requirements for pads.

GENERAL NOTES

SPECIFICATIONS: Fabricate the Elastomeric Bearing Pads to the design and dimensions as shown on these drawings and to AASHTO LRFD Bridge Construction Specifications, Section 18.

Ensure bearings are low temperature Grade 3 with durometer hardness of 50 and subjected to the load testing requirements corresponding to Design Method A.

REVISION	DATE

DATE: February 2017	CHECKED BY
DESIGNED BY: M. Wolfe	JC Pyles
DETAILED BY: M. Pinson	M. Wolfe

Commonwealth of Kentucky
DEPARTMENT OF HIGHWAYS

COUNTY: HART

ROUTE: KY 1214 | CROSSING: Nolin River

ELASTOMERIC BEARING PADS

ITEM NUMBER

PREPARED BY: Division of Structural Design

SHEET NO. S14

DRAWING NO. 27664

MicroStation v8.11.7.443 | E-SHEET NAME: | USER: gerrw.downey DATE PLOTTED: 10-MAR-2017 | FILE NAME: J:\District04\RS & M\Hart-Co-050B00022-NolinRiver\27664.dgn

050B00022N

76' - 96' CONTINUOUS STEEL GIRDERS. 45' SIMPLE SPAN

297' TOTAL - NO SKEW

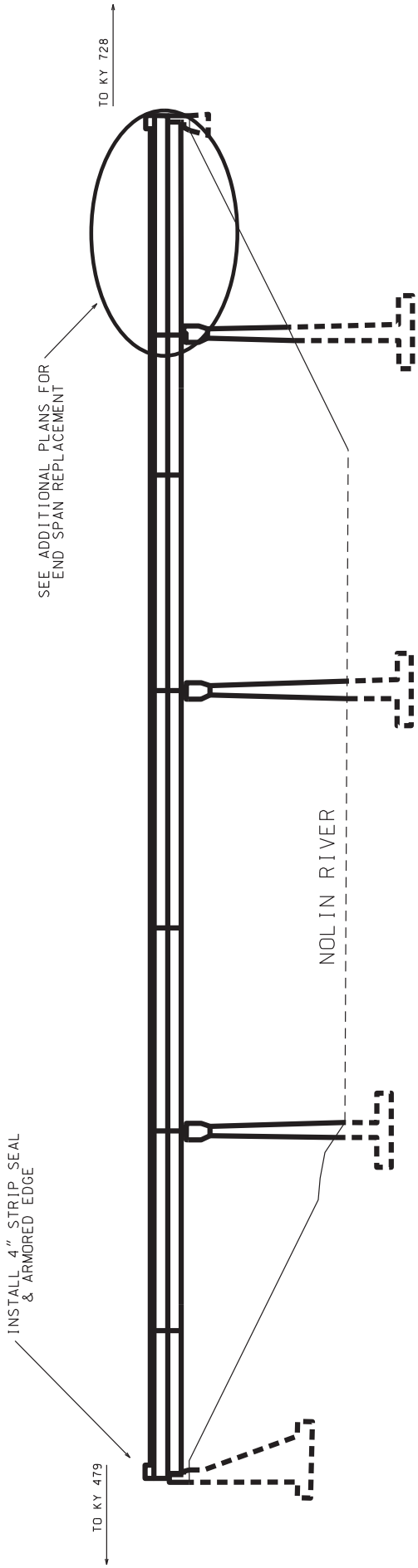

050B00022N

EXPANSION DAM DETAIL

Abutments #1 and #2

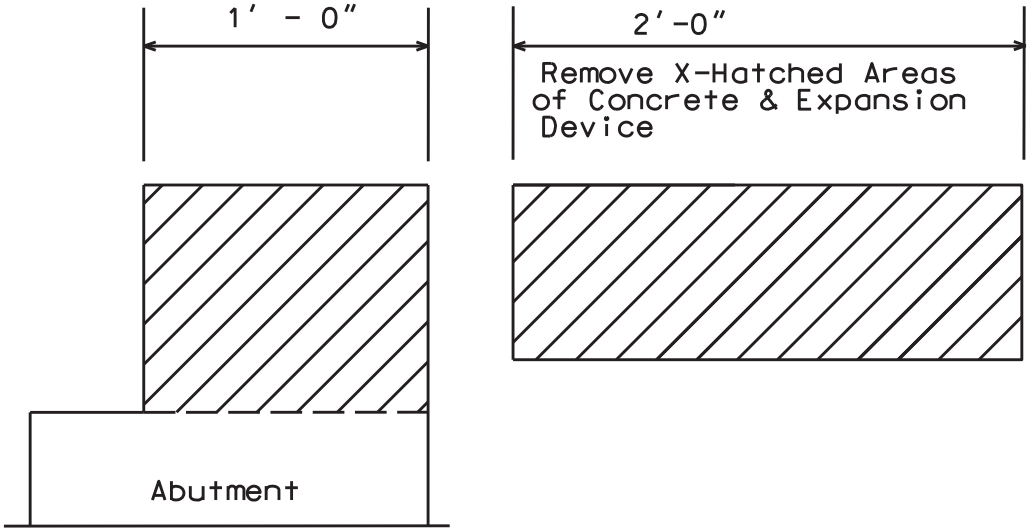

Clean & Leave Steel Reinf. in place.

EXISTING SECTION

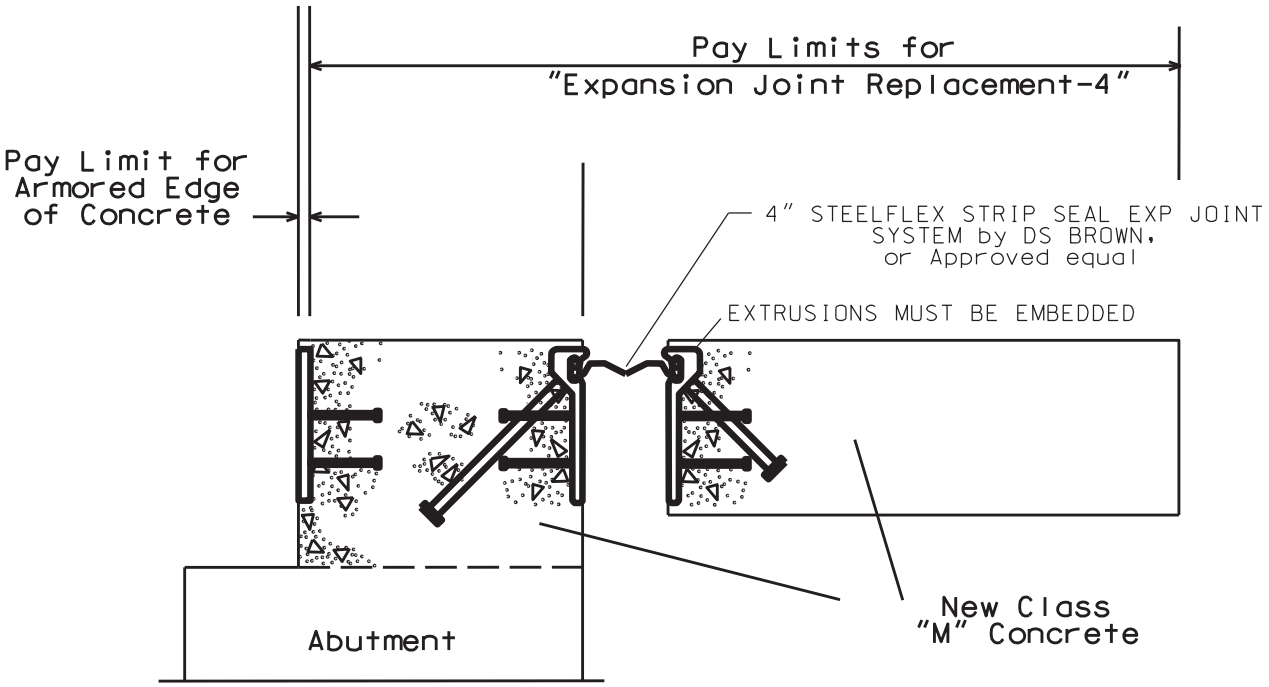

PROPOSED SECTION

CURB SECTION

ABUTMENT/END BENT

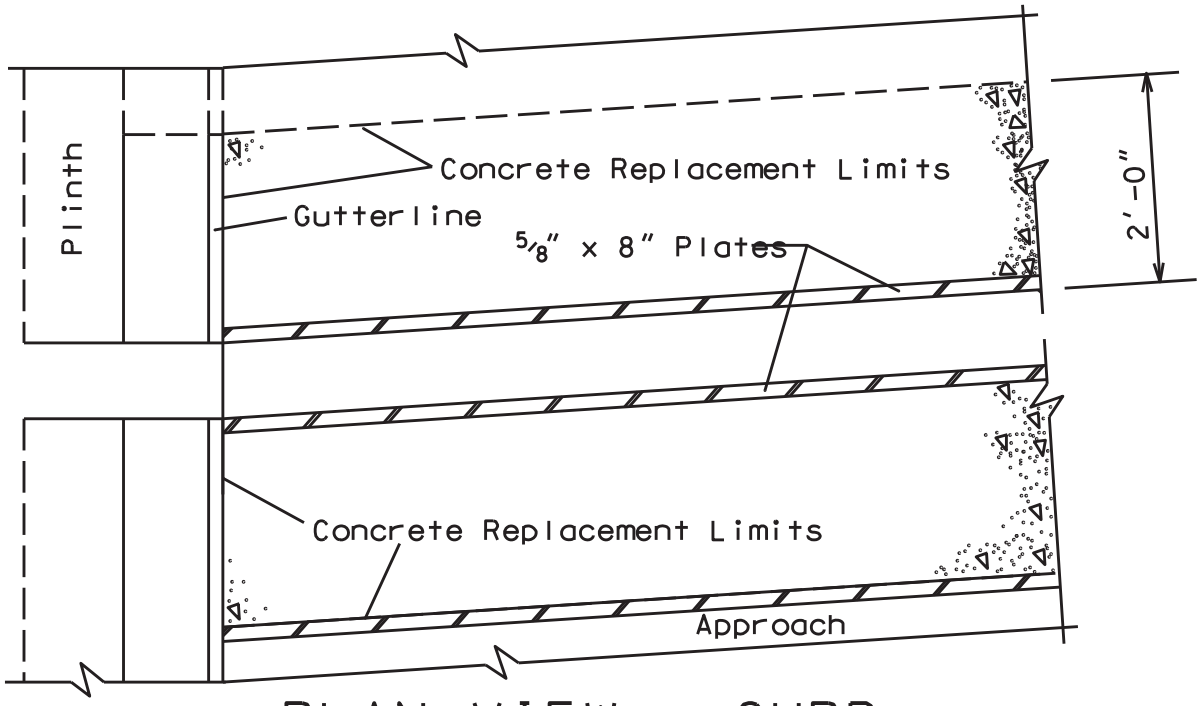

PLAN VIEW @ CURB

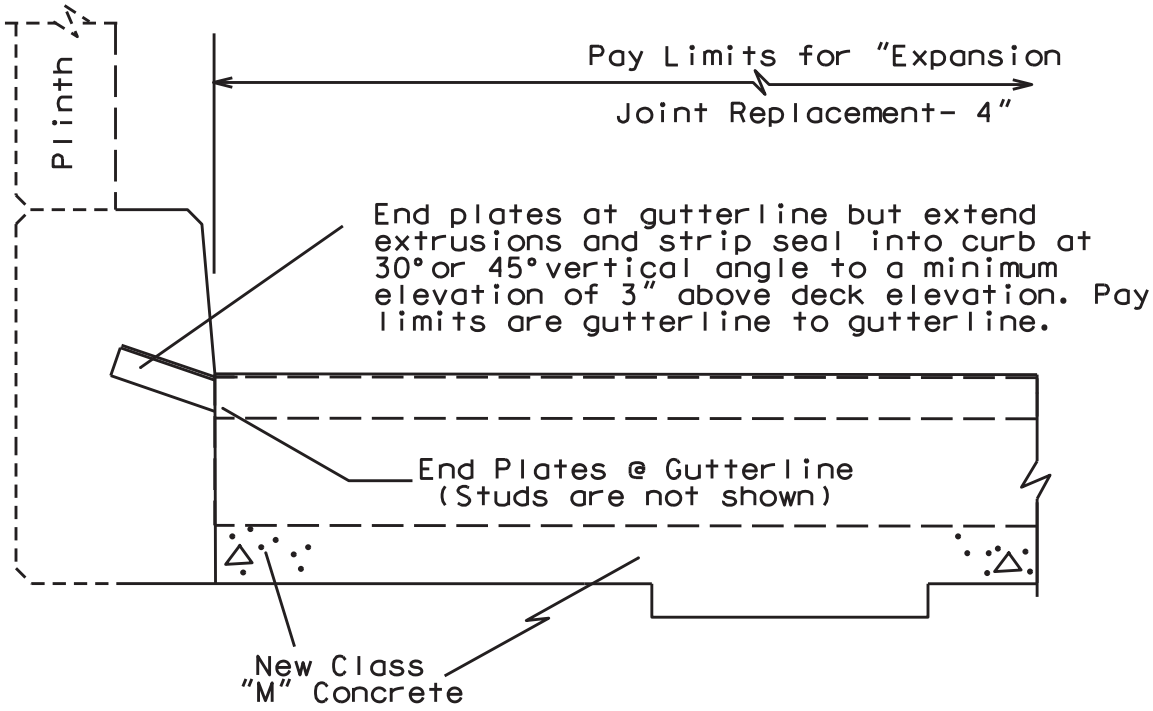

PROPOSED SECTION @ CURB

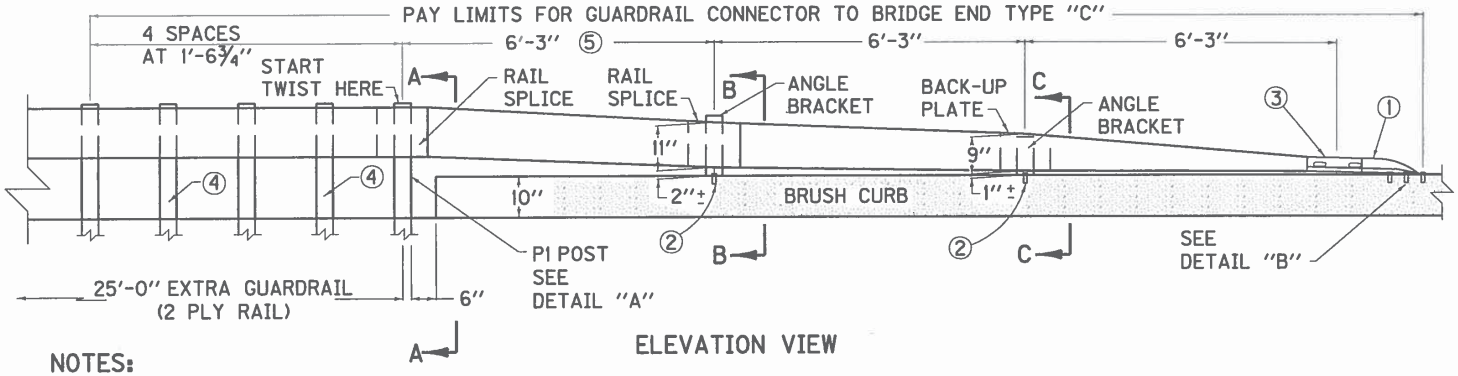

ELEVATION VIEW

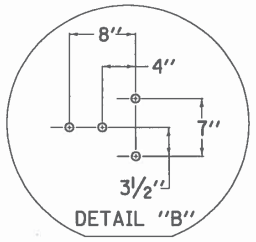

PLAN VIEW OF SELF-DRILL EXPANSION SHIELD LOCATIONS

NOTES:

GUARDRAIL CONNECTOR TO BRIDGE END TYPE "C" SHALL BE PAID FOR AT THE CONTRACT UNIT PRICE EACH. THE UNIT PRICE INCLUDES ALL METAL COMPONENTS WITHIN THE PAY LIMITS AND IN ADDITION SHALL INCLUDE AN EXTRA 25'-0" OF STEEL "W" BEAM GUARDRAIL FOR DOUBLE STRENGTH, EXTRA GUARDRAIL POSTS, EXTRA OFFSET BLOCKS, AND ALL OTHER INCIDENTALS NECESSARY TO COMPLETE THE INSTALLATION AS DETAILED.

GUARDRAIL CONNECTOR TO BRIDGE END TYPE "C" SHALL BE APPLIED ON:
A. ALL FOUR CORNERS OF EXISTING STRUCTURES WHICH HAVE TWO DIRECTIONAL TRAFFIC AND CURBS GREATER THAN 9" IN WIDTH.
B. APPROACH END OF EXISTING STRUCTURES WHICH HAVE ONE DIRECTION TRAFFIC AND CURBS GREATER THAN 9" IN WIDTH.
C. NO PEDESTRIAN TRAFFIC IS INVOLVED.

SEE CURRENT STANDARD DRAWINGS RBR SERIES FOR ALL OTHER APPLICABLE MATERIAL AND CONSTRUCTION REQUIRMENTS.

① TERMINAL SECT. NO. 2 SHALL BE ANCHORED TO THE BRIDGE BRUSH CURB WITH 4 CHUCK END TYPE SELF-DRILL EXPANSION SHIELDS ⅞" DIA. BOLT SIZE AND FOUR -⅞"x2" HEX HEAD HIGH STRENGTH GALVANIZED CAP SCREWS AND GALVANIZED STANDARD STEEL WASHERS.

② ANGLE BRACKETS SHALL BE ANCHORED TO THE BRIDGE BRUSH CURB WITH TWO CHUCK END TYPE SELF-DRILL EXPANSION SHIELDS ⅞" DIAMETER BOLT SIZE AND TWO ⅞"x2" HEX HEAD HIGH STRENGTH GALVANIZED CAP SCREWS AND GALVANIZED STANDARD STEEL WASHERS.

③ TERMINAL SECTION NO. 2; FOR RECTANGULAR PLATE WASHER REQUIREMENTS AT SPLICE SEE CUR. STD. DWG. RBR-010.

④ GUARDRAIL NOT REQUIRED TO BE ATTACHED TO POST AT THESE LOCATIONS.

⑤ A 6'-3" SECTION OF GUARDRAIL FACTORY PUNCHED SHALL BE REQUIRED.

⑥ BACKUP PLATES SHALL NOT BE REQUIRED WITHIN THE 2 PLY GUARDRAIL SECTION.

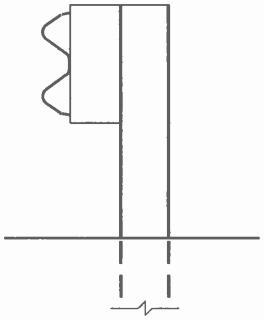

SECTION A-A

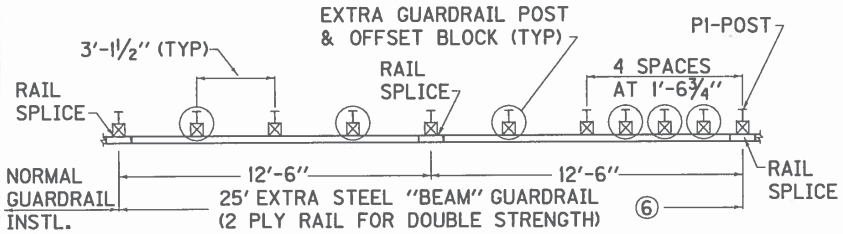

DETAIL "A"

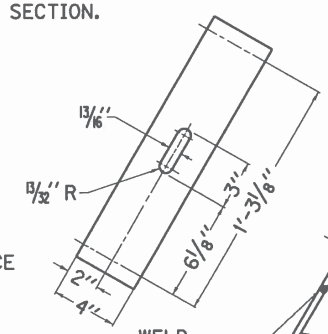

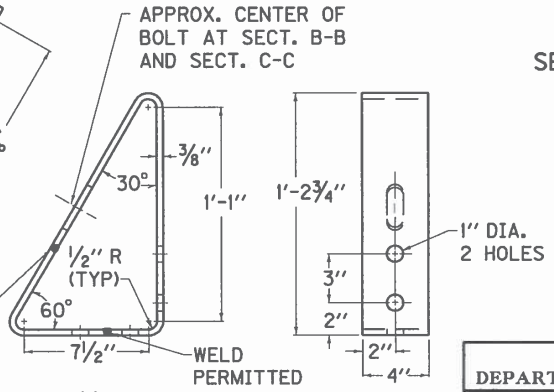

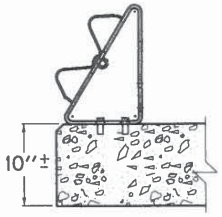

SECTION B-B

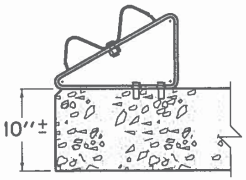

SECTION C-C

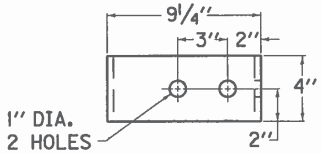

ANGLE BRACKET DETAIL

KENTUCKY DEPARTMENT OF HIGHWAYS

GUARDRAIL CONNECTOR TO BRIDGE END TYPE "C"

GUARDRAIL SUMMARY - KY 1214

NEW GUARDRAIL							REMOVE GUARDRAIL				
LANE	END TREAT.	BEGIN MILEPOINT	END MILEPOINT	END TREAT.	LIN FEET	REMARKS	LANE	BEGIN MILEPOINT	END MILEPOINT	LIN FEET	REMARKS
Right	Type 7	2.497	2.578	Guardrail Connector to Bridge Type C	350.0	Hart County Side	Right	2.497	2.578	425.0	Hart County Side
Left	Type 7	2.500	2.578	Guardrail Connector to Bridge Type C	337.5	Hart County Side	Left	2.500	2.578	412.5	Hart County Side
Right	Guardrail Connector to Bridge Type C	2.606	2.625	Type 7	25.0	Grayson County Side	Right	2.606	2.611	25.0	Grayson County Side
Left	Guardrail Connector to Bridge Type C	2.606	2.625	Type 7	25.0	Grayson County Side	Left	2.606	2.611	25.0	Grayson County Side
				Total	737.5				Total	887.5	

PART II

SPECIFICATIONS AND STANDARD DRAWINGS

SPECIFICATIONS REFERENCE

Any reference in the plans or proposal to previous editions of the *Standard Specifications for Road and Bridge Construction* and *Standard Drawings* are superseded by *Standard Specifications for Road and Bridge Construction, Edition of 2012* and *Standard Drawings, Edition of 2016.*

SUPPLEMENTAL SPECIFICATIONS

The contractor shall use the Supplemental Specifications that are effective at the time of letting. The Supplemental Specifications can be found at the following link:

http://transportation.ky.gov/Construction/Pages/Kentucky-Standard-Specifications.aspx

STANDARD DRAWINGS THAT APPLY

ROADWAY

~ BARRIERS ~

GUARDRAIL END TREATMENT

TYPE 7	RBR-051

BRIDGES

JOINTS

NEOPRENE EXPANSION DAMS AND ARMORED EDGES	BJE-001-11

PART III

EMPLOYMENT, WAGE AND RECORD REQUIREMENTS

TRANSPORTATION CABINET
DEPARTMENT OF HIGHWAYS

LABOR AND WAGE REQUIREMENTS
APPLICABLE TO OTHER THAN FEDERAL-AID SYSTEM PROJECTS

I. Application
II. Nondiscrimination of Employees (KRS 344)

I. APPLICATION

1. These contract provisions shall apply to all work performed on the contract by the contractor with his own organization and with the assistance of workmen under his immediate superintendence and to all work performed on the contract by piecework, station work or by subcontract. The contractor's organization shall be construed to include only workmen employed and paid directly by the contractor and equipment owned or rented by him, with or without operators.

2. The contractor shall insert in each of his subcontracts all of the stipulations contained in these Required Provisions and such other stipulations as may be required.

3. A breach of any of the stipulations contained in these Required Provisions may be grounds for termination of the contract.

II. NONDISCRIMINATION OF EMPLOYEES

AN ACT OF THE KENTUCKY
GENERAL ASSEMBLY TO PREVENT
DISCRIMINATION IN EMPLOYMENT
KRS CHAPTER 344
EFFECTIVE JUNE 16, 1972

The contract on this project, in accordance with KRS Chapter 344, provides that during the performance of this contract, the contractor agrees as follows:

1. The contractor shall not fail or refuse to hire, or shall not discharge any individual, or otherwise discriminate against an individual with respect to his compensation, terms, conditions, or privileges of employment, because of such individual's race, color, religion, national origin, sex, disability or age (forty and above); or limit, segregate, or classify his employees in any way which would deprive or tend to deprive an individual of employment opportunities or otherwise adversely affect his status as an employee, because of such individual's race, color, religion, national origin, sex, disability or age forty (40) and over. The contractor agrees to post in conspicuous places, available to employees and applicants for employment, notices to be provided setting forth the provisions of this nondiscrimination clause.

2. The contractor shall not print or publish or cause to be printed or published a notice or advertisement relating to employment by such an employer or membership in or any classification or referral for employment by the employment agency, indicating any preference, limitation, specification, or discrimination, based on race, color, religion, national origin, sex, or age forty (40) and over, or because the person is a qualified individual with a disability, except that such a notice or advertisement may indicate a preference, limitation, or specification based on religion, national origin, sex, or age forty (40) and over, or because the person is a qualified individual with a disability, when religion, national origin, sex, or age forty (40) and over, or because the person is a qualified individual with a disability, is a bona fide occupational qualification for employment.

3. If the contractor is in control of apprenticeship or other training or retraining, including on-the-job training programs, he shall not discriminate against an individual because of his race, color, religion, national origin, sex, disability or age forty (40) and over, in admission to, or employment in any program established to provide apprenticeship or other training.

4. The contractor will send to each labor union or representative of workers with which he has a collective bargaining agreement or other contract or understanding, a notice to be provided advising the said labor union or workers' representative of the contractor's commitments under this section, and shall post copies of the notice in conspicuous places available to employees and applicants for employment. The contractor will take such action with respect to any subcontract or purchase order as the administrating agency may direct as a means of enforcing such provisions, including sanctions for non-compliance.

Revised: January 25, 2017

EXECUTIVE BRANCH CODE OF ETHICS

In the 1992 regular legislative session, the General Assembly passed and Governor Brereton Jones signed Senate Bill 63 (codified as KRS 11A), the Executive Branch Code of Ethics, which states, in part:

> KRS 11A.040 (7) provides:
>
> No present or former public servant shall, within six (6) months following termination of his office or employment, accept employment, compensation, or other economic benefit from any person or business that contracts or does business with, or is regulated by, the state in matters in which he was directly involved during the last thirty-six (36) months of his tenure. This provision shall not prohibit an individual from returning to the same business, firm, occupation, or profession in which he was involved prior to taking office or beginning his term of employment, or for which he received, prior to his state employment, a professional degree or license, provided that, for a period of six (6) months, he personally refrains from working on any matter in which he was directly involved during the last thirty-six (36) months of his tenure in state government. This subsection shall not prohibit the performance of ministerial functions, including but not limited to filing tax returns, filing applications for permits or licenses, or filing incorporation papers, nor shall it prohibit the former officer or public servant from receiving public funds disbursed through entitlement programs.
>
> KRS 11A.040 (9) states:
>
> A former public servant shall not represent a person or business before a state agency in a matter in which the former public servant was directly involved during the last thirty-six (36) months of his tenure, for a period of one (1) year after the latter of:
>
> a) The date of leaving office or termination of employment; or
> b) The date the term of office expires to which the public servant was elected.

This law is intended to promote public confidence in the integrity of state government and to declare as public policy the idea that state employees should view their work as a public trust and not as a way to obtain private benefits.

If you have worked for the executive branch of state government within the past six months, you may be subject to the law's prohibitions. The law's applicability may be different if you hold elected office or are contemplating representation of another before a state agency.

Also, if you are affiliated with a firm which does business with the state and which employs former state executive-branch employees, you should be aware that the law may apply to them.

In case of doubt, the law permits you to request an advisory opinion from the Executive Branch Ethics Commission, 3 Fountain Place, Frankfort, Kentucky 40601; telephone (502) 564-7954.

Revised: January 27, 2017

Kentucky Equal Employment Opportunity Act of 1978

The requirements of the Kentucky Equal Employment Opportunity Act of 1978 (KRS 45.560-45.640) shall apply to this Contract. The apparent low Bidder will be required to submit EEO forms to the Division of Construction Procurement, which will then forward to the Finance and Administration Cabinet for review and approval. No award will become effective until all forms are submitted and EEO/CC has certified compliance. The required EEO forms are as follows:

- EEO-1: Employer Information Report
- Affidavit of Intent to Comply
- Employee Data Sheet
- Subcontractor Report

These forms are available on the Finance and Administration's web page under ***Vendor Information, Standard Attachments and General Terms*** at the following address: **https://www.eProcurement.ky.gov**.

Bidders currently certified as being in compliance by the Finance and Administration Cabinet may submit a copy of their approval letter in lieu of the referenced EEO forms.

For questions or assistance please contact the Finance and Administration Cabinet by email at **finance.contractcompliance@ky.gov** or by phone at 502-564-2874.

EMPLOYEE RIGHTS

UNDER THE FAIR LABOR STANDARDS ACT

THE UNITED STATES DEPARTMENT OF LABOR WAGE AND HOUR DIVISION

FEDERAL MINIMUM WAGE

$7.25 PER HOUR

BEGINNING JULY 24, 2009

OVERTIME PAY

At least 1½ times your regular rate of pay for all hours worked over 40 in a workweek.

CHILD LABOR

An employee must be at least **16** years old to work in most non-farm jobs and at least **18** to work in non-farm jobs declared hazardous by the Secretary of Labor.

Youths **14** and **15** years old may work outside school hours in various non-manufacturing, non-mining, non-hazardous jobs under the following conditions:

HART COUNTY
FE02 050 1214 B00022N
Contract ID: 172606
Page 42 of 46

No more than

- **3** hours on a school day or **18** hours in a school week;
- **8** hours on a non-school day or **40** hours in a non-school week.

Also, work may not begin before **7 a.m.** or end after **7 p.m.**, except from June 1 through Labor Day, when evening hours are extended to **9 p.m.** Different rules apply in agricultural employment.

TIP CREDIT

Employers of "tipped employees" must pay a cash wage of at least $2.13 per hour if they claim a tip credit against their minimum wage obligation. If an employee's tips combined with the employer's cash wage of at least $2.13 per hour do not equal the minimum hourly wage, the employer must make up the difference. Certain other conditions must also be met.

ENFORCEMENT

The Department of Labor may recover back wages either administratively or through court action, for the employees that have been underpaid in violation of the law. Violations may result in civil or criminal action.

Employers may be assessed civil money penalties of up to $1,100 for each willful or repeated violation of the minimum wage or overtime pay provisions of the law and up to $11,000 for each employee who is the subject of a violation of the Act's child labor provisions. In addition, a civil money penalty of up to $50,000 may be assessed for each child labor violation that causes the death or serious injury of any minor employee, and such assessments may be doubled, up to $100,000, when the violations are determined to be willful or repeated. The law also prohibits discriminating against or discharging workers who file a complaint or participate in any proceeding under the Act.

ADDITIONAL INFORMATION

- Certain occupations and establishments are exempt from the minimum wage and/or overtime pay provisions.
- Special provisions apply to workers in American Samoa and the Commonwealth of the Northern Mariana Islands.
- Some state laws provide greater employee protections; employers must comply with both.
- The law requires employers to display this poster where employees can readily see it.
- Employees under 20 years of age may be paid $4.25 per hour during their first 90 consecutive calendar days of employment with an employer.
- Certain full-time students, student learners, apprentices, and workers with disabilities may be paid less than the minimum wage under special certificates issued by the Department of Labor.

For additional information:

1-866-4-USWAGE

(1-866-487-9243) TTY: 1-877-889-5627

WWW.WAGEHOUR.DOL.GOV

U.S. Department of Labor | Wage and Hour Division

WHD Publication 1088 (Revised July 2009)

PART IV

INSURANCE

INSURANCE

The Contractor shall procure and maintain the following insurance in addition to the insurance required by law:

1) Commercial General Liability-Occurrence form – not less than $2,000,000 General aggregate, $2,000,000 Products & Completed Aggregate, $1,000,000 Personal & Advertising, $1,000,000 each occurrence.

2) Automobile Liability- $1,000,000 per accident

3) Employers Liability:

   a) $100,000 Each Accident Bodily Injury
   b) $500,000 Policy limit Bodily Injury by Disease
   c) $100,000 Each Employee Bodily Injury by Disease

4) The insurance required above must be evidenced by a Certificate of Insurance and this Certificate of Insurance must contain one of the following statements:
   a) "policy contains no deductible clauses."
   b) "policy contains _____ (amount) deductible property damage clause but company will pay claim and collect the deductible from the insured."

5) KENTUCKY WORKMEN'S COMPENSATION INSURANCE. The contractor shall furnish evidence of coverage of all his employees or give evidence of self-insurance by submitting a copy of a certificate issued by the Workmen's Compensation Board.

The cost of insurance is incidental to all contract items. All subcontractors must meet the same minimum insurance requirements.

PART V

BID ITEMS

172606

PROPOSAL BID ITEMS

Report Date 4/4/17

Section: 0001 - BRIDGE

LINE	BID CODE	ALT	DESCRIPTION	QUANTITY	UNIT	UNIT PRIC	FP	AMOUNT
0010	01982		DELINEATOR FOR GUARDRAIL MONO DIRECTIONAL WHITE	25.00	EACH		$	
0020	02014		BARRICADE-TYPE III	6.00	EACH		$	
0030	02231		STRUCTURE GRANULAR BACKFILL	6.00	CUYD		$	
0040	02351		GUARDRAIL-STEEL W BEAM-S FACE	737.50	LF		$	
0050	02371		GUARDRAIL END TREATMENT TYPE 7	4.00	EACH		$	
0060	02377		GUARDRAIL CONNECTOR TO BRIDGE END TY C	4.00	EACH		$	
0070	02381		REMOVE GUARDRAIL	887.50	LF		$	
0080	02403		REMOVE CONCRETE MASONRY	3.90	CUYD		$	
0090	02562		TEMPORARY SIGNS	200.00	SQFT		$	
0100	02650		MAINTAIN & CONTROL TRAFFIC APPLIES TO 050B00022N	1.00	LS		$	
0110	02653		LANE CLOSURE	2.00	EACH		$	
0120	02671		PORTABLE CHANGEABLE MESSAGE SIGN	2.00	EACH		$	
0130	03298		EXPAN JOINT REPLACE 4 IN	22.00	LF		$	
0140	03299		ARMORED EDGE FOR CONCRETE	22.00	LF		$	
0150	06514		PAVE STRIPING-PERM PAINT-4 IN	200.00	LF		$	
0160	08104		CONCRETE-CLASS AA	52.00	CUYD		$	
0170	08150		STEEL REINFORCEMENT	133.60	LB		$	
0180	08151		STEEL REINFORCEMENT-EPOXY COATED	12,765.00	LB		$	
0190	08160		STRUCTURAL STEEL APPLIES TO END SPAN REPLACEMENT FOR 050B00022N	1.00	LS		$	
0200	08170		SHEAR CONNECTORS	1.00	LS		$	
0210	08191		REPLACE BRIDGE RAIL	95.20	LF		$	
0220	08301		REMOVE SUPERSTRUCTURE	1.00	LS		$	
0230	08811		REMOVE BRIDGE RAIL	95.20	LF		$	
0240	08820		DRAIN PIPE-6 IN	12.00	LF		$	
0250	22146EN		CONCRETE PATCHING REPAIR	30.00	SQFT		$	
0260	23380EC		BEARING PADS	10.00	EACH		$	

Section: 0002 - DEMOBILIZATION

LINE	BID CODE	ALT	DESCRIPTION	QUANTITY	UNIT	UNIT PRIC	FP	AMOUNT
0270	02569		DEMOBILIZATION	1.00	LS		$	