CALL NO. 322

CONTRACT ID. 262258

PULASKI COUNTY

FED/STATE PROJECT NUMBER FD05 100 0027 010-015

DESCRIPTION BURNSIDE - SOMERSET ROAD (US 27)

WORK TYPE PAVEMENT (WITH ALTERNATES)

PRIMARY COMPLETION DATE 9/30/2027

LETTING DATE: December 10,2026

Sealed Bids will be received electronically through the Bid Express bidding service until 10:00 AM EASTERN STANDARD TIME December 10,2026. Bids will be publicly announced at 10:00 AM EASTERN STANDARD TIME.

NO PLANS ASSOCIATED WITH THIS PROJECT.

DEFERRED PAYMENT

REQUIRED BID PROPOSAL GUARANTY: Not less than 5% of the total bid.

TABLE OF CONTENTS

PART I SCOPE OF WORK
- PROJECT(S), COMPLETION DATE(S), & LIQUIDATED DAMAGES
- CONTRACT NOTES
- STATE CONTRACT NOTES
- DEFERRED PAYMENT
- NATIONAL HIGHWAY
- SURFACING AREAS
- ASPHALT MIXTURE
- INCIDENTAL SURFACING
- COMPACTION OPTION B
- SPECIAL NOTE(S) APPLICABLE TO PROJECT
- LIQUIDATED DAMAGES
- NON-TRACKING TACK COAT
- MANHOLE ADJUSTMENTS
- ASPHALT MIX PAVEMENT WEDGE MONOLITHIC OPERATION
- EDGE KEY (BY TON)
- ASPHALT MILLING AND TEXTURING
- TYPICAL SECTION DIMENSIONS
- TRAFFIC CONTROL PLAN
- DURABLE PAVEMENT EDGE DETAILS
- INSTALLATION OF TRAFFIC COUNTING INDUCTANCE LOOPS
- SKETCH MAP(S)
- SUMMARY SHEET(S)
- TYPICAL SECTION(S)

PART II SPECIFICATIONS AND STANDARD DRAWINGS
- STANDARD AND SUPPLEMENTAL SPECIFICATIONS
- 2020 STANDARD DRAWINGS THAT APPLY

PART III EMPLOYMENT, WAGE AND RECORD REQUIREMENTS
- LABOR AND WAGE REQUIREMENTS
- EXECUTIVE BRANCH CODE OF ETHICS
- KENTUCKY EQUAL EMPLOYMENT OPPORTUNITY ACT OF 1978 LOCALITY / STATE
- PROJECT WAGE RATES / STATE FUNDED

PART IV BID ITEMS

PART I

SCOPE OF WORK

ADMINISTRATIVE DISTRICT - 08

CONTRACT ID - 262258

FD05 100 0027 010-015

COUNTY - PULASKI

PCN - MP10000272601
FD05 100 0027 010-015

BURNSIDE - SOMERSET ROAD (US 27) (MP 10.850) BEGIN 250 FEET SOUTH OF WINDY HILLS DRIVE EXTENDING NORTH TO EXISTING PAVEMENT JOINT 380 FEET NORTH OF GRAND CENTRAL BOULEVARD. (MP 14.100), A DISTANCE OF 03.25 MILES.PAVEMENT (WITH ALTERNATES)

GEOGRAPHIC COORDINATES LATITUDE 37:01:58.55 LONGITUDE 84:37:38.06

ADT 32,546

COMPLETION DATE(S):

COMPLETED BY 09/30/2027 APPLIES TO ENTIRE CONTRACT

CONTRACT NOTES

INSURANCE

Refer to Kentucky Standard Specifications for Road and Bridge Construction, current edition.

PROPOSAL ADDENDA

All addenda to this proposal must be applied when calculating bid and certified in the bid packet submitted to the Kentucky Department of Highways. Failure to use the correct and most recent addenda may result in the bid being rejected.

BID SUBMITTAL

Bidder must use the Department's electronic bidding software. The Bidder must download the bid file located on the Bid Express website (www.bidx.com) to prepare a bid packet for submission to the Department. The bidder must submit electronically using Bid Express.

JOINT VENTURE BIDDING

Joint venture bidding is permissible. All companies in the joint venture must be prequalified in one of the work types in the Qualifications for Bidders for the project. The bidders must get a vendor ID for the joint venture from the Division of Construction Procurement and register the joint venture as a bidder on the project. Also, the joint venture must obtain a digital ID from Bid Express to submit a bid. A joint bid bond of 5% may be submitted for both companies or each company may submit a separate bond of 5%.

UNDERGROUND FACILITY DAMAGE PROTECTION

The contractor shall make every effort to protect underground facilities from damage as prescribed in the Underground Facility Damage Protection Act of 1994, Kentucky Revised Statute KRS 367.4901 to 367.4917. It is the contractor's responsibility to determine and take steps necessary to be in compliance with federal and state damage prevention directives. When prescribed in said directives, the contractor shall submit Excavation Locate Requests to the Kentucky Contact Center (KY811) via web ticket entry. The submission of this request does not relieve the contractor from the responsibility of contacting non-member facility owners, whom shall be contacted through their individual Protection Notification Center. Non-compliance with these directives can result in the enforcement of penalties.

REGISTRATION WITH THE SECRETARY OF STATE BY A FOREIGN ENTITY

Pursuant to KRS 176.085(1)(b), an agency, department, office, or political subdivision of the Commonwealth of Kentucky shall not award a state contract to a person that is a foreign entity required by KRS 14A.9-010 to obtain a certificate of authority to transact business in the Commonwealth ("certificate") from the Secretary of State under KRS 14A.9-030 unless the person produces the certificate within fourteen (14) days of the bid or proposal opening. If the

foreign entity is not required to obtain a certificate as provided in KRS 14A.9-010, the foreign entity should identify the applicable exception. Foreign entity is defined within KRS 14A.1-070.

For all foreign entities required to obtain a certificate of authority to transact business in the Commonwealth, if a copy of the certificate is not received by the contracting agency within the time frame identified above, the foreign entity's solicitation response shall be deemed non-responsive or the awarded contract shall be cancelled.

Businesses can register with the Secretary of State at https://secure.kentucky.gov/sos/ftbr/welcome.aspx .

SPECIAL NOTE FOR PROJECT QUESTIONS DURING ADVERTISEMENT

Questions about projects during the advertisement should be submitted in writing to the Division of Construction Procurement. This may be done by email to kytc.projectquestions@ky.gov. The Department will attempt to answer all submitted questions. The Department reserves the right not to answer if the question is not pertinent or does not aid in clarifying the project intent.

The deadline for posting answers will be 3:00 pm Eastern Daylight Time, the day preceding the Letting. Questions may be submitted until this deadline with the understanding that the later a question is submitted, the less likely an answer will be able to be provided.

The questions and answers will be posted for each Letting under the heading "Questions & Answers" on the Construction Procurement website (www.transportation.ky.gov/construction-procurement). The answers provided shall be considered part of this Special Note and, in case of a discrepancy, will govern over all other bidding documents.

HARDWOOD REMOVAL RESTRICTIONS

The US Department of Agriculture has imposed a quarantine in Kentucky and several surrounding states, to prevent the spread of an invasive insect, the emerald ash borer. Hardwood cut in conjunction with the project may not be removed from the state. Chipping or burning on site is the preferred method of disposal.

INSTRUCTIONS FOR EXCESS MATERIAL SITES AND BORROW SITES

Identification of excess material sites and borrow sites shall be the responsibility of the Contractor. The Contractor shall be responsible for compliance with all applicable state and federal laws and may wish to consult with the US Fish and Wildlife Service to seek protection under Section 10 of the Endangered Species Act for these activities.

ACCESS TO RECORDS

The state agency certifies that it is in compliance with the provisions of KRS 45A.150, "Access to contractor's books, documents, papers, records, or other evidence directly pertinent to the contract." The Contractor, as defined in KRS 45A.030, agrees that the contracting agency, the

Finance and Administration Cabinet, the Auditor of Public Accounts, and the Legislative Research Commission, or their duly authorized representatives, shall have access to any books, documents, papers, records, or other evidence, which are directly pertinent to this agreement for the purpose of financial audit or program review. The Contractor also recognizes that any books, documents, papers, records, or other evidence, received during a financial audit or program review shall be subject to the Kentucky Open Records Act, KRS 61.870 to 61.884. Records and other prequalification information confidentially disclosed as part of the bid process shall not be deemed as directly pertinent to the agreement and shall be exempt from disclosure as provided in KRS 61.878(1)(c).

BOYCOTT PROVISIONS

If applicable, the contractor represents that, pursuant to KRS 45A.607, they are not currently engaged in, and will not for the duration of the contract engage in, the boycott of a person or an entity based in or doing business with a jurisdiction with which Kentucky can enjoy open trade. **Note:** The term Boycott does not include actions taken for bona fide business or economic reasons, or actions specifically required by federal or state law.

If applicable, the contractor verifies that, pursuant to KRS 41.480, they do not engage in, and will not for the duration of the contract engage in, in energy company boycotts as defined by KRS 41.472.

LOBBYING PROHIBITIONS

The contractor represents that they, and any subcontractor performing work under the contract, have not violated the agency restrictions contained in KRS 11A.236 during the previous ten (10) years, and pledges to abide by the restrictions set forth in such statute for the duration of the contract awarded.

The contractor further represents that, pursuant to KRS 45A.328, they have not procured an original, subsequent, or similar contract while employing an executive agency lobbyist who was convicted of a crime related to the original, subsequent, or similar contract within five (5) years of the conviction of the lobbyist.

SPECIAL NOTE FOR RECIPROCAL PREFERENCE

RECIPROCAL PREFERENCE TO BE GIVEN BY PUBLIC AGENCIES TO RESIDENT BIDDERS

By reference, KRS 45A.490 to 45A.494 are incorporated herein and in compliance regarding the bidders residency. Bidders who want to claim resident bidder status should complete the Affidavit for Claiming Resident Bidder Status along with their bid in the electronic bidding software. Submittal of the Affidavit should be done along the bid in Bid Express.

April 30, 2018

DEFERRED PAYMENT

The successful bidder on this project has the distinct understanding that payment for any work may be delayed until July 15, 2027. Work Order/Notice to Proceed will be issued in accordance the Standard Specifications for Road and Bridge Construction, current edition.

NATIONAL HIGHWAY

Be advised this project is on the NATIONAL HIGHWAY SYSTEM.

SURFACING AREAS

The Department estimates the mainline surfacing width varies 48 – 96 feet.
The Department estimates the total mainline area to be surfaced to be 148,610 square yards.
The Department estimates the shoulder width varies 0 – 4 feet on each side.
The Department estimates the total shoulder area to be surfaced to be 16,779 square yards.

ASPHALT MIXTURE

Unless otherwise noted, the Department estimates the rate of application for all asphalt mixtures to be 110 lbs/sy per inch of depth.

INCIDENTAL SURFACING

The Department has included in the quantities of asphalt mixtures established in the proposal estimated quantities required for resurfacing or surfacing mailbox turnouts, farm field entrances, residential and commercial entrances, curve widening, ramp gores and tapers, and road and street approaches, as applicable. Pave these areas to the limits as shown on Standard Drawing RPM-110-06 or as directed by the Engineer. In the event signal detectors are present in the intersecting streets or roads, pave the crossroads to the right of way limit or back of the signal detector, whichever is the farthest back of the mainline. Surface or resurface these areas as directed by the Engineer. The Department will not measure placing and compacting for separate payment but shall be incidental to the Contract unit price for the asphalt mixtures.

OPTION B

Be advised that the Department will control and accept compaction of asphalt mixtures furnished on this project under OPTION B in accordance with Sections 402 and 403.

SPECIAL NOTE FOR THERMOPLASTIC PAVEMENT MARKINGS REMOVAL

If needed remove existing Thermoplastic Pavement Markings just prior to placement of the overlay as directed by the Engineer. The Department will not measure removal of the Thermoplastic Pavement Markings, but shall be incidental to the other items of work. Lane Striping thermo removal will be paid for as indicated by the Bid Item 06531 PAVE STRIPING REMOVAL-6 IN

SPECIAL NOTE FOR THERMO STRIPING

Thermoplastic application shall comply with Section 714.03.02 Spray Applied Thermoplastic Equipment. Section 714.03.01 will not apply.

SPECIAL NOTE FOR POLISH-RESISTANT AGGREGATE IN NO 4 THINLAY ASPHALT MIXTURES

Contrary to Section 409.03.03 of the *Standard Specifications for Road and Bridge Construction*, for 4.75mm asphalt mixtures requiring Class D aggregate, recycled asphalt pavement (RAP) shall not exceed 15% of cold feed percentage, and the use of recycled asphalt shingles (RAS) is prohibited.

Contrary to Section 402 of the *Standard Specifications for Road and Bridge Construction*, Warm Mix Asphalt (WMA) will not be permitted for all 4.75mm asphalt mixtures.

Contrary to Section 403.03.01 of the *Standard Specifications for Road and Bridge Construction*, the NO 4 surface mixtures, do not place the mixture between September 30 and May 1 unless requested in writing and approved by the engineer.

SPECIAL NOTE FOR FINE MILLING

Perform Fine Milling at areas outlined in the Typical Sections and as directed by the Engineer.

A. Equipment. Provide a cold milling machine with a fine tooth milling drum and an electronic grade control system. The tool spacing of the drum shall not exceed 3/8 inch. The machine shall be equipped with a grade control system capable of determining a mean value from a minimum of three grade sensors. The sensors shall span a minimum length of 20 feet longitudinally. The drum must be capable of producing a macrotexture measurement greater than or equal to 9.5 inches as described in C. Testing.

B. Construction. The milling machine shall be operated as a speed and drum revolution per minute such that the macrotexture measurement is greater than or equal to 9.5 inches as described in C. Testing and the milled pavement profile does not vary longitudinally more than ¼ inch from a 16’ straight edge. Maintain the milling drum such that the

cross-slope does not vary more than 1/8 inch from a 10 foot straightedge. Milling shall be performed so that the cross-slope breaks between driving lanes and shoulders remain at their existing locations. Depth of milling shall be set so as to remove rutting, rumble strips, and profile errors. Contractor will take possession of all millings from milling operations. The milled surface shall be swept clean of all loose material after milling and prior to resurfacing. Prior to resurfacing, allow traffic to drive on the milled surface for a minimum of 5 days to permit the removal of fine dust from the milled surface.

C. Testing. Testing shall be performed to determine the macrotexture of the milled pavement surface at a random location chosen in accordance with Kentucky Method KM 64-113-14. Test area shall be cleaned with a stiff wire and or soft bristle brush and protected with a wind screen as necessary. Pour 200 ml of Type 1 glass beads (meeting AASHTO M247) from a height of 4 inches or less onto the milled pavement surface. Using a round plexiglass disk (8 inches in diameter x ½ inch thick) with a round handle, place gently on the pile of beads and spread in a slow circular motion to disperse the beads in a circular area and create a defined crest around the perimeter. Continue spreading until the beads are well dispersed and the disk rides on top of the high points of the milled pavement surface. Measure the diameter of the pile in inches at 0 degrees, 45 degrees, 90 degrees and 135 degrees. Determine the macrotexture measurement in inches by adding the four measurements and dividing by four. Frequency of testing shall be a minimum of once daily and additional testing will be performed as determined necessary by the project engineer.

D. Measurement. The Department will measure Fine Milling in Sq. Yds. of surface milled.

E. Payment. Payment at the contract unit price per Sq. Yd. of Asphalt Pavement Milling and Texturing (Fine Milling) shall be full compensation for all equipment, labor, materials, and incidentals necessary to complete the operations described herein.

SPECIAL NOTE FOR LIQUIDATED DAMAGES

FD05 100 0027 010-015

In addition to the Liquidated Damages for contract completion specified in Section 108.09, Special Liquidated Damages in the amount of $1500 per hour per lane will be assessed for failure to open the roadway as specified in the traffic control plans. If work is delayed by inclement weather, the minimum work required to place traffic on this pavement shall be resumed immediately as soon as weather permits.

Contrary to section 108.09 of the Standard Specifications, Liquidated damages will be assessed without regard to seasonal or weather limitations that prohibit the contractor from performing work on the controlling item or operation.

All liquidated damages will be applied accumulatively.

All other applicable portions of Section 108 apply.

SPECIAL NOTE FOR NON-TRACKING TACK COAT

1. DESCRIPTION AND USEAGE. This specification covers the requirements and practices for applying a non-tracking tack asphalt coating. Place this material on the existing pavement course, prior to placement of a new asphalt pavement layer. Use when expedited paving is necessary or when asphalt tracking would negatively impact the surrounding area. This material is not suitable for other uses. Ensure material can "break" within 15 minutes under conditions listed in 3.2.

2. MATERIALS, EQUIPMENT, AND PERSONNEL.

2.1 Non-Tracking Tack. Provide material conforming to Subsection 2.1.1.

2.1.1 Provide a tack conforming to the following material requirements:

Property	Specification	Test Procedure
Viscosity, SFS, 77 ˚ F	20 – 100	AASHTO T 72
Sieve, %	0.3 max.	AASHTO T 59
Asphalt Residue[1], %	50 min.	AASHTO T 59
Oil Distillate, %	1.0 max.	AASHTO T 59
Residue Penetration, 77 ˚ F	0 - 30	AASHTO T 49
Original Dynamic Shear (G*/sin δ), 82 ˚ C	1.0 min.	AASHTO T 315
Softening Point, ˚ F	149 min.	AASHTO T 53
Solubility, %	97.5 min.	AASHTO T 44

[1] Bring sample to 212 ˚F over a 10-15 minute period. Maintain 212 ˚F for 15-20 minutes or until 30-40 mL of water has distilled. Continue distillation as specified in T59.

2.2. Equipment. Provide a distributor truck capable of heating, circulating, and spraying the tack between 170 ˚F and 180 ˚F. Do not exceed 180 ˚F. Circulate the material while heating. Provide the correct nozzles that is recommend by the producer to ensure proper coverage of tack is obtained. Ensure the bar can be raised to between 14" and 18" from the roadway.

2.3. Personnel. Ensure the tack supplier has provided training to the contractor on the installation procedures for this product. Make a technical representative from the supplier available at the request of the Engineer.

3. CONSTRUCTION.

3.1 Surface Preparation. Prior to the application of the non-tracking tack, ensure the pavement surface is thoroughly dry and free from dust or any other debris that would inhibit adhesion. Clean the surface by scraping, sweeping, and the use of compressed air. Ensure this preparation process occurs shortly before application to prevent the return of debris on to the pavement. If rain is expected within one hour after application, do not apply material. Apply material only when the surface is dry, and no precipitation is expected.

3.2 Non-tracking Tack Application. Placement of non-tracking tack is not permitted from October 1st to May 15th. When applying material, ensure the roadway temperature is a minimum of 40˚F and rising. Prior to application, demonstrate competence in applying the tack according to this note to the satisfaction of the Engineer. Heat the tack in the distributor to between 170 – 180 ˚F. After the initial heating, between 170 – 180 ˚F, the material may be sprayed between 165 ˚F and 180 ˚F. Do not apply outside this temperature range. Apply material at a minimum rate of 0.70 pounds (0.08 gallons) per square yard. Ensure full coverage of the material on the pavement surface. Full coverage of this material is critical. Increase material application rate if needed to achieve full coverage. Schedule the work so that, at the end of the day's production, all non-tracking tack is covered with the asphalt mixture. If for some reason the non-tracking tack cannot be covered by an asphalt mixture, ensure the non-tracking tack material is clean and reapply the non-tracking tack prior to placing the asphalt mixture. Do not heat material more than twice in one day.

3.3 Non-tracking Tack Certification. Furnish the tack certification to the Engineer stating the material conforms to all requirements herein prior to use.

3.4 Sampling and Testing. The Department will require a sample of non-tracking tack be taken from the distributor at a rate of one sample per 15,000 tons of mix. Take two 1 gallon samples of the heated material and forward the sample to the Division of Materials for testing within 7 days. Ensure the product temperature is between 170 and 180 °F at the time of sampling.

4. MEASUREMENT. The Department will measure the quantity of non-tracking tack in tons. The Department will not measure for payment any extra materials, labor, methods, equipment, or construction techniques used to satisfy the requirements of this note. The Department will not measure for payment any trial applications of non-tracking tack, the cleaning of the pavement surface, or furnishing and placing the non-tracking tack. The Department will consider all such items incidental to the non-tracking tack.

5. PAYMENT. The Department will pay for the non-tracking tack at the Contract unit bid price and apply an adjustment for each manufacturer's lot of material based on the degree of compliance as defined in the following schedule. Non-tracking tack will not be permitted for use from October 1st to May 15th. During this timeframe, the department will allow the use of an approved asphalt emulsion in lieu of a non-tracking tack product but will not adjust the unit bid price of the material. When a sample fails on two or more tests, the Department may add the deductions, but the total deduction will not exceed 100 percent.

Non-Tracking Tack Price Adjustment Schedule						
Test	Specification	100% Pay	90% Pay	80% Pay	50% Pay	0% Pay
Viscosity, SFS, 77 ˚ F	20 – 100	19 - 102	17 - 18 103 - 105	15 - 16 106 - 107	14 108 - 109	≤13 ≥ 110
Sieve, %	0.30 max.	≤ 0.40	0.41 - 0.50	0.51 - 0.60	0.61 - 0.70	≥ 0.71
Asphalt Residue, %	50 min.	≥49.0	48.5 – 48.9	48.0 – 48.4	47.5-47.9	≤ 47.4
Oil Distillate, %	1.0 max.	≤1.0	1.1-1.5	1.6 - 1.7	1.8-1.9	>2.0
Residue Penetration, 77 ° F.	30 max.	≤ 31	32 - 33	34 - 35	36 - 37	≥ 38
Original Dynamic Shear (G*/sin δ), 82 ˚ C	1.0 min.	≥0.95	0.92 – 0.94	0.90 – 0.91	0.85 - 0.89	≤ 0.84
Softening Point, º F	149 min.	≥145	142 - 144	140 - 141	138 - 139	≤ 137
Solubility, %	97.5 min.	≥ 97.0	96.8 – 96.9	96.6 – 96.7	96.4 – 96.5	≤ 96.3

Code	Pay Item	Pay Unit
24970EC	Asphalt Material for Tack Non-Tracking	Ton

Revised: May 23, 2022

SPECIAL NOTE FOR MANHOLE ADJUSTMENTS

The City of Somerset is responsible for manhole adjustments. Notify the Engineer a minimum of 30 calendar days prior to beginning any work on the project. Unless directed otherwise by the Engineer, do not begin resurfacing until the manhole adjustments are completed by the City. The Engineer will coordinate the work between the Contractor and City.

SPECIAL NOTE FOR PAVEMENT WEDGE AND SHOULDER MONOLITHIC OPERATION

1.0 MATERIALS. Provide an Asphalt Surface Mixture conforming to Section 403 of the Standard Specifications, as applicable to the project, for the pavement wedge.

2.0 CONSTRUCTION. Place the specified Asphalt Surface Mixture on shoulders monolithically with the driving lane. Prime the existing shoulder with tack material as the Engineer directs before placing the wedge. Construct according to Section 403.03 of the Standard Specifications.

Equip the paver with a modified screed that extends the full width of the wedge being placed and is tapered to produce a wedge. Obtain the Engineer's approval of the modified screed before placing shoulder wedge monolithically with the driving lane.

The wedge may vary in thickness at the edge of the milled area in the shoulder. If the area to receive the shoulder wedge is milled prior to placement, during rolling operations pinch the outside edge of the new inlay wedge to match the existing shoulder elevation not being resurfaced. Unless required otherwise by the Contract, construct rolled or sawed rumble strips according to Section 403.03.08, as applicable.

The following sketch is primarily for the computation of quantities; however, the wedge will result in a similar cross-section where sufficient width exists. Do not construct a shoulder for placing the wedge unless specified elsewhere in the Contract.

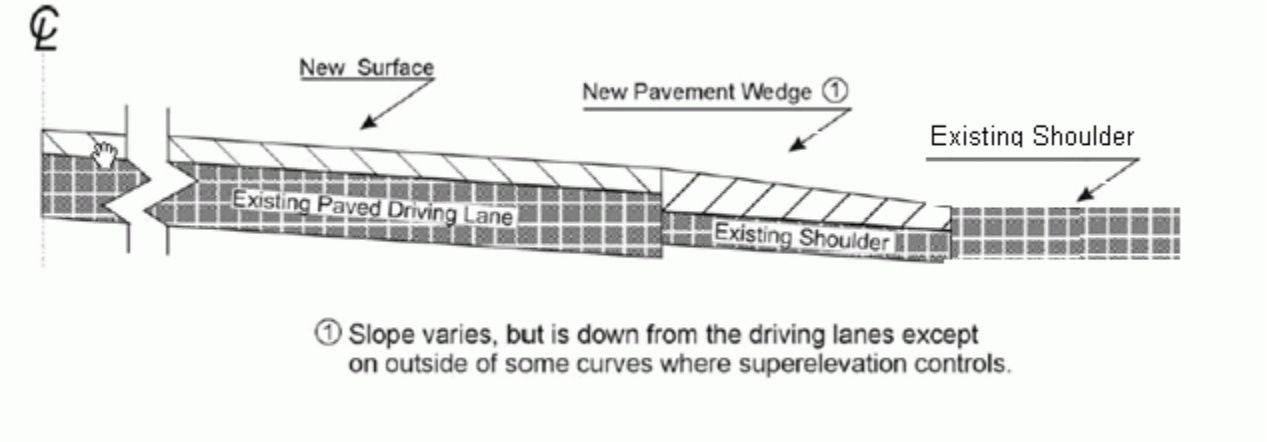

3.0 MEASUREMENT. The Department will measure Asphalt Surface Mixture placed as the pavement wedge according to Section 403.

4.0 PAYMENT. The Department will make payment for the completed and accepted quantities of Asphalt Surface Mixtures on pavement wedges according to Section 403.

SPECIAL NOTE FOR EDGE KEY

Construct Edge Keys at the beginning of project, end of project, at railroad crossings, and at ramps, as applicable. Unless specified in the Contract or directed by the Engineer, do not construct edge keys at intersecting streets, roads, alleys, or entrances. Cut out the existing asphalt surface to the required depth and width shown on the drawing and heel the new surface into the existing surface. The Department will make payment for this work at the Contract unit price per square yards for Fine Milling, which shall be full compensation for all labor, materials, equipment, and incidentals for removal and disposal of the existing asphalt surface required to construct the edge key.

EDGE KEY

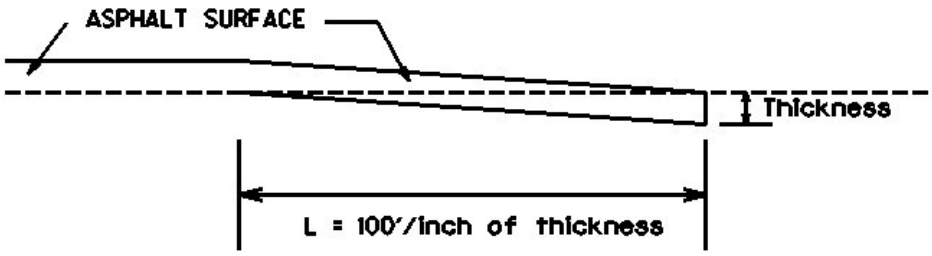

Thickness = 0.75 Inches

L = 75 LF

L = Length of Edge Key

SPECIAL NOTE FOR
ASPHALT MILLING AND TEXTURING

Begin paving operations within **48 hours** of commencement of the milling operation. Continue paving operations continuously until completed. If paving operations are not begun within this time period, the Department will assess liquidated damages at the rate prescribed by Section 108.09 until such time as paving operations are begun.

Take possession of the millings and recycle the millings or dispose of the millings off the Right-of-Way at sites obtained by the Contractor at no additional cost to the Department.

1-3520 48 hours Contractor keeps millings
01/2/2012

SPECIAL NOTE FOR TYPICAL SECTION DIMENSIONS

Consider the dimensions shown on the typical sections for pavement and shoulder widths and thickness' to be nominal or typical dimensions. The Engineer may direct or approve varying the actual dimensions to be constructed to fit existing conditions. Do not widen existing pavement or shoulders unless specified elsewhere in this proposal or directed by the engineer.

1-3725 Typical Section Dimensions
01/02/2012

TRAFFIC CONTROL PLAN
FD05 100 0027 010-015

TRAFFIC CONTROL GENERAL

Except as provided herein, maintain and control traffic in accordance with the Standard and Supplemental Specifications and the Standard and Sepia Drawings, current editions. Except for the roadway and traffic control bid items listed, all items of work necessary to maintain and control traffic will be paid at the lump sum bid price to "Maintain and Control Traffic".

Contrary to Section 106.01, furnish new, or used in like new condition, traffic control devices at the beginning of the work and maintain in like new condition until completion of the work.

PROJECT PHASING & CONSTRUCTION PROCEDURES

Do not erect lane closures on the following days and adjacent weekends:

- **Memorial Day**
- **Independence Day**
- **Labor Day**
- **Veterans Day**

Maintain all lanes open to traffic and perform no work during the following hours:

7:00 a.m. - 7:00 p.m. Monday through Thursday

No Work will be permitted from 7:00 am Friday through 7:00 pm Sunday.

The Engineer may permit minor operations that do not require a lane closure and cause little disruption to traffic between the hours of 7:00 a.m. to 7:00 p.m. Obtain the Engineer's written approval before performing work during this timeframe.

The Engineer may specify additional days and hours when lane closures will not be allowed.

At locations with three or more lanes, maintain one lane of traffic in each direction at all times during construction. At locations with two lanes, maintain alternating one way traffic during construction. Provide a minimum clear lane width of 11.0 feet; however, provide for passage of vehicles of up to 16 feet in width. If traffic should be stopped due to construction operations, and a school bus on an official run arrives on the scene, make provisions for the passage of the bus as quickly as possible.

The Department will require night work on this project. Obtain the Engineer's approval of the method of lighting prior to performing night work.

Traffic **will not** be allowed on milled sections (mainline driving lanes and turn lanes) until the new asphalt surface and striping has been constructed. The contractor may submit a request in writing to the Engineer to allow traffic on milled sections if a "fine-tooth" milling drum is utilized for milling operations. Traffic will be allowed on milled sections on approach roads and other areas where the temporary riding surface is deemed acceptable by the Engineer.

Take these restrictions into account in submitting bid. The Department will not consider any claims for money or grant contract time extensions for any delays to the Contractor as a result of these restrictions.

LANE CLOSURES

Do not leave lane closures in place during non-working hours.

SIGNS

Sign posts and splices shall be compliant with NCHRP 350 or MASH. Manufacturer's documentation validating this compliance shall be provided to the Engineer prior to installation. Signs, including any splices, shall be installed according to manufacturer's specifications and installation recommendations. Contrary to section 112.04.02, only long-term signs (signs intended to be continuously in place for more than 3 days) will be measured for payment. Short-term signs (signs intended to be left in place for 3 days or less) will not be measured for payment but will be incidental to Maintain and Control Traffic.

CHANGEABLE MESSAGE SIGNS

Provide changeable message signs in advance of and within the project at locations determined by the Engineer. If work is in progress concurrently in both directions or if more than one lane closure is in place in the same direction of travel, provide additional changeable message signs as directed by the Engineer. Place changeable message signs one mile in advance of the anticipated queue at each lane closure. As the actual queue lengthens and/or shortens, relocate or provide additional changeable message signs so that traffic has warning of slowed or stopped traffic at least one mile but not more than two miles before reaching the end of the actual queue. The Engineer may vary the designated locations as the work progresses. The Engineer will determine the messages to be displayed. In the event of damage or mechanical/electrical failure, repair or replace the Changeable

Message Sign within 24 hours. The Department will measure for payment the maximum number of Changeable Message Signs in concurrent use at the same time on a single day on all sections of the contract. The Department will measure individual Changeable Message Signs only once for payment, regardless of how many times they are set, reset, removed, and relocated during the duration of the project. The Department will not measure replacements for damaged Changeable Message Signs or for signs the Engineer directs be replaced due to poor condition or readability. Retain possession of the Changeable Message Signs upon completion of the work.

ARROW PANELS

Use arrow panels as shown on the Standard Drawings or as directed by the Engineer. The Department will measure for payment the maximum number of arrow panels in concurrent use at the same time on a single day on all sections of the contract. The Department will measure for payment the maximum number of Arrow Panels in concurrent use at the same time on a single day on all sections of the contract. The Department will measure individual Arrow Panels only once for payment, regardless of how many times they are set, reset, removed, and relocated during the duration of the project. The Department will not measure replacements for damaged Arrow Panels or for panels signs the Engineer directs be replaced due to poor condition or readability for payment. Retain possession of the Arrow Panels upon completion of the work.

TEMPORARY ENTRANCES

The Engineer will not require the Contractor to provide continuous access to farms, single family, duplex, or triplex residential properties during working hours; however, provide reasonable egress and ingress to each such property when actual operations are not in progress at that location. Limit the time during which a farm or residential entrance is blocked to the minimum length of time required for actual operations, not extended for the Contractor's convenience, and in no case exceeding six (6) hours. Notify all residents twenty-four hours in advance of any driveway or entrance closings and make any accommodations necessary to meet the access needs of disabled residents.

Except as allowed by the Phasing as specified above, maintain direct access to all side streets and roads, schools, churches, commercial properties and apartments or apartment complexes of four or more units at all times.

The Department will measure asphalt materials required to construct and maintain any temporary entrances which may be necessary to provide temporary access; however, the Department will not measure aggregates, excavation, and/or embankment, but shall be incidental to Maintain and Control Traffic. The Engineer will determine the type of surfacing material, asphalt or aggregate, to be used at each entrance.

TRAFFIC COUNTING INDUCTANCE LOOPS AND AXLE SENSORS

Install traffic counting loops and axle sensors according to the Special Notes for Installation of Traffic Counting Inductance Loops and Axle Sensors. Coordinate the placement of the loops and sensors with the Engineer.

THERMOPLASTIC INTERSECTION MARKINGS

Consider the locations listed on the summary as approximate only. Prior to milling and/or resurfacing, locate and document the locations of the existing markings. After resurfacing, replace the markings at their approximate existing locations or as directed by Engineer. Place markings not existing prior to resurfacing as directed by the Engineer.

BARRICADES

The Department will not measure barricades used in lieu of barrels and cones for channelization or delineation, but shall be incidental to Maintain and Control Traffic according to Section 112.04.01.

The Department will measure barricades used to protect pavement removal areas in individual units Each. The Department will measure for payment the maximum number of barricades in concurrent use at the same time on a single day on all sections of the contract. The Department will measure individual barricades only once for payment, regardless of how many times they are set, reset, removed, and relocated during the duration of the project. The Department will not measure replacements for damaged barricades the Engineer directs to be replaced due to poor condition or reflectivity. Retain possession of the Barricades upon completion of the work.

PAVEMENT MARKINGS

If there is to be a deviation from the existing striping plan, the Engineer will furnish the Contractor a striping plan prior to placement of the final surface course. Install Temporary Striping according to Section 112 with the following exceptions:

1. Place Temporary or Permanent Striping before opening a lane to traffic (**placement of edge lines shall be deferred until final completion of project**); and
2. If the Contractor's operations or phasing requires temporary markings that must subsequently be removed from the final surface course, use an approved removable lane tape; however, the Department will not measure removable lane tape for separate

payment, but will measure and pay for removable lane tape as temporary striping.

PAVEMENT EDGE DROP-OFFS

Do not allow a pavement edge between opposing directions of traffic or lanes that traffic is expected to cross in a lane change situation with an elevation difference greater than 1½". Place Warning signs (MUTCD W8-11 or W8-9A) in advance of and at 1500' intervals throughout the drop-off area. Dual post the signs on both sides of the traveled way. Wedge all transverse transitions between resurfaced and unresurfaced areas which traffic may cross with asphalt mixture for leveling and wedging. Remove the wedges prior to placement of the final surface course.

Protect pavement edges that traffic is not expected to cross, except accidentally, as follows:

Less than 2" - No protection required.

2" to 4" - Place plastic drums, vertical panels, or barricades every 50 feet. During daylight working hours only, the Engineer will allow the Contractor to use cones in lieu of plastic drums, panels, and barricades. Wedge the drop-off with DGA or asphalt mixture for leveling and wedging with a 1:1 or flatter slope in daylight hours, or 3:1 or flatter slope during nighttime hours, when work is not active in the drop-off area.

Greater than 4' - Protect drop-offs greater than 4 inches within 10 feet of traffic by placing drums, vertical panels, or barricades every 25 feet. The Engineer will not allow the use of cones in lieu of drums, vertical panels, or barricades for drop-offs greater than 4". Place Type III Barricades directly in front of the drop-off facing on coming traffic in both directions of travel. Provide warning signs as shown on the Standard Drawings or as directed by the Engineer

Pedestrians & Bicycles - Protect pedestrian and bicycle traffic as directed by the engineer.

USE AND PLACEMENT OF CHANGEABLE MESSAGE SIGNS

The following policy is based upon current Changeable Message Signs (CMS) standards and practice from many sources, including the Federal Highway Administration (FHWA), other State Departments of Transportation, and Traffic Safety Associations. It is understood that each CMS installation or use requires individual consideration due to the specific location or purpose. However, there will be elements that are constant in nearly all applications. Accordingly these recommended guidelines bring a level of uniformity, while still being open to regional experience and engineering judgment.

Application

The primary purpose of CMS is to advise the driver of unexpected traffic and routing situations. Examples of applications where CMS can be effective include:

- Closures (road, lane, bridge, ramp, shoulder, interstate)
- Changes in alignment or surface conditions
- Significant delays, congestion
- Construction/maintenance activities (delays, future activities)
- Detours/alternative routes
- Special events with traffic and safety implications
- Crash/incidents
- Vehicle restrictions (width, height, weight, flammable)
- Advance notice of new traffic control devices
- Real-time traffic conditions (must be kept up to date)
- Weather /driving conditions, environmental conditions, Roadway Weather Information Systems
- Emergency Situations
- Referral to Highway Advisory Radio (if available)
- Messages as approved by the County Engineer's Office

CMS should not be used for:

- Replacement of static signs (e.g. road work ahead), regulatory signage (e.g. speed limits), pavement markings, standard traffic control devices, conventional warning or guide signs.
- Replacement of lighted arrow board
- Advertising (Don't advertise the event unless clarifying "action" to be taken by driver – e.g. Speedway traffic next exit)
- Generic messages
- Test messages (portable signs only)
- Describe recurrent congestion (e.g. rush hour)
- Public service announcements (not traffic related

Messages

Basic principles that are important to providing proper messages and insuring the proper operation of a CMS are:

- Visible for at least ½ mile under ideal daytime and nighttime conditions
- Legible from all lanes a minimum of 650 feet
- Entire message readable twice while traveling at the posted speed
- Nor more than two message panels should be used (three panels may be used on roadways where vehicles are traveling less than 45 mph). A panel is the message that fits on the face of the sign without flipping or scrolling.
- Each panel should convey a single thought; short and concise
- Do not use two unrelated panels on a sign
- Do not use the sign for two unrelated messages
- Should not scroll text horizontally or vertically
- Should not contain both the words left and right
- Use standardized abbreviations and messages
- Should be accurate and timely
- Avoid filler/unnecessary words and periods (hazardous, a, an, the)
- Avoid use of speed limits
- Use words (not numbers) for dates

Placement

Placement of the CMS is important to insure that the signs is visible to the driver and provides ample time to take any necessary action. Some of the following principles may only be applicable to controlled access roadways. The basic principles of placement for a CMS are:

- When 2 signs are needed, place on same side of roadway and at least 1,000 feet apart
- Place behind semi-rigid/rigid protection (guardrail, barrier) or outside of the clear zone
- Place 1,000 feet in advance of work zone; at least one mile ahead of decision point
- Normally place on right side of roadway; but should be placed closest to the affected lane so that either side is acceptable
- Signs should not be dual mounted (one on each side of roadway facing same direction)
- Point trailer hitch downstream
- Secure to immovable object to prevent thief (if necessary)
- Do not place in sags or just beyond crest
- Check for reflection of sun to prevent the blinding of motorist
- Should be turned ~3 degrees outward from perpendicular to the edge of pavement
- Bottom of sign should be 7 feet above the elevation of edge of roadway
- Should be removed when not in use
-

Standard Abbreviations

The following is a list of standard abbreviations to be used on CMS.

Word	Abbrev.	Example
Access	ACCS	ACCIDENT AHEAD/USE ACCS RD NEXT RIGHT
Alternate	ALT	ACCIDENT AHEAD/USE ALT RTE NEXT RIGHT
Avenue	AVE	FIFTH AVE CLOSED/DETOUR NEXT LEFT
Blocked	BLKD	FIFTH AVE BLKD/MERGE LEFT
Boulevard	BLVD	MAIN BLVD CLOSED/USE ALT RTE
Bridge	BRDG	SMITH BRDG CLOSED/USE ALT RTE
Cardinal Directions	N, S, E, W	N I75 CLOSED/ DETOUR EXIT 30
Center	CNTR	CNTR LANE CLOSED/MERGE LEFT
Commercial	COMM	OVRSZ COMM VEH/USE I275
Condition	COND	ICY COND POSSIBLE
Congested	CONG	HVY CONG NEXT 3 MI
Construction	CONST	CONST WORK AHEAD/EXPECT DELAYS
Downtown	DWNTN	DWNTN TRAF USE EX 40
Eastbound	E-BND	E-BND I64 CLOSED/DETOUR EXIT 20
Emergency	EMER	EMER VEH AHEAD/PREPARE TO STOP
Entrance, Enter	EX, EXT	DWNTN TRAF USE EX 40
Expressway	EXPWY	WTRSN EXPWY CLOSED/DETOUR EXIT 10
Freeway	FRWY, FWY	GN SYNDR FWY CLOSED/DETOUR EXIT 15
Hazardous Materials	HAZMAT	HAZMAT IN ROADWAY/ALL TRAF EXIT 25
Highway	HWY	ACCIDENT ON AA HWY/EXPECT DELAYS
Hour	HR	ACCIDENT ON AA HWY/2 HR DELAY
Information	INFO	TRAF INFO TUNE TO 1240 AM
Interstate	I	E-BND I64 CLOSED/DETOUR EXIT 20
Lane	LN	LN CLOSED/MERGE LEFT
Left	LFT	LANE CLOSED/MERGE LFT
Local	LOC	LOC TRAF USE ALT RTE
Maintenance	MAINT	MAINT WRK ON BRDG/SLOW

Major	MAJ	MAJ DELWAYS I75/USE ALT RTE
Mile	MI	ACCIDENT 3 MI AHEAD/ USE ALT RTE
Minor	MNR	ACCIDENT 3 MI MNR DELAY
Minutes	MIN	ACCIDENT 3 MI/30 MIN DELAY
Northbound	N-BND	N-BND I75 CLOSED/ DETOUR EXIT 50
Oversized	OVRSZ	OVRSZ COMM VEH/USE I275 NEXT RIGHT
Parking	PKING	EVENT PKING NEXT RGT
Parkway	PKWY	CUM PKWAY TRAF/DETOUR EXIT 60
Prepare	PREP	ACCIDENT 3 MIL/PREP TO STOP
Right	RGT	EVENT PKING NEXT RGT
Road	RD	HAZMAT IN RD/ALL TRAF EXIT 25
Roadwork	RDWK	RDWK NEXT 4 MI/POSSIBLE DELAYS
Route	RTE	MAJ DELAYS I75/USE ALT RTE
Shoulder	SHLDR	SHLDR CLOSED NEXT 5 MI
Slippery	SLIP	SLIP COND POSSIBLE/ SLOW SPD
Southbound	S-BND	S-BND I75 CLOSED/DETOUR EXIT 50
Speed	SPD	SLIP COND POSSIBLE/ SLOW SPD
Street	ST	MAIN ST CLOSED/USE ALT RTE
Traffic	TRAF	CUM PKWAY TRAF/DETOUR EXIT 60
Vehicle	VEH	OVRSZ COMM VEH/USE I275 NEXT RIGHT
Westbound	W-BND	W-BND I64 CLOSED/DETOUR EXIT 50
Work	WRK	CONST WRK 2MI/POSSIBLE DELAYS

Certain abbreviations are prone to inviting confusion because another word is abbreviated or could be abbreviated in the same way. DO NO USE THESE ABBREVIATIONS.

Abbrev.	**Intended Word**	**Word Erroneously Given**
ACC	Accident	Access (Road)
CLRS	Clears	Colors
DLY	Delay	Daily
FDR	Feeder	Federal
L	Left	Lane (merge)
LOC	Local	Location
LT	Light (traffic)	Left
PARK	Parking	Park
POLL	Pollution (index)	Poll

RED	Reduce	Red
STAD	Stadium	Standard
TEMP	Temporary	Temperature
WRNG	Warning	Wrong

TYPICAL MESSAGES

The following is a list of typical messages used on CMS. The list consists of the reason or problem that you want the driver to be aware of and the action that you want the driver to take.

Reason/Problem	Action
ACCIDENT	ALL TRAFFIC EXIT RT
ACCIDENT/XX MILES	AVOID DELAY USE XX
XX ROAD CLOSED	CONSIDER ALT ROUTE
XX EXIT CLOSED	DETOUR
BRIDGE CLOSED	DETOUR XX MILES
BRIDGE/(SLIPPERY, ICE, ETC.)	DO NOT PASS
CENTER/LANE/CLOSED	EXPECT DELAYS
DELAY(S), MAJOR/DELAYS	FOLLOW ALT ROUTE
DEBRIS AHEAD	KEEP LEFT
DENSE FOG	KEEP RIGHT
DISABLED/VEHICLE	MERGE XX MILES
EMER/VEHICLES/ONLY	MERGE LEFT
EVENT PARKING	MERGE RIGHT
EXIT XX CLOSED	ONE-WAY TRAFFIC
FLAGGER XX MILES	PASS TO LEFT
FOG XX MILES	PASS TO RIGHT
FREEWAY CLOSED	PREPARE TO STOP
FRESH OIL	REDUCE SPEED
HAZMAT SPILL	SLOW
ICE	SLOW DOWN
INCIDENT AHEAD	STAY IN LANE
LANES (NARROW, SHIFT, MERGE, ETC.)	STOP AHEAD
LEFT LANE CLOSED	STOP XX MILES
LEFT LANE NARROWS	TUNE RADIO 1610 AM
LEFT 2 LANES CLOSED	USE NN ROAD
LEFT SHOULDER CLOSED	USE CENTER LANE
LOOSE GRAVEL	USE DETOUR ROUTE
MEDIAN WORK XX MILES	USE LEFT TURN LANE
MOVING WORK ZONE, WORKERS IN ROADWAY	USE NEXT EXIT
NEXT EXIT CLOSED	USE RIGHT LANE
NO OVERSIZED LOADS	WATCH FOR FLAGGER

NO PASSING
NO SHOULDER
ONE LANE BRIDGE
PEOPLE CROSSING
RAMP CLOSED
RAMP (SLIPPERY, ICE, ETC.)
RIGHT LANE CLOSED
RIGHT LANE NARROWS
RIGHT SHOULDER CLOSED
ROAD CLOSED
ROAD CLOSED XX MILES
ROAD (SLIPPERY, ICE, ETC.)
ROAD WORK
ROAD WORK (OR CONSTRUCTION) (TONIGHT, TODAY, TOMORROW, DATE)
ROAD WORK XX MILES
SHOULDER (SLIPPERY, ICE, SOFT, BLOCKED, ETC.)
NEW SIGNAL XX MILES
SLOW 1 (OR 2) - WAY TRAFFIC
SOFT SHOULDER
STALLED VEHICLES AHEAD
TRAFFIC BACKUP
TRAFFIC SLOWS
TRUCK CROSSING
TRUCKS ENTERING
TOW TRUCK AHEAD
UNEVEN LANES
WATER ON ROAD
WET PAINT
WORK ZONE XX MILES
WORKERS AHEAD

DURABLE PAVEMENT EDGE DETAIL

(Resurfacing adjacent to low shoulder with dropoff of 5 inches or less)

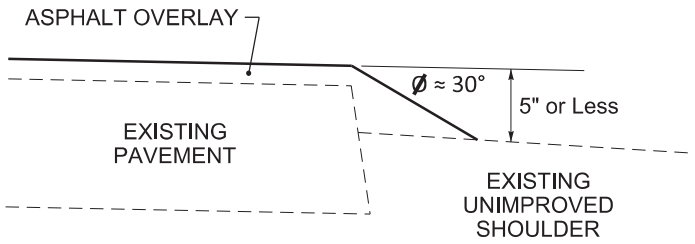

DURABLE PAVEMENT EDGE DETAIL

(Resurfacing adjacent to low shoulder with dropoff of more than 5 inches)

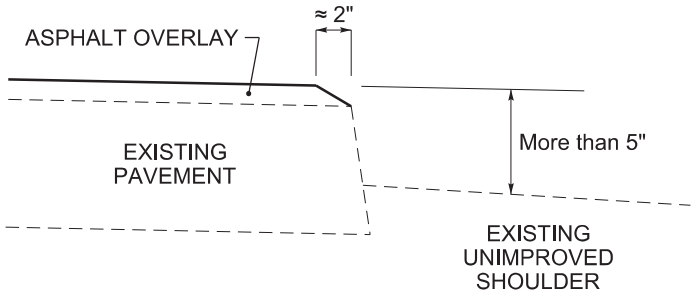

DURABLE PAVEMENT EDGE DETAIL

(Resurfacing adjacent to an obstruction, such as an existing headwall)

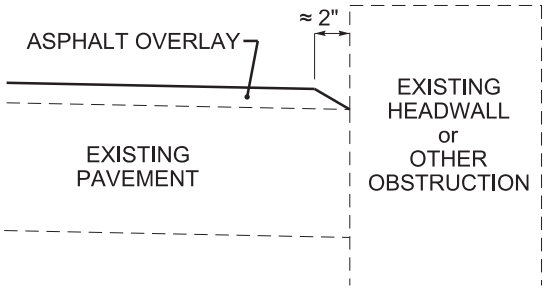

DURABLE PAVEMENT EDGE DETAIL

(Resurfacing adjacent to fill slope or ditch foreslope that is 3:1 or less)

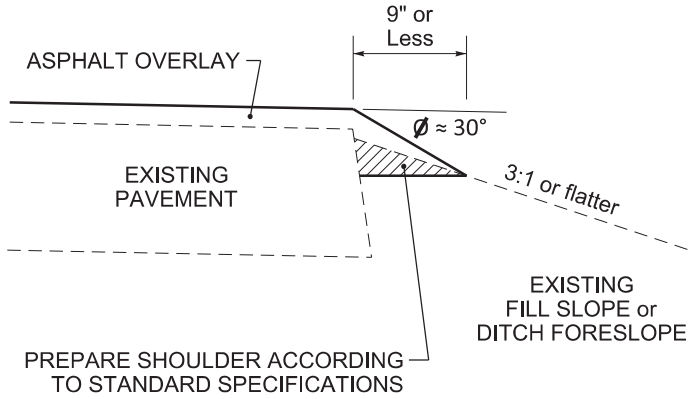

DURABLE PAVEMENT EDGE DETAIL

(Resurfacing adjacent to fill slope or ditch foreslope that is steeper than 3:1)

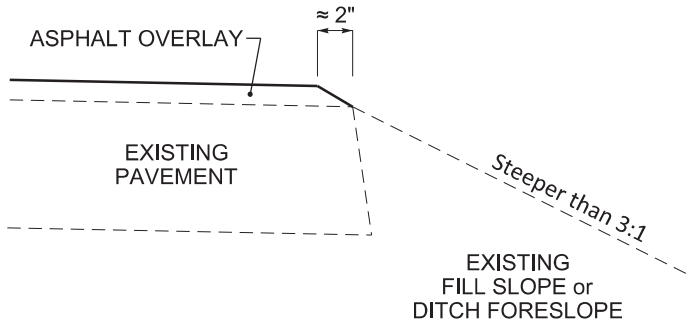

NOTES

1. DETAILS DO NOT APPLY TO OVERLAYS LESS THAN 1 INCH THICK.
2. THE DURABLE PAVEMENT EDGE DEVICE MAY BE DISENGAGED AT DRIVEWAYS, SIDE STREETS, HIGH SHOULDERS, AND OTHER LOCATIONS NOT FEASIBLE TO CONSTRUCT, AS APROVED BY THE ENGINEER.

DRAWING NOT TO SCALE

DURABLE PAVEMENT EDGE DETAILS

PULASKI CO. US 27 m.p. 11.3
~LAT/LONG N 37.014977, W 84.627795
STATION B90

SITE LOCATION IS APPROXIMATE AND WILL BE DETERMINED IN THE FIELD AND APPROVED BY DIVISION OF PLANNING PERSONNEL PRIOR TO ANY CONSTRUCTION.

ALL LOOPS SHALL BE 6'X6' SQUARE AND SHALL BE INSTALLED 16' FROM LEADING EDGE TO LEADING EDGE AS SHOWN. PIEZOELECTRIC SENSORS (PIEZOS) SHALL BE INSTALLED 5' FROM THE EDGE OF LOOPS WITH THE EDGE OF EACH PIEZO FLUSH WITH THE EDGE OF THE CORRESPONDING DRIVING LANE. LOOPS AND PIEZOS SHALL BE INSTALLED SPLICE-FREE TO THE CABINET AND A MINIMUM OF 2' OF WIRE FOR EACH SENSOR SHALL BE COILED AND LABELED INSIDE EACH JUNCTION BOX AND CABINET. DIVISION OF PLANNING PERSONNEL WILL CONNECT THE LOOPS AND PIEZOS INSIDE THE CABINETS.

INSTALL ONE (1) 1¼" CONDUIT FROM EACH SAW SLOT TO NEAREST JUNCTION BOX.

INSTALL TWO (2) TYPE A JUNCTION BOXES (JB A1, JB A2).

INSTALL TWO (2) 20"X20"X8" CABINETS MOUNTED TO TWO (2) WOOD POSTS EACH.

REMOVE EX. 20"x20"x8" BOXES AND WOOD POSTS AND DISPOSE OF OFF THE PROJECT.

CODED NOTE:

(1) INSTALL ONE (1) 2" CONDUIT.

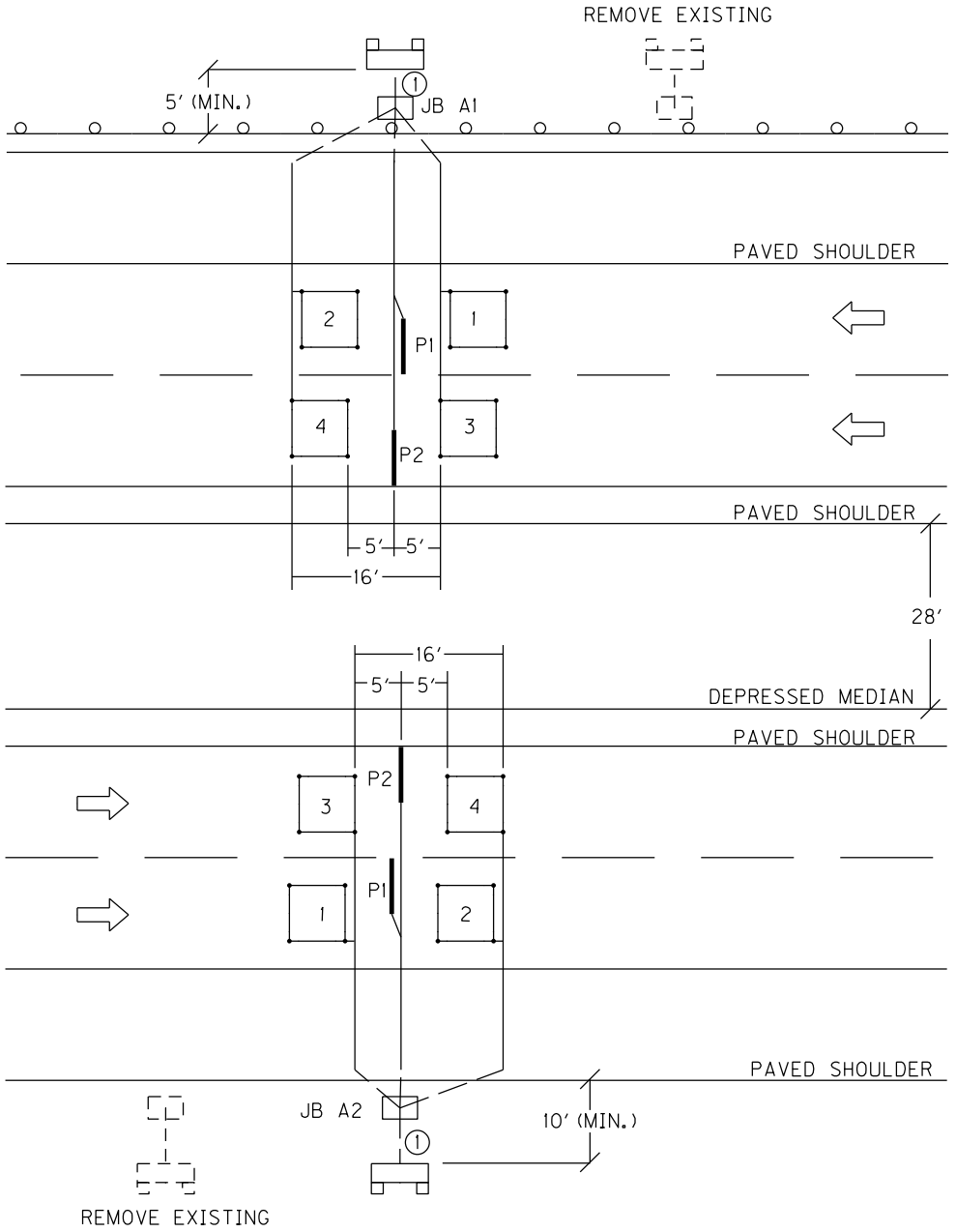

SCALE 1"=20'

PULASKI CO. US 27
NB ~m.p. 12.98; ~LAT/LONG N 37.04056, W 84.62629
SB ~m.p. 13.04; ~LAT/LONG N 37.04154, W 84.62649
STATION B74

SITE LOCATION IS APPROXIMATE AND WILL BE DETERMINED IN THE FIELD AND APPROVED BY DIVISION OF PLANNING PERSONNEL PRIOR TO ANY CONSTRUCTION.

ALL LOOPS SHALL BE 6'X6' SQUARE AND SHALL BE INSTALLED 16' FROM LEADING EDGE TO LEADING EDGE AS SHOWN. PIEZOELECTRIC SENSORS (PIEZOS) SHALL BE INSTALLED 5' FROM THE EDGE OF LOOPS WITH THE EDGE OF EACH PIEZO FLUSH WITH THE EDGE OF THE CORRESPONDING DRIVING LANE. LOOPS AND PIEZOS SHALL BE INSTALLED SPLICE-FREE TO THE CABINET AND A MINIMUM OF 2' OF WIRE FOR EACH SENSOR SHALL BE COILED AND LABELED INSIDE EACH JUNCTION BOX AND CABINET. DIVISION OF PLANNING PERSONNEL WILL CONNECT THE LOOPS AND PIEZOS INSIDE THE CABINETS.

INSTALL ONE (1) 1¼" CONDUIT FROM EACH SAW SLOT TO NEAREST JUNCTION BOX.

INSTALL TWO (2) TYPE A JUNCTION BOXES (JB A1, JB A2).

INSTALL TWO (2) 20"X20"X8" CABINETS MOUNTED TO TWO (2) WOOD POSTS EACH.

REMOVE EX. 6"x6"x4" BOXES AND WOOD POSTS AND DISPOSE OF OFF THE PROJECT.

CODED NOTE:

① INSTALL ONE (1) 2" CONDUIT.

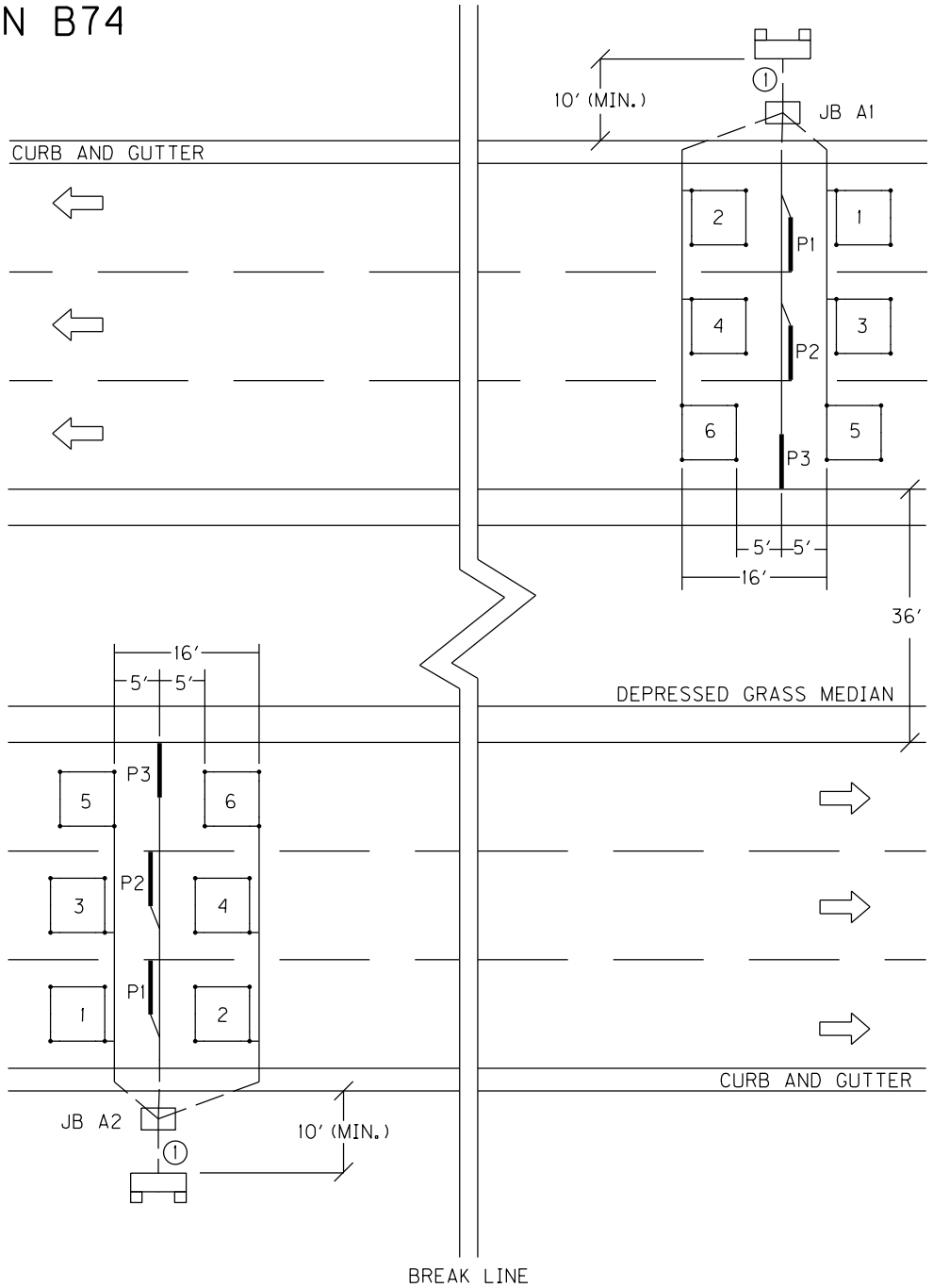

SCALE 1"=20'

PERMANENT TRAFFIC DATA ACQUISITION STATIONS
ESTIMATE OF QUANTITIES

Bid Item Code	Description	Unit	Quantity
4793	CONDUIT 1 ¼ INCH	LIN FT	160
4795	CONDUIT 2 INCH	LIN FT	50
4811	ELECTRICAL JUNCTION BOX TYPE B	EACH	
4820	TRENCHING AND BACKFILLING	LIN FT	190
4821	OPEN CUT ROADWAY	LIN FT	
4829	PIEZOELECTRIC SENSOR	EACH	10
4830	LOOP WIRE	LIN FT	4300
4833	WIRE – NO. 8	LIN FT	
4834	WIRE – NO. 6	LIN FT	
4850	CABLE NO. 14/1 PAIR	LIN FT	
4871	POLE – 35’ WOODEN	EACH	
4895	LOOP SAW SLOT AND FILL	LIN FT	900
4899	ELECTRICAL SERVICE	EACH	
4960	REMOVE AND REPLACE SIDEWALK	SQYD	
20213EC	INSTALL PAD MOUNT ENCLOSURE	EACH	
20359NN	GALVANIZED STEEL CABINET	EACH	4
20360ES818	WOOD POST	EACH	8
20391NS835	ELECTRICAL JUNCTION BOX TYPE A	EACH	4
20392NS835	ELECTRICAL JUNCTION BOX TYPE C	EACH	
20468EC	ELECTRICAL JUNCTION BOX 10x8x4	EACH	
21543EN	BORE AND JACK CONDUIT – 2 INCH	LIN FT	
23206EC	INSTALL CONTROLLER CABINET	EACH	
24963ED	LOOP TEST	EACH	

MATERIAL, INSTALLATION, AND BID ITEM NOTES FOR PERMANENT TRAFFIC DATA ACQUISITION STATIONS

1. DESCRIPTION

Except as specified in these notes, all work shall consist of furnishing and installing all materials necessary for permanent data acquisition station equipment installation(s) and shall be performed in accordance with the current editions of:

- The Contract
- Division of Planning Standard Detail Sheets
- Kentucky Transportation Cabinet, Department of Highways, *Standard Specifications for Road and Bridge Construction*
- Kentucky Transportation Cabinet, Department of Highways, Standard Drawings
- National Fire Protection Association *(NFPA) 70: National Electrical Code*
- Institute of Electrical and Electronic Engineers (IEEE), *National Electrical Safety Code*
- Federal Highway Administration, *Manual on Uniform Traffic Control Devices*
- American Association of State Highway and Transportation Officials (AASHTO), *Roadside Design Guide*.
- Standards of the utility company serving the installation, if applicable

The permanent traffic data acquisition station layout(s) indicate the extent and general arrangement of the proposed installation and are for general guidance. Any omission or commission shown or implied shall not be cause for deviation from the intent of the plans and specifications. Information shown on the plans and in this proposal and the types and quantities of work listed are not to be taken as an accurate or complete evaluation of the material and conditions to be encountered during construction. The bidder must draw his own conclusion as to the conditions encountered. The Department of Highways (Department) does not give any guarantee as to the accuracy of the data and no claim will be considered for additional compensation if the conditions encountered are not in accordance with the information shown. If any modifications of the plans or specifications are considered necessary by the Contractor, details of such modifications and the reasons, therefore, shall be submitted in writing to the Engineer for written approval prior to beginning such modified work.

The Contractor shall contact all utility companies and the district utility agent prior to beginning construction to insure proper clearance and shielding from existing and proposed utilities. The Contractor shall use all possible care in excavating on this project so as not to disturb any existing utilities whether shown on the plans or not shown on the plans. Any utilities disturbed or damaged by the Contractor during construction shall be replaced or repaired to original condition by the Contractor at no cost to the department. If necessary, to avoid existing utilities, the Contractor shall hand dig areas where poles or conduit cross utilities.

The Contractor shall be responsible for all damage to public and/or private property resulting from his work.

The Contractor shall inspect the project site prior to submitting a bid and shall be thoroughly familiarized with existing conditions. Submission of a bid will be considered an affirmation of this inspection having been completed. The Department will not honor any claims resulting from site conditions.

2. MATERIALS

All proposed materials shall be approved prior to being utilized. The Contractor shall submit for material approval an electronic file of descriptive literature, drawings and any requested design data for the proposed materials. After approval, no substitutions of any approved materials may be made without the written approval of the Engineer.

Materials requiring sampling shall be made available a sufficient time in advance of their use to allow for necessary testing.

2.1. Anchoring

2.1.1. Anchor and Anchor Rod

Anchor, except rock anchor, shall be expanding type, with a minimum area of 135 square inches.

Anchor rod shall be galvanized steel, double-eye, have a minimum diameter of 5/8 inches, and a minimum length of 84 inches. Minimum holding capacity shall be 15,400 lbs.

Rock anchor shall be galvanized steel, triple-eye, expanding type, with a minimum diameter of ¾ inch, a minimum 53 inches long, and a minimum tensile strength of 23,000 lb.

2.1.2. Guy Wire and Guy Guard

Guy wire shall be Class A, Zinc-coated, 3/8 inch diameter, high strength grade steel (minimum 10,800 lb.) and galvanized per ASTM A475. Guy guard shall be 8’ long, fully-rounded, yellow, and able to be securely attached to the guy wire.

2.1.3. Strandvise for Guy Wire

Strandvise for guy wire shall be 3/8 inch and rated to hold a minimum of 90% of the rated breaking strength (RBS) of the strand used.

2.2. Asphalt

Asphalt shall be a minimum CL2 Asph Surf 0.38B PG64-22 and conform to the *Standard Specifications for Road and Bridge Construction.*

2.3. Backer Rod

Backer rod shall be ½ inch diameter, closed cell polyethylene foam and shall meet or exceed the following physical properties:

- Density (average): 2.0 lbs/cu.ft. (minimum): ASTM D 1622 test method
- Tensile Strength: 50 PSI (minimum): ASTM D 1623 test method
- Compression Recovery: 90% (minimum): ASTM D 5249 test method
- Water Absorption: 0.03 gm/cc (maximum): ASTM C 1016 test method

2.4. Cabinets

2.4.1. Galvanized Steel Cabinet

Galvanized Steel Cabinet shall be constructed of 16 or 14 gauge galvanized steel and shall meet or exceed the industry standards set forth by UL 50 and NEMA 3R. The finish shall be an ANSI 61 gray polyester powder finish inside and out over the galvanized steel. Cabinet shall have minimum inside dimensions of 20 inches high by 20 inches wide by 8 inches deep.

The cabinet shall be equipped with the following:

- Drip shield top
- Seam-free sides, front, and back, to provide protection in outdoor installations against rain, sleet, and snow
- Hinged cover with 16 gauge galvanized steel continuous stainless steel pin.
- Cover fastened with captive plated steel screws, knob or latch
- Hasp and staple for padlocking
- No gaskets or knockouts
- Back panel for terminal block installation
- Post mounting hardware
- Terminal Blocks

2.4.2. Anchor Bolt for Pad Mounted Cabinet

Anchor bolt for pad mounted cabinet shall be galvanized steel with minimum dimensions of 3/8 inch by 6 inches.

2.5. Concrete

Concrete shall be Class A and conform to the *Standard Specifications for Road and Bridge Construction.*

2.6. Conduit and Conduit Fittings

Conduit and conduit fittings shall be rigid steel unless otherwise specified.

Conduit shall be zinc galvanized inside and out and conform to the NEC, UL Standard 6, and ANSI C-80.1.

Rigid Steel Conduit Fittings shall be galvanized inside and out and conform to the NEC, UL Standard 514B, and ANSI C-80.4. Intermediate Metal Conduit (IMC) will not be approved as an acceptable alternative to rigid steel conduit.

2.7. Conduit sealant

Conduit sealant shall be weather-, mold-, and mildew-resistant and chemically resistant to gasoline, oil, dilute acids and bases. Conduit sealant shall be closed cell type and shall meet or exceed the following properties:

- Cure Time — 20 minutes max.
- Density — 64.4 kg/m3; 6 lbs/ft3
- Compressive Strength (ASTM 1691) — 13.8 MPa; 330 or 300 psi

- Tensile Strength (ASTM 1623) 15.9 MPa; 270 or 250 psi
- Flexural Strength (ASTM D790) 14.5 MPa; 460 or 450 psi
- Service Temperature -20 to 200 F

2.8. Electrical Service Meter Base

Electrical service meter base shall meet or exceed all requirements of the National Electrical Code and the local utility providing the electrical service.

2.9. Electrical Service Disconnect

Electrical service disconnect shall meet or exceed all requirements of the National Electrical Code and the local utility providing the electrical service.

2.10. Flashing Arrow

Flashing Arrow shall conform to the *Standard Specifications for Road and Bridge Construction.*

2.11. Ground Fault Circuit Interrupter (GFCI) Receptacle

Ground Fault Circuit Interrupter Receptacle shall be 2-pole, 3-wire, 20 Amp, 125 Volt, 60 Hz, NEMA 5-20R configuration and meet or exceed the following standards and certifications:

- NEMA WD-1 and WD-6
- UL 498 and 943
- NOM 057
- ANSI C-73

This item shall include a UL listed, 4 inch x4 inch x $2^{1}/_{8}$ inch box with ¾ inch side and end knockouts and a 1½ inches deep, single-receptacle cover to house the GFCI receptacle. Box and cover shall be hot rolled, galvanized steel with a minimum thickness of 0.62 inches.

2.12. Grounding

2.12.1. Ground Rod

Ground Rod shall be composite shaft consisting of a pure copper exterior (5 mil minimum) that has been inseparably molten welded to a steel core. Ground Rod shall have a minimum diameter of 5/8 inch, a minimum length of 8 feet and shall be manufactured for the sole purpose of providing electrical grounding.

2.12.2. Ground Rod Clamp

Ground rod shall be equipped with a one piece cast copper or bronze body with a non-ferrous hexagonal head set screw and designed to accommodate a 10 AWG solid through 2 AWG stranded grounding conductor.

2.13. Grout

2.13.1. Grout for Inductive Loop Installation

Grout for inductive loop installation shall be non-shrink, shall meet the requirements of the *Standard Specifications for Road and Bridge Construction*,

and shall be included on the KYTC Division of Materials, *List of Approved Materials*.

2.13.2. Grout for Piezoelectric Sensor Installation

Grout for piezoelectric sensor installation shall be per the piezoelectric sensor manufacturer's recommendation. Grout shall be suitable for installation in both asphalt and Portland cement pavements. Grout shall have a short curing time (tack free in ten minutes; open to traffic in forty minutes; and fully cured within sixty minutes) to prevent unnecessary lane closure time and should be of sufficient consistency to prevent running when applied on road surfaces with a drainage cross slope. Particulate matter within the grout shall not separate or settle and the grout shall not shrink during the curing process.

2.14. Hardware

Except where specified otherwise, all hardware such as nuts, bolts, washers, threaded ends of fastening devices, etc. with a diameter less than 5/8 inch shall be passivated stainless steel, alloy type 316 or type 304. Stainless steel hardware shall meet ASTM F593 and F594 for corrosion resistance. All other nuts and bolts shall meet ASTM A307 and shall be galvanized.

2.14.1. Conduit Strap

Conduit strap shall be double-hole, stainless steel, and sized to support specified conduit. Conduit strap shall attach to wood pole or post with two 2 ¼ inch wood screws.

2.14.2. Mounting Strap for Pole Mount Cabinet

Mounting strap for pole mount cabinet shall be ¾ inch x 0.03 inch stainless steel; equipped with clips or buckles to securely hold strap.

2.14.3. Metal Framing Channel and Fittings

Metal framing channel shall be 1 5/8 inches wide galvanized steel that conforms to ASTM A1011 and ASTM A653. One side of the channel shall have a continuous slot with in-turned edges to accommodate toothed fittings.

Fittings shall be punch pressed from steel plates and conform to ASTM A575 and the physical requirements of ASTM A1011.

2.15. Junction Box

2.15.1. Junction Box Type A, B, or C

Junction Box Type A, B, or C shall meet or exceed ANSI/SCTE 77-2007, Tier 15. Box shall have an open bottom. A removable, non-slip cover marked "PLANNING" shall be equipped with a lifting slot and attached with a minimum of two 3/8 inch stainless steel hex bolts and washers. Type A Box shall have nominal inside dimensions of 13 inches wide by 24 inches long by 18 inches deep. Type B Box shall have nominal inside dimensions of 11 inches wide by 18 inches long by 12

inches deep. Type C Box shall have nominal inside dimensions of 24 inches wide by 36 inches long by 30 inches deep.

2.15.2. Aggregate for Junction Box Type A, B, or C

Aggregate for junction box type A, B, or C shall be gradation size no. 57 and conform to the *Standard Specifications for Road and Bridge Construction*.

2.15.3. Junction Box 10x8x4

Junction Box Type 10x8x4 shall be constructed of a UV-stabilized, nonmetallic material or non-rusting metal and be weatherproof in accordance with NEMA 4X. Box shall be equipped with an overhanging door with a continuous durable weatherproof gasket between the body and door. Door shall be hinged with screws, hinge(s) and pin(s) and shall be equipped with a padlockable latch on the side opposite the hinge(s). Junction Box 10x8x4 shall have minimum inside dimensions of 10 inches high by 8 inches wide by 4 inches deep.

2.16. Maintain and Control Traffic

Materials for the bid item Maintain and Control Traffic shall conform to the *Standard Specifications for Road and Bridge Construction,* and the KYTC Department of Highways *Standard Drawings*.

2.17. Piezoelectric Sensor

Piezoelectric sensor (piezo) shall provide a consistent level voltage output signal when a vehicle axle passes over it, shall have a shielded transmission cable attached, and shall meet the following requirements:

- Dimensions: such that sensor will fit in a ¾ inch wide by 1 inch deep saw cut. Total length shall be 6 feet unless specified otherwise.
- Output uniformity: ± 7% (maximum)
- Typical output level range: 250mV (minimum) from a wheel load of 400 lbs.
- Working temperature range: -40° to 160° F.
- Sensor life: 30 million Equivalent Single Axle Loadings (minimum)

Shielded transmission cable shall be coaxial and shall meet the following requirements:

- RG 58C/U with a high density polyethylene outer jacket rated for direct burial
- Length shall be a minimum of 100 feet. Installations may exceed 100 feet so the piezo shall be supplied with a lead-in of appropriate length so that the cable can be installed splice-free from the piezo to the cabinet.
- Soldered, water resistant connection to the sensor.

One installation bracket for every 6 inches of sensor length shall also be supplied. Piezo shall be a RoadTrax BL Class I or approved equal.

2.18. Saw Slot Sealant

Saw Slot Sealant shall be non-shrink, non-stringing, moisture cure, polyurethane

encapsulant suitable for use in both asphalt and concrete pavements. It shall provide a void-free encapsulation for detector loop cables and adequate compressive yield strength and flexibility to withstand heavy vehicular traffic and normal pavement movement.

The cured encapsulant shall meet or exceed the following:

- Hardness (Indentation): 35-65 Shore A, ASTM D2240
- Tensile Strength: 150 psi minimum, ASTM D412
- Elongation: 125% minimum 2 inch/minute pull, ASTM D412
- Tack-free Drying Time: 24 hours maximum, ASTM C679
- Complete Drying Time: 30 hours maximum, KM 64-447
- Chemical Interactions (seven day cure at room temperature, 24-hour immersion, KM 64-446):
  - Motor Oil: No effect
  - Deicing Chemicals: No effect
  - Gasoline: Slight swell
  - Hydraulic Brake Fluid: No effect
  - Calcium Chloride (5%): No effect

2.19. Seeding and Protection

Material for Seeding and Protection shall be Seed Mixture Type I and conform to the *Standard Specifications for Road and Bridge Construction*.

2.20. Signs

Materials for signs shall conform to the *Standard Specifications for Road and Bridge Construction.*

2.21. Splicing Materials

2.21.1. Electrical Tape

Electrical tape shall be a premium grade, UL-listed, all-weather, vinyl-insulating tape with a minimum thickness of 7 mil. Tape shall be flame retardant and resistant to abrasion, moisture, alkalis, acids, corrosion, and weather (including ultraviolet exposure).

2.21.2. Splice Kit

Splice kit shall be inline resin-type and rated for a minimum of 600V. Resin shall be electrical insulating-type and shall provide complete moisture and insulation resistance.

2.22. Steel Reinforcing Bar

Steel reinforcing bar shall be #5 and shall conform to the *Standard Specifications for Road and Bridge Construction.*

2.23. Terminal Block

Terminal block shall be rated for a minimum of 300 V and have a minimum of six

terminal pairs with 9/16-inch nominal spacing (center to center) for connecting loop and piezoelectric sensor wires to cable assemblies. Terminal block shall have screw type terminal strips to accommodate wire with spade-tongue ends.

2.24. Warning Tape

Warning tape shall be acid and alkali resistant formulated for direct burial. Tape shall be a minimum of 3 inches wide by 4.0 mils (nominal) thick, and shall be permanently imprinted with a minimum 1 inch black legend on a red background warning of an electric line. Tape shall meet or exceed the following industry specifications:

- American Gas Association (AGA) 72-D-56
- American Petroleum Institute (API) RP 1109
- American Public Works Association (APWA) Uniform Color Code
- Department of Transportation (DOT) Office of Pipeline Safety USAS B31.8
- Federal Gas Safety Regulations S 192-321 (e)
- General Services Administration (GSA) Public Buildings Service Guide: PBS 4-1501, Amendment 2
- National Transportation Safety Board (NTSB) PSS 73-1
- Occupational Safety and Health Administration (OSHA) 1926.956 (c) (1)

2.25. Wire and Cable

All cable and wire shall be plainly marked in accordance with the National Electrical Code (NEC).

2.25.1. Loop Wire

Loop wire shall be 14 AWG, stranded, copper, single conductor, and shall conform to the International Municipal Signal Association (IMSA) Specification No. 51-7.

2.25.2. Cable No. 14/1 Pair

Cable No. 14/1 pair loop lead-in cable shall be 14 AWG, stranded, copper paired, electrically shielded conductors, and shall conform to IMSA 19-2.

2.25.3. Grounding conductor

Grounding conductor and bonding jumper shall be solid or stranded, 4 AWG bare copper.

2.25.4. Service Entrance Conductor

Service entrance conductor shall be stranded, copper, Type USE-2, sized as required to comply with the NEC.

2.25.5. Terminal for electrical wire or cable

Terminal for electrical wires or cables shall be insulated, solderless, spade tongue terminals of correct wire and stud size. Terminal for electrical wires or cables shall be incidental to the wire or cable (including piezoelectric sensor transmission cable) to be connected to terminal strips.

2.26. Wood Post

Wood post shall be Southern Pine pretreated to conform to the American Wood Preservers' Association (AWPA) C-14 or UC4B and shall have minimum dimensions of 4 inches by 4 inches by 8 feet long (for Galvanized Steel Cabinet) or 4 feet long (for Junction Box 10x8x4), sawed on all four sides with both ends square.

2.27. Wooden Pole

Wooden pole shall be a Class IV wood pole of the length specified and shall conform to the *Standard Specifications for Road and Bridge Construction* except the pole shall be treated in accordance with AWPA P9 Type A.

3. CONSTRUCTION METHODS

The plans indicate the extent and general arrangement of the installation and are for guidance. When the Contractor deems any modifications to the plans or specifications necessary, details of such changes and the reasons shall be submitted in writing to the engineer for written approval prior to beginning the modified work.

After the project has been let and awarded, the Division of Construction shall notify the Division of Planning of the scheduled date for a Pre-Construction meeting so that prior arrangements can be made to attend. This will allow the Division of Planning an opportunity to address any concerns and answer any questions that the Contractor may have before beginning the work.

The Division of Planning Equipment Management Team (502-564-7183) shall be notified a minimum of seven days before any work pertaining to these specifications begins to allow their personnel the option to be present during installation.

Unless otherwise specified, installed materials shall be new.

Construction involving the installation of loops or piezoelectric sensors shall not be performed when the temperature of the pavement is less than 38ºF.

A final inspection will be performed by a member of the Central Office Division of Planning equipment staff after the installation is complete to verify that the installation is in compliance with the plans and specifications.

Any required corrective work shall be performed per the *Standard Specifications for Road and Bridge Construction.*

3.1. Anchoring

Furnish: Anchor, anchor rod, guy wire, strand vise, guy guard.

Anchor shall be installed in relatively dry and solid soil. Rock anchor shall be installed in solid rock. Excavate the hole at a 45° to 60° angle in line with the guy (hole size shall be slightly larger than the expanded anchor – see manufacturer's recommendation). Attach rod to anchor, install assembly into hole, and expand anchor. Backfill and tamp entire disturbed area. The effectiveness of the anchor is dependent upon the thoroughness of backfill tamping. Attach guy to strand vise on pole and anchor rod and tighten to required tension. Install guy guard on guy.

3.2. Bore and Jack Pipe – 2"

Furnish: Steel Encasement Pipe, 2"

Bore and jack pipe – 2" shall conform to the Section 706 of the *Standard Specifications for Road and Bridge Construction*.

3.3. Cleanup and Restoration

Furnish: Seed Mix Type 1 (as required); fertilizer (as required); agricultural limestone (as required); mulch or hydromulch (as required); tackifier (as required).

The Contractor shall be responsible for repairing any damage to public and/or private property resulting from his work. Upon completion of the work, restore all disturbed highway features in like kind design and materials. This shall include filling any ruts and leveling ground appropriately. Contractor shall dispose of all waste and debris off the project. Sow all disturbed earthen areas with Seed Mix Type 1 per Section 212 of the *Standard Specifications for Road and Bridge Construction*. All materials and labor necessary for cleanup and restoration shall be considered incidental to other bid items.

3.4. Conduit

Furnish: Conduit; conduit fittings; bushings (grounding where required); LB condulets (as required); weatherheads (as required); conduit straps; hardware; conduit sealant.

Conduit that may be subject to regular pressure from traffic shall be laid to a minimum depth of 24 inches below grade. Conduit that will not be subject to regular pressure from traffic shall be laid to a minimum depth of 18 inches below grade.

Conduit ends shall be reamed to remove burrs and sharp edges. Cuts shall be square and true so that the ends will butt together for the full circumference of the conduit. Tighten couplings until the ends of the conduit are brought together. Do not leave exposed threads. Damaged portions of the galvanized surfaces and untreated threads resulting from field cuts shall be painted with an Engineer-approved, rust inhibitive paint. Conduit bends shall have a radius of no less than 12 times the nominal diameter of the conduit, unless otherwise shown on the plans.

Contractor shall install a bushing (grounding bushing where required) on both ends of all conduits. Cap spare conduits on both ends with caps or conduit sealant.

Conduit openings in junction boxes and cabinets shall be waterproofed with a flexible, removable conduit sealant, working it around the wires, and extending it a minimum 1 inch into the end of the conduit.

After the conduit has been installed and prior to backfilling, the conduit installation shall be inspected and approved by the Engineer.

3.5. Electrical Service

Furnish: Meter base, service disconnect, wire, GFCI AC duplex receptacle with box and cover; conduit, conduit fittings, bushings (grounding where required); LB condulets (as required); weatherhead; conduit straps; hardware; conduit sealant; ground rod with clamp; grounding conductor.

Prior to any construction, the Contractor shall initiate a work order with the local power

company for the installation of electrical service to the site. A representative from the Division of Planning and the local power company shall be consulted prior to choosing an exact location for the pole. The Contractor shall clear the right-of-way for the electrical service drop.

Contractor shall obtain electrical inspections, memberships, meter base, service disconnect and any other requirements by the utility serving the installation and pay all fees as required.

Install meter-base and disconnect panel with a 30-ampere, fused, circuit breaker inside. Install a manufactured weatherproof hub connector to connect the conduit to the top of the meter base and service disconnect.

Install a rigid ¾ inch conduit with three 8 AWG service conductors from the cabinet, through the service disconnect to the meter base and a 1¼" conduit with three 8 AWG service conductors from the meter base to a weatherhead two feet from the top of the electrical service pole. Install conduit straps 30 inches on center and provide a drip loop where the wire enters the weatherhead. Splice electric drop with service entrance conductors at the top of the pole.

The limit of conduit incidental to "Install Electrical Service" for a pad mounted cabinet is 24 inches beyond face of service pole.

Install a 120-volt, 20-amp GFCI AC duplex receptacle with box and cover in the automatic data recorder (ADR) cabinet.

Install a ground rod with clamp. Install a grounding conductor wire from the meter base, through the disconnect panel, to the ground rod clamp. Install grounding conductor in 1-¾" conduit from service disconnect to ground rod.

After completing the installation and before the electrical service is connected, obtain a certificate of compliance from the Kentucky Department of Housing, Buildings and Construction, Electrical Inspection Division.

3.6. Flashing Arrow

Furnish: Arrow Panel

Construction of Flashing Arrow shall conform to the *Standard Specifications for Road and Bridge Construction.*

3.7. Galvanized Steel Cabinet

Furnish: Cabinet; wood posts; concrete; conduit fittings; metal framing channel; pipe clamp; terminal block(s); spade tongue wire terminals; wire labels; hardware.

Where right-of-way allows, locate the cabinet such that it is outside the clear zone in accordance with the *Roadside Design Guide*. Install Cabinet such that the door of the

cabinet faces the roadway.

Excavate as required and install wood posts to a depth of 36 inches and place concrete around posts as shown on the standard detail sheets. Install metal framing channel with pipe clamp between posts.

Install Cabinet on wood posts 38 inches above the finished grade as shown on the standard detail sheets. Install a unistrut between posts when two posts are specified.

Install the required number of terminal blocks on the cabinet back plate. Install a spade tongue terminal on each loop and piezo sensor wire entering the cabinet and connect wires to terminal block(s). Wiring shall be neat and orderly. Label all wires and cables inside cabinet.

Install conduit from ground to cabinet and attach to pipe clamp. Install locknuts to attach conduit to cabinet and install a conduit bushing as shown on the standard detail sheets.

3.8. Grounding

Furnish: Ground rod with clamp; grounding conductor.

At sites with electrical or solar service, all conduits, poles, and cabinets shall be bonded to ground rods and the electrical system ground to form a complete grounded system.

Install such that top of ground rod is a minimum of 3 inches below finished grade.

Grounding systems shall have a maximum 25 ohms resistance to ground. If the resistance to ground is greater than 25 ohms, two or more ground rods connected in parallel shall be installed. Adjacent ground rods shall be separated by a minimum of 6 feet.

3.9. Install Pad Mount Enclosure

Furnish: Concrete; anchor bolts with washers and nuts; conduit; conduit fittings; conduit grounding bushings; ground rod with clamp; grounding conductor; conduit sealant; wooden stakes (where required); wire labels; hardware.

The Contractor shall be responsible for securing the enclosure from the Central Office Division of Planning Warehouse in Frankfort and transporting it to the installation site.

Where right-of-way allows, locate the enclosure such that it is outside the clear zone in accordance with the *Roadside Design Guide*.

Excavate as required, and place concrete to construct the enclosure foundation as specified on the standard detail sheets. Install enclosure on the concrete base such that the door(s) of the enclosure opens away from traffic (hinges away from traffic). Install anchor bolts, washers, and nuts to secure the enclosure to the foundation.

Install ground rod with clamp and install one ¾ inch rigid conduit from enclosure base to

ground rod. Install a grounding conductor from ground rod to enclosure base and bond to each conduit bushing in the base.

Install one ¾ inch rigid steel conduit for electrical service from the base of the enclosure to 24 inches beyond the concrete base. Make all field wiring connections to the electrical service, as applicable.

If electrical service is not provided as a bid item in the contract, plug conduit on both ends with a cap, conduit sealant, or electrical tape. Mark the location of the buried conduit end with a wooden stake labeled "3/4 in. conduit."

Install specified rigid steel conduit(s) into the base of the enclosure for sensor wire entry. Install one spare 2-inch conduit from the enclosure base to 2 feet beyond the concrete base. Plug spare conduit on both ends with a cap, conduit sealant or electrical tape.

The limit of all conduits incidental to "Install Pad Mount Enclosure" is 24 inches beyond the edge of the concrete base.

Wiring in enclosure shall be neat and orderly. Label all wires and cables inside enclosure. KYTC personnel will furnish and install terminal blocks and connect sensors to terminal blocks.

3.10. Install Controller Cabinet

Furnish: Mounting brackets; mounting straps; conduit; LB condulets; conduit fittings; conduit grounding bushings; ground rod with clamp; grounding conductor; cable staples; conduit sealant; wooden stakes (where required); wire labels; hardware.

The Contractor shall be responsible for securing the cabinet from the Central Office Division of Planning Warehouse in Frankfort and transporting it to the installation site. Any existing holes in the cabinet not to be reused shall be covered or plugged to meet NEC requirements.

Install mounting brackets and secure cabinet to pole with mounting straps.

Install a ground rod with clamp. Install grounding conductor in 1-¾" conduit form cabinet to ground rod.

Install one ¾ inch rigid steel conduit with two lb. condulets from cabinet to electrical service disconnect box. Make all field wiring connections to the electrical service, as applicable.

If electrical service is not provided as a bid item in the contract, plug conduit on both ends with cap, plumbers putty, conduit sealant, or electrical tape. Mark the location of the buried conduit end with a wooden stake labeled "3/4 in. conduit".

Install specified rigid steel conduit(s) and type LB condulet(s) into the bottom of the

cabinet for sensor wire entry. The limit of conduits incidental to "Install Controller Cabinet" is 24 inches beyond the face of the pole.

Wiring in cabinet shall be neat and orderly. Label all wires and cables inside cabinet. KYTC personnel will furnish and install terminal blocks and connect sensors to terminal blocks.

3.11. Junction Box Type 10x8x4

Furnish: Junction box; wood post; conduit fittings; wire labels; hardware.

Where right-of-way allows, locate the junction box such that it is outside the clear zone in accordance with the Roadside Design Guide.

Excavate as required and install wood post(s) to a depth of 18 inches. Install junction box on wood post such that the bottom of the box is 18 inches above the finished grade as shown on the standard detail sheets. Box shall be installed with four (4) 2½ inch wood screws and washers.

Install locknuts to attach conduit to junction box and install a conduit bushing as shown on the standard detail sheets.

Wiring inside box shall be neat and orderly. Label all wires and cables inside box.

3.12. Junction Box Type A, B, or C

Furnish: Junction box, No. 57 aggregate; grounding conductor

Excavate as required and place approximately 12 inches of No. 57 aggregate beneath the proposed junction box to allow for drainage. Install specified junction box type A, B, or C near the edge of pavement, flush with finished grade per the detail sheets. Where required, orient the box so that the dimensions comply with the National Electrical Code. Stub conduits with grounding bushings into junction box at its base to accommodate wires and connect grounding conductor to all grounding bushings. Backfill to existing grade, and restore disturbed area to the satisfaction of the Engineer.

Wiring inside box shall be neat and orderly. Label all wires and cables inside box.

3.13. Loops - Proposed

Furnish: Wire; saw slot sealant; backer rod; grout; conduit sealant.

The plans and notes specify the approximate location for loop installations. Prior to sawing slots or drilling cores, the Contractor shall meet with a representative of the Division of Planning to verify the precise layout locations on site. Avoid expansion joints and pavement sections where potholes, cracks, or other roadway flaws exist.

Upon completion of this meeting, the Contractor shall measure out and mark the proposed loop locations with spray paint or chalk such that the saw slots will be parallel

and perpendicular to the direction of traffic. Marked lines shall be straight and exact to the locations determined and sized as shown on the plans. Unless indicated otherwise, loops shall be 6 feet by 6 feet square and loops in the same lane shall be spaced 16 feet from leading edge to leading edge.

On resurfacing, rehabilitation, and new construction projects that include new asphalt pavement, the Contractor shall install loops prior to laying the final surface course. On projects with milling and texturing, the Contractor may install the loops prior to or after the milling operation; however, if installed prior to milling, the Contractor shall be responsible for ensuring that the loops are installed at a depth such that the milling operation will not disturb the newly installed loops. The Contractor shall correct damage caused by the milling operations to newly installed loops prior to placement of the final surface course at no additional cost to the Cabinet.

For projects that include the installation of new asphalt and piezoelectric sensors, the Contractor shall mark or otherwise reference all loops installed prior to the final surface course such that the loops can be accurately located when the piezoelectric sensors are installed after placement of the final surface course.

For projects that do not have asphalt surfacing, the Contractor shall install the loops in the surface of the pavement.

The Prime Contractor shall coordinate the installation of loops with the electrical sub-Contractor and the Engineer to ensure correct operation of the completed installation.

The following is a typical step by step procedure for the installation of a loop.

- Carefully mark the slot to be cut, perpendicular to the flow of traffic and centered in the lane.
- Make each saw-cut 3/8-inch wide and at a depth such that the top of the backer rod is a minimum of 2 inches below the surface of rigid (PCC/Concrete) pavement or 4 inches below the surface of asphalt pavement.
- Drill a 1½ inch core hole at each corner and use a chisel to smooth corners to prevent sharp bends in the wire.
- Clean ALL foreign and loose matter out of the slots and drilled cores and within 1 foot on all sides of the slots using a high-pressure washer.
- Completely dry the slots and drilled cores and within 1 foot on all sides of the slots using oil-free forced air, torpedo heaters, electric heaters, or natural evaporation, depending on weather conditions. Be very careful not to burn the asphalt if heat is used.
- Measure 9-12 inches from the edge of the paved surface (shoulder break or face of curb) and drill a 1½ inch hole on a 45º angle to the conduit adjacent to the roadway.
- Closely inspect all cuts, cores, and slots for jagged edges or protrusions prior to the placement of the wire. All jagged edges and protrusions shall be ground or re-cut and cleaned again.

- Place the loop wire splice-free from the termination point (cabinet or junction box) to the loop, continue around the loop for four turns, and return to the termination point.
- Push the wire into the saw slot with a blunt object such as a wooden stick. Make sure that the loop wire is pushed fully to the bottom of the saw slot.
- Install conduit sealant to a minimum of 1" deep into the cored 1½ inch hole.
- Apply loop sealant from the bottom up and fully encapsulate the loop wires in the saw slot. The wire should not be able to move when the sealant has set.
- Cover the encapsulated loop wire with a continuous layer of backer rod along the entire loop and home run saw slots such that no voids are present between the loop sealant and backer rod.
- Finish filling the saw cut with non-shrinkable grout per manufacturer's instructions. Alleviate all air pockets and refill low spaces. There shall be no concave portion to the grout in the saw slot. Any excess grout shall be cleaned from the roadway to alleviate tracking.
- Clean up the site and dispose of all waste off the project.
- Ensure that the grout has completely cured prior to subjecting the loop to traffic. Curing time varies with temperature and humidity.

Exceptions to installing loop wire splice-free to the junction box or cabinet may be considered on a case-by-case basis and must be pre-approved by the Engineer. If splices are allowed, they shall be located in a junction box and shall conform to the construction note for Splicing.

If loop lead-in cable (Cable No. 14/1 Pair) is specified, cable shall be installed splice free to the cabinet ensuring that extra cable is left in each junction box or cabinet. All wires and cables shall be labeled in each junction box and cabinet.

Loop inductance readings shall be between 100 and 300 microhenries. The difference of the loop inductance between two loops in the same lane shall be ±20 microhenries. Inductance loop conductors shall test free of shorts and grounds. Upon completion of the project, all loops must pass an insulation resistance test of a minimum of 100 million ohms to ground when tested with a 500 Volt direct current potential in a reasonably dry atmosphere between conductors and ground.

3.14. Loop Test

When noted on a data collection station layout sheet that there are existing inductive loops within the limits of the project, notify the Engineer in writing, a minimum of 14 calendar days prior to beginning milling operations. After milling and prior to placing asphalt inlay, conduct an operating test on the existing inductance loops at the control cabinet in the presence of the Engineer to determine if the inductance loop conductors have an insulating resistance of a minimum of 100 megohms when tested with a 500-volt direct current potential in a reasonably dry atmosphere between conductors and ground. The Department may also conduct its own tests with its own equipment.

If the tests indicate the loop resistances are above the specified limit and the Engineer determines the system is operable, proceed with the asphalt inlay. If the test indicates the loop resistance is not within the specified limits or if the Engineer determines the system is otherwise not operable, prior to placing the asphalt inlay install and test new loop detectors according to the station layout, notes, and Detail Drawings.

The Engineer will contact and maintain liaison with the District Planning Engineer and the Division of Planning in order to coordinate any necessary work.

3.15. Maintain and Control Traffic

Furnish (all as required): Drums, traffic cones, barricades used for channelization purposes, delineators, and object markers.

Maintain and Control Traffic shall conform to the plans, the Standard Specifications for Road and Bridge Construction, and the KYTC Department of Highways Standard Drawings.

3.16. Open Cut Roadway

Furnish: Concrete, reinforcing bars.

Excavate trench by sawing and chipping away roadway to dimensions as indicated on the detail sheets. After placing conduit, install concrete and steel reinforcing bars per the *Standard Specifications for Road and Bridge Construction*. Restore any disturbed sidewalk to its original condition.

3.17. Piezoelectric Sensor

Furnish: Piezoelectric sensor and cable; sensor support brackets; saw slot sealant; backer rod; grout; conduit sealant.

The plans and notes specify the approximate location for piezoelectric sensor (piezo) installations. Prior to sawing slots or drilling cores, the Contractor shall meet with a representative of the Division of Planning to verify the final layout on site. Avoid expansion joints and pavement sections where potholes, cracks, or other roadway flaws exist. Roadway ruts at the proposed piezo location shall not be in excess of ½ inch under a 4-foot straight edge.

Install the piezo perpendicular to traffic in the final surface course of the pavement. Locate the sensor in the lane as shown on the site layout drawing. Eleven-foot length sensors shall be centered in the lane.

The following is a typical step by step procedure for the installation of a piezo. Refer specifically to the manufacturer's instructions provided with the sensor prior to installation.

- Carefully mark the slot to be cut, perpendicular to the flow of traffic and properly positioned in the lane.

- It is strongly recommended that a ¾ inch wide diamond blade be used for cutting the slot, or that blades be ganged together to provide a single ¾ inch wide cut. The slot shall be wet cut to minimize damage to the pavement.
- Cut a slot ¾ inch wide (±1/16 inch) by 1 inch minimum deep. The slot should be a minimum of 2 inches longer than the sensor (including the lead attachment). Drop the saw blade an extra ½ inch down on both ends of the sensor. The lead out of the passive cable should be centered on the slot.
- Cut the slot for the passive cable ¼ inch wide and at a depth so that the top of the backer rod is a minimum of 2 inches below the road surface.
- Clean ALL foreign and loose matter out of the slot and within 1 foot on all sides of the slot using a high-pressure washer.
- Completely dry the slot and within 1 foot on all sides of the slot using oil-free forced air, torpedo heaters, electric heaters, or natural evaporation, depending on weather conditions. Be very careful not to burn the asphalt if heat is used.
- Measure 9-12 inches from the edge of the paved surface (shoulder break or face of curb) and drill a 1½ inch hole on a 45º angle to the conduit adjacent to the roadway.
- Place strips of 2-4-inch-wide tape strips on the pavement along the lengths of both sides of the sensor slot, 1/8 inch away from the slot.
- Wear clean, protective latex (or equivalent) gloves at all times when handling sensors. Visually inspect sensor to ensure it is straight. Check lead attachment and passive cable for cuts, gaps, cracks and/or bare wire. Verify that the correct sensor type and length is being installed by checking the data sheet. Verify there is sufficient cable to reach the cabinet. Piezo lead-in cable shall not be spliced.
- Test the sensor for capacitance, dissipation factor and resistance, according to the directions enclosed with the sensor. Capacitance and dissipation should be within ±20% of the piezo data sheet. Resistance (using the 20M setting) should be infinite. Record the sensor serial number and the test results and label “pre-installation.” This information should be stored in the counter cabinet and/or returned to Department Planning personnel.
- Lay the sensor next to the slot and ensure that it is straight and flat.
- Clean the sensor with steel wool or an emery pad and wipe with alcohol and a clean, lint-free cloth.
- Place the installation bracket clips every 6 inches along the length of the sensor.
- Bend the tip of the sensor downward at a 30° angle. Bend the lead attachment end down at a 15° angle and then 15° back up until level (forming a lazy Z).
- Place the sensor in the slot, with the brass element 3/8 inch below the road surface along the entire length. The tip of the sensor should be a minimum of 2 inches from the end of the slot and should not touch the bottom of the slot. The top of the plastic installation bracket clips should be 1/8 inch below the surface of the road. The lead attachment should not touch the bottom or sides of the slot. Ensure the sensor ends are pushed down per the manufacturer’s instructions.
- Visually inspect the length of the sensor to ensure it is at uniform depth along its length and it is level (not twisted, canted or bent).

- On the passive cable end, block the end of the slot approximately 3-5 inches beyond the end of the lead attachment area creating an adequate "dam" so that the sensor grout does not flow out.
- Use one bucket of sensor grout per piezo installation. Overfill the slot with sensor grout and allow to cure for a minimum of 10 minutes before continuing with the installation. Ensure that sensor grout fills around and beneath the sensor completely and that there is not a trough on top.
- Remove the tape along the sides of the saw slot when the adhesive starts to cure.
- Carefully remove the dam from the end of the sensor.
- Route the lead-in cable through the saw slot
- Install conduit sealant to a minimum of 1" deep into the cored 1½ inch hole.
- Cover the lead-in cable with encapsulant, backer rod, and grout.
- If necessary, after the grout has hardened, grind with an angle grinder until the profile is a 1/16-inch mound. There shall be no concave portion to the mound.
- Clean up the site and dispose of all waste off the project.
- Ensure that the sensor grout has completely cured prior to subjecting the sensor to traffic. Curing time will vary with temperature and humidity.

Upon installation, test the sensor for capacitance, dissipation factor and resistance, according to the directions enclosed with the sensor. Capacitance and dissipation should be within ±20% of the piezo data sheet. Resistance (using the 20M setting) should be infinite. Perform a functional test of the piezo with an oscilloscope to ensure that the sensor is generating a proper response to the passage of vehicles.

Record the sensor serial number and the test results and label "post-installation." This information should be stored in the counter cabinet and/or returned to Department Planning personnel.

3.18. Pole – Wooden

Furnish: Pole; anchoring equipment (as required); hardware (as required).

Excavate and install wood pole to a minimum depth of one-sixth the total pole height. Place backfill material in hole and compact until flush with existing grade. Install guy wire, guy guard, anchor, anchor rod, and strand vise, if necessary. Anchor shall be a minimum of one-third the pole height from the face of the pole. Provide temporary erosion control, seeding, protection and restoration of disturbed areas to the satisfaction of the Engineer.

3.19. Removal of Existing Equipment

The Contractor shall remove existing materials (including but not limited to: poles, anchors, cabinets, junction boxes, conduit and wire) not to be reused. Contractor shall dispose of all removed materials off the project. All materials and labor necessary for the removal of existing equipment shall be considered incidental to other bid items.

3.20. Signs

Furnish: Signs; sign standards; hardware.

Construction of **s**igns shall conform to the *Standard Specifications for Road and Bridge Construction.*

3.21. Splicing

Furnish: Splice kit; solder.

These notes describe the splicing process (if permitted) and are not intended to grant permission to splice. Permission to splice shall be determined by the Division of Planning and the locations shall be shown on the layout sheet. If splicing is needed but not shown on the layout sheet, the Contractor shall receive prior written approval from the Division of Planning.

All splices shall conform to the provisions of the NEC.

Splices for loop and loop lead-in wire shall be twisted and soldered. Abrade the outer jacket of both wires to promote good adhesion and prevent capillary leak paths. Seal the splice with an electrical sealing resin. Spliced loop conductors shall test free of shorts and unauthorized grounds and shall have an insulating resistance of at least 100 megohms when tested with a 500-volt direct current potential in a reasonably dry atmosphere between conductors and ground.

For piezos, the same type coax cable, supplied by the manufacturer, shall be used to splice to the sensor's lead-in cable. Cables shall be soldered. Abrade the outer jacket of both cables to promote good adhesion and prevent capillary leak paths. Seal the splice with an electrical sealing resin. Spliced piezo cables shall be tested and have a minimum resistance of 20 megohms, a maximum dissipation factor of 0.03, a capacitance within the manufacturer's recommended range based upon the length of additional cable. A functional test of the piezo shall be performed to ensure that the sensor is generating a proper response to the passage of vehicles.

3.22. Trenching and Backfilling

Furnish: Warning tape; seed mix type I; cereal rye or German foxtail-millet; mulch; concrete (as required); asphalt (as required).

Excavate trench and provide required cover as shown on the standard detail sheets. After placing conduit, backfill material shall be placed and compacted in lifts of 9 inches or less. Install warning tape as shown on the detail sheet. Provide temporary erosion control, seeding, protection and restoration of disturbed areas to the satisfaction of the Engineer.

3.23. Wiring

Furnish: Wire; wire labels; spade tongue wire terminals (as required).

Installation of all wiring shall conform to the NEC. Permanent identification numbers

shall be affixed to all wires in all junction boxes and cabinets (see Layout(s) for loop and piezo numbers).

Additional lengths of each loop and piezo sensor wire shall be neatly coiled in all cabinets and junction boxes as follows:

Enclosure Type	Additional length of each wire
Galvanized Steel Cabinet	2’ – 3’
Pad Mount Cabinet (332)	6’ - 8’
Pole Mount Cabinet (336)	3’ - 4’
Junction Box Type 10x8x4	2’ – 3’
Junction Box Type A, B, or C	2’ – 3’

3.24. Wood Post

Furnish: Wood post; concrete (as required); seed mix type I; cereal rye or German foxtail-millet; mulch.

Excavate hole to specified depth and place concrete, if required. Install post, backfill to existing grade, and tamp backfill. Provide temporary erosion control, seeding, protection and restoration of disturbed areas to the satisfaction of the Engineer.

3.25. Remove and Replace Sidewalk

Furnish: Lumber, stakes, nails or screws, and concrete.

Remove existing sidewalk to install rigid conduit from edge of roadway to nearest junction box or cabinet. Form, pour and finish concrete in place of old existing sidewalk making sure to replace the expansion joints in their respective locations. Concrete shall conform to the *Kentucky Standard Specifications for Road and Bridge Construction* for sidewalks.

4. BID ITEM NOTES AND METHOD OF MEASUREMENT FOR PAYMENT

Only the bid items listed will be measured for payment. All other items required to complete the vehicle detection installation shall be incidental to other items of work. Payment at the contract unit price shall be full compensation for all materials, labor, equipment and incidentals to furnish and install these items.

4.1. Bore and Jack Pipe – 2”

Bore and jack pipe – 2” shall be furnished, installed, and measured for payment per the *Standard Specifications for Road and Bridge Construction*.

4.2. Conduit

Conduit shall include furnishing and installing specified conduit in accordance with the specifications. This item shall include conduit fittings, bodies, boxes, weatherheads, expansion joints, couplings, caps, conduit sealant, electrical tape, clamps, bonding straps and any other necessary hardware. Conduit will be measured in linear feet.

4.3. Electrical Service

Electrical Service shall include furnishing and installing all necessary materials and payment of all fees toward the complete installation of an electrical service which has passed all required inspections. Incidental to this item shall be furnishing and installing:

- Meter-base per utility company’s specifications
- Service disconnect panel per utility company’s specifications
- Meter base and service disconnect entrance hubs, waterproof
- Service entrance conductors
- Rigid steel conduit
- Rigid steel conduit fittings
- Conduit straps
- Weatherhead
- Duplex GFCI receptacle, 120-volt, 20-amp
- Ground rod with clamp
- Grounding conductor

Also incidental to this item shall be any necessary clearing of right of way for the electrical service drop.

Electrical service will be measured in individual units each.

4.4. Flashing Arrow

Flashing Arrow shall be furnished, installed, and measured for payment per the *Standard Specifications for Road and Bridge Construction.*

4.5. Galvanized Steel Cabinet

Galvanized Steel Cabinet shall include furnishing and installing galvanized steel cabinet on post as specified. Incidental to this item shall be furnishing and installing grounding hardware, and any necessary post/pole mounting hardware. Also incidental to this item shall be furnishing and installing the required number of terminal blocks and connection of all

sensors to the terminal blocks. Galvanized Steel Cabinet will be measured in individual units each.

4.6. Install Pad Mount Enclosure

Install Pad Mount Enclosure shall include installing a Department-furnished enclosure as specified on the detail sheets.

This item shall include obtaining the enclosure from KYTC and transporting it to the installation site and furnishing and installing the following:

- Concrete foundation (including any excavation necessary)
- Anchor bolts, lock washers, and nuts
- Conduit
- Conduit fittings (including grounding bushings)
- Weatherhead
- Terminal Strip(s)
- Ground rod with clamp
- Grounding conductor

Install Pad Mount Enclosure will be measured in individual units each.

4.7. Install Controller Cabinet

Install Controller Cabinet shall include installing a Department-furnished cabinet as specified on the detail sheets.

This item shall include obtaining the cabinet from KYTC and transporting it to the installation site and furnishing and installing the following:

- Conduit
- Conduit Fittings
- Terminal Strip(s)
- Ground rod with clamp
- Grounding conductor

Install Controller Cabinet will be measured in individual units each.

4.8. Junction Box Type 10" x 8" x 4"

Junction Box Type 10”x8”x4” shall include furnishing and installing specified junction box in accordance with the specifications. This item shall include connectors, splice sleeves, conduit fittings, mounting materials and any other items required to complete the installation. Incidental to this item shall be furnishing and installing specified post (wood, channel, metal, etc.) as required for the installation. Junction Box Type 10”x8”x4” will be measured in individual units each.

4.9. Junction Box Type A, B, or C

Junction Box Type A, B, or C shall include furnishing and installing specified junction box in accordance with the specifications. This item shall include excavation, furnishing and installing #57 aggregate, backfilling around the box, and restoration of disturbed areas to the satisfaction of the Engineer. Incidental to this item shall be furnishing and installing a

grounding conductor bonding all conduit grounding bushings in the box. Junction Box Type A, B, or C will be measured in individual units each.

4.10. Loop Saw Slot and Fill

Loop Saw Slot and Fill shall include sawing and cleaning saw slots and furnishing and installing conduit sealant, loop sealant, backer rod, grout, or other specified material. Loop Saw Slot and Fill will be measured in linear feet of sawed slot.

4.11. Maintain and Control Traffic

Maintain and Control Traffic shall be measured for payment per the *Standard Specifications for Road and Bridge Construction.*

4.12. Open Cut Roadway

Open Cut Roadway shall include excavating trench (sawing and chipping roadway) to dimensions as indicated on the detail sheets and furnishing and placing concrete, steel reinforcing bars, and asphalt. This item also includes restoring any disturbed sidewalk to its original condition. Open Cut Roadway will be measured in linear feet.

4.13. Piezoelectric Sensor

Piezoelectric sensor (piezo) shall include sawing and cleaning saw slots and furnishing and installing piezo in accordance with the specifications. This item shall include furnishing and installing lead-in wire, conduit sealant, encapsulation material, backer rod, grout, testing, and accessories. Piezo will be measured in individual units each.

4.14. Pole – 35’ Wooden

Pole – 35’ Wooden shall include excavation, furnishing and installing specified wood pole, backfilling and restoring disturbed areas to the satisfaction of the Engineer. Incidental to this item shall be furnishing and installing guy wire, anchor and anchor rod, strand vise, and guy guard, if specified.

Pole – 35’ Wooden will be measured in individual units each.

4.15. Signs

Signs shall be furnished, installed, and measured for payment per the *Standard Specifications for Road and Bridge Construction.*

4.16. Trenching and Backfilling

Trenching and Backfilling shall include excavation, warning tape, backfilling, temporary erosion control, seeding, protection and restoration of disturbed areas to original condition. This item shall include concrete, asphalt or approved replacement material for sidewalks, curbs, roadways, etc. (if required). Trenching and backfilling will be measured in linear feet.

4.17. Wire or Cable

Wire or cable shall include furnishing and installing specified wire or cable within saw slot, conduit, junction box, cabinet, or overhead as indicated on the detail sheets. Incidental to this item shall be the labeling of all wires and cables in each junction box, cabinet and splice

box, and furnishing and installing other hardware required for installing cable. Wire or Cable will be measured in linear feet.

4.18. Wood Post

Wood Post shall include furnishing and installing wood post as specified. This item shall include excavation, furnishing and placing concrete (if required), backfilling around the post, and restoration of disturbed areas to the satisfaction of the engineer. Wood Post will be measured in individual units each.

4.19. Remove and Replace Sidewalk

Remove and Replace Sidewalk shall include removing existing sidewalk to install conduit and/or junction box (if required) and replacing old existing sidewalk with new sidewalk after installation of required items. This item includes removing old sidewalk and disposing of off the project and forming, pouring and finishing the new sidewalk after installation of required items.

4.20. Loop Test

Loop Test includes conducting an operating test on the existing inductance loops at the control cabinet in the presence of the Engineer to determine if the inductance loop conductors have an insulating resistance of a minimum of 100 megohms when tested with a 500-volt direct current potential in a reasonably dry atmosphere between conductors and ground.

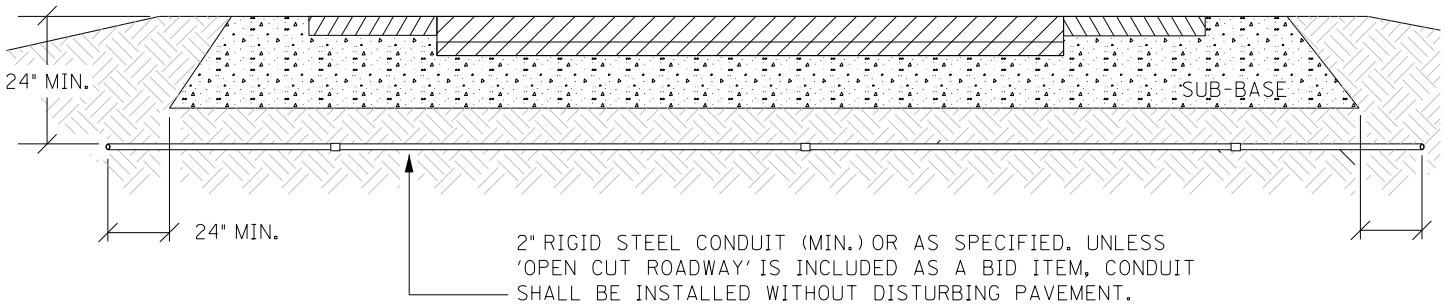

CONDUIT UNDER PAVEMENT

TOTAL TRENCH WIDTH SHALL BE 3" (NOM.) WIDER THAN THE SUM OF THE OUTSIDE DIAMETER(S) OF THE CONDUIT(S) INSTALLED. CONDUIT(S) SHALL BE CENTERED IN TRENCH.

CONTRACTOR SHALL PLACE BACKFILL IN LIFTS (9" MAX.) COMPACT BACKFILL, AND RESTORE DISTURBED AREA TO THE SATISFACTION OF THE ENGINEER

CONTRACTOR SHALL INSTALL UNDERGROUND UTILITY WARNING TAPE ABOVE CONDUIT AS SHOWN.

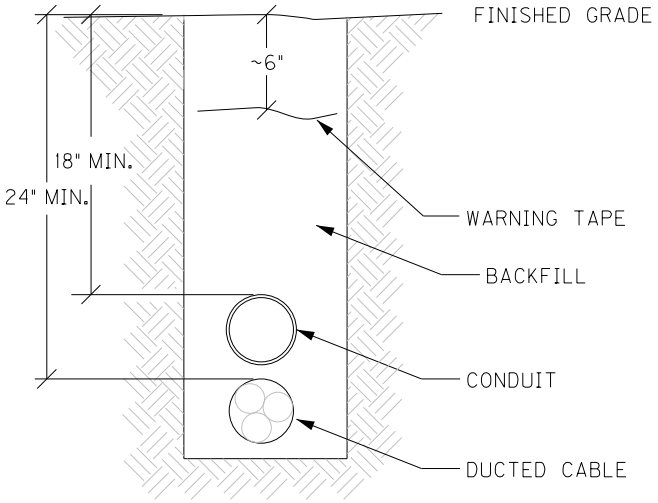

CONDUIT TRENCH

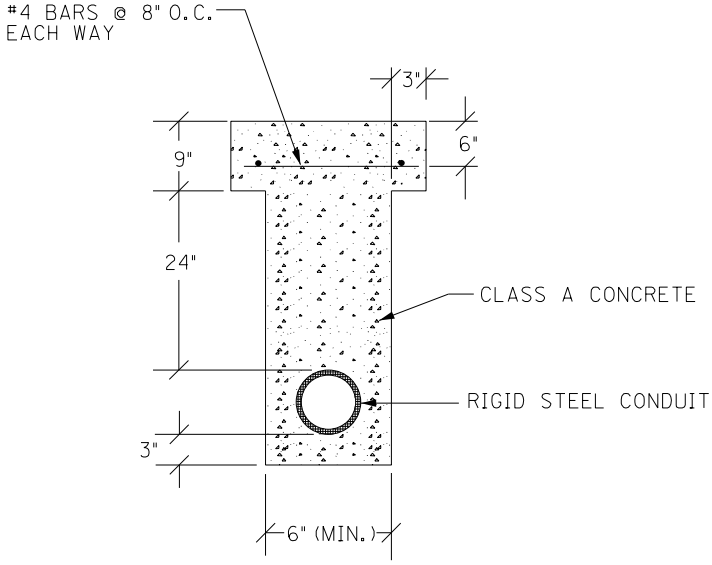

OPEN CUT PAVEMENT DETAIL

CONDUIT INSTALLATION

NOT TO SCALE

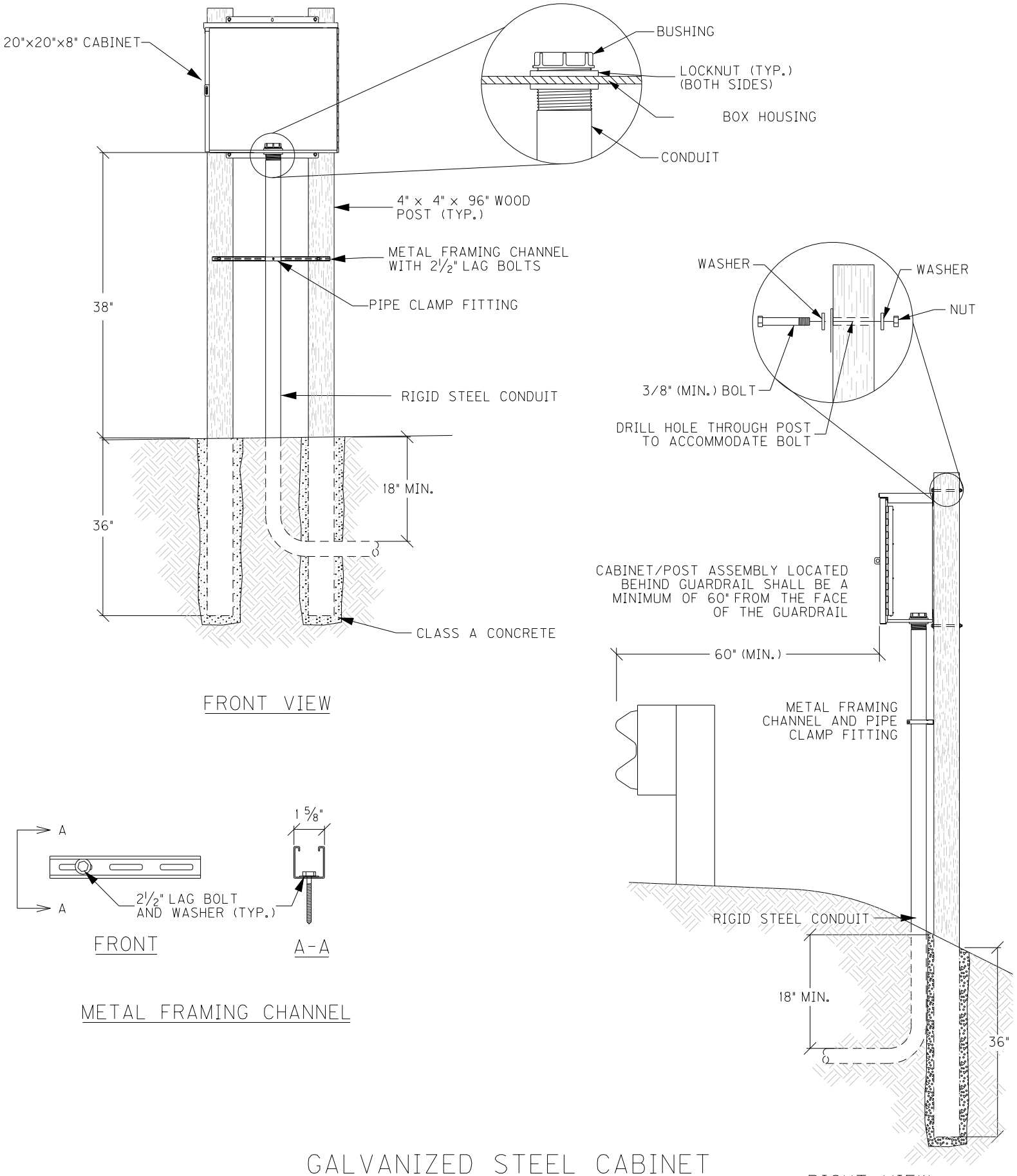

GALVANIZED STEEL CABINET
DOUBLE POST ASSEMBLY

NOT TO SCALE

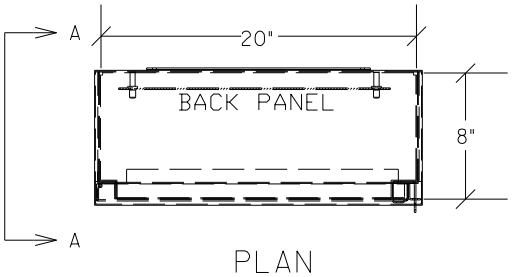

PLAN

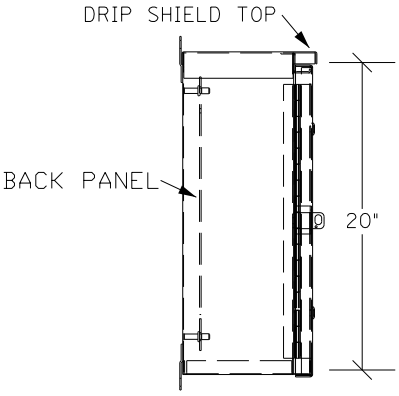

SECTION A-A

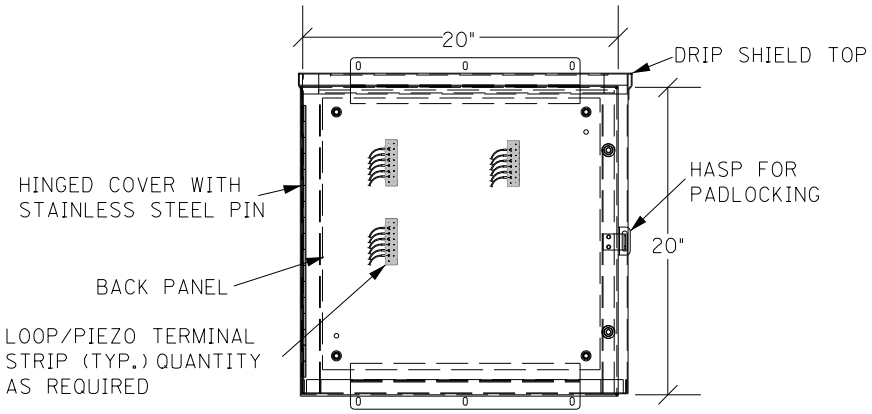

ELEVATION

GALVANIZED STEEL CABINET

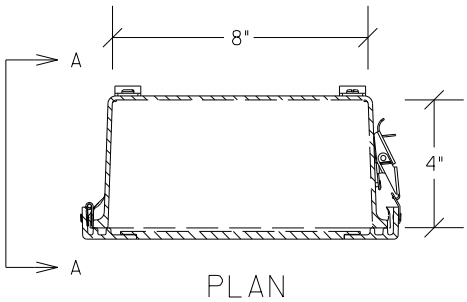

PLAN

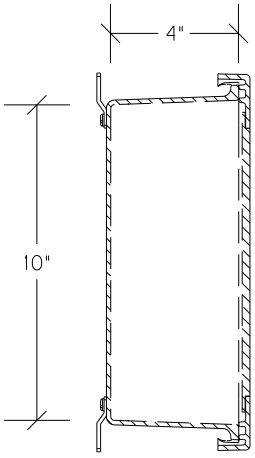

SECTION A-A

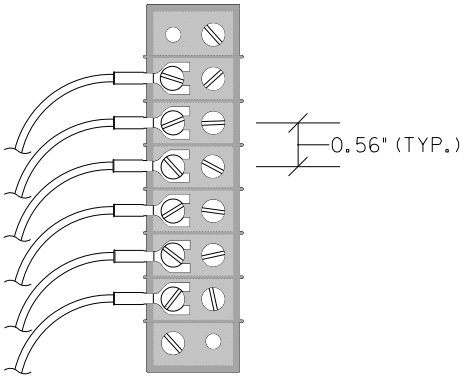

TERMINAL STRIP (TYP.)

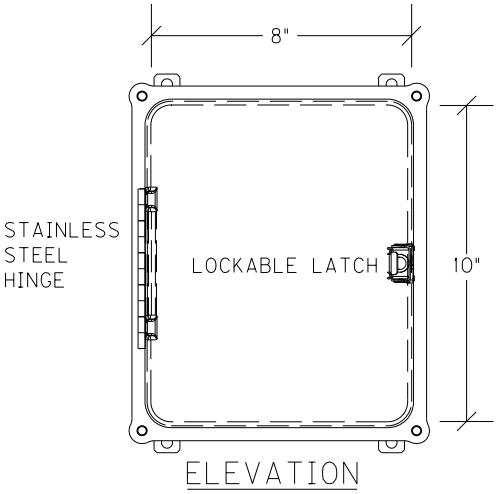

ELEVATION

JUNCTION BOX 10"x8"X4"

NOT TO SCALE

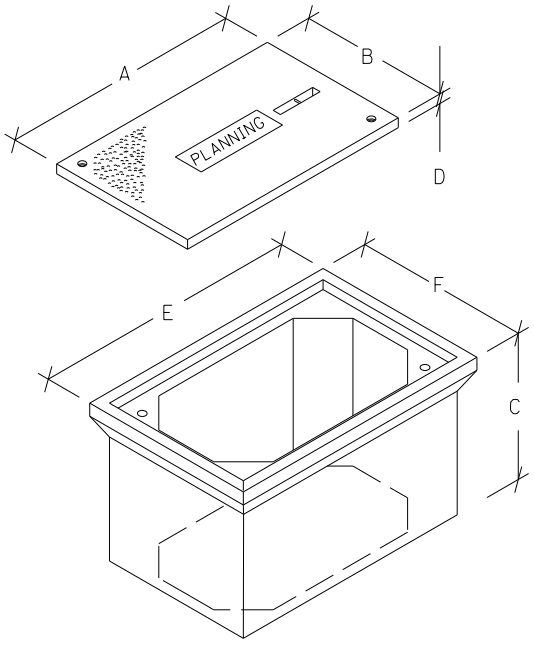

JUNCTION BOX DIMENSIONS (NOMINAL)						
	A	B	C	D*	E	F
TYPE A	23"	14"	18"	2"	25"	16"
TYPE B	18"	11"	12"	1¾"	20"	13"
TYPE C	36"	24"	30"	3"	38"	26"

* MINIMUM
STACKABLE BOXES ARE PERMITTED

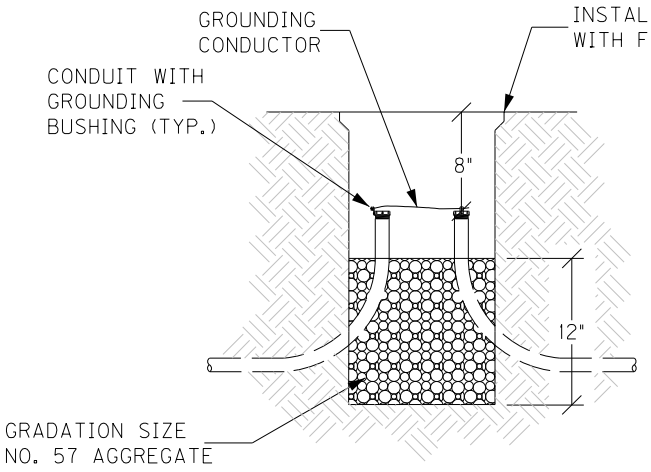

WHERE REQUIRED, JUNCTION BOX SHALL BE ORIENTED SUCH THAT THE DIMENSIONS COMPLY WITH THE NATIONAL ELECTRICAL CODE.

ELEVATION

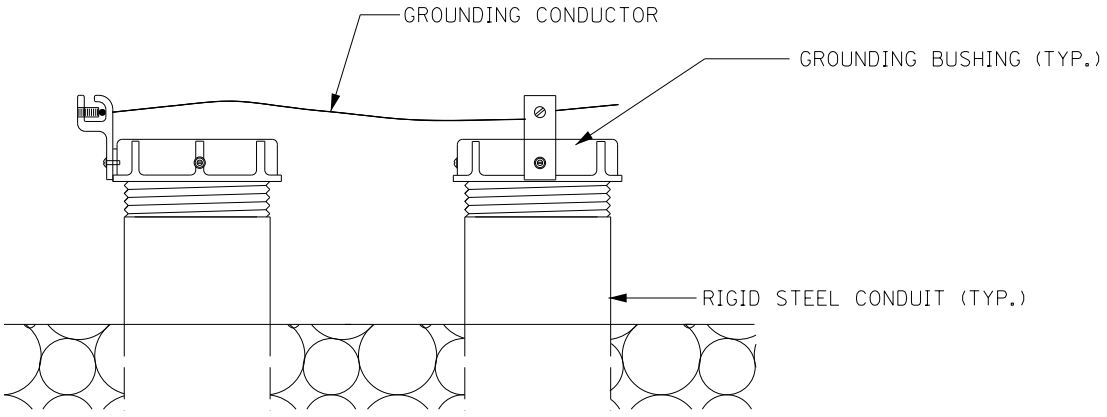

GROUNDING DETAIL

JUNCTION BOX - TYPE A, TYPE B, TYPE C

NOT TO SCALE

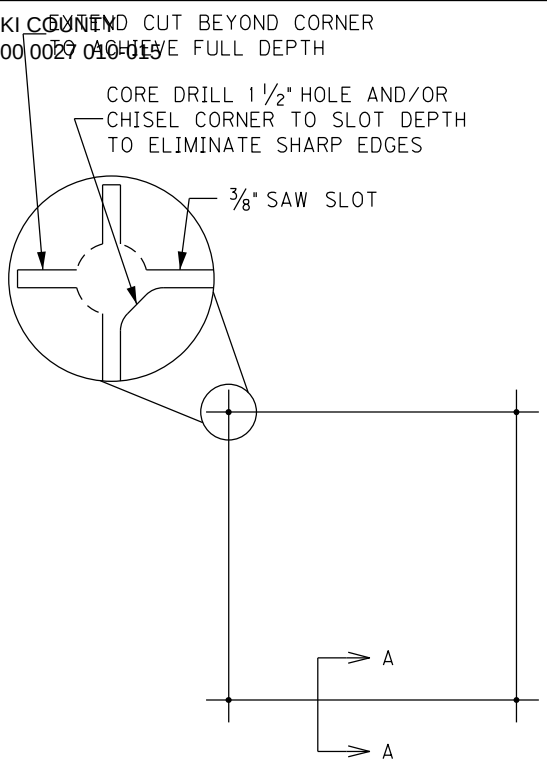

SAW CUT PLAN

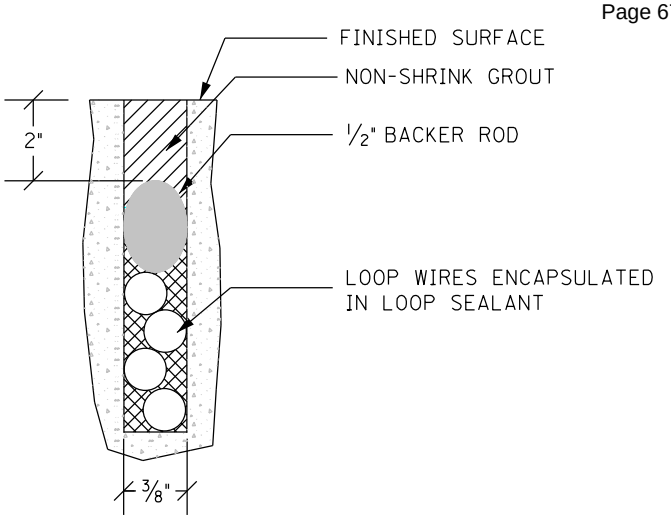

SECTION A-A (CONCRETE)

UNLESS SPECIFIED OTHERWISE, ALL LOOPS SHALL BE 6' x 6' SQUARE, CENTERED IN EACH LANE, WITH FOUR (4) TURNS OF 14 AWG LOOP WIRE.

ADJACENT SAW SLOTS SHALL BE A MINIMUM OF 12" APART.

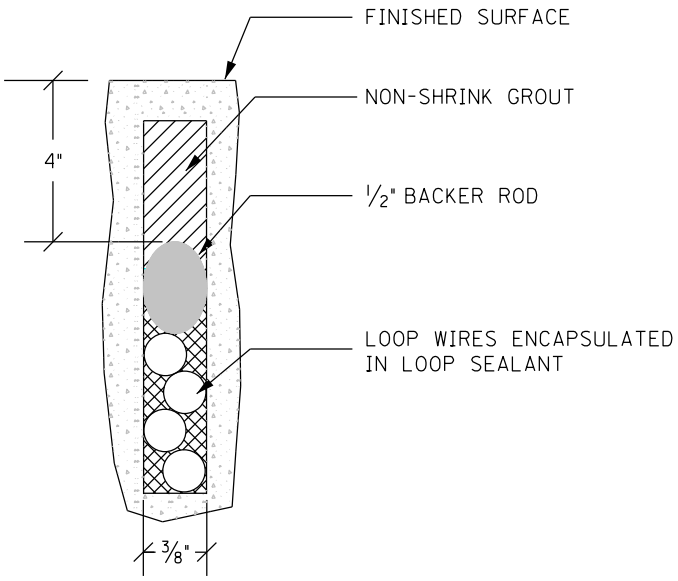

SECTION A-A (ASPHALT)

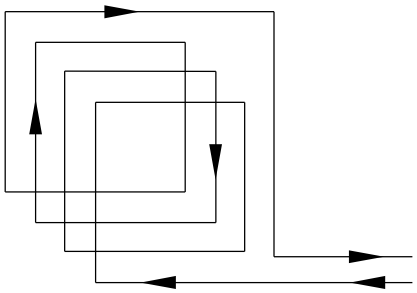

WIRING PLAN

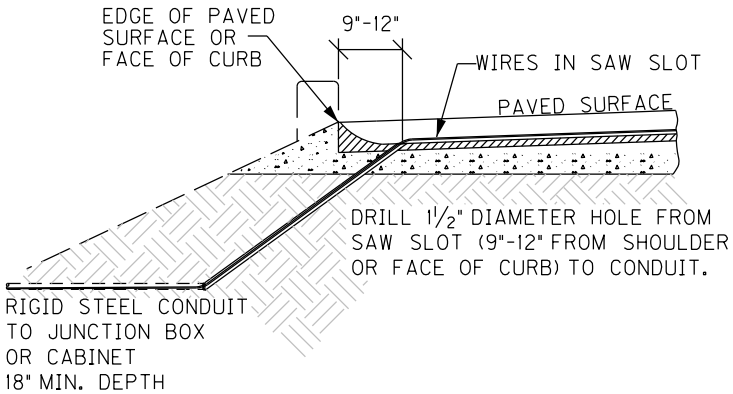

SAW SLOT EDGE OF PAVEMENT TRANSITION

INDUCTIVE LOOP DETECTOR

NOT TO SCALE

EXTEND SAW SLOT A MINIMUM OF 2" BEYOND THE END OF THE SENSOR.

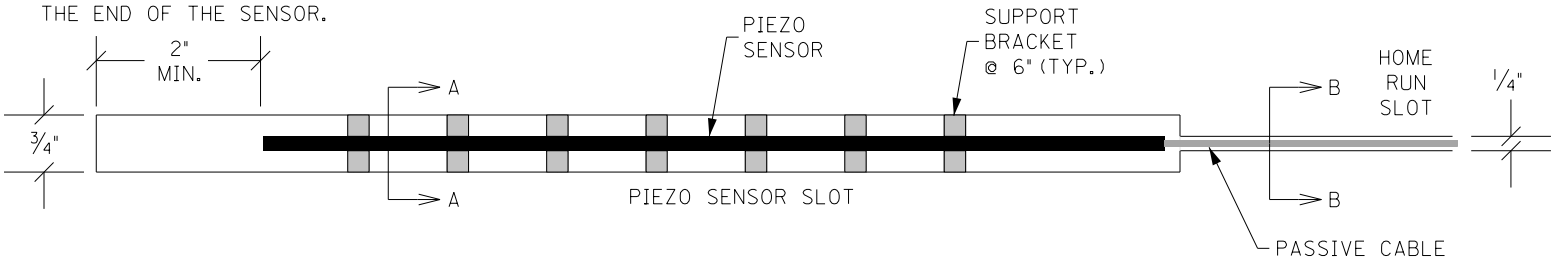

PLAN

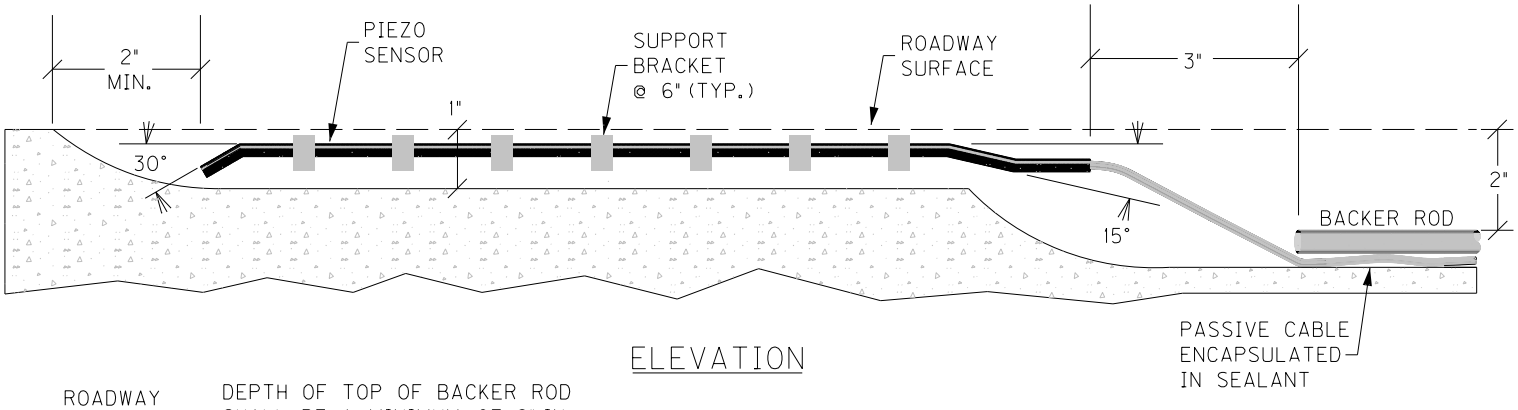

ELEVATION

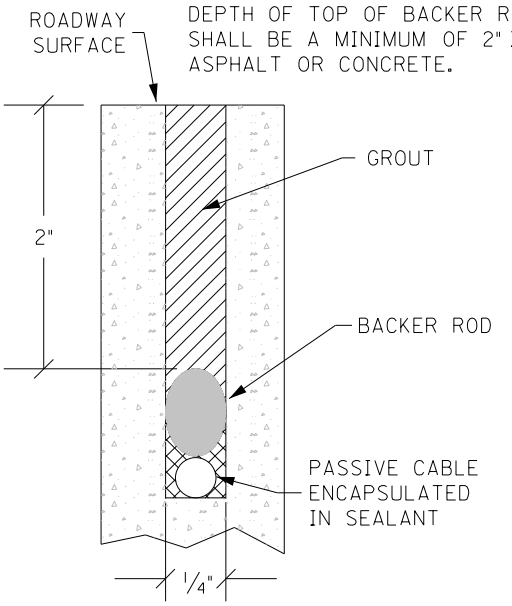

SECTION B-B

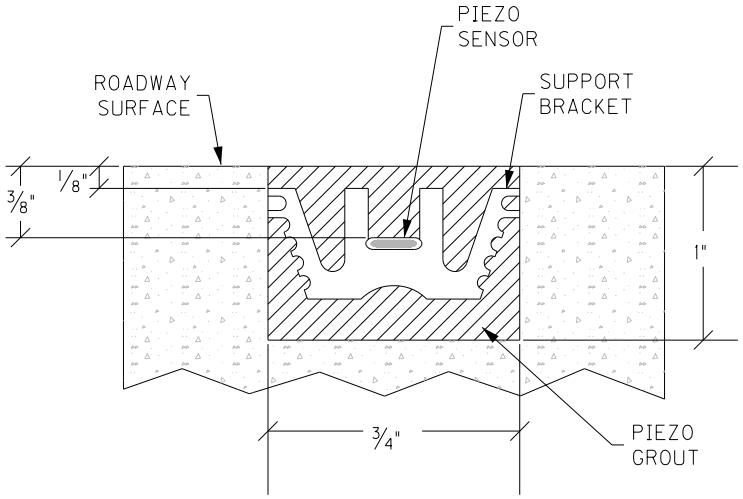

SECTION A-A

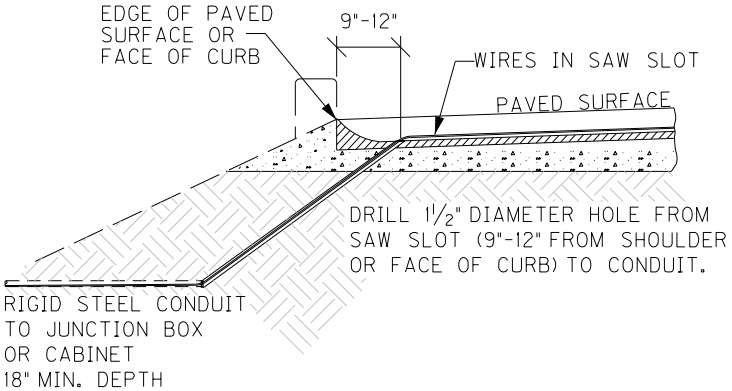

SAW SLOT EDGE OF PAVEMENT TRANSITION

PIEZOELECTRIC SENSOR INSTALLATION

NOT TO SCALE

FD05 100 0027 010-015 - PULASKI CO.

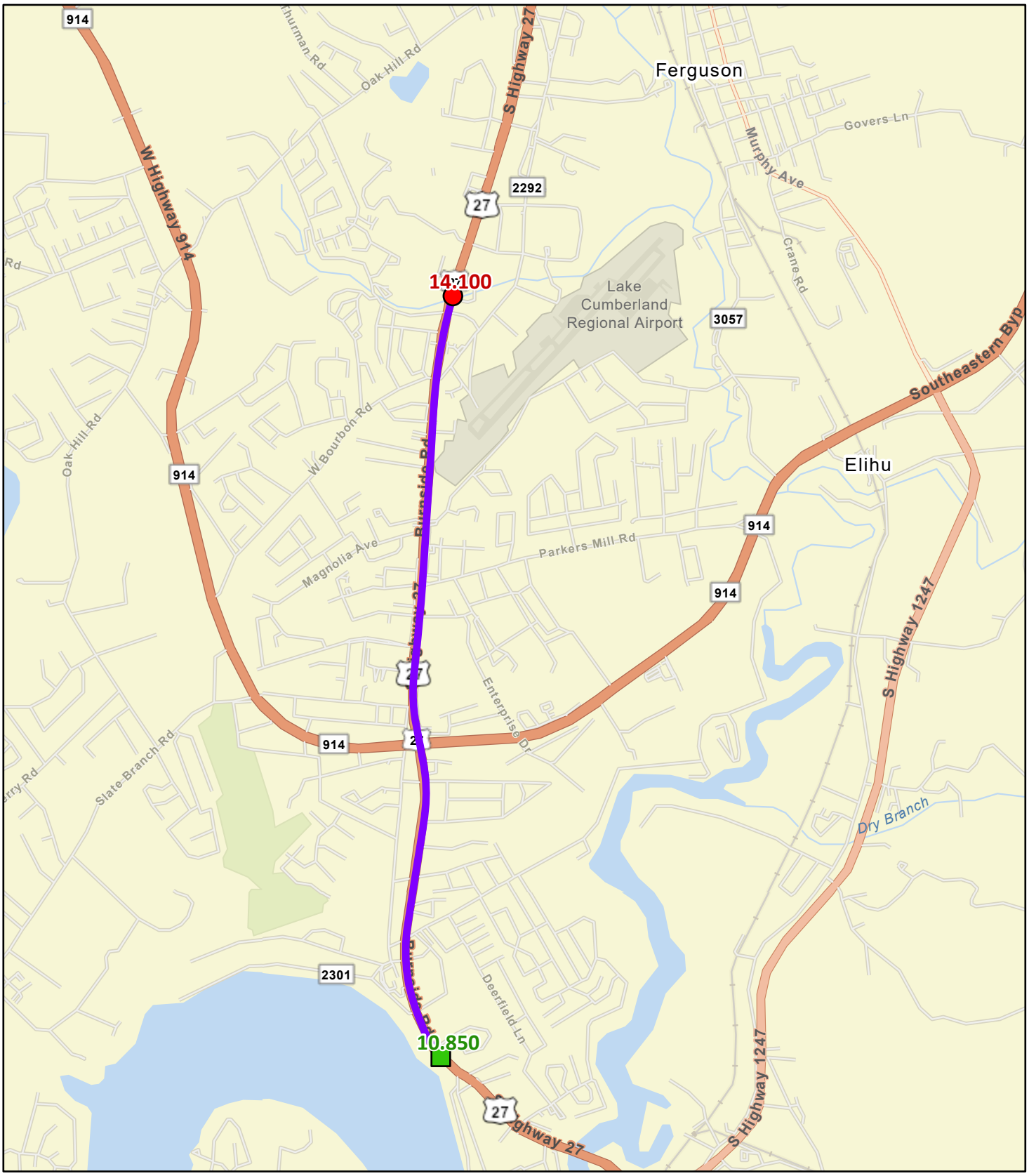

N
W E
S

0 0.25 0.5 1 mi

TEAM KENTUCKY®
TRANSPORTATION CABINET

Thermo Summary Sheet

Project: FD05 100 0027 010-015

County: Pulaski

District: D8 - Somerset

Milepoint	Location	Notes	PAVE MARKIN G-THERMO COMB ARROW	PAVE MARKIN G-THERMO CROSS-HATCH	PAVE MARKIN G-THERMO CURV ARROW	PAVE MARKIN G-THERMO DOTTED LANE EXTEN	PAVE MARKIN G-THERMO MERGE ARROW	PAVE MARKIN G-THERMO STOP BAR-24IN	PAVE MARKIN G-THERMO X-WALK-12 IN	PAVE MARK THERMO -6 IN W CAT TRAXX	PAVE MARK THERMO CONE CAP-SOLID YELLOW	PAVE STRIPIN G-THERMO -12 IN Y
11.209	Crossover				2							
11.374	Boat Dock Rd		5				3	72	300		157	70
11.593	Summitt Drive		6					98	500			70
11.723	Heritage Drive		4					98	220			70
12.010	North Horshoe Drive		6					98	225			70
12.202	KY 914		8	740	19	400		122		400		70
12.360	KY 1642 (Slate Branch Road)		7					132	512			70
12.566	Sherwood Ave		6					98	360	80		70
12.862	KY 1642 (Parkers Mill Road)		7					98	350			70
13.115	Kit Cowan Road		5					98	300			70
13.337	Sunset Boulevard		6					98	285			70
13.727	KY 2292		10		2			135	575	160		70
13.857	Grand Central Place		6					98	300			70
13.980	Grand Central Boulevard		6					98	450			70
		Total:	82	740	23	400	3	1,343	4,377	640	157	910

Fine Milling
Summary
FD05 100 0027 010-015

			Total	25600
Milepoint	**Comment**	**Length**	**Width**	**SQYD**
10.850	**Edge Key - Begin Project**	**75**	**60**	500.0
11.500 - 14.100	**Longitudinal Edge Key NB**	**13730**	**8**	12204.4
11.500 - 14.100	**Longitudinal Edge Key SB**	**13730**	**8**	12204.4
14.100	**Edge Key - End Project**	**75**	**80**	666.7

Pulaski County
TYPICAL SECTION
FD05 100 0027 010-015
MP's 10.850 - 11.500

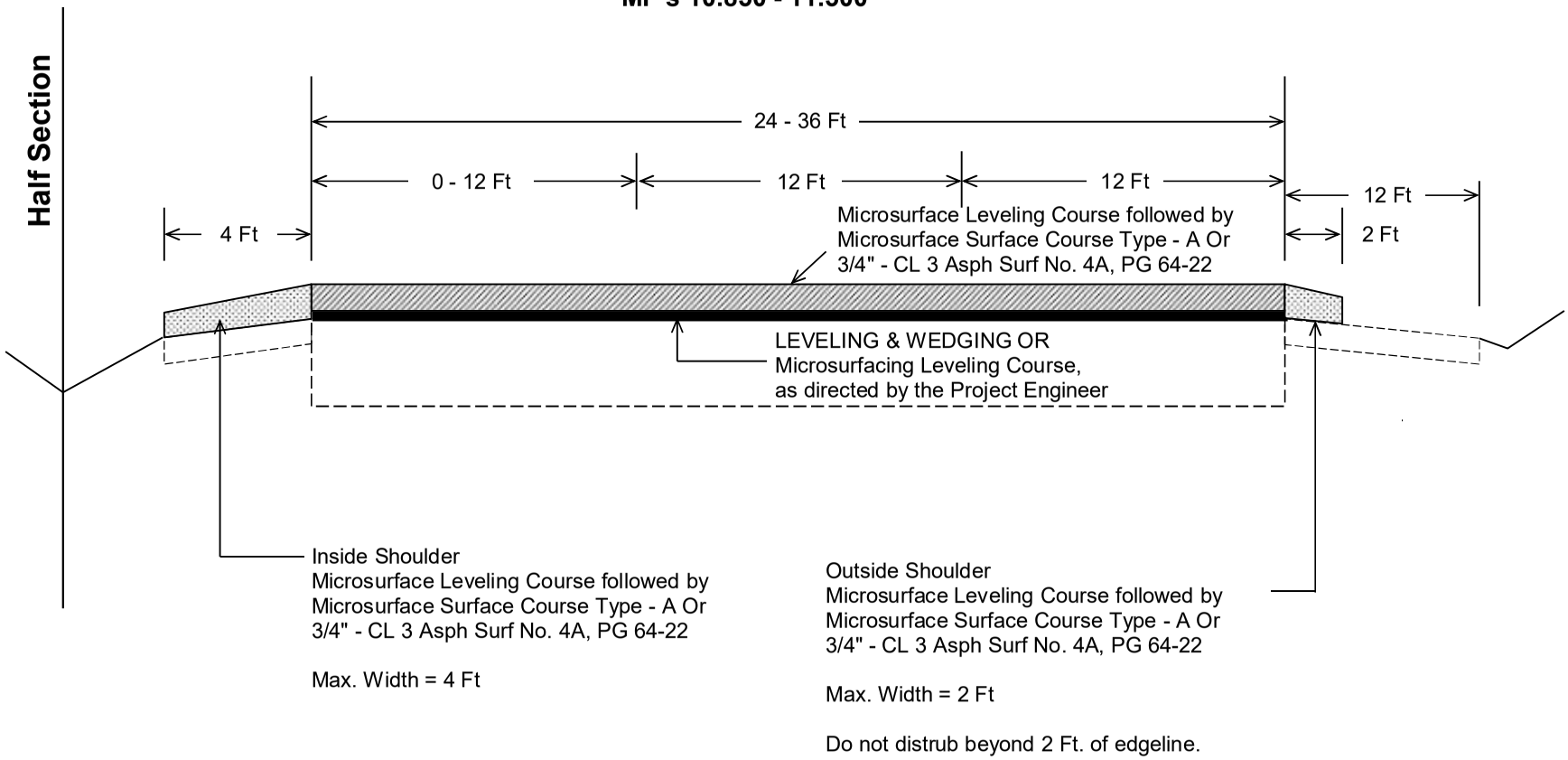

Pulaski County
TYPICAL SECTION
FD05 100 0027 010-015
MP's 11.500 - 14.100

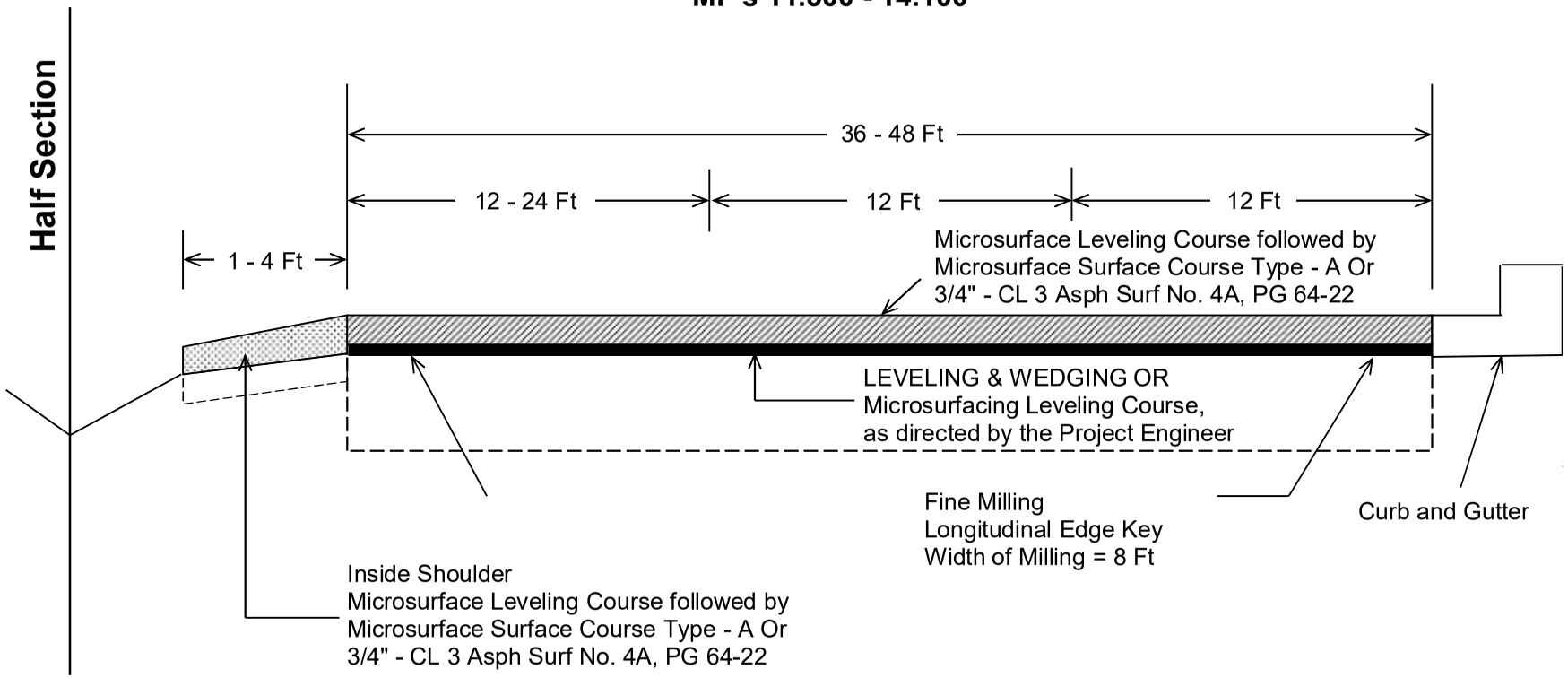

***Where Existing Site Conditions Permit**

PART II

SPECIFICATIONS AND STANDARD DRAWINGS

STANDARD SPECIFICATIONS

Any reference in the plans or proposal to previous editions of the *Standard Specifications for Road and Bridge Construction* and *Standard Drawings* are superseded by *Standard Specifications for Road and Bridge Construction, Edition of 2026* and *Standard Drawings, Edition of 2025.*

SUPPLEMENTAL SPECIFICATIONS

The contractor shall use the Supplemental Specifications that are effective at the time of letting. The Supplemental Specifications can be found at the following link:
http://transportation.ky.gov/Construction/Pages/Kentucky-Standard-Specifications.aspx

2020 KENTUCKY STANDARD DRAWINGS

CURVE WIDENING AND SUPERELEVATION TRANSITIONS RGS-001-07
SUPERELEVATION FOR MULTILANE PAVEMENT RGS-002-06
MISCELLANEOUS STANDARDS RGX-001-06
APPROACHES, ENTRANCES, AND MAIL BOX TURNOUT RPM-110-07
LANE CLOSURE MULTI-LANE HIGHWAY CASE I TTC-115-04
LANE CLOSURE MULTI-LANE HIGHWAY CASE II TTC-120-04
SHOULDER CLOSURE TTC-135-03
PAVEMENT CONDITION WARNING SIGNS TTD-125-02
MOBILE OPERATION FOR PAINT STRIPING CASE III TTS-110-02
MOBILE OPERATION FOR PAINT STRIPING CASE IV TTS-115-02
CURB AND GUTTER, CURBS AND VALLEY GUTTER RPM-100-11

PART III

EMPLOYMENT, WAGE AND RECORD REQUIREMENTS

TRANSPORTATION CABINET
DEPARTMENT OF HIGHWAYS

LABOR AND WAGE REQUIREMENTS
APPLICABLE TO OTHER THAN FEDERAL-AID SYSTEM PROJECTS

I. Application
II. Nondiscrimination of Employees (KRS 344)

I. APPLICATION

1. These contract provisions shall apply to all work performed on the contract by the contractor with his own organization and with the assistance of workmen under his immediate superintendence and to all work performed on the contract by piecework, station work or by subcontract. The contractor's organization shall be construed to include only workmen employed and paid directly by the contractor and equipment owned or rented by him, with or without operators.

2. The contractor shall insert in each of his subcontracts all of the stipulations contained in these Required Provisions and such other stipulations as may be required.

3. A breach of any of the stipulations contained in these Required Provisions may be grounds for termination of the contract.

II. NONDISCRIMINATION OF EMPLOYEES

AN ACT OF THE KENTUCKY
GENERAL ASSEMBLY TO PREVENT
DISCRIMINATION IN EMPLOYMENT
KRS CHAPTER 344
EFFECTIVE JUNE 16, 1972

The contract on this project, in accordance with KRS Chapter 344, provides that during the performance of this contract, the contractor agrees as follows:

1. The contractor shall not fail or refuse to hire, or shall not discharge any individual, or otherwise discriminate against an individual with respect to his compensation, terms, conditions, or privileges of employment, because of such individual's race, color, religion, national origin, sex, disability or age (forty and above); or limit, segregate, or classify his employees in any way which would deprive or tend to deprive an individual of employment opportunities or otherwise adversely affect his status as an employee, because of such individual's race, color, religion, national origin, sex, disability or age forty (40) and over. The contractor agrees to post in conspicuous places, available to employees and applicants for employment, notices to be provided setting forth the provisions of this nondiscrimination clause.

2. The contractor shall not print or publish or cause to be printed or published a notice or advertisement relating to employment by such an employer or membership in or any classification or referral for employment by the employment agency, indicating any preference, limitation, specification, or discrimination, based on race, color, religion, national origin, sex, or age forty (40) and over, or because the person is a qualified individual with a disability, except that such a notice or advertisement may indicate a preference, limitation, or specification based on religion, national origin, sex, or age forty (40) and over, or because the person is a qualified individual with a disability, when religion, national origin, sex, or age forty (40) and over, or because the person is a qualified individual with a disability, is a bona fide occupational qualification for employment.

3. If the contractor is in control of apprenticeship or other training or retraining, including on-the-job training programs, he shall not discriminate against an individual because of his race, color, religion, national origin, sex, disability or age forty (40) and over, in admission to, or employment in any program established to provide apprenticeship or other training.

4. The contractor will send to each labor union or representative of workers with which he has a collective bargaining agreement or other contract or understanding, a notice to be provided advising the said labor union or workers' representative of the contractor's commitments under this section, and shall post copies of the notice in conspicuous places available to employees and applicants for employment. The contractor will take such action with respect to any subcontract or purchase order as the administrating agency may direct as a means of enforcing such provisions, including sanctions for non-compliance.

Revised: January 25, 2017

EXECUTIVE BRANCH CODE OF ETHICS

The Executive Branch Code of Ethics created by Kentucky Revised Statutes (KRS) Chapter 11A, effective July 14, 1992, establishes the ethical standards that govern the conduct of all executive branch employees. The Executive Branch Code of Ethics, which states, in part:

KRS 11A.040 (7) provides:

A present or former public servant listed in KRS 11A.010(9)(a) to (g) shall not, within one (1) year following termination of his or her office or employment, accept employment, compensation, or other economic benefit from any person or business that contracts or does business with, or is regulated by, the state in matters in which he was directly involved during the last thirty-six (36) months of his tenure. This provision shall not prohibit an individual from returning to the same business, firm, occupation, or profession in which he was involved prior to taking office or beginning his term of employment, or for which he received, prior to his state employment, a professional degree or license, provided that, for a period of one (1) year, he or she personally refrains from working on any matter in which he was directly involved during the last thirty-six (36) months of his or her tenure in state government. This subsection shall not prohibit the performance of ministerial functions, including but not limited to filing tax returns, filing applications for permits or licenses, or filing incorporation papers, nor shall it prohibit the former officer or public servant from receiving public funds disbursed through entitlement programs.

KRS 11A.040 (9) states:

A former public servant shall not represent a person or business before a state agency in a matter in which the former public servant was directly involved during the last thirty-six (36) months of his tenure, for a period of one (1) year after the latter of:

a) The date of leaving office or termination of employment; or
b) The date the term of office expires to which the public servant was elected.

This law is intended to promote public confidence in the integrity of state government and to declare as public policy the idea that state employees should view their work as a public trust and not to obtain private benefits.

If you have worked for the executive branch of state government within the past year, you may be subject to the law's prohibitions. The law's applicability may be different if you hold elected office or are contemplating representation of another before a state agency.

Also, if you are affiliated with a firm which does business with the state and which employs former state executive-branch employees, you should be aware that the law may apply to them.

In case of doubt, the law permits you to request an advisory opinion from the Executive Branch Ethics Commission, 1025 Capital Center Drive, Suite 105, Frankfort, Kentucky 40601; telephone (502) 564-7954.

Revised: March 11, 2025

Kentucky Equal Employment Opportunity Act of 1978

The requirements of the Kentucky Equal Employment Opportunity Act of 1978 (KRS 45.560-45.640) shall apply to this Contract. The apparent low Bidder will be required to submit EEO forms to the Division of Construction Procurement, which will then forward to the Finance and Administration Cabinet for review and approval. No award will become effective until all forms are submitted and EEO/CC has certified compliance. The required EEO forms are as follows:

- EEO-1: Employer Information Report
- Affidavit of Intent to Comply
- Employee Data Sheet
- Subcontractor Report

These forms are available on the Finance and Administration's web page under ***Vendor Information, Standard Attachments and General Terms*** at the following address: **https://www.eProcurement.ky.gov**.

Bidders currently certified as being in compliance by the Finance and Administration Cabinet may submit a copy of their approval letter in lieu of the referenced EEO forms.

For questions or assistance please contact the Finance and Administration Cabinet by email at **finance.contractcompliance@ky.gov** or by phone at 502-564-2874.

EMPLOYEE RIGHTS
UNDER THE FAIR LABOR STANDARDS ACT

THE UNITED STATES DEPARTMENT OF LABOR WAGE AND HOUR DIVISION

FEDERAL MINIMUM WAGE
$7.25 PER HOUR
BEGINNING JULY 24, 2009

OVERTIME PAY

At least 1½ times your regular rate of pay for all hours worked over 40 in a workweek.

CHILD LABOR

An employee must be at least **16** years old to work in most non-farm jobs and at least **18** to work in non-farm jobs declared hazardous by the Secretary of Labor.

Youths **14** and **15** years old may work outside school hours in various non-manufacturing, non-mining, non-hazardous jobs under the following conditions:

No more than
- **3** hours on a school day or **18** hours in a school week;
- **8** hours on a non-school day or **40** hours in a non-school week.

Also, work may not begin before **7 a.m.** or end after **7 p.m.**, except from June 1 through Labor Day, when evening hours are extended to **9 p.m.** Different rules apply in agricultural employment.

TIP CREDIT

Employers of "tipped employees" must pay a cash wage of at least $2.13 per hour if they claim a tip credit against their minimum wage obligation. If an employee's tips combined with the employer's cash wage of at least $2.13 per hour do not equal the minimum hourly wage, the employer must make up the difference. Certain other conditions must also be met.

ENFORCEMENT

The Department of Labor may recover back wages either administratively or through court action, for the employees that have been underpaid in violation of the law. Violations may result in civil or criminal action.

Employers may be assessed civil money penalties of up to $1,100 for each willful or repeated violation of the minimum wage or overtime pay provisions of the law and up to $11,000 for each employee who is the subject of a violation of the Act's child labor provisions. In addition, a civil money penalty of up to $50,000 may be assessed for each child labor violation that causes the death or serious injury of any minor employee, and such assessments may be doubled, up to $100,000, when the violations are determined to be willful or repeated. The law also prohibits discriminating against or discharging workers who file a complaint or participate in any proceeding under the Act.

ADDITIONAL INFORMATION

- Certain occupations and establishments are exempt from the minimum wage and/or overtime pay provisions.
- Special provisions apply to workers in American Samoa and the Commonwealth of the Northern Mariana Islands.
- Some state laws provide greater employee protections; employers must comply with both.
- The law requires employers to display this poster where employees can readily see it.
- Employees under 20 years of age may be paid $4.25 per hour during their first 90 consecutive calendar days of employment with an employer.
- Certain full-time students, student learners, apprentices, and workers with disabilities may be paid less than the minimum wage under special certificates issued by the Department of Labor.

For additional information:

1-866-4-USWAGE

(1-866-487-9243) TTY: 1-877-889-5627

WHD U.S. Wage and Hour Division

WWW.WAGEHOUR.DOL.GOV

U.S. Department of Labor | Wage and Hour Division

WHD Publication 1088 (Revised July 2009)

PART IV

BID ITEMS

262258

PROPOSAL BID ITEMS

Report Date 11/16/26

262258

Section: 0001 - MICROSURFACING

LINE	BID CODE	ALT	DESCRIPTION	QUANTITY	UNIT	UNIT PRIC	FP	AMOUNT
0010	06511		PAVE STRIPING-TEMP PAINT-6 IN (MICROSURFACING)	168,640.00	LF		$	
0020	20814EC		MICROSURFACING-SURFACE COURSE - TYPE A	165,389.00	SQYD		$	
0030	21652EN		MICROSURFACING-LEVELING COURSE	170,237.00	SQYD		$	

Section: 0002 - THINLAY

LINE	BID CODE	ALT	DESCRIPTION	QUANTITY	UNIT	UNIT PRIC	FP	AMOUNT
0040	00190		LEVELING & WEDGING PG64-22	200.00	TON		$	
0050	02676		MOBILIZATION FOR MILL & TEXT	1.00	LS		$	
0060	06511		PAVE STRIPING-TEMP PAINT-6 IN (THINLAY)	120,000.00	LF		$	
0070	24887EC		CL3 ASPH SURF NO.4A PG64-22	6,830.00	TON		$	
0080	24964EC		FINE MILLING	25,600.00	SQYD		$	
0090	24970EC		ASPHALT MATERIAL FOR TACK NON-TRACKING	60.00	TON		$	

Section: 0003 - ROADWAY

LINE	BID CODE	ALT	DESCRIPTION	QUANTITY	UNIT	UNIT PRIC	FP	AMOUNT
0100	02562		TEMPORARY SIGNS	700.00	SQFT		$	
0110	02650		MAINTAIN & CONTROL TRAFFIC	1.00	LS		$	
0120	02671		PORTABLE CHANGEABLE MESSAGE SIGN	4.00	EACH		$	
0130	02775		ARROW PANEL	2.00	EACH		$	
0140	04793		CONDUIT-1 1/4 IN	160.00	LF		$	
0150	04795		CONDUIT-2 IN	50.00	LF		$	
0160	04820		TRENCHING AND BACKFILLING	190.00	LF		$	
0170	04829		PIEZOELECTRIC SENSOR	10.00	EACH		$	
0180	04830		LOOP WIRE	4,300.00	LF		$	
0190	04895		LOOP SAW SLOT AND FILL	900.00	LF		$	
0200	06531		PAVE STRIPING REMOVAL-6 IN	84,320.00	LF		$	
0210	06542		PAVE STRIPING-THERMO-6 IN W	50,000.00	LF		$	
0220	06543		PAVE STRIPING-THERMO-6 IN Y	34,320.00	LF		$	
0230	06547		PAVE STRIPING-THERMO-12 IN Y	910.00	LF		$	
0240	06566		PAVE MARKING-THERMO X-WALK-12 IN	4,377.00	LF		$	
0250	06568		PAVE MARKING-THERMO STOP BAR-24IN	1,343.00	LF		$	
0260	06569		PAVE MARKING-THERMO CROSS-HATCH	740.00	SQFT		$	
0270	06574		PAVE MARKING-THERMO CURV ARROW	23.00	EACH		$	
0280	06575		PAVE MARKING-THERMO COMB ARROW	82.00	EACH		$	
0290	06578		PAVE MARKING-THERMO MERGE ARROW	3.00	EACH		$	
0300	20359NN		GALVANIZED STEEL CABINET	4.00	EACH		$	
0310	20360ES818		WOOD POST	8.00	EACH		$	

PROPOSAL BID ITEMS

262258

Report Date 11/16/26

LINE	BID CODE	ALT	DESCRIPTION	QUANTITY	UNIT	UNIT PRIC	FP	AMOUNT
0320	20391NS835		ELECTRICAL JUNCTION BOX TYPE A	4.00	EACH		$	
0330	20411ED		LAW ENFORCEMENT OFFICER	80.00	HOUR		$	
0340	21417ES717		PAVE MARK THERMO CONE CAP-SOLID YELLOW	157.00	SQFT		$	
0350	23010EN		PAVE MARK TEMP PAINT STOP BAR-24 IN	1,343.00	LF		$	
0360	23625EC		PAVE MARK THERMO-6 IN W CAT TRAXX	640.00	LF		$	
0370	24683ED		PAVE MARKING-THERMO DOTTED LANE EXTEN	400.00	LF		$	
0380	24880EC		REMOVE PAVEMENT MARKER	750.00	EACH		$	

Section: 0004 - DEMOBILIZATION

LINE	BID CODE	ALT	DESCRIPTION	QUANTITY	UNIT	UNIT PRIC	FP	AMOUNT
0390	02569		DEMOBILIZATION	1.00	LS		$	