CALL NO. 200

CONTRACT ID. 261140

JEFFERSON COUNTY

FED/STATE PROJECT NUMBER 056GR26D040-NHPP

DESCRIPTION I-64

WORK TYPE ASPHALT SURFACE WITH BRIDGE

PRIMARY COMPLETION DATE 9/30/2028

LETTING DATE: December 10,2026

Sealed Bids will be received electronically through the Bid Express bidding service until 10:00 AM EASTERN STANDARD TIME December 10,2026. Bids will be publicly announced at 10:00 AM EASTERN STANDARD TIME.

PLANS AVAILABLE FOR THIS PROJECT.

DBE CERTIFICATION REQUIRED - 0%

REQUIRED BID PROPOSAL GUARANTY: Not less than 5% of the total bid.

TABLE OF CONTENTS

PART I SCOPE OF WORK
- PROJECT(S), COMPLETION DATE(S), & LIQUIDATED DAMAGES
- CONTRACT NOTES
- FEDERAL CONTRACT NOTES
- NATIONAL HIGHWAY
- INCIDENTAL SURFACING
- FUEL AND ASPHALT PAY ADJUSTMENT
- ASPHALT PAVEMENT RIDE QUALITY CAT A
- COMPACTION OPTION A
- SPECIAL NOTE(S) APPLICABLE TO PROJECT
- PIPELINE INSPECTION
- TRAFFIC QUEUE PROTECTION VEHICLE
- PORTABLE QUEUE WARNING ALERT SYSTEM
- NON-TRACKING TACK COAT
- EXPERIMENTAL KYCT AND HAMBURG TESTING
- DOLOMITIC POLISH-RESISTANT AGGREGATE
- RECYCLED ASPHALT PAVEMENT (RAP) STOCKPILE MANAGEMENT
- DOUBLE ASPHALT SEAL COAT
- BRIDGE DEMOLITION, RENOVATION AND ASBESTOS ABATEMENT
- ASBESTOS ABATEMENT REPORT
- CONTRACT COMPLETION DATE AND LIQUIDATED DAMAGES
- RIGHT OF WAY CERTIFICATION
- UTILITY IMPACT & RAIL CERTIFICATION NOTES
- KPDES STORM WATER PERMIT, BMP AND ENOI
- COMMUNICATING ALL PROMISES
- MATERIAL SUMMARY
- GUARDRAIL DELIVERY VERIFICATION SHEET

PART II SPECIFICATIONS AND STANDARD DRAWINGS
- STANDARD AND SUPPLEMENTAL SPECIFICATIONS
- [SN-1I] PORTABLE CHANGEABLE MESSAGE SIGNS
- [SN-11C] DRILLED SHAFTS
- [SN-11N] LONGITUDINAL PAVEMENT JOINT ADHESIVE
- [SP-69] EMBANKMENT AT BRIDGE END BENT STRUCTURES

PART III EMPLOYMENT, WAGE AND RECORD REQUIREMENTS
- FEDERAL-AID CONSTRUCTION CONTRACTS - FHWA 1273
- NONDISCRIMINATION OF EMPLOYEES
- EXECUTIVE BRANCH CODE OF ETHICS
- PROJECT WAGE RATES LOCALITY 3 / FEDERAL

PART IV BID ITEMS

PART I

SCOPE OF WORK

ADMINISTRATIVE DISTRICT - 05

CONTRACT ID - 261140

056GR26D040-NHPP

COUNTY - JEFFERSON

PCN - DE05600642625
BRO 0642 (202)

I-64 BRIDGE PROJECT IN JEFFERSON COUNTY ON I-64 @ TUCKER STATION RD, A DISTANCE OF 0.03 MILES.ASPHALT SURFACE WITH BRIDGE SYP NO. 05-100057.0.

GEOGRAPHIC COORDINATES LATITUDE 38:13:24.00 LONGITUDE 85:31:39.00

ADT

PCN - DE05600642631
NHPP 0642(203)

I-64 I-64 REHABILITATION, A DISTANCE OF 06.00 MILES.ASPHALT REHAB INTERSTATE/PARKWAY SYP NO. 05-22024.00.

GEOGRAPHIC COORDINATES LATITUDE 38:13:24.00 LONGITUDE 85:33:12.00

ADT 135,000

COMPLETION DATE(S):

COMPLETED BY 04/28/2028	I-64 BRIDGES OVER TUCKER STATION ROAD
COMPLETED BY 08/30/2027	INTERMEDIATE COMPLETION DATE - SEE SPECIAL NOTE
COMPLETED BY 09/30/2028	APPLIES TO ENTIRE CONTRACT

CONTRACT NOTES

INSURANCE
Refer to Kentucky Standard Specifications for Road and Bridge Construction, current edition.

PROPOSAL ADDENDA
All addenda to this proposal must be applied when calculating bid and certified in the bid packet submitted to the Kentucky Department of Highways. Failure to use the correct and most recent addenda may result in the bid being rejected.

BID SUBMITTAL
Bidder must use the Department's electronic bidding software. The Bidder must download the bid file located on the Bid Express website (www.bidx.com) to prepare a bid packet for submission to the Department. The bidder must submit electronically using Bid Express.

JOINT VENTURE BIDDING
Joint venture bidding is permissible. All companies in the joint venture must be prequalified in one of the work types in the Qualifications for Bidders for the project. The bidders must get a vendor ID for the joint venture from the Division of Construction Procurement and register the joint venture as a bidder on the project. Also, the joint venture must obtain a digital ID from Bid Express to submit a bid. A joint bid bond of 5% may be submitted for both companies or each company may submit a separate bond of 5%.

UNDERGROUND FACILITY DAMAGE PROTECTION
The contractor shall make every effort to protect underground facilities from damage as prescribed in the Underground Facility Damage Protection Act of 1994, Kentucky Revised Statute KRS 367.4901 to 367.4917. It is the contractor's responsibility to determine and take steps necessary to be in compliance with federal and state damage prevention directives. When prescribed in said directives, the contractor shall submit Excavation Locate Requests to the Kentucky Contact Center (KY811) via web ticket entry. The submission of this request does not relieve the contractor from the responsibility of contacting non-member facility owners, whom shall be contacted through their individual Protection Notification Center. Non-compliance with these directives can result in the enforcement of penalties.

REGISTRATION WITH THE SECRETARY OF STATE BY A FOREIGN ENTITY
Pursuant to KRS 176.085(1)(b), an agency, department, office, or political subdivision of the Commonwealth of Kentucky shall not award a state contract to a person that is a foreign entity required by KRS 14A.9-010 to obtain a certificate of authority to transact business in the Commonwealth ("certificate") from the Secretary of State under KRS 14A.9-030 unless the person produces the certificate within fourteen (14) days of the bid or proposal opening. If the

foreign entity is not required to obtain a certificate as provided in KRS 14A.9-010, the foreign entity should identify the applicable exception. Foreign entity is defined within KRS 14A.1-070.

For all foreign entities required to obtain a certificate of authority to transact business in the Commonwealth, if a copy of the certificate is not received by the contracting agency within the time frame identified above, the foreign entity's solicitation response shall be deemed non-responsive or the awarded contract shall be cancelled.

Businesses can register with the Secretary of State at https://secure.kentucky.gov/sos/ftbr/welcome.aspx .

SPECIAL NOTE FOR PROJECT QUESTIONS DURING ADVERTISEMENT

Questions about projects during the advertisement should be submitted in writing to the Division of Construction Procurement. This may be done by email to kytc.projectquestions@ky.gov. The Department will attempt to answer all submitted questions. The Department reserves the right not to answer if the question is not pertinent or does not aid in clarifying the project intent.

The deadline for posting answers will be 3:00 pm Eastern Daylight Time, the day preceding the Letting. Questions may be submitted until this deadline with the understanding that the later a question is submitted, the less likely an answer will be able to be provided.

The questions and answers will be posted for each Letting under the heading "Questions & Answers" on the Construction Procurement website (www.transportation.ky.gov/construction-procurement). The answers provided shall be considered part of this Special Note and, in case of a discrepancy, will govern over all other bidding documents.

HARDWOOD REMOVAL RESTRICTIONS

The US Department of Agriculture has imposed a quarantine in Kentucky and several surrounding states, to prevent the spread of an invasive insect, the emerald ash borer. Hardwood cut in conjunction with the project may not be removed from the state. Chipping or burning on site is the preferred method of disposal.

INSTRUCTIONS FOR EXCESS MATERIAL SITES AND BORROW SITES

Identification of excess material sites and borrow sites shall be the responsibility of the Contractor. The Contractor shall be responsible for compliance with all applicable state and federal laws and may wish to consult with the US Fish and Wildlife Service to seek protection under Section 10 of the Endangered Species Act for these activities.

ACCESS TO RECORDS

The state agency certifies that it is in compliance with the provisions of KRS 45A.150, "Access to contractor's books, documents, papers, records, or other evidence directly pertinent to the contract." The Contractor, as defined in KRS 45A.030, agrees that the contracting agency, the

Finance and Administration Cabinet, the Auditor of Public Accounts, and the Legislative Research Commission, or their duly authorized representatives, shall have access to any books, documents, papers, records, or other evidence, which are directly pertinent to this agreement for the purpose of financial audit or program review. The Contractor also recognizes that any books, documents, papers, records, or other evidence, received during a financial audit or program review shall be subject to the Kentucky Open Records Act, KRS 61.870 to 61.884. Records and other prequalification information confidentially disclosed as part of the bid process shall not be deemed as directly pertinent to the agreement and shall be exempt from disclosure as provided in KRS 61.878(1)(c).

BOYCOTT PROVISIONS

If applicable, the contractor represents that, pursuant to KRS 45A.607, they are not currently engaged in, and will not for the duration of the contract engage in, the boycott of a person or an entity based in or doing business with a jurisdiction with which Kentucky can enjoy open trade. **Note:** The term Boycott does not include actions taken for bona fide business or economic reasons, or actions specifically required by federal or state law.

If applicable, the contractor verifies that, pursuant to KRS 41.480, they do not engage in, and will not for the duration of the contract engage in, in energy company boycotts as defined by KRS 41.472.

LOBBYING PROHIBITIONS

The contractor represents that they, and any subcontractor performing work under the contract, have not violated the agency restrictions contained in KRS 11A.236 during the previous ten (10) years, and pledges to abide by the restrictions set forth in such statute for the duration of the contract awarded.

The contractor further represents that, pursuant to KRS 45A.328, they have not procured an original, subsequent, or similar contract while employing an executive agency lobbyist who was convicted of a crime related to the original, subsequent, or similar contract within five (5) years of the conviction of the lobbyist.

FEDERAL CONTRACT NOTES

The Kentucky Department of Highways, in accordance with the Regulations of the United States Department of Transportation 23 CFR 635.112 (h), hereby notifies all bidders that failure by a bidder to comply with all applicable sections of the current Kentucky Standard Specifications, including, but not limited to the following, may result in a bid not being considered responsive and thus not eligible to be considered for award:

102.02 Current Rating
102.13 Irregular Bid Proposals
102.09 Proposal Guaranty
102.08 Preparation and Delivery of Proposals
102.14 Disqualification of Bidders

CIVIL RIGHTS ACT OF 1964

The Kentucky Transportation Cabinet, Department of Highways, in accordance with the provisions of Title VI of the Civil Rights Act of 1964 (78 Stat. 252, 42 U.S.C. §§ 2000d to 2000d-4) and the Regulations, hereby notifies all bidders that it will affirmatively ensure that any contract entered into pursuant to this advertisement, disadvantaged business enterprises will be afforded full and fair opportunity to submit bids in response to this invitation and will not be discriminated against on the grounds of race, color, national origin, sex, age (over 40), religion, sexual orientation, gender identity, veteran status, disability, income- level, or Limited English Proficiency (LEP)in consideration for an award.

NOTICE TO ALL BIDDERS

To report bid rigging activities call: 1-800-424-9071.

The U.S. Department of Transportation (DOT) operates the above toll-free “hotline” Monday through Friday, 8:00 a.m. to 5:00 p.m. eastern time. Anyone with knowledge of possible bid rigging, bidder collusion, or other fraudulent activities should use the “hotline” to report such activities.

The “hotline” is part of the DOT’s continuing effort to identify and investigate highway construction contract fraud and abuse and is operated under the direction of the DOT Inspector General. All information will be treated confidentially and caller anonymity will be respected.

SECOND TIER SUBCONTRACTS

Second tier subcontracts are acceptable per Section 108.01 of the Standard Specifications for Road and Bridge Construction. S u b - Contractors fulfilling a disadvantaged business enterprise goal on a project may enter into a 2nd tier subcontract with a Non-DBE Subcontractor. However, in this instance, none of the work subcontracted to the Non-DBE Contractor will count toward fulfilling the established Disadvantaged Goal for the project.

DISADVANTAGED BUSINESS ENTERPRISE PROGRAM

It is the policy of the Kentucky Transportation Cabinet ("the Cabinet") that Disadvantaged Business Enterprises ("DBE") shall have the opportunity to participate in the performance of highway construction projects financed in whole or in part by Federal Funds in order to create a level playing field for all businesses who wish to contract with the Cabinet. To that end, the Cabinet will comply with the regulations found in 49 CFR Part 26, and the definitions and requirements contained therein shall be adopted as if set out verbatim herein.

The Cabinet, contractors, subcontractors, and sub-recipients shall not discriminate on the basis of race, color, national origin, or sex in the performance of work performed pursuant to Cabinet contracts. The contractor shall carry out applicable requirements of 49 CFR 26 in the award and administration of federally assisted highway construction projects. The contractor will include this provision in all its subcontracts and supply agreements pertaining to contracts with the Cabinet.

Failure by the contractor to carry out these requirements is a material breach of its contract with the Cabinet, which may result in the termination of the contract or such other remedy as the Cabinet deems necessary.

DBE GOAL

The Disadvantaged Business Enterprise (DBE) goal established for this contract, as listed on the front page of the proposal, is the percentage of the total value of the contract.

The contractor shall exercise all necessary and reasonable steps to ensure that Disadvantaged Business Enterprises participate in a least the percent of the contract as set forth above as goals for this contract.

OBLIGATION OF CONTRACTORS

Each contractor prequalified to perform work on Cabinet projects shall designate and make known to the Cabinet a liaison officer who is assigned the responsibility of effectively administering and promoting an active program for utilization of DBEs.

If a formal goal has not been designated for the contract, all contractors are encouraged to consider DBEs for subcontract work as well as for the supply of material and services needed to perform this work.

Contractors are encouraged to use the services of banks owned and controlled by minorities and women.

CERTIFICATION OF CONTRACT GOAL

Contractors shall include the following certification in bids for projects for which a DBE goal has been established. BIDS SUBMITTED WHICH DO NOT INCLUDE CERTIFICATION OF DBE PARTICIPATION WILL NOT BE ACCEPTED. These bids will not be considered for award by the Cabinet and they will be returned to the bidder.

"The bidder certifies that it has secured participation by Disadvantaged Business Enterprises ("DBE") in the amount of _____ percent of the total value of this contract and that the DBE participation is in compliance with the requirements of 49 CFR 26 and the policies of the Kentucky Transportation Cabinet pertaining to the DBE Program."

The certification statement is located in the electronic bid file. All contractors must certify their DBE participation on that page. DBEs utilized in achieving the DBE goal must be certified and prequalified for the work items at the time the bid is submitted.

DBE PARTICIPATION PLAN

Lowest responsive bidders must submit the *DBE Plan/ Subcontractor Request*, form TC 14-35 DBE, within 5 days of the letting. This is necessary before the Awards Committee will review and make a recommendation. **The project will not be considered for award prior to submission and approval of the apparent low bidder's DBE Plan/Subcontractor Request.**

The DBE Participation Plan shall include the following:

1. Name and address of DBE Subcontractor(s) and/or supplier(s) intended to be used in the proposed project;
2. Description of the work each is to perform including the work item, unit, quantity, unit price and total amount of the work to be performed by the individual DBE. The Proposal Line Number, Category Number, and the Project Line Number can be found in the "material listing" on the Construction Procurement website under the specific letting;
3. The dollar value of each proposed DBE subcontract and the percentage of total project contract value this represents. DBE participation may be counted as follows;
   a) If DBE suppliers and manufactures assume actual and contractual responsibility, the dollar value of materials to be furnished will be counted toward the goal as follows:
      - The entire expenditure paid to a DBE manufacturer;
      - 60 percent of expenditures to DBE suppliers that are not manufacturers provided the supplier is a regular dealer in the product involved. A regular dealer must be engaged in, as its principal business and in its own name, the sale of products to the public, maintain an inventory and own and operate distribution equipment; and
      - The amount of fees or commissions charged by the DBE firms for a bona fide service, such as professional, technical, consultant, or managerial services and assistance in the procurement of essential personnel, facilities, equipment, materials, supplies, delivery of materials and supplies or for furnishing bonds, or insurance, providing such fees or commissions are determined to be reasonable and customary.
   b) The dollar value of services provided by DBEs such as quality control testing, equipment repair and maintenance, engineering, staking, etc.;

c) The dollar value of joint ventures. DBE credit for joint ventures will be limited to the dollar amount of the work actually performed by the DBE in the joint venture;
4. Written and signed documentation of the bidder's commitment to use a DBE contractor whose participation is being utilized to meet the DBE goal; and
5. Written and signed confirmation from the DBE that it is participating in the contract as provided in the prime contractor's commitment.

AFTER PROJECT AWARD AND BEFORE NOTICE TO PROCEED/WORK ORDER IS ISSUED (SEE SECTION 103.06, STANDARD SPECIFICATIONS FOR ROAD AND BRIDGE CONSTRUCTION

Prime Contractors awarded a federally funded project with a DBE Goal greater than zero will be required to submit a fully executed DBE Subcontract, along with the attached FHWA 1273 and Certificate of Liability Insurance for each DBE Firm submitted as part of the previously approved DBE Utilization Plan (TC 14-35). A signed quote or purchase order shall be attached when the DBE subcontractor is a material supplier or broker.

The Certificate of Liability Insurance submitted must meet the requirements outlined in Section 107.18 of the Standard Specifications for Road and Bridge Construction.

Changes to ***APPROVED*** DBE Participation Plans must be approved by the Office for Civil Rights & Small Business Development. The Cabinet may consider extenuating circumstances including, but not limited to, changes in the nature or scope of the project, the inability or unwillingness of a DBE to perform the work in accordance with the bid, and/or other circumstances beyond the control of the prime contractor.

CONSIDERATION OF GOOD FAITH EFFORTS REQUESTS

If the DBE participation submitted in the bid by the apparent lowest responsive bidder does not meet or exceed the DBE contract goal, the apparent lowest responsive bidder must submit a Good Faith Effort Package to satisfy the Cabinet that sufficient good faith efforts were made to meet the contract goals prior to submission of the bid. Efforts to increase the goal after bid submission will not be considered in justifying the good faith effort, unless the contractor can show that the proposed DBE was solicited prior to the letting date. DBEs utilized in achieving the DBE goal must be certified and prequalified for the work items at the time the bid is submitted. One complete set (hard copy along with an electronic copy) of this information must be received in the Division of Contract Procurement no later than 12:00 noon of the tenth calendar day after receipt of notification that they are the apparent low bidder.

Where the information submitted includes repetitious solicitation letters it will be acceptable to submit a sample representative letter along with a distribution list of the firms solicited. Documentation of DBE quotations shall be a part of the good faith effort submittal as necessary to demonstrate compliance with the factors listed below which the Cabinet considers in judging good faith efforts. This documentation may include written subcontractors' quotations, telephone log notations of verbal quotations, or other types of quotation documentation.

The Good Faith Effort Package shall include, but may not be limited to information showing evidence of the following:

1. Whether the bidder attended any pre-bid meetings that were scheduled by the Cabinet to inform DBEs of subcontracting opportunities;
2. Whether the bidder provided solicitations through all reasonable and available means;
3. Whether the bidder provided written notice to all DBEs listed in the DBE directory at the time of the letting who are prequalified in the areas of work that the bidder will be subcontracting;
4. Whether the bidder followed up initial solicitations of interest by contacting DBEs to determine with certainly whether they were interested. If a reasonable amount of DBEs within the targeted districts do not provide an intent to quote or no DBEs are prequalified in the subcontracted areas, the bidder must notify the Disadvantaged Enterprise Business Liaison Officer (DEBLO) in the Office for Civil Rights and Small Business Development to give notification of the bidder's inability to get DBE quotes;
5. Whether the bidder selected portions of the work to be performed by DBEs in order to increase the likelihood of meeting the contract goals. This includes, where appropriate, breaking out contract work items into economically feasible units to facilitate DBE participation, even when the prime contractor might otherwise perform these work items with its own forces;
6. Whether the bidder provided interested DBEs with adequate and timely information about the plans, specifications, and requirements of the contract;
7. Whether the bidder negotiated in good faith with interested DBEs not rejecting them as unqualified without sound reasons based on a thorough investigation of their capabilities. Any rejection should be so noted in writing with a description as to why an agreement could not be reached;
8. Whether quotations were received from interested DBE firms but were rejected as unacceptable without sound reasons why the quotations were considered unacceptable. The fact that the DBE firm's quotation for the work is not the lowest quotation received will not in itself be considered as a sound reason for rejecting the quotation as unacceptable. The fact that the bidder has the ability and/or desire to perform the contract work with its own forces will not be considered a sound reason for rejecting a DBE quote. Nothing in this provision shall be construed to require the bidder to accept unreasonable quotes in order to satisfy DBE goals;
9. Whether the bidder specifically negotiated with subcontractors to assume part of the responsibility to meet the contract DBE goal when the work to be subcontracted includes potential DBE participation;
10. Whether the bidder made any efforts and/or offered assistance to interested DBEs in obtaining the necessary equipment, supplies, materials, insurance and/or bonding to satisfy the work requirements of the bid proposal; and
11. Any other evidence that the bidder submits which may show that the bidder has made reasonable good faith efforts to include DBE participation.

FAILURE TO MEET GOOD FAITH REQUIREMENT

Where the apparent lowest responsive bidder fails to submit sufficient participation by DBE firms to meet the contract goal and upon a determination by the Good Faith Committee based upon the information submitted that the apparent lowest responsive bidder failed to make sufficient reasonable efforts to meet the contract goal, the bidder will be offered the opportunity to meet in person for administrative reconsideration. The bidder will be notified of the Committee's decision within 24 hours of its decision. The bidder will have 24 hours to request reconsideration of the Committee's decision. The reconsideration meeting will be held within two days of the receipt of a request by the bidder for reconsideration.

The request for reconsideration will be heard by the Office of the Secretary. The bidder will have the opportunity to present written documentation or argument concerning the issue of whether it met the goal or made an adequate good faith effort. The bidder will receive a written decision on the reconsideration explaining the basis for the finding that the bidder did or did not meet the goal or made adequate Good Faith efforts to do so.

The result of the reconsideration process is not administratively appealable to the Cabinet or to the United States Department of Transportation.

The Cabinet reserves the right to award the contract to the next lowest responsive bidder or to rebid the contract in the event that the contract is not awarded to the low bidder as the result of a failure to meet the good faith requirement.

SANCTIONS FOR FAILURE TO MEET DBE REQUIREMENTS OF THE PROJECT

Failure by the prime contractor to fulfill the DBE requirements of a project under contract or to demonstrate good faith efforts to meet the goal constitutes a breach of contract. When this occurs, the Cabinet will hold the prime contractor accountable, as would be the case with all other contract provisions. Therefore, the contractor's failure to carry out the DBE contract requirements shall constitute a breach of contract and as such the Cabinet reserves the right to exercise all administrative remedies at its disposal including, but not limited to the following:

- Suspension of Prequalification;
- Disallow credit toward the DBE goal;
- Withholding progress payments;
- Withholding payment to the prime in an amount equal to the unmet portion of the contract goal; and/or
- Termination of the contract.

PROMPT PAYMENT

The prime contractor will be required to pay the DBE and Non-DBE Subcontractors within seven (7) working days after he or she has received payment from the Kentucky Transportation Cabinet for work performed or materials furnished.

CONTRACTOR REPORTING

All contractors must keep detailed records and provide reports to the Cabinet on their progress in meeting the DBE requirement on any highway contract. These records may include, but shall not be limited to payroll, lease agreements, cancelled payroll checks, executed subcontracting agreements, etc. Prime contractors will be required to complete and submit a ***signed and notarized*** Affidavit of Subcontractor Payment (TC 18-7) and copies of checks for any monies paid to each DBE subcontractor or supplier utilized to meet a DBE goal. These documents must be completed and signed within 7 days of being paid by the Cabinet.

Payment information that needs to be reported includes date the payment is sent to the DBE, check number, Contract ID, amount of payment and the check date. Before Final Payment is made on this contract, the Prime Contractor will certify that all payments were made to the DBE subcontractor and/or DBE suppliers.

******* IMPORTANT *******

Please mail the original, signed and completed TC (18-7) Affidavit of Subcontractor Payment form and all copies of checks for payments listed above to the following address:

Office for Civil Rights and Small Business Development
6th Floor West 200 Mero Street
Frankfort, KY 40622

The prime contractor should notify the KYTC Office for Civil Rights and Small Business Development seven (7) days prior to DBE contractors commencing work on the project. The contact in this office is Mr. Tony Youssefi. Mr. Youssefi's current contact information is email address – tyousseffi@ky.gov and the telephone number is (502) 564-3601.

DEFAULT OR DECERTIFICATION OF THE DBE

If the DBE subcontractor or supplier is decertified or defaults in the performance of its work, and the overall goal cannot be credited for the uncompleted work, the prime contractor may utilize a substitute DBE or elect to fulfill the DBE goal with another DBE on a different work item. If after exerting good faith effort in accordance with the Cabinet's Good Faith Effort policies and procedures, the prime contractor is unable to replace the DBE, then the unmet portion of the goal may be waived at the discretion of the Cabinet.

PROHIBITION ON TELECOMMUNICATIONS EQUIPMENT OR SERVICES

In accordance with the FY 2019 National Defense Authorization Act (NDAA), 2 CFR 200.216, and 2 CFR 200.471, Federal agencies are prohibited, after August 13, 2020, from obligating or expending financial assistance to obtain certain telecommunications and video surveillance services and equipment from specific producers. As a result of these regulations, contractors and subcontractors are prohibited, on projects with federal funding participation, from providing telecommunication or video surveillance equipment, services, or systems produced by:

- Huawei Technologies Company or ZTE Corporation (or any subsidiary or affiliate of such entities)
- Hytera Communications Corporation, Hangzhou Hikvision Digital Technology Company, or Dahua Technology Company (or any subsidiary or affiliate of such entities)

LEGAL REQUIREMENTS AND RESPONSIBILITY TO THE PUBLIC – CARGO PREFERENCE ACT (CPA).

(REV 12-17-15) (1-16)

SECTION 7 is expanded by the following new Article:

102.10 **Cargo Preference Act – Use of United States-flag vessels.**

Pursuant to Title 46CFR Part 381, the Contractor agrees

- To utilize privately owned United States-flag commercial vessels to ship at least 50 percent of the gross tonnage (computed separately for dry bulk carriers, dry cargo liners, and tankers) involved, whenever shipping any equipment, material, or commodities pursuant to this contract, to the extent such vessels are available at fair and reasonable rates for United States-flag commercial vessels.
- To furnish within 20 days following the date of loading for shipments originating within the United States or within 30 working days following the date of loading for shipments originating outside the United States, a legible copy of a rated, 'on-board' commercial ocean bill-of-lading in English for each shipment of cargo described in paragraph 1 of this section to both the Contracting Officer (through the prime contractor in the case of subcontractor bills-of-lading) and to the Division of National Cargo, Office of Market Development, Maritime Administration, Washington, DC 20590.
- To insert the substance of the provisions of this clause in all subcontracts issued pursuant to this contract.

NATIONAL HIGHWAY

Be advised this project is on the NATIONAL HIGHWAY SYSTEM.

INCIDENTAL SURFACING

The Department has included in the quantities of asphalt mixtures established in the proposal estimated quantities required for resurfacing or surfacing mailbox turnouts, farm field entrances, residential and commercial entrances, curve widening, ramp gores and tapers, and road and street approaches, as applicable. Pave these areas to the limits as shown on Standard Drawing RPM-110-06 or as directed by the Engineer. In the event signal detectors are present in the intersecting streets or roads, pave the crossroads to the right of way limit or back of the signal detector, whichever is the farthest back of the mainline. Surface or resurface these areas as directed by the Engineer. The Department will not measure placing and compacting for separate payment but shall be incidental to the Contract unit price for the asphalt mixtures.

FUEL AND ASPHALT PAY ADJUSTMENT

The Department has included the Contract items Asphalt Adjustment and Fuel Adjustment for possible future payments at an established Contract unit price of $1.00. The Department will calculate actual adjustment quantities after work is completed. If existing Contract amount is insufficient to pay all items on the contract with the adjustments, the Department will establish additional monies with a change order.

ASPHALT PAVEMENT RIDE QUALITY CATEGORY A

The Department will apply Pavement Rideability Requirements on this project in accordance with Section 410, Category A.

OPTION A

Be advised that the Department will accept compaction of asphalt mixtures furnished for driving lanes and ramps, at 1 inch (25mm) or greater, on this project according to OPTION A in accordance with Section 402 and Section 403 of the current Standard Specifications. The Department will require joint cores as described in Section 402.03.02 for surface mixtures only. The Department will accept compaction of all other asphalt mixtures according to OPTION B.

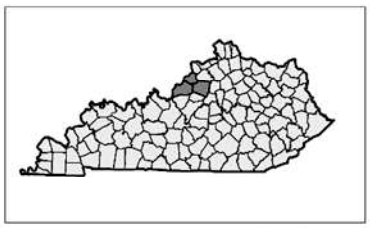



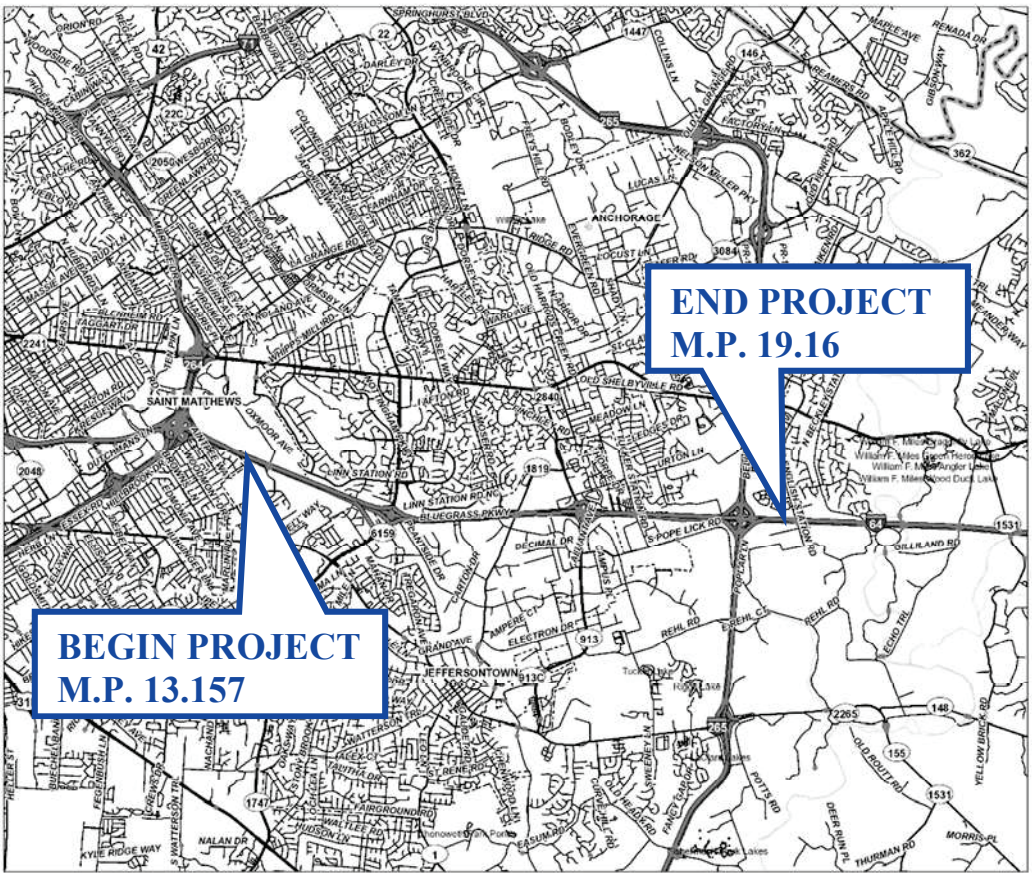

COUNTY: JEFFERSON

ITEM NUMBERS: 5-22024

PROJECT NUMBER: FD52 056 0064 013-020

CONSTRUCTION NUMBER: NHPP 0642 (203)

LETTING DATE: 12/10/ 2026

ADT (2025): 134,189

RECOMMENDED BY: _____ DATE: _____
Project Manager

PLAN APPROVED BY: _____ DATE: _____
State Highway Engineer

FHWA APPROVED BY: _____ DATE: _____

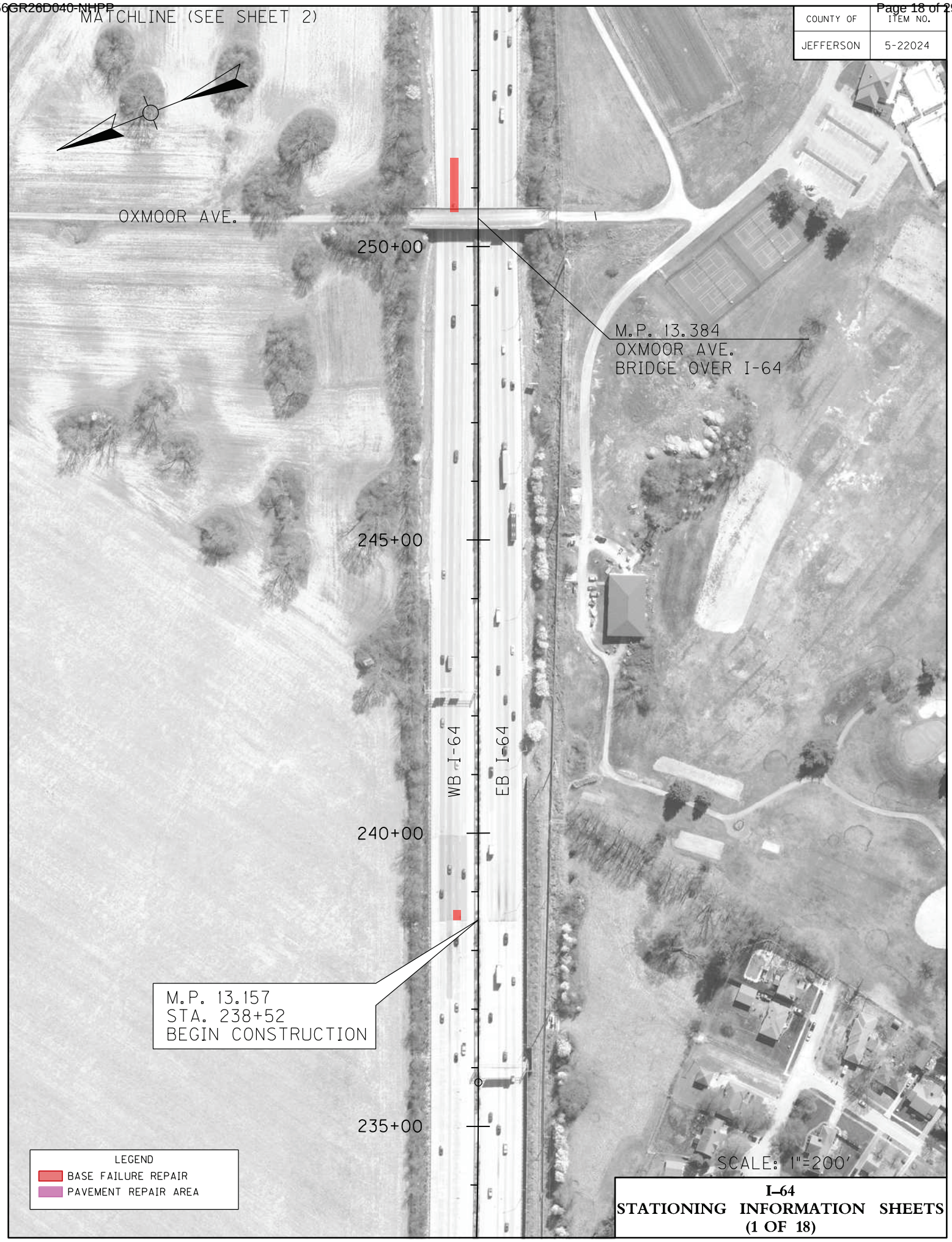

I–64
STATIONING INFORMATION SHEETS
(1 OF 18)

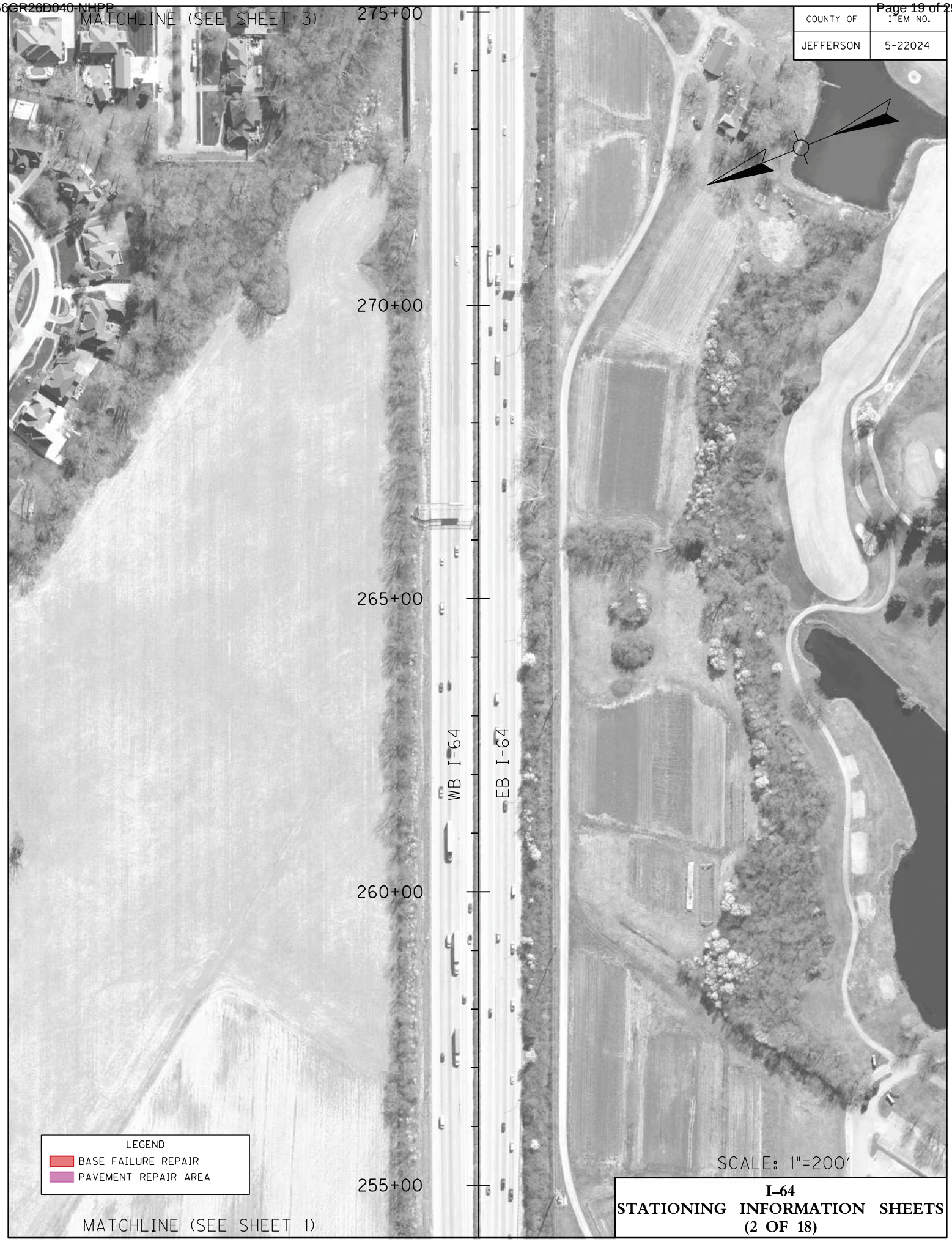

I–64
STATIONING INFORMATION SHEETS
(2 OF 18)

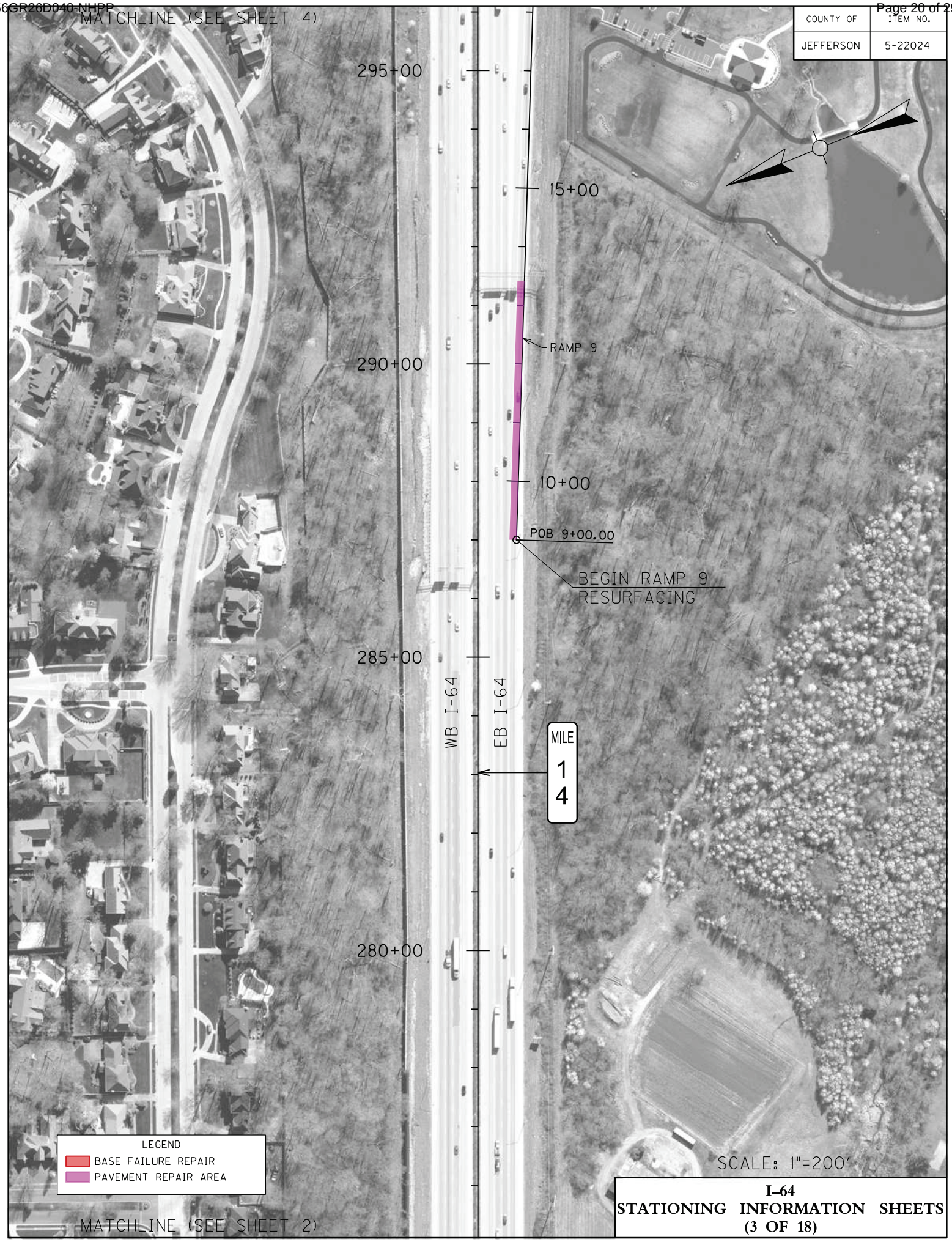

COUNTY OF	ITEM NO.
JEFFERSON	5-22024

SCALE: 1"=200'

I–64
STATIONING INFORMATION SHEETS
(3 OF 18)

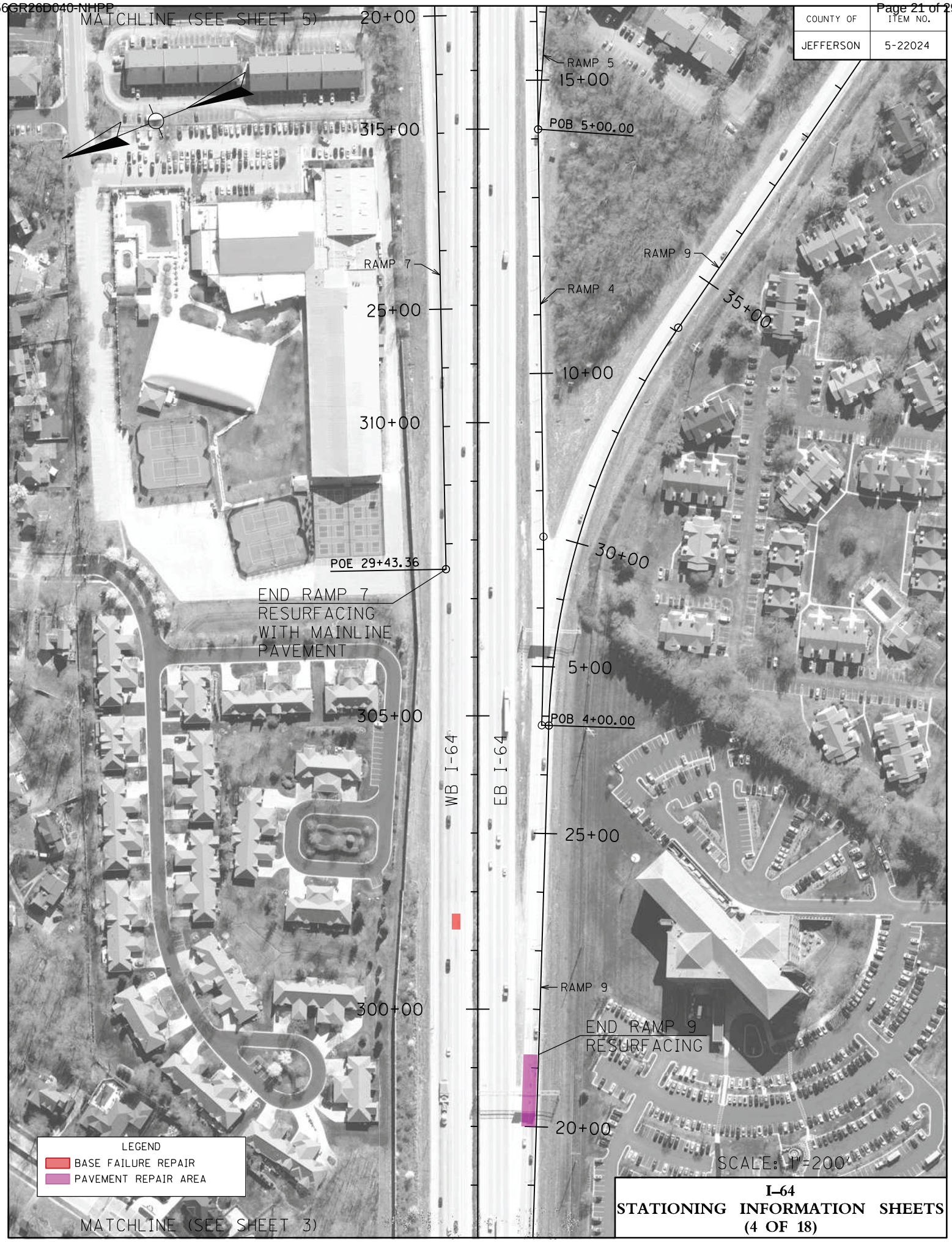

COUNTY OF	ITEM NO.
JEFFERSON	5-22024

I–64
STATIONING INFORMATION SHEETS
(4 OF 18)

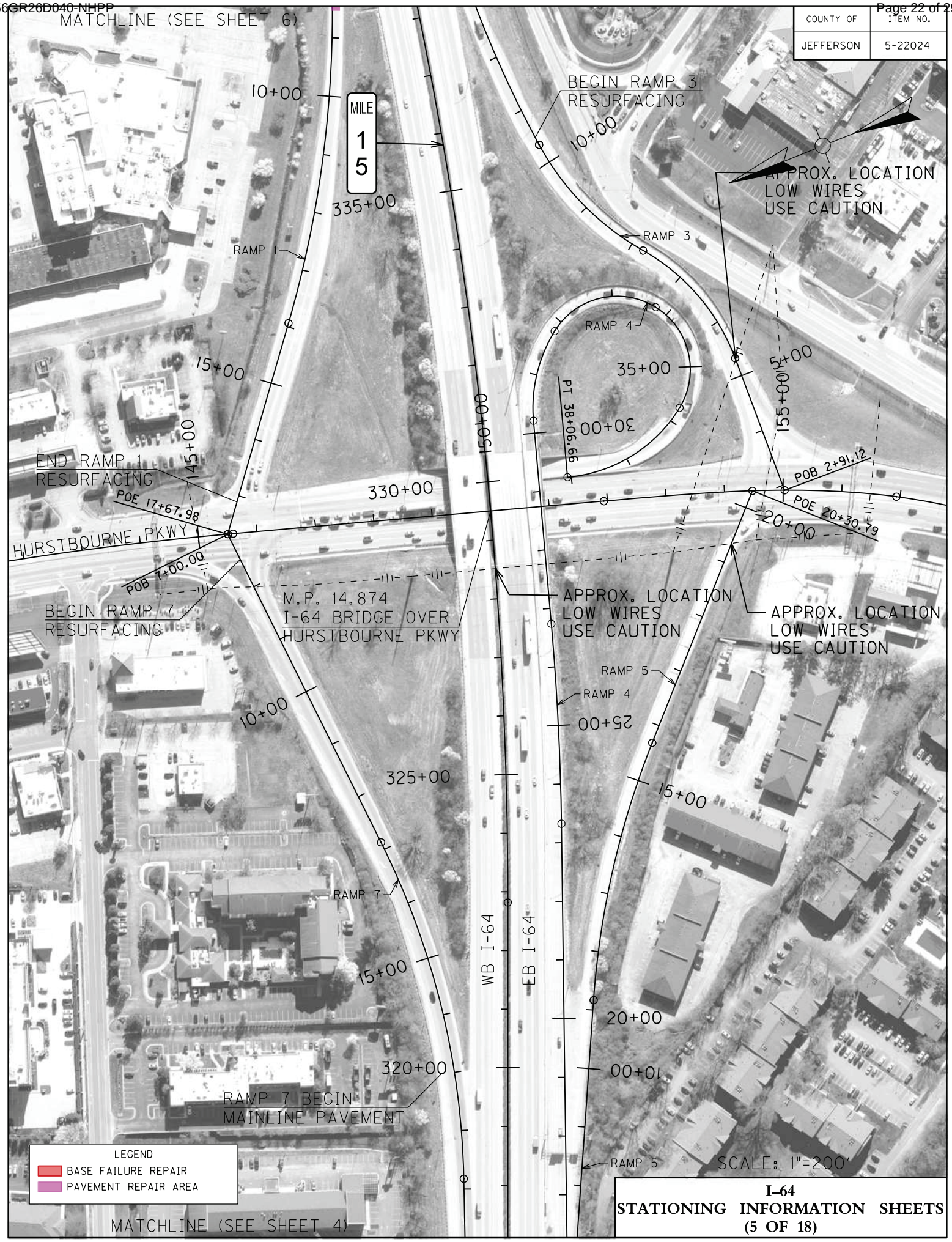

I–64
STATIONING INFORMATION SHEETS
(5 OF 18)

COUNTY OF	ITEM NO.
JEFFERSON	5-22024

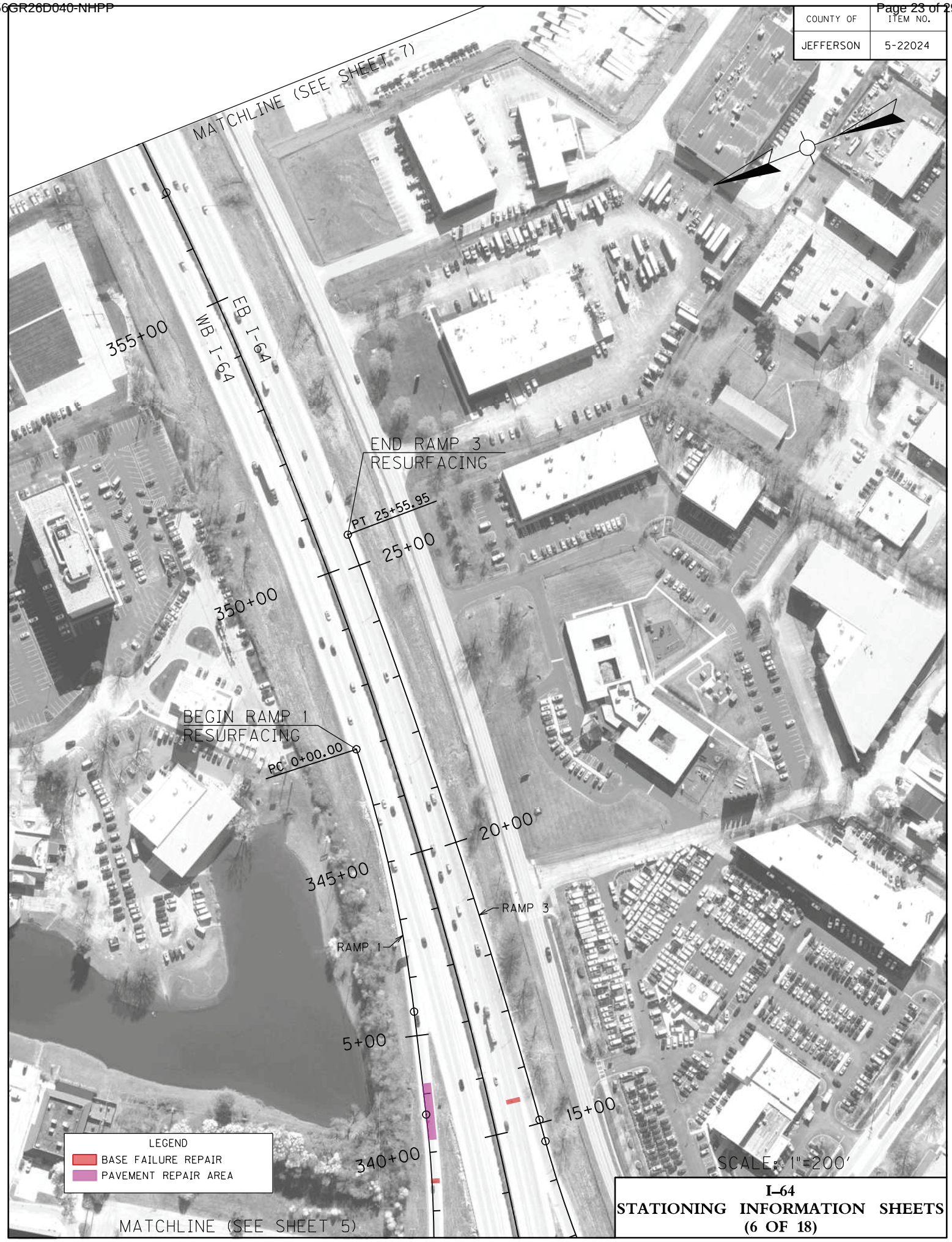

I–64
STATIONING INFORMATION SHEETS
(6 OF 18)

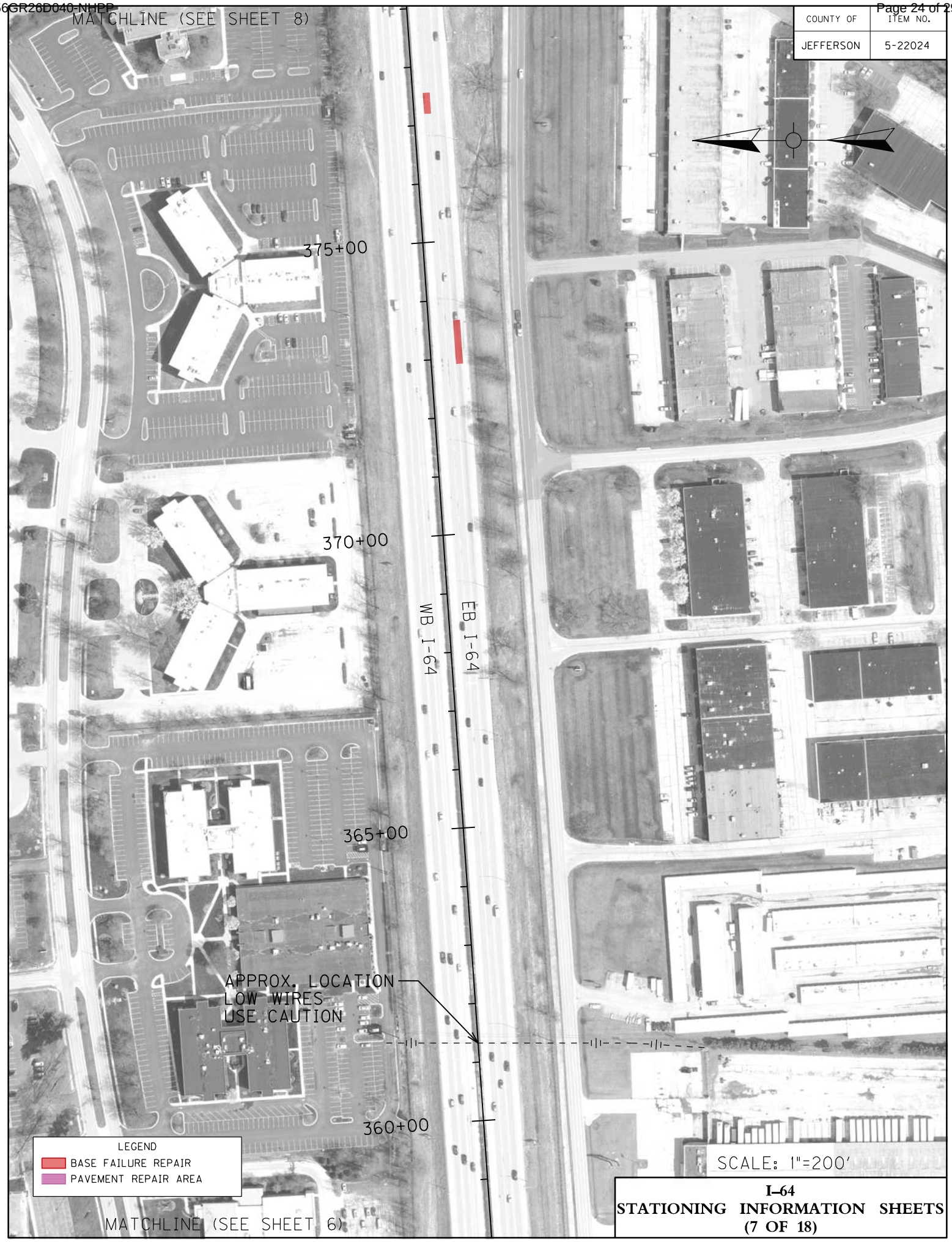

I–64
STATIONING INFORMATION SHEETS
(7 OF 18)

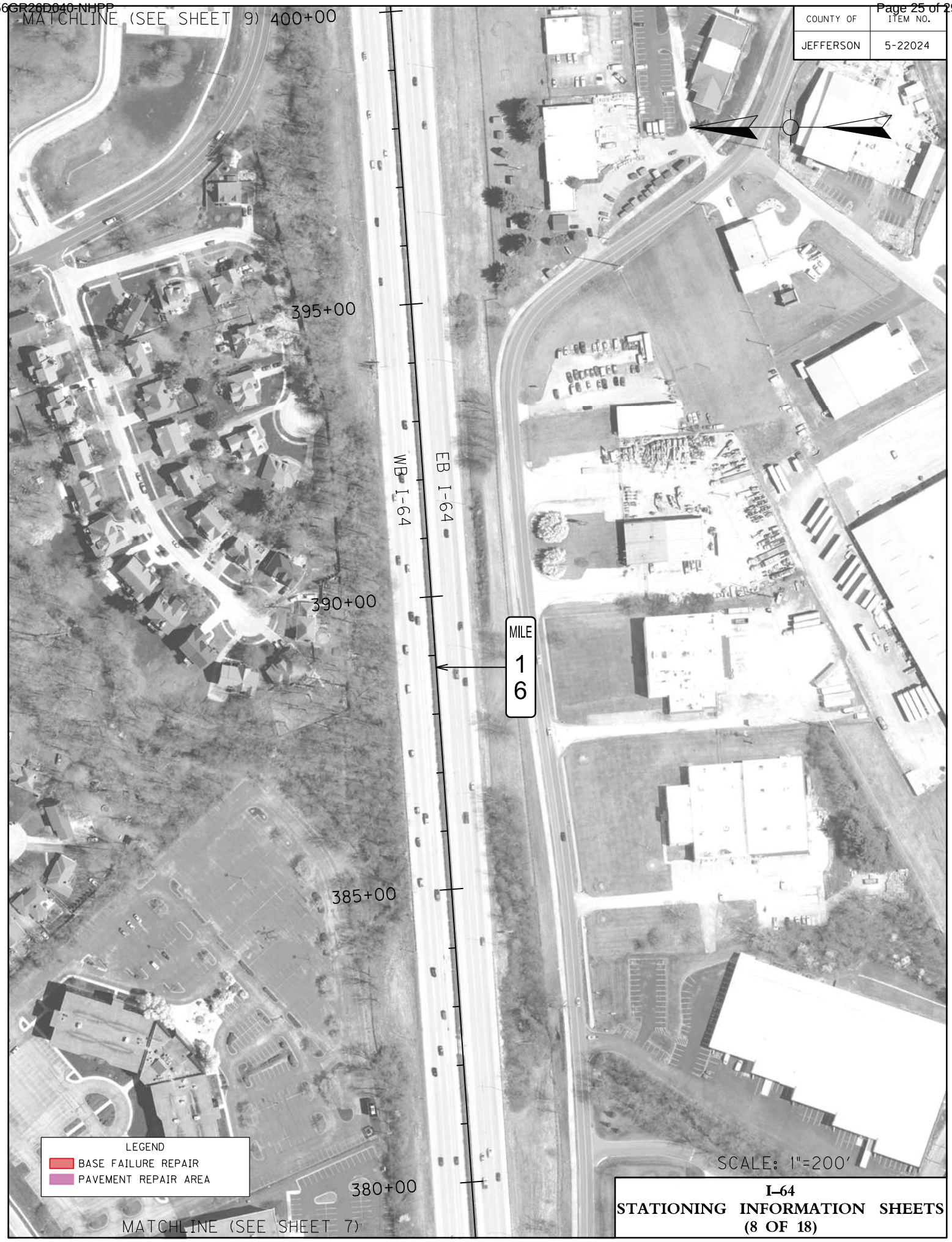

I–64
STATIONING INFORMATION SHEETS
(8 OF 18)

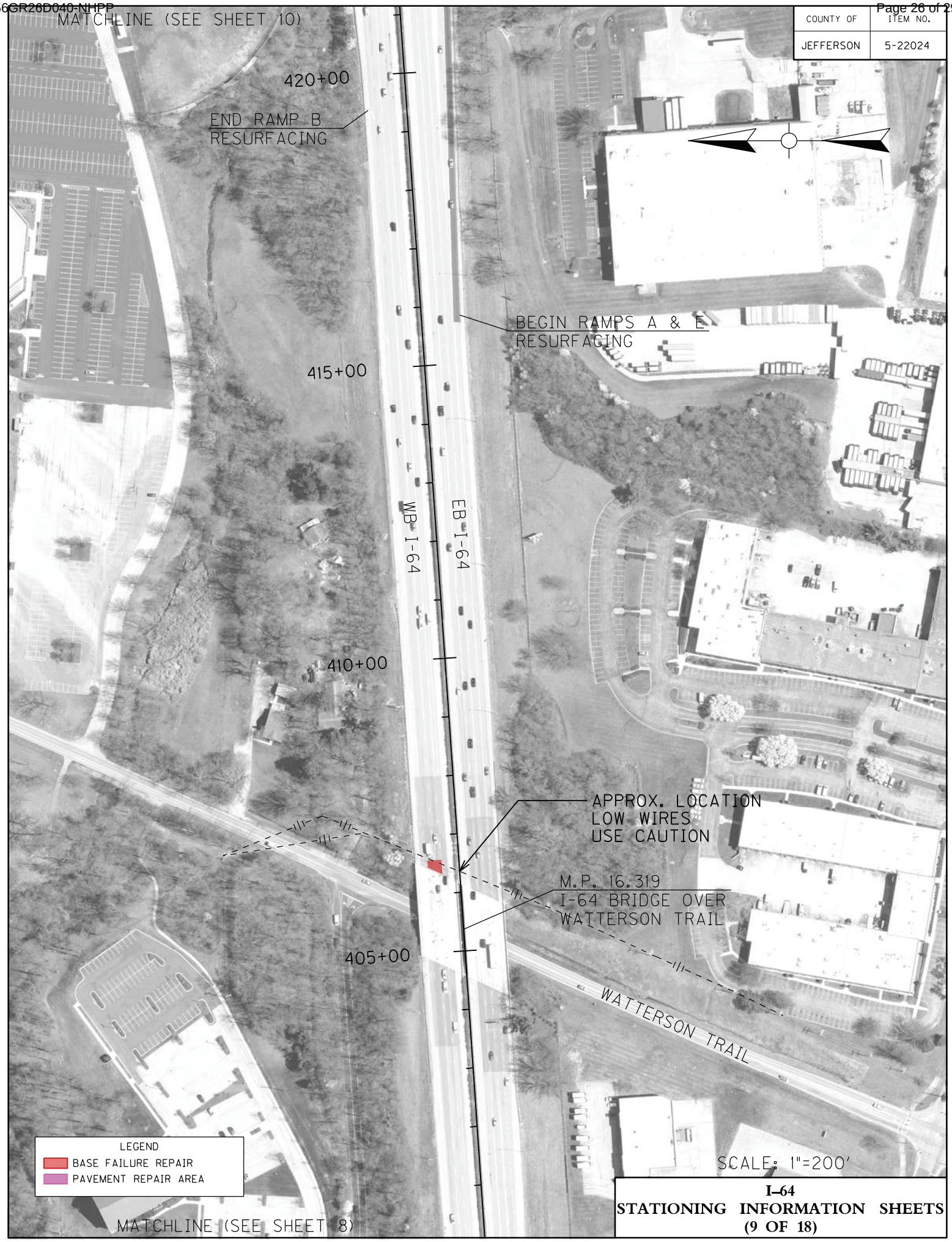

COUNTY OF	ITEM NO.
JEFFERSON	5-22024

I–64
STATIONING INFORMATION SHEETS
(9 OF 18)

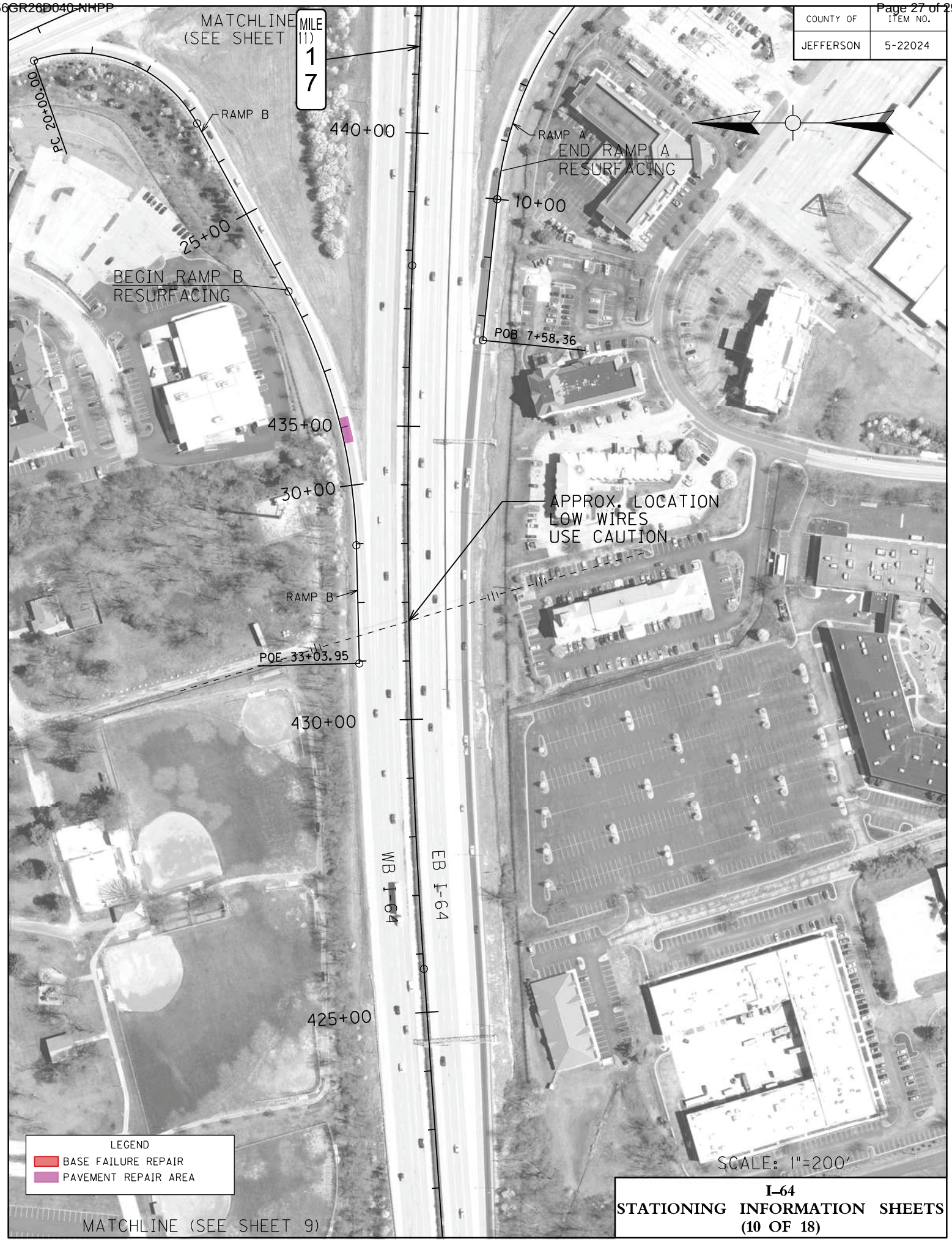

I–64
STATIONING INFORMATION SHEETS
(10 OF 18)

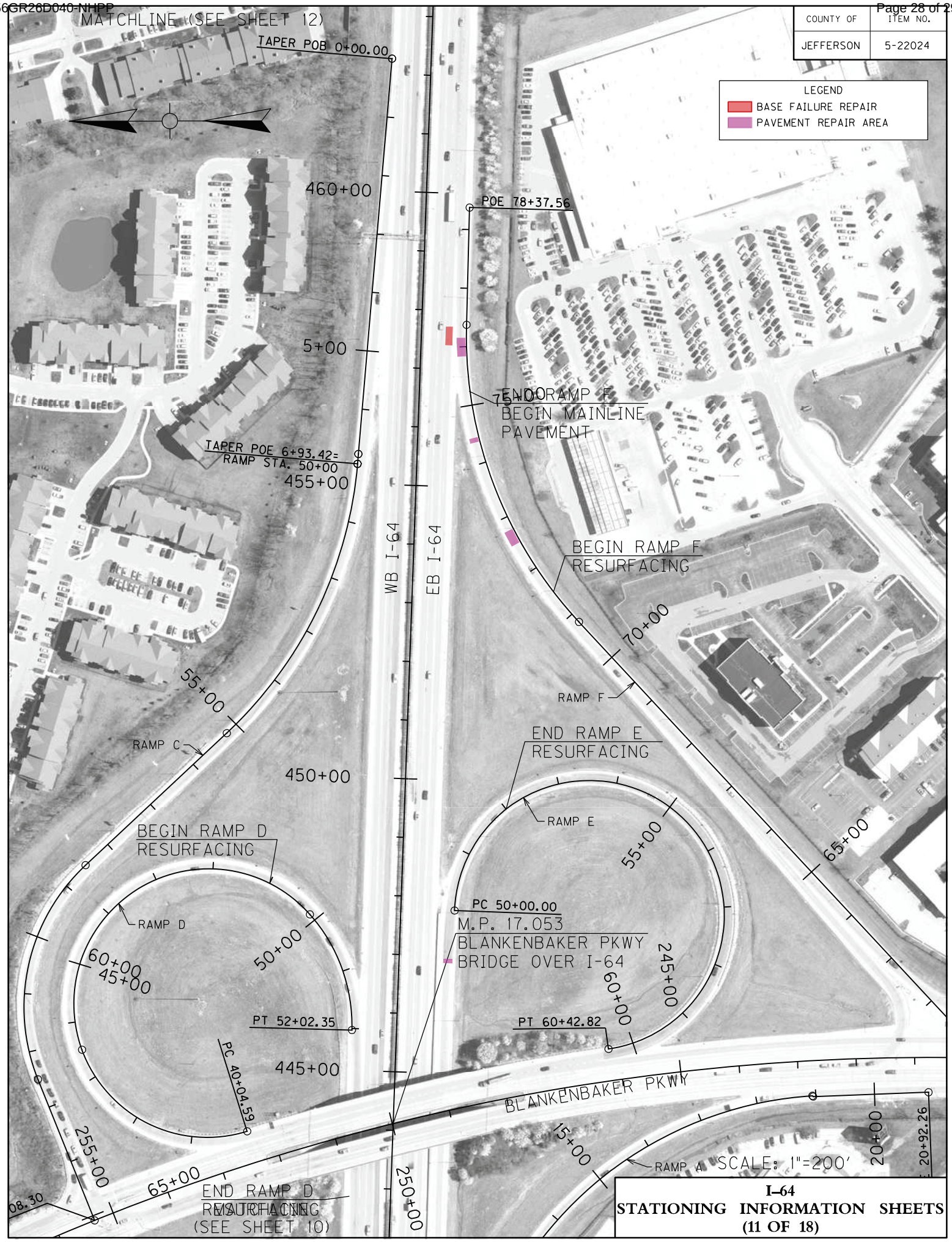

COUNTY OF	ITEM NO.
JEFFERSON	5-22024

LEGEND
- BASE FAILURE REPAIR
- PAVEMENT REPAIR AREA

I-64
STATIONING INFORMATION SHEETS
(11 OF 18)

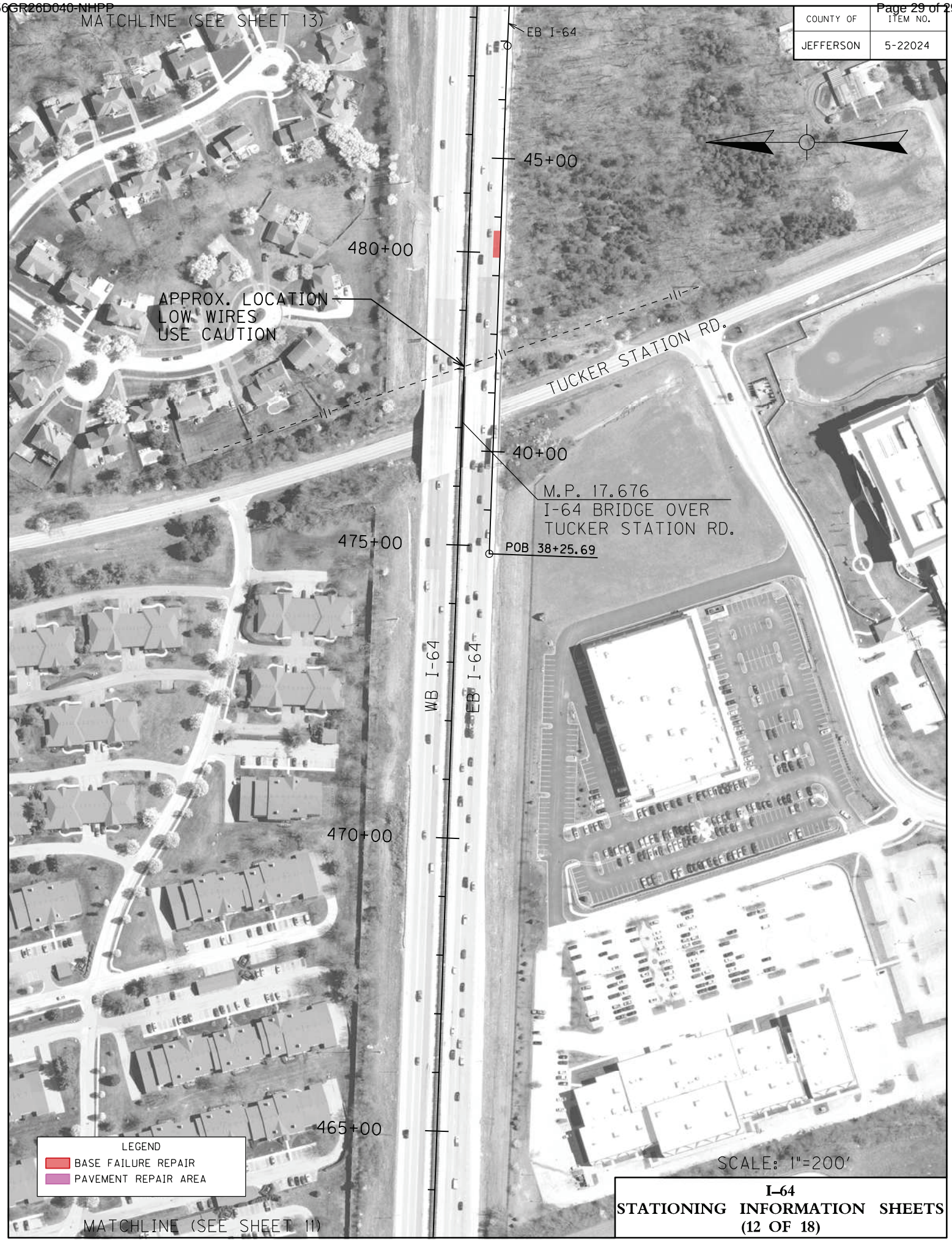

I–64
STATIONING INFORMATION SHEETS
(12 OF 18)

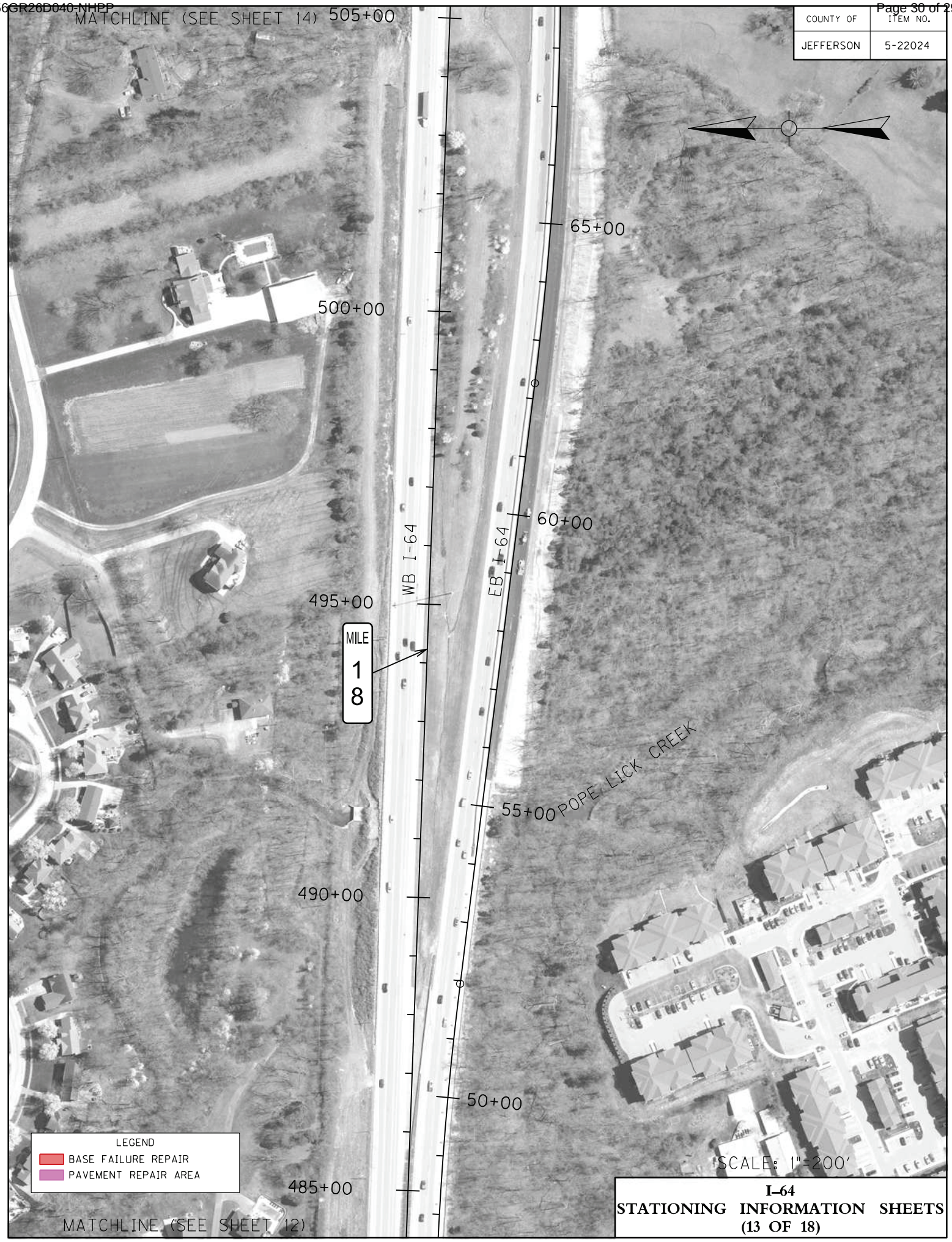

COUNTY OF	ITEM NO.
JEFFERSON	5-22024

I–64
STATIONING INFORMATION SHEETS
(13 OF 18)

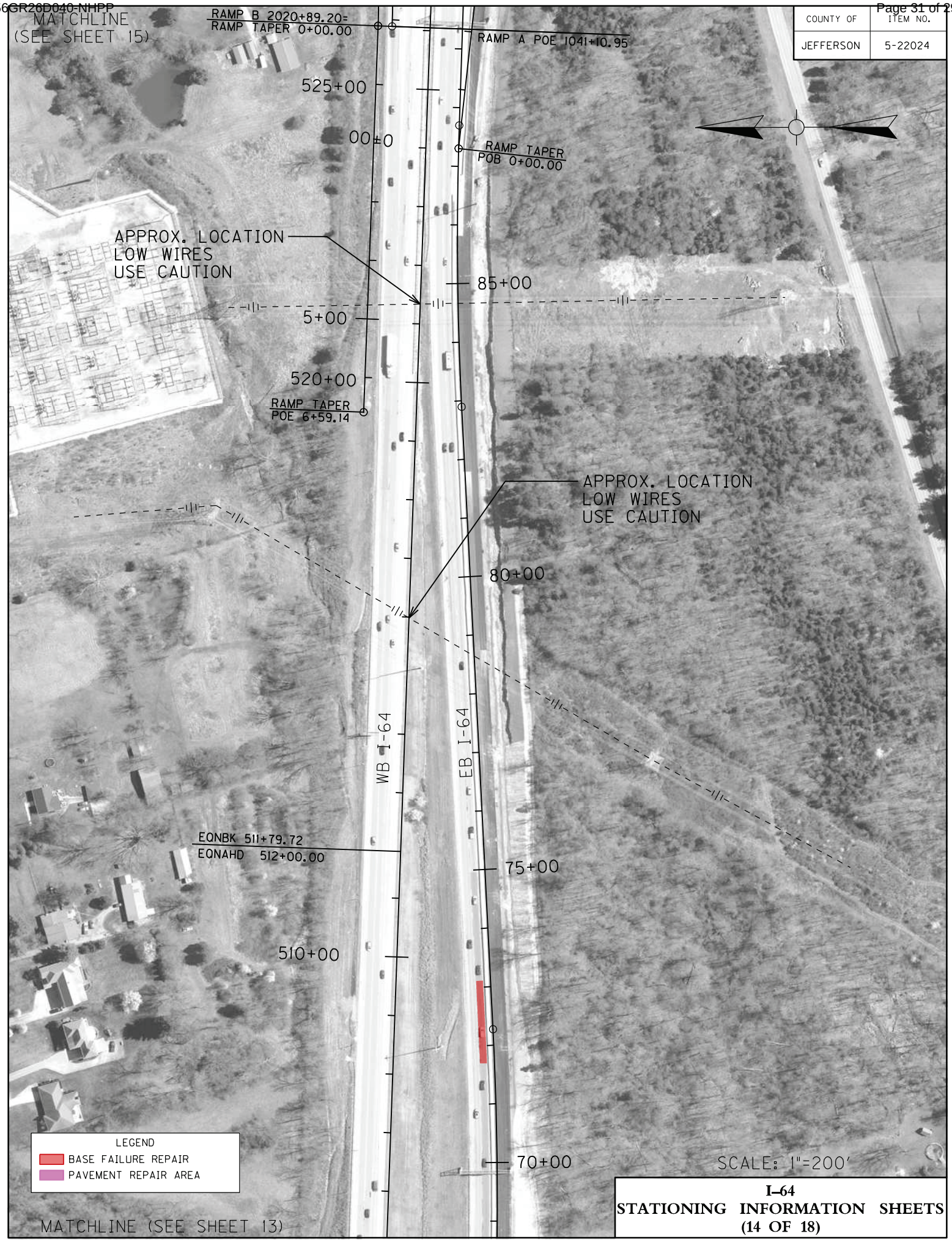

COUNTY OF	ITEM NO.
JEFFERSON	5-22024

I–64
STATIONING INFORMATION SHEETS
(14 OF 18)

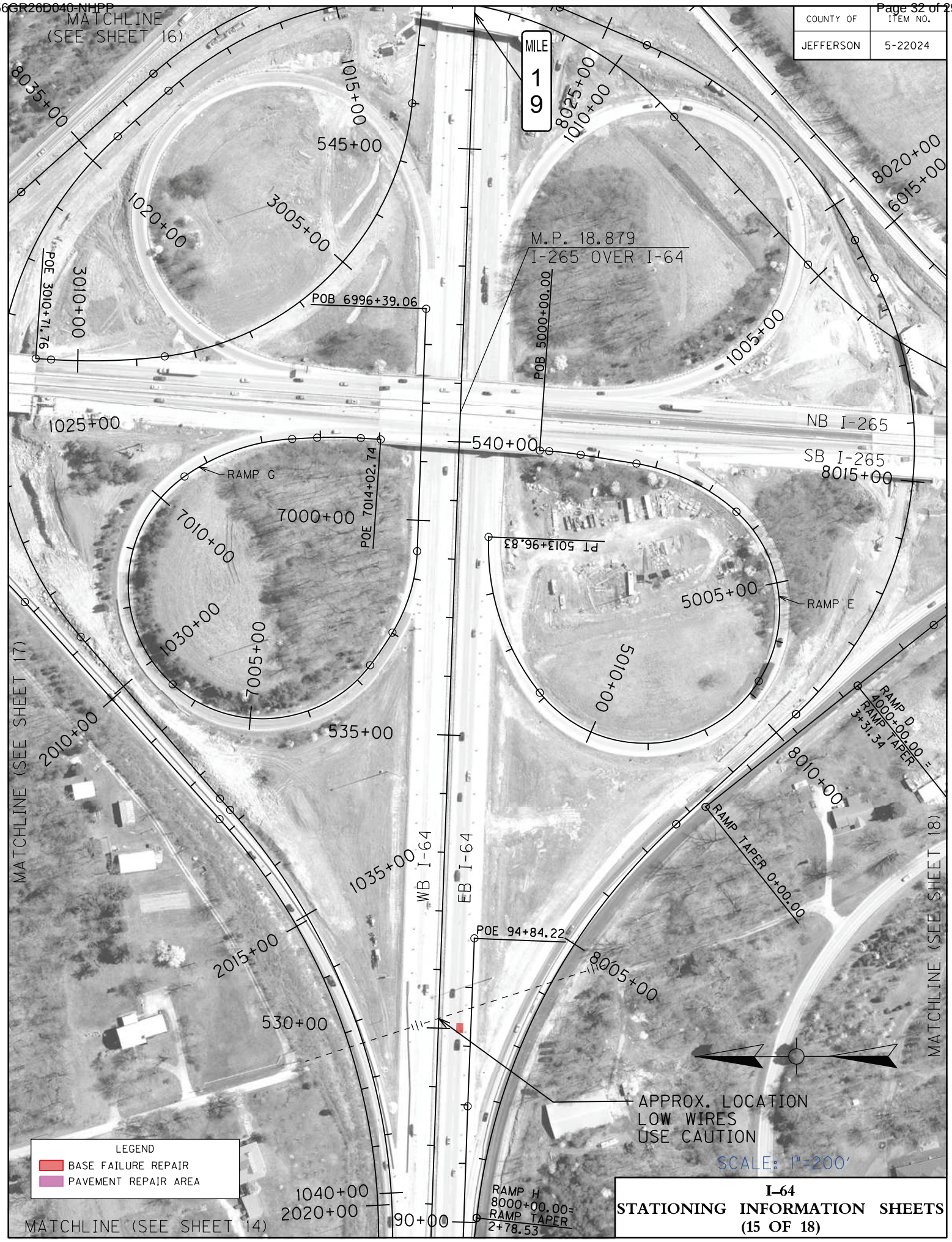

I–64
STATIONING INFORMATION SHEETS
(15 OF 18)

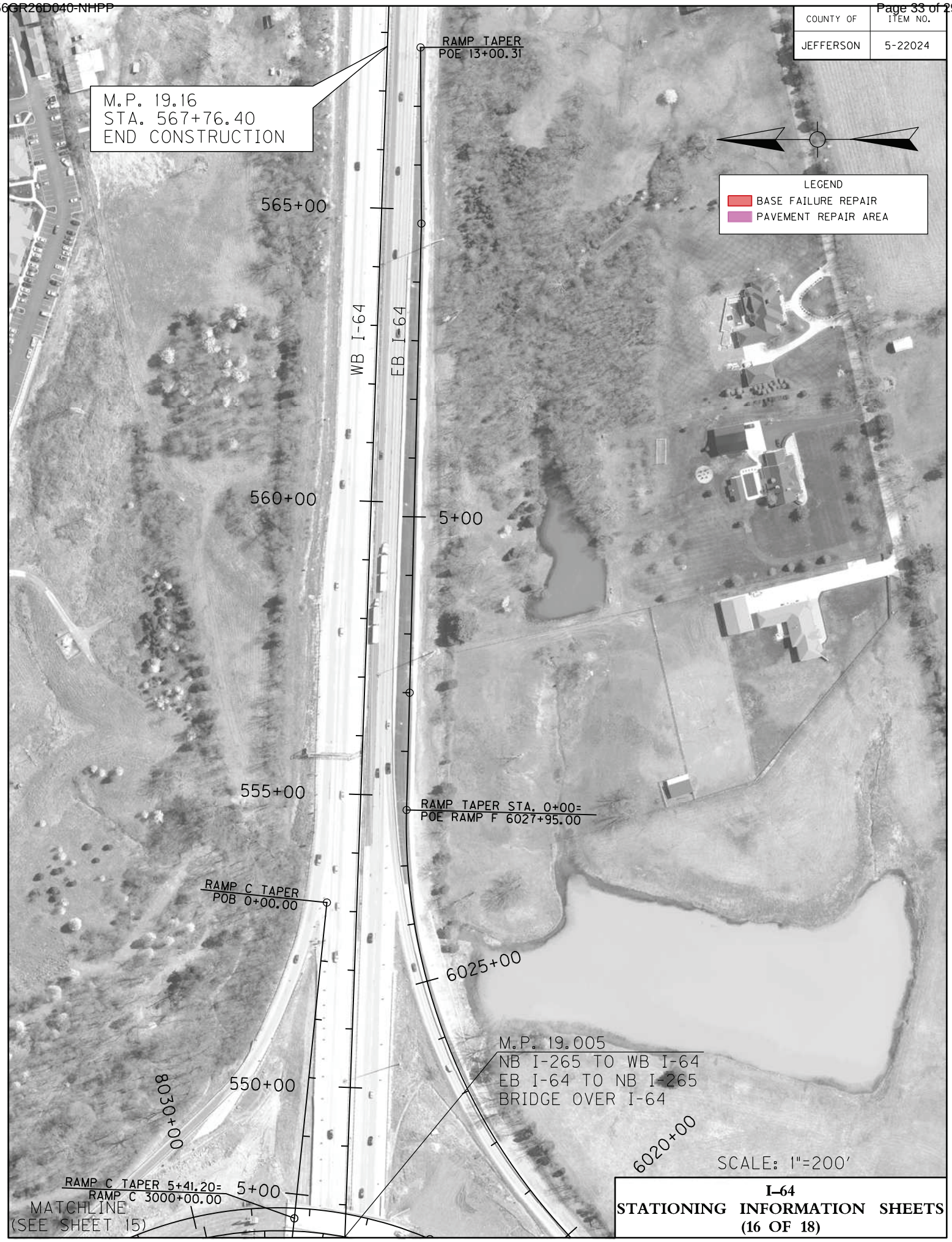

I–64
STATIONING INFORMATION SHEETS
(16 OF 18)

COUNTY OF	ITEM NO.
JEFFERSON	5-22024

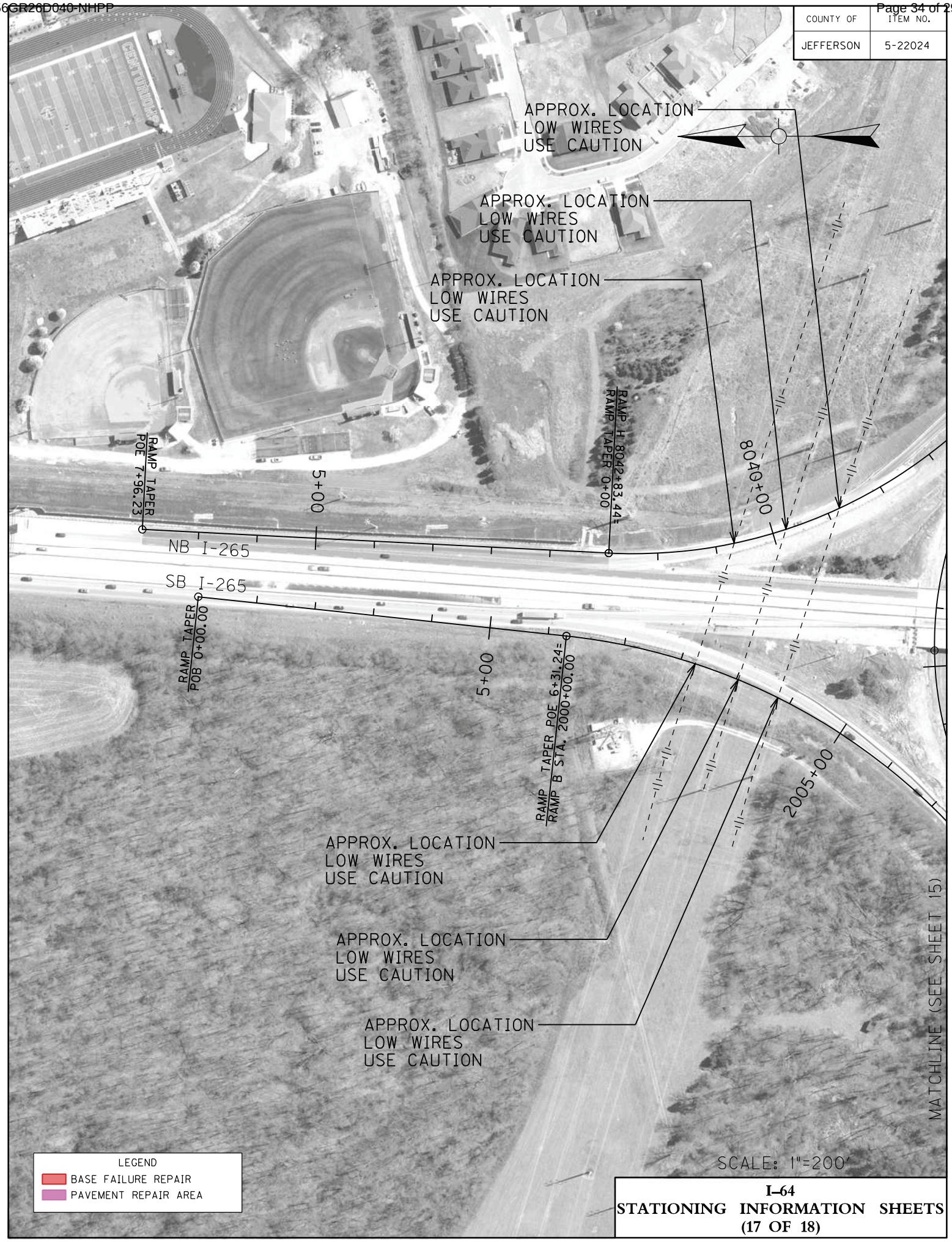

I–64
STATIONING INFORMATION SHEETS
(17 OF 18)

COUNTY OF	ITEM NO.
JEFFERSON	5-22024



I–64
STATIONING INFORMATION SHEETS
(18 OF 18)

COUNTY OF	ITEM NO.
JEFFERSON	5-22024

EXISTING TYPICAL SECTIONS

I–64

WESTBOUND STA. 238+51.66 (M.P. 13.157) TO STA. 307+50 (M.P. 14.464)
WESTBOUND STA. 402+75 (M.P. 16.268) TO STA. 442+85 (M.P. 17.027)
WESTBOUND STA. STA. 462+26 (M.P. 17.395) TO STA. 483+28 (M.P. 17.793)
EASTBOUND STA. 238+51.66 (M.P. 13.157) TO STA. 287+00 (M.P. 14.075)
EASTBOUND STA. 402+25 (M.P. 16.258) TO STA. 415+50 (M.P. 16.509)

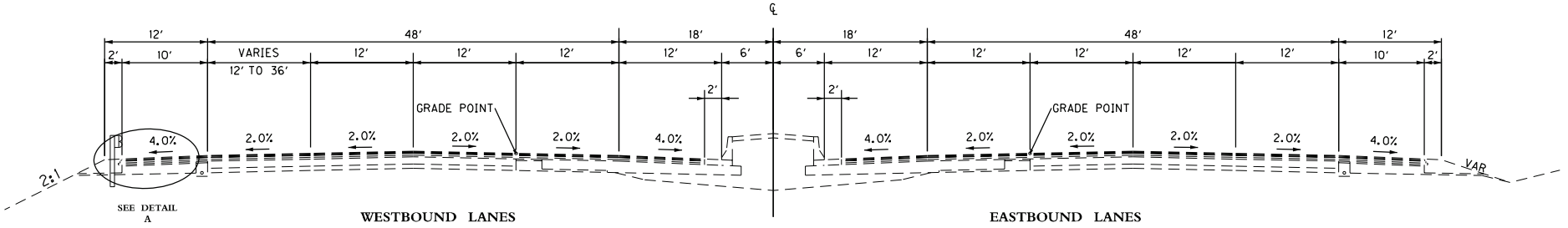

NORMAL SECTION

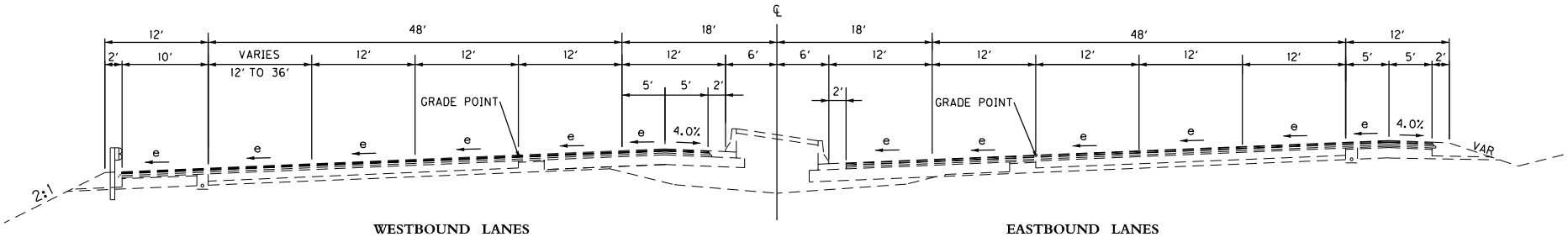

SUPERELEVATED SECTION

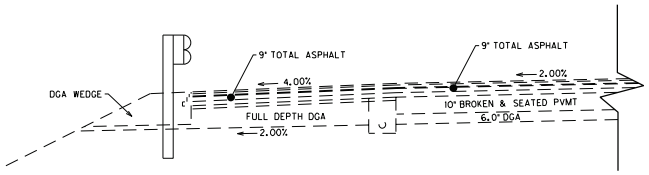

DETAIL 'A'

COUNTY OF	ITEM NO.
JEFFERSON	5-22024

EXISTING TYPICAL SECTIONS
I–64

WESTBOUND STA. 307+50 (M.P. 14.464) TO STA. 402+75 (M.P. 16.268)
WESTBOUND STA. 442+85 (M.P. 17.027) TO STA. 462+26 (M.P. 17.395)
WESTBOUND STA. 526+05 (M.P. 18.599) TO STA. 555+67.61 (M.P. 19.160)
EASTBOUND STA. 287+00 (M.P. 14.075) TO STA. 402+25 (M.P. 16.258)
EASTBOUND STA. 415+50 (M.P.16.509) TO STA. 483+48 (M.P. 17.797)
EASTBOUND STA. 526+05 (M.P. 18.599) TO STA. 555+67.61 (M.P. 19.160)

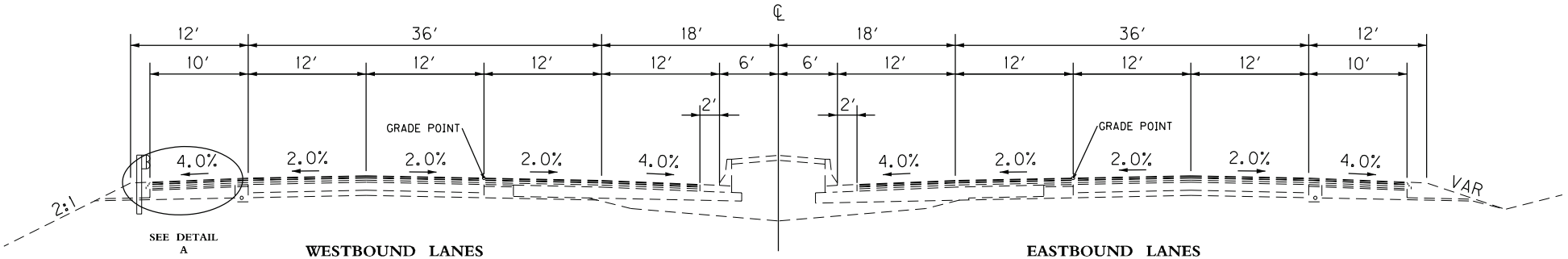

NORMAL SECTION

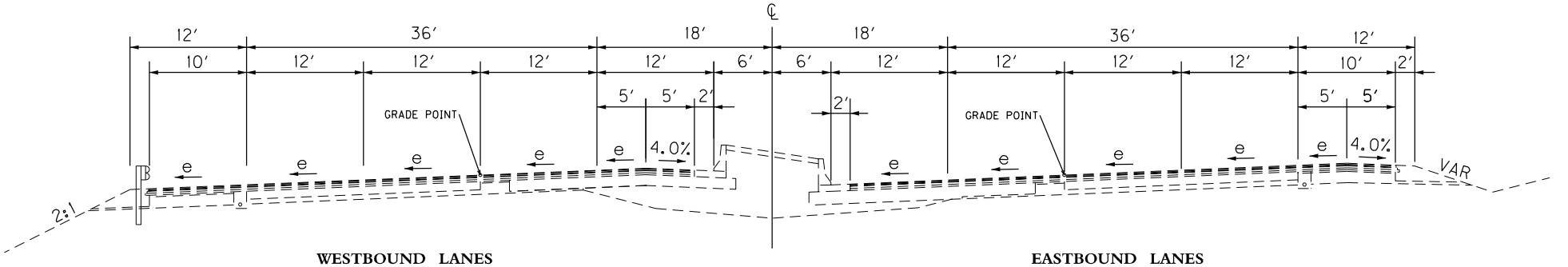

SUPERELEVATED SECTION

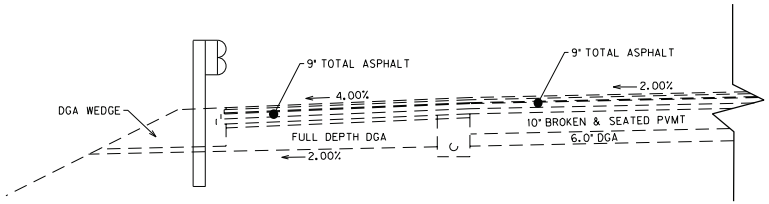

DETAIL 'A'

I-64
TYPICAL SECTIONS

COUNTY OF	ITEM NO.
JEFFERSON	5-22024

EXISTING TYPICAL SECTIONS
I–64

WESTBOUND STA. 483+48 (M.P. 17.797) TO STA. 526+05 (M.P. 18.599)
EASTBOUND STA. 483+48 (M.P. 17.797) TO STA. 526+05 (M.P. 18.599)

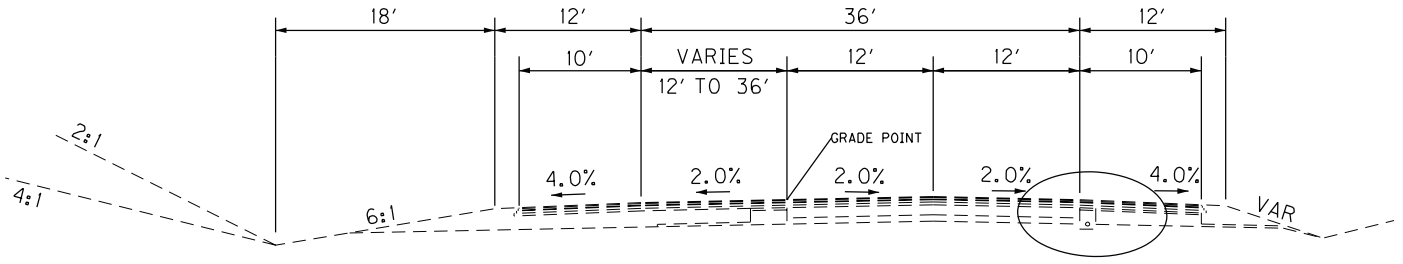

1/2 TANGENT BIFURCATED SECTION

SEE DETAIL A

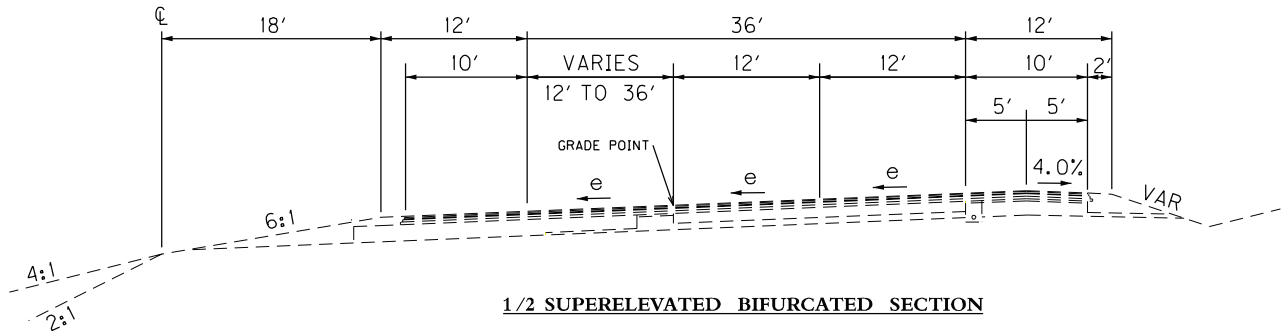

1/2 SUPERELEVATED BIFURCATED SECTION

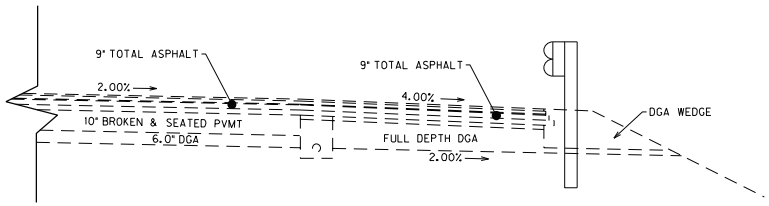

DETAIL 'A'

COUNTY OF	ITEM NO.
JEFFERSON	5-22024

PROPOSED TYPICAL SECTIONS
I–64

WESTBOUND STA. 238+51.66 (M.P. 13.157) TO STA. 307+50 (M.P. 14.464)
WESTBOUND STA. 402+75 (M.P. 16.268) TO STA. 442+85 (M.P. 17.027)
WESTBOUND STA. STA. 462+26 (M.P. 17.395) TO STA. 466+00 (M.P. 17.467)
EASTBOUND STA. 238+51.66 (M.P. 13.157) TO STA. 287+00 (M.P. 14.075)
EASTBOUND STA. 402+25 (M.P. 16.258) TO STA. 415+50 (M.P. 16.509)

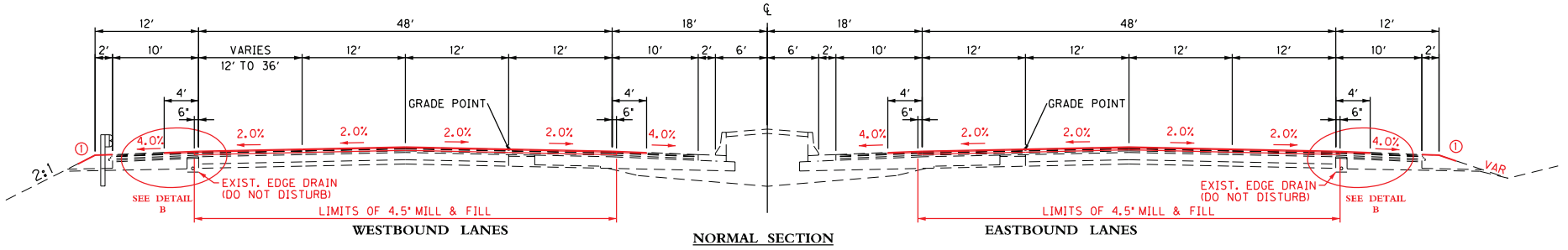

WESTBOUND LANES

NORMAL SECTION

EASTBOUND LANES

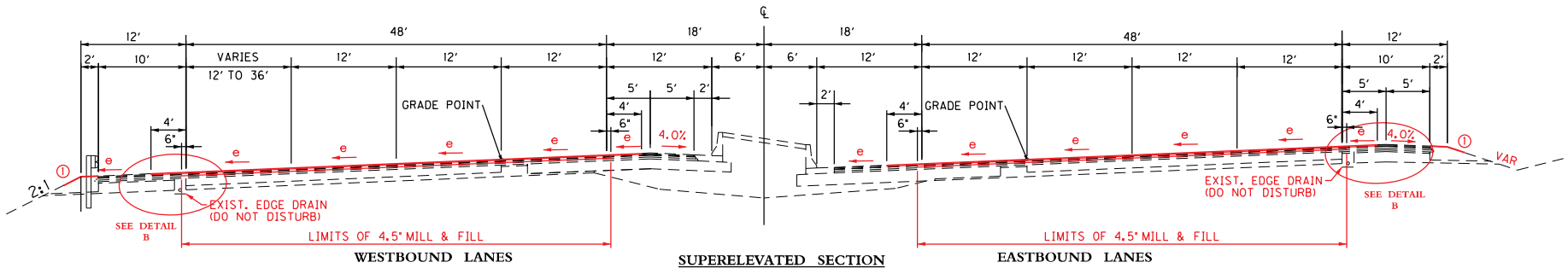

WESTBOUND LANES

SUPERELEVATED SECTION

EASTBOUND LANES

① ASPHALT SEAL IS REQUIRED FROM THE EDGE OF THE OUTSIDE PAVED SHOULDER TO A POINT 2′ DOWN THE DITCH OR FILL SLOPE OR AS DIRECTED BY THE ENGINEER.

ASPHALT SEAL IS TO CONSIST OF TWO APPLICATIONS OF THE FOLLOWING:

ASPHALT SEAL AGGREGATE (#8 OR #9M) - 20 LB/SY
ASPHALT SEAL COAT - 2.4 LB/SY

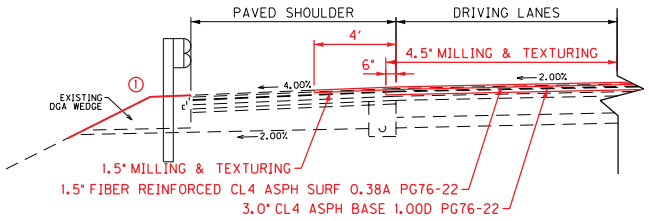

DETAIL 'B'

PAVEMENT REHABILITATION

DRIVING LANES & 6 INCHES OF THE SHOULDERS

1.5" FIBER REINFORCED CL4 ASPH SURF 0.38A PG76-22
3.0" CL4 ASPH BASE 1.00D PG76-22
4.5" ASPHALT MILLING AND TEXTURING

ADDITIONAL 3.5′ OF SHOULDERS

1.5" FIBER REINFORCED CL4 ASPH SURF 0.38A PG76-22
1.5" ASPHALT MILLING AND TEXTURING

I-64
TYPICAL SECTIONS

COUNTY OF	ITEM NO.
JEFFERSON	5-22024

PROPOSED TYPICAL SECTIONS
I–64

WESTBOUND STA. 307+50 (M.P. 14.464) TO STA. 402+75 (M.P. 16.268)
WESTBOUND STA. 442+85 (M.P. 17.027) TO STA. 455+32 (M.P. 17.263)
WESTBOUND STA. 526+05 (M.P. 18.599) TO STA. 555+67.61 (M.P. 19.160)
EASTBOUND STA. 287+00 (M.P. 14.075) TO STA. 402+25 (M.P. 16.258)
EASTBOUND STA. 415+50 (M.P.16.509) TO STA. 447+50 (M.P. 17.117)
EASTBOUND STA. 526+05 (M.P. 18.599) TO STA. 555+67.61 (M.P. 19.160)

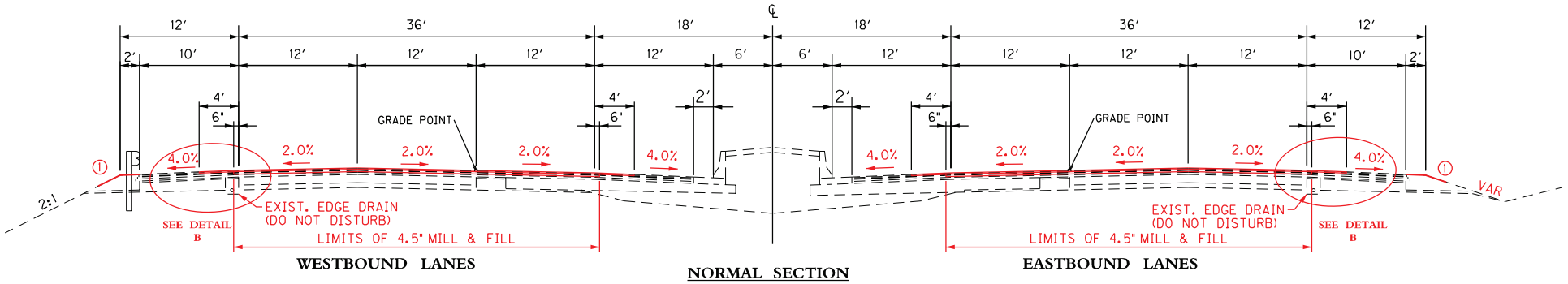

NORMAL SECTION

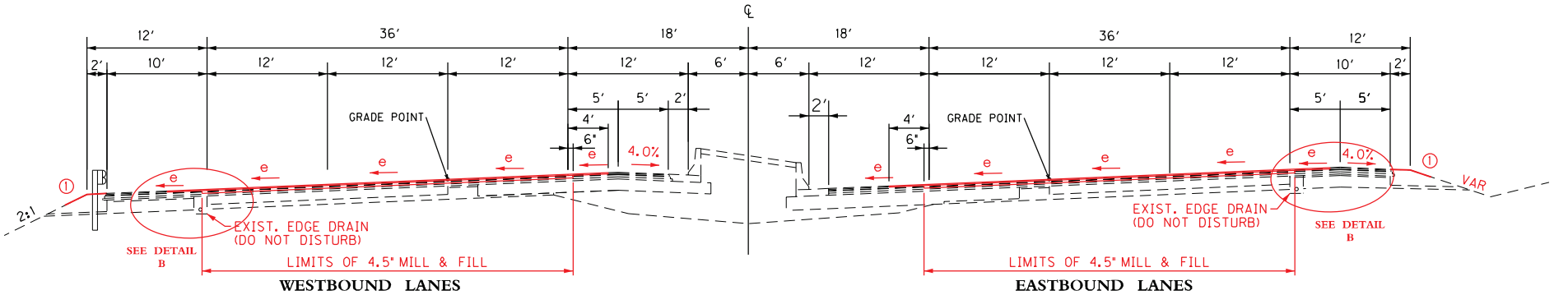

SUPERELEVATED SECTION

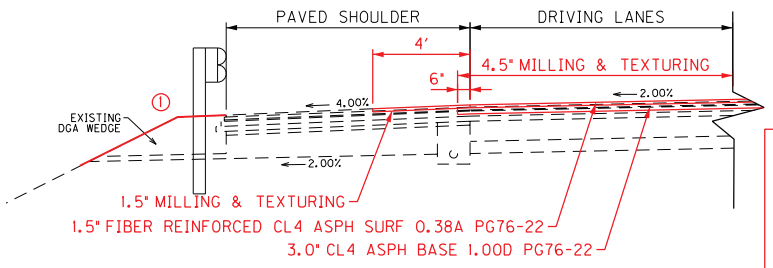

DETAIL 'B'

① ASPHALT SEAL IS REQUIRED FROM THE EDGE OF THE OUTSIDE PAVED SHOULDER TO A POINT 2′ DOWN THE DITCH OR FILL SLOPE OR AS DIRECTED BY THE ENGINEER.

ASPHALT SEAL IS TO CONSIST OF TWO APPLICATIONS OF THE FOLLOWING:

ASPHALT SEAL AGGREGATE (#8 OR #9M) - 20 LB/SY
ASPHALT SEAL COAT - 2.4 LB/SY

PAVEMENT REHABILITATION

DRIVING LANES & 6 INCHES OF THE SHOULDERS

1.5" FIBER REINFORCED CL4 ASPH SURF 0.38A PG76-22
3.0" CL4 ASPH BASE 1.00D PG76-22
4.5" ASPHALT MILLING AND TEXTURING

ADDITIONAL 3.5′ OF SHOULDERS

1.5" FIBER REINFORCED CL4 ASPH SURF 0.38A PG76-22
1.5" ASPHALT MILLING AND TEXTURING

I-64
TYPICAL SECTIONS

COUNTY OF	ITEM NO.
JEFFERSON	5-22024

PROPOSED TYPICAL SECTIONS
I–64

WESTBOUND STA. 466+00 (M.P. 17.467) TO STA. 483+48 (M.P. 17.797)
EASTBOUND STA. 447+50 (M.P. 17.117) TO STA. 483+48 (M.P. 17.797)

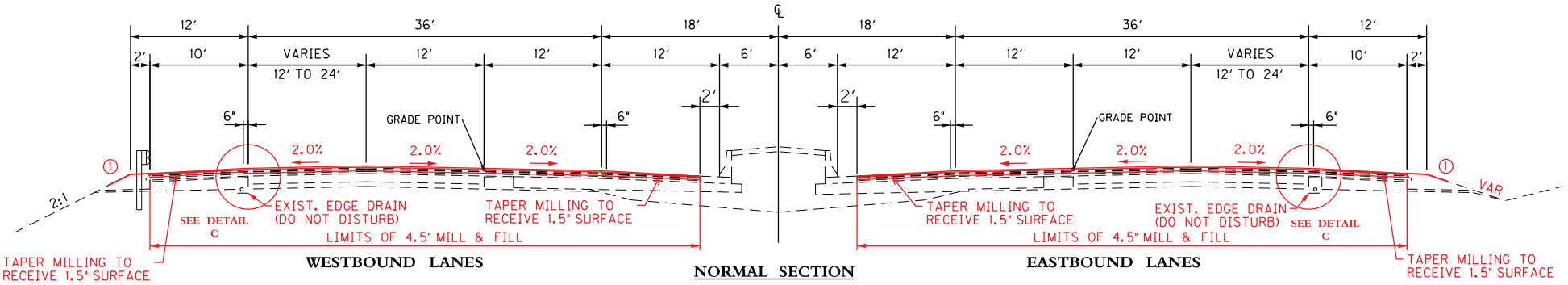

NORMAL SECTION

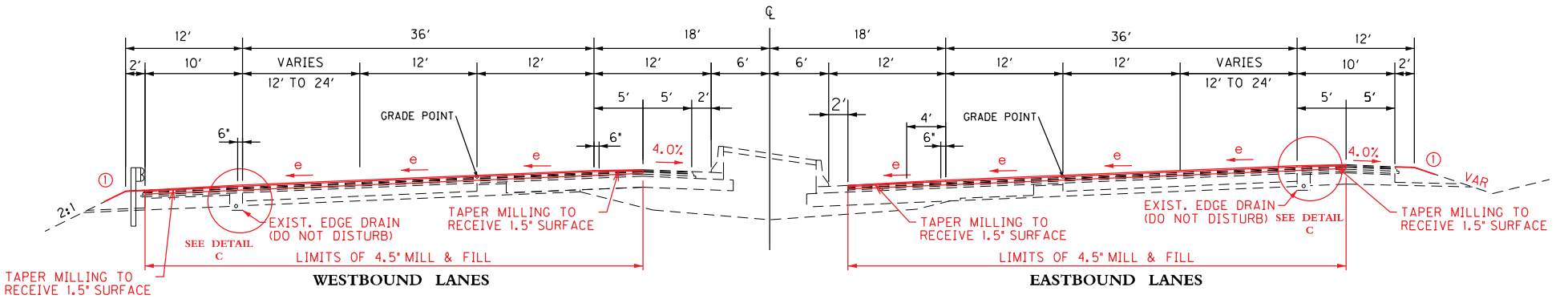

SUPERELEVATED SECTION

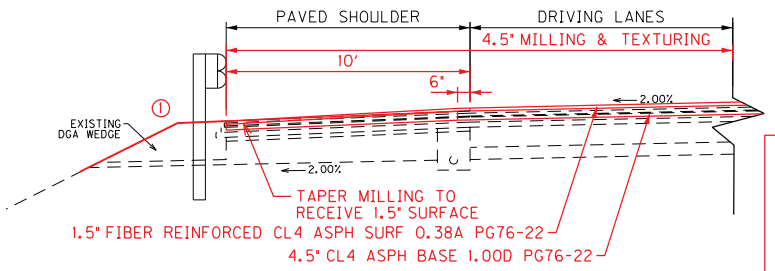

DETAIL 'C'

① ASPHALT SEAL IS REQUIRED FROM THE EDGE OF THE OUTSIDE PAVED SHOULDER TO A POINT 2′ DOWN THE DITCH OR FILL SLOPE OR AS DIRECTED BY THE ENGINEER.

ASPHALT SEAL IS TO CONSIST OF TWO APPLICATIONS OF THE FOLLOWING:

ASPHALT SEAL AGGREGATE (#8 OR #9M) - 20 LB/SY
ASPHALT SEAL COAT - 2.4 LB/SY

PAVEMENT REHABILITATION

DRIVING LANES & 6 INCHES OF THE SHOULDERS

1.5" FIBER REINFORCED CL4 ASPH SURF 0.38A PG76-22
4.5" CL4 ASPH BASE 1.00D PG76-22
4.5" ASPHALT MILLING AND TEXTURING

REMAINING WIDTH OF SHOULDERS

1.5" FIBER REINFORCED CL4 ASPH SURF 0.38A PG76-22
1.5" ASPHALT MILLING AND TEXTURING (TAPER)
4.5" CL4 ASPH BASE 1.00D PG76-22

I-64
TYPICAL SECTIONS

COUNTY OF	ITEM NO.
JEFFERSON	5-22024

PROPOSED TYPICAL SECTIONS
I–64

WESTBOUND STA. 483+48 (M.P. 17.797) TO STA. 508+50 (M.P. 18.290)
EASTBOUND STA. 483+48 (M.P. 17.797) TO STA. 486+50 (M.P. 17.854)

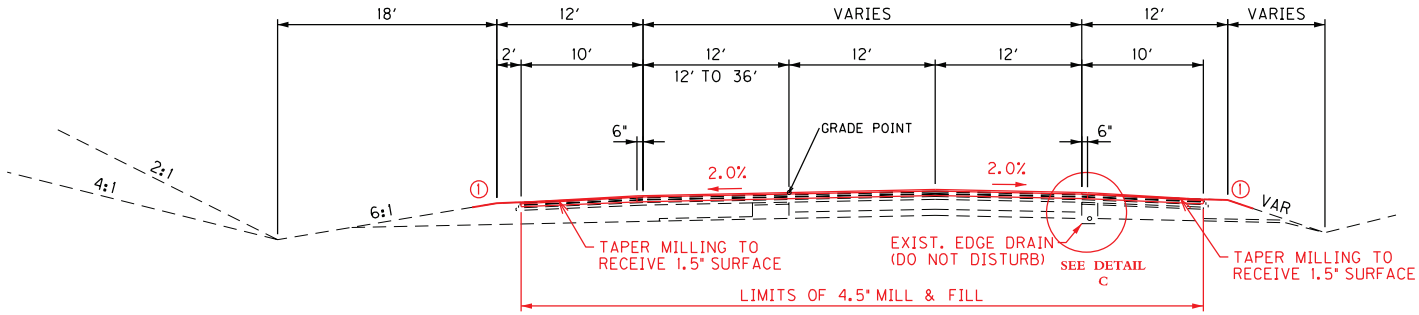

1/2 TANGENT BIFURCATED SECTION

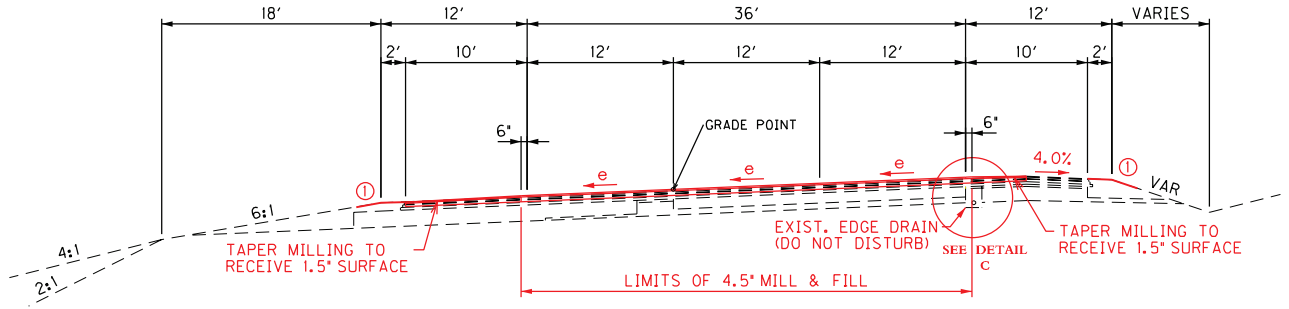

1/2 SUPERELEVATED BIFURCATED SECTION

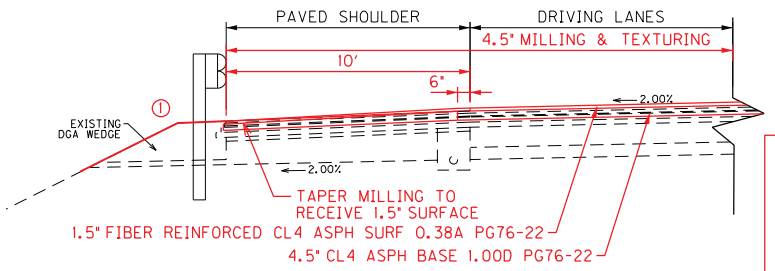

DETAIL 'C'

(1) ASPHALT SEAL IS REQUIRED FROM THE EDGE OF THE OUTSIDE PAVED SHOULDER TO A POINT 2' DOWN THE DITCH OR FILL SLOPE OR AS DIRECTED BY THE ENGINEER.

ASPHALT SEAL IS TO CONSIST OF TWO APPLICATIONS OF THE FOLLOWING:

ASPHALT SEAL AGGREGATE (#8 OR #9M) - 20 LB/SY
ASPHALT SEAL COAT - 2.4 LB/SY

PAVEMENT REHABILITATION

DRIVING LANES & 6 INCHES OF THE SHOULDERS

1.5" FIBER REINFORCED CL4 ASPH SURF 0.38A PG76-22
4.5" CL4 ASPH BASE 1.00D PG76-22
4.5" ASPHALT MILLING AND TEXTURING

REMAINING WIDTH OF SHOULDERS

1.5" FIBER REINFORCED CL4 ASPH SURF 0.38A PG76-22
1.5" ASPHALT MILLING AND TEXTURING (TAPER)
4.5" CL4 ASPH BASE 1.00D PG76-22

I-64
TYPICAL SECTIONS

COUNTY OF	ITEM NO.
JEFFERSON	5-22024

PROPOSED TYPICAL SECTIONS
I–64

WESTBOUND STA. 508+50 (M.P. 18.290) TO STA. 526+05 (M.P. 18.599)
EASTBOUND STA. 486+50 (M.P. 17.854) TO STA. 526+05 (M.P. 18.599)

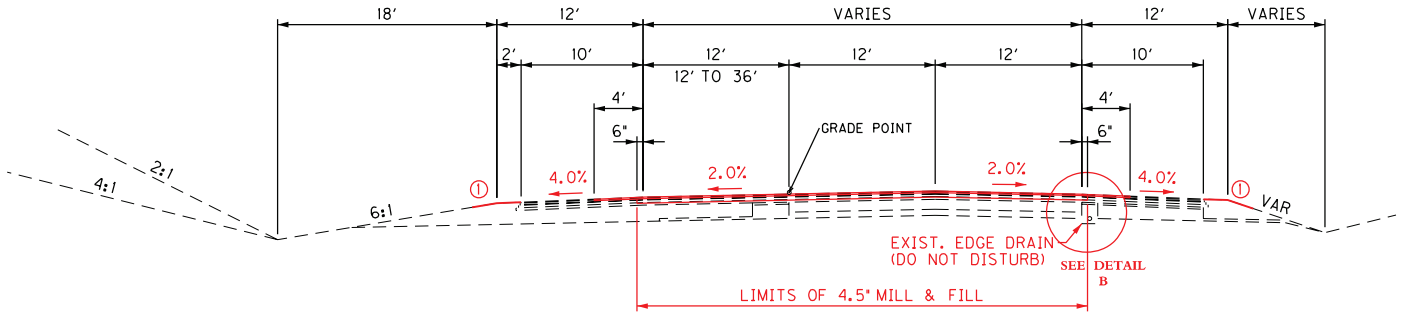

1/2 TANGENT BIFURCATED SECTION

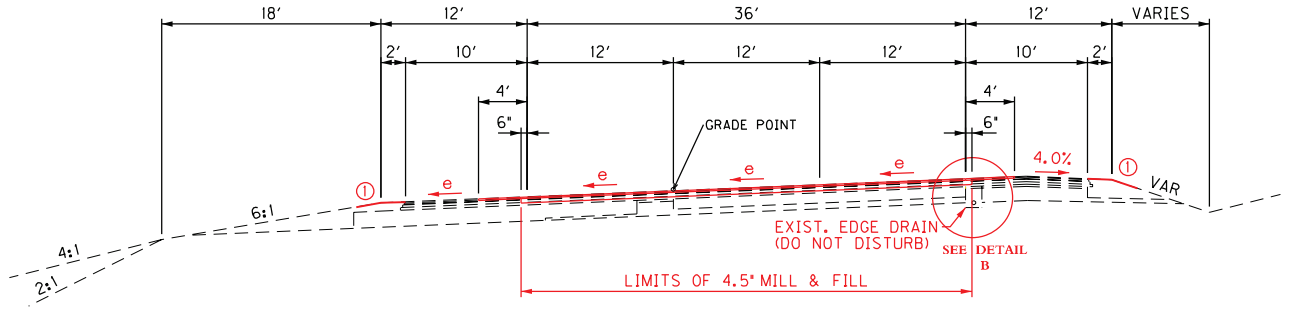

1/2 SUPERELEVATED BIFURCATED SECTION

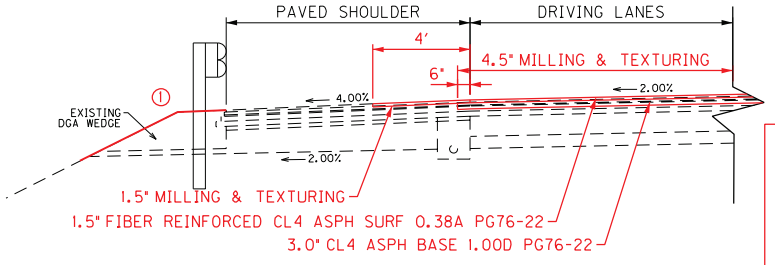

DETAIL 'B'

① ASPHALT SEAL IS REQUIRED FROM THE EDGE OF THE OUTSIDE PAVED SHOULDER TO A POINT 2' DOWN THE DITCH OR FILL SLOPE OR AS DIRECTED BY THE ENGINEER.

ASPHALT SEAL IS TO CONSIST OF TWO APPLICATIONS OF THE FOLLOWING:

ASPHALT SEAL AGGREGATE (#8 OR #9M) - 20 LB/SY
ASPHALT SEAL COAT - 2.4 LB/SY

PAVEMENT REHABILITATION

DRIVING LANES & 6 INCHES OF THE SHOULDERS

1.5" FIBER REINFORCED CL4 ASPH SURF 0.38A PG76-22
4.5" CL4 ASPH BASE 1.00D PG76-22
4.5" ASPHALT MILLING AND TEXTURING

ADDITIONAL 3.5' OF SHOULDERS

1.5" FIBER REINFORCED CL4 ASPH SURF 0.38A PG76-22
1.5" ASPHALT MILLING AND TEXTURING

I-64
TYPICAL SECTIONS

COUNTY OF	ITEM NO.
JEFFERSON	5-22024

TYPICAL SECTIONS
HURSTBOURNE RAMPS

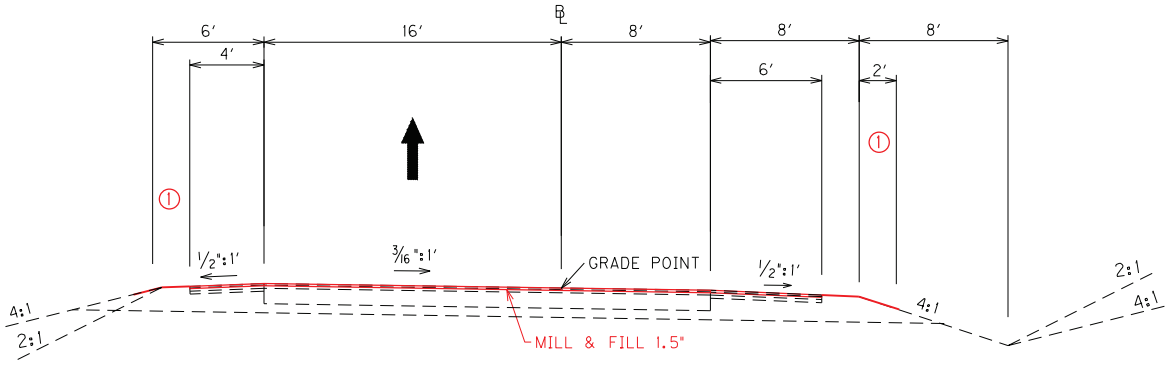

RAMPS 1, 7

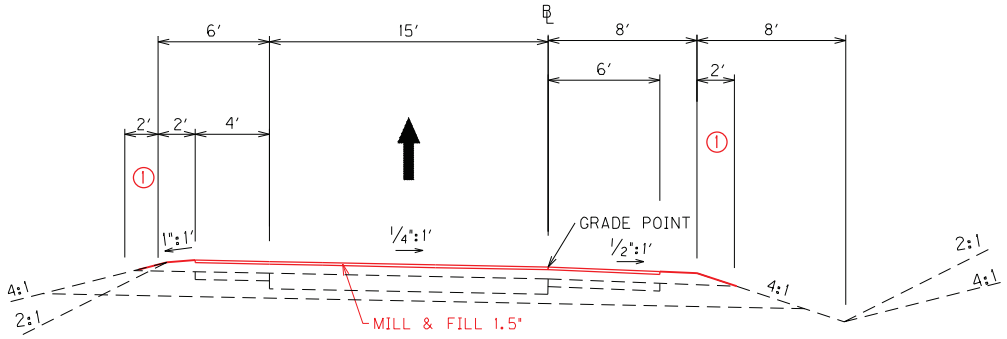

RAMP 3

PAVEMENT REHABILITATION

DRIVING LANE & BOTH SHOULDERS

1.5" FIBER REINFORCED CL4 ASPH SURF 0.38A PG76-22
1.5" ASPHALT MILLING AND TEXTURING

① ASPHALT SEAL IS REQUIRED FROM THE EDGE OF THE PAVED SHOULDERS TO A POINT 2′ DOWN THE DITCH OR FILL SLOPE OR AS DIRECTED BY THE ENGINEER.

ASPHALT SEAL IS TO CONSIST OF TWO APPLICATIONS OF THE FOLLOWING:

ASPHALT SEAL AGGREGATE (#8 OR #9M) - 20 LB/SY
ASPHALT SEAL COAT - 2.4 LB/SY

HURSTBOURNE RAMPS
TYPICAL SECTIONS

COUNTY OF	ITEM NO.
JEFFERSON	5-22024

TYPICAL SECTIONS
HURSTBOURNE RAMPS

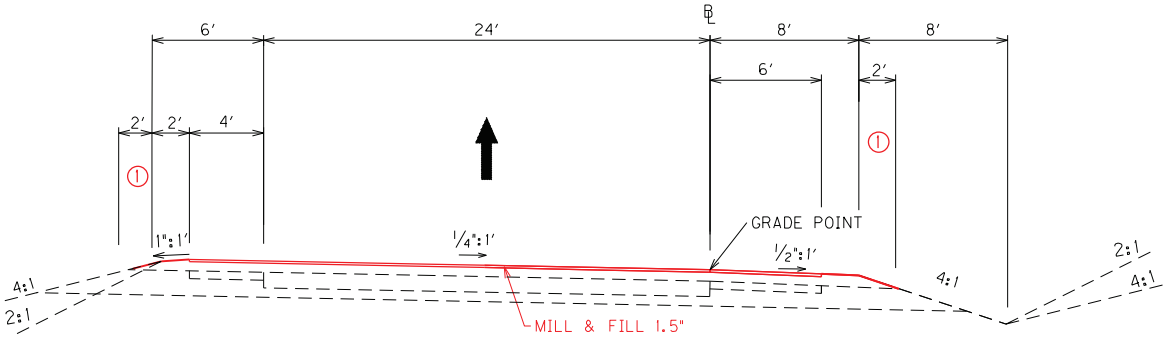

RAMP 9

PAVEMENT REHABILITATION

DRIVING LANE & BOTH SHOULDERS

1.5" FIBER REINFORCED CL4 ASPH SURF 0.38A PG76-22
1.5" ASPHALT MILLING AND TEXTURING

① ASPHALT SEAL IS REQUIRED FROM THE EDGE OF THE PAVED SHOULDERS TO A POINT 2' DOWN THE DITCH OR FILL SLOPE OR AS DIRECTED BY THE ENGINEER.

ASPHALT SEAL IS TO CONSIST OF TWO APPLICATIONS OF THE FOLLOWING:

ASPHALT SEAL AGGREGATE (#8 OR #9M) - 20 LB/SY
ASPHALT SEAL COAT - 2.4 LB/SY

HURSTBOURNE RAMPS
TYPICAL SECTIONS

COUNTY OF	ITEM NO.
JEFFERSON	5-22024

TYPICAL SECTIONS
BLANKENBAKER RAMPS

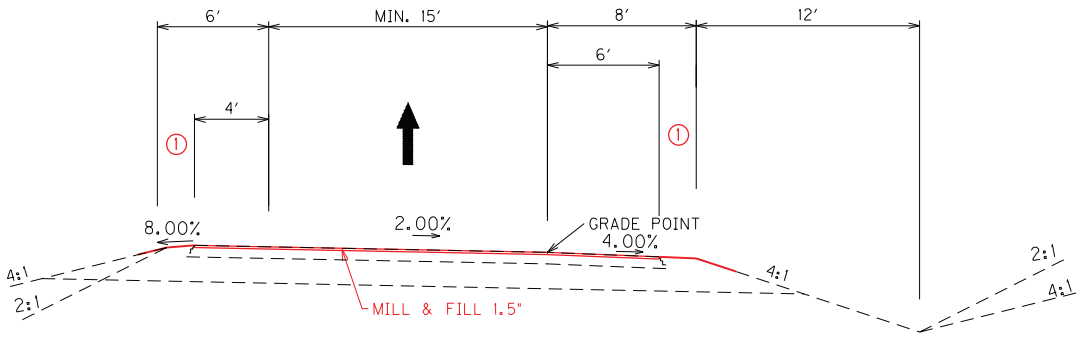

RAMPS A, B, F

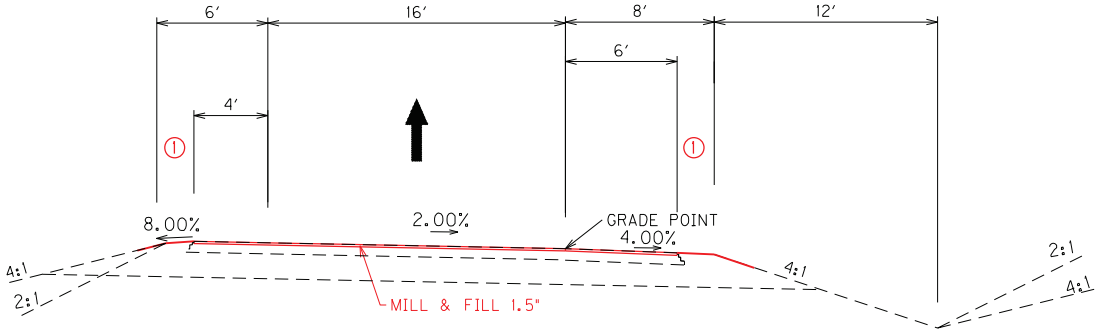

RAMPS D, E

PAVEMENT REHABILITATION

DRIVING LANE & BOTH SHOULDERS

1.5" FIBER REINFORCED CL4 ASPH SURF 0.38A PG76-22
1.5" ASPHALT MILLING AND TEXTURING

(1) ASPHALT SEAL IS REQUIRED FROM THE EDGE OF THE PAVED SHOULDERS TO A POINT 2' DOWN THE DITCH OR FILL SLOPE OR AS DIRECTED BY THE ENGINEER.

ASPHALT SEAL IS TO CONSIST OF TWO APPLICATIONS OF THE FOLLOWING:

ASPHALT SEAL AGGREGATE (#8 OR #9M) - 20 LB/SY
ASPHALT SEAL COAT - 2.4 LB/SY

BLANKENBAKER RAMPS
TYPICAL SECTIONS

COUNTY OF	ITEM NO.
JEFFERSON	5-22024

CROSS SECTION VIEW

CONCRETE WEDGE CURB

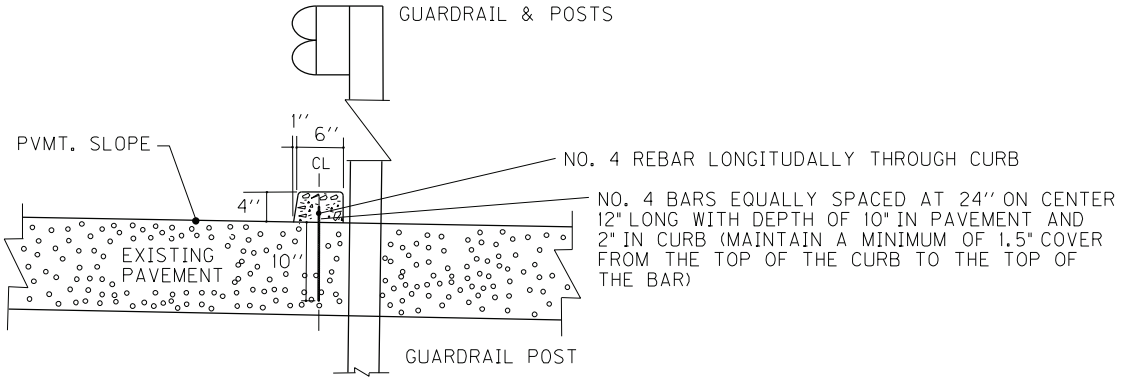

NOTE:
REMOVAL OF EXISTING CURB SHALL NOT BE PAID FOR, BUT SHALL BE CONSIDERED INCIDENTAL TO THE CONCRETE WEDGE CURB.

NOT TO SCALE

PLAN VIEW

CONCRETE WEDGE CURB

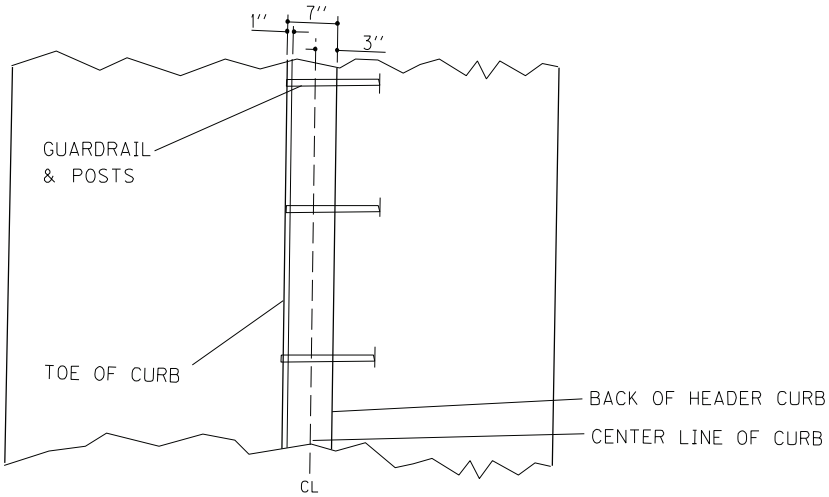

NOT TO SCALE

DETAIL SHEET

COUNTY OF	ITEM NO.
JEFFERSON	5-22024

I–64
PROPOSED TYPICAL SECTIONS

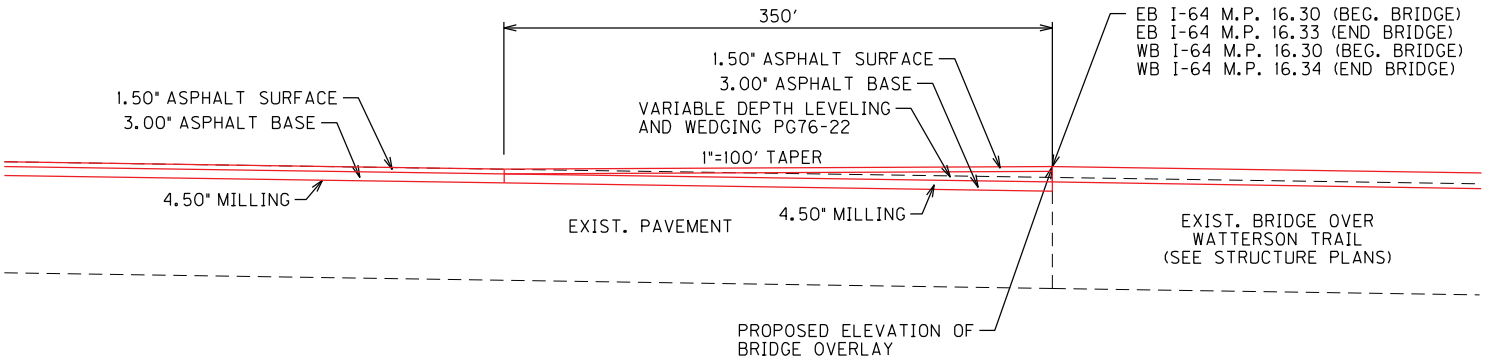

TAPERING OF OVERLAY
AT WATTERSON TRAIL
BRIDGE ENDS

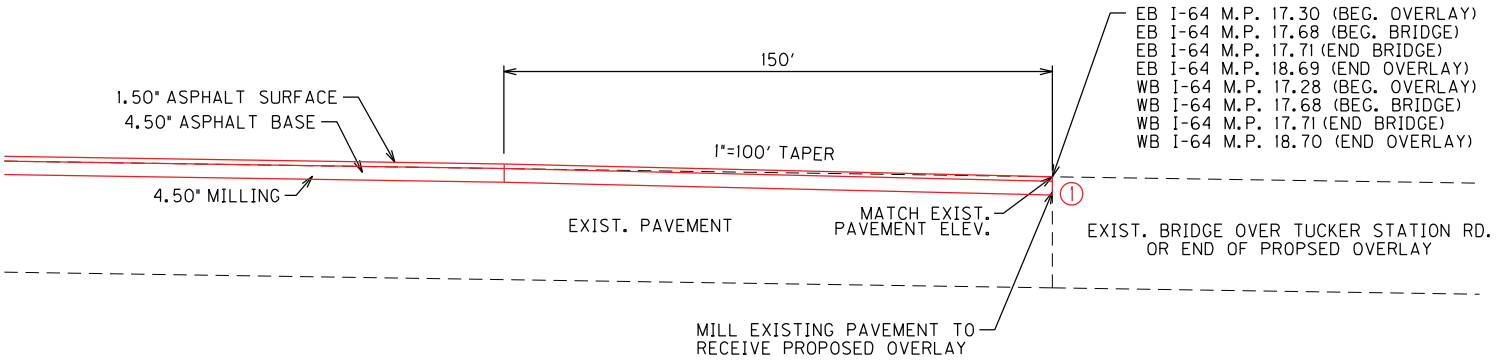

TAPERING OF OVERLAY
AT ENDS OF PROPOSED 1.50" OVERLAY
AND AT THE TUCKER STATION BRIDGE ENDS

(1) EDGE KEY WILL NOT BE PAID FOR SEPARATELY AND WILL BE CONSIDERED INCIDENTAL TO ASPHALT PAVE MILLING & TEXTURING.

BASE FAILURE REPAIR DETAIL

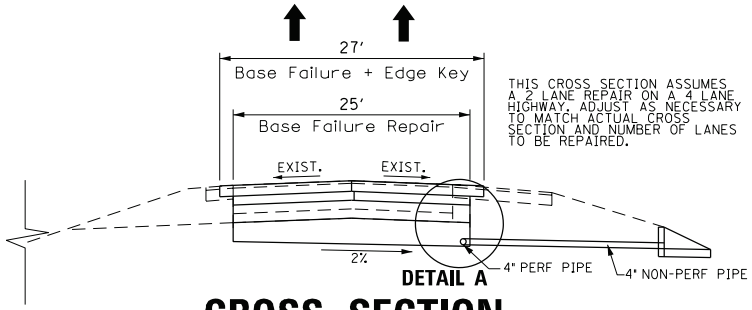

CROSS SECTION

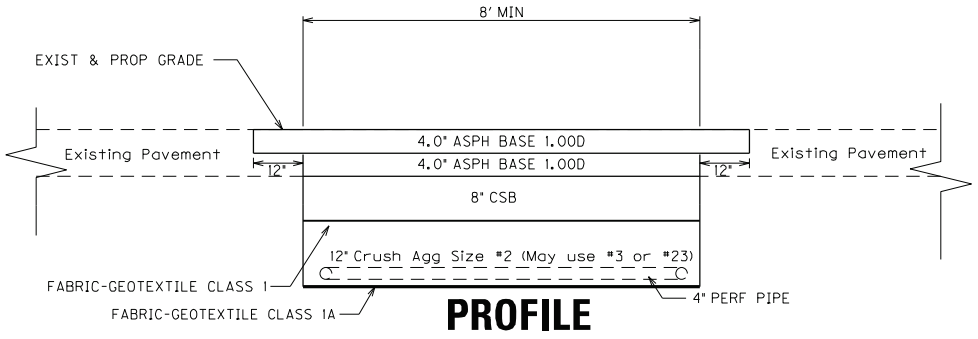

PROFILE

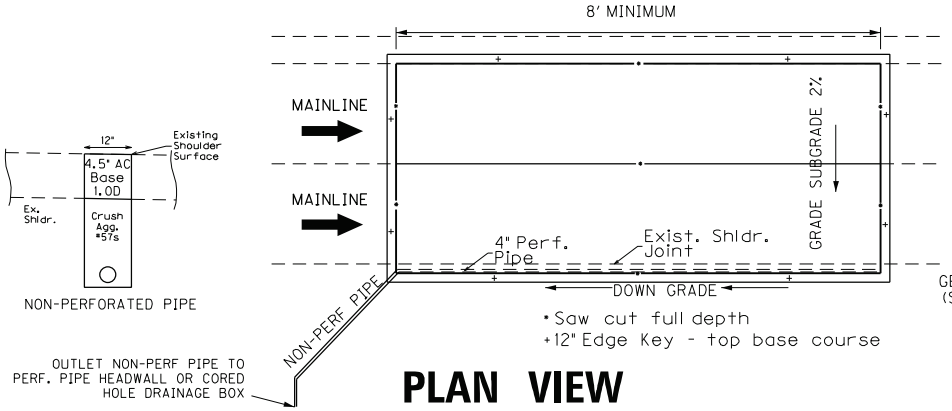

PLAN VIEW

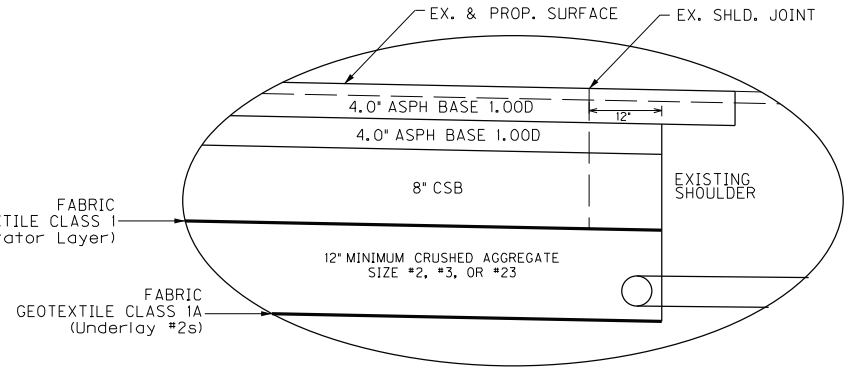

DETAIL A

NOTES

1. Caution: Existing concrete pavement may exist below the asphalt pavement.
2. Full depth base failure repairs shall be performed at locations selected by and as directed by the Engineer. The Engineer will assess, select, and mark areas for treatment. The full lane width will be removed and replaced. The Engineer may elect to perform repairs on one lane or multiple lanes. An edge key 12" into existing pavement is required for the top course of base. If only one lane is being repaired, carry top base course 12" into adjacent lane when MOT allows.
3. When replacing the outside lane, perforated pipe should be placed under the shoulder by extending the repair area 12 inches into the existing shoulder.
4. Select an appropriate outlet source which may include a perf pipe headwall or cored hole in an existing drop box inlet. Non-perf outlet pipe may require installation at significant length or adjusted alignment to provide positive drainage. Grade subgrade to the outlet side of the excavation at 2%, install a longitudinal perforated pipe on the low side of subgrade connecting to the down grade outlet.
5. Complete base failure operations in one continuous operation or protect with barrier wall. Do not leave an unprotected hole with no workers present. If barrier wall must be used for base failure repairs, it will be considered incidental to other items of work and not be considered for payment.
6. After completing base failure repair operations, open to traffic for a minimum of 14 days before resurfacing. Monitor pavement for settlement during this 14+ days and repair by leveling and wedging, as approved by the Engineer, until placement of final surface course.
7. All items required to perform the Base Failure repair including Crushed Stone Base, Crushed aggregate No. 2, Pavemement removal, Roadway Excavation, Fabric-Geotextile Class 1, Fabric-Geotextile Class 1a, Asphalt Base, and any other items of work required by the Engineer to perform the repair shall be incidental to the bid item "BASE FAILURE REPAIR", SQ. YD.
8. Perforated pipe, non-perforated pipe, crushed aggregate #57s, cored hole drainage structures, and perforated pipe headwalls will not be measured for payment and will be considered incidental to other items of work.
9. Perform typical mill and inlay operations with resurfacing items subject to payment as part of the resurfacing operation.

* QUANTITIES TO BID

3240	BASE FAILURE REPAIR	SQ. YD.

* Only items listed will be considered for payment and will considered full compensation for the work required. Any other items of work not listed for payment will be considered incidental to other items of work. Items carried to Paving Summary.

Asph base course class and binder grade to be chosen by designer based on current asphalt warrants and/or to remain consistent with mainline asphalt surface used on the project.

NOT TO SCALE

PAVEMENT REPAIR DETAIL

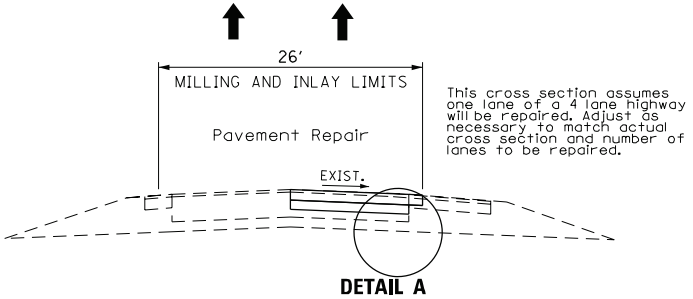

CROSS SECTION

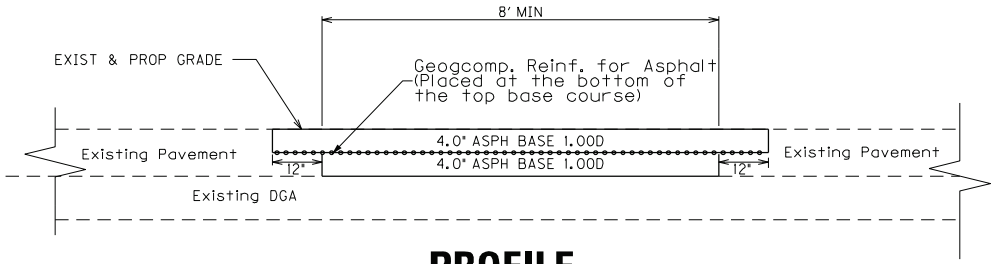

PROFILE

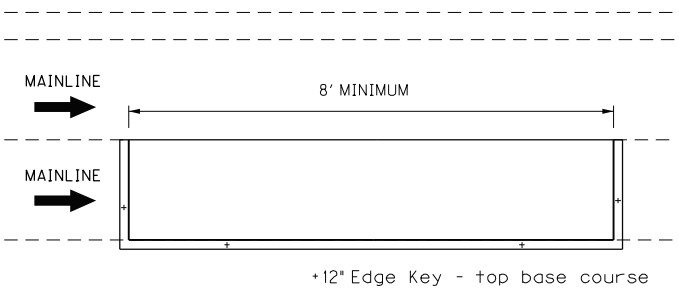

PLAN VIEW

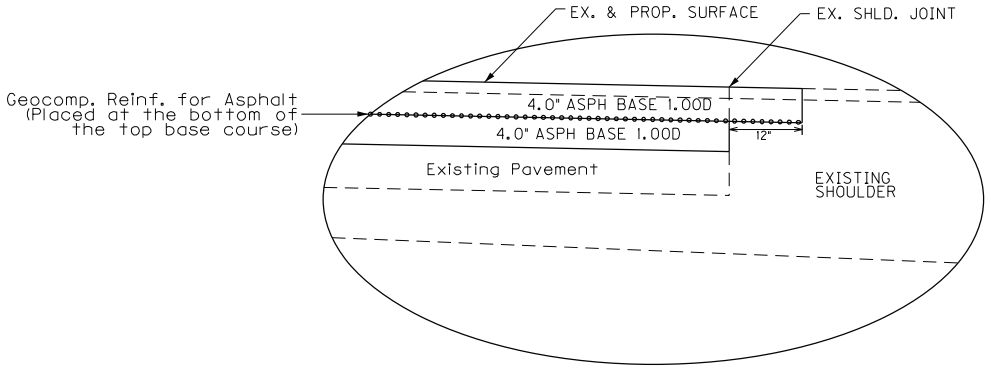

DETAIL A

NOTES

1. Caution: Existing concrete pavement may exist below the asphalt pavement.
2. Pavement repairs shall be performed at locations selected by and as directed by the Engineer. The Engineer will assess, select, and mark areas for treatment. The full lane width will be removed and replaced. The Engineer may elect to perform repairs on one lane or multiple lanes. The Engineer may elect to only remove and replace the top lift of base or may decide a Base Failure Repair is more appropriate (see Base Failure Repair Detail). An edge key 12" into existing pavement is required for the top course of base.
3. Complete pavement repair operations in one continuous operation or protect with barrier wall. Do not leave an unprotected hole with no workers present. If barrier wall must be used for pavement repairs, it will be considered incidental to other items of work and not be considered for payment.
4. Before resurfacing, open repaired area to traffic for a minimum of 14 days. Monitor pavement for settlement during this 14+ days and repair by leveling and wedging, as approved by the Engineer, until placement of final surface course.
5. The item PAVEMENT REPAIR includes removal of all asphalt to the required depth.
6. Perform typical mill and inlay operations with resurfacing items subject to payment as part of the resurfacing operation.

* QUANTITIES TO BID

20757ED	PAVEMENT REPAIR	SQ.YD.

* Only items listed will be considered for payment and will considered full compensation for the work required. Any other items of work not listed for payment will be considered incidental to other items of work.

Asph base course class and binder grade to be chosen by designer based on current asphalt warrants and/or to remain consistent with mainline asphalt surface used on the project.

NOT TO SCALE

JEFFERSON COUNTY
056GR26D040-NHPP
Contract ID: 261140
Page 50 of 297

I-64 PAVEMENT REHABILITATION
JEFFERSON COUNTY
MILEPOST 13.124 TO MILEPOST 19.44
ITEM NUMBER: 5-22024

ITEM NUMBER	ITEM		I-64	UNIT
0001	DGA BASE	(1)	2000	TON
0100	ASPHALT SEAL AGGREGATE	(2)	593	TON
0103	ASPHALT SEAL COAT	(2)	71	TON
0194	LEVELING & WEDGING PG76-22	(4)	1000	TON
0219	CL4 ASPH BASE 1.00D PG76-22		56236	TON
0342	CL4 ASPH SURF 0.38A PG76-22		34447	TON
1982	DELINEATOR FOR G/R MONO DIRECTIONAL WHITE		40	EACH
2003	RELOCATE TEMP CONC BARRIER	(7)	1280	LF
2014	BARRICADE - TYPE III		10	EACH
2367	G/R END TREATMENT TYPE 1		3	EACH
2370	G/R END TREATMENT TYPE M		19	EACH
2381	REMOVE G/R		1237.5	LF
2383	REMOVE & RESET G/R		787.5	LF
2483	CHANNEL LINING CLASS II	(3)	132.0	TON
2562	TEMPORARY SIGNS		2500	SQ FT
2568	MOBILIZATION		1	LS
2569	DEMOBILIZATION		1	LS
2650	MAINTAIN AND CONTROL TRAFFIC		1	LS
2671	PORTABLE CHANGEABLE MESSAGE SIGN		6	EACH
2676	MOBILIZATION FOR MILL & TEXT		1	LS
2677	ASPHALT PAVE MILLING & TEXTURING		90890	TON
2697	EDGELINE RUMBLE STRIPS	(5)	138186	LF
2714	SHOULDERING		33348	LF
2898	RELOCATE CRASH CUSHION	(7)	3	EACH
3240	BASE FAILURE REPAIR		725	SQ YD
6401	FLEXIBLE DELINEATOR POST-M/W		675	EACH
6404	FLEXIBLE DELINEATOR POST-M/Y		74	EACH
6511	PAVE STRIPING-TEMP PAINT-6 IN		185,337	LF
6542	PAVE STRIPING THERMO - 6 IN W		114,656	LF
6543	PAVE STRIPING THERMO - 6 IN Y		70,681	LF
6546	PAVE STRIPING-THERMO - 12 IN W		9,631	LF
6549	PAVE STRIPING-TEMP REM TAPE-B	(6)	8,100	LF
6550	PAVE STRIPING-TEMP REM TAPE-W	(6)	10,800	LF
6551	PAVE STRIPING-TEMP REM TAPE-Y	(6)	7,200	LF
6556	PAVE STRIPING-DUR TYPE 1-6 IN W		1,596	LF
6557	PAVE STRIPING-DUR TYPE 1-6 IN Y		1,010	LF
6566	PAVE MARKING-THERMO X-WALK-12 IN		48	LF
6568	PAVE MARKING THERMO STOP BAR-24 IN		45	LF
6569	PAVE MARKING-THERMO CROSS-HATCH		5,146	SQFT
6574	PAVE MARKING-THERMO CURV ARROW		15	EACH
6575	PAVE MARKING-THERMO COMB ARROW		6	EACH
6578	PAVE MARKING-THERMO MERGE ARROW		28	EACH
6613	INLAID PAVEMENT MARKERS-B W/R		2,316	EACH
6614	INLAID PAVEMENT MARKERS-B Y/R		145	EACH
8904	CRASH CUSHION TY 6 CLASS C TL-3		2	EACH
8912	CRASH CUSHION TY 6 CLASS T TL3	(7)	3	EACH
06601NC	PAVE MARKING-PAINT WORDS		3	EACH
10020NS	FUEL ADJUSTMENT		142709	DOLL
10030NS	ASPHALT ADJUSTMENT		358444	DOLL
20071EC	JOINT ADHESIVE		200100	LF
20190ES601	CONC BARR WALL TY 9T-INSTALL	(7)	1,280	LF
20191ED	OBJECT MARKER TYPE 3		5	EACH
20411ED	LAW ENFORCEMENT OFFICER		1000	HOURS
20757ED	PAVEMENT REPAIR		1293	SQ YD
22883EN	CONCRETE WEDGE CURB		105	LF
24679ED	PAVE MARK THERMO CHEVRON		6,531	SQ FT
24683ED	PAVE MARKING-THERMO DOTTED LANE EXTEN		1,113	LF
24785EC	FIBER REINFORCEMENT FOR HMA		34447	TON

I-64 PAVEMENT REHABILITATION
JEFFERSON COUNTY
MILEPOST 13.124 TO MILEPOST 19.44
ITEM NUMBER: 5-22024

ITEM NUMBER	ITEM		I-64	UNIT
24899EC	PAVE MARKING-THERMO ELONG ROUTE SHIELD		5	EACH
24970EC	ASPHALT MATERIAL FOR TACK NON-TRACKING		265	TON
25075EC	QUEUE PROTECTION VEHICLE		1440	HOUR
25078ED	THRIE BEAM G/R TRANSITION (TL-3)		9	EACH
25079ED	THRIE BEAM G/R TRANSITION (TL-2)		6	EACH
25117EC	FURNISH QUEUE PROTECTION VEHICLES		12	MONTH
26136EC	PORTABLE QUEUE WARNING ALERT SYSTEM		12	MONTH
26137EC	QUEUE WARNING PCMS		72	MONTH
26138EC	QUEUE WARNING PORTABLE RADAR SENSORS		72	MONTH
26237EC	CONNECTED ARROW PANELS		12	MONTH
26312EC	G/R-W BEAM-S FACE (TL-3) 8 FT POST		787.5	LF

NOTE: Quantities from all roadway summary sheets have been carried over and included in this General Summary

(1) Includes 942 tons from the drainage summary with the remainder to be used as directed by the Engineer.

(2) Quantity is included for the ramp shoulders and the outside mainline shoulders.

(3) Any excavation and Fabric-Geotextile Class 2 is incidental to the channel lining.

(4) To be used as directed by the Engineer for shoulder pavement repairs, cross slope corrections and for the pavement overlay taper at the I-64 bridges

(5) Contrary to Section 714.02.05 of the Standard Specifications for Road and Bridge Construction, application of 6 inch and 12 inch white and yellow "long-line" thermoplastic striping will be required to be by ribbon-extrusion gun at all locations that are to be applied over milled rumble strips in lieu of an extrusion die application. Also, ribbon-extrusion gun application may be used for all other 6 inch and 12 inch white and yellow "long-line" thermoplastic striping on this project in lieu of an extrusion die application.

(6) To be used for maintenance of traffic tapers on existing pavement outside the project limits.

(7) To be used for maintenance of traffic during overlay operations for the I-64 bridges over Watterson Trail (420 LF X2) and WB over Hurstbourne (440 LF).

I-64 PAVEMENT REHABILITATION
JEFFERSON COUNTY
ITEM NUMBER: 5-22024
PAVEMENT SUMMARY

PAVING AREAS

ITEM	TOTAL
EB I-64 (M.P. 13.12 TO M.P. 17.11 AND M.P. 17.85 TO M.P. 19.44)	**SQYD**
DRIVING LANES AND 6 INCHES OF INSIDE AND OUTSIDE SHOULDERS	
1.5" FIBER REINFORCED CL4 ASPH SURF 0.38A PG76-22	131313
3.0" CL4 ASPH BASE 1.00D PG76-22	131313
ASPHALT MATERIAL FOR TACK NON-TRACKING	262626
INSIDE AND OUTSIDE SHOULDER (REMAINING 3.50')	
1.5" FIBER REINFORCED CL4 ASPH SURF 0.38A PG76-22	22944
ASPHALT MATERIAL FOR TACK NON-TRACKING	22944
WB I-64 (M.P. 13.12 TO M.P. 17.47 AND M.P. 18.27 TO M.P. 19.44)	**SQYD**
DRIVING LANES AND 6 INCHES OF INSIDE AND OUTSIDE SHOULDERS	
1.5" FIBER REINFORCED CL4 ASPH SURF 0.38A PG76-22	146522
3.0" CL4 ASPH BASE 1.00D PG76-22	146522
ASPHALT MATERIAL FOR TACK NON-TRACKING	293044
OUTSIDE SHOULDER (REMAINING 3.50')	
1.5" FIBER REINFORCED CL4 ASPH SURF 0.38A PG76-22	21544
ASPHALT MATERIAL FOR TACK NON-TRACKING	21544
EB I-64 (M.P. 17.11 TO M.P. 17.85)	**SQYD**
DRIVING LANES AND 6 INCHES OF INSIDE AND OUTSIDE SHOULDERS	
1.5" FIBER REINFORCED CL4 ASPH SURF 0.38A PG76-22	17850
4.5" CL4 ASPH BASE 1.00D PG76-22	17850
ASPHALT MATERIAL FOR TACK NON-TRACKING	35700
INSIDE AND OUTSIDE SHOULDERS (REMAINING FULL WIDTH)	
1.5" FIBER REINFORCED CL4 ASPH SURF 0.38A PG76-22	8922
4.5" CL4 ASPH BASE 1.00D PG76-22	8922
ASPHALT MATERIAL FOR TACK NON-TRACKING	17844
WB I-64 (M.P. 17.47 TO M.P. 18.27)	**SQYD**
DRIVING LANES AND 6 INCHES OF INSIDE AND OUTSIDE SHOULDERS	
1.5" FIBER REINFORCED CL4 ASPH SURF 0.38A PG76-22	24142
4.5" CL4 ASPH BASE 1.00D PG76-22	24142
ASPHALT MATERIAL FOR TACK NON-TRACKING	48284
INSIDE AND OUTSIDE SHOULDERS (REMAINING FULL WIDTH)	
1.5" FIBER REINFORCED CL4 ASPH SURF 0.38A PG76-22	8878
4.5" CL4 ASPH BASE 1.00D PG76-22	8878
ASPHALT MATERIAL FOR TACK NON-TRACKING	17756
WB I-64 TO HURSTBOURNE PKWY (RAMP 1)	**SQYD**
DRIVING LANES AND SHOULDERS	
1.5" FIBER REINFORCED CL4 ASPH SURF 0.38A PG76-22	5630
ASPHALT MATERIAL FOR TACK NON-TRACKING	5630
HURSTBOURNE PKWY TO EB I-64 (RAMP 3)	**SQYD**
DRIVING LANES AND SHOULDERS	
1.5" FIBER REINFORCED CL4 ASPH SURF 0.38A PG76-22	2907
ASPHALT MATERIAL FOR TACK NON-TRACKING	2907
HURSTBOURNE PKWY TO WB I-64 (RAMP 7)	**SQYD**
DRIVING LANES AND SHOULDERS	
1.5" FIBER REINFORCED CL4 ASPH SURF 0.38A PG76-22	5126
ASPHALT MATERIAL FOR TACK NON-TRACKING	5126
EB I-64 TO HURSTBOURNE PKW (RAMP 9)	**SQYD**
DRIVING LANES AND SHOULDERS	
1.5" FIBER REINFORCED CL4 ASPH SURF 0.38A PG76-22	3701
ASPHALT MATERIAL FOR TACK NON-TRACKING	3701
EB I-64 TO BLANKENBAKER PKWY (RAMPS A AND E)	**SQYD**
DRIVING LANES AND SHOULDERS	
1.5" FIBER REINFORCED CL4 ASPH SURF 0.38A PG76-22	11559
ASPHALT MATERIAL FOR TACK NON-TRACKING	11559

I-64 PAVEMENT REHABILITATION
JEFFERSON COUNTY
ITEM NUMBER: 5-22024
PAVEMENT SUMMARY

PAVING AREAS

ITEM	TOTAL
SB BLANKENBAKER PKWY TO WB I-64 (RAMP B)	**SQYD**
DRIVING LANES AND SHOULDERS	
1.5" FIBER REINFORCED CL4 ASPH SURF 0.38A PG76-22	3902
ASPHALT MATERIAL FOR TACK NON-TRACKING	3902
NB BLANKENBAKER PKWY TO WB I-64 (RAMP D)	**SQYD**
DRIVING LANES AND SHOULDERS	
1.5" FIBER REINFORCED CL4 ASPH SURF 0.38A PG76-22	1552
ASPHALT MATERIAL FOR TACK NON-TRACKING	1552
BLANKENBAKER PKWY TO EB I-64 (RAMP F)	**SQYD**
DRIVING LANES AND SHOULDERS	
1.5" FIBER REINFORCED CL4 ASPH SURF 0.38A PG76-22	1046
ASPHALT MATERIAL FOR TACK NON-TRACKING	1046
ASPHALT PAVE MILLING & TEXTURING	**SQYD**
MAINLINE TOTAL (4.50")	337627
MAINLINE SHOULDER TOTALS (1.50")	53388
RAMP TOTALS (1.50")	35423

PAVING SUMMARY

	CODE	ITEM	UNITS	TOTAL
(2)	100	ASPHALT SEAL AGGREGATE	TON	593
(3)	103	ASPHALT SEAL COAT	TON	71
(1)	219	CL4 ASPH BASE 1.00D PG76-22	TON	56236
(1)	342	CL4 ASPH SURF 0.38A PG76-22	TON	34447
(1)	2677	ASPHALT PAVE MILLING & TEXTURING	TON	90890
	20071EC	JOINT ADHESIVE	LF	200100
	24785EC	FIBER REINFORCEMENT FOR HMA	TON	34447
(4)	24970EC	ASPHALT MATERIAL FOR TACK NON-TRACKING	TON	265

(1) ALL ASPHALT MIXTURES ESTIMATED AT 110 LBS. PER SQ. YD. PER INCH OF DEPTH

(2) TWO APPLICATIONS OF ASPHALT SEAL AGGREGATE ESTIMATED AT 20 LBS. PER SQ. YD. TO BE USED AS

(3) TWO APPLICATIONS OF ASPHALT SEAL ESTIMATED AT 2.4 LBS. PER SQ. YD. TO BE USED AS DIRECTED

(4) ASPHALT MATERIAL FOR TACK NON-TRACKING ESTIMATED AT 0.70 LBS. PER SQ. YD

QUANTITIES HAVE BEEN CARRIED OVER AND INCLUDED IN THE GENERAL SUMMARY

I-64 PAVEMENT REHABILITATION
JEFFERSON COUNTY
ITEM NUMBER: 5-22024
PAVEMENT REPAIRS AND
BASE FAILURE REPAIRS

BEGIN MILEPOST	END MILEPOST	INSIDE SHOULDER	LANE #1	LANE #2	LANE #3	LANE #4	OUTSIDE SHOULDER	APPROX. LENGTH (LF)	APPROX. SURF. AREA (SQ FT)	BASE FAILURE REPAIR (SQ YD)	PAVEMENT REPAIR (SQ YD)
										3240	20757ED
EASTBOUND I-64											
15.09	15.09			X	X			8	193	**21**	
15.70	15.72				X			75	900	**100**	
15.78	15.79		X					36	432	**48**	
17.30	17.31				X			32	384	**43**	
17.73	17.74				X			46	544	**60**	
18.27	18.29			X				141	1690	**188**	
18.67	18.68			X				17	204	**23**	
WESTBOUND I-64											
13.16	13.16			X				17	204	**23**	
13.39	13.40				X			92	1104	**123**	
14.35	14.35			X				25	300	**33**	
16.34	16.34			X	X			25	450	**50**	
HURSTBOURNE PKWY RAMP 1											
5+82	6+79		X					97	1457		**162**
7+45	7+53		X					8	120	**13**	
8+46	8+54		X					8	120		**13**
HURSTBOURNE PKWY RAMP 9											
9+00	13+42			X				442	5306		**590**
20+00	21+23		X	X				123	2952		**328**
BLANKENBAKER PKWY RAMP B											
28+83	29+28		X					45	670		**74**
BLANKENBAKER PKWY RAMP E											
49+09	49+17		X					8	128		**14**
BLANKENBAKER PKWY RAMP F											
72+52	72+78		X					26	394		**44**
74+37	74+45		X					8	122		**14**
75+84	76+16		X					32	483		**54**
PROJECT TOTALS										**725**	**1293**

Lane numbers begin with the left most driving lane (lane #1 and increase as you move right into the right most lane. Note that shoulders were noted directly. (Each Direction Separately)

Ramp locations use existing stationing instead of mileposts.

Approximate base failure locations are listed in this proposal. The Engineer will determine the exact location and type of repair at the time of construction.

GUARDRAIL, SHOULDER, AND DRAINAGE SUMMARY
JEFFERSON COUNTY
Item Number: 5-22024

Location	SIDE	BEGIN MP (2)	END MP (2)	DGA BASE	DELINEATOR FOR GUARDRAIL MONO DIRECTIONAL WHITE	G/R-W BEAM-S FACE (TL-3) 8 FT POST	GUARDRAIL END TREATMENT TYPE 1	GUARDRAIL END TREATMENT TYPE 2M	REMOVE GUARDRAIL (1)	REMOVE & RESET GUARDRAIL	CHANNEL LINING CLASS II (3)	CRASH CUSHION TY6 CLASS C TL-3	OBJECT MARKER TYPE 3	CONCRETE WEDGE CURB	THRIE BEAM G/R TRANSITION (TL-3)	THRIE BEAM G/R TRANSITION (TL-2)	COMMENTS
Units				TON	EACH	LF	EACH	EACH	LF	LF	TON	LF	EACH	LF	EACH	EACH	
Item Number				1	1982	26312EC	2367	2370	2381	2383	2483	8904	20191ED	22883EN	25078ED	25079ED	
I-64 EASTBOUND																	
EB I-64	OUTSIDE	13.20	13.20	2													REPAIR SHOULDER DROP OFF
EB I-64	OUTSIDE	13.24	13.24	2													REPAIR SHOULDER DROP OFF
EB I-64	OUTSIDE	13.37	13.37	2													REPAIR SHOULDER DROP OFF
EB I-64	OUTSIDE	13.37	13.37		1	25.0			50.0						1		REPLACE GUARDRAIL CONNECTION TO BRIDGE WALL
EB I-64	OUTSIDE	13.39	13.39		1	25.0			12.5							1	REPLACE GUARDRAIL CONNECTION TO BRIDGE WALL
EB I-64	OUTSIDE	13.77	13.77		1	12.5		1	25.0								REPLACE EXISTING END TREATMENT
EB I-64	OUTSIDE	14.09	14.17	39													REPAIR SHOULDER DROP OFF
EB I-64	GORE	14.30	14.38	45													REPAIR DGA IN THE GORE AREA
EB I-64	OUTSIDE	14.40	14.43	16													REPAIR SHOULDER DROP OFF
EB I-64	GORE	14.65	14.65	11													REPAIR DGA IN THE GORE AREA
EB I-64	GORE	14.65	14.65									1	1				REPLACE EXISTING CRASH CUSHION
EB I-64	OUTSIDE	14.91	14.91		1	12.5			12.5							1	REPLACE GUARDRAIL CONNECTION TO WALL
EB I-64	OUTSIDE	14.98	14.99	2													REPAIR SHOULDER DROP OFF
EB I-64	OUTSIDE	15.03	15.03		1	12.5		1	25.0								REPLACE EXISTING END TREATMENT
EB I-64	OUTSIDE	15.60	15.60		1	12.5		1	25.0								REPLACE EXISTING END TREATMENT
EB I-64	OUTSIDE	15.65	15.69	16													REPAIR SHOULDER DROP OFF
EB I-64	OUTSIDE	15.81	15.81	87	2	12.5	1		62.5				1				REPLACE EXISTING END TREATMENT
EB I-64	OUTSIDE	15.86	15.86	3													REPAIR SHOULDER DROP OFF
EB I-64	OUTSIDE	15.89	15.89	2													REPAIR SHOULDER DROP OFF
EB I-64	OUTSIDE	15.91	15.91		1	12.5		1	25.0								REPLACE EXISTING END TREATMENT
EB I-64	OUTSIDE	15.95	16.19	127													REPAIR SHOULDER DROP OFF
EB I-64	OUTSIDE	16.25	16.26	87	2	12.5	1		62.5				1				REPLACE EXISTING END TREATMENT
EB I-64	OUTSIDE	16.30	16.30		1	25.0			50.0						1		REPLACE GUARDRAIL CONNECTION TO BRIDGE
EB I-64	OUTSIDE	16.32	16.32		1	25.0			12.5							1	REPLACE GUARDRAIL CONNECTION TO BRIDGE
EB I-64	OUTSIDE	16.33	16.33	2													REPAIR SHOULDER DROP OFF
EB I-64	OUTSIDE	16.37	16.37		1	12.5		1	25.0								REPLACE EXISTING END TREATMENT
EB I-64	OUTSIDE	16.61	16.61	3						25.0							REPAIR SHOULDER DROP OFF
EB I-64	OUTSIDE	16.68	16.68		1	12.5		1	25.0								REPLACE EXISTING END TREATMENT
EB I-64	OUTSIDE	16.69	16.71	10													REPAIR SHOULDER DROP OFF
EB I-64	GORE	16.79	16.79									1	1				REPLACE EXISTING CRASH CUSHION
EB I-64	OUTSIDE	16.78	16.79	13													REPAIR SHOULDER EROSION
EB I-64	OUTSIDE	16.85	16.92	37													REPAIR SHOULDER EROSION
EB I-64	OUTSIDE	17.35	17.41	29													REPAIR SHOULDER DROP OFF
EB I-64	OUTSIDE	17.52	17.59	36													REPAIR SHOULDER DROP OFF
EB I-64	OUTSIDE	17.67	17.67		1	25.0			50.0						1		REPLACE GUARDRAIL CONNECTION TO BRIDGE
EB I-64	OUTSIDE	17.69	17.69		1	25.0			12.5							1	REPLACE GUARDRAIL CONNECTION TO BRIDGE
EB I-64	OUTSIDE	17.79	17.79							25.0				25			REPLACE DAMAGED CURB
EB I-64	OUTSIDE	17.89	17.90	5						50.0				50			REPLACE DAMAGED CURB AND REPAIR SHLDR. WASHOUT
EB I-64	OUTSIDE	17.96	17.96	2						37.5				30			REPLACE DAMAGED CURB AND REPAIR SHLDR. WASHOUT
EB I-64	MEDIAN	18.49	18.58								120						REPAIR ERODED MEDIAN
EB I-64	OUTSIDE	18.38	18.39	11													REPAIR SHOULDER EROSION
EB I-64	OUTSIDE	18.86	18.86		1	25.0			50.0						1		REPLACE GUARDRAIL CONNECTION TO BRIDGE WALL

GUARDRAIL, SHOULDER, AND DRAINAGE SUMMARY
JEFFERSON COUNTY
Item Number: 5-22024

Location	SIDE	BEGIN MP (2)	END MP (2)	DGA BASE	DELINEATOR FOR GUARDRAIL MONO DIRECTIONAL WHITE	G/R-W BEAM-S FACE (TL-3) 8 FT POST	GUARDRAIL END TREATMENT TYPE 1	GUARDRAIL END TREATMENT TYPE 2M	REMOVE GUARDRAIL (1)	REMOVE & RESET GUARDRAIL	CHANNEL LINING CLASS II (3)	CRASH CUSHION TY6 CLASS C TL-3	OBJECT MARKER TYPE 3	CONCRETE WEDGE CURB	THRIE BEAM G/R TRANSITION (TL-3)	THRIE BEAM G/R TRANSITION (TL-2)	COMMENTS
Units				TON	EACH	LF	EACH	EACH	LF	LF	TON	LF	EACH	LF	EACH	EACH	
Item Number				1	1982	26312EC	2367	2370	2381	2383	2483	8904	20191ED	22883EN	25078ED	25079ED	
I-64 WESTBOUND																	
WB I-64	OUTSIDE	13.39	13.39		1	25.0			50.0						1		REPLACE GUARDRAIL CONNECTION TO BRIDGE WALL
WB I-64	OUTSIDE	13.68	13.68		1	25.0		1	25.0								REPLACE EXISTING END TREATMENT
WB I-64	OUTSIDE	14.06	14.06		1	25.0		1	25.0								REPLACE EXISTING END TREATMENT
WB I-64	OUTSIDE	14.09	14.09	6													REPAIR SHOULDER EROSION
WB I-64	OUTSIDE	14.60	14.60		1	25.0		1	25.0								REPLACE EXISTING END TREATMENT
WB I-64	OUTSIDE	14.73	14.73		1	25.0		1	25.0								REPLACE EXISTING END TREATMENT
WB I-64	OUTSIDE	14.74	14.74	3													REPAIR SHOULDER EROSION
WB I-64	OUTSIDE	14.86	14.86		1	25.0			12.5							1	REPLACE GUARDRAIL CONNECTION TO BRIDGE
WB I-64	OUTSIDE	14.90	14.90		1	25.0			50.0						1		REPLACE GUARDRAIL CONNECTION TO BRIDGE
WB I-64	OUTSIDE	15.09	15.09	2													REPAIR SHOULDER EROSION
WB I-64	OUTSIDE	15.14	15.14		1	12.5		1	25.0								REPLACE EXISTING END TREATMENT
WB I-64	OUTSIDE	15.79	15.80	3													REPAIR SHOULDER DROP OFF
WB I-64	OUTSIDE	15.91	15.91		1	12.5		1	25.0								REPLACE EXISTING END TREATMENT
WB I-64	OUTSIDE	16.10	16.12	87	3	87.5	1	1	137.5				1				REPLACE LOW GUARDRAIL
WB I-64	OUTSIDE	16.27	16.27		1	12.5		1	25.0								REPLACE EXISTING END TREATMENT
WB I-64	OUTSIDE	16.31	16.31		1	25.0			12.5							1	REPLACE GUARDRAIL CONNECTION TO BRIDGE
WB I-64	OUTSIDE	16.34	16.34		1	25.0			50.0						1		REPLACE GUARDRAIL CONNECTION TO BRIDGE
WB I-64	OUTSIDE	16.46	16.46	1													REPAIR SHOULDER DROP OFF
WB I-64	OUTSIDE	16.57	16.57		1	12.5		1	25.0								REPLACE EXISTING END TREATMENT
WB I-64	OUTSIDE	16.64	16.66	9						100.0							REPAIR SHOULDER EROSION
WB I-64	OUTSIDE	16.69	16.69	2						25.0							REPAIR SHOULDER EROSION
WB I-64	OUTSIDE	17.03	17.03		1	12.5		1	25.0								REPLACE EXISTING END TREATMENT
WB I-64	OUTSIDE	17.65	17.65	2													REPAIR SHOULDER EROSION
WB I-64	OUTSIDE	17.69	17.69		1	25.0			50.0						1		REPLACE GUARDRAIL CONNECTION TO BRIDGE
WB I-64	OUTSIDE	18.19	18.19		1	12.5		1	25.0								REPLACE EXISTING END TREATMENT
WB I-64	MEDIAN	18.49	18.49		1	12.5		1	25.0								REPLACE EXISTING END TREATMENT
WB I-64	OUTSIDE	18.56	18.57	87	1	50.0		1	25.0								EXTEND GUARDRAIL
WB I-64	GORE	18.80	18.80								2						REPAIR EROSION AT DROP BOX INLET
WB I-64	OUTSIDE	18.83	18.83								10						TRIM TREE ENCROACHING ON THE SHOULDER
WB I-64	OUTSIDE	18.88	18.88		1	25.0			50.0						1		REPLACE GUARDRAIL CONNECTION TO BRIDGE WALL
WB I-64	OUTSIDE	18.88	18.89	2													REPAIR SHOULDER EROSION
WB I-64	OUTSIDE	19.11	19.39	38						525.0							REPAIR SHOULDER DROP OFF
HURSTBOURNE PARKWAY																	
RAMP 1	OUTSIDE	7+66	15+80	42													REPAIR SHOULDER DROP OFF
RAMP 3	OUTSIDE	11+57	12+55	15													REPAIR SHOULDER DROP OFF
RAMP 7	OUTSIDE	8+42	8+86	4													REPAIR SHOULDER DROP OFF
BLANKENBAKER PARKWAY																	
RAMP A	GORE	7+72	8+73	21													REPAIR DGA IN THE GORE AREA
RAMP E	GORE	50+31	50+95	25													REPAIR DGA IN THE GORE AREA
RAMP B	LT	27+50	28+43	4													REPAIR SHOULDER DROP OFF
EASTBOUND TOTALS				589	18	287.5	2	6	525.0	137.5	120	2	4	105	4	4	
WESTBOUND TOTALS				242	22	500.0	1	13	712.5	650.0	12	0	1	0	5	2	
RAMP TOTALS				111	0	0.0	0	0	0.0	0.0	0	0	0	0	0	0	
PROJECT TOTALS				942	40	787.5	3	19	1237.5	787.5	132	2	5	105	9	6	

(1) Quantity includes removal of guardrail with end treatments.
(2) Ramp locations use existing stationing instead of mileposts.
(3) Any excavation and Fabric-Geotextile class 2 is incidental to the channel lining.
Note: All quantities are carried over and included in the General Summary.

JEFFERSON COUNTY
I-64
MP 13.124 TO MP 19.440
Item No. 5-22024
FD52 056 0064 (013-020)
NHPP 0642 (203)

THIS PROJECT IS A FULLY CONTROLLED ACCESS HIGHWAY

I. DESCRIPTION

Perform all work in accordance with the Kentucky Transportation Cabinet, Department of Highways, Standard Specifications for Road and Bridge Construction, Current Edition, Supplemental Specifications, any applicable Special Provisions, and applicable Standard and Sepia Drawings, except as hereafter specified. Article references are to the Standard Specifications. Furnish all materials, labor, equipment, and incidentals for the following work:

(1) Maintain and Control Traffic; (2) Remove and replace Guardrail and Guardrail End treatments at the locations listed and/or as directed by the Engineer; (3) Inlaid pavement markers; (4) Asphalt Pavement Milling and Texturing; (5) Asphalt Surface and Asphalt Base at locations listed and/or as directed by the Engineer; (6) Concrete Bridge Work; and (7) All other work specified as part of this contract.

II. MATERIALS

Except as specified in these notes or on the drawings, all materials will be according to the Standard Specifications and applicable Special Provisions and Special Notes. The Department will sample and test all materials according to Department's Sampling Manual and the Contractor will have the materials available for sampling a sufficient time in advance of the use of the materials to allow for the necessary time for testing, unless otherwise specified in these notes.

A. **Maintain and Control Traffic.** See Traffic Control Plan.
B. **Dense Graded Aggregate.** Crushed Stone Base may not be furnished in lieu of DGA.

C. **Pavement Markings - 6 inch Thermoplastic.** Use 6-inch Thermoplastic markings for permanent striping on asphalt.

D. **Pavement Markings - 12 inch Thermoplastic.** Use 12-inch Thermoplastic markings for permanent striping on asphalt ramp gores.

E. **Pavement Markings - 6 inch Durable Type-1.** Use 6-inch Durable Type 1 markings for permanent striping on bridge Decks.

F. **Channel Lining Class II.** Channel lining will be limestone and is to be placed in repair locations as directed by the Engineer.

III. CONSTRUCTION METHODS

A. **Maintain and Control Traffic.** See Traffic Control Plan.

B. **Site Preparation.** Be responsible for all site preparation. Do not disturb existing signs. This item will include, but is not limited to, incidental excavation and backfilling; removal of all obstructions or any other items; disposal of materials; sweeping and removal of debris; shoulder preparation and restoration, temporary and permanent erosion and pollution control; and all incidentals. Site preparation will be only as approved or directed by the Engineer. Other than the bid items listed, no direct payment will be made for site preparation, but will be incidental to the other items of work.

C. **Disposal of Waste.** Dispose of all cuttings, debris, and other waste off the right-of-way at approved sites obtained by the Contractor at no additional cost to the Department. The contractor will be responsible for obtaining any necessary permits for this work. Temporary openings in the right of way fence for direct access to waste sites off the right of way or for access to other public roads will not be allowed. No separate payment will be made for the disposal of waste and debris from the project or obtaining the necessary permits, but will be incidental to the other items of the work.

D. **Final Dressing, Clean Up, and Seeding and Protection.** After all work is completed, completely remove all debris from the job site. Perform Class A Final Dressing on all disturbed areas. Sow disturbed earthen areas with Seed Mixture No. I. These items are incidental to other items in the contract.

E. **Guardrail.** Construct new guardrail and end treatments and remove and reset Guardrail and guardrail End Treatments listed in the Guardrail Summary or as directed by the Engineer. Guardrail, End Treatments and Terminal Sections are listed by mile points and quantities are approximate only. Actual locations will be determined by the Engineer at the time of construction. Grade and reshape shoulders to proper template for new End Treatment. Utilize DGA for embankment when required for new end treatments. Remove any existing guardrail with a shoulder closure in place.

Do not leave the area unprotected. After the guardrail is removed, a shoulder closure shall remain in place until the guardrail is replaced in that area. To minimize safety hazards, guardrail removal is to be performed at the latest practical time prior to initiating the shoulder repair operation in an area and re-installation is to begin within 5 calendar days from the time that the shoulder repair work is completed and shall be

pursued until completion. If guardrail installation is not started within 5 calendar days after shoulder repair work ends, Liquated Damages will be charged as outlined in Section 108 of the Standard Specifications.

The Contractor shall deliver any existing salvaged guardrail system materials to the Central Sign Shop and Recycle Center in in Frankfort, KY (502-564-8187) between the hours of 8:00AM and 3:00PM, Monday through Friday and shall be neatly stacked in accordance with section 719.03.07 of the Standard Specifications. There is a guardrail delivery verification sheet which must be completed. The Contractor, Engineer, and Central Sign/Guardrail Center representative must all sign off on this sheet before payment may be made.

F. **Pavement Striping and Pavement Markers.** Temporary and permanent striping will be in accordance with Section 112, and Section 714, except that:

(1). Striping will be 6" in width on the driving lanes and 12” in width on the ramp gores;
(2). Temporary or permanent striping configuration will be in place before a lane is opened to traffic; and
(3). Permanent striping will be 6" Thermoplastic Markings on asphalt, 12” Thermoplastic Markings on asphalt ramp gores, and 6” Durable Type 1 Markings on Bridge Decks.

G. **On-Site Inspection.** Each Contractor submitting a bid for this work will make a thorough inspection of the site prior to submitting a bid and will thoroughly familiarize himself with existing conditions so that the work can be expeditiously performed after a contract is awarded. Submission of a bid will be considered evidence of this inspection having been made. Any claims resulting from site conditions will not be honored by the Department.

H. **Caution:** Information shown on the drawings and in this proposal and the types and quantities of work listed are not to be taken as an accurate or complete evaluation of the material and conditions to be encountered during construction. The bidder must draw his own conclusions as to the conditions encountered. The Department does not give any guarantee as to the accuracy of the data and no claim will be considered for additional compensation if the conditions encountered are not in accordance with the information above.

I. **Utility Clearance.** It is not anticipated that utility facilities will need to be relocated and/or adjusted; however, in the event that it is discovered that the work does require that utilities be relocated and/or adjusted, the utility companies will work concurrently with the Contractor while relocating their facilities.

IV. METHOD OF MEASUREMENT

A. **Maintain and Control Traffic.** See Traffic Control Plan.

B. **Site Preparation.** Other than the bid items listed, site preparation will not be measured for payment, but will be incidental to the other items of work**.**

C. **Dense Graded Aggregate.** DGA will be used for shoulder wedging, guardrail end treatments and slope repair. DGA will be measured in tons.

D. **Inlaid Pavement Markers and Permanent Striping.** 6" Thermoplastic Striping, 12" Thermoplastic Striping, and 6" Durable Type 1 Striping is measured per linear foot. See Traffic Control Plan. Inlaid Pavement Markers are measured as each.

V. BASIS OF PAYMENT

No direct payment will be made other than for the bid items listed in the contract. All other items required to complete the construction will be incidental to the bid items listed. Existing signs damaged by the Contractor will be replaced by the Contractor at his expense.

A. **Maintain and Control Traffic.** See Traffic Control Plan.

B. **Site Preparation.** Other than the bid items listed, no direct payment will be allowed for site preparation, but will be incidental to the other items of work.

C. **Dense Graded Aggregate.** See Section 302 of the current Standard Specifications.

D. **Inlaid Pavement Markers and Permanent Striping.** See current Standard Drawings, Sepias, Traffic Control Plan, and Sections 712 & 714 of the Standard Specifications.

NOTES APPLICABLE TO PROJECT
PAVEMENT REHABILITATION
JEFFERSON COUNTY
I-64
MP 13.124 TO MP 19.440
Item No. 5-22024
FD52 056 0064 (013-020)
NHPP 0642 (203)

1. The dimensions shown on the typical section for pavement and shoulder widths and thickness are nominal or typical dimensions. The actual dimensions to be constructed may be varied to fit existing conditions as directed or approved by the Engineer. It is not intended that existing pavement or shoulders be widened except where specified in the Proposal.

2. The contractor is to be advised that low wires and underground utilities may exist. The following locations are approximate:

   I-64 M.P. 14.87
   I-64 M.P. 15.49
   I-64 M.P. 16.33
   I-64 M.P. 16.81
   I-64 M.P. 17.71
   I-64 M.P. 18.45
   I-64 M.P. 18.56
   I-64 M.P. 18.72

   CAUTION: Other locations may exist. These and all utilities should be avoided on this project. If any utility is impacted, it will be the contractor's responsibility to contact the affected utility and cover any costs associated with the impact.

3. Guardrail, End Treatments, and Terminal Sections to be replaced, or removed and reset, are listed by mileposts. Exact placement to be approved by the Engineer on construction.

4. All mainline outside shoulders and all ramp shoulders are to receive two applications of asphalt seal coat. The width of the asphalt seal may vary throughout the project. The actual width shall be as directed by the Engineer. Quantities of asphalt seal coat and asphalt seal aggregate are included in the General Summary.

5. Any roadway signs that are damaged during construction are to be replaced at the contractor's expense.

6. Any light poles damaged during construction are to be replaced at the contractor's expense.

7. Delineators shall meet the requirements of Section 830 and 838 of the Standard Specifications. Delineators shall be placed in accordance with Section 3F of the M.U.T.C.D.

8. Pavement rideability requirements in accordance with section 410 category A of the standard specifications shall apply on this project.

9. The Department will accept the compaction of asphalt mixtures furnished for the driving lanes at one inch or greater on this project by Option A according to subsections 402 and 403 of the Standard Specifications, Current Edition. The Department will accept the compaction of all other mixtures by option B.

10. The existing edge drain system is to be preserved. Care should be taken when the asphalt is removed and replaced, and edge drains damaged during these activities will be replaced at the contractor's expense.

11. The Contractor shall be responsible for the repair of any pavement in the travelled lanes and shoulders that becomes detrimental or hazardous to the travelling public during construction. Areas needing repair will be at the discretion of the Engineer.

12. The contractor shall remove all existing traffic loop hardware prior to final milling operations and new traffic loop hardware shall be installed prior to placement of the final surface course.

13. **CAUTION:** Underground utilities are present in areas where reconstruction will occur with this project. The contractor must call Kentucky One Call (1-800-752-6007 to reach KY 811) before any construction activity begins. See Special Note for Before You Dig for more details.

14. This project is considered a Significant Project.

TRAFFIC CONTROL PLAN
I-64 JEFFERSON COUNTY
EB MP 13.124 TO MP 19.440
WB MP 13.206 TO MP 19.440
Item No. 5-22024.00
FD52 056 0064 013-020
NHPP 0642 (203)

THIS PROJECT IS A FULLY CONTROLLED ACCESS HIGHWAY

TRAFFIC CONTROL GENERAL

Except as provided herein, maintain and control traffic in accordance with the Standard Specifications and the Standard Drawings, current editions. Except for the roadway and traffic control bid items listed, all items of work necessary to maintain and control traffic will be paid at the lump sum bid price to "Maintain and Control Traffic". All lane closures used on the Project will be in compliance with the appropriate Standard Drawings.

Individual bid items for maintenance of traffic are estimated based on the proposed Maintenance of Traffic phasing and shown in this proposal. If the Contractor requests and receives approval to alter the proposed phasing of Traffic Control Plan, all additional quantities required for the modified phasing/plan shall be the responsibility of the Contractor.

Contrary to Section 106.01, traffic control devices used on this project may be new or used in like new condition at the beginning of the work and maintained in like new condition until completion of the work. Traffic control devices will conform to the current MUTCD.

Reduce the speed limit in work areas to 10 miles per hour below the posted speed limit and establish higher fine zones for work zone speeding violations. The extent of these areas within the project limits will be restricted to the proximity of actual work areas as determined by the Engineer. Notify the Engineer a minimum of 12 hours prior to using the higher fine zone signs. Payment for the signs will be at the unit bid price for “Temporary Signs” erected. Any relocation or covering of signs will be incidental to Maintain and Control Traffic.

Night work will be required on this project. Obtain approval from the Engineer for the method of lighting prior to its use.

PROJECT PHASING & CONSTRUCTION PROCEDURES

The phasing for this project will be broken into three segments. Segment 1 (Pavement Rehab) will be from project beginning to EB MP 17.11/WB MP 17.47. Segment 2 (Tucker Station Bridge Widening) will be from EB MP 17.11/WB MP 17.47 to EB MP 17.85/WB MP 18.27. Segment 3 (Pavement Rehab) will be from EB MP 17.85/WB MP 18.27 to the end of the project.

No lane closures will be allowed, in Segment 1 or Segment 3 during the following days:

November 25-29, 2026	Thanksgiving Weekend
December 24, 2026 – January 1, 2027	Christmas & New Year's
April 2-5, 2027	Easter Weekend
March 26-28, 2027	Thunder Over Louisville
April 23 - May 2, 2027	Kentucky Derby Week
May 28-31, 2027	Memorial Day Weekend
July 2-4, 2027	Independence Day Weekend

The contractor **shall maintain a minimum of two lanes** in each direction at all times unless otherwise stated in this proposal or approved by the Engineer:

Traffic may be reduced to one lane for 4.5 inch milling activities and barrier wall placement and removal at mainline bridges nightly, from 9:00 p.m. to 6:00 a.m. the following morning. Traffic may also be reduced to one lane for two weekends per direction from 9:00 p.m. Friday to 6:00 a.m. Monday on any weekend not prohibited elsewhere in this proposal or not approved by the Engineer. Any times that the eastbound lanes are reduced to one lane shall be independent of the times that the westbound lanes are reduced to one lane. Weekend closures are to be used for the purposed of surface construction utilizing **echelon paving.**

Once Segments 1 and 3 are completed (Phase IV), no lane closures will be permitted within the limits of these segments and two lanes of traffic must be maintained at all times in Segment 2 unless otherwise directed/approved by the Engineer.

The clear lane width will be 11 feet. The Contractor will make accommodations for wide loads. Use a lane closure all times when work is performed in the lane or adjacent shoulder. Shoulders used as temporary roadways will be inspected by the Engineer and if deemed necessary by the Engineer, repaired with Asphalt Mixture for Level & Wedging as directed prior to opening to traffic. Perform any maintenance of the shoulder as deemed necessary by the Engineer in order to maintain traffic. All removal of existing striping shall be by waterblasting, unless otherwise directed by the Engineer, and this work shall be for payment per linear foot as "Water Blasting Existing Stripe." Remove edge lines as necessary and approved by the Engineer throughout the project. Paint temporary edge lines through the lane closure.

All pavement edge transitions must be smooth and level before opening adjacent lanes up to traffic. A lane closure must be in place during all times that pavement edge drop-offs greater than 1.5" are present (see Pavement Edge Dropoff note).

The Engineer will determine exact locations of pavement repair, if any, at the time of construction. Once removal of pavement at a particular repair location has begun, work continuously within the parameters outlined above to complete the work and eliminate the "hole". Place Type III Barricades immediately in front of pavement removal areas. Once pavement removal at a site has begun, full depth replacement must be completed within the time a lane closure is allowed.

Access to all ramps at all interchanges on the project shall be maintained at all times, with the exception of one ramp may be closed during the night from 9:00 p.m. to 6:00 a.m. the following morning and if otherwise directed by the Engineer. NO TWO RAMPS SHALL BE CLOSED AT THE SAME TIME UNLESS OTHERWISE APPROVED BY THE ENGINEER. All diversions to access ramps in areas of lane closures shall be approved by the Engineer prior to implementing the particular lane closure.

The Contractor shall maintain positive drainage on the pavement at all times.

Final surface is to be placed utilizing **echelon paving** methods to reduce the number of cold joints on the project. Joint adhesive is to be placed on any "cold joint" on the project as directed by the Engineer. Any deviation from this scheme shall be approved by the Engineer.

All pavement edge transitions must be smooth and level before opening both lanes up to traffic. A lane closure must be in place during all times that pavement edge drop-offs are present (see Adjacent Lane Drop-offs note).

A summary of pavement repair locations is included for this project. The Engineer will determine exact locations and types of pavement repair, if any, at the time of construction. Once removal of pavement at a repair location has begun, work continuously within the parameters outlined above to complete the work and eliminate the "hole". Place Type III Barricades immediately in front of pavement removal areas. Type III Barricades will be paid by each and measured based on the maximum number used at one time in front of pavement removal areas. Relocation of Type III Barricades will not be measured for payment. Once pavement removal at a site has begun, full depth replacement must be completed within the time a lane closure is allowed.

Note that Lane shifts are required throughout the project. See the Exhibits for lane locations and widths. Stripe according to the MUTCD.

During the days and hours when a lane closure is allowed, implement the following procedures: Maintain traffic as specified in the phasing notes. Any other work not requiring traffic lane

widths to be restricted due to barrels or equipment encroaching into the interior lanes can be done during the remaining hours when two lanes of traffic must be maintained. Please refer to the "Special Note for Fixed Completion Date and Liquidated Damages" for damage rates per hour associated with failure to maintain the required number of lanes during the specified time period. Once pavement removal at a site has begun, full depth replacement must be completed within the time a lane closure is allowed. Liquidated Damages, at the rate specified per hour in the "Special Note for Fixed Completion Date and Liquidated Damages", will be assessed for each hour the existing number of lanes is not maintained.

The contractor must notify the Engineer at least fourteen (14) days prior to beginning construction in either direction.

SHOULDER PREPARATION AND RESTORATION

Prior to placing any lane closure that requires shifting traffic onto existing shoulders, patch and remove any foreign debris on the shoulders as directed by the Engineer. Remove the existing rumble strips and construct patches on the inside shoulder by milling 4 feet of the inside shoulder 1.50 inches and paving with 1.50 inches of asphalt surface. The pavement used for the rumble strip milling and shoulder patching shall be measured for payment as CL3 ASPH SURF 0.38D PG64-22.

During the time that the shoulder is used as a travel lane, remove failed materials and perform additional patching as directed by the Engineer. All work required for shoulder restoration while the shoulder is used as a travel lane will be measured and paid per ton of Leveling and Wedging PG76-22.

CONSTRUCTION PHASING

The phasing for this project will be broken into three segments. Segment 1 (Pavement Rehab) will be from project beginning to EB MP 17.11/WB MP 17.47. Segment 2 (Tucker Station Bridge Widening) will be from EB MP 17.11/WB MP 17.47 to EB MP 17.85/WB MP 18.27. Segment 3 (Pavement Rehab) will be from EB MP 17.85/WB MP 18.27 to the end of the project.

PHASE I – Segment 1 and Segment 3

OUTSIDE SHOULDER AND OUTSIDE LANES PAVEMENT REPAIRS, MILLING AND BASE, CONCRETE BARRIERS, BRIDGE CONSTRUCTION

Shift traffic to the inside lane and close the remaining lanes to traffic. Repair pavement failures in the outside lanes and shoulder as determined by the Engineer on the mainline as well as Hurstbourne Parkway Ramps 1 & 9, Blankenbaker Parkway Ramps B & F. Once the pavement has been removed, the Contractor must work continuously until the pavement has been replaced in the pavement repair areas. The top base course of the repair area should match the base course elevation of the surrounding area approximately

1.5 inches below proposed grade. The Engineer may restrict the number of locations being repaired at the same time.

In three lane sections, mill outside lane, 6 inches of outside shoulder and half of the center lane 4.5 inches and additional 3.5 feet of the outside shoulder 1.5 inches. Construct 3.0 inch base course on previously milled driving lanes and 6 inches of shoulder.

In four lane sections, mill the two outside lanes, 6 inches of outside shoulder and half of the next to inside lane (Lame 2) 4.5 inches and additional 3.5 feet of the outside shoulder 1.5 inches. Construct 3.0 inch base course on previously milled driving lanes and 6 inches of shoulder.

Construct the proposed concrete bridge pier protection walls on the outside shoulders throughout the limits of these segments. Construct the proposed bridge overlays on the outside lanes and shoulder of the bridges over Watterson Trail and the westbound bridge over Hurstborne Parkway.

PHASE I – Segment 2

OUTSIDE SHOULDER AND OUTSIDE LANES PAVEMENT REPAIRS, MILLING AND BASE

Shift traffic to the inside lanes and close the outside lanes to traffic. Repair pavement failures in the outside lanes and shoulder as determined by the Engineer. Once the pavement has been removed, the Contractor must work continuously until the pavement has been replaced in the pavement repair areas. The top base course of the repair area should match the base course elevation of the surrounding area at existing grade. The Engineer may restrict the number of locations being repaired at the same time.

Mill outside lanes and the outside shoulder 4.5 inches. Construct 4.5 inch base course on driving lanes and outside shoulder.

PHASE II – Segment 1 and Segment 3

INSIDE SHOULDER AND INSIDE LANES PAVEMENT REPAIRS, MILLING AND BASE, CONCRETE BARRIERS, BRIDGE CONSTRUCTION

Shift traffic to the outside lane, in the three lanes sections, and outside two lanes, in the four lane sections, and close the remaining lanes to traffic. Repair pavement failures in the inside lanes and shoulder as determined by the Engineer. Once the pavement has been removed, the Contractor must work continuously until the pavement has been replaced in the pavement repair areas. The top base course of the repair area should match the base course elevation of the surrounding area approximately 1.5 inches below proposed grade. The Engineer may restrict the number of locations being repaired at the

same time.

In three lane sections, mill inside lane, 6 inches of inside shoulder and half of the center lane 4.5 inches and 3.5 additional feet of the inside shoulder 1.5 inches. Construct 3.0 inch base course on previously milled driving lanes and 6 inches of shoulder.

In four lane sections, mill the inside lane, 6 inches of inside shoulder and half of the next to inside lane (Lame 2) 4.5 inches and 3.5 additional feet of the outside shoulder 1.5 inches. Construct 3.0 inch base course on preciously milled driving lanes and 6 inches of shoulder.

Construct the proposed concrete bridge pier protection walls on the outside shoulders throughout the limits of the segments. Construct the proposed bridge overlays on the outside lanes and shoulder of the bridges over Watterson Trail and the westbound bridge over Hurstborne Parkway.

PHASE II – Segment 2

INSIDE SHOULDER AND INSIDE LANES PAVEMENT REPAIRS

Shift traffic to the outside lanes and close the inside lanes to traffic. Repair pavement failures in the inside lanes and shoulder as determined by the Engineer. Once the pavement has been removed, the Contractor must work continuously until the pavement has been replaced in the pavement repair areas. The top base course of the repair area should match the surface course elevation of the surrounding area at existing grade. The Engineer may restrict the number of locations being repaired at the same time.

Mill inside lanes and the outside shoulder 4.5 inches. Construct 4.5 inch base course on driving lanes and inside shoulder. This work may be reduced, as directed by the Engineer, dependent upon the amount of time traffic will be on this pavement prior to Phase V.

PHASE III – Segment 1 and Segment 3

INSIDE SHOULDER AND INSIDE LANES FINAL SURFACE AND PERMANENT STRIPING

Shift traffic to the outside lane and close the inside lanes to traffic. Complete any roadside work including guardrail installation. Place the 1.5 inch final surface course.

After all other work is completed, place permanent striping and pavement markers. In addition to newly paved areas, place permanent striping on bridge decks within the segment limits.

PHASE IV – Segment 1 and Segment 3

OUTSIDE SHOULDER AND OUTSIDE LANES FINAL SURFACE

Shift traffic to the inside lanes and close the outside lanes to traffic. Mill roadway 1.5 inches on the ramps utilizing part width construction phasing. The ramps must remain open during the lane closure.

Ramps needing milling and surface course:

Hurstbourne Parkway Ramp 1
Hurstbourne Parkway Ramp 3
Hurstbourne Parkway Ramp 7
Hurstbourne Parkway Ramp 9
Blankenbaker Parkway Ramp A
Blankenbaker Parkway Ramp B
Blankenbaker Parkway Ramp C
Blankenbaker Parkway Ramp D
Blankenbaker Parkway Ramp E
Blankenbaker Parkway Ramp F

I-265 Ramp A
I-265 Ramp B (To be completed in Phase VI with Segment 2)
I-265 Ramp C
I-265 Ramp E
I-265 Ramp F
I-265 Ramp G
I-265 Ramp H

Complete any roadside work including guardrail installation. Place the 1.5 inch final surface course on driving lanes, ramps and 4 feet of outside mainline shoulder.

After all other work is completed, place permanent striping and pavement markers. In addition to newly paved areas, place permanent striping on bridge decks within the segment limits.

PHASE V – Segment 2

INSIDE SHOULDER WIDENING AND MEDIAN BRIDGE CONSTRUCTION

Shift traffic to the outside lanes and shoulder as shown in Phase I of the traffic control plans for the I-64 over Tucker Station Road project. Construct widening in median through the top lift of base, new median barrier and median portion of the Tucker Station Road bridge.

PHASE VI – Segment 2

OUTSIDE WIDENING AND OUTSIDE BRIDGE CONSTRUCTION

Shift traffic to the inside lanes and shoulder as shown in Phase II of the traffic control plans for the I-64 over Tucker Station Road project. Construct pavement widening of the outside lane and shoulder through the final surface course and the outside portions of the Tucker Station Road bridge.

Mill I-265 Westbound Entrance Ramp (Ramp B) lanes1.5 inches and construct 1.5 inch final surface course.

PHASE VII – Segment 2

INSIDE LANE AND SHOULDER FINAL SURFACE

Shift traffic to the newly constructed outside lanes and shoulder. Construct 1.5 inch final surface course on the inside lanes and shoulder.

PHASE VIII – Segment 2

PLACE PERMANENT STRIPING

After all other work is completed, place permanent striping and pavement markers. Mobile operations may be utilized. In addition to newly paved areas, place permanent striping on bridge decks within the segment limits.

LANE/SHOULDER CLOSURES

Limit the lengths of lane and shoulder closures to only that needed for actual operations in accordance with the phasing specified herein, or as directed by the Engineer. Any deviation from this scheme shall be approved by the Engineer. Contrary to section 112, lane and shoulder closures will **NOT** be measured for payment, but are considered incidental to "Maintain and Control Traffic," lump sum.

SIGNS

Additional traffic control signs in addition to normal lane closure signing detailed on the Standard Drawings may be required by the Engineer. Additional signs needed for lane closures may include, but are not limited to, dual mounted TRUCKS USE LEFT/RIGHT LANE, LEFT/RIGHT LANE CLOSED 1 MILE, LEFT/RIGHT LANE CLOSED 2 MILE, LEFT/RIGHT LANE CLOSED 3 MILE, SLOWED/STOPPED TRAFFIC AHEAD. Signage for reduced speed limits and Higher Fine Zones will be furnished, relocated, and maintained by the Contractor.

Contrary to section 112, individual signs will be measured only once for payment, regardless of how many times they are set, reset, removed, and relocated during the duration of the project.

Replacements for damaged signs or signs directed to be replaced by the Engineer due to poor legibility or reflectivity will not be measured for payment.

A quantity of signs has been included for lane shifts, "Roadwork Ahead" signs on entrance ramps, and extra Double Fine signs and Speed Limit signs between interchanges to be paid only once no matter how many times they are moved or relocated.

FLASHING ARROWS

Flashing arrows will be paid for once, no matter how many times they are moved or relocated. The Department **WILL NOT** take possession of the flashing arrows upon completion of the work.

PORTABLE CHANGEABLE MESSAGE SIGNS

Portable Changeable Message Signs being bid independently of the Queue Warning System shall be used as directed by the Engineer. The messages required to be provided will be designated by the Engineer. In the event of damage or mechanical/electrical failure, the Contractor will repair or replace the Portable Changeable Message Sign immediately. Portable Changeable Message Signs will be paid for once, no matter how many times they are moved or relocated. The Department **WILL NOT** take possession of the signs upon completion of the work.

BARRELS

Barrels are to be used for channelization or delineation and will be incidental to "MAINTAIN AND CONTROL TRAFFIC" according to Section 112.04.01. Replacements for damaged barrels directed by the Engineer to be replaced due to poor condition or reflectivity will not be measured for payment.

TRUCK MOUNTED ATTENUATORS

Furnish and install MUTCD approved truck mounted attenuators (TMA) in advance of work areas when workers are present less than 12 feet from traffic. If there is less than 500 feet between work sites, only a single TMA will be required at a location directed by the Engineer. Locate the TMAs at the individual work sites and move them as the work zone moves within the project limits. All details of the TMA installations shall be approved by the Engineer. TMA will be paid for once, no matter how many times they are moved or relocated. The Department **WILL NOT** take possession of the TMAs upon completion of the work.

PAVEMENT MARKINGS

If lane closures are in place during nighttime hours, remove or cover the lenses of inlaid pavement markers that do not conform to the traffic control scheme in use, or as directed by the Engineer. Replace or uncover lenses before a closed lane is reopened to traffic. No direct payment will be

made for removing and replacing or covering and uncovering the lenses, but will be incidental to "Maintain and Control Traffic".

Place temporary and permanent striping in accordance with Section 112 and Section 714, except that:

1. Temporary and permanent striping will be 6" in width in the driving lanes and 12” in the ramp gores.
2. If the contractor's operations or phasing requires temporary markings which must be subsequently removed from the ultimate pavement, an approved removable lane tape will be used.
3. Edge lines will be required for temporary striping.
4. Existing, temporary, or permanent striping will be in place before a lane is opened to traffic.
5. Place permanent striping on pavement within the project limits.
6. Permanent striping will be Thermoplastic Striping on asphalt and Durable Type 1 markings on bridge decks.

Should the Contractor change the existing striping pattern, the Contractor is to restripe the roadway back to its original configuration within the time allotted for a lane closure.

PAVEMENT EDGE DROP-OFFS

A pavement edge between lanes that traffic **IS EXPECTED** to cross in a lane change maneuver shall not have an elevation difference greater than 1.5”. Place warning signs (MUTCD W8-11 or W8-9A) shall be placed in advance of and at 1500’ intervals throughout the drop-off area. Dual posting on both sides of the traveled way shall be required. Wedge all transverse transitions between resurfaced and unresurfaced areas which traffic may cross with asphalt mixture for leveling and wedging. Remove the wedges prior to placement of the final surface course.

Pavement edges that traffic is **NOT EXPECTED** to cross, except accidentally, shall be treated as follows:

Less than 1.5” - 2” – Protect with a lane closure.

2” to 4” – Protect with a lane closure. Place plastic drums, vertical panels, or barricades should be used in accordance with MUTCD and Kentucky Standard Drawings. Cones may not be used in place of plastic drums, panels, and barricades at any time. Construct a wedge with compacted cuttings from milling, trenching, or asphalt mixtures with a 3:1 or flatter slope, when work is not active in the drop-off area. Place Type III Barricades at the beginning of the lane closures, and place additional Type III Barricades spaced at 2,500 feet, or as directed by the Engineer, during the time the lane closure is in place.

Greater than 4" – Pavement Repair areas – In areas where pavement is to be removed, work should proceed continuously so that traffic is exposed to a drop-off for the minimum amount of time necessary to bring the pavement back up to existing grade. Barrel spacing should be 20 feet and appropriate lighting should be utilized to illuminate the area during nighttime operations.

Guardrail Installation – Guardrail will be removed at the last practical moment and replaced as soon as the placement of all base courses in an area requiring guardrail is complete. All areas from which guardrail is removed shall be protected by a shoulder closure or other method approved by the Engineer until the new guardrail is installed.

TRAFFIC COORDINATOR

Designate an employee to be traffic coordinator. The designated Traffic Coordinator shall meet the requirements described in Section 112.03.12 of the Department's Standard Specifications. The Traffic Coordinator will report all incidents throughout the work zone to the Engineer on the project. The Contractor will furnish the name and a telephone number where the Traffic Coordinator can be contacted at all times. The I-64 rehabilitation is classified as a Significant Project.

COORDINATION OF WORK

The Contractor is advised that other projects may be in progress within or in the near vicinity of this project. The traffic control of those projects may affect this project and the traffic control of this project may affect those projects. The Contractor will coordinate the work on this project with the work of the other contractors. In case of conflict, the Engineer will determine the relative priority to give to work phasing on the various projects.

CONTRACTOR'S AND CONTRACTOR'S EMPLOYEES' VEHICLES

Do not use or allow employees to use median crossovers at any time except when inside lanes are closed for construction. In all other phases of construction, change vehicular direction of travel only at interchanges.

LAW ENFORCEMENT OFFICERS (LEO'S)

Police support shall be a unit consisting of an off-duty police officer from any police force agency having lawful jurisdiction and a police car equipped with externally mounted flashing blue lights. Officers may be asked to issue citations for traffic violations, but will be considered incidental to the contract unit bid price for "Law Enforcement Officer". No additional compensation will be provided. The officers will be placed at the discretion of the Engineer. Police support will be measured and paid on a per hour basis for each officer and police vehicle.

COUNTY OF	ITEM NO.
JEFFERSON	5-22024

I-64
MAINTENANCE OF TRAFFIC
TYPICAL SECTIONS
PHASE I

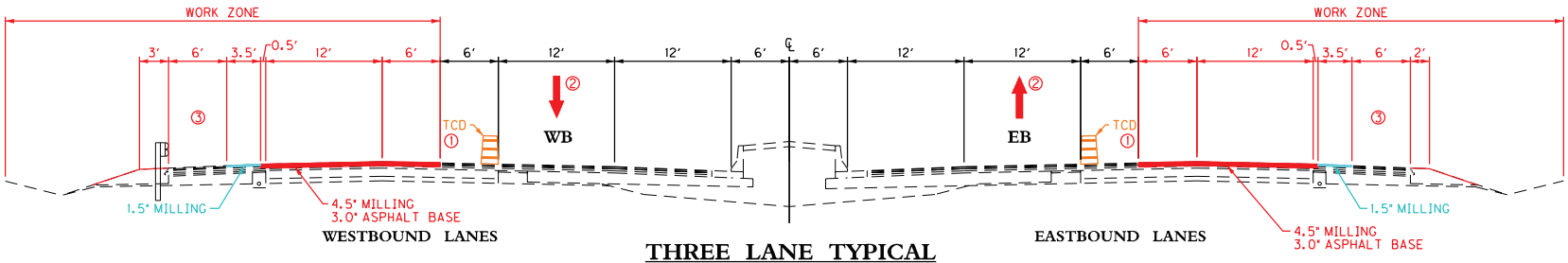

THREE LANE TYPICAL

WESTBOUND STA. 307+50 (M.P. 14.464) TO STA. 402+75 (M.P. 16.268)
WESTBOUND STA. 443+00 (M.P. 17.030) TO STA. 536+73.65 (M.P. 18.801)
EASTBOUND STA. 287+00 (M.P. 14.075) TO STA. 402+25 (M.P. 16.258)
EASTBOUND STA. 415+50 (M.P.16.509) TO STA. 555+67.61 (M.P. 19.160)

- PERFORM PAVEMENT REPAIRS WHERE NECESSARY ON LANES AND SHOULDER
- PERFORM PAVEMENT REPAIRS ON
  HURSTBOURNE PARKWAY RAMPS 1 & 9
  BLANKENBAKER PARKWAY RAMP F
- CONSTRUCT MILLING ON LANES AND SHOULDERS
- CONSTRUCT SURFACE PAVEMENT ON MAINLINE

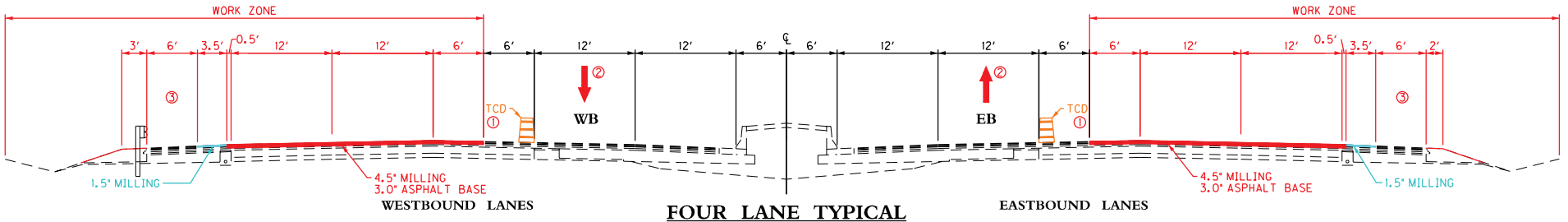

FOUR LANE TYPICAL

WESTBOUND STA. 238+55.60 (M.P. 13.158) TO STA. 307+50 (M.P. 14.464)
WESTBOUND STA. 402+75 (M.P. 16.268) TO STA. 443+00 (M.P. 17.030)
EASTBOUND STA. 238+55.60 (M.P. 13.158) TO STA. 287+00 (M.P. 14.075)
EASTBOUND STA. 402+25 (M.P. 16.258) TO STA. 415+50 (M.P. 16.509)

- PERFORM PAVEMENT REPAIRS WHERE NECESSARY ON LANES AND SHOULDER
- PERFORM PAVEMENT REPAIRS ON
  BLANKENBAKER PARKWAY RAMP B
- CONSTRUCT MILLING ON LANES AND SHOULDERS
- CONSTRUCT SURFACE PAVEMENT ON MAINLINE

① TCDs SHALL BE SHIFTED TO ALLOW ADEQUATE SPACE TO PERFORM PAVEMENT REPAIRS AND PAVING OPERATIONS.

② RAMPS MUST REMAIN OPEN DURING LANE CLOSURE.

③ MILL AND FILL SHLDR. 4.5" DEEP, FULL WIDTH FROM EB M.P. 17.11 TO M.P. 17.85 AND WB M.P. 17.47 TO M.P. 18.27

NOTE: ALLOW ACCESS TO RAMPS BETWEEN INTERCHANGES AS DIRECTED AND/OR APPROVED BY THE ENGINEER

I-64
MAINTENANCE OF TRAFFIC
TYPICAL SECTIONS

COUNTY OF	ITEM NO.
JEFFERSON	5-22024

I-64
MAINTENANCE OF TRAFFIC
TYPICAL SECTIONS
PHASE II

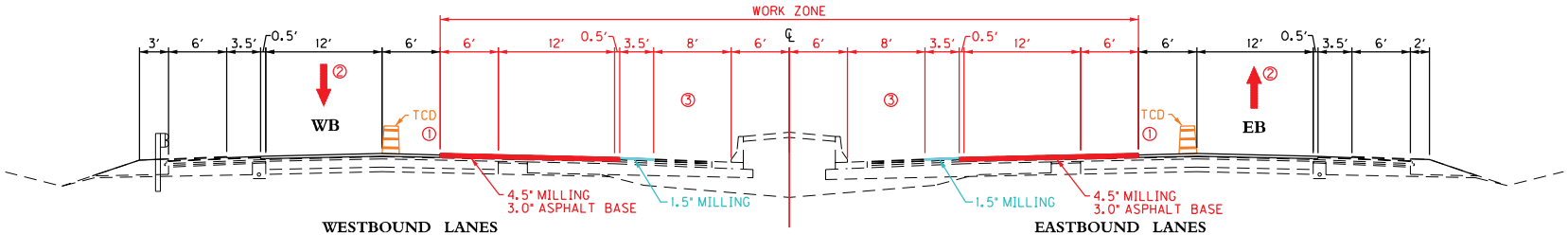

THREE LANE TYPICAL

WESTBOUND STA. 307+50 (M.P. 14.464) TO STA. 402+75 (M.P. 16.268)
WESTBOUND STA. 443+00 (M.P. 17.030) TO STA. 536+73.65 (M.P. 18.801)
EASTBOUND STA. 287+00 (M.P. 14.075) TO STA. 402+25 (M.P. 16.258)
EASTBOUND STA. 415+50 (M.P.16.509) TO STA. 555+67.61 (M.P. 19.160)

- PERFORM PAVEMENT REPAIRS WHERE NECESSARY ON LANES AND SHOULDER
- CONSTRUCT MILLING ON LANES AND SHOULDERS
- CONSTRUCT SURFACE PAVEMENT ON MAINLINE

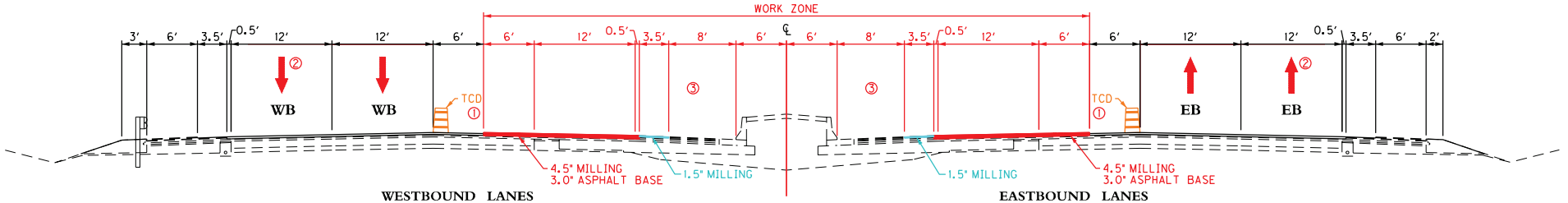

FOUR LANE TYPICAL

WESTBOUND STA. 238+55.60 (M.P. 13.158) TO STA. 307+50 (M.P. 14.464)
WESTBOUND STA. 402+75 (M.P. 16.268) TO STA. 443+00 (M.P. 17.030)
EASTBOUND STA. 238+55.60 (M.P. 13.158) TO STA. 287+00 (M.P. 14.075)
EASTBOUND STA. 402+25 (M.P. 16.258) TO STA. 415+50 (M.P. 16.509)

- PERFORM PAVEMENT REPAIRS WHERE NECESSARY ON LANES AND SHOULDER
- CONSTRUCT MILLING ON LANES AND SHOULDERS
- CONSTRUCT SURFACE PAVEMENT ON MAINLINE

① TCDs SHALL BE SHIFTED TO ALLOW ADEQUATE SPACE TO PERFORM PAVEMENT REPAIRS AND PAVING OPERATIONS.

② RAMPS MUST REMAIN OPEN DURING LANE CLOSURE.

③ MILL AND FILL SHLDR. 4.5" DEEP, FULL WIDTH FROM EB M.P. 17.11 TO M.P. 17.85 AND WB M.P. 17.47 TO M.P. 18.27

NOTE: ALLOW ACCESS TO RAMPS BETWEEN INTERCHANGES AS DIRECTED AND/OR APPROVED BY THE ENGINEER

I-64
MAINTENANCE OF TRAFFIC
TYPICAL SECTIONS

COUNTY OF	ITEM NO.
JEFFERSON	5-22024

I-64
MAINTENANCE OF TRAFFIC
TYPICAL SECTIONS
PHASE III

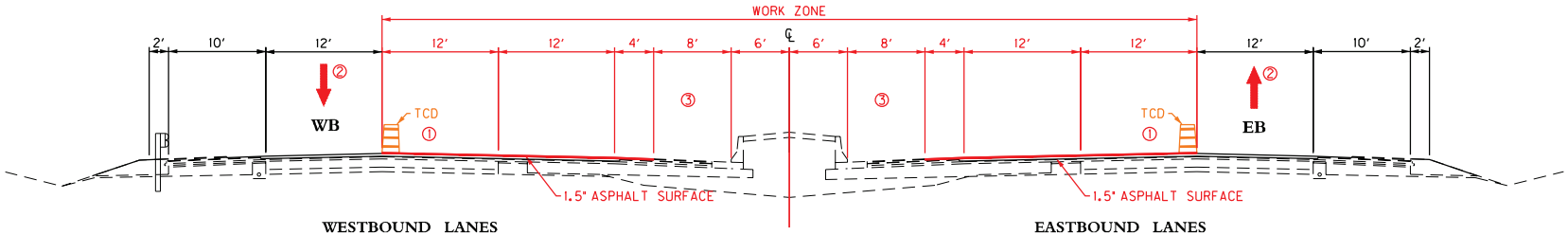

THREE LANE TYPICAL

WESTBOUND STA. 307+50 (M.P. 14.464) TO STA. 402+75 (M.P. 16.268)
WESTBOUND STA. 443+00 (M.P. 17.030) TO STA. 536+73.65 (M.P. 18.801)
EASTBOUND STA. 287+00 (M.P. 14.075) TO STA. 402+25 (M.P. 16.258)
EASTBOUND STA. 415+50 (M.P.16.509) TO STA. 555+67.61 (M.P. 19.160)

- PERFORM PAVEMENT REPAIRS WHERE NECESSARY ON LANES AND SHOULDER
- CONSTRUCT MILLING ON LANES AND SHOULDERS
- CONSTRUCT SURFACE PAVEMENT ON MAINLINE

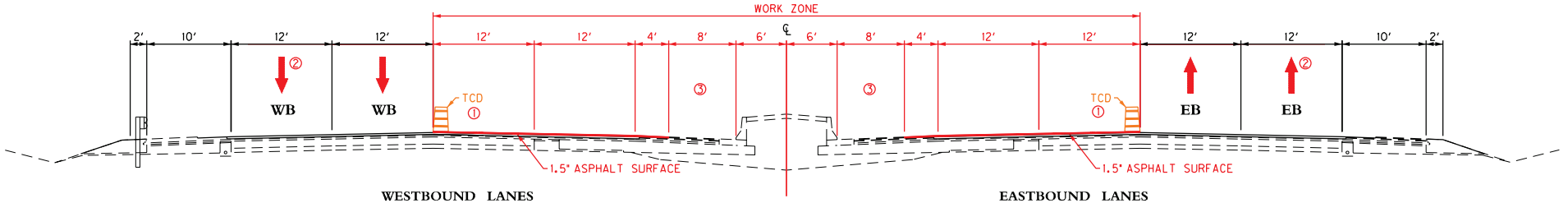

FOUR LANE TYPICAL

WESTBOUND STA. 238+55.60 (M.P. 13.158) TO STA. 307+50 (M.P. 14.464)
WESTBOUND STA. 402+75 (M.P. 16.268) TO STA. 443+00 (M.P. 17.030)
EASTBOUND STA. 238+55.60 (M.P. 13.158) TO STA. 287+00 (M.P. 14.075)
EASTBOUND STA. 402+25 (M.P. 16.258) TO STA. 415+50 (M.P. 16.509)

- PERFORM PAVEMENT REPAIRS WHERE NECESSARY ON LANES AND SHOULDER
- CONSTRUCT MILLING ON LANES AND SHOULDERS
- CONSTRUCT SURFACE PAVEMENT ON MAINLINE

① TCDs SHALL BE SHIFTED TO ALLOW ADEQUATE SPACE TO PERFORM PAVEMENT REPAIRS AND PAVING OPERATIONS.

② RAMPS MUST REMAIN OPEN DURING LANE CLOSURE.

③ MILL SHLDR TO RECEIVE 1.5" SURF EB M.P. 17.11 TO M.P. 17.85 AND WB M.P. 17.47 TO M.P. 18.27

NOTE: ALLOW ACCESS TO RAMPS BETWEEN INTERCHANGES AS DIRECTED AND/OR APPROVED BY THE ENGINEER

I-64
MAINTENANCE OF TRAFFIC
TYPICAL SECTIONS

COUNTY OF	ITEM NO.
JEFFERSON	5-22024

I-64
MAINTENANCE OF TRAFFIC
TYPICAL SECTIONS
PHASE IV

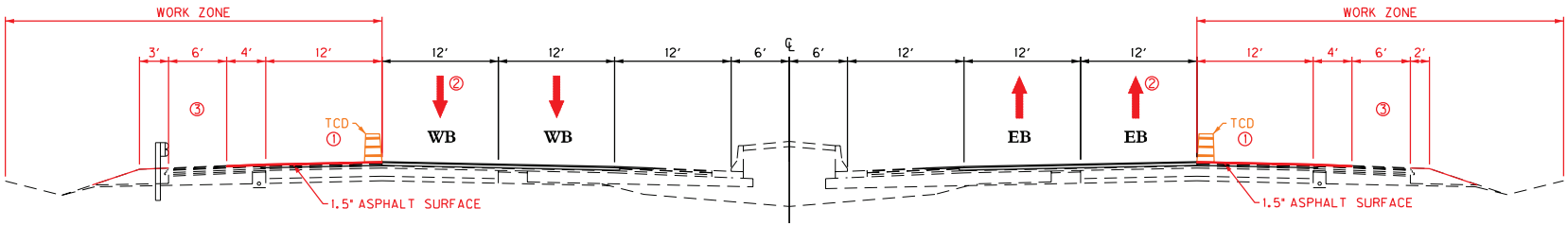

WESTBOUND LANES

EASTBOUND LANES

THREE LANE TYPICAL

WESTBOUND STA. 307+50 (M.P. 14.464) TO STA. 402+75 (M.P. 16.268)
WESTBOUND STA. 443+00 (M.P. 17.030) TO STA. 536+73.65 (M.P. 18.801)
EASTBOUND STA. 287+00 (M.P. 14.075) TO STA. 402+25 (M.P. 16.258)
EASTBOUND STA. 415+50 (M.P.16.509) TO STA. 555+67.61 (M.P. 19.160)

- PERFORM PAVEMENT REPAIRS WHERE NECESSARY ON LANES AND SHOULDER
- PERFORM PAVEMENT REPAIRS ON
  HURSTBOURNE PARKWAY RAMPS I & 9
  BLANKENBAKER PARKWAY RAMP F
- CONSTRUCT MILLING ON LANES AND SHOULDERS
- CONSTRUCT SURFACE PAVEMENT ON MAINLINE

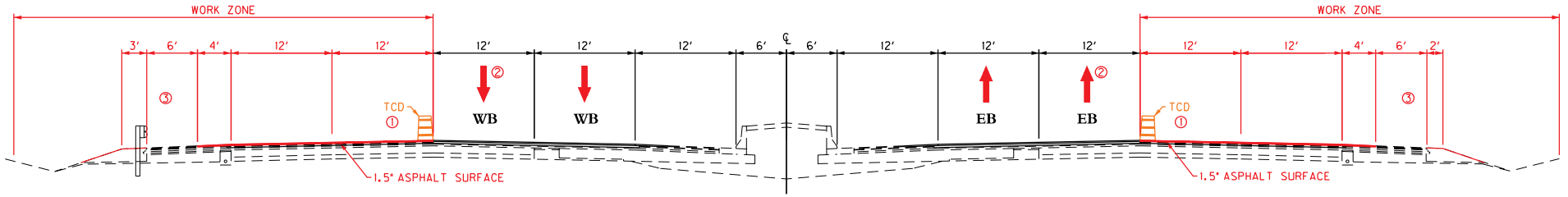

WESTBOUND LANES

EASTBOUND LANES

FOUR LANE TYPICAL

WESTBOUND STA. 238+55.60 (M.P. 13.158) TO STA. 307+50 (M.P. 14.464)
WESTBOUND STA. 402+75 (M.P. 16.268) TO STA. 443+00 (M.P. 17.030)
EASTBOUND STA. 238+55.60 (M.P. 13.158) TO STA. 287+00 (M.P. 14.075)
EASTBOUND STA. 402+25 (M.P. 16.258) TO STA. 415+50 (M.P. 16.509)

- PERFORM PAVEMENT REPAIRS WHERE NECESSARY ON LANES AND SHOULDER
- PERFORM PAVEMENT REPAIRS ON
  BLANKENBAKER PARKWAY RAMP B
- CONSTRUCT MILLING ON LANES AND SHOULDERS
- CONSTRUCT SURFACE PAVEMENT ON MAINLINE

① TCDs SHALL BE SHIFTED TO ALLOW ADEQUATE SPACE TO PERFORM PAVEMENT REPAIRS AND PAVING OPERATIONS.

② RAMPS MUST REMAIN OPEN DURING LANE CLOSURE.

③ MILL SHLDR TO RECEIVE 1.5" SURF EB M.P. 17.11 TO M.P. 17.85 AND WB M.P. 17.47 TO M.P. 18.27

NOTE: ALLOW ACCESS TO RAMPS BETWEEN INTERCHANGES AS DIRECTED AND/OR APPROVED BY THE ENGINEER

I-64
MAINTENANCE OF TRAFFIC
TYPICAL SECTIONS

JEFFERSON COUNTY
056GR26D040-NHPP

COUNTY OF	ITEM NO.
JEFFERSON	5-22024

BRIDGES
(DIMENSIONS SHOWN ARE MINIMUMS)

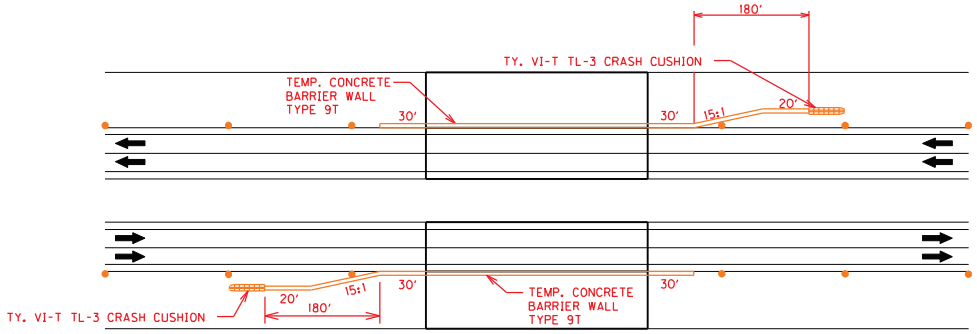

OUTSIDE SHOULDER
BARRIER RETROFIT
I–64 BRIDGE OVER WATTERSON TRAIL

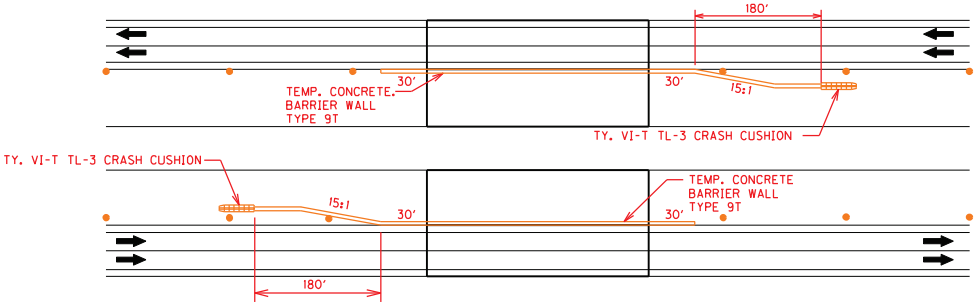

INSIDE SHOULDER
BARRIER RETROFIT
I–64 BRIDGE OVER WATTERSON TRAIL

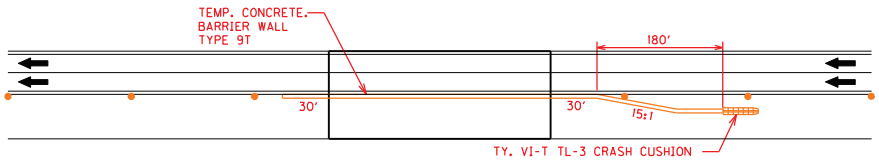

INSIDE SHOULDER
BARRIER RETROFIT
WESTBOUND I–64 BRIDGE OVER HURSTBOURNE PKWY

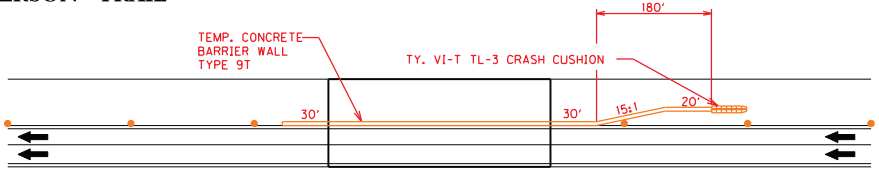

OUTSIDE SHOULDER
BARRIER RETROFIT
WESTBOUND I–64 BRIDGE OVER HURSTBOURNE PKWY

NOTE: ALLOW ACCESS TO RAMPS BETWEEN INTERCHANGES AS DIRECTED AND/OR APPROVED BY THE ENGINEER

I-64
MAINTENANCE OF TRAFFIC
TYPICAL SECTIONS

COUNTY OF	ITEM NO.
JEFFERSON	5-22024

I–64 OVER HURSTBOURNE PKWY
MAINTENANCE OF TRAFFIC TYPICAL SECTIONS

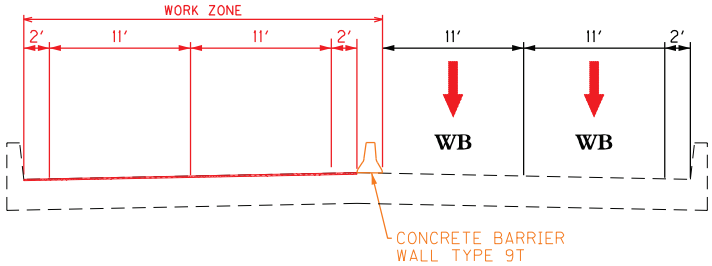

PHASE I

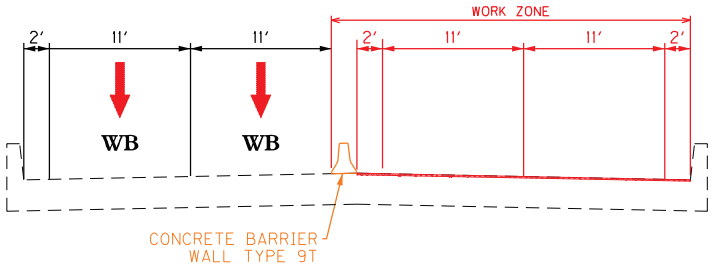

PHASE II

NOTE: ALLOW ACCESS TO RAMPS BETWEEN INTERCHANGES AS DIRECTED AND/OR APPROVED BY THE ENGINEER

I-64
MAINTENANCE OF TRAFFIC
TYPICAL SECTIONS

JEFFERSON COUNTY
056GR26D040-NHPP

REFERENCES

1. Kentucky Transportation Cabinet, Department of Highways, Standard Specifications for Road and Bridge Construction, Current Edition.

2. FHWA Manual on Uniform Traffic Control Devices (MUTCD), latest edition.

3. Kentucky Department of Highways Standard Drawings, current editions, as applicable:

RBI-001	Typical Guardrail Installations
RBI-002	Typical Guardrail Installations
RBI-005	Guardrail Installation at Bridge Colums
RBI-006	Guardrail Installation at Sign Supports
RBR-001	Steel Beam Guardrail “W” Beam
RBR-005	Guardrail Components
RBR-015	Guardrail Steel Posts
RBR-016	Guardrail Timber Posts
RBR-018	Guardrail Transition System
RBR-025	Guardrail End Treatment Type 2M
RBR-055	Delineators for Guardrail
RBR-060	Delineators at Narrow Shoulder Bridges
RBR-100	Steel Beam Guardrail (Thrie Beam)
RBR-200-00-S	MGS Guardrail TL-3
RDD-040	Channel Lining Class II and III
RDX-225	Silt Trap Type B
RDX-230	Silt Trap Type C
RGS-001	Curve Widening and Superelevation Transitions
RGS-002	Superelevation for Multilane Pavement
RGX-001	Miscellaneous Standards
RGX-200	One Point Proctor Family of Curves
TPM-100	Inlaid Pavement Marker Arrangements Multi Lane Roadways
TPM-105	Inlaid Pavement Marker Arrangements Multi Lane Roadways
TPM-125	Inlaid Pavement Marker Arrangement Exit Gore and Off Ramp
TPM-126	Inlaid Pavement Marker Arrangement for Parallel Deceleration Lane
TPM-130	Inlaid Pavement Marker Arrangement On Ramp with Tapered Acceleration Lane
TPM-135	Inlaid Pavement Marker Arrangement On Ramp with Parallel Acceleration Lane
TPM-170	Flexible Delineator Post Arrangements for Horizontal Curves
TPM-171	Flexible Delineator Post Arrangements for Interchange Ramps and Crossovers
TPM-200	Typical Entrance Ramp Markings for Interstates and Parkways
TPM-201	Typical Exit Ramp Markings for Interstates and Parkways
TPM-202	Typical Exit Ramp Markings for Interstates and Parkways
TPM-204	Typical Markings for Gore Areas
TPR-115	Edgeline Rumble Strips Placement Details
TPR-130	Rumble Strip Details Multi-Lane Roadways and Ramps
TTC-115	Lane Closure Multi-Lane Highway Case I
TTC-120	Lane Closure Multi-Lane Highway Case II
TTC-135	Shoulder Closure
TTC-160	Temporary Pavement Marker Arrangements for Lane Closures
S-TTC-170	Sheet 001: Speed Zone Signing for Work Zones

S-TTC-170	Sheet 002: Higher Fine Zone Sign
S-TTC-170	Sheet 003: Signs for Automated Speed Enforcement
S-TTC-170	Sheet 004: Location of Work Zone Signing
TTD-125	Pavement Condition Warning Signs
TTS-110	Mobile Operation for Paint Striping Case III
TTS-115	Mobile Operation for Paint Striping Case IV
TTS-120	Mobile Operation for Durable Striping Case 1
TTS-140	Channelizing Devices (Including Barricades)
BHS-013	Thrie-Beam Guardrail Transition (TL-2)
BHS-014	Thrie-Beam Guardrail Transition (TL-3)

4. Kentucky Transportation Cabinet, Department of Highways, Standard Specifications for Road and Bridge Construction, Current Edition - Supplemental Specifications, as applicable:

Standard Notes:

Special Note	Portable Changeable Message Signs
Special Note	Longitudinal Joint Adhesive
Special Note	Guardrail Delivery Verification Sheet
Special Note	Non-Tracking Tack Coat
Special Note	Experimental KYCT and Hamburg Testing
Special Note	Portable Queue Warning Alert System
Special Note	Special Note for Recycled Asphalt Pavement (RAP) Stockpile Management

Project Specific Notes:

Special Note	Typical Section Dimensions
Special Note	Before You Dig
Special Note	Fixed Completion Date and Liquidated Damages
Special Note	Asphalt Milling and Texturing
Special Note	Electronic Delivery Management System (Asphalt)
Special Note	Electronic Delivery Management System (Aggregate)
Special Note	Concrete Sealing
Special Note	Connected Arrow Panels
Special Note	Fiber Reinforcement of Asphalt
Special Note	Crash Wall Structure Plans
Special Note	Structure Plans
Special Note	Materials, Installation, and Bid Items for Permanent Traffic Data Acquisition Stations

SPECIAL NOTE FOR TYPICAL SECTION DIMENSIONS

The dimensions shown on the typical sections for pavement and shoulder widths are nominal or typical dimensions. The actual dimensions to be constructed may be varied to fit existing conditions as directed or approved by the Engineer. It is not intended that existing pavement or shoulders be widened unless specified elsewhere in the Proposal.

SPECIAL NOTE FOR BEFORE YOU DIG

The contractor is instructed to call 1-800-752-6007 to reach KY 811, the one-call system for information on the location of existing underground utilities. The call is to be placed a minimum of two (2) and no more than ten (10) business days prior to excavation. The contractor should be aware that owners of underground facilities are not required to be members of the KY 811 one-call Before –U-Dig (BUD) service. The contractor must coordinate excavation with the utility owners, including those whom do not subscribe to KY 811. It may be necessary for the contractor to contact the County Court Clerk to determine what utility companies have facilities in the area.

Special Note for Fixed Completion Date and Liquidated Damages I-64 Jefferson County Item No. 5-22024

This project has an Intermediate Completion Date and a Fixed Completion Date.

Intermediate Completion Date – August 30, 2027

All work related to segments 1 and 3 (pavement rehab), as described in the traffic control notes, shall be completed by **August 30, 2027**.

Fixed Completion Date – September 30, 2028

All other work included in the proposal that is not required to be completed by the Intermediate Completion date shall be completed by **September 30, 2028**.

Liquidated damages in the amount specified in the Standard Specifications, per calendar day or fraction thereof, will be assessed for each day required work remains incomplete beyond the Intermediate or Fixed Completion date.

In addition to the Liquidated Damages specified in Section 108.09, Liquidated Damages in the following amounts will be charged when a lane closure remains in place during the prohibited period outlined in the Traffic Control Plan, excluding delays caused by inclement weather:

Mainline:	$5,000 for the first hour or fraction thereof $10,000 for the second hour or fraction thereof $20,000 for any additional hour or fraction thereof
Ramps:	$1,000 for the first hour or fraction thereof $2,500 for the any additional hour or fraction thereof

These hourly disincentives will still be in effect after the Fixed Completion Date and will be charged in addition to the $5,000 per calender day if warranted. The contractor is expected to make every effort to complete the work in order to open the mainline lane closure within the specified timeframe.

If work is delayed by inclement weather, the minimum work required to allow removal of the lane closure, as directed by the Engineer, shall be resumed immediately as soon as weather permits or the Department will begin to assess Liquidated Damages as specified herein.

Contrary to Section 108.09 of the Standard Specifications, **the disincentive fee will be charged during those periods when seasonal limitations of the Contract prohibit the Contractor from working on a controlling item or operation. This includes the months from December through March.**

All liquidated damages will be applied cumulatively.
All other applicable portions of Section 108 apply.

Special Note For:
Asphalt Milling and Texturing

Begin paving operations immediately after the commencement of the asphalt milling operations. Continue paving operations continuously until completed. Do not allow public traffic to drive on the milled surface. If paving operations are not begun within this time, liquidated damages will be assessed at the rate prescribed by Section 108.09 of the current Standard Specifications until paving operations are begun.

Removal of the existing pavement markers located in the project limits prior to the milling operation are to be considered incidental to the bid item "Asphalt Pavement Milling and Texturing."

SPECIAL NOTE FOR CONCRETE SEALING

These Notes or designated portions thereof, apply where so indicated on the plans, proposals or bidding instruction.

I. DESCRIPTION. Perform all work in accordance with the Department's 2019 Standard Specifications, and applicable Supplemental Specifications, the attached sketches, and these Notes. Section references are to the Standard Specifications.
This work consists of: (1) Furnish all labor, materials, tools, and equipment; (2) Clean the bridge deck; (3) Seal the bridge deck; (4) Maintain & control traffic; and, (5) Any other work specified as part of this contract.

II. MATERIALS.

A. Sealer. Use a sealer from the KYTC list of approved materials.

B. Coverage Rate: Follow all manufacturers recommendations for coverage rates except the application rate must not exceed the square footage coverage rate per gallon of sealer as given in the chart below. If the manufacturer recommends a coverage rate greater than given in the table below, apply sealer at the rate given in the table below for the chosen sealers silane percentage.

% Silane	Coverage rate (ft^2/gallon)
100	300
40	120
20	60

III. CONSTRUCTION.

A. Curing Compound. Contrary to Section 609.03.12 of the specifications, curing compound is not to be used on this deck due to potentially causing issues with the concrete sealer. During the deck pour, finishing, and tining operations the Class AA concrete shall be kept continuously moist with the use of a mister until burlap or curing blankets are applied to the surface. At no point should water be pooling or running off the surface or the surface of the concrete be allowed to become dry. After the burlap or curing blankets are installed, cure in accordance with the specifications. Include all costs in the unit price bid for Class AA concrete. Failure to properly cure the concrete in accordance with this note and the specifications may result in weakened or cracked concrete. If the concrete is weakened or cracked due to improper curing, the contractor will be responsible for providing alternates to fix the issues to the Engineer for review and the contractor will be solely responsible for all costs to do so, up to complete replacement. Do not begin any construction on fixing any issues without approval of the Engineer.

B. Contract Time. Concrete Sealing may need to be installed after contract time has elapsed in a separate mobilization and after the Engineer has declared the project otherwise complete. Liquidated damages shall not be charged provided Concrete Sealing is complete within 60 days after the last concrete pour on the structure. When the Contractor has not completed Concrete Sealing within the time frame allotted, Liquidated Damages shall be charged at 25 percent of the original contract daily charge from the expiration of the time allowed until the Contractor completes the work except the Department will not deduct liquated damages when weather limitations prohibit the Contractor from performing the work.

C. Cleaning the Deck. Dry clean the deck to remove all loose debris. Remove all visible hydrocarbons from the surface with detergent approved by the manufacturer of the deck sealant. Pressure wash all surfaces to be sealed at 2000 to 3000 psi. Install pressure gauges at each wand to verify pressure. Use 30° fan tip or as recommended by the manufacturer of the deck sealant. Hold pressure washing wand a minimum of 45° from the deck with a maximum stand-off distance of 12 inches.

D. Sealing the Deck. Allow new concrete to cure a minimum 28 days prior to application of sealer. Monitor weather conditions prior to sealer application. Refer to manufacturer's recommendations for proper ambient conditions. Do not apply sealer if precipitation is anticipated within the time stated by the manufacturer. Allow the deck to dry 24 hours (after washing or rain event) before sealer application. The deck can be reopened to traffic while drying. Sealer must be applied within 48 hours of washing or the deck must be rewashed. Divide the deck into predefined areas of specific square footage to aid in determining usage. Comply with manufacturer's usage recommendation. Using a low pressure pump, apply sealer and spread evenly with broom or squeegee; do not allow pooling to remain. When each predefined area is complete, measure the amount of sealer used to verify proper usage. After sealing, follow manufacturer's recommended cure time before opening to traffic. On vertical surfaces, apply the sealer in a flooding application from the bottom up, so the material runs down 6 to 8 inches below the spray pattern.

E. Inspection: Monitor all aspects of the project to assure compliance to this specification. Observe and document general conditions during the entirety of the project. Verify that each phase of work has been satisfactorily completed prior to beginning the next phase. Phases are described as follows:

1. Dry cleaning to remove loose debris, verify and document:
   a. All debris has been removed and disposed of properly.
2. Removal of hydrocarbons, verify and document:
   a. The manufacturer's recommended detergent is used for removal.
   b. Hydrocarbons have been satisfactorily removed.
3. Pressure washing, verify and document:
   a. Washing pressure at the wand.
   b. Tip size used.
   c. Wash angle and stand-off distance.

d. The deck is satisfactorily cleaned.

4. Sealer application, verify and document:
   a. Proper cure time for new concrete.
   b. Deck surface is dry.
      1. Document time since washed.
      2. Was deck opened to traffic after washing?
   c. Ambient conditions.
      1. Document ambient temperature, surface temperature, relative humidity, and dew point.
   d. Application and distribution method.
   e. Coverage to be complete and even.
   f. Material is not allowed to remain pooled.
   g. Monitor material usage.
   h. No traffic until proper cure time is allowed.

IV. MEASUREMENT

A. Concrete Sealing. The Department will measure the quantity per square feet of each area sealed.

B. Mobilization – For Concrete Surface Treatment. The Department will pay the lump sum bid for an additional mobilization when Concrete Sealing must be performed after the Engineer has deemed the project complete except for Concrete Sealing, structure is opened to traffic, and Contractor has fully demobilized.

V. PAYMENT

A. **23378EC - Concrete Sealing – Sq. Ft.** Payment at the contract unit price per square feet is full compensation for the following: (1) Furnish all labor, materials, tools, and equipment; (2) Clean the bridge deck; (3) Seal the bridge deck; (4) Maintain & control traffic; and, (5) Any other work specified as part of this contract.

B. **26233EC - Mobilization – For Concrete Surface Treatment – L.S.** Payment at the contract lump sum price bid shall be full compensation for the Contractor to remobilize on the project to perform Concrete Sealing as detailed herein this special note.

Special Note for Connected Arrow Panels

1. DECRIPTION

Furnish, install, operate, and maintain connected arrow panels at the locations shown on the plans or designated by the Engineer. Remove and retain possession of arrow panels when they are no longer needed on the project. The connected arrows panels shall be capable of reporting real-time lane closure and location information to the Kentucky Transportation Operations Center as well as for third party GPS vendors (Mapping, Navigation, Connected Vehicles, etc).

2. MATERIALS & EQUIPMENT

2.1. General

Conform to the current requirements of the Standard Drawings and the MUTCD. Mount on traffic-worthy carriages that meet all applicable safety standards. Devices shall be compliant with current MASH standards. Use either diesel powered, electric, or solar powered. A portable dynamic message sign may be used to simulate an arrow panel if it meets the requirements in this section. The use of retrofit kits to modify older arrow panel equipment to become “connected” will be allowed as long as they are in compliance with this special note, meet the manufacturer's specifications and recommendations, and are approved by the Engineer.

Materials installed on the project shall be provided by the Contractor in new or like-new condition, shall be corrosion resistant, and in strict accordance with all the details shown within Contractor's Plans approved by KYTC. The Contractor shall maintain an adequate inventory of parts and replacement units to support maintenance and repair of the arrow panels. Pre-deployment is a condition of the system's acceptance and is based on the successful performance demonstration for a (5) day continuous period in accordance with this specification and as set forth in the plans.

2.2. Capabilities and Performance Requirements

2.2.1. Power System: The arrow panels power source shall be capable of maintaining power as well as ability to broadcast location and operations data for year-round deployment in a stand-alone state and without intervention.

2.2.2. Display: Type C Arrow panels as defined in Part 6 of the MUTCD are required for all applications. The following display requirement shall apply to Connected Arrow Panels:

- Minimum display size shall be 96 inches wide by 48 inches tall.
- Minimum legibility distance is 1 mile.
- Minimum number of elements (or pixels) is 15.
- Elements shall be capable of at least 50% dimming from full brightness. Use dimmed mode for nighttime operation.
- Color presented by elements shall be yellow.

2.2.3. Operating Modes: Connected Arrow Panel shall be switched between the following modes in accordance with the contract or as directed by the Engineer:

- Blank – The unit is turned ON, but the display shall be blank and the connected arrow panel shall make transmissions to the data feed.
- Flashing Left/Right Arrow
- Flashing Double Arrow
- Alternating Diamond/Flashing Caution

2.2.4. GPS and Remote Communications: The connected arrow panels shall be connected to the cloud and provide a data feed compliant with latest specification of the U.S Department of Transportation Work Zone Data Exchange (WZDx) Device Feed. Furthermore, the real time data program shall be in compliance with "Title 23 of the Code of Federal Regulations (CFR) Chapter 1 Subchapter F Part 511.305-315 (https://www.ecfr.gov/current/title-23/part-511/subpart-C)." Arrow panels shall have the ability to receive and transmit the GPS coordinates (latitude and longitude) within a 30-foot diameter of its true location. Arrow panels shall transmit status and location as follows: a). Mode change within 2 minutes. b). Location (if moved more than 500 feet) within 2 minutes. c). Health check every 30 minutes.

Data shall be accessible through a website and the Contractor shall provide a username and password for protection. The website shall be accessible seven (7) days a week and twenty - four (24) hours a day. The website shall provide historical & real-time data in graphical and numerical formats and shall have the capability of being integrated within the Department's Traffic Operations Center (if requested). The website should be compatible to most handheld devices. Data shall be saved on the manufacturer's network for up to (5) years from the deployment date of system and shall be provided at the request of the Department at any time within the (5) year window. The use of the website shall be included within the price of connected arrow panels.

3. CONSTRUCTION

The Contractor will be required to perform a trial run with the arrow panels to be utilized for a project at least 1 week prior to being deployed in the presence of the Engineer. The trial run shall go through a series of steps and meet all the following requirements to the satisfaction of the Engineer to ensure the devices are communicating and responding in the provided WZDx Device Feed:

- Make sure device is turned on, with a blank display, and at the start location – Make sure it is blank and the data feed accurately represents this.
- Right Arrow – Turn the arrow panel to right and wait at least 5 minutes, so the data is archived.
- Left Arrow – Turn the arrow panel to left and wait at least 5 minutes, so the data is archived.
- Move 500' – Blank the display. Move the arrow panel at least 500' (try to minimize as much as possible).

- Wait 5 minutes after 1st move – Turn on Right Arrow Display. Wait 5 minutes to see if the location is refined.
- Move 500' again – Blank the display. Move the arrow panel again at least 500' (try to minimize as much as possible).
- Wait 5 minutes after 2nd move – Turn on Left Arrow Display. Wait 5 minutes to see if the location is refined.
- Right Arrow again – Change to right arrow to make sure the device location and information is updated.
- Wait 1 hour (if on roadway wait as long as possible) – Wait 1 hour to see how much the check-in occurs.
- Turn Device Off – Turn the device off and record information.

Once the arrow panels are approved by the Engineer, install them at the beginning of the lane closure taper per plan or as the Engineer directs and ensure the panels operate continuously when deployed on the project. The Contractor shall have available one portable flashing arrow that has been approved in reserve. Place the reserve arrow panel in operation if one is damaged or if there is mechanical or electrical failure. A qualified technician will be responsible to correct any deficiencies in accordance with Section 112.03.15 deemed necessary by the Engineer.

When the connected arrow panel is not displaying the flashing left or right arrow, the display shall be blank and the connected arrow panel shall make transmissions to the data feed. When a connected arrow panel is switched to Flashing Left Arrow mode or Flashing Right Arrow mode, the display shall flash accordingly, and the connected arrow panel shall transmit its location and its current operating mode to the data feed. The Connected Arrow Panels central server shall provide real-time status change alerts to a list of designated personnel via text and/or email. An alert shall be sent each time a device is switched between operating modes (i.e., switched between ON mode and OFF mode; each time a connected arrow panel is switched between blank, flashing left arrow mode, flashing right arrow mode, flashing caution mode), each alert shall include the current operating mode, the previous operating mode, the date and time of the mode switch, and the location (latitude and longitude) of the device at the time of the mode switch.

4. MEASUREMENT

The Department will measure each item below in Months. For partial months the Department will pay in 0.25 increments based on the number of calendar days in the below table.

Partial Month Payment Schedule

Days	Increment
0-7 days	0.25
8-14 days	0.50
15-21 days	0.75
22-31 days	1.00

The Department will not measure any costs associated with the required cellular communications (SAT communications will be required, if cellular is not available), all supporting field equipment, website access, and unlimited data reports accessible by the Engineer, but will consider them incidental to this item of work. The Department will not measure the reserved flashing arrows for payment and will consider them incidental to this item of work. The Department will not measure installation, maintenance, or removal for payment and will consider them incidental to this item of work. Always maintain system components in good working condition. Repair or replace damaged or malfunctioning components, at no cost to the Department, as soon as possible and within (12) hours of notification by the Engineer. The quantity to be paid for arrow panels will be the maximum number of arrow panels in use at any one time on the project.

5. PAYMENT

Code	Pay Item	Pay Unit
26237EC	Connected Arrow Panels	MONTH

February 17, 2022

SPECIAL NOTE FOR FIBER REINFORCEMENT OF ASPHALT

PART 1 – GENERAL

1.1 DESCRIPTION

This Section includes specifications for furnishing all materials, equipment, labor, and incidentals for mixing aramid fiber reinforcements to hot mix asphalt.

1.2 DEFINITIONS

A. HMA - hot mix asphalt, without aramid fiber.
B. WMA- warm mix asphalt, without aramid fiber.
C. Reinforced HMA - hot mix asphalt including aramid fibers properly proportioned, uniformly mixed and coated with asphalt.
D. Aramid fiber - pure aramid fiber meeting the material properties of this specification, without additive materials.
E. Delivery material(s) - the material(s) combined with the pure aramid fiber to facilitate Aramid fiber and HMA/WMA proportioning, uniform mixing with the HMA/WMA, and asphalt coating of the aramid fibers.
F. Aramid product - the aramid supplier's mixture of pure aramid fiber and delivery material(s).
G. Manufacturer - the company that produces the aramid fiber from raw materials.
H. Supplier - the company that offers an aramid product.

PART 2 – PRODUCT

2.1 MATERIALS

Meet the following aramid fiber properties.

Property	Measure	Standard
Material	Aramid	ASTM D276
Form	Monofilament fibers	Manufacturer Certification
Length	0.75-1.50 inches (+/- 10%)	Manufacturer Cert.
Specific Gravity	1.44	ASTM D276
Minimum Tensile Strength	400,000 psi	ASTM D3379
Maximum Tensile Elongation	1.8 %	ASTM D3379
Degradation Temperature	800 degrees F	ASTM D276
Acid and Alkali Resistance	Inert	Manufacturer Cert.

2.2 SUBMITTALS

Submit the following.

A. Identify the mixing plant.
B. Provide a specification sheet from the aramid fiber manufacturer.
C. Provide the following from the aramid product supplier at least three weeks prior to HMA/WMA production.
    1. The supplier's specified mix rate for the aramid product.
    2. Certification that the amount of aramid fiber in the aramid product will be between 2.1 and 4.0

ounces of pure aramid fiber for each ton of hot mix asphalt.

3. Evidence showing how many times, if any, the supplier's fiber product has been successfully produced at the asphalt plant to be used for the project.
4. Proven method of introducing the aramid fibers into the hot mix asphalt which will not cause the aramid fibers to become airborne.

2.3 JOB MIX FORMULA

When aramid fiber is required as a mixture ingredient, modification to the job mix formula is not required.

PART 3 – EXECUTION

3.1 CONSTRUCTION REQUIREMENTS

Store aramid product in a dry environment and do not allow them to be in contact with moisture.

Mix 3.0 ounces (+/- 1.0 ounces) of aramid fibers per ton of asphalt. The weight applied is for pure aramid fibers only, weight of any delivery materials is not considered.

Have a fiber supplier's representative on site during the first day of production mixing. This requirement can be waived if fiber supplier and HMA/WMA producer can supply evidence of supplier's brand of fiber product being successfully produced by the HMA/WMA producer. The fiber supplier's representative may be on site for additional days as requested by the Engineer.

Introduce the aramid product as follows:

1. Batch Plant

   When a batch type plant is used, add the aramid product dosage to the aggregate in the weigh hopper. This may be done with loose fibers and a fiber metering device, or may be done by using manual dosing equipment. If necessary, increase the batch dry mixing time to ensure the aramid fibers are uniformly distributed prior to the injection of asphalt cement into the mixer.

2. Drum Plant

   When a continuous or drier-drum type plant is used, add the aramid product to the RAP material to uniformly disperse with the aggregate and injected asphalt. Use a separate aramid product metering device feed system to proportion by weight of total mix, the required percentage of fiber reinforcement into the mixture. Control the aramid product metering system with a proportioning device to meet the dosing requirements.

   When a continuous or drier-drum type plant is used for limited production volumes, the addition of the aramid product may be done by using manual measuring tools or equipment and adding them directly onto the RAP belt or into the RAP opening on the plant. Because this is not an automated process, a written protocol must be supplied by the producer to demonstrate how they will attain the dosage requirement, and documentation must be supplied by the

February 17, 2022

material manufacturer assuring this method will produce the desired uniform aramid fiber distribution.

Mix the aramid fiber with the aggregate longer, if needed, to allow thorough distribution of aramid fibers at the end of the mixing process and to promote asphalt coating of individual strands of aramid fiber. At the start of any fiber mixing, visually observe the reinforced HMA/WMA at the plant and in first three trucks at the point of discharge and prior to delivery to the job site. Observation shall include using a shovel or other device. Look for proper distribution of aramid fibers and make mixing adjustments if needed.

WMA: Use of a feeder system will be required for both Drum and Batch plants when producing Warm Mix Asphalt to ensure correct distribution and coating of the aramid fibers. This requirement maybe waved if the asphalt producer can demonstrate complete melting of the delivery material and proper incorporation of the aramid fibers into the WMA.

3.2 ACCEPTANCE

Acceptance of the reinforced HMA/WMA will include the following factors:

1. Aramid fiber is properly proportioned based on documentation comparing fiber feed to HMA/WMA mix production. A log of the total amount of aramid fibers applied certified by fiber manufacturer/supplier shall be required daily.
2. By visual inspection at the end of the mixing process, there is no clumping of aramid fiber or aramid delivery product and the aramid fibers are uniformly distributed.
3. All other mixture and density requirement of the asphalt as detailed in the Standard Specifications, current edition, shall apply.

PART 4 - MEASUREMENT AND PAYMENT

The Department will measure the quantity of Fiber Reinforcement for HMA/WMA as ton of asphalt placed with fibers. Each ton of asphalt placed with the aramid fibers according to this special note will be measured and paid for at the contract unit bid price per ton, and shall include full compensation for furnishing all labor, tools, equipment, and incidentals for doing all the work involved in adding the fibers to HMA/WMA.

Code	Pay Item	Pay Unit
24785EC	Fiber Reinforcement for HMA	Tons

I-64 WB over Hurstbourne Parkway

M.P. 14.874

(056B00040L)

Latex Concrete Overlay



ESTIMATE OF QUANTITIES

Bid Code	Bid Item	Unit	Quantity
8510	Remove Epoxy Bit Foreign Overlay	SQYD	1237
24094EC	Partial Depth Patching	CUYD	30
8526	Concrete Class M Full Depth Patch	CUYD	5.0
8549	Blast Cleaning	SQYD	1248
8504	Epoxy Sand Slurry	SQYD	50
8534	Concrete Overlay - Latex	CUYD	51.6
8150	Steel Reinforcement	LB	1300

GENERAL NOTES

1. On **westbound bridge only** remove and replace deck overlay with new 1.5" LMC overlay.
2. Perform work in accordance with the Special Note for *Bridge Deck Restoration and Waterproofing with Concrete Overlays,* except that the Approach Pavement and Marking are included with the Roadway sheets and quantities.
3. Perform work in two phases. See Traffic Control Plan.
4. Applicable Standard Drawing: BGX-004-09 *Bridge Restoration and Waterproofing with Concrete Overlays.*
5. As an aid to the contractor, plans of the existing structure are available from the Division of Maintenance upon request. The completeness of these drawings is not guaranteed and no responsibility is assumed by KYTC for their accuracy. The existing drawing numbers for the structure are 15294,19668, and 21439.

SPECIAL NOTE FOR BRIDGE DECK RESTORATION AND WATERPROOFING WITH CONCRETE OVERLAYS

1. DESCRIPTION. Perform all work in accordance with the Kentucky Transportation Cabinet, Department of Highway's Standard Specifications for Road and Bridge Construction and applicable Supplemental Specifications, the Standard Drawings (current editions), this Note, and the attached detail drawings. Section references are to the Standard Specifications. This work consists of the following: (1) Furnish all labor, materials, tools, and equipment, (2) Machine prep the existing slab, (3) Complete full-depth and partial depth repairs as directed by the Engineer, (4) Repair/replace damaged and corroded reinforcing bars, (5) Place new concrete overlay and epoxy-sand slurry in accordance with Section 606, (6) Complete asphalt approach pavement, and (7) Any other work specified as part of this contract. All construction will be in accordance with Section 606 unless otherwise specified.

2. MATERIALS.

A. Latex Concrete. See Section 606.03.17.

B. Class "M" Concrete. Use either "M1" or "M2". See Section 601.

C. Bituminous Asphalt. Use CL2 ASPH SURF 0.38D PG64-22.

D. Epoxy-Sand Slurry. See Section 606.03.10.

3. CONSTRUCTION.

A. Remove Existing Overlay. In addition to Section 606.03.03, totally remove the existing concrete overlay by milling.

B. Partial Depth Slab Repair and Latex Overlay. Remove areas determined to be unsound by the Engineer via hydro-demolition or via handheld jackhammers weighing less than 45lbs. in accordance with Section 606.02.10 D. Repair/Replace all damaged or severely corroded reinforcing bars prior to partial depth repair operation. The Department will not measure material removal and will consider this work incidental to the bid item "PARTIAL DEPTH PATCHING". Mix and place Latex Modified Concrete Overlay in accordance with Sections 606.03.08 and 606.03.17.

C. Asphalt Approach Pavement. Mill each existing asphalt approach to the distance indicated in the attached detailed drawings. Remove the bituminous material uniformly by making an edge key, so as to provide a smooth transition to the finished bridge when a new bituminous overlay of compacted depth of approximately 1½" is added to the approaches. The grinding depth may vary depending on the condition of the existing approach and final elevation of bridge end. Dispose of all removed material away from the site.

D. Surface Texturing. Texture the concrete surface of the overlay in accordance with Section 609.03.10.

E. Pavement Markings. Restore pavement markings to original patterns and/or as directed by the Engineer in accordance with Sections 713, 714 and 837. See Standard Drawings TPM-115 and TPM-207 Current Edition.

F. Verifying Field Conditions. The Contractor shall field verify all dimensions before ordering any material. New material that is unsuitable due to variation in existing structure shall be replaced at the Contractors expense.

G. Damage to the Structure. The Contractor shall bear all responsibility and expense for all damage to the structure during the repair work even to removal and replacement of a fallen span, should the fallen span result from the Contractor's actions.

4. MEASUREMENT. See Section 606 and the following:

A. Latex Modified Concrete for Overlay. The Department will measure the quantity in cubic yards using the theoretical volume as follows for each bridge:

056B00040LN (192'-0" x 66'-0" x 1.5") = 58.7 CY

B. Remove Epoxy Bit Foreign Overlay, Blast Cleaning, Epoxy Sand Slurry and Bridge Overlay Approach Pavement. The Department will measure the removal of the existing overlay in square yards.

C. Partial Depth Patching. The Department will measure the quantity in cubic yards by deducting the theoretical volume of bridge deck overlay (LMC) from the total volume (as indicated by the batch quantity tickets) of Concrete required to obtain the finished grade shown on the plans or established by the Engineer.

D. Concrete Class M Full Depth Patch and Concrete Latex Overlay. The Department will measure the quantity in cubic yards.

E. Steel Reinforcement. The Department will measure any reinforcing steel necessary for the partial or full depth patch in pounds.

F. Pave Striping-Perm 4 Inch. The Department will measure the quantity in lineal feet.

5. PAYMENT. See Section 606 and the following:

A. Remove Epoxy Bit Foreign Overlay (08510). The Department will make payment for the removal of the existing overlay.

B. Partial Depth Patching (24094EC). The Department will make payment for removing exiting materials, furnishing, and placing all new materials completed and accepted.

C. Concrete Class M Full Depth Patch (08526). The Department will make payment for removing exiting materials, furnishing, and placing all new materials.

D. Blast Cleaning (08549). The Department will make payment for blast cleaning all surfaces specified.

E. Epoxy Sand Slurry (08504). The Department will make payment for furnishing and placing all new materials as specified.

F. Concrete Latex Overlay (08534). The Department will make payment for furnishing and placing all new material as specified.

G. Steel Reinforcement (08150). The Department will make payment for steel reinforcement, if necessary.

H. Asphalt Approach Pavement (03304). The Department will make payment for removing existing materials, furnishing, and placing all new materials as specified.

I. Pave Striping-Perm 4 Inch (06514). The Department will make payment for furnishing and placing permanent striping as specified.

BRIDGE PIER CRASHWALL ADDITIONS

SPECIFICATIONS

ALL REFERENCES TO THE STANDARD SPECIFICATIONS ARE TO THE 2026 EDITION OF THE KENTUCKY DEPARTMENT OF HIGHWAYS STANDARD SPECIFICATIONS FOR ROAD AND BRIDGE CONSTRUCTION WITH SUPPLEMENTAL SPECIFICATIONS.

DESIGN LOAD

THE COLUMNS AND CRASH WALLS ARE DESIGNED FOR 600 KIP COLLISION FORCE.

DESIGN METHOD

ALL REINFORCED CONCRETE MEMBERS ARE DESIGNED BY THE LOAD AND RESISTANCE FACTOR METHOD AS SPECIFIED IN THE CURRENT AASHTO SPECIFICATIONS.

MATERIALS DESIGN SPECIFICATIONS

FOR CLASS "A" REINFORCED CONCRETE	F'C = 3500 psi
FOR STEEL REINFORCEMENT	FY = 60000 psi

REINFORCEMENT

DIMENSIONS SHOWN FROM THE FACE OF CONCRETE TO BARS ARE TO CENTER OF BAR UNLESS OTHERWISE SHOWN. CLEAR DISTANCE TO THE FACE OF CONCRETE IS 2" UNLESS NOTED OTHERWISE. SPACING OF BARS IS FROM CENTER TO CENTER OF BARS.

DRILLING AND ANCHORING INTO EXISTING CONCRETE

FOR ANCHORING NEW REINFORCING STEEL INTO EXISTING CONCRETE, SEE SECTIONS 511 AND 602.03.04 OF THE STANDARD SPECIFICATIONS. AVOID DRILLING THROUGH COLUMN REINFORCEMENT (VERTICAL BARS, HORIZONTAL STIRRUPS AND/OR SPIRAL BARS). IF REINFORCEMENT CAN NOT BE LOCATED PRIOR TO DRILLING AND IS HIT, STOP DRILLING IMMEDIATELY. SHIFT DRILL TEMPLATE LOCATION AND RE-DRILL. THE COST OF THIS WORK, INCLUDING LABOR, TOOLS, AND MATERIALS IS TO BE INCIDENTAL TO THE UNIT BID PRICE FOR STEEL REINFORCEMENT.

CONCRETE SEALING

APPLY CONCRETE SEALER TO ALL EXPOSED SURFACES OF THE NEW REINFORCED PIER CRASH WALLS/BARRIERSIN ACCORDANCE WITH SECTION 616 OF THE SPECIFICATIONS. THE CONCRETE SHALL RECEIVE THE ORDINARY SURFACE FINISH AS DESCRIBED IN SECTION 601.03.18 PRIOR TO BEING SEALED.

BEVELED EDGES

ALL EXPOSED EDGES SHALL BE BEVELED ¾" UNLESS OTHERWISE SHOWN.

TRAFFIC CONTROL

THE CONTRACTOR SHALL BE RESPONSIBLE FOR ERECTING AND MAINTAINING PROPER BARRICADES AND ADVANCE WARNING SIGNALS FOR ROAD CONSTRUCTION AND ROAD CLOSURE.

UTILITIES

BEFORE BEGINNING WORK, LOCATE ALL EXISTING UTILITIES. CONSIDER LOCATION OF ANY UTILITIES SHOWN ON THE EXISTING OR CONTRACT DRAWINGS TO BE APPROXIMATE AND FOR INFORMATIONAL PURPOSES ONLY. THE DEPARTMENT DOES NOT WARRANT THE LOCATIONS AND ASSUMES NO RESPONSIBILITY FOR THE ACCURACY OR COMPLETENESS. THE CONTRACTOR MUST MAKE UTILITY LOCATION DETERMINATION. EXCEPT AS SHOWN ON THE PLANS, WORK AROUND AND DO NOT DISTURB EXISTING UTILITIES.

REMOVE EXISTING STRUCTURE

THE EXISTING BARRIERS BETWEEN/BESIDE THE PIER COLUMNS ARE TO BE REMOVED AS SHOWN IN THE PLANS. SAWCUT BARRIER, WHERE SHOWN IN THE PLANS, BEFORE BEGINNING REMOVAL PROCESSTHE COST OF THE WORK TO REMOVE THE LEADING, TRAILING, AND INTERMEDIATE CRASHWALLS ADJACENT TO THE PIER COLUMNS SHALL BE INCLUDED IN THE UNIT BID PRICE FOR REMOVE BARRIER.

STRUCTURE EXCAVATION

THE COST FOR ANY EXCAVATION REQUIRED TO REMOVE AND CONSTRUCT CRASHWALL IS INCIDENTAL TO THE UNIT BID PRICE FOR CONCRETE CLASS "A".

PLANS OF EXISTING STRUCTURE

AS AN AID TO THE CONTRACTOR, PLANS OF THE EXISTING BRIDGES ARE AVAILABLE (SEE DRAWING NUMBERS 15588, 21228, AND 14239). THE COMPLETENESS AND ACCURACY OF THESE DRAWINGS IS NOT GUARANTEED.

VERIFYING FIELD CONDITIONS

THE CONTRACTOR SHALL VERIFY ALL DIMENSIONS BEFORE ORDERING MATERIAL. NEW MATERIAL THAT IS UNSUITABLE BECAUSE OF VARIATIONS IN THE EXISTING STRUCTURE SHALL BE REPLACED AT THE CONTRACTOR'S EXPENSE.

DAMAGE TO THE STRUCTURE

THE CONTRACTOR IS RESPONSIBLE FOR ANY AND ALL DAMAGE TO THE EXISTING STRUCTURE, SHOULD IT BE ALLOWED TO FALL DUE TO THE CONTRACTOR'S ACTIONS. THE CONTRACTOR IS RESPONSIBLE FOR BOTH THE REMOVAL AND REPLACEMENT OF THE FALLEN PORTION AT THE CONTRACTOR'S EXPENSE.

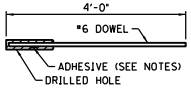

DOWEL DETAIL

DOWEL NOTE:

ANCHOR DOWELS SHALL BE ADHESIVELY BONDED TO EXISTING CONCRETE IN DRILLED HOLES. THE ANCHOR DOWEL ADHESIVE SHALL BE ONE OF THE FOLLOWING:

A. HILTI HIT-HY 200
B. AN APPROVED EQUAL MEETING ACI 355.4 AND THE MINIMUM BOND STRESS OF THE HILTI-HY 200.

INSTALL ANCHOR DOWELS WITH A MINIMUM EMBEDMENT INTO EXISTING CONCRETE AS SHOWN. INSTALL PER THE MANUFACTURER'S RECOMMENDATIONS.

STANDARD DRAWINGS

BHS-013	THRIE-BEAM GUARDRAIL TRANSITION (TL-2)
BHS-014	THRIE-BEAM GUARDRAIL TRANSITION (TL-3)
RBR-015-06	STEEL GUARDRAIL POST

ABBREVIATIONS

℄	CENTERLINE
COL	COLUMN
CLR	CLEAR
EF	EACH FACE
EMBED	EMBEDMENT
EQ	EQUAL
MIN	MINIMUM
MAX	MAXIMUM
PROJ	PROJECT
SPA	SPACE
TYP	TYPICAL
UNO	UNLESS NOTED OTHERWISE
VAR	VARIES

INDEX OF SHEETS

SHEET NO	DESCRIPTION
S1	TITLE, QTYS, NOTES, & INDEX OF SHEETS
S2	I-64 CRASHWALLS - OXMOOR AVE
S3	I-64 CRASHWALLS - BLANKENBAKER PKWY
S4	I-64 CRASHWALLS - BLANKENBAKER PKWY
S5	I-64 CRASHWALLS - I-265
S6	I-64 CRASHWALLS - I-265

ESTIMATE OF QUANTITIES

ITEM NO, BRIDGE ID, COUNTY, MILE POINT, BRIDGE DESCR	BID ITEM CODE					08100	08150	20591EC	23378EC
						Concrete Class "A"	Steel Reinforcement	Remove Barrier	Concrete Sealing
	UNIT					CY	LB	LF	SF
	5-22024	056B00041N	JEFFERSON	MP 13.384	OXMOOR AVE/I-64	92.1	8783	49	1800
	5-22024	056B00416LR	JEFFERSON	MP 17.053	BLANKENBAKER PWKY/I-64	206.2	20,764	157	3020
	5-22024	056B00090LR	JEFFERSON	MP 18.879	I-265/I-64	287.8	21,806	288	4810
					TOTALS:	586.1	51,353	494	9630

Stantec

TITLE, QTYS, NOTES, & INDEX OF SHEETS

SHEET: S1
ITEM NO: 5-22024
BR. ID:

COUNTY: JEFFERSON
ROUTE: OXMOOR AVE/BLANKENBAKER/PKWY/I-264
CROSSING: I-64

JEFFERSON COUNTY
056GR26D040-NHPP
Contract ID: 261140
Page 100 of 297

① THE VERTICAL DIMENSIONS TO THE NEW CRASHWALL PANELS ARE APPROXIMATE AND MEASURED RELATIVE TO THE EXISTING GROUNDLINE AT THE PIER. AFTER REMOVING THE EXISTING PIER CRASHWALLS, REGRADE THE GROUND SURFACE TO MATCH THE EXISTING GROUNDLINE PRIOR TO INSTALLING NEW CRASHWALL PANELS.

② TYPICAL EACH COLUMN

③ OPTIONAL CONSTRUCTION JOINT

GUARDRAIL ATTACHMENT BARRIER WALL FOR TRAILING TRAFFIC IS LOCATED AT I-64 EB PIER ONLY

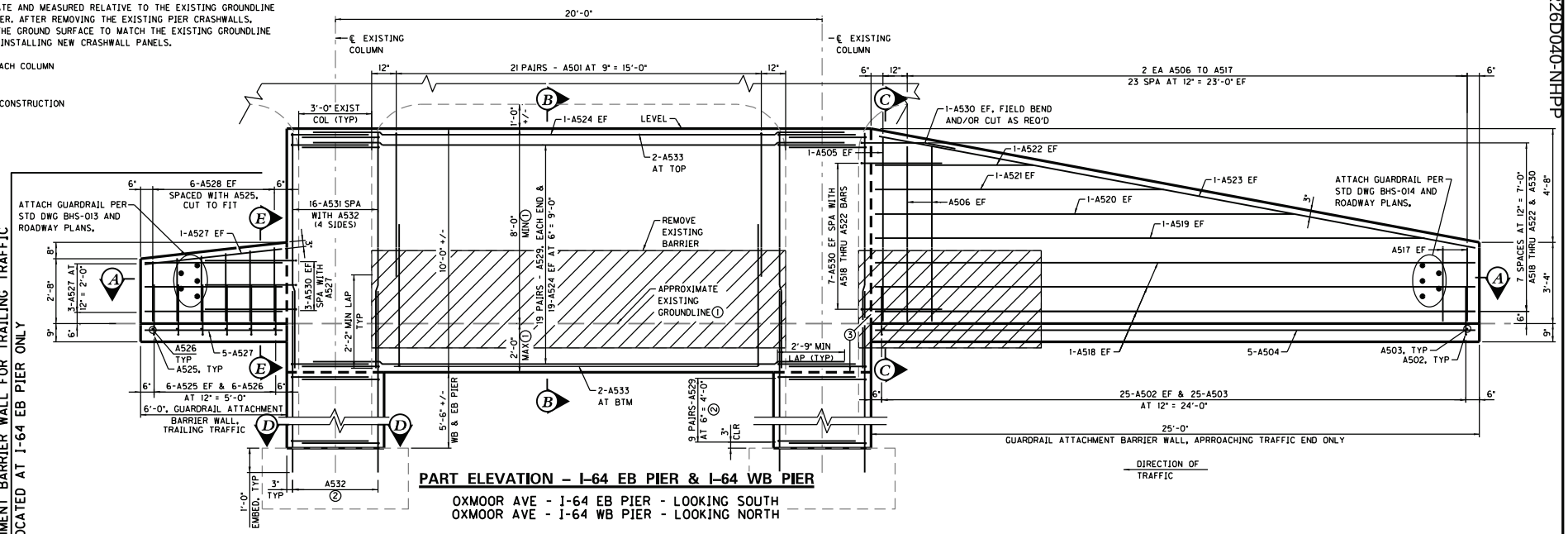

PART ELEVATION – I-64 EB PIER & I-64 WB PIER

OXMOOR AVE - I-64 EB PIER - LOOKING SOUTH
OXMOOR AVE - I-64 WB PIER - LOOKING NORTH

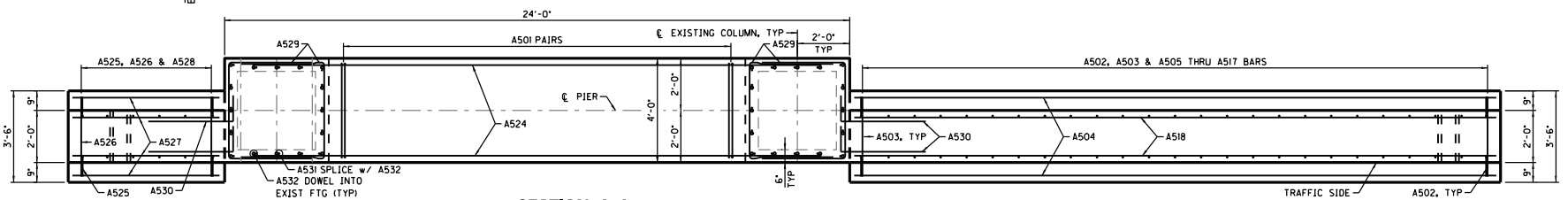

SECTION A–A

NOTE:
EXISTING WALLS TO BE REMOVED ARE NOT SHOWN IN SECTIONS FOR CLARITY.

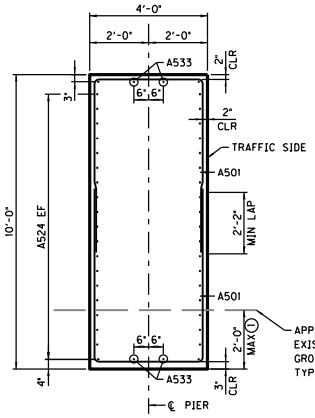

SECTION B–B

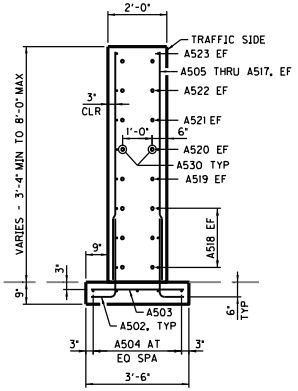

SECTION C–C

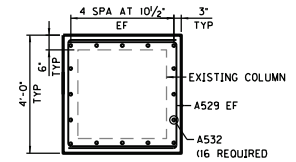

SECTION D–D

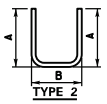

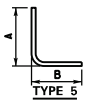

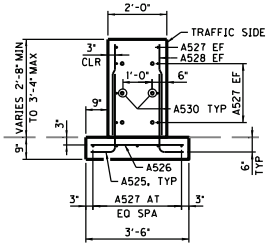

SECTION E–E

GUARDRAIL ATTACHMENT BARRIER WALL FOR TRAILING TRAFFIC IS LOCATED AT EB PIER ONLY

BILL OF REINFORCEMENT

MARK	TYPE	SIZE	NO. WB PIER	NO. EB PIER	LENGTH FT.	LENGTH IN.	LOCATION	A FT.	A IN.	B FT.	B IN.	C FT.	C IN.	D FT.	D IN.
A501	2	5	42	42	15	6	INNER WALLS	5	11	3	8				
A502	5	5	50	50	3	7	APPROACH WALL	2	9	0	10				
A503	STR	5	25	25	3	2	APPROACH WALL								
A504	STR	5	5	5	24	8	APPROACH WALL								
A505	STR	5	2	2	7	6	APPROACH WALL								
A506	STR	5	4	4	7	2	APPROACH WALL								
A507	STR	5	4	4	6	9	APPROACH WALL								
A508	STR	5	4	4	6	5	APPROACH WALL								
A509	STR	5	4	4	6	0	APPROACH WALL								
A510	STR	5	4	4	5	8	APPROACH WALL								
A511	STR	5	4	4	5	4	APPROACH WALL								
A512	STR	5	4	4	4	11	APPROACH WALL								
A513	STR	5	4	4	4	7	APPROACH WALL								
A514	STR	5	4	4	4	3	APPROACH WALL								
A515	STR	5	4	4	3	10	APPROACH WALL								
A516	STR	5	4	4	3	5	APPROACH WALL								
A517	STR	5	4	4	3	1	APPROACH WALL								
A518	STR	5	6	6	24	8	APPROACH WALL								
A519	STR	5	2	2	22	6	APPROACH WALL								
A520	STR	5	2	2	17	2	APPROACH WALL								
A521	STR	5	2	2	11	10	APPROACH WALL								
A522	STR	5	2	2	6	6	APPROACH WALL								
A523	STR	5	2	2	24	11	APPROACH WALL								
A524	STR	5	40	40	18	8	INNER WALLS								
A525	5	5	0	12	3	7	TRAILING WALL	2	9	0	10				
A526	STR	5	0	6	3	2	TRAILING WALL								
A527	STR	5	0	13	5	8	TRAILING WALL								
A528	STR	5	0	12	3	0	TRAILING WALL								
A529	2	5	112	112	9	2	INNER WALLS/FOOTING	2	9	3	8				
A530	5	5	22	16	4	1	WALLS/COLUMNS	1	0	3	1				
A531	STR	5	32	32	9	8	COLUMNS								
A532	STR	5	32	32	8	10	COLUMNS/FOOTING								
A533	STR	5	4	4	18	8	INNER WALLS								

Stantec

I-64 PIER CRASHWALL ADDITION

SHEET: S2
ITEM NO: 5-22024
BR. ID: 056B00041N

COUNTY:	JEFFERSON
ROUTE:	OXMOOR AVENUE
CROSSING:	I-64

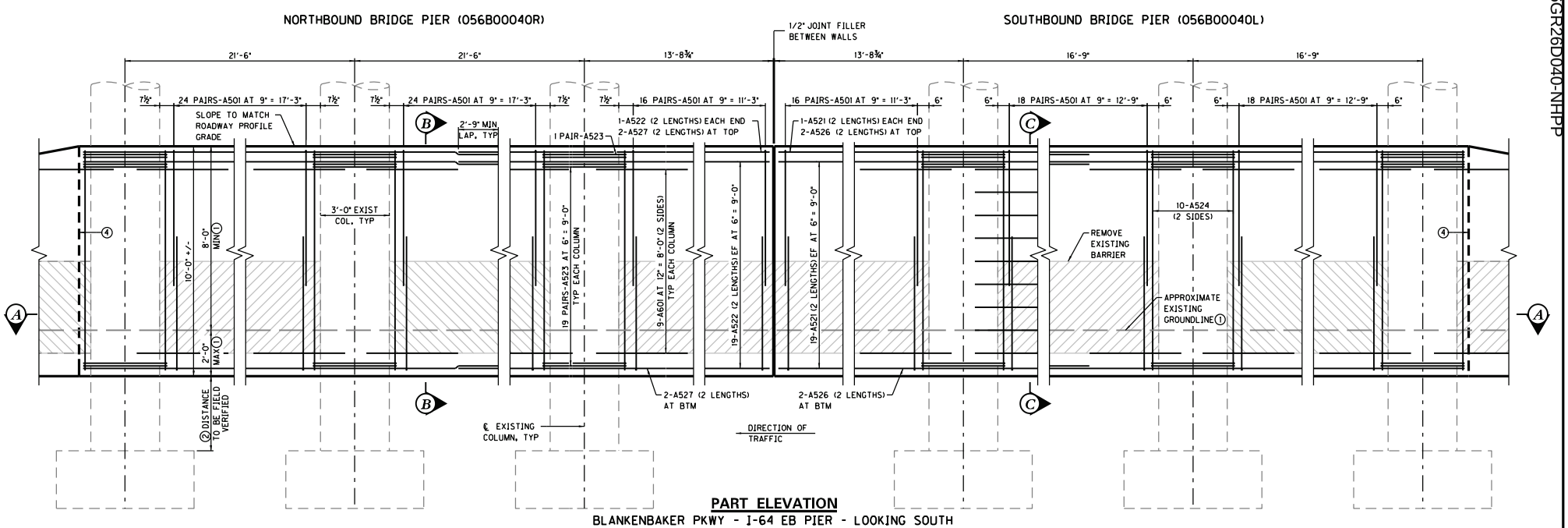

PART ELEVATION
BLANKENBAKER PKWY - I-64 EB PIER - LOOKING SOUTH

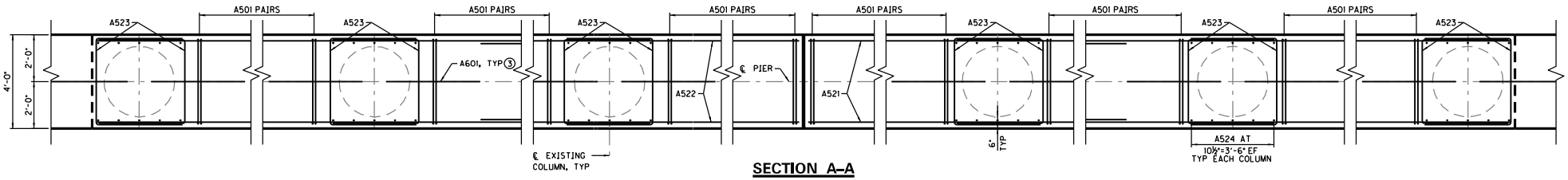

SECTION A–A

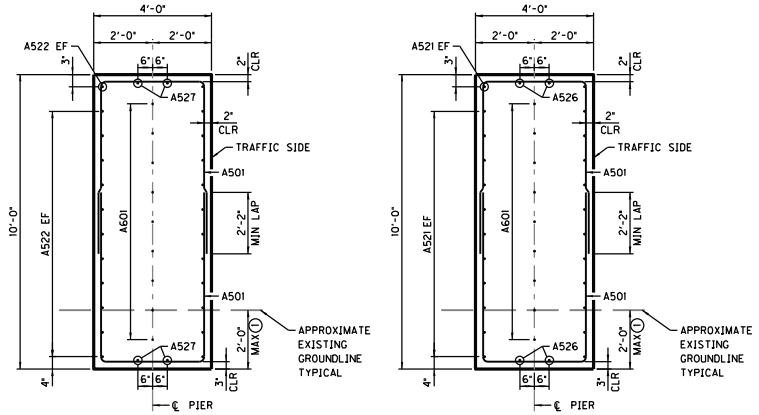

SECTION B–B

SECTION C–C

NOTES:
SEE SHEET SX FOR APPROACH WALL DETAILS.

EXISTING WALLS TO BE REMOVED ARE NOT SHOWN IN SECTIONS FOR CLARITY.

NOTATIONS:

(1) THE VERTICAL DIMENSIONS TO THE NEW CRASHWALL PANELS ARE APPROXIMATE AND MEASURED RELATIVE TO THE EXISTING GROUNDLINE AT THE PIER. AFTER REMOVING THE EXISTING PIER CRASHWALLS, REGRADE THE GROUND SURFACE TO MATCH THE EXISTING GROUNDLINE PRIOR TO INSTALLING NEW CRASHWALL PANELS.

(2) IF THE TOP OF THE EXISTING FOOTINGS ARE ENCOUNTERED AT AN ELEVATION THAT IS HIGHER THAN EXPECTED, THEN THE CONFIGURATION OF THE BOTTOM OF THE NEW CRASHWALLS SHALL BE MODIFIED AS NEEDED TO ACCOMODATE THE FOOTING GEOMETRY. THE CRASHWALLS WILL REMAIN AT A HEIGHT OF 10'-0".

(3) A601 - DRILL AND EMBED, 1'-0" MIN INTO EXISTING COLUMN, AT ℄. SHIFT BARS AS NEEDED TO CLEAR EXISTING REINFORCING, TYP. SEE DOWEL DETAIL AND NOTE ON SHEET S1.

(4) OPTIONAL CONSTRUCTION JOINT

Stantec

I-64 PIER CRASHWALL ADDITION

SHEET: S3
ITEM NO: 5-22024
BR. ID: 056B00416L&R

COUNTY:	JEFFERSON
ROUTE:	BLANKENBAKER PKWY
CROSSING:	I-64

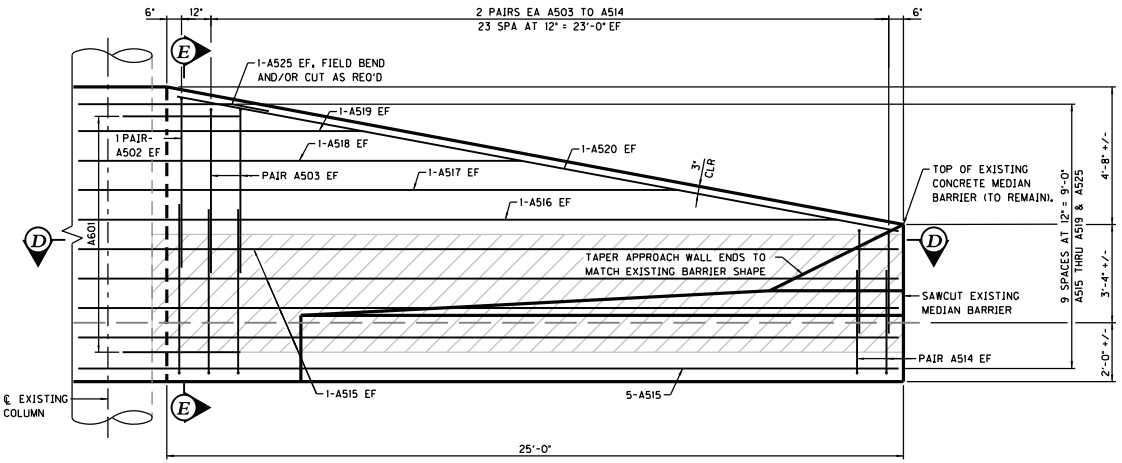

PART ELEVATION – APPROACH WALL
BLANKENBAKER PKWY - I-64 EB PIER - LOOKING SOUTH

NOTE:
INNER WALL REINFORCEMENT ARE NOT SHOWN IN SECTIONS FOR CLARITY.

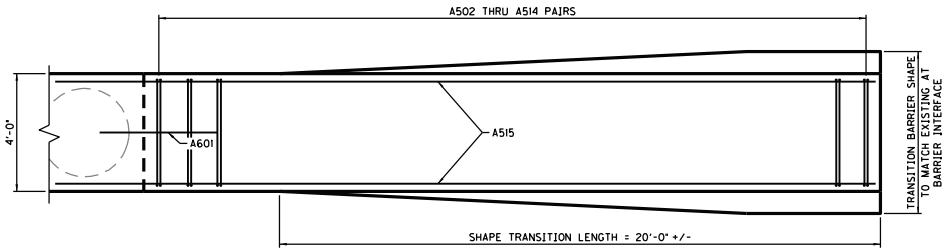

SECTION D–D

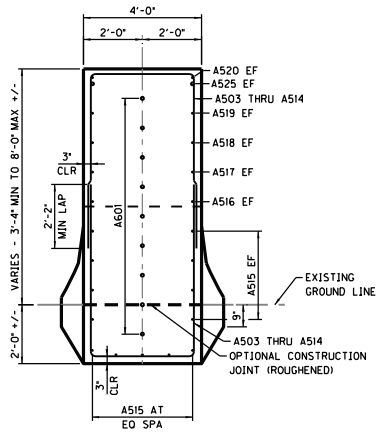

SECTION E–E

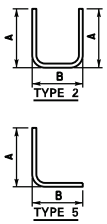

BILL OF REINFORCEMENT

MARK	TYPE	SIZE	NO. NB PIER	NO. SB PIER	LENGTH FT.	LENGTH IN.	LOCATION	A FT.	A IN.	B FT.	B IN.	C FT.	C IN.	D FT.	D IN.
A501	2	5	128	104	15	6	INNER WALLS	5	11	3	8				
A502	2	5	2	2	16	4	APPROACH WALL	6	4	3	8				
A503	2	5	4	4	15	10	APPROACH WALL	6	1	3	8				
A504	2	5	4	4	15	6	APPROACH WALL	5	11	3	8				
A505	2	5	4	4	15	2	APPROACH WALL	5	9	3	8				
A506	2	5	4	4	14	10	APPROACH WALL	5	7	3	8				
A507	2	5	4	4	14	6	APPROACH WALL	5	5	3	8				
A508	2	5	4	4	14	0	APPROACH WALL	5	2	3	8				
A509	2	5	4	4	13	8	APPROACH WALL	5	0	3	8				
A510	2	5	4	4	13	4	APPROACH WALL	4	10	3	8				
A511	2	5	4	4	13	0	APPROACH WALL	4	8	3	8				
A512	2	5	4	4	12	6	APPROACH WALL	4	5	3	8				
A513	2	5	4	4	12	4	APPROACH WALL	4	3	3	8				
A514	2	5	4	4	11	10	APPROACH WALL	4	1	3	8				
A515	STR	5	13	13	27	10	APPROACH WALL								
A516	STR	5	2	2	25	9	APPROACH WALL								
A517	STR	5	2	2	20	5	APPROACH WALL								
A518	STR	5	2	2	15	1	APPROACH WALL								
A519	STR	5	2	2	9	9	APPROACH WALL								
A520	STR	5	2	2	24	11	APPROACH WALL								
A521	STR	5	80	80	25	10	INNER WALLS								
A522	STR	5	80	80	30	8	INNER WALLS								
A523	2	5	120	120	11	0	INNER WALLS	3	8	3	8				
A524	STR	5	30	30	9	7	COLUMNS								
A525	5	5	2	2	6	6	APPROACH/INNER WALL	1	3	5	3				
A526	STR	5	8	8	25	10	INNER WALLS								
A527	STR	5	8	8	30	8	INNER WALLS								
A601	STR	6	54	54	4	0	APPROACH/INNER WALL/COLUMNS								

Stantec

I–64 PIER CRASHWALL ADDITION

SHEET: S4
ITEM NO: 5-22024
BR. ID: 056B00416L&R

COUNTY:	JEFFERSON
ROUTE:	BLANKENBAKER PKWY
CROSSING:	I-64

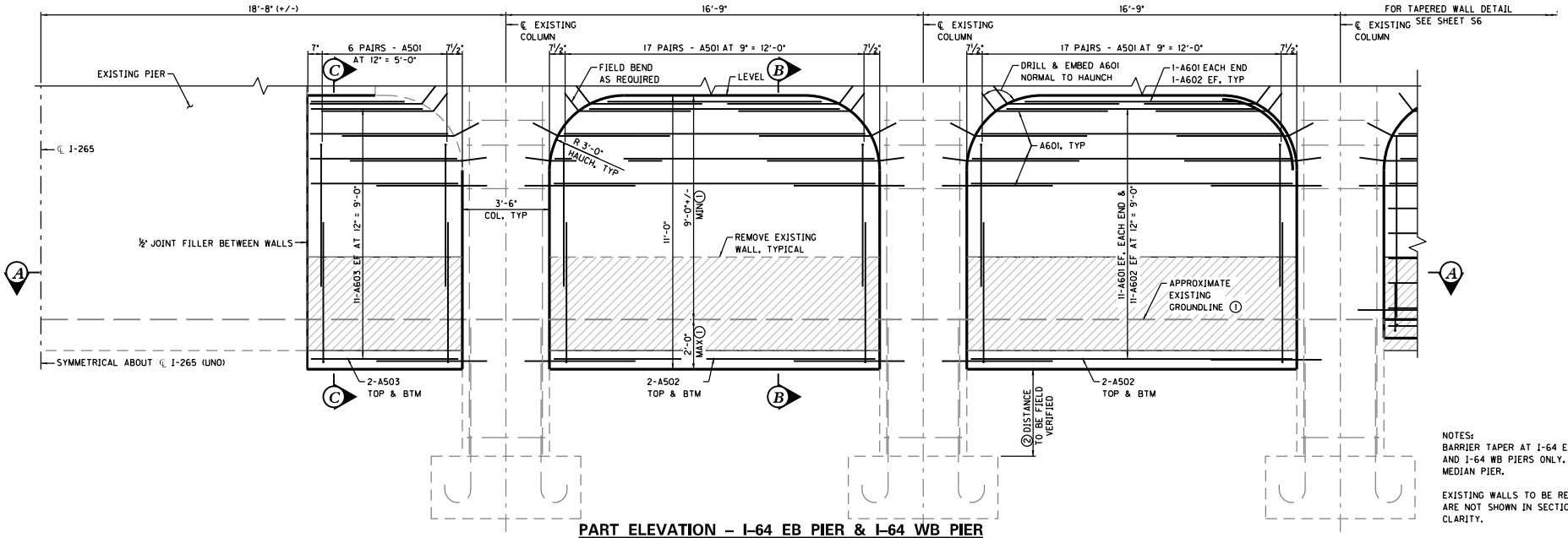

PART ELEVATION – I-64 EB PIER & I-64 WB PIER

I-265 - I-64 WB PIER - LOOKING NORTH
I-265 - I-64 EB PIER - LOOKING SOUTH &
I-265 - MEDIAN PIER - LOOKING SOUTH

NOTES:
BARRIER TAPER AT I-64 EB PIER AND I-64 WB PIERS ONLY. OMIT AT MEDIAN PIER.

EXISTING WALLS TO BE REMOVED ARE NOT SHOWN IN SECTIONS FOR CLARITY.

REINFORCEMENT & DIMENSIONS SHOWN ARE SYMMETICAL ABOUT ℄ OF I-265.

FIELD CUT A602 AND A603 BARS, AS NECCESSARY, TO MAINTAIN CLEARANCE

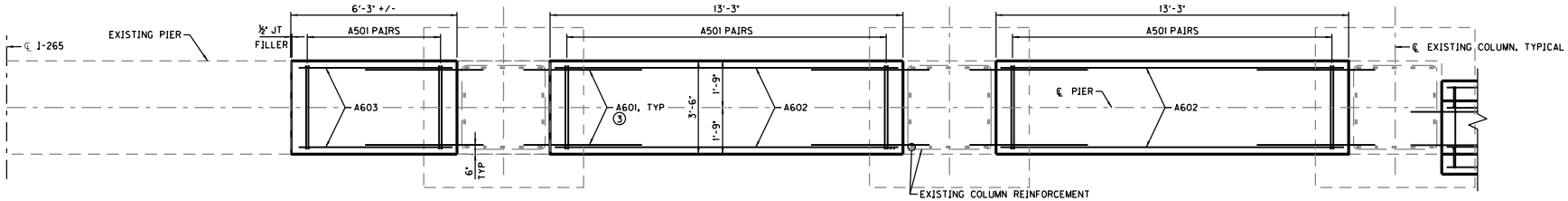

SECTION A–A

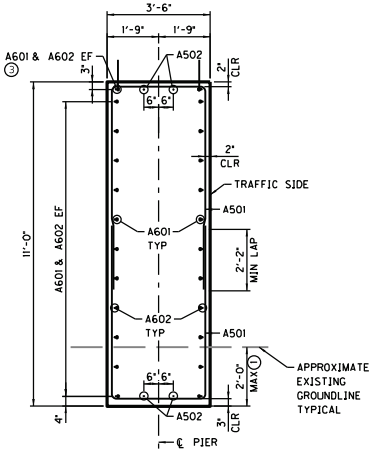

SECTION B–B

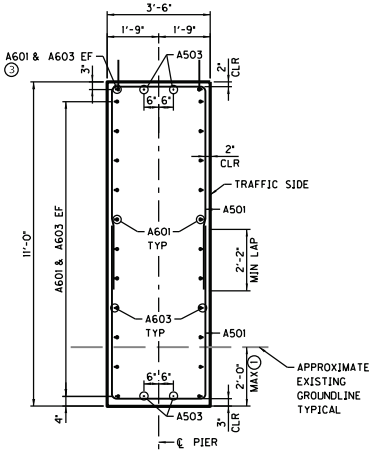

SECTION C–C

NOTATIONS:

(1) THE VERTICAL DIMENSIONS TO THE NEW CRASHWALL PANELS ARE APPROXIMATE AND MEASURED RELATIVE TO THE EXISTING GROUNDLINE AT THE PIER. AFTER REMOVING THE EXISTING PIER CRASHWALLS, REGRADE THE GROUND SURFACE TO MATCH THE EXISTING GROUNDLINE PRIOR TO INSTALLING NEW CRASHWALL PANELS.

(2) IF THE TOP OF THE EXISTING FOOTINGS ARE ENCOUNTERED AT AN ELEVATION THAT IS HIGHER THAN EXPECTED, THEN THE CONFIGURATION OF THE BOTTOM OF THE NEW CRASHWALLS SHALL BE MODIFIED AS NEEDED TO ACCOMODATE THE FOOTING GEOMETRY. THE CRASHWALLS WILL REMAIN AT A HEIGHT OF 11'-0".

(3) A601 - DRILL AND EMBED, 1'-0" MIN INTO EXISTING COLUMN, HAUNCH OR CAP. SHIFT BARS AS NEEDED TO CLEAR EXISTING REINFORCING, TYP. SEE DOWEL DETAIL AND NOTE ON SHEET S1.

Stantec

I-64 PIER CRASHWALL ADDITION

SHEET: S5
ITEM NO: 5-22024
BR. ID: 056B00090L&R

COUNTY:	JEFFERSON
ROUTE:	I-265
CROSSING:	I-64

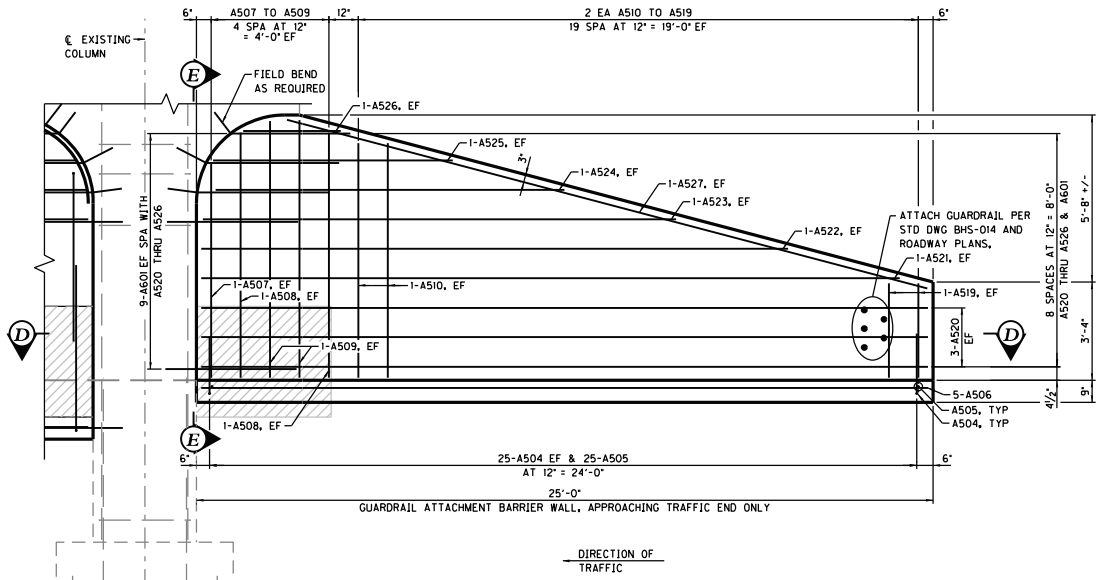

PART ELEVATION – I-64 EB PIER & I-64 WB PIER

I-265 - I-64 WB PIER - LOOKING NORTH
I-265 - I-64 EB PIER - LOOKING SOUTH
NOT REQUIRED FOR I-64 MEDIAN PIER

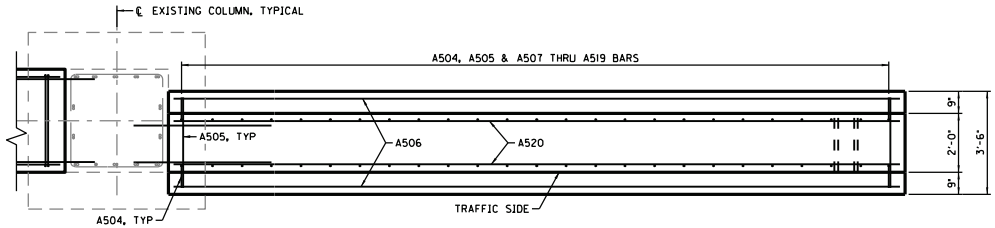

SECTION D-D

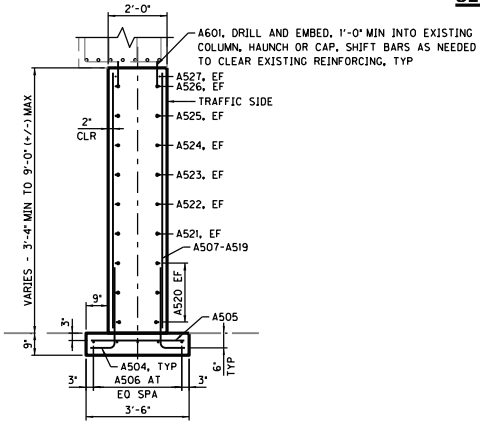

SECTION E-E

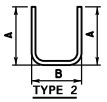

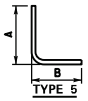

BILL OF REINFORCEMENT

MARK	TYPE	SIZE	NO. EB PIER	NO. MEDIAN	NO. WB PIER	LENGTH FT.	LENGTH IN.	LOCATION	A FT.	A IN.	B FT.	B IN.	C FT.	C IN.	D FT.	D IN.
A501	2	5	160	160	160	15	6	INNER WALLS	5	11	3	8				
A502	STR	5	16	16	16	12	11	INNER WALLS								
A503	STR	5	8	8	8	5	11	INNER WALLS								
A504	5	5	50	0	50	2	10	APPROACH WALL	2	9	0	10				
A505	STR	5	25	0	25	3	2	APPROACH WALL								
A506	STR	5	5	0	5	24	8	APPROACH WALL								
A507	STR	5	2	0	2	7	3	APPROACH WALL								
A508	STR	5	4	0	4	8	4	APPROACH WALL								
A509	STR	5	4	0	4	8	8	APPROACH WALL								
A510	STR	5	4	0	4	7	11	APPROACH WALL								
A511	STR	5	4	0	4	7	5	APPROACH WALL								
A512	STR	5	4	0	4	6	11	APPROACH WALL								
A513	STR	5	4	0	4	6	4	APPROACH WALL								
A514	STR	5	4	0	4	5	10	APPROACH WALL								
A515	STR	5	4	0	4	5	4	APPROACH WALL								
A516	STR	5	4	0	4	4	10	APPROACH WALL								
A517	STR	5	4	0	4	4	3	APPROACH WALL								
A518	STR	5	4	0	4	3	9	APPROACH WALL								
A519	STR	5	4	0	4	3	3	APPROACH WALL								
A520	STR	5	12	0	12	24	8	APPROACH WALL								
A521	STR	5	2	0	2	23	8	APPROACH WALL								
A522	STR	5	2	0	2	19	10	APPROACH WALL								
A523	STR	5	2	0	2	16	0	APPROACH WALL								
A524	STR	5	2	0	2	12	4	APPROACH WALL								
A525	STR	5	2	0	2	8	1	APPROACH WALL								
A526	STR	5	2	0	2	3	3	APPROACH WALL								
A527	STR	5	2	0	2	22	5	APPROACH WALL								
A601	STR	6	258	240	258	4	0	APPROACH/INNER WALL/COLUMNS								
A602	STR	6	88	88	88	12	11	INNER WALL								
A603	STR	6	44	44	44	5	11	INNER WALL								

Stantec

I-64 PIER CRASHWALL ADDITION

SHEET: S6
ITEM NO: 5-22024
BR. ID: 056B00090L&R

COUNTY:	JEFFERSON
ROUTE:	I-265
CROSSING:	I-64

LETTING DATE

CONSTRUCTION PROJECT NO.

TRANSPORTATION CABINET
DEPARTMENT OF HIGHWAYS

JEFFERSON COUNTY
I-64
OVER WATTERSON TRAIL
DECK OVERLAY AND BARRIER RETROFIT

ESTIMATE OF QUANTITIES

BID ITEM CODE	02403	03299	04810	08104	08151	08510	08526	08549	23378EC	24094EC	24902EC	25028ED	26233EC
BID ITEM	Remove Concrete Masonry	Armored Edge for Concrete	Electrical Junction Box	Concrete Class "AA"	Steel Reinforcement - Epoxy Coated	Remove Epoxy, Asphalt, or Foreign Overlay	Concrete Class "M" Full Depth Patch	Blast Cleaning	Concrete Sealing	Partial Depth Patching	PVC Conduit 3 IN Schedule 80	Rail System 40 Inch Single Slope	Mobilization for Concrete Surface Treatment
UNIT	C.Y.	L.F.	EACH	C.Y.	LBS.	S.Y.	C.Y.	S.Y.	S.F.	C.Y.	L.F.	L.F.	L.S.
Superstructure Eastbound Bridge	38	151	2	170	34419	1166	10.0	1224	13341	31.0	159	318	-
Superstructure Westbound Bridge	38	151	2	170	34419	1166	10.0	1224	13341	31.0	159	318	-
BRIDGE TOTALS	76	302	4	340	68838	2332	20.0	2448	26682	62.0	318	636	1

INDEX OF SHEETS

Sheet No.	Description
S1	Title and Estimate of Qtys
S2	General Notes
S3	Layout
S4	Phase Construction
S5	Superstructure

SPECIAL NOTES

SPECIAL PROVISIONS

STANDARD DRAWINGS

BGX-019	24 Inch Junction Box Single Slope and Vertical Barrier
BGX-006-10	Stencils for Structure
BGX-021	Junction Box Type - A
BJE-001-14	Armored Edges
BHS-010	Railing System 40 Inch Single Slope
BHS-013	Thrie-Beam Guardrail Transition (TL-2)
BHS-014	Thrie-Beam Guardrail Transition (TL-3)
RBM-135	Concrete Barrier Wall Type 9T (Temporary)
RBM-135	Box Beam Stiffening PF Temporary Concrete Barrier

SPECIFICATIONS

2026 Standard Specifications for Road and Bridge Construction.

2024 (10th Edition) AASHTO LRFD Bridge Design Specifications

COMMONWEALTH OF KENTUCKY
DEPARTMENT OF HIGHWAYS
TEAM KENTUCKY

REVISION	DATE

PREPARED BY: Stantec

DATE: OCTOBER 2026	CHECKED BY
DESIGNED BY: S. KING	D. DEPP
DETAILED BY: A. GRACE	S. KING

TITLE AND ESTIMATE OF QTYS

CROSSING: WATTERSON TRAIL

ROUTE	ITEM NO.	COUNTY OF
I-64	5-22024	JEFFERSON
	SHEET NO.	DRAWING NUMBER
	S1	29153

OpenRoads Designer v10.16.2.267 USER: agrace DATE PLOTTED: 8/7/2026 12:13:09 PM FILE NAME: U:\178579199\structural\drawing\04_I-64 at Watterson Tr\Sheets\S1_Title & Est of Qty_I-64 over WattersonTr.dgn

SPECIFICATIONS

ALL REFERENCES TO THE STANDARD SPECIFICATIONS ARE TO THE 2026 EDITION OF THE KENTUCKY DEPARTMENT OF HIGHWAYS STANDARD SPECIFICATIONS FOR ROAD AND BRIDGE CONSTRUCTION WITH CURRENT SUPPLEMENTS.

ALL REFERENCES TO THE AASHTO SPECIFICATIONS ARE TO THE LRFD BRIDGE DESIGN SPECIFICATIONS, 10th EDITION.

DESIGN LOAD

THE EXISTING BRIDGE IS DESIGNED FOR HS20 LIVE LOAD. SEE PLANS OF THE EXISTING STRUCTURE.

MATERIALS DESIGN SPECIFICATIONS

FOR CLASS "AA" REINFORCED CONCRETE	F'C = 4000 psi
CLASS "M" REINFORCED CONCRETE	F'C = 4000 psi
FOR STEEL REINFORCEMENT	FY = 60000 psi

CONCRETE

CLASS "AA" CONCRETE IS TO BE USED THROUGHOUT, EXCEPT CLASS "M" CONCRETE SHALL BE USED FOR FULL-DEPTH PATCHES.

REINFORCEMENT

DIMENSIONS SHOWN FROM THE FACE OF CONCRETE TO BARS ARE TO CENTER OF BAR UNLESS OTHERWISE SHOWN. CLEAR DISTANCE TO FACE OF CONCRETE IS 2" UNLESS OTHERWISE NOTED. SPACING OF BARS IS FROM CENTER TO CENTER OF BARS. ANY REINFORCING BARS DESIGNATED BY SUFFIX "e" IN THE PLANS SHALL BE EPOXY COATED IN ACCORDANCE WITH SECTION 811.10 OF THE STANDARD SPECIFICATIONS. ANY REINFORCING BARS DESIGNATED BY SUFFIX "s" IN A BILL OF REINFORCEMENT SHALL BE CONSIDERED A STIRRUP FOR PURPOSES OF BEND DIAMETERS.

BEVELED EDGES

ALL EXPOSED EDGES SHALL BE BEVELED ¾" UNLESS OTHERWISE SHOWN.

DIMENSIONS

DIMENSIONS ARE FOR A NORMAL TEMPERATURE OF 60 DEGREES FAHRENHEIT. LAYOUT DIMENSIONS ARE HORIZONTAL DIMENSIONS.

SUPERSTRUCTURE SLAB

THE SUPERSTRUCTURE SLAB SHALL BE POURED CONTINUOUSLY FROM END TO END OF SLAB BEFORE THE CONCRETE IS ALLOWED TO SET.

BRIDGE RESTORATION AND WATERPROOFING WITH CONCRETE OVERLAYS

THIS WORK SHALL CONSIST OF THE FOLLOWING: (1) FURNISH ALL LABOR, MATERIALS, TOOLS, AND EQUIPMENT, (2) REMOVE EXISTING OVERLAY AND PREPARE THE EXISTING SLAB, (3) COMPLETE FULL-DEPTH AND PARTIAL DEPTH PREPAIRS AS DIRECTED BY THE ENGINEER, (4) REPAIR/REPLACE DAMAGED AND CORRODED REINFORCING BARS, (5) CLEAN SURFACES TO RECEIVE NEW OVERLAY, (6) PREWET THE DECK IN ACCORDANCE WITH SECTION 606.3.17-A-1, (7) PLACE NEW 5" REINFORCED CONCRETE OVERLAY, 8) ANY OTHER ITEMS NECESSARY TO COMPLETE THIS WORK. ALL CONSTRUCTION WILL BE IN ACCORDANCE WITH SECTION 606 UNLESS OTHERWISE SPECIFIED. COST OF CONCRETE OVERLAY ITEMS NOT PAID SEPERATELY SHALL BE INCIDENTAL TO CONCRETE CLASS "AA".

DISPOSAL OF MATERIALS

ALL MATERIALS AND DEBRIS REMOVED FROM OR BENEATH THE BRIDGE SHALL BECOME THE PROPERTY OF THE CONTRACTOR AND SHALL BE REMOVED FROM THE RIGHT-OF-WAY.

REMOVAL OF EXISTING REINFORCED CONCRETE RAILING

THIS WORK SHALL INCLUDE REMOVING THE EXISTING REINFORCED CONCRETE RAILING AS DETAILED FOR THE ENTIRE LENGTH OF THE BRIDGE AND DISPOSING OF THIS MATERIAL AWAY FROM THE BRIDGE SITE. PROPER CARE SHALL BE TAKEN TO PROTECT THE CONCRETE BEAMS AND SUBSTRUCTURE FROM DAMAGE DURING THIS OPERATION. THE CONTRACTOR SHALL BE RESPONSIBLE FOR ANY DAMAGE CAUSED BY FALLING PARTICLES.

THE REMOVAL SHALL BE PERFORMED BY SAW-CUTTING TO THE LINES DESIGNATED IN THE PLANS IN ACCORDANCE WITH THE SPECIFICATIONS. THE CONTRACTOR SHALL SUBMIT THEIR PROPOSED REMOVAL METHOD FOR APPROVAL. ANY SAW CUT BARS SHALL BE REPLACED WITH AN EQUIVALENT NUMBER OF DOWEL BARS AS DETAILED.

THE COST OF THIS WORK SHALL BE INCLUDED IN THE UNIT PRICE BID FOR REMOVE CONCRETE MASONRY.

DRILLING HOLES AND ANCHORING REINFORCING STEEL INTO EXISTING CONCRETE

WHERE DETAILED OR AS DIRECTED BY THE ENGINEER, DRILL AND GROUT NEW REINFORCEMENT INTO EXISTING CONCRETE IN ACCORDANCE WITH SECTION 511 AND 826 OF THE SPECIFICATIONS AND THE GROUT MANUFACTURER'S RECOMMENDATIONS. EMBEDMENT FOR THE APPROVED GROUT SHALL BE SUFFICIENT TO DEVELOP 125% OF THE YIELD STRENGTH OF THE REINFORCING BAR BUT NO LESS THAN THE MINIMUM EMBEDMENT SHOWN. THE COST OF THIS WORK, INCLUDING ALL LABOR, TOOLS, AND MATERIALS IS INCIDENTAL TO THE UNIT PRICE BID FOR THE CONCRETE RAIL SYSTEM SINGLE SLOPE - 40".

CONDUIT

REPLACE THE EXISTING CONDUIT AND JUNCTION BOXES IN THE OUTSIDE FASCIA BARRIERS WITH NEW 3"DIAMETER PVC CONDUIT AND JUNCTION BOXES IN ACCORDANCE WITH STANDARD DRAWING BGX-019 AND BGX-021, RESPECTIVELY. SPLICE CONDUIT, AS DIRECTED BY THE ENGINEER, TO CONNECT TO EXISTING CONDUIT AT EACH END OF THE BRIDGE. SPLICING SHALL BE INCIDENTAL TO THE UNIT PRICE BID FOR THE CONDUIT.

GRADE ELEVATIONS

THE FIELD ENGINEER SHALL CHECK THE ALIGNMENT OF THE FINISHING MACHINE RAILS TO VERIFY THAT THE NEW SLAB WILL HAVE A SMOOTH DRIVING SURFACE. DEAD LOAD CAMBER IS INSIGNIFICANT ON THIS BRIDGE.

ARMORED EDGE

FABRICATE ARMORED EDGE TO MATCH CROSS SLOPE AND PARABOLIC CROWN AT EACH END OF BRIDGE. THE COST OF PARTIAL REMOVAL OF THE EXISTING ARMORED EDGE AS DETAILED SHALL BE INCLUDED WITH THE UNIT PRICE BID FOR ARMORED EDGE.

CONCRETE BONDING AGENTS

AN EPOXY BOND COAT CONFORMING TO SECTIONS 511 AND 826 OF THE SPECIFICATIONS SHALL BE USED ON THE SURFACE OF ANY CONCRETE JOINT SPECIFIED AS "BONDED" IN THESE PLANS. THE COST OF THIS WORK, INCLUDING ALL LABOR, TOOLS, AND MATERIALS, IS TO BE INCIDENTAL TO THE UNIT BID PRICE FOR THE CLASS OF CONCRETE BEING BONDED.

CONCRETE SEALER

APPLY CONCRETE SEALER TO ALL EXPOSED SURFACES OF THE NEW REINFORCED CONCRETE OVERLAY AND NEW CONCRETE RAILING SYSTEM IN ACCORDANCE WITH SECTION 616 OF THE SPECIFICATIONS. THE CONCRETE RAILING SYSTEM SHALL RECEIVE THE ORDINARY SURFACE FINISH AS DESCRIBED IN SECTION 601.03.18 PRIOR TO BEING SEALED.

DECK PHASE CONSTRUCTION JOINT SEALER

SEAL ALL LONGITUDINAL PHASE CONSTRUCTION JOINTS IN THE CONCRETE DECK WITH AN APPROVED HIGH MOLECULAR WEIGHT METHACRYLATE (HMWM) OR EPOXY SEALER WITH A SKID-RESISTANT SURFACE. THE SELECTED PRODUCT MUST BE APPROVED BY KYTC BEFORE USE. KBP 204 P SEAL, SUPPLIED BY KWIK BOND POLYMERS, IS APPROVED FOR EXPERIMENTAL USE ON THE KY PRODUCT EVALUATION LIST. THE CONSTRUCTION JOINTS MUST BE SEALED IN ACCORDANCE WITH THE MANUFACTURER'S INSTRUCTIONS. A MINIMUM OF 3 INCHES ON BOTH SIDES OF THE JOINT. THE CONSTRUCTION JOINTS MUST BE SEALED AND CURED BEFORE APPLICATION OF THE SILANE SEALER THAT IS BEING APPLIED TO THE REST OF THE DECK SURFACE. THE COST OF THE DECK CONSTRUCTION JOINT SEALING SHOULD BE INCLUDED WITH THE BID ITEM FOR CONCRETE SEALING.

VERIFYING FIELD CONDITIONS

THE CONTRACTOR SHALL FIELD VERIFY ALL DIMENSIONS BEFORE ORDERING MATERIAL. NEW MATERIAL THAT IS UNSUITABLE BECAUSE OF VARIATIONS IN THE EXISTING STRUCTURE SHALL BE REPLACED AT THE CONTRACTOR'S EXPENSE.

DAMAGE TO THE STRUCTURE

THE CONTRACTOR SHALL BEAR FULL RESPONSIBILITY AND EXPENSE FOR REPAIR OF ANY AND ALL DAMAGE TO THE STRUCTURE, EVEN TO INCLUDE THE REMOVAL AND REPLACEMENT OF A FALLEN SPAN, SHOULD SUCH DAMAGE RESULT FROM THE CONTRACTOR'S ACTIONS. THE CONTRACTOR IS COMPLETELY RESPONSIBLE FOR THE STABILITY OF THE STRUCTURE FROM THE TIME OF MOBILIZATION UNTIL AFTER THE BRIDGE HAS BEEN REOPENED TO NORMAL TRAFFIC FOLLOWING COMPLETION OF ALL WORK REQUIRED IN THE CONTRACT. AFTER COMPLETION OF ALL OPERATIONS, THE STRUCTURE AND SITE SHALL BE LEFT IN A CONDITION THAT IS IN ACCORDANCE WITH SECTION 105.12 OF THE SPECIFICATIONS.

COMPLETION OF THE STRUCTURE REHAB

THE CONTRACTOR IS REQUIRED TO COMPLETE THE STRUCTURE REHABILITATION IN ACCORDANCE WITH THE PLANS AND SPECIFICATIONS. MATERIAL, LABOR, OR CONSTRUCTION OPERATIONS NOT OTHERWISE SPECIFIED, ARE TO BE INCLUDED IN THE BID ITEM MOST APPROPRIATE TO THE WORK INVOLVED AND OTHERWISE CONSIDERED INCIDENTAL TO THE CONTRACT. THIS MAY INCLUDE COFFERDAMS, SHORING, EXCAVATIONS, BACKFILLING, REMOVAL OF ALL OR PARTS OF EXISTING STRUCTURES, PHASE CONSTRUCTION, INCIDENTAL MATERIALS, LABOR, OR ANYTHING ELSE REQUIRED TO COMPLETE THE STRUCTURE REHAB.

PLANS OF EXISTING STRUCTURE

AS AN AID TO THE CONTRACTOR, PLANS OF THE EXISTING STRUCTURE ARE AVAILABLE FROM THE DIVISION OF MAINTENANCE UPON REQUEST. THE COMPLETENESS OF THESE DRAWINGS IS NOT GUARANTEED AND NO RESPONSIBILITY IS ASSUMED BY KYTC FOR THEIR ACCURACY. THE EXISTING DRAWING NUMBERS FOR THE STRUCTURE ARE 15286 AND 21382.

CONSTRUCTION IDENTIFICATION

APPLY STENCILS FOR STRUCTURES TO THE NEW BARRIER IN ACCORDANCE WITH STANDARD DRAWING BGX-006-CE. THE CONTRACTOR SHALL FURNISH PLANS, EQUIPMENT, AND LABOR NECESSARY TO DO THE WORK FOR WHICH NO DIRECT PAYMENT WILL BE MADE.

ABBREVIATIONS

℄	BASELINE	EX	EXISTING	RAD	RADIUS
℄	CENTERLINE	EXIST	EXISTING	RDWY	ROADWAY
℄	FLANGE	EXP	EXPANSION	REINF	REINFORCEMENT
℄	PLATE	FF	FRONT FACE	RELOC	RELOCATED
ABUT	ABUTMENT	FS	FIELD SPLICE	REQD	REQUIRED
ALT	ALTERNATE	FT	FEET	RR	RAILROAD
APPR	APPROACH	FTG	FOOTING	RT	RIGHT
APPROX	APPROXIMATE	GALV	GALVANIZED	RTE	ROUTE
BF	BACK FACE	HORIZ	HORIZONTAL	SB	SOUTHBOUND
BARR	BARRIER	HS	HIGH STRENGTH	SEC	SECTION
BKWL	BACKWALL	ID	INSIDE DIAMETER	SER	SERIES
BM	BEAM	IN	INCH	SHLD	SHOULDER
BM	BENCHMARK	IEB	INTEGRAL END BENT	SHT	SHEET
BOS	BOTTOM OF SLAB	JB	JUNCTION BOX	SPA	SPACES
BRG	BEARING	JT	JOINT	SS	STAINLESS STEEL
BTM	BOTTOM	JUNC	JUNCTION	STA	STATION
BTWN	BETWEEN	LP	LIGHT POLE	STD	STANDARD
CE	CURRENT EDITION	LT	LEFT	STIFF	STIFFENER
CHD	CHORD	LONG	LONGITUDINAL	STR	STRAIGHT
CLR	CLEAR	MAX	MAXIMUM	SYS	SYSTEM
COL	COLUMN	MED	MEDIAN	TEMP	TEMPORARY
CONC	CONCRETE	MIN	MINIMUM	THRU	THROUGH
CONN	CONNECTION	MOM	MOMENT	TOS	TOP OF SLAB
CONST	CONSTRUCTION	NB	NORTHBOUND	TYP	TYPICAL
CTR	CENTER	NEG	NEGATIVE	UNO	UNLESS NOTED OTHERWISE
CVN	CHARPY V-NOTCH	NEOP	NEOPRENE	VERT	VERTICAL
DEG	DEGREE	NOM	NOMINAL	WB	WESTBOUND
DET	DETAIL	OD	OUTSIDE DIAMETER	WP	WORKING POINT
DIA	DIAMETER	OS	OVERSIZED		
DIAPH	DIAPHRAGM	PERF	PERFORATED		
DIM	DIMENSION	PG	PROFILE GRADE		
DWG	DRAWING	PPC	PRECAST PRESTRESSED CONCRETE		
EA	EACH				
EB	EASTBOUND	PR	PAIR		
EF	EACH FACE	PREF	PREFORMED		
EL	ELEVATION	PROJ	PROJECTION		
EQ	EQUAL	PRS	PAIRS		
EQUIV	EQUIVALENT	PSI	POUNDS PER SQUARE INCH		
ETC	ETCETERA				
EW	EACH WAY	R	RADIUS		

COMMONWEALTH OF KENTUCKY
DEPARTMENT OF HIGHWAYS
TEAM KENTUCKY

REVISION	DATE

PREPARED BY: Stantec

DATE: OCTOBER 2026	CHECKED BY
DESIGNED BY: S. KING	D. DEPP
DETAILED BY: A. GRACE	S. KING

GENERAL NOTES

CROSSING: WATTERSON TRAIL

ROUTE: I-64

ITEM NO.: 5-22024
SHEET NO.: S2

COUNTY OF: JEFFERSON
DRAWING NUMBER: 29153

OpenRoads Designer v10.16.2.267 USER: agrace DATE PLOTTED: 8/6/2026 9:51:45 AM FILE NAME: U:\178579199\structural\drawing\04_I-64 at Watterson Tr\Sheets\S2_General Notes_I-64 over WattersonTr.dgn

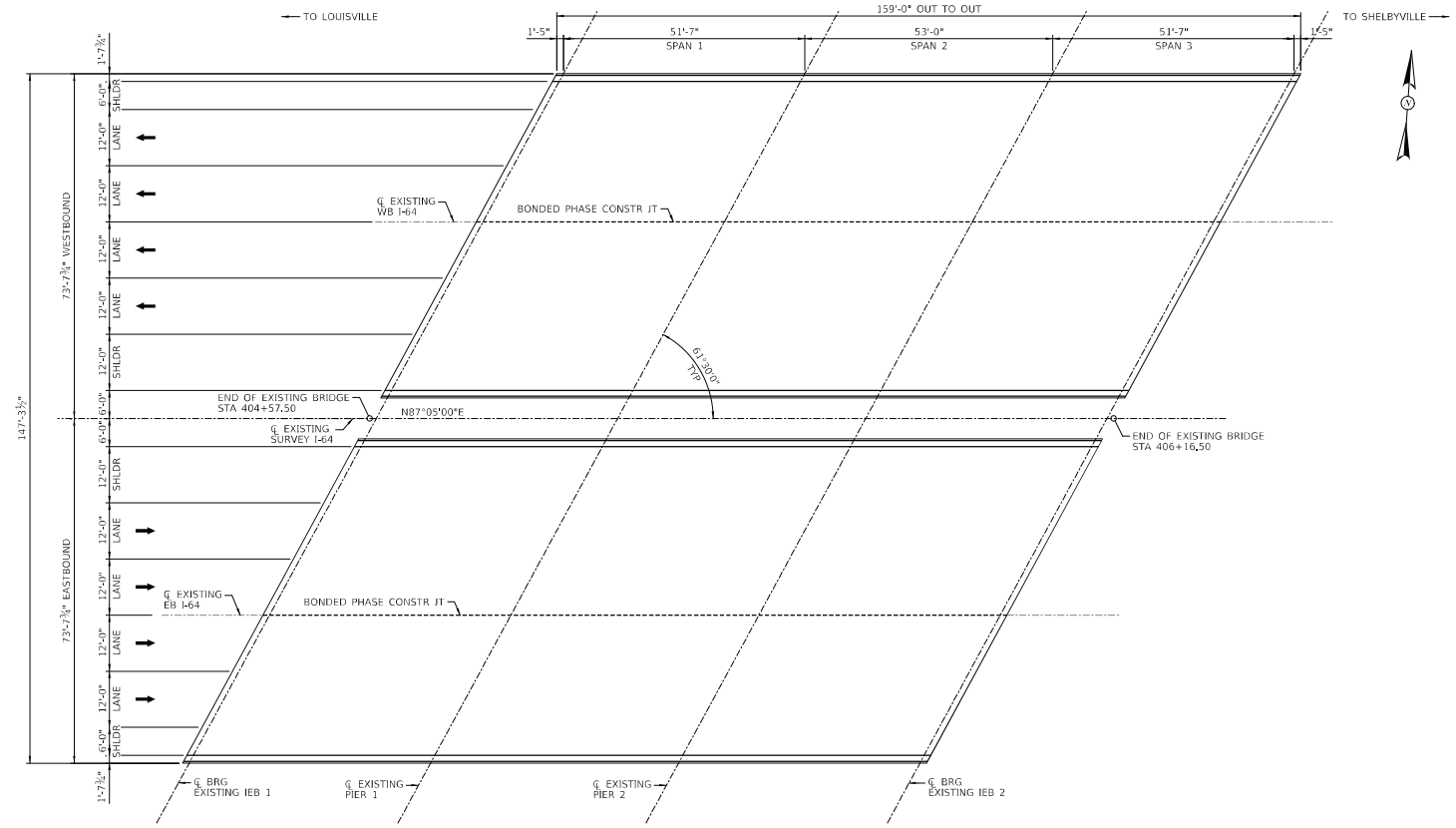

PLAN

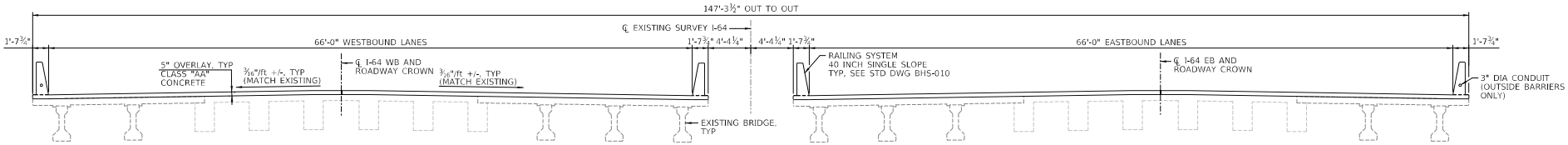

PROPOSED TYPICAL SECTION

LOOKING AHEAD STATION (EAST)

COMMONWEALTH OF KENTUCKY DEPARTMENT OF HIGHWAYS TEAM KENTUCKY	REVISION	DATE	PREPARED BY Stantec	DATE: OCTOBER 2026 DESIGNED BY: S. KING DETAILED BY: A. GRACE	CHECKED BY D. DEPP S. KING	LAYOUT CROSSING WATTERSON TRAIL	ROUTE I-64	ITEM NO. 5-22024 SHEET NO. S3	COUNTY OF JEFFERSON DRAWING NUMBER 29153

OpenRoads Designer v10.16.2.267 USER: agrace DATE PLOTTED: 8/6/2026 6:53:54 PM FILE NAME: U:\178579199\structural\drawing\04_I-64 at Watterson Tr\Sheets\S3_Layout_I-64 over Watterson Tr.dgn

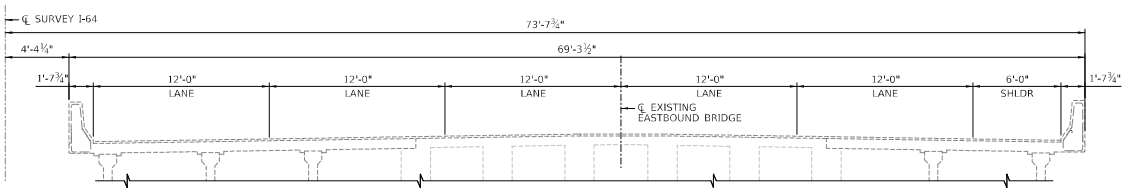

TYPICAL SECTION - EXISTING

BRIDGE SYMMETRICAL ABOUT CL I-64, EASTBOUND LANES SHOWN

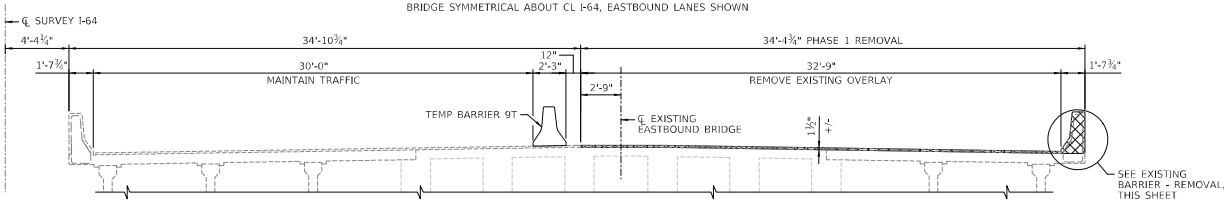

PHASE 1 - REMOVAL

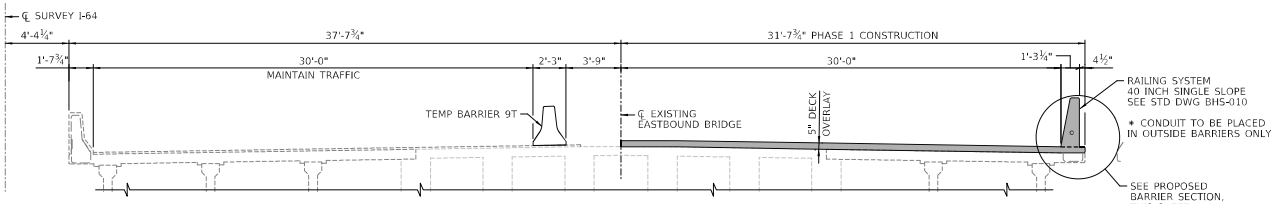

PHASE 1 - CONSTRUCTION

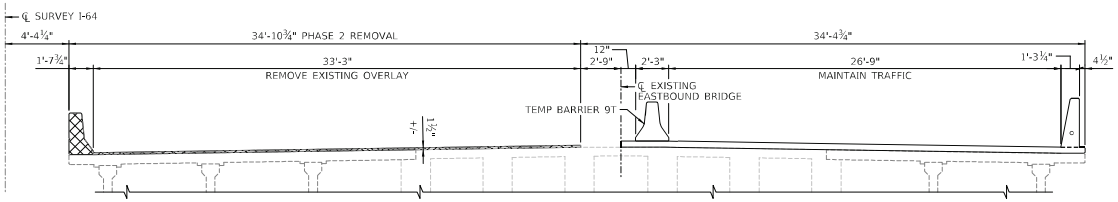

PHASE 2 - REMOVAL

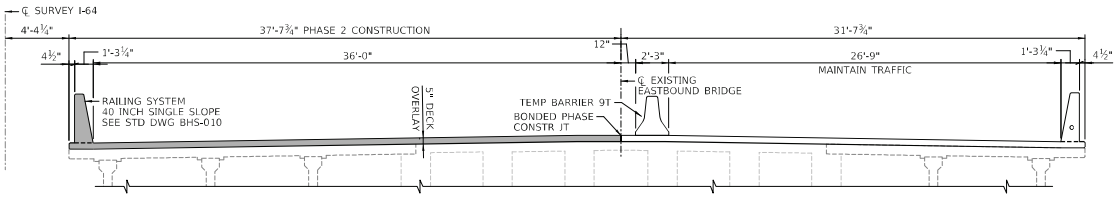

PHASE 2 - CONSTRUCTION

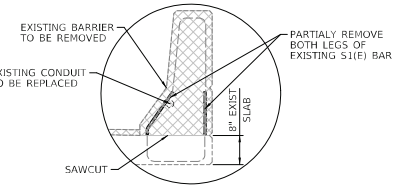

EXISTING BARRIER - REMOVAL

PHASE 1 REMOVAL SHOWN, PHASE 2 REMOVAL SIMILAR

LEGEND:
- REMOVAL
- NEW CONSTRUCTION

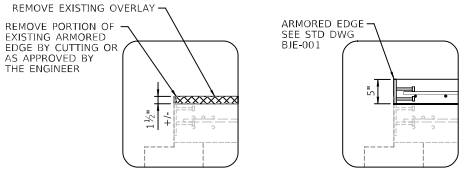

END OF SLAB SECTION DETAILS

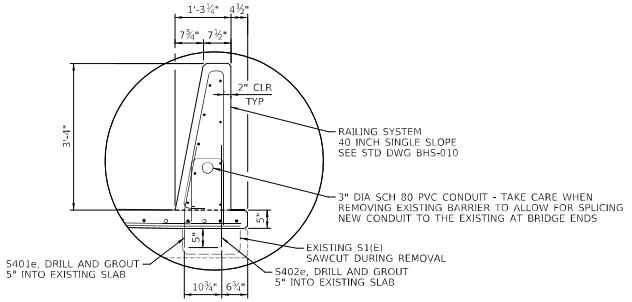

PROPOSED BARRIER SECTION

PHASE 1 CONSTRUCTION SHOWN, PHASE 2 CONSTRUCTION SIMILAR

** STD BARRIER REINFORCEMENT ARE INCLUDED IN THE LF QTY OF THE NEW RAIL SYSTEM. DOWEL BARS ARE QUANTIFIED w/ THE REST OF THE OVERLAY REINFORCEMENT.

NOTES:

SEE SUPERSTRUCTURE, SHEET S5, FOR DECK REINFORCEMENT.

COMMONWEALTH OF KENTUCKY
DEPARTMENT OF HIGHWAYS
TEAM KENTUCKY

REVISION	DATE

PREPARED BY: Stantec

DATE: OCTOBER 2026	CHECKED BY
DESIGNED BY: S. KING	D. DEPP
DETAILED BY: A. GRACE	S. KING

PHASE CONSTRUCTION

CROSSING: WATTERSON TRAIL

ROUTE	ITEM NO.	COUNTY OF
I-64	5-22024	JEFFERSON
	SHEET NO.	DRAWING NUMBER
	S4	29153

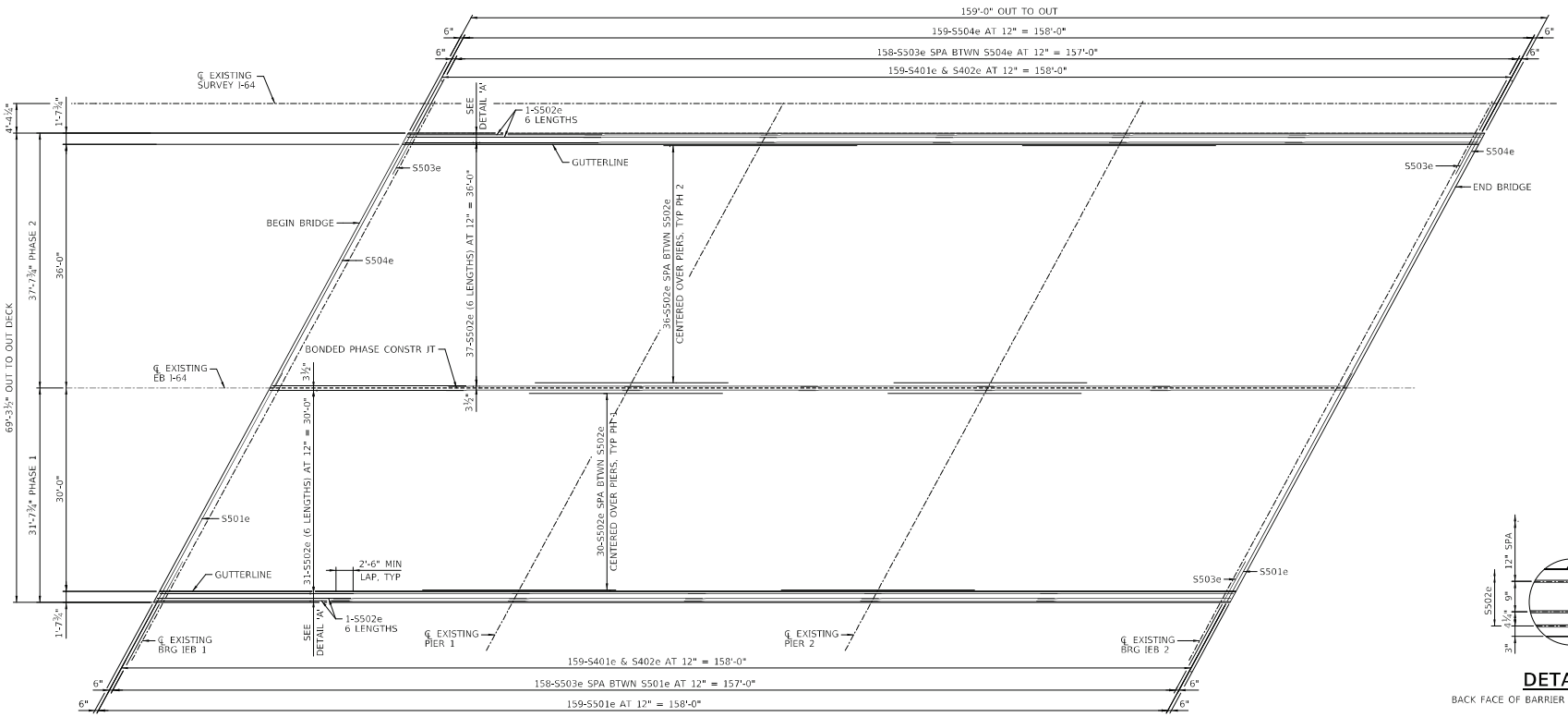

PART PLAN

EASTBOUND SHOWN, BRIDGE SYMMETRICAL ABOUT ℄ I-64
BACK FACE OF BARRIER NOT SHOWN FOR CLARITY

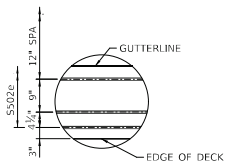

DETAIL 'A'

BACK FACE OF BARRIER NOT SHOWN FOR CLARITY

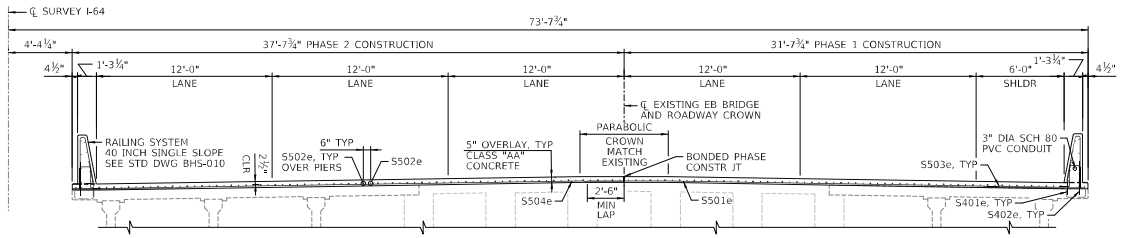

PROPOSED TYPICAL SECTION

LOOKING AHEAD STATION, EASTBOUND
BRIDGE SYMMETRICAL ABOUT ℄ I-64

SEE PROPOSED BARRIER SECTION, SHEET S4

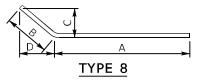

TYPE 8

BILL OF REINFORCEMENT

MARK	TYPE	SIZE	NO. EB DECK	NO. WB DECK	LENGTH FT.	LENGTH IN.	LOCATION	A FT.	A IN.	B FT.	B IN.	C FT.	C IN.	D FT.	D IN.
S401e	8	4	636	636	2	4	BARRIER	1	6	0	10	0	1 7/8	0	4 7/8
S402e	STR	4	636	636	2	3	BARRIER								
S501e	STR	5	159	159	38	5	TRNSVRS PH 1								
S502e	STR	5	564	564	28	7	LONG. PH 1 & PH 2								
S503e	STR	5	316	316	6	9	OVERHANG PH 1 & PH 2								
S504e	STR	5	159	159	42	7	TRNSVRS PH 2								

COMMONWEALTH OF KENTUCKY
DEPARTMENT OF HIGHWAYS
TEAM KENTUCKY

REVISION	DATE

PREPARED BY: Stantec

DATE: OCTOBER 2026	CHECKED BY	
DESIGNED BY: S. KING	D. DEPP	
DETAILED BY: A. GRACE	S. KING	

SUPERSTRUCTURE
CROSSING: WATTERSON TRAIL

ROUTE	ITEM NO.	COUNTY OF
I-64	5-22024	JEFFERSON
	SHEET NO. S5	DRAWING NUMBER 29153

OpenRoads Designer v10.16.2.267 USER: agrace DATE PLOTTED: 8/7/2026 1:13:00 PM FILE NAME: U:\178579199\structural\drawing\04_I-64 at Watterson Tr\Sheets\S5_Superstructure_I-64 over WattersonTr..dgn

JEFFERSON CO. I-64 EB m.p. ~13.76; WB m.p. ~14.06
EB ~LAT/LONG N 38.22934, W 85.59801
WB ~LAT/LONG N 38.22789, W 85.59255
STATION 220

SITE LOCATION IS APPROXIMATE AND WILL BE DETERMINED IN THE FIELD AND APPROVED BY DIVISION OF PLANNING PERSONNEL PRIOR TO ANY CONSTRUCTION.

ALL LOOPS SHALL BE 6'X6' SQUARE AND SHALL BE INSTALLED 16' FROM LEADING EDGE TO LEADING EDGE AS SHOWN. PIEZOELECTRIC SENSORS (PIEZOS) SHALL BE INSTALLED 5' FROM THE EDGE OF LOOPS WITH THE EDGE OF EACH PIEZO FLUSH WITH THE EDGE OF THE CORRESPONDING DRIVING LANE. LOOPS AND PIEZOS SHALL BE INSTALLED SPLICE-FREE TO THE CABINET. A MINIMUM OF 2' OF WIRE FOR EACH SENSOR SHALL BE COILED INSIDE EACH JUNCTION BOX AND A MINIMUM OF 2' OF WIRE FOR EACH SENSOR SHALL BE COILED INSIDE THE CABINET. ALL LOOPS AND PIEZOS SHALL BE LABELED IN ALL JUNCTION BOXES AND CABINET. DIVISION OF PLANNING PERSONNEL WILL CONNECT THE LOOPS AND PIEZOS INSIDE THE CABINET.

INSTALL TWO (2) TYPE A JUNCTION BOXES (JB A1 AND A2).

INSTALL ONE (1) 1¼" CONDUIT FROM EACH SAW SLOT TO NEAREST JUNCTION BOX.

INSTALL TWO (2) 20"x20"x8" GALVANIZED STEEL CABINET ON TWO (2) WOOD POSTS EACH.

INSTALL ONE (1) 2" CONDUIT FROM EACH JUNCTION BOX TO EACH CABINET.

REMOVE ALL EX. TRAFFIC DATA COLLECTION EQUIPMENT (CABINET, WOOD POSTS, JUNCTION BOXES, WIRE, CONDUIT) NOT TO BE REUSED AND DISPOSE OF OFF THE PROJECT.

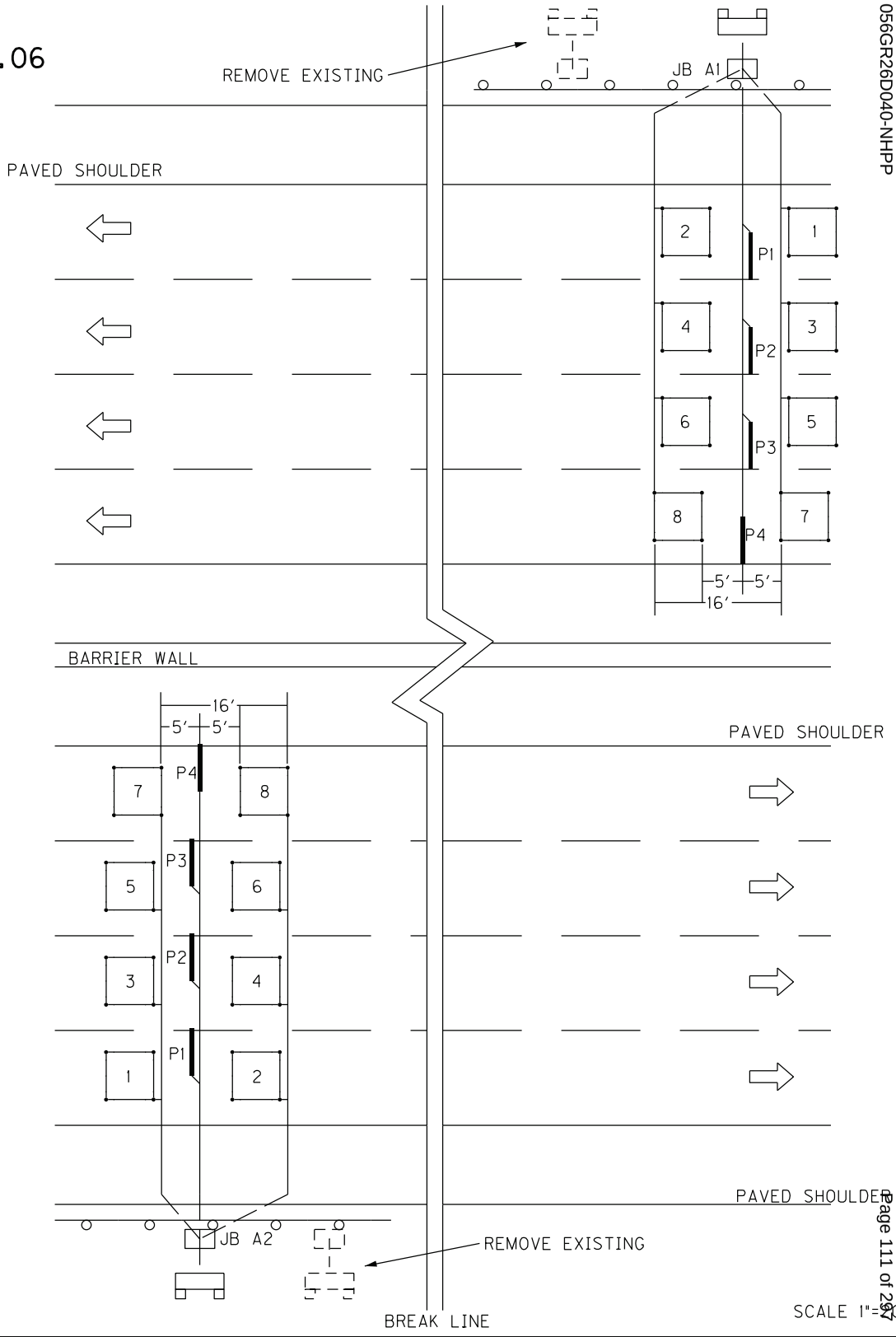

JEFFERSON COUNTY
056GR26D040-NHPP

SCALE 1"=

JEFFERSON CO. I-64 EB m.p. ~15.56; WB m.p. ~16.08
EB ~LAT/LONG N 38.22268, W 85.56577
WB ~LAT/LONG N 38.22342, W 85.55653
STATION B33

SITE LOCATION IS APPROXIMATE AND WILL BE DETERMINED IN THE FIELD AND APPROVED BY DIVISION OF PLANNING PERSONNEL PRIOR TO ANY CONSTRUCTION.

ALL LOOPS SHALL BE 6'X6' SQUARE AND SHALL BE INSTALLED 16' FROM LEADING EDGE TO LEADING EDGE AS SHOWN. PIEZOELECTRIC SENSORS (PIEZOS) SHALL BE INSTALLED 5' FROM THE EDGE OF LOOPS WITH THE EDGE OF EACH PIEZO FLUSH WITH THE EDGE OF THE CORRESPONDING DRIVING LANE. LOOPS AND PIEZOS SHALL BE INSTALLED SPLICE-FREE TO THE CABINET AND A MINIMUM OF 2' OF WIRE FOR EACH SENSOR SHALL BE COILED INSIDE EACH JUNCTION BOX AND EACH CABINET. ALL LOOPS AND PIEZOS SHALL BE LABELED IN ALL JUNCTION BOXES AND CABINET. DIVISION OF PLANNING PERSONNEL WILL CONNECT THE LOOPS AND PIEZOS INSIDE THE CABINET.

INSTALL ONE (1) 1¼" CONDUIT FROM EACH SAW SLOT TO NEAREST JUNCTION BOX.

INSTALL TWO (2) TYPE A JUNCTION BOXES (JB A1 AND A2)

INSTALL TWO (2) 20"x20"x8" CABINETS MOUNTED TO TWO (2) WOOD POSTS EACH (ONE ON EACH SIDE OF THE ROADWAY).

REMOVE ANY AND ALL EX. TRAFFIC DATA COLLECTION EQUIPMENT AND DISPOSE OF OFF THE JOBSITE.

CODED NOTE:

① INSTALL ONE (1) 2" CONDUIT.

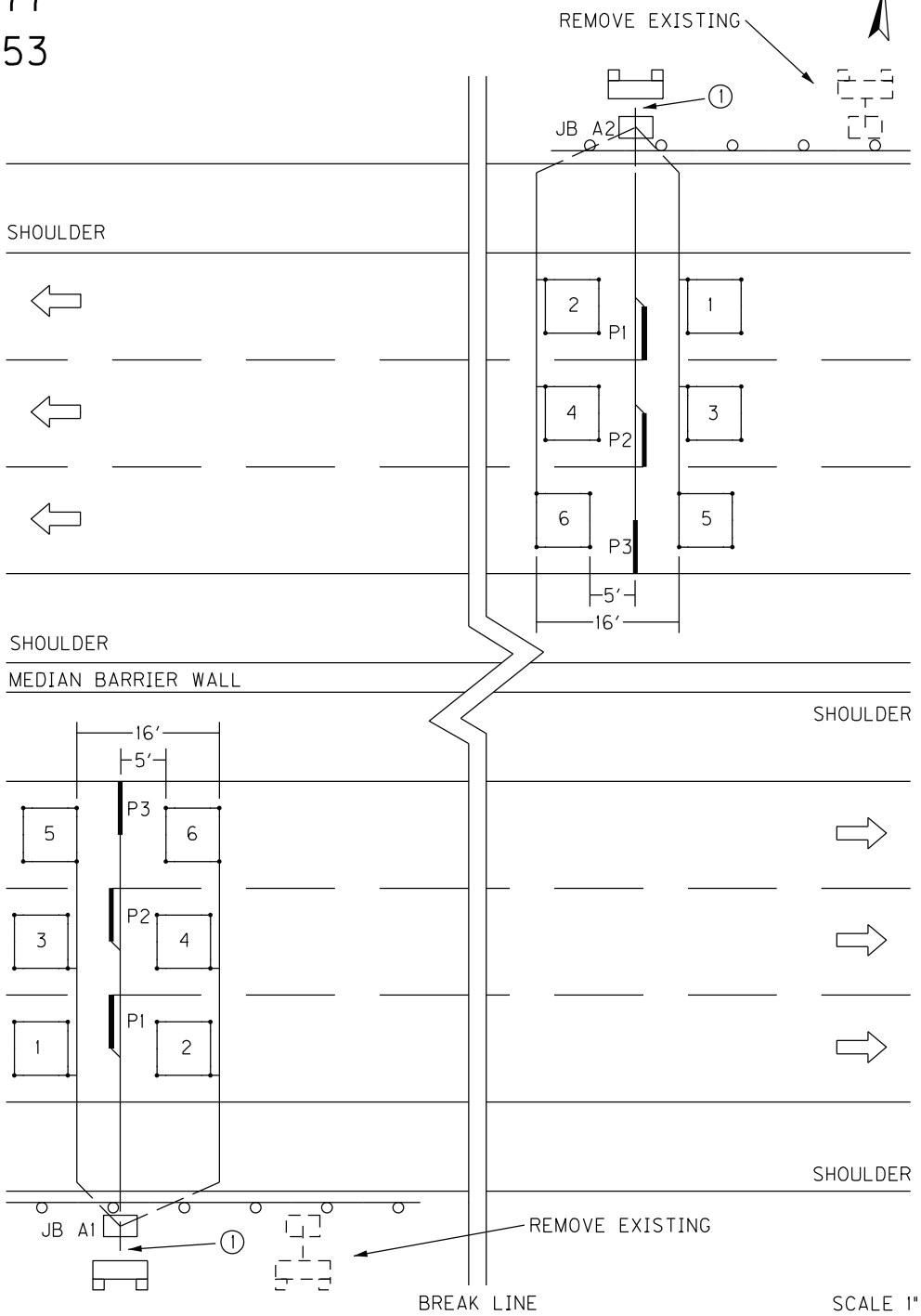

JEFFERSON CO. I-64 EB m.p. ~18.12; WB m.p. ~18.10
EB ~LAT/LONG N 38.22264, W 85.51905
WB ~LAT/LONG N 38.22332, W 85.52023
STATION 222

SITE LOCATION IS APPROXIMATE AND WILL BE DETERMINED IN THE FIELD AND APPROVED BY DIVISION OF PLANNING PERSONNEL PRIOR TO ANY CONSTRUCTION.

ALL LOOPS SHALL BE 6'X6' SQUARE AND SHALL BE INSTALLED 16' FROM LEADING EDGE TO LEADING EDGE AS SHOWN. PIEZOELECTRIC SENSORS (PIEZOS) SHALL BE INSTALLED 5' FROM THE EDGE OF LOOPS WITH THE EDGE OF EACH PIEZO FLUSH WITH THE EDGE OF THE CORRESPONDING DRIVING LANE. LOOPS AND PIEZOS SHALL BE INSTALLED SPLICE-FREE TO THE CABINET. A MINIMUM OF 2' OF WIRE FOR EACH SENSOR SHALL BE COILED INSIDE EACH JUNCTION BOX AND A MINIMUM OF 2' OF WIRE FOR EACH SENSOR SHALL BE COILED INSIDE THE CABINET. ALL LOOPS AND PIEZOS SHALL BE LABELED IN ALL JUNCTION BOXES AND CABINET. DIVISION OF PLANNING PERSONNEL WILL CONNECT THE LOOPS AND PIEZOS INSIDE THE CABINET.

INSTALL TWO (2) TYPE A JUNCTION BOXES (JB A1 AND A2).

INSTALL ONE (1) 1¼" CONDUIT FROM EACH SAW SLOT TO NEAREST JUNCTION BOX.

INSTALL TWO (2) 20"x20"x8" GALVANIZED STEEL CABINET ON TWO (2) WOOD POSTS EACH.

INSTALL ONE (1) 2" CONDUIT FROM EACH JUNCTION BOX TO EACH CABINET.

REMOVE ALL EX. TRAFFIC DATA COLLECTION EQUIPMENT (CABINET, WOOD POSTS, JUNCTION BOXES, WIRE, CONDUIT) NOT TO BE REUSED AND DISPOSE OF OFF THE PROJECT.

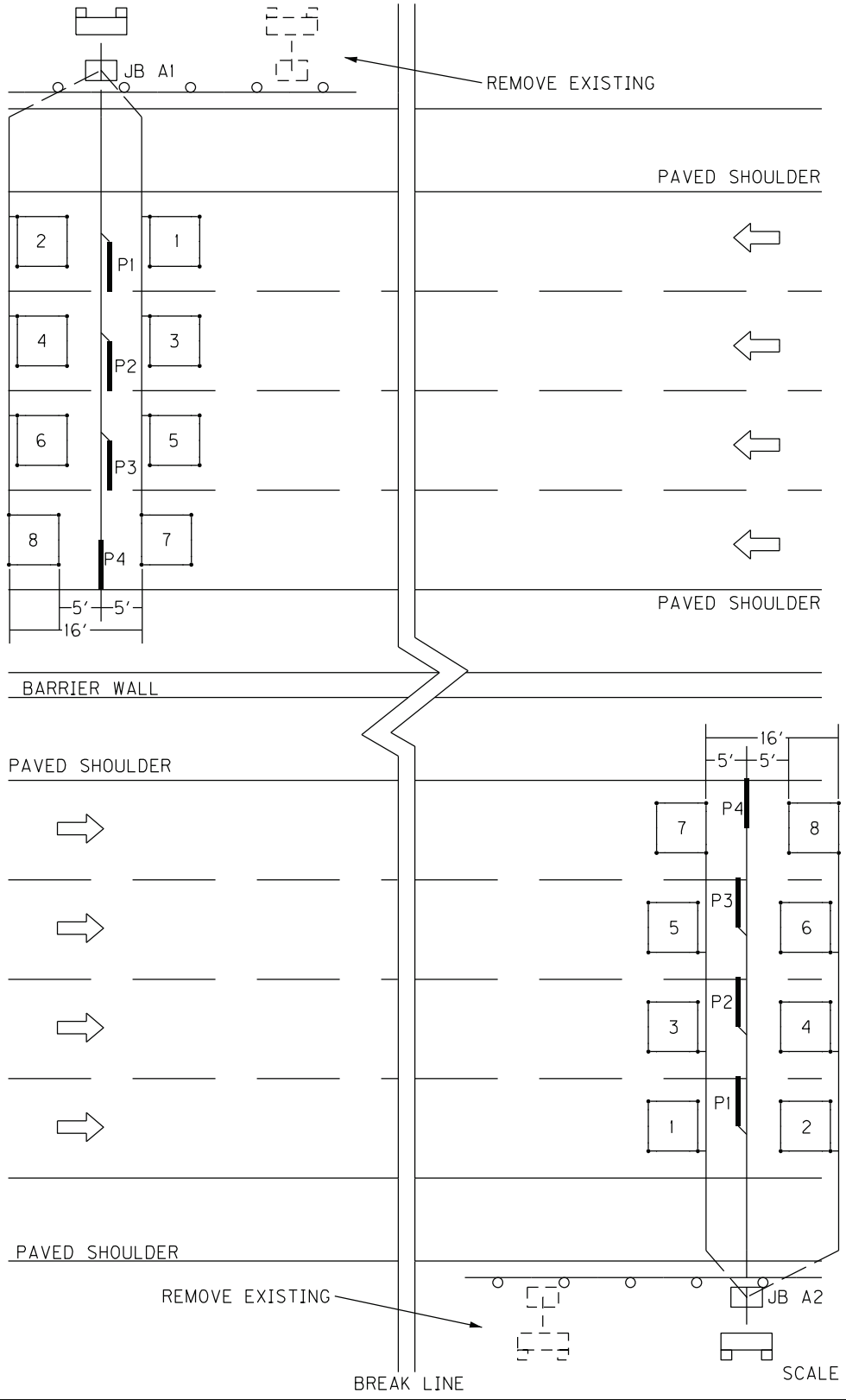

PERMANENT TRAFFIC DATA ACQUISITION STATIONS
ESTIMATE OF QUANTITIES

Bid Item Code	Description	Unit	Quantity
4793	CONDUIT 1 ¼ INCH	LIN FT	240
4795	CONDUIT 2 INCH	LIN FT	60
4811	ELECTRICAL JUNCTION BOX TYPE B	EACH	
4820	TRENCHING AND BACKFILLING	LIN FT	270
4821	OPEN CUT ROADWAY	LIN FT	
4829	PIEZOELECTRIC SENSOR	EACH	22
4830	LOOP WIRE	LIN FT	10800
4833	WIRE – NO. 8	LIN FT	
4834	WIRE – NO. 6	LIN FT	
4850	CABLE NO. 14/1 PAIR	LIN FT	
4871	POLE – 35’ WOODEN	EACH	
4895	LOOP SAW SLOT AND FILL	LIN FT	2100
4899	ELECTRICAL SERVICE	EACH	
4960	REMOVE AND REPLACE SIDEWALK	SQYD	
20213EC	INSTALL PAD MOUNT ENCLOSURE	EACH	
20359NN	GALVANIZED STEEL CABINET	EACH	6
20360ES818	WOOD POST	EACH	12
20391NS835	ELECTRICAL JUNCTION BOX TYPE A	EACH	6
20392NS835	ELECTRICAL JUNCTION BOX TYPE C	EACH	
20468EC	ELECTRICAL JUNCTION BOX 10x8x4	EACH	
21543EN	BORE AND JACK CONDUIT – 2 INCH	LIN FT	
23206EC	INSTALL CONTROLLER CABINET	EACH	
24963ED	LOOP TEST	EACH	

MATERIAL, INSTALLATION, AND BID ITEM NOTES FOR PERMANENT TRAFFIC DATA ACQUISITION STATIONS

1. DESCRIPTION

Except as specified in these notes, all work shall consist of furnishing and installing all materials necessary for permanent data acquisition station equipment installation(s) and shall be performed in accordance with the current editions of:

- The Contract
- Division of Planning Standard Detail Sheets
- Kentucky Transportation Cabinet, Department of Highways, *Standard Specifications for Road and Bridge Construction*
- Kentucky Transportation Cabinet, Department of Highways, Standard Drawings
- National Fire Protection Association *(NFPA) 70: National Electrical Code*
- Institute of Electrical and Electronic Engineers (IEEE), *National Electrical Safety Code*
- Federal Highway Administration, *Manual on Uniform Traffic Control Devices*
- American Association of State Highway and Transportation Officials (AASHTO), *Roadside Design Guide*.
- Standards of the utility company serving the installation, if applicable

The permanent traffic data acquisition station layout(s) indicate the extent and general arrangement of the proposed installation and are for general guidance. Any omission or commission shown or implied shall not be cause for deviation from the intent of the plans and specifications. Information shown on the plans and in this proposal and the types and quantities of work listed are not to be taken as an accurate or complete evaluation of the material and conditions to be encountered during construction. The bidder must draw his own conclusion as to the conditions encountered. The Department of Highways (Department) does not give any guarantee as to the accuracy of the data and no claim will be considered for additional compensation if the conditions encountered are not in accordance with the information shown. If any modifications of the plans or specifications are considered necessary by the Contractor, details of such modifications and the reasons, therefore, shall be submitted in writing to the Engineer for written approval prior to beginning such modified work.

The Contractor shall contact all utility companies and the district utility agent prior to beginning construction to insure proper clearance and shielding from existing and proposed utilities. The Contractor shall use all possible care in excavating on this project so as not to disturb any existing utilities whether shown on the plans or not shown on the plans. Any utilities disturbed or damaged by the Contractor during construction shall be replaced or repaired to original condition by the Contractor at no cost to the department. If necessary, to avoid existing utilities, the Contractor shall hand dig areas where poles or conduit cross utilities.

The Contractor shall be responsible for all damage to public and/or private property resulting from his work.

The Contractor shall inspect the project site prior to submitting a bid and shall be thoroughly familiarized with existing conditions. Submission of a bid will be considered an affirmation of this inspection having been completed. The Department will not honor any claims resulting from site conditions.

2. MATERIALS

All proposed materials shall be approved prior to being utilized. The Contractor shall submit for material approval an electronic file of descriptive literature, drawings and any requested design data for the proposed materials. After approval, no substitutions of any approved materials may be made without the written approval of the Engineer.

Materials requiring sampling shall be made available a sufficient time in advance of their use to allow for necessary testing.

2.1. Anchoring

2.1.1. Anchor and Anchor Rod

Anchor, except rock anchor, shall be expanding type, with a minimum area of 135 square inches.

Anchor rod shall be galvanized steel, double-eye, have a minimum diameter of 5/8 inches, and a minimum length of 84 inches. Minimum holding capacity shall be 15,400 lbs.

Rock anchor shall be galvanized steel, triple-eye, expanding type, with a minimum diameter of ¾ inch, a minimum 53 inches long, and a minimum tensile strength of 23,000 lb.

2.1.2. Guy Wire and Guy Guard

Guy wire shall be Class A, Zinc-coated, 3/8 inch diameter, high strength grade steel (minimum 10,800 lb.) and galvanized per ASTM A475. Guy guard shall be 8’ long, fully-rounded, yellow, and able to be securely attached to the guy wire.

2.1.3. Strandvise for Guy Wire

Strandvise for guy wire shall be 3/8 inch and rated to hold a minimum of 90% of the rated breaking strength (RBS) of the strand used.

2.2. Asphalt

Asphalt shall be a minimum CL2 Asph Surf 0.38B PG64-22 and conform to the *Standard Specifications for Road and Bridge Construction.*

2.3. Backer Rod

Backer rod shall be ½ inch diameter, closed cell polyethylene foam and shall meet or exceed the following physical properties:

- Density (average): 2.0 lbs/cu.ft. (minimum): ASTM D 1622 test method
- Tensile Strength: 50 PSI (minimum): ASTM D 1623 test method
- Compression Recovery: 90% (minimum): ASTM D 5249 test method
- Water Absorption: 0.03 gm/cc (maximum): ASTM C 1016 test method

2.4. Cabinets

2.4.1. Galvanized Steel Cabinet

Galvanized Steel Cabinet shall be constructed of 16 or 14 gauge galvanized steel and shall meet or exceed the industry standards set forth by UL 50 and NEMA 3R. The finish shall be an ANSI 61 gray polyester powder finish inside and out over the galvanized steel. Cabinet shall have minimum inside dimensions of 20 inches high by 20 inches wide by 8 inches deep.

The cabinet shall be equipped with the following:

- Drip shield top
- Seam-free sides, front, and back, to provide protection in outdoor installations against rain, sleet, and snow
- Hinged cover with 16 gauge galvanized steel continuous stainless steel pin.
- Cover fastened with captive plated steel screws, knob or latch
- Hasp and staple for padlocking
- No gaskets or knockouts
- Back panel for terminal block installation
- Post mounting hardware
- Terminal Blocks

2.4.2. Anchor Bolt for Pad Mounted Cabinet

Anchor bolt for pad mounted cabinet shall be galvanized steel with minimum dimensions of 3/8 inch by 6 inches.

2.5. Concrete

Concrete shall be Class A and conform to the *Standard Specifications for Road and Bridge Construction.*

2.6. Conduit and Conduit Fittings

Conduit and conduit fittings shall be rigid steel unless otherwise specified.

Conduit shall be zinc galvanized inside and out and conform to the NEC, UL Standard 6, and ANSI C-80.1.

Rigid Steel Conduit Fittings shall be galvanized inside and out and conform to the NEC, UL Standard 514B, and ANSI C-80.4. Intermediate Metal Conduit (IMC) will not be approved as an acceptable alternative to rigid steel conduit.

2.7. Conduit sealant

Conduit sealant shall be weather-, mold-, and mildew-resistant and chemically resistant to gasoline, oil, dilute acids and bases. Conduit sealant shall be closed cell type and shall meet or exceed the following properties:

- Cure Time — 20 minutes max.
- Density — 64.4 kg/m3; 6 lbs/ft3
- Compressive Strength (ASTM 1691) — 13.8 MPa; 330 or 300 psi

- Tensile Strength (ASTM 1623) 15.9 MPa; 270 or 250 psi
- Flexural Strength (ASTM D790) 14.5 MPa; 460 or 450 psi
- Service Temperature -20 to 200 F

2.8. Electrical Service Meter Base

Electrical service meter base shall meet or exceed all requirements of the National Electrical Code and the local utility providing the electrical service.

2.9. Electrical Service Disconnect

Electrical service disconnect shall meet or exceed all requirements of the National Electrical Code and the local utility providing the electrical service.

2.10. Flashing Arrow

Flashing Arrow shall conform to the *Standard Specifications for Road and Bridge Construction.*

2.11. Ground Fault Circuit Interrupter (GFCI) Receptacle

Ground Fault Circuit Interrupter Receptacle shall be 2-pole, 3-wire, 20 Amp, 125 Volt, 60 Hz, NEMA 5-20R configuration and meet or exceed the following standards and certifications:

- NEMA WD-1 and WD-6
- UL 498 and 943
- NOM 057
- ANSI C-73

This item shall include a UL listed, 4 inch x4 inch x $2^{1}/_{8}$ inch box with ¾ inch side and end knockouts and a 1½ inches deep, single-receptacle cover to house the GFCI receptacle. Box and cover shall be hot rolled, galvanized steel with a minimum thickness of 0.62 inches.

2.12. Grounding

2.12.1. Ground Rod

Ground Rod shall be composite shaft consisting of a pure copper exterior (5 mil minimum) that has been inseparably molten welded to a steel core. Ground Rod shall have a minimum diameter of 5/8 inch, a minimum length of 8 feet and shall be manufactured for the sole purpose of providing electrical grounding.

2.12.2. Ground Rod Clamp

Ground rod shall be equipped with a one piece cast copper or bronze body with a non-ferrous hexagonal head set screw and designed to accommodate a 10 AWG solid through 2 AWG stranded grounding conductor.

2.13. Grout

2.13.1. Grout for Inductive Loop Installation

Grout for inductive loop installation shall be non-shrink, shall meet the requirements of the *Standard Specifications for Road and Bridge Construction*,

and shall be included on the KYTC Division of Materials, *List of Approved Materials*.

2.13.2. Grout for Piezoelectric Sensor Installation

Grout for piezoelectric sensor installation shall be per the piezoelectric sensor manufacturer's recommendation. Grout shall be suitable for installation in both asphalt and Portland cement pavements. Grout shall have a short curing time (tack free in ten minutes; open to traffic in forty minutes; and fully cured within sixty minutes) to prevent unnecessary lane closure time and should be of sufficient consistency to prevent running when applied on road surfaces with a drainage cross slope. Particulate matter within the grout shall not separate or settle and the grout shall not shrink during the curing process.

2.14. Hardware

Except where specified otherwise, all hardware such as nuts, bolts, washers, threaded ends of fastening devices, etc. with a diameter less than 5/8 inch shall be passivated stainless steel, alloy type 316 or type 304. Stainless steel hardware shall meet ASTM F593 and F594 for corrosion resistance. All other nuts and bolts shall meet ASTM A307 and shall be galvanized.

2.14.1. Conduit Strap

Conduit strap shall be double-hole, stainless steel, and sized to support specified conduit. Conduit strap shall attach to wood pole or post with two 2 ¼ inch wood screws.

2.14.2. Mounting Strap for Pole Mount Cabinet

Mounting strap for pole mount cabinet shall be ¾ inch x 0.03 inch stainless steel; equipped with clips or buckles to securely hold strap.

2.14.3. Metal Framing Channel and Fittings

Metal framing channel shall be 1 5/8 inches wide galvanized steel that conforms to ASTM A1011 and ASTM A653. One side of the channel shall have a continuous slot with in-turned edges to accommodate toothed fittings.

Fittings shall be punch pressed from steel plates and conform to ASTM A575 and the physical requirements of ASTM A1011.

2.15. Junction Box

2.15.1. Junction Box Type A, B, or C

Junction Box Type A, B, or C shall meet or exceed ANSI/SCTE 77-2007, Tier 15. Box shall have an open bottom. A removable, non-slip cover marked "PLANNING" shall be equipped with a lifting slot and attached with a minimum of two 3/8 inch stainless steel hex bolts and washers. Type A Box shall have nominal inside dimensions of 13 inches wide by 24 inches long by 18 inches deep. Type B Box shall have nominal inside dimensions of 11 inches wide by 18 inches long by 12

inches deep. Type C Box shall have nominal inside dimensions of 24 inches wide by 36 inches long by 30 inches deep.

2.15.2. Aggregate for Junction Box Type A, B, or C

Aggregate for junction box type A, B, or C shall be gradation size no. 57 and conform to the *Standard Specifications for Road and Bridge Construction*.

2.15.3. Junction Box 10x8x4

Junction Box Type 10x8x4 shall be constructed of a UV-stabilized, nonmetallic material or non-rusting metal and be weatherproof in accordance with NEMA 4X. Box shall be equipped with an overhanging door with a continuous durable weatherproof gasket between the body and door. Door shall be hinged with screws, hinge(s) and pin(s) and shall be equipped with a padlockable latch on the side opposite the hinge(s). Junction Box 10x8x4 shall have minimum inside dimensions of 10 inches high by 8 inches wide by 4 inches deep.

2.16. Maintain and Control Traffic

Materials for the bid item Maintain and Control Traffic shall conform to the *Standard Specifications for Road and Bridge Construction,* and the KYTC Department of Highways *Standard Drawings*.

2.17. Piezoelectric Sensor

Piezoelectric sensor (piezo) shall provide a consistent level voltage output signal when a vehicle axle passes over it, shall have a shielded transmission cable attached, and shall meet the following requirements:

- Dimensions: such that sensor will fit in a ¾ inch wide by 1 inch deep saw cut. Total length shall be 6 feet unless specified otherwise.
- Output uniformity: ± 7% (maximum)
- Typical output level range: 250mV (minimum) from a wheel load of 400 lbs.
- Working temperature range: -40° to 160° F.
- Sensor life: 30 million Equivalent Single Axle Loadings (minimum)

Shielded transmission cable shall be coaxial and shall meet the following requirements:

- RG 58C/U with a high density polyethylene outer jacket rated for direct burial
- Length shall be a minimum of 100 feet. Installations may exceed 100 feet so the piezo shall be supplied with a lead-in of appropriate length so that the cable can be installed splice-free from the piezo to the cabinet.
- Soldered, water resistant connection to the sensor.

One installation bracket for every 6 inches of sensor length shall also be supplied. Piezo shall be a RoadTrax BL Class I or approved equal.

2.18. Saw Slot Sealant

Saw Slot Sealant shall be non-shrink, non-stringing, moisture cure, polyurethane

encapsulant suitable for use in both asphalt and concrete pavements. It shall provide a void-free encapsulation for detector loop cables and adequate compressive yield strength and flexibility to withstand heavy vehicular traffic and normal pavement movement.

The cured encapsulant shall meet or exceed the following:

- Hardness (Indentation): 35-65 Shore A, ASTM D2240
- Tensile Strength: 150 psi minimum, ASTM D412
- Elongation: 125% minimum 2 inch/minute pull, ASTM D412
- Tack-free Drying Time: 24 hours maximum, ASTM C679
- Complete Drying Time: 30 hours maximum, KM 64-447
- Chemical Interactions (seven day cure at room temperature, 24-hour immersion, KM 64-446):
  - Motor Oil: No effect
  - Deicing Chemicals: No effect
  - Gasoline: Slight swell
  - Hydraulic Brake Fluid: No effect
  - Calcium Chloride (5%): No effect

2.19. Seeding and Protection

Material for Seeding and Protection shall be Seed Mixture Type I and conform to the *Standard Specifications for Road and Bridge Construction*.

2.20. Signs

Materials for signs shall conform to the *Standard Specifications for Road and Bridge Construction.*

2.21. Splicing Materials

2.21.1. Electrical Tape

Electrical tape shall be a premium grade, UL-listed, all-weather, vinyl-insulating tape with a minimum thickness of 7 mil. Tape shall be flame retardant and resistant to abrasion, moisture, alkalis, acids, corrosion, and weather (including ultraviolet exposure).

2.21.2. Splice Kit

Splice kit shall be inline resin-type and rated for a minimum of 600V. Resin shall be electrical insulating-type and shall provide complete moisture and insulation resistance.

2.22. Steel Reinforcing Bar

Steel reinforcing bar shall be #5 and shall conform to the *Standard Specifications for Road and Bridge Construction.*

2.23. Terminal Block

Terminal block shall be rated for a minimum of 300 V and have a minimum of six

terminal pairs with 9/16-inch nominal spacing (center to center) for connecting loop and piezoelectric sensor wires to cable assemblies. Terminal block shall have screw type terminal strips to accommodate wire with spade-tongue ends.

2.24. Warning Tape

Warning tape shall be acid and alkali resistant formulated for direct burial. Tape shall be a minimum of 3 inches wide by 4.0 mils (nominal) thick, and shall be permanently imprinted with a minimum 1 inch black legend on a red background warning of an electric line. Tape shall meet or exceed the following industry specifications:

- American Gas Association (AGA) 72-D-56
- American Petroleum Institute (API) RP 1109
- American Public Works Association (APWA) Uniform Color Code
- Department of Transportation (DOT) Office of Pipeline Safety USAS B31.8
- Federal Gas Safety Regulations S 192-321 (e)
- General Services Administration (GSA) Public Buildings Service Guide: PBS 4-1501, Amendment 2
- National Transportation Safety Board (NTSB) PSS 73-1
- Occupational Safety and Health Administration (OSHA) 1926.956 (c) (1)

2.25. Wire and Cable

All cable and wire shall be plainly marked in accordance with the National Electrical Code (NEC).

2.25.1. Loop Wire

Loop wire shall be 14 AWG, stranded, copper, single conductor, and shall conform to the International Municipal Signal Association (IMSA) Specification No. 51-7.

2.25.2. Cable No. 14/1 Pair

Cable No. 14/1 pair loop lead-in cable shall be 14 AWG, stranded, copper paired, electrically shielded conductors, and shall conform to IMSA 19-2.

2.25.3. Grounding conductor

Grounding conductor and bonding jumper shall be solid or stranded, 4 AWG bare copper.

2.25.4. Service Entrance Conductor

Service entrance conductor shall be stranded, copper, Type USE-2, sized as required to comply with the NEC.

2.25.5. Terminal for electrical wire or cable

Terminal for electrical wires or cables shall be insulated, solderless, spade tongue terminals of correct wire and stud size. Terminal for electrical wires or cables shall be incidental to the wire or cable (including piezoelectric sensor transmission cable) to be connected to terminal strips.

2.26. Wood Post

Wood post shall be Southern Pine pretreated to conform to the American Wood Preservers' Association (AWPA) C-14 or UC4B and shall have minimum dimensions of 4 inches by 4 inches by 8 feet long (for Galvanized Steel Cabinet) or 4 feet long (for Junction Box 10x8x4), sawed on all four sides with both ends square.

2.27. Wooden Pole

Wooden pole shall be a Class IV wood pole of the length specified and shall conform to the *Standard Specifications for Road and Bridge Construction* except the pole shall be treated in accordance with AWPA P9 Type A.

3. CONSTRUCTION METHODS

The plans indicate the extent and general arrangement of the installation and are for guidance. When the Contractor deems any modifications to the plans or specifications necessary, details of such changes and the reasons shall be submitted in writing to the engineer for written approval prior to beginning the modified work.

After the project has been let and awarded, the Division of Construction shall notify the Division of Planning of the scheduled date for a Pre-Construction meeting so that prior arrangements can be made to attend. This will allow the Division of Planning an opportunity to address any concerns and answer any questions that the Contractor may have before beginning the work.

The Division of Planning Equipment Management Team (502-564-7183) shall be notified a minimum of seven days before any work pertaining to these specifications begins to allow their personnel the option to be present during installation.

Unless otherwise specified, installed materials shall be new.

Construction involving the installation of loops or piezoelectric sensors shall not be performed when the temperature of the pavement is less than 38ºF.

A final inspection will be performed by a member of the Central Office Division of Planning equipment staff after the installation is complete to verify that the installation is in compliance with the plans and specifications.

Any required corrective work shall be performed per the *Standard Specifications for Road and Bridge Construction.*

3.1. Anchoring

Furnish: Anchor, anchor rod, guy wire, strand vise, guy guard.

Anchor shall be installed in relatively dry and solid soil. Rock anchor shall be installed in solid rock. Excavate the hole at a 45° to 60° angle in line with the guy (hole size shall be slightly larger than the expanded anchor – see manufacturer's recommendation). Attach rod to anchor, install assembly into hole, and expand anchor. Backfill and tamp entire disturbed area. The effectiveness of the anchor is dependent upon the thoroughness of backfill tamping. Attach guy to strand vise on pole and anchor rod and tighten to required tension. Install guy guard on guy.

3.2. Bore and Jack Pipe – 2"

Furnish: Steel Encasement Pipe, 2"

Bore and jack pipe – 2" shall conform to the Section 706 of the *Standard Specifications for Road and Bridge Construction.*

3.3. Cleanup and Restoration

Furnish: Seed Mix Type 1 (as required); fertilizer (as required); agricultural limestone (as required); mulch or hydromulch (as required); tackifier (as required).

The Contractor shall be responsible for repairing any damage to public and/or private property resulting from his work. Upon completion of the work, restore all disturbed highway features in like kind design and materials. This shall include filling any ruts and leveling ground appropriately. Contractor shall dispose of all waste and debris off the project. Sow all disturbed earthen areas with Seed Mix Type 1 per Section 212 of the *Standard Specifications for Road and Bridge Construction*. All materials and labor necessary for cleanup and restoration shall be considered incidental to other bid items.

3.4. Conduit

Furnish: Conduit; conduit fittings; bushings (grounding where required); LB condulets (as required); weatherheads (as required); conduit straps; hardware; conduit sealant.

Conduit that may be subject to regular pressure from traffic shall be laid to a minimum depth of 24 inches below grade. Conduit that will not be subject to regular pressure from traffic shall be laid to a minimum depth of 18 inches below grade.

Conduit ends shall be reamed to remove burrs and sharp edges. Cuts shall be square and true so that the ends will butt together for the full circumference of the conduit. Tighten couplings until the ends of the conduit are brought together. Do not leave exposed threads. Damaged portions of the galvanized surfaces and untreated threads resulting from field cuts shall be painted with an Engineer-approved, rust inhibitive paint. Conduit bends shall have a radius of no less than 12 times the nominal diameter of the conduit, unless otherwise shown on the plans.

Contractor shall install a bushing (grounding bushing where required) on both ends of all conduits. Cap spare conduits on both ends with caps or conduit sealant.

Conduit openings in junction boxes and cabinets shall be waterproofed with a flexible, removable conduit sealant, working it around the wires, and extending it a minimum 1 inch into the end of the conduit.

After the conduit has been installed and prior to backfilling, the conduit installation shall be inspected and approved by the Engineer.

3.5. Electrical Service

Furnish: Meter base, service disconnect, wire, GFCI AC duplex receptacle with box and cover; conduit, conduit fittings, bushings (grounding where required); LB condulets (as required); weatherhead; conduit straps; hardware; conduit sealant; ground rod with clamp; grounding conductor.

Prior to any construction, the Contractor shall initiate a work order with the local power

company for the installation of electrical service to the site. A representative from the Division of Planning and the local power company shall be consulted prior to choosing an exact location for the pole. The Contractor shall clear the right-of-way for the electrical service drop.

Contractor shall obtain electrical inspections, memberships, meter base, service disconnect and any other requirements by the utility serving the installation and pay all fees as required.

Install meter-base and disconnect panel with a 30-ampere, fused, circuit breaker inside. Install a manufactured weatherproof hub connector to connect the conduit to the top of the meter base and service disconnect.

Install a rigid ¾ inch conduit with three 8 AWG service conductors from the cabinet, through the service disconnect to the meter base and a 1¼" conduit with three 8 AWG service conductors from the meter base to a weatherhead two feet from the top of the electrical service pole. Install conduit straps 30 inches on center and provide a drip loop where the wire enters the weatherhead. Splice electric drop with service entrance conductors at the top of the pole.

The limit of conduit incidental to "Install Electrical Service" for a pad mounted cabinet is 24 inches beyond face of service pole.

Install a 120-volt, 20-amp GFCI AC duplex receptacle with box and cover in the automatic data recorder (ADR) cabinet.

Install a ground rod with clamp. Install a grounding conductor wire from the meter base, through the disconnect panel, to the ground rod clamp. Install grounding conductor in 1-¾" conduit from service disconnect to ground rod.

After completing the installation and before the electrical service is connected, obtain a certificate of compliance from the Kentucky Department of Housing, Buildings and Construction, Electrical Inspection Division.

3.6. Flashing Arrow

Furnish: Arrow Panel

Construction of Flashing Arrow shall conform to the *Standard Specifications for Road and Bridge Construction.*

3.7. Galvanized Steel Cabinet

Furnish: Cabinet; wood posts; concrete; conduit fittings; metal framing channel; pipe clamp; terminal block(s); spade tongue wire terminals; wire labels; hardware.

Where right-of-way allows, locate the cabinet such that it is outside the clear zone in accordance with the *Roadside Design Guide*. Install Cabinet such that the door of the

cabinet faces the roadway.

Excavate as required and install wood posts to a depth of 36 inches and place concrete around posts as shown on the standard detail sheets. Install metal framing channel with pipe clamp between posts.

Install Cabinet on wood posts 38 inches above the finished grade as shown on the standard detail sheets. Install a unistrut between posts when two posts are specified.

Install the required number of terminal blocks on the cabinet back plate. Install a spade tongue terminal on each loop and piezo sensor wire entering the cabinet and connect wires to terminal block(s). Wiring shall be neat and orderly. Label all wires and cables inside cabinet.

Install conduit from ground to cabinet and attach to pipe clamp. Install locknuts to attach conduit to cabinet and install a conduit bushing as shown on the standard detail sheets.

3.8. Grounding

Furnish: Ground rod with clamp; grounding conductor.

At sites with electrical or solar service, all conduits, poles, and cabinets shall be bonded to ground rods and the electrical system ground to form a complete grounded system.

Install such that top of ground rod is a minimum of 3 inches below finished grade.

Grounding systems shall have a maximum 25 ohms resistance to ground. If the resistance to ground is greater than 25 ohms, two or more ground rods connected in parallel shall be installed. Adjacent ground rods shall be separated by a minimum of 6 feet.

3.9. Install Pad Mount Enclosure

Furnish: Concrete; anchor bolts with washers and nuts; conduit; conduit fittings; conduit grounding bushings; ground rod with clamp; grounding conductor; conduit sealant; wooden stakes (where required); wire labels; hardware.

The Contractor shall be responsible for securing the enclosure from the Central Office Division of Planning Warehouse in Frankfort and transporting it to the installation site.

Where right-of-way allows, locate the enclosure such that it is outside the clear zone in accordance with the *Roadside Design Guide*.

Excavate as required, and place concrete to construct the enclosure foundation as specified on the standard detail sheets. Install enclosure on the concrete base such that the door(s) of the enclosure opens away from traffic (hinges away from traffic). Install anchor bolts, washers, and nuts to secure the enclosure to the foundation.

Install ground rod with clamp and install one ¾ inch rigid conduit from enclosure base to

ground rod. Install a grounding conductor from ground rod to enclosure base and bond to each conduit bushing in the base.

Install one ¾ inch rigid steel conduit for electrical service from the base of the enclosure to 24 inches beyond the concrete base. Make all field wiring connections to the electrical service, as applicable.

If electrical service is not provided as a bid item in the contract, plug conduit on both ends with a cap, conduit sealant, or electrical tape. Mark the location of the buried conduit end with a wooden stake labeled "3/4 in. conduit."

Install specified rigid steel conduit(s) into the base of the enclosure for sensor wire entry. Install one spare 2-inch conduit from the enclosure base to 2 feet beyond the concrete base. Plug spare conduit on both ends with a cap, conduit sealant or electrical tape.

The limit of all conduits incidental to "Install Pad Mount Enclosure" is 24 inches beyond the edge of the concrete base.

Wiring in enclosure shall be neat and orderly. Label all wires and cables inside enclosure. KYTC personnel will furnish and install terminal blocks and connect sensors to terminal blocks.

3.10. Install Controller Cabinet

Furnish: Mounting brackets; mounting straps; conduit; LB condulets; conduit fittings; conduit grounding bushings; ground rod with clamp; grounding conductor; cable staples; conduit sealant; wooden stakes (where required); wire labels; hardware.

The Contractor shall be responsible for securing the cabinet from the Central Office Division of Planning Warehouse in Frankfort and transporting it to the installation site. Any existing holes in the cabinet not to be reused shall be covered or plugged to meet NEC requirements.

Install mounting brackets and secure cabinet to pole with mounting straps.

Install a ground rod with clamp. Install grounding conductor in 1-¾" conduit form cabinet to ground rod.

Install one ¾ inch rigid steel conduit with two lb. condulets from cabinet to electrical service disconnect box. Make all field wiring connections to the electrical service, as applicable.

If electrical service is not provided as a bid item in the contract, plug conduit on both ends with cap, plumbers putty, conduit sealant, or electrical tape. Mark the location of the buried conduit end with a wooden stake labeled "3/4 in. conduit".

Install specified rigid steel conduit(s) and type LB condulet(s) into the bottom of the

cabinet for sensor wire entry. The limit of conduits incidental to "Install Controller Cabinet" is 24 inches beyond the face of the pole.

Wiring in cabinet shall be neat and orderly. Label all wires and cables inside cabinet. KYTC personnel will furnish and install terminal blocks and connect sensors to terminal blocks.

3.11. Junction Box Type 10x8x4

Furnish: Junction box; wood post; conduit fittings; wire labels; hardware.

Where right-of-way allows, locate the junction box such that it is outside the clear zone in accordance with the Roadside Design Guide.

Excavate as required and install wood post(s) to a depth of 18 inches. Install junction box on wood post such that the bottom of the box is 18 inches above the finished grade as shown on the standard detail sheets. Box shall be installed with four (4) 2½ inch wood screws and washers.

Install locknuts to attach conduit to junction box and install a conduit bushing as shown on the standard detail sheets.

Wiring inside box shall be neat and orderly. Label all wires and cables inside box.

3.12. Junction Box Type A, B, or C

Furnish: Junction box, No. 57 aggregate; grounding conductor

Excavate as required and place approximately 12 inches of No. 57 aggregate beneath the proposed junction box to allow for drainage. Install specified junction box type A, B, or C near the edge of pavement, flush with finished grade per the detail sheets. Where required, orient the box so that the dimensions comply with the National Electrical Code. Stub conduits with grounding bushings into junction box at its base to accommodate wires and connect grounding conductor to all grounding bushings. Backfill to existing grade, and restore disturbed area to the satisfaction of the Engineer.

Wiring inside box shall be neat and orderly. Label all wires and cables inside box.

3.13. Loops - Proposed

Furnish: Wire; saw slot sealant; backer rod; grout; conduit sealant.

The plans and notes specify the approximate location for loop installations. Prior to sawing slots or drilling cores, the Contractor shall meet with a representative of the Division of Planning to verify the precise layout locations on site. Avoid expansion joints and pavement sections where potholes, cracks, or other roadway flaws exist.

Upon completion of this meeting, the Contractor shall measure out and mark the proposed loop locations with spray paint or chalk such that the saw slots will be parallel

and perpendicular to the direction of traffic. Marked lines shall be straight and exact to the locations determined and sized as shown on the plans. Unless indicated otherwise, loops shall be 6 feet by 6 feet square and loops in the same lane shall be spaced 16 feet from leading edge to leading edge.

On resurfacing, rehabilitation, and new construction projects that include new asphalt pavement, the Contractor shall install loops prior to laying the final surface course. On projects with milling and texturing, the Contractor may install the loops prior to or after the milling operation; however, if installed prior to milling, the Contractor shall be responsible for ensuring that the loops are installed at a depth such that the milling operation will not disturb the newly installed loops. The Contractor shall correct damage caused by the milling operations to newly installed loops prior to placement of the final surface course at no additional cost to the Cabinet.

For projects that include the installation of new asphalt and piezoelectric sensors, the Contractor shall mark or otherwise reference all loops installed prior to the final surface course such that the loops can be accurately located when the piezoelectric sensors are installed after placement of the final surface course.

For projects that do not have asphalt surfacing, the Contractor shall install the loops in the surface of the pavement.

The Prime Contractor shall coordinate the installation of loops with the electrical sub-Contractor and the Engineer to ensure correct operation of the completed installation.

The following is a typical step by step procedure for the installation of a loop.

- Carefully mark the slot to be cut, perpendicular to the flow of traffic and centered in the lane.
- Make each saw-cut 3/8-inch wide and at a depth such that the top of the backer rod is a minimum of 2 inches below the surface of rigid (PCC/Concrete) pavement or 4 inches below the surface of asphalt pavement.
- Drill a 1½ inch core hole at each corner and use a chisel to smooth corners to prevent sharp bends in the wire.
- Clean ALL foreign and loose matter out of the slots and drilled cores and within 1 foot on all sides of the slots using a high-pressure washer.
- Completely dry the slots and drilled cores and within 1 foot on all sides of the slots using oil-free forced air, torpedo heaters, electric heaters, or natural evaporation, depending on weather conditions. Be very careful not to burn the asphalt if heat is used.
- Measure 9-12 inches from the edge of the paved surface (shoulder break or face of curb) and drill a 1½ inch hole on a 45º angle to the conduit adjacent to the roadway.
- Closely inspect all cuts, cores, and slots for jagged edges or protrusions prior to the placement of the wire. All jagged edges and protrusions shall be ground or re-cut and cleaned again.

- Place the loop wire splice-free from the termination point (cabinet or junction box) to the loop, continue around the loop for four turns, and return to the termination point.
- Push the wire into the saw slot with a blunt object such as a wooden stick. Make sure that the loop wire is pushed fully to the bottom of the saw slot.
- Install conduit sealant to a minimum of 1" deep into the cored 1½ inch hole.
- Apply loop sealant from the bottom up and fully encapsulate the loop wires in the saw slot. The wire should not be able to move when the sealant has set.
- Cover the encapsulated loop wire with a continuous layer of backer rod along the entire loop and home run saw slots such that no voids are present between the loop sealant and backer rod.
- Finish filling the saw cut with non-shrinkable grout per manufacturer's instructions. Alleviate all air pockets and refill low spaces. There shall be no concave portion to the grout in the saw slot. Any excess grout shall be cleaned from the roadway to alleviate tracking.
- Clean up the site and dispose of all waste off the project.
- Ensure that the grout has completely cured prior to subjecting the loop to traffic. Curing time varies with temperature and humidity.

Exceptions to installing loop wire splice-free to the junction box or cabinet may be considered on a case-by-case basis and must be pre-approved by the Engineer. If splices are allowed, they shall be located in a junction box and shall conform to the construction note for Splicing.

If loop lead-in cable (Cable No. 14/1 Pair) is specified, cable shall be installed splice free to the cabinet ensuring that extra cable is left in each junction box or cabinet. All wires and cables shall be labeled in each junction box and cabinet.

Loop inductance readings shall be between 100 and 300 microhenries. The difference of the loop inductance between two loops in the same lane shall be ±20 microhenries. Inductance loop conductors shall test free of shorts and grounds. Upon completion of the project, all loops must pass an insulation resistance test of a minimum of 100 million ohms to ground when tested with a 500 Volt direct current potential in a reasonably dry atmosphere between conductors and ground.

3.14. Loop Test

When noted on a data collection station layout sheet that there are existing inductive loops within the limits of the project, notify the Engineer in writing, a minimum of 14 calendar days prior to beginning milling operations. After milling and prior to placing asphalt inlay, conduct an operating test on the existing inductance loops at the control cabinet in the presence of the Engineer to determine if the inductance loop conductors have an insulating resistance of a minimum of 100 megohms when tested with a 500-volt direct current potential in a reasonably dry atmosphere between conductors and ground. The Department may also conduct its own tests with its own equipment.

If the tests indicate the loop resistances are above the specified limit and the Engineer determines the system is operable, proceed with the asphalt inlay. If the test indicates the loop resistance is not within the specified limits or if the Engineer determines the system is otherwise not operable, prior to placing the asphalt inlay install and test new loop detectors according to the station layout, notes, and Detail Drawings.

The Engineer will contact and maintain liaison with the District Planning Engineer and the Division of Planning in order to coordinate any necessary work.

3.15. Maintain and Control Traffic

Furnish (all as required): Drums, traffic cones, barricades used for channelization purposes, delineators, and object markers.

Maintain and Control Traffic shall conform to the plans, the Standard Specifications for Road and Bridge Construction, and the KYTC Department of Highways Standard Drawings.

3.16. Open Cut Roadway

Furnish: Concrete, reinforcing bars.

Excavate trench by sawing and chipping away roadway to dimensions as indicated on the detail sheets. After placing conduit, install concrete and steel reinforcing bars per the *Standard Specifications for Road and Bridge Construction*. Restore any disturbed sidewalk to its original condition.

3.17. Piezoelectric Sensor

Furnish: Piezoelectric sensor and cable; sensor support brackets; saw slot sealant; backer rod; grout; conduit sealant.

The plans and notes specify the approximate location for piezoelectric sensor (piezo) installations. Prior to sawing slots or drilling cores, the Contractor shall meet with a representative of the Division of Planning to verify the final layout on site. Avoid expansion joints and pavement sections where potholes, cracks, or other roadway flaws exist. Roadway ruts at the proposed piezo location shall not be in excess of ½ inch under a 4-foot straight edge.

Install the piezo perpendicular to traffic in the final surface course of the pavement. Locate the sensor in the lane as shown on the site layout drawing. Eleven-foot length sensors shall be centered in the lane.

The following is a typical step by step procedure for the installation of a piezo. Refer specifically to the manufacturer's instructions provided with the sensor prior to installation.

- Carefully mark the slot to be cut, perpendicular to the flow of traffic and properly positioned in the lane.

- It is strongly recommended that a ¾ inch wide diamond blade be used for cutting the slot, or that blades be ganged together to provide a single ¾ inch wide cut. The slot shall be wet cut to minimize damage to the pavement.
- Cut a slot ¾ inch wide (±1/16 inch) by 1 inch minimum deep. The slot should be a minimum of 2 inches longer than the sensor (including the lead attachment). Drop the saw blade an extra ½ inch down on both ends of the sensor. The lead out of the passive cable should be centered on the slot.
- Cut the slot for the passive cable ¼ inch wide and at a depth so that the top of the backer rod is a minimum of 2 inches below the road surface.
- Clean ALL foreign and loose matter out of the slot and within 1 foot on all sides of the slot using a high-pressure washer.
- Completely dry the slot and within 1 foot on all sides of the slot using oil-free forced air, torpedo heaters, electric heaters, or natural evaporation, depending on weather conditions. Be very careful not to burn the asphalt if heat is used.
- Measure 9-12 inches from the edge of the paved surface (shoulder break or face of curb) and drill a 1½ inch hole on a 45º angle to the conduit adjacent to the roadway.
- Place strips of 2-4-inch-wide tape strips on the pavement along the lengths of both sides of the sensor slot, 1/8 inch away from the slot.
- Wear clean, protective latex (or equivalent) gloves at all times when handling sensors. Visually inspect sensor to ensure it is straight. Check lead attachment and passive cable for cuts, gaps, cracks and/or bare wire. Verify that the correct sensor type and length is being installed by checking the data sheet. Verify there is sufficient cable to reach the cabinet. Piezo lead-in cable shall not be spliced.
- Test the sensor for capacitance, dissipation factor and resistance, according to the directions enclosed with the sensor. Capacitance and dissipation should be within ±20% of the piezo data sheet. Resistance (using the 20M setting) should be infinite. Record the sensor serial number and the test results and label “pre-installation.” This information should be stored in the counter cabinet and/or returned to Department Planning personnel.
- Lay the sensor next to the slot and ensure that it is straight and flat.
- Clean the sensor with steel wool or an emery pad and wipe with alcohol and a clean, lint-free cloth.
- Place the installation bracket clips every 6 inches along the length of the sensor.
- Bend the tip of the sensor downward at a 30° angle. Bend the lead attachment end down at a 15° angle and then 15° back up until level (forming a lazy Z).
- Place the sensor in the slot, with the brass element 3/8 inch below the road surface along the entire length. The tip of the sensor should be a minimum of 2 inches from the end of the slot and should not touch the bottom of the slot. The top of the plastic installation bracket clips should be 1/8 inch below the surface of the road. The lead attachment should not touch the bottom or sides of the slot. Ensure the sensor ends are pushed down per the manufacturer’s instructions.
- Visually inspect the length of the sensor to ensure it is at uniform depth along its length and it is level (not twisted, canted or bent).

- On the passive cable end, block the end of the slot approximately 3-5 inches beyond the end of the lead attachment area creating an adequate "dam" so that the sensor grout does not flow out.
- Use one bucket of sensor grout per piezo installation. Overfill the slot with sensor grout and allow to cure for a minimum of 10 minutes before continuing with the installation. Ensure that sensor grout fills around and beneath the sensor completely and that there is not a trough on top.
- Remove the tape along the sides of the saw slot when the adhesive starts to cure.
- Carefully remove the dam from the end of the sensor.
- Route the lead-in cable through the saw slot
- Install conduit sealant to a minimum of 1" deep into the cored 1½ inch hole.
- Cover the lead-in cable with encapsulant, backer rod, and grout.
- If necessary, after the grout has hardened, grind with an angle grinder until the profile is a 1/16-inch mound. There shall be no concave portion to the mound.
- Clean up the site and dispose of all waste off the project.
- Ensure that the sensor grout has completely cured prior to subjecting the sensor to traffic. Curing time will vary with temperature and humidity.

Upon installation, test the sensor for capacitance, dissipation factor and resistance, according to the directions enclosed with the sensor. Capacitance and dissipation should be within ±20% of the piezo data sheet. Resistance (using the 20M setting) should be infinite. Perform a functional test of the piezo with an oscilloscope to ensure that the sensor is generating a proper response to the passage of vehicles.

Record the sensor serial number and the test results and label "post-installation." This information should be stored in the counter cabinet and/or returned to Department Planning personnel.

3.18. Pole – Wooden

Furnish: Pole; anchoring equipment (as required); hardware (as required).

Excavate and install wood pole to a minimum depth of one-sixth the total pole height. Place backfill material in hole and compact until flush with existing grade. Install guy wire, guy guard, anchor, anchor rod, and strand vise, if necessary. Anchor shall be a minimum of one-third the pole height from the face of the pole. Provide temporary erosion control, seeding, protection and restoration of disturbed areas to the satisfaction of the Engineer.

3.19. Removal of Existing Equipment

The Contractor shall remove existing materials (including but not limited to: poles, anchors, cabinets, junction boxes, conduit and wire) not to be reused. Contractor shall dispose of all removed materials off the project. All materials and labor necessary for the removal of existing equipment shall be considered incidental to other bid items.

3.20. Signs

Furnish: Signs; sign standards; hardware.

Construction of **s**igns shall conform to the *Standard Specifications for Road and Bridge Construction.*

3.21. Splicing

Furnish: Splice kit; solder.

These notes describe the splicing process (if permitted) and are not intended to grant permission to splice. Permission to splice shall be determined by the Division of Planning and the locations shall be shown on the layout sheet. If splicing is needed but not shown on the layout sheet, the Contractor shall receive prior written approval from the Division of Planning.

All splices shall conform to the provisions of the NEC.

Splices for loop and loop lead-in wire shall be twisted and soldered. Abrade the outer jacket of both wires to promote good adhesion and prevent capillary leak paths. Seal the splice with an electrical sealing resin. Spliced loop conductors shall test free of shorts and unauthorized grounds and shall have an insulating resistance of at least 100 megohms when tested with a 500-volt direct current potential in a reasonably dry atmosphere between conductors and ground.

For piezos, the same type coax cable, supplied by the manufacturer, shall be used to splice to the sensor's lead-in cable. Cables shall be soldered. Abrade the outer jacket of both cables to promote good adhesion and prevent capillary leak paths. Seal the splice with an electrical sealing resin. Spliced piezo cables shall be tested and have a minimum resistance of 20 megohms, a maximum dissipation factor of 0.03, a capacitance within the manufacturer's recommended range based upon the length of additional cable. A functional test of the piezo shall be performed to ensure that the sensor is generating a proper response to the passage of vehicles.

3.22. Trenching and Backfilling

Furnish: Warning tape; seed mix type I; cereal rye or German foxtail-millet; mulch; concrete (as required); asphalt (as required).

Excavate trench and provide required cover as shown on the standard detail sheets. After placing conduit, backfill material shall be placed and compacted in lifts of 9 inches or less. Install warning tape as shown on the detail sheet. Provide temporary erosion control, seeding, protection and restoration of disturbed areas to the satisfaction of the Engineer.

3.23. Wiring

Furnish: Wire; wire labels; spade tongue wire terminals (as required).

Installation of all wiring shall conform to the NEC. Permanent identification numbers

shall be affixed to all wires in all junction boxes and cabinets (see Layout(s) for loop and piezo numbers).

Additional lengths of each loop and piezo sensor wire shall be neatly coiled in all cabinets and junction boxes as follows:

Enclosure Type	Additional length of each wire
Galvanized Steel Cabinet	2' – 3'
Pad Mount Cabinet (332)	6' - 8'
Pole Mount Cabinet (336)	3' - 4'
Junction Box Type 10x8x4	2' – 3'
Junction Box Type A, B, or C	2' – 3'

3.24. Wood Post

Furnish: Wood post; concrete (as required); seed mix type I; cereal rye or German foxtail-millet; mulch.

Excavate hole to specified depth and place concrete, if required. Install post, backfill to existing grade, and tamp backfill. Provide temporary erosion control, seeding, protection and restoration of disturbed areas to the satisfaction of the Engineer.

3.25. Remove and Replace Sidewalk

Furnish: Lumber, stakes, nails or screws, and concrete.

Remove existing sidewalk to install rigid conduit from edge of roadway to nearest junction box or cabinet. Form, pour and finish concrete in place of old existing sidewalk making sure to replace the expansion joints in their respective locations. Concrete shall conform to the *Kentucky Standard Specifications for Road and Bridge Construction* for sidewalks.

4. BID ITEM NOTES AND METHOD OF MEASUREMENT FOR PAYMENT

Only the bid items listed will be measured for payment. All other items required to complete the vehicle detection installation shall be incidental to other items of work. Payment at the contract unit price shall be full compensation for all materials, labor, equipment and incidentals to furnish and install these items.

4.1. Bore and Jack Pipe – 2”

Bore and jack pipe – 2” shall be furnished, installed, and measured for payment per the *Standard Specifications for Road and Bridge Construction*.

4.2. Conduit

Conduit shall include furnishing and installing specified conduit in accordance with the specifications. This item shall include conduit fittings, bodies, boxes, weatherheads, expansion joints, couplings, caps, conduit sealant, electrical tape, clamps, bonding straps and any other necessary hardware. Conduit will be measured in linear feet.

4.3. Electrical Service

Electrical Service shall include furnishing and installing all necessary materials and payment of all fees toward the complete installation of an electrical service which has passed all required inspections. Incidental to this item shall be furnishing and installing:

- Meter-base per utility company’s specifications
- Service disconnect panel per utility company’s specifications
- Meter base and service disconnect entrance hubs, waterproof
- Service entrance conductors
- Rigid steel conduit
- Rigid steel conduit fittings
- Conduit straps
- Weatherhead
- Duplex GFCI receptacle, 120-volt, 20-amp
- Ground rod with clamp
- Grounding conductor

Also incidental to this item shall be any necessary clearing of right of way for the electrical service drop.

Electrical service will be measured in individual units each.

4.4. Flashing Arrow

Flashing Arrow shall be furnished, installed, and measured for payment per the *Standard Specifications for Road and Bridge Construction.*

4.5. Galvanized Steel Cabinet

Galvanized Steel Cabinet shall include furnishing and installing galvanized steel cabinet on post as specified. Incidental to this item shall be furnishing and installing grounding hardware, and any necessary post/pole mounting hardware. Also incidental to this item shall be furnishing and installing the required number of terminal blocks and connection of all

sensors to the terminal blocks. Galvanized Steel Cabinet will be measured in individual units each.

4.6. Install Pad Mount Enclosure

Install Pad Mount Enclosure shall include installing a Department-furnished enclosure as specified on the detail sheets.

This item shall include obtaining the enclosure from KYTC and transporting it to the installation site and furnishing and installing the following:

- Concrete foundation (including any excavation necessary)
- Anchor bolts, lock washers, and nuts
- Conduit
- Conduit fittings (including grounding bushings)
- Weatherhead
- Terminal Strip(s)
- Ground rod with clamp
- Grounding conductor

Install Pad Mount Enclosure will be measured in individual units each.

4.7. Install Controller Cabinet

Install Controller Cabinet shall include installing a Department-furnished cabinet as specified on the detail sheets.

This item shall include obtaining the cabinet from KYTC and transporting it to the installation site and furnishing and installing the following:

- Conduit
- Conduit Fittings
- Terminal Strip(s)
- Ground rod with clamp
- Grounding conductor

Install Controller Cabinet will be measured in individual units each.

4.8. Junction Box Type 10" x 8" x 4"

Junction Box Type 10”x8”x4” shall include furnishing and installing specified junction box in accordance with the specifications. This item shall include connectors, splice sleeves, conduit fittings, mounting materials and any other items required to complete the installation. Incidental to this item shall be furnishing and installing specified post (wood, channel, metal, etc.) as required for the installation. Junction Box Type 10”x8”x4” will be measured in individual units each.

4.9. Junction Box Type A, B, or C

Junction Box Type A, B, or C shall include furnishing and installing specified junction box in accordance with the specifications. This item shall include excavation, furnishing and installing #57 aggregate, backfilling around the box, and restoration of disturbed areas to the satisfaction of the Engineer. Incidental to this item shall be furnishing and installing a

grounding conductor bonding all conduit grounding bushings in the box. Junction Box Type A, B, or C will be measured in individual units each.

4.10. Loop Saw Slot and Fill

Loop Saw Slot and Fill shall include sawing and cleaning saw slots and furnishing and installing conduit sealant, loop sealant, backer rod, grout, or other specified material. Loop Saw Slot and Fill will be measured in linear feet of sawed slot.

4.11. Maintain and Control Traffic

Maintain and Control Traffic shall be measured for payment per the *Standard Specifications for Road and Bridge Construction.*

4.12. Open Cut Roadway

Open Cut Roadway shall include excavating trench (sawing and chipping roadway) to dimensions as indicated on the detail sheets and furnishing and placing concrete, steel reinforcing bars, and asphalt. This item also includes restoring any disturbed sidewalk to its original condition. Open Cut Roadway will be measured in linear feet.

4.13. Piezoelectric Sensor

Piezoelectric sensor (piezo) shall include sawing and cleaning saw slots and furnishing and installing piezo in accordance with the specifications. This item shall include furnishing and installing lead-in wire, conduit sealant, encapsulation material, backer rod, grout, testing, and accessories. Piezo will be measured in individual units each.

4.14. Pole – 35’ Wooden

Pole – 35’ Wooden shall include excavation, furnishing and installing specified wood pole, backfilling and restoring disturbed areas to the satisfaction of the Engineer. Incidental to this item shall be furnishing and installing guy wire, anchor and anchor rod, strand vise, and guy guard, if specified.

Pole – 35’ Wooden will be measured in individual units each.

4.15. Signs

Signs shall be furnished, installed, and measured for payment per the *Standard Specifications for Road and Bridge Construction.*

4.16. Trenching and Backfilling

Trenching and Backfilling shall include excavation, warning tape, backfilling, temporary erosion control, seeding, protection and restoration of disturbed areas to original condition. This item shall include concrete, asphalt or approved replacement material for sidewalks, curbs, roadways, etc. (if required). Trenching and backfilling will be measured in linear feet.

4.17. Wire or Cable

Wire or cable shall include furnishing and installing specified wire or cable within saw slot, conduit, junction box, cabinet, or overhead as indicated on the detail sheets. Incidental to this item shall be the labeling of all wires and cables in each junction box, cabinet and splice

box, and furnishing and installing other hardware required for installing cable. Wire or Cable will be measured in linear feet.

4.18. Wood Post

Wood Post shall include furnishing and installing wood post as specified. This item shall include excavation, furnishing and placing concrete (if required), backfilling around the post, and restoration of disturbed areas to the satisfaction of the engineer. Wood Post will be measured in individual units each.

4.19. Remove and Replace Sidewalk

Remove and Replace Sidewalk shall include removing existing sidewalk to install conduit and/or junction box (if required) and replacing old existing sidewalk with new sidewalk after installation of required items. This item includes removing old sidewalk and disposing of off the project and forming, pouring and finishing the new sidewalk after installation of required items.

4.20. Loop Test

Loop Test includes conducting an operating test on the existing inductance loops at the control cabinet in the presence of the Engineer to determine if the inductance loop conductors have an insulating resistance of a minimum of 100 megohms when tested with a 500-volt direct current potential in a reasonably dry atmosphere between conductors and ground.

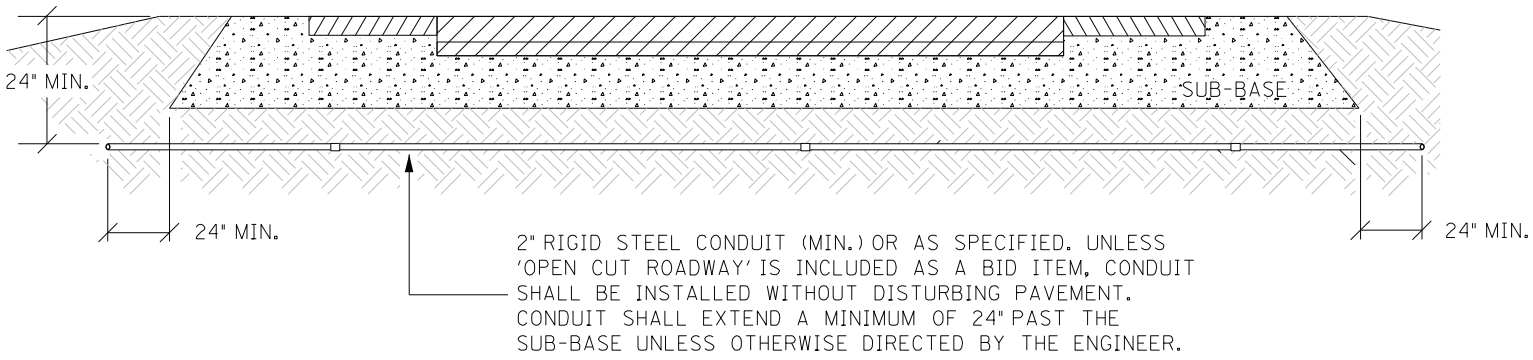

CONDUIT UNDER PAVEMENT

TOTAL TRENCH WIDTH SHALL BE 3" (NOM.) WIDER THAN THE SUM OF THE OUTSIDE DIAMETER(S) OF THE CONDUIT(S) INSTALLED. CONDUIT(S) SHALL BE CENTERED IN TRENCH.

CONTRACTOR SHALL PLACE BACKFILL IN LIFTS (9" MAX.) COMPACT BACKFILL, AND RESTORE DISTURBED AREA TO THE SATISFACTION OF THE ENGINEER

CONTRACTOR SHALL INSTALL UNDERGROUND UTILITY WARNING TAPE ABOVE CONDUIT AS SHOWN.

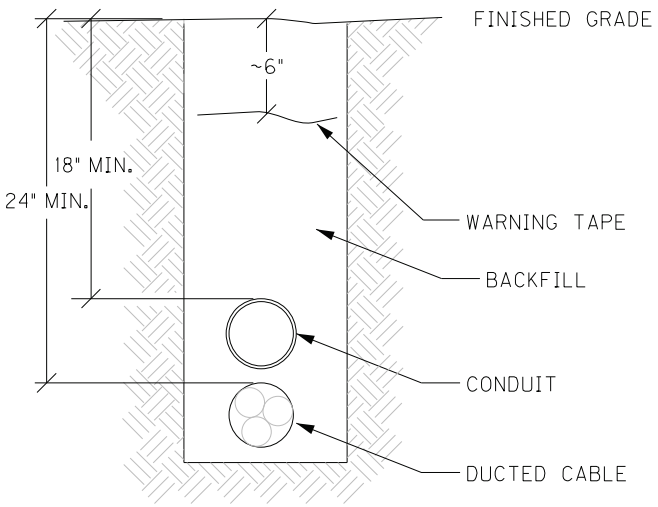

CONDUIT TRENCH

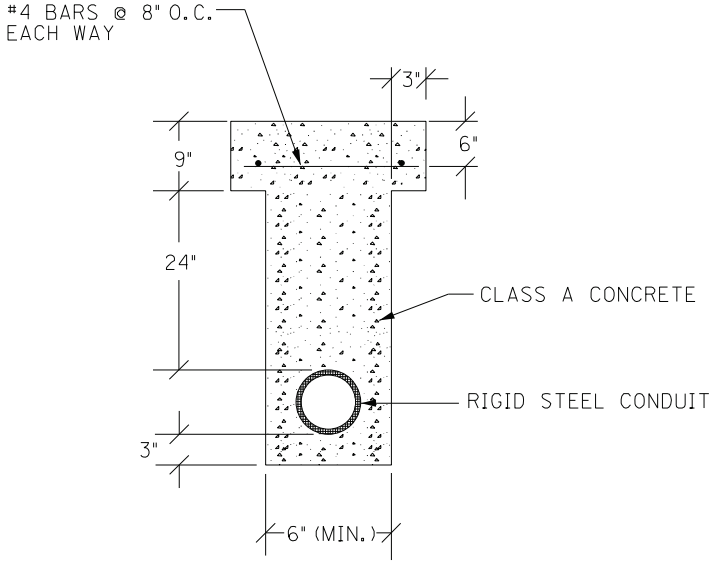

OPEN CUT PAVEMENT DETAIL

CONDUIT INSTALLATION

NOT TO SCALE

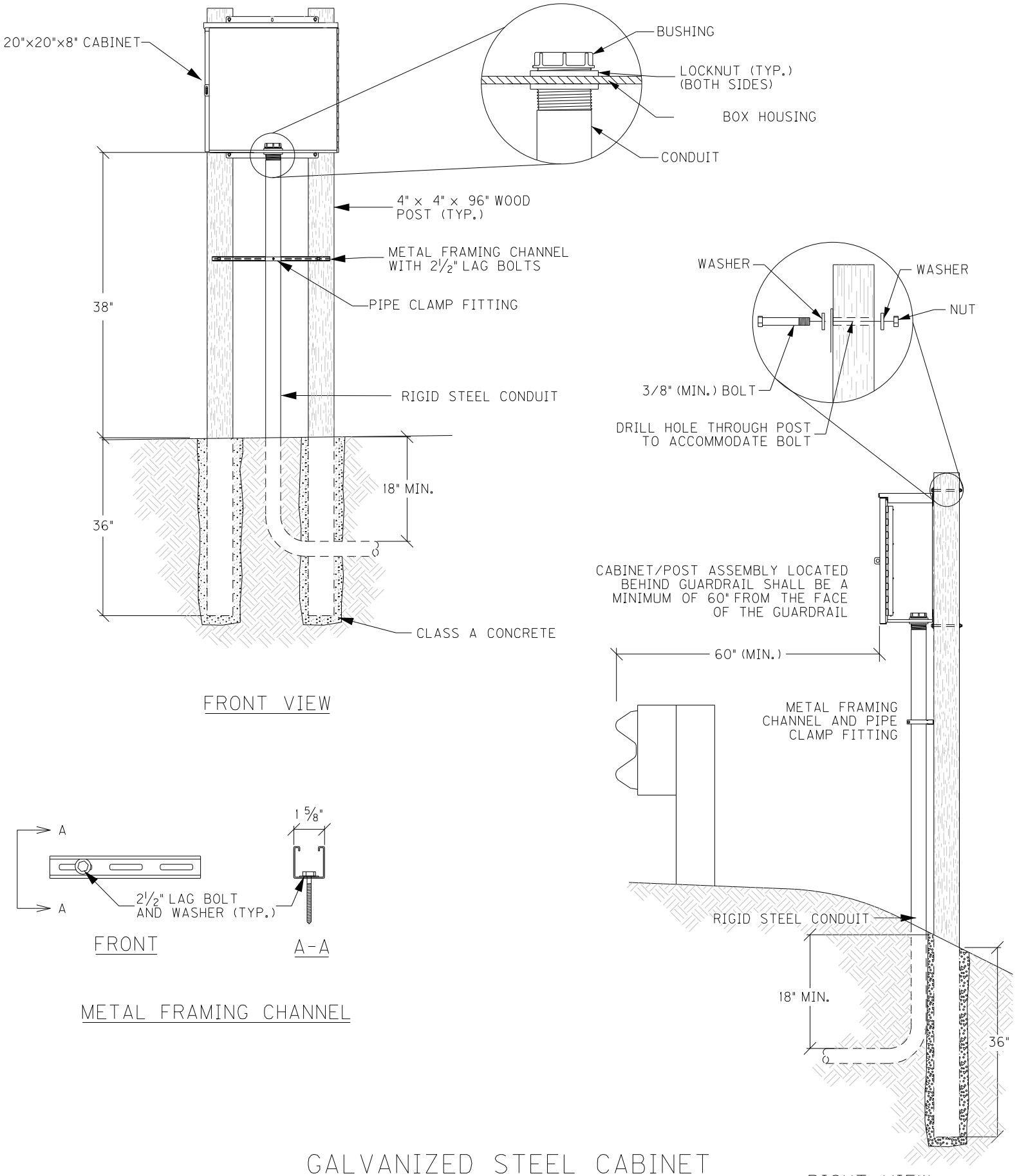

GALVANIZED STEEL CABINET
DOUBLE POST ASSEMBLY

NOT TO SCALE

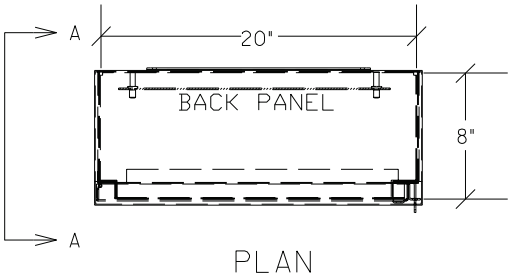

PLAN

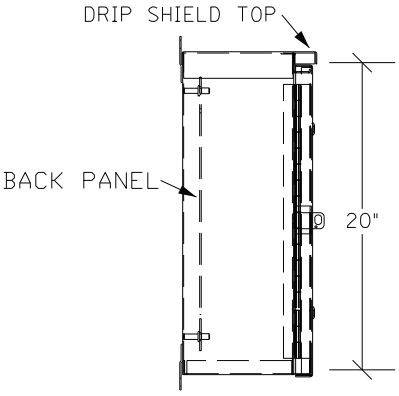

SECTION A-A

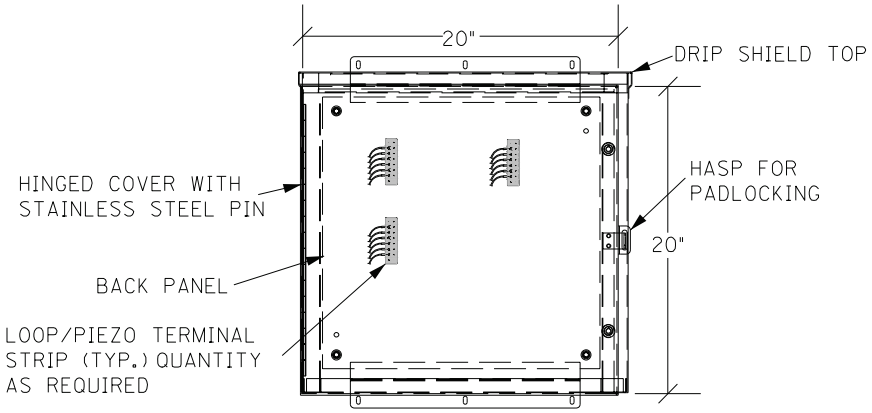

ELEVATION

GALVANIZED STEEL CABINET

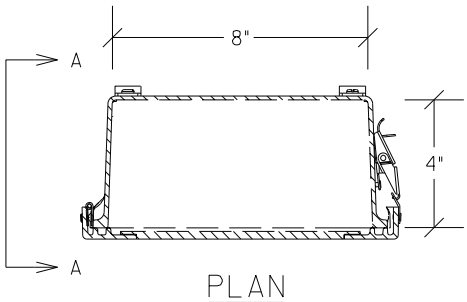

PLAN

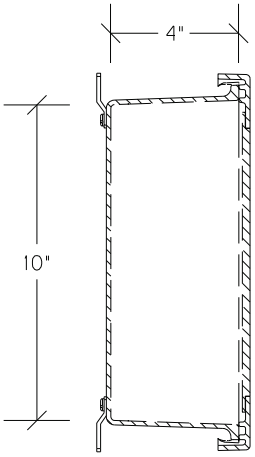

SECTION A-A

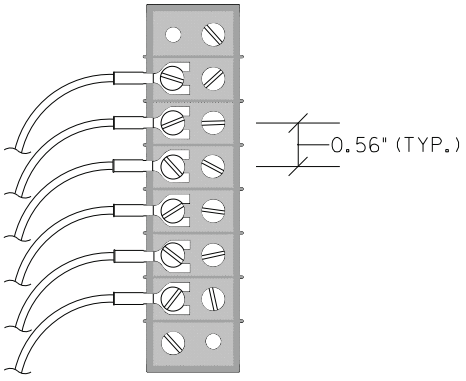

TERMINAL STRIP (TYP.)

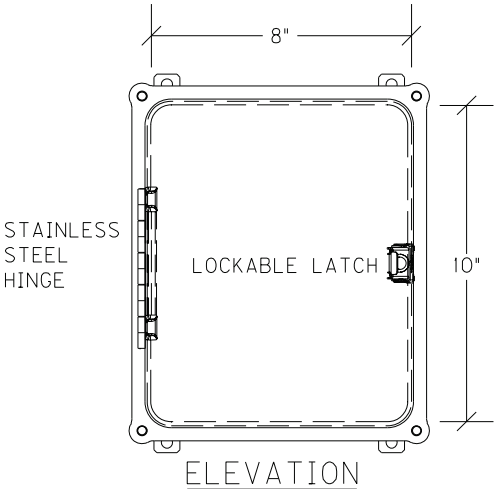

ELEVATION

JUNCTION BOX 10"x8"X4"

NOT TO SCALE

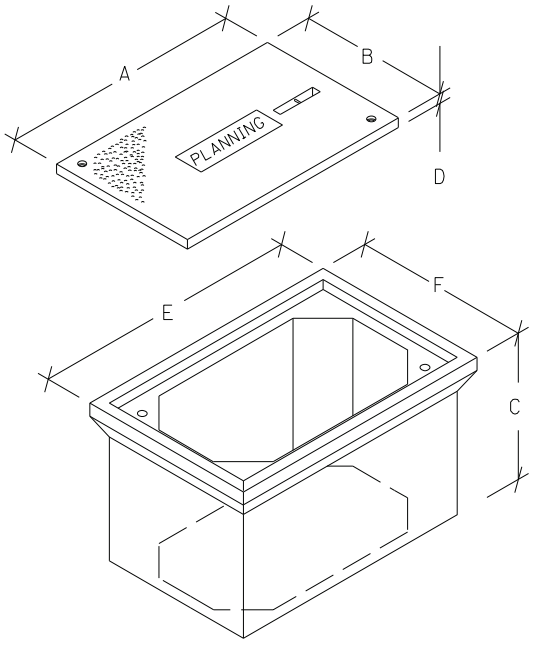

JUNCTION BOX DIMENSIONS (NOMINAL)						
	A	B	C	D*	E	F
TYPE A	23"	14"	18"	2"	25"	16"
TYPE B	18"	11"	12"	1¾"	20"	13"
TYPE C	36"	24"	30"	3"	38"	26"

* MINIMUM
STACKABLE BOXES ARE PERMITTED

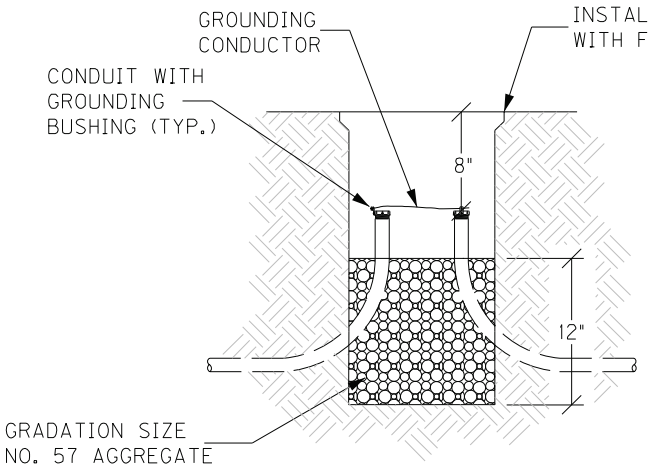

WHERE REQUIRED, JUNCTION BOX SHALL BE ORIENTED SUCH THAT THE DIMENSIONS COMPLY WITH THE NATIONAL ELECTRICAL CODE.

ELEVATION

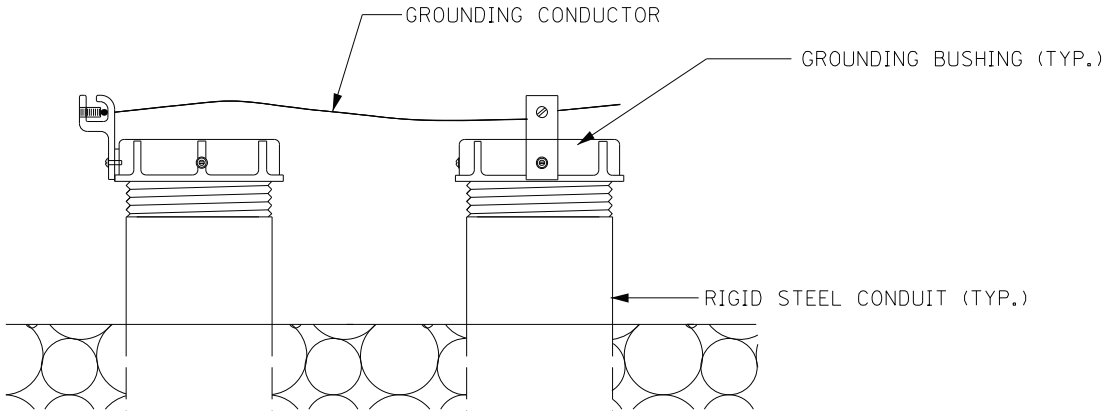

GROUNDING DETAIL

JUNCTION BOX - TYPE A, TYPE B, TYPE C

NOT TO SCALE

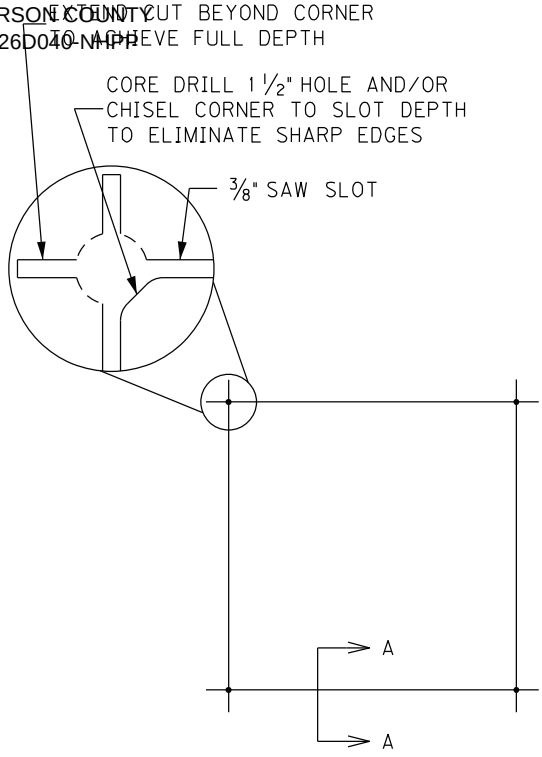

SAW CUT PLAN

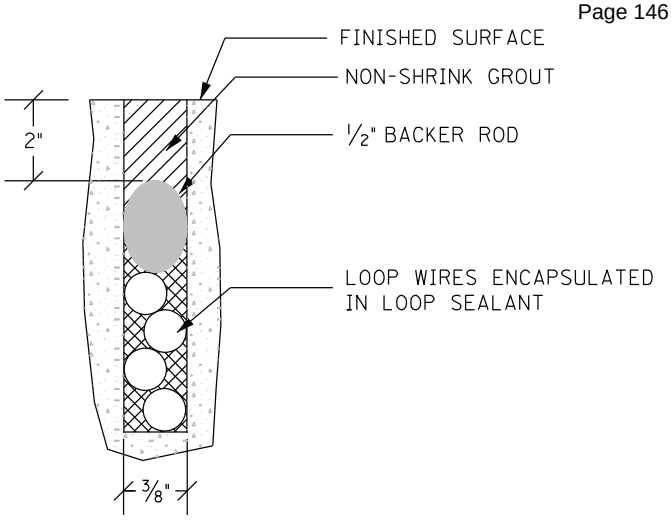

SECTION A-A (CONCRETE)

UNLESS SPECIFIED OTHERWISE, ALL LOOPS SHALL BE 6' x 6' SQUARE, CENTERED IN EACH LANE, WITH FOUR (4) TURNS OF 14 AWG LOOP WIRE.

ADJACENT SAW SLOTS SHALL BE A MINIMUM OF 12" APART.

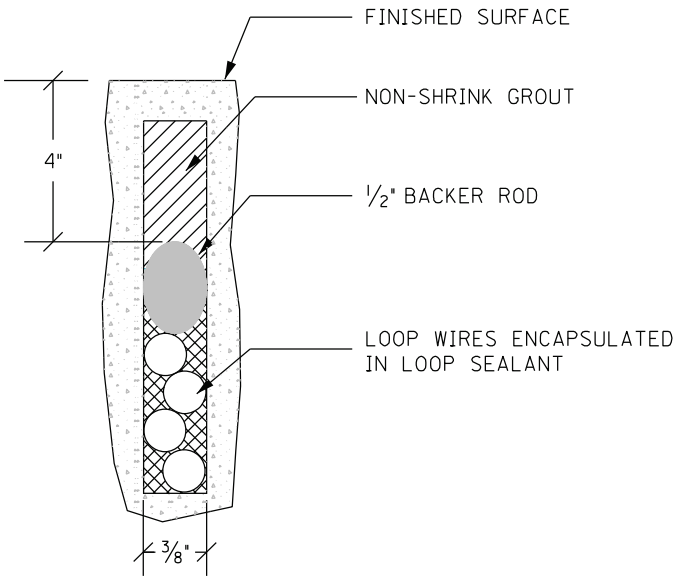

SECTION A-A (ASPHALT)

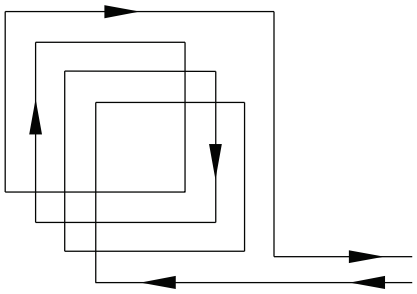

WIRING PLAN

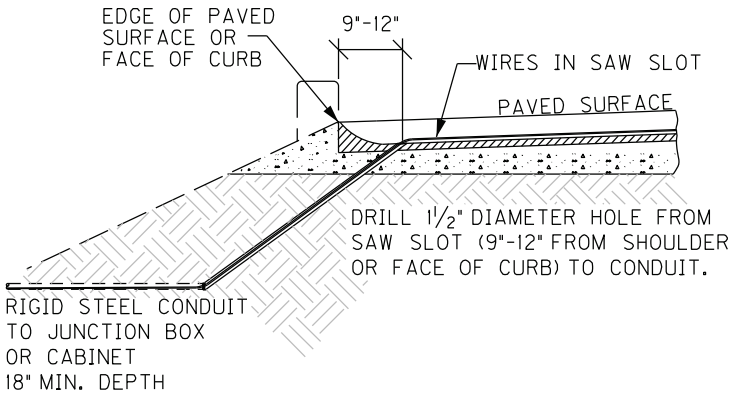

SAW SLOT EDGE OF PAVEMENT TRANSITION

INDUCTIVE LOOP DETECTOR

NOT TO SCALE

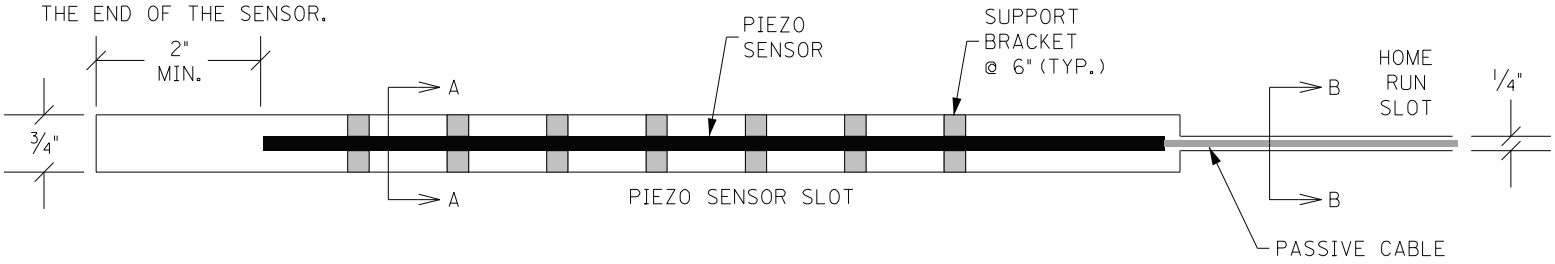

PLAN

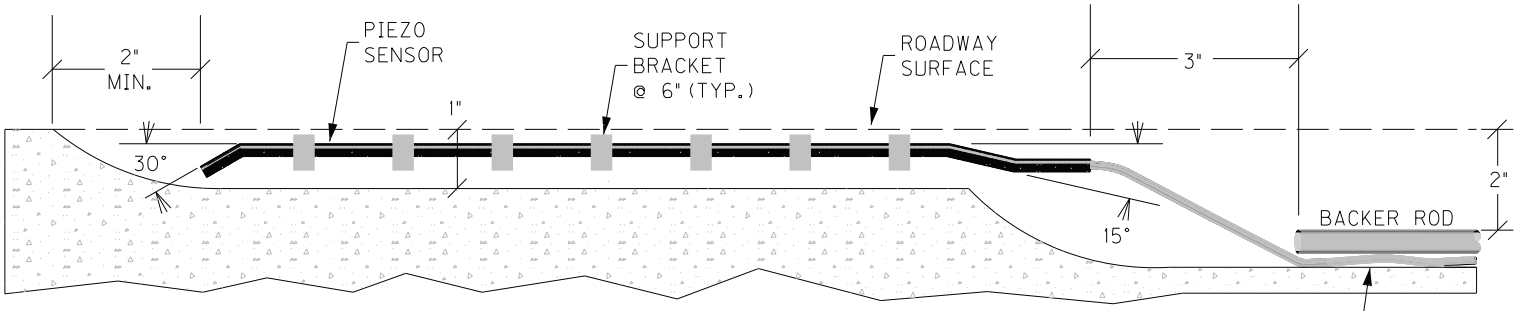

ELEVATION

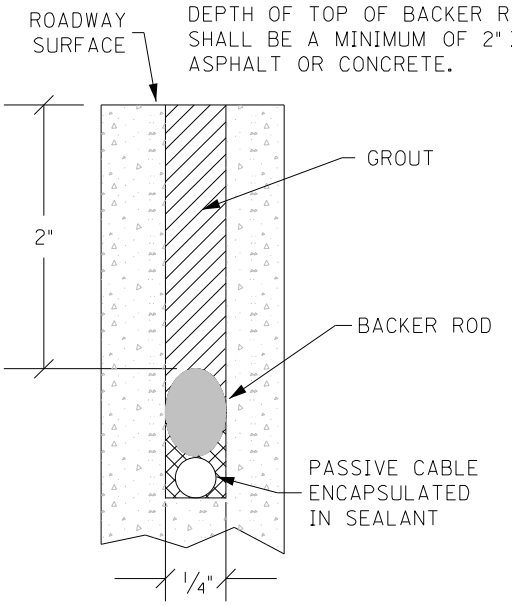

SECTION B-B

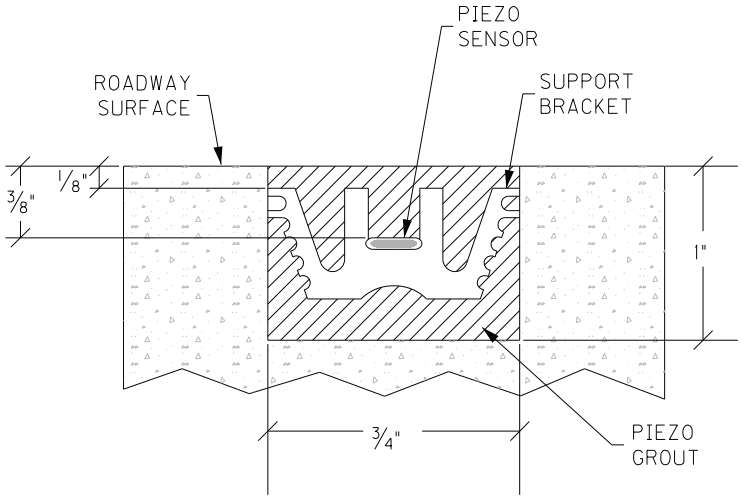

SECTION A-A

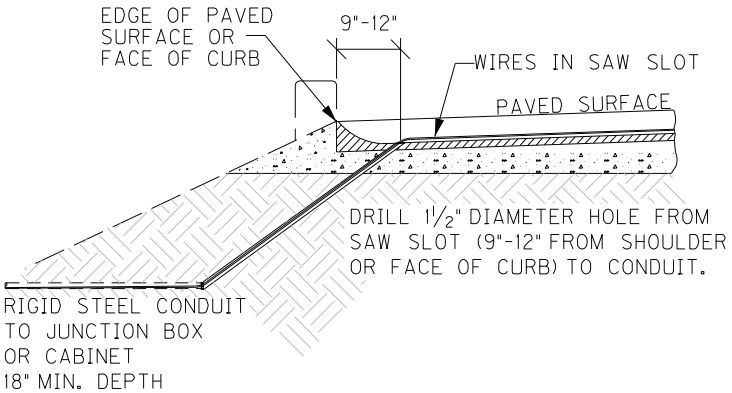

SAW SLOT EDGE OF PAVEMENT TRANSITION

PIEZOELECTRIC SENSOR INSTALLATION

NOT TO SCALE

M E M O R A N D U M

S-102-2025

cc: J. VanZee
T. Lovell
B. Nelson
B. Kidd
K. Sawyer
C. Berger
S. King (Stantec)
W. Harper (Stantec)
J. Bricker (Stantec)
A. Crace (Stantec)

TO: Michael Carpenter, P.E.
Director, Division of Structural Design

FROM: Adam Ross, P.E.
TEBM, Geotechnical Services Branch

BY: Robert McDonald, P.E.
Geotechnical Services Branch,
Structure Foundation Section

DATE: March 4th, 2025

SUBJECT: **Jefferson County**
FD52 12F0 056 0064 17.71-17.74; NHPP0642202
1746501D 01 D
Interstate-64
3-Span Bridge (48',70',48') at Sta. 477+11.37, Skew 21° Lt.
(over Tucker Station Rd.)
Item #: 5-10057.00
Geotechnical Engineering Structure Foundation Report

1.0 LOCATION AND DESCRIPTION

The geotechnical investigation for this structure has been completed. The DGN file for the subsurface data sheet has been made available on Projectwise and through email for use in development of structure plans. The most recent drilling for the project was performed by Terracon.

The proposed bridge is part of a bridge replacement project for Interstate-64. The proposed structure will replace the existing bridge over Tucker Station Rd. The project is located in Louisville, KY.

2.0 SITE GEOLOGIC CONDITIONS

This structure is located in the Jeffersontown Geologic Quadrangle (GQ# 999). The geologic mapping indicates that the bedrock at this site consists primarily of the Drakes Formation.

3.0 FIELD INVESTIGATION

Most recently, Six (6) borings were taken for this structure. Four (4) of these borings were sample and core holes and two (2) were mechanical rockline soundings. Terracon drill crews delivered rock cores and soil samples to their laboratory, where they logged the rock cores and the soils were classified and tested. **Note: Multiple sets of historic geotechnical data were available for this proposed structure replacement (years 2019, 2008, 1983, and 1961). This historic geotechnical information has been utilized and attached to this report.**

4.0 LABORATORY TESTING

The laboratory soil testing was completed by the Geotechnical Branch. The soil samples obtained from the borings were determined to consist of inorganic, low plasticity clays with clayey sands, low-plasticity silts, and some high plasticity clays. The samples were designated as CL, SC, ML, and CH, respectively, in the Unified Soil Classification System.

S-102-2025
Jefferson Co., I-64
March 4th, 2025
Item #: 5-10057.00

5.0 SUBSURFACE CONDITIONS

For 2008 & 2019 explorations, depths to refusal vary from 4.0 ft to 19.0 ft. The rock cores obtained for this location revealed gray limestone and non-durable shales KY RQD values for the rock cores taken at this proposed bridge location ranged from 0% to 100% and core recoveries ranged from 44% to 100%. The variations in top of rock/auger refusal elevations at the substructure units encountered during the most recent 2 sets of drilling (2008 & 2019) are provided below.

Substructure Unit	Refusal Elev. Range	Range from Historic Data
• Abutment 1/End Bent 1	693.7 to 695.3 ft	682.1 to 707.0 ft
• Pier 1	674.7 to 675.0 ft	
• Pier 2	673.9 to 674.1 ft	
• End Bent 2	676.4 to 683.9 ft	

6.0 ENGINEERING ANALYSIS

6.1 Alternate #1: Abutment 1

Use **spread footing foundations** on competent unweathered bedrock. Embedment of the footings into bedrock a minimum of 2.0 feet into competent unweathered bedrock will be required as outlined in the recommendations.

6.2 Alternate #2: End Bents 1 & 2

Use end bearing **H-Pile foundations** seated in bedrock with spill through slopes for End Bents 1 & 2. Pre-drilling will be required for the H-Piles at the end bent locations in order to attain minimum pile embedment as recommended by section GT-605-1 in the KYTC Geotechnical Manual. **Note: There are overhead utility restrictions along the proposed End Bent 2 location. Pre-drilling has been provided as a H-pile foundation installation alternative. Due to limited access refusal may be attained with excavator downward pressure, at the Proposed End Bent 2 Location. (See attached Special Note for Pile Strike Alternate.)** Slope protection will be required as a scour abatement measure on the 2H: 1V spill-thru slopes at end bent 1 with the use of piles. Local scour can be negated with the use of slope protection.

A temporary casing may be required to prevent collapse of the hole. If used, the casing shall be removed as the hole is being backfilled. Piles shall then be driven to refusal. Include the cost of all materials, labor and equipment needed to pre-drill, backfill the holes and drive the piles to refusal in the price per linear foot for "Pre-drilling for Piles".

A wave equation analysis was performed for this location. Based on this analyses it will be possible to drive 12" or 14" H-piles to bedrock and practical refusal without encountering excessive blow counts or damaging the pile. The contractor shall submit the proposed pile driving system to the Department for approval prior to the installation of the first pile. Approval of the pile driving system by the Engineer will be subject to satisfactory field performance of the pile driving procedures. A hammer with a rated energy between **20 and 30 kip-ft** will be required to drive the H-piles to practical refusal without encountering excessive blow counts or damaging the piles.

S-102-2025
Jefferson Co., I-64
March 4th, 2025
Item #: 5-10057.00

6.3 Alternate #1: End Bent 2

Use **H-Pile foundations** seated in bedrock with spill through slopes for End Bent 2.

A wave equation analysis was performed for this location. Based on this analyses it will be possible to drive 12" or 14" H-piles to bedrock and practical refusal without encountering excessive blow counts or damaging the pile. The contractor shall submit the proposed pile driving system to the Department for approval prior to the installation of the first pile. Approval of the pile driving system by the Engineer will be subject to satisfactory field performance of the pile driving procedures. A hammer with a rated energy between **25 and 35 kip-ft** will be required to drive the H-piles to practical refusal without encountering excessive blow counts or damaging the piles.

6.4 Piers 1 & 2

Use **spread footing foundations** on competent unweathered bedrock. Embedment of the footings into bedrock a minimum of 2.0 feet into competent unweathered bedrock will be required as outlined in the recommendations.

6.5 Scour Considerations

Scour was determined not to be of geotechnical concern, due to the dry crossing. For H-Pile foundations subsequently driven to bedrock with spill through slopes (2H:1V spill-through slopes), slope protection will be required at the bridge meeting the requirements of Sections 703.03.01D & 805 of the Standard Specifications for Road and Bridge Construction, current edition. Place a Class 1 Geotextile Fabric, in accordance with Sections 214 & 843 of the Standard Specifications for Road and Bridge Construction, current edition.

6.6 Embankment Analysis

Due to minimal amounts of new fill, embankment stability is not considered to be a concern at this location. The current in-place embankment slopes appear to be stable. Embankment is to be constructed at slopes the same as those currently in existence or a 2H: 1V, whichever is flatter. **All spill-through slopes shall be 2H: 1V.** Embankments at the end bent locations at both ends of the bridge shall also be constructed in accordance with **Special Provision #69 for Embankment at Bridge End Bent Structures**. If any additional/new embankment is to be constructed at slopes steeper than those currently in existence or a 2H: 1V, please contact the geotechnical branch for further analysis.

In view of the minimal new embankment heights and foundation soil depths at the end bents, settlement is not believed to be a concern at this location.

The designer should feel free to contact the Geotechnical Branch at 502-564-2374 for further recommendations or if any questions arise pertaining to this project.

7.0 FOUNDATION RECOMMENDATIONS:

7.1 Alternate #1: Abutment 1

S-102-2025
Jefferson Co., I-64
March 4th, 2025
Item #: 5-10057.00

7.1.1 Abutment 1: Use spread footings on unweathered bedrock with estimated base of footing elevations of 680.0 to 691.5 ft.

7.1.2 The spread footings shall be embedded a minimum of 2.0 feet into competent unweathered bedrock. Footings may be raised if competent unweathered bedrock is encountered at a higher elevation. (Note: Minimum 2.0 feet of embedment must still be attained.)

7.1.3 The base of the spread footing elevation shall be founded minimum at or below the elevation of the existing spread footing elevations.

7.1.4 The spread footings shall be founded on solid bedrock. Size the footing at service limit state using a presumptive factored bearing resistance of **12 ksf**. Contact this branch for a more detailed analysis of the nominal bearing resistance if the strength or extreme limit states control the footing design.

7.2 Alternate #2: End Bents 1 & 2

7.2.1 End Bent 1: Use pre-drilled end-bearing steel H-Piles with approximate pile tip elevations of 682.0 ft. We recommend a resistance factor (f_c) of 0.5 to determine the maximum nominal resistance of the pile.

7.2.2 End Bent 2: Use pre-drilled end-bearing steel H-Piles with approximate pile tip elevations of 673.0 ft. We recommend a resistance factor (f_c) of 0.5 to determine the maximum nominal resistance of the pile.

7.2.1 For determining practical refusal for point-bearing steel H-Piles, we recommend using Case 2.

7.2.2 **Pre-drilling** will be required at **End Bent 1** locations in order to attain adequate penetration depth for the piles. Holes for drilled for pile placement shall be drilled to an elevation such that a minimum penetration depth of 10 ft below the pile cap is attained.

7.2.3 Temporary casing may be required to prevent the collapse of the hole pre-drilled for the H-pile. The casing shall be removed, as the hole is being backfilled.

7.3 **Alternate #1: End Bent 2**

7.3.1 End Bent 2: Use end-bearing steel H-Piles with approximate pile tip elevations ranging from 673.5 to 678.0 ft. We recommend a resistance factor (f_c) of 0.5 to determine the maximum nominal resistance of the pile.

7.3.2 For determining practical refusal for point-bearing steel H-Piles, we recommend using Case 2.

7.4 **Piers 1 & 2**

7.4.1 Pier 1: Use spread footings on unweathered bedrock with estimated base of footing elevations of 672.0 ft.

7.4.2 Pier 2: Use spread footings on unweathered bedrock with estimated base of footing elevations of 671.0 ft.

7.4.3 The spread footings shall be embedded a minimum of 2.0 feet into competent unweathered bedrock. Footings may be raised if competent unweathered bedrock is encountered at a higher elevation. (Note: Minimum 2.0 feet of embedment must still be attained.)

7.4.4 The base of the spread footing elevation shall be founded minimum at or below the

S-102-2025
Jefferson Co., I-64
March 4th, 2025
Item #: 5-10057.00

elevation of the existing spread footing elevations.

7.4.5 The spread footings shall be founded on solid bedrock. Size the footing at service limit state using a presumptive factored bearing resistance of **12 ksf.** Contact this branch for a more detailed analysis of the nominal bearing resistance if the strength or extreme limit states control the footing design.

8.0 Plan Notes
(Include the notes below at appropriate locations in the plans.)

For Alternate #1: Abutment 1

8.0.1 All footing excavations in bedrock shall be cut neatly so that no forming or backfilling is necessary in the construction of the portions of the footings located in rock. Concrete should be placed directly against the cut rock faces. Mass concrete should be placed in the excavation from the top of the footing to the bedrock surface where the footing does not extend to the bedrock surface.

8.0.2 The bedrock at this location is highly susceptible to weathering and softening in the presence of water. Water must be kept out of the footing excavations. The footing steel and concrete should be placed the same day as or as soon as practical after the footing excavation is made. If the bedrock becomes softened at bearing elevation, the softened material should be undercut to unweathered material prior to placing the concrete.

8.0.3 If the bedrock becomes softened at bearing elevation, the softened material should be undercut to unweathered material prior to placing the concrete. Seasonal groundwater fluctuations may cause groundwater infiltration into the footing excavations and a dewatering method may be necessary.

8.0.4 The spread footings shall be embedded a minimum of 2.0 feet into competent unweathered bedrock. Footings may be raised if competent unweathered bedrock is encountered at a higher elevation. (Note: Minimum 2.0 feet of embedment must still be attained.)

8.0.5 Solid rock excavation will be required for installation of this structure's spread footings.

8.0.6 Removal of existing spread footings will be required in the excavation for proposed spread footings. The existing footings shall be removed, and the base of the new spread footings must be at or below the base of the existing footings

8.0.7 Cofferdams and/or dewatering methods may be required to facilitate foundation construction of spread footings.

8.0.8 Temporary sheeting and/or shoring may be required for installation of spread footings. The contractor shall be responsible for the stability and safety of all excavations.

For Alternate #2: End Bents 1 & 2

8.0.9 PRACTICAL REFUSAL: Drive point bearing piles to practical refusal. For this project minimum blow requirements are reached after total penetration becomes ½ inch or less for 10 consecutive blows, practical refusal is obtained after the pile is struck an additional 10 blows with total penetration of ½ inch or less. Advance the production piling to the driving resistances specified above and to depths determined by test pile(s) and subsurface data sheet(s). Immediately cease driving operations if the pile visibly yields or

becomes damaged during driving. If hard driving is encountered because of dense strata or an obstruction, such as a boulder before the pile is advanced to the depth anticipated, the Engineer will determine if more blows than the average driving resistance specified for practical refusal is required to further advance the pile. Drive additional production and test piles if directed by the Engineer.

8.0.10 HAMMER CRITERIA: A hammer with a rated energy of between **20 and 30 kip-ft** will be required to drive the H-piles to practical refusal without encountering excessive blow counts or damaging the pile. The contractor shall submit the proposed pile driving system to the Department for approval prior to the installation of the first pile. Approval of the pile driving system by the Engineer will be subject to satisfactory field performance of the pile driving procedures.

8.0.11 Refusal may be attained through the use of downward excavator pressure. **Pile strike alternate must meet the requirements of the Special Note for Pile Strike Alternate.**

8.0.12 Where pre-drilling is necessary for pile installation, holes shall be drilled into solid rock. Piles shall be placed in the holes and then backfilled with sand or pea-gravel. A temporary casing may be required to prevent collapse of the hole. If used, remove the casing as the hole is being backfilled. Drive piles to refusal after backfill operations are complete.

8.0.13 The cost of all materials, labor, and equipment needed to pre-drill, backfill the holes, and drive to pile to refusal shall be included in the price per linear foot for "Pre-drilling for Piles".

8.0.14 Slope protection will be required at the bridge meeting the requirements of Sections 703.03.01D & 805 of the Standard Specifications for Road and Bridge Construction, current edition. Place a Class 1 Geotextile Fabric, in accordance with Sections 214 & 843 of the Standard Specifications for Road and Bridge Construction, current edition, between the embankment and the slope protection.

8.0.15 Embankments at the bridge end bent locations shall be constructed in accordance with Special Provision #69 for Embankment at Bridge End Bent Structures.

8.0.16 Cofferdams and/or dewatering methods may be required to facilitate foundation construction of pile caps.

8.0.17 Temporary sheeting and/or shoring may be required for installation of pile caps. The contractor shall be responsible for the stability and safety of all excavations.

For Alternate #1: End Bent 2

8.0.18 PRACTICAL REFUSAL: Drive point bearing piles to practical refusal. For this project minimum blow requirements are reached after total penetration becomes ½ inch or less for 10 consecutive blows, practical refusal is obtained after the pile is struck an additional 10 blows with total penetration of ½ inch or less. Advance the production piling to the driving resistances specified above and to depths determined by test pile(s) and subsurface data sheet(s). Immediately cease driving operations if the pile visibly yields or becomes damaged during driving. If hard driving is encountered because of dense strata or an obstruction, such as a boulder before the pile is advanced to the depth anticipated, the Engineer will determine if more blows than the average driving resistance specified for practical refusal is required to further advance the pile. Drive additional production and test piles if directed by the Engineer.

S-102-2025
Jefferson Co., I-64
March 4th, 2025
Item #: 5-10057.00

8.0.19 HAMMER CRITERIA: A hammer with a rated energy of between **25 and 35 kip-ft** will be required to drive the H-piles to practical refusal without encountering excessive blow counts or damaging the pile. The contractor shall submit the proposed pile driving system to the Department for approval prior to the installation of the first pile. Approval of the pile driving system by the Engineer will be subject to satisfactory field performance of the pile driving procedures.

8.0.20 Slope protection will be required at the bridge meeting the requirements of Sections 703.03.01D & 805 of the Standard Specifications for Road and Bridge Construction, current edition. Place a Class 1 Geotextile Fabric, in accordance with Sections 214 & 843 of the Standard Specifications for Road and Bridge Construction, current edition, between the embankment and the slope protection.

8.0.21 Embankments at the bridge end bent locations shall be constructed in accordance with Special Provision #69 for Embankment at Bridge End Bent Structures.

8.0.22 Cofferdams and/or dewatering methods may be required to facilitate foundation construction of pile caps.

8.0.23 Temporary sheeting and/or shoring may be required for installation of pile caps. The contractor shall be responsible for the stability and safety of all excavations.

For Piers 1 & 2

8.0.24 All footing excavations in bedrock shall be cut neatly so that no forming or backfilling is necessary in the construction of the portions of the footings located in rock. Concrete should be placed directly against the cut rock faces. Mass concrete should be placed in the excavation from the top of the footing to the bedrock surface where the footing does not extend to the bedrock surface.

8.0.25 The bedrock at this location is susceptible to weathering and softening in the presence of water. Water must be kept out of the footing excavations. The footing steel and concrete should be placed the same day as or as soon as practical after the footing excavation is made. If the bedrock becomes softened at bearing elevation, the softened material should be undercut to unweathered material prior to placing the concrete.

8.0.26 If the bedrock becomes softened at bearing elevation, the softened material should be undercut to unweathered material prior to placing the concrete. Seasonal groundwater fluctuations may cause groundwater infiltration into the footing excavations and a dewatering method may be necessary.

8.0.27 The spread footings shall be embedded a minimum of 2.0 feet into competent unweathered bedrock. Footings may be raised if competent unweathered bedrock is encountered at a higher elevation. (Note: Minimum 2.0 feet of embedment must still be attained.)

8.0.28 Solid rock excavation will be required for installation of this structure's spread footings.

8.0.29 Removal of existing spread footings will be required in the excavation for proposed spread footings. The existing footings shall be removed and the base of the new spread footings must be at or below the base of the existing footings

8.0.30 Cofferdams and/or dewatering methods may be required to facilitate foundation construction of spread footings.

8.0.31 Temporary sheeting and/or shoring may be required for installation of spread footings. The contractor shall be responsible for the stability and safety of all excavations.

S-102-2025
Jefferson Co., I-64
March 4th, 2025
Item #: 5-10057.00

Attachments:

- **Project Location Map**
- **Subsurface Data Sheet**
- **Bridge Layout Sheet**
- **Historic Geotechnical Subsurface Data Sheets**
- **Special Note for Pile strike Alternate**
- **Coordinate Data Sheet**

Project Location Map:



(Bridge replacement project in Jefferson County on (056B00039L & 056B00039R) I-64 Tucker Station Rd MP 17.71 to 17.74. Located in Louisville, KY.)

SUBSURFACE DATA

Plan Scale 1" = 30'

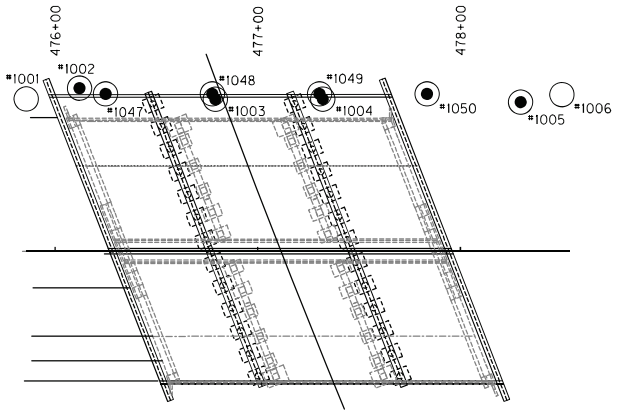

Profile Scale:
Vertical 1" = 10'
Horizontal not to scale

END BENT ONE

APPROXIMATE ROADWAY GRADE ELEV. = 702.05

Hole No.	1001	1002	1047
Station	475+85.74	476+12.04	476+24.92
Offset	75.20 ft. Lt.	80.50 ft. Lt.	77.65 ft. Lt.
Elev. (NAVD 88 datum)	701.50	701.90	700.10

710 700 690 680 670 660 650 640 630

R
(695.30)

D_{50} (mm)	w%	LI	KYROD REC	
0.007	18	-0.09		A-6(17),CL,S+C=96(69+27)
	3			
	64	78		Limestone: brown to light brown, slightly weathered, laminated, durable, w/stylolite around 10', weathered fractures @ 8'-10'
	83	98		
	100	100		Limestone: gray to dark gray, unweathered to slightly weathered, weathered fracture @ 13.8'
	73	98		Shale: black to dark gray, weathered, laminated, nondurable, fractured
	0	100		Shale: dark gray, calcareous, weathered, laminated, nondurable, w/Clay filled fractures between 26.3' & 26.7'
				Shale: dark gray to purple, weathered, nondurable, fractures between 27.2' & 28.3'
				Limestone: dark gray to gray, slightly weathered to unweathered, laminated, durable, weathered fractures @ 29.1'-29.6'

Top of rock elev.= 694.80
No weathered rock

D_{50} (mm)	w%	LI	KYROD REC	
0.005	17	-0.09		A-6(14),CL,S+C=94(61+33)
				97(5)
	79	98	SDI(JS)	Dolomite: greenish gray, fine grained, argillaceous, laminated
				73(5)
				Shale:(siltstone)dark gray, calcareous, laminated

Top of rock elev.= 693.70
Base of weathered rock elev.= 693.60

Datum

The Presumptive Factored Bearing Resistance at the Service Limit State is
12 ksf for Spread Footings on Competent Unweathered Bedrock

COMMONWEALTH OF KENTUCKY DEPARTMENT OF HIGHWAYS	REVISION	DATE	PREPARED BY Division of Structural Design Geotechnical Branch	DATE: 24-FEBRUARY-2025	CHECKED BY	CROSSING Bridge over Tucker Station Rd.	ROUTE I-64	ITEM NO. 5-10057.00	COUNTY OF JEFFERSON
				DESIGNED BY:				SHEET NO.	DRAWING NUMBER S-102-2025
				DETAILED BY: E. BAILEY	R. McDONALD				

OpenRoads Designer v23.00.01.11 USER: $$$$USERS$$$ DATE PLOTTED: $$$$DATE$$$$ FILE NAME: $$$$design$ lesspeci cation$$$$

SUBSURFACE DATA

Plan Scale 1" = 30'

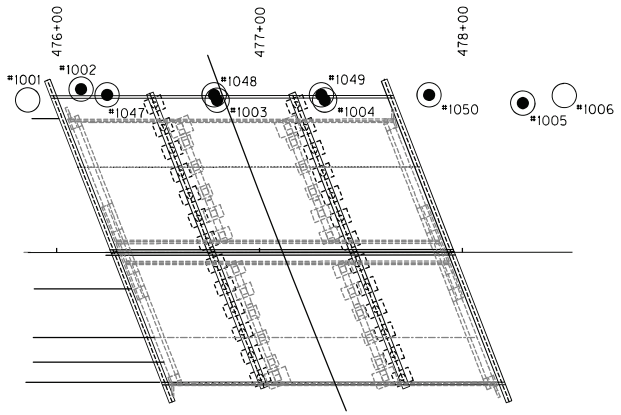

Profile Scale:
Vertical 1" = 10'
Horizontal not to scale

PIER ONE | PIER TWO

Hole No.	1048	1003	1049	1004
Station	476+77.62	476+79.08	477+30.51	477+32.08
Offset	77.63 ft. Lt.	75.00 ft. Lt.	77.60 ft. Lt.	75.00 ft. Lt.
Elev. (NAVD 88 datum)	678.90	679.00	678.20	678.10

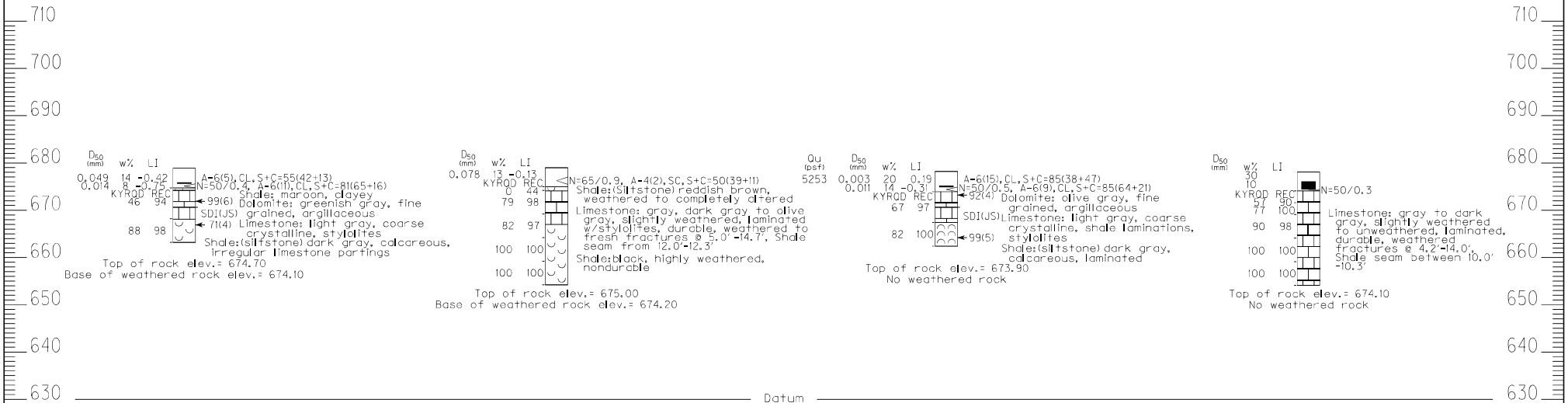

The Presumptive Factored Bearing Resistance at the Service Limit State is
12 ksf for Spread Footings on Competent Unweathered Bedrock

COMMONWEALTH OF KENTUCKY DEPARTMENT OF HIGHWAYS	REVISION	DATE	PREPARED BY Division of Structural Design Geotechnical Branch	DATE: 24-FEBRUARY-2025 DESIGNED BY: DETAILED BY: E. BAILEY	CHECKED BY R. McDONALD	CROSSING Bridge over Tucker Station Rd.	ROUTE I-64	ITEM NO. 5-10057.00 SHEET NO.	COUNTY OF JEFFERSON DRAWING NUMBER S-102-2025

OpenRoads Designer v23.00.01.11 USER: $$$$USER$$$$ DATE PLOTTED: $$$$DATE$$$$ FILE NAME: $$$$design$ Jesspeci cation$$$$

SUBSURFACE DATA

Plan Scale 1" = 30'

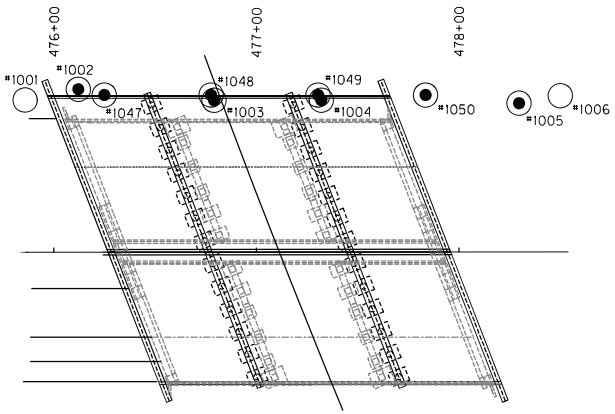

Profile Scale:
Vertical 1" = 10'
Horizontal not to scale

END BENT TWO

APPROXIMATE ROADWAY GRADE ELEV. = 696.93

Hole No.	1050	1005	1006
Station	477+83.59	478+29.72	478+50.14
Offset	77.57 ft. Lt.	73.50 ft. Lt.	77.20 ft. Lt.
Elev. (NAVD 88 datum)	694.30	695.40	694.40

710 700 690 680 670 660 650 640 630

Qu (psf)	D_{50} (mm)	w%	LI	
	0.009	14	-1.54	A-4(6), ML, S+C=96(80+16)
1604	0.002	24	-0.07	A-7-6(41), CH, S+C=98(35+63)
KYROD REC				SDI(JS) Shale: brown, clayey, weathered
				7(1)
5	97			Shale: gray, clayey
				21(2) Shale: maroon, clayey
				Limestone: gray, coarse
100	100			98(4) crystalline, shale laminations, stylolites

Top of rock elev.= 683.90
Base of weathered rock elev.= 681.60

D_{50} (mm)	w%	LI	
0.006	27	0.46	A-6(16), CL, S+C=98(69+29)
0.013	14	-0.83	A-4(6), CL, S+C=84(70+14)
	13		≤N=40
0.007	12	-0.67	A-6(16), CL, S+C=98(75+23)
	10		≤N=75
	6		
KYROD REC			N=50/0.3
21	100		Shale: red to dark gray, weathered, nondurable, highly fractured
72	97		
67	83		Limestone: gray to dark gray, slightly weathered, laminated, durable, weathered fractures @ 21.0'-29.0', Clay filled seams @ 21.0'-21.3' & 28.8'-29.0'
100	100		
100	100		

Top of rock elev.= 676.40
Base of weathered rock elev.= 673.90

R
(676.90)

Datum

The Presumptive Factored Bearing Resistance at the Service Limit State is
12 ksf for Spread Footings on Competent Unweathered Bedrock

COMMONWEALTH OF KENTUCKY DEPARTMENT OF HIGHWAYS	REVISION	DATE	PREPARED BY Division of Structural Design Geotechnical Branch	DATE: 24-FEBRUARY-2025	CHECKED BY	CROSSING Bridge over Tucker Station Rd.	ROUTE I-64	ITEM NO. 5-10057.00	COUNTY OF JEFFERSON
				DESIGNED BY:				SHEET NO.	DRAWING NUMBER S-102-2025
				DETAILED BY: E. BAILEY	R. McDONALD				

OpenRoads Designer v23.00.01.11 USER: $$$$USER$$$$ DATE PLOTTED: $$$$DATE$$$$ FILE NAME: $$$$design$$$$special cations$$$$

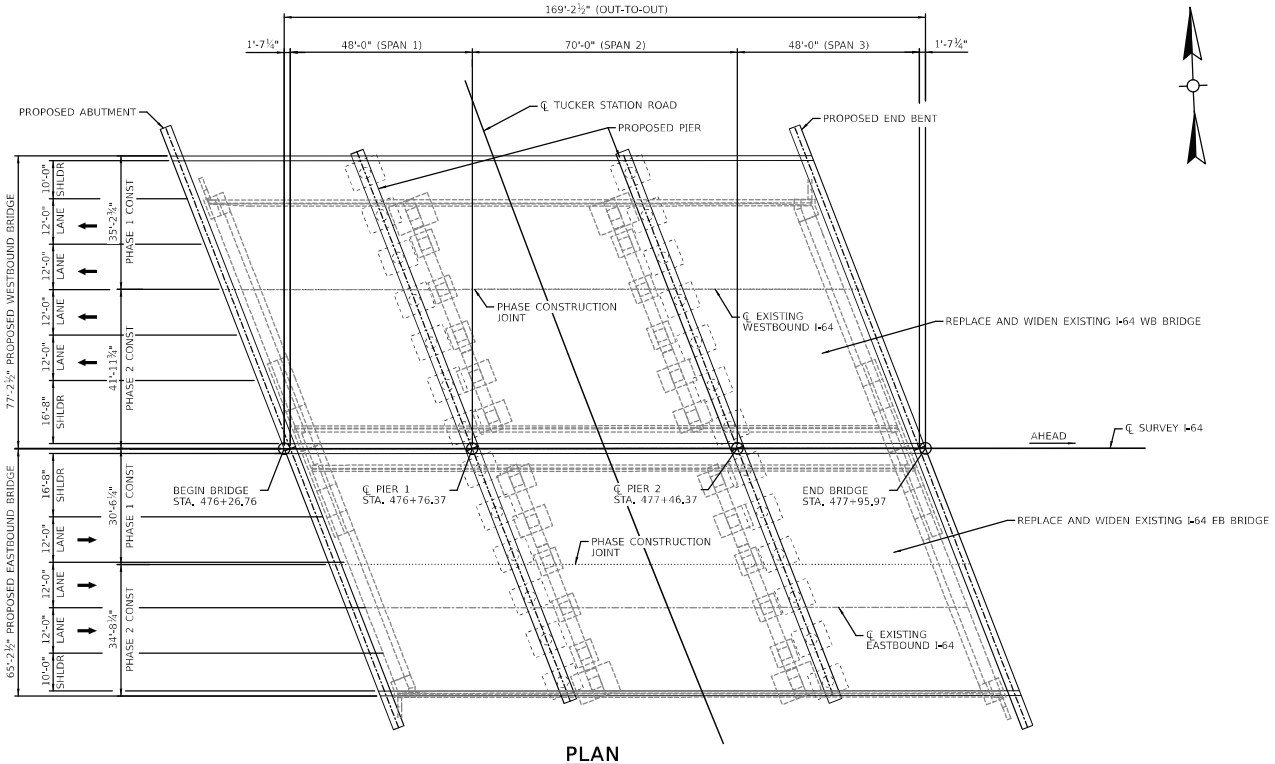

PLAN

48'-0" X 70'-0" X 48'-0" SB 33 THREE SPAN
KY HL 93 LIVE LOAD (CONTINUOUS FOR LIVE LOAD)
21°11'18" SKEW
2:1 FILL SLOPES

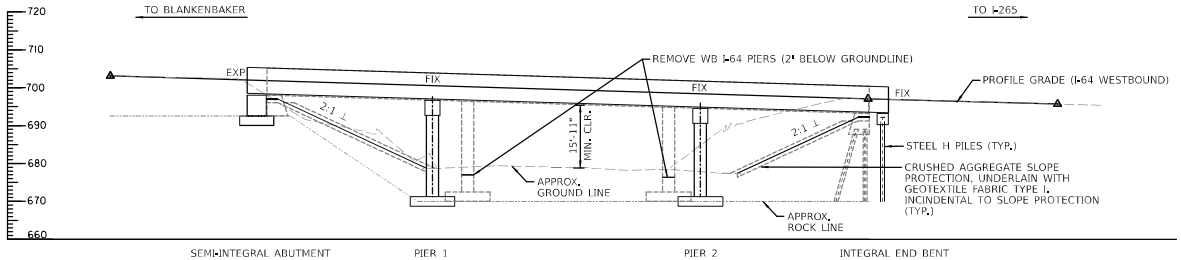

SECTION ALONG PROPOSED CENTERLINE

COMMONWEALTH OF KENTUCKY
DEPARTMENT OF HIGHWAYS
TEAM KENTUCKY

REVISION	DATE

PREPARED BY: Stantec

DATE:	CHECKED BY
DESIGNED BY:	
DETAILED BY:	

ALTERNATE 5
CROSSING: TUCKER STATION ROAD

ROUTE: I-64
ITEM NO.: 5-10057.00
SHEET NO.:
COUNTY OF: JEFFERSON
DRAWING NUMBER:

OpenRoads Designer v10.12.02.4 | USER: skking | DATE PLOTTED: $DATE$ $TIME$ | FILE NAME: $FILE1$

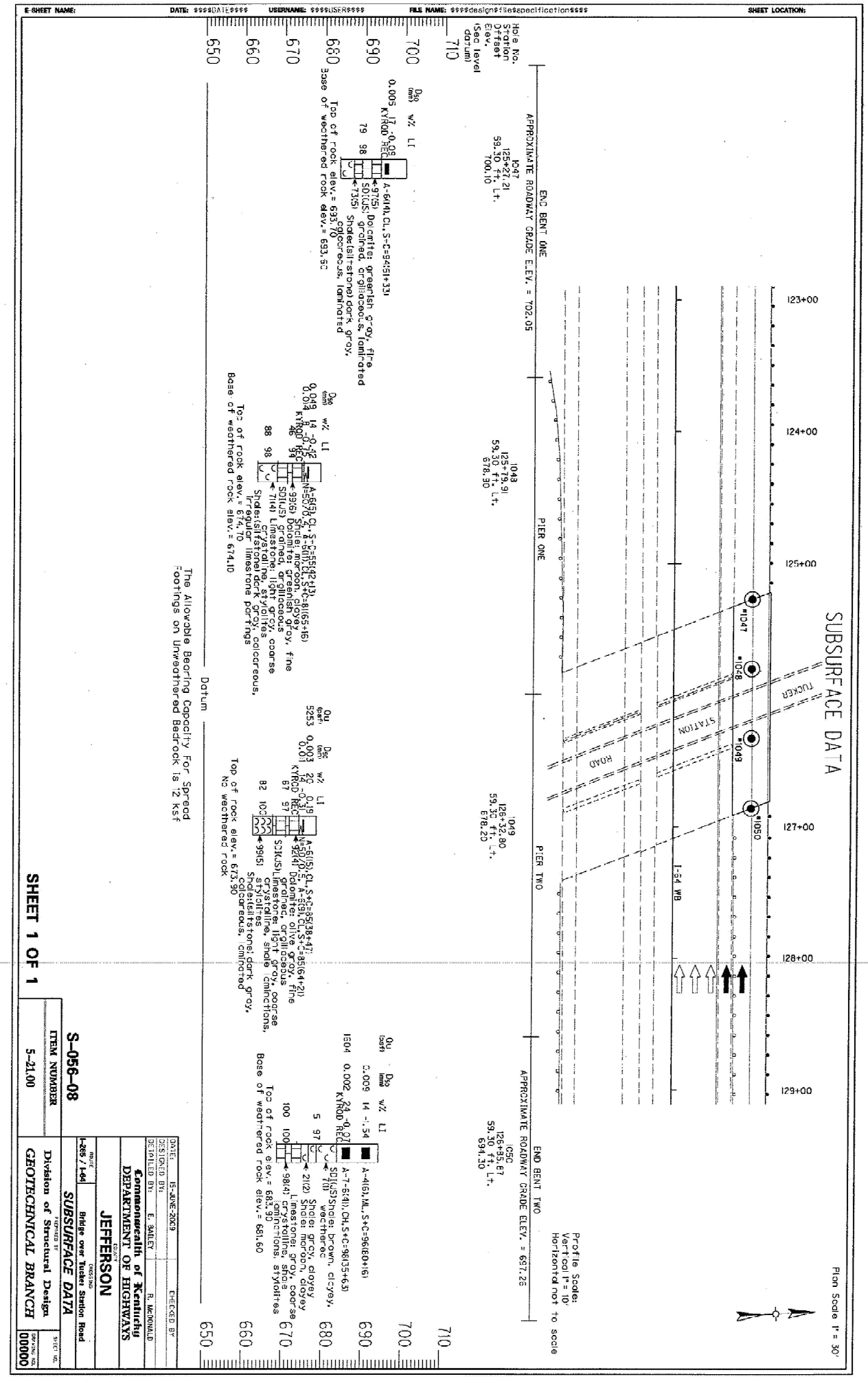

SHEET 1 OF 1

ITEM NUMBER	S-056-08
5-21.00	

DATE: 15-JUNE-2009 | CHECKED BY:
DESIGNED BY:
DETAILED BY: E. BARLEY | R. MCDONALD

Commonwealth of Kentucky
DEPARTMENT OF HIGHWAYS

COUNTY: **JEFFERSON**

ROUTE	CROSSING
I-265 / I-64	Bridge over Tucker Station Road

SUBSURFACE DATA

"ADOPTED BY"

Division of Structural Design

GEOTECHNICAL BRANCH

SHEET NO.: 00000

SUBSURFACE DATA

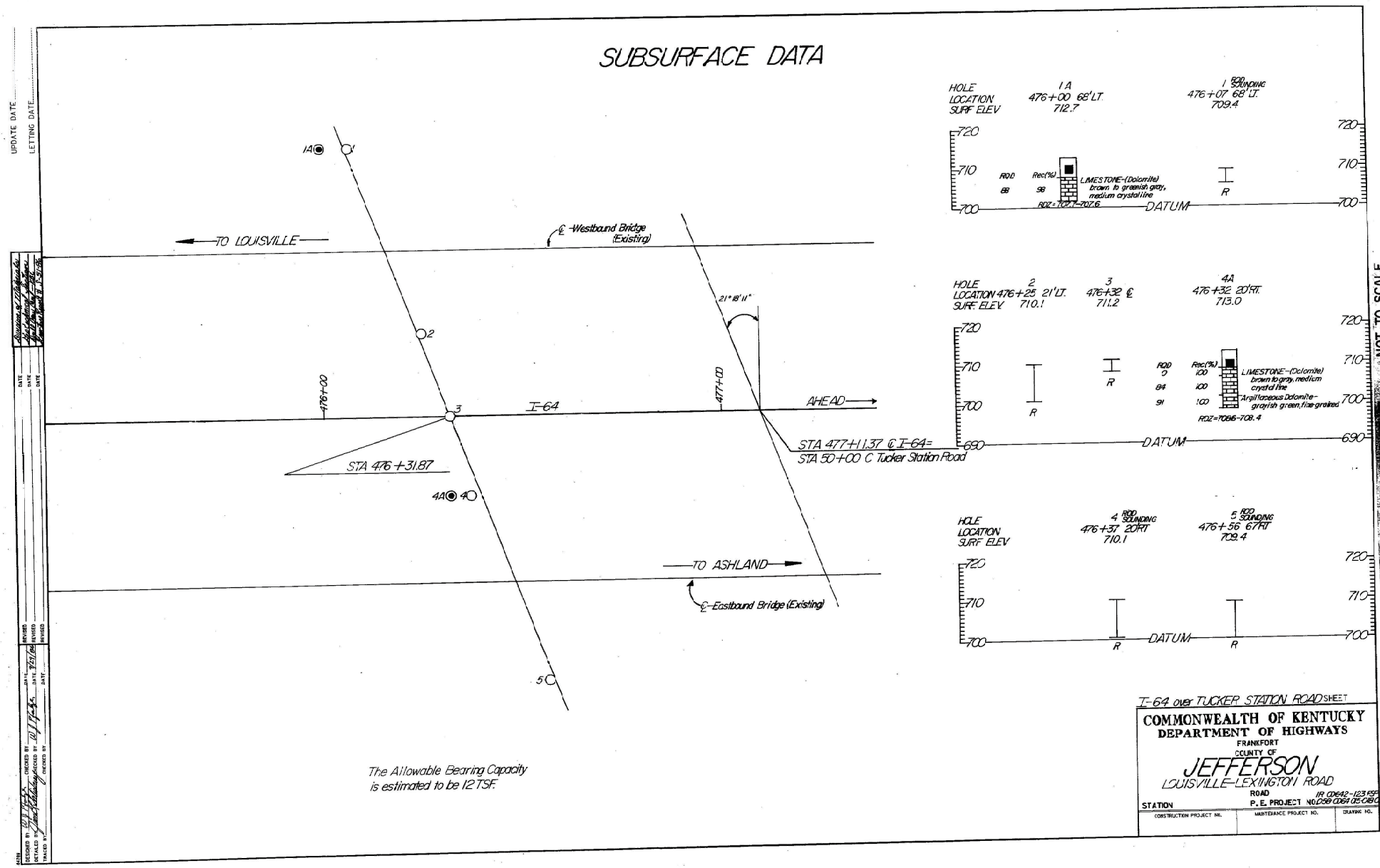

The Allowable Bearing Capacity is estimated to be 12 TSF.

THIS IS A REDUCED PLAN NOT TO SCALE

I-64 over TUCKER STATION ROAD SHEET

COMMONWEALTH OF KENTUCKY
DEPARTMENT OF HIGHWAYS
FRANKFORT
COUNTY OF
JEFFERSON
LOUISVILLE-LEXINGTON ROAD
ROAD IR 0642-123 ESP
STATION P. E. PROJECT NO. 059.0064.05-018.031 D

CONSTRUCTION PROJECT NO.	MAINTENANCE PROJECT NO.	DRAWING NO.

Contract ID: 261140
Page 162 of 297

NOTE : Limestone is laminated with clay shale.

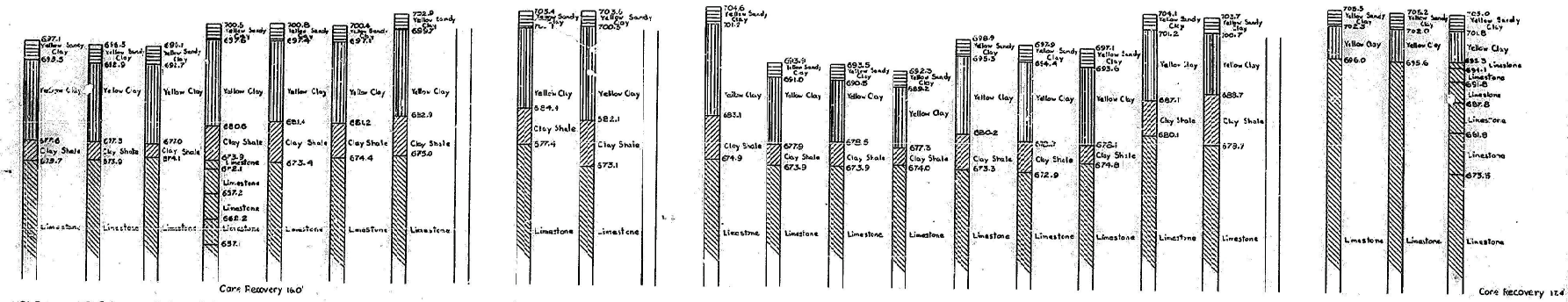

Scale 1"=10'

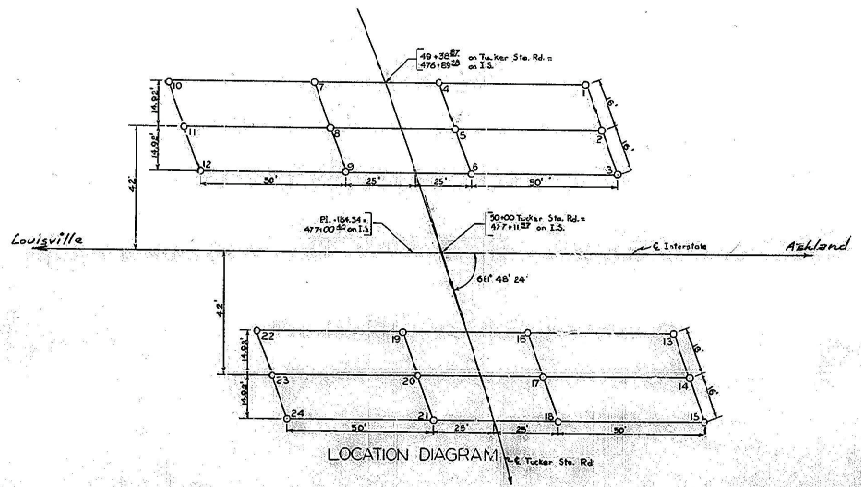

SOUNDINGS

I-64 OVER TUCKER STATION ROAD SHEET 9

COMMONWEALTH OF KENTUCKY
DEPARTMENT OF HIGHWAYS
RUNCIMENT
COUNTY OF
JEFFERSON
LOUISVILLE TO ASHLAND
ROAD
STATION 477+11.87 PROJECT NO. I64-2(89)16
BRIDGE NO. 15285

JEFFERSON COUNTY
056GR26D040-NHPP

SPECIAL NOTE FOR PILE STRIKE ALTERNATE

As an alternate to striking the pile with a hammer once placed inside a pre-drilled hole, the contractor may include shear resisting devices on the pile as shown in Figure 1 below. Place pile in hole and use an excavator to apply full hydraulic load to the top of pile before filling hole with concrete. The cost of all labor and materials is incidental to Pre-drilling Piles.

Notes:

1. Alternate was designed for 125% of the pile design axial load. Required number of threaded rods is provided in Table 1. The piles on this project have a maximum pile design axial load of 95 tons.
2. Use ASTM F1554 Grade 36 threaded rods with a minimum tensile strength of 58 ksi.
3. The minimum depth of the rock socket is 7'-0". Engineer to determine the top of rock elevation.
4. The minimum depth of the concrete backfill shall be 9" above the top threaded rod. Concrete to be Class A or B.
5. Pile points are not required.
6. Provide an excavator with sufficient capacity and reach to lift and place piles without contacting the ground or sides of the boring and to pull casing as the hole is being backfilled.
7. Contractor is to ensure hole is cleaned during and after excavation. The portion of the predrilled bore hole above the rock socket shall be excavated using casing to prevent collapsing. The rock socket shall be visually inspected. The bottom of the hole shall be visible to the Inspector by normal means from the surface elevation. If not adequately cleared of debris or water the contractor may be required to clean out the holes using a vacuum excavator and/or a pump. After the pile and concrete are placed the casing shall be backfilled with sand or pea gravel. Remove the casing as the hole above the rock socket is backfilled.
8. Measure final excavation depths with a weighted tape or other approved methods after final cleaning. Ensure the base of the excavation has less than ½" of sediment at the time of pile and concrete placement. Do not allow the depth of the water to exceed 3" during concrete placement.

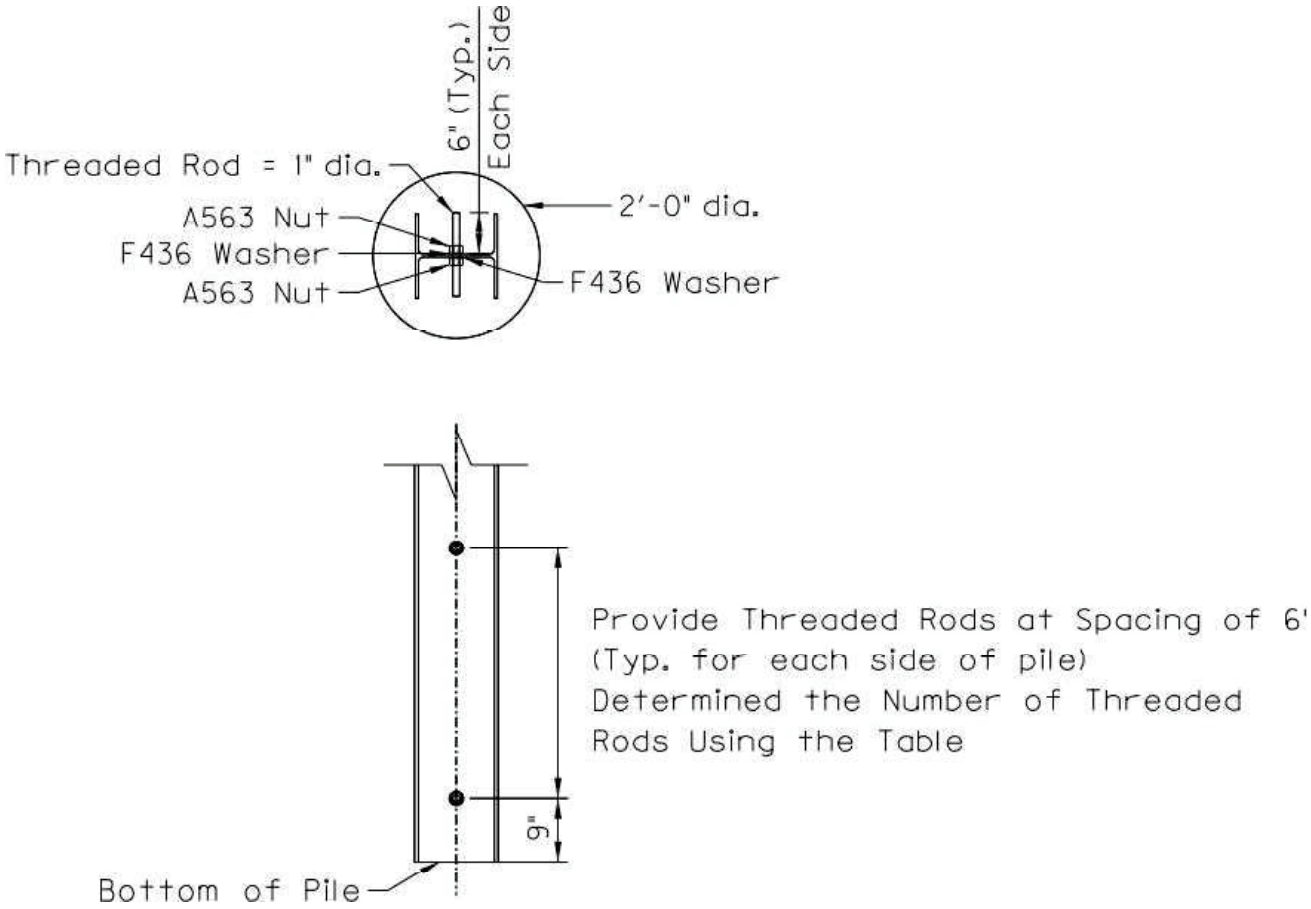

Figure 1: Threaded rod detail

Table 1: Number of threaded rods required based on pile design load

NUMBER OF THREADED RODS								
PILE DESIGN LOAD (TONS)	60	70	80	90	100	110	120	135
Grade 36 (fu = 58 ksi)	5	6	7	7	8	9	9	10
Grade 55 (fu = 75 ksi)	4	5	5	6	6	7	7	8
Grade 105 (fu = 125 ksi)	3	3	3	4	4	4	5	5

########
EV0000
KYTC Geotech
Version 10.02.00.04
Query: COORDINATE DATA FILE
Project: n:\geotech\gint\projects\s-102-2025.gpj Library: n:\geotech\gint\libraries\kytc library version 5.0.glb

ID	Latitude	Longitude	Hole	Station	Offset	Elevation	Comments
2	38.22367	-85.5281	1001	47585.47	-75.2	701.53	
3	38.22368	-85.528	1002	47612.04	-80.5	701.94	
4	38.22366	-85.5278	1003	47679.08	-75	679.02	
5	38.22365	-85.5276	1004	47732.08	-75	678.11	
6	38.22364	-85.5272	1005	47829.72	-73.5	695.35	
1	38.22364	-85.5272	1006	47850.14	-77.17	694.35	

SPECIAL NOTE FOR INLAID PAVEMENT MARKERS

I. DESCRIPTION

Except as provided herein, perform all work in accordance with the Department's Standard and Supplemental Specifications and applicable Standard and Sepia Drawings, current editions. Article references are to the Standard Specifications. This work shall consist of:

(1) Maintain and Control Traffic; and (2) Furnish and install Inlaid Pavement Markers (IPMs) in recessed grooves; and (3) Any other work as specified by these notes and the Contract.

II. MATERIALS

The Department will sample all materials in accordance with the Department's Sampling Manual. Make the materials available for sampling a sufficient time in advance of the use of the materials to allow for the necessary time for testing unless otherwise specified in these Notes.

A. Maintain and Control Traffic. See the Traffic Control Plan.

B. Markers. Provide reflective lenses with depth control breakaway positioning tabs. Before furnishing the markers, provide to the Engineer the manufacturer's current recommendations for adhesives and installation procedures. Use one brand and design throughout the project. Use markers meeting the specifications in the table below.

SPECIFICATIONS FOR HOUSING AND REFLECTOR	
Material:	Polycarbonate Plastic
Weight:	Housing 2.00 oz.
	Reflector 2.00oz.
Housing Size:	5.00" x 3.00" x 0.70" high
Specific Intensity of Reflectivity at 0.2° Observation Angle	
White:	3.0 at 0°entrance angle
	1.2 at 20°entrance angle
Yellow:	60% of white values
Red:	25% of white values

C. Adhesives. Use adhesives that conform to the manufacturer's recommendations.

III. CONSTRUCTION

A. Experimental Evaluation. The University of Kentucky Transportation Center will be evaluating this installation of IPMs. Notify the Engineer a minimum of 14 calendar days prior to beginning work. The Engineer will coordinate the University's activities with the Contractor's work.

B. Maintain and Control Traffic. See the Traffic Control Plan.

C. Installation. Install IPMs in recessed grooves cut into the final course of asphalt pavement according to the manufacturer's recommendations. Do not cut the grooves until the pavement has cured sufficiently to prevent tearing or raveling. Cut installation grooves using diamond blades on saws that accurately control groove dimensions. Remove all dirt, grease, oil, loose or unsound layers, and any other material from the marker area which would reduce the bond of the adhesive. Maintain pavement surfaces in a clean condition until placing markers.

Prepare the pavement surfaces, and install the markers in the recessed groove according to the drawing below. Use an approved snowplowable epoxy adhesive. Ensure that the adhesive bed area is equal to the bottom area of the marker, and apply adhesive in sufficient quantity to force excess out around the entire perimeter of the marker. Use materials, equipment, and construction procedures that ensure proper adhesion of the markers to the pavement surface according to the manufacturer's recommendations. Remove all excess adhesive from in front of the reflective faces. If any adhesive or foreign matter cannot be removed from the reflective faces, or if any marker fails to properly adhere to the pavement surface, remove and replace the marker at no additional cost to the Department.

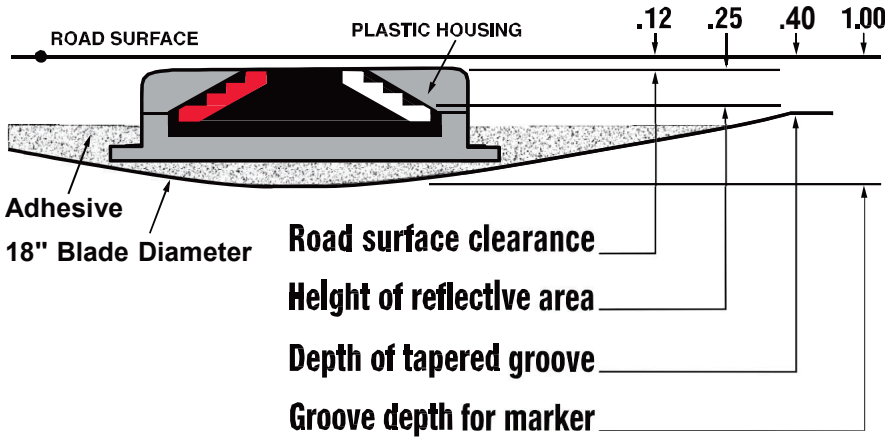

D. Location and Spacing. Install the markers in the pattern for high reflectivity with two (2) IPMs per groove. Locate and space markers as shown in the current Standard Drawings or Sepias. (Note: use Inlaid Pavement Markers wherever Type V Pavement

Markers are called for.) Do not install markers on bridge decks. Do not install a marker on top of a pavement joint or crack. Offset the recessed groove a minimum of 2 inches from any longitudinal pavement joint or crack and at least one inch from the painted stripe, ensuring that the finished line of markers is straight with minimal lateral deviation. Give preference to maintaining the 2-inch offset between recessed groove and joint as opposed to keeping the line of markers straight.

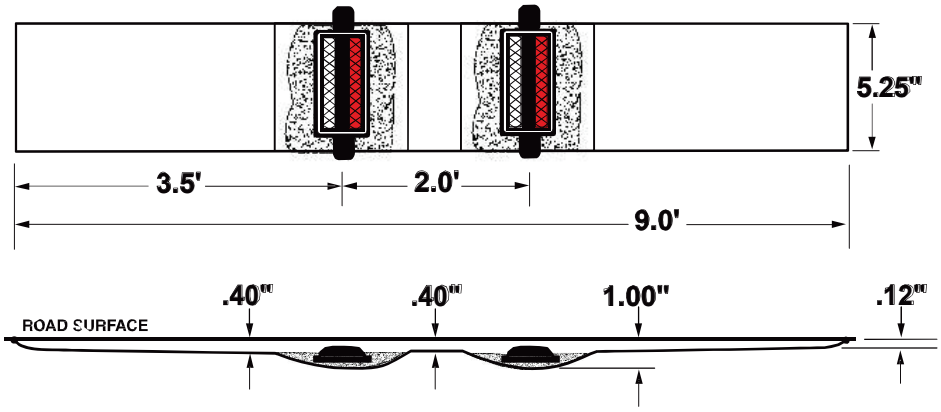

Place inlaid markers as much in line with existing pavement striping as possible. Place markers installed along an edge line or channelizing line so that the near edge of the plastic housing is no more than one inch from the near edge of the line. Place markers installed along a lane line between and in line with the dashes. Do not place markers over the lines except where the lines deviate visibly from their correct alignment, and then only after obtaining the Engineer's prior approval of the location.

If conflicts between recessed groove placement in relation to pavement joint and striping cannot be resolved, obtain the Engineer's approval to eliminate the marker or revise the alignment.

E. Disposal of Waste. Dispose of all removed asphalt pavement, debris, and other waste at sites off the right of way obtained by the Contractor at no additional cost to the Department. See the Special Provision for Waste and Borrow Sites.

F. Restoration. Be responsible for all damage to public and/or private property resulting from the work. Restore all damaged features in like kind materials and design at no additional cost to the Department.

G. On-Site Inspection. Make a thorough inspection of the site prior to submitting a bid and be thoroughly familiar with existing conditions so that the work can be expeditiously performed after a contract is awarded. The Department will consider submission of a bid as evidence of this inspection having been made and will not honor any claims for money or grant Contract time extensions resulting from site conditions.

H. Caution. Do not take information shown on the drawings and in this proposal and the types and quantities of work listed as an accurate or complete evaluation of the material and conditions to be encountered during construction, but consider the types and quantities of work listed as approximate only. The bidder must draw his or her own conclusion as to the conditions encountered. The Department does not give any guarantee as to the accuracy of the data and no claim will be considered for additional compensation or extension of Contract time if the conditions encountered are not in accordance with the information shown.

IV. MEASUREMENT

A. Maintain and Control Traffic. See the Traffic Control Plan.

B. Inlaid Pavement Markers. The Department shall measure as Each. One (1) installation of "INLAID PAVEMENT MARKER" will consist of grooving the pavement, removing asphalt cuttings and debris, preheating pavement to remove moisture, adhesives, and installation of two (2) markers with all lenses in accordance with this note.

Note: Each pay item of Inlaid Pavement Marker will require two markers.

V. PAYMENT

A. Maintain and Control Traffic. See the Traffic Control Plan.

B. Inlaid Pavement Markers. The Department will make payment for the completed and accepted quantities of completely installed "INLAID PAVEMENT MARKERS" at the Contract unit price, Each. Accept payment as full compensation for all labor, equipment, materials, and incidentals necessary to accomplish this work to the satisfaction of the Engineer. A system of one (1) groove and two (2) markers shall be paid as one "INLAID PAVEMENT MARKER". The bid item "INLAID PAVEMENT MARKER" shall be used regardless of the color and type of lenses required.

PPL companies

POWER LINE SAFETY

OSHA Cranes in Construction Standard Power Line Safety Section 1926.1408 and 1926.1409

This is a high level summary only. Refer to www.osha.gov for details.

Employer must identify the work zone by either: (1) demarcating boundaries (with flags, range limit device or range control warning device) and prohibit operator from operating past those boundaries; OR (2) define the work zone as the area 360 degrees around the equipment, up to the equipment's maximum working radius.

Determine if any part of equipment, load line, or load could get closer than 20 feet for less than 350 kV or 50 feet for greater than 350 kV if operated up to the equipment's maximum working radius.

NO → Crane operator can proceed with crane operations.

YES → Employer must do either **Option 1, 2, or 3.**

Option 1. Confirm from the utility that the power line has been de-energized and visibly grounded at the worksite. Proceed with crane operations.

Option 2. Employer must ensure that no part of the equipment, load line, or load gets closer than 20 feet if less than 350 kV or 50 feet if more than 350 kV to the power line by implementing the Encroachment Precautions. Employer needs to know if line is more or less than 350 kV but does not need to know exact voltage.

Option 3. Employer contacts utility to determine line voltage. Utility provides within 2 days. Determine if any part of equipment, load line, or load while operating up to the maximum working radius in the work zone could get closer than the Table A distances. If so, implement Encroachment Precautions.

Table A Distances:

Up to 50 kV:	10 feet
50 to 200 kV:	15 feet
200 to 350 kV:	20 feet
350 to 500 kV:	25 feet

Implement encroachment precautions.

Operations where any part of crane, load line, or load is closer than Table A distance to an energized power line is prohibited unless the requirements on Page 2 are met.

Encroachment Prevention Precautions required for Options 2 or 3:

1. Conduct a planning meeting with operator and other workers.
2. Tag lines, if used, must be non-conductive.
3. Erect and maintain elevated warning line, barricade, or line of signs, in view of the operator, equipped with flags at 20 feet from the power line if less than 350 kV or 50 feet if more than 350 kV (if using Option 2) or the distance shown in Table A if using Option 3. If operator is unable to see the elevated warning line, a dedicated spotter (B) must be used in addition to implementing one of A, C, D, or E below.

In addition to the items above, implement at least one of these:

A. Use a proximity alarm set to give operator sufficient warning to prevent encroachment.
B. Use a dedicated spotter who is in continuous contact with the operator.
C. Use a device that automatically warns the operator to stop (range control warning device).
D. Use a device that limits range of movement, set to prevent encroachment.
E. Use an insulating link between the end of the load line and the load.

PPL companies

POWER LINE SAFETY

Power Line Safety requirements for getting closer than the Table A distances

Table A Distances:

Up to 50 kV:	10 feet
50 to 200 kV:	15 feet
200 to 350 kV:	20 feet
350 to 500 kV:	25 feet

Operations where any part of crane, load line, or load is closer than Table A distance to an energized power line is prohibited unless the requirements on this page are met.

Crane operator employer shall determine that it is infeasible to work without breaching Table A distances.

Employer determines after consulting with utility that it is infeasible to de-energize and ground or relocate the power line.

Utility or registered professional engineer (PE) shall determine minimum clearance distance that shall be maintained to prevent electrical contact.

Planning meeting with employer and utility (or PE) shall be held to determine procedures that shall be followed.

If so equipped, the automatic reclosing features shall be made inoperative by the utility before work begins.

Crane operator is required to have utility install line hose or coverup except where unavailable for the voltage.

Documented procedures must be developed and kept on site. Equipment user, operator and others shall meet with utility to review procedures.

Utility and employers of employees involved in the work shall identify one person to direct implementation of procedures.

If procedures are not effective, crane operator shall stop work OR have utility de-energize lines.

Crane operator is also required to do these items.

- Dedicated spotter shall be used.
- Elevated warning line or barricade in view of operator equipped with flags shall be installed.
- Insulating link shall be installed between end of load line and load.
- Non-conductive rigging shall be used.
- If equipment has device that limits range of movement, it shall be used.
- Tag lines shall be non-conductive.
- Barricades set up 10 feet around crane to prevent personnel from entering the work area.
- Workers, other than operator, shall be prohibited from touching load line.
- Only essential personnel shall be allowed.
- Crane shall be grounded.

SPECIAL NOTE FOR NON-DESTRUCTIVE TESTING OF DRILLED SHAFTS (CROSSHOLE SONIC LOGGING)

Jefferson
County

Item No. 05_10057
DESCRIPTION - Drawing No. 29062

1.0 DESCRIPTION

Crosshole Sonic Logging (CSL) is a nondestructive method to test the integrity of drilled shafts. The Contractor will be responsible for supplying all equipment and materials necessary to perform this testing, and obtaining the services of a CSL Testing Firm using personnel experienced with CSL testing and approved by the Engineer to perform the testing.

1.1 The CSL tests must either be performed by or under the supervision of a responsible licensed professional engineer with:

- a minimum of three (3) years experience performing CSL tests, and
- experience performing CSL tests on a minimum of three (3) past projects with ascope and complexity similar to this project including a minimum of 60 drilled shafts in the past three (3) years.

If the responsible professional engineer does not perform the testing, then the responsible field technician who does perform the testing must meet the same experience requirements.

1.2 Preliminary Submittal - At least 21 calendar days before beginning drilled shaft construction, submit a technical proposal prepared by the CSL Testing Firm that documents the personnel's experience and addresses the testing procedures. Experience documentation should include resumes, references, certifications, project lists, experiencedescriptions and details, etc. Within 10 working days, the Engineer will review the proposal and report to the Contractor whether the CSL Testing Firm and personnel are approved and the proposal is acceptable.

1.3 The Contractor will be responsible for providing:

a. access tubes which will be used for CSL testing of the drilled shafts;
b. watertight shoes, watertight caps, and non-shrink grout;
c. suitable working space and access to every shaft;
d. a reliable 600 watt (minimum) generator; and
e. any other equipment or materials necessary to accomplish the testing.

Table 1 - Minimum Number of Access Tubes and CSL Logs			
Rock Socket Diameter (inches)	Number of Tubes	Diagonal Logs	Perimeter Logs
30 to 54	4	2	4
60 to 78	6	3	6
84 to 96	8	4	8

2.0 MATERIALS

2.1 Supply the number of access tubes shown in the plans or in Table 1. Provide access tubesmeeting the requirements below. The Engineer will accept access tubes based on visual inspection and certification that the steel pipe meets the requirements below:

a. Schedule 40 steel pipe conforming to ASTM A 53, Grade A or B, Type E, F, or S;
b. contains round, regular internal diameters free of defects or obstructions, includingany at pipe joints;
c. capable of permitting the free, unobstructed passage of source and receiver probes; and
d. watertight and free from corrosion with clean internal and external faces to ensurepassage of the probes and a good bond between the concrete and the tubes.

2.2 Provide watertight shoes on the bottom and removable watertight caps on the top of the tubes.

2.3 Provide non-shrink grout to fill the access tubes and any cored holes at the completion of the CSL testing and Engineer approval for refill. Use grout conforming to Section 601.03.03 of the Standard Specifications.

3.0 CONSTRUCTION

3.1 Access Tube Installation

a. Install access tubes equally spaced around the perimeter of each of the drilled shafts.
b. Securely attach the tubes to the longitudinal reinforcement. Wire-tie the tubes a minimum of every 3 feet so they will stay in position during placement of rebar and concrete. Place the tubes so they will be parallel with each other and as near to vertical as possible in the finished shaft. Even moderate bending of the tubes will result in large regional variations in the data.
c. Place the tubes from 6 inches above the shaft tip to at least 3 feet above the top of shaft and at least 2 feet above ground level or top of casing. Under no circumstances may the tubes be allowed to come to rest on the bottom of the excavation.
d. Ensure that any joints in the tubes are watertight.
e. During placement of the reinforcement cage, exercise care so that the tubes will notbe damaged to the extent that would prevent a probe from passing through them.
f. After placing the reinforcing cage and before beginning concrete placement, fill the tubes with clean potable water and cap or seal the tube tops to keep debris out of the tubes. Replace the watertight caps immediately after filling the tubes with water.
g. Before placing concrete, investigate at least one tube per shaft to make sure that there are no bends, crimps, obstructions or other impediments to the free passage of the testing probes.

h. During removal of the caps from the tubes, exercise care so as not to apply excess torque, hammering, or other stresses which could break the bond between the tubes and concrete.

i. After concrete placement and before the beginning of CSL testing, inspect the access tubes and report any access tubes that the test probe cannot pass through to the Engineer. The Engineer will make an evaluation to determine if the CSL testing can be successfully performed without the tube(s); the Engineer may require the contractor to, at its own expense, replace one or more tubes with 2-inch diameter holes cored through the concrete for the entire length of the shaft, excluding the bottom 6 inches. Unless directed otherwise by the Engineer, locate core holes approximately 6 inches inside the reinforcement such that it does not damage the reinforcement. For each core hole drilled, record a log with descriptions of inclusionsand voids in the cored holes and submit a copy of the log to the Engineer. Preserve the cores, identify as to location and make available for inspection by the Engineer.

3.2 Grouting - After completion of the CSL testing and evaluation of results, and only after being directed to do so by the Engineer, remove the water from the access tubes and any cored holes, completely fill the tubes and holes with approved grout. After grouting, cut the tubes flush with the tops of the drilled shafts.

4.0 TESTING AND REPORTING

The Engineer may elect to reduce the amount of testing and will pay only for the authorized quantities.

CS

4.1 Testing

a. Perform CSL testing according to ASTM D6760, “Integrity Testing of Concrete DeepFoundations by Ultrasonic Crosshole Testing”.
b. Provide access to the top of the shaft for testing personnel and equipment.
c. Perform CSL testing in accordance with generally accepted CSL Testing methods.
d. Obtain the minimum number of CSL logs shown in Table 1 unless otherwise directed by the Engineer.
e. Perform CSL testing on all completed shafts designated for testing by the Engineer, after the shaft concrete has cured at least 48 hours. Additional curing time may be necessary, depending on the concrete admixtures that are used.

4.2 Test Reports - Submit a test report prepared by the CSL Testing Firm and signed by theresponsible professional engineer which, as a minimum, contains:

a. Date of test
b. Pier No., Plan Shaft No., Station, Offset, and Top of Shaft Elevation;
c. Schematic showing a plan view of the access tube locations;
d. CSL logs presented for each tube pair tested with any defect zones indicated on thelogs and discussed in the report as appropriate.
e. Analyses of initial pulse arrival time versus depth or velocity versus depth if requested by the Engineer; and
f. Analyses of pulse energy/amplitude versus depth.

4.3 The Department will generally use the criteria below for evaluation of the shafts but may vary the criteria based on other available information (e.g. TIP results, construction records, etc.)

Satisfactory	Good (G)	FAT increase 0 to 10% **and** Energy Reduction < 6 dB
Anomaly	Questionable (Q)	FAT increase 11 to 20% **and** Energy Reduction < 9 dB
Flaw	Poor/Flaw (P/F)	FAT increase 21 to 30% **or** Energy Reduction < 12 dB
Defect	Poor/Defect (P/D)	FAT increase >31% **or** Energy Reduction < 12 dB

The Department will consider energy reductions in conjunction with FAT increases and reserves the right to vary the anomaly, flaw and defect criteria based on energy reductions.

- Flaws affecting >50% of profiles or defects affecting >1 profile at the same depth must be addressed.
- "Addressing" may include tomography, core drilling, repair, replacement, or other methods.
- Full cross-section flaws or defects require repair.
- Anomalies need evaluation and potential addressing.

4.4 Independent Comparison Tests - Consultants acting on behalf of the Department may perform independent comparison tests on the shafts tested by the Contractor's CSL Testing Firm.

5.0 EVALUATION OF TEST RESULTS

5.1 Allow direct communication between the CSL Testing Firm and the Department.

5.2 The Engineer will evaluate the CSL test results in the test report to determine whether or not the drilled shaft integrity is acceptable. Within 5 working days after receiving a test report, the Engineer will report to the Contractor whether the construction is acceptableor additional analyses are needed.

5.3 The Engineer will not require the Contractor to wait for CSL testing and evaluation to continue drilled shaft construction. However, if the CSL tests indicate that the integrity of any drilled shaft is questionable, the Engineer may direct the Contractor to suspend drilled shaft operations until the problem is resolved.

5.4 Continue with construction of the structure above the drilled shafts only after receiving written approval to do so, based on evaluation of the CSL test results.

5.5 If the CSL records are complex or inconclusive, the Engineer may require additional testing (such as Angled CSL, Crosshole Tomography, Singlehole Sonic Logging, or Sonic Echo/Impulse Response, etc.) or concrete cores to sample the concrete in question to verify shaft conditions. If core samples are needed, obtain cores with a minimum diameter of 2 inches, unless directed otherwise by the Engineer. Unless directed otherwise by the Engineer, locate core holes approximately 6 inches inside the reinforcement such that they do not damage the reinforcement. For each core hole drilled, record a log with descriptions of inclusions and voids in the cored holes and submit a copy of the log to the Engineer. Place the cores in crates properly marked showing the shaft depth at each interval of core recovery. Transport the cores and logs

tothe Geotechnical Branch in Frankfort for inspection and testing. Grout the core holes in accordance with Section 3.2 above.

5.6 If the additional testing or evaluation of cores indicate that concrete for any drilled shaft on which additional testing or coring was required is acceptable, the Department will pay for the additional testing and concrete coring and grouting on a cost plus basis. If the additional testing or evaluations of cores indicate that the concrete for any drilled shaft concrete is unacceptable, the additional testing and concrete coring and grouting will beat the expense of the Contractor.

5.7 If defects are found, the original structural designer will perform structural analyses, at the expense of the Contractor, based on the design criteria established for the structure to assess the effects of the defects on the structural performance of the drilled shaft. If the results of the analyses indicate that there is conclusive evidence that the defects willresult in inadequate or unsafe performance under the design loads, as defined by the design criteria for the structure, the Engineer will reject the shaft.

5.8 If any shaft is rejected, provide a plan for remedial action to the Engineer for approval. Any modifications to the foundation shafts and/or other substructure elements caused by the remedial action will require calculations and working drawings by the original structural designer, at the expense of the Contractor. Begin remediation operations only after receiving approval from the Engineer for the proposed remediation. All remedial action will be at no cost to the Department and with no extension of contract time.

6.0 METHOD OF MEASUREMENT

The Department will pay for the authorized and accepted quantities of "CSL Testing" at the contract unit price per each shaft tested (production and technique drilled shafts). This will constitute full compensation for all costs associated with providing access for testing personnel and equipment, performing the CSL Testing in a single shaft, and reporting the results to the Engineer.

Installation of CSL Access Tubing is incidental to the applicable contract unit bid price for Drilled Shaft, Common, and Drilled Shaft, Solid Rock. This will constitute all costs and delays associated with installing the CSL Access Tubing in a single shaft, including but not limited to providing and installing access tubing, providing and installing all required bracing for access tubes, providing and placing grout in access tubes.

The Department will pay using a change order for the direct cost of additional testing and concrete coring, authorized by the Engineer, required to investigate shafts with inconclusive CSL records if evaluation of the additional testing or cores indicates that concrete for that drilled shaft is acceptable. This will constitute full compensation for all costs and delays associated with performing additional tests, obtaining and delivering concrete cores to the Geotechnical Branch, and grouting core holes.

7.0 PAYMENT

The Department will pay for the completed and accepted quantities under the following:

Code	Pay Item	Unit
21321NC	CSL Testing (4 tubes)	Each

The Department will consider payment as full compensation for all work required under this Special Note.

SPECIAL NOTE FOR PIPELINE INSPECTION

1.0 DESCRIPTION. The Department will perform visual inspections on all pipe on the project. A video inspection will be required on projects having more than 250 linear feet of storm sewer and/or culvert pipe and on routes with an ADT of greater than 1,000 vehicles. Conduct video inspections on all pipe located under the roadway and 50 percent of the remaining pipe not under the roadway. Storm sewer runs and outfall pipes not under the roadway take precedence over rural entrance pipes. Contractors performing this item of work must be prequalified with the Department in the work type J51 (Video Pipe Inspection and Cleaning). Deflection testing shall be completed using a mandrel in accordance with the procedure outlined below or by physical measurement for pipes greater than 36inches in diameter. Mandrel testing for deflection must be completed prior to the video inspection testing. Unless otherwise noted, Section references herein are to the Department's Standard Specifications for Road and Bridge Construction, current edition.

2.0 VIDEO INSPECTION. Ensure pipe is clear of water, debris or obstructions. Complete the video inspection and any necessary measurement prior to placing the final surface over any pipe. When paving will not be delayed, take measurements 30 days or more after the completion of earthwork to within 1 foot of the finished subgrade. Notify the Engineer a minimum of 24 hours in advance of inspection and notify the Engineer immediately if distresses or locations of improper installation are logged.

2.1 INSPECTION FOR DEFECTS AND DISTRESSES

A) Begin at the outlet end and proceed through to the inlet at a speed less than or equal to 30 ft/minute. Remove blockages that will prohibit a continuous operation.

B) Document locations of all observed defects and distresses including but not limited to: cracking, spalling, slabbing, exposed reinforcing steel, sags, joint offsets, joint separations, deflections, improper joints/connections, blockages, leaks, rips, tears, buckling, deviation from line and grade, damaged coatings/paved inverts, and other anomalies not consistent with a properly installed pipe.

C) During the video inspection provide a continuous 360 degree pan of every pipe joint.

D) Identify and measure all cracks greater than 0.1" and joint separations greater than 0.5".

E) Video Inspections are conducted from junction to junction which defines a pipe run. A junction is defined as a headwall, drop box inlet, curb box inlet, manhole, buried junction, or other structure that disturbs the continuity of the pipe. Multiple pipe inspections may be conducted from a single set up location, but each pipe run must be on a separate video file and all locations are to be referenced from nearest junction relative to that pipe run.

F) Record and submit all data on the TC 64-765 and TC 64-766 forms.

3.0 MANDREL TESTING. Mandrel testing will be used for deflection testing. For use on Corrugated Metal Pipe, High Density Polyethylene Pipe, and Polyvinyl Chloride Pipe, use a mandrel device with an odd number of legs (9 minimum) having a length not less than the outside diameter of the mandrel. The diameter of the mandrel at any point shall not be less than the diameter specified in Section 3.6. Mandrels can be a fixed size or a variable size.

3.1 Use a proving ring or other method recommended by the mandrel manufacturer to verify mandrel diameter prior to inspection. Provide verification documentation for each size mandrel to the Engineer.

3.2 All deflection measurements are to be based off of the AASHTO Nominal Diameters. Refer to the chart in section 3.6.

3.3 Begin by using a mandrel set to the 5.0% deflection limit. Place the mandrel in the inlet end of the pipe and pull through to the outlet end. If resistance is met prior to completing the entire run, record the maximum distance achieved from the inlet side, then remove the mandrel and continue the inspection from the outlet end of the pipe toward the inlet end. Record the maximum distance achieved from the outlet side.

3.4 If no resistance is met at 5.0% then the inspection is complete. If resistance occurred at 5.0% then repeat 3.1 and 3.2 with the mandrel set to the 10.0% deflection limit. If the deflection of entire pipe run cannot be verified with the mandrel then immediately notify the Engineer.

3.5 Care must be taken when using a mandrel in all pipe material types and lining/coating scenarios. Pipe damaged during the mandrel inspection will be video inspected to determine the extent of the damage. If the damaged pipe was video inspected prior to mandrel inspection then a new video inspection is warranted and supersedes the first video inspection. Immediately notify the Engineer of any damages incurred during the mandrel inspection and submit a revised video inspection report.

3.6 AASHTO Nominal Diameters and Maximum Deflection Limits.

Base Pipe Diameter	AASHTO Nominal Diameter	Max. Deflection Limit	
		5.0%	10.0%
(inches)	(inches)	(inches)	
15	14.76	14.02	13.28
18	17.72	16.83	15.95
24	23.62	22.44	21.26
30	29.53	28.05	26.58
36	35.43	33.66	31.89
42	41.34	39.27	37.21
48	47.24	44.88	42.52
54	53.15	50.49	47.84
60	59.06	56.11	53.15

4.0 PHYSICAL MEASUREMENT OF PIPE DEFLECTION. Alternate method for deflection testing when there is available access or the pipe is greater than 36 inches in diameter, as per 4.1. Use a contact or non-contact distance instrument. A leveling device is recommended for establishing or verifying vertical and horizontal control.

4.1 Physical measurements may be taken after installation and compared to the AASHTO Nominal Diameter of the pipe as per Section 3.6. When this method is used, determine the smallest interior diameter of the pipe as measured through the center point of the pipe (D2). All measurements are to be taken from the inside crest of the corrugation. Take the D2 measurements at the most deflected portion of the pipe run in question and at intervals no greater than ten (10) feet through the run. Calculate the deflection as follows:

% Deflection = [(AASHTO Nominal Diameter - D2) / AASHTO Nominal Diameter] x 100%

Note: The Engineer may require that preset monitoring points be established in the culvert prior to backfilling. For these points the pre-installation measured diameter (D1) is measured and recorded. Deflection may then be calculated from the following formula:

$$\% \text{ Deflection} = [(D1 - D2) / D1] (100\%)$$

4.2 Record and submit all data.

5.0 DEDUCTION SCHEDULE. All pipe deductions shall be handled in accordance with the tables shown below.

FLEXIBLE PIPE DEFLECTION	
Amount of Deflection (%)	Payment
0.0 to 5.0	100% of the Unit Bid Price
5.1 to 9.9	50% of the Unit Bid Price [(1)]
10 or greater	Remove and Replace [(2)]

[(1)] Provide Structural Analysis for HDPE and metal pipe. Based on the structural analysis, pipe may be allowed to remain in place at the reduced unit price. [(2)] The Department may allow the pipe to remain in place with no pay to the Contractor in instances where it is in the best interest to the public and where the structural analysis demonstrates that the pipe should function adequately.

RIGID PIPE REMEDIATION TABLE PIPE	
Crack Width (inches)	Payment
≤ 0.1	100% of the Unit Bid Price
Greater than 0.1	Remediate or Replace [(1)]

(1) Provide the Department in writing a method for repairing the observed cracking. Do not begin work until the method has been approved.

6.0 PAYMENT. The Department will measure the quantity in linear feet of pipe to inspect. The Department will make payment for the completed and accepted quantities under the following:

Code	Pay Item	Pay Unit
24814EC	Pipeline Inspection	Linear Foot
10065NS	Pipe Deflection Deduction	Dollars

Rev 7/2021

Special Note for Traffic Queue Protection Vehicle

1.0 DESCRIPTION. Furnish, Operate, and Maintain Traffic Queue Protection Vehicle at locations and times described herein. The Queue Protection Vehicle is expected to alert motorists (inside and outside of project limits) of all stopped traffic caused by construction activities or incidents within the project limits.

2.0 MATERIALS. The contractor shall provide a minimum of one (1) queue protection vehicle for each traveling direction where traffic flow is reduced or modified in a manner where a queue could occur. One (1) additional queue protection vehicle shall be onsite in reserve. The Traffic Queue Protection Vehicle must fulfill the following minimum requirements:

1. A truck mounted attenuators that meets or exceeds NCHRP TL-3 requirements.
2. Four (4) round yellow strobe lights (with auto-dimmers) positioned rear facing
    - Two (2) mounted under rear bumper
    - Two (2) mounted at cab level
    - Visibility of strobe lights can not be deterred by attenuator
3. One (1) standard cab mounted light bar.
4. A truck mounted message board with a minimum of 3 Lines and 8 Characters per line.
5. Four Hour National Traffic Incident Management (TIM) Responder Training for Queue Truck Operators.

3.0. CONSTRUCTION. A queue will be defined as anytime that traffic traveling through the project is reduced to a speed of twenty (20) miles per hour or less. The following procedures will be followed when a traffic queue occurs until free flow traffic conditions are present:

- The queue protection vehicle shall be positioned no further than ½ mile upstream from the back of the slow moving traffic.
- The queue protection vehicle shall be positioned on the shoulder and clear of the traveled way so as not to impede traffic.
- The queue protection vehicle shall relocate as needed to maintain approximately ½ mile distance from the back of the slow moving traffic.
- The 2nd queue protection vehicle shall be held in reserve, on site, and support the primary vehicle if conditions prevent repositioning by reverse. This vehicle shall not be paid for idle time.
- Queue Protection Vehicles shall be kept in project limits during planned lane closures and other project activities expected to cause a queue. One Queue Protection Vehicle shall remain on the project at all times available to respond to incidents within the project limits in a timely manner.
- Queue length estimates and traffic conditions shall be reported to the KYTC project engineer or designee at the following periods:
    1. At 30 minute intervals
    2. At significant changes
    3. When free flow traffic is achieved
- The KYTC project engineer or designee will document all daily queue reports and provide these logs to the Director of Maintenance and Director of Construction at the end of each month.

The Queue Protection Vehicle shall be mobilized by the Project Engineer or designee for planned construction activities. For unplanned incidents mobilization should be initiated by the first person (KYTC's or Contractor's project staff) receiving notification of the queue.

4. MEASUREMENT.

4.01 Queue Protection Vehicle. The Department will measure the time from when the vehicle is in position protecting the queue until either free flow traffic is achieved or the vehicle is no longer protecting the queue, whichever occurs first. Idle time will not be paid. The Department will not measure mobilization, removal, maintenance, labor, fuel, or any additional items but will consider them all incidental to this item of work.

4.02 Furnish Queue Protection Vehicles. The Department will measure the quantity by each month the Engineer requires to have the Contractor furnish vehicles as defined in '2.0 Materials' of this Special Note. The Department will not measure mobilization, removal, labor, fuel, or any additional items but will consider them all incidental to this item of work. Partial Months will be calculated as shown in the table below.

Partial Month Payment Schedule

Days	Increment
0-7 days	0.25
8-14 days	0.50
15-21 days	0.75
22-31 days	1.00

5. PAYMENT.

Code	Pay Item	Pay Unit
25075EC	Queue Protection Vehicle	Hour
25117EC	Furnish Queue Protection Vehicles	Month

Rev 8/2021

Special Note for Portable Queue Warning Alert System

1.0 Description

This item shall consist of furnishing, installing, relocating, operating, servicing, and removing various components of a portable, quickly deployable, real-time automated ITS queue warning alert system (PQWAS), in accordance with the standard specifications and this special provision. The Contractor shall also provide the maintenance of the complete system for the duration of the project or as directed by the Project Engineer. The Department is willing to look at different technologies (i.e. allow the use of crowd sourcing data to be used in lieu of the portable radar sensors). Any changes to the below requirements must be submitted and approved by the Engineer.

2.0 Materials

Materials shall be in accordance as follows:

All materials used shall meet the manufacturer's specifications and recommendations.

All PQWAS materials installed on the project shall be provided by the Contractor in excellent quality condition, shall be corrosion resistant and in strict accordance with all of the details shown within Contractor's Plans approved by KYTC. The Contractor shall maintain an adequate inventory of parts and replacement units to support maintenance and repair of the PQWAS. Pre-deployment is a condition of the system's acceptance and is based on the successful performance demonstration for a (5) day continuous period in accordance to this specification and as set forth in the plans. Ensure compliance to all FCC and Department specifications.

The Contractor shall maintain this system and shall be locally available to service and maintain system components, move portable devices as necessary and respond to emergency situations. The Contractor has oversight responsibility for directing placement of devices in the project area. The Contractor is to be accessible seven (7) days a week and twenty-four (24) hours a day while the system is deployed. The Contractor shall provide contact information for the system's coordinator and others responsible for maintenance of the system prior to installation of the system. Furnish a System Coordinator for monitoring the PQWAS throughout all periods of deployment.

A. General Capabilities and Performance Requirements

1. Overall PQWAS capabilities and performance requirements include the following:
   a. Furnish a system capable of providing advance traffic information to motorists when there is a queueing of traffic due to congestion resulting from lane reductions, emergency events or other conditions. The condition-responsive notification to the motorist occurs with the use of Portable Changeable Message Signs (PCMS) in accordance to the below capabilities and performance requirements, activated through real-time traffic data collected downstream of the PCMS locations. This equipment must

be a packaged system, pre-programmed and operates as a stand-alone PQWAS meeting this specification. Conditions might exist that require relocation of the portable sensors at any given time, the sensors shall be portable and shall not require re-calibration in the field for fast deployments. Due to the potential need to replace damaged sensors or to change the position of one or more sensors at any given time, sensors must be interchangeable and relocatable by an unskilled laborer. The system must continue to function if as many as half the sensors fail to function.

b. Provide a PQWAS that consists of the following field equipment: portable radar sensors and portable changeable message signs (PCMS). Provide a system capable of withstanding inclement weather conditions while continuing to provide adequate battery power. The portable radar sensor battery, in a stand-alone state and without a solar panel for recharging, shall be capable of keeping power and capable of sending data for (10) consecutive days or longer. The system shall notify drivers of real-time queue events via specifically placed PCMS units up stream of the work zone. All predetermined/preprogrammed messages are to be approved by KYTC. The number and location of portable radar sensors and PCMS units shall be as directed by the Project Engineer. The decision to deploy or relocate field equipment is made by the Project Engineer and instrumented through the System Coordinator. The decision for equipment removal is made by the Project Engineer after work is complete. The sensors and PCMS units shall be identifiable via global positioning system (GPS) and shall contain an accelerometer to detect and alert of unauthorized movement.
c. The portable radar sensor shall be capable of collecting traffic speed data. The processed data is used to remotely control PCMS units to display user definable, Engineer approved and locally stored messages. The message trigger state thresholds for slow and stopped speeds shall be user configurable and revisable in less than {1) hour from the Project Engineer's request. Weekly Traffic Data Reports shall be presented to the Project Engineer and shall include speed data per sensor location, travel times, and queue lengths in graphical and numerical formats. In the event the Project Engineer requires a report, other than a weekly report, for any reason; then the Contractor shall provide report within (48) hours of request. Unlimited data reports shall be included within price of system. Sensors shall require no calibration adjustments in the field. Sensor should begin transmitting data within (30) seconds of being turned on. Satellite (SAT) communications will be required when cellular service does not provide continuous communications. Contractor shall identify the most trustworthy cellular provider within the project area.
d. Data shall be accessible through a website and the Contractor shall provide a username and password for protection. The website shall be accessible seven (7) days a week and twenty - four (24) hours a day. The website shall provide historical & real-time data in graphical and numerical formats and shall have the capability of being integrated within the Department's Traffic Management Center (if requested). The website should be compatible to most hand held devices. Data shall be saved on the manufacturer's network for up to (5) years from the deployment date of system and shall be provided at the request

of the Department at any time within the (5) year window. The use of the website shall be included within the price of system.

e. Warning Alerts: queue events, low battery voltage warnings, sensor movement alerts, high and low speed alerts shall be provided via cellular text messaging and/or via email messaging at the request of select Contractor personnel and KYTC officials.

f. The PQWAS system shall have the capabilities to provide alternate route messaging on specifically placed portable changeable message units and/or fixed Variable Message Systems (VMS). The intent of this service is to provide alternate route messaging to motorists before entering the project limits from all directions and giving them appropriate time to adjust their routes. Alternative routes shall be predefined and approved by KYTC. Additional PCMS units may be required for alternate route messaging and will be as per Section 5.0 of this note. KYTC's Traffic Management Center will provide detour messages via fixed VMS units during the term of the project.

B. Portable Radar Sensor Capabilities and Performance Requirements

The PQWAS shall include portable radar sensors (PRD) to monitor and detect queue events.

1. The Radar Sensor shall be FHWA accepted to meet NCHRP 350 test requirements
2. The Radar Sensor shall be locatable at all times via an internal Global Positioning System (GPS) and shall be capable of Cellular or SAT Communications.
3. The Radar Sensor shall have a dry-cell battery capable of powering the system for (10) consecutive days or longer
4. The Radar sensor shall be K-Band technology and have a line of sight up to 200 linear feet without obstruction
5. The Radar sensor shall have the ability to be charged in the field through adaptable solar recharging technology in the case the sensor is utilized for more than 10 consecutive days

C. PCMS Capabilities and Performance Requirements

The PQWAS shall include portable changeable message signs (PCMS) designated to relay automated messaging of queue events, alternate route messages, and caution for the work area defined by the project limits. PCMS placements shall meet the requirements set forth by the Cabinet in each direction of the National Highway System (NHS).

1. The PCMS unit shall be a Full Matrix 24 rows x 50 columns and shall be capable of l line, 2line or 3 line messages
2. The PCMS unit shall be legible from a distance over twelve hundred feet (1200')
3. The height and size of characters shall be 18" to 58"
4. The PCMS shall be capable of storing up to 199 pre-programmed messages and up to 199 user-defined messages
5. The PCMS shall have a weather tight control cabinet with back lit LCD handheld controller.
6. The PCMS shall utilize a hydraulic lift to raise the unit to display height
7. The PCMS unit shall include solar recharging ports to allow for recharging of the portable radar sensors when they are not deployed.
8. The PCMS shall be NTCIP compliant and shall have an active Modem with active cellular service.

9. The user shall have the ability to communicate and override the PCMS remotely in the event of an emergency, Amber Alert, etc.
10. The PCMS unit shall have a docking station to include safety rails that allow a commercial safety strap to tie down the portable radar sensors while in transport. The docking station shall hold-up to (4) sensors safely and securely at all times

3.0 Construction Requirements

All communication costs include cellular telephone services, FCC licensing, wireless data networks, satellite and internet subscription charges, and battery charging and maintenance. Additional to these requirements, the Contractor shall assume all responsibility for any and all damaged equipment due to crashes, vandalism, and adverse weather that may occur during the contract period.

The PQWAS shall operate continuously (24 hours/ 7 Days) when deployed on the project. The system is in a constant "data collection" mode when deployed. The Contractor shall provide technical support for the PQWAS for all periods of operation.

In the event communication is lost with any component of the PQWAS, provide a means and staff to manually program a PCMS message. If communication is lost for more the 10 consecutive minutes, the system shall revert to a fail-safe ROADWORK/# MILES/AHEAD message displayed on the PCMS units until communication is restored.

System Operator, local control function and remote management operation must be password protected.

The PQWAS shall be capable of acquiring traffic information and selecting messages automatically without operator intervention after system utilization. The lag time between changes in threshold ranges and the posting of the appropriate PCMS message(s) shall be no greater than (60) seconds. The system operation and accuracy must not be appreciably degraded by inclement weather or degraded visibility conditions including precipitation, fog, darkness, excessive dust, and road debris.

The system shall be capable of storing ad-hoc messages created by the System Coordinator and logging this action when overriding any default or automatic advisory message.

The PQWAS communication system shall incorporate an error detection/correction mechanism to insure the integrity of all traffic conditions data and motorists information messages. Any required configuration of the PQWAS communication system shall be performed automatically during system initialization.

The system's acceptance is based on the successful performance demonstration of PQWAS for a (5) day continuous period in accordance to this specification and as set forth in the plans.

Ensure compliance to all FCC and Department specifications.

4.0 Equipment Maintenance.

Maintain system components in good working condition at all times. Repair or replace damaged or malfunctioning components, at no cost to the Department, as soon as possible and within (12) hours of notification by the Engineer. Periodically clean PCMS units if necessary.

5.0 Measurement. The Department will measure each item below in Months. For partial months the Department will pay in 0.25 increments based on the number of calendar days in the below table.

Partial Month Payment Schedule

Days	Increment
0-7 days	0.25
8-14 days	0.50
15-21 days	0.75
22-31 days	1.00

5.1 Portable Queue Warning Alert System includes cellular (SAT communications will be required if cellular is not available), all supporting field equipment, website, and unlimited data reports accessible by the Engineer. It will be measured by the number of months authorized by the Engineer for use on the project.

5.2 Queue Warning PCMS will be measured by each individual unit multiplied by the number of months authorized by the Engineer for use on the project.

5.3 Queue Warning Portable Radar Sensors will be measured by each individual unit multiplied by the number of months authorized by the Engineer for use on the project. Queue Warning Portable Radar Sensors will not be measured for payment if the Contractor utilizes a system operating on crowd sourcing data. Crowd sourcing data systems will only be allowed as approved by the engineer and will be considered incidental to Portable Queue Warning Alert System.

6.0 Payment.

Code	Pay Item	Pay Unit
26136EC	Portable Queue Warning Alert System	Month
26137EC	Queue Warning PCMS	Month
26138EC	Queue Warning Portable Radar Sensors	Month

SPECIAL NOTE FOR NON-TRACKING TACK COAT

1. DESCRIPTION AND USEAGE. This specification covers the requirements and practices for applying a non-tracking tack asphalt coating. Place this material on the existing pavement course, prior to placement of a new asphalt pavement layer. Use when expedited paving is necessary or when asphalt tracking would negatively impact the surrounding area. This material is not suitable for other uses. Ensure material can "break" within 15 minutes under conditions listed in 3.2.

2. MATERIALS, EQUIPMENT, AND PERSONNEL.

2.1 Non-Tracking Tack. Provide material conforming to Subsection 2.1.1.

2.1.1 Provide a tack conforming to the following material requirements:

Property	Specification	Test Procedure
Viscosity, SFS, 77 ˚ F	20 – 100	AASHTO T 72
Sieve, %	0.3 max.	AASHTO T 59
Asphalt Residue[1], %	50 min.	AASHTO T 59
Oil Distillate, %	1.0 max.	AASHTO T 59
Residue Penetration, 77 ˚ F	0 - 30	AASHTO T 49
Original Dynamic Shear (G*/sin δ), 82 ˚ C	1.0 min.	AASHTO T 315
Softening Point, ˚ F	149 min.	AASHTO T 53
Solubility, %	97.5 min.	AASHTO T 44

[1] Bring sample to 212 ˚F over a 10-15 minute period. Maintain 212 ˚F for 15-20 minutes or until 30-40 mL of water has distilled. Continue distillation as specified in T59.

2.2. Equipment. Provide a distributor truck capable of heating, circulating, and spraying the tack between 170 ˚F and 180 ˚F. Do not exceed 180 ˚F. Circulate the material while heating. Provide the correct nozzles that is recommend by the producer to ensure proper coverage of tack is obtained. Ensure the bar can be raised to between 14" and 18" from the roadway.

2.3. Personnel. Ensure the tack supplier has provided training to the contractor on the installation procedures for this product. Make a technical representative from the supplier available at the request of the Engineer.

3. CONSTRUCTION.

3.1 Surface Preparation. Prior to the application of the non-tracking tack, ensure the pavement surface is thoroughly dry and free from dust or any other debris that would inhibit adhesion. Clean the surface by scraping, sweeping, and the use of compressed air. Ensure this preparation process occurs shortly before application to prevent the return of debris on to the pavement. If rain is expected within one hour after application, do not apply material. Apply material only when the surface is dry, and no precipitation is expected.

3.2 Non-tracking Tack Application. Placement of non-tracking tack is not permitted from October 1st to May 15th. When applying material, ensure the roadway temperature is a minimum of 40˚F and rising. Prior to application, demonstrate competence in applying the tack according to this note to the satisfaction of the Engineer. Heat the tack in the distributor to between 170 – 180 ˚F. After the initial heating, between 170 – 180 ˚F, the material may be sprayed between 165 ˚F and 180 ˚F. Do not apply outside this temperature range. Apply material at a minimum rate of 0.70 pounds (0.08 gallons) per square yard. Ensure full coverage of the material on the pavement surface. Full coverage of this material is critical. Increase material application rate if needed to achieve full coverage. Schedule the work so that, at the end of the day's production, all non-tracking tack is covered with the asphalt mixture. If for some reason the non-tracking tack cannot be covered by an asphalt mixture, ensure the non-tracking tack material is clean and reapply the non-tracking tack prior to placing the asphalt mixture. Do not heat material more than twice in one day.

3.3 Non-tracking Tack Certification. Furnish the tack certification to the Engineer stating the material conforms to all requirements herein prior to use.

3.4 Sampling and Testing. The Department will require a sample of non-tracking tack be taken from the distributor at a rate of one sample per 15,000 tons of mix. Take two 1 gallon samples of the heated material and forward the sample to the Division of Materials for testing within 7 days. Ensure the product temperature is between 170 and 180 °F at the time of sampling.

4. MEASUREMENT. The Department will measure the quantity of non-tracking tack in tons. The Department will not measure for payment any extra materials, labor, methods, equipment, or construction techniques used to satisfy the requirements of this note. The Department will not measure for payment any trial applications of non-tracking tack, the cleaning of the pavement surface, or furnishing and placing the non-tracking tack. The Department will consider all such items incidental to the non-tracking tack.

5. PAYMENT. The Department will pay for the non-tracking tack at the Contract unit bid price and apply an adjustment for each manufacturer's lot of material based on the degree of compliance as defined in the following schedule. Non-tracking tack will not be permitted for use from October 1st to May 15th. During this timeframe, the department will allow the use of an approved asphalt emulsion in lieu of a non-tracking tack product but will not adjust the unit bid price of the material. When a sample fails on two or more tests, the Department may add the deductions, but the total deduction will not exceed 100 percent.

Non-Tracking Tack Price Adjustment Schedule						
Test	Specification	100% Pay	90% Pay	80% Pay	50% Pay	0% Pay
Viscosity, SFS, 77 ˚ F	20 – 100	19 - 102	17 - 18 103 - 105	15 - 16 106 - 107	14 108 - 109	≤13 ≥ 110
Sieve, %	0.30 max.	≤ 0.40	0.41 - 0.50	0.51 - 0.60	0.61 - 0.70	≥ 0.71
Asphalt Residue, %	50 min.	≥49.0	48.5 – 48.9	48.0 – 48.4	47.5-47.9	≤ 47.4
Oil Distillate, %	1.0 max.	≤1.0	1.1-1.5	1.6 - 1.7	1.8-1.9	>2.0
Residue Penetration, 77 ° F.	30 max.	≤ 31	32 - 33	34 - 35	36 - 37	≥ 38
Original Dynamic Shear (G*/sin δ), 82 ˚ C	1.0 min.	≥0.95	0.92 – 0.94	0.90 – 0.91	0.85 - 0.89	≤ 0.84
Softening Point, º F	149 min.	≥145	142 - 144	140 - 141	138 - 139	≤ 137
Solubility, %	97.5 min.	≥ 97.0	96.8 – 96.9	96.6 – 96.7	96.4 – 96.5	≤ 96.3

Code	Pay Item	Pay Unit
24970EC	Asphalt Material for Tack Non-Tracking	Ton

Revised: May 23, 2022

SPECIAL NOTE FOR EXPERIMENTAL KYCT AND FIELD RUT TESTING
June 2025 Update

1.0 General

1.1 Description. The KYCT (Kentucky Method for Cracking Test) and the IDEAL-RT/IDT-HT test results will help determine if the mixture is susceptible to cracking and rutting. During the experimental phase, data will be gathered and analyzed by the Department to determine the durability and stability of the bituminous mixes. Additionally, the data will help the Department to create future performance-based specifications which will include the KYCT and field rutting test methods.

2.0 Equipment

2.1 KYCT Testing Equipment. The Department will require a Marshall Test Press with digital recording capabilities. Other CT testing equipment may be used for testing with prior approval by the Department.

2.2 Water Baths. One or more water baths will be required that can maintain a temperature of 77° +/- 1.8^{o} F with a digital thermometer showing the water bath temperature. Also, one water bath shall have the ability to suspend gyratory specimen fully submerged in water in accordance with AASHTO T-166, current edition.

2.3 Field Rutting Tests. I f t he contractor elects to perform the IDEAL-RT test, in conformance with ASTM D8360-22, the acquisition of the “Option A” or “Option B” test fixture is required. If the IDT-HT is desired, the test press utilized for the KYTC is sufficient. The Department shall approve all test configurations at their discretion.

2.4 Gyratory Molds. Gyratory molds will be required to assist in the production of gyratory specimens in accordance with AASHTO T-312, current edition.

2.5 Ovens. Adequate (minimum of two ovens) will be required to accommodate the additional molds and asphalt mixture necessary to perform the acceptance testing as outlined in Section 402 of the Kentucky Standard Specifications for Road and Bridge Construction, current edition.

2.6 Department Equipment. The Department will provide gyratory molds, PINE 850 Test Press with digital recordation, and CT testing equipment to assist during this experimental phase so data can be gathered.

3.0 Testing Requirements

3.1 Acceptance Testing. Perform all acceptance testing and aggregate gradation as according with Section 402 and Section 403 of the Kentucky Standard Specifications for Road and Bridge Construction, current edition.

3.2 KYCT Testing. Perform crack resistance analysis (KYCT) in accordance with the current Kentucky Method for KYCT Index Testing during the plant production of all surface mixtures. Conform to KYTC Specifications for Mix Design approvals. All production testing is currently informational.

3.2.1 KYCT Frequency. Obtain an adequate sample of hot mix asphalt to ensure the acceptance testing, gradation, and KYCT gyratory samples can be fabricated and is representative of the bituminous mixture. Acceptance specimens shall be fabricated first, then after the specified amount of oven conditioning, fabricate the KYCT samples with the gyratory compactor in accordance with Section 2.4 of this Special Note. Analysis of the KYCT specimens will be required one per sublot produced from the same asphalt material and at the same time as the acceptance specimen is sampled and tested.

3.2.2 Number of Specimens and Conditioning. Fabricate specimens in accordance with the Kentucky Method for KYCT Index Testing. Contrary to the method, for field specimens, fabricate three replicates for cracking resistance analyses and three replicates for rutting resistance analyses. The specimens shall be compacted at the temperature in accordance with KM 64-411.

Contrary to the Kentucky Method, plant produced bituminous material shall be short-term conditioned immediately after sampling for two hours uncovered in the oven at compaction temperature in accordance with KM 64-411.

While the fabricated specimens are allowed to cool in air (fan is permissible) for 30 minutes +/- 5 minutes, find the bulk specific gravity of each specimen according to AASHTO T166. Next, condition the replicates in a 77 °F water bath for 30 minutes +/- 5 minutes. To ensure confidence and reliability of the test results provided by KYCT testing and Field Rut testing, reheating of the asphalt mixture is prohibited.

3.2.3 Long Term Aging CT's. For long-term aging and cracking resistance considerations in mix design, mix and condition 3 specimens uncovered for 20 hours at compaction temperature in accordance with KM 64-411. Perform KYCT testing in accordance with KM 64-450 and record the results on the Long-Term KYCT tab of the latest version of the MixPack.

3.2.4 Record Times. For each sublot, record the time required between drying aggregates in the plant to KYCT specimen fabrication. The production time may vary due to the time that the bituminous material is held in the silo. Record the preconditioning time when the time exceeds the one-hour specimen cool down time as required in accordance with The Kentucky Method for KYCT Index Testing. The preconditioning time may exceed an hour if the technician is unable to complete the test on the same day or within the specified times as outlined in The Kentucky Method for KYCT Index Testing. The production time and the preconditioning time shall be recorded on the AMAW.

3.2.5 File Name. As according to section 7.12 of The Kentucky Method for KYCT Index Testing, save the filename with the following format: "CID_Approved Mix Number_Lot Number_Sublot Number_ Date"

3.3 Field Rut Testing. Perform the rut resistance analysis (IDEAL-RT or IDT-HT) in accordance with ASTM D8360-22 or ALDOT458, respectively. Contrary to ASTM D8360 & ALDOT458, precondition the test specimens in a water bath or forced draft oven at 50 °C +/- 1 °C for 60 +/- 5 min before completing the test.

3.3.1 Field Rut Testing Frequency. Perform one test per lot of mixture produced. The plant produced bituminous material sampled for the field rut test does not have to be obtained at the same time as the acceptance and KYCT sample. If the field rut test sample is not obtained at the same time as the KYCT sample, determine the Maximum Specific Gravity of the KYCT sample in accordance with AASHTO T-209 coinciding with the test specimens.

3.3.2 Number of Specimens and Conditioning. Fabricate in accordance with the Kentucky Method for KYCT Index Testing. Contrary to the method, for field specimens, fabricate three

replicates for rutting resistance analyses. The specimens shall be compacted at the temperature in accordance with KM 64-411. Contrary to the Kentucky Method, plant produced bituminous material shall be short-term conditioned immediately after sampling for two hours uncovered in the oven at compaction temperature in accordance with KM 64-411.

3.3.3 Record Times. Record the production time as according to section 3.2.3 in this special note. Also record the time that the specimens were fabricated. All times shall be recorded on the AMAW.

3.3.4 File Name. Record all field rut data in the latest version of the AMAW.

4.0 Data

Submit the AMAW and all test data that was obtained for acceptance, gradation, KYCT, and field rut testing within five working days once all testing has been completed for a lot to Central Materials Lab and the District Materials Engineer. Also, any data and or comments that the asphalt contractor or district personnel deem informational during this experimental phase, shall also be submitted to the Central Materials Lab and the District Materials Engineer. Any questions or comments regarding any item in this Special Note can be directed to the Central Office, Division of Materials, Asphalt Branch.

5.0 Payment

Any additional labor and testing equipment that is required to fabricate and test the KYCT and field rut specimens shall be considered incidental to the asphalt surface line item. The Department will perform the testing for the KYCT and field rut specimens if a producer does not possess the proper equipment.

June 12th, 2025

SPECIAL NOTE FOR DOLOMITIC POLISH-RESISTANT AGGREGATE IN CLASS A 0.38-IN. AND 0.50-IN. NOMINAL ASPHALT MIXTURES

Contrary to Subsection 403.03.03, when utilizing a dolomitic polish-resistant aggregate as the coarse portion of the Class A 0.38-in. or 0.50-in.-nominal asphalt surface mixture, provide an asphalt mixture conforming to the following requirements:

- 70 percent of total combined aggregate is Class A polish-resistant aggregate.
- Any coarse aggregate utilized in the mixture shall be classified as Class A polish-resistant.
- Non-dolomitic substitutes from other Class A sources may be used as direct substitutes
- All mixes must have DFT testing/results submitted to Division of Materials with any supporting documentation prior to completion of the project.

Dynamic Friction Testing Procedure. Prepare samples for DFT analysis in accordance with PP 104. Friction testing shall be conducted by an AASHTO-accredited facility and data shall be provided in accordance with ASTM E1911 conforming to the following three-wheel polishing schedule. Variations to the testing frequency or methodology shall be coordinated with Division of Materials prior to testing.

Polishing Cycles
5,000
25,000
75,000
150,000

SPECIAL NOTE FOR RECYCLED ASPHALT PAVEMENT (RAP) STOCKPILE MANAGEMENT

I. GENERAL

The use of reclaimed asphalt pavement (RAP) from Department projects or other approved sources in hot mix asphalt (HMA) or warm mix asphalt (WMA) shall be subject to stockpile management and handling of material as described in this section.

The Department approves RAP on a stockpile basis, following the process set forth in this method. The contractor's responsibilities in the process are as follows:

- To obtain the Department's approval of all RAP prior to its use on a Department project and to deliver test data and samples as required
- To monitor and preserve the quality and uniformity of the approved material during storage and handling, adding no unapproved material to the existing stockpile
- To comply with the Department's requirements regarding replenishment of approved stockpiles

The Department will approve RAP based on its composition and variability in gradation and asphalt content, and on visual inspections of the stockpile, which the Department may conduct at its discretion. The Department may withdraw approval of a stockpile if the requirements of this specification are not followed in good faith.

The Maximum Percentage Allowed in a mix design will be based on these criteria and on the category of RAP source, as defined in this document.

II. APPROVAL PROCESS

Qualified asphalt producers (listed in List of Approved Materials-Asphalt Mixing Plants) may submit requests for RAP stockpile approval to the Asphalt Branch, Division of Materials, in the Annual Certification for Previously Approved Asphalt Mixing Plants and Related Equipment. The requester shall provide test results as prescribed in Part IID. The Division of Materials may, at their discretion, collect samples or inspect a RAP stockpile consistent with Section IIE.

Upon completion of the review of testing results and, if applicable, visual inspection, the Division of Materials, Asphalt Branch will approve or disapprove the material by letter and will assign a Stockpile Identification Number for each approved RAP stockpile. Note: The contractor's average gradation and asphalt content, as listed in the approval letter, shall be the gradation used in subsequent mix designs. The approval letter will state the applicable limits on the use of the material in mix designs and will summarize the Department's findings, listing the average gradation and asphalt content from the contractor's tests and the corresponding values found by the Department. Where the Maximum Percentage Allowed is low due to variability, the contractor may elect to improve the uniformity of the material by further processing and may again sample, test, and request approval for the material.

No material shall be added to a stockpile after it has been approved, except as provided in Parts V, VI, and VII below.

IIA. RAP Quality Management Plan

For a contractor to receive approval to use RAP on any department project, a RAP Quality Management Plan must first be approved by the department. The RAP Quality Management Plan shall be submitted to the

Division of Materials annually for approval as part of the Contractor's Quality Control Plan/Checklist. The Quality Management Plan is required to demonstrate how the Contractor will provide consistency and quality of material utilized in all asphalt mixes produced for use on Department projects. The Quality Management Plan shall include:

- Unprocessed RAP Stockpiles
  - Designation of stockpile(s) as single or multiple source
  - Designation of stockpile(s) as classified or unclassified
  - Designation of stockpile(s) as captive or continuously replenishing
  - Plan for how stockpile(s) is built (layers, slope, etc.)
  - Plan to minimize stockpile(s) contamination
- Processing and Crushing
  - Equipment used to feed screener or crusher
  - Excavation process based on equipment type
- Processing Millings
  - Single Project or Source
    - Screening, Fractionation, or Crushing plan
  - Multiple Source
    - Process to achieve uniform material from stockpile
    - Screening, Fractionation, or Crushing plan
- Processed RAP Stockpiles
  - Minimization of segregation
  - Minimization of moisture

IIB. RAP Stockpile Placement

All processed RAP stockpiles shall be placed on a sloped, paved surface. The requirement for a paved surface may be waived by the Cabinet if the Contractor's RAP Quality Management Plan demonstrates effective material handling that will minimize deleterious material from beneath the processed stockpile entering the plant. *No processed stockpile will be placed directly on grass or dirt.*

IIC. Stockpile Identification Signs

RAP stockpiles shall be identified with posted signs displaying the gradation of material in the stockpile (course, intermediate, or fine). These signs shall be made of weatherproof material and shall be highly visible. Numerals shall be easily readable from outside the stockpile area. If a stockpile exists in two or more parts, each part must have its own sign.

IID. Standard Approval Procedure

The Contractor shall obtain random samples representative of the entire stockpile and shall have each sample tested for gradation and asphalt content according to KM 64-426, KM 64-427, and AASHTO T308. The material samples must be in its final condition after all crushing and screening. At least one sample shall be obtained for each 1,000 tons of processed RAP, with a minimum of five samples per stockpile. Sampling shall be performed according to the method prescribed for asphalt mix aggregates in the Department's Materials Field Testing and Sampling Manual and KM 64-601. The minimum sampling size (after quartering) for tests of RAP samples is 1,500 g. except for samples containing particles more than one inch in diameter, for which the minimum is 2,000 g.

To request approval of a RAP stockpile, submit the following documents to the Division of Materials. It is the requester's responsibility to correctly address, label, and deliver these submittals:

• Submit request for approval at beginning of the paving season as part of the Annual Certification for Previously Approved Asphalt Mixing Plants and Related Equipment.

• If requesting approval after paving season begins, submit memo, including stockpile portion of the inspection list for Annual Certification for Previously Approved Asphalt Mixing Plants and Related Equipment, to Division of Materials.

• Reports of the tests prescribed above using the Stockpile <INSERT NAME> document.

• A drawing of the plant site showing the location of the stockpile to be approved *and all other stockpiles on the premises*

Mail, deliver or email the request form, with test reports and site drawing, to:

Kentucky Transportation Cabinet
Division of Materials
ATTN: Asphalt Branch Manager
1227 Wilkinson Boulevard
Frankfort, Kentucky 40601

Robert.Semones@ky.gov

IIE. Tests and inspections by the Department

The Department shall have the right to observe the collection of samples, or to perform the sampling and testing as a verification of contractor submittal. As a condition of approval, the Department may at any time inspect and sample RAP stockpiles for which approval has been requested and may perform additional quality control tests to determine the consistency and quality of the material.

The approval letter issued by the Department will include any results of verification testing performed by the Cabinet. The approved contractor results should be used by mix design technicians in the design calculations.

III. RAP STOCKPILE TIERED MANAGEMENT AND EFFECTIVE BINDER CONTENT

The stockpile management and approval requirements will be tiered based on the maximum cold feed percentages as defined in this section and Table 1. below.

Table 1. Tiered Testing Requirements

Mix Type	0-≤12%	12-≤20%	20-≤35%
Surface	Tier 1	Tier 2	Tier 3
Base	Tier 1	Tier 2	Tier 3

NOTE: All asphalt mixes and binder selection will be subject to Section 409 of the current Standard Specifications.

The following requirements will apply based on the percentage of RAP in the mix.

Tier 1

Tier 1 mixes (less than or equal to 12% RAP) will be subject to the requirements of sections IIA, IIB, and IIC.

Tier 2

Tier 2 mixes (12% to less than 20% RAP) will be subject to the requirements of Section II in its entirety and Table 2 requirements.

Tier 3

Tier 3 Asphalt Base mixes with 20% to less than 35% RAP, Tier 3 Asphalt Surface mixes with 20% to less than 30% RAP will be subject to Section II in its entirety and Table 2 requirements.

IV. MAXIMUM PERCENTAGE OF RAP ALLOWED

The Maximum Percent of RAP allowed in mix designs shall be the lowest percentage determined by the gradation and asphalt content of the RAP, as established under the criteria below, and requirements listed in Section III.

Limits according to range in gradation and bitumen content

The Maximum Percent of RAP Allowed, based on gradation and asphalt content, shall be determined by the Department using the standard deviation of these values. This standard deviation will be calculated using data provided by the contractor from at least five samples. While the contractor is required to provide the data from these tested samples, the Department retains the discretion to perform its own sampling and testing to support or verify its findings. An apparent outlier shall not be considered in determining these ranges. Where one result appears to be unrepresentative of the whole, two or more additional samples shall be tested. The outlying value of all tests shall then be excluded from the range. The maximum percentage of RAP allowable shall be the lowest percentage determined according to Table 2 below.

Table 2. Maximum Percent RAP According to Variability in Test Results

	Standard Deviation as calculated above:		
Surface			
% asphalt content	< 0.4	< 0.5	
% passing No. 200 sieve	< 1.25	< 1.5	
% passing Median Sieve	< 4.0	< 5.0	
	Allowable RAP Cold Feed %		
	Tier 3 - 20%-30%	Tier 2 - 12%-20%	Tier 1 - 0%-12%
Base			
% asphalt content	< 0.5	< 0.75	
% passing No. 200 sieve	< 1.5	< 2.25	
% passing Median sieve	< 5.0	< 7.0	
	Allowable RAP Cold Feed %		
	Tier 3 - 20%-35%	Tier 2 - 12%-20%	Tier 1 - 0%-12%

NOTE: These allowances notwithstanding, the Contractor is required to maintain the mixture within the Mixture Control Tolerances of Kentucky Method 443.
The percentage allowable in mix designs shall be limited to meet the design criteria for viscosity established in the Standard Specifications.

V. GENERAL STOCKPILE REQUIREMENTS AND REPLENISHMENT

V.A. Single Pavement Source

Early approval of material from a single pavement source. When a new stockpile is to consist entirely of millings removed from a single existing pavement, the stockpile may be approved based on samples taken during the milling and processing operations, prior to completion of milling. The initial stockpile may be approved as either a new stockpile or a new stockpile in continual replenishment status.

For continual replenishment status, samples shall be taken from the processed stockpile after it reaches 1,000 tons. A total of five initial samples, plus one additional sample for every 1,000 tons, is required. As prescribed in Part II above, the contractor shall test all samples and deliver the test results, together with a letter request for approval in Continual Replenishment status, to the address indicated. The stockpile shall be subject to initial approval as prescribed above in Part II. Once approved, it may be replenished without further approvals as provided in Part VII below.

V.B. Heterogeneous or contaminated material

Asphalt pavement millings containing traffic detection loops, raised pavement markers, or other debris must be separated and excluded before stockpiling RAP for approval for use in KYTC asphaltic concrete mixtures.

No material other than RAP from an approved stockpile shall be included in mixtures for State projects. The following materials are specifically excluded:

• Material contaminated with foreign matter such as liquids, soil, concrete, or debris

• Plant waste, especially waste containing abnormal concentrations of bitumen, drum build-up, or material from spills or plant clean-up operations

The following materials shall not be added to or placed in proximity to an approved stockpile but may be accumulated in a separate stockpile and submitted for approval according to Part III:

- Production mixtures returned to the plant for any reason.
- Mis-proportioned mixtures, especially those generated at start-up.

VI. REPLENISHMENT OF STOCKPILES

An approved RAP stockpile may be replenished with Department approval, provided the replenishment material meets all necessary requirements for approval and maintains uniformity in gradation and asphalt content as outlined in this document.

VI.A. Procedure and approval criteria

The procedure for requesting approval of a stockpile replenishment, that is not in continual replenishment status, shall be the same as for approval of an original stockpile, and the material for the replenishment shall meet all criteria for approval as a new stockpile. RAP proposed for replenishment shall be sampled and tested by the Contractor for gradation and asphalt cement as prescribed in Section II above. The Laboratory shall

review these results and provide approval for use in Department asphalt mix designs, according to Table 2 above.

VI.B. Effect of replenishment on existing approved mix designs

Replenishment of a stockpile may render certain mix designs invalid, depending on the percent RAP allowed in the design and on the difference in average properties between the old and new stockpiles. A replenished stockpile may be used as the RAP ingredient in an existing approved design provided that:

1. The Maximum Percent Allowed for the replenishment stockpile equals or exceeds the percent RAP called for in the mix design. In no case may the Maximum Percent Allowed be exceeded.

However, if a mix design calls for up to 5.0 percent more than the Maximum Percent Allowed for the replenishment, the *design* may be adjusted, with approval, to use the lower percent allowed, provided that the production mixture continues to meet all acceptance criteria. For example, a design which calls for 20 percent RAP may be adjusted and produced with 15 percent if it continues to meet for acceptance.

VII. CONTINUAL REPLENISHMENT WITHOUT RE-APPROVAL

At the request of the contractor, a previously approved stockpile may be placed in Continual Replenishment Status and may be replenished any number of times without re-approval provided that:

1. Replenishment is within six months of the last stockpile addition.
2. The contractor shall continue to monitor and test the materials added to the stockpile and shall forward these results to the Division of Materials for every 1,000 tons of RAP added to the stockpile.
3. The contractor must certify that replenishment materials are free of contaminants.
4. The Department shall be notified by letter to the Director of the Division of Materials that the stockpile is being replenished on a continual basis.
5. The RAP Maximum Percent Allowed for continual replenishment shall be limited by Sections III and IV.

Note: Upon request, one 20-pound sample bag of RAP for each Continual Replenishment Stockpile shall be submitted to the Division of Materials for petrographic analysis every 12 months.

The Department may inspect, sample, and test such stockpiles at its discretion and may, upon determining that the stockpile is unsuitable, withdraw approval of the material and all mix designs which include it. Approval of the stockpile may be withdrawn at any time based upon extreme or erratic ingredient proportions, unsuitable ingredients, or poor performance, as determined by the Division of Materials, Asphalt Branch. The Department will conduct periodic comparison testing on the opposite quarters of samples submitted by the Contractor for special replenishment approval category. The approval of the stockpile may be withdrawn if

erroneous information was found on the contractor's testing and/or improper sampling procedures were involved after a thorough investigation.

VIII. DEPLETION OF STOCKPILE AND EXPIRATION OF APPROVAL

When a stockpile has been fully depleted, the Contractor may replenish it within 24 months after the date of depletion; a depleted stockpile not replenished after 24 months will be removed from the approved list and may not be replenished.

Approval of a stockpile may be withdrawn if, in the finding of the Division of Materials, Asphalt Branch, the total amount of material used in new mixtures equals the total tonnage of the original stockpile plus all approved replenishments. Six years from the original approval of a stockpile or from its most recent replenishment, a stockpile shall be presumed to be depleted, and its approval shall expire. This shall apply to all stockpiles, regardless of status or history of use.

IX. RECORDS

The Contractor shall maintain records at the plant site on all RAP stockpiles. These records shall be available for inspection by representatives of the Department and shall include the following:

- All test results.
- The Department's approval letter for each stockpile and replenishment, together with the Contractor's requests for approval and all data submitted therewith.
- A current drawing of all stockpile locations at the plant site, including unapproved stockpiles, showing stockpile numbers of all stockpiles approved for State work.

X. RELOCATION OF STOCKPILE

If material from an approved RAP stockpile is to be moved to another location, the contractor shall seek approval from the Department prior to its further use on State projects. A letter request shall be submitted to the Division of Materials indicating the current stockpile location, the total quantity of material to be moved, and the amount, if any, to remain in the current location. The Division of Materials will issue an approval letter applicable to the new location.

June 18, 2025

SPECIAL NOTE FOR DOUBLE ASPHALT SEAL COAT

Use RS-2 or RS-2C asphalt material that is compatible with the seal aggregate. Apply the first course of asphalt seal coat at the rate of 3.2 lbs/sy of asphalt and 30 lbs/sy of size #78 seal coat aggregate. Apply the second course at 2.8 lbs/sy of asphaltt and 20 lbs/sy of size #9M seal coat aggregate. The Engineer may adjust the rate of application as conditions warrant. Use caution in applying liquid asphalt material to avoid over spray getting on curbs, gutter, barrier walls, bridges, guardrail, and other roadway appurtenances.

The Department will not measure any surface preparation required prior to applying the asphalt seal coat, but shall be incidental to “Asphalt Material for Asphalt Seal Coat”.

1-3215 Double Asphalt Seal Coat
01/02/2012

Special Note for Bridge Demolition, Renovation and Asbestos Abatement

If the project includes any bridge demolition or renovation, the successful bidder is required to notify Kentucky Division for Air Quality (KDAQ) via filing of form (DEP 7036) a minimum of 10 working days prior to commencement of any bridge demolition or renovation work.

Any available information regarding possible asbestos containing materials (ACM) on or within bridges to be affected by the project has been included in the bid documents. These are to be included with the Contractor's notification filed with the KDAQ. If not included in the bid documents, the Department will provide that information to the successful bidder for inclusion in the KDAQ notice as soon as possible. If there are no documents stating otherwise, the bidders should assume there are no asbestos containing materials that will in any way affect the work.

Andy Beshear
GOVERNOR

TRANSPORTATION CABINET
200 Mero Street
Frankfort, Kentucky 406 01

Jim Gray
SECRETARY

Asbestos Inspection Survey

To: Donna Hardin

District: 5

Date: January 27, 2025

Conducted By: O'Dail Lawson

Report Prepared By: O'Dail Lawson

Project and Structure Identification

Project Number: Jefferson 05-10057

Structure ID: 056B00039R

Structure Location: I-64 over Tucker Station Road

Sample Description: There were no suspect materials present on this structure.

Inspection Date: January 22, 2025

Results and Recommendations

There were no suspect materials observed during this inspection; No samples collected.

This asbestos survey was performed in accordance with the current USEPA regulations, specifically 40 CFR Part 61, Asbestos National Emissions Standards for Hazardous Air Pollutants (NESHAP) revision, final rule effective November 20, 1990.

It is recommended that this report accompany the 10-Day Notice of Intent for Demolition (Notification Form DEP 7036) which is to be submitted to the Kentucky Division of Air Quality prior to abatement, demolition, or renovation of any building or structure in the Commonwealth. This form can be submitted electronically at the EEC Forms Homepage

ENVIRONMENTAL TRAINING CONCEPTS, INC
P.O Box 99603 Louisville, KY 40269
(502)640-2951

Certification Number: ETC-AIR-031324-00278

O'Dail Lawson

has on 03-13-2024 attended and successfully completed the requirements and passed the examination with a score of 70% or better on the entitled course.

ASBESTOS INSPECTOR REFRESHER

Training was in accordance with 40 CFR Part 763 (AHERA) approved by the Commonwealth of Kentucky, the Indiana Department of Environmental Management, Tennessee Department of Environment & Conservation and The Arkansas Department of Environmental Quality. The above student received requisite training for Asbestos Accreditation under Title II of the Toxic Substance Act (TSCA).

Conducted at: 1520 Alliant Ave., Louisville, KY

Name – Training Manager

Expiration Date: 03-13-2025

Name - Instructor

Special Note for Fixed Completion Date and Liquidated Damages I-64 Jefferson County Item No. 5-22024

This project has an Intermediate Completion Date and a Fixed Completion Date.

Intermediate Completion Date – August 30, 2027

All work related to segments 1 and 3 (pavement rehab), as described in the traffic control notes, shall be completed by **August 30, 2027**.

Fixed Completion Date – September 30, 2028

All other work included in the proposal that is not required to be completed by the Intermediate Completion date shall be completed by **September 30, 2028**.

Liquidated damages in the amount specified in the Standard Specifications, per calendar day or fraction thereof, will be assessed for each day required work remains incomplete beyond the Intermediate or Fixed Completion date.

In addition to the Liquidated Damages specified in Section 108.09, Liquidated Damages in the following amounts will be charged when a lane closure remains in place during the prohibited period outlined in the Traffic Control Plan, excluding delays caused by inclement weather:

Mainline:	$5,000 for the first hour or fraction thereof $10,000 for the second hour or fraction thereof $20,000 for any additional hour or fraction thereof
Ramps:	$1,000 for the first hour or fraction thereof $2,500 for the any additional hour or fraction thereof

These hourly disincentives will still be in effect after the Fixed Completion Date and will be charged in addition to the $5,000 per calender day if warranted. The contractor is expected to make every effort to complete the work in order to open the mainline lane closure within the specified timeframe.

If work is delayed by inclement weather, the minimum work required to allow removal of the lane closure, as directed by the Engineer, shall be resumed immediately as soon as weather permits or the Department will begin to assess Liquidated Damages as specified herein.

Contrary to Section 108.09 of the Standard Specifications, **the disincentive fee will be charged during those periods when seasonal limitations of the Contract prohibit the Contractor from working on a controlling item or operation. This includes the months from December through March.**

All liquidated damages will be applied cumulatively.
All other applicable portions of Section 108 apply.

SPECIAL NOTE
FOR PROJECT COMPLETION DATE AND LIQUIDATED DAMAGES

Jefferson County
I-64 Bridges over Tucker Station Road
Item No. 5-10057.00

FAILURE TO COMPLETE WORK ON TIME

Specified fixed completion date for this contract is April 30, 2028. For each calendar day beyond a fixed completion date of April 30, 2028, the Department will assess liquidated damages per Section 108.09 of the current edition of the Standard Specifications for Road and Bridge Construction.

All liquidated damages will be applied cumulatively.
All other applicable portions of KYTC Standard Specifications Section 108 apply.

TEAM KENTUCKY TRANSPORTATION CABINET

KENTUCKY TRANSPORTATION CABINET
Department of Highways
DIVISION OF RIGHT OF WAY & UTILITIES

TC 62-226
Rev. 01/2016
Page 1 of 1

RIGHT OF WAY CERTIFICATION

☒ Original	☐ Re-Certification	RIGHT OF WAY CERTIFICATION

ITEM #	COUNTY	PROJECT # (STATE)	PROJECT # (FEDERAL)
5-10057.00	Jefferson	1100 FD52 056 1746501	BRO 0642202

PROJECT DESCRIPTION

BRIDGE PROJECT IN JEFFERSON COUNTY ON (056B00039R) I-64 EB AND (056B00039L) I-64 WB AT TUCKER STATION RD

☒ **No Additional Right of Way Required**

Construction will be within the limits of the existing right of way. The right of way was acquired in accordance to FHWA regulations under the Uniform Relocation Assistance and Real Property Acquisitions Policy Act of 1970, as amended. No additional right of way or relocation assistance were required for this project.

☐ **Condition # 1 (Additional Right of Way Required and Cleared)**

All necessary right of way, including control of access rights when applicable, have been acquired including legal and physical possession. Trial or appeal of cases may be pending in court but legal possession has been obtained. There may be some improvements remaining on the right-of-way, but all occupants have vacated the lands and improvements, and KYTC has physical possession and the rights to remove, salvage, or demolish all improvements and enter on all land. Just Compensation has been paid or deposited with the court. All relocations have been relocated to decent, safe, and sanitary housing or that KYTC has made available to displaced persons adequate replacement housing in accordance with the provisions of the current FHWA directive.

☐ **Condition # 2 (Additional Right of Way Required with Exception)**

The right of way has not been fully acquired, the right to occupy and to use all rights-of-way required for the proper execution of the project has been acquired. Some parcels may be pending in court and on other parcels full legal possession has not been obtained, but right of entry has been obtained, the occupants of all lands and improvements have vacated, and KYTC has physical possession and right to remove, salvage, or demolish all improvements. Just Compensation has been paid or deposited with the court for most parcels. Just Compensation for all pending parcels will be paid or deposited with the court prior to AWARD of construction contract

☐ **Condition # 3 (Additional Right of Way Required with Exception)**

The acquisition or right of occupancy and use of a few remaining parcels are not complete and/or some parcels still have occupants. All remaining occupants have had replacement housing made available to them in accordance with 49 CFR 24.204. KYTC is hereby requesting authorization to advertise this project for bids and to proceed with bid letting even though the necessary right of way will not be fully acquired, and/or some occupants will not be relocated, and/or the just compensation will not be paid or deposited with the court for some parcels until after bid letting. KYTC will fully meet all the requirements outlined in 23 CFR 635.309(c)(3) and 49 CFR 24.102(j) and will expedite completion of all acquisitions, relocations, and full payments after bid letting and prior to AWARD of the construction contract or force account construction.

Total Number of Parcels on Project		EXCEPTION (S) Parcel #	ANTICIPATED DATE OF POSSESSION WITH EXPLANATION
Number of Parcels That Have Been Acquired			
Signed Deed			
Condemnation			
Signed ROE			

Notes/ Comments (Text is limited. Use additional sheet if necessary.)

LPA RW Project Manager		Right of Way Supervisor	
Printed Name		Printed Name	
Signature		Signature	Tom Boykin Digitally signed by Tom Boykin Date: 2026.04.07 12:32:24 -04'00'
Date		Date	

Right of Way Director		FHWA	
Printed Name		Printed Name	
Signature	Digitally signed by Kelly Divine Date: 2026.04.09 10:40:58 -05'00'	Signature	
Date		Date	

UTILITIES AND RAIL CERTIFICATION NOTE

Project:	**5-10057.00**	**Jefferson County**	**I 64**
Funding Source:	**FD52 056 17465 01C**		
Description:	**BRIDGE PROJECT IN JEFFERSON COUNTY ON (056B00039L & 056B00039R) I-64 AT TUCKER STATION RD (2024CCR)**		
Mile Point:	**17.664 To 17.694**		

GENERAL UTILITY NOTES

1. Please Note: The information presented in this Utility Note is informational in nature and the information contained herein is not guaranteed.

2. The contractor shall make every effort to protect underground facilities from damage as prescribed in the Underground Facility Damage Protection Act of 1994, Kentucky Revised Statute KRS 367.4901 to 367.4917. It is the contractor's responsibility to determine and take steps necessary to be in compliance with federal and state damage prevention directives. The contractor is instructed to contact KY 811 for the location of existing underground utilities. Contact shall be made a minimum of two (2) and no more than ten (10) business days prior to excavation. The contractor shall submit Excavation Locate Requests to the Kentucky Contact Center (KY 811) via web ticket entry. The submission of this request does not relieve the contractor from the responsibility of contacting non-member facility owners, whom are to be contacted through their individual Protection Notification Center. It may be necessary for the contractor to contact the County Court.

3. Utility coordination efforts determined that no significant utility relocation work is required to complete the project. Any work pertaining to these utility facilities is defined in the bid package and is to be carried out as instructed by the Kentucky Transportation Cabinet. The contractor will be responsible for any coordination or adjustments that are discussed or quantified in the proposal.

4. For all projects under 2000 Linear feet which require a normal excavation locate request pursuant to KRS 367.4901-4917, the awarded contractor shall field mark the proposed excavation or construction boundaries of the project (also called white lining) using the procedure set forth in KRS 367.4909(9)(k). For all projects over 2000 linear feet, which are defined as a "Large Project" in KRS 367.4903(18), the awarded contractor shall initially mark the first 2000 linear feet minimally of proposed

UTILITIES AND RAIL CERTIFICATION NOTE

Project:	**5-10057.00**	**Jefferson County**	**I 64**
Funding Source:	**FD52 056 17465 01C**		
Description:	**BRIDGE PROJECT IN JEFFERSON COUNTY ON (056B00039L & 056B00039R) I-64 AT TUCKER STATION RD (2024CCR)**		
Mile Point:	**17.664 To 17.694**		

excavation or construction boundaries of the project to be worked using the procedure set forth in KRS 367.4909(9)(k). This temporary field locating of the project excavation boundary shall take place prior to submitting an excavation location request to the underground utility protection Kentucky Contact Center. For large projects, the awarded contractor shall work with the impacted utilities to determine when additional white lining of the remainder of the project site will take place. This provision shall not alter or relieve the awarded contractor from complying with requirements of KRS 367.4905 to 367.4917 in their entirety.

5. The contractor will be responsible for contacting all utility facility owners on the subject project to coordinate his activities. The contractor will coordinate his activities to minimize and, where possible, avoid conflicts with utility facilities. Due to the nature of the work proposed, it is unlikely to conflict with the existing utilities beyond minor facility adjustments. Where conflicts with utility facilities are unavoidable, the contractor will coordinate any necessary relocation work with the facility owner and Resident Engineer. The Kentucky Transportation Cabinet maintains the right to remove or alter portions of this contract if a utility conflict occurs. The utility facilities as noted in the previous section(s) have been determined using data garnered by varied means and with varying degrees of accuracy: from the facility owners, a result of S.U.E., field inspections, and/or reviews of record drawings. The facilities defined may not be inclusive of all utilities in the project scope and are not Level A quality, unless specified as such. It is the contractor's responsibility to verify all utilities and their respective locations before excavating.

UTILITIES AND RAIL CERTIFICATION NOTE

Project:	**5-10057.00**	**Jefferson County**	**I 64**
Funding Source:	**FD52 056 17465 01C**		
Description:	**BRIDGE PROJECT IN JEFFERSON COUNTY ON (056B00039L & 056B00039R) I-64 AT TUCKER STATION RD (2024CCR)**		
Mile Point:	**17.664 To 17.694**		

DO NOT DISTURB THE FOLLOWING FACILITIES LOCATED WITHIN THE PROJECT

Utility Company	Facility Type
AT&T KY	Communication - Jefferson
AT&T has aerial lines on the LG&E pole route crossing I-64 on the east side of Tucker Station Rd. AT&T has an underground line in conduit running on the east side of Tucker Station Rd.	
AT&T Corp	Communication - Jefferson
AT&T has an underground transmission fiber in conduit within a private easement parallel and adjacent to the northern I-64 ROW line. The line crosses Tucker Station Rd. north of the project limits.	
Charter Communications	Communication - Jefferson
Charter Communications has aerial lines on the LG&E pole route crossing I-64 on the east side of Tucker Station Rd.	
Louisville Gas & Electric	Natural Gas - Jefferson
LG&E has a 6” medium pressure plastic gas main running along the west side of Tucker Station Rd.	
Louisville Gas & Electric	Electric - Jefferson
LG&E has aerial (12.47kV) electric lines crossing over I-64, running along the east side of Tucker Station Rd. The roadway contractor is required to coordinate with LG&E during the bridge construction. The contractor is required to follow OSHA clearance and/or shielding requirements during construction on the structure. • **Coordination with LG&E is required when working under the 12.47kV electric lines to ensure OSHA and NESC safety compliance.**	
Louisville Water Company	Water - Jefferson
Louisville Water Company has a 16” ductile iron water main running along the east side of Tucker Station Rd.	

The Contractor is fully responsible for protection of all utilities listed above

UTILITIES AND RAIL CERTIFICATION NOTE

Project:	**5-10057.00**	**Jefferson County**	**I 64**
Funding Source:	**FD52 056 17465 01C**		
Description:	**BRIDGE PROJECT IN JEFFERSON COUNTY ON (056B00039L & 056B00039R) I-64 AT TUCKER STATION RD (2024CCR)**		
Mile Point:	**17.664 To 17.694**		

THE FOLLOWING FACILITY OWNERS ARE RELOCATING/ADJUSTING THEIR FACILITIES WITHIN THE PROJECT LIMITS AND WILL BE COMPLETE PRIOR TO CONSTRUCTION

Not Applicable

THE FOLLOWING FACILITY OWNERS HAVE FACILITIES TO BE RELOCATED/ADJUSTED BY THE OWNER OR THEIR SUBCONTRACTOR AND IS TO BE COORDINATED WITH THE ROAD CONTRACT

Not Applicable

THE FOLLOWING FACILITY OWNERS HAVE FACILITIES TO BE RELOCATED/ADJUSTED BY THE ROAD CONTRACTOR AS INCLUDED IN THIS CONTRACT

Not Applicable

RAIL COMPANIES HAVE FACILITIES IN CONJUNCTION WITH THIS PROJECT AS NOTED

No Rail Involvement

UTILITIES AND RAIL CERTIFICATION NOTE

Project:	**5-10057.00**	**Jefferson County**	**I 64**
Funding Source:	**FD52 056 17465 01C**		
Description:	**BRIDGE PROJECT IN JEFFERSON COUNTY ON (056B00039L & 056B00039R) I-64 AT TUCKER STATION RD (2024CCR)**		
Mile Point:	**17.664 To 17.694**		

AREA FACILITY OWNER CONTACT LIST

1. AT&T - KY - Communication
   Zach Stucker - Phone: (502) 713-8602 Email: zs3204@att.com

2. AT&T Corp - Communication
   Kevin Mefford - Phone: (502) 226-0907 Email: km5258@att.com

3. Charter Communications - Communication
   Michael York - Phone: (502) 357-4376 Email: Michael.York@charter.com

4. Louisville Gas & Electric - Natural Gas
   Caroline Justice - Phone: (502) 627-3708 Email: caroline.justice@lge-ku.com

5. Louisville Gas and Electric Company - Electric
   Caroline Justice - Phone: (502) 627-3708 Email: Caroline.Justice@lge-ku.com

6. Louisville Water Company - Water
   Pat Howard - Phone: (502) 569-3615 Email: phoward@louisvillewater.com

UTILITIES AND RAIL CERTIFICATION NOTE

Project:	**5-22024.00**	**Jefferson County**	**I 64**
Funding Source:	**FD52 056 0064 013-020**	**NHPP 0642 (203)**	
Description:	**ADDRESS CONDITION OF I 64 PAVEMENTS AND BRIDGE DECKS**		
Mile Point:	**13.124 to 19.44**		

GENERAL UTILITY NOTES

1. Please Note: The information presented in this Utility Note is informational in nature and the information contained herein is not guaranteed.

2. The contractor shall make every effort to protect underground facilities from damage as prescribed in the Underground Facility Damage Protection Act of 1994, Kentucky Revised Statute KRS 367.4901 to 367.4917. It is the contractor's responsibility to determine and take steps necessary to be in compliance with federal and state damage prevention directives. The contractor is instructed to contact KY 811 for the location of existing underground utilities. Contact shall be made a minimum of two (2) and no more than ten (10) business days prior to excavation. The contractor shall submit Excavation Locate Requests to the Kentucky Contact Center (KY 811) via web ticket entry. The submission of this request does not relieve the contractor from the responsibility of contacting non-member facility owners, whom are to be contacted through their individual Protection Notification Center. It may be necessary for the contractor to contact the County Court.

3. Utility coordination efforts determined that no significant utility relocation work is required to complete the project. Any work pertaining to these utility facilities is defined in the bid package and is to be carried out as instructed by the Kentucky Transportation Cabinet. The contractor will be responsible for any coordination or adjustments that are discussed or quantified in the proposal.

RAIL COMPANIES HAVE FACILITIES IN CONJUNCTION WITH THIS PROJECT AS NOTED

No Rail Involvement

UTILITIES AND RAIL CERTIFICATION NOTE

Project:	**5-22024.00**	**Jefferson County**	**I 64**
Funding Source:	**FD52 056 0064 013-020**	**NHPP 0642 (203)**	
Description:	**ADDRESS CONDITION OF I 64 PAVEMENTS AND BRIDGE DECKS**		
Mile Point:	**13.124 to 19.44**		

AREA FACILITY OWNER CONTACT LIST

1. Louisville Gas and Electric
   Caroline Justice
   Caroline.Justice@lge-ku.com
   (502) 627-3708

2. AT&T
   Zach Stucker
   zs3204@att.com
   (502) 713-8602

3. Charter / Spectrum
   Kevin Mercer
   Kevin.Mercer@Charter.com
   Mobile: 502-817-5055

4. Cogent
   Paul Becker
   PBecker@cogentco.com
   (815) 557-8416

5. Crown Castle
   Patrick Massie
   Patrick.Massie@zayo.com
   Office: (502) 340-1403
   Mobile: (502) 604-5268

6. KY Wired
   Erick Johnson
   erick.johnson@ky.gov
   (502) 330-0679

7. Louisville Water Company
   Scott Reynolds
   msreynolds@louisvillewater.com
   Office: (502) 272-4881
   Mobile: (502) 564-0789

8. Louisville MSD
   Taylor Friesz
   Taylor.Friesz@louisvillemsd.org

Form Revised 10/01/2025

UTILITIES AND RAIL CERTIFICATION NOTE

Project:	**5-22024.00**	**Jefferson County**	**I 64**
Funding Source:	**FD52 056 0064 013-020**	**NHPP 0642 (203)**	
Description:	**ADDRESS CONDITION OF I 64 PAVEMENTS AND BRIDGE DECKS**		
Mile Point:	**13.124 to 19.44**		

Office: (502) 540-6163
Mobile: 502.530.5192

9. Lumens — Patrick Barkes
Patrick.Barkes@lumen.com
(502) 389-4829

10. Lumos — Danielle Allen
danielle.allen@lumosfiber.com
(502) 715-0148

11. JCPS — Jeff Hardy
jeff.hardy@jefferson.kyschools.us
502-485-7975

12. Great Plains — Brayden Linkel
blinkel@gpcom.com
(812) 623-3300, ext 5230

13. Verizon MCI — Jeff Tucker
jeffrey.tucker@verizon.com
Mobile: (502) 830-1827

14. Uniti — James Galvin
James.Galvin@uniti.com
Mobile: (270) 748-9249

Form Revised 10/01/2025

Kentucky Transportation Cabinet

Highway District 5

And

_____(2), Construction

Kentucky Pollutant Discharge Elimination System Permit KYR10 Best Management Practices (BMP) plan

Groundwater protection plan

For Highway Construction Activities

For

I-64 Bridges over Tucker Station Road

Project: CID 26-1125

Revised 3/4/2016

Project information

Note – (1) = Design (2) = Construction (3) = Contractor

1. Owner – Kentucky Transportation Cabinet, District 5 (1)

2. Resident Engineer: (2)

3. Contractor name: (2)
   Address: (2)

   Phone number: (2)
   Contact: (2)
   Contractors agent responsible for compliance with the KPDES permit requirements (3):

4. Project Control Number (2)

5. Route (Address) - I-64 @ MP 17.6

6. Latitude/Longitude (project mid-point) dd/mm/ss, dd/mm/ss

   Lat. 38-13-24 N, Long. 85-31-39 W

7. County (project mid-point) - Jefferson

8. Project start date (date work will begin): (2)

9. Projected completion date: (2)

KyTC BMP Plan for Project CID 26-1125

A. Site description:

1. Nature of Construction Activity (from letting project description) – Complete replacement of EB and WB I-64 bridges over Tucker Station Road (MP 17.6).

2. Order of major soil disturbing activities (2) and (3)

3. Projected volume of material to be moved – 3765 C.Y.

4. Estimate of total project area (acres) – 8.03 acres

5. Estimate of area to be disturbed (acres) – 3.74 acres

6. Post construction runoff coefficient will be included in the project drainage folder. Persons needing information pertaining to the runoff coefficient will contact the resident engineer to request this information.

7. Data describing existing soil condition - Refer to Geotechnical Notes in the plan set and Geotechnical Report. (1) & (2)

8. Data describing existing discharge water quality (if any) – None known. Runoff consists mainly of roadway drainage from pavement. (1) & (2)

9. Receiving water name – Pope Lick

10. TMDLs and Pollutants of Concern in Receiving Waters: None known.

11. Site map – Project layout sheet plus the erosion control sheets in the project plans that depict Disturbed Drainage Areas (DDAs) and related information. These sheets depict the existing project conditions with areas delineated by DDA (drainage area bounded by watershed breaks and right of way limits), the storm water discharge locations (either as a point discharge or as overland flow) and the areas that drain to each discharge point. These plans define the limits of areas to be disturbed and the location of control measures. Controls will be either site specific as designated by the designer or will be annotated by the contractor and resident engineer before disturbance commences. The project layout sheet shows the surface waters and wetlands.

12. Potential sources of pollutants:

The primary source of pollutants is solids that are mobilized during storm events. Other sources of pollutants include oil/fuel/grease from servicing and operating construction equipment, concrete washout water, sanitary wastes and trash/debris. (3)

B. Sediment and Erosion Control Measures:

1. Plans for highway construction projects will include erosion control sheets that depict Disturbed Drainage Areas (DDAs) and related information. These plan sheets will show the existing project conditions with areas delineated by DDA within the right of way limits, the discharge points and the areas that drain to each discharge point. Project managers and designers will analyze the DDAs and identify Best Management Practices (BMPs) that are site specific. The balance of the BMPs for the project will be listed in the bid documents for selection and use by the contractor on the project with approval by the resident engineer.

   Projects that do not have DDAs annotated on the erosion control sheets will employ the same concepts for development and managing BMP plans.

2. Following award of the contract, the contractor and resident engineer will annotate the erosion control sheets showing location and type of BMPs for each of the DDAs that will be disturbed at the outset of the project. This annotation will be accompanied by an order of work that reflects the order or sequence of major soil moving activities. The remaining DDAs are to be designated as “Do Not Disturb” until the contractor and resident engineer prepare the plan for BMPs to be employed. The initial BMP’s shall be for the first phase (generally Clearing and Grubbing) and shall be modified as needed as the project changes phases. The BMP Plan will be modified to reflect disturbance in additional DDA’s as the work progresses. <u>All DDA’s will have adequate BMP’s in place before being disturbed.</u>

3. As DDAs are prepared for construction, the following will be addressed for the project as a whole or for each DDA as appropriate:

   - Construction Access – This is the first land-disturbing activity. As soon as construction begins, bare areas will be stabilized with gravel and temporary mulch and/or vegetation.
   - At the beginning of the project, all DDAs for the project will be inspected for areas that are a source of storm water pollutants.

Areas that are a source of pollutants will receive appropriate cover or BMPs to arrest the introduction of pollutants into storm water. Areas that have not been opened by the contractor will be inspected periodically (once per month) to determine if there is a need to employ BMPs to keep pollutants from entering storm water.

- Clearing and Grubbing – The following BMP's will be considered and used where appropriate.
  - Leaving areas undisturbed when possible.
  - Silt basins to provide silt volume for large areas.
  - Silt Traps Type A for small areas.
  - Silt Traps Type C in front of existing and drop inlets which are to be saved
  - Diversion ditches to catch sheet runoff and carry it to basins or traps or to divert it around areas to be disturbed.
  - Brush and/or other barriers to slow and/or divert runoff.
  - Silt fences to catch sheet runoff on short slopes. For longer slopes, multiple rows of silt fence may be considered.
  - Temporary Mulch for areas which are not feasible for the fore mentioned types of protections.
  - Non-standard or innovative methods.
- Cut & Fill and placement of drainage structures - The BMP Plan will be modified to show additional BMP's such as:
  - Silt Traps Type B in ditches and/or drainways as they are completed
  - Silt Traps Type C in front of pipes after they are placed
  - Channel Lining
  - Erosion Control Blanket
  - Temporary mulch and/or seeding for areas where construction activities will be ceased for 21 days or more.
  - Non-standard or innovative methods
- Profile and X-Section in place – The BMP Plan will be modified to show elimination of BMP's which had to be removed and the addition of new BMP's as the roadway was shaped. Probably changes include:
  - Silt Trap Type A, Brush and/or other barriers, Temporary Mulch, and any other BMP which had to be removed for final grading to take place.
  - Additional Silt Traps Type B and Type C to be placed as final drainage patterns are put in place.
  - Additional Channel Lining and/or Erosion Control Blanket.
  - Temporary Mulch for areas where Permanent Seeding and Protection cannot be done within 21 days.
  - Special BMP's such as Karst Policy

- Finish Work (Paving, Seeding, Protect, etc.) – A final BMP Plan will result from modifications during this phase of construction. Probably changes include:
  - Removal of Silt Traps Type B from ditches and drainways if they are protected with other BMP's which are sufficient to control erosion, i.e. Erosion Control Blanket or Permanent Seeding and Protection on moderate grades.
  - Permanent Seeding and Protection
  - Placing Sod
  - Planting trees and/or shrubs where they are included in the project
- BMP's including Storm Water Management Devices such as velocity dissipation devices and Karst policy BMP's to be installed during construction to control the pollutants in storm water discharges that will occur after construction has been completed are : None known. (1)

C. Other Control Measures

1. No solid materials, including building materials, shall be discharged to waters of the commonwealth, except as authorized by a Section 404 permit.

2. Waste Materials

All waste materials that may leach pollutants (paint and paint containers, caulk tubes, oil/grease containers, liquids of any kind, soluble materials, etc.) will be collected and stored in appropriate covered waste containers. Waste containers shall be removed from the project site on a sufficiently frequent basis as to not allow wastes to become a source of pollution. All personnel will be instructed regarding the correct procedure for waste disposal. Wastes will be disposed in accordance with appropriate regulations. Notices stating these practices will be posted in the office.

3. Hazardous Waste

All hazardous waste materials will be managed and disposed of in the manner specified by local or state regulation. The contractor shall notify the Section Engineer if there any hazardous wastes being generated at the project site and how these wastes are being managed. Site personnel will be instructed with regard to proper storage and handling of hazardous wastes when required. The Transportation Cabinet will file for generator, registration when appropriate, with the Division of Waste Management and advise the contractor regarding waste management requirements.

4. Spill Prevention

The following material management practices will be used to reduce the risk of spills or other exposure of materials and substances to the weather and/or runoff.

- **Good Housekeeping:**

The following good housekeeping practices will be followed onsite during the construction project.

- An effort will be made to store only enough product required to do the job
- All materials stored onsite will be stored in a neat, orderly manner in their appropriate containers and, if possible, under a roof or other enclosure
- Products will be kept in their original containers with the original manufacturer's label
- Substances will not be mixed with one another unless recommended by the manufacturer
- Whenever possible, all of the product will be used up before disposing of the container
- Manufacturers' recommendations for proper use and disposal will be followed
- The site contractor will inspect daily to ensure proper use and disposal of materials onsite

- **Hazardous Products:**

These practices will be used to reduce the risks associated with any and all hazardous materials.

- Products will be kept in original containers unless they are not resealable
- Original labels and material safety data sheets (MSDS) will be reviewed and retained
- Contractor will follow procedures recommended by the manufacturer when handling hazardous materials
- If surplus product must be disposed of, manufacturers' or state/local recommended methods for proper disposal will be followed

The following product-specific practices will be followed onsite:

- **Petroleum Products:**

Vehicles and equipment that are fueled and maintained on site will be monitored for leaks, and receive regular preventative maintenance to reduce the chance of leakage. Petroleum products onsite will be stored in tightly sealed containers, which are clearly labeled and will be protected from exposure to weather.

The contractor shall prepare an Oil Pollution Spill Prevention Control and Countermeasure plan when the project that involves the storage of petroleum products in 55 gallon or larger containers with a total combined storage capacity of 1,320 gallons. This is a requirement of 40 CFR 112.

This project (will / will not) (3) have over 1,320 gallons of petroleum products with a total capacity, sum of all containers 55 gallon capacity and larger.

- **Fertilizers:**

Fertilizers will be applied at rates prescribed by the contract, standard specifications or as directed by the resident engineer. Once applied, fertilizer will be covered with mulch or blankets or worked into the soil to limit exposure to storm water. Storage will be in a covered shed. The contents of any partially used bags of fertilizer will be transferred to a sealable plastic bin to avoid spills.

- **Paints:**

All containers will be tightly sealed and stored indoors or under roof when not being used. Excess paint or paint wash water will not be discharged to the drainage or storm sewer system but will be properly disposed of according to manufacturers' instructions or state and local regulations.

- **Concrete Truck Washout:**

Concrete truck mixers and chutes will not be washed on pavement, near storm drain inlets, or within 75 feet of any ditch, stream, wetland, lake, or sinkhole. Where possible, excess concrete and wash water will be discharged to areas prepared for pouring new concrete, flat areas to be paved that are away from ditches or drainage system features, or other locations that will not drain off site. Where this approach is not possible, a shallow earthen wash basin will be excavated away from ditches to receive the wash water

- **Spill Control Practices**

In addition to the good housekeeping and material management practices discussed in the previous sections of this plan, the following practices will be followed for spill prevention and cleanup**:**

- Manufacturers' recommended methods for spill cleanup will be clearly posted. All personnel will be made aware of procedures and the location of the information and cleanup supplies.
- Materials and equipment necessary for spill cleanup will be kept in the material storage area. Equipment and materials will include as appropriate, brooms, dust pans, mops, rags, gloves, oil absorbents, sand, sawdust, and plastic and metal trash containers.
- All spills will be cleaned up immediately after discovery.
- The spill area will be kept well ventilated and personnel will wear appropriate protective clothing to prevent injury from contract with a hazardous substance.
- Spills of toxic or hazardous material will be reported to the appropriate state/local agency as required by KRS 224 and applicable federal law.
- The spill prevention plan will be adjusted as needed to prevent spills from reoccurring and improve spill response and cleanup.
- Spills of products will be cleaned up promptly. Wastes from spill clean up will be disposed in accordance with appropriate regulations.

D. Other State and Local Plans

This BMP plan shall include any requirements specified in sediment and erosion control plans, storm water management plans or permits that have been approved by other state or local officials. Upon submittal of the NOI, other requirements for surface water protection are incorporated by reference into and are enforceable under this permit (even if they are not specifically included in this BMP plan). This provision does not apply to master or comprehensive plans, non-enforceable guidelines or technical guidance documents that are not identified in a specific plan or permit issued for the construction site by state or local officials. (1)

E. Maintenance

1. The BMP plan shall include a clear description of the maintenance procedures necessary to keep the control measures in good and effective operating condition.

- Maintenance of BMPs during construction shall be a result of weekly and post rain event inspections with action being taken by the contractor to correct deficiencies.

- Post Construction maintenance will be a function of normal highway maintenance operations. Following final project acceptance by the cabinet, district highway crews will be responsible for identification and correction of deficiencies regarding ground cover and cleaning of storm water BMPs. The project manager shall identify any BMPs that will be for

the purpose of post construction storm water management with specific guidance for any non-routine maintenance. (1)

F. Inspections

Inspection and maintenance practices that will be used to maintain erosion and sediment controls:

- All erosion prevention and sediment control measures will be inspected at least once each week and following any rain of one-half inch or more.
- Inspections will be conducted by individuals that have successfully completed the KEPSC-RI course as required by Section 213.02.02 of the Standard Specifications for Road and Bridge Construction, current edition.
- Inspection reports will be written, signed, dated, and kept on file.
- Areas at final grade will be seeded and mulched within 14 days.
- Areas that are not at final grade where construction has ceased for a period of 21 days or longer and soil stock piles shall receive temporary mulch no later than 14 days from the last construction activity in that area.
- All measures will be maintained in good working order; if a repair is necessary, it will be initiated within 24 hours of being reported.
- Built-up sediment will be removed from behind the silt fence before it has reached halfway up the height of the fence.
- Silt fences will be inspected for bypassing, overtopping, undercutting, depth of sediment, tears, and to ensure attachment to secure posts.
- Sediment basins will be inspected for depth of sediment, and built-up sediment will be removed when it reaches 50 percent of the design capacity and at the end of the job.
- Diversion dikes and berms will be inspected and any breaches promptly repaired. Areas that are eroding or scouring will be repaired and re-seeded / mulched as needed.
- Temporary and permanent seeding and mulching will be inspected for bare spots, washouts, and healthy growth. Bare or eroded areas will be repaired as needed.
- All material storage and equipment servicing areas that involve the management of bulk liquids, fuels, and bulk solids will be inspected weekly for conditions that represent a release or possible release of pollutants to the environment.

G. Non – Storm Water discharges

It is expected that non-storm water discharges may occur from the site during the construction period. Examples of non-storm water discharges include:

- Water from water line flushings.
- Water form cleaning concrete trucks and equipment.
- Pavement wash waters (where no spills or leaks of toxic or hazardous materials have occurred).
- Uncontaminated groundwater and rain water (from dewatering during excavation).

All non-storm water discharges will be directed to the sediment basin or to a filter fence enclosure in a flat vegetated infiltration area or be filtered via another approved commercial product.

H. Groundwater Protection Plan (3)

This plan serves as the groundwater protection plan as required by 401 KAR 5:037.

- Contractors statement: (3)

The following activities, as enumerated by 401 KAR 5:037 Section 2 that require the preparation and implementation of a groundwater protection plan, will or may be may be conducted as part of this construction project:

_____ 2. (e) land treatment or land disposal of a pollutant;

_____ 2. (f) Storing, …, or related handling of hazardous waste, solid waste or special waste, …, in tanks, drums, or other containers, or in piles, (This does not include wastes managed in a container placed for collection and removal of municipal solid waste for disposal off site);

_____ 2. (g) …. Handling of materials in bulk quantities (equal or greater than 55 gallons or 100 pounds net dry weight transported held in an individual container) that, if released to the environment, would be a pollutant;

_____ 2. (j) Storing or related handling of road oils, dust suppressants, …., at a central location;

_____ 2. (k) Application or related handling of road oils, dust suppressants or deicing materials, (does not include use of chloride-based deicing materials applied to roads or parking lots);

_____ 2. (m) Installation, construction, operation, or abandonment of wells, bore holes, or core holes, (this does not include bore holes for the purpose of explosive demolition);

Or, check the following only if there are no qualifying activities

_____ There are no activities for this project as listed in 401 KAR 5:037 Section 2 that require the preparation and implementation of a groundwater protection plan.

The contractor is responsible for the preparation of a plan that addresses the

401 KAR 5:037 Section 3. (3) Elements of site specific groundwater protection plan:

(a) General information about this project is covered in the Project information;
(b) Activities that require a groundwater protection plan have been identified above;
(c) Practices that will protect groundwater from pollution are addressed in section C. Other control measures.
(d) Implementation schedule – all practices required to prevent pollution of groundwater are to be in place prior to conducting the activity;
(e) Training is required as a part of the ground water protection plan. All employees of the contractor, sub-contractor and resident engineer personnel will be trained to understand the nature and requirements of this plan as they pertain to their job function(s). Training will be accomplished within one week of employment and annually thereafter. A record of training will be maintained by the contractor with a copy provide to the resident engineer.
(f) Areas of the project and groundwater plan activities will be inspected as part of the weekly sediment and erosion control inspections
(g) Certification (see signature page.)

KyTC BMP Plan for Project CID 26-1125

Contractor and Resident Engineer Plan certification

The contractor that is responsible for implementing this BMP plan is identified in the Project Information section of this plan.

The following certification applies to all parties that are signatory to this BMP plan:

I certify under penalty of law that this document and all attachments were prepared under my direction or supervision in accordance with a system designed to assure that qualified personnel properly gathered and evaluated the information submitted. Based on my inquiry of the person or persons who manage the system, or those persons directly responsible for gathering the information, the information submitted is, to the best of my knowledge and belief, true, accurate, and complete. I am aware that there are significant penalties for submitting false information, including the possibility of fine and imprisonment for knowing violations. Further, this plan complies with the requirements of 401 KAR 5:037. By this certification, the undersigned state that the individuals signing the plan have reviewed the terms of the plan and will implement its provisions as they pertain to ground water protection.

Resident Engineer and Contractor Certification:

(2) Resident Engineer signature

Signed _____title_____, _____
Typed or printed name[2] signature

(3) Signed _____title_____, _____
Typed or printed name[1] signature

1. Contractors Note: to be signed by a person who is the owner, a responsible corporate officer, a general partner or the proprietor or a person designated to have the authority to sign reports by such a person in accordance with 401 KAR 5:060 Section 9. This delegation shall be in writing to: Manager, KPDES Branch, Division of Water, 14 Reilly Road, Frankfort Kentucky 40601. Reference the Project Control Number (PCN) and KPDES number when one has been issued.

2. KyTC note: to be signed by the Chief District Engineer or a person designated to have the authority to sign reports by such a person (usually the resident engineer) in accordance with 401 KAR 5:060 Section 9. This delegation shall be in writing to: Manager, KPDES Branch, Division of Water, 14 Reilly Road, Frankfort Kentucky 40601 Reference the Project Control Number (PCN) and KPDES number when one has been issued.

Sub-Contractor Certification

The following sub-contractor shall be made aware of the BMP plan and responsible for implementation of BMPs identified in this plan as follows:

Subcontractor

Name:
Address:
Address:

Phone:

The part of BMP plan this subcontractor is responsible to implement is:

I certify under penalty of law that I understand the terms and conditions of the general Kentucky Pollutant Discharge Elimination System permit that authorizes the storm water discharges, the BMP plan that has been developed to manage the quality of water to be discharged as a result of storm events associated with the construction site activity and management of non-storm water pollutant sources identified as part of this certification.

Signed _____title_____, _____
Typed or printed name[1] signature

1. Sub Contractor Note: to be signed by a person who is the owner, a responsible corporate officer, a general partner or the proprietor or a person designated to have the authority to sign reports by such a person in accordance with 401 KAR 5:060 Section 9. This delegation shall be in writing to: Manager, KPDES Branch, Division of Water, 14 Reilly Road, Frankfort Kentucky 40601. Reference the Project Control Number (PCN) and KPDES number when one has been issued.

I-64 Bridges over Tucker Station Road
5-10057.00
Jefferson County

KPDES NOI for Stormwater Discharges Associated with Construction Activity Under the KPDES General Permit

eForm Transaction ID : b9f9d2f0-f825-43be-961e-372706db7378

Andy Beshear
GOVERNOR

ENERGY AND ENVIRONMENT CABINET
DEPARTMENT FOR ENVIRONMENTAL PROTECTION
300 Sower Boulevard
Frankfort, Kentucky 40601
Phone: (502) 564-2150
Fax: 502-564-4245

Rebecca W. Goodman
SECRETARY

Anthony R. Hatton
COMMISSIONER

December 22, 2025

Matthew Bullock
KYTC District 5
8310 Westport Rd
Louisville, KY 402423042

Re: KYR10 Coverage Acknowledgment
KPDES No.: KYR10U195
5-10057.00
Permit Type: Construction Stormwater
AI ID: 50067
Jefferson County, Kentucky

Dear Matthew Bullock :

The discharges associated with the Notice of Intent you submitted have been approved for coverage under the "Kentucky Pollutant Discharge Elimination System (KPDES) General Permit for Storm Water Discharges Associated with Construction Activities (KYR100000)" master general permit. Your coverage becomes effective on the date of this letter. This coverage automatically terminates two years from the effective date of your coverage unless an extension is requested prior to the termination date, or the Division of Water revokes coverage, whichever comes first. During this period of coverage all discharges shall comply with the conditions of the KYR100000 master general permit. This permit and links to the eNOI (and permit coverage extension) and eNOT forms can be found on our website:
https://eec.ky.gov/Environmental-Protection/Water/PermitCert/KPDES/Documents/KYR10PermitPage.pdf.

Any person aggrieved by the issuance of a permit final decision may demand a hearing pursuant to KRS 224.10-420(2) within thirty (30) days from the date of the issuance of this letter. Any demand for a hearing on the permit shall be filed in accordance with the procedures specified in KRS 224.10-420, 224.10-440, 224.10-470, and the regulations promulgated thereto. The request for hearing should be submitted in writing to the Energy and Environment Cabinet, Office of Administrative Hearings, 211 Sower Boulevard, Frankfort, Kentucky 40601 and the Commonwealth of Kentucky, Energy and Environment Cabinet, Division of Water, 300 Sower Boulevard, Frankfort, Kentucky 40601. For your record keeping purposes, it is recommended that these requests be sent by certified mail. The written request must conform to the appropriate statutes referenced above.

Any questions concerning the general permit and its requirements should be directed to me at 502-782-7076 or email me at Robin.Snider@ky.gov

Construction Site GPS Coordinates: 38.223333, -85.5275
Receiving Water: Pope Lick

Sincerely,

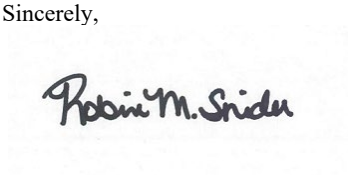

Robin Snider
Surface Water Permits Branch
Division of Water

cc: Kourosh Namin , eNOI Preparer
Todd Giles, Louisville Regional Office

KENTUCKY TRANSPORTATION CABINET
COMMUNICATING ALL PROMISES (CAP)

Item No. **5 - 10057** **County:** **Jefferson** **Route:** **64** **Project Manager:** **CHUCK BERGER**

4/10/26

CAP #	Date of Promise	Promise made to:	Location of Promise:	CAP Description
1	4/10/26	Chuck Berger	none	No CAP's have been registered

MATERIAL SUMMARY

CONTRACT ID: 261140 **056GR26D040-NHPP** **DE05600642625**

I-64 BRIDGE PROJECT IN JEFFERSON COUNTY ON I-64 @ TUCKER STATION RD ASPHALT SURFACE WITH BRIDGE, A DISTANCE OF .03 MILES.

Project Line No	Bid Code	DESCRIPTION	Quantity	Unit
0645	00003	CRUSHED STONE BASE	2,212.00	TON
0650	00018	DRAINAGE BLANKET-TYPE II-ASPH	1,034.00	TON
0655	00069	CRUSHED AGGREGATE SIZE NO 3	1,948.00	TON
0660	00100	ASPHALT SEAL AGGREGATE	71.00	TON
0665	00103	ASPHALT SEAL COAT	9.00	TON
0670	00194	LEVELING & WEDGING PG76-22	2,503.00	TON
0675	00208	CL4 ASPH BASE 1.50D PG64-22	139.00	TON
0680	00214	CL3 ASPH BASE 1.00D PG64-22	271.00	TON
0685	00217	CL4 ASPH BASE 1.00D PG64-22	104.00	TON
0690	00219	CL4 ASPH BASE 1.00D PG76-22	86.00	TON
0695	00301	CL2 ASPH SURF 0.38D PG64-22	107.00	TON
0700	00339	CL3 ASPH SURF 0.38D PG64-22	174.00	TON
0705	00342	CL4 ASPH SURF 0.38A PG76-22	763.00	TON
0710	02677	ASPHALT PAVE MILLING & TEXTURING	992.00	TON
0715	21289ED	LONGITUDINAL EDGE KEY	2,240.00	LF
0720	24970EC	ASPHALT MATERIAL FOR TACK NON-TRACKING	13.00	TON
0725	01015	INSPECT & CERTIFY EDGE DRAIN SYSTEM	1.00	LS
0730	01963	CONC MEDIAN BARRIER TYPE A1 TL5 56 IN	130.00	LF
0735	01978	CONC MEDIAN BARRIER TYPE A TL5 56 IN	788.00	LF
0740	01979	CONC MEDIAN BARRIER TYPE B TL5 56 IN	72.00	LF
0745	01982	DELINEATOR FOR G/R MONO DIRECTIONAL WHITE	20.00	EACH
0750	01984	DELINEATOR FOR BARRIER - WHITE	4.00	EACH
0755	01985	DELINEATOR FOR BARRIER - YELLOW	7.00	EACH
0760	02003	RELOCATE TEMP CONC BARRIER	4,680.00	LF
0765	02200	ROADWAY EXCAVATION	3,240.00	CUYD
0770	02242	WATER	1.00	MGAL
0775	02351	G/R-W BEAM-S FACE TL-3	1,990.00	LF
0780	02367	G/R END TREATMENT TYPE 1	1.00	EACH
0785	02381	REMOVE G/R	1,234.00	LF
0790	02545	CLEARING AND GRUBBING - APPROX 3.74 ACRES	1.00	LS
0795	02562	TEMPORARY SIGNS	704.00	SQFT
0800	02585	EDGE KEY	2,004.00	LF
0805	02650	MAINTAIN & CONTROL TRAFFIC	1.00	LS
0810	02671	PORTABLE CHANGEABLE MESSAGE SIGN	10.00	EACH
0815	02676	MOBILIZATION FOR MILL & TEXT	1.00	LS
0820	02701	TEMP SILT FENCE	326.00	LF
0825	02726	STAKING	1.00	LS
0830	02731	REMOVE STRUCTURE	1.00	LS
0835	02775	ARROW PANEL	5.00	EACH
0840	02898	RELOCATE CRASH CUSHION	2.00	EACH
0845	03171	CONC BARRIER WALL TYPE 9T	2,340.00	LF
0850	05952	TEMP MULCH	21,264.00	SQYD
0855	05953	TEMP SEEDING AND PROTECTION	15,948.00	SQYD

MATERIAL SUMMARY

Project Line No	Bid Code	DESCRIPTION	Quantity	Unit
0860	05963	INITIAL FERTILIZER	0.40	TON
0865	05964	MAINTENANCE FERTILIZER	0.60	TON
0870	05985	SEEDING AND PROTECTION	9,964.00	SQYD
0875	05992	AGRICULTURAL LIMESTONE	19.80	TON
0880	06511	PAVE STRIPING-TEMP PAINT-6 IN	20,570.00	LF
0885	06531	PAVE STRIPING REMOVAL-6 IN	17,215.00	LF
0890	06542	PAVE STRIPING-THERMO-6 IN W	3,170.00	LF
0895	06543	PAVE STRIPING-THERMO-6 IN Y	1,902.00	LF
0900	06546	PAVE STRIPING-THERMO-12 IN W	410.00	LF
0905	06613	INLAID PAVEMENT MARKER-B W/R	81.00	EACH
0910	08002	STRUCTURE EXCAV-SOLID ROCK	380.00	CUYD
0915	08912	CRASH CUSHION TY 6 CLASS T TL3	2.00	EACH
0920	10020NS	FUEL ADJUSTMENT	7,348.00	DOLL
0925	10030NS	ASPHALT ADJUSTMENT	18,457.00	DOLL
0930	20071EC	JOINT ADHESIVE	2,004.00	LF
0935	20191ED	OBJECT MARKER TY 3	3.00	EACH
0940	20362ES403	SHOULDER RUMBLE STRIPS-SAWED	3,695.00	LF
0945	20411ED	LAW ENFORCEMENT OFFICER	400.00	HOUR
0950	20430ED	SAW CUT	2,046.00	LF
0955	22664EN	WATER BLASTING EXISTING STRIPE	6,720.00	LF
0960	22880ED	BARRIER WALL TRANSITION	100.00	LF
0965	25075EC	QUEUE PROTECTION VEHICLE	1,000.00	HOUR
0970	25078ED	THRIE BEAM G/R TRANSITION TL-3	2.00	EACH
0975	25079ED	THRIE BEAM G/R TRANSITION TL-2	2.00	EACH
0980	25117EC	FURNISH QUEUE PROTECTION VEHICLES	6.00	MONT
0985	26136EC	PORTABLE QUEUE WARNING ALERT SYSTEM	6.00	MONT
0990	26137EC	QUEUE WARNING PCMS	36.00	MONT
0995	26138EC	QUEUE WARNING PORTABLE RADAR SENSORS	36.00	MONT
1000	26237EC	CONNECTED ARROW PANEL	6.00	MONT
1005	26240EC	PAVE STRIPE-WET REF CONT TAPE-6 IN W	565.00	LF
1010	26241EC	PAVE STRIPE-WET REF CONT TAPE-6 IN Y	339.00	LF
1015	26242EC	PAVE STRIPE-WET REF CONT TAPE-12 IN W	56.00	LF
1020	00522	STORM SEWER PIPE-18 IN	36.00	LF
1025	01001	PERFORATED PIPE-6 IN	851.00	LF
1030	01002	PERFORATED PIPE-8 IN	635.00	LF
1035	01011	NON-PERFORATED PIPE-6 IN	10.00	LF
1040	01033	PERF PIPE HEADWALL TY 4-6 IN	1.00	EACH
1045	01623	CONC MED BARR BOX INLET TY B1 TL5 56	1.00	EACH
1050	01624	CONC MED BARR BOX INLET TY B2 TL5 56	2.00	EACH
1055	01634	CAP CURB BOX INLET	1.00	EACH
1060	01691	FLUME INLET TYPE 2	1.00	EACH
1065	01719	ADJUST INLET	1.00	EACH
1070	01741	CORED HOLE DRAINAGE BOX CON-6 IN	3.00	EACH
1075	01756	MANHOLE TYPE A	1.00	EACH
1080	22883EN	CONCRETE WEDGE CURB	1,231.00	LF
1085	02231	STRUCTURE GRANULAR BACKFILL	614.00	CUYD
1090	03299	ARMORED EDGE FOR CONCRETE	294.00	LF
1095	08003	FOUNDATION PREPARATION	1.00	LS
1100	08020	CRUSHED AGGREGATE SLOPE PROT	670.00	TON
1105	08033	TEST PILES	120.00	LF

MATERIAL SUMMARY

Project Line No	Bid Code	DESCRIPTION	Quantity	Unit
1110	08039	PRE-DRILLING FOR PILES	589.00	LF
1115	08046	PILES-STEEL HP12X53	577.00	LF
1120	08100	CONCRETE-CLASS A	403.00	CUYD
1125	08104	CONCRETE-CLASS AA	911.00	CUYD
1130	08140	MECHANICAL REINF COUPLER #5 EPOXY COATED	608.00	EACH
1135	08141	MECHANICAL REINF COUPLER #6 EPOXY COATED	576.00	EACH
1140	08150	STEEL REINFORCEMENT	55,322.00	LB
1145	08151	STEEL REINFORCEMENT-EPOXY COATED	246,554.00	LB
1150	08671	PRECAST PC BOX BEAM SB33	2,810.70	LF
1155	20637ED	DRILLED SHAFT-ROCK 48 IN	65.00	LF
1160	20745ED	ROCK SOUNDINGS	60.00	LF
1165	20746ED	ROCK CORINGS	522.00	LF
1170	21321NC	CSL TESTING (4 TUBES)	24.00	EACH
1175	23378EC	CONCRETE SEALING	42,500.00	SQFT
1180	23583EC	DRILLED SHAFT-48 IN-COMMON	15.00	LF
1185	23584EC	DRILLED SHAFT-42 IN-ROCK	168.00	LF
1190	24405EC	MECHANICAL REINF COUPLER #8-EPOXY COATED	36.00	EACH
1195	25028ED	RAIL SYSTEM SINGLE SLOPE - 40 IN	338.50	LF
1200	26233EC	MOBILIZATION FOR CONCRETE SURF TREATMENT	1.00	LS
1205	04761	LIGHTING CONTROL EQUIPMENT	1.00	EACH
1210	04800	MARKER	1.00	EACH
1215	04820	TRENCHING AND BACKFILLING	100.00	LF
1220	04940	REMOVE LIGHTING	1.00	LS
1225	20392NS835	ELECTRICAL JUNCTION BOX TYPE C	1.00	EACH
1230	02568	MOBILIZATION	1.00	LS
1235	02569	DEMOBILIZATION	1.00	LS

CONTRACT ID: 261140 **056GR26D040-NHPP** **DE05600642631**

I-64 I-64 REHABILITATION ASPHALT REHAB INTERSTATE/PARKWAY, A DISTANCE OF 6 MILES.

Project Line No	Bid Code	DESCRIPTION	Quantity	Unit
0005	00001	DGA BASE	2,000.00	TON
0010	00100	ASPHALT SEAL AGGREGATE	593.00	TON
0015	00103	ASPHALT SEAL COAT	71.00	TON
0020	00194	LEVELING & WEDGING PG76-22	1,000.00	TON
0025	00219	CL4 ASPH BASE 1.00D PG76-22	56,236.00	TON
0030	00342	CL4 ASPH SURF 0.38A PG76-22	34,447.00	TON
0035	02676	MOBILIZATION FOR MILL & TEXT - I-64	1.00	LS
0040	02677	ASPHALT PAVE MILLING & TEXTURING	90,890.00	TON
0045	03240	BASE FAILURE REPAIR	725.00	SQYD
0050	20071EC	JOINT ADHESIVE	200,100.00	LF
0055	20757ED	PAVEMENT REPAIR	1,293.00	SQYD
0060	24785EC	FIBER REINFORCEMENT FOR HMA	34,447.00	TON
0065	24970EC	ASPHALT MATERIAL FOR TACK NON-TRACKING	265.00	TON
0070	01982	DELINEATOR FOR G/R MONO DIRECTIONAL WHITE	40.00	EACH

MATERIAL SUMMARY

Project Line No	Bid Code	DESCRIPTION	Quantity	Unit
0075	02003	RELOCATE TEMP CONC BARRIER	1,280.00	LF
0080	02014	BARRICADE-TYPE III	10.00	EACH
0085	02367	G/R END TREATMENT TYPE 1	3.00	EACH
0090	02370	G/R END TREATMENT TYPE 2M	19.00	EACH
0095	02381	REMOVE G/R	1,237.50	LF
0100	02383	REMOVE & RESET G/R	787.50	LF
0105	02483	CHANNEL LINING CLASS II	132.00	TON
0110	02562	TEMPORARY SIGNS	2,500.00	SQFT
0115	02650	MAINTAIN & CONTROL TRAFFIC - I-64	1.00	LS
0120	02671	PORTABLE CHANGEABLE MESSAGE SIGN	6.00	EACH
0125	02697	EDGELINE RUMBLE STRIPS	138,186.00	LF
0130	02714	SHOULDERING	33,348.00	LF
0135	02898	RELOCATE CRASH CUSHION	3.00	EACH
0140	06401	FLEXIBLE DELINEATOR POST-M/W	675.00	EACH
0145	06404	FLEXIBLE DELINEATOR POST-M/Y	74.00	EACH
0150	06511	PAVE STRIPING-TEMP PAINT-6 IN	185,337.00	LF
0155	06542	PAVE STRIPING-THERMO-6 IN W	114,656.00	LF
0160	06543	PAVE STRIPING-THERMO-6 IN Y	70,681.00	LF
0165	06546	PAVE STRIPING-THERMO-12 IN W	9,631.00	LF
0170	06549	PAVE STRIPING-TEMP REM TAPE-B	8,100.00	LF
0175	06550	PAVE STRIPING-TEMP REM TAPE-W	10,800.00	LF
0180	06551	PAVE STRIPING-TEMP REM TAPE-Y	7,200.00	LF
0185	06556	PAVE STRIPING-DUR TY 1-6 IN W	1,596.00	LF
0190	06557	PAVE STRIPING-DUR TY 1-6 IN Y	1,010.00	LF
0195	06566	PAVE MARKING-THERMO X-WALK-12 IN	48.00	LF
0200	06568	PAVE MARKING-THERMO STOP BAR-24IN	45.00	LF
0205	06569	PAVE MARKING-THERMO CROSS-HATCH	5,146.00	SQFT
0210	06574	PAVE MARKING-THERMO CURV ARROW	15.00	EACH
0215	06575	PAVE MARKING-THERMO COMB ARROW	6.00	EACH
0220	06578	PAVE MARKING-THERMO MERGE ARROW	28.00	EACH
0225	06601NC	PAVE MARKING-PAINT WORDS	3.00	EACH
0230	06613	INLAID PAVEMENT MARKER-B W/R	2,316.00	EACH
0235	06614	INLAID PAVEMENT MARKER-B Y/R	145.00	EACH
0240	08904	CRASH CUSHION TY 6 CLASS C TL3	2.00	EACH
0245	08912	CRASH CUSHION TY 6 CLASS T TL3	3.00	EACH
0250	10020NS	FUEL ADJUSTMENT	142,709.00	DOLL
0255	10030NS	ASPHALT ADJUSTMENT	358,444.00	DOLL
0260	20190ES601	CONC BARR WALL TY 9T-INSTALL	1,280.00	LF
0265	20191ED	OBJECT MARKER TY 3	5.00	EACH
0270	20411ED	LAW ENFORCEMENT OFFICER	1,000.00	HOUR
0275	22883EN	CONCRETE WEDGE CURB	105.00	LF
0280	24679ED	PAVE MARK THERMO CHEVRON	6,531.00	SQFT
0285	24683ED	PAVE MARKING-THERMO DOTTED LANE EXTEN	1,113.00	LF
0290	24899EC	PAVE MARKING-THERMO ELONG ROUTE SHIELD	5.00	EACH
0295	25075EC	QUEUE PROTECTION VEHICLE	1,440.00	HOUR
0300	25078ED	THRIE BEAM G/R TRANSITION TL-3	9.00	EACH
0305	25079ED	THRIE BEAM G/R TRANSITION TL-2	6.00	EACH
0310	25117EC	FURNISH QUEUE PROTECTION VEHICLES	12.00	MONT
0315	26136EC	PORTABLE QUEUE WARNING ALERT SYSTEM	12.00	MONT
0320	26137EC	QUEUE WARNING PCMS	72.00	MONT

MATERIAL SUMMARY

Project Line No	Bid Code	DESCRIPTION	Quantity	Unit
0325	26138EC	QUEUE WARNING PORTABLE RADAR SENSORS	72.00	MONT
0330	26237EC	CONNECTED ARROW PANEL	12.00	MONT
0335	26312EC	G/R-W BEAM-S FACE (TL-3) 8 FT POST	787.50	LF
0340	02403	REMOVE CONCRETE MASONRY	38.00	CUYD
0345	03299	ARMORED EDGE FOR CONCRETE	151.00	LF
0350	04810	ELECTRICAL JUNCTION BOX	2.00	EACH
0355	08104	CONCRETE-CLASS AA	170.00	CUYD
0360	08151	STEEL REINFORCEMENT-EPOXY COATED	34,419.00	LB
0365	08510	REM EPOXY BIT FOREIGN OVERLAY	1,166.00	SQYD
0370	08526	CONC CLASS M FULL DEPTH PATCH	10.00	CUYD
0375	08549	BLAST CLEANING	1,224.00	SQYD
0380	23378EC	CONCRETE SEALING	13,341.00	SQFT
0385	24094EC	PARTIAL DEPTH PATCHING	31.00	CUYD
0390	24902EC	PVC CONDUIT-3 IN-SCHEDULE 80	159.00	LF
0395	25028ED	RAIL SYSTEM SINGLE SLOPE - 40 IN	318.00	LF
0400	02403	REMOVE CONCRETE MASONRY	38.00	CUYD
0405	03299	ARMORED EDGE FOR CONCRETE	151.00	LF
0410	04810	ELECTRICAL JUNCTION BOX	2.00	EACH
0415	08104	CONCRETE-CLASS AA	170.00	CUYD
0420	08151	STEEL REINFORCEMENT-EPOXY COATED	34,419.00	LB
0425	08510	REM EPOXY BIT FOREIGN OVERLAY	1,166.00	SQYD
0430	08526	CONC CLASS M FULL DEPTH PATCH	10.00	CUYD
0435	08549	BLAST CLEANING	1,224.00	SQYD
0440	23378EC	CONCRETE SEALING	13,341.00	SQFT
0445	24094EC	PARTIAL DEPTH PATCHING	31.00	CUYD
0450	24902EC	PVC CONDUIT-3 IN-SCHEDULE 80	159.00	LF
0455	25028ED	RAIL SYSTEM SINGLE SLOPE - 40 IN	318.00	LF
0460	08150	STEEL REINFORCEMENT	1,300.00	LB
0465	08504	EPOXY SAND SLURRY	50.00	SQYD
0470	08510	REM EPOXY BIT FOREIGN OVERLAY	1,237.00	SQYD
0475	08526	CONC CLASS M FULL DEPTH PATCH	5.00	CUYD
0480	08534	CONCRETE OVERLAY-LATEX	51.60	CUYD
0485	08549	BLAST CLEANING	1,248.00	SQYD
0490	24094EC	PARTIAL DEPTH PATCHING	30.00	CUYD
0495	08100	CONCRETE-CLASS A	92.10	CUYD
0500	08150	STEEL REINFORCEMENT	8,783.00	LB
0505	20591EC	REMOVE BARRIER	49.00	LF
0510	23378EC	CONCRETE SEALING	1,800.00	SQFT
0515	08100	CONCRETE-CLASS A	206.20	CUYD
0520	08150	STEEL REINFORCEMENT	20,764.00	LB
0525	20591EC	REMOVE BARRIER	157.00	LF
0530	23378EC	CONCRETE SEALING	3,020.00	SQFT
0535	08100	CONCRETE-CLASS A	287.80	CUYD
0540	08150	STEEL REINFORCEMENT	21,806.00	LB
0545	20591EC	REMOVE BARRIER	288.00	LF
0550	23378EC	CONCRETE SEALING	4,810.00	SQFT
0555	04793	CONDUIT-1 1/4 IN	240.00	LF
0560	04795	CONDUIT-2 IN	60.00	LF
0565	04820	TRENCHING AND BACKFILLING	270.00	LF
0570	04829	PIEZOELECTRIC SENSOR	22.00	EACH

MATERIAL SUMMARY

Project Line No	Bid Code	DESCRIPTION	Quantity	Unit
0575	04830	LOOP WIRE	10,800.00	LF
0580	04895	LOOP SAW SLOT AND FILL	2,100.00	LF
0585	20359NN	GALVANIZED STEEL CABINET	6.00	EACH
0590	20360ES818	WOOD POST	12.00	EACH
0595	20391NS835	ELECTRICAL JUNCTION BOX TYPE A	6.00	EACH
0600	04780	FUSED CONNECTOR KIT	8.00	EACH
0605	04820	TRENCHING AND BACKFILLING	150.00	LF
0610	04834	WIRE-NO. 6	1,950.00	LF
0615	04940	REMOVE LIGHTING	1.00	LS
0620	20391NS835	ELECTRICAL JUNCTION BOX TYPE A	4.00	EACH
0625	24900EC	PVC CONDUIT-1 1/4 IN-SCHEDULE 80	150.00	LF
0630	24901EC	PVC CONDUIT-2 IN-SCHEDULE 80	400.00	LF
0635	02568	MOBILIZATION	1.00	LS
0640	02569	DEMOBILIZATION	1.00	LS

GUARDRAIL DELIVERY VERIFICATION SHEET

Contract Id: _____ **Contractor: _____**

Section Engineer: _____ **District & County: _____**

DESCRIPTION	UNIT	QTY LEAVING PROJECT	QTY RECEIVED@BB YARD
GUARDRAIL (Includes End treatments & crash cushions)	LF	_____	_____
STEEL POSTS	EACH	_____	_____
STEEL BLOCKS	EACH	_____	_____
WOOD OFFSET BLOCKS	EACH	_____	_____
BACK UP PLATES	EACH	_____	_____
CRASH CUSHION	EACH	_____	_____
NUTS, BOLTS, WASHERS	BAG/BCKT	_____	_____
DAMAGED RAIL TO MAINT. FACILITY	LF	_____	_____
DAMAGED POSTS TO MAINT. FACILITY	EACH	_____	_____

****Required Signatures before Leaving Project Site***

Printed Section Engineer's Representative_____ & Date_____

Signature Section Engineer's Representative_____& Date_____

Printed Contractor's Representative_____& Date_____

Signature Contractor's Representative_____& Date_____

****Required Signatures after Arrival at Bailey Bridge Yard (All material on truck must be counted & the quantity received column completed before signatures)***

Printed Bailey Bridge Yard Representative_____ & Date_____

Signature Bailey Bridge Yard Representative_____& Date_____

Printed Contractor's Representative_____& Date_____

Signature Contractor's Representative_____& Date_____

**Payment for the bid item remove guardrail will be based upon the quantities shown in the Bailey Bridge Yard received column. Payment will not be made for guardrail removal until the guardrail verification sheets are electronically submitted to the Section Engineer by the Bailey Bridge Yard Representative.

Completed Form Submitted to Section Engineer Date: _____ By: _____

PART II

SPECIFICATIONS AND STANDARD DRAWINGS

STANDARD SPECIFICATIONS

Any reference in the plans or proposal to previous editions of the *Standard Specifications for Road and Bridge Construction* and *Standard Drawings* are superseded by *Standard Specifications for Road and Bridge Construction, Edition of 2026* and *Standard Drawings, Edition of 2025.*

SUPPLEMENTAL SPECIFICATIONS

The contractor shall use the Supplemental Specifications that are effective at the time of letting. The Supplemental Specifications can be found at the following link:
http://transportation.ky.gov/Construction/Pages/Kentucky-Standard-Specifications.aspx

1I

SPECIAL NOTE FOR PORTABLE CHANGEABLE MESSAGE SIGNS

This Special Note will apply when indicated on the plans or in the proposal.

1.0 DESCRIPTION. Furnish, install, operate, and maintain variable message signs at the locations shown on the plans or designated by the Engineer. Remove and retain possession of variable message signs when they are no longer needed on the project.

2.0 MATERIALS.

2.1 General. Use LED Variable Message Signs Class I, II, or III, as appropriate, from the Department's List of Approved Materials.

Unclassified signs may be submitted for approval by the Engineer. The Engineer may require a daytime and nighttime demonstration. The Engineer will make a final decision within 30 days after all required information is received.

2.2 Sign and Controls. All signs must:

1) Provide 3-line messages with each line being 8 characters long and at least 18 inches tall. Each character comprises 35 pixels.
2) Provide at least 40 preprogrammed messages available for use at any time. Provide for quick and easy change of the displayed message; editing of the message; and additions of new messages.
3) Provide a controller consisting of:
   a) Keyboard or keypad.
   b) Readout that mimics the actual sign display. (When LCD or LCD type readout is used, include backlighting and heating or otherwise arrange for viewing in cold temperatures.)
   c) Non-volatile memory or suitable memory with battery backup for storing pre-programmed messages.
   d) Logic circuitry to control the sequence of messages and flash rate.
4) Provide a serial interface that is capable of supporting complete remote control ability through land line and cellular telephone operation. Include communication software capable of immediately updating the message, providing complete sign status, and allowing message library queries and updates.
5) Allow a single person easily to raise the sign to a satisfactory height above the pavement during use, and lower the sign during travel.
6) Be Highway Orange on all exterior surfaces of the trailer, supports, and controller cabinet.
7) Provide operation in ambient temperatures from -30 to + 120 degrees Fahrenheit during snow, rain and other inclement weather.
8) Provide the driver board as part of a module. All modules are interchangeable, and have plug and socket arrangements for disconnection and reconnection. Printed circuit boards associated with driver boards have a conformable coating to protect against moisture.
9) Provide a sign case sealed against rain, snow, dust, insects, etc. The lens is UV stabilized clear plastic (polycarbonate, acrylic, or other approved material) angled to prevent glare.
10) Provide a flat black UV protected coating on the sign hardware, character PCB, and appropriate lens areas.
11) Provide a photocell control to provide automatic dimming.

1I

12) Allow an on-off flashing sequence at an adjustable rate.
13) Provide a sight to aim the message.
14) Provide a LED display color of approximately 590 nm amber.
15) Provide a controller that is password protected.
16) Provide a security device that prevents unauthorized individuals from accessing the controller.
17) Provide the following 3-line messages preprogrammed and available for use when the sign unit begins operation:

/KEEP/RIGHT/⇒⇒⇒/
/KEEP/LEFT/⇐⇐⇐/
/LOOSE/GRAVEL/AHEAD/
/RD WORK/NEXT/**MILES/
/TWO WAY/TRAFFIC/AHEAD/
/PAINT/CREW/AHEAD/
/REDUCE/SPEED/**MPH/
/BRIDGE/WORK/***0 FT/
/MAX/SPEED/**MPH/
/SURVEY/PARTY/AHEAD/
/MIN/SPEED/**MPH/
/ICY/BRIDGE/AHEAD/ /ONE LANE/BRIDGE/AHEAD/
/ROUGH/ROAD/AHEAD/
/MERGING/TRAFFIC/AHEAD/
/NEXT/***/MILES/
/HEAVY/TRAFFIC/AHEAD/
/SPEED/LIMIT/**MPH/
/BUMP/AHEAD/
/TWO/WAY/TRAFFIC/

*Insert numerals as directed by the Engineer.
Add other messages during the project when required by the Engineer.

2.3 Power.

1) Design solar panels to yield 10 percent or greater additional charge than sign consumption. Provide direct wiring for operation of the sign or arrow board from an external power source to provide energy backup for 21 days without sunlight and an on-board system charger with the ability to recharge completely discharged batteries in 24 hours.

3.0 CONSTRUCTION. Furnish and operate the variable message signs as designated on the plans or by the Engineer. Ensure the bottom of the message panel is a minimum of 7 feet above the roadway in urban areas and 5 feet above in rural areas when operating. Use Class I, II, or III signs on roads with a speed limit less than 55 mph. Use Class I or II signs on roads with speed limits 55 mph or greater.

Maintain the sign in proper working order, including repair of any damage done by others, until completion of the project. When the sign becomes inoperative, immediately repair or replace the sign. Repetitive problems with the same unit will be cause for rejection and replacement.

Use only project related messages and messages directed by the Engineer, unnecessary messages lessen the impact of the sign. Ensure the message is displayed in either one or 2 phases with each phase having no more than 3 lines of text. When no message is needed, but it is necessary to know if the sign is operable, flash only a pixel.

When the sign is not needed, move it outside the clear zone or where the Engineer directs. Variable Message Signs are the property of the Contractor and shall be removed from the project when no longer needed. The Department will not assume ownership of these signs.

4.0 MEASUREMENT. The final quantity of Variable Message Sign will be

1I

the actual number of individual signs acceptably furnished and operated during the project. The Department will not measure signs replaced due to damage or rejection.

5.0 PAYMENT. The Department will pay for the Variable Message Signs at the unit price each. The Department will not pay for signs replaced due to damage or rejection. Payment is full compensation for furnishing all materials, labor, equipment, and service necessary to, operate, move, repair, and maintain or replace the variable message signs. The Department will make payment for the completed and accepted quantities under the following:

Code	Pay Item	Pay Unit
02671	Portable Changeable Message Sign	Each

Effective June 15, 2012

11C

SPECIAL NOTE FOR DRILLED SHAFTS

1.0 DESCRIPTION. Furnish all equipment, materials and labor necessary for constructing reinforced concrete drilled shafts in cylindrically excavated holes according to the details shown on the plans or as the Engineer directs. Construct the shaft to the lines and dimensions shown on the plans, or as the Engineer directs. Section references herein are to the Department's Standard Specifications for Road and Bridge Construction, current edition.

2.0 MATERIALS.

2.1 Concrete. Use Class A Modified concrete unless otherwise shown on the plans. The slump at the time of placement shall be 6.5 to 9.5 inches, the coarse aggregate shall be size 67, 68, 78, 8 or 9M, and the water/cementitious material ratio shall not exceed 0.45. Include water reducing and retarding admixtures. Type F high range water reducers used in combination with retarding admixtures or Type G high range water reducers fully meeting trial batch requirements are permitted and Class F fly ash is permitted in conformance with Section 601. Design the mix such that the concrete slump exceeds 4 inches at 4 hours after batching. If the estimated concrete transport, plus time to complete placement, exceeds 4 hours, design the concrete to have a slump that exceeds 4 inches or more for the greater time after batching and demonstrate that the slump requirement can be achieved after the extended time period using a trial batch.

Perform trial batches prior to beginning drilled shaft construction in order to demonstrate the adequacy of the proposed concrete mix. Demonstrate that the mix to be used will meet the requirements for temperature, slump, air content, water/cementitious material ratio, and compressive strength. Use the ingredients, proportions and equipment (including batching, mixing, and delivery) to be used on the project. Make at least 2 independent consecutive trial batches of 3 cubic yards each using the same mix proportions and meeting all specification requirements for mix design approval. Submit a report containing these results for slump, air content, water/cement ratio, temperature, and compressive strength and mix proportions for each trial batch to the Engineer for review and approval. Failure to demonstrate the adequacy of the concrete mix, methods, or equipment to the Engineer is cause for the Engineer to require appropriate alterations in concrete mix, equipment, and/or method by the Contractor to eliminate unsatisfactory results. Perform additional trial batches required to demonstrate the adequacy of the concrete mix, method, or equipment.

2.2 Steel Reinforcement. Provide Grade 60 deformed bars conforming to Section 811 of the Standard Specifications. Rail steel is permitted for straight bars only. Place according to Section 602 of the Standard Specifications, this Special Note, and the plans. Use non-corrosive centering devices and feet to maintain the specified reinforcement clearances.

2.3 Casings. Provide casing meeting the requirements of ASTM A 252 Grade 2 or better unless otherwise specified. Ensure casing is smooth, clean, watertight, true and straight, and of ample strength to withstand handling, installation, and extraction stresses and the pressure of both concrete and the surrounding earth materials. Ensure the outside diameter of casing is not less than the specified diameter of shaft.

Use only continuous casings. Cut off the casing at the prescribed elevation and trim to within tolerances prior to acceptance. Extend casing into bedrock a sufficient distance to stabilize the shaft excavation against collapse, excessive deformation, and/or flow of water if required and/or shown on the plans.

Install from the work platform continuous casing meeting the design thickness requirements, but not less than 3/8 inch, to the elevations shown on the plans. When drilled

shafts are located in open water areas, extend casings above the water elevation to the plan tip elevation to protect the shaft concrete from water action during concrete placement and curing. All casing is permanent unless temporary casing is specified in the contract drawings or documents. Permanent casing is incidental to the applicable drilled shaft unit bid price unless noted otherwise in the contract. Temporary casing may be required for drilled shafts not socketed into bedrock. If temporary surface casings are used, extend each casing up to the work platform. Remove all temporary surface casing prior to final acceptance unless otherwise permitted by the Central Office Construction Engineer.

Ensure casing splices have full penetration butt welds conforming to the current edition of AWS D1.1 with no exterior or interior splice plates and produce true and straight casing.

2.4 Slurry. When slurry is to be used for installation of the Drilled Shaft, submit a detailed plan for its use and disposal. The plan should include, but not be limited to the following:

1) Material properties
2) Mixing requirements and procedures
3) Testing requirements
4) Placement procedures
5) Disposal techniques

Obtain the Central Office Division of Construction's approval for the slurry use and disposal plan before installing drilled shafts.

2.5 Tremies. Provide tremies of sufficient length, weight, and diameter to discharge concrete at the shaft base elevation. Ensure the tremie diameter is least 6 times the maximum size coarse aggregate to be used in the concrete mix and no less than 10 inches. Provide adequate wall thickness to prevent crimping or sharp bends that restrict concrete placement. Support tremies used for depositing concrete in a dry drilled shaft excavation so that the free fall of the concrete does not cause the shaft excavation to cave or slough. Maintain a clean and smooth tremie surface to permit both flow of concrete and unimpeded withdrawal during concrete placement. Do not allow any aluminum parts to contact the concrete. Construct tremies used to deposit concrete for wet excavations so that they are watertight and will readily discharge concrete.

2.6 Concrete Pumps. Provide pump lines with a minimum diameter of 5 inches and watertight joints.

2.7 Drop Chutes. Do not use aluminum drop chutes.

3.0 CONSTRUCTION.

3.1 Preconstruction.

3.1.1 Prequalification. The Department will require prequalification by the Division of Construction Procurement before accepting a bid for the construction of Drilled Shafts.

3.1.2 Pre-Bid Inspection. Inspect both the project site and all subsurface information, including any soil or rock samples, prior to submitting a bid. Contact the Geotechnical Branch (502-564-2374) to schedule a viewing of the subsurface information. Failure to inspect the project site and view the

subsurface information will result in the forfeiture of the right to file a claim based on site conditions and may result in disqualification from the project.

3.1.3 Drilled Shaft Installation Plan. Upon request, the Department will review a Drilled Shaft Installation Plan. Submit the plan no later than 45 calendar days prior to constructing drilled shafts. Items covered in this plan should include, but not be limited to the following:

1) Name and experience record of jobsite drilled shaft superintendent and foremen in charge of drilled shaft operations for each shift.
2) List and size of proposed equipment including cranes, drills, augers, bailing buckets, final cleaning equipment, de-sanding equipment, slurry pumps, core sampling equipment, tremies or concrete pumps, casings, etc.
3) Details of overall construction operation sequence and the sequence of shaft construction in the bents or groups.
4) Details of shaft excavation methods including methods to over-ream or roughen shaft walls, if necessary.
5) Details of slurry when the use of slurry is anticipated. Include methods to mix, circulate, and de-sand the proposed slurry. Provide details of proposed testing, test methods, sampling methods, and test equipment.
6) Details of proposed methods to clean shaft and inside of casing after initial excavation.
7) Details of reinforcement handling, lifting, and placement including support and method to center in shaft. Also include rebar cage support during concrete placement and temporary casing removal.
8) Details of concrete placement including procedures for concrete tremie or pump. Include initial placement, raising during placement, and overfilling of the shaft to expel contaminated concrete.
9) Required submittals including shop drawings and concrete design mixes.
10) Other information shown in the plans or requested by the Engineer.
11) Special considerations for wet construction.
12) Details of environmental control procedures to protect the environment from discharge of excavation spoil, slurry (natural and mineral), and concrete over-pour.

The Division of Construction will review the submitted procedure and provide comments and recommendations. The Contractor is responsible for satisfactory construction and ultimate performance of the Drilled Shaft.

3.2 General Construction. Construct drilled shafts as indicated in the plans or described in this Special Note by either the dry or wet method. When the plans describe a particular method of construction, use this method unless the Engineer permits otherwise. When the plans do not describe a particular method, propose a method on the basis of its suitability to the site conditions. Approval of this proposed method is contingent upon the satisfactory results of the technique shaft.

The construction of the first drilled shaft or technique shaft will be used to determine if the methods and equipment used by the contractor are sufficient to produce a completed shaft meeting the requirements of the plans and specifications. Ability to control dimensions and alignment of excavations within tolerances; to seal the casing into impervious materials; to prevent caving or deterioration of subsurface materials by the use of slurry or other means; to

properly clean the completed shaft excavation; to construct excavations in open water areas when required by the plans; to establish methods for belling or over-reaming when required by the plans; to determine the elevation of ground water; to satisfactorily handle, lift, place, and support the reinforcement cage; to satisfactorily place concrete meeting the specifications within the prescribed time frame; and to satisfactorily execute any other necessary construction operations will be evaluated during construction of the first shaft(s). Revise the methods and equipment as necessary at any time during the construction of the first shaft when unable to satisfactorily carry out any of the necessary operations described above or unable to control the dimensions and alignment of the shaft excavation within tolerances. Accurately locate technique so they may be used in the finished structure unless directed otherwise in the contract document or by the Engineer.

If at any time the Contractor fails to satisfactorily demonstrate, to the satisfaction of the Engineer, the adequacy of methods or equipment and alterations are required, additional technique shafts will be required at no additional cost to the Department and with no extension of contract time. Additional technique shafts shall be located as near as possible to the proposed production shafts but in a location as not to interfere with other construction activities. Once approval has been given to construct production shafts, no changes will be permitted in the methods or equipment used to construct the satisfactory shaft without written approval of the Engineer.

Do not make a claim against the Department for costs of construction delays, or any materials, labor, or equipment that may be necessary due to the Contractor's failure to furnish drilled shafts of a length sufficient to obtain the required bearing values, or for variations in length due to subsurface conditions that may be encountered. Soundings, boring logs, soil profiles, or other subsurface data included in the Contract documents are used by the Department for design and making preliminary estimates of quantities and should be used only at the risk of the Contractor for determining equipment, materials, or labor necessary for drilling shafts as required by the contract.

When necessary, set temporary removable surface casing. Use surface casing of sufficient length to prevent caving of the surface soils and to aid in maintaining shaft position and alignment. Pre-drilling with slurry and/or over-reaming to the outside diameter of the casing may be required to install the surface casing at some sites.

Provide equipment capable of constructing shafts to the deepest shaft depth shown in the plans plus 15 feet, 20 percent greater than the longest shaft (measured from the ground or water surface to the tip of the shaft), or 3 times the shaft diameter, whichever is greater. Blasting excavation methods are not permitted.

Use permanent casing unless otherwise noted in the Contract. Place casing as shown on the plans before beginning excavation. If full penetration cannot be attained, the Engineer may direct that excavation through the casing be accomplished and the casing advanced until reaching the plan tip elevation. In some cases, over-reaming to the outside diameter of the casing may be required before placing the casing. Cut off the casing at the prescribed elevation and leave the remainder of the casing in place. Do not use vibratory hammers for casing installation within 50 feet of shafts that have been completed less than 24 hours.

3.2.1 Dry Construction Method. Use the dry construction method only at sites where the ground water table and soil conditions (generally stiff to hard clays or rock above the water table) make it feasible to construct the shaft in a relatively dry excavation and where the sides and bottom of the shaft are stable and may be visually inspected by the Engineer prior to placing the concrete. The dry construction method consists of drilling the shaft excavation, removing accumulated seepage water and loose material from the excavation, and placing the shaft concrete in a relatively dry excavation.

3.2.2 Wet Construction Method. Use the wet construction method at all sites where it is impractical to excavate by the dry method. The wet construction method consists of drilling the shaft excavation below the water table, keeping the shaft filled with water (including natural slurry formed during the drilling process) or slurry as defined in part 2.4 of this Special Note, desanding and cleaning the slurry as required, final cleaning of the excavation by means of a bailing bucket, air lift, submersible pump or other approved devices and placing the shaft concrete (with a tremie or concrete pump beginning at the shaft bottom) which displaces the water or slurry as concrete is placed.

Where drilled shafts are located in open water areas, construct the shafts by the wet method using casings extending from above water elevation to the plan casing tip elevation to protect the shaft concrete from water action during placement and curing. Install the casing in a manner that will produce a positive seal at the bottom of the casing.

3.3 Slurry. When the Contractor elects to use slurry, adjust construction operations so that the slurry is in contact with the bottom 5 feet of the shaft for less than 4 hours unless the Engineer approves otherwise. If the 4-hour limit is exceeded, over-ream the bottom 5 feet of shaft.

3.4 Cleaning. Over-reaming, cleaning, or wire brushing the sidewalls of the shaft excavation and permanent casings may be necessary to remove the depth of softening or to remove excessive slurry cake buildup as indicated by sidewall samples or other test methods employed by the Engineer. Over-ream around the perimeter of the excavation a minimum depth of 1/2 inch and maximum depth of 3 inches.

3.5 Subsurface Exploration. Take subsurface exploration borings when shown on the plans or as the Engineer directs to determine the character of the material that the shaft extends through and the material directly below the shaft excavation. Complete subsurface exploration borings prior to beginning excavation for any drilled shaft in a group. Unless directed otherwise, extend subsurface exploration borings a minimum depth of 3 shaft diameters but not less than 10 feet below the bottom of the anticipated tip of drilled shaft excavation as shown on the plans. For subsurface exploration borings where soil sampling is required use thin-wall tube samples and perform standard penetration tests according to the Department's current Geotechnical Manual. When shafts extend into bedrock, soil samples are not required unless otherwise specified. Perform rock core drilling according to the Department's Geotechnical Manual. When the Engineer directs, perform additional subsurface exploration borings prior to drilled shaft construction. Measure soil samples and/or rock cores and visually identify and describe them on the subsurface log according to the Department's current Geotechnical Manual. Subsurface exploration borings must be performed by contractors/consultants prequalified by the Department's Division of Professional Services for Geotechnical Drilling Services at the time that field work begins.

The Engineer or geotechnical branch representative may be on-site during the subsurface exploration process to evaluate the soil and/or rock core samples. The Engineer or geotechnical branch representative will determine the need to extend the borings to depths greater than the depths previously specified. Handle, label, identify, and store soil and/or rock samples according to the Department's current Geotechnical Manual and deliver them with the subsurface logs to the geotechnical branch's rock core lab in Frankfort within 24-hours of completing the borings, unless directed otherwise.

The Engineer will inspect the soil samples and/or cores and determine the final depth of required excavation (final drilled shaft tip elevation) based on evaluation of the material's suitability. The Engineer will establish the final tip elevations for shaft locations, other than

those for which subsurface exploration borings have been performed, based on the results of the subsurface exploration. Within 15 calendar days after completion of the subsurface exploration borings, the Engineer will notify the contractor of the final tip elevations for shaft locations.

3.6 Excavations. The plans indicate the expected depths, the top of shaft elevations, and the estimated bottom of shaft elevations between which the drilled shaft are to be constructed. Drilled shafts may be extended deeper when the Engineer determines that the material encountered while drilling the shaft excavation is unsuitable and/or is not the same as anticipated in the design of the drilled shaft. Drilled shafts may be shortened when the Engineer determines the material encountered is better than that anticipated.

Begin drilled shaft excavation the excavation, excavation inspection, reinforcement placement, and concrete placement can be completed as one continuous operation. Do not construct new shafts within 24 hours adjacent to recently completed shafts if the center-to-center spacing is less than 3 shaft diameters.

Dispose of excavated material removed from the shaft according to the Standard Specifications or the contract documents.

Do not allow workmen to enter the shaft excavation for any reason unless both a suitable casing has been installed and adequate safety equipment and procedures have been provided to the workmen entering the excavation. Recommended Procedures for the Entry of Drilled Shaft Foundation Excavations, prepared by ADSC: The International Association of Foundation Drilling provides guideline recommendations for down-hole entry of drilled excavations.

3.7 Obstructions. Remove subsurface obstructions at drilled shaft locations. Such obstructions may include man-made materials such as old concrete foundations or natural materials such as boulders. Blasting is not permitted.

3.8 Inspections of Excavations. Provide equipment for checking the dimensions and alignment of each shaft excavation. Determine the dimensions and alignment of the shaft excavation under the observation and direction of the Engineer. Provide equipment necessary to verify shaft cleanliness for the method of inspection selected by the Engineer.

Measure final shaft depths with a weighted tape or other approved methods after final cleaning. Ensure the base of each shaft has less than ½ inch of sediment at the time of concrete placement. For dry excavations, do not allow the depth of water to exceed 3 inches for tremie or pump methods of concrete placement. Verify shaft cleanliness to the Engineer using direct visual inspection or other method the Engineers determines acceptable. Video camera or underwater inspection procedures may be used if specified in the plans. Inspect the side surfaces of rock sockets to ensure they are rough and of such condition to ensure bond between the shaft concrete and the rock. Calipers, bent rods, or other devices may be used to inspect the diameter and roughness of rock sockets. When the Engineer directs, mechanically roughen surfaces found to be smooth.

3.9 Reinforcing Steel Cage Fabrication and Placement. Assemble the reinforcing steel cage, consisting of longitudinal bars, ties, spirals, cage stiffener bars, spacers, centering devices, and other necessary appurtenances and place as a prefabricated unit immediately after the shaft excavation is inspected and accepted, and just prior to concrete placement.

Tie the reinforcing steel with 100 percent double-wire ties and provide support so that it will remain within allowable tolerances for position. Locate splices as shown on the plans. Splice no more than 50 percent of the longitudinal reinforcing within 2-lap splice lengths of any location or within 3 feet of the splice location if approved mechanical connectors are used. All splices are to be in accordance with plan details. Use bands, temporary cross ties,

etc. as required to provide a reinforcement cage of sufficient rigidity to prevent racking, permanent deformations, etc. during installation.

Use concrete centering devices or other approved non-corrosive centering devices at sufficient intervals along the length of the reinforcement cage to ensure concentric spacing for the entire cage length. As a minimum, provide a set of non-corrosive centering devices at intervals not exceeding 5 feet throughout the length of the shaft. When the size of the longitudinal reinforcement exceeds one inch in diameter the minimum spacing may be increased to 10 feet. As a minimum, provide a set of centering devices within 2 feet of the top and 2 feet of the bottom of the shaft. In addition provide one set of centering devices 2 feet above and 2 feet below each change in shaft diameter. Provide feet (bottom supports) at the bottom of the shaft on vertical bars. As a minimum, provide non-corrosive centering devices at 60 degree intervals around the circumference of the shaft to maintain the required reinforcement clearances. Ensure the centering devices maintain the specified annular clearance between the outside of the reinforcing cage and the side of the excavated hole or casing.

Concrete centering devices and feet will be constructed of concrete equal in quality and durability to the concrete specified for the shaft. Use epoxy coated centering devices fabricated from reinforcing steel. Use feet (bottom supports) of adequate size and number to assure the rebar cage is the proper distance above the bottom as determined by part 3.11 3) of this Special Note. The feet are not intended to support the weight of the cage. In the event that the shaft has been excavated below the anticipated tip elevation, extend the reinforcing cage at the tip (low) end by lap splices, mechanical connectors, or welded splices conforming to the Standard Specifications. In this instance, splices need not be staggered and 100 percent of the reinforcing bars may be spliced at a given location. The bottom 12 inches of the shaft may not be reinforced when below plan tip elevation.

During concrete placement, support the reinforcing cage at or near the top of shaft such that the concrete feet are positioned approximately one inch above the bottom of shaft excavation. Not sooner than 24 hours after the completion of concrete placement, remove temporary supports. Provide the needed equipment, including extra cranes if necessary, to provide this cage support.

Prior to placing the reinforcement cage, demonstrate to the satisfaction of the Engineer that the fabrication and handling methods to be used will result in a reinforcing cage placed in the proper position, with the proper clearances, and without permanent bending, squashing, or racking of the reinforcement cage. During this demonstration bring the cage to an upright position, lower into a shaft excavation, and support as if for concrete placement.

Check the elevation of the top of the reinforcing cage before and after the concrete is placed. If the reinforcing cage is not maintained within the specified tolerances, correct to the satisfaction of the Engineer. Do not construct additional shafts until the contractor has modified his reinforcing cage support to obtain the required tolerances.

3.10 Concrete Placement. Place concrete according to the applicable portions of the Standard Specifications and with the requirements set forth herein. Do not apply the provisions of the Special Note 6U for Structural Mass Concrete.

Place concrete as soon as practical after reinforcing steel placement but no later than 4 hours after completion of the shaft excavation. Place concrete continuously from the bottom to above the top elevation of the shaft. For shafts that extend above ground or water surface, place concrete continuously after the shaft is full until good quality concrete is evident at the top of the shaft. Form any portion of the shaft above ground with a removable form or other approved method to the dimensions shown on the plans.

For shafts constructed in the wet with the top of the shaft below the water surface and below top of casing, place concrete to approximately one shaft diameter but no less than 2 feet above the top of shaft elevation. Remove contaminated concrete and deleterious material, as

determined by the Engineer, accumulated above the top of shaft elevation immediately after completing concrete placement. Deleterious material and contaminated concrete may be airlifted under a head of water or slurry provided that the head is maintained at or near the exterior water surface elevation. Carefully remove any concrete remaining above plan top of shaft after curing and excess casing removal.

Place concrete either by free fall, through a tremie, or concrete pump. Use the free fall placement method in dry holes only. The maximum height of free fall placement is 20 feet. Do not allow concrete placed by free fall to contact either the reinforcing cage or hole sidewall. Drop chutes may be used to direct concrete to the base during free fall placement.

Place concrete in the shaft in one continuous operation. Maintain a minimum slump of 4 inches or more throughout the placement for 4 hours after batching. Adjust approved admixtures in the concrete mix for the conditions encountered on the job so that the concrete remains in a workable plastic state throughout the placement. Perform slump loss tests to demonstrate that the concrete will maintain a 4-inch or greater slump for a period of time equal to the estimated transport plus the 2-hour placement time, but not less than 4 hours.

When the Engineer determines the concrete placement methods and/or equipment during construction of any technique and/or production shafts to be inadequate, make appropriate alterations to eliminate unsatisfactory results.

Drilled shafts not meeting the concrete placement requirements of this Special Note or contract plans are unacceptable. Correct all unacceptable completed shafts to the satisfaction of the Engineer.

3.10.1 Tremie Placement. Tremies may be used for concrete placement in either wet or dry holes. Extend the tremie to the shaft base elevation before starting underwater placement. Valves, bottom plates, or plugs may be used only if concrete discharge can begin approximately 2 inches above the excavation bottom. Remove plugs from the excavation unless otherwise approved by the Engineer. Maintain tremie discharge at or near the bottom of excavation as long as practical during concrete placement. Immerse tremie discharge end as deep as practical in the concrete but not less than 10 feet.

If at any time during the concrete pour the tremie line orifice is removed from the fluid concrete column and discharges concrete above the rising concrete surface, the entire drilled shaft is considered defective. In such case, remove the reinforcing cage and concrete, complete any necessary sidewall cleaning or over-reaming as directed by the Engineer, and repour the shaft.

3.10.2 Pumped Concrete. Concrete pumps and lines may be used for concrete placement in either wet or dry excavations. Do not begin concrete placement until the pump line discharge orifice is at the shaft base elevation.

For wet excavations, use a plug or similar device to separate the concrete from the fluid in the hole until pumping begins. Remove the plug unless otherwise approved by the engineer.

Ensure the discharge orifice remains at least 10 feet below the surface of the fluid concrete. When lifting the pump line during concrete placement, reduce the line pressure until the orifice has been repositioned at a higher level in the excavation.

If at any time during the concrete pour the pump line orifice is removed from the fluid concrete column and discharges concrete above the rising concrete level, the Department will consider the shaft defective. In such case, remove the reinforcing cage and concrete, complete any necessary sidewall cleaning or over-reaming as the Engineer directs, and repour the shaft.

3.10.3 Drop Chutes. Drop chutes may be used to direct placement of free fall concrete in excavations where the maximum depth of water does not exceed one inch. Do not use the free fall method of placement in wet excavations. Concrete may be placed through either a hopper at the top of the tube or side openings as the drop chute is retrieved during concrete placement. Reduce the height of free fall and/or reduce the rate of concrete flow into the excavation if the concrete placement causes the shaft excavation to cave or slough, or if the concrete strikes the reinforcing cage or sidewall. When the Engineer determines free fall placement cannot be accomplished satisfactorily, use either tremie or pumping to accomplish the pour.

3.11 Construction Tolerances. The following construction tolerances apply to drilled shafts unless otherwise stated in the contract document:

1) Construct drilled shaft within 3 inches of plan position in the horizontal plane at the top of the shaft.
2) Do not vary the vertical alignment of a shaft excavation from the plan alignment by more than 1/4 inch per foot of depth or 6 inches total.
3) Maintain the top of the reinforcing steel cage no more than 6 inches above and no more than 3 inches below plan position.
4) All casing diameters shown on the plans refer to O.D. (outside diameter) dimensions. The casing dimensions are subject to American Pipe Institute tolerances applicable to regular steel pipe. A casing larger in diameter than shown in the plans may be used, at no additional cost, with prior approval by the Department.
5) Maintain the top of shaft concrete within ± 3 inches from the plan top of shaft elevation, measured after excess shaft concrete has been removed.
6) Design excavation equipment and methods so that the completed shaft excavation will have a planar bottom. Maintain the cutting edges of excavation equipment normal to the vertical axis of the equipment within a tolerance of ± 3/8 inch per foot of diameter. The tip elevation of the shaft has a tolerance of ± 6 inches from final shaft tip elevation unless otherwise specified in the plans.

Drilled shaft excavations and completed shafts not constructed within the required tolerances are unacceptable. Correct all unacceptable shaft excavations and completed shafts to the satisfaction of the Engineer. When a shaft excavation is completed with unacceptable tolerances, present corrective measures designed by a registered Professional Engineer for approval.

4.0 MEASUREMENT.

4.1 Drilled Shafts. The Department will not measure for payment any trial batches required to demonstrate the adequacy of the concrete mix, method, or equipment; concrete required to fill an oversized casing or oversized excavation; obstruction removal; over-reaming or sidewall cleaning; inspection work or inspection equipment; materials or work necessary, including engineering analyses and redesign, to alter unacceptable work methods or to complete corrections for unacceptable work; and will consider them incidental to the Drilled Shaft. Unless noted otherwise in the contract documents, casing is incidental to the drilled shaft.

4.1.1 Drilled Shaft, Common. The Department will measure the length, in linear feet, of drilled shaft above the top of rock elevation shown on the plans. The

Department will consider this quantity Drilled Shaft, Common regardless of the character of material actually encountered.

4.1.2 Drilled Shafts, Solid Rock. The Department will measure the length, in linear feet, of drilled shaft below the top of rock elevation shown on plans. The Department will consider this quantity Drilled Shafts, Solid Rock regardless of the character of material actually encountered during excavation.

4.2 Technique Shaft. The Department will pay for technique shaft at the contract unit price per each as detailed on the plans or as directed by the Engineer. This will constitute full compensation for all costs incurred during installation as described herein for 'Drilled Shaft' or in the contract documents. No additional compensation beyond the number of technique shafts allowed for in the plans will be permitted for additional technique shafts required because of failure to demonstrate adequacy of methods.

4.3 Rock Coring and Rock Sounding. The Department will measure Rock Sounding and Rock Coring shown on the plans, as specified in part 3.5 of this Special Note, and as the Engineer directs, in linear feet to the nearest 0.1-foot. If soil samples are specified in the contract documents they will be incidental to the unit price bid for Rock Sounding. The Department will not measure or pay for subsurface exploration performed deeper than the elevations indicated on the plans and/or in this Special Note, unless directed by the Engineer, and will consider it incidental to these items of work. Additionally, the Department will consider all mobilization, equipment, labor, incidental items, and operations necessary to complete the boring operations incidental to these items of work.

5.0 PAYMENT. The Department will make payment for the completed and accepted quantities under the following:

Code	Pay Item	Pay Unit
-----	Drilled Shaft, Diameter*, Common	Linear Foot
-----	Drilled Shaft, Diameter*, Solid Rock	Linear Foot
-----	Technique Shaft	Each
20745ED	Rock Sounding	Linear Foot
20746ED	Rock Coring	Linear Foot

* *See Plan Sheets for sizes of shafts*.

The Department will consider payment as full compensation for all work required in this note.

June 15, 2012

11N

SPECIAL NOTE FOR LONGITUDINAL PAVEMENT JOINT ADHESIVE

1. DESCRIPTION. This specification covers the requirements and practices for applying an asphalt adhesive material to the longitudinal joint of the surface course of an asphalt pavement. Apply the adhesive to the face of longitudinal joint between driving lanes for the first lane paved. Then, place and compact the adjacent lane against the treated face to produce a strong, durable, waterproof longitudinal joint.

2. MATERIALS, EQUIPMENT, AND PERSONNEL.

2.1 Joint Adhesive. Provide material conforming to Subsection 2.1.1.

2.1.1 Provide an adhesive conforming to the following requirements:

Property	Specification	Test Procedure
Viscosity, 400 ° F (Pa·s)	4.0 – 10.0	ASTM D 4402
Cone Penetration, 77 ° F	60 – 100	ASTM D 5329
Flow, 140 ° F (mm)	5.0 max.	ASTM D 5329
Resilience, 77 ° F (%)	30 min.	ASTM D 5329
Ductility, 77 ° F (cm)	30.0 min.	ASTM D 113
Ductility, 39 ° F (cm)	30.0 min.	ASTM D 113
Tensile Adhesion, 77 ° F (%)	500 min.	ASTM D 5329, Type II
Softening Point, ° F	171 min.	AASHTO T 53
Asphalt Compatibility	Pass	ASTM D 5329

Ensure the temperature of the pavement joint adhesive is between 380 and 410 °F when the material is extruded in a 0.125-inch-thick band over the entire face of the longitudinal joint.

2.2. Equipment.

2.2.1 Melter Kettle. Provide an oil-jacketed, double-boiler, melter kettle equipped with any needed agitation and recirculating systems.

2.2.2 Applicator System. Provide a pressure-feed-wand applicator system with an applicator shoe attached.

2.3 Personnel. Ensure a technical representative from the manufacturer of the pavement joint adhesive is present during the initial construction activities and available upon the request of the Engineer.

3. CONSTRUCTION.

3.1 Surface Preparation. Prior to the application of the pavement joint adhesive, ensure the face of the longitudinal joint is thoroughly dry and free from dust or any other debris that would inhibit adhesion. Clean the joint face by the use of compressed air.

Ensure this preparation process occurs shortly before application to prevent the return of debris on the joint face.

3.2 Pavement Joint Adhesive Application. Ensure the ambient temperature is a minimum of 40 ^{o} F during the application of the pavement joint adhesive. Prior to applying the adhesive, demonstrate competence in applying the adhesive according to this note to the satisfaction of the Engineer. Heat the adhesive in the melter kettle to the specified temperature range. Pump the adhesive from the melter kettle through the wand onto the vertical face of the cold joint. Apply the adhesive in a continuous band over the entire face of the longitudinal joint. Do not use excessive material in either thickness or location. Ensure the edge of the extruded adhesive material is flush with the surface of the pavement. Then, place and compact the adjacent lane against the joint face. Remove any excessive material extruded from the joint after compaction (a small line of material may remain).

3.3 Pavement Joint Adhesive Certification. Furnish the joint adhesive's certification to the Engineer stating the material conforms to all requirements herein prior to use.

3.4 Sampling and Testing. The Department will require a random sample of pavement joint adhesive from each manufacturer's lot of material. Extrude two 5 lb. samples of the heated material and forward the sample to the Division of Materials for testing. Reynolds oven bags, turkey size, placed inside small cardboard boxes or cement cylinder molds have been found suitable. Ensure the product temperature is 400°F or below at the time of sampling.

4. MEASUREMENT. The Department will measure the quantity of Pavement Joint Adhesive in linear feet. The Department will not measure for payment any extra materials, labor, methods, equipment, or construction techniques used to satisfy the requirements of this note. The Department will not measure for payment any trial applications of Pavement Joint Adhesive, the cleaning of the joint face, or furnishing and placing the adhesive. The Department will consider all such items incidental to the Pavement Joint Adhesive.

5. PAYMENT. The Department will pay for the Pavement Joint Adhesive at the Contract unit bid price and apply an adjustment for each manufacturer's lot of material based on the degree of compliance as defined in the following schedule. When a sample fails on two or more tests, the Department may add the deductions, but the total deduction will not exceed 100 percent.

11N

Pavement Joint Adhesive Price Adjustment Schedule						
Test	Specification	100% Pay	90% Pay	80% Pay	50% Pay	0% Pay
Joint Adhesive Referenced in Subsection 2.1.1						
Viscosity, 400 º F (Pa•s)			3.0-3.4	2.5-2.9	2.0-2.4	≤1.9
ASTM D 3236	4.0-10.0	3.5-10.5	10.6-11.0	11.1-11.5	11.6-12.0	≥ 12.1
Cone Penetration, 77 º F			54-56	51-53	48-50	≤ 47
ASTM D 5329	60-100	57-103	104-106	107-109	110-112	≥ 113
Flow, 140 º F (mm) ASTM D 5329	≤ 5.0	≤ 5.5	5.6-6.0	6.1-6.5	6.6-7.0	≥ 7.1
Resilience, 77 º F (%) ASTM D 5329	≥ 30	≥ 28	26-27	24-25	22-23	≤ 21
Tensile Adhesion, 77 º F (%) ASTM D 5329	≥ 500	≥ 490	480-489	470-479	460-469	≤ 459
Softening Point, º F AASHTO T 53	≥ 171	≥ 169	166-168	163-165	160-162	≤ 159
Ductility, 77 º F (cm) ASTM D 113	≥ 30.0	≥ 29.0	28.0-28.9	27.0-27.9	26.0-26.9	≤ 25.9
Ductility, 39 º F (cm) ASTM D 113	≥ 30.0	≥ 29.0	28.0-28.9	27.0-27.9	26.0-26.9	≤ 25.9

Code	Pay Item	Pay Unit
20071EC	Joint Adhesive	Linear Foot

May 7, 2014

SPECIAL PROVISION FOR EMBANKMENT AT BRIDGE END BENT STRUCTURES

This Special Provision will apply when indicated on the plans or in the proposal. Section references herein are to the Department's Standard Specifications for Road and Bridge Construction, Current Edition.

1.0 DESCRIPTION. Construct a soil, granular, or rock embankment with soil, granular or cohesive pile core and place structure granular backfill, as the Plans require. Construct the embankment according to the requirements of this Special Provision, the Plans, Standard Drawing RGX 100 and 105, and the Standard Specifications, Current Edition.

2.0 MATERIALS.

2.1 Granular Embankment. Conform to Subsection 805.10. When Granular Embankment materials are erodible or unstable according to Subsection 805.03.04, use the Special Construction Methods found in 3.2 of the Special Provision.

2.2 Rock Embankment. Provide durable rock from roadway excavation that consists principally of Unweathered Limestone, Durable Shale (SDI equal to or greater than 95 according to KM 64-513), or Durable Sandstone.

2.3 Pile Core. Provide a pile core in the area of the embankments where deep foundations are to be installed unless otherwise specified. The Pile Core is the zone indicated on Standard Drawings RGX 100 and 105 designated as Pile Core. Material control of the pile core area during embankment construction is always required. Proper Pile Core construction is required for installation of foundation elements such as drilled or driven piles or drilled shafts. The type of material used to construct the pile core is as directed in the plans or below. Typically, the pile core area will be constructed from the same material used to construct the surrounding embankment. Pile Core can be classified as one of three types:

A) Pile Core - Conform to Section 206 of the Standard Specifications. Provide pile core material consisting of the same material as the adjacent embankment except the material in the pile core area shall be free of boulders or particle sizes larger than 4 inches in any dimension or any other obstructions that may hinder pile driving operations. If the pile core material hinders pile driving operations, take the appropriate means necessary to reach the required pile tip elevation, at no expense to the Department.

B) Granular Pile Core. Granular pile core is required only when specified in the plans. Select a gradation of durable rock to facilitate pile driving that conforms to Subsection 805.11. If granular pile core material hinders pile driving operations, take appropriate means necessary to reach the required pile tip elevation, at no expense to the Department.

C) Cohesive Pile Core. Cohesive Pile Core is required only when specified in the plans. Conform to Section 206 of the Standard Specifications and use soil with at least 50 percent passing a No. 4 sieve having a minimum Plasticity Index (PI) of 10. In addition, keep the cohesive pile core free of boulders, larger than 4 inches in any dimension, or any other obstructions, which would interfere with drilling operations. If cohesive pile core material interferes with drilling operations, take appropriate means necessary to maintain excavation stability, at no expense to the Department.

2.4 Structure Granular Backfill. Conform to Subsection 805.11

2.5 Geotextile Fabric. Conform to Class 1 or Class 2 in Section 214 and 843.

3.0 CONSTRUCTION.

3.1 General. Construct roadway embankments at end bents according to Section 206 and in accordance with the Special Provision, the Plans, and Standard Drawings for the full embankment section. In some instances, granular or rock embankment will be required for embankment construction for stability purposes, but this special provision does not prevent the use of soil when appropriate. Refer to the plans for specific details regarding material requirements for embankment construction.
Place and compact the pile core and structure granular backfill according to the applicable density requirements for the project. If the embankment and pile core are dissimilar materials (i.e., a granular pile core is used with a soil embankment or a cohesive pile core is used with a granular embankment), a Geotextile Fabric, will be required between the pile core and embankment in accordance with Sections 214 and 843 of the Standard Specifications.

When granular or rock embankment is required for embankment construction, conform to the general requirements of Subsection 206.03.02 B. In addition, place the material in no greater than 2-foot loose lifts and compact with a vibrating smooth wheel roller capable of producing a minimum centrifugal force of 15 tons. Apply these requirements to the full width of the embankment for a distance of half the embankment height or 50 feet, whichever is greater, as shown on Standard Drawing RGX-105.

When using granular pile core, install 8-inch perforated underdrain pipe at or near the elevation of the original ground in the approximate locations depicted on the standard drawing, and as the Engineer directs, to ensure positive drainage of the embankment. Wrap the perforated pipe with a fabric of a type recommended by the pipe manufacturer.

After constructing the embankment, excavate for the end bent cap, drive piling, install shafts or other foundation elements, place the mortar bed, construct the end bent, and complete the embankment to finish grade according to the construction sequence shown on the Plans or Standard Drawings and as specified hereinafter.

Certain projects may require widening of existing embankments and the removal of substructures. Construct embankment according to the plans. Substructure removal shall be completed according to the plans and Section 203. Excavation may be required at the existing embankment in order to place the structure granular backfill as shown in the Standard Drawings.
After piles are driven or shafts installed (see design drawings), slope the bottom of the excavation towards the ends of the trench as noted on the plans for drainage. Using a separate pour, place concrete mortar, or any class concrete, to provide a base for forming and placing the cap. Place side forms for the end bent after the mortar has set sufficiently to support workmen and forms without being disturbed.

Install 4-inch perforated pipe in accordance with the plans and Standard Drawings. In the event slope protection extends above the elevation of the perforated pipe, extend the pipe through the slope protection.

After placing the end bent cap and achieving required concrete cylinder strengths, remove adjacent forms and fill the excavation with compacted structure granular backfill material (maximum 1’ loose lifts) to the level of the berm prior to placing beams for the bridge. Place a geotextile fabric between embankment material and structure granular backfill. After completing the end bent backwall, or after completing the span end wall, place the compacted structure granular backfill (maximum 1’

loose lifts) to subgrade elevation. If the original excavation is enlarged, fill the entire volume with compacted structure granular backfill (maximum 1' loose lifts) at no expense to the Department. Do not place backfill before removing adjacent form work. Place structure granular backfill material in trench ditches at the ends of the excavation. Place Geotextile Fabric, over the surface of the compacted structure granular backfill prior to placing aggregate base course.

Tamp the backfill with hand tampers, pneumatic tampers, or other means approved by the Engineer. Thoroughly compact the backfill under the overhanging portions of the structure to ensure that the backfill is in intimate contact with the sides of the structure.

Do not apply seeding, sodding, or other vegetation to the exposed granular embankment.

3.2 Special Construction Methods. Erodible or unstable materials may erode even when protected by riprap or channel lining; use the special construction method described below when using these materials.

Use fine aggregates or friable sandstone granular embankment at "dry land" structures only. Do not use them at stream crossings or locations subject to flood waters.

For erodible or unstable materials having 50 percent or more passing the No. 4 sieve, protect with geotextile fabric. Extend the fabric from the original ground to the top of slope over the entire area of the embankment slopes on each side of, and in front of, the end bent. Cover the fabric with at least 12 inches of non-erodible material.

For erodible or unstable materials having less than 50 percent passing a No. 4 sieve, cover with at least 12 inches of non-erodible material.

Where erodible or unstable granular embankment will be protected by riprap or channel lining, place a geotextile fabric between the embankment and the specified slope protection.

4.0 MEASUREMENT.

4.1 Granular Embankment. The Department will measure the quantity in cubic yards using the plan quantity, increased or decreased by authorized adjustments as specified in Section 204. The Department will not measure for payment any Granular Embankment that is not called for in the plans.

The Department will not measure for payment any special construction caused by using erodible or unstable materials and will consider it incidental to the Granular Embankment regardless of whether the erodible or unstable material was specified or permitted.

4.2 Rock Embankment. The Department will not measure for payment any rock embankment and will consider it incidental to roadway excavation or embankment in place, as applicable. Rock embankments will be constructed using granular embankment on projects where there is no available rock present within the excavation limits of the project.

4.3 Pile Core. Pile core will be measured and paid under roadway excavation or embankment in place, as applicable. The Department will not measure the pile core for separate payment. The Department will not measure for payment the 8-inch perforated underdrain pipe and will consider it incidental to the Pile Core.

4.4 Structure Granular Backfill. The Department will measure the quantity in cubic yards using the plan quantity, increased or decreased by authorized adjustments as specified in Section 204. The

Department will not measure any additional material required for backfill outside the limits shown on the Plans and Standard Drawings for payment and will consider it incidental to the work.

The Department will not measure for payment the 4-inch perforated underdrain pipe and will consider it incidental to the Structure Granular Backfill.

4.5 Geotextile Fabric. The Department will not measure the quantity of fabric used for separating dissimilar materials when constructing the embankment and pile core and will consider it incidental to embankment construction.

The Department will not measure for payment the Geotextile Fabric used to separate the Structure Granular Backfill from the embankment and aggregate base course and will consider it incidental to Structure Granular Backfill.

The Department will not measure for payment the Geotextile Fabric required for construction with erodible or unstable materials and will consider it incidental to embankment construction.

4.6 End Bent. The Department will measure the quantities according to the Contract. The Department will not measure furnishing and placing the 2-inch mortar or concrete bed for payment and will consider it incidental to the end bent construction.

4.7 Structure Excavation. The Department will not measure structure excavation on new embankments for payment and will consider it incidental to the Structure Granular Backfill or Concrete as applicable.

5.0 PAYMENT. The Department will make payment for the completed and accepted quantities under the following:

Code	Pay Item	Pay Unit
02223	Granular Embankment	Cubic Yards
02231	Structure Granular Backfill	Cubic Yards

The Department will consider payment as full compensation for all work required in this provision.

August 5, 2019

PART III

EMPLOYMENT, WAGE AND RECORD REQUIREMENTS

FHWA-1273 – Revised June 25, 2026

**CONTRACT PROVISIONS FOR
FEDERAL-AID CONSTRUCTION CONTRACTS**

I. General
II. Nondiscrimination
III. Davis-Bacon and Related Act Provisions
IV. Contract Work Hours and Safety Standards Act Provisions
V. Subletting or Assigning the Contract
VI. Safety: Accident Prevention
VII. False Statements Concerning Highway Projects
VIII. Implementation of Clean Air Act and Federal Water Pollution Control Act
IX. Certification Regarding Debarment, Suspension, Ineligibility and Voluntary Exclusion
X. Certification Regarding Use of Contract Funds for Lobbying
XI. Use of United States-Flag Vessels

ATTACHMENTS

A. Employment and Materials Preference for Appalachian Development Highway System or Appalachian Local Access Road Contracts (included in Appalachian contracts only).

I. GENERAL

1. Historically, contracting agencies using Federal-aid highway funds were required to ensure Form FHWA-1273 was physically incorporated into all contracts and subcontracts. Effective June 10, 2026, this requirement was eliminated [91 FR 25492]. Future use of Form FHWA-1273 is now optional on the part of the contracting agency using Federal-aid highway funds. FHWA continues to make Form FHWA-1273 available as a convenience to contracting agencies. Contracting agencies must continue to ensure compliance with the provisions cited in Form FHWA-1273 in accordance with the provisions regardless of the use of Form FHWA-1273. Accordingly, the contracting agency retains the authority to determine whether the contractor must use Form FHWA-1273 to physically incorporate required contract provisions in each subcontract and in lower tier contracts. Where permitted by the contracting agency, the contractor may choose other ways to include required contract provisions in each subcontract, besides incorporating Form FHWA-1273. Contract provisions in Form FHWA-1273 are not required to be physically included in subcontracts for design services on Federal-aid design-build contracts, or in purchase orders, rental agreements and other agreements for supplies or services.

The applicable provisions of Form FHWA-1273 are incorporated by reference for work done under any purchase order, rental agreement or agreement for other services. The prime contractor or design-builder shall be responsible for compliance by any subcontractor, lower-tier subcontractor or service provider.

Contracting agencies may reference Form FHWA-1273 in solicitation-for-bids or request-for-proposals documents.

2. Subject to the applicability criteria noted in the following sections, these contract provisions shall apply to all work performed on the contract by the contractor's own organization and with the assistance of workers under the contractor's immediate superintendence and to all work performed on the contract by piecework, station work, or by subcontract.

3. A breach of any of the stipulations contained in these Required Contract Provisions may be sufficient grounds for withholding of progress payments, withholding of final payment, termination of the contract, suspension / debarment or any other action determined to be appropriate by the contracting agency and FHWA.

4. Selection of Labor: During the performance of this contract, the contractor shall not use convict labor for any purpose within the limits of a construction project on a Federal-aid highway unless it is labor performed by convicts who are on parole, supervised release, or probation. 23 U.S.C. 114(b). The term Federal-aid highway does not include roadways functionally classified as local roads or rural minor collectors. 23 U.S.C. 101(a).

II. NONDISCRIMINATION

The contractor and all subcontractors must comply with the following policies: 29 CFR Parts 1625-1627, 23 U.S.C. 140, Section 504 of the Rehabilitation Act of 1973, as amended (29 U.S.C. 794), Title VI of the Civil Rights Act of 1964, as amended (42 U.S.C. 2000d et seq.), and related regulations including 49 CFR Parts 21, 26, and 27, including any amendments thereto.

Note: The U.S. Department of Labor has exclusive authority to determine compliance with 29 CFR Parts 1625-1627. The contracting agency and the FHWA have the authority and the responsibility to ensure compliance with 23 U.S.C. 140, Section 504 of the Rehabilitation Act of 1973, as amended (29 U.S.C. 794), and Title VI of the Civil Rights Act of 1964, as amended (42 U.S.C. 2000d et seq.), and related regulations including 49 CFR Parts 21, 26, and 27, including any amendments thereto.

The provisions of the Americans with Disabilities Act of 1990 (42 U.S.C. 12101 et seq.) set forth under 28 CFR Part 35 and 29 CFR Part 1630 are incorporated by reference in this contract.

1. Assurances Required:

a. The requirements of 49 CFR Part 26, including any amendments thereto, and the State DOT's FHWA-approved Disadvantaged Business Enterprise (DBE) program are incorporated by reference.

b. The contractor, subrecipient or subcontractor shall not discriminate on the basis of race, color, national origin, or sex in the performance of this contract. The contractor shall carry out applicable requirements of 49 CFR part 26, including any amendments thereto, in the award and administration of DOT-assisted contracts. Failure by the contractor to carry out these requirements is a material breach of this contract, which may result in the termination of this contract or such other remedy as the recipient deems appropriate, which may include, but is not limited to:

(1) Withholding monthly progress payments;
(2) Assessing sanctions;
(3) Liquidated damages; and/or
(4) Disqualifying the contractor from future bidding as non-responsible.

c. The Title VI and nondiscrimination provisions of U.S. DOT Order 1050.2A at Appendixes A and E, including any amendments thereto, are incorporated by reference. 49 CFR Part 21.

III. DAVIS-BACON AND RELATED ACT PROVISIONS

This section is applicable to all Federal-aid construction projects exceeding $2,000 and to all related subcontracts and lower-tier subcontracts (regardless of subcontract size), in accordance with 29 CFR 5.5. The requirements apply to all projects located within the right-of-way of a roadway that is functionally classified as Federal-aid highway. 23 U.S.C. 113. This excludes roadways functionally classified as local roads or rural minor collectors, which are exempt. 23 U.S.C. 101. Where applicable law requires that projects be treated as a project on a Federal-aid highway, the provisions of this subpart will apply regardless of the location of the project. Examples include: Surface Transportation Block Grant Program projects funded under 23 U.S.C. 133 [excluding recreational trails projects], the Nationally Significant Freight and Highway Projects funded under 23 U.S.C. 117, and National Highway Freight Program projects funded under 23 U.S.C. 167.

The following provisions are from the U.S. Department of Labor regulations in 29 CFR 5.5 “Contract provisions and related matters” with minor revisions to conform to the FHWA-1273 format and FHWA program requirements.

1. Minimum wages (29 CFR 5.5)

a. *Wage rates and fringe benefits.* All laborers and mechanics employed or working upon the site of the work (or otherwise working in construction or development of the project under a development statute), will be paid unconditionally and not less often than once a week, and without subsequent deduction or rebate on any account (except such payroll deductions as are permitted by regulations issued by the Secretary of Labor under the Copeland Act (29 CFR part 3)), the full amount of basic hourly wages and bona fide fringe benefits (or cash equivalents thereof) due at time of payment computed at rates not less than those contained in the wage determination of the Secretary of Labor which is attached hereto and made a part hereof, regardless of any contractual relationship which may be alleged to exist between the contractor and such laborers and mechanics. As provided in paragraphs (d) and (e) of 29 CFR 5.5, the appropriate wage determinations are effective by operation of law even if they have not been attached to the contract. Contributions made or costs reasonably anticipated for bona fide fringe benefits under the Davis-Bacon Act (40 U.S.C. 3141(2)(B)) on behalf of laborers or mechanics are considered wages paid to such laborers or mechanics, subject to the provisions of paragraph 1.e. of this section; also, regular contributions made or costs incurred for more than a weekly period (but not less often than quarterly) under plans, funds, or programs which cover the particular weekly period, are deemed to be constructively made or incurred during such weekly period. Such laborers and mechanics must be paid the appropriate wage rate and fringe benefits on the wage determination for the classification(s) of work actually performed, without regard to skill, except as provided in paragraph 4. of this section. Laborers or mechanics performing work in more than one classification may be compensated at the rate specified for each classification for the time actually worked therein: *Provided,* That the employer's payroll records accurately set forth the time spent in each classification in which work is performed. The wage determination (including any additional classifications and wage rates conformed under paragraph 1.c. of this section) and the Davis-Bacon poster (WH–1321) must be posted at all times by the contractor and its subcontractors at the site of the work in a prominent and accessible place where it can be easily seen by the workers.

b. *Frequently recurring classifications.* (1) In addition to wage and fringe benefit rates that have been determined to be prevailing under the procedures set forth in 29 CFR part 1, a wage determination may contain, pursuant to § 1.3(f), wage and fringe benefit rates for classifications of laborers and mechanics for which conformance requests are regularly submitted pursuant to paragraph 1.c. of this section, provided that:

(i) The work performed by the classification is not performed by a classification in the wage determination for which a prevailing wage rate has been determined;

(ii) The classification is used in the area by the construction industry; and

(iii) The wage rate for the classification bears a reasonable relationship to the prevailing wage rates contained in the wage determination.

(2) The Administrator will establish wage rates for such classifications in accordance with paragraph 1.c.(1)(iii) of this section. Work performed in such a classification must be paid at no less than the wage and fringe benefit rate listed on the wage determination for such classification.

c. *Conformance.* (1) The contracting officer must require that any class of laborers or mechanics, including helpers, which is not listed in the wage determination and which is to be employed under the contract be classified in conformance with the wage determination. Conformance of an additional classification and wage rate and fringe benefits is appropriate only when the following criteria have been met:

(i) The work to be performed by the classification requested is not performed by a classification in the wage determination; and

(ii) The classification is used in the area by the construction industry; and

(iii) The proposed wage rate, including any bona fide fringe benefits, bears a reasonable relationship to the wage rates contained in the wage determination.

(2) The conformance process may not be used to split, subdivide, or otherwise avoid application of classifications listed in the wage determination.

(3) If the contractor and the laborers and mechanics to be employed in the classification (if known), or their representatives, and the contracting officer agree on the

classification and wage rate (including the amount designated for fringe benefits where appropriate), a report of the action taken will be sent by the contracting officer by email to DBAconformance@dol.gov. The Administrator, or an authorized representative, will approve, modify, or disapprove every additional classification action within 30 days of receipt and so advise the contracting officer or will notify the contracting officer within the 30–day period that additional time is necessary.

(4) In the event the contractor, the laborers or mechanics to be employed in the classification or their representatives, and the contracting officer do not agree on the proposed classification and wage rate (including the amount designated for fringe benefits, where appropriate), the contracting officer will, by email to DBAconformance@dol.gov, refer the questions, including the views of all interested parties and the recommendation of the contracting officer, to the Administrator for determination. The Administrator, or an authorized representative, will issue a determination within 30 days of receipt and so advise the contracting officer or will notify the contracting officer within the 30–day period that additional time is necessary.

(5) The contracting officer must promptly notify the contractor of the action taken by the Wage and Hour Division under paragraphs 1.c.(3) and (4) of this section. The contractor must furnish a written copy of such determination to each affected worker or it must be posted as a part of the wage determination. The wage rate (including fringe benefits where appropriate) determined pursuant to paragraph 1.c.(3) or (4) of this section must be paid to all workers performing work in the classification under this contract from the first day on which work is performed in the classification.

d. *Fringe benefits not expressed as an hourly rate.* Whenever the minimum wage rate prescribed in the contract for a class of laborers or mechanics includes a fringe benefit which is not expressed as an hourly rate, the contractor may either pay the benefit as stated in the wage determination or may pay another bona fide fringe benefit or an hourly cash equivalent thereof.

e. *Unfunded plans.* If the contractor does not make payments to a trustee or other third person, the contractor may consider as part of the wages of any laborer or mechanic the amount of any costs reasonably anticipated in providing bona fide fringe benefits under a plan or program, *Provided,* That the Secretary of Labor has found, upon the written request of the contractor, in accordance with the criteria set forth in § 5.28, that the applicable standards of the Davis-Bacon Act have been met. The Secretary of Labor may require the contractor to set aside in a separate account assets for the meeting of obligations under the plan or program.

f. *Interest.* In the event of a failure to pay all or part of the wages required by the contract, the contractor will be required to pay interest on any underpayment of wages.

2. Withholding (29 CFR 5.5)

a. *Withholding requirements.* The contracting agency may, upon its own action, or must, upon written request of an authorized representative of the Department of Labor, withhold or cause to be withheld from the contractor so much of the accrued payments or advances as may be considered necessary to satisfy the liabilities of the prime contractor or any subcontractor for the full amount of wages and monetary relief, including interest, required by the clauses set forth in this section for violations of this contract, or to satisfy any such liabilities required by any other Federal contract, or federally assisted contract subject to Davis-Bacon labor standards, that is held by the same prime contractor (as defined in § 5.2). The necessary funds may be withheld from the contractor under this contract, any other Federal contract with the same prime contractor, or any other federally assisted contract that is subject to Davis-Bacon labor standards requirements and is held by the same prime contractor, regardless of whether the other contract was awarded or assisted by the same agency, and such funds may be used to satisfy the contractor liability for which the funds were withheld. In the event of a contractor's failure to pay any laborer or mechanic, including any apprentice or helper working on the site of the work all or part of the wages required by the contract, or upon the contractor's failure to submit the required records as discussed in paragraph 3.d. of this section, the contracting agency may on its own initiative and after written notice to the contractor, take such action as may be necessary to cause the suspension of any further payment, advance, or guarantee of funds until such violations have ceased.

b. *Priority to withheld funds.* The Department has priority to funds withheld or to be withheld in accordance with paragraph 2.a. of this section or Section IV, paragraph 3.a., or both, over claims to those funds by:

(1) A contractor's surety(ies), including without limitation performance bond sureties and payment bond sureties;

(2) A contracting agency for its reprocurement costs;

(3) A trustee(s) (either a court-appointed trustee or a U.S. trustee, or both) in bankruptcy of a contractor, or a contractor's bankruptcy estate;

(4) A contractor's assignee(s);

(5) A contractor's successor(s); or

(6) A claim asserted under the Prompt Payment Act, 31 U.S.C. 3901–3907.

3. Records and certified payrolls (29 CFR 5.5)

a. *Basic record requirements* (1) *Length of record retention.* All regular payrolls and other basic records must be maintained by the contractor and any subcontractor during the course of the work and preserved for all laborers and mechanics working at the site of the work (or otherwise working in construction or development of the project under a development statute) for a period of at least 3 years after all the work on the prime contract is completed.

(2) *Information required.* Such records must contain the name; Social Security number; last known address, telephone number, and email address of each such worker; each worker's correct classification(s) of work actually performed; hourly rates of wages paid (including rates of contributions or costs anticipated for bona fide fringe benefits or cash equivalents thereof of the types described in 40 U.S.C. 3141(2)(B) of the Davis-Bacon Act); daily and weekly number

of hours actually worked in total and on each covered contract; deductions made; and actual wages paid.

(3) *Additional records relating to fringe benefits.* Whenever the Secretary of Labor has found under paragraph 1.e. of this section that the wages of any laborer or mechanic include the amount of any costs reasonably anticipated in providing benefits under a plan or program described in 40 U.S.C. 3141(2)(B) of the Davis-Bacon Act, the contractor must maintain records which show that the commitment to provide such benefits is enforceable, that the plan or program is financially responsible, and that the plan or program has been communicated in writing to the laborers or mechanics affected, and records which show the costs anticipated or the actual cost incurred in providing such benefits.

(4) *Additional records relating to apprenticeship.* Contractors with apprentices working under approved programs must maintain written evidence of the registration of apprenticeship programs, the registration of the apprentices, and the ratios and wage rates prescribed in the applicable programs.

b. *Certified payroll requirements* (1) *Frequency and method of submission.* The contractor or subcontractor must submit weekly, for each week in which any DBA- or Related Acts-covered work is performed, certified payrolls to the contracting agency. The prime contractor is responsible for the submission of all certified payrolls by all subcontractors. A contracting agency or prime contractor may permit or require contractors to submit certified payrolls through an electronic system, as long as the electronic system requires a legally valid electronic signature; the system allows the contractor, the contracting agency, and the Department of Labor to access the certified payrolls upon request for at least 3 years after the work on the prime contract has been completed; and the contracting agency or prime contractor permits other methods of submission in situations where the contractor is unable or limited in its ability to use or access the electronic system.

(2) *Information required.* The certified payrolls submitted must set out accurately and completely all of the information required to be maintained under paragraph 3.a.(2) of this section, except that full Social Security numbers and last known addresses, telephone numbers, and email addresses must not be included on weekly transmittals. Instead, the certified payrolls need only include an individually identifying number for each worker (*e.g.,* the last four digits of the worker's Social Security number). The required weekly certified payroll information may be submitted using Optional Form WH–347 or in any other format desired. Optional Form WH–347 is available for this purpose from the Wage and Hour Division website at *https://www.dol.gov/sites/dolgov/files/WHD/legacy/files/wh347/.pdf* or its successor website. It is not a violation of this section for a prime contractor to require a subcontractor to provide full Social Security numbers and last known addresses, telephone numbers, and email addresses to the prime contractor for its own records, without weekly submission by the subcontractor to the contracting agency.

(3) *Statement of Compliance.* Each certified payroll submitted must be accompanied by a "Statement of Compliance," signed by the contractor or subcontractor, or the contractor's or subcontractor's agent who pays or supervises the payment of the persons working on the contract, and must certify the following:

(i) That the certified payroll for the payroll period contains the information required to be provided under paragraph 3.b. of this section, the appropriate information and basic records are being maintained under paragraph 3.a. of this section, and such information and records are correct and complete;

(ii) That each laborer or mechanic (including each helper and apprentice) working on the contract during the payroll period has been paid the full weekly wages earned, without rebate, either directly or indirectly, and that no deductions have been made either directly or indirectly from the full wages earned, other than permissible deductions as set forth in 29 CFR part 3; and

(iii) That each laborer or mechanic has been paid not less than the applicable wage rates and fringe benefits or cash equivalents for the classification(s) of work actually performed, as specified in the applicable wage determination incorporated into the contract.

(4) *Use of Optional Form WH–347.* The weekly submission of a properly executed certification set forth on the reverse side of Optional Form WH–347 will satisfy the requirement for submission of the "Statement of Compliance" required by paragraph 3.b.(3) of this section.

(5) *Signature.* The signature by the contractor, subcontractor, or the contractor's or subcontractor's agent must be an original handwritten signature or a legally valid electronic signature.

(6) *Falsification.* The falsification of any of the above certifications may subject the contractor or subcontractor to civil or criminal prosecution under 18 U.S.C. 1001 and 31 U.S.C. 3729.

(7) *Length of certified payroll retention.* The contractor or subcontractor must preserve all certified payrolls during the course of the work and for a period of 3 years after all the work on the prime contract is completed.

c. *Contracts, subcontracts, and related documents.* The contractor or subcontractor must maintain this contract or subcontract and related documents including, without limitation, bids, proposals, amendments, modifications, and extensions. The contractor or subcontractor must preserve these contracts, subcontracts, and related documents during the course of the work and for a period of 3 years after all the work on the prime contract is completed.

d. *Required disclosures and access* (1) *Required record disclosures and access to workers.* The contractor or subcontractor must make the records required under paragraphs 3.a. through 3.c. of this section, and any other documents that the contracting agency, the State DOT, the FHWA, or the Department of Labor deems necessary to determine compliance with the labor standards provisions of any of the applicable statutes referenced by § 5.1, available for inspection, copying, or transcription by authorized representatives of the contracting agency, the State DOT, the FHWA, or the Department of Labor, and must permit such representatives to interview workers during working hours on the job.

(2) *Sanctions for non-compliance with records and worker access requirements.* If the contractor or subcontractor fails to submit the required records or to make them available, or refuses to permit worker interviews during working hours on the job, the Federal agency may, after written notice to the contractor, sponsor, applicant, owner, or other entity, as the case may be, that maintains such records or that employs such workers, take such action as may be necessary to cause the suspension of any further payment, advance, or guarantee of funds. Furthermore, failure to submit the required records upon request or to make such records available, or to permit worker interviews during working hours on the job, may be grounds for debarment action pursuant to § 5.12. In addition, any contractor or other person that fails to submit the required records or make those records available to WHD within the time WHD requests that the records be produced will be precluded from introducing as evidence in an administrative proceeding under 29 CFR part 6 any of the required records that were not provided or made available to WHD. WHD will take into consideration a reasonable request from the contractor or person for an extension of the time for submission of records. WHD will determine the reasonableness of the request and may consider, among other things, the location of the records and the volume of production.

(3) *Required information disclosures.* Contractors and subcontractors must maintain the full Social Security number and last known address, telephone number, and email address of each covered worker, and must provide them upon request to the contracting agency, the State DOT, the FHWA, the contractor, or the Wage and Hour Division of the Department of Labor for purposes of an investigation or other compliance action.

4. Apprentices and equal employment opportunity (29 CFR 5.5)

a. *Apprentices* (1) *Rate of pay.* Apprentices will be permitted to work at less than the predetermined rate for the work they perform when they are employed pursuant to and individually registered in a bona fide apprenticeship program registered with the U.S. Department of Labor, Employment and Training Administration, Office of Apprenticeship (OA), or with a State Apprenticeship Agency recognized by the OA. A person who is not individually registered in the program, but who has been certified by the OA or a State Apprenticeship Agency (where appropriate) to be eligible for probationary employment as an apprentice, will be permitted to work at less than the predetermined rate for the work they perform in the first 90 days of probationary employment as an apprentice in such a program. In the event the OA or a State Apprenticeship Agency recognized by the OA withdraws approval of an apprenticeship program, the contractor will no longer be permitted to use apprentices at less than the applicable predetermined rate for the work performed until an acceptable program is approved.

(2) *Fringe benefits.* Apprentices must be paid fringe benefits in accordance with the provisions of the apprenticeship program. If the apprenticeship program does not specify fringe benefits, apprentices must be paid the full amount of fringe benefits listed on the wage determination for the applicable classification. If the Administrator determines that a different practice prevails for the applicable apprentice classification, fringe benefits must be paid in accordance with that determination.

(3) *Apprenticeship ratio.* The allowable ratio of apprentices to journeyworkers on the job site in any craft classification must not be greater than the ratio permitted to the contractor as to the entire work force under the registered program or the ratio applicable to the locality of the project pursuant to paragraph 4.a.(4) of this section. Any worker listed on a payroll at an apprentice wage rate, who is not registered or otherwise employed as stated in paragraph 4.a.(1) of this section, must be paid not less than the applicable wage rate on the wage determination for the classification of work actually performed. In addition, any apprentice performing work on the job site in excess of the ratio permitted under this section must be paid not less than the applicable wage rate on the wage determination for the work actually performed.

(4) *Reciprocity of ratios and wage rates.* Where a contractor is performing construction on a project in a locality other than the locality in which its program is registered, the ratios and wage rates (expressed in percentages of the journeyworker's hourly rate) applicable within the locality in which the construction is being performed must be observed. If there is no applicable ratio or wage rate for the locality of the project, the ratio and wage rate specified in the contractor's registered program must be observed.

b. *Equal employment opportunity.* The use of apprentices and journeyworkers under this part must be in conformity with 29 CFR part 30, including any amendments thereto.

c. Apprentices and Trainees (programs of the U.S. DOT).

Apprentices and trainees working under apprenticeship and skill training programs which have been certified by the Secretary of Transportation as promoting EEO in connection with Federal-aid highway construction programs are not subject to the requirements of paragraph 4 of this Section III. 23 CFR 230.111(e)(2). The straight time hourly wage rates for apprentices and trainees under such programs will be established by the particular programs. The ratio of apprentices and trainees to journeyworkers shall not be greater than permitted by the terms of the particular program.

5. Compliance with Copeland Act requirements. The contractor shall comply with the requirements of 29 CFR part 3, which are incorporated by reference in this contract as provided in 29 CFR 5.5.

6. Subcontracts. The contractor or subcontractor must insert in any subcontracts the clauses set forth in paragraphs (1) through (11) of this section, along with the applicable wage determination(s) and such other clauses or contract modifications as the contracting agency may by appropriate instructions require, and a clause requiring the subcontractors to include these clauses and wage determination(s) in any lower tier subcontracts. The prime contractor is responsible for the compliance by any subcontractor or lower tier subcontractor with all the contract clauses in this section. In the event of any violations of these clauses, the prime contractor and any subcontractor(s) responsible will be liable for any unpaid wages and monetary relief, including interest from the date of the underpayment or loss, due to any workers of lower-tier subcontractors, and may be subject to debarment, as appropriate. 29 CFR 5.5.

7. Contract termination: debarment. A breach of the contract clauses in 29 CFR 5.5 may be grounds for termination of the

contract, and for debarment as a contractor and a subcontractor as provided in 29 CFR 5.12.

8. Compliance with Davis-Bacon and Related Act requirements. All rulings and interpretations of the Davis-Bacon and Related Acts contained in 29 CFR parts 1, 3, and 5 are herein incorporated by reference in this contract as provided in 29 CFR 5.5.

9. Disputes concerning labor standards. As provided in 29 CFR 5.5, disputes arising out of the labor standards provisions of this contract shall not be subject to the general disputes clause of this contract. Such disputes shall be resolved in accordance with the procedures of the Department of Labor set forth in 29 CFR parts 5, 6, and 7. Disputes within the meaning of this clause include disputes between the contractor (or any of its subcontractors) and the contracting agency, the U.S. Department of Labor, or the employees or their representatives.

10. Certification of eligibility. a. By entering into this contract, the contractor certifies that neither it nor any person or firm who has an interest in the contractor's firm is a person or firm ineligible to be awarded Government contracts by virtue of 40 U.S.C. 3144(b) or § 5.12(a).

b. No part of this contract shall be subcontracted to any person or firm ineligible for award of a Government contract by virtue of 40 U.S.C. 3144(b) or § 5.12(a).

c. The penalty for making false statements is prescribed in the U.S. Code, Title 18 Crimes and Criminal Procedure, 18 U.S.C. 1001.

11. Anti-retaliation. It is unlawful for any person to discharge, demote, intimidate, threaten, restrain, coerce, blacklist, harass, or in any other manner discriminate against, or to cause any person to discharge, demote, intimidate, threaten, restrain, coerce, blacklist, harass, or in any other manner discriminate against, any worker or job applicant for:

a. Notifying any contractor of any conduct which the worker reasonably believes constitutes a violation of the DBA, Related Acts, this part, or 29 CFR part 1 or 3;

b. Filing any complaint, initiating or causing to be initiated any proceeding, or otherwise asserting or seeking to assert on behalf of themselves or others any right or protection under the DBA, Related Acts, this part, or 29 CFR part 1 or 3;

c. Cooperating in any investigation or other compliance action, or testifying in any proceeding under the DBA, Related Acts, this part, or 29 CFR part 1 or 3; or

d. Informing any other person about their rights under the DBA, Related Acts, this part, or 29 CFR part 1 or 3.

IV. CONTRACT WORK HOURS AND SAFETY STANDARDS ACT

Pursuant to 29 CFR 5.5(b), the following clauses apply to any Federal-aid construction contract in an amount in excess of $100,000 and subject to the overtime provisions of the Contract Work Hours and Safety Standards Act. These clauses shall be inserted in addition to the clauses required by 29 CFR 5.5(a) or 29 CFR 4.6. As used in this paragraph, the terms laborers and mechanics include watchpersons and guards.

1. Overtime requirements. No contractor or subcontractor contracting for any part of the contract work which may require or involve the employment of laborers or mechanics shall require or permit any such laborer or mechanic in any workweek in which he or she is employed on such work to work in excess of forty hours in such workweek unless such laborer or mechanic receives compensation at a rate not less than one and one-half times the basic rate of pay for all hours worked in excess of forty hours in such workweek. 29 CFR 5.5.

2. Violation; liability for unpaid wages; liquidated damages. In the event of any violation of the clause set forth in paragraph 1. of this section the contractor and any subcontractor responsible therefor shall be liable for the unpaid wages and interest from the date of the underpayment. In addition, such contractor and subcontractor shall be liable to the United States (in the case of work done under contract for the District of Columbia or a territory, to such District or to such territory), for liquidated damages. Such liquidated damages shall be computed with respect to each individual laborer or mechanic, including watchpersons and guards, employed in violation of the clause set forth in paragraph 1. of this section, in the sum currently provided in 29 CFR 5.5(b)(2)* for each calendar day on which such individual was required or permitted to work in excess of the standard workweek of forty hours without payment of the overtime wages required by the clause set forth in paragraph 1. of this section.

* $33 as of January 15, 2025 (See 90 FR 1859) as may be adjusted annually by the Department of Labor, pursuant to the Federal Civil Penalties Inflation Adjustment Act of 1990.

3. Withholding for unpaid wages and liquidated damages

a. *Withholding process.* The FHWA or the contracting agency may, upon its own action, or must, upon written request of an authorized representative of the Department of Labor, withhold or cause to be withheld from the contractor so much of the accrued payments or advances as may be considered necessary to satisfy the liabilities of the prime contractor or any subcontractor for any unpaid wages; monetary relief, including interest; and liquidated damages required by the clauses set forth in this section on this contract, any other Federal contract with the same prime contractor, or any other federally assisted contract subject to the Contract Work Hours and Safety Standards Act that is held by the same prime contractor (as defined in § 5.2). The necessary funds may be withheld from the contractor under this contract, any other Federal contract with the same prime contractor, or any other federally assisted contract that is subject to the Contract Work Hours and Safety Standards Act and is held by the same prime contractor, regardless of whether the other contract was awarded or assisted by the same agency, and such funds may be used to satisfy the contractor liability for which the funds were withheld.

b. *Priority to withheld funds.* The Department has priority to funds withheld or to be withheld in accordance with Section III paragraph 2.a. or paragraph 3.a. of this section, or both, over claims to those funds by:

(1) A contractor's surety(ies), including without limitation performance bond sureties and payment bond sureties;

(2) A contracting agency for its reprocurement costs;

(3) A trustee(s) (either a court-appointed trustee or a U.S. trustee, or both) in bankruptcy of a contractor, or a contractor's bankruptcy estate;

(4) A contractor's assignee(s);

(5) A contractor's successor(s); or

(6) A claim asserted under the Prompt Payment Act, 31 U.S.C. 3901–3907.

4. Subcontracts. The contractor or subcontractor must insert in any subcontracts the clauses set forth in paragraphs 1. through 5. of this section and a clause requiring the subcontractors to include these clauses in any lower tier subcontracts. The prime contractor is responsible for compliance by any subcontractor or lower tier subcontractor with the clauses set forth in paragraphs 1. through 5. In the event of any violations of these clauses, the prime contractor and any subcontractor(s) responsible will be liable for any unpaid wages and monetary relief, including interest from the date of the underpayment or loss, due to any workers of lower-tier subcontractors, and associated liquidated damages and may be subject to debarment, as appropriate.

5. Anti-retaliation. It is unlawful for any person to discharge, demote, intimidate, threaten, restrain, coerce, blacklist, harass, or in any other manner discriminate against, or to cause any person to discharge, demote, intimidate, threaten, restrain, coerce, blacklist, harass, or in any other manner discriminate against, any worker or job applicant for:

a. Notifying any contractor of any conduct which the worker reasonably believes constitutes a violation of the Contract Work Hours and Safety Standards Act (CWHSSA) or its implementing regulations in this part;

b. Filing any complaint, initiating or causing to be initiated any proceeding, or otherwise asserting or seeking to assert on behalf of themselves or others any right or protection under CWHSSA or this part;

c. Cooperating in any investigation or other compliance action, or testifying in any proceeding under CWHSSA or this part; or

d. Informing any other person about their rights under CWHSSA or this part.

V. SUBLETTING OR ASSIGNING THE CONTRACT

This provision is applicable to all Federal-aid construction contracts on the National Highway System pursuant to 23 CFR 635.116.

1. The contractor shall perform with its own organization contract work amounting to not less than 30 percent (or a greater percentage if specified elsewhere in the contract) of the total original contract price, excluding any specialty items designated by the contracting agency. Specialty items may be performed by subcontract and the amount of any such specialty items performed may be deducted from the total original contract price before computing the amount of work required to be performed by the contractor's own organization (23 CFR 635.116).

a. The term “perform work with its own organization” in paragraph 1. of this section refers to workers employed or leased by the prime contractor, and equipment owned or rented by the prime contractor, with or without operators. Such term does not include employees or equipment of a subcontractor or lower tier subcontractor, agents of the prime contractor, or any other assignees. The term may include payments for the costs of hiring leased employees from an employee leasing firm meeting all relevant Federal and State regulatory requirements. Leased employees may only be included in this term if the prime contractor meets all of the following conditions: (based on longstanding interpretation)

(1) the prime contractor maintains control over the supervision of the day-to-day activities of the leased employees;
(2) the prime contractor remains responsible for the quality of the work of the leased employees;
(3) the prime contractor retains all power to accept or exclude individual employees from work on the project; and
(4) the prime contractor remains ultimately responsible for the payment of predetermined minimum wages, the submission of payrolls, statements of compliance and all other Federal regulatory requirements.

b. "Specialty Items" shall be construed to be limited to work that requires highly specialized knowledge, abilities, or equipment not ordinarily available in the type of contracting organizations qualified and expected to bid or propose on the contract as a whole and in general are to be limited to minor components of the overall contract. 23 CFR 635.102.

2. Pursuant to 23 CFR 635.116(a), the contract amount upon which the requirements set forth in paragraph 1. of this section is computed includes the cost of material and manufactured products which are to be purchased or produced by the contractor under the contract provisions.

3. Pursuant to 23 CFR 635.116(c), the contractor shall furnish (a) a competent superintendent or supervisor who is employed by the firm, has full authority to direct performance of the work in accordance with the contract requirements, and is in charge of all construction operations (regardless of who performs the work) and (b) such other of its own organizational resources (supervision, management, and engineering services) as the contracting officer determines is necessary to assure the performance of the contract.

4. No portion of the contract shall be sublet, assigned or otherwise disposed of except with the written consent of the contracting officer, or authorized representative, and such consent when given shall not be construed to relieve the contractor of any responsibility for the fulfillment of the contract. Written consent will be given only after the contracting agency has assured that each subcontract is evidenced in writing and that it contains all pertinent provisions and requirements of the prime contract. (based on long-standing interpretation of 23 CFR 635.116).

5. The 30-percent self-performance requirement of paragraph (1) is not applicable to design-build contracts; however,

contracting agencies may establish their own self-performance requirements. 23 CFR 635.116(d).

VI. SAFETY: ACCIDENT PREVENTION

This provision is applicable to all Federal-aid construction contracts and to all related subcontracts.

1. In the performance of this contract the contractor shall comply with all applicable Federal, State, and local laws governing safety, health, and sanitation (23 CFR Part 635). The contractor shall provide all safeguards, safety devices and protective equipment and take any other needed actions as it determines, or as the contracting officer may determine, to be reasonably necessary to protect the life and health of employees on the job and the safety of the public and to protect property in connection with the performance of the work covered by the contract. 23 CFR 635.108.

2. It is a condition of this contract, and shall be made a condition of each subcontract, which the contractor enters into pursuant to this contract, that the contractor and any subcontractor shall not permit any employee, in performance of the contract, to work in surroundings or under conditions which are unsanitary, hazardous or dangerous to his/her health or safety, as determined under construction safety and health standards (29 CFR Part 1926) promulgated by the Secretary of Labor, in accordance with Section 107 of the Contract Work Hours and Safety Standards Act (40 U.S.C. 3704). 29 CFR 1926.10.

3. Pursuant to 29 CFR 1926.3, it is a condition of this contract that the Secretary of Labor or authorized representative thereof, shall have right of entry to any site of contract performance to inspect or investigate the matter of compliance with the construction safety and health standards and to carry out the duties of the Secretary under Section 107 of the Contract Work Hours and Safety Standards Act (40 U.S.C. 3704).

VII. FALSE STATEMENTS CONCERNING HIGHWAY PROJECTS

This provision is applicable to all Federal-aid construction contracts and to all related subcontracts.

In order to assure high quality and durable construction in conformity with approved plans and specifications and a high degree of reliability on statements and representations made by engineers, contractors, suppliers, and workers on Federal-aid highway projects, it is essential that all persons concerned with the project perform their functions as carefully, thoroughly, and honestly as possible. Willful falsification, distortion, or misrepresentation with respect to any facts related to the project is a violation of Federal law. To prevent any misunderstanding regarding the seriousness of these and similar acts, Form FHWA-1022 shall be posted on each Federal-aid highway project (23 CFR Part 635) in one or more places where it is readily available to all persons concerned with the project:

18 U.S.C. 1020 reads as follows:

"Whoever, being an officer, agent, or employee of the United States, or of any State or Territory, or whoever, whether a person, association, firm, or corporation, knowingly makes any false statement, false representation, or false report as to the character, quality, quantity, or cost of the material used or to be used, or the quantity or quality of the work performed or to be performed, or the cost thereof in connection with the submission of plans, maps, specifications, contracts, or costs of construction on any highway or related project submitted for approval to the Secretary of Transportation; or

Whoever knowingly makes any false statement, false representation, false report or false claim with respect to the character, quality, quantity, or cost of any work performed or to be performed, or materials furnished or to be furnished, in connection with the construction of any highway or related project approved by the Secretary of Transportation; or

Whoever knowingly makes any false statement or false representation as to material fact in any statement, certificate, or report submitted pursuant to provisions of the Federal-aid Roads Act approved July 11, 1916, (39 Stat. 355), as amended and supplemented;

Shall be fined under this title or imprisoned not more than 5 years or both."

VIII. IMPLEMENTATION OF CLEAN AIR ACT AND FEDERAL WATER POLLUTION CONTROL ACT (42 U.S.C. 7606; 2 CFR 200.88; EO 11738)

This provision is applicable to all Federal-aid construction contracts in excess of $150,000 and to all related subcontracts. 48 CFR 2.101; 2 CFR 200.327.

By submission of this bid/proposal or the execution of this contract or subcontract, as appropriate, the bidder, proposer, Federal-aid construction contractor, subcontractor, supplier, or vendor agrees to comply with all applicable standards, orders or regulations issued pursuant to the Clean Air Act (42 U.S.C. 7401-7671q) and the Federal Water Pollution Control Act, as amended (33 U.S.C. 1251-1387). Violations must be reported to the Federal Highway Administration and the Regional Office of the Environmental Protection Agency. 2 CFR Part 200, Appendix II.

The contractor agrees to include or cause to be included the requirements of this Section in every subcontract, and further agrees to take such action as the contracting agency may direct as a means of enforcing such requirements. 2 CFR 200.327.

IX. CERTIFICATION REGARDING DEBARMENT, SUSPENSION, INELIGIBILITY AND VOLUNTARY EXCLUSION

This provision is applicable to all Federal-aid construction contracts, design-build contracts, subcontracts, lower-tier subcontracts, purchase orders, lease agreements, consultant contracts or any other covered transaction requiring FHWA approval or that is estimated to cost $25,000 or more – as defined in 2 CFR Parts 180 and 1200. 2 CFR 180.220 and 1200.220.

1**. Instructions for Certification – First Tier Participants:**

a. By signing and submitting this proposal, the prospective first tier participant is providing the certification set out below.

b. The inability of a person to provide the certification set out below will not necessarily result in denial of participation in this

covered transaction. The prospective first tier participant shall submit an explanation of why it cannot provide the certification set out below. The certification or explanation will be considered in connection with the department or agency's determination whether to enter into this transaction. However, failure of the prospective first tier participant to furnish a certification or an explanation shall disqualify such a person from participation in this transaction. 2 CFR 180.320.

c. The certification in this clause is a material representation of fact upon which reliance was placed when the contracting agency determined to enter into this transaction. If it is later determined that the prospective participant knowingly rendered an erroneous certification, in addition to other remedies available to the Federal Government, the contracting agency may terminate this transaction for cause of default. 2 CFR 180.325.

d. The prospective first tier participant shall provide immediate written notice to the contracting agency to whom this proposal is submitted if any time the prospective first tier participant learns that its certification was erroneous when submitted or has become erroneous by reason of changed circumstances. 2 CFR 180.345 and 180.350.

e. The terms "covered transaction," "debarred," "suspended," "ineligible," "participant," "person," "principal," and "voluntarily excluded," as used in this clause, are defined in 2 CFR Parts 180, Subpart I, 180.900-180.1020, and 1200. “First Tier Covered Transactions” refers to any covered transaction between a recipient or subrecipient of Federal funds and a participant (such as the prime or general contract). “Lower Tier Covered Transactions” refers to any covered transaction under a First Tier Covered Transaction (such as subcontracts). “First Tier Participant” refers to the participant who has entered into a covered transaction with a recipient or subrecipient of Federal funds (such as the prime or general contractor). “Lower Tier Participant” refers any participant who has entered into a covered transaction with a First Tier Participant or other Lower Tier Participants (such as subcontractors and suppliers).

f. The prospective first tier participant agrees by submitting this proposal that, should the proposed covered transaction be entered into, it shall not knowingly enter into any lower tier covered transaction with a person who is debarred, suspended, declared ineligible, or voluntarily excluded from participation in this covered transaction, unless authorized by the department or agency entering into this transaction. 2 CFR 180.330.

g. The prospective first tier participant further agrees by submitting this proposal that it will include the clause titled "Certification Regarding Debarment, Suspension, Ineligibility and Voluntary Exclusion-Lower Tier Covered Transactions," provided by the department or contracting agency, entering into this covered transaction, without modification, in all lower tier covered transactions and in all solicitations for lower tier covered transactions exceeding the $25,000 threshold. 2 CFR 180.220 and 180.300.

h. A participant in a covered transaction may rely upon a certification of a prospective participant in a lower tier covered transaction that is not debarred, suspended, ineligible, or voluntarily excluded from the covered transaction, unless it knows that the certification is erroneous. 2 CFR 180.300; 180.320, and 180.325. A participant is responsible for ensuring that its principals are not suspended, debarred, or otherwise ineligible to participate in covered transactions. 2 CFR 180.335. To verify the eligibility of its principals, as well as the eligibility of any lower tier prospective participants, each participant may, but is not required to, check the System for Award Management website (https://www.sam.gov/). 2 CFR 180.300, 180.320, and 180.325.

i. Nothing contained in the foregoing shall be construed to require the establishment of a system of records in order to render in good faith the certification required by this clause. The knowledge and information of the prospective participant is not required to exceed that which is normally possessed by a prudent person in the ordinary course of business dealings.

j. Except for transactions authorized under paragraph (f) of these instructions, if a participant in a covered transaction knowingly enters into a lower tier covered transaction with a person who is suspended, debarred, ineligible, or voluntarily excluded from participation in this transaction, in addition to other remedies available to the Federal Government, the department or agency may terminate this transaction for cause or default. 2 CFR 180.325.

* * * * *

2. Certification Regarding Debarment, Suspension, Ineligibility and Voluntary Exclusion – First Tier Participants:

a. The prospective first tier participant certifies to the best of its knowledge and belief, that it and its principals:

(1) Are not presently debarred, suspended, proposed for debarment, declared ineligible, or voluntarily excluded from participating in covered transactions by any Federal department or agency, 2 CFR 180.335;

(2) Have not within a three-year period preceding this proposal been convicted of or had a civil judgment rendered against them for commission of fraud or a criminal offense in connection with obtaining, attempting to obtain, or performing a public (Federal, State, or local) transaction or contract under a public transaction; violation of Federal or State antitrust statutes or commission of embezzlement, theft, forgery, bribery, falsification or destruction of records, making false statements, or receiving stolen property, 2 CFR 180.800;

(3) Are not presently indicted for or otherwise criminally or civilly charged by a governmental entity (Federal, State or local) with commission of any of the offenses enumerated in paragraph (a)(2) of this certification, 2 CFR 180.700 and 180.800; and

(4) Have not within a three-year period preceding this application/proposal had one or more public transactions (Federal, State or local) terminated for cause or default. 2 CFR 180.335(d).

(5) Are not a corporation that has been convicted of a felony violation under any Federal law within the two-year period preceding this proposal (USDOT Order 4200.6 implementing appropriations act requirements); and

(6) Are not a corporation with any unpaid Federal tax liability that has been assessed, for which all judicial and administrative remedies have been exhausted, or have lapsed, and that is not being paid in a timely manner pursuant to an agreement with the authority responsible for collecting the tax liability (USDOT Order 4200.6 implementing appropriations act requirements).

b. Where the prospective participant is unable to certify to any of the statements in this certification, such prospective participant should attach an explanation to this proposal. 2 CFR 180.335 and 180.340.

* * * * *

3. **Instructions for Certification - Lower Tier Participants:**

(Applicable to all subcontracts, purchase orders, and other lower tier transactions requiring prior FHWA approval or estimated to cost $25,000 or more - 2 CFR Parts 180 and 1200). 2 CFR 180.220 and 1200.220.

a. By signing and submitting this proposal, the prospective lower tier participant is providing the certification set out below.

b. The certification in this clause is a material representation of fact upon which reliance was placed when this transaction was entered into. If it is later determined that the prospective lower tier participant knowingly rendered an erroneous certification, in addition to other remedies available to the Federal Government, the department, or agency with which this transaction originated may pursue available remedies, including suspension and/or debarment.

c. The prospective lower tier participant shall provide immediate written notice to the person to which this proposal is submitted if at any time the prospective lower tier participant learns that its certification was erroneous by reason of changed circumstances. 2 CFR 180.365.

d. The terms "covered transaction," "debarred," "suspended," "ineligible," "participant," "person," "principal," and "voluntarily excluded," as used in this clause, are defined in 2 CFR Parts 180, Subpart I, 180.900 – 180.1020, and 1200. You may contact the person to which this proposal is submitted for assistance in obtaining a copy of those regulations. “First Tier Covered Transactions” refers to any covered transaction between a recipient or subrecipient of Federal funds and a participant (such as the prime or general contract). “Lower Tier Covered Transactions” refers to any covered transaction under a First Tier Covered Transaction (such as subcontracts). “First Tier Participant” refers to the participant who has entered into a covered transaction with a recipient or subrecipient of Federal funds (such as the prime or general contractor). “Lower Tier Participant” refers any participant who has entered into a covered transaction with a First Tier Participant or other Lower Tier Participants (such as subcontractors and suppliers).

e. The prospective lower tier participant agrees by submitting this proposal that, should the proposed covered transaction be entered into, it shall not knowingly enter into any lower tier covered transaction with a person who is debarred, suspended, declared ineligible, or voluntarily excluded from participation in this covered transaction, unless authorized by the department or agency with which this transaction originated. 2 CFR 1200.220 and 1200.332.

f. The prospective lower tier participant further agrees by submitting this proposal that it will include this clause titled "Certification Regarding Debarment, Suspension, Ineligibility and Voluntary Exclusion-Lower Tier Covered Transaction," without modification, in all lower tier covered transactions and in all solicitations for lower tier covered transactions exceeding the $25,000 threshold. 2 CFR 180.220 and 1200.220.

g. A participant in a covered transaction may rely upon a certification of a prospective participant in a lower tier covered transaction that is not debarred, suspended, ineligible, or voluntarily excluded from the covered transaction, unless it knows that the certification is erroneous. A participant is responsible for ensuring that its principals are not suspended, debarred, or otherwise ineligible to participate in covered transactions. To verify the eligibility of its principals, as well as the eligibility of any lower tier prospective participants, each participant may, but is not required to, check the System for Award Management website (https://www.sam.gov/), which is compiled by the General Services Administration. 2 CFR 180.300, 180.320, 180.330, and 180.335.

h. Nothing contained in the foregoing shall be construed to require establishment of a system of records in order to render in good faith the certification required by this clause. The knowledge and information of participant is not required to exceed that which is normally possessed by a prudent person in the ordinary course of business dealings.

i. Except for transactions authorized under paragraph e of these instructions, if a participant in a covered transaction knowingly enters into a lower tier covered transaction with a person who is suspended, debarred, ineligible, or voluntarily excluded from participation in this transaction, in addition to other remedies available to the Federal Government, the department or agency with which this transaction originated may pursue available remedies, including suspension and/or debarment. 2 CFR 180.325.

* * * * *

4. Certification Regarding Debarment, Suspension, Ineligibility and Voluntary Exclusion--Lower Tier Participants:

a. The prospective lower tier participant certifies, by submission of this proposal, that neither it nor its principals:

(1) is presently debarred, suspended, proposed for debarment, declared ineligible, or voluntarily excluded from participating in covered transactions by any Federal department or agency, 2 CFR 180.355;

(2) is a corporation that has been convicted of a felony violation under any Federal law within the two-year period preceding this proposal (USDOT Order 4200.6 implementing appropriations act requirements); and

(3) is a corporation with any unpaid Federal tax liability that has been assessed, for which all judicial and administrative remedies have been exhausted, or have lapsed, and that is not being paid in a timely manner pursuant to an agreement with the authority responsible for collecting the tax liability. (USDOT Order 4200.6 implementing appropriations act requirements)

b. Where the prospective lower tier participant is unable to certify to any of the statements in this certification, such prospective participant should attach an explanation to this proposal.

* * * * *

X. CERTIFICATION REGARDING USE OF CONTRACT FUNDS FOR LOBBYING

This provision is applicable to all Federal-aid construction contracts and to all related subcontracts which exceed $100,000. 49 CFR Part 20, App. A.

1. The prospective participant certifies, by signing and submitting this bid or proposal, to the best of his or her knowledge and belief, that:

a. No Federal appropriated funds have been paid or will be paid, by or on behalf of the undersigned, to any person for influencing or attempting to influence an officer or employee of any Federal agency, a Member of Congress, an officer or employee of Congress, or an employee of a Member of Congress in connection with the awarding of any Federal contract, the making of any Federal grant, the making of any Federal loan, the entering into of any cooperative agreement, and the extension, continuation, renewal, amendment, or modification of any Federal contract, grant, loan, or cooperative agreement.

b. If any funds other than Federal appropriated funds have been paid or will be paid to any person for influencing or attempting to influence an officer or employee of any Federal agency, a Member of Congress, an officer or employee of Congress, or an employee of a Member of Congress in connection with this Federal contract, grant, loan, or cooperative agreement, the undersigned shall complete and submit Standard Form-LLL, "Disclosure Form to Report Lobbying," in accordance with its instructions.

2. This certification is a material representation of fact upon which reliance was placed when this transaction was made or entered into. Submission of this certification is a prerequisite for making or entering into this transaction imposed by 31 U.S.C. 1352. Any person who fails to file the required certification shall be subject to a civil penalty of not less than $10,000 and not more than $100,000 for each such failure.

3. The prospective participant also agrees by submitting its bid or proposal that the participant shall require that the language of this certification be included in all lower tier subcontracts, which exceed $100,000 and that all such recipients shall certify and disclose accordingly.

XI. USE OF UNITED STATES-FLAG VESSELS:

This provision is applicable to all Federal-aid construction contracts, design-build contracts, subcontracts, lower-tier subcontracts, purchase orders, lease agreements, or any other covered transaction. 46 CFR Part 381.

This requirement applies to material or equipment that is acquired for a specific Federal-aid highway project. 46 CFR 381.7. It is not applicable to goods or materials that come into inventories independent of an FHWA funded-contract.

When oceanic shipments (or shipments across the Great Lakes) are necessary for materials or equipment acquired for a specific Federal-aid construction project, the bidder, proposer, contractor, subcontractor, or vendor agrees:

1. To utilize privately owned United States-flag commercial vessels to ship at least 50 percent of the gross tonnage (computed separately for dry bulk carriers, dry cargo liners, and tankers) involved, whenever shipping any equipment, material, or commodities pursuant to this contract, to the extent such vessels are available at fair and reasonable rates for United States-flag commercial vessels. 46 CFR 381.7.

2. To furnish within 20 days following the date of loading for shipments originating within the United States or within 30 working days following the date of loading for shipments originating outside the United States, a legible copy of a rated, ‘on-board’ commercial ocean bill-of-lading in English for each shipment of cargo described in paragraph (b)(1) of this section to both the Contracting Officer (through the prime contractor in the case of subcontractor bills-of-lading) and to the Office of Cargo and Commercial Sealift (MAR-620), Maritime Administration, Washington, DC 20590. (MARAD requires copies of the ocean carrier's (master) bills of lading, certified onboard, dated, with rates and charges. These bills of lading may contain business sensitive information and therefore may be submitted directly to MARAD by the Ocean Transportation Intermediary on behalf of the contractor). 46 CFR 381.7.

ATTACHMENT A - EMPLOYMENT AND MATERIALS PREFERENCE FOR APPALACHIAN DEVELOPMENT HIGHWAY SYSTEM OR APPALACHIAN LOCAL ACCESS ROAD CONTRACTS (40 U.S.C. sections 14501(d) and 14701 and the Appalachian Regional Commission Code as authorized under 40 U.S.C. section 14302)
This provision is applicable to all Federal-aid projects funded under the Appalachian Regional Development Act of 1965.

1. During the performance of this contract, the contractor undertaking to do work which is, or reasonably may be, done as on-site work, shall give preference to qualified persons who regularly reside in the labor area as designated by the DOL wherein the contract work is situated, or the subregion, or the Appalachian counties of the State wherein the contract work is situated, except:

a. To the extent that qualified persons regularly residing in the area are not available.

b. For the reasonable needs of the contractor to employ supervisory or specially experienced personnel necessary to assure an efficient execution of the contract work.

c. For the obligation of the contractor to offer employment to present or former employees as the result of a lawful collective bargaining contract, provided that the number of nonresident persons employed under this subparagraph (1c) shall not exceed 20 percent of the total number of employees employed by the contractor on the contract work, except as provided in subparagraph (4) below.

2. The contractor shall place a job order with the State Employment Service indicating (a) the classifications of the laborers, mechanics and other employees required to perform the contract work, (b) the number of employees required in each classification, (c) the date on which the participant estimates such employees will be required, and (d) any other pertinent information required by the State Employment Service to complete the job order form. The job order may be placed with the State Employment Service in writing or by telephone. If during the course of the contract work, the information submitted by the contractor in the original job order is substantially modified, the participant shall promptly notify the State Employment Service.

3. The contractor shall give full consideration to all qualified job applicants referred to him by the State Employment Service. The contractor is not required to grant employment to any job applicants who, in his opinion, are not qualified to perform the classification of work required.

4. If, within one week following the placing of a job order by the contractor with the State Employment Service, the State Employment Service is unable to refer any qualified job applicants to the contractor, or less than the number requested, the State Employment Service will forward a certificate to the contractor indicating the unavailability of applicants. Such certificate shall be made a part of the contractor's permanent project records. Upon receipt of this certificate, the contractor may employ persons who do not normally reside in the labor area to fill positions covered by the certificate, notwithstanding the provisions of subparagraph (1c) above.

5. The provisions of 40 U.S.C. 14501 allow the contracting agency to provide a contractual preference for the use of mineral resource materials native to the Appalachian region.

6. The contractor shall include the provisions of Sections 1 through 4 of this Attachment A in every subcontract for work which is, or reasonably may be, done as on-site work.

KENTUCKY TRANSPORTATION CABINET
DEPARTMENT OF HIGHWAYS

EMPLOYMENT REQUIREMENTS
RELATING TO
NONDISCRIMINATION OF EMPLOYEES
(APPLICABLE TO FEDERAL-AID SYSTEM CONTRACTS)

AN ACT OF THE KENTUCKY GENERAL ASSEMBLY TO PREVENT DISCRIMINATION IN EMPLOYMENT

KRS CHAPTER 344
EFFECTIVE JUNE 16, 1972

The contract on this project, in accordance with KRS Chapter 344, provides that during the performance of this contract, the contractor agrees as follows:

1. The contractor shall not fail or refuse to hire, or shall not discharge any individual, or otherwise discriminate against an individual with respect to his compensation, terms, conditions, or privileges of employment, because of such individual's race, color, religion, national origin, sex, disability or age (forty and above); or limit, segregate, or classify his employees in any way which would deprive or tend to deprive an individual of employment opportunities or otherwise adversely affect his status as an employee, because of such individual's race, color, religion, national origin, sex, disability or age forty (40) and over. The contractor agrees to post in conspicuous places, available to employees and applicants for employment, notices to be provided setting forth the provisions of this nondiscrimination clause.

2. The contractor shall not print or publish or cause to be printed or published a notice or advertisement relating to employment by such an employer or membership in or any classification or referral for employment by the employment agency, indicating any preference, limitation, specification, or discrimination, based on race, color, religion, national origin, sex, or age forty (40) and over, or because the person is a qualified individual with a disability, except that such a notice or advertisement may indicate a preference, limitation, or specification based on religion, national origin, sex, or age forty (40) and over, or because the person is a qualified individual with a disability, when religion, national origin, sex, or age forty (40) and over, or because the person is a qualified individual with a disability, is a bona fide occupational qualification for employment.

3. If the contractor is in control of apprenticeship or other training or retraining, including on-the-job training programs, he shall not discriminate against an individual because of his race, color, religion, national origin, sex, disability or age forty (40) and over, in admission to, or employment in any program established to provide apprenticeship or other training.

4. The contractor will send to each labor union or representative of workers with which he has a collective bargaining agreement or other contract or understanding, a notice to be provided advising the said labor union or workers' representative of the contractor's commitments under this section, and shall post copies of the notice in conspicuous places available to employees and applicants for employment. The contractor will take such action with respect to any subcontract or purchase order as the administrating agency may direct as a means of enforcing such provisions, including sanctions for non-compliance.

Revised: January 25, 2017

Standard Title VI/Non-Discrimination Assurances

During the performance of this contract, the contractor, for itself, its assignees, and successors in interest (hereinafter referred to as the "contractor") agrees as follows:

1. **Compliance with Regulations:** The contractor (hereinafter includes consultants) will comply with the Acts and the Regulations relative to Non-discrimination in Federally-assisted programs of the U.S. Department of Transportation, **Federal Highway Administration**, as they may be amended from time to time, which are herein incorporated by reference and made a part of this contract.

2. **Non-discrimination:** The contractor, with regard to the work performed by it during the contract, will not discriminate on the grounds of race, color, or national origin in the selection and retention of subcontractors, including procurements of materials and leases of equipment. The contractor will not participate directly or indirectly in the discrimination prohibited by the Acts and the Regulations, including employment practices when the contract covers any activity, project, or program set forth in Appendix B of 49 CFR Part 21.

3. **Solicitations for Subcontracts, Including Procurements of Materials and Equipment:** In all solicitations, either by competitive bidding, or negotiation made by the contractor for work to be performed under a subcontract, including procurements of materials, or leases of equipment, each potential subcontractor or supplier will be notified by the contractor of the contractor's obligations under this contract and the Acts and the Regulations relative to Non-discrimination on the grounds of race, color, or national origin.

4. **Information and Reports:** The contractor will provide all information and reports required by the Acts, the Regulations, and directives issued pursuant thereto and will permit access to its books, records, accounts, other sources of information, and its facilities as may be determined by the Recipient or the **Federal Highway Administration** to be pertinent to ascertain compliance with such Acts, Regulations, and instructions. Where any information required of a contractor is in the exclusive possession of another who fails or refuses to furnish the information, the contractor will so certify to the Recipient or the **Federal Highway Administration**, as appropriate, and will set forth what efforts it has made to obtain the information.

5. **Sanctions for Noncompliance:** In the event of a contractor's noncompliance with the Non-discrimination provisions of this contract, the Recipient will impose such contract sanctions as it or the **Federal Highway Administration** may determine to be appropriate, including, but not limited to:

    a. withholding payments to the contractor under the contract until the contractor complies; and/or
    b. cancelling, terminating, or suspending a contract, in whole or in part.

6. **Incorporation of Provisions:** The contractor will include the provisions of paragraphs one through six in every subcontract, including procurements of materials and leases of equipment, unless exempt by the Acts, the Regulations and directives issued pursuant thereto. The contractor will take action with respect to any subcontract or procurement as the Recipient or the **Federal Highway Administration** may direct as a means of enforcing such provisions including sanctions for noncompliance. Provided, that if the contractor becomes involved in, or is threatened with litigation by a subcontractor, or supplier because of such direction, the contractor may request the Recipient to enter into any litigation to protect the interests of the Recipient. In addition, the contractor may request the United States to enter into the litigation to protect the interests of the United States.

Standard Title VI/Non-Discrimination Statutes and Authorities

During the performance of this contract, the contractor, for itself, its assignees, and successors in interest (hereinafter referred to as the "contractor") agrees to comply with the following non-discrimination statutes and authorities; including but not limited to:

- Title VI of the Civil Rights Act of 1964 (42 U.S.C. § 2000d *et seq.*, 78 stat. 252), (prohibits discrimination on the basis of race, color, national origin); and 49 CFR Part 21;
- The Uniform Relocation Assistance and Real Property Acquisition Policies Act of 1970, (42 U.S.C. § 4601), (prohibits unfair treatment of persons displaced or whose property has been acquired because of Federal or Federal-aid programs and projects);
- Federal-Aid Highway Act of 1973, (23 U.S.C. § 324 *et seq.*), (prohibits discrimination on the basis of sex);
- Section 504 of the Rehabilitation Act of 1973, (29 U.S.C. § 794 *et seq.*), as amended, (prohibits discrimination on the basis of disability); and 49 CFR Part 27;
- The Age Discrimination Act of 1975, as amended, (42 U.S.C. § 6101 *et seq.*), (prohibits discrimination on the basis of age);
- Airport and Airway Improvement Act of 1982, (49 USC § 471, Section 47123), as amended, (prohibits discrimination based on race, creed, color, national origin, or sex);
- The Civil Rights Restoration Act of 1987, (PL 100-209), (Broadened the scope, coverage and applicability of Title VI of the Civil Rights Act of 1964, The Age Discrimination Act of 1975 and Section 504 of the Rehabilitation Act of 1973, by expanding the definition of the terms "programs or activities" to include all of the programs or activities of the Federal-aid recipients, sub-recipients and contractors, whether such programs or activities are Federally funded or not);
- Titles II and III of the Americans with Disabilities Act, which prohibit discrimination on the basis of disability in the operation of public entities, public and private transportation systems, places of public accommodation, and certain testing entities (42 U.S.C. §§ 12131 -- 12189) as implemented by Department of Transportation regulations at 49 C.F.R. parts 37 and 38;
- The Federal Aviation Administration's Non-discrimination statute (49 U.S.C. § 47123) (prohibits discrimination on the basis of race, color, national origin, and sex);
- Executive Order 12898, Federal Actions to Address Environmental Justice in Minority Populations and Low-Income Populations, which ensures non-discrimination against minority populations by discouraging programs, policies, and activities with disproportionately high and adverse human health or environmental effects on minority and low-income populations;
- Executive Order 13166, Improving Access to Services for Persons with Limited English Proficiency, and resulting agency guidance, national origin discrimination includes discrimination because of limited English proficiency (LEP). To ensure compliance with Title VI, you must take reasonable steps to ensure that LEP persons have meaningful access to your programs (70 Fed. Reg. at 74087 to 74100);
- Title IX of the Education Amendments of 1972, as amended, which prohibits you from discriminating because of sex in education programs or activities (20 U.S.C. 1681 et seq).

EXECUTIVE BRANCH CODE OF ETHICS

The Executive Branch Code of Ethics created by Kentucky Revised Statutes (KRS) Chapter 11A, effective July 14, 1992, establishes the ethical standards that govern the conduct of all executive branch employees. The Executive Branch Code of Ethics, which states, in part:

KRS 11A.040 (7) provides:

A present or former public servant listed in KRS 11A.010(9)(a) to (g) shall not, within one (1) year following termination of his or her office or employment, accept employment, compensation, or other economic benefit from any person or business that contracts or does business with, or is regulated by, the state in matters in which he was directly involved during the last thirty-six (36) months of his tenure. This provision shall not prohibit an individual from returning to the same business, firm, occupation, or profession in which he was involved prior to taking office or beginning his term of employment, or for which he received, prior to his state employment, a professional degree or license, provided that, for a period of one (1) year, he or she personally refrains from working on any matter in which he was directly involved during the last thirty-six (36) months of his or her tenure in state government. This subsection shall not prohibit the performance of ministerial functions, including but not limited to filing tax returns, filing applications for permits or licenses, or filing incorporation papers, nor shall it prohibit the former officer or public servant from receiving public funds disbursed through entitlement programs.

KRS 11A.040 (9) states:

A former public servant shall not represent a person or business before a state agency in a matter in which the former public servant was directly involved during the last thirty-six (36) months of his tenure, for a period of one (1) year after the latter of:

a) The date of leaving office or termination of employment; or
b) The date the term of office expires to which the public servant was elected.

This law is intended to promote public confidence in the integrity of state government and to declare as public policy the idea that state employees should view their work as a public trust and not to obtain private benefits.

If you have worked for the executive branch of state government within the past year, you may be subject to the law's prohibitions. The law's applicability may be different if you hold elected office or are contemplating representation of another before a state agency.

Also, if you are affiliated with a firm which does business with the state and which employs former state executive-branch employees, you should be aware that the law may apply to them.

In case of doubt, the law permits you to request an advisory opinion from the Executive Branch Ethics Commission, 1025 Capital Center Drive, Suite 105, Frankfort, Kentucky 40601; telephone (502) 564-7954.

Revised: March 11, 2025

"General Decision Number: KY20260038 05/18/2026

State: Kentucky

Construction Types: Highway

Counties: Kentucky Counties of
Anderson, Bath, Bourbon, Boyd, Boyle,
Bracken, Breckinridge, Bullitt, Carroll,
Carter, Clark, Elliott, Fayette,
Fleming, Franklin, Gallatin, Grant,
Grayson, Greenup, Hardin, Harrison,
Henry, Jefferson, Jessamine, Larue,
Lewis, Madison, Marion, Mason, Meade,
Mercer, Montgomery, Nelson, Nicholas,
Oldham, Owen, Robertson, Rowan, Scott,
Shelby, Spencer, Trimble, Washington and
Woodford

Modification Number Publication Date
0 01/02/2026
1 05/18/2026

BRIN0004-003 06/01/2024
Rates Fringes
BRICKLAYER (BRECKENRIDGE COUNTY).....$ 33.70 16.57

BRKY0001-005 06/01/2024
Rates Fringes
BRICKLAYER (BULLITT, CARROLL, GRAYSON, HARDIN,
HENRY, JEFFERSON, LARUE, MARION, MEADE, NELSON,
OLDHAM, SHELBY, SPENCER, & TRIMBLE COUNTIES).....$ 35.00 17.13

BRKY0002-006 06/01/2024
Rates Fringes
BRICKLAYER (BRACKEN, GALLATIN, GRANT, MASON &
ROBERTSON COUNTIES).....$ 35.00 17.13

BRKY0007-004 06/01/2024
Rates Fringes
BRICKLAYER (BOYD, CARTER, ELLIOT, FLEMING, GREENUP,
LEWIS & ROWAN COUNTIES).....$ 41.05 21.79

BRKY0017-004 06/01/2024
Rates Fringes
BRICKLAYER (ANDERSON, BATH, BOURBON, BOYLE, CLARK,
FAYETTE, FRANKLIN, HARRISON, JESSAMINE, MADISON,
MERCER, MONTGOMERY, NICHOLAS, OWEN, SCOTT,
WASHINGTON & WOODFORD COUNTIES).....$ 35.00 17.13

CARP0064-001 04/01/2025
Rates Fringes
PILEDRIVERMAN.....$ 34.39 24.06
DIVER.....$ 51.21 24.06
CARPENTER.....$ 33.89 24.06

ELEC0212-008 06/02/2025
Rates Fringes
ELECTRICIAN (BRACKEN, GALLATIN AND GRANT COUNTIES)..$ 38.05 22.97

ELEC0212-014 11/27/2023
Rates Fringes
SOUND & COMMUNICATION TECHNICIAN (BRACKEN, GALLATIN
& GRANT COUNTIES).....$ 27.20 14.54

ELEC0317-012 06/02/2025
Rates Fringes
ELECTRICIAN: WIREMEN (BOYD, CARTER, ELLIOT & ROWAN
COUNTIES).....$ 41.15 29.35

ELEC0369-007 05/27/2025
Rates Fringes
ELECTRICIAN (ANDERSON, BATH, BOURBON, BOYLE,
BRECKINRIDGE, BULLITT, CARROLL, CLARK, FAYETTE,
FRAONKLIN, GRAYSON, HARDIN, HARRISON, HENRY,
JEFFERSON, JESSAMINE, LARUE, MADISON, MARION,
MEADE, MERCER, MONTGOMERY, NELSON, NICHOLAS,
OLDHAM, OWEN, ROBERTSON, SCOTT, SHELBY, SPENCER,
TRIMBLE, WASHINGTON, & WOODFORD COUNTIES:).....$ 40.96 22.44

ELEC0575-002 05/29/2023
Rates Fringes
ELECTRICIAN (FLEMING, GREENUP, LEWIS & MASON
COUNTIES).....$ 37.00 22.26

ENGI0181-018 07/01/2025
Rates Fringes
POWER EQUIPMENT OPERATOR GROUP 4 BITUMINOUS
DISTRIBUTOR; BURLAP & CURING MACHINE; CEMENT GUN;
CONCRETE SAW; CONVEYOR; DECKHAND OILER; GROUT PUMP;
HYDRAULIC POST DRIVER; HYDRO SEEDER; MUD JACK;
OILER; PAVING JOINT MACHINE; POWER FORM HANDLING
EQUIPMENT; PUMP; ROLLER (EARTH); STEERMAN; TAMPING
MACHINE; TRACTOR (UNDER 50 H.P.); & VIBRATOR
CRANES - WITH BOOMS 150 FT. & OVER (INCLUDING JIB),
AND WHERE THE LENGTH OF THE BOOM IN COMBINATION
WITH THE LENGTH OF THE PILING LEADS EQUALS OR
EXCEEDS 150 FT. - $1.00 OVER GROUP 1 RATE
EMPLOYEES ASSIGNED TO WORK BELOW GROUND LEVEL ARE
TO BE PAID 10% ABOVE BASIC WAGE RATE. THIS DOES NOT
APPLY TO OPEN CUT WORK.....$ 38.37 19.60
POWER EQUIPMENT OPERATOR GROUP 3 ALL OFF ROAD
MATERIAL HANDLING EQUIPMENT, INCLUDING ARTICULATING
DUMP TRUCKS; GREASER ON GREASE FACILITIES SERVICING
HEAVY EQUIPMENT CRANES - WITH BOOMS 150 FT. &
OVER (INCLUDING JIB), AND WHERE THE LENGTH OF THE
BOOM IN COMBINATION WITH THE LENGTH OF THE PILING
LEADS EQUALS OR EXCEEDS 150 FT. - $1.00 OVER GROUP
1 RATE EMPLOYEES ASSIGNED TO WORK BELOW GROUND
LEVEL ARE TO BE PAID 10% ABOVE BASIC WAGE RATE.
THIS DOES NOT APPLY TO OPEN CUT WORK.....$ 39.14 19.60
POWER EQUIPMENT OPERATOR GROUP 2 AIR COMPRESSOR
(OVER 900 CU. FT. PER MIN.); BITUMINOUS MIXER; BOOM
TYPE TAMPING MACHINE; BULL FLOAT; CONCRETE MIXER
(UNDER 21 CU. FT.); DREDGE ENGINEER; ELECTRIC
VIBRATOR; COMPACTOR/SELF-PROPELLED COMPACTOR;
ELEVATOR (ONE DRUM OR BUCK HOIST); ELEVATOR (WHEN
USED TO HOIST BUILDING MATERIAL); FINISH MACHINE;
FIREMEN & HOIST (ONE DRUM); FLEXPLANE; FORKLIFT
(REGARDLESS OF LIFT HEIGHT); FORM GRADER; JOINT
SEALING MACHINE; OUTBOARD MOTOR BOAT; POWER SWEEPER
(RIDING TYPE); ROLLER (ROCK); ROSS CARRIER; SKID
MOUNTED OR TRAILER MOUNTED CONRETE PUMP; SKID STEER
MACHINE WITH ALL ATTACHMENTS; SWITCHMAN OR
BRAKEMAN; THROTTLE VALVE PERSON; TRACTAIR & ROAD
WIDENING TRENCHER; TRACTOR (50 H.P. OR OVER); TRUCK
CRANE OILER; TUGGER; WELDING MACHINE; WELL POINTS;
& WHIRLEY OILER CRANES - WITH BOOMS 150 FT. &
OVER (INCLUDING JIB), AND WHERE THE LENGTH OF THE
BOOM IN COMBINATION WITH THE LENGTH OF THE PILING
LEADS EQUALS OR EXCEEDS 150 FT. - $1.00 OVER GROUP
1 RATE EMPLOYEES ASSIGNED TO WORK BELOW GROUND
LEVEL ARE TO BE PAID 10% ABOVE BASIC WAGE RATE.
THIS DOES NOT APPLY TO OPEN CUT WORK.....$ 38.69 19.60
POWER EQUIPMENT OPERATOR GROUP 1 A-FRAME WINCH
TRUCK; AUTO PATROL; BACKFILLER; BATCHER PLANT;
BITUMINOUS PAVER; BITUMINOUS TRANSFER MACHINE; BOOM
CAT; BULLDOZER; MECHANIC; CABLEWAY; CARRY-ALL
SCOOP; CARRY DECK CRANE; CENTRAL COMPRESSOR PLANT;
CHERRY PICKER; CLAMSHELL; CONCRETE MIXER (21 CU.
FT. OR OVER); CONCRETE PAVER; TRUCK-MOUNTED
CONCRETE PUMP; CORE DRILL; CRANE; CRUSHER PLANT;

DERRICK; DERRICK BOAT; DITCHING & TRENCHING MACHINE; DRAGLINE; DREDGE OPERATOR; DREDGE ENGINEER; ELEVATING GRADER & LOADERS; GRADE-ALL; GURRIES; HEAVY EQUIPMENT ROBOTICS OPERATOR/MECHANIC; HIGH LIFT; HOE-TYPE MACHINE; HOIST (TWO OR MORE DRUMS); HOISTING ENGINE (TWO OR MORE DRUMS); HORIZONTAL DIRECTIONAL DRILL OPERATOR; HYDROCRANE; HYSTER; KECAL LOADER; LETOURNEAU; LOCOMOTIVE; MECHANIC; MECHANICALLY OPERATED LASER SCREED; MECHANIC WELDER; MUCKING MACHINE; MOTOR SCRAPER; ORANGEPEEL BUCKET; OVERHEAD CRANE; PILEDRIVER; POWER BLADE; PUMPCRETE; PUSH DOZER; ROCK SPREADER, ATTACHED TO EQUIPMENT; ROTARY DRILL; ROLLER (BITUMINOUS); ROUGH TERRAIN CRANE; SCARIFIER; SCOOPMOBILE; SHOVEL; SIDE BOOM; SUBGRADER; TAILBOOM; TELESCOPING TYPE FORKLIFT; TOW OR PUSH BOAT; TOWER CRANE (FRENCH, GERMAN & OTHER TYPES); TRACTOR SHOVEL; TRUCK CRANE; TUNNEL MINING MACHINES, INCLUDING MOLES, SHIELDS OR SIMILAR TYPES OF TUNNEL MINING EQUIPMENT CRANES - WITH BOOMS 150 FT. & OVER (INCLUDING JIB), AND WHERE THE LENGTH OF THE BOOM IN COMBINATION WITH THE LENGTH OF THE PILING LEADS EQUALS OR EXCEEDS 150 FT. - $1.00 OVER GROUP 1 RATE EMPLOYEES ASSIGNED TO WORK BELOW GROUND LEVEL ARE TO BE PAID 10% ABOVE BASIC WAGE RATE. THIS DOES NOT APPLY TO OPEN CUT WORK.....$ 41.55 19.60

IRON0044-009 06/01/2025
Rates Fringes
IRONWORKER: STRUCTURAL (BRACKEN, GALLATIN, GRANT, HARRISON, ROBERTSON, BOURBON (NORTHERN THIRD, INCLUDING TOWNSHIPS OF JACKSON, MILLERSBURG, RUDDEL MILLS & SHAWHAN); CARROLL (EASTERN THIRD, INCLUDING THE TOWNSHIP OF GHENT); FLEMING (WESTERN PART, EXCLUDING TOWNSHIPS OF BEECHBURG, COLFAX, ELIZAVILLE, FLEMINGSBURG, FLEMINGSBURG JUNCTION, FOXPORT, GRANGE CITY, HILLSBORO, HILLTOP, MOUNT CARMEL, MUSES MILLS, NEPTON, PECKSRIDGE, PLUMMERS LANDING, PLUMMERS MILL, POPLAR PLAINS, RINGOS MILLS, TILT.....$ 37.77 23.90
IRONWORKER: FENCE ERECTOR (BRACKEN, GALLATIN, GRANT, HARRISON, ROBERTSON, BOURBON (NORTHERN THIRD, INCLUDING TOWNSHIPS OF JACKSON, MILLERSBURG, RUDDEL MILLS & SHAWHAN); CARROLL (EASTERN THIRD, INCLUDING THE TOWNSHIP OF GHENT); FLEMING (WESTERN PART, EXCLUDING TOWNSHIPS OF BEECHBURG, COLFAX, ELIZAVILLE, FLEMINGSBURG, FLEMINGSBURG JUNCTION, FOXPORT, GRANGE CITY, HILLSBORO, HILLTOP, MOUNT CARMEL, MUSES MILLS, NEPTON, PECKSRIDGE, PLUMMERS LANDING, PLUMMERS MILL, POPLAR PLAINS, RINGOS MILLS, T.....$ 35.88 23.90

IRON0070-006 06/01/2025
Rates Fringes
IRONWORKER (ANDERSON, BOYLE, BRECKINRIDGE, BULLITT, FAYETTE, FRANKLIN, GRAYSON, HARDIN, HENRY, JEFFERSON, JESSAMINE, LARUE, MADISON, MARION, MEADE, MERCER, NELSON, OLDHAM, SHELBY, SPENCER, TRIMBLE, WASHINGTON & WOODFORD BOURBON (SOUTHERN TWO-THIRDS, INCLUDING TOWNSHIPS OF AUSTERLITY, CENTERVILLE, CLINTONVILLE, ELIZABETH, HUTCHISON, LITTLEROCK, NORTH MIDDLETOWN & PARIS); CARROLL (WESTERN TWO-THIRDS, INCLUDING TOWNSHIPS OF CARROLLTON, EASTERDAY, ENGLISH, LOCUST, LOUIS, PRESTONVILLE &amp.....$ 36.17 25.80---

IRON0769-007 06/01/2025
Rates Fringes
IRONWORKER ZONE 3.....$ 41.70 29.59
IRONWORKER ZONE 2.....$ 40.10 29.59
IRONWORKER ZONE 1.....$ 39.70 29.59

LABO0189-003 07/01/2025
Rates Fringes
LABORERS: GROUP 4 CAISSON WORKER (FREE AIR); CEMENT FINISHER; ENVIRONMENTAL - NUCLEAR, RADIATION, TOXIC & HAZARDOUS WASTE - LEVELS A & B; MINER & DRILLER (FREE AIR); TUNNEL BLASTER; & TUNNEL MUCKER (FREE AIR); DIRECTIONAL & HORIZONTAL BORING; AIR TRACK

DRILLERS (ALL TYPES); POWDERMEN & BLASTERS; TROXLER
& CONCRETE TESTER IF LABORER IS UTILIZED (BATH,
BOURBON, BOYD, BOYLE, BRACKEN, CARTER, CLARK,
ELLIOTT, FAYETTE, FLEMING, FRANKLIN, GALLATIN,
GRANT, GREENUP, HARRISON, JESSAMINE, LEWIS,
MADISON, MASON, MERCER, MONTGOMERY, NICHOLAS, OWEN,
ROBERTSON, ROWAN, SCOTT, & WOOLFORD COUNTIES).....$ 27.77 19.66
LABORERS: GROUP 3 ASPHALT LUTEMAN & RAKER; GUNNITE
NOZZLEMAN; GUNNITE OPERATOR & MIXER; GROUT PUMP
OPERATOR; SIDE RAIL SETTER; RAIL PAVED DITCHES;
SCREW OPERATOR; TUNNEL (FREE AIR); WATER BLASTER
(BATH, BOURBON, BOYD, BOYLE, BRACKEN, CARTER,
CLARK, ELLIOTT, FAYETTE, FLEMING, FRANKLIN,
GALLATIN, GRANT, GREENUP, HARRISON, JESSAMINE,
LEWIS, MADISON, MASON, MERCER, MONTGOMERY,
NICHOLAS, OWEN, ROBERTSON, ROWAN, SCOTT, & WOOLFORD
COUNTIES).....$ 27.17 19.66
LABORERS: GROUP 2 BATTER BOARD MAN (SANITARY &
STORM SEWER); BRICKMASON TENDER; MORTAR MIXER
OPERATOR; SCAFFOLD BUILDER; BURNER & WELDER;
BUSHAMMER; CHAIN SAW OPERATOR; CONCRETE SAW
OPERATOR; DECKHAND SCOW MAN; DRY CEMENT HANDLER;
ENVIRONMENTAL - NUCLEAR, RADIATION, TOXIC &
HAZARDOUS WASTE - LEVEL C; FORKLIFT OPERATOR FOR
MASONARY; FORM SETTER; GREEN CONCRETE CUTTING; HAND
OPERATED GROUTER & GRINDER MACHINE OPERATOR;
JACKHAMMER; PAVEMENT BREAKER; PAVING JOINT MACHINE;
PIPELAYER; PLASTIC PIPE FUSION; POWER DRIVEN
GEORGIA BUGGY & WHEEL BARROW; POWER POST HOLE
DIGGER; PRECAST MANHOLE SETTER; WALK-BEHIND TAMPER;
WALK-BEHIND TRENCHER; SAND BLASTER; CONCRETE
CHIPPER; SURFACE GRINDER; VIBRATOR OPERATOR; WAGON
DRILLER (BATH, BOURBON, BOYD, BOYLE, BRACKEN,
CARTER, CLARK, ELLIOTT, FAYETTE, FLEMING, FRANKLIN,
GALLATIN, GRANT, GREENUP, HARRISON, JESSAMINE,
LEWIS, MADISON, MASON, MERCER, MONTGOMERY,
NICHOLAS, OWEN, ROBERTSON, ROWAN, SCOTT, & WOOLFORD
COUNTIES).....$ 27.12 19.66
LABORERS: GROUP 1 AGING & CURING OF CONCRETE;
ASBESTOS ABATEMENT WORKER; ASPHALT PLANT; ASPHALT;
BATCH TRUCK DUMP; CARPENTER TENDER; CEMENT MASON
TENDER; CLEANING OF MACHINES; CONCRETE; DEMOLITION;
DREDGING; ENVIRONMENTAL - NUCLEAR, RADIATION, TOXIC
& HAZARDOUS WASTE - LEVEL D; FLAGPERSON; GRADE
CHECKER; HAND DIGGING & HAND BACK FILLING; HIGHWAY
MARKER PLACER; LANDSCAPING, MESH HANDLER & PLACER;
PUDDLER; RAILROAD; RIP-RAP & GROUTER; RIGHT-OF-WAY;
SIGN, GUARD RAIL & FENCE INSTALLER; SIGNAL PERSON;
SOUND BARRIER INSTALLER; STORM & SANITARY SEWER;
SWAMPER; TRUCK SPOTTER & DUMPER; WRECKING OF
CONCRETE FORMS; GENERAL CLEANUP (BATH, BOURBON,
BOYD, BOYLE, BRACKEN, CARTER, CLARK, ELLIOTT,
FAYETTE, FLEMING, FRANKLIN, GALLATIN, GRANT,
GREENUP, HARRISON, JESSAMINE, LEWIS, MADISON,
MASON, MERCER, MONTGOMERY, NICHOLAS, OWEN,
ROBERTSON, ROWAN, SCOTT, & WOOLFORD COUNTIES).....$ 26.87 19.66

LABO0189-008 07/01/2025
Rates Fringes
LABORERS: GROUP 4 CAISSON WORKER (FREE AIR); CEMENT
FINISHER; ENVIRONMENTAL - NUCLEAR, RADIATION, TOXIC
& HAZARDOUS WASTE - LEVELS A & B; MINER & DRILLER
(FREE AIR); TUNNEL BLASTER; & TUNNEL MUCKER (FREE
AIR); DIRECTIONAL & HORIZONTAL BORING; AIR TRACK
DRILLERS (ALL TYPES); POWDERMEN & BLASTERS; TROXLER
& CONCRETE TESTER IF LABORER IS UTILIZED
(ANDERSON, BULLITT, CARROLL, HARDIN, HENRY,
JEFFERSON, LARUE, MARION, MEADE, NELSON, OLDHAM,
SHELBY, SPENCER, TRIMBLE & WASHINGTON COUNTIES).....$ 27.77 19.66
LABORERS: GROUP 3 ASPHALT LUTEMAN & RAKER; GUNNITE
NOZZLEMAN; GUNNITE OPERATOR & MIXER; GROUT PUMP
OPERATOR; SIDE RAIL SETTER; RAIL PAVED DITCHES;
SCREW OPERATOR; TUNNEL (FREE AIR); WATER BLASTER
(ANDERSON, BULLITT, CARROLL, HARDIN, HENRY,
JEFFERSON, LARUE, MARION, MEADE, NELSON, OLDHAM,
SHELBY, SPENCER, TRIMBLE & WASHINGTON COUNTIES).....$ 27.17 19.66
LABORERS: GROUP 2 BATTER BOARD MAN (SANITARY &
STORM SEWER); BRICKMASON TENDER; MORTAR MIXER
OPERATOR; SCAFFOLD BUILDER; BURNER & WELDER;
BUSHAMMER; CHAIN SAW OPERATOR; CONCRETE SAW
OPERATOR; DECKHAND SCOW MAN; DRY CEMENT HANDLER;

ENVIRONMENTAL - NUCLEAR, RADIATION, TOXIC &
HAZARDOUS WASTE - LEVEL C; FORKLIFT OPERATOR FOR
MASONARY; FORM SETTER; GREEN CONCRETE CUTTING; HAND
OPERATED GROUTER & GRINDER MACHINE OPERATOR;
JACKHAMMER; PAVEMENT BREAKER; PAVING JOINT MACHINE;
PIPELAYER; PLASTIC PIPE FUSION; POWER DRIVEN
GEORGIA BUGGY & WHEEL BARROW; POWER POST HOLE
DIGGER; PRECAST MANHOLE SETTER; WALK-BEHIND TAMPER;
WALK-BEHIND TRENCHER; SAND BLASTER; CONCRETE
CHIPPER; SURFACE GRINDER; VIBRATOR OPERATOR; WAGON
DRILLER (ANDERSON, BULLITT, CARROLL, HARDIN,
HENRY, JEFFERSON, LARUE, MARION, MEADE, NELSON,
OLDHAM, SHELBY, SPENCER, TRIMBLE & WASHINGTON
COUNTIES).....$ 27.12 19.66
LABORERS: GROUP 1 AGING & CURING OF CONCRETE;
ASBESTOS ABATEMENT WORKER; ASPHALT PLANT; ASPHALT;
BATCH TRUCK DUMP; CARPENTER TENDER; CEMENT MASON
TENDER; CLEANING OF MACHINES; CONCRETE; DEMOLITION;
DREDGING; ENVIRONMENTAL - NUCLEAR, RADIATION, TOXIC
& HAZARDOUS WASTE - LEVEL D; FLAGPERSON; GRADE
CHECKER; HAND DIGGING & HAND BACK FILLING; HIGHWAY
MARKER PLACER; LANDSCAPING, MESH HANDLER & PLACER;
PUDDLER; RAILROAD; RIP-RAP & GROUTER; RIGHT-OF-WAY;
SIGN, GUARD RAIL & FENCE INSTALLER; SIGNAL PERSON;
SOUND BARRIER INSTALLER; STORM & SANITARY SEWER;
SWAMPER; TRUCK SPOTTER & DUMPER; WRECKING OF
CONCRETE FORMS; GENERAL CLEANUP (ANDERSON,
BULLITT, CARROLL, HARDIN, HENRY, JEFFERSON, LARUE,
MARION, MEADE, NELSON, OLDHAM, SHELBY, SPENCER,
TRIMBLE & WASHINGTON COUNTIES).....$ 26.87 19.66

LABO0189-009 07/01/2025
Rates Fringes
LABORERS: GROUP 4 CAISSON WORKER (FREE AIR); CEMENT
FINISHER; ENVIRONMENTAL - NUCLEAR, RADIATION, TOXIC
& HAZARDOUS WASTE - LEVELS A & B; MINER & DRILLER
(FREE AIR); TUNNEL BLASTER; & TUNNEL MUCKER (FREE
AIR); DIRECTIONAL & HORIZONTAL BORING; AIR TRACK
DRILLERS (ALL TYPES); POWDERMEN & BLASTERS; TROXLER
& CONCRETE TESTER IF LABORER IS UTILIZED
(BRECKINRIDGE & GRAYSON COUNTIES).....$ 27.77 19.66
LABORERS: GROUP 3 ASPHALT LUTEMAN & RAKER; GUNNITE
NOZZLEMAN; GUNNITE OPERATOR & MIXER; GROUT PUMP
OPERATOR; SIDE RAIL SETTER; RAIL PAVED DITCHES;
SCREW OPERATOR; TUNNEL (FREE AIR); WATER BLASTER
(BRECKINRIDGE & GRAYSON COUNTIES).....$ 27.17 19.66
LABORERS: GROUP 2 BATTER BOARD MAN (SANITARY &
STORM SEWER); BRICKMASON TENDER; MORTAR MIXER
OPERATOR; SCAFFOLD BUILDER; BURNER & WELDER;
BUSHAMMER; CHAIN SAW OPERATOR; CONCRETE SAW
OPERATOR; DECKHAND SCOW MAN; DRY CEMENT HANDLER;
ENVIRONMENTAL - NUCLEAR, RADIATION, TOXIC &
HAZARDOUS WASTE - LEVEL C; FORKLIFT OPERATOR FOR
MASONARY; FORM SETTER; GREEN CONCRETE CUTTING; HAND
OPERATED GROUTER & GRINDER MACHINE OPERATOR;
JACKHAMMER; PAVEMENT BREAKER; PAVING JOINT MACHINE;
PIPELAYER; PLASTIC PIPE FUSION; POWER DRIVEN
GEORGIA BUGGY & WHEEL BARROW; POWER POST HOLE
DIGGER; PRECAST MANHOLE SETTER; WALK-BEHIND TAMPER;
WALK-BEHIND TRENCHER; SAND BLASTER; CONCRETE
CHIPPER; SURFACE GRINDER; VIBRATOR OPERATOR; WAGON
DRILLER (BRECKINRIDGE & GRAYSON COUNTIES).....$ 27.12 19.66
LABORERS: GROUP 1 AGING & CURING OF CONCRETE;
ASBESTOS ABATEMENT WORKER; ASPHALT PLANT; ASPHALT;
BATCH TRUCK DUMP; CARPENTER TENDER; CEMENT MASON
TENDER; CLEANING OF MACHINES; CONCRETE; DEMOLITION;
DREDGING; ENVIRONMENTAL - NUCLEAR, RADIATION, TOXIC
& HAZARDOUS WASTE - LEVEL D; FLAGPERSON; GRADE
CHECKER; HAND DIGGING & HAND BACK FILLING; HIGHWAY
MARKER PLACER; LANDSCAPING, MESH HANDLER & PLACER;
PUDDLER; RAILROAD; RIP-RAP & GROUTER; RIGHT-OF-WAY;
SIGN, GUARD RAIL & FENCE INSTALLER; SIGNAL PERSON;
SOUND BARRIER INSTALLER; STORM & SANITARY SEWER;
SWAMPER; TRUCK SPOTTER & DUMPER; WRECKING OF
CONCRETE FORMS; GENERAL CLEANUP (BRECKINRIDGE &
GRAYSON COUNTIES).....$ 26.87 19.66

PAIN0012-005 06/11/2005
Rates Fringes
PAINTER: SPRAY (BATH, BOURBON, BOYLE, CLARK,

FAYETTE, FLEMING, FRANKLIN, HARRISON, JESSAMINE,
MADISON, MERCER, MONTGOMERY, NICHOLAS, ROBERTSON,
SCOTT & WOODFORD COUNTIES).....$ 21.80 5.90
PAINTER: SANDBLASTING & WATERBLASTING (BATH,
BOURBON, BOYLE, CLARK, FAYETTE, FLEMING, FRANKLIN,
HARRISON, JESSAMINE, MADISON, MERCER, MONTGOMERY,
NICHOLAS, ROBERTSON, SCOTT & WOODFORD COUNTIES).....$ 22.05 5.90
PAINTER: ELEVATED TANKS; STEEPLEJACK WORK; BRIDGE &
LEAD ABATEMENT (BATH, BOURBON, BOYLE, CLARK,
FAYETTE, FLEMING, FRANKLIN, HARRISON, JESSAMINE,
MADISON, MERCER, MONTGOMERY, NICHOLAS, ROBERTSON,
SCOTT & WOODFORD COUNTIES:).....$ 22.30 5.90
PAINTER: BRUSH & ROLLER (BATH, BOURBON, BOYLE,
CLARK, FAYETTE, FLEMING, FRANKLIN, HARRISON,
JESSAMINE, MADISON, MERCER, MONTGOMERY, NICHOLAS,
ROBERTSON, SCOTT & WOODFORD COUNTIES).....$ 21.30 5.90
PAINTER: BRIDGE/EQUIPMENT TENDER AND/OR CONTAINMENT
BUILDER (BATH, BOURBON, BOYLE, CLARK, FAYETTE,
FLEMING, FRANKLIN, HARRISON, JESSAMINE, MADISON,
MERCER, MONTGOMERY, NICHOLAS, ROBERTSON, SCOTT &
WOODFORD COUNTIES:).....$ 18.90 5.90

PAIN0012-017 05/01/2015
Rates Fringes
PAINTER, HEAVY & HIGHWAY BRIDGES - GUARDRAILS -
LIGHTPOLES - STRIPING: SPRAY (BRACKEN, GALLATIN,
GRANT, MASON & OWEN COUNTIES).....$ 23.89 9.06
PAINTER, HEAVY & HIGHWAY BRIDGES - GUARDRAILS -
LIGHTPOLES - STRIPING: SANDBLASTING & WATER
BLASTING (BRACKEN, GALLATIN, GRANT, MASON & OWEN
COUNTIES).....$ 24.14 9.06
PAINTER, HEAVY & HIGHWAY BRIDGES - GUARDRAILS -
LIGHTPOLES - STRIPING: ELEVATED TANKS; STEEPLEJACK
WORK; BRIDGE & LEAD ABATEMENT (BRACKEN, GALLATIN,
GRANT, MASON & OWEN COUNTIES).....$ 24.39 9.06
PAINTER, HEAVY & HIGHWAY BRIDGES - GUARDRAILS -
LIGHTPOLES - STRIPING: BRUSH & ROLLER (BRACKEN,
GALLATIN, GRANT, MASON & OWEN COUNTIES).....$ 23.39 9.06
PAINTER, HEAVY & HIGHWAY BRIDGES - GUARDRAILS -
LIGHTPOLES - STRIPING: BRIDGE EQUIPMENT TENDER AND
CONTAINMENT BUILDER (BRACKEN, GALLATIN, GRANT,
MASON & OWEN COUNTIES).....$ 20.73 9.06

PAIN0118-004 06/01/2018
Rates Fringes
PAINTER: SPRAY, SANDBLAST, POWER TOOLS, WATERBLAST
& STEAM CLEANING (ANDERSON, BRECKINRIDGE, BULLITT,
CARROLL, GRAYSON, HARDIN, HENRY, JEFFERSON, LARUE,
MARION, MEADE, NELSON, OLDHAM, SHELBY, SPENCER,
TRIMBLE & WASHINGTON COUNTIES:).....$ 23.00 12.52
PAINTER: BRUSH & ROLLER (ANDERSON, BRECKINRIDGE,
BULLITT, CARROLL, GRAYSON, HARDIN, HENRY,
JEFFERSON, LARUE, MARION, MEADE, NELSON, OLDHAM,
SHELBY, SPENCER, TRIMBLE & WASHINGTON COUNTIES).....$ 22.00 12.52

PAIN1072-003 12/01/2024
Rates Fringes
PAINTERS: POWER GENERATING FACILITIES (BOYD,
CARTER, ELLIOTT, GREENUP, LEWIS AND ROWAN COUNTIES).$ 34.29 23.95
PAINTERS: BRIDGES; LOCKS; DAMS; TENSION TOWERS &
ENERGIZED SUBSTATIONS (BOYD, CARTER, ELLIOTT,
GREENUP, LEWIS AND ROWAN COUNTIES).....$ 37.53 23.95

PLUM0248-003 06/01/2025
Rates Fringes
PLUMBER AND STEAMFITTER (BOYD, CARTER, ELLIOTT,
GREENUP, LEWIS & ROWAN COUNTIES).....$ 42.75 25.76

PLUM0392-007 06/01/2025
Rates Fringes
PLUMBERS AND PIPEFITTERS (BRACKEN, CARROLL (EASTERN
HALF), GALLATIN, GRANT, MASON, OWEN & ROBERTSON
COUNTIES).....$ 43.30 27.40

PLUM0502-003 08/01/2024
Rates Fringes

PLUMBER (BRECKINRIDGE, BULLITT, CARROLL (WESTERN HALF), FRANKLIN (WESTERN THREE-FOURTHS), GRAYSON, HARDIN, HENRY, JEFFERSON, LARUE, MARION, MEADE, NELSON, OLDHAM, SHELBY, SPENCER, TRIMBLE & WASHINGTON COUNTIES).....$ 41.90 24.89

SUKY2010-160 10/08/2001
Rates Fringes

TRUCK DRIVERS: GROUP 4 Euclid & Other Heavy Earthmoving Equipment & Lowboy; Articulator Cat; 5-Axle Vehicle; Winch & A-Frame when used in transporting materials; Ross Carrier; Forklift when used to transport building materials; & Pavement Breaker.....$ 16.96 7.34

TRUCK DRIVERS: GROUP 3 Single Axle Dump; Flatbed; Semi-trailer or Pole Trailer when used to pull building materials and equipment; Tandem Axle Dump; Distributor; Mixer; & Truck Mechanic.....$ 16.86 7.34

TRUCK DRIVERS: GROUP 2 Greaser; Tire Changer; & Mechanic Tender.....$ 16.68 7.34

TRUCK DRIVERS: GROUP 1 Mobile Batch Truck Tender...$ 16.57 7.34

WELDERS - Receive rate prescribed for craft performing operation to which welding is incidental.

==========

Note: Executive Order (EO) 13706, Establishing Paid Sick Leave for Federal Contractors applies to all contracts subject to the Davis-Bacon Act for which the contract is awarded (and any solicitation was issued) on or after January 1, 2017. If this contract is covered by the EO, the contractor must provide employees with 1 hour of paid sick leave for every 30 hours they work, up to 56 hours of paid sick leave each year. Employees must be permitted to use paid sick leave for their own illness, injury or other health-related needs, including preventive care; to assist a family member (or person who is like family to the employee) who is ill, injured, or has other health-related needs, including preventive care; or for reasons resulting from, or to assist a family member (or person who is like family to the employee) who is a victim of, domestic violence, sexual assault, or stalking. Additional information on contractor requirements and worker protections under the EO is available at https://www.dol.gov/agencies/whd/government-contracts.

Note: Executive Order 13658 generally applies to contracts subject to the Davis-Bacon Act that were awarded on or between January 1, 2015 and January 29, 2022, and that have not been renewed or extended on or after January 30, 2022. Executive Order 13658 does not apply to contracts subject only to the Davis-Bacon Related Acts regardless of when they were awarded. If a contract is subject to Executive Order 13658, the contractor must pay all covered workers at least $13.65 per hour (or the applicable wage rate listed on this wage determination, if it is higher) for all hours spent performing on the contract from May 11, 2026, through December 31, 2026. The applicable Executive Order minimum wage rate will be adjusted annually. Additional information on contractor requirements and worker protections under Executive Order 13658 is available at www.dol.gov/whd/govcontracts.

Unlisted classifications needed for work not included within the scope of the classifications listed may be added after award only as provided in the labor standards contract clauses (29CFR 5.5 (a) (1) (iii)).

The body of each wage determination lists the classifications and wage rates that have been found to be prevailing for the type(s) of construction and geographic area covered by the wage determination. The classifications are listed in alphabetical order under rate identifiers indicating whether the particular rate is a union rate (current union negotiated rate), a survey rate, a weighted union average rate, a state adopted rate, or a supplemental classification rate.

Union Rate Identifiers

A four-letter identifier beginning with characters other than "SU", "UAVG", "SA", or "SC" denotes that a union rate was prevailing for that classification in the survey. Example: PLUM0198-005 07/01/2024. PLUM is an identifier of the union

whose collectively bargained rate prevailed in the survey for this classification, which in this example would be Plumbers. 0198 indicates the local union number or district council number where applicable, i.e., Plumbers Local 0198. The next number, 005 in the example, is an internal number used in processing the wage determination. The date, 07/01/2024 in the example, is the effective date of the most current negotiated rate.

Union prevailing wage rates are updated to reflect all changes over time that are reported to WHD in the rates in the collective bargaining agreement (CBA) governing the classification.

Union Average Rate Identifiers

The UAVG identifier indicates that no single rate prevailed for those classifications, but that 100% of the data reported for the classifications reflected union rates. EXAMPLE: UAVG-OH-0010 01/01/2024. UAVG indicates that the rate is a weighted union average rate. OH indicates the State of Ohio. The next number, 0010 in the example, is an internal number used in producing the wage determination. The date, 01/01/2024 in the example, indicates the date the wage determination was updated to reflect the most current union average rate.

A UAVG rate will be updated once a year, usually in January, to reflect a weighted average of the current rates in the collective bargaining agreements on which the rate is based.

Survey Rate Identifiers

The "SU" identifier indicates that either a single non-union rate prevailed (as defined in 29 CFR 1.2) for this classification in the survey or that the rate was derived by computing a weighted average rate based on all the rates reported in the survey for that classification. As a weighted average rate includes all rates reported in the survey, it may include both union and non-union rates. Example: SUFL2022-007 6/27/2024. SU indicates the rate is a single non-union prevailing rate or a weighted average of survey data for that classification. FL indicates the State of Florida. 2022 is the year of the survey on which these classifications and rates are based. The next number, 007 in the example, is an internal number used in producing the wage determination. The date, 6/27/2024 in the example, indicates the survey completion date for the classifications and rates under that identifier.

"SU" wage rates typically remain in effect until a new survey is conducted. However, the Wage and Hour Division (WHD) has the discretion to update such rates under 29 CFR 1.6(c)(1).

State Adopted Rate Identifiers

The "SA" identifier indicates that the classifications and prevailing wage rates set by a state (or local) government were adopted under 29 C.F.R 1.3(g)-(h). Example: SAME2023-007 01/03/2024. SA reflects that the rates are state adopted. ME refers to the State of Maine. 2023 is the year during which the state completed the survey on which the listed classifications and rates are based. The next number, 007 in the example, is an internal number used in producing the wage determination. The date, 01/03/2024 in the example, reflects the date on which the classifications and rates under the "SA" identifier took effect under state law in the state from which the rates were adopted.

WAGE DETERMINATION APPEALS PROCESS

1) Has there been an initial decision in the matter? This can be:
 a) a survey underlying a wage determination
 b) an existing published wage determination
 c) an initial WHD letter setting forth a position on a wage determination matter
 d) an initial conformance (additional classification and rate) determination

On survey related matters, initial contact, including requests for summaries of surveys, should be directed to the WHD Branch of Wage Surveys. Requests can be submitted via email to davisbaconinfo@dol.gov or by mail to:
 Branch of Wage Surveys

```
 Wage and Hour Division
 U.S. Department of Labor
 200 Constitution Avenue, N.W.
 Washington, DC 20210
Regarding any other wage determination matter such as
conformance decisions, requests for initial decisions should be
directed to the WHD Branch of Construction Wage Determinations.
Requests can be submitted via email to BCWD-Office@dol.gov or
by mail to:
 Branch of Construction Wage Determinations
 Wage and Hour Division
 U.S. Department of Labor
 200 Constitution Avenue, N.W.
 Washington, DC 20210
2) If an initial decision has been issued, then any interested
party (those affected by the action) that disagrees with the
decision can request review and reconsideration from the Wage
and Hour Administrator (See 29 CFR Part 1.8 and 29 CFR Part 7).
Requests for review and reconsideration can be submitted via
email to dba.reconsideration@dol.gov or by mail to:
 Wage and Hour Administrator
 U.S. Department of Labor
 200 Constitution Avenue, N.W.
 Washington, DC 20210
The request should be accompanied by a full statement of the
interested party's position and any information (wage payment
data, project description, area practice material, etc.) that
the requestor considers relevant to the issue.

3) If the decision of the Administrator is not favorable, an
interested party may appeal directly to the Administrative
Review Board (formerly the Wage Appeals Board). Write to:
 Administrative Review Board
 U.S. Department of Labor
 200 Constitution Avenue, N.W.
 Washington, DC 20210.
================================================================
 END OF GENERAL DECISION
"
```

Fringe benefit amounts are applicable for all hours worked except when otherwise noted.

No laborer, workman or mechanic shall be paid at a rate less than that of a Journeyman except those classified as bona fide apprentices.

Apprentices or trainees shall be permitted to work as such subject to Administrative Regulations adopted by the Commissioner of Workplace Standards. Copies of these regulations will be furnished upon request from any interested person.

Before using apprentices on the job the contractor shall present to the Contracting Officer written evidence of registration of such employees in a program of a State apprenticeship and training agency approved and recognized by the U. S. Bureau of Apprenticeship and Training. In the absence of such a State agency, the contractor shall submit evidence of approval and registration by the U. S. Bureau of Apprenticeship and Training.

The contractor shall submit to the Contracting Officer, written evidence of the established apprenticeship-journeyman ratios and wage rates in the project area, which will be the basis for establishing such ratios and rates for the project under the applicable contract provisions.

TO: EMPLOYERS/EMPLOYEES

PREVAILING WAGE SCHEDULE:

The wages indicated on this wage schedule are the least permitted to be paid for the occupations indicated. When an employee works in more than one classification, the employer must record the number of hours worked in each classification at the prescribed hourly base rate.

OVERTIME:

Overtime is to be paid to an employee at a rate not less than one and one-half times the basic rate of pay for all hours worked in excess of forty (40) hours in such workweek. Wage violations or questions should be directed to the designated Engineer or the undersigned.

Director
Division of Construction Procurement
Frankfort, Kentucky 40622
502-564-3500

PART IV

BID ITEMS

261140

PROPOSAL BID ITEMS

Report Date 11/10/26

261140

Section: 0001 - PAVEMENT

LINE	BID CODE	ALT	DESCRIPTION	QUANTITY	UNIT	UNIT PRIC	FP	AMOUNT
0010	00001		DGA BASE	2,000.00	TON		$	
0020	00003		CRUSHED STONE BASE	2,212.00	TON		$	
0030	00018		DRAINAGE BLANKET-TYPE II-ASPH	1,034.00	TON		$	
0040	00069		CRUSHED AGGREGATE SIZE NO 3	1,948.00	TON		$	
0050	00100		ASPHALT SEAL AGGREGATE	664.00	TON		$	
0060	00103		ASPHALT SEAL COAT	80.00	TON		$	
0070	00194		LEVELING & WEDGING PG76-22	3,503.00	TON		$	
0080	00208		CL4 ASPH BASE 1.50D PG64-22	139.00	TON		$	
0090	00214		CL3 ASPH BASE 1.00D PG64-22	271.00	TON		$	
0100	00217		CL4 ASPH BASE 1.00D PG64-22	104.00	TON		$	
0110	00219		CL4 ASPH BASE 1.00D PG76-22	56,322.00	TON		$	
0120	00301		CL2 ASPH SURF 0.38D PG64-22	107.00	TON		$	
0130	00339		CL3 ASPH SURF 0.38D PG64-22	174.00	TON		$	
0140	00342		CL4 ASPH SURF 0.38A PG76-22	35,210.00	TON		$	
0150	02676		MOBILIZATION FOR MILL & TEXT I-64	1.00	LS		$	
0160	02677		ASPHALT PAVE MILLING & TEXTURING	91,882.00	TON		$	
0170	03240		BASE FAILURE REPAIR	725.00	SQYD		$	
0180	20071EC		JOINT ADHESIVE	200,100.00	LF		$	
0190	20757ED		PAVEMENT REPAIR	1,293.00	SQYD		$	
0200	21289ED		LONGITUDINAL EDGE KEY	2,240.00	LF		$	
0210	24785EC		FIBER REINFORCEMENT FOR HMA	34,447.00	TON		$	
0220	24970EC		ASPHALT MATERIAL FOR TACK NON-TRACKING	278.00	TON		$	

Section: 0002 - ROADWAY

LINE	BID CODE	ALT	DESCRIPTION	QUANTITY	UNIT	UNIT PRIC	FP	AMOUNT
0230	01015		INSPECT & CERTIFY EDGE DRAIN SYSTEM	1.00	LS		$	
0240	01963		CONC MEDIAN BARRIER TYPE A1 TL5 56 IN	130.00	LF		$	
0250	01978		CONC MEDIAN BARRIER TYPE A TL5 56 IN	788.00	LF		$	
0260	01979		CONC MEDIAN BARRIER TYPE B TL5 56 IN	72.00	LF		$	
0270	01982		DELINEATOR FOR G/R MONO DIRECTIONAL WHITE	60.00	EACH		$	
0280	01984		DELINEATOR FOR BARRIER - WHITE	4.00	EACH		$	
0290	01985		DELINEATOR FOR BARRIER - YELLOW	7.00	EACH		$	
0300	02003		RELOCATE TEMP CONC BARRIER	5,960.00	LF		$	
0310	02014		BARRICADE-TYPE III	10.00	EACH		$	
0320	02200		ROADWAY EXCAVATION	3,240.00	CUYD		$	
0330	02242		WATER	1.00	MGAL		$	
0340	02351		G/R-W BEAM-S FACE TL-3	1,990.00	LF		$	
0350	02367		G/R END TREATMENT TYPE 1	4.00	EACH		$	
0360	02370		G/R END TREATMENT TYPE 2M	19.00	EACH		$	
0370	02381		REMOVE G/R	2,471.50	LF		$	

261140

PROPOSAL BID ITEMS

Report Date 11/10/26

LINE	BID CODE	ALT	DESCRIPTION	QUANTITY	UNIT	UNIT PRIC	FP	AMOUNT
0380	02383		REMOVE & RESET G/R	787.50	LF		$	
0390	02483		CHANNEL LINING CLASS II	132.00	TON		$	
0400	02545		CLEARING AND GRUBBING APPROX 3.74 ACRES	1.00	LS		$	
0410	02562		TEMPORARY SIGNS	3,204.00	SQFT		$	
0420	02585		EDGE KEY	2,004.00	LF		$	
0430	02650		MAINTAIN & CONTROL TRAFFIC	1.00	LS		$	
0440	02650		MAINTAIN & CONTROL TRAFFIC I-64	1.00	LS		$	
0450	02671		PORTABLE CHANGEABLE MESSAGE SIGN	16.00	EACH		$	
0460	02676		MOBILIZATION FOR MILL & TEXT	1.00	LS		$	
0470	02697		EDGELINE RUMBLE STRIPS	138,186.00	LF		$	
0480	02701		TEMP SILT FENCE	326.00	LF		$	
0490	02714		SHOULDERING	33,348.00	LF		$	
0500	02726		STAKING	1.00	LS		$	
0510	02731		REMOVE STRUCTURE	1.00	LS		$	
0520	02775		ARROW PANEL	5.00	EACH		$	
0530	02898		RELOCATE CRASH CUSHION	5.00	EACH		$	
0540	03171		CONC BARRIER WALL TYPE 9T	2,340.00	LF		$	
0550	05952		TEMP MULCH	21,264.00	SQYD		$	
0560	05953		TEMP SEEDING AND PROTECTION	15,948.00	SQYD		$	
0570	05963		INITIAL FERTILIZER	0.40	TON		$	
0580	05964		MAINTENANCE FERTILIZER	0.60	TON		$	
0590	05985		SEEDING AND PROTECTION	9,964.00	SQYD		$	
0600	05992		AGRICULTURAL LIMESTONE	19.80	TON		$	
0610	06401		FLEXIBLE DELINEATOR POST-M/W	675.00	EACH		$	
0620	06404		FLEXIBLE DELINEATOR POST-M/Y	74.00	EACH		$	
0630	06511		PAVE STRIPING-TEMP PAINT-6 IN	205,907.00	LF		$	
0640	06531		PAVE STRIPING REMOVAL-6 IN	17,215.00	LF		$	
0650	06542		PAVE STRIPING-THERMO-6 IN W	117,826.00	LF		$	
0660	06543		PAVE STRIPING-THERMO-6 IN Y	72,583.00	LF		$	
0670	06546		PAVE STRIPING-THERMO-12 IN W	10,041.00	LF		$	
0680	06549		PAVE STRIPING-TEMP REM TAPE-B	8,100.00	LF		$	
0690	06550		PAVE STRIPING-TEMP REM TAPE-W	10,800.00	LF		$	
0700	06551		PAVE STRIPING-TEMP REM TAPE-Y	7,200.00	LF		$	
0710	06556		PAVE STRIPING-DUR TY 1-6 IN W	1,596.00	LF		$	
0720	06557		PAVE STRIPING-DUR TY 1-6 IN Y	1,010.00	LF		$	
0730	06566		PAVE MARKING-THERMO X-WALK-12 IN	48.00	LF		$	
0740	06568		PAVE MARKING-THERMO STOP BAR-24IN	45.00	LF		$	
0750	06569		PAVE MARKING-THERMO CROSS-HATCH	5,146.00	SQFT		$	
0760	06574		PAVE MARKING-THERMO CURV ARROW	15.00	EACH		$	
0770	06575		PAVE MARKING-THERMO COMB ARROW	6.00	EACH		$	
0780	06578		PAVE MARKING-THERMO MERGE ARROW	28.00	EACH		$	
0790	06601NC		PAVE MARKING-PAINT WORDS	3.00	EACH		$	
0800	06613		INLAID PAVEMENT MARKER-B W/R	2,397.00	EACH		$	
0810	06614		INLAID PAVEMENT MARKER-B Y/R	145.00	EACH		$	
0820	08002		STRUCTURE EXCAV-SOLID ROCK	380.00	CUYD		$	
0830	08904		CRASH CUSHION TY 6 CLASS C TL3	2.00	EACH		$	
0840	08912		CRASH CUSHION TY 6 CLASS T TL3	5.00	EACH		$	
0850	10020NS		FUEL ADJUSTMENT	150,057.00	DOLL	$1.00	$	$150,057.00

261140

PROPOSAL BID ITEMS

Report Date 11/10/26

LINE	BID CODE	ALT	DESCRIPTION	QUANTITY	UNIT	UNIT PRIC	FP	AMOUNT
0860	10030NS		ASPHALT ADJUSTMENT	376,901.00	DOLL	$1.00	$	$376,901.00
0870	20071EC		JOINT ADHESIVE	2,004.00	LF		$	
0880	20190ES601		CONC BARR WALL TY 9T-INSTALL	1,280.00	LF		$	
0890	20191ED		OBJECT MARKER TY 3	8.00	EACH		$	
0900	20362ES403		SHOULDER RUMBLE STRIPS-SAWED	3,695.00	LF		$	
0910	20411ED		LAW ENFORCEMENT OFFICER	1,400.00	HOUR		$	
0920	20430ED		SAW CUT	2,046.00	LF		$	
0930	22664EN		WATER BLASTING EXISTING STRIPE	6,720.00	LF		$	
0940	22880ED		BARRIER WALL TRANSITION	100.00	LF		$	
0950	22883EN		CONCRETE WEDGE CURB	105.00	LF		$	
0960	24679ED		PAVE MARK THERMO CHEVRON	6,531.00	SQFT		$	
0970	24683ED		PAVE MARKING-THERMO DOTTED LANE EXTEN	1,113.00	LF		$	
0980	24899EC		PAVE MARKING-THERMO ELONG ROUTE SHIELD	5.00	EACH		$	
0990	25075EC		QUEUE PROTECTION VEHICLE	2,440.00	HOUR		$	
1000	25078ED		THRIE BEAM G/R TRANSITION TL-3	11.00	EACH		$	
1010	25079ED		THRIE BEAM G/R TRANSITION TL-2	8.00	EACH		$	
1020	25117EC		FURNISH QUEUE PROTECTION VEHICLES	18.00	MONT		$	
1030	26136EC		PORTABLE QUEUE WARNING ALERT SYSTEM	18.00	MONT		$	
1040	26137EC		QUEUE WARNING PCMS	108.00	MONT		$	
1050	26138EC		QUEUE WARNING PORTABLE RADAR SENSORS	108.00	MONT		$	
1060	26237EC		CONNECTED ARROW PANEL	18.00	MONT		$	
1070	26240EC		PAVE STRIPE-WET REF CONT TAPE-6 IN W	565.00	LF		$	
1080	26241EC		PAVE STRIPE-WET REF CONT TAPE-6 IN Y	339.00	LF		$	
1090	26242EC		PAVE STRIPE-WET REF CONT TAPE-12 IN W	56.00	LF		$	
1100	26312EC		G/R-W BEAM-S FACE (TL-3) 8 FT POST	787.50	LF		$	

Section: 0003 - DRAINAGE

LINE	BID CODE	ALT	DESCRIPTION	QUANTITY	UNIT	UNIT PRIC	FP	AMOUNT
1110	00522		STORM SEWER PIPE-18 IN	36.00	LF		$	
1120	01001		PERFORATED PIPE-6 IN	851.00	LF		$	
1130	01002		PERFORATED PIPE-8 IN	635.00	LF		$	
1140	01011		NON-PERFORATED PIPE-6 IN	10.00	LF		$	
1150	01033		PERF PIPE HEADWALL TY 4-6 IN	1.00	EACH		$	
1160	01623		CONC MED BARR BOX INLET TY B1 TL5 56	1.00	EACH		$	
1170	01624		CONC MED BARR BOX INLET TY B2 TL5 56	2.00	EACH		$	
1180	01634		CAP CURB BOX INLET	1.00	EACH		$	
1190	01691		FLUME INLET TYPE 2	1.00	EACH		$	
1200	01719		ADJUST INLET	1.00	EACH		$	
1210	01741		CORED HOLE DRAINAGE BOX CON-6 IN	3.00	EACH		$	
1220	01756		MANHOLE TYPE A	1.00	EACH		$	
1230	22883EN		CONCRETE WEDGE CURB	1,231.00	LF		$	

Section: 0004 - STRUCTURE 056B00038L

261140

PROPOSAL BID ITEMS

Report Date 11/10/26

LINE	BID CODE	ALT	DESCRIPTION	QUANTITY	UNIT	UNIT PRIC	FP	AMOUNT
1240	02403		REMOVE CONCRETE MASONRY	38.00	CUYD		$	
1250	03299		ARMORED EDGE FOR CONCRETE	151.00	LF		$	
1260	04810		ELECTRICAL JUNCTION BOX	2.00	EACH		$	
1270	08104		CONCRETE-CLASS AA	170.00	CUYD		$	
1280	08151		STEEL REINFORCEMENT-EPOXY COATED	34,419.00	LB		$	
1290	08510		REM EPOXY BIT FOREIGN OVERLAY	1,166.00	SQYD		$	
1300	08526		CONC CLASS M FULL DEPTH PATCH	10.00	CUYD		$	
1310	08549		BLAST CLEANING	1,224.00	SQYD		$	
1320	23378EC		CONCRETE SEALING	13,341.00	SQFT		$	
1330	24094EC		PARTIAL DEPTH PATCHING	31.00	CUYD		$	
1340	24902EC		PVC CONDUIT-3 IN-SCHEDULE 80	159.00	LF		$	
1350	25028ED		RAIL SYSTEM SINGLE SLOPE - 40 IN	318.00	LF		$	

Section: 0005 - STRUCTURE

LINE	BID CODE	ALT	DESCRIPTION	QUANTITY	UNIT	UNIT PRIC	FP	AMOUNT
1360	02231		STRUCTURE GRANULAR BACKFILL	614.00	CUYD		$	
1370	03299		ARMORED EDGE FOR CONCRETE	294.00	LF		$	
1380	08003		FOUNDATION PREPARATION	1.00	LS		$	
1390	08020		CRUSHED AGGREGATE SLOPE PROT	670.00	TON		$	
1400	08033		TEST PILES	120.00	LF		$	
1410	08039		PRE-DRILLING FOR PILES	589.00	LF		$	
1420	08046		PILES-STEEL HP12X53	577.00	LF		$	
1430	08100		CONCRETE-CLASS A	403.00	CUYD		$	
1440	08104		CONCRETE-CLASS AA	911.00	CUYD		$	
1450	08140		MECHANICAL REINF COUPLER #5 EPOXY COATED	608.00	EACH		$	
1460	08141		MECHANICAL REINF COUPLER #6 EPOXY COATED	576.00	EACH		$	
1470	08150		STEEL REINFORCEMENT	55,322.00	LB		$	
1480	08151		STEEL REINFORCEMENT-EPOXY COATED	246,554.00	LB		$	
1490	08671		PRECAST PC BOX BEAM SB33	2,810.70	LF		$	
1500	20637ED		DRILLED SHAFT-ROCK 48 IN	65.00	LF		$	
1510	20745ED		ROCK SOUNDINGS	60.00	LF		$	
1520	20746ED		ROCK CORINGS	522.00	LF		$	
1530	21321NC		CSL TESTING (4 TUBES)	24.00	EACH		$	
1540	23378EC		CONCRETE SEALING	42,500.00	SQFT		$	
1550	23583EC		DRILLED SHAFT-48 IN-COMMON	15.00	LF		$	
1560	23584EC		DRILLED SHAFT-42 IN-ROCK	168.00	LF		$	
1570	24405EC		MECHANICAL REINF COUPLER #8-EPOXY COATED	36.00	EACH		$	
1580	25028ED		RAIL SYSTEM SINGLE SLOPE - 40 IN	338.50	LF		$	
1590	26233EC		MOBILIZATION FOR CONCRETE SURF TREATMENT	1.00	LS		$	

Section: 0006 - STRUCTURE 056B00038R

LINE	BID CODE	ALT	DESCRIPTION	QUANTITY	UNIT	UNIT PRIC	FP	AMOUNT

261140

PROPOSAL BID ITEMS

Report Date 11/10/26

LINE	BID CODE	ALT	DESCRIPTION	QUANTITY	UNIT	UNIT PRIC	FP	AMOUNT
1600	02403		REMOVE CONCRETE MASONRY	38.00	CUYD		$	
1610	03299		ARMORED EDGE FOR CONCRETE	151.00	LF		$	
1620	04810		ELECTRICAL JUNCTION BOX	2.00	EACH		$	
1630	08104		CONCRETE-CLASS AA	170.00	CUYD		$	
1640	08151		STEEL REINFORCEMENT-EPOXY COATED	34,419.00	LB		$	
1650	08510		REM EPOXY BIT FOREIGN OVERLAY	1,166.00	SQYD		$	
1660	08526		CONC CLASS M FULL DEPTH PATCH	10.00	CUYD		$	
1670	08549		BLAST CLEANING	1,224.00	SQYD		$	
1680	23378EC		CONCRETE SEALING	13,341.00	SQFT		$	
1690	24094EC		PARTIAL DEPTH PATCHING	31.00	CUYD		$	
1700	24902EC		PVC CONDUIT-3 IN-SCHEDULE 80	159.00	LF		$	
1710	25028ED		RAIL SYSTEM SINGLE SLOPE - 40 IN	318.00	LF		$	

Section: 0007 - STRUCTURE 056B00040L

LINE	BID CODE	ALT	DESCRIPTION	QUANTITY	UNIT	UNIT PRIC	FP	AMOUNT
1720	08150		STEEL REINFORCEMENT	1,300.00	LB		$	
1730	08504		EPOXY SAND SLURRY	50.00	SQYD		$	
1740	08510		REM EPOXY BIT FOREIGN OVERLAY	1,237.00	SQYD		$	
1750	08526		CONC CLASS M FULL DEPTH PATCH	5.00	CUYD		$	
1760	08534		CONCRETE OVERLAY-LATEX	51.60	CUYD		$	
1770	08549		BLAST CLEANING	1,248.00	SQYD		$	
1780	24094EC		PARTIAL DEPTH PATCHING	30.00	CUYD		$	

Section: 0008 - STRUCTURE 056B00041N

LINE	BID CODE	ALT	DESCRIPTION	QUANTITY	UNIT	UNIT PRIC	FP	AMOUNT
1790	08100		CONCRETE-CLASS A	92.10	CUYD		$	
1800	08150		STEEL REINFORCEMENT	8,783.00	LB		$	
1810	20591EC		REMOVE BARRIER	49.00	LF		$	
1820	23378EC		CONCRETE SEALING	1,800.00	SQFT		$	

Section: 0009 - STRUCTURE 056B000416LR

LINE	BID CODE	ALT	DESCRIPTION	QUANTITY	UNIT	UNIT PRIC	FP	AMOUNT
1830	08100		CONCRETE-CLASS A	206.20	CUYD		$	
1840	08150		STEEL REINFORCEMENT	20,764.00	LB		$	
1850	20591EC		REMOVE BARRIER	157.00	LF		$	
1860	23378EC		CONCRETE SEALING	3,020.00	SQFT		$	

Section: 0010 - STRUCTURE 056B00090LR

LINE	BID CODE	ALT	DESCRIPTION	QUANTITY	UNIT	UNIT PRIC	FP	AMOUNT
1870	08100		CONCRETE-CLASS A	287.80	CUYD		$	
1880	08150		STEEL REINFORCEMENT	21,806.00	LB		$	

261140

PROPOSAL BID ITEMS

Report Date 11/10/26

LINE	BID CODE	ALT	DESCRIPTION	QUANTITY	UNIT	UNIT PRIC	FP	AMOUNT
1890	20591EC		REMOVE BARRIER	288.00	LF		$	
1900	23378EC		CONCRETE SEALING	4,810.00	SQFT		$	

Section: 0011 - LIGHTING-TUCKER STATION

LINE	BID CODE	ALT	DESCRIPTION	QUANTITY	UNIT	UNIT PRIC	FP	AMOUNT
1910	04761		LIGHTING CONTROL EQUIPMENT	1.00	EACH		$	
1920	04800		MARKER	1.00	EACH		$	
1930	04820		TRENCHING AND BACKFILLING	100.00	LF		$	
1940	04940		REMOVE LIGHTING	1.00	LS		$	
1950	20392NS835		ELECTRICAL JUNCTION BOX TYPE C	1.00	EACH		$	

Section: 0012 - LIGHTING-WATTERSON TRAIL

LINE	BID CODE	ALT	DESCRIPTION	QUANTITY	UNIT	UNIT PRIC	FP	AMOUNT
1960	04780		FUSED CONNECTOR KIT	8.00	EACH		$	
1970	04820		TRENCHING AND BACKFILLING	150.00	LF		$	
1980	04834		WIRE-NO. 6	1,950.00	LF		$	
1990	04940		REMOVE LIGHTING	1.00	LS		$	
2000	20391NS835		ELECTRICAL JUNCTION BOX TYPE A	4.00	EACH		$	
2010	24900EC		PVC CONDUIT-1 1/4 IN-SCHEDULE 80	150.00	LF		$	
2020	24901EC		PVC CONDUIT-2 IN-SCHEDULE 80	400.00	LF		$	

Section: 0013 - TRAFFIC LOOPS

LINE	BID CODE	ALT	DESCRIPTION	QUANTITY	UNIT	UNIT PRIC	FP	AMOUNT
2030	04793		CONDUIT-1 1/4 IN	240.00	LF		$	
2040	04795		CONDUIT-2 IN	60.00	LF		$	
2050	04820		TRENCHING AND BACKFILLING	270.00	LF		$	
2060	04829		PIEZOELECTRIC SENSOR	22.00	EACH		$	
2070	04830		LOOP WIRE	10,800.00	LF		$	
2080	04895		LOOP SAW SLOT AND FILL	2,100.00	LF		$	
2090	20359NN		GALVANIZED STEEL CABINET	6.00	EACH		$	
2100	20360ES818		WOOD POST	12.00	EACH		$	
2110	20391NS835		ELECTRICAL JUNCTION BOX TYPE A	6.00	EACH		$	

Section: 0014 - MOBILIZATION/DEMOBILIZATION

LINE	BID CODE	ALT	DESCRIPTION	QUANTITY	UNIT	UNIT PRIC	FP	AMOUNT
2120	02568		MOBILIZATION	1.00	LS		$	
2130	02569		DEMOBILIZATION	1.00	LS		$	

261140

PROPOSAL BID ITEMS

Report Date 11/10/26