CALL NO. 109

CONTRACT ID. 215182

LETCHER COUNTY

FED/STATE PROJECT NUMBER STP BRZ 9030 (276)

DESCRIPTION HANCOCK DRIVE

WORK TYPE BRIDGE REPLACEMENT

PRIMARY COMPLETION DATE 11/15/2021

LETTING DATE: March 19,2021

Sealed Bids will be received electronically through the Bid Express bidding service until 10:00 am EASTERN DAYLIGHT TIME March 19,2021. Bids will be publicly announced at 10:00 am EASTERN DAYLIGHT TIME.

NO PLANS ASSOCIATED WITH THIS PROJECT.

DBE CERTIFICATION REQUIRED - 6%

REQUIRED BID PROPOSAL GUARANTY: Not less than 5% of the total bid.

TABLE OF CONTENTS

PART I SCOPE OF WORK

- PROJECT(S), COMPLETION DATE(S), & LIQUIDATED DAMAGES
- CONTRACT NOTES
- FEDERAL CONTRACT NOTES
- ASPHALT MIXTURE
- INCIDENTAL SURFACING
- COMPACTION OPTION B
- SPECIAL NOTE(S) APPLICABLE TO PROJECT
- LIQUIDATED DAMAGES
- TREE REMOVAL
- BRIDGE DEMOLITION, RENOVATION AND ASBESTOS ABATEMENT
- ASBESTOS ABATEMENT REPORT
- RIGHT OF WAY CERTIFICATION
- UTILITY IMPACT & RAIL CERTIFICATION NOTES
- DEPT OF ARMY - NATIONWIDE PERMIT
- GEOTECHNICAL NOTES

PART II SPECIFICATIONS AND STANDARD DRAWINGS

- SPECIFICATIONS REFERENCE
- SUPPLEMENTAL SPECIFICATION
- [SN-1I] PORTABLE CHANGEABLE SIGNS
- [SP-69] EMBANKMENT AT BRIDGE END BENT STRUCTURES

PART III EMPLOYMENT, WAGE AND RECORD REQUIREMENTS

- FEDERAL-AID CONSTRUCTION CONTRACTS - FHWA 1273
- NONDISCRIMINATION OF EMPLOYEES
- EXECUTIVE BRANCH CODE OF ETHICS
- PROJECT WAGE RATES LOCALITY 2 / FEDERAL
- NOTICE OF REQUIREMENT FOR AFFIRMATIVE ACTION TO ENSURE EEO LETCHER

PART IV INSURANCE

PART V BID ITEMS

PART I

SCOPE OF WORK

ADMINISTRATIVE DISTRICT - 12

CONTRACT ID - 215182

STP BRZ 9030 (276)

COUNTY - LETCHER

PCN - BR06717162000
STP BRZ 9030 (276)

HANCOCK DRIVE (MP 0.15) ADDRESS DEFICIENCIES OF HANCOCK DRIVE BRIDGE OVER NORTH FORK KENTUCKY RIVER
(067C00091N) (MP 0.25), A DISTANCE OF 0.10 MILES.BRIDGE REPLACEMENT SYP NO. 12-10116.00.

GEOGRAPHIC COORDINATES LATITUDE 37:07:07.00 LONGITUDE 82:53:05.00

COMPLETION DATE(S):

COMPLETED BY 11/15/2021 APPLIES TO ENTIRE CONTRACT

CONTRACT NOTES

PROPOSAL ADDENDA

All addenda to this proposal must be applied when calculating bid and certified in the bid packet submitted to the Kentucky Department of Highways. Failure to use the correct and most recent addenda may result in the bid being rejected.

BID SUBMITTAL

Bidder must use the Department's electronic bidding software. The Bidder must download the bid file located on the Bid Express website (www.bidx.com) to prepare a bid packet for submission to the Department. The bidder must submit electronically using Bid Express.

JOINT VENTURE BIDDING

Joint venture bidding is permissible. All companies in the joint venture must be prequalified in one of the work types in the Qualifications for Bidders for the project. The bidders must get a vendor ID for the joint venture from the Division of Construction Procurement and register the joint venture as a bidder on the project. Also, the joint venture must obtain a digital ID from Bid Express to submit a bid. A joint bid bond of 5% may be submitted for both companies or each company may submit a separate bond of 5%.

UNDERGROUND FACILITY DAMAGE PROTECTION

The contractor shall make every effort to protect underground facilities from damage as prescribed in the Underground Facility Damage Protection Act of 1994, Kentucky Revised Statute KRS 367.4901 to 367.4917. It is the contractor's responsibility to determine and take steps necessary to be in compliance with federal and state damage prevention directives. When prescribed in said directives, the contractor shall submit Excavation Locate Requests to the Kentucky Contact Center (KY811) via web ticket entry. The submission of this request does not relieve the contractor from the responsibility of contacting non-member facility owners, whom shall be contacted through their individual Protection Notification Center. Non-compliance with these directives can result in the enforcement of penalties.

REGISTRATION WITH THE SECRETARY OF STATE BY A FOREIGN ENTITY

Pursuant to KRS 176.085(1)(b), an agency, department, office, or political subdivision of the Commonwealth of Kentucky shall not award a state contract to a person that is a foreign entity required by KRS 14A.9-010 to obtain a certificate of authority to transact business in the Commonwealth ("certificate") from the Secretary of State under KRS 14A.9-030 unless the person produces the certificate within fourteen (14) days of the bid or proposal opening. If the foreign entity is not required to obtain a certificate as provided in KRS 14A.9-010, the foreign entity should identify the applicable exception. Foreign entity is defined within KRS 14A.1-070.

For all foreign entities required to obtain a certificate of authority to transact business in the Commonwealth, if a copy of the certificate is not received by the contracting agency within the time frame identified above, the foreign entity's solicitation response shall be deemed non-responsive or the awarded contract shall be cancelled.

Businesses can register with the Secretary of State at https://secure.kentucky.gov/sos/ftbr/welcome.aspx .

SPECIAL NOTE FOR PROJECT QUESTIONS DURING ADVERTISEMENT

Questions about projects during the advertisement should be submitted in writing to the Division of Construction Procurement. This may be done by fax (502) 564-7299 or email to kytc.projectquestions@ky.gov. The Department will attempt to answer all submitted questions. The Department reserves the right not to answer if the question is not pertinent or does not aid in clarifying the project intent.

The deadline for posting answers will be 3:00 pm Eastern Daylight Time, the day preceding the Letting. Questions may be submitted until this deadline with the understanding that the later a question is submitted, the less likely an answer will be able to be provided.

The questions and answers will be posted for each Letting under the heading "Questions & Answers" on the Construction Procurement website (www.transportation.ky.gov/contract). The answers provided shall be considered part of this Special Note and, in case of a discrepancy, will govern over all other bidding documents.

HARDWOOD REMOVAL RESTRICTIONS

The US Department of Agriculture has imposed a quarantine in Kentucky and several surrounding states, to prevent the spread of an invasive insect, the emerald ash borer. Hardwood cut in conjunction with the project may not be removed from the state. Chipping or burning on site is the preferred method of disposal.

INSTRUCTIONS FOR EXCESS MATERIAL SITES AND BORROW SITES

Identification of excess material sites and borrow sites shall be the responsibility of the Contractor. The Contractor shall be responsible for compliance with all applicable state and federal laws and may wish to consult with the US Fish and Wildlife Service to seek protection under Section 10 of the Endangered Species Act for these activities.

ACCESS TO RECORDS

The contractor, as defined in KRS 45A.030 (9) agrees that the contracting agency, the Finance and Administration Cabinet, the Auditor of Public Accounts, and the Legislative Research Commission, or their duly authorized representatives, shall have access to any books, documents, papers, records, or other evidence, which are directly pertinent to this contract for the purpose of financial audit or program review. Records and other prequalification information confidentially

disclosed as part of the bid process shall not be deemed as directly pertinent to the contract and shall be exempt from disclosure as provided in KRS 61.878(1)(c). The contractor also recognizes that any books, documents, papers, records, or other evidence, received during a financial audit or program review shall be subject to the Kentucky Open Records Act, KRS 61.870 to 61.884.

In the event of a dispute between the contractor and the contracting agency, Attorney General, or the Auditor of Public Accounts over documents that are eligible for production and review, the Finance and Administration Cabinet shall review the dispute and issue a determination, in accordance with Secretary's Order 11-004.

April 30, 2018

FEDERAL CONTRACT NOTES

The Kentucky Department of Highways, in accordance with the Regulations of the United States Department of Transportation 23 CFR 635.112 (h), hereby notifies all bidders that failure by a bidder to comply with all applicable sections of the current Kentucky Standard Specifications, including, but not limited to the following, may result in a bid not being considered responsive and thus not eligible to be considered for award:

102.02	Current Rating	102.08	Preparation and Delivery of Proposals
102.13	Irregular Bid Proposals	102.14	Disqualification of Bidders
102.09	Proposal Guaranty		

CIVIL RIGHTS ACT OF 1964

The Kentucky Department of Highways, in accordance with the provisions of Title VI of the Civil Rights Act of 1964 (78 Stat. 252) and the Regulations of the Federal Department of Transportation (49 C.F.R., Part 21), issued pursuant to such Act, hereby notifies all bidders that it will affirmatively insure that the contract entered into pursuant to this advertisement will be awarded to the lowest responsible bidder without discrimination on the ground of race, color, or national origin.

NOTICE TO ALL BIDDERS

To report bid rigging activities call: 1-800-424-9071.

The U.S. Department of Transportation (DOT) operates the above toll-free "hotline" Monday through Friday, 8:00 a.m. to 5:00 p.m. eastern time. Anyone with knowledge of possible bid rigging, bidder collusion, or other fraudulent activities should use the "hotline" to report such activities.

The "hotline" is part of the DOT's continuing effort to identify and investigate highway construction contract fraud and abuse and is operated under the direction of the DOT Inspector General. All information will be treated confidentially and caller anonymity will be respected.

SECOND TIER SUBCONTRACTS

Second Tier subcontracts on federally assisted projects shall be permitted. However, in the case of DBE's, second tier subcontracts will only be permitted where the other subcontractor is also a DBE. All second tier subcontracts shall have the consent of both the Contractor and the Engineer.

DISADVANTAGED BUSINESS ENTERPRISE PROGRAM

It is the policy of the Kentucky Transportation Cabinet ("the Cabinet") that Disadvantaged Business Enterprises ("DBE") shall have the opportunity to participate in the performance of highway construction projects financed in whole or in part by Federal Funds in order to create a level playing field for all businesses who wish to contract with the Cabinet. To that end, the Cabinet will comply with the regulations found in 49 CFR Part 26, and the definitions and requirements contained therein shall be adopted as if set out verbatim herein.

The Cabinet, contractors, subcontractors, and sub-recipients shall not discriminate on the basis of race, color, national origin, or sex in the performance of work performed pursuant to Cabinet contracts. The contractor shall carry out applicable requirements of 49 CFR 26 in the award and administration of federally assisted highway construction projects. The contractor will include this provision in all its subcontracts and supply agreements pertaining to contracts with the Cabinet.

Failure by the contractor to carry out these requirements is a material breach of its contract with the Cabinet, which may result in the termination of the contract or such other remedy as the Cabinet deems necessary.

DBE GOAL

The Disadvantaged Business Enterprise (DBE) goal established for this contract, as listed on the front page of the proposal, is the percentage of the total value of the contract.

The contractor shall exercise all necessary and reasonable steps to ensure that Disadvantaged Business Enterprises participate in a least the percent of the contract as set forth above as goals for this contract.

OBLIGATION OF CONTRACTORS

Each contractor prequalified to perform work on Cabinet projects shall designate and make known to the Cabinet a liaison officer who is assigned the responsibility of effectively administering and promoting an active program for utilization of DBEs.

If a formal goal has not been designated for the contract, all contractors are encouraged to consider DBEs for subcontract work as well as for the supply of material and services needed to perform this work.

Contractors are encouraged to use the services of banks owned and controlled by minorities and women.

CERTIFICATION OF CONTRACT GOAL

Contractors shall include the following certification in bids for projects for which a DBE goal has been established. BIDS SUBMITTED WHICH DO NOT INCLUDE CERTIFICATION OF DBE PARTICIPATION WILL NOT BE ACCEPTED. These bids will not be considered for award by the Cabinet and they will be returned to the bidder.

"The bidder certifies that it has secured participation by Disadvantaged Business Enterprises ("DBE") in the amount of_____percent of the total value of this contract and that the DBE participation is in compliance with the requirements of 49 CFR 26 and the policies of the Kentucky Transportation Cabinet pertaining to the DBE Program."

The certification statement is located in the electronic bid file. All contractors must certify their DBE participation on that page. DBEs utilized in achieving the DBE goal must be certified and prequalified for the work items at the time the bid is submitted.

DBE PARTICIPATION PLAN

Lowest responsive bidders must submit the *DBE Plan/ Subcontractor Request*, form TC 14-35 DBE, within 5 days of the letting. This is necessary before the Awards Committee will review and make a recommendation. **The project will not be considered for award prior to submission and approval of the apparent low bidder's DBE Plan/Subcontractor Request.**

The DBE Participation Plan shall include the following:

1. Name and address of DBE Subcontractor(s) and/or supplier(s) intended to be used in the proposed project;
2. Description of the work each is to perform including the work item, unit, quantity, unit price and total amount of the work to be performed by the individual DBE. The Proposal Line Number, Category Number, and the Project Line Number can be found in the "material listing" on the Construction Procurement website under the specific letting;
3. The dollar value of each proposed DBE subcontract and the percentage of total project contract value this represents. DBE participation may be counted as follows;
   a. If DBE suppliers and manufactures assume actual and contractual responsibility, the dollar value of materials to be furnished will be counted toward the goal as follows:
      - The entire expenditure paid to a DBE manufacturer;
      - 60 percent of expenditures to DBE suppliers that are not manufacturers provided the supplier is a regular dealer in the product involved. A regular dealer must be engaged in, as its principal business and in its own name, the sale of products to the public, maintain an inventory and own and operate distribution equipment; and
      - The amount of fees or commissions charged by the DBE firms for a bona fide service, such as professional, technical, consultant, or managerial services and assistance in the procurement of essential personnel, facilities, equipment, materials, supplies, delivery of materials and supplies or for furnishing bonds, or insurance, providing such fees or commissions are determined to be reasonable and customary.

b) The dollar value of services provided by DBEs such as quality control testing, equipment repair and maintenance, engineering, staking, etc.;
c) The dollar value of joint ventures. DBE credit for joint ventures will be limited to the dollar amount of the work actually performed by the DBE in the joint venture;

4. Written and signed documentation of the bidder's commitment to use a DBE contractor whose participation is being utilized to meet the DBE goal; and
5. Written and signed confirmation from the DBE that it is participating in the contract as provided in the prime contractor's commitment.

UPON AWARD AND BEFORE A WORK ORDER WILL BE ISSUED

Contractors must submit the signed subcontract between the contractor and the DBE contractor, along with the DBE's certificate of insurance. If the DBE is a supplier of materials for the project, a signed purchase order must be submitted to the Division of Construction Procurement.

Changes to DBE Participation Plans must be approved by the Cabinet. The Cabinet may consider extenuating circumstances including, but not limited to, changes in the nature or scope of the project, the inability or unwillingness of a DBE to perform the work in accordance with the bid, and/or other circumstances beyond the control of the prime contractor.

CONSIDERATION OF GOOD FAITH EFFORTS REQUESTS

If the DBE participation submitted in the bid by the apparent lowest responsive bidder does not meet or exceed the DBE contract goal, the apparent lowest responsive bidder must submit a Good Faith Effort Package to satisfy the Cabinet that sufficient good faith efforts were made to meet the contract goals prior to submission of the bid. Efforts to increase the goal after bid submission will not be considered in justifying the good faith effort, unless the contractor can show that the proposed DBE was solicited prior to the letting date. DBEs utilized in achieving the DBE goal must be certified and prequalified for the work items at the time the bid is submitted. One complete set (hard copy along with an electronic copy) of this information must be received in the Division of Contract Procurement no later than 12:00 noon of the tenth calendar day after receipt of notification that they are the apparent low bidder.

Where the information submitted includes repetitious solicitation letters it will be acceptable to submit a sample representative letter along with a distribution list of the firms solicited. Documentation of DBE quotations shall be a part of the good faith effort submittal as necessary to demonstrate compliance with the factors listed below which the Cabinet considers in judging good faith efforts. This documentation may include written subcontractors' quotations, telephone log notations of verbal quotations, or other types of quotation documentation.

The Good Faith Effort Package shall include, but may not be limited to information showing evidence of the following:

1. Whether the bidder attended any pre-bid meetings that were scheduled by the Cabinet to inform DBEs of subcontracting opportunities;
2. Whether the bidder provided solicitations through all reasonable and available means;
3. Whether the bidder provided written notice to all DBEs listed in the DBE directory at the time of the letting who are prequalified in the areas of work that the bidder will be subcontracting;
4. Whether the bidder followed up initial solicitations of interest by contacting DBEs to determine with certainly whether they were interested. If a reasonable amount of DBEs within the targeted districts do not provide an intent to quote or no DBEs are prequalified in the subcontracted areas, the bidder must notify the Disadvantaged Enterprise Business Liaison Officer (DEBLO) in the Office of Civil Rights and Small Business Development to give notification of the bidder's inability to get DBE quotes;
5. Whether the bidder selected portions of the work to be performed by DBEs in order to increase the likelihood of meeting the contract goals. This includes, where appropriate, breaking out contract work items into economically feasible units to facilitate DBE participation, even when the prime contractor might otherwise perform these work items with its own forces;
6. Whether the bidder provided interested DBEs with adequate and timely information about the plans, specifications, and requirements of the contract;
7. Whether the bidder negotiated in good faith with interested DBEs not rejecting them as unqualified without sound reasons based on a thorough investigation of their capabilities. Any rejection should be so noted in writing with a description as to why an agreement could not be reached;
8. Whether quotations were received from interested DBE firms but were rejected as unacceptable without sound reasons why the quotations were considered unacceptable. The fact that the DBE firm's quotation for the work is not the lowest quotation received will not in itself be considered as a sound reason for rejecting the quotation as unacceptable. The fact that the bidder has the ability and/or desire to perform the contract work with its own forces will not be considered a sound reason for rejecting a DBE quote. Nothing in this provision shall be construed to require the bidder to accept unreasonable quotes in order to satisfy DBE goals;
9. Whether the bidder specifically negotiated with subcontractors to assume part of the responsibility to meet the contract DBE goal when the work to be subcontracted includes potential DBE participation;
10. Whether the bidder made any efforts and/or offered assistance to interested DBEs in obtaining the necessary equipment, supplies, materials, insurance and/or bonding to satisfy the work requirements of the bid proposal; and
11. Any other evidence that the bidder submits which may show that the bidder has made reasonable good faith efforts to include DBE participation.

FAILURE TO MEET GOOD FAITH REQUIREMENT

Where the apparent lowest responsive bidder fails to submit sufficient participation by DBE firms to meet the contract goal and upon a determination by the Good Faith Committee based upon the information submitted that the apparent lowest responsive bidder failed to make sufficient reasonable efforts to meet the contract goal, the bidder will be offered the opportunity to meet in person for administrative reconsideration. The bidder will be notified of the Committee's decision within 24 hours of its decision. The bidder will have 24 hours to request reconsideration of the Committee's decision. The reconsideration meeting will be held within two days of the receipt of a request by the bidder for reconsideration.

The request for reconsideration will be heard by the Office of the Secretary. The bidder will have the opportunity to present written documentation or argument concerning the issue of whether it met the goal or made an adequate good faith effort. The bidder will receive a written decision on the reconsideration explaining the basis for the finding that the bidder did or did not meet the goal or made adequate Good Faith efforts to do so.

The result of the reconsideration process is not administratively appealable to the Cabinet or to the United States Department of Transportation.

The Cabinet reserves the right to award the contract to the next lowest responsive bidder or to rebid the contract in the event that the contract is not awarded to the low bidder as the result of a failure to meet the good faith requirement.

SANCTIONS FOR FAILURE TO MEET DBE REQUIREMENTS OF THE PROJECT

Failure by the prime contractor to fulfill the DBE requirements of a project under contract or to demonstrate good faith efforts to meet the goal constitutes a breach of contract. When this occurs, the Cabinet will hold the prime contractor accountable, as would be the case with all other contract provisions. Therefore, the contractor's failure to carry out the DBE contract requirements shall constitute a breach of contract and as such the Cabinet reserves the right to exercise all administrative remedies at its disposal including, but not limited to the following:

- Disallow credit toward the DBE goal;
- Withholding progress payments;
- Withholding payment to the prime in an amount equal to the unmet portion of the contract goal; and/or
- Termination of the contract.

PROMPT PAYMENT

The prime contractor will be required to pay the DBE within seven (7) working days after he or she has received payment from the Kentucky Transportation Cabinet for work performed or materials furnished.

CONTRACTOR REPORTING

All contractors must keep detailed records and provide reports to the Cabinet on their progress in meeting the DBE requirement on any highway contract. These records may include, but shall not be limited to payroll, lease agreements, cancelled payroll checks, executed subcontracting agreements, etc. Prime contractors will be required to complete and submit a ***signed and notarized*** Affidavit of Subcontractor Payment (TC 18-7) and copies of checks for any monies paid to each DBE subcontractor or supplier utilized to meet a DBE goal. These documents must be completed and signed within 7 days of being paid by the Cabinet.

Payment information that needs to be reported includes date the payment is sent to the DBE, check number, Contract ID, amount of payment and the check date. Before Final Payment is made on this contract, the Prime Contractor will certify that all payments were made to the DBE subcontractor and/or DBE suppliers.

********* IMPORTANT *********

Please mail the original, signed and completed TC (18-7) Affidavit of Subcontractor Payment form and all copies of checks for payments listed above to the following address:

Office of Civil Rights and Small Business Development
6th Floor West 200 Mero Street
Frankfort, KY 40622

The prime contractor should notify the KYTC Office of Civil Rights and Small Business Development seven (7) days prior to DBE contractors commencing work on the project. The contact in this office is Mr. Melvin Bynes. Mr. Bynes' current contact information is email address – melvin.bynes2@ky.gov and the telephone number is (502) 564-3601.

DEFAULT OR DECERTIFICATION OF THE DBE

If the DBE subcontractor or supplier is decertified or defaults in the performance of its work, and the overall goal cannot be credited for the uncompleted work, the prime contractor may utilize a substitute DBE or elect to fulfill the DBE goal with another DBE on a different work item. If after exerting good faith effort in accordance with the Cabinet's Good Faith Effort policies and procedures, the prime contractor is unable to replace the DBE, then the unmet portion of the goal may be waived at the discretion of the Cabinet.

PROHIBITION ON TELECOMMUNICATIONS EQUIPMENT OR SERVICES

In accordance with the FY 2019 National Defense Authorization Act (NDAA), 2 CFR 200.216, and 2 CFR 200.471, Federal agencies are prohibited, after August 13, 2020, from obligating or expending financial assistance to obtain certain telecommunications and video surveillance services and equipment from specific producers. As a result of these regulations, contractors and subcontractors are prohibited, on projects with federal funding participation, from providing telecommunication or video surveillance equipment, services, or systems produced by:

- Huawei Technologies Company or ZTE Corporation (or any subsidiary or affiliate of such entities)
- Hytera Communications Corporation, Hangzhou Hikvision Digital Technology Company, or Dahua Technology Company (or any subsidiary or affiliate of such entities)

LEGAL REQUIREMENTS AND RESPONSIBILITY TO THE PUBLIC – CARGO PREFERENCE ACT (CPA).

(REV 12-17-15) (1-16)

SECTION 7 is expanded by the following new Article:

102.10 **Cargo Preference Act – Use of United States-flag vessels.**

Pursuant to Title 46CFR Part 381, the Contractor agrees

- To utilize privately owned United States-flag commercial vessels to ship at least 50 percent of the gross tonnage (computed separately for dry bulk carriers, dry cargo liners, and tankers) involved, whenever shipping any equipment, material, or commodities pursuant to this contract, to the extent such vessels are available at fair and reasonable rates for United States-flag commercial vessels.
- To furnish within 20 days following the date of loading for shipments originating within the United States or within 30 working days following the date of loading for shipments originating outside the United States, a legible copy of a rated, 'on-board' commercial ocean bill-of-lading in English for each shipment of cargo described in paragraph 1 of this section to both the Contracting Officer (through the prime contractor in the case of subcontractor bills-of-lading) and to the Division of National Cargo, Office of Market Development, Maritime Administration, Washington, DC 20590.
- To insert the substance of the provisions of this clause in all subcontracts issued pursuant to this contract.

ASPHALT MIXTURE

Unless otherwise noted, the Department estimates the rate of application for all asphalt mixtures to be 110 lbs/sy per inch of depth.

INCIDENTAL SURFACING

The Department has included in the quantities of asphalt mixtures established in the proposal estimated quantities required for resurfacing or surfacing mailbox turnouts, farm field entrances, residential and commercial entrances, curve widening, ramp gores and tapers, and road and street approaches, as applicable. Pave these areas to the limits as shown on Standard Drawing RPM-110-06 or as directed by the Engineer. In the event signal detectors are present in the intersecting streets or roads, pave the crossroads to the right of way limit or back of the signal detector, whichever is the farthest back of the mainline. Surface or resurface these areas as directed by the Engineer. The Department will not measure placing and compacting for separate payment but shall be incidental to the Contract unit price for the asphalt mixtures.

OPTION B

Be advised that the Department will control and accept compaction of asphalt mixtures furnished on this project under OPTION B in accordance with Sections 402 and 403.

SPECIAL NOTE FOR TRAFFIC CONTROL ON BRIDGE REPAIR CONTRACTS

12-10116.00 Letcher 067C00091N

I. TRAFFIC CONTROL GENERAL

Except as provided herein, traffic shall be maintained in accordance with the current standard specifications, section 112. The contractor will be responsible for developing and implementing the maintenance of traffic details with guidance through standard drawings and the MUTCD current editions. The developed traffic control plan must be approved by the Engineer prior to implementation. The contractor is expected to provide at a minimum the items listed in this note, however this note does not relieve the contractor of other items that may be necessary to comply with current standards. Except for the roadway and traffic control bid items listed, all items of work necessary to maintain and control traffic will be paid at the lump sum bid price to "Maintain and Control Traffic".

Contrary to section 106.01, traffic control devices used on this project may be new or used in new condition, at the beginning of the work and maintained in like new condition until completion of the work.

The contractor must notify the engineer and public information officer at least 14 calendar days prior to the beginning work. Please see the Special Note for Liquidated Damages for additional information.

II. TRAFFIC COORDINATOR

Furnish a traffic coordinator as per section 112. The traffic coordinator shall inspect the project maintenance of traffic, at least three times daily, or as directed by the engineer, during the contractor's operations and at any time a bi-directional lane closure or road closure is in place. The personnel shall have access on the project to a radio or telephone to be used in case of emergencies or accidents. The traffic coordinator shall report all incidents throughout the work zone to the engineer on the project. The contractor shall furnish the name and telephone number where the traffic coordinator can be contacted at all times.

III. SIGNS

The contractor is responsible for all signage during construction. The contractor shall adhere to the standard drawings and manual on uniform traffic control devices (MUTCD) for guidance. If, at any time, the engineer requests a change in the maintenance of traffic signage, the contractor shall implement the change within 8 hours. Failure to implement these changes within the required eight hours will result in liquidated damages of $5,000 per day.

The contractor shall provide all detour signing needed for the bridge closure, if allowed in the contract documents. All signing required will be incidental to the lump sum bid item "Maintain and Control Traffic".

The department will not measure installation, maintenance, or removal for payment of any detour signage or standard construction signage, and will consider these incidental to "Maintain and Control Traffic"

Closure signs, detour signs, and bi-directional lane closure signs should be placed no sooner than two weeks prior to the closing of the bridge (when applicable) or placing lane closures. Wayfinding detour signs should be placed a maximum of 2 miles apart unless specified by the engineer. Signs shall be covered or removed within 24 hours of opening the bridge to traffic.

Road closed signs (when applicable) should be double signed and placed a minimum of 1500', 1000', and 500' in advance of the closure, in addition to signage required by the MUTCD and standard drawings.

IV. TEMPORARY PAVEMENT STRIPING

For projects where road closures are allowed in the contract documents, it is not anticipated that temporary pavement striping will be needed since the bridge will be closed. However, if the contractor's means and methods allows for need for temporary striping, conflicting pavement marking will be covered with 6" black removable tape. However, for bi-directional lane closures or if the plans call for a diversion, temporary striping will be required per the plans and MUTCD. Contrary to the standard specifications, no direct payment will be made for any temporary striping, pavement striping removal, or any other temporary striping item. If temporary striping is used, the contractor shall replace any temporary striping that becomes damaged or fails to adhere to the pavement before dark on the day of the notification. Liquidated damages shall be assessed to the contractor at a rate of $500 per day for failing to replace temporary striping within this time limit.

V. PROJECT PHASING & CONSTRUCTION PROCEDURES

Project phasing shall be as directed by the plans, special notes, and the approved Traffic Control Plan prepared by the contractor. Maintain traffic over the bridge as long as possible. Once work on the structure begins that impacts traffic, ensure work progresses to minimize the effected time to the public. All materials that must be made specific for the project should be ordered and made prior to closure of the bridge or implementation of bi-directional lane closures so that delivery does not delay progress of the work, unless approved by the Engineer. If the bridge is reopened prior to safety devices being in place, an approved protective barrier wall shall be placed in accordance to the standard drawings. Contrary to standard specifications, no direct payment would be made for the barrier wall and will be considered incidental to "Maintain and Control Traffic".

For projects which require an on-site diversion to be constructed to maintain traffic, the traffic control plan and project schedule prepared by the contractor shall include provisions such that traffic is not switched to the diversion until all materials that must be made specific for the project are ordered and made so that use of the diversion is minimized, unless approved by the Engineer.

VI. PAVEMENT DROP-OFF

Less than two inches - no protection required. Warning signs should be placed in advance and throughout the drop-off area.
Two to four inches - plastic drums, vertical panels or barricades every 100 feet on tangent sections for speeds of 50 mph or greater. Cones may be used in place of plastic drums, panels and barricades during daylight hours. For tangent sections with speeds less than 50 mph and curves devices should be placed every 50 feet. Spacing of devices on tapered sections should be in accordance with the manual on uniform traffic control devices, current edition.

Greater than four inches - positive separation or wedge with 3:1 or flatter slope needed. If there is five feet or more distance between the edge of the pavement and the drop-off, then drums, panel, or barricades may be used. If the drop-off is greater than 12 inches, positive separation is strongly encouraged. If concrete barriers are used, special reflective devices or steady burn lights should be used for overnight installations.

For temporary conditions, drop-offs greater than four inches may be protected with plastic drums, vertical panels or barricades for short distances during daylight hours while work is being done in the drop-off area.

VII. VARIABLE MESSAGE SIGNS AND TEMPORARY TRAFFIC SIGNALS

At the direction of the Engineer, the contractor is expected to provide up to four (4) message boards for use at locations determined by the Engineer. These message boards are expected to be in place one week prior to the closure of the roadway and remain in place for the duration of the closure. The message boards will be paid for as per the standard specifications.

For projects that involve the use of lane closures, all lane closures shall be bi-directional. The contractor shall provide temporary traffic signals and all labor, materials, and incidentals needed to maintain bi-directional traffic for the project. For short term bi-directional lane closures, the use of flaggers in lieu of temporary traffic signals may be acceptable if approved by the Engineer.

VIII. BARRICADES

For projects which allow full closure, ensure a minimum of (4) type III barricades are used at each end of the bridge for a total of (8) type III barricades. Contrary to the standard specifications, no direct payment will be made for barricades but they will be included in the lump sum price for “Maintain and Control Traffic”.

VIII. DETOUR AND ON SITE DIVERSIONS

For projects which allow a full closure of the bridge, or if necessary to detour trucks, the traffic control plan proposed by the contractor shall include a signed detour route for the road closure. The traffic control plan along with the proposed detour plan will be delivered to the engineer 7

days prior to the pre-construction meeting. The proposed detour route shall meet the following requirements:

1) Detour routes must remain at minimum on the same classification of roadway (i.e. AA, AAA, state, county, etc.) Unless written approval is obtained through the owner of the facility.
2) The contractor must coordinate with other projects along the detour route in order to avoid ongoing construction projects along those routes.
3) It may be determined that two detour routes would be needed if the first selected route cannot accommodate truck traffic. If this occurs, the contractor is expected to sign both detours per the standard drawings and MUTCD. Additional clarification signage between the detours may be needed at points where they diverge.
4) For projects that involve the use of bi-directional lane closures and the temporary lane width per the plans or as proposed by the contractor is less than 10 feet, the contractor shall be required to provide a signed detour for oversized vehicles.

The traffic control plan must be submitted and approved to allow for coordination of the public information officer with the closure notification. The public must be notified of the proposed detour route when they are notified of the closure, 2 weeks before closure. All time and expenses necessary for the development of the detour plan(s) will be incidental to the lump sum bid item “Maintain and Control Traffic”.

For projects with an on-site diversion included in the construction, the preparation of traffic control plans for a detour and implementation of a detour will not be required, unless specified in the plans.

IX. PAYMENT

Unless listed as a bid item in the contract documents, payment will only be made for the following items:

1. Portable Changeable Message Boards - Each
2. Maintain and Control Traffic - Lump Sum

All other items needed to maintain traffic in accordance with these contract documents and the approved traffic control plan shall be considered incidental to Maintain and Control Traffic. These items include but are not limited to traffic signals, signs, barrier wall, crash cushions, temporary guardrail, temporary and permanent pavement striping, cones, barrels, flaggers, etc.

SPECIAL NOTE FOR FOUNDATION PREPARATION

12-10116.00 Letcher 067C00091N

Foundation Preparation. For projects involving the removal and replacement of the asphalt and backfill behind the existing abutments and new abutments or end bents, the required excavation, geotextile fabric Class 1, 4" perforated pipe, and new Structural Granular Backfill as shown in Figure 1 as well as any excavation and grading needed to shape the bridge approaches to match the existing roadway template, will be paid for by the bid item for Foundation Preparation. See Special Provision 69 and the Standard Drawings regarding additional construction details as required.

Backfill material used behind newly constructed abutments on county routes may be constructed with Type III soil backfill. All existing abutments, abutments on state routes, and newly constructed or existing bents must be backfilled with material meeting Structural Granular Backfill specifications.

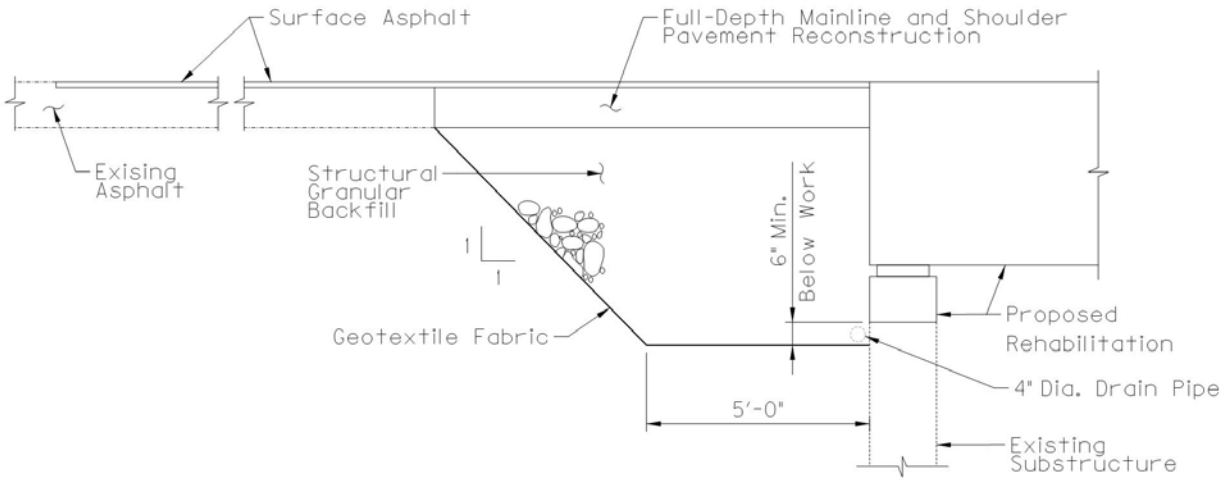

Figure 1: Detail showing proposed work for deck and superstructure replacements

I. MEASUREMENT

A. Foundation Preparation: See Section 603.

II. PAYMENT

A. Foundation Preparation: See Section 603. Payment for Structural Granular Backfill or Type III soil backfill to be incidental to Foundation Preparation.

SPECIAL NOTE FOR CONCRETE SEALING

12-10116.00 Letcher 067C00091N

These Notes or designated portions thereof, apply where so indicated on the plans, proposals or bidding instruction.

I. DESCRIPTION. Perform all work in accordance with the Department's current Standard Specifications, and applicable Supplemental Specifications, the attached sketches, and these Notes. Section references are to the Standard Specifications.

This work consists of:

1. Furnish all labor, materials, tools, equipment, and incidental items necessary to complete the work.
2. Provide safe access to the bridge, in accordance with Section 107.01.01, for the Engineer to sound possible repair areas and for workers to complete the construction.
3. Repair cracks as applicable in accordance with the Special Note for Epoxy Injection Crack Repair.
4. Repair delaminated or spalled areas as applicable in accordance with the Special Note for Concrete Patching.
5. Apply Ordinary Surface Finish
6. Prepare the surfaces to receive sealing.
7. Apply concrete sealing.
8. Any other work as specified as part of this contract.

II. MATERIALS.

A. Sealer. Use one of the following:

Product	**Supplier**
Protectosil BHN	Evonik Industries
Protectosil 300S	Evonik Industries
TK-590-40 Tri-Silane 40%	TK Products
SW-244-100	Chemical Products Industries, Inc.
TK-590-1 MS Tri-Silane	TK Products
MasterProtect H1000	BASF
Aquanil Plus 40	ChemMasters
SIL-ACT ATS-100	Advanced Chemical Technologies
Certivex Penseal BTS 100%	Vexcon
Pentreat 244-40	W.R. Meadows
Aquanil Plus 40A	ChemMasters

B. **Coverage Rate:** Follow all manufacturers recommendations for coverage rates except the application rate must not exceed the square footage coverage rate per gallon of sealer as given in the chart below. If the manufacturer recommends a coverage rate greater than given in the table below, apply sealer at the rate given in the table below for the chosen sealers silane percentage.

% Silane	Coverage rate (ft^2/gallon)
100	300
40	120
20	60

III. CONSTRUCTION.

A. **Perform Concrete Repairs.** Repair concrete surface in accordance with the Special Note for Epoxy Injection Crack Repair and/or the Special Note for Concrete Patching Repair if included in the contract documents.

B. **Curing Compound.** Contrary to Section 609.03.12 of the specifications, curing compound is not to be used on the deck due to potentially causing issues with the concrete sealer. During the deck pour, finishing, and tining operations the Class AA concrete shall be kept continuously moist with the use of a mister until burlap or curing blankets are applied to the surface. At no point should water be pooling or running off the surface or the surface of the concrete be allowed to become dry. After the burlap or curing blankets are installed, cure in accordance with the specifications. Include all costs in the unit price bid for Class AA concrete. Failure to properly cure the concrete in accordance with this note and the specifications may result in weakened or cracked concrete. If the concrete is weakened or cracked due to improper curing, the contractor will be responsible for providing alternates to fix the issues to the Engineer for review and the contractor will be solely responsible for all costs to do so, up to complete replacement. Do not begin any construction on fixing any issues without approval of the Engineer.

C. **Apply Ordinary Surface Finish.** In addition to new concrete, areas receiving epoxy injection, concrete patching, and other surface imperfections, including areas of minor cracking, should receive Ordinary Surface Finish in accordance with Section 601.03.18 of the Standard Specifications. Existing structural items not newly placed, patched, or repaired may be exempt from Ordinary Surface Finish. Use mortar of the same cement and fine aggregate as the concrete patching, or as directed by the Engineer. Payment will be incidental to Concrete Sealing. Finish surface of bridge decks in accordance with Section 609 of the Standard Specifications.

D. **Areas to Receive Concrete Sealing:**

1. Every exposed surface above a point 6” below ground or fill line of abutments, wing walls, end bent and pier caps, pedestals, back walls, columns, and exposed footings.

2. All exposed surfaces of concrete deck, barrier walls, parapets, curbs, and plinths.
3. Prestressed Concrete I-Girders, Concrete Beams, and Spread Prestressed Concrete Box Beams: The underneath surfaces of slab overhangs outside of exterior concrete girders and to the exterior side and bottom of exterior concrete girders and beams.
4. Adjacent Prestressed Concrete Composite Box Beams: Full length of the exterior face of all exterior beams from the top of the box beam to 1'-0" underneath the beams.
5. Prestressed Non-Composite Box Beams: All faces of all beams, excluding surfaces to be covered with a waterproofing membrane. Take care to ensure that the grout pockets are not sealed.
6. If the contract documents include the Special Note for Concrete Coating, do not apply concrete sealer to the areas where Concrete Coating is specified.

E. **Cleaning the Concrete Surfaces to be sealed.** Dry clean the concrete to remove all loose debris. Remove all visible hydrocarbons from the surface with detergent approved by the manufacturer of the deck sealant. Pressure wash all surfaces to be sealed at 2000 to 3000 psi. Install pressure gauges at each wand to verify pressure. Use 30° fan tip or as recommended by the manufacturer of the sealant. Hold pressure washing wand a minimum of 45° from the surfaces with a maximum stand-off distance of 12 inches.

F. **Sealing the Concrete.** Allow new concrete to cure a minimum 28 days prior to application of sealer. Monitor weather conditions prior to sealer application. Refer to manufacturer's recommendations for proper ambient conditions. Do not apply sealer if precipitation is anticipated within the time stated by the manufacturer. Allow the concrete to dry 24 hours (after washing or rain event) before sealer application. The bridge deck can be reopened to traffic while drying. Sealer must be applied within 48 hours of washing or the concrete must be rewashed. Divide the concrete into predefined areas of specific square footage to aid in determining usage. Comply with manufacturer's usage recommendation. Using a low-pressure pump, apply sealer and spread evenly with broom or squeegee; do not allow pooling to remain. When each predefined area is complete, measure the amount of sealer used to verify proper usage. After sealing, follow manufacturer's recommended cure time before opening to traffic. On vertical surfaces, apply the sealer in a flooding application from the bottom up, so the material runs down 6 to 8 inches below the spray pattern.

G. **Inspection:** Monitor all aspects of the project to assure compliance to this specification. Observe and document general conditions during the entirety of the project. Verify that each phase of work has been satisfactorily completed prior to beginning the next phase. Phases are described as follows:

1. Dry cleaning to remove loose debris, verify and document:
   a. All debris has been removed and disposed of properly.
2. Removal of hydrocarbons, verify and document:

a. The manufacturer's recommended detergent is used for removal.
b. Hydrocarbons have been satisfactorily removed.

3. Pressure washing, verify and document:
   a. Washing pressure at the wand.
   b. Tip size used.
   c. Wash angle and stand-off distance.
   d. The concrete is satisfactorily cleaned.
4. Sealer application, verify and document:
   a. Proper cure time for new concrete.
   b. Concrete surface is dry.
   c. Document time since washed.
   d. Was the bridge deck opened to traffic after washing?
   e. Document ambient temperature, surface temperature, relative humidity, and dew point.
   f. Application and distribution method.
   g. Coverage to be complete and even.
   h. Material is not allowed to remain pooled.
   i. Monitor material usage.
   j. No traffic on the bridge decks until proper cure time is allowed.

IV. MEASUREMENT

A. Concrete Sealing. The Department will measure the quantity per square feet of each area sealed.

V. PAYMENT

A. Concrete Sealing. Payment at the contract unit price per square feet is full compensation for the following: (1) Furnish all labor, materials, tools, and equipment; (2) Cleaning; (3) Sealing; (4) Maintain & control traffic; and, (5) Any other work specified as part of this contract.

SPECIAL NOTE FOR STRUCTURES WITH OVER THE SIDE DRAINAGE

12-10116.00 Letcher 067C00091N

1.0 DESCRIPTION. Perform all work in accordance with the Kentucky Transportation Cabinet, Department of Highway's current Standard Specifications for Road and Bridge Construction and applicable Supplemental Specifications, the Standard Drawings, this Note, and the attached detail drawings. Section references are to the Standard Specifications.

This note applies to structures with over the side drainage.

This work consists of: (1) Furnish all labor, materials, tools, and equipment; (2) Install the drip strip; (3) Maintain and control traffic as applicable; and (4) Any other work specified as part of this contract.

2.0 MATERIALS.

2.1 Drip Strip. Drip strip shall be hot dipped galvanized steel with a minimum of 22 gage.

3.0 CONSTRUCTION. The Contractor shall bear full responsibility and expense for any and all damage to the structure, should such damage result from the Contractor's actions.

3.1 Installation of Drip Strip. Install lower drip strip, as detailed, along the full length of each side of the bridge. If splices are required in the lower drip strip, tightly butt the individual pieces together, do not lap. Install a 1'-6" long upper drip strip at each railing post.

For concrete decks/slabs: Bend up strips at 90° against the inside face of the forms before concrete is placed. After the forms are removed, bend the drip strips into the final position of 45° as shown in the attached detail drawing. Use care when stripping formwork so as not to damage or wrinkle the drip strip. To further ensure that wrinkling of the strips does not occur, use an adequate length backup bar during the bending out operation.

For asphalt overlays: Prior to placing the asphalt overlay, install the bent drip strips along the edge of the prestressed box beam as shown. Fasten the drip strips with (1¼" length, 3/32" shank diameter) button head spikes with deformed shanks or expansion anchors at 1'-6" c/c max. All installation devices shall be galvanized or stainless steel. Other similar devices shall not be used unless approved by the Engineer.

4.0 PAYMENT.

5.1 Drip Strip. Cost of all work, including all materials, labor, equipment, tools, and incidentals necessary to complete the work as specified by this note, shall be considered incidental to the project.

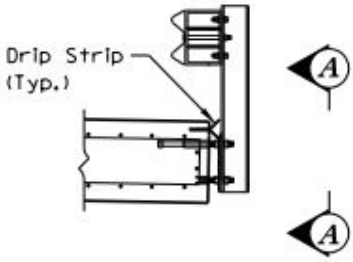

CONCRETE SLAB WITH TYPE II RAILING

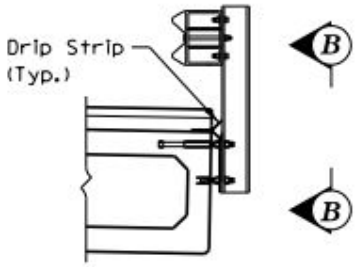

NONCOMPOSITE BOX BEAM WITH TYPE II RAILING

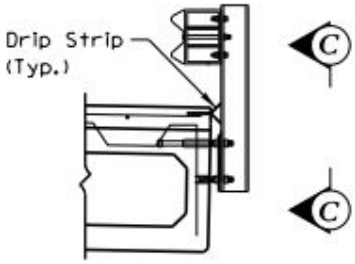

COMPOSITE BOX BEAM WITH TYPE II RAILING

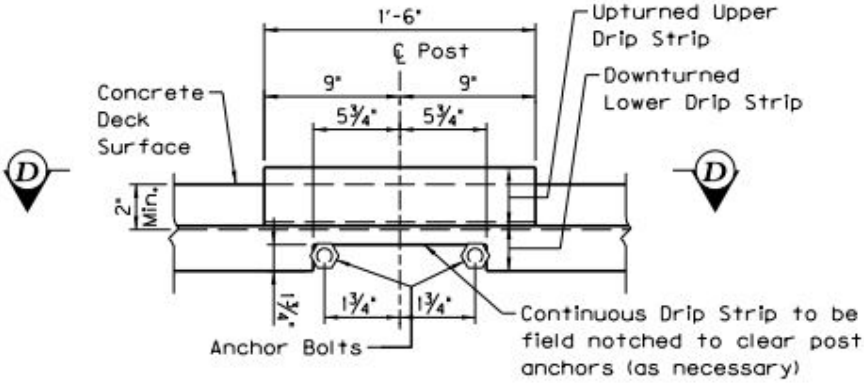

VIEW A–A

(Strip shown prior to concrete placement)

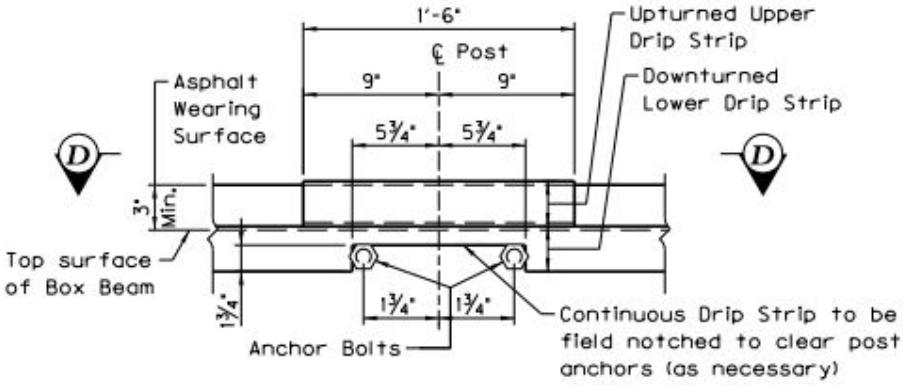

VIEW B–B

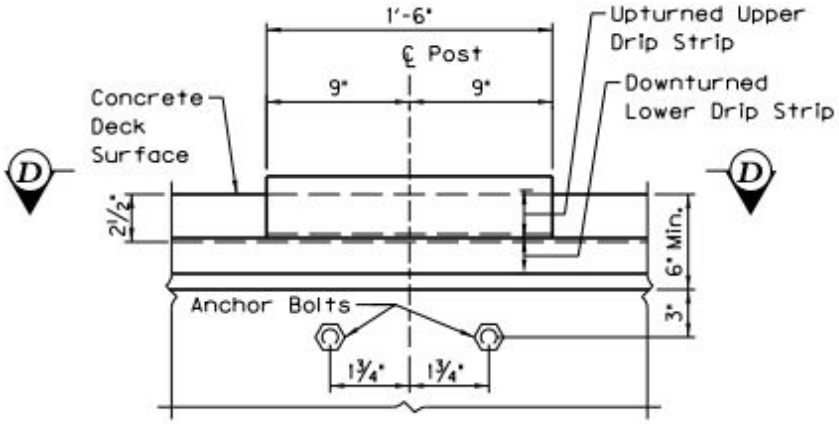

VIEW C–C

(Strip shown prior to concrete placement)

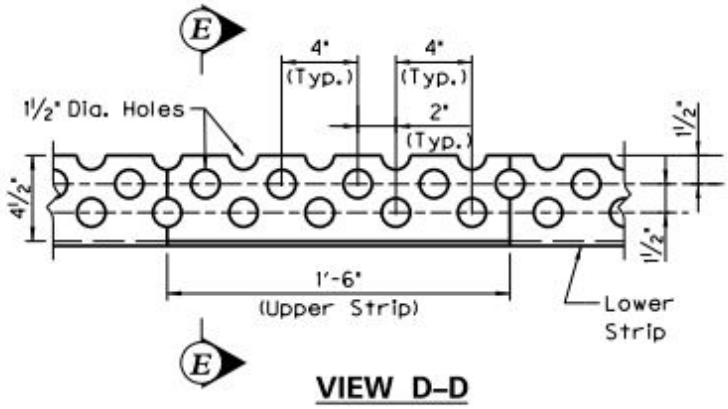

VIEW D–D

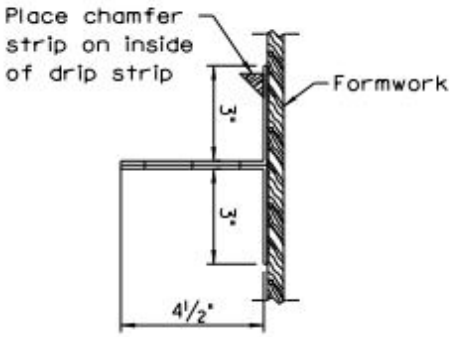

SECTION E–E

(For concrete deck prior to concrete placement)

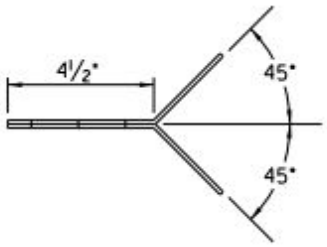

SECTION E–E

(For concrete deck after concrete placement)

April 23, 2020

SPECIAL NOTE FOR TRUSS SCREEDS ON CONCRETE OVERLAYS

12-10116.00 Letcher 067C00091N

This Special Note will apply where indicated on the plans or in the proposal. Section references herein are to the Department's Current Standard Specifications for Road and Bridge Construction.

1.0 DESCRIPTION. This specification covers the use of vibratory truss screed use on side-by-side composite box beams with designed slab thickness equal to a nominal five inches. Contrary to Kentucky Transportation Cabinet Department of Highways Standard Specifications for Road And Bridge Construction, latest edition, the use of a Vibratory Truss Screed in lieu of a self-propelled finishing machine equipped as detailed in Section 609.02.09 of the Specifications will be considered for use provided the following requirements of this Special Note are met:

2.0 EQUIPMENT AND QUALIFYING PROJECTS.

2.1 Vibratory Truss Screed. The contractor shall submit for approval, prior to use, the manufacturer's literature confirming that the vibratory truss screed proposed shall be able to meet the required cross slope of bridge and provide a minimum of 8,000 vibration cycle modes per minute (VPM). The Central Office Division of Construction will make the determination of use for each project.

2.2 Qualifying Structures. The vibratory truss screed can only be considered on structures meeting the following criteria:

- **A.** Bridge design consists of side-by-side composite box beams with concrete overlay.
- **B.** The design for the thickness of concrete for the bridge deck shall be 5-inch depth as detailed on the typical section of the bridge plans.
- **C.** The actual maximum nominal depth thickness must be less than 8" at any point on the deck.
- **D.** The side-by-side box beam bridge deck shall have only a single mat of reinforcement steel.

3.0 CONSTRUCTION.

3.1 Submittal. Submit, to the Central Office, Division of Construction, manufacturer's specifications of equipment proposed for use.

3.2 Sampling and Testing. If approved, the bridge deck may be cored to verify density and voids, at the discretion of the Director of the Division of Construction. Failure to meet proper density and consolidation will incur a penalty up to removal and replacement.

4.0 MEASUREMENT. The Department will not measure for the use of vibratory truss screeds and are incidental to the work being performed.

April 23, 2020

5.0 PAYMENT. The Department will not make payment for the use of the vibratory truss screed and shall be incidental to the following:

Code	Pay Item	Pay Unit
08104	CONCRETE-CLASS AA	Cubic Yard

Environmental Compliance Plan (ECP) 1-10000

Special Note for Environmental Compliance Plan (ECP)

Project:	A1 D1 028B00021N Crittenden	Item No:	1-10000
Process Document:	-1	Bridge No	028B00021N
Current Workflow Step:	ENV Updates	County:	Crittenden
Subject:	ECP- 028B00021N	Status	Submitted

The following ECP checklist outlines responsibilities of the Contractor and/or the KYTC to ensure all environmental commitments are met. Please pay special attention to:

- Commitment Description (commitment made to resource agencies)
- Responsible Party
- Compliance Document (how compliance is to be documented)

If you have any questions, please email BKY_Env@doc.e-builder.net.

Environmental Compliance Plan (ECP) 1-10000

#	Subject	Commitment Description	ENV Reference Document and Oversight Agency	Responsibility Phase	Responsible Party	Compliance Document	Doc to Include in Bid Pkg and Contract	Bid Pckg / Contract Doc Attached?
1	Other	Project/Site dependent	NEPA Doc - FHWA	Environmental	KYTC DEA	n/a	CE	Yes
2	Archaeology	Stop work if unanticipated discoveries, including human remains, are discovered	Archaeology Report - Kentucky SHPO	Construction	Contractor	See instruction in Special Note	Special Note for Additional Environmental Commitments	Yes
3	Environmentally Cleared Area (ECA)	Keep all work activity within the cleared area. Contractor shall install snow fencing to delineate ECA	Archaeology Report - Kentucky SHPO	Construction	Contractor, Inspector	Daily Work Report (DWR)	Special Note and ECA map	Yes
4	Species	Do not clear trees during June or July	Biological Assessment - USFWS	Construction	Contractor	Daily Work Report (DWR)	Special Note for Seasonal Restrictions	Yes
5	Water Quality	Follow permit re: mobiliz. form, debris removal, erosion control	NW3 - USACE; WQC - KDOW	Construction	Contractor	Daily Work Report (DWR)	Special Note for Ourstanding State Resource Water (OSRW) & LD	Yes
6	Water Quality	If 1.0 acre or more of land is disturbed in total (including staging areas) must obtain KPDES permit	KYR10 (BMP) - USEPA KDOW	Construction	Contractor	See instructions in KPDES	KPDES KYR10 (BMP)	Yes

#	Subject	Commitment Description	ENV Reference Document and Oversight Agency	Responsibility Phase	Responsible Party	Compliance Document	Doc to Include in Bid Pkg and Contract	Bid Pckg / Contract Doc Attached?
7	Water Quality	Notify KYTC DEA 14 days prior to mobilization, and other items in Special Note	NW3 - USACE; WQC - KDOW	Construction	Contractor	Mobilization Form	Special Note for OSRW	Yes
8	Air Quality	Notify DAQ 10 working days prior to demolition	Asbestos Inspection Report - USEPA and KDAQ	Construction	Contractor	DEP 7036 Form and email to KDAQ	Asbestos Inspection Report	Yes
9	Water Quality	Follow commitments in 404 and NW3 permits	USACE - NW3; KDOW - WQC	Construction	KYTC DEA, Inspector, KYTC Resident Engineer, Contractor	DWL	NW3 and WQC	Yes

SPECIAL NOTE

For Additional Environmental Commitments

12-10116.00 Letcher 067C00091N

IN ADDITION TO OTHER ENVIRONMENTAL COMMITMENTS LISTED IN THIS CONTRACT, THE FOLLOWING COMMITMENTS ALSO APPLY, AS THIS IS A FEDERALLY FUNDED UNDERTAKING AS DEFINED IN SECTION 106 OF THE NATIONAL HISTORIC PRESERVATION ACT, 36 CFR 800.16(Z):

1) The KYTC has completed a Phase 1 archaeological survey for a site-specific area surrounding the bridge. The cleared area is shown as "Archaeologically Cleared Area" or "Environmentally Cleared Area" on the concept plans and/or the map attached to this note or included elsewhere in the proposal. Likewise, any areas that must be avoided have been labeled "Do Not Disturb." The contractor shall install snow fencing to clearly delineate the boundary of the project lying within the bounds of the archeologically cleared area and right of way/easements. This snow fence shall be paid for per linear foot measured. If the Contractor requests additional area, and as a result additional delineation is required, the additional snow fence will not be paid and will be considered incidental to the original line item for snow fence.

   If the Contractor deems it necessary to use additional areas outside the Archaeologically/ Environmentally Cleared Area for any purposes—e.g., laydown yards, vehicle parking, parking cranes, delivering beams, borrow areas, waste areas, etc.—the Contractor must first get a written agreement with the landowner (assuming the additional area is outside the right-of-way). Then the Contractor shall seek approval of the use of the site—whether within or outside the right-of-way—by both the KYTC Section Supervisor and the Bridging Kentucky Environmental Lead at BKY_Env@docs.e-builder.net. The Contractor shall provide a map of the area(s) to be used, including access points, and property-owner agreements. The BKY Environmental Team will complete initial field investigations for archaeological, historical, ecological, and other environmental clearances. If any potentially significant site or resources are found, the KYTC has the right to deny the use of the proposed site. The maps and property owner agreements are to be submitted at least ten (10) business days prior to the Preconstruction Conference, or sixty (60) days prior to the Contractors access to the site, for coordination and review by the KYTC District and Bridging Kentucky Team.

   A Liquidated Damage of $50,000 will be assessed whenever the Contractor has used any restricted areas. The fee will be assessed on a *per bridge* basis, whether the contract involves bridge bundles or a single bridge. In addition, all fines, fees, penalties, remediation costs, and other damages related to breaches of Threatened and Endangered Species Act Section 7, National Historic Preservation Act Section 106, Clean Water Act Sections 401 and 404, Kentucky General Permit for Stormwater Discharges KYR10, Environmental Protection Agency requirements, State Historic Preservation Office requirements, and other related permitting agencies will be paid by the Contractor, including all associated costs and burdens placed upon the Kentucky Transportation Cabinet.

2) In the event that human remains are encountered during project activities, all work should be immediately stopped in the area. The area should be cordoned off, and, in accordance with KRS

72.020, the county coroner and local law enforcement must be contacted immediately. Upon confirmation that the human remains are not of forensic interest, the unanticipated discovery must be reported to Nicolas Laracuente at the Kentucky Heritage Council at (502) 892-3614, George Crothers at the Office of State Archaeology at (859) 257-1944, and KYTC DEA archaeologists at (502) 564-7250.

For guidance regarding inadvertent discovery and treatment of human remains, refer to the KYTC's *Right of Way Guidance Manual* (Section ROW-1202), and the Advisory Council on Historic Preservation's (ACHP) *Policy Statement Regarding Treatment of Human Remains and Grave Goods* (adopted by ACHP February 23, 2007).

3) If, during the implementation of The Project, a previously unidentified historic/ archaeological property is discovered or a previously identified historic/archaeological property is affected in an unanticipated manner, the contractor shall (1) call KYTC DEA archaeologists at (502) 564-7250, (2) call SHPO archaeologists at (502) 892-3614, and (3) ensure that all work within a reasonable area of the discovery shall cease until such time as a treatment plan can be developed and implemented.

	LATITUDE	LONGITUDE	ELEVATION
A	37° 7'8.89"N	82°53'4.74"W	1130
B	37° 7'6.97"N	82°53'2.22"W	1109
C	37° 7'4.32"N	82°53'5.22"W	1089
D	37° 7'6.29"N	82°53'7.70"W	1100

Environmentally Cleared Area

North Fork Kentucky River

Cr-1716Q4 x Hancock Dr

Bridge

ID: 067C00091N

Item No.: 12-10116

N

NOTE: Latitude, Longitude and Elevation are approximate based on Google Earth

SPECIAL NOTE

FOR SEDIMENT PREVENTION AND EROSION CONTROL

12-10116.00 Letcher 067C00091N

FOR IMPACT REGARDLESS OF SIZE OF THE DISTRUBED AREA

Potential impacts to gray bat foraging habitat and habitat for federally listed fish and mussel species will be minimized by implementing erosion prevention and sediment control measures.

As required under Section 213 of the KYTC Standard Specifications, prior to onsite activities a **site-specific *Erosion Control Plan* including BMPs** to ensure continuous erosion control throughout the construction and post construction period. The plan will identify individual Disturbed Drainage Areas (DDA) where storm water from the construction area will be discharged off site or into waters of the Commonwealth.

Should the Contractor fail to create a BMP Plan or provide and maintain the necessary erosion control, Liquidated Damages will apply at the rate specified in the contract. If no rate is specified, Liquidated Damages will be applied at the rate specified in Section 108 of the Standard Specifications.

The erosion prevention and sediment controls proposed are presented below.

- The location of the individual erosion prevention/sediment control measures will be identified by the Resident Engineer and Contractor. The Contractor will place erosion control devices as identified in the site-specific BMP Plan prior to beginning work.
- Mulch will be placed, during grade and drain activities, across all areas where no work will be conducted for a period of 14 consecutive days.
- Tree clearing within the riparian zone will be minimized. Trees to be removed will be determined by the resident engineer and the contractor prior to disturbance. (Note: Any “Special Note for Tree Clearing Restrictions” must be adhered to.)
- Silt fence, or other approved method as appropriate, will be installed at the edge of waters within the project corridors to eliminate the deposition of rock and debris in the streams during construction activities. In the unforeseen event that unintended debris does enter the streams, the resident engineer will halt the contributing activity until appropriate remedial actions have been implemented.
- To the maximum extent plausible, construction activities will take place during low-flow periods.
- Equipment staging and cleaning areas will be located to eliminate direct inputs to waters of the Commonwealth. These areas will be located such that effluent will be filtered through vegetated areas and appropriate sediment controls prior to discharge offsite.

- Concrete will be poured in a manner to avoid spills into the streams. In the unforeseen event that a spill does occur, the USFWS will be notified, and the resident engineer will immediately halt the activity until remedial measures have been implemented.
- KYTC proposes to stabilize areas disturbed during construction activities through vegetation establishment and placement of riprap and geotextile fabric. Re-vegetation of the disturbed areas will allow thermoregulation of water within the streams, establish long-term, regenerative stabilization of the stream banks, and provide nutrients to the aquatic macroinvertebrate community through inputs of organic material.
- Areas disturbed during construction and not stabilized with rip rap and erosion blanket will be seeded using a standard seed mix. Depending on project slope and project location, application rates and seed mix types will vary. The Contractor shall perform all final seeding and protection, in accordance with the plans and Section 212 of KYTC Standard Specifications.
- Contrary to Section 213.03.03, paragraph 2, the Engineer shall conduct inspections as needed to verify compliance with Section 221 of KYTC Standard Specifications The Engineer's inspections shall be performed a minimum of once per month and within seven (7) days after a storm of ½ inch or greater. Copies of the Engineer's inspections shall not be provided to the Contractor unless improvements to the BMPs are required. The Contractor shall initiate corrective action within 24 hours of any reported deficiency and complete the work within five (5) days. The Engineer shall use Form TC 63-61 A for this report. Inspections performed by the Engineer do not relieve the Contractor of any responsibility for compliance. If corrections are not made within the five (5) days specified, the liquidated damages will apply at the rate specified in the Liquidated Damages note in the contract.
- Contrary to Sections 212.05 and 213.05, unless listed in the proposal, bid items for temporary BMPs and items for permanent erosion control will not be measured for payment and will be replaced with one lump sum item for the services. Payment will be pro-rated based on the Project Schedule as submitted by the Contractor and as agreed to by the Engineer.
- The Contractor shall be responsible for applying "good engineering practices." The Contractor may use any temporary BMPs and permanent BMPs that fall within the guidance of the current Standard Specifications, KYTC's Best Management Practices manual, and with the approval of the KYTC Engineer.

FOR IMPACT GREATER THAN 1.0 ACRE

When the total disturbed area for a project, including laydown and waste/borrow areas, is greater than 1.0 acre, the Contractor shall be responsible for filing the Kentucky Pollution discharge Elimination System (KPDES) KYR10 permit Notice of Intent (NOI) with the Kentucky Division of Water (DOW). The Contractor will be responsible for following the KPDES requirements of local Municipal Separate Storm Sewer System (MS4) programs with jurisdiction. Required NOI shall name the Contractor as the Facility Operator and include the KYTC Contract ID Number (CID) for reference. For grouped contracts with more than one structure, each structure will be treated independently in regards to disturbed area unless another structure is within 0.25 mile of

the structure. For structures within 0.25 mile of each other, the total disturbed area will be the sum of the combined disturbed areas. The Contractor shall be responsible for filing the KPDES permit Notice of Termination (NOT) with the Kentucky DOW and any local MS4 Program that has jurisdiction. The NOT shall be filed after the Engineer agrees the project is stabilized or the project has been formally accepted.

The Contractor shall perform all temporary erosion/sediment control functions including: providing a Best Management Practice (BMP) Plan, conducting required inspections, modifying the BMP Plan documents as construction progresses, and documenting the installation and maintenance of BMPs in conformance with the KPDES KYR10 permit effective on August 1, 2009, or a permit re-issued to replace that KYR10 permit. This work shall be conducted in conformance with the requirements of Section 213 of the KYTC current Department of Highways, Standard Specifications for Road and Bridge Construction (Standard Specifications).

The Contractor shall be responsible for the examination of the soils to be encountered and make his own independent determination of the temporary BMPs that will be required to accomplish effective erosion prevention and sediment control. The Contractor shall provide the Engineer copies of all documents required by the KPDES permit at the time they are prepared.

If there are any questions regarding this note, please contact Danny Peake, Director, Division of Environmental Analysis, 200 Mero Street, Frankfort, KY 40601, Phone (502) 564-7250.

12-10116.00 LETCHER COUNTY

PLAN SHEETS

PLAN SHEETS WHICH ARE TO SCALE ARE AVAILABLE TO VIEW AND PRINT IN THE PROJECT-RELATED INFORMATION FOLDER FOR THIS LETTING AT THE CONSTRUCTION PROCUREMENT WEBSITE:

http://transportation.ky.gov/Construction-Procurement/Pages/default.aspx

Kentucky Transportation Cabinet

Highway District 12

And

_____(2), Construction

Kentucky Pollutant Discharge Elimination System Permit KYR10 Best Management Practices (BMP) plan

Groundwater protection plan

For Highway Construction Activities

For

Replacement

Project: CID ## -

Project Information

Note – (1) = Design (2) = Construction (3) = Contractor

1. Owner – County Highway Agency, District 12 (1)

2. Resident Engineer: (2)

3. Contractor Name: (2)

   Address: (2)

   Phone number: (2)

   Contact: (2)

   Contractor's agent responsible for compliance with KPDES permit requirements: (3)

4. Project Control Number: (2)

5. Route (Address): CR 1716Q4 (Hancock Drive) over N. Fork of Kentucky River (1)

6. Latitude/Longitude (project mid-point): 37°07'06.8" / 82°53'05.0" (1)

7. County (project mid-point): Letcher County (1)

8. Project start date (date work will begin): (2)

9. Projected completion date: (2)

A. Site Description

1. **Nature of Construction Activity (from letting project description):** Address deficiencies of CR 1716Q4 (Hancock Drive) Bridge over North Fork of Kentucky River (067C00091N), 0.196 mile from KY 588 MP 0.15 to MP 0.25, a distance of 0.10 mile. Replacement SYP No. 12-10116. (1)

2. **Order of major soil disturbing activities:** (2) and (3)

3. **Projected volume of material to be moved:** (3)

4. **Estimate of total project area (acres):** (3)

5. **Estimate of area to be disturbed (acres):** (3)

6. **Post construction runoff coefficient** will be included in the project drainage folder. Persons needing information pertaining to the runoff coefficient will contact the resident engineer to request this information. (1)

7. **Data describing existing soil condition:** The Rowdy-Grigsby soil complex is mapped within the project area. The Grigsby series consists of very deep, well drained soils that formed from a mixture of Pennsylvanian aged sandstone, shale, siltstone, and limestone alluvium. They are found on low stream terraces, floodplains, and natural levees. (1) and (2)

8. **Data describing existing discharge water quality (if any):** (2)

9. **Receiving water name:** North Fork of Kentucky River (1)

10. **TMDLs and Pollutants of Concern in Receiving Waters:** (1 DEA)

11. **Site map:** Project layout sheet plus the erosion control sheets in the project plans that depict Disturbed Drainage Areas (DDAs) and related information. These sheets depict the existing project conditions with areas delineated by DDA (drainage area bounded by watershed breaks and right of way limits), the storm water discharge locations (either as a point discharge or as overland flow) and the areas that drain to each discharge point. These plans define the limits of areas to be disturbed and the location of control measures. Controls will be either site specific as designated by the designer or will be annotated by the contractor and resident engineer before disturbance commences. The project layout sheet shows the surface waters and wetlands.

12. **Potential sources of pollutants:** The primary source of pollutants is solids that are mobilized during storm events. Other sources of pollutants include

oil/fuel/grease from servicing and operating construction equipment, concrete washout water, sanitary wastes and trash/debris. (3)

B. Sediment and Erosion Control Measures

1. Plans for highway construction projects will include erosion control sheets that depict Disturbed Drainage Areas (DDAs) and related information. These plan sheets will show the existing project conditions with areas delineated by DDA within the right of way limits, the discharge points and the areas that drain to each discharge point. Project managers and designers will analyze the DDAs and identify Best Management Practices (BMPs) that are site specific. The balance of the BMPs for the project will be listed in the bid documents for selection and use by the contractor on the project with approval by the resident engineer.

   Projects that do not have DDAs annotated on the erosion control sheets will employ the same concepts for development and managing BMP plans.

2. Following award of the contract, the contractor and resident engineer will annotate the erosion control sheets showing location and type of BMPs for each of the DDAs that will be disturbed at the outset of the project. This annotation will be accompanied by an order of work that reflects the order or sequence of major soil moving activities. The remaining DDAs are to be designated as "Do Not Disturb" until the contractor and resident engineer prepare the plan for BMPs to be employed. The initial BMP's shall be for the first phase (generally Clearing and Grubbing) and shall be modified as needed as the project changes phases. The BMP Plan will be modified to reflect disturbance in additional DDA's as the work progresses. <u>All DDA's will have adequate BMP's in place before being disturbed.</u>

3. As DDAs are prepared for construction, the following will be addressed for the project as a whole or for each DDA as appropriate:

   - **Construction Access**—This is the first land-disturbing activity. As soon as construction begins, bare areas will be stabilized with gravel and temporary mulch and/or vegetation.

   - **Sources**—At the beginning of the project, all DDAs for the project will be inspected for areas that are a source of storm water pollutants. Areas that are a source of pollutants will receive appropriate cover or BMPs to arrest the introduction of pollutants into storm water. Areas that have not been opened by the contractor will be inspected periodically (once per month) to determine if there is a need to employ BMPs to keep pollutants from entering storm water.

   - **Clearing and Grubbing**—The following BMP's will be considered and used where appropriate.

- Leaving areas undisturbed when possible.
- Silt basins to provide silt volume for large areas.
- Silt Traps Type A for small areas.
- Silt Traps Type C in front of existing and drop inlets which are to be saved.
- Diversion ditches to catch sheet runoff and carry it to basins or traps or to divert it around areas to be disturbed.
- Brush and/or other barriers to slow and/or divert runoff.
- Silt fences to catch sheet runoff on short slopes. For longer slopes, multiple rows of silt fence may be considered.
- Temporary mulch for areas which are not feasible for the fore mentioned types of protections.
- Non-standard or innovative methods.

➢ **Cut and Fill and Placement of Drainage Structures**—The BMP Plan will be modified to show additional BMP's such as:

- Silt Traps Type B in ditches and/or drainways as they are completed.
- Silt Traps Type C in front of pipes after they are placed.
- Channel Lining.
- Erosion Control Blanket.
- Non-standard or innovative methods.

➢ **Profile and X-Section in Place**—The BMP Plan will be modified to show elimination of BMP's which had to be removed and the addition of new BMP's as the roadway was shaped. Probably changes include:

- Silt Trap Type A, Brush and/or other barriers, Temporary mulch, and any other BMP which had to be removed for final grading to take place.
- Additional Silt Traps Type B and Type C to be placed as final drainage patterns are put in place.
- Additional Channel Lining and/or Erosion Control Blanket.
- Temporary mulch for areas where Permanent Seeding and Protection cannot be done within 21 days.
- Special BMP's such as Karst Policy.

➢ **Finish Work (Paving, Seeding, Protect, etc.)**—A final BMP Plan will result from modifications during this phase of construction. Probable changes include:

- Removal of Silt Traps Type B from ditches and drainways if they are protected with other BMP's which are sufficient to control

erosion, i.e. Erosion Control Blanket, or Permanent Seeding and Protection on moderate grades.

- Permanent Seeding and Protection.
- Placing Sod.
- Planting trees and/or shrubs where they are included in the project.

➢ BMP's, including Storm Water Management Devices such as velocity dissipation devices and Karst policy BMP's, to be installed during construction to control the pollutants in storm water discharges that will occur after construction has been completed are: (3)

C. Other Control Measures

1. **Solid Materials**

   No solid materials, including building materials, shall be discharged to waters of the commonwealth, except as authorized by a Section 404 permit.

2. **Waste Materials**

   All waste materials that may leach pollutants (paint and paint containers, caulk tubes, oil/grease containers, liquids of any kind, soluble materials, etc.) will be collected and stored in appropriate covered waste containers. Waste containers shall be removed from the project site on a sufficiently frequent basis as to not allow wastes to become a source of pollution. All personnel will be instructed regarding the correct procedure for waste disposal. Wastes will be disposed in accordance with appropriate regulations. Notices stating these practices will be posted in the office.

3. **Hazardous Waste**

   All hazardous waste materials will be managed and disposed of in the manner specified by local or state regulation. The contractor shall notify the Section Engineer if there any hazardous wastes being generated at the project site and how these wastes are being managed. Site personnel will be instructed with regard to proper storage and handling of hazardous wastes when required. The Transportation Cabinet will file for generator, registration when appropriate, with the Division of Waste Management and advise the contractor regarding waste management requirements.

4. **Spill Prevention**

   The following material management practices will be used to reduce the risk of spills or other exposure of materials and substances to the weather and/or runoff. (3)

- **Good Housekeeping**

  The following good housekeeping practices will be followed onsite during the construction project.

  - An effort will be made to store only enough product required to do the job.
  - All materials stored onsite will be stored in a neat, orderly manner in their appropriate containers and, if possible, under a roof or other enclosure.
  - Products will be kept in their original containers with the original manufacturer's label.
  - Substances will not be mixed with one another unless recommended by the manufacturer.
  - Whenever possible, all of the product will be used up before disposing of the container.
  - Manufacturers' recommendations for proper use and disposal will be followed.
  - The site contractor will inspect daily to ensure proper use and disposal of materials onsite.

- **Hazardous Products**

  These practices will be used to reduce the risks associated with any and all hazardous materials.

  - Products will be kept in original containers unless they are not resealable.
  - Original labels and material safety data sheets (MSDS) will be reviewed and retained.
  - Contractor will follow procedures recommended by the manufacturer when handling hazardous materials.
  - If surplus product must be disposed of, manufacturers' or state/local recommended methods for proper disposal will be followed.

5. **Product-specific Practices**

   The following product-specific practices will be followed onsite:

   - **Petroleum Products**

     - Vehicles and equipment that are fueled and maintained on site will be monitored for leaks, and receive regular preventative maintenance to reduce the chance of leakage. Petroleum products

onsite will be stored in tightly sealed containers, which are clearly labeled and will be protected from exposure to weather.

- The contractor shall prepare an Oil Pollution Spill Prevention Control and Countermeasure plan when the project that involves the storage of petroleum products in 55 gallon or larger containers with a total combined storage capacity of 1,320 gallons. This is a requirement of 40 CFR 112.
- This project (will / will not) (3) have over 1,320 gallons of petroleum products with a total capacity, sum of all containers 55 gallon capacity and larger.

➢ **Fertilizers**

Fertilizers will be applied at rates prescribed by the contract, standard specifications or as directed by the resident engineer. Once applied, fertilizer will be covered with mulch or blankets or worked into the soil to limit exposure to storm water. Storage will be in a covered shed. The contents of any partially used bags of fertilizer will be transferred to a sealable plastic bin to avoid spills.

➢ **Paints**

All containers will be tightly sealed and stored indoors or under roof when not being used. Excess paint or paint wash water will not be discharged to the drainage or storm sewer system but will be properly disposed of according to manufacturers' instructions or state and local regulations.

➢ **Concrete Truck Washout**

Concrete truck mixers and chutes will not be washed on pavement, near storm drain inlets, or within 75 feet of any ditch, stream, wetland, lake, or sinkhole. Where possible, excess concrete and wash water will be discharged to areas prepared for pouring new concrete, flat areas to be paved that are away from ditches or drainage system features, or other locations that will not drain off site. Where this approach is not possible, a shallow earthen wash basin will be excavated away from ditches to receive the wash water.

➢ **Spill Control Practices**

In addition to the good housekeeping and material management practices discussed in the previous sections of this plan, the following practices will be followed for spill prevention and cleanup**:**

- Manufacturers' recommended methods for spill cleanup will be clearly posted. All personnel will be made aware of procedures and the location of the information and cleanup supplies.

- Materials and equipment necessary for spill cleanup will be kept in the material storage area. Equipment and materials will include as appropriate, brooms, dust pans, mops, rags, gloves, oil absorbents, sand, sawdust, and plastic and metal trash containers.
- All spills will be cleaned up immediately after discovery.
- The spill area will be kept well ventilated and personnel will wear appropriate protective clothing to prevent injury from contract with a hazardous substance.
- Spills of toxic or hazardous material will be reported to the appropriate state/local agency as required by KRS 224 and applicable federal law.
- The spill prevention plan will be adjusted as needed to prevent spills from reoccurring and improve spill response and cleanup.
- Spills of products will be cleaned up promptly. Wastes from spill clean-up will be disposed in accordance with appropriate regulations.

D. Other State and Local Plans

This BMP plan shall include any requirements specified in sediment and erosion control plans, storm water management plans or permits that have been approved by other state or local officials. Upon submittal of the NOI, other requirements for surface water protection are incorporated by reference into and are enforceable under this permit (even if they are not specifically included in this BMP plan). This provision does not apply to master or comprehensive plans, non-enforceable guidelines or technical guidance documents that are not identified in a specific plan or permit issued for the construction site by state or local officials. (1)

E. Maintenance

1. The BMP plan shall include a clear description of the maintenance procedures necessary to keep the control measures in good and effective operating condition.

2. Maintenance of BMPs during construction shall be a result of weekly and post rain event inspections with action being taken by the contractor to correct deficiencies.

3. Post Construction maintenance will be a function of normal highway maintenance operations. Following final project acceptance by the cabinet, district highway crews will be responsible for identification and correction of deficiencies regarding ground cover and cleaning of storm water BMPs. The project manager shall identify any BMPs that will be for the purpose of post construction storm water management with specific guidance for any non-routine maintenance. (1)

F. Inspections

Inspection and maintenance practices that will be used to maintain erosion and sediment controls:

- All erosion prevention and sediment control measures will be inspected at least once each week and following any rain of one-half inch or more.
- Inspections will be conducted by individuals that have successfully completed KEPSC-RI course as required by Section 213.02.02 of the Standard Specifications for Road and Bridge Construction, current edition.
- Inspection reports will be written, signed, dated, and kept on file.
- Areas at final grade will be seeded and mulched within 14 days.
- Areas that are not at final grade where construction has ceased for a period of 21 days or longer and soil stock piles shall receive temporary mulch no later than 14 days from the last construction activity in that area.
- All measures will be maintained in good working order. If a repair is necessary, it will be initiated within 24 hours of being reported.
- Built-up sediment will be removed from behind the silt fence before it has reached halfway up the height of the fence.
- Silt fences will be inspected for bypassing, overtopping, undercutting, depth of sediment, tears, and to ensure attachment to secure posts.
- Sediment basins will be inspected for depth of sediment, and built-up sediment will be removed when it reaches 50 percent of the design capacity and at the end of the job.
- Diversion dikes and berms will be inspected and any breaches promptly repaired. Areas that are eroding or scouring will be repaired and re-seeded / mulched as needed.
- Temporary and permanent seeding and mulching will be inspected for bare spots, washouts, and healthy growth. Bare or eroded areas will be repaired as needed.
- All material storage and equipment servicing areas that involve the management of bulk liquids, fuels, and bulk solids will be inspected weekly for conditions that represent a release or possible release of pollutants to the environment.

G. Non–Storm Water Discharges

It is expected that non-storm water discharges may occur from the site during the construction period. Examples of non-storm water discharges include:

- Water from water line flushings.
- Water form cleaning concrete trucks and equipment.
- Pavement wash waters (where no spills or leaks of toxic or hazardous materials have occurred).
- Uncontaminated groundwater and rain water (from dewatering during excavation).

All non-storm water discharges will be directed to the sediment basin or to a filter fence enclosure in a flat vegetated infiltration area or be filtered via another approved commercial product.

H. Groundwater Protection Plan (3)

This plan serves as the groundwater protection plan as required by 401 KAR 5:037.

- Contractors statement: (3)

The following activities, as enumerated by 401 KAR 5:037 Section 2, require the preparation and implementation of a groundwater protection plan, and will or may be may be conducted as part of this construction project:

_____2. (e) Land treatment or land disposal of a pollutant;

_____2. (f) Storing…or related handling of hazardous waste, solid waste or special waste…in tanks, drums, or other containers, or in piles (does not include wastes managed in a container placed for collection and removal of municipal solid waste for disposal off site);

_____2. (g) …handling of materials in bulk quantities (equal or greater than 55 gallons or 100 pounds net dry weight transported held in an individual container) that, if released to the environment, would be a pollutant;

_____2. (j) Storing or related handling of road oils, dust suppressants at a central location;

_____2. (k) Application or related handling of road oils, dust suppressants or deicing materials (does not include use of chloride-based deicing materials applied to roads or parking lots);

_____2. (m) Installation, construction, operation, or abandonment of wells, bore holes, or core holes (does not include bore holes for the purpose of explosive demolition);

Or, check the following only if there are no qualifying activities:

_____ There are no activities for this project as listed in 401 KAR 5:037 Section 2 that require the preparation and implementation of a groundwater protection plan.

The contractor is responsible for the preparation of a plan that addresses the 401 KAR 5:037 Section 3. (3) Elements of site specific groundwater protection plan:

(a) General information about this project is covered in the Project information;

(b) Activities that require a groundwater protection plan have been identified above;

(c) Practices that will protect groundwater from pollution are addressed in *Section C: Other Control Measures*.

(d) Implementation schedule—all practices required to prevent pollution of groundwater are to be in place prior to conducting the activity;

(e) Training is required as a part of the ground water protection plan. All employees of the contractor, sub-contractor, and resident engineer personnel will be trained to understand the nature and requirements of this plan as they pertain to their job function(s). Training will be accomplished within one week of employment and annually thereafter. A record of training will be maintained by the contractor with a copy provided to the resident engineer.

(f) Areas of the project and groundwater plan activities will be inspected as part of the weekly sediment and erosion control inspections

(g) Certification (see signature page).

Contractor and Resident Engineer Plan Certification

The contractor that is responsible for implementing this BMP plan is identified in the Project Information section of this plan.

The following certification applies to all parties that are signatory to this BMP plan:

I certify under penalty of law that this document and all attachments were prepared under my direction or supervision in accordance with a system designed to assure that qualified personnel properly gathered and evaluated the information submitted. Based on my inquiry of the person or persons who manage the system, or those persons directly responsible for gathering the information, the information submitted is, to the best of my knowledge and belief, true, accurate, and complete. I am aware that there are significant penalties for submitting false information, including the possibility of fine and imprisonment for knowing violations. Further, this plan complies with the requirements of 401 KAR 5:037. By this certification, the undersigned state that the individuals signing the plan have reviewed the terms of the plan and will implement its provisions as they pertain to ground water protection.

Resident Engineer and Contractor Certification:

(2) Resident Engineer signature

Signed _____ _____, _____

Typed or printed name[2] Title Signature

(3) Signed _____ _____, _____

Typed or printed name[1] Title Signature

1. *Contractors Note: to be signed by a person who is the owner, a responsible corporate officer, a general partner or the proprietor or a person designated to have the authority to sign reports by such a person in accordance with 401 KAR 5:060 Section 9. This delegation shall be in writing to: Manager, KPDES Branch, Division of Water, 14 Reilly Road, Frankfort, Kentucky 40601. Reference the Project Control Number (PCN) and KPDES number when one has been issued.*

2. *KYTC note: to be signed by the Chief District Engineer or a person designated to have the authority to sign reports by such a person (usually the resident engineer) in accordance with 401 KAR 5:060 Section 9. This delegation shall be in writing to: Manager, KPDES Branch, Division of Water, 14 Reilly Road, Frankfort, Kentucky 40601. Reference the Project Control Number (PCN) and KPDES number when one has been issued.*

Sub-Contractor Certification

The following sub-contractor shall be made aware of the BMP plan and responsible for implementation of BMPs identified in this plan as follows:

Subcontractor Name:

Address:

Phone:

The part of BMP plan this subcontractor is responsible to implement is:

I certify under penalty of law that I understand the terms and conditions of the general Kentucky Pollutant Discharge Elimination System permit that authorizes the storm water discharges, the BMP plan that has been developed to manage the quality of water to be discharged as a result of storm events associated with the construction site activity and management of non-storm water pollutant sources identified as part of this certification.

Signed _____ _____, _____

Typed or printed name[1] Title Signature

1. *Sub-Contractor Note: to be signed by a person who is the owner, a responsible corporate officer, a general partner or the proprietor or a person designated to have the authority to sign reports by such a person in accordance with 401 KAR 5:060 Section 9. This delegation shall be in writing to: Manager, KPDES Branch, Division of Water, 14 Reilly Road, Frankfort, Kentucky 40601. Reference the Project Control Number (PCN) and KPDES number when one has been issued*.

COUNTY OF	ITEM NO.	SHEET #
LETCHER	12-10116	R1

TRANSPORTATION CABINET
DEPARTMENT OF HIGHWAYS

LETCHER COUNTY
HANCOCK DRIVE OVER NORTH FORK KENTUCKY RIVER
STA. 49+97.00

STANDARD DRAWINGS

BDP-001-06	BOX BEAM GENERAL NOTES AND REFERENCES
BDP-002-03	BOX BEAM BEARING DETAILS
BDP-003-03	BOX BEAM MISCELLANEOUS DETAILS
BDP-004-04	BOX BEAM TENSION ROD DETAILS
BDP-007-05	BOX BEAM B17 AND CB17 DETAILS
BGX-006-10	STENCILS FOR STRUCTURES
BHS-011	RAILING SYSTEM SIDE MOUNTED MGS DETAILS
BJE-001-14	ARMORED EDGES
BPS-003-09	HP12x53 STEEL PILE
RBI-001-12	TYPICAL GUARDRAIL INSTALLATIONS
RBI-002-07	TYPICAL GUARDRAIL INSTALLATIONS
RBR-001-13	STEEL BEAM GUARDRAIL ('W' BEAM)
RBR-005-11	GUARDRAIL COMPONENTS
RBR-010-06	GUARDRAIL TERMINAL SECTIONS
RBR-015-06	STEEL GUARDRAIL POSTS
RBR-016-05	TIMBER GUARDRAIL POSTS
RBR-050-08	GUARDRAIL END TREATMENT TYPE 7
RBR-051-01	GUARDRAIL END TREATMENT TYPE 7 ALTERNATE
RBR-055-01	DELINEATORS FOR GUARDRAIL
RDI-040-01	EROSION CONTROL BLANKET SLOPE INSTALLATION
RDX-210-03	TEMPORARY SILT FENCE
RDX-220-05	SILT TRAP TYPE A
RDX-225-01	SILT TRAP TYPE B
RDX-230-1	SILT TRAP TYPE C
RGX-001-06	MISCELLANEOUS STANDARDS
RGX-100-07	TREATMENT OF EMBANKMENTS AT END-BENTS
RGX-105-09	TREATMENT OF EMBANKMENTS AT END-BENTS - DETAILS
RGX-200-01	ONE POINT PROCTOR FAMILY OF CURVES

ACTIVE SEPIAS

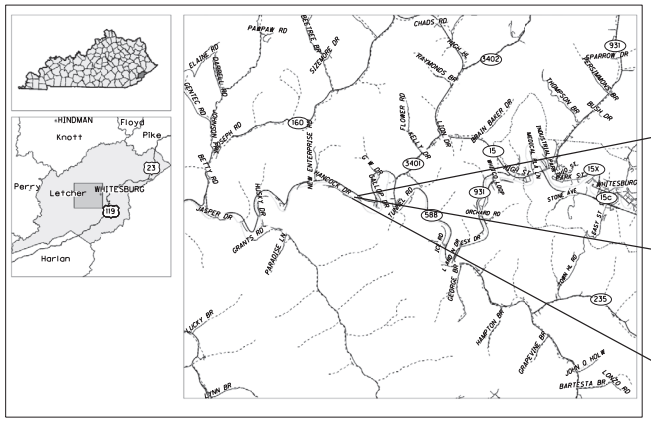

LOCATION MAP
GRAPHIC SCALE
0' 5000' 10000' 20000'

INDEX OF SHEETS

Sheet No.	Description
R1	LAYOUT SHEET
R2	TYPICAL SECTIONS, LEGEND & RIGHT OF WAY SUMMARY
R3	ROADWAY PLAN & PROFILE
X1-X8	CROSS SECTIONS
S1	GENERAL NOTES
S2	BRIDGE LAYOUT
S3	FOUNDATION LAYOUT
S4	END BENT DETAILS
S5	PIER DETAILS
S6	SUPERSTRUCTURE
S7	CONSTRUCTION ELEVATIONS

SPECIAL NOTES

TRAFFIC CONTROL ON BRIDGE REPAIR CONTRACTS
EROSION PREVENTION AND SEDIMENT CONTROL
CONTRACT COMPLETION DATE & LIQUIDATED DAMAGES ON BRIDGE REPAIR CONTRACTS
CONCRETE SEALING
STRUCTURES WITH OVER THE SIDE DRAINAGE
ADDITIONAL ENVIRONMENTAL COMMITMENTS
BRIDGING KENTUCKY PROJECT STENCIL

SPECIAL PROVISIONS

69 EMBANKMENT FOR BRIDGE END BENT STRUCTURES

SPECIFICATIONS

Standard Specifications for Road and Bridge Construction, Current Edition

2017 AASHTO LRFD Bridge Design Specifications with Current Interims.

REVISION	DATE

BEFORE YOU DIG

The contractor is instructed to call 1-800-752-6007 to reach KY 811, the one-call system for information on the location of existing underground utilities. The call is to be placed a minimum of two (2) and no more than ten (10) business days prior to excavation. The contractor should be aware that owners of underground facilities are not required to be members of the KY 811 one-call Before-U-Dig (BUD) service. The contractor must coordinate excavation with the utility owners, including those whom do not subscribe to KY 811. It may be necessary for the contractor to contact the County Court Clerk to determine what utility companies have facilities in the area.

DESIGN CRITERIA

CLASS OF HIGHWAY: RURAL LOCAL
TYPE OF TERRAIN: ROLLING
DESIGN SPEED
REQUIRED NPSD
REQUIRED PSD
LEVEL OF SERVICE
ADT PRESENT (2019)
ADT FUTURE ( )
DHV
D %
T %

GEOGRAPHIC COORDINATES

LATITUDE 37 DEGREES 07 MINUTES 07 SECONDS NORTH
LONGITUDE 82 DEGREES 53 MINUTES 05 SECONDS WEST

DESIGNED

% RESTRICTED SD
LEVEL OF SERVICE
MAX. DISTANCE W/O PASSING

REV. NO.	SHEETS REVISED	DATE

TABLE OF REVISIONS

EX BRIDGE ID 067C00091N

PREPARED BY
J.M. Crawford & Associates Consulting Engineers

BRIDGING KENTUCKY

STATE OF KENTUCKY — JOSEPH H. HODSKINS 12279 — LICENSED PROFESSIONAL ENGINEER

Joseph H. Hodskins — Digitally signed by Joseph H. Hodskins DN: c=US, st=Kentucky, l=Lexington, o=J.M. Crawford & Associates, cn=Joseph H. Hodskins, email=jjhodskins@jmcas.com Date: 2020.06.26 11:45:51 -04'00'

STATE OF KENTUCKY — LEE A. CARLISLE 25709 — LICENSED PROFESSIONAL ENGINEER

Lee A. Carlisle — Digitally signed by Lee A. Carlisle DN: c=US, st=Kentucky, l=Lexington, o=J.M. Crawford & Associates, cn=Lee A. Carlisle, email=lacarlisle@jmcas.com Date: 2020.06.26 11:44:25 -04'00'

Commonwealth of Kentucky
DEPARTMENT OF HIGHWAYS
COUNTY OF
LETCHER

HANCOCK DRIVE over NORTH FORK KENTUCKY RIVER
ITEM NO. 12-10116
DRAWING NO. 28158
PROJECT NUMBER:
LETTING DATE: August 21, 2020

RECOMMENDED BY: PROJECT MANAGER DATE:
PLAN APPROVED BY: STATE HIGHWAY ENGINEER DATE:

FILE NAME: ...\Plan Set\067C00091N_LS.dgn
USER: gacrank
DATE PLOTTED: 6/26/2020 1:39:29 AM
E-SHEET NAME:
Power InRoads v8.11.5.397

COUNTY OF	ITEM NO.	SHEET #
LETCHER	12-10116	R2

TYPICAL SECTIONS

CONVENTIONAL SIGNS

SURVEY LINE
GRADE LINE (400' V.C.)
GROUND LINE
COUNTY LINE
CORPORATE LIMITS
EXIST. PROPERTY LINE
EXIST. RIGHT OF WAY & PROPERTY LINE
PROPOSED RIGHT OF WAY
RIGHT OF WAY MONUMENT
BENCH MARK (B.M. NO.4)
EXISTING R/W MARKER
RIGHT OF WAY MONUMENT EXISTING/PROPOSED
UTILITY TEST HOLE (TH)
EXISTING ROAD
RAILROAD
FENCE (CONTROLLED ACCESS)
FENCE (EXCEPT STONE AND HEDGE)
TREE LINE
TREES
PIPE CULVERT
CULVERT
BRIDGE
BUILDINGS (1-S FRAME, 1-S BRICK, SHED, 2-S BRICK)
GUARDRAIL (END TREATMENT, GUARDRAIL, TERMINAL SECTION)

	EXISTING	PROPOSED
LIGHTING POLE		
POWER POLE		
JOINT POWER & TELEPHONE POLE		
TELEPHONE & TELEGRAPH POLE		
ANCHOR, POWER OR TELEPHONE		
STUB POWER		
STUB TELEPHONE		
WATER MAIN	WM	6" WM
GAS MAIN	GM	6" GM
TELEPHONE DUCT	T	T
ELECTRIC DUCT	E	E
DIRECT BURIAL TV CABLE	TV	TV
SANITARY SEWER (WITH MANHOLE)	SAN	SAN
STORM SEWER (WITH MANHOLE)	STORM	STORM
DIRECT BURIAL ELECTRIC CABLE	E	E
DIRECT BURIAL TELEPHONE CABLE	T	T
OVERHEAD WIRE		
TRAFFIC LIGHTS		
ELECTRIC MANHOLE	EMH	EMH
TELEPHONE MANHOLE	TMH	TMH

STONE FENCE
HEDGE FENCE
SWAMP OR MARSH
SPRINGS
SINKHOLE
QUARRY SITE
BLUE LINE STREAM
INTERMITTENT STREAM OR DITCH
LAKES OR PONDS
REGULATED FLOODWAY
NORTH POINT

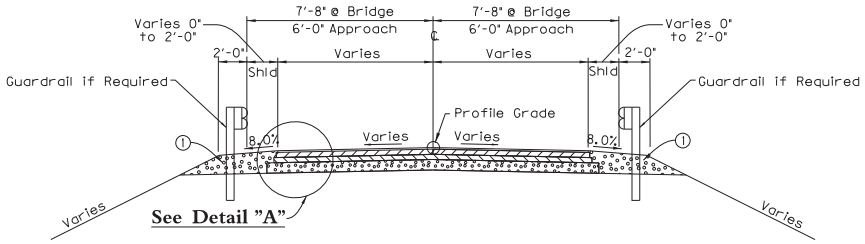

NOTES:

① DGA Base or other granular material approved by the Engineer needed for shoulders outside of paved area will be measured and paid as GRANULAR EMBANKMENT in accordance with the *Special Note for Bridge Overlay Approach Pavement*

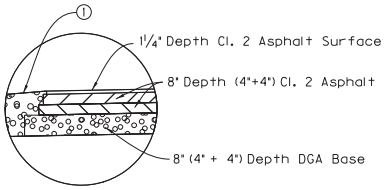

Detail "A"

NORMAL SECTION

Traffic Lane Pavement

Asphalt Surface — 1¼" Depth Cl. 2 Asphalt Surface 0.38D PG64-22
Asphalt Base — 8" Depth (4"+4") Cl. 2 Asphalt Base 1.00D PG 64-22
DGA Base — 8" Depth (4"+4")

Shoulders

Granular Embankment — Full Depth

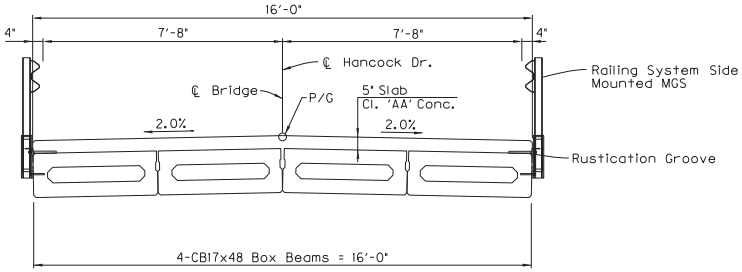

TYPICAL DECK SECTION

RIGHT OF WAY SUMMARY

PARCEL NO.	OWNER(S)	TOTAL AREA OF TRACT		PERMANENT R/W ACQUIRED		EASEMENTS		PORTION REMAINING		SEWER SYSTEM TYPE	SEWER SYSTEM AFFECTED BY PROJECT		BUILDINGS ACQUIRED NUMBER				SOURCE OF TITLE	REMARKS *
		ACRES	SQ. FT.	ACRES	SQ. FT.	PERMANENT SQ. FT.	TEMPORARY SQ. FT.	ACRES	SQ. FT.		YES	NO	C	R	F	S		
P-10	WENDALL WAYNE CAUDILL,SR.	0.50			2843			0.435		I		X					DB 417 PG 450	AREA FROM PVA
P-11	PAUL RANDALL COLLINS,JR		19820		3862		1526		15958	I		X					DB 444 PG 732	AREA FROM DEED
P-12	KENTUCKY RIVER PROPERTIES,LLC	481.5			9023			481.293		I		X					DB PG	AREA FROM PVA

SCALE: 1"=AS NOTED

PREPARED BY
JMC J.M. Crawford & Associates Consulting Engineers
BRIDGING KENTUCKY

TYPICAL SECTIONS, LEGEND & RIGHT OF WAY SUMMARY- HANCOCK DRIVE OVER NORTH FORK KENTUCKY RIVER

FILE NAME: ...\Plan Set\067C00091N_SHT1.dgn
USER: gpcrank
DATE PLOTTED: 6/26/2020 1:39:31 AM
E-SHEET NAME:
Power InRoads v8.11.9.397

COUNTY OF	ITEM NO.	SHEET #
LETCHER	12-10116	R3

HANCOCK DRIVE CURVE DATA

C# 1	C# 2	C# 3
P.I. Sta= 48+20.25	P.I. Sta= 50+82.16	P.I. Sta= 51+55.16
N =3579411.225	N =3579585.798	N =3579538.927
E =5756453.785	E =5756666.062	E =5756730.263
Delta= 72°16'52.13" Left	Delta= 75°33'53.52" Right	Delta= 19°35'16.66" Left
Ts= 47.47'	Ts= 21.71'	Ts= 40.57'
Lc = 82.00'	Lc = 36.93'	Lc = 80.34'
R= 65.00'	R= 28.00'	R= 235.00'
E= 15.49'	E= 7.43'	E= 3.48'
e=NC	e=NC	e=NC

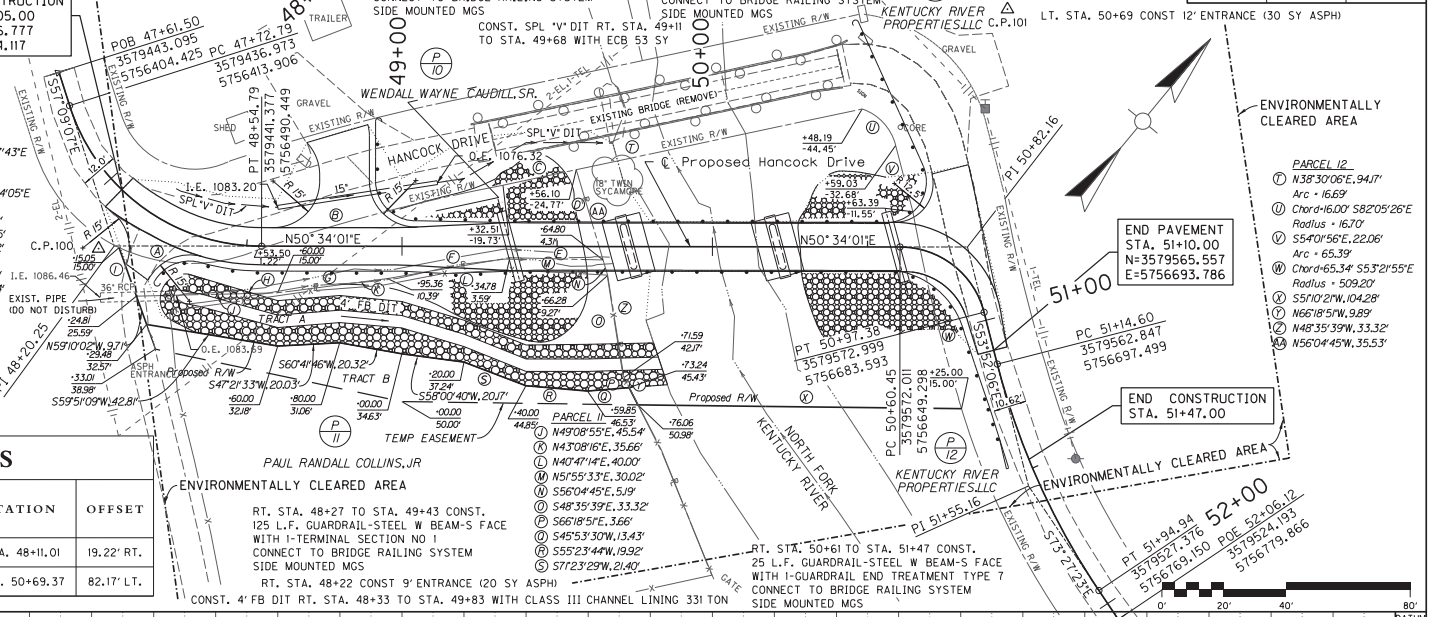

COORDINATE CONTROL POINTS

POINT	DESCRIPTION	State Plane Coordinates			STATION	OFFSET
		NORTH (Y)	EAST (X)	ELEV. (Z)		
CP 100	BRIDGING KY IP&CAP	3579407.368	5756450.412	1090.480	STA. 48+11.01	19.22' RT.
CP 101	BRIDGING KY IP&CAP	3579653.114	5756627.288	1084.900	STA. 50+69.37	82.17' LT.

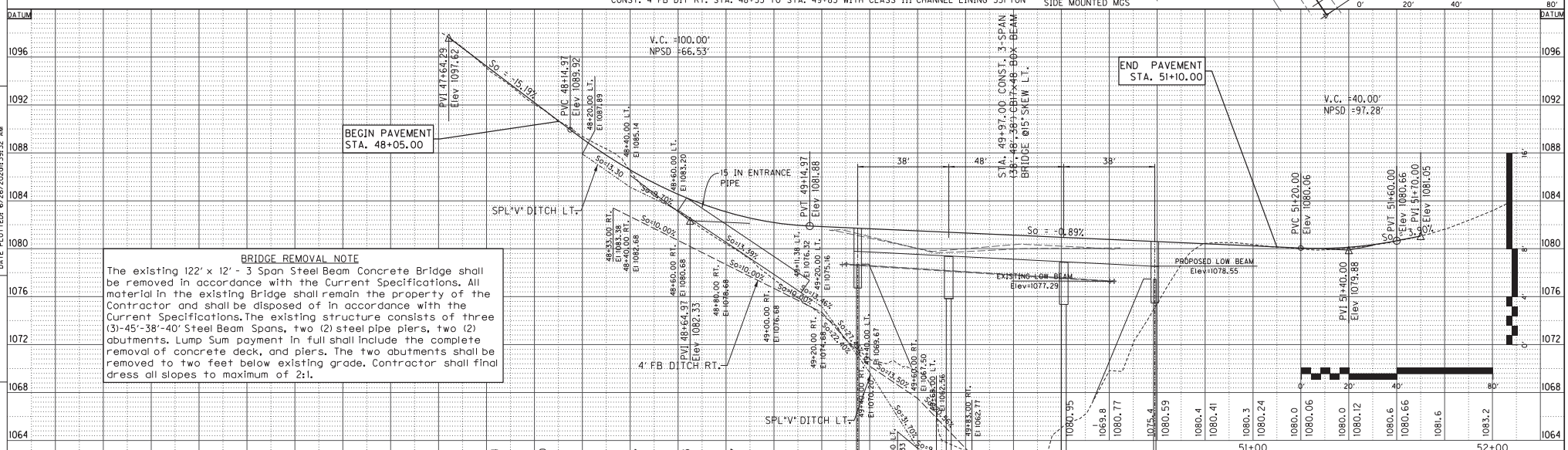

BRIDGE REMOVAL NOTE

The existing 122' x 12' - 3 Span Steel Beam Concrete Bridge shall be removed in accordance with the Current Specifications. All material in the existing Bridge shall remain the property of the Contractor and shall be disposed of in accordance with the Current Specifications. The existing structure consists of three (3)-45'-38'-40' Steel Beam Spans, two (2) steel pipe piers, two (2) abutments. Lump Sum payment in full shall include the complete removal of concrete deck, and piers. The two abutments shall be removed to two feet below existing grade. Contractor shall final dress all slopes to maximum of 2:1.

PREPARED BY J.M. Crawford & Associates Consulting Engineers

BRIDGING KENTUCKY

PLAN AND PROFILE
HANCOCK DRIVE
OVER NORTH FORK KENTUCKY RIVER

FILE NAME: ...\067C00091N_PLAN_PROFILE.dgn
USER: gcrank
DATE PLOTTED: 6/26/2020 1:39:32 AM
E-SHEET NAME:
Power InRoads v8.11.9.397

COUNTY OF	ITEM NO.	SHEET #
LETCHER	12-10116	XI

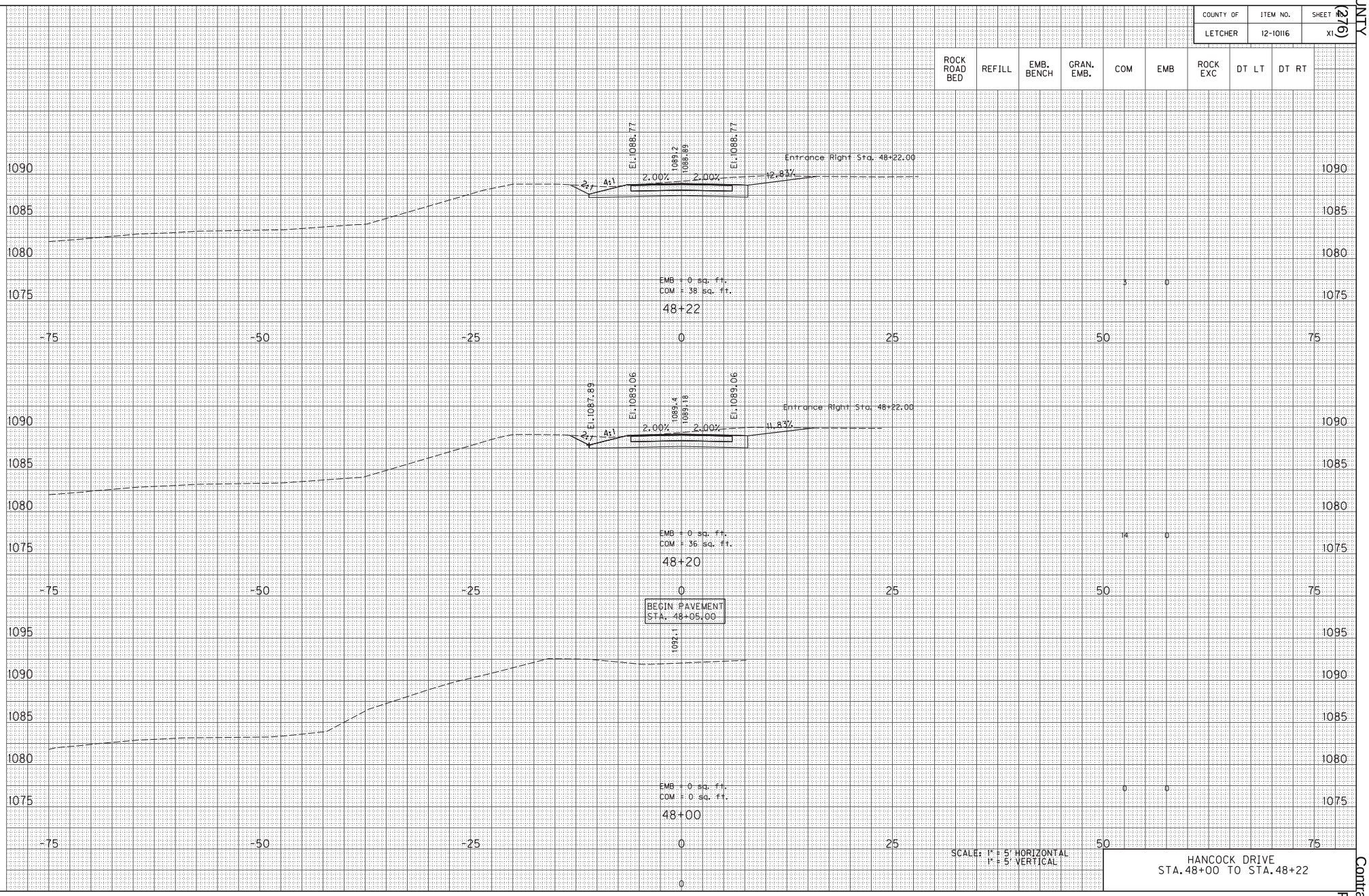

FILE NAME: G:\KY\BKP\JMC PROJECTS\067C0009N\PLAN SET\067C0009N_CROSS_SECTIONS.DGN
USER: gocrank
DATE PLOTTED: June 26, 2020
E-SHEET NAME: X0010XS
Power InRoads v8.11.9.397

COUNTY OF	ITEM NO.	SHEET #
LETCHER	12-10116	X2

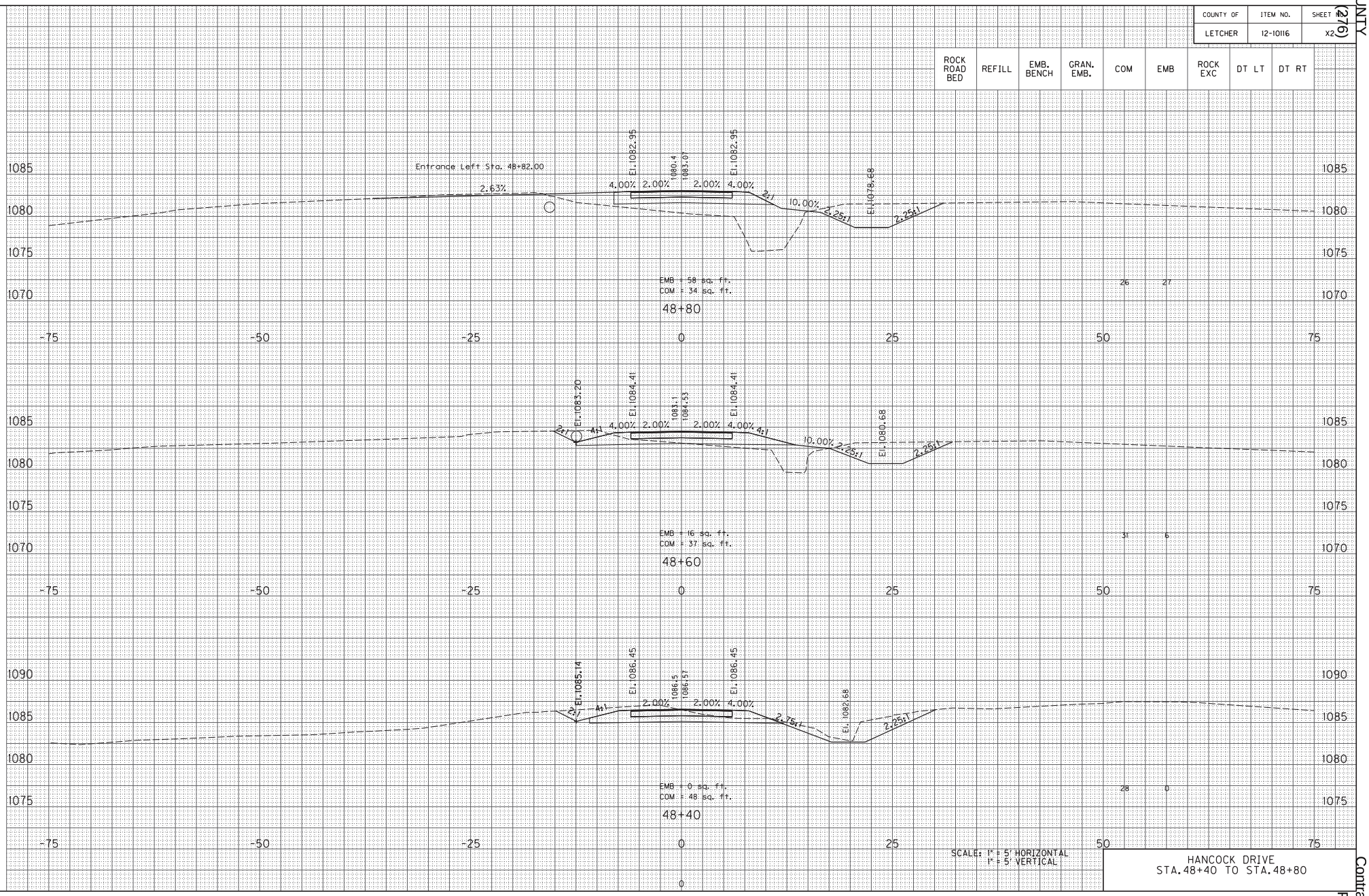

HANCOCK DRIVE
STA.48+40 TO STA.48+80

FILE NAME: G:\KY\BKP\JMC PROJECTS\067C0009N\PLAN SET\067C0009N_CROSS_SECTIONS.DGN
USER: gocrank
DATE PLOTTED: June 26, 2020
E-SHEET NAME: X00200XS
Power InRoads v8.11.9.397

COUNTY OF	ITEM NO.	SHEET #
LETCHER	12-10116	X3

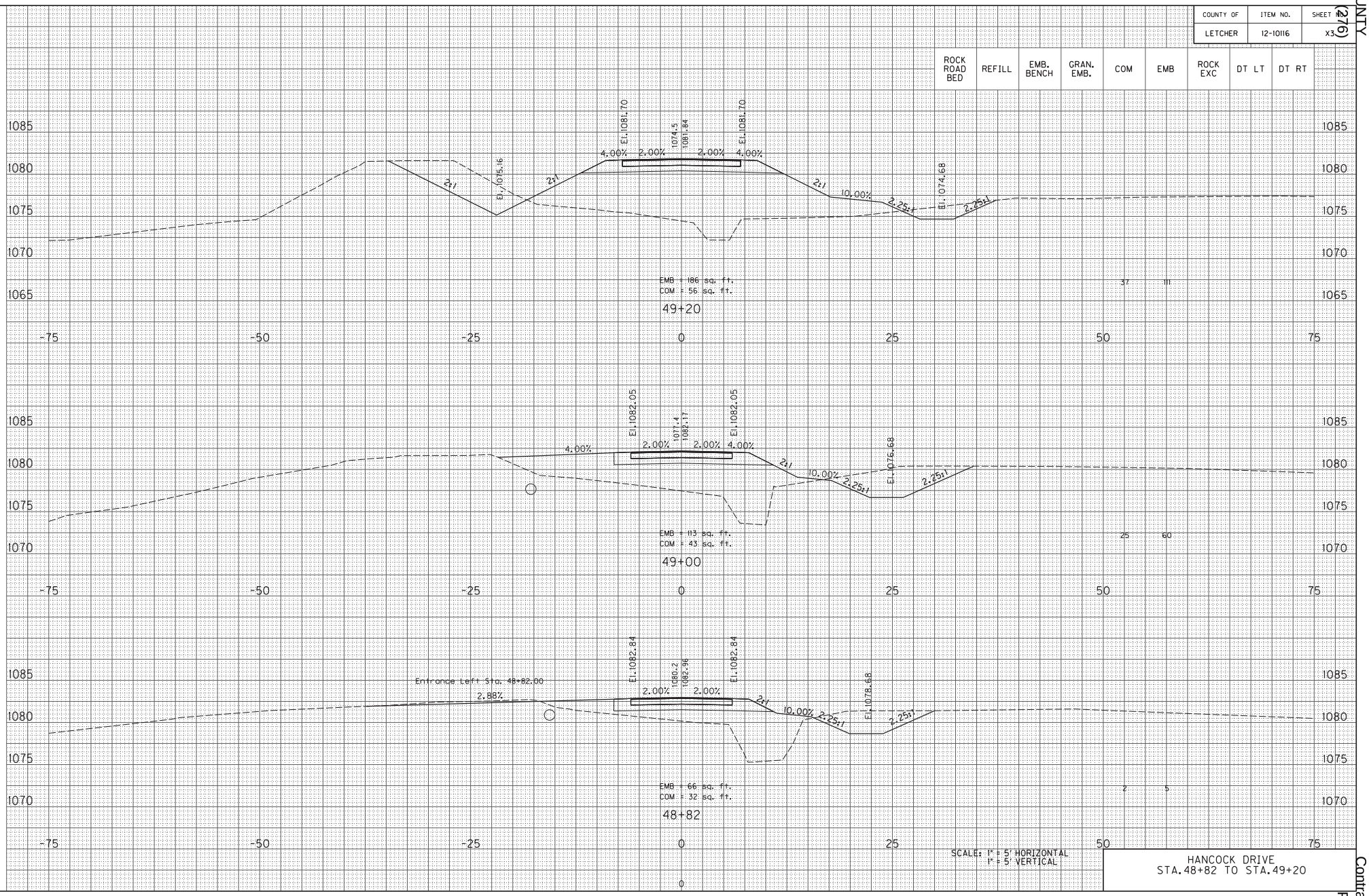

HANCOCK DRIVE
STA.48+82 TO STA.49+20

FILE NAME: G:\KY\BKP\JMC PROJECTS\067C0009N\PLAN SET\067C0009N_CROSS_SECTIONS.DGN
USER: gocrank
DATE PLOTTED: June 26, 2020
E-SHEET NAME: X003DXS
Power InRoads v8.11.9.397

COUNTY OF	ITEM NO.	SHEET
LETCHER	12-10116	X4

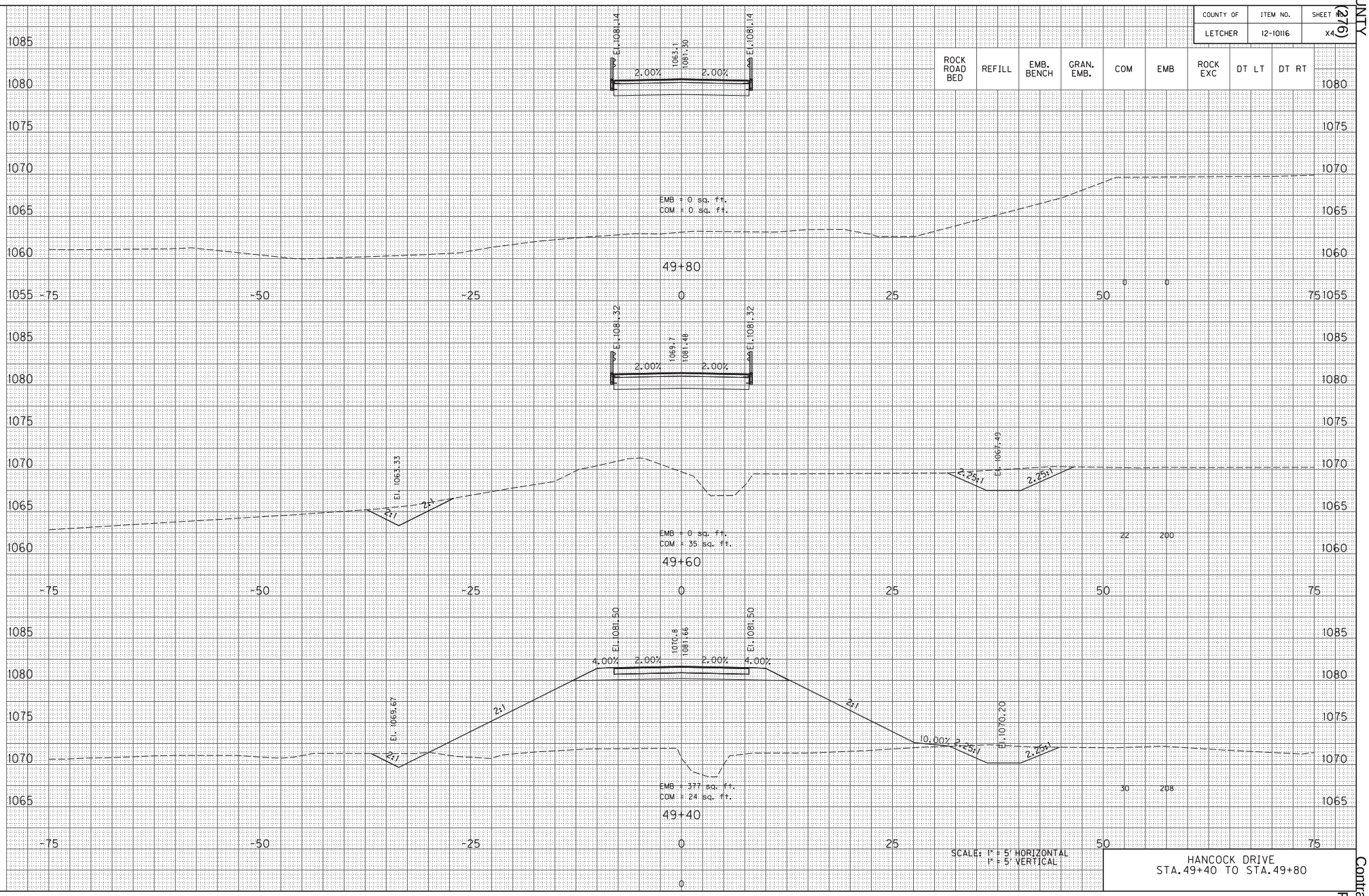

HANCOCK DRIVE
STA.49+40 TO STA.49+80

FILE NAME: G:\KY\BKP\JMC PROJECTS\067C0009N\PLAN SET\067C0009N_CROSS_SECTIONS.DGN
USER: gocrank
DATE PLOTTED: June 26, 2020
E-SHEET NAME: X004001XS
Power InRoads v8.11.9.397

COUNTY OF	ITEM NO.	SHEET #
LETCHER	12-10116	X5

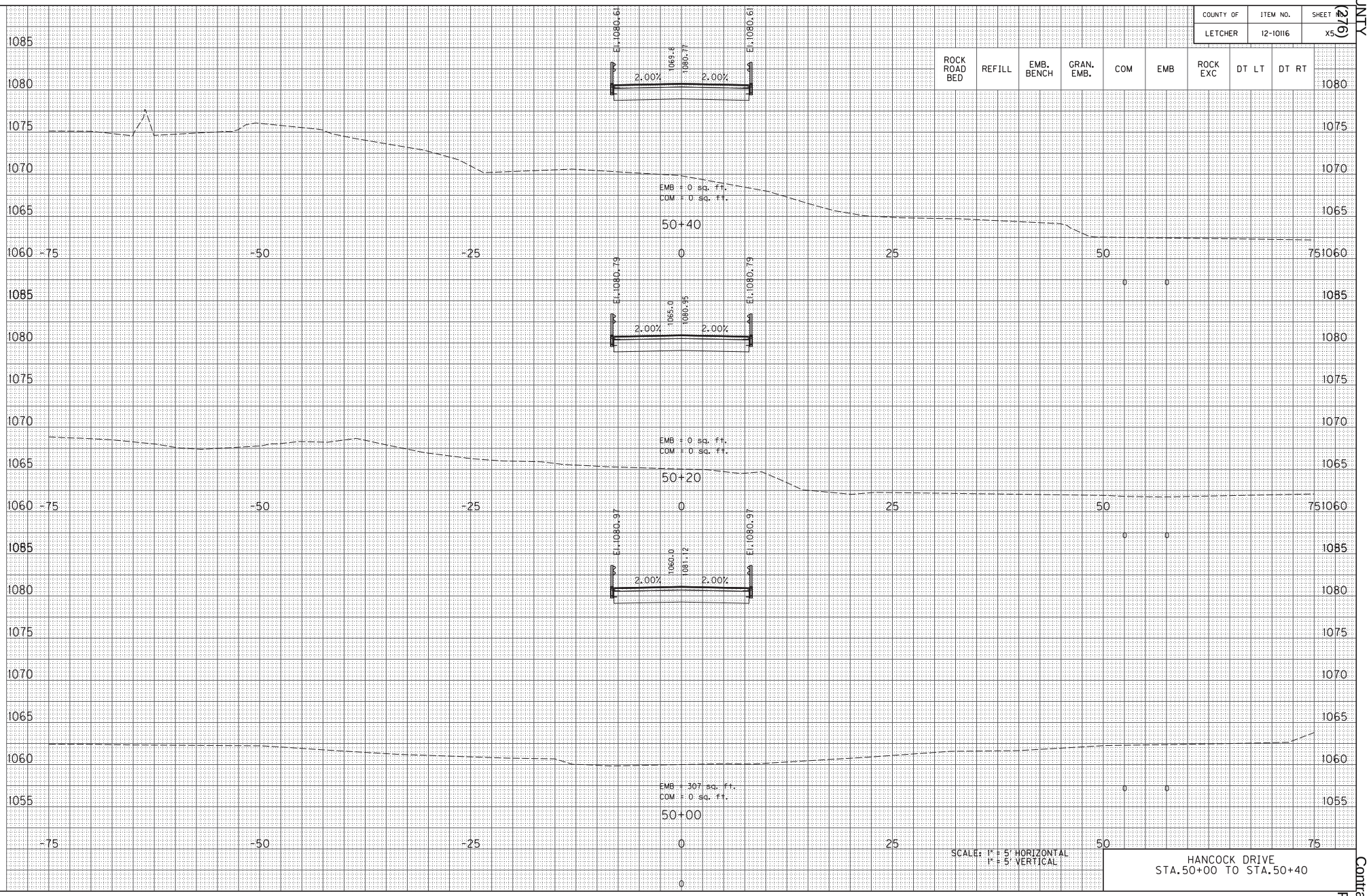

SCALE: 1" = 5' HORIZONTAL
1" = 5' VERTICAL

HANCOCK DRIVE
STA.50+00 TO STA.50+40

FILE NAME: G:\KY\BKP\JMC PROJECTS\067C0009N\PLAN SET\067C0009N_CROSS_SECTIONS.DGN
USER: gocrank
DATE PLOTTED: June 26, 2020
E-SHEET NAME: X00500XS
Power InRoads v8.11.9.397

COUNTY OF	ITEM NO.	SHEET #
LETCHER	12-10116	X6

ROCK ROAD BED	REFILL	EMB. BENCH	GRAN. EMB.	COM	EMB	ROCK EXC	DT LT	DT RT

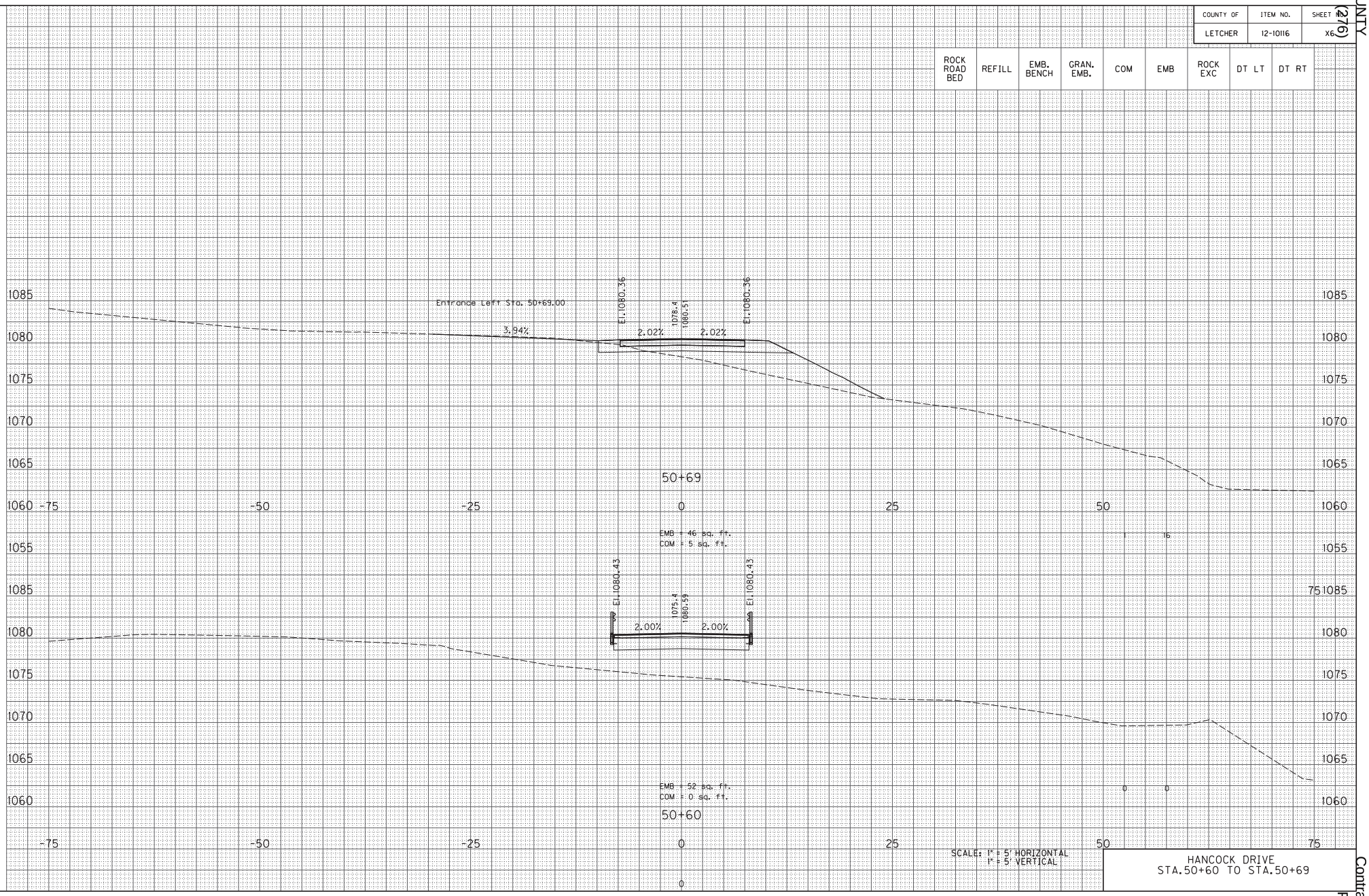

HANCOCK DRIVE
STA.50+60 TO STA.50+69

FILE NAME: G:\KY\BKP\JMC PROJECTS\067C0009N\PLAN SET\067C0009N_CROSS_SECTIONS.DGN
USER: gocrank
DATE PLOTTED: June 26, 2020
E-SHEET NAME: X00600XS
Power InRoads v8.11.9.397

COUNTY OF	ITEM NO.	SHEET #
LETCHER	12-10116	X7

ROCK ROAD BED	REFILL	EMB. BENCH	GRAN. EMB.	COM	EMB	ROCK EXC	DT LT	DT RT

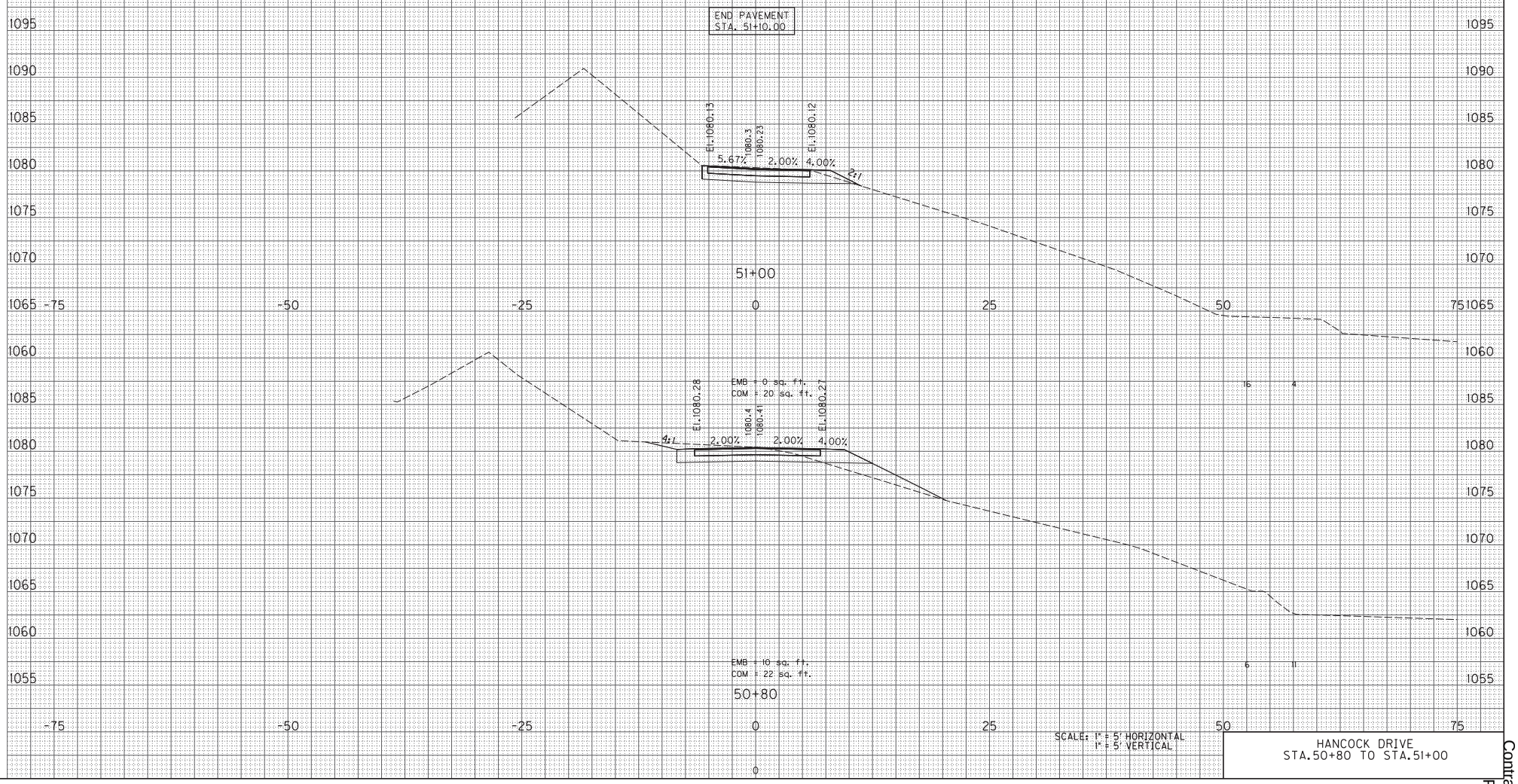

SCALE: 1" = 5' HORIZONTAL
1" = 5' VERTICAL

HANCOCK DRIVE
STA.50+80 TO STA.51+00

FILE NAME: G:\KY\BKP\JMC PROJECTS\067C00091N\PLAN SET\067C00091N_CROSS_SECTIONS.DGN
USER: gacrank
DATE PLOTTED: June 26, 2020
E-SHEET NAME: X007000XS
Power InRoads v8.11.9.397

COUNTY OF	ITEM NO.	SHEET #
LETCHER	12-10116	X8

ROCK ROAD BED	REFILL	EMB. BENCH	GRAN. EMB.	COM	EMB	ROCK EXC	DT LT	DT RT
PROJECT TOTALS				248	647			

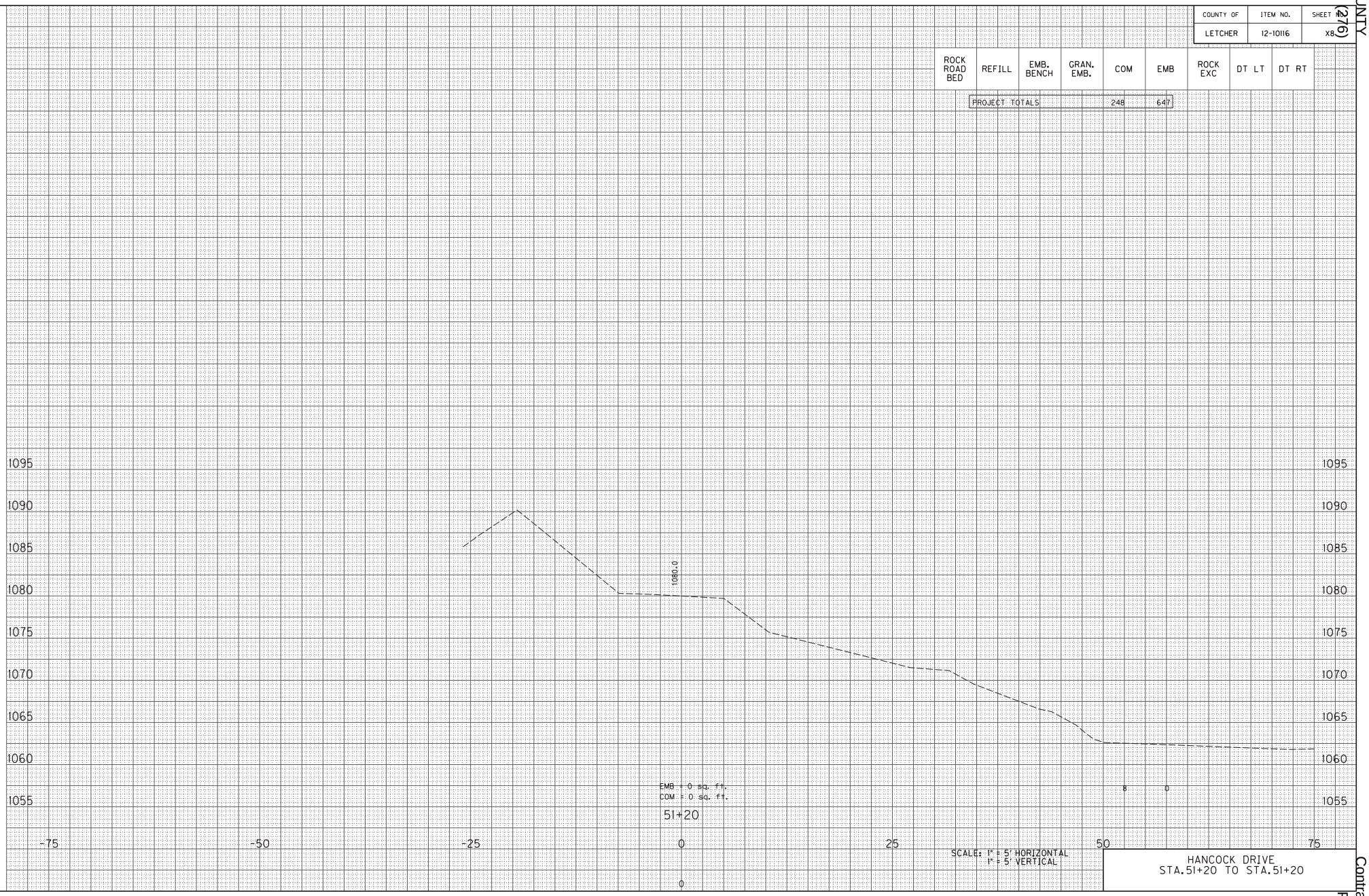

HANCOCK DRIVE
STA.51+20 TO STA.51+20

FILE NAME: G:\KY\BKP\JMC PROJECTS\067C00091N\PLAN SET\067C00091N_CROSS_SECTIONS.DGN
USER: gocrank
DATE PLOTTED: June 26, 2020
E-SHEET NAME: X008DDXS
Power InRoads v8.11.9.397

General Notes

Specifications: References to the specifications are to the current edition of the Kentucky Department of Highways Standard Specifications for Road and Bridge Construction including any current supplemental specifications. All references to the AASHTO specifications are to the AASHTO LRFD Bridge Design Specifications, 8th edition with interims.

Design Load: This bridge is designed for KYHL-93 live load, (i.e. 1.25xAASHTO HL93 live load). This bridge is designed for a future wearing surface of 15 psf.

Design Method: All reinforced concrete members are designed to be equivalent or greater than the load and resistance factor design method as specified in the current AASHTO Specifications.

Materials Design Specifications:

For Class "A" Reinforced Concrete	f'c = 3500 psi
For Class "AA" Reinforced Concrete	f'c = 4000 psi
For Steel Reinforcement	fy = 60000 psi

Material Specifications: AASHTO Specifications or ASTM, current edition, as designated below shall govern the materials furnished.

AASHTO M153	Premolded Cork Filler, Type II
AASHTO M-31	Deformed and Plain Billet-Steel for Concrete Reinforcement, Grade 60

Preformed Cork Expansion Joint Material: Preformed Cork Expansion Joint Material shall conform to subsection 807.04.02 (Type II) of the Kentucky Department of Highways Standard Specifications.

Concrete: Class "AA" Concrete is to be used throughout the superstructure. Class "A" concrete is to be used in the substructure. Prestressed beam concrete shall be in accordance with the plans and specifications.

Reinforcement: Dimensions shown from the face of concrete to bars are to center of bars unless otherwise shown. Spacing of bars is from center to center of bars. Any reinforcing bars designated by suffix "e" in the plans shall be epoxy coated in accordance with section 811.10 of the Standard Specifications. Any reinforcing bars designated by suffix "s" in a Bill of Reinforcement shall be considered a stirrup for purposes of bend diameters.

Construction Identification: The names of the Prime Contractor and the Sub-Contractor shall be imprinted in the concrete with 1 inch letters at a location designated by the engineer. The contractor shall furnish all plans, equipment and labor necessary to do the work for which no direct payment will be made.

Beveled Edges: All exposed edges shall be beveled ¾", unless otherwise shown.

Payment for Precast Concrete Beams: The basis of payment for the Prestressed Concrete Beams shall be at the contract unit price per linear foot of beam, in accordance with the specifications.

Slope Protection: Slope Protection at abutments shall be dry cyclopean stone riprap in accordance with the plans and specifications. Geotextile Fabric, Class I shall be placed between the embankment and the slope protection in accordance with Standard Specifications 214 and 843. Payment for Geotextile Fabric, Class I, shall be considered incidental to the unit price bid for Dry Cyclopean Stone Riprap.

Completion of the Structure: The contractor is required to complete the structure in accordance with the plans and specifications. Material, labor, or construction operations not otherwise specified, are to be included in the bid item most appropriate to the work involved. This may include cofferdams, shoring, excavations, backfilling, removal of all or parts of existing structures, phase construction, incidental materials, labor, or anything else required to complete the structure.

Shop Drawings: The fabricator shall submit all required shop plans, by email to SHOP_067C00091N@docs.e-Builder.net, for review. These submissions shall depict the shop plans in .PDF format, as either 11"x17" or 22"x36" sheets. Designers will make review comments on these electronic submissions as needed and, if required, shall return them to the fabricator for corrections and resubmittal. Upon acceptable reconciliation of all comments, files shall be sent to the Bridging Kentucky Shop Plan Coordinator for distribution. Only plans submitted directly to the Shop Plan Coordinator will be distributed. Additionally, only plans electronically stamped "Distributed by The Bridging Kentucky Program Team" are to be used for fabrication. While this process does not require the submission of paper copies, the Engineer of Record reserves the right to require such copies on a case by case basis.
When any changes to the design plans are proposed, the shop drawings reflecting these changes shall be submitted through the process above.

Note: The designation in the email 067C00091N refers to the Bridge ID number which is located on the Title Sheet, R1 of the Bridge Plans. Example: SHOP_067C00091N@docs.e-Builder.net

Utilities: The contractor shall be responsible for locating any and all existing utilities prior to excavation of material or installation of guardrail or other construction activities that may involve utilities (overhead or underground).

Verifying Field Conditions: The contractor shall field verify all dimensions before ordering material. New material that is unsuitable because of variations in the existing structure shall be replaced at the contractor's expense.

Dimensions: Dimensions are for a normal temperature of 60 degrees fahrenheit. Layout dimensions are horizontal dimensions.

Superstructure Slab: The superstructure slab shall be poured continuously from end to end of slab before the concrete is allowed to set.

Mastic Tape: Mastic Tape used to seal joints is to meet the requirements of ASTM C-877 Type I, II, or III. The joint is to be covered with 12" wide mastic tape. Prior to application, the joint surface shall be clean and free of dirt, debris, or deleterious material. Primer, if required by the tape manufacturer, shall be applied for a minimum width of 9" on each side of the joint.

Mastic Tape shall be either:

EZ-Wrap Rubber by Press-seal Casket Corporation,
Seal Wrap by Mar Mac Manufacturing Co. Inc.,
Cadilloc by The UP Rubber Co. Inc.
or approved equal.

Mastic Tape shall cover the joint continuously unless otherwise shown in the plans. Mastic Tape shall be spliced by taping a minimum of 6" and in accordance with the manufacturer's recommendations with the overlap running downhill.

The cost of labor, materials, and incidental items for furnishing and installing Mastic Tape shall be considered incidental to the unit price bid for concrete class 'AA' and no separate measurement of payment shall be made.

Temporary Supports: Temporary Supports or shoring will not be permitted under the beams when pouring the concrete deck slab or when taking "top of beam" elevations.

Armored Edge: Fabricate armored edge to match cross slope and parabolic crown at each end of bridge.

Foundation Preparation: Foundation Preparation shall be in accordance with Section 603 of the Specifications.

Foundation excavations should be properly braced/shored to provide adequate safety to persons working in or around excavations. Bracing should be performed in accordance with applicable federal, state and local guidelines.

Temporary shoring, sheeting, cofferdams, and/or dewatering methods may be required to facilitate foundation construction. It should be anticipated that groundwater will be encountered at foundation locations within the flood plain.

Temporary shoring, bracing, sheeting, cofferdams and dewatering shall be included in the Lump Sum Bid for Foundation Preparation.

Structural Granular Backfill: Materials for Structural Granular Backfill shall be in accordance with Section 805 of the Specifications.

Contrary to the Specifications, Structural Granular Backfill will not be measured for payment but shall be included in the Lump Sum Bid for Foundation Preparation.

Concrete Sealer:
Apply concrete sealer in accordance with the Special Note for Concrete Sealing and to the limits as indicated in the plans.

Spread Footing: Based on a review of the existing subsurface conditions and anticipated structural loads, it is recommended that rock bearing foundation system consisting of spread footings be used for all bridge substructure elements. A presumptive bearing resistance of 20 ksf on unweathered bedrock is being recommended.

Excavation for footings at the structure locations should be level and free of loose, water softened material, etc. Additional rock excavation to achieve suitable bearing conditions may be required depending upon topography and bedrock weathering conditions.

Solid rock excavation will be required for installation of the substructure's spread footings. The contractor shall take care during blasting and other excavation methods to avoid over-breakage and damage to the bedrock beneath the footings.

Footing excavations in bedrock shall be cut neatly so that no forming or backfilling is necessary in the construction of the portions of the footings located in rock. Concrete shall be placed directly against the cut rock faces. Mass concrete should be placed in the excavation from the top of the footing to the bedrock surface where the footing does not extend to the bedrock surface.

Bearing elevation of footings may be adjusted at the discretion of the Engineer if competent, unweathered bedrock is found at a higher elevation than specified for the respective substructure element. The top of new spread footings should be fully embedded into unweathered bedrock. At a minimum, two-foot embedment into competent bedrock shall be maintained.

Prior to placement of any concrete or reinforcing steel in a foundation excavation, the excavation bottom should be clean and all soft, wet, or loose materials should be removed. In no case should concrete be placed upon compressible or water-softened materials. Any clay seams or suspect weak materials at or near the bearing elevation will need to be undercut and replaced with mass concrete.

Concrete placement for footings should be placed as soon as practical after completion of the footing excavation. If the bedrock becomes softened at bearing elevation, the softened material should be undercut to unweathered material prior to placement of reinforcing steel and concrete. Seasonal groundwater fluctuations may cause groundwater infiltration into the footing excavation, and a dewatering method may be necessary.

Piling: Piling shall be driven to practical refusal as defined on the pile record sheet.

Test piles shall be driven where designated on the plans to determine the length of pile required.

All test piles shall be accurately located so that they may be used in the finished structure.

Contrary to the standard drawings for steel piling, mill test reports are not required to be notarized.

Pile Points: Provide pile points for all piles. Pile points shall be in accordance with Section 604 of the specifications and of the type shown on the pile record sheet.

REVISION	DATE

DATE: 12/13/19	CHECKED BY
DESIGNED BY: L. Carlisle	S. McIntosh
DETAILED BY: G. Crank	L. Carlisle

Commonwealth of Kentucky
DEPARTMENT OF HIGHWAYS

COUNTY: LETCHER

ROUTE: HANCOCK DR. CROSSING: NORTH FORK KENTUCKY RIVER

GENERAL NOTES

PREPARED BY: JMC J.M. Crawford & Associates Consulting Engineers

BRIDGING KENTUCKY

SHEET NO. S1

DRAWING NO. 28158

ITEM NUMBER
12-10116

FILE NAME: ...\067C00091N_General Notes.dgn
USER: gcrank
DATE PLOTTED: 6/26/2020 1:39:36 AM
E-SHEET NAME:
Power InRoads v8.11.9.397

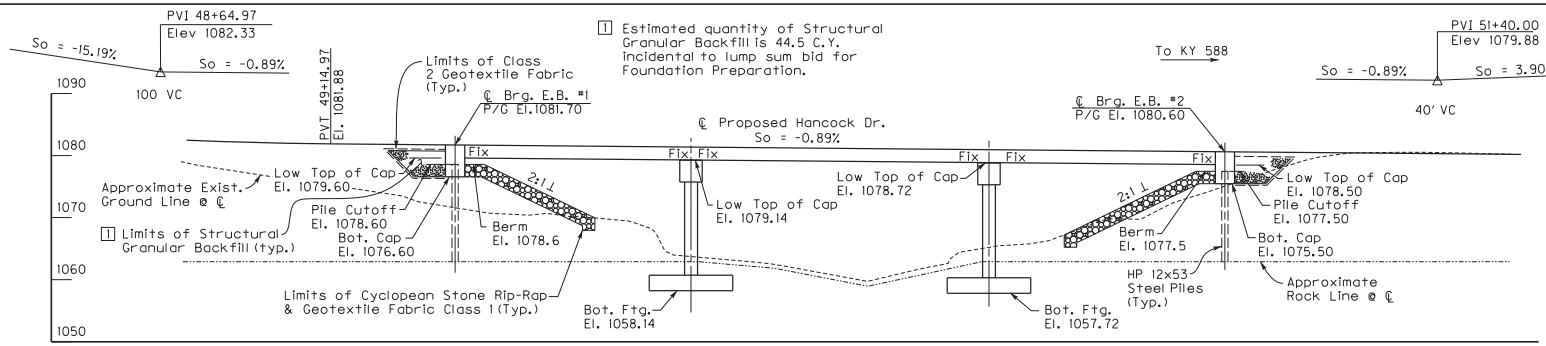

ELEVATION

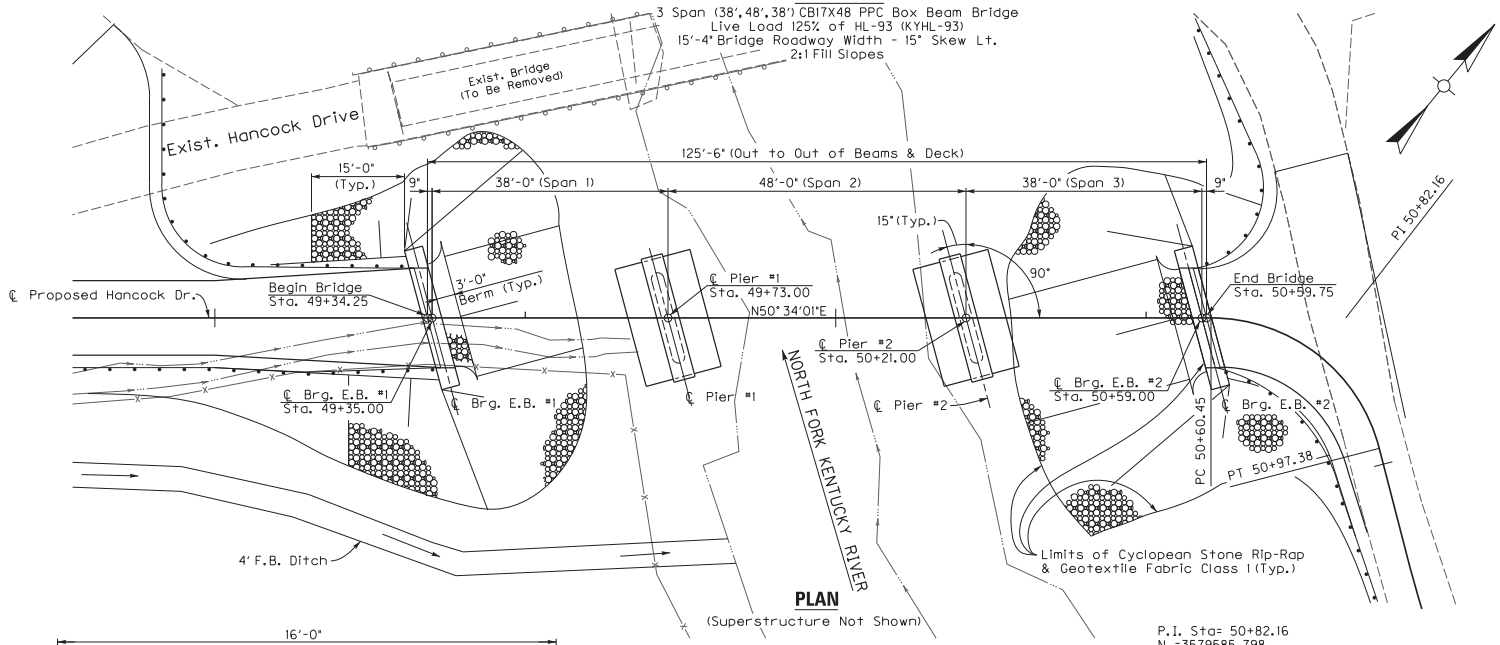

PLAN

(Superstructure Not Shown)

P.I. Sta= 50+82.16
N =3579585.798
E =5756666.062
Delta= 75°33'53.52" Right
T= 21.71'
Lc = 36.93'
R= 28.00'
E= 7.43'
e=NC

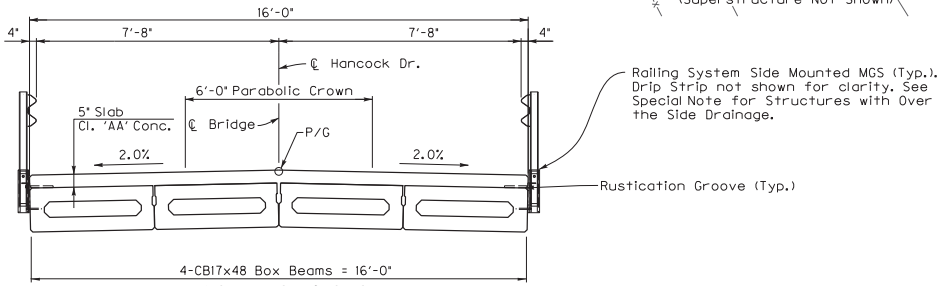

TYPICAL DECK SECTION

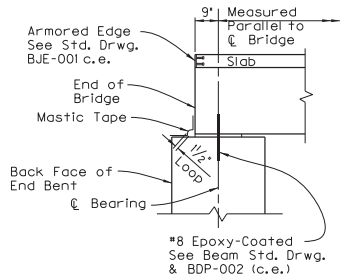

END OF BRIDGE DETAIL

Note: Contractor shall provide 12" wide Mastic Tape to water-proof the joint between the end of beam and End Bents. Tape shall be looped as shown to prevent damage to tape. See the General Note for Mastic Tape.

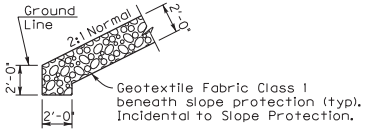

TOE OF SLOPE DETAIL

REVISION	DATE

DATE: 12/13/19	CHECKED BY
DESIGNED BY: L. Carlisle	S. McIntosh
DETAILED BY: G. Crank	L. Carlisle

Commonwealth of Kentucky
DEPARTMENT OF HIGHWAYS

COUNTY: LETCHER

ROUTE: HANCOCK DR. | CROSSING: NORTH FORK KENTUCKY RIVER

LAYOUT

PREPARED BY: J.M. Crawford & Associates Consulting Engineers

BRIDGING KENTUCKY

SHEET NO. S2

DRAWING NO. 28158

ITEM NUMBER: 12-10116

FILE NAME: ...\Bridge\067C00091N_Layout.dgn
USER: gocrank
DATE PLOTTED: 6/26/2020 11:39:37 AM
E-SHEET NAME:
Power InRoads v8.11.9.397

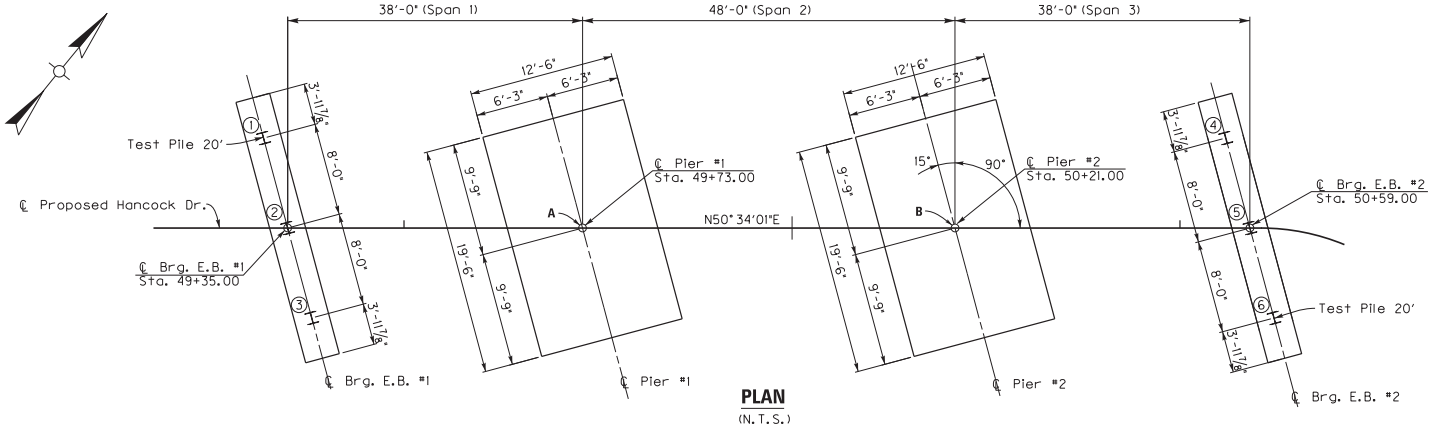

PLAN
(N.T.S.)

PILE RECORD FOR POINT BEARING PILES

Pile No.	Pile Cut-off Elevation	Pile Length In Place	Point of Pile Elevation As Driven	Design Axial Load
	FEET	FEET	FEET	TONS
END BENT #1				
1	1078.60			95
2	1078.60			95
3	1078.60			95
END BENT #2				
4	1077.50			95
5	1077.50			95
6	1077.50			95

SPREAD FOOTING RECORD

POINT	PLAN FOOTING ELEV.	AS-BUILT FTG. ELEV.
PIER #1		
A	1058.14	
PIER #2		
B	1057.72	

Footings are designed for a maximum pressure of 8.0 ksf. (AASHTO Service 1 Limit State)

The Allowable Bearing Pressure is 20 ksf

Note:
After all foundations have been placed, the Project Resident Engineer shall record the bottom of footing elevation "As-Built" and shall submit one copy of this sheet with this data to:

Kentucky Transportation Cabinet
Director, Division of Structural Design
3rd Floor East
200 Mero Street
Frankfort, KY 40622

Note:
If the spread footing foundation is stepped due to unsuitable material found at the given elevation, the location and elevation of the step shall be shown on this sheet and submitted along with as-built elevations.

Definitions of Terms

PILE CUT-OFF ELEVATION: Elevation of the top of pile in the finished structure.

PILE LENGTH IN PLACE: Actual pile length below the Pile Cut-Off Elevation in the finished structure.

POINT OF PILE ELEVATION AS DRIVEN: Actual point of pile elevation in the finished structure.

DESIGN AXIAL LOAD: Load carried by each pile as estimated from structural design calculations for factored LRFD Loadings.

CALCULATED FIELD BEARING: Contrary to Section 604.03.07 of the Standard Specifications, in place bearing values are not required for piles bearing on rock when driven to practical refusal.

Driving Criteria

DRIVING CRITERIA: Drive point bearing piles to practical refusal.

PRACTICAL REFUSAL (Case 2): For this project minimum blow requirements are reached after total penetration becomes 1/2" or less for 10 consecutive blows, practical refusal is obtained after the pile is struck an additional 10 blows with total penetration of 1/2" or less. Advance the production piling to the driving resistances specifed above and to depths determined by test pile(s). Immediately cease driving operations if the pile visibly yields or becomes damaged during driving. If hard driving is encountered because of dense strata or an obstruction, such as a boulder before the pile is advanced to the depth anticipated, the Engineer will determine if more blows than the average driving resistance specified for practical refusal is required to further advance the pile. Drive additional production and test piles if directed by the Engineer.

At the End Bent locations, a diesel pile driving hammer with a rated energy between 10.5 foot-kips and 20.5 foot-kips will be required to drive 12x53 steel H-piles to practical refusal without encountering excessive blow counts or damaging the piles. The Contractor shall submit the proposed pile driving system to the Engineer for approval prior to the installation of the first pile. Approval of the pile driving system by the Engineer will be subject to satisfactory field performance of the pile driving procedures.

Field Data

For each pile, the Project Engineer shall record the following on this sheet: Pile Length in Place and Point of Pile Elevation as Driven.

Submit this record to:

Kentucky Transportation Cabinet
Director, Division of Structural Design
3rd Floor East
200 Mero Street
Frankfort, KY 40622

This pile record does not replace other pile records the Project Engineer is required to keep and submit.

Use HP 12x53 in accordance with BPS-003, c.e.

Additional Pile Notes

The installation of the pile foundations should conform to current AASHTO LRFD Bridge Design Specifications, and Section 604 of the current edition of the Kentucky Department of Highways Standard Specifications for Road and Bridge Construction.

The Kentucky Transportation Cabinet recommends that protective pile points be used on end bearing piles to allow for embedment into the top of bedrock. Use of reinforced pile points capable of penetrating boulders and hard layers which may be encountered is recommended. Installation of pile points should be in accordance with Section 604 of the Kentucky Standard Specifications for Road and Bridge Construction, current edition.

See additional pile-related notes on sheet S1.

REVISION	DATE

DATE: 12/13/19	CHECKED BY
DESIGNED BY: L. Carlisle	S. McIntosh
DETAILED BY: G. Crank	L. Carlisle

Commonwealth of Kentucky
DEPARTMENT OF HIGHWAYS

COUNTY: **LETCHER**

ROUTE: HANCOCK DR. | CROSSING: NORTH FORK KENTUCKY RIVER

FOUNDATION LAYOUT

PREPARED BY: J.M. Crawford & Associates Consulting Engineers

BRIDGING KENTUCKY

SHEET NO. S3

DRAWING NO. 28158

ITEM NUMBER: 12-10116

FILE NAME: ...\067C00091N_Foundation Layout.dgn
USER: gcrank
DATE PLOTTED: 6/26/2020 1:39:38 AM
E-SHEET NAME:
Power InRoads v8.11.9.397

SUPERSTRUCTURE HEIGHT	
SDH=Beam Height +pad height +(haunch+slab) [if applicable]	
H1	12" ≤ SDH ≤ 27" SDH (This Bridge) = 1'-11"

CAP BILL OF REINFORCEMENT

16'-0" BRIDGE WIDTH

MARK	TYPE	NO.	SIZE	LENGTH
A1e	14s	22	5	11- 0
A2e	Str.	9	8	23- 7
A3e	Str.	4	5	23- 7

WING BILL OF REINFORCEMENT

MARK	TYPE	NO.	SIZE	LENGTH	MARK	TYPE	NO.	SIZE	LENGTH	MARK	TYPE	NO.	SIZE	LENGTH
A4e	Str.	14	5	4- 0	A7e	Str.	2	5	3- 4	A10e	Str.	1	6	2- 6
A5e	Str.	2	5	3- 2	A8e	Str.	2	5	4- 1	A11e	Str.	1	6	3- 4
A6e	Str.	2	5	2- 6	A9e	Str.	1	6	3- 2	A12e	Str.	1	6	4- 1

BRIDGE WIDTH	PILE LOAD		PILES				DIMENSIONS												WING A												WING B												QUANTITIES	
							Geometry			Reinforcement									Back Face						Front Face						Back Face						Front Face							
	SIZE	TONS	NO.	PE	PS	PL	L	L1	L2	A	B	C	D	E	F	G	H	WALB	WAUB	WV	WX	J	K	WALF	WAUF	WV	WX	J	K	WBLB	WBUB	WV	WX	J	K	WBLF	WBUF	WV	WX	J	K	CONC. (C.Y.)	STEEL (LBS.)
16	H1	95	3	3'-11⅞"	8'-0"	16'-0"	23'-11¾"	11'-6⅞"	12'-4⅞"	2⅞"	4	11"	2'-9"	7	12"	6'-0"	2	3'-7⅞"	0	0	0	3	2'-0"	2'-10⅛"	0	0	0	3	2'-0"	3'-8⅛"	0	0	0	4	3'-0"	4'-5⅞"	0	0	0	4	3'-0"	10.2	1024

NOTES:
1) Conform to KYTC, Standard Specifications, Current Edition.
2) Concrete to be Class "A", 3500 psi.
3) Rebar to be epoxy coated A615, Grade 60.
4) Maintain 2" clear cover to reinforcement unless otherwise noted.
5) End Bents are designed for the maximum span of the following steel and concrete beams as shown in the current standards: H1 - B12, CB12, B17, CB17, B21 or rolled steel beams up to 16" nominal depth.
6) Piles shall be HP12x53.
7) Piles driven to rock must be driven to Refusal.
8) Pile load given is Factored Strength Load.
9) Piles must be driven 10' into existing ground or to refusal on bedrock. Piles at wet crossings must be driven to 10' below stream bed or to refusal on bedrock. A minimum pile length of 10' is required in all circumstances.
10) Contractor shall provide a hammer capable of driving the piling to refusal or capacity without encountering excessive blow counts or damaging the pile. Contractor shall be responsible for all damaged piling.

TABLE OF ELEVATIONS

POINT	E.B. #1	E.B. #2
A	1079.64	1078.54
B	1079.78	1078.68
C	1079.60	1078.50

NOTE:
Slope cap as necessary with side by side box beams to maintain proper roadway slope.
Top of Cap elevations given @ ℄ Brg.

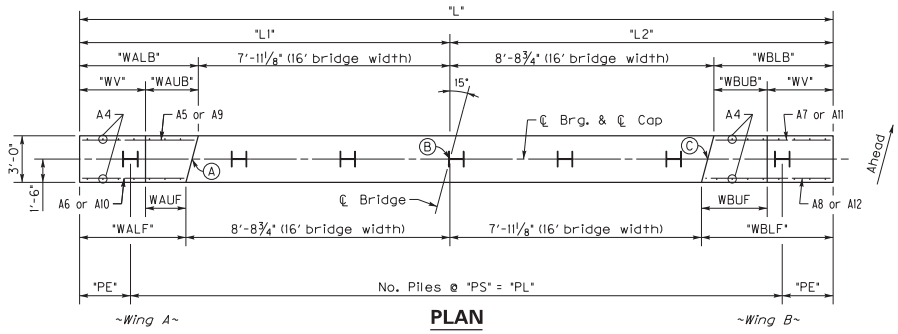

PLAN
(Left skew shown)

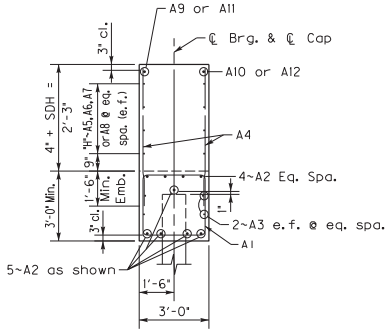

SECTION A–A

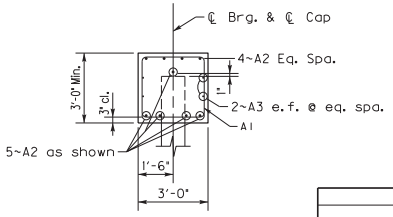

SECTION B–B

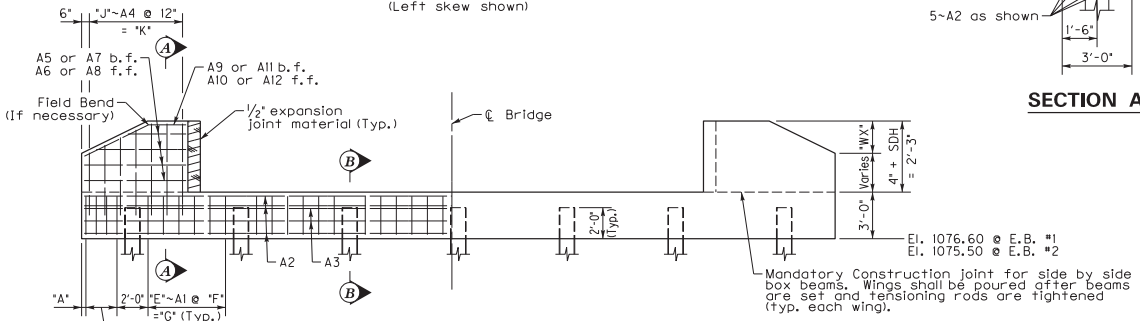

ELEVATION

NOTE:
Trim A4-A12 bars as necessary.

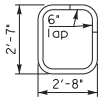

A1 Bar
~Size #5~

ITEM NUMBER
12-10116

REVISION	DATE

DATE: 12/13/19	CHECKED BY
DESIGNED BY: L. Carlisle	S. McIntosh
DETAILED BY: G. Crank	L. Carlisle

Commonwealth of Kentucky
DEPARTMENT OF HIGHWAYS

COUNTY: LETCHER

ROUTE: HANCOCK DR. | CROSSING: NORTH FORK KENTUCKY RIVER

END BENT DETAILS

PREPARED BY: JMC J.M. Crawford & Associates Consulting Engineers

BRIDGING KENTUCKY

SHEET NO. S4

DRAWING NO. 28158

FILE NAME: ...\067C00091N_END BENT DETAILS.dgn
USER: gcrank
DATE PLOTTED: 6/26/2020:39:38 AM
E-SHEET NAME:
Power InRoads v8.11.9.397

15° SKEW 16'-0" - 17'-6" BRIDGE WIDTH (No Seismic Load)

Bill of Reinforcement

MARK	P1					P2					P3					P4										P5						P6						P7				P8					P9(e)				P10(e)				P11(e)			
TYPE	Str.					Str.					Str.					Type 4										Type 10						Str.						Type 31				Str.					Str.				Str.				Type 14			
SIZE																																						#4									#8				#5				#5			
H	No.	Size	Length ft.	Length in.	Spacing	No.	Size	Length ft.	Length in.	Spacing	No.	Size	Length ft.	Length in.	Spacing	No.	Size	Length ft.	Length in.	Spacing	A ft.	A in.	B ft.	B in.	C ft.	C in.	D ft.	D in.	No.	Size	Length ft.	Length in.	Spacing	A ft.	A in.	No.	Size	Length ft.	Length in.	No.	Size	Length ft.	Length in.	No.	Size	Length ft.	Length in.	No.	Length ft.	Length in.	No.	Length ft.	Length in.	No.	Length ft.	Length in.
10-11	29	8	12	2	8	26	5	19	2	12	29	5	12	2	8	42	8	8	10	8	7	5	1	5	0	8	7	9	10	5	7	5	12	2	6	10	5	13	0	12	35	2	5	42	8	8	0	8	20	2	4	20	2	20	13	2
12-13	29	8	12	2	8	26	5	19	2	12	29	5	12	2	8	42	8	8	10	8	7	5	1	5	0	8	7	9	14	5	7	5	12	2	6	14	5	13	0	12	49	2	5	42	8	10	0	8	20	2	4	20	2	20	13	2
14-15	29	8	12	2	8	26	5	19	2	12	29	5	12	2	8	42	8	8	10	8	7	5	1	5	0	8	7	9	18	5	7	5	12	2	6	18	5	13	0	12	63	2	5	42	8	12	0	8	20	2	4	20	2	20	13	2
16-17	29	8	12	2	8	26	5	19	2	12	29	5	12	2	8	42	8	8	10	8	7	5	1	5	0	8	7	9	22	5	7	5	12	2	6	22	5	13	0	12	77	2	5	42	8	14	0	8	20	2	4	20	2	20	13	2
18-19	29	8	12	2	8	26	5	19	2	12	29	5	12	2	8	42	8	8	10	8	7	5	1	5	0	8	7	9	26	5	7	5	12	2	6	26	5	13	0	12	91	2	5	42	8	16	0	8	20	2	4	20	2	20	13	2
20-21	29	8	12	2	8	26	5	19	2	12	29	5	12	2	8	42	8	8	10	8	7	5	1	5	0	8	7	9	30	5	7	5	12	2	6	30	5	13	0	12	105	2	5	42	8	18	0	8	20	2	4	20	2	20	13	2
22-23	29	8	12	2	8	26	5	19	2	12	29	5	12	2	8	42	8	8	10	8	7	5	1	5	0	8	7	9	34	5	7	5	12	2	6	34	5	13	0	12	119	2	5	42	8	20	0	8	20	2	4	20	2	20	13	2
24-25	29	8	12	2	8	26	5	19	2	12	29	5	12	2	8	42	8	8	10	8	7	5	1	5	0	8	7	9	38	5	7	5	12	2	6	38	5	13	0	12	133	2	5	42	8	22	0	8	20	2	4	20	2	20	13	2

Reinforcement Details

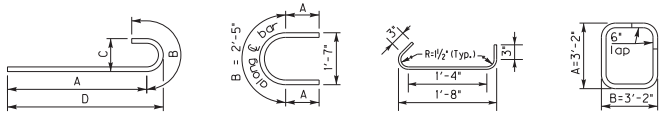

TYPE 4 — TYPE 10 (#5 bar) — TYPE 31 (#4 bar) — TYPE 14 (#5 bar)

DIMENSIONS TABLE

H	A ft.	A in.	B ft.	B in.	C ft.	C in.	D ft.	D in.
10-11	2	6	2	3	9	9	5	3
12-13	2	6	2	3	9	9	5	3
14-15	2	6	2	3	9	9	5	3
16-17	2	6	2	3	9	9	5	3
18-19	2	6	2	3	9	9	5	3
20-21	2	6	2	3	9	9	5	3
22-23	2	6	2	3	9	9	5	3
24-25	2	6	2	3	9	9	5	3

QUANTITIES

H	CONCRETE CLASS "A" CU. YDS. (1)	STEEL REINFORCEMENT EPOXY COATED LBS.	STEEL REINFORCEMENT LBS.
10-11	37.5	792	3998
12-13	39.7	792	4331
14-15	41.8	792	4665
16-17	44	792	4998
18-19	46.2	792	5331
20-21	(2) 48.3	(2) 792	(2) 5664
22-23	50.5	792	5997
24-25	52.6	792	6330

Note: All bars in cap shall be epoxy coated.

Note: All concrete shall be Class "A"

(1) Quantity is based on taller height. Reduce by 1.0 cubic yd. for shorter height.

(2) Bid quantities based on H=21 feet. Use actual height established by footing location in field and adjust reinforcement accordingly based on table shown.

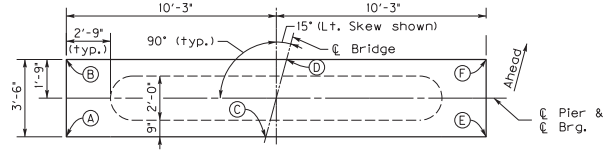

PLAN OF CAP

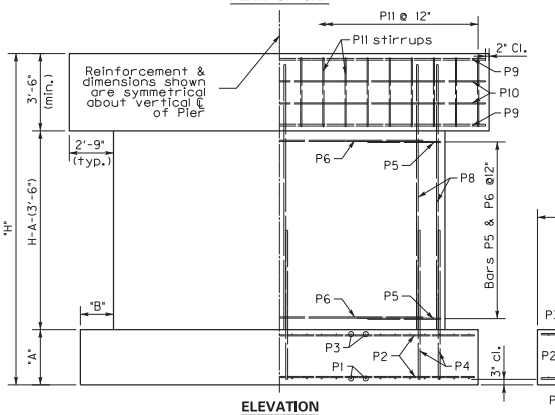

ELEVATION

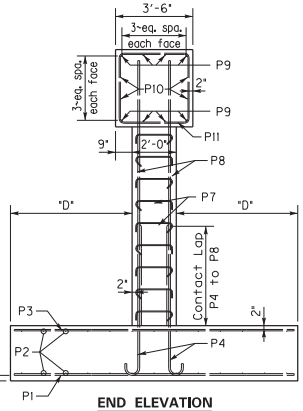

END ELEVATION

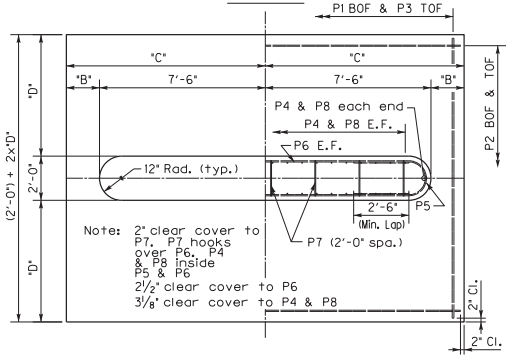

PLAN OF FOOTING

TABLE OF ELEVATIONS		
POINT	PIER #1	PIER #2
A	1079.22	1078.80
B	1079.17	1078.75
C	1079.38	1078.96
D	1079.35	1078.93
E	1079.15	1078.73
F	1079.14	1078.72

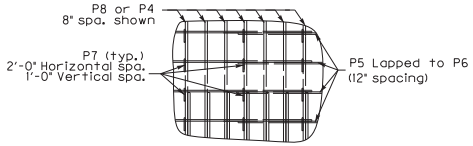

P7 BAR PLACEMENT

(alternate 90° & 135° bar ends)

GENERAL NOTES

SPECIFICATIONS: Construct piers according to the current edition of the Kentucky Department of Highways Standard Specifications for Road and Bridge Construction. Piers are designed for side by side box beams as detailed in Standard Drawings BDP-001 through BDP-012, current edition. They may be slightly modified to allow for 17'-6" rolled steel beam bridge width.

FOUNDATION PRESSURE: Construct pier footings on solid rock bearing material that can support a pressure of 8000 psf service or 10,800 psf strength factored, as recommended by a geotechnical engineer.

DESIGN LOADS: Pier is designed for the CB42 beam superstructure with 3~97 foot spans. Pier is designed to handle a half a 97 foot span for thermal load with expansion bearings under the beams.
Pier is designed for 100 mph wind.
Wind on superstructure is for 1~97' span longitudinal and transverse.
Pier is designed for stream flow of 10 ft./sec. up to the top of the pier. It is not designed for flow acting on the superstructure.
Pier is not designed for earthquake loading.

DESIGN APPLICABILITY: Consult with a structural engineer to determine if these details are applicable for any particular project.

FOOTING ELEVATION: Construct bottom of footing below the anticipated scour elevation. (This typically entails embedding the footings 1'-0" to 2'-0" into rock and pouring concrete directly against cut rock faces, as recommended by geotechnical engineer.)

NOTE: Distances to bars shown are clear dimensions unless otherwise noted.

MATERIAL SPECIFICATIONS:
Concrete, Class "A" = 3500 psi
Steel Reinforcement = Grade 60

REVISION	DATE

DATE: 12/13/19	CHECKED BY
DESIGNED BY: L. Carlisle	G. Crank
DETAILED BY: G. Crank	L. Carlisle

Commonwealth of Kentucky
DEPARTMENT OF HIGHWAYS

COUNTY: LETCHER

ROUTE: HANCOCK DR. — CROSSING: NORTH FORK KENTUCKY RIVER

PIER DETAILS

PREPARED BY: J.M. Crawford & Associates Consulting Engineers

BRIDGING KENTUCKY

SHEET NO. S5

DRAWING NO. 28158

ITEM NUMBER: 12-10116

FILE NAME: ...\067C00091N_PIER_DETAILS.dgn
USER: gcrank
DATE PLOTTED: 6/26/2020 1:39:39 AM
E-SHEET NAME:
Power InRoads v8.11.9.397

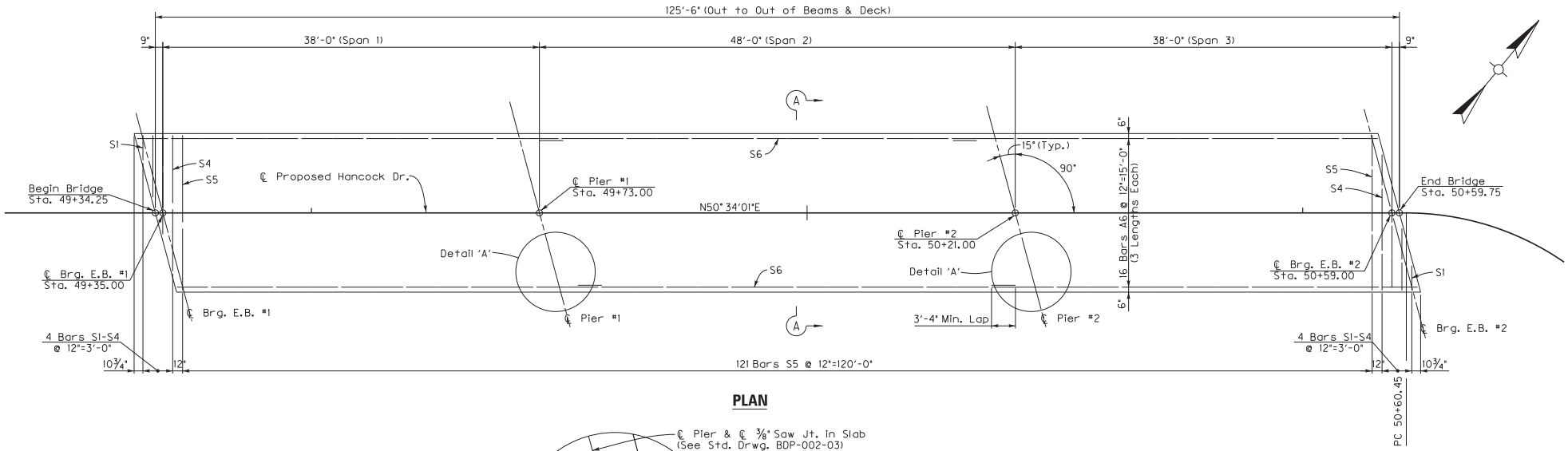

PLAN

BILL OF REINFORCEMENT						
MARK	TYPE	SIZE	NO.	LENGTH FT.	LENGTH IN.	LOCATION
S1E	Str	#5	2	2	6	SLAB
S2E	Str	#5	2	6	3	
S3E	Str	#5	2	10	0	
S4E	Str	#5	2	13	9	
S5E	Str	#5	121	15	8	
S6E	Str	#5	48	44	0	SLAB

All reinforcement designated with Suffix "E" shall be Epoxy Coated.

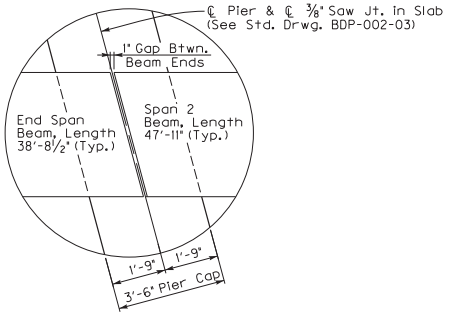

DETAIL 'A'

Beam Ends at Pier
(Pier #1 shown)

[1] Note: Contrary to the Standard Drawings (5" thickness), the construction elevations will cause the slab to be approximately 5.6" thick at end bents, 6.4" thick at the piers and approximately 5" thick at the center of each span. This is how the quantity of class "AA" concrete was calculated. Any additional concrete required above the plan quantity, due to beam camber being different from the designer's assumptions, is the contractor's responsibility and at no cost to the department.

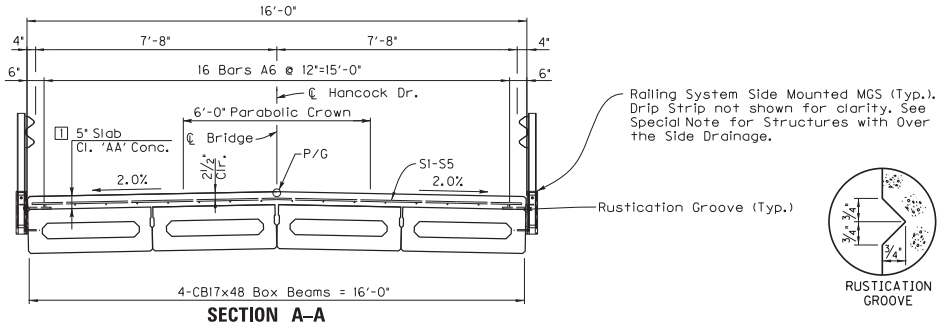

SECTION A–A

RUSTICATION GROOVE

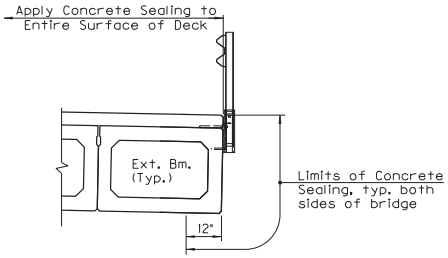

CONCRETE SEALING DETAIL

Applied in the field. See General Notes.

REVISION	DATE

DATE: 12/13/19	CHECKED BY
DESIGNED BY: L. Carlisle	S. McIntosh
DETAILED BY: G. Crank	L. Carlisle

Commonwealth of Kentucky
DEPARTMENT OF HIGHWAYS

COUNTY: **LETCHER**

ROUTE: HANCOCK DR. | CROSSING: NORTH FORK KENTUCKY RIVER

SUPERSTRUCTURE

PREPARED BY: J.M. Crawford & Associates Consulting Engineers

BRIDGING KENTUCKY

SHEET NO. S6

DRAWING NO. 28158

ITEM NUMBER: 12–10116

USER: gcrank
DATE PLOTTED: 6/26/2020 1:39:40 AM
FILE NAME: ...\067C00091N_Superstructure.dgn
E-SHEET NAME:
Power InRoads v8.11.9.397

CONSTRUCTION ELEVATIONS

LOCATION	LEFT FASCIA			CENTER LINE			RIGHT FASCIA		
	CONSTR. ELEV.	TOP OF BEAM	DIM "X"	CONSTR. ELEV.	TOP OF BEAM	DIM "X"	CONSTR. ELEV.	TOP OF BEAM	DIM "X"
SKEW LINE A-A	1081.567			1081.678			1081.529		
SKEW LINE B-B	1081.561			1081.672			1081.523		
SKEW LINE C-C	1081.223			1081.334			1081.184		
SKEW LINE D-D	1080.795			1080.906			1080.757		
SKEW LINE E-E	1080.457			1080.568			1080.419		
SKEW LINE F-F	1080.451			1080.561			1080.412		
GRID LINE 1	1081.513			1081.624			1081.475		
GRID LINE 2	1081.449			1081.560			1081.411		
GRID LINE 3	1081.379			1081.490			1081.340		
GRID LINE 4	1081.300			1081.411			1081.262		
GRID LINE 5	1081.162			1081.273			1081.124		
GRID LINE 6	1081.102			1081.213			1081.064		
GRID LINE 7	1081.042			1081.153			1081.004		
GRID LINE 8	1080.960			1081.071			1080.921		
GRID LINE 9	1080.877			1080.988			1080.839		
GRID LINE 10	1080.731			1080.842			1080.693		
GRID LINE 11	1080.667			1080.778			1080.628		
GRID LINE 12	1080.594			1080.705			1080.556		
GRID LINE 13	1080.516			1080.627			1080.478		

NOTES FOR ELEVATIONS TAKEN ON PRESTRESSED CONCRETE BEAMS

Take elevations on top of beam at points indicated after the beams have been laterally tensioned and grouted. The beam elevations are to be read to three decimal places and entered in tables under "Top of Beam" elevations.

Compute dimension "X" as follows: "Construction Elevation" minus "Top of Beam" elevation equals dimension "X". Construction Elevations include camber due to weight of the concrete slab and railing. Measuring of dimension "X" gives the final check on beam tolerances for camber, beam damage, and errors in erection that produce reverse cambers, sags, and unsightly fascia beams.
The minimum allowable dimension "X" or slab thickness is 4¾" (0.395').
The maximum allowable dimension "X" or slab thickness is 5¾" (0.479') at the end bents and 6½" (0.542') at the piers. If any computed dimension "X" is ouside limits, adjustments need to be made to the dimensions "X" on one or more gridlines at the discretion of the Engineer.

For setting templates, measure dimension "X" above top of beams for top of template. Do not set template by elevations.

Temporary supports or shoring will not be permitted under the girders when pouring the concrete floor slab or when taking "Top of Beam" elevations.

Note: The Table of Elevations at Center Line include the ⅜" deduction for Parabolic Crown.

[1] See Note 1 on sheet S6

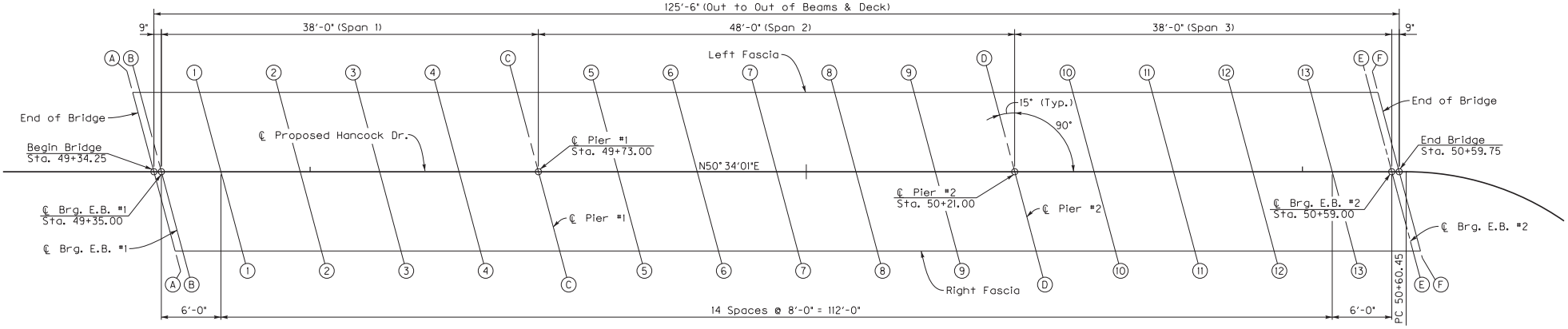

GRID LAYOUT

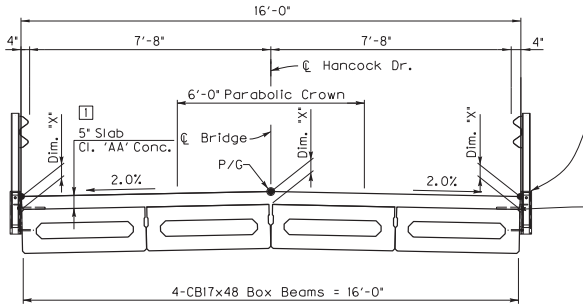

TYPICAL DECK SECTION

Railing System Side Mounted MGS (Typ.). Drip Strip not shown for clarity. See Special Note for Structures with Over the Side Drainage.

Rustication Groove (Typ.)

● Construction Elevations given at these points.

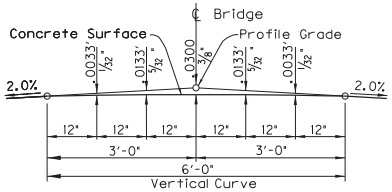

PARABOLIC CROWN DETAIL

REVISION	DATE

DATE: 12/13/19	CHECKED BY
DESIGNED BY: L. Carlisle	G. Crank
DETAILED BY: G. Crank	L. Carlisle

Commonwealth of Kentucky
DEPARTMENT OF HIGHWAYS

COUNTY: LETCHER

ROUTE: HANCOCK DR. | CROSSING: NORTH FORK KENTUCKY RIVER

CONSTRUCTION ELEVATIONS

PREPARED BY: J.M. Crawford & Associates Consulting Engineers

BRIDGING KENTUCKY

SHEET NO. S7

DRAWING NO. 28158

ITEM NUMBER: 12-10116

FILE NAME: ...\067C00091N_Construction Elevations.dgn
USER: gcrank
DATE PLOTTED: 6/26/2020 11:39:41 AM
E-SHEET NAME:
Power InRoads v8.11.9.397

SPECIAL NOTE FOR CONTRACT COMPLETION DATE AND LIQUIDATED DAMAGES ON BRIDGE REPAIR CONTRACTS

12-10116.00 Letcher 067C00091N

I. COMPLETION DATE.

Upon Notice to Proceed, the Contractor has the option of selecting the Begin Work date. Once selected, notify the Department in writing of the date selected at least two weeks prior to beginning work and provide a proposed project schedule. All work is to be completed by the specified contract completion date. The Contractor is allotted 60 calendar days once work begins to complete all work to safely reopen the structure with no lane closures. At a minimum, prior to reopening the lane to traffic, all strength requirements and curing for materials used shall be completed per Division 600 of the Standard Specifications.

The Engineer will begin charging calendar days for a structure on the day the Contractor begins work, with the exception of placement of signs, regardless of holidays or seasonal weather limitations.

II. LIQUIDATED DAMAGES.

Liquidated damages will be assessed to the Contractor in accordance with the Transportation Cabinet, Department of Highway's Current Standard Specifications for Road and Bridge Construction, Section 112.03.15A, when the lane closures are used beyond the allotted number of calendar days. Liquidated Damages will be assessed per the Standard Specification Section 108.09 when the contract time extends beyond the contract date.

Contrary to the Standard Specifications, liquidated damages will be assessed to the Contractor during the months of December, January, February and March when the contract time has expired on any individual bridge. Contract time will be charged during these months. All construction must be completed in accordance with the weather limitations specified in Section 606 and/or Section 601 as applicable. No extension of Contract time will be granted due to inclement weather or temperature limitations that occur due to starting work on the Contract or a structure late in the construction season.

SPECIAL NOTE

Tree Clearing Restriction

DUE TO THE RECOVEREY PLAN FOR ENDANGERED BATS, NO TREE CLEARING IS PERMITTED FROM JUNE 1 THROUGH JULY 31.

If there are any questions regarding this note, please contact Danny Peake, Director, Division of Environmental Analysis, 200 Mero Street, Frankfort, KY 40601, Phone: (502) 564-7250.

Special Note for Bridge Demolition, Renovation and Asbestos Abatement

If the project includes any bridge demolition or renovation, the successful bidder is required to notify Kentucky Division for Air Quality (KDAQ) via filing of form (DEP 7036) a minimum of 10 working days prior to commencement of any bridge demolition or renovation work.

Any available information regarding possible asbestos containing materials (ACM) on or within bridges to be affected by the project has been included in the bid documents. These are to be included with the Contractor's notification filed with the KDAQ. If not included in the bid documents, the Department will provide that information to the successful bidder for inclusion in the KDAQ notice as soon as possible. If there are no documents stating otherwise, the bidders should assume there are no asbestos containing materials that will in any way affect the work.

Asbestos Inspection Report

To: Tom Springer, QK4, Inc.

Date: 7-19-2019

Conducted By: Jeffrey Lee, Lee Engineering, llc
Kentucky Accredited Asbestos Inspector # 59640

Project and Structure Identification

067C00091N_Letcher_12-10116

Structure ID: 067C00091N

County and Item No: Letcher_12-10116

Structure Location: Hancock Dr Over N Fork KY River

Sample Description: No Suspect ACM Observed.

Inspection Date: 7-17-2019

Results and Recommendations

The asbestos inspection was performed in accordance with current United States Environmental Protection Agency (US EPA) regulations, specifically 40 CFR Part 61, Asbestos National Emissions Standards for Hazardous Air Pollutants (NESHAP) revision, final rule effective November 20, 1990.

It is recommended that this report accompany the 10-Day Notice of Intent for Demolition (DEP7036 Form) which is to be submitted to the Kentucky Division of Air Quality prior to abatement, demolition, or renovation of any building or structure in the Commonwealth.

No suspect asbestos containing materials (ACM) were observed.

KENTUCKY TRANSPORTATION CABINET
Department of Highways
DIVISION OF RIGHT OF WAY & UTILITIES

TC 62-226
Rev. 01/2016
Page 1 of 1

RIGHT OF WAY CERTIFICATION

☒ **Original** ☐ **Re-Certification** — **RIGHT OF WAY CERTIFICATION**

ITEM #	COUNTY	PROJECT # (STATE)	PROJECT # (FEDERAL)
12-10116	Letcher	1100 FD04 121 9414001R	

PROJECT DESCRIPTION

Bridging Kentucky - 067C00091N - Hancock Drive over North Fork KY River (replacement)

☐ **No Additional Right of Way Required**

Construction will be within the limits of the existing right of way. The right of way was acquired in accordance to FHWA regulations under the Uniform Relocation Assistance and Real Property Acquisitions Policy Act of 1970, as amended. No additional right of way or relocation assistance were required for this project.

☒ **Condition # 1 (Additional Right of Way Required and Cleared)**

All necessary right of way, including control of access rights when applicable, have been acquired including legal and physical possession. Trial or appeal of cases may be pending in court but legal possession has been obtained. There may be some improvements remaining on the right-of-way, but all occupants have vacated the lands and improvements, and KYTC has physical possession and the rights to remove, salvage, or demolish all improvements and enter on all land. Just Compensation has been paid or deposited with the court. All relocations have been relocated to decent, safe, and sanitary housing or that KYTC has made available to displaced persons adequate replacement housing in accordance with the provisions of the current FHWA directive.

☐ **Condition # 2 (Additional Right of Way Required with Exception)**

The right of way has not been fully acquired, the right to occupy and to use all rights-of-way required for the proper execution of the project has been acquired. Some parcels may be pending in court and on other parcels full legal possession has not been obtained, but right of entry has been obtained, the occupants of all lands and improvements have vacated, and KYTC has physical possession and right to remove, salvage, or demolish all improvements. Just Compensation has been paid or deposited with the court for most parcels. Just Compensation for all pending parcels will be paid or deposited with the court prior to AWARD of construction contract

☐ **Condition # 3 (Additional Right of Way Required with Exception)**

The acquisition or right of occupancy and use of a few remaining parcels are not complete and/or some parcels still have occupants. All remaining occupants have had replacement housing made available to them in accordance with 49 CFR 24.204. KYTC is hereby requesting authorization to advertise this project for bids and to proceed with bid letting even though the necessary right of way will not be fully acquired, and/or some occupants will not be relocated, and/or the just compensation will not be paid or deposited with the court for some parcels until after bid letting. KYTC will fully meet all the requirements outlined in 23 CFR 635.309(c)(3) and 49 CFR 24.102(j) and will expedite completion of all acquisitions, relocations, and full payments after bid letting and prior to AWARD of the construction contract or force account construction.

Total Number of Parcels on Project	3	EXCEPTION (S) Parcel #	ANTICIPATED DATE OF POSSESSION WITH EXPLANATION
Number of Parcels That Have Been Acquired			
Signed Deed	2		
Condemnation	1		
Signed ROE	1		

Notes/ Comments (Use Additional Sheet if necessary)
Acquisition complete

LPA RW Project Manager		Right of Way Supervisor	
Printed Name		Printed Name	Mark Askin, PE
Signature		Signature	Askin, Mark — Digitally signed by Askin, Mark DN: cn=Askin, Mark, c=US, o=Strand Associates, Inc., ou=Louisville, email=mark.askin@strand.com Date: 2021.02.19 09:44:26-05'00'
Date		Date	02/19/21
Right of Way Director		**FHWA**	
Printed Name	Dean M. Loy	Printed Name	
Signature	DM Loy — Digitally signed by DM Loy Date: 2021.02.19 13:10:37 -05'00'	Signature	
Date		Date	

UTILITIES AND RAIL CERTIFICATION NOTE

Letcher County
FD04 067 94140 01U
Mile point: *
ADDRESS DEFICIENCIES OF BRIDGE on Hancock Drive Over North Fork KY River (067C00091N)
ITEM NUMBER: 11-10018.00

PROJECT NOTES ON UTILITIES

For all projects under 2000 Linear feet which require a normal excavation locate request pursuant to KRS 367.4901-4917, the awarded contractor shall field mark the proposed excavation or construction boundaries of the project (also called white lining) using the procedure set forth in KRS 367.4909(9)(k). For all projects over 2000 linear feet, which are defined as a "Large Project" in KRS 367.4903(18), the awarded contractor shall initially mark the first 2000 linear feet minimally of proposed excavation or construction boundaries of the project to be worked using the procedure set forth in KRS 367.4909(9)(k). This temporary field locating of the project excavation boundary shall take place prior to submitting an excavation location request to the underground utility protection Kentucky Contact Center. For large projects, the awarded contractor shall work with the impacted utilities to determine when additional white lining of the remainder of the project site will take place. This provision shall not alter or relieve the awarded contractor from complying with requirements of KRS 367.4905 to 367.4917 in their entirety.

Please Note: The information presented in this Utility Note is informational in nature and the information contained herein is not guaranteed.

The contractor will be responsible for contacting all utility facility owners on the subject project to coordinate his activities. The contractor will coordinate his activities to minimize and, where possible, avoid conflicts with utility facilities. Due to the nature of the work proposed, it is unlikely to conflict with the existing utilities beyond minor facility adjustments. Where conflicts with utility facilities are unavoidable, the contractor will coordinate any necessary relocation work with the facility owner and Resident Engineer. The Kentucky Transportation Cabinet maintains the right to remove or alter portions of this contract if a utility conflict occurs. The utility facilities as noted in the previous section(s) have been determined using data garnered by varied means and with varying degrees of accuracy: from the facility owners, a result of S.U.E., field inspections, and/or reviews of record drawings. The facilities defined may not be inclusive of all utilities in the project scope and are not Level A quality, unless specified as such. It is the contractor's responsibility to verify all utilities and their respective locations before excavating.

The contractor shall make every effort to protect underground facilities from damage as prescribed in the Underground Facility Damage Protection Act of 1994, Kentucky Revised Statute KRS 367.4901 to 367.4917. It is the contractor's responsibility to determine and take steps necessary to be in compliance with federal and state damage prevention directives. The contractor is instructed to contact KY 811 for

UTILITIES AND RAIL CERTIFICATION NOTE

Letcher County
FD04 067 94140 01U
Mile point: *
ADDRESS DEFICIENCIES OF BRIDGE on Hancock Drive Over North Fork KY River (067C00091N)
ITEM NUMBER: 11-10018.00

the location of existing underground utilities. Contact shall be made a minimum of two (2) and no more than ten (10) business days prior to excavation. The contractor shall submit Excavation Locate Requests to the Kentucky Contact Center (KY 811) via web ticket entry. The submission of this request does not relieve the contractor from the responsibility of contacting non-member facility owners, whom are to be contacted through their individual Protection Notification Center. It may be necessary for the contractor to contact the County Court Clerk to determine what utility companies have facilities in the area. Non-compliance with these directives can result in the enforcement of penalties.

NOTE: DO NOT DISTURB THE FOLLOWING FACILITIES LOCATED WITHIN THE PROJECT DISTURB LIMITS

AT&T- Communications

KY Power AEP- Electric

Vinland Energy- Gas

Letcher Sewer and Water-Water

*The Contractor is fully responsible for protection of all utilities listed above

THE FOLLOWING FACILITY OWNERS ARE RELOCATING/ADJUSTING THEIR FACILITIES WITHIN THE PROJECT LIMITS AND WILL BE COMPLETE PRIOR TO CONSTRUCTION

Not Applicable

UTILITIES AND RAIL CERTIFICATION NOTE

Letcher County
FD04 067 94140 01U
Mile point: *
ADDRESS DEFICIENCIES OF BRIDGE on Hancock Drive Over North Fork KY River (067C00091N)
ITEM NUMBER: 11-10018.00

THE FOLLOWING FACILITY OWNERS HAVE FACILITIES TO BE RELOCATED/ADJUSTED BY THE OWNER OR THEIR SUBCONTRACTOR AND IS TO BE COORDINATED WITH THE ROAD CONTRACT

*Not Applicable

THE FOLLOWING FACILITY OWNERS HAVE FACILITIES TO BE RELOCATED/ADJUSTED BY THE ROAD CONTRACTOR AS INCLUDED IN THIS CONTRACT

Not Applicable

RAIL COMPANIES HAVE FACILITIES IN CONJUNCTION WITH THIS PROJECT AS NOTED

☒ **No Rail Involvement** ☐ **Rail Involved** ☐ **Rail Adjacent**

UTILITIES AND RAIL CERTIFICATION NOTE

Letcher County
FD04 067 94140 01U
Mile point: *
ADDRESS DEFICIENCIES OF BRIDGE on Hancock Drive Over North Fork KY River (067C00091N)
ITEM NUMBER: 11-10018.00

AREA FACILITY OWNER CONTACT LIST

AT&T	**Ky Power AEP**	**Vinland**	**Letcher County Water and Sewer**
29 Willis Branch	1400 E. Main St.	104 Fortress Properties Suite 1	6 Broadway Street
Prestonsburg, KY 41653	Hazard, KY 41701	London Ky 40741	Whitesburg, KY 41858
Attn: Jackie Salyer	Attn: Ellis Mcknight	Attn: Mike Bays	Mark Lewis
606-874-2715	606-438-0423	606-344-9593	606-633-8550
Js2299@att.com	ermcknight@aep.com	mike.bays@vinlandenergyllc.com	marklws21@gmail.com

Kentucky Transportation
Cabinet Project:

N O T I C E

DEPARTMENT OF THE ARMY

CORPS OF ENGINEERS

NATIONWIDE SECTION 404 PERMIT AUTHORIZATION

DEPARTMENT FOR ENVIRONMENTAL PROTECTION

KENTUCKY DIVISION OF WATER

SECTION 401 WATER QUALITY CERTIFICATION

PROJECT DESCRIPTION: Bridge Replacement
Hancock Drive over North Fork of Kentucky River
Letcher County, KY
KYTC Item No. N/A

The Sections 404 and 401 activities for this project have previously been permitted under the authority of the Department of the Army, Section 404 Nationwide Permit Number 3, *Maintenance Projects* (with additional *Kentucky Regional General Conditions*), and the Kentucky Division of Water, Section 401 General Water Quality Certification. For these authorized permits to be valid, the attached conditions must be followed. The contractor shall post a copy of this Nationwide Permit Number 3 and General Water Quality Certification in a conspicuous location at the project site, with unencumbered public access, for the duration of construction and comply with the general conditions required.

Kentucky Transportation
Cabinet Project:

Locations Impacting Water Quality

Station-Location	Description
Bridge ID: **067C00091N**	**Hancock Drive Bridge over North Fork of Kentucky River** project will entail replacing the existing bridge and constructing a new bridge in the same location and with the same current geometrics (bridge width, length, hydraulic opening, etc.). The project may involve the removal of debris and/or sediment.

This project involves work near and/or within Jurisdictional Waters of the United States as defined by the U. S. Army Corps of Engineers; therefore, requiring a Nationwide Number 3 General Section 404 permit. The Division of Water conditionally certified this General Permit. Importantly, one of those conditions regards the use of heavy equipment in any stream channel, or streambed. If there is need to cross the stream channel with heavy equipment, or conduct work within the stream channel, a work platform or temporary crossing, is authorized. This should be constructed with clean rock and sufficient pipe to allow stream flow to continue, unimpeded. Other conditions may be found under the heading, *General Certification—Nationwide Permit # 3 Maintenance Projects*.

In order for this authorization to be valid, the attached conditions must be followed. The contractor shall post a copy of this Nationwide Permit Number 3 Approval in a conspicuous location at the project site, for the duration of the construction, and comply with the general conditions as required.

To more readily expedite construction, the contractor may elect to alter the design, or perform the work in a manner different from what was originally proposed and specified. Prior to commencing such alternative work, the contractor shall obtain written permission from the Division of Construction and the Kentucky Transportation Cabinet, Division of Environmental Analysis. If such changes necessitate further permitting, then the contractor will be responsible for applying to the U. S. Army Corps of Engineers and the Kentucky Division of Water. A copy of any request to the Corps of Engineers or Division of Water to alter this proposal and subsequent responses shall be forwarded to the Division of Environmental Analysis, DA Permit Coordinator, for office records and for informational purposes.

Terms for Nationwide Permit No. 3 – Maintenance Projects

(a) The repair, rehabilitation, or replacement of any previously authorized, currently serviceable structure or fill, or of any currently serviceable structure or fill authorized by 33 CFR 330.3, provided that the structure or fill is not to be put to uses differing from those uses specified or contemplated for it in the original permit or the most recently authorized modification. Minor deviations in the structure's configuration or filled area, including those due to changes in materials, construction techniques, requirements of other regulatory agencies, or current construction codes or safety standards that are necessary to make the repair, rehabilitation, or replacement are authorized. This NWP also authorizes the removal of previously authorized structures or fills. Any stream channel modification is limited to the minimum necessary for the repair, rehabilitation, or replacement of the structure or fill; such modifications, including the removal of material from the stream channel, must be immediately adjacent to the project. This NWP also authorizes the removal of accumulated sediment and debris within, and in the immediate vicinity of, the structure or fill. This NWP also authorizes the repair, rehabilitation, or replacement of those structures or fills destroyed or damaged by storms, floods, fire or other discrete events, provided the repair, rehabilitation, or replacement is commenced, or is under contract to commence, within two years of the date of their destruction or damage. In cases of catastrophic events, such as hurricanes or tornadoes, this two-year limit may be waived by the district engineer, provided the permittee can demonstrate funding, contract, or other similar delays.

(b) This NWP also authorizes the removal of accumulated sediments and debris outside the immediate vicinity of existing structures (e.g., bridges, culverted road crossings, water intake structures, etc.). The removal of sediment is limited to the minimum necessary to restore the waterway in the vicinity of the structure to the approximate dimensions that existed when the structure was built, but cannot extend farther than 200 feet in any direction from the structure. This 200 foot limit does not apply to maintenance dredging to remove accumulated sediments blocking or restricting outfall and intake structures or to maintenance dredging to remove accumulated sediments from canals associated with outfall and intake structures. All dredged or excavated materials must be deposited and retained in an area that has no waters of the United States unless otherwise specifically approved by the district engineer under separate authorization.

(c) This NWP also authorizes temporary structures, fills, and work, including the use of temporary mats, necessary to conduct the maintenance activity. Appropriate measures must be taken to maintain normal downstream flows and minimize flooding to the maximum extent practicable, when temporary structures, work, and discharges, including cofferdams, are necessary for construction activities, access fills, or dewatering of construction sites. Temporary fills must consist of materials, and be placed in a manner, that will not be eroded by expected high flows. After conducting the maintenance activity, temporary fills must be removed in their entirety and the affected areas returned to pre-construction elevations. The areas affected by temporary fills must be revegetated, as appropriate.

(d) This NWP does not authorize maintenance dredging for the primary purpose of navigation. This NWP does not authorize beach restoration. This NWP does not authorize new stream channelization or stream relocation projects.

Notification: For activities authorized by paragraph (b) of this NWP, the permittee must submit a pre-construction notification to the district engineer prior to commencing the activity (see general condition 32). The pre-construction notification must include information regarding the original design capacities and configurations of the outfalls, intakes, small impoundments, and canals. (Authorities: Section 10 of the Rivers and Harbors Act of 1899 and section 404 of the Clean Water Act (Sections 10 and 404))

Note: This NWP authorizes the repair, rehabilitation, or replacement of any previously authorized structure or fill that does not qualify for the Clean Water Act section 404(f) exemption for maintenance.

MATTHEW G. BEVIN
GOVERNOR

CHARLES G. SNAVELY
SECRETARY

ENERGY AND ENVIRONMENT CABINET
DEPARTMENT FOR ENVIRONMENTAL PROTECTION

R. BRUCE SCOTT
COMMISSIONER

300 SOWER BOULEVARD
FRANKFORT, KENTUCKY 40601

General Certification--Nationwide Permit # 3
Maintenance

This General Certification is issued March 19, 2017, in conformity with the requirements of Section 401 of the Clean Water Act of 1977, as amended (33 U.S.C. §1341), as well as Kentucky Statute KRS 224.16-050.

For this and all nationwide permits, the definition of surface water is as per 401 KAR 10:001 Chapter 10, Section 1(80): Surface Waters means those waters having well-defined banks and beds, either constantly or intermittently flowing; lakes and impounded waters; marshes and wetlands; and any subterranean waters flowing in well-defined channels and having a demonstrable hydrologic connection with the surface. Lagoons used for waste treatment and effluent ditches that are situated on property owned, leased, or under valid easement by a permitted discharger are not considered to be surface waters of the commonwealth.

The Commonwealth of Kentucky hereby certifies under Section 401 of the Clean Water Act (CWA) that it has reasonable assurances that applicable water quality standards under Kentucky Administrative Regulations Title 401, Chapter 10, established pursuant to Sections 301, 302, 304, 306 and 307 of the CWA, will not be violated for the activity covered under NATIONWIDE PERMIT 3, namely Maintenance, provided that the following conditions are met:

1. The activity will not occur within surface waters of the Commonwealth identified by the Kentucky Division of Water as Outstanding State or National Resource Water, Cold Water Aquatic Habitat, or Exceptional Waters.

2. The activity will not occur within surface waters of the Commonwealth identified as perpetually-protected (e.g. deed restriction, conservation easement) mitigation sites.

3. The activity will impact less than 1/2 acre of wetland/marsh.

4. The activity will impact less than 300 linear feet of surface waters of the Commonwealth.

General Certification--Nationwide Permit # 3
Maintenance
Page 2

5. The Kentucky Division of Water may require submission of a formal application for an individual certification for any project if the project has been determined to likely have a significant adverse effect upon water quality or degrade the waters of the Commonwealth so that existing uses of the water body or downstream waters are precluded.

6. Activities that do not meet the conditions of this General Water Quality Certification require an Individual Section 401 Water Quality Certification.

7. Activities qualifying for coverage under this General Water Quality Certification are subject to the following conditions:

    - Projects requiring in-stream stormwater detention/retention basins shall require individual water quality certifications.
    - Erosion and sedimentation pollution control plans and Best Management Practices must be designed, installed, and maintained in effective operating condition at all times during construction activities so that violations of state water quality standards do not occur.
    - Sediment and erosion control measures, such as check-dams constructed of any material, silt fencing, hay bales, etc., shall not be placed within surface waters of the Commonwealth, either temporarily or permanently, without prior approval by the Kentucky Division of Water's Water Quality Certification Section. If placement of sediment and erosion control measures in surface waters is unavoidable, design and placement of temporary erosion control measures shall not be conducted in such a manner that may result in instability of streams that are adjacent to, upstream, or downstream of the structures. All sediment and erosion control devices shall be removed and the natural grade restored within the completion timeline of the activities.
    - Measures shall be taken to prevent or control spills of fuels, lubricants, or other toxic materials used in construction from entering the watercourse.
    - Removal of riparian vegetation shall be limited to that necessary for equipment access.
    - To the maximum extent practicable, all in-stream work under this certification shall be performed under low-flow conditions.
    - Heavy equipment, e.g. bulldozers, backhoes, draglines, etc., if required for this project, should not be used or operated within the stream channel. In those instances in which such in-stream work is unavoidable, then it shall be performed in such a manner and duration as to minimize turbidity and disturbance to substrates and bank or riparian vegetation.
    - Any fill shall be of such composition that it will not adversely affect the biological, chemical, or physical properties of the receiving waters and/or cause violations of water quality standards. If rip-rap is utilized, it should be of such weight and size that bank stress or slump conditions will not be created because of its placement.

General Certification--Nationwide Permit # 3
Maintenance
Page 3

- If there are water supply intakes located downstream that may be affected by increased turbidity and suspended solids, the permittee shall notify the operator when such work will be done.
- Should evidence of stream pollution or jurisdictional wetland impairment and/or violations of water quality standards occur as a result of this activity (either from a spill or other forms of water pollution), the Kentucky Division of Water shall be notified immediately by calling (800) 928-2380.

Non-compliance with the conditions of this general certification or violation of Kentucky state water quality standards may result in civil penalties.

US Army Corps of Engineers®
Louisville District

2017 Nationwide Permit General Conditions

The following General Conditions must be followed in order for any authorization by NWP to be valid:

1. Navigation. (a) No activity may cause more than a minimal adverse effect on navigation.

(b) Any safety lights and signals prescribed by the US Coast Guard, through regulations or otherwise, must be installed and maintained at the permittee's expense on authorized facilities in navigable waters of the United States.

(c) The permittee understands and agrees that, if future operations by the United States require the removal, relocation, or other alteration, of the structure or work herein authorized, or if, in the opinion of the Secretary of the Army or his authorized representative, said structure or work shall cause unreasonable obstruction to the free navigation of the navigable waters, the permittee will be required, upon due notice from the Corps of Engineers, to remove, relocate, or alter the structural work or obstructions caused thereby, without expense to the United States. No claim shall be made against the United States on account of any such removal or alteration.

2. Aquatic Life Movements. No activity may substantially disrupt the necessary life cycle movements of those species of aquatic life indigenous to the waterbody, including those species that normally migrate through the area, unless the activity's primary purpose is to impound water. All permanent and temporary crossings of waterbodies shall be suitably culverted, bridged, or otherwise designed and constructed to maintain low flows to sustain the movement of those aquatic species.

3. Spawning Areas. Activities in spawning areas during spawning seasons must be avoided to the maximum extent practicable. Activities that result in the physical destruction (e.g., through excavation, fill, or downstream smothering by substantial turbidity) of an important spawning area are not authorized.

4. Migratory Bird Breeding Areas. Activities in waters of the United States that serve as breeding areas for migratory birds must be avoided to the maximum extent practicable.

5. Shellfish Beds. No activity may occur in areas of concentrated shellfish populations, unless the activity is directly related to a shellfish harvesting activity authorized by NWPs 4 and 48, or is a shellfish seeding or habitat restoration activity authorized by NWP 27.

6. Suitable Material. No activity may use unsuitable material (e.g., trash, debris, car bodies, asphalt, etc.). Material used for construction or discharged must be free from toxic pollutants in toxic amounts (see Section 307 of the Clean Water Act).

7. Water Supply Intakes. No activity may occur in the proximity of a public water supply intake, except where the activity is for the repair or improvement of public water supply intake structures or adjacent bank stabilization.

8. Adverse Effects From Impoundments. If the activity creates an impoundment of water, adverse effects to the aquatic system due to accelerating the passage of water, and/or restricting its flow must be minimized to the maximum extent practicable.

9. Management of Water Flows. To the maximum extent practicable, the pre-construction course, condition, capacity, and location of open waters must be maintained for each activity, including stream channelization, storm water management activities, and temporary and permanent road crossings, except as provided below. The activity must be constructed to withstand expected high flows. The activity must not restrict or impede the passage of normal or high flows, unless the primary purpose of the activity is to impound water or manage high flows. The activity may alter the pre-construction course, condition, capacity, and location of open waters if it benefits the aquatic environment (e.g., stream restoration or relocation activities).

10. Fills Within 100-Year Floodplains. The activity must comply with applicable FEMA-approved state or local floodplain management requirements.

11. Equipment. Heavy equipment working in wetlands or mudflats must be placed on mats, or other measures must be taken to minimize soil disturbance.

12. Soil Erosion and Sediment Controls. Appropriate soil erosion and sediment controls must be used and maintained in effective operating condition during construction, and all exposed soil and other fills, as well as any work below the ordinary high water mark or high tide line, must be permanently stabilized at the earliest practicable date. Permittees are encouraged to perform work within waters of the United States during periods of low-flow or no-flow, or during low tides.

13. Removal of Temporary Fills. Temporary fills must be removed in their entirety and the affected areas returned to pre-construction elevations. The affected areas must be revegetated, as appropriate.

14. Proper Maintenance. Any authorized structure or fill shall be properly maintained, including maintenance to ensure public safety and compliance with applicable NWP general conditions, as well as any activity-specific conditions added by the district engineer to an NWP authorization.

15. Single and Complete Project. The activity must be a single and complete project. The same NWP cannot be used more than once for the same single and complete project.

16. Wild and Scenic Rivers. (a) No activity may occur in a component of the National Wild and Scenic River System, or in a river officially designated by Congress as a “study river” for possible inclusion in the system while the river is in an official study status, unless the appropriate Federal agency with direct management responsibility for such river, has determined in writing that the proposed activity will not adversely affect the Wild and Scenic River designation or study status.

(b) If a proposed NWP activity will occur in a component of the National Wild and Scenic River System, or in a river officially designated by Congress as a “study river” for possible inclusion in the system while the river is in an official study status, the permittee must submit a pre-construction notification (see general condition 32). The district engineer will coordinate the PCN with the Federal agency with direct management responsibility for that river. The permittee shall not begin the NWP activity until notified by the district engineer that the Federal agency with direct management responsibility for that river has determined in writing that the proposed NWP activity will not adversely affect the Wild and Scenic River designation or study status.

(c) Information on Wild and Scenic Rivers may be obtained from the appropriate Federal land management agency responsible for the designated Wild and Scenic River or study river (e.g., National Park Service, U.S. Forest Service, Bureau of Land Management, U.S. Fish and Wildlife Service). Information on these rivers is also available at: http://www.rivers.gov/

17. Tribal Rights. No activity may impair tribal rights (including treaty rights), protected tribal resources, or tribal lands.

18. Endangered Species. (a) No activity is authorized under any NWP which is likely to directly or indirectly jeopardize the continued existence of a threatened or endangered species or a species proposed for such designation, as identified under the Federal Endangered Species Act (ESA), or which will directly or indirectly destroy or adversely modify the critical habitat of such species. No activity is authorized under any NWP which “may affect” a listed species or critical habitat, unless section 7 consultation addressing the effects of the proposed activity has been completed. Direct effects are the immediate effects on the listed species and critical habitat caused by the NWP activity. Indirect effects are those effects on listed species and critical habitat that are caused by the NWP activity and are later in time, but still are reasonably certain to occur.

(b) Federal agencies should follow their own procedures for complying with the requirements of the ESA. If pre-construction notification is required for the proposed activity, the Federal permittee must provide the district engineer with the appropriate documentation to demonstrate compliance with those requirements. The district engineer will verify that the appropriate documentation has been submitted. If the appropriate documentation has not been submitted, additional ESA section 7 consultation may be necessary for the activity and the respective federal agency would be responsible for fulfilling its obligation under section 7 of the ESA.

(c) Non-federal permittees must submit a pre-construction notification (PCN) to the district engineer if any listed species or designated critical habitat might be affected or is in the vicinity of the activity, or if the activity is located in designated critical habitat, and shall not begin work on the activity until notified by the district engineer that the requirements of the ESA have been satisfied and that the activity is authorized. For activities that might affect Federally-listed endangered or threatened species or designated critical habitat, the PCN must include the name(s) of the endangered or threatened species that might be affected by the proposed activity or that utilize the designated critical habitat that might be affected by the proposed work. The district engineer will determine whether the proposed activity "may affect" or will have "no effect" to listed species and designated critical habitat and will notify the non-Federal applicant of the Corps' determination within 45 days of receipt of a complete PCN. In cases where the non-Federal applicant has identified listed species or critical habitat that might be affected or is in the vicinity of the activity, and has so notified the Corps, the applicant shall not begin work until the Corps has provided notification the proposed activities will have "no effect" on listed species or critical habitat, or until Section 7 consultation has been completed. If the non-Federal applicant has not heard back from the Corps within 45 days, the applicant must still wait for notification from Corps.

(d) As a result of formal or informal consultation with the USFWS or NMFS the district engineer may add species-specific permit conditions to the NWPs.

(e) Authorization of an activity by a NWP does not authorize the "take" of a threatened or endangered species as defined under the ESA. In the absence of separate authorization (e.g., an ESA Section 10 Permit, a Biological Opinion with "incidental take" provisions, etc.) from the USFWS or the NMFS, the Endangered Species Act prohibits any person subject to the jurisdiction of the United States to take a listed species, where "take" means to harass, harm, pursue, hunt, shoot, wound, kill, trap, capture, or collect, or to attempt to engage in any such conduct. The word "harm" in the definition of "take" means an act which actually kills or injures wildlife. Such an act may include significant habitat modification or degradation where it actually kills or injures wildlife by significantly impairing essential behavioral patterns, including breeding, feeding or sheltering.

(f) If the non-federal permittee has a valid ESA section 10(a)(1)(B) incidental take permit with an approved Habitat Conservation Plan for a project or a group of projects that includes the proposed NWP activity, the non-federal applicant should provide a copy of that ESA section 10(a)(1)(B) permit with the PCN required by paragraph (c) of this general condition. The district engineer will review the ESA section 10(a)(1)(B) permit, and if he or she determines that it covers the proposed NWP activity, including any incidental take of listed species that might occur as a result of conducting the proposed NWP activity, the district engineer does not need to conduct a separate section 7 consultation for the proposed NWP activity. The district engineer will notify the non-federal applicant within 45 days of receipt of a complete PCN whether the ESA section 10(a)(1)(B) permit covers the proposed NWP activity or whether additional ESA section 7 consultation is required.

(g) Information on the location of threatened and endangered species and their critical habitat can be obtained directly from the offices of the USFWS and NMFS or their world wide web pages at http://www.fws.gov/ or http://www.fws.gov/ipac and http://www.nmfs.noaa.gov/pr/species/esa respectively.

19. Migratory Birds and Bald and Golden Eagles. The permittee is responsible for ensuring their action complies with the Migratory Bird Treaty Act and the Bald and Golden Eagle Protection Act. The permittee is responsible for contacting appropriate local office of the U.S. Fish and Wildlife Service to determine applicable measures to reduce impacts to migratory birds or eagles, including whether "incidental take" permits are necessary and available under the Migratory Bird Treaty Act or Bald and Golden Eagle Protection Act for a particular activity.

20. Historic Properties. (a) In cases where the district engineer determines that the activity may have the potential to cause effects to properties listed, or eligible for listing, in the National Register of Historic Places, the activity is not authorized, until the requirements of Section 106 of the National Historic Preservation Act (NHPA) have been satisfied.

(b) Federal permittees should follow their own procedures for complying with the requirements of Section 106 of the National Historic Preservation Act. If pre-construction notification is required for the proposed NWP activity, the Federal permittee must provide the district engineer with the appropriate documentation to demonstrate compliance with those requirements. The district engineer will verify that the appropriate documentation has been submitted. If the appropriate documentation is not submitted, then additional consultation under section 106 may be necessary. The respective federal agency is responsible for fulfilling its obligation to comply with section 106.

(c) Non-federal permittees must submit a pre-construction notification to the district engineer if the NWP activity might have the potential to cause effects to any historic properties listed on, determined to be eligible for listing on, or potentially eligible for listing on the National Register of Historic Places, including previously unidentified properties. For such activities, the pre-construction notification must state which historic properties might have the potential to be affected by the proposed activity or include a vicinity map indicating the location of the historic properties or the potential for the presence of historic properties. Assistance regarding information on the location of or potential for the presence of historic properties can be sought from the State Historic Preservation Officer, Tribal Historic Preservation Officer, or designated tribal representative, as appropriate, and the National Register of Historic Places (see 33 CFR 330.4(g)). When reviewing pre-construction notifications, district engineers will comply with the current procedures for addressing the requirements of Section 106 of the National Historic Preservation Act. The district engineer shall make a reasonable and good faith effort to carry out appropriate identification efforts, which may include background research, consultation, oral history interviews, sample field investigation, and field survey. Based on the information submitted in the PCN and these identification efforts, the district engineer shall determine whether the proposed NWP activity has the potential to cause an effect on the historic properties. Section 106 consultation is not required when the district engineer determines that the activity does not have the potential to cause effects on historic properties (see 36 CFR 800.3(a)). Section 106 consultation is required when the district engineer determines that the activity has the potential to cause effects on historic properties. The district engineer will conduct consultation with consulting parties identified under 36 CFR 800.2(c) when he or she makes any of the following effect determinations for the purposes of section 106 of the NHPA: no historic properties affected, no adverse effect, and adverse effect. Where the non-Federal applicant has identified historic properties on which the activity might have the potential to cause effects and notified the Corps, the non-Federal applicant shall not begin the activity until notified by the district engineer either that the activity has no potential to cause effects to historic properties or that NHPA section 106 consultation has been completed.

(d) For non-federal permittees, the district engineer will notify the prospective permittee within 45 days of receipt of a complete pre-construction notification whether NHPA section 106 consultation is required. If NHPA section 106 consultation is required, the district engineer will notify the non-Federal applicant that he or she cannot begin the activity until Section 106 consultation is completed. If the non-Federal applicant has not heard back from the Corps within 45 days, the applicant must still wait for notification from the Corps.

(e) Prospective permittees should be aware that section 110k of the NHPA (54 U.S.C. 306113) prevents the Corps from granting a permit or other assistance to an applicant who, with intent to avoid the requirements of Section 106 of the NHPA, has intentionally significantly adversely affected a historic property to which the permit would relate, or having legal power to prevent it, allowed such significant adverse effect to occur, unless the Corps, after consultation with the Advisory Council on Historic Preservation (ACHP), determines that circumstances justify granting such assistance despite the adverse effect created or permitted by the applicant. If circumstances justify granting the assistance, the Corps is required to notify the ACHP and provide documentation specifying the circumstances, the degree of damage to the integrity of any historic properties affected, and proposed mitigation. This documentation must include any views obtained from the applicant, SHPO/THPO, appropriate Indian tribes if the undertaking occurs on or affects historic properties on tribal lands or affects properties of interest to those tribes, and other parties known to have a legitimate interest in the impacts to the activity on historic properties.

21. Discovery of Previously Unknown Remains and Artifacts. If you discover any previously unknown historic, cultural or archeological remains and artifacts while accomplishing the activity authorized by this permit, you must immediately notify the district engineer of what you have found, and to the maximum extent practicable, avoid construction activities that may affect the remains and artifacts until the required coordination has been completed. The district engineer will initiate the Federal, Tribal and state coordination required to determine if the items or remains warrant recovery effort or if the site is eligible for listing in the National Register of Historic Places.

22. Designated Critical Resource Waters. Critical resource waters include, NOAA-managed marine sanctuaries and marine monuments, and National Estuarine Research Reserves. The district engineer may designate, after notice and opportunity for public comment, additional waters officially designated by a state as having particular environmental or ecological significance, such as outstanding national resource waters or state natural heritage sites. The district engineer may also designate additional critical resource waters after notice and opportunity for public comment.

(a) Discharges of dredged or fill material into waters of the US are not authorized by NWPs 7, 12, 14, 16, 17, 21, 29, 31, 35, 39, 40, 42, 43, 44, 49, 50, 51, and 52 for any activity within, or directly affecting, critical resource waters, including wetlands adjacent to such waters.

(b) For NWPs 3, 8, 10, 13, 15, 18, 19, 22, 23, 25, 27, 28, 30, 33, 34, 36, 37, 38, and 54, notification is required in accordance with general condition 32, for any activity proposed in the designated critical resource waters including wetlands adjacent to those waters. The district engineer may authorize activities under these NWPs only after it is determined that the impacts to the critical resource waters will be no more than minimal.

23. Mitigation. The district engineer will consider the following factors when determining appropriate and practicable mitigation necessary to ensure that the individual and cumulative adverse environmental effects are no more than minimal:

(a) The activity must be designed and constructed to avoid and minimize adverse effects, both temporary and permanent, to waters of the United States to the maximum extent practicable at the project site (i.e., on site).

(b) Mitigation in all its forms (avoiding, minimizing, rectifying, reducing, or compensating for resource losses) will be required to the extent necessary to ensure that the individual and cumulative adverse environmental effects are no more than minimal.

(c) Compensatory mitigation at a minimum one-for-one ratio will be required for all wetland losses that exceed 1/10-acre and require pre-construction notification, unless the district engineer determines in writing that either some other form of mitigation would be more environmentally appropriate or the adverse effects of the proposed activity are minimal, and provides a project-specific waiver of this requirement. For wetland losses of 1/10-acre or less that require pre-construction notification, the district engineer may determine on a case-by-case basis that compensatory mitigation is required to ensure that the activity results in minimal adverse environmental effects.

(d) For losses of streams or other open waters that require pre-construction notification, the district engineer may require compensatory mitigation to ensure that the activity results in no more than minimal adverse environmental effects. Compensatory mitigation for losses of streams should be provided, if practicable, through stream rehabilitation, enhancement, or preservation, since streams are difficult-to-replace resources (see 33 CFR 332.3(e)(3)).

(e) Compensatory mitigation plans for NWP activities in or near streams or other open waters will normally include a requirement for the restoration or enhancement, maintenance, and legal protection (e.g. conservation easements) of riparian areas next to open waters. In some cases, the restoration or maintenance/protection of riparian areas may be the only compensatory mitigation required. Restored riparian areas should consist of native species. The width of the required riparian area will address documented water quality or aquatic habitat loss concerns. Normally, the riparian area will be 25 to 50 feet wide on each side of the stream, but the district engineer may require slightly wider riparian areas to address documented water quality or habitat loss concerns. If it is not possible to restore or maintain/protect a riparian area on the both sides of a stream or if the waterbody is a lake or coastal waters. Then restoring or maintaining/protecting a riparian area along a single bank or shoreline may be sufficient. Where both wetlands and open waters exist on the project site, the district engineer will determine the appropriate compensatory mitigation (e.g. riparian areas and/or wetlands compensation) based on what is best for the aquatic environmental on a watershed basis. In cases where riparian areas are determined to be the most appropriate form of minimization or compensatory mitigation, the district engineer may waive or reduce the requirement to provide wetland compensatory mitigation for wetland losses.

(f) Compensatory mitigation projects provided to offset losses of aquatic resources must comply with the applicable provisions of 33 CFR part 332.

(1) The prospective permittee is responsible for proposing an appropriate compensatory mitigation option if compensatory mitigation is necessary to ensure that the activity results in no more than minimal adverse environmental effects. For the NWPs, the preferred mechanism for providing compensatory mitigation is mitigation bank credits or in-lieu fee program credits (see 33 CFR 332.3(b)(2) and (3)). However, if an appropriate number and type of mitigation bank or in-lieu credits are not available at the time the PCN is submitted to the district engineer, the district engineer may approve the use of permittee-responsible mitigation if the use of mitigation bank or in-lieu fee program credits is not appropriate and practicable.

(2) The amount of compensatory mitigation required by the district engineer must be sufficient to ensure that the authorized activity results in no more than minimal individual and cumulative adverse environmental effects (see 33 CFR 330.1(e)(3)). (See also 33 CFR 332.3(f).)

(3) Since the likelihood of success is greater and the impacts to potentially valuable uplands are reduced, aquatic resource restoration should be the first compensatory mitigation option considered for permittee-responsible mitigation.

(4) If permittee-responsible mitigation is the proposed option, the prospective permittee is responsible for submitting a mitigation plan. A conceptual or detailed mitigation plan may be used by the district engineer to make the decision on the NWP verification request, but a final mitigation plan that addresses the applicable requirements of 33 CFR 332.4(c)(2) through (14) must be approved by the district engineer before the permittee begins work in waters of the United States, unless the district engineer determines that prior approval of the final mitigation plan is not practicable or not necessary to ensure timely completion of the required compensatory mitigation (see 33 CFR 332.3(k)(3)).

(5) If mitigation bank or in-lieu fee program credits are the proposed option, the mitigation plan only needs to address the baseline conditions at the impact site and the number of credits to be provided.

(6) Compensatory mitigation requirements (e.g., resource type and amount to be provided as compensatory mitigation, site protection, ecological performance standards, monitoring requirements) may be addressed through conditions added to the NWP authorization, instead of components of a compensatory mitigation plan.

(g) Compensatory mitigation will not be used to increase the acreage losses allowed by the acreage limits of the NWPs. For example, if an NWP has an acreage limit of 1/2-acre, it cannot be used to authorize any project resulting in the loss of greater than 1/2-acre of waters of the United States, even if compensatory mitigation is provided that replaces or restores some of the lost waters. However, compensatory mitigation can and should be used, as necessary, to ensure that an NWP activity already meeting the established acreage limits also satisfies the minimal impact requirement for the NWPs.

(h) Permittees may propose the use of mitigation banks, in-lieu fee programs, or separate permittee-responsible mitigation. When developing a compensatory mitigation proposal, the permittee must consider appropriate and practicable options consistent with the framework at 33 CFR 332.3(b). For activities resulting in the loss of marine or estuarine resources, permittee-responsible compensatory mitigation may be environmentally preferable if there are no mitigation banks or in-lieu fee programs in the area that have marine or estuarine credits available for sale or transfer to the permittee. For permittee-responsible mitigation, the special conditions of the NWP verification must clearly indicate the party or parties responsible for the implementation and performance of the compensatory mitigation project, and, if required, its long-term management.

(i) Where certain functions and services of waters of the United States are permanently adversely affected by a regulated activity, such as discharges of dredged or fill material into waters of the United States that will convert a forested or scrub-shrub wetland to a herbaceous wetland in a permanently maintained utility line right-of-way, mitigation may be required to reduce the adverse environmental effects of the activity to the no more than minimal level.

24. Safety of Impoundment Structures. To ensure that all impoundment structures are safely designed, the district engineer may require non-Federal applicants to demonstrate that the structures comply with established state dam safety criteria or have been designed by qualified persons. The district engineer may also require documentation that the design has been independently reviewed by similarly qualified persons, and appropriate modifications made to ensure safety.

25. Water Quality. Where States and authorized Tribes, or EPA where applicable, have not previously certified compliance of an NWP with CWA Section 401, individual 401 Water Quality

Certification must be obtained or waived (see 33 CFR 330.4(c)). The district engineer or State or Tribe may require additional water quality management measures to ensure that the authorized activity does not result in more than minimal degradation of water quality.

26. Coastal Zone Management. In coastal states where an NWP has not previously received a state coastal zone management consistency concurrence, an individual state coastal zone management consistency concurrence must be obtained, or a presumption of concurrence must occur (see 33 CFR 330.4(d)). The district engineer or a State may require additional measures to ensure that the authorized activity is consistent with state coastal zone management requirements.

27. Regional and Case-By-Case Conditions. The activity must comply with any regional conditions that may have been added by the Division Engineer (see 33 CFR 330.4(e)) and with any case specific conditions added by the Corps or by the state, Indian Tribe, or USEPA in its section 401 Water Quality Certification, or by the state in its Coastal Zone Management Act consistency determination.

28. Use of Multiple Nationwide Permits. The use of more than one NWP for a single and complete project is prohibited, except when the acreage loss of waters of the United States authorized by the NWPs does not exceed the acreage limit of the NWP with the highest specified acreage limit. For example, if a road crossing over tidal waters is constructed under NWP 14, with associated bank stabilization authorized by NWP 13, the maximum acreage loss of waters of the United States for the total project cannot exceed 1/3-acre.

29. Transfer of Nationwide Permit Verifications. If the permittee sells the property associated with a nationwide permit verification, the permittee may transfer the nationwide permit verification to the new owner by submitting a letter to the appropriate Corps district office to validate the transfer. A copy of the nationwide permit verification must be attached to the letter, and the letter must contain the following statement and signature: "When the structures or work authorized by this nationwide permit are still in existence at the time the property is transferred, the terms and conditions of this nationwide permit, including any special conditions, will continue to be binding on the new owner(s) of the property. To validate the transfer of this nationwide permit and the associated liabilities associated with compliance with its terms and conditions, have the transferee sign and date below."

_____
(Transferee)

_____
(Date)

30. Compliance Certification. Each permittee who receives an NWP verification letter from the Corps must provide a signed certification documenting completion of the authorized activity and implementation of any required compensatory mitigation. The success of any required permittee-responsible mitigation, including the achievement of ecological performance standards, will be addressed separately by the district engineer. The Corps will provide the permittee the certification document with the NWP verification letter. The certification document will include:

(a) A statement that the authorized work was done in accordance with the NWP authorization, including any general, regional, or activity-specific conditions;

(b) A statement that the implementation of any required compensatory mitigation was completed in accordance with the permit conditions. If credits from a mitigation bank or in-lieu fee program are used to satisfy the compensatory mitigation requirements, the certification must include the documentation required by 33 CFR 332.3(l)(3) to confirm that the permittee secured the appropriate number and resource type of credits; and

(c) The signature of the permittee certifying the completion of the work and mitigation. The completed certification document must be submitted to the district engineer within 30 days of completion of the authorized activity or the implementation of any required compensatory mitigation, whichever occurs later.

31. Activities Affecting Structures or Works Built by the United States. If an NWP activity also requires permission from the Corps pursuant to 33 U.S.C. 408 because it will alter or temporarily or permanently occupy or use a U.S. Army Corps of Engineers (USACE) federally authorized Civil Works project (a "USACE project"), the prospective permittee must submit a pre-construction notification. See paragraph (b)(10) of general condition 32. An activity that requires Section 408 permission is not authorized by the NWP until the appropriate Corps office issues the section 408 permission to altar, occupy, or use the USACE project, and the district engineer issues a written NWP verification.

32. Pre-Construction Notification (PCN). (a) Timing. Where required by the terms of the NWP, the prospective permittee must notify the district engineer by submitting a pre-construction notification (PCN) as early as possible. The district engineer must determine if the PCN is complete within 30 calendar days of the date of receipt and, if the PCN is determined to be incomplete, notify the prospective permittee within that 30 day period to request the additional information necessary to make the PCN complete. As a general rule, district engineers will request additional information necessary to make the PCN complete only once. However, if the prospective permittee does not provide all of the requested information, then the district engineer will notify the prospective permittee that the PCN is still incomplete and the PCN review process will not commence until all of the requested information has been received by the district engineer. The prospective permittee shall not begin the activity until either:

(1) He or she is notified in writing by the district engineer that the activity may proceed under the NWP with any special conditions imposed by the district or division engineer; or

(2) 45 calendar days have passed from the district engineer's receipt of the complete PCN and the prospective permittee has not received written notice from the district or division engineer. However, if the permittee was required to notify the Corps pursuant to general condition 18 that listed species or critical habitat might be affected or in the vicinity of the project, or to notify the Corps pursuant to general condition 20 that the activity might have the potential to cause effects to historic properties, the permittee cannot begin the activity until receiving written notification from the Corps that there is "no effect" on listed species or "no potential to cause effects" on historic properties, or that any consultation required under Section 7 of the Endangered Species Act (see 33 CFR 330.4(f)) and/or Section 106 of the National Historic Preservation (see 33 CFR 330.4(g)) has been completed. Also, work cannot begin under NWPs 21, 49, or 50 until the permittee has received written approval from the Corps. If the proposed activity requires a written waiver to exceed specified limits of an NWP, the permittee may not begin the activity until the district engineer issues the waiver. If the district or division engineer notifies the permittee in writing that an individual permit is required within 45 calendar days of receipt of a complete PCN, the permittee cannot begin the activity until an individual permit has been obtained. Subsequently, the permittee's right to proceed under the NWP may be modified, suspended, or revoked only in accordance with the procedure set forth in 33 CFR 330.5(d)(2).

(b) Contents of Pre-Construction Notification: The PCN must be in writing and include the following information:

(1) Name, address and telephone numbers of the prospective permittee;

(2) Location of the proposed activity;

(3) Identify the specific NWP or NWP(s) the prospective permittee wants to use to authorize the proposed activity;

(4) A description of the proposed activity; the activity's purpose; direct and indirect adverse environmental effects the activity would cause, including the anticipated amount of loss of wetlands, other special aquatic sites, and other waters expected to result from the NWP activity, in acres, linear feet, or other appropriate unit of measure; a description of any proposed mitigation measures intended to reduce the adverse environmental effects caused by the proposed activity; and any other NWP(s), regional general permit(s), or individual permit(s) used or intended to be used to authorize any part of the proposed project or any related activity, including other separate and distant crossings for linear projects that require Department of the Army authorization but do not require pre-construction notification. The description of the proposed activity and any proposed mitigation measures should be sufficiently detailed to allow the district engineer to determine that the adverse environmental effects of the activity will be no more than minimal and to determine the need for compensatory mitigation or other mitigation measures. For single and complete linear projects, the PCN must include the quantity of anticipated losses of wetlands, other special aquatic sites, and other water for each single and complete crossing of those wetlands, other special aquatic sites, and other waters. Sketches should be provided when necessary to show that the activity complies with the terms of the NWP. (Sketches usually clarify the project and when provided results in a quicker decision. Sketches should contain sufficient detail to provide an

illustrative description of the proposed activity (e.g., a conceptual plan), but do not need to be detailed engineering plans);

(5) The PCN must include a delineation of wetlands, other special aquatic sites, and other waters, such as lakes and ponds, and perennial, intermittent, and ephemeral streams, on the project site. Wetland delineations must be prepared in accordance with the current method required by the Corps. The permittee may ask the Corps to delineate the special aquatic sites and other waters on the project site, but there may be a delay if the Corps does the delineation, especially if the project site is large or contains many wetlands, other special aquatic sites, and other waters. Furthermore, the 45 day period will not start until the delineation has been submitted to or completed by the Corps, as appropriate;

(6) If the proposed activity will result in the loss of greater than 1/10-acre of wetlands and a PCN is required, the prospective permittee must submit a statement describing how the mitigation requirement will be satisfied, or explaining why the adverse environmental effects are no more than minimal and why compensatory mitigation should not be required. As an alternative, the prospective permittee may submit a conceptual or detailed mitigation plan.

(7) For non-federal permittees, if any listed species or designated critical habitat might be affected or is in the vicinity of the project, or if the project is located in designated critical habitat, for non-Federal applicants the PCN must include the name(s) of those endangered or threatened species that might be affected by the proposed activity or utilize the designated critical habitat that may be affected by the proposed activity. For any NWP activity that requires pre-construction notification, Federal permittees must provide documentation demonstrating compliance with the Endangered Species Act;

(8) For non-federal permittees, if the NWP activity might have the potential to cause effects to a historic property listed on, determined to be eligible for listing on, or potentially eligible for listing on, the National Register of Historic Places, the PCN must state which historic property might have the potential to be affected by the proposed activity or include a vicinity map indicating the location of the historic property. Federal permittees must provide documentation demonstrating compliance with Section 106 of the National Historic Preservation Act.

(9) For an activity that will occur in a component of the National Wild and Scenic River System, or in a river officially designated by Congress as a “study river” for possible inclusion in the system while the river is in an official study status, the PCN must identify the Wild and Scenic River or the “study river” (see general condition 16); and

(10) For an activity that requires permission from the Corps pursuant to 33 U.S.C. 408 because it will alter or temporarily or permanently occupy or use a U.S. Army Corps of Engineers federally authorized civil works project, the pre-construction notification must include a statement confirming that the project proponent has submitted a written request for section 408 permission from the Corps office having jurisdiction over that USACE project.

(c) Form of PCN Notification: The standard individual permit application form (Form ENG 4345) may be used, but the completed application form must clearly indicate that it is an NWP PCN and must include all of the information required in paragraphs (b)(1) through (10) of this general condition. A letter containing the required information may also be used. Applicants may provide electronic files of PCNs and supporting materials if the district engineer has established tools and procedures for electronic submittals.

(d) Agency Coordination: (1) The district engineer will consider any comments from Federal and state agencies concerning the proposed activity’s compliance with the terms and conditions of the NWPs and the need for mitigation to reduce the project’s adverse environmental effects so that they are no more than minimal.

(2) Agency coordination is required for: (i) all NWP activities that require preconstruction notification and result in the loss of greater than 1/2-acre of waters of the United States; (ii) NWP 21, 29, 39, 40, 42, 43, 44, 50, 51, and 52 activities that require pre-construction notification and will result in the loss of greater than 300 linear feet of stream bed; (iii) NWP 13 activities in excess of 500 linear feet, fills greater than one cubic yard per running foot, or involve discharges of dredged or fill material into special aquatic sites; and (iv) NWP 54 activities in excess of 500 linear feet, or that extend into the waterbody more than 30 feet from the mean low water line or ordinary high water mark.

(3) When agency coordination is required, the district engineer will immediately provide (e.g., via e-mail, facsimile transmission, overnight mail, or other expeditious manner) a copy of the complete PCN to the appropriate Federal or state offices (FWS, state natural resource or water quality agency, EPA, and, if appropriate, the NMFS). With the exception of NWP 37, these agencies will have 10 calendar days from the date the material is transmitted to notify the district engineer via telephone, facsimile transmission, or e-mail that they intend to provide substantive, sites pecific comments. The comments must explain why the agency believes the adverse environmental effects will be more than minimal. If so contacted by an agency, the district engineer will wait an additional 15 calendar days before making a decision on the pre-construction notification. The district engineer will fully consider agency comments received within the specified time frame concerning the proposed activity’s compliance with the terms and conditions of the NWPs, including the need for mitigation to ensure the net adverse environmental effects of the proposed activity are no more than minimal. The district engineer will provide no response to the resource agency, except as provided below. The district engineer will indicate in the administrative record associated with each pre-construction notification that the resource agencies’ concerns were considered. For NWP 37, the emergency watershed protection and rehabilitation activity may proceed immediately in cases where there is an unacceptable hazard to life or a significant loss of property or economic hardship will occur. The district engineer will consider any comments received to decide whether the NWP 37 authorization should be modified, suspended, or revoked in accordance with the procedures at 33 CFR 330.5.

(4) In cases of where the prospective permittee is not a Federal agency, the district engineer will provide a response to NMFS within 30 calendar days of receipt of any Essential Fish Habitat conservation recommendations, as required by Section 305(b)(4)(B) of the Magnuson-Stevens Fishery Conservation and Management Act.

(5) Applicants are encouraged to provide the Corps with either electronic files or multiple copies of PCN notifications to expedite agency coordination.

Further Information

1. District Engineers have authority to determine if an activity complies with the terms and conditions of an NWP.

2. NWPs do not obviate the need to obtain other federal, state, or local permits, approvals, or authorizations required by law.

3. NWPs do not grant any property rights or exclusive privileges.

4. NWPs do not authorize any injury to the property or rights of others.

5. NWPs do not authorize interference with any existing or proposed Federal project (see general condition 31).

BRIDGING KENTUCKY
Restore | Renew | Replace

Independent Review Certification

Package Name: RP_AEI_JD_067C00091N-GEODRAFT_08132019	Today's Date: 08/13/2019

Firm Submitting Package: American Engineers Inc.

Description:

Geotechnical Report

Submittal Type: [X] Independent Review	Submittal: [X] Basic Submittal [ ] 30% [ ] 90% [ ] PS&E

Reviewer Name:	Reviewer Firm:	Reviewer Discipline:
Lee A. Carlisle, P.E.	J.M. Crawford & Assoc.	Structures

The above described package has been Independently Reviewed without any consultation with the responsible design team of the package per the DQMP.

Lee A. Carlisle
Sign Your Name

8/14/2019
Date

BRIDGING KENTUCKY
Restore | Renew | Replace

Independent Review Certification

Package Name: RP_AEI_JD_067C00091N-GEODRAFT_08132019	Today's Date: 08/13/2019

Firm Submitting Package: American Engineers Inc.

Description:

Geotechnical Report

Submittal Type: ☑ Independent Review	Submittal: ☑ Basic Submittal ☐ 30% ☐ 90% ☐ PS&E

Reviewer Name:	Reviewer Firm:	Reviewer Discipline:
Adam Crace	Stantec	Geotechnical

The above described package has been Independently Reviewed without any consultation with the responsible design team of the package per the DQMP.

Sign Your Name

8/14/2019
Date

August 14, 2019

Mr. Stuart McIntosh, PE
Bridging Kentucky Area Team Leader
J.M. Crawford and Associates, Inc.
131 Prosperous Place #18A
Lexington, KY 40509

RE: Geotechnical Exploration
Letcher County, Kentucky
Hancock Drive over North Fork of Kentucky River
Bridge No. 067C00091N

Dear Mr. McIntosh:

1 INTRODUCTION

The abbreviated geotechnical engineering report for this structure has been completed. The project is a part of the Bridging Kentucky Program. The project is to replace the existing bridge at Hancock Drive over the North Fork of the Kentucky River in Letcher County, Kentucky.

2 GEOLOGY

The structure is in the Roxana Geologic Quadrangle (GQ-1299) in Letcher County, Kentucky. The geologic mapping indicates the soils at this site are of the Quaternary-aged alluvial deposits, which consists primarily of silt, sand, clay and gravel. Underlying the alluvial deposits is the Pikeville formation which is comprised of sandstone, siltstone, claystone and coal. The sandstone is described as gray, fine grained, silty and occurs in thin to medium thick beds. Interbedded soft claystone and well indurated siltstone occurs between the Upper Elkhorn and Amburgy coal beds.

The Upper Elkhorn No. 3 coal bed is located nearby at approximate elevation 1,120 ft.

3 DRILLING AND SAMPLING

One soil test boring was completed at this location. Soil samples were obtained to a depth of approximately 18.1 feet prior to auger refusal. Approximately 11.4 feet of rock core was obtained.

The boring "as drilled" latitude and longitude in decimal degrees was surveyed as a part of the Bridging Kentucky Program and are included in Table 1. Table 1 provides a summary of the location, elevation, and depth of the boring drilled for the proposed bridge.

Table 1: Bridge over North Fork of Kentucky River – Summary of Boring

Hole No.	Latitude	Longitude	Surface Elevation (ft.) MSL	Top of Rock		Refusal / Begin Core		Bottom of Hole	
				Depth (ft.)	Elevation (ft.) MSL	Depth (ft.)	Elevation (ft.) MSL	Depth (ft.)	Elevation (ft.) MSL
B-1	37.118615	-82.884558	1081.0	18.1	1062.9	18.1	1062.9	29.5	1051.5

4 GROUNDWATER CONDITIONS

Groundwater was encountered at a depth of 16.0 feet. To accurately determine the long-term groundwater level, as well as the seasonal and precipitation induced fluctuations of the groundwater level, it is necessary to install piezometers in the borings, and monitor them for an extended length of time. During excavation the groundwater table will produce seepage durations and rates that will vary depending on the recent precipitation and the hydraulic conductivity of the material.

5 LABORATORY TESTING

The laboratory testing indicates that the soil samples at this location were predominantly sand, with some silt and clay. USCS classifications indicate the subsurface to be comprised of SC, clayey sand. AASHTO classifications indicate A-4 with a group index of one.

6 ENGINEERING ANALYSIS AND RECOMMENDATIONS

6.1 OPTION 1 SPREAD FOOTINGS ON ROCK

6.1.1 **Abutments and Piers**– Size the footings at service limit state using a presumptive bearing resistance of **20 ksf** on competent unweathered bedrock.

6.2 OPTION 2 PRE-DRILLED PILES

6.2.1 **End Bents and Piers**– Use end bearing steel H-Piles with reinforced pile points driven to bedrock. The approximate point of pile elevation is near 1063 feet. We recommend a resistance factor (ϕc) of 0.6 to determine the maximum nominal resistance of the piles.

6.2.2 **Wave Equation Analysis**– Drivability analyses were performed for the H-piles at this location. These analyses indicate that a single acting diesel hammer with rated energies of 10 foot-kips to 20.5 foot-kips is recommended to adequately drive the H-piles without encountering excessive blow counts or overstressing the piles. The use of hammers other than single acting diesel may require different energy ranges.

Drivability analyses were performed assuming continuous driving. If interruptions in driving individual piles should occur, difficulties in continuing the installation process will likely occur due to pile “set” characteristics.

6.3 BOTH OPTIONS

6.3.1 **Settlement at End Bents**– A settlement analysis was not required due to the relatively small amount of new fill that will be added.

6.3.2 **Embankment Stability**– Due to the minimal amount of new fill, no embankment stability analyses were deemed necessary.

7 PLAN NOTES

Add the following plan notes as necessary at the appropriate locations in the plans.

7.1 OPTION 1 SPREAD FOOTINGS ON ROCK

7.1.1 Based on a review of the existing subsurface conditions and anticipated structural loads, it is recommended that a rock bearing foundation system consisting of spread footings be used for all bridge substructure elements. A presumptive bearing resistance of **20 ksf** on unweathered bedrock is being recommended.

7.1.2 Foundation excavations should be properly braced/shored to provide adequate safety to people working in or around the excavations. Bracing should be performed in accordance with applicable federal, state and local guidelines.

7.1.3 Temporary shoring, sheeting, cofferdams, and/or dewatering methods may be required to facilitate foundation construction. It should be anticipated that groundwater will be encountered at foundation locations within the floodplain.

7.1.4 Rock-bearing spread footings are being provided for substructure elements. Foundation excavations for footings at the structure locations should be level and free of loose, water softened material, etc. Additional rock excavation to achieve suitable bearing conditions may be required depending upon topography and bedrock weathering conditions.

7.1.5 Solid rock excavation will be required for installation of the substructure's spread footings. The contractor shall take care during blasting and other excavation methods to avoid over-breakage and damage to the bedrock beneath the footings.

7.1.6 Bearing elevation of footings may be adjusted at the discretion of the Engineer if competent, unweathered bedrock is found at a higher elevation than specified for the respective substructure element. The top of new spread footings should be fully embedded into unweathered bedrock.

7.1.7 Prior to placement of any concrete or reinforcing steel in a foundation excavation, the excavation bottom should be clean and all soft, wet, or loose materials should be removed. In no case should concrete be placed upon compressible or water-softened materials.

7.1.8 Concrete placement for footings should be placed as soon as practical after completion of the footing excavation. If the bedrock becomes softened at bearing elevation, the softened material should be undercut to unweathered material prior to placement of reinforcing steel and concrete. Seasonal groundwater fluctuations may cause groundwater infiltration into the footing excavation, and a dewatering method may be necessary.

7.1.9 Any clay seams or suspect weak materials at or near the bearing elevation will need to be undercut and replaced with mass concrete.

7.1.10 Footing excavations in bedrock shall be cut neatly so that no forming or backfilling is necessary in the construction of the portions of the footings located in rock. Concrete shall be placed directly against the cut rock faces. Mass concrete should be placed in the excavation from the top of the footing to the bedrock surface where the footing does not extend to the bedrock surface.

7.2 OPTION 2 PRE-DRILLED PILES

7.2.1 **A plan note should be included by the designer** to address pre-drilling for piles at specified locations to the estimated bearing elevation. Where pre-drilling is necessary for pile installation, holes shall be drilled into solid rock. A minimum pile length of 10 feet is required below the pile bent/pile cap. Backfill the holes with sand or pea gravel after the pile is placed in the hole. A temporary casing may be required to prevent collapse of the hole. If used, remove the casing as the hole is being backfilled. Drive piles to refusal after backfill operations are complete. Include the cost of all materials, labor, and equipment needed to pre-drill, backfill the holes, and drive the piles to refusal in the price per linear foot for "Pre-drilling for Piles".

7.2.2 Foundation excavations should be properly braced/shored to provide adequate safety to people working in or around the excavations. Bracing should be performed in accordance with applicable federal, state and local guidelines.

7.2.3 Temporary shoring, sheeting, cofferdams, and/or dewatering methods may be required to facilitate foundation construction. It should be anticipated that groundwater will be encountered at foundation locations with the flood plain.

7.2.4 A diesel pile driving hammer with a rated energy between 10 foot-kips and 20.5 foot-kips will be required to drive 12x53 steel H-piles to practical refusal without encountering excessive blow counts or damaging the piles. The Contractor shall submit the proposed pile driving system to the Engineer for approval prior to the installation of the first pile. Approval of the pile driving system by the Engineer will be subject to satisfactory field performance of the pile driving procedures.

7.2.5 For this project, minimum blow requirements may be reached after total penetration becomes ½ inch or less for ten consecutive blows, practical refusal is obtained after the pile is struck an additional ten blows with total penetration of ½ inch or less. Advance the production piling to the driving resistances specified above and to depths determined by test pile(s). Immediately cease driving operations if the pile visibly yields or becomes damaged during driving.

7.2.6 If hard driving is encountered because of dense strata or an obstruction, such as a boulder before the pile is advanced to the depth anticipated, the Engineer will determine if more blows than the average driving resistance specified for practical refusal is required to further advance the pile. Drive additional production and test piles if directed by the Engineer.

7.2.7 The installation of the pile foundations should conform to current AASHTO LRFD Bridge Design Specifications, and Section 604 of the current edition of the Kentucky Department of Highways Standard Specifications for Road and Bridge Construction.

7.2.8 The Kentucky Transportation Cabinet recommends that protective pile points be used on end bearing piles to allow for embedment into the top of bedrock. Use of reinforced pile points capable of penetrating boulders and hard layers which may be encountered is recommended. Installation of pile points should be in accordance with Section 604 of the Kentucky Standard Specifications for Road and Bridge Construction, current edition.

The designer should feel free to contact AEI at 270-651-7220 for further recommendations or if any questions arise pertaining to this project.

Sincerely,

AMERICAN ENGINEERS, INC.

Jackson Daugherty, PE, PMP
Geotechnical Engineer

Dennis Mitchell, PE, PMP
Director of Geotechnical Services

Attachments:

- Boring Layout
- Typed Boring Log
- Laboratory Data

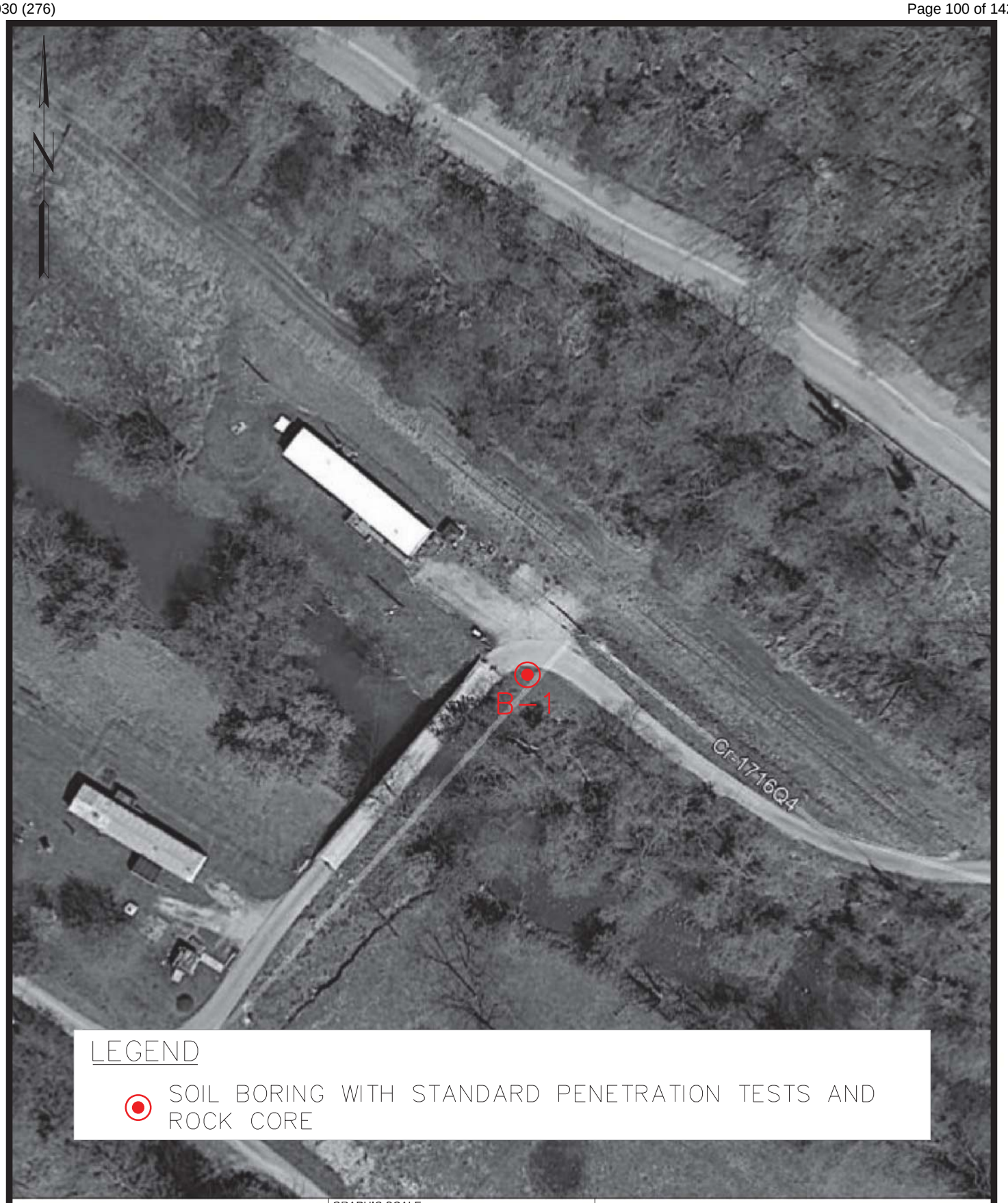

BRIDGING KENTUCKY
Restore | Renew | Replace

GRAPHIC SCALE: NTS		BRIDGING KENTUCKY	
DATE: 08/05/2019		BRIDGE: 067C00091N	PAGE NO. -
DRAWN BY: JC	CKD. BY: JD	SHEET: HANCOCK DRIVE OVER NORTH FORK OF KY RIVER	FIG. NO. -
AEI JOB NO.: 218-158			
FILE NAME:			

PLOT DATE: 8/5/2019 2:34:34 PM USER: JACKSON DAUGHERTY
T:\GEOTECH SUPPORT\KYTC\218-158 BRIDGING KY PROGRAM\GEOTECH\ROUND 1 BRIDGES\REPORTS\LETCHER 067C00091N\SUPPORT INFO\LETCHER 067C0091N LAYOUT.DGN

Drilling Firm: American Engineers (Glasgow)
For: Division of Structural Design
Geotechnical Branch

DRILLER'S SUBSURFACE LOG

Printed: 8/13/19

Project ID: ***067C00091N***	***Letcher - Hancock Drive***	Project Type: ***Structure County Bridge***
Item Number:	***North Fork of KY River***	Project Manager: ***Dennis Mitchell***

Hole Number ***B-1***	Immediate Water Depth ***16.0 (07/22/19)***	Start Date ***07/22/2019***	Hole Type ***core and sample***
Surface Elevation ***1081.0'***	Static Water Depth ***NA***	End Date ***07/22/2019***	Rig_Number ***CME 45***
Total Depth ***29.5'***	Driller ***James Felts***	Latitude(83) ***37.118615***	
Location ***+ ' Lt.***		Longitude(83) ***-82.884558***	

Lithology Elevation	Lithology Depth	Description (Overburden / Rock Core)	Sample No. / Std/Ky RQD	Depth (ft) / Run (ft)	Rec. (ft) / Rec (ft)	SPT Blows / Rec (%)	Sample Type / SDI (JS)	Remarks
1080.8	0.2	Topsoil.	1	0.0-1.5	0.9	2-4-2	SPT	
		Very loose to loose, brown, moist, clayey sand (A-4 (1), SC).	2	3.0-4.5	1.1	2-3-2	SPT	
			3	4.5-6.0	0.3	1-2-1	SPT	
			4	7.0-8.5	1.0	2-2-2	SPT	
			5	9.5-11.0	0.6	2-3-4	SPT	
			6	14.5-16.0	1.2	7-12-15	SPT	
1062.9	18.1	(Begin Core)						
1062.0	19.0	Tan to brown sandstone, (coarse grained, thin bedded, hard to moderately hard).	23 / 23	4.4	3.0	68		22.5
		Dark gray to gray shale, sandy, (medium grained, thin bedded, very soft to moderately hard, non-durable).	64 / 64	5.0	5.0	100		27.5
1057.0	24.0	Dark gray to gray shale, sandy, (medium grained, thin bedded, moderately hard to hard).	85 / 85	2.0	2.0	100		29.5
1051.5	29.5	(Bottom of Hole 29.5')						

Project ID: 067C00091N
Location: Letcher
Item No:

Hole	Sample Type	Depth	Liquid Limit	Plastic Limit	PI	D50	%<#200 Sieve	AASHTO	Classif-ication	Water Content (%)	Dry Density (pcf)	CBR
B-1	SPT									13.6		
B-1	SPT	3	25	17	8	0.093	47	A-4 (1)	SC	15.2		
B-1	SPT									13.5		
B-1	SPT									24.1		
B-1	SPT									23.4		
B-1	SPT									13.4		

Total Jars: 0
Total SPT: 0
Total ST: 0
Total Cut Bags: 0
Total Fill Bags: 0

Drilling Firm: American Engineers (Glasgow)
For: Division of Structural Design
Geotechnical Branch

ATTERBERG LIMITS' RESULTS

Project ID: ***067C00091N***	***Letcher - Hancock Drive***	Project Type: ***Structure County Bridge***
Item Number:	***North Fork of KY River***	Project Manager: ***Dennis Mitchell***

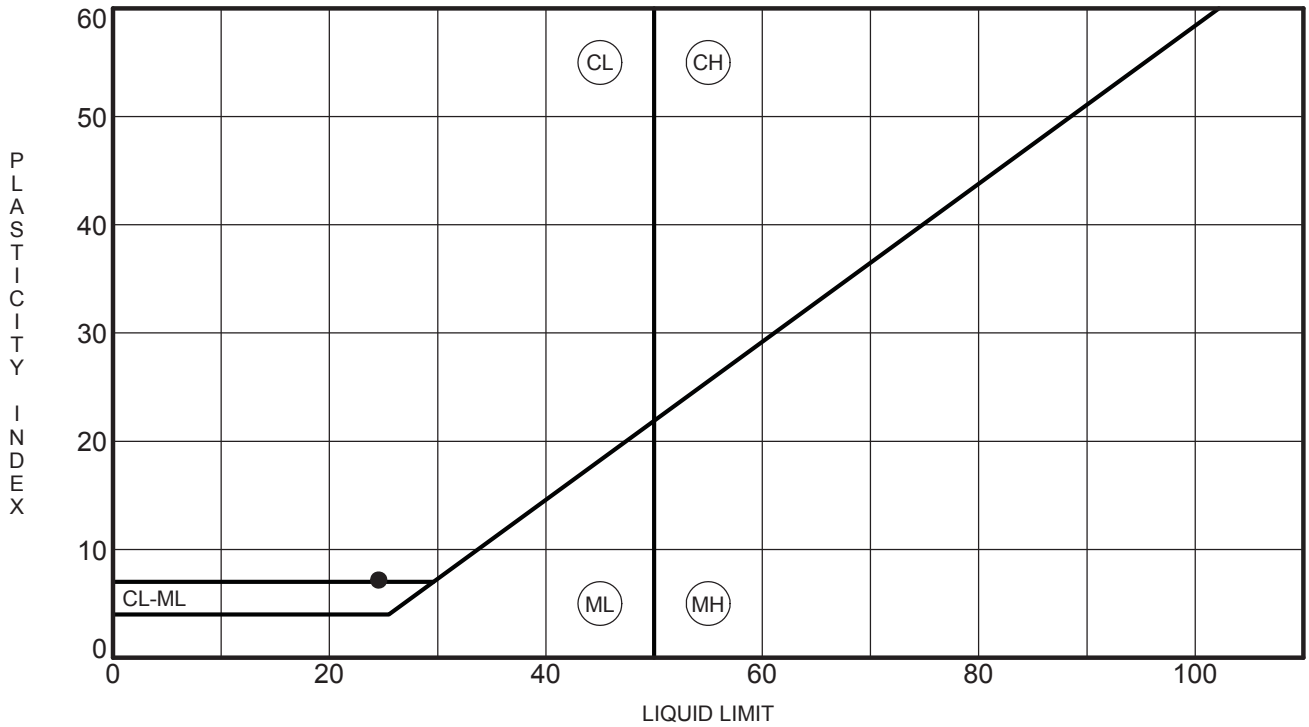

	Specimen Identification		LL	PL	PI	Fines	Classification
●	**B-1**	**3.0**	**25**	**17**	**8**	**47**	**CLAYEY SAND(SC)**

Drilling Firm: American Engineers (Glasgow)
For: Division of Structural Design
Geotechnical Branch

GRAIN SIZE DISTRIBUTION

Project ID: ***067C00091N***	***Letcher - Hancock Drive***	Project Type: ***Structure County Bridge***
Item Number:	***North Fork of KY River***	Project Manager: ***Dennis Mitchell***

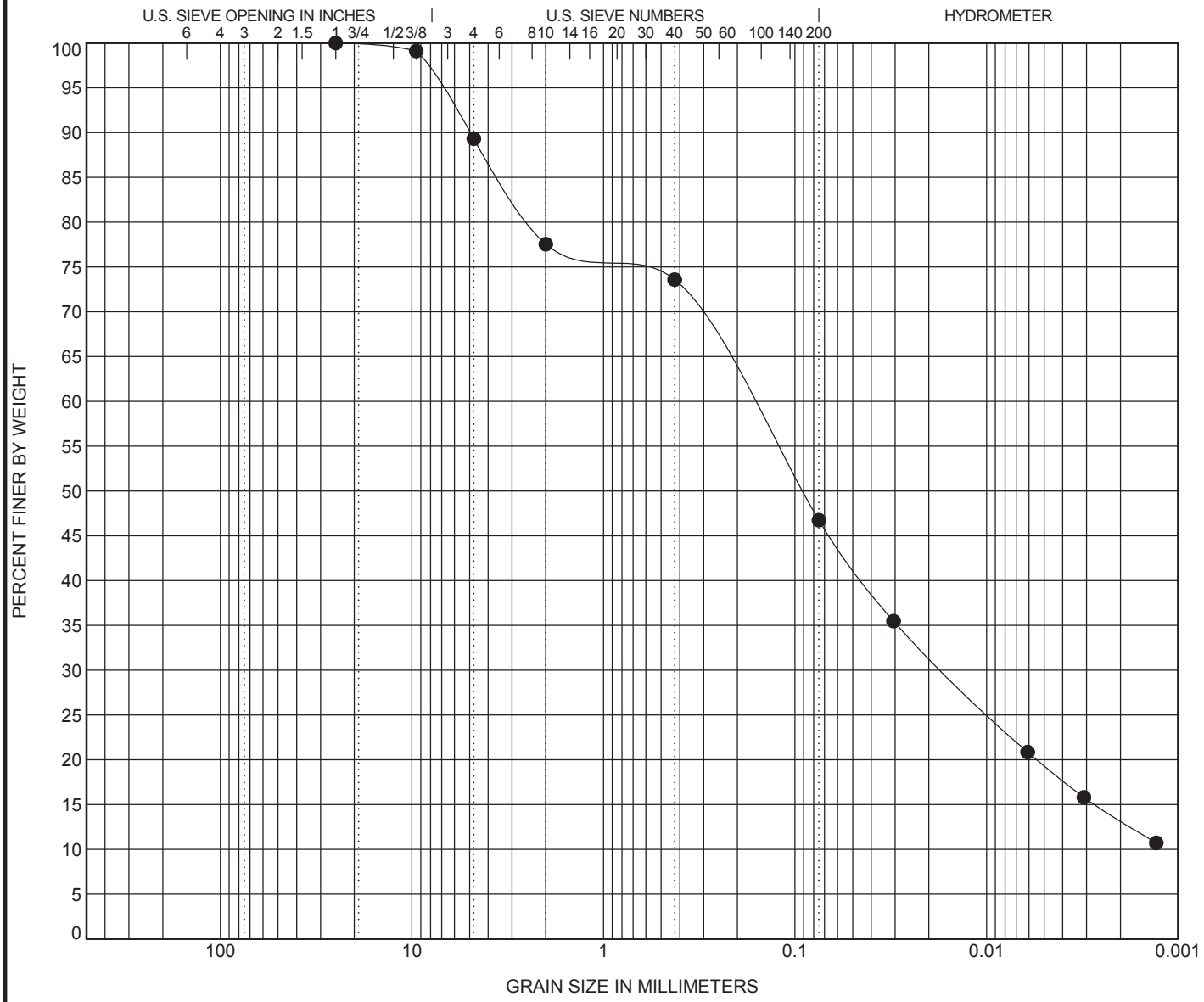

COBBLES	GRAVEL		SAND			SILT OR CLAY
	coarse	fine	coarse	medium	fine	

Specimen Identification		Classification	LL	PL	PI	Cc	Cu
● **B-1**	**3.0**	**CLAYEY SAND(SC)**	**25**	**17**	**8**		

Specimen Identification		D100	D60	D30	D10	%Gravel	%Sand	%Silt	%Clay
● **B-1**	**3.0**	**25**	**0.177**	**0.017**		**10.7**	**42.6**	**33.5**	**13.2**

PART II

SPECIFICATIONS AND STANDARD DRAWINGS

SPECIFICATIONS REFERENCE

Any reference in the plans or proposal to previous editions of the *Standard Specifications for Road and Bridge Construction* and *Standard Drawings* are superseded by *Standard Specifications for Road and Bridge Construction, Edition of 2019* and *Standard Drawings, Edition of 2020.*

SUPPLEMENTAL SPECIFICATIONS

The contractor shall use the Supplemental Specifications that are effective at the time of letting. The Supplemental Specifications can be found at the following link:

http://transportation.ky.gov/Construction/Pages/Kentucky-Standard-Specifications.aspx

1I

SPECIAL NOTE FOR PORTABLE CHANGEABLE MESSAGE SIGNS

This Special Note will apply when indicated on the plans or in the proposal.

1.0 DESCRIPTION. Furnish, install, operate, and maintain variable message signs at the locations shown on the plans or designated by the Engineer. Remove and retain possession of variable message signs when they are no longer needed on the project.

2.0 MATERIALS.

2.1 General. Use LED Variable Message Signs Class I, II, or III, as appropriate, from the Department's List of Approved Materials.

Unclassified signs may be submitted for approval by the Engineer. The Engineer may require a daytime and nighttime demonstration. The Engineer will make a final decision within 30 days after all required information is received.

2.2 Sign and Controls. All signs must:

1) Provide 3-line messages with each line being 8 characters long and at least 18 inches tall. Each character comprises 35 pixels.
2) Provide at least 40 preprogrammed messages available for use at any time. Provide for quick and easy change of the displayed message; editing of the message; and additions of new messages.
3) Provide a controller consisting of:
   a) Keyboard or keypad.
   b) Readout that mimics the actual sign display. (When LCD or LCD type readout is used, include backlighting and heating or otherwise arrange for viewing in cold temperatures.)
   c) Non-volatile memory or suitable memory with battery backup for storing pre-programmed messages.
   d) Logic circuitry to control the sequence of messages and flash rate.
4) Provide a serial interface that is capable of supporting complete remote control ability through land line and cellular telephone operation. Include communication software capable of immediately updating the message, providing complete sign status, and allowing message library queries and updates.
5) Allow a single person easily to raise the sign to a satisfactory height above the pavement during use, and lower the sign during travel.
6) Be Highway Orange on all exterior surfaces of the trailer, supports, and controller cabinet.
7) Provide operation in ambient temperatures from -30 to + 120 degrees Fahrenheit during snow, rain and other inclement weather.
8) Provide the driver board as part of a module. All modules are interchangeable, and have plug and socket arrangements for disconnection and reconnection. Printed circuit boards associated with driver boards have a conformable coating to protect against moisture.
9) Provide a sign case sealed against rain, snow, dust, insects, etc. The lens is UV stabilized clear plastic (polycarbonate, acrylic, or other approved material) angled to prevent glare.
10) Provide a flat black UV protected coating on the sign hardware, character PCB, and appropriate lens areas.
11) Provide a photocell control to provide automatic dimming.

12) Allow an on-off flashing sequence at an adjustable rate.
13) Provide a sight to aim the message.
14) Provide a LED display color of approximately 590 nm amber.
15) Provide a controller that is password protected.
16) Provide a security device that prevents unauthorized individuals from accessing the controller.
17) Provide the following 3-line messages preprogrammed and available for use when the sign unit begins operation:

/KEEP/RIGHT/⇒⇒⇒/
/KEEP/LEFT/⇐⇐⇐/
/LOOSE/GRAVEL/AHEAD/
/RD WORK/NEXT/**MILES/
/TWO WAY/TRAFFIC/AHEAD/
/PAINT/CREW/AHEAD/
/REDUCE/SPEED/**MPH/
/BRIDGE/WORK/***0 FT/
/MAX/SPEED/**MPH/
/SURVEY/PARTY/AHEAD/
/MIN/SPEED/**MPH/
/ICY/BRIDGE/AHEAD/ /ONE LANE/BRIDGE/AHEAD/
/ROUGH/ROAD/AHEAD/
/MERGING/TRAFFIC/AHEAD/
/NEXT/***/MILES/
/HEAVY/TRAFFIC/AHEAD/
/SPEED/LIMIT/**MPH/
/BUMP/AHEAD/
/TWO/WAY/TRAFFIC/

*Insert numerals as directed by the Engineer.
Add other messages during the project when required by the Engineer.

2.3 Power.

1) Design solar panels to yield 10 percent or greater additional charge than sign consumption. Provide direct wiring for operation of the sign or arrow board from an external power source to provide energy backup for 21 days without sunlight and an on-board system charger with the ability to recharge completely discharged batteries in 24 hours.

3.0 CONSTRUCTION. Furnish and operate the variable message signs as designated on the plans or by the Engineer. Ensure the bottom of the message panel is a minimum of 7 feet above the roadway in urban areas and 5 feet above in rural areas when operating. Use Class I, II, or III signs on roads with a speed limit less than 55 mph. Use Class I or II signs on roads with speed limits 55 mph or greater.

Maintain the sign in proper working order, including repair of any damage done by others, until completion of the project. When the sign becomes inoperative, immediately repair or replace the sign. Repetitive problems with the same unit will be cause for rejection and replacement.

Use only project related messages and messages directed by the Engineer, unnecessary messages lessen the impact of the sign. Ensure the message is displayed in either one or 2 phases with each phase having no more than 3 lines of text. When no message is needed, but it is necessary to know if the sign is operable, flash only a pixel.

When the sign is not needed, move it outside the clear zone or where the Engineer directs. Variable Message Signs are the property of the Contractor and shall be removed from the project when no longer needed. The Department will not assume ownership of these signs.

4.0 MEASUREMENT. The final quantity of Variable Message Sign will be

1I

the actual number of individual signs acceptably furnished and operated during the project. The Department will not measure signs replaced due to damage or rejection.

5.0 PAYMENT. The Department will pay for the Variable Message Signs at the unit price each. The Department will not pay for signs replaced due to damage or rejection. Payment is full compensation for furnishing all materials, labor, equipment, and service necessary to, operate, move, repair, and maintain or replace the variable message signs. The Department will make payment for the completed and accepted quantities under the following:

Code	Pay Item	Pay Unit
02671	Portable Changeable Message Sign	Each

Effective June 15, 2012

SPECIAL PROVISION FOR EMBANKMENT AT BRIDGE END BENT STRUCTURES

This Special Provision will apply when indicated on the plans or in the proposal. Section references herein are to the Department's Standard Specifications for Road and Bridge Construction, Current Edition.

1.0 DESCRIPTION. Construct a soil, granular, or rock embankment with soil, granular or cohesive pile core and place structure granular backfill, as the Plans require. Construct the embankment according to the requirements of this Special Provision, the Plans, Standard Drawing RGX 100 and 105, and the Standard Specifications, Current Edition.

2.0 MATERIALS.

2.1 Granular Embankment. Conform to Subsection 805.10. When Granular Embankment materials are erodible or unstable according to Subsection 805.03.04, use the Special Construction Methods found in 3.2 of the Special Provision.

2.2 Rock Embankment. Provide durable rock from roadway excavation that consists principally of Unweathered Limestone, Durable Shale (SDI equal to or greater than 95 according to KM 64-513), or Durable Sandstone.

2.3 Pile Core. Provide a pile core in the area of the embankments where deep foundations are to be installed unless otherwise specified. The Pile Core is the zone indicated on Standard Drawings RGX 100 and 105 designated as Pile Core. Material control of the pile core area during embankment construction is always required. Proper Pile Core construction is required for installation of foundation elements such as drilled or driven piles or drilled shafts. The type of material used to construct the pile core is as directed in the plans or below. Typically, the pile core area will be constructed from the same material used to construct the surrounding embankment. Pile Core can be classified as one of three types:

A) Pile Core - Conform to Section 206 of the Standard Specifications. Provide pile core material consisting of the same material as the adjacent embankment except the material in the pile core area shall be free of boulders or particle sizes larger than 4 inches in any dimension or any other obstructions that may hinder pile driving operations. If the pile core material hinders pile driving operations, take the appropriate means necessary to reach the required pile tip elevation, at no expense to the Department.

B) Granular Pile Core. Granular pile core is required only when specified in the plans. Select a gradation of durable rock to facilitate pile driving that conforms to Subsection 805.11. If granular pile core material hinders pile driving operations, take appropriate means necessary to reach the required pile tip elevation, at no expense to the Department.

C) Cohesive Pile Core. Cohesive Pile Core is required only when specified in the plans. Conform to Section 206 of the Standard Specifications and use soil with at least 50 percent passing a No. 4 sieve having a minimum Plasticity Index (PI) of 10. In addition, keep the cohesive pile core free of boulders, larger than 4 inches in any dimension, or any other obstructions, which would interfere with drilling operations. If cohesive pile core material interferes with drilling operations, take appropriate means necessary to maintain

excavation stability, at no expense to the Department.

2.4 Structure Granular Backfill. Conform to Subsection 805.11

2.5 Geotextile Fabric. Conform to Type I or Type IV in Section 214 and 843.

3.0 CONSTRUCTION.

3.1 General. Construct roadway embankments at end bents according to Section 206 and in accordance with the Special Provision, the Plans, and Standard Drawings for the full embankment section. In some instances, granular or rock embankment will be required for embankment construction for stability purposes, but this special provision does not prevent the use of soil when appropriate. Refer to the plans for specific details regarding material requirements for embankment construction.

Place and compact the pile core and structure granular backfill according to the applicable density requirements for the project. If the embankment and pile core are dissimilar materials (i.e., a granular pile core is used with a soil embankment or a cohesive pile core is used with a granular embankment), a Geotextile Fabric, Type IV, will be required between the pile core and embankment in accordance with Sections 214 and 843 of the Standard Specifications.

When granular or rock embankment is required for embankment construction, conform to the general requirements of Subsection 206.03.02 B. In addition, place the material in no greater than 2-foot loose lifts and compact with a vibrating smooth wheel roller capable of producing a minimum centrifugal force of 15 tons. Apply these requirements to the full width of the embankment for a distance of half the embankment height or 50 feet, whichever is greater, as shown on Standard Drawing RGX-105.

When using granular pile core, install 8-inch perforated underdrain pipe at or near the elevation of the original ground in the approximate locations depicted on the standard drawing, and as the Engineer directs, to ensure positive drainage of the embankment. Wrap the perforated pipe with a fabric of a type recommended by the pipe manufacturer.

After constructing the embankment, excavate for the end bent cap, drive piling, install shafts or other foundation elements, place the mortar bed, construct the end bent, and complete the embankment to finish grade according to the construction sequence shown on the Plans or Standard Drawings and as specified hereinafter.

Certain projects may require widening of existing embankments and the removal of substructures. Construct embankment according to the plans. Substructure removal shall be completed according to the plans and Section 203. Excavation may be required at the existing embankment in order to place the structure granular backfill as shown in the Standard Drawings.

After piles are driven or shafts installed (see design drawings), slope the bottom of the excavation towards the ends of the trench as noted on the plans for drainage. Using a separate pour, place concrete mortar, or any class concrete, to provide a base for forming and placing the cap. Place side forms for the end bent after the mortar has set sufficiently to support workmen and forms without being disturbed.

Install 4-inch perforated pipe in accordance with the plans and Standard Drawings. In the event slope protection extends above the elevation of the perforated pipe, extend the pipe through the slope protection.

After placing the end bent cap and achieving required concrete cylinder strengths, remove adjacent forms and fill the excavation with compacted structure granular backfill material (maximum 1’ loose lifts) to the level of the berm prior to placing beams for the bridge. Place Type IV geotextile fabric between embankment material and structure granular backfill. After completing the end bent backwall, or after completing the span end

wall, place the compacted structure granular backfill (maximum 1' loose lifts) to subgrade elevation. If the original excavation is enlarged, fill the entire volume with compacted structure granular backfill (maximum 1' loose lifts) at no expense to the Department. Do not place backfill before removing adjacent form work. Place structure granular backfill material in trench ditches at the ends of the excavation. Place Geotextile Fabric, Type IV over the surface of the compacted structure granular backfill prior to placing aggregate base course.

Tamp the backfill with hand tampers, pneumatic tampers, or other means approved by the Engineer. Thoroughly compact the backfill under the overhanging portions of the structure to ensure that the backfill is in intimate contact with the sides of the structure.

Do not apply seeding, sodding, or other vegetation to the exposed granular embankment.

3.2 Special Construction Methods. Erodible or unstable materials may erode even when protected by riprap or channel lining; use the special construction method described below when using these materials.

Use fine aggregates or friable sandstone granular embankment at "dry land" structures only. Do not use them at stream crossings or locations subject to flood waters.

For erodible or unstable materials having 50 percent or more passing the No. 4 sieve, protect with geotextile fabric. Extend the fabric from the original ground to the top of slope over the entire area of the embankment slopes on each side of, and in front of, the end bent. Cover the fabric with at least 12 inches of non-erodible material.

For erodible or unstable materials having less than 50 percent passing a No. 4 sieve, cover with at least 12 inches of non-erodible material.

Where erodible or unstable granular embankment will be protected by riprap or channel lining, place Type IV geotextile fabric between the embankment and the specified slope protection.

4.0 MEASUREMENT.

4.1 Granular Embankment. The Department will measure the quantity in cubic yards using the plan quantity, increased or decreased by authorized adjustments as specified in Section 204. The Department will not measure for payment any Granular Embankment that is not called for in the plans.

The Department will not measure for payment any special construction caused by using erodible or unstable materials and will consider it incidental to the Granular Embankment regardless of whether the erodible or unstable material was specified or permitted.

4.2 Rock Embankment. The Department will not measure for payment any rock embankment and will consider it incidental to roadway excavation or embankment in place, as applicable. Rock embankments will be constructed using granular embankment on projects where there is no available rock present within the excavation limits of the project.

4.3 Pile Core. Pile core will be measured and paid under roadway excavation or embankment in place, as applicable. The Department will not measure the pile core for separate payment. The Department will not measure for payment the 8-inch perforated underdrain pipe and will consider it incidental to the Pile Core.

4.4 Structure Granular Backfill. The Department will measure the quantity in cubic yards using the plan quantity, increased or decreased by authorized adjustments as specified in Section 204. The Department will not measure any additional material required for backfill outside the limits shown on the Plans and Standard Drawings for payment and will

consider it incidental to the work.

The Department will not measure for payment the 4-inch perforated underdrain pipe and will consider it incidental to the Structure Granular Backfill.

4.5 Geotextile Fabric. The Department will not measure the quantity of fabric used for separating dissimilar materials when constructing the embankment and pile core and will consider it incidental to embankment construction.

The Department will not measure for payment the Geotextile Fabric used to separate the Structure Granular Backfill from the embankment and aggregate base course and will consider it incidental to Structure Granular Backfill.

The Department will not measure for payment the Geotextile Fabric required for construction with erodible or unstable materials and will consider it incidental to embankment construction.

4.6 End Bent. The Department will measure the quantities according to the Contract. The Department will not measure furnishing and placing the 2-inch mortar or concrete bed for payment and will consider it incidental to the end bent construction.

4.7 Structure Excavation. The Department will not measure structure excavation on new embankments for payment and will consider it incidental to the Structure Granular Backfill or Concrete as applicable.

5.0 PAYMENT. The Department will make payment for the completed and accepted quantities under the following:

Code	Pay Item	Pay Unit
02223	Granular Embankment	Cubic Yards
02231	Structure Granular Backfill	Cubic Yards

The Department will consider payment as full compensation for all work required in this provision.

September 16, 2016

PART III

EMPLOYMENT, WAGE AND RECORD REQUIREMENTS

FHWA-1273 -- Revised May 1, 2012

REQUIRED CONTRACT PROVISIONS
FEDERAL-AID CONSTRUCTION CONTRACTS

I. General
II. Nondiscrimination
III. Nonsegregated Facilities
IV. Davis-Bacon and Related Act Provisions
V. Contract Work Hours and Safety Standards Act Provisions
VI. Subletting or Assigning the Contract
VII. Safety: Accident Prevention
VIII. False Statements Concerning Highway Projects
IX. Implementation of Clean Air Act and Federal Water Pollution Control Act
X. Compliance with Governmentwide Suspension and Debarment Requirements
XI. Certification Regarding Use of Contract Funds for Lobbying

ATTACHMENTS

A. Employment and Materials Preference for Appalachian Development Highway System or Appalachian Local Access Road Contracts (included in Appalachian contracts only)

I. GENERAL

1. Form FHWA-1273 must be physically incorporated in each construction contract funded under Title 23 (excluding emergency contracts solely intended for debris removal). The contractor (or subcontractor) must insert this form in each subcontract and further require its inclusion in all lower tier subcontracts (excluding purchase orders, rental agreements and other agreements for supplies or services).

The applicable requirements of Form FHWA-1273 are incorporated by reference for work done under any purchase order, rental agreement or agreement for other services. The prime contractor shall be responsible for compliance by any subcontractor, lower-tier subcontractor or service provider.

Form FHWA-1273 must be included in all Federal-aid design-build contracts, in all subcontracts and in lower tier subcontracts (excluding subcontracts for design services, purchase orders, rental agreements and other agreements for supplies or services). The design-builder shall be responsible for compliance by any subcontractor, lower-tier subcontractor or service provider.

Contracting agencies may reference Form FHWA-1273 in bid proposal or request for proposal documents, however, the Form FHWA-1273 must be physically incorporated (not referenced) in all contracts, subcontracts and lower-tier subcontracts (excluding purchase orders, rental agreements and other agreements for supplies or services related to a construction contract).

2. Subject to the applicability criteria noted in the following sections, these contract provisions shall apply to all work performed on the contract by the contractor's own organization and with the assistance of workers under the contractor's immediate superintendence and to all work performed on the contract by piecework, station work, or by subcontract.

3. A breach of any of the stipulations contained in these Required Contract Provisions may be sufficient grounds for withholding of progress payments, withholding of final payment, termination of the contract, suspension / debarment or any other action determined to be appropriate by the contracting agency and FHWA.

4. Selection of Labor: During the performance of this contract, the contractor shall not use convict labor for any purpose within the limits of a construction project on a Federal-aid highway unless it is labor performed by convicts who are on parole, supervised release, or probation. The term Federal-aid highway does not include roadways functionally classified as local roads or rural minor collectors.

II. NONDISCRIMINATION

The provisions of this section related to 23 CFR Part 230 are applicable to all Federal-aid construction contracts and to all related construction subcontracts of $10,000 or more. The provisions of 23 CFR Part 230 are not applicable to material supply, engineering, or architectural service contracts.

In addition, the contractor and all subcontractors must comply with the following policies: Executive Order 11246, 41 CFR 60, 29 CFR 1625-1627, Title 23 USC Section 140, the Rehabilitation Act of 1973, as amended (29 USC 794), Title VI of the Civil Rights Act of 1964, as amended, and related regulations including 49 CFR Parts 21, 26 and 27; and 23 CFR Parts 200, 230, and 633.

The contractor and all subcontractors must comply with: the requirements of the Equal Opportunity Clause in 41 CFR 60-1.4(b) and, for all construction contracts exceeding $10,000, the Standard Federal Equal Employment Opportunity Construction Contract Specifications in 41 CFR 60-4.3.

Note: The U.S. Department of Labor has exclusive authority to determine compliance with Executive Order 11246 and the policies of the Secretary of Labor including 41 CFR 60, and 29 CFR 1625-1627. The contracting agency and the FHWA have the authority and the responsibility to ensure compliance with Title 23 USC Section 140, the Rehabilitation Act of 1973, as amended (29 USC 794), and Title VI of the Civil Rights Act of 1964, as amended, and related regulations including 49 CFR Parts 21, 26 and 27; and 23 CFR Parts 200, 230, and 633.

The following provision is adopted from 23 CFR 230, Appendix A, with appropriate revisions to conform to the U.S. Department of Labor (US DOL) and FHWA requirements.

1. Equal Employment Opportunity: Equal employment opportunity (EEO) requirements not to discriminate and to take affirmative action to assure equal opportunity as set forth under laws, executive orders, rules, regulations (28 CFR 35, 29 CFR 1630, 29 CFR 1625-1627, 41 CFR 60 and 49 CFR 27) and orders of the Secretary of Labor as modified by the provisions prescribed herein, and imposed pursuant to 23 U.S.C. 140 shall constitute the EEO and specific affirmative action standards for the contractor's project activities under

this contract. The provisions of the Americans with Disabilities Act of 1990 (42 U.S.C. 12101 et seq.) set forth under 28 CFR 35 and 29 CFR 1630 are incorporated by reference in this contract. In the execution of this contract, the contractor agrees to comply with the following minimum specific requirement activities of EEO:

a. The contractor will work with the contracting agency and the Federal Government to ensure that it has made every good faith effort to provide equal opportunity with respect to all of its terms and conditions of employment and in their review of activities under the contract.

b. The contractor will accept as its operating policy the following statement:

"It is the policy of this Company to assure that applicants are employed, and that employees are treated during employment, without regard to their race, religion, sex, color, national origin, age or disability. Such action shall include: employment, upgrading, demotion, or transfer; recruitment or recruitment advertising; layoff or termination; rates of pay or other forms of compensation; and selection for training, including apprenticeship, pre-apprenticeship, and/or on-the-job training."

2. EEO Officer: The contractor will designate and make known to the contracting officers an EEO Officer who will have the responsibility for and must be capable of effectively administering and promoting an active EEO program and who must be assigned adequate authority and responsibility to do so.

3. Dissemination of Policy: All members of the contractor's staff who are authorized to hire, supervise, promote, and discharge employees, or who recommend such action, or who are substantially involved in such action, will be made fully cognizant of, and will implement, the contractor's EEO policy and contractual responsibilities to provide EEO in each grade and classification of employment. To ensure that the above agreement will be met, the following actions will be taken as a minimum:

a. Periodic meetings of supervisory and personnel office employees will be conducted before the start of work and then not less often than once every six months, at which time the contractor's EEO policy and its implementation will be reviewed and explained. The meetings will be conducted by the EEO Officer.

b. All new supervisory or personnel office employees will be given a thorough indoctrination by the EEO Officer, covering all major aspects of the contractor's EEO obligations within thirty days following their reporting for duty with the contractor.

c. All personnel who are engaged in direct recruitment for the project will be instructed by the EEO Officer in the contractor's procedures for locating and hiring minorities and women.

d. Notices and posters setting forth the contractor's EEO policy will be placed in areas readily accessible to employees, applicants for employment and potential employees.

e. The contractor's EEO policy and the procedures to implement such policy will be brought to the attention of employees by means of meetings, employee handbooks, or other appropriate means.

4. Recruitment: When advertising for employees, the contractor will include in all advertisements for employees the notation: "An Equal Opportunity Employer." All such advertisements will be placed in publications having a large circulation among minorities and women in the area from which the project work force would normally be derived.

a. The contractor will, unless precluded by a valid bargaining agreement, conduct systematic and direct recruitment through public and private employee referral sources likely to yield qualified minorities and women. To meet this requirement, the contractor will identify sources of potential minority group employees, and establish with such identified sources procedures whereby minority and women applicants may be referred to the contractor for employment consideration.

b. In the event the contractor has a valid bargaining agreement providing for exclusive hiring hall referrals, the contractor is expected to observe the provisions of that agreement to the extent that the system meets the contractor's compliance with EEO contract provisions. Where implementation of such an agreement has the effect of discriminating against minorities or women, or obligates the contractor to do the same, such implementation violates Federal nondiscrimination provisions.

c. The contractor will encourage its present employees to refer minorities and women as applicants for employment. Information and procedures with regard to referring such applicants will be discussed with employees.

5. Personnel Actions: Wages, working conditions, and employee benefits shall be established and administered, and personnel actions of every type, including hiring, upgrading, promotion, transfer, demotion, layoff, and termination, shall be taken without regard to race, color, religion, sex, national origin, age or disability. The following procedures shall be followed:

a. The contractor will conduct periodic inspections of project sites to insure that working conditions and employee facilities do not indicate discriminatory treatment of project site personnel.

b. The contractor will periodically evaluate the spread of wages paid within each classification to determine any evidence of discriminatory wage practices.

c. The contractor will periodically review selected personnel actions in depth to determine whether there is evidence of discrimination. Where evidence is found, the contractor will promptly take corrective action. If the review indicates that the discrimination may extend beyond the actions reviewed, such corrective action shall include all affected persons.

d. The contractor will promptly investigate all complaints of alleged discrimination made to the contractor in connection with its obligations under this contract, will attempt to resolve such complaints, and will take appropriate corrective action within a reasonable time. If the investigation indicates that the discrimination may affect persons other than the complainant, such corrective action shall include such other persons. Upon completion of each investigation, the contractor will inform every complainant of all of their avenues of appeal.

6. Training and Promotion:

a. The contractor will assist in locating, qualifying, and increasing the skills of minorities and women who are

applicants for employment or current employees. Such efforts should be aimed at developing full journey level status employees in the type of trade or job classification involved.

b. Consistent with the contractor's work force requirements and as permissible under Federal and State regulations, the contractor shall make full use of training programs, i.e., apprenticeship, and on-the-job training programs for the geographical area of contract performance. In the event a special provision for training is provided under this contract, this subparagraph will be superseded as indicated in the special provision. The contracting agency may reserve training positions for persons who receive welfare assistance in accordance with 23 U.S.C. 140(a).

c. The contractor will advise employees and applicants for employment of available training programs and entrance requirements for each.

d. The contractor will periodically review the training and promotion potential of employees who are minorities and women and will encourage eligible employees to apply for such training and promotion.

7. Unions: If the contractor relies in whole or in part upon unions as a source of employees, the contractor will use good faith efforts to obtain the cooperation of such unions to increase opportunities for minorities and women. Actions by the contractor, either directly or through a contractor's association acting as agent, will include the procedures set forth below:

a. The contractor will use good faith efforts to develop, in cooperation with the unions, joint training programs aimed toward qualifying more minorities and women for membership in the unions and increasing the skills of minorities and women so that they may qualify for higher paying employment.

b. The contractor will use good faith efforts to incorporate an EEO clause into each union agreement to the end that such union will be contractually bound to refer applicants without regard to their race, color, religion, sex, national origin, age or disability.

c. The contractor is to obtain information as to the referral practices and policies of the labor union except that to the extent such information is within the exclusive possession of the labor union and such labor union refuses to furnish such information to the contractor, the contractor shall so certify to the contracting agency and shall set forth what efforts have been made to obtain such information.

d. In the event the union is unable to provide the contractor with a reasonable flow of referrals within the time limit set forth in the collective bargaining agreement, the contractor will, through independent recruitment efforts, fill the employment vacancies without regard to race, color, religion, sex, national origin, age or disability; making full efforts to obtain qualified and/or qualifiable minorities and women. The failure of a union to provide sufficient referrals (even though it is obligated to provide exclusive referrals under the terms of a collective bargaining agreement) does not relieve the contractor from the requirements of this paragraph. In the event the union referral practice prevents the contractor from meeting the obligations pursuant to Executive Order 11246, as amended, and these special provisions, such contractor shall immediately notify the contracting agency.

8. Reasonable Accommodation for Applicants / Employees with Disabilities: The contractor must be familiar with the requirements for and comply with the Americans with Disabilities Act and all rules and regulations established there under. Employers must provide reasonable accommodation in all employment activities unless to do so would cause an undue hardship.

9. Selection of Subcontractors, Procurement of Materials and Leasing of Equipment: The contractor shall not discriminate on the grounds of race, color, religion, sex, national origin, age or disability in the selection and retention of subcontractors, including procurement of materials and leases of equipment. The contractor shall take all necessary and reasonable steps to ensure nondiscrimination in the administration of this contract.

a. The contractor shall notify all potential subcontractors and suppliers and lessors of their EEO obligations under this contract.

b. The contractor will use good faith efforts to ensure subcontractor compliance with their EEO obligations.

10. Assurance Required by 49 CFR 26.13(b):

a. The requirements of 49 CFR Part 26 and the State DOT's U.S. DOT-approved DBE program are incorporated by reference.

b. The contractor or subcontractor shall not discriminate on the basis of race, color, national origin, or sex in the performance of this contract. The contractor shall carry out applicable requirements of 49 CFR Part 26 in the award and administration of DOT-assisted contracts. Failure by the contractor to carry out these requirements is a material breach of this contract, which may result in the termination of this contract or such other remedy as the contracting agency deems appropriate.

11. Records and Reports: The contractor shall keep such records as necessary to document compliance with the EEO requirements. Such records shall be retained for a period of three years following the date of the final payment to the contractor for all contract work and shall be available at reasonable times and places for inspection by authorized representatives of the contracting agency and the FHWA.

a. The records kept by the contractor shall document the following:

(1) The number and work hours of minority and non-minority group members and women employed in each work classification on the project;

(2) The progress and efforts being made in cooperation with unions, when applicable, to increase employment opportunities for minorities and women; and

(3) The progress and efforts being made in locating, hiring, training, qualifying, and upgrading minorities and women;

b. The contractors and subcontractors will submit an annual report to the contracting agency each July for the duration of the project, indicating the number of minority, women, and non-minority group employees currently engaged in each work classification required by the contract work. This information is to be reported on Form FHWA-1391. The staffing data should represent the project work force on board in all or any part of the last payroll period preceding the end of July. If on-the-job training is being required by special provision, the contractor

will be required to collect and report training data. The employment data should reflect the work force on board during all or any part of the last payroll period preceding the end of July.

III. NONSEGREGATED FACILITIES

This provision is applicable to all Federal-aid construction contracts and to all related construction subcontracts of $10,000 or more.

The contractor must ensure that facilities provided for employees are provided in such a manner that segregation on the basis of race, color, religion, sex, or national origin cannot result. The contractor may neither require such segregated use by written or oral policies nor tolerate such use by employee custom. The contractor's obligation extends further to ensure that its employees are not assigned to perform their services at any location, under the contractor's control, where the facilities are segregated. The term "facilities" includes waiting rooms, work areas, restaurants and other eating areas, time clocks, restrooms, washrooms, locker rooms, and other storage or dressing areas, parking lots, drinking fountains, recreation or entertainment areas, transportation, and housing provided for employees. The contractor shall provide separate or single-user restrooms and necessary dressing or sleeping areas to assure privacy between sexes.

IV. DAVIS-BACON AND RELATED ACT PROVISIONS

This section is applicable to all Federal-aid construction projects exceeding $2,000 and to all related subcontracts and lower-tier subcontracts (regardless of subcontract size). The requirements apply to all projects located within the right-of-way of a roadway that is functionally classified as Federal-aid highway. This excludes roadways functionally classified as local roads or rural minor collectors, which are exempt. Contracting agencies may elect to apply these requirements to other projects.

The following provisions are from the U.S. Department of Labor regulations in 29 CFR 5.5 “Contract provisions and related matters” with minor revisions to conform to the FHWA-1273 format and FHWA program requirements.

1. Minimum wages

a. All laborers and mechanics employed or working upon the site of the work, will be paid unconditionally and not less often than once a week, and without subsequent deduction or rebate on any account (except such payroll deductions as are permitted by regulations issued by the Secretary of Labor under the Copeland Act (29 CFR part 3)), the full amount of wages and bona fide fringe benefits (or cash equivalents thereof) due at time of payment computed at rates not less than those contained in the wage determination of the Secretary of Labor which is attached hereto and made a part hereof, regardless of any contractual relationship which may be alleged to exist between the contractor and such laborers and mechanics.

Contributions made or costs reasonably anticipated for bona fide fringe benefits under section 1(b)(2) of the Davis-Bacon Act on behalf of laborers or mechanics are considered wages paid to such laborers or mechanics, subject to the provisions of paragraph 1.d. of this section; also, regular contributions made or costs incurred for more than a weekly period (but not less often than quarterly) under plans, funds, or programs which cover the particular weekly period, are deemed to be constructively made or incurred during such weekly period. Such laborers and mechanics shall be paid the appropriate wage rate and fringe benefits on the wage determination for the classification of work actually performed, without regard to skill, except as provided in 29 CFR 5.5(a)(4). Laborers or mechanics performing work in more than one classification may be compensated at the rate specified for each classification for the time actually worked therein: Provided, That the employer's payroll records accurately set forth the time spent in each classification in which work is performed. The wage determination (including any additional classification and wage rates conformed under paragraph 1.b. of this section) and the Davis-Bacon poster (WH–1321) shall be posted at all times by the contractor and its subcontractors at the site of the work in a prominent and accessible place where it can be easily seen by the workers.

b.(1) The contracting officer shall require that any class of laborers or mechanics, including helpers, which is not listed in the wage determination and which is to be employed under the contract shall be classified in conformance with the wage determination. The contracting officer shall approve an additional classification and wage rate and fringe benefits therefore only when the following criteria have been met:

(i) The work to be performed by the classification requested is not performed by a classification in the wage determination; and

(ii) The classification is utilized in the area by the construction industry; and

(iii) The proposed wage rate, including any bona fide fringe benefits, bears a reasonable relationship to the wage rates contained in the wage determination.

(2) If the contractor and the laborers and mechanics to be employed in the classification (if known), or their representatives, and the contracting officer agree on the classification and wage rate (including the amount designated for fringe benefits where appropriate), a report of the action taken shall be sent by the contracting officer to the Administrator of the Wage and Hour Division, Employment Standards Administration, U.S. Department of Labor, Washington, DC 20210. The Administrator, or an authorized representative, will approve, modify, or disapprove every additional classification action within 30 days of receipt and so advise the contracting officer or will notify the contracting officer within the 30-day period that additional time is necessary.

(3) In the event the contractor, the laborers or mechanics to be employed in the classification or their representatives, and the contracting officer do not agree on the proposed classification and wage rate (including the amount designated for fringe benefits, where appropriate), the contracting officer shall refer the questions, including the views of all interested parties and the recommendation of the contracting officer, to the Wage and Hour Administrator for determination. The Wage and Hour Administrator, or an authorized representative, will issue a determination within 30 days of receipt and so advise the contracting officer or

will notify the contracting officer within the 30-day period that additional time is necessary.

(4) The wage rate (including fringe benefits where appropriate) determined pursuant to paragraphs 1.b.(2) or 1.b.(3) of this section, shall be paid to all workers performing work in the classification under this contract from the first day on which work is performed in the classification.

c. Whenever the minimum wage rate prescribed in the contract for a class of laborers or mechanics includes a fringe benefit which is not expressed as an hourly rate, the contractor shall either pay the benefit as stated in the wage determination or shall pay another bona fide fringe benefit or an hourly cash equivalent thereof.

d. If the contractor does not make payments to a trustee or other third person, the contractor may consider as part of the wages of any laborer or mechanic the amount of any costs reasonably anticipated in providing bona fide fringe benefits under a plan or program, Provided, That the Secretary of Labor has found, upon the written request of the contractor, that the applicable standards of the Davis-Bacon Act have been met. The Secretary of Labor may require the contractor to set aside in a separate account assets for the meeting of obligations under the plan or program.

2. Withholding

The contracting agency shall upon its own action or upon written request of an authorized representative of the Department of Labor, withhold or cause to be withheld from the contractor under this contract, or any other Federal contract with the same prime contractor, or any other federally-assisted contract subject to Davis-Bacon prevailing wage requirements, which is held by the same prime contractor, so much of the accrued payments or advances as may be considered necessary to pay laborers and mechanics, including apprentices, trainees, and helpers, employed by the contractor or any subcontractor the full amount of wages required by the contract. In the event of failure to pay any laborer or mechanic, including any apprentice, trainee, or helper, employed or working on the site of the work, all or part of the wages required by the contract, the contracting agency may, after written notice to the contractor, take such action as may be necessary to cause the suspension of any further payment, advance, or guarantee of funds until such violations have ceased.

3. Payrolls and basic records

a. Payrolls and basic records relating thereto shall be maintained by the contractor during the course of the work and preserved for a period of three years thereafter for all laborers and mechanics working at the site of the work. Such records shall contain the name, address, and social security number of each such worker, his or her correct classification, hourly rates of wages paid (including rates of contributions or costs anticipated for bona fide fringe benefits or cash equivalents thereof of the types described in section 1(b)(2)(B) of the Davis-Bacon Act), daily and weekly number of hours worked, deductions made and actual wages paid. Whenever the Secretary of Labor has found under 29 CFR 5.5(a)(1)(iv) that the wages of any laborer or mechanic include the amount of any costs reasonably anticipated in providing benefits under a plan or program described in section 1(b)(2)(B) of the Davis-Bacon Act, the contractor shall maintain records which show that the commitment to provide such benefits is enforceable, that the plan or program is financially responsible, and that the plan or program has been communicated in writing to the laborers or mechanics affected, and records which show the costs anticipated or the actual cost incurred in providing such benefits. Contractors employing apprentices or trainees under approved programs shall maintain written evidence of the registration of apprenticeship programs and certification of trainee programs, the registration of the apprentices and trainees, and the ratios and wage rates prescribed in the applicable programs.

b.(1) The contractor shall submit weekly for each week in which any contract work is performed a copy of all payrolls to the contracting agency. The payrolls submitted shall set out accurately and completely all of the information required to be maintained under 29 CFR 5.5(a)(3)(i), except that full social security numbers and home addresses shall not be included on weekly transmittals. Instead the payrolls shall only need to include an individually identifying number for each employee (e.g. , the last four digits of the employee's social security number). The required weekly payroll information may be submitted in any form desired. Optional Form WH–347 is available for this purpose from the Wage and Hour Division Web site at http://www.dol.gov/esa/whd/forms/wh347instr.htm or its successor site. The prime contractor is responsible for the submission of copies of payrolls by all subcontractors. Contractors and subcontractors shall maintain the full social security number and current address of each covered worker, and shall provide them upon request to the contracting agency for transmission to the State DOT, the FHWA or the Wage and Hour Division of the Department of Labor for purposes of an investigation or audit of compliance with prevailing wage requirements. It is not a violation of this section for a prime contractor to require a subcontractor to provide addresses and social security numbers to the prime contractor for its own records, without weekly submission to the contracting agency..

(2) Each payroll submitted shall be accompanied by a “Statement of Compliance,” signed by the contractor or subcontractor or his or her agent who pays or supervises the payment of the persons employed under the contract and shall certify the following:

(i) That the payroll for the payroll period contains the information required to be provided under §5.5 (a)(3)(ii) of Regulations, 29 CFR part 5, the appropriate information is being maintained under §5.5 (a)(3)(i) of Regulations, 29 CFR part 5, and that such information is correct and complete;

(ii) That each laborer or mechanic (including each helper, apprentice, and trainee) employed on the contract during the payroll period has been paid the full weekly wages earned, without rebate, either directly or indirectly, and that no deductions have been made either directly or indirectly from the full wages earned, other than permissible deductions as set forth in Regulations, 29 CFR part 3;

(iii) That each laborer or mechanic has been paid not less than the applicable wage rates and fringe benefits or cash equivalents for the classification of work performed, as specified in the applicable wage determination incorporated into the contract.

(3) The weekly submission of a properly executed certification set forth on the reverse side of Optional Form WH–347 shall satisfy the requirement for submission of the "Statement of Compliance" required by paragraph 3.b.(2) of this section.

(4) The falsification of any of the above certifications may subject the contractor or subcontractor to civil or criminal prosecution under section 1001 of title 18 and section 231 of title 31 of the United States Code.

c. The contractor or subcontractor shall make the records required under paragraph 3.a. of this section available for inspection, copying, or transcription by authorized representatives of the contracting agency, the State DOT, the FHWA, or the Department of Labor, and shall permit such representatives to interview employees during working hours on the job. If the contractor or subcontractor fails to submit the required records or to make them available, the FHWA may, after written notice to the contractor, the contracting agency or the State DOT, take such action as may be necessary to cause the suspension of any further payment, advance, or guarantee of funds. Furthermore, failure to submit the required records upon request or to make such records available may be grounds for debarment action pursuant to 29 CFR 5.12.

4. Apprentices and trainees

a. Apprentices (programs of the USDOL).

Apprentices will be permitted to work at less than the predetermined rate for the work they performed when they are employed pursuant to and individually registered in a bona fide apprenticeship program registered with the U.S. Department of Labor, Employment and Training Administration, Office of Apprenticeship Training, Employer and Labor Services, or with a State Apprenticeship Agency recognized by the Office, or if a person is employed in his or her first 90 days of probationary employment as an apprentice in such an apprenticeship program, who is not individually registered in the program, but who has been certified by the Office of Apprenticeship Training, Employer and Labor Services or a State Apprenticeship Agency (where appropriate) to be eligible for probationary employment as an apprentice.

The allowable ratio of apprentices to journeymen on the job site in any craft classification shall not be greater than the ratio permitted to the contractor as to the entire work force under the registered program. Any worker listed on a payroll at an apprentice wage rate, who is not registered or otherwise employed as stated above, shall be paid not less than the applicable wage rate on the wage determination for the classification of work actually performed. In addition, any apprentice performing work on the job site in excess of the ratio permitted under the registered program shall be paid not less than the applicable wage rate on the wage determination for the work actually performed. Where a contractor is performing construction on a project in a locality other than that in which its program is registered, the ratios and wage rates (expressed in percentages of the journeyman's hourly rate) specified in the contractor's or subcontractor's registered program shall be observed.

Every apprentice must be paid at not less than the rate specified in the registered program for the apprentice's level of progress, expressed as a percentage of the journeymen hourly rate specified in the applicable wage determination. Apprentices shall be paid fringe benefits in accordance with the provisions of the apprenticeship program. If the apprenticeship program does not specify fringe benefits, apprentices must be paid the full amount of fringe benefits listed on the wage determination for the applicable classification. If the Administrator determines that a different practice prevails for the applicable apprentice classification, fringes shall be paid in accordance with that determination.

In the event the Office of Apprenticeship Training, Employer and Labor Services, or a State Apprenticeship Agency recognized by the Office, withdraws approval of an apprenticeship program, the contractor will no longer be permitted to utilize apprentices at less than the applicable predetermined rate for the work performed until an acceptable program is approved.

b. Trainees (programs of the USDOL).

Except as provided in 29 CFR 5.16, trainees will not be permitted to work at less than the predetermined rate for the work performed unless they are employed pursuant to and individually registered in a program which has received prior approval, evidenced by formal certification by the U.S. Department of Labor, Employment and Training Administration.

The ratio of trainees to journeymen on the job site shall not be greater than permitted under the plan approved by the Employment and Training Administration.

Every trainee must be paid at not less than the rate specified in the approved program for the trainee's level of progress, expressed as a percentage of the journeyman hourly rate specified in the applicable wage determination. Trainees shall be paid fringe benefits in accordance with the provisions of the trainee program. If the trainee program does not mention fringe benefits, trainees shall be paid the full amount of fringe benefits listed on the wage determination unless the Administrator of the Wage and Hour Division determines that there is an apprenticeship program associated with the corresponding journeyman wage rate on the wage determination which provides for less than full fringe benefits for apprentices. Any employee listed on the payroll at a trainee rate who is not registered and participating in a training plan approved by the Employment and Training Administration shall be paid not less than the applicable wage rate on the wage determination for the classification of work actually performed. In addition, any trainee performing work on the job site in excess of the ratio permitted under the registered program shall be paid not less than the applicable wage rate on the wage determination for the work actually performed.

In the event the Employment and Training Administration withdraws approval of a training program, the contractor will no longer be permitted to utilize trainees at less than the applicable predetermined rate for the work performed until an acceptable program is approved.

c. Equal employment opportunity. The utilization of apprentices, trainees and journeymen under this part shall be in conformity with the equal employment opportunity requirements of Executive Order 11246, as amended, and 29 CFR part 30.

d. Apprentices and Trainees (programs of the U.S. DOT).

Apprentices and trainees working under apprenticeship and skill training programs which have been certified by the Secretary of Transportation as promoting EEO in connection with Federal-aid highway construction programs are not subject to the requirements of paragraph 4 of this Section IV. The straight time hourly wage rates for apprentices and trainees under such programs will be established by the particular programs. The ratio of apprentices and trainees to journeymen shall not be greater than permitted by the terms of the particular program.

5. Compliance with Copeland Act requirements. The contractor shall comply with the requirements of 29 CFR part 3, which are incorporated by reference in this contract.

6. Subcontracts. The contractor or subcontractor shall insert Form FHWA-1273 in any subcontracts and also require the subcontractors to include Form FHWA-1273 in any lower tier subcontracts. The prime contractor shall be responsible for the compliance by any subcontractor or lower tier subcontractor with all the contract clauses in 29 CFR 5.5.

7. Contract termination: debarment. A breach of the contract clauses in 29 CFR 5.5 may be grounds for termination of the contract, and for debarment as a contractor and a subcontractor as provided in 29 CFR 5.12.

8. Compliance with Davis-Bacon and Related Act requirements. All rulings and interpretations of the Davis-Bacon and Related Acts contained in 29 CFR parts 1, 3, and 5 are herein incorporated by reference in this contract.

9. Disputes concerning labor standards. Disputes arising out of the labor standards provisions of this contract shall not be subject to the general disputes clause of this contract. Such disputes shall be resolved in accordance with the procedures of the Department of Labor set forth in 29 CFR parts 5, 6, and 7. Disputes within the meaning of this clause include disputes between the contractor (or any of its subcontractors) and the contracting agency, the U.S. Department of Labor, or the employees or their representatives.

10. Certification of eligibility.

a. By entering into this contract, the contractor certifies that neither it (nor he or she) nor any person or firm who has an interest in the contractor's firm is a person or firm ineligible to be awarded Government contracts by virtue of section 3(a) of the Davis-Bacon Act or 29 CFR 5.12(a)(1).

b. No part of this contract shall be subcontracted to any person or firm ineligible for award of a Government contract by virtue of section 3(a) of the Davis-Bacon Act or 29 CFR 5.12(a)(1).

c. The penalty for making false statements is prescribed in the U.S. Criminal Code, 18 U.S.C. 1001.

V. CONTRACT WORK HOURS AND SAFETY STANDARDS ACT

The following clauses apply to any Federal-aid construction contract in an amount in excess of $100,000 and subject to the overtime provisions of the Contract Work Hours and Safety Standards Act. These clauses shall be inserted in addition to the clauses required by 29 CFR 5.5(a) or 29 CFR 4.6. As used in this paragraph, the terms laborers and mechanics include watchmen and guards.

1. Overtime requirements. No contractor or subcontractor contracting for any part of the contract work which may require or involve the employment of laborers or mechanics shall require or permit any such laborer or mechanic in any workweek in which he or she is employed on such work to work in excess of forty hours in such workweek unless such laborer or mechanic receives compensation at a rate not less than one and one-half times the basic rate of pay for all hours worked in excess of forty hours in such workweek.

2. Violation; liability for unpaid wages; liquidated damages. In the event of any violation of the clause set forth in paragraph (1.) of this section, the contractor and any subcontractor responsible therefor shall be liable for the unpaid wages. In addition, such contractor and subcontractor shall be liable to the United States (in the case of work done under contract for the District of Columbia or a territory, to such District or to such territory), for liquidated damages. Such liquidated damages shall be computed with respect to each individual laborer or mechanic, including watchmen and guards, employed in violation of the clause set forth in paragraph (1.) of this section, in the sum of $10 for each calendar day on which such individual was required or permitted to work in excess of the standard workweek of forty hours without payment of the overtime wages required by the clause set forth in paragraph (1.) of this section.

3. Withholding for unpaid wages and liquidated damages. The FHWA or the contacting agency shall upon its own action or upon written request of an authorized representative of the Department of Labor withhold or cause to be withheld, from any moneys payable on account of work performed by the contractor or subcontractor under any such contract or any other Federal contract with the same prime contractor, or any other federally-assisted contract subject to the Contract Work Hours and Safety Standards Act, which is held by the same prime contractor, such sums as may be determined to be necessary to satisfy any liabilities of such contractor or subcontractor for unpaid wages and liquidated damages as provided in the clause set forth in paragraph (2.) of this section.

4. Subcontracts. The contractor or subcontractor shall insert in any subcontracts the clauses set forth in paragraph (1.) through (4.) of this section and also a clause requiring the subcontractors to include these clauses in any lower tier subcontracts. The prime contractor shall be responsible for compliance by any subcontractor or lower tier subcontractor with the clauses set forth in paragraphs (1.) through (4.) of this section.

VI. SUBLETTING OR ASSIGNING THE CONTRACT

This provision is applicable to all Federal-aid construction contracts on the National Highway System.

1. The contractor shall perform with its own organization contract work amounting to not less than 30 percent (or a greater percentage if specified elsewhere in the contract) of the total original contract price, excluding any specialty items designated by the contracting agency. Specialty items may be performed by subcontract and the amount of any such specialty items performed may be deducted from the total original contract price before computing the amount of work required to be performed by the contractor's own organization (23 CFR 635.116).

a. The term “perform work with its own organization” refers to workers employed or leased by the prime contractor, and equipment owned or rented by the prime contractor, with or without operators. Such term does not include employees or equipment of a subcontractor or lower tier subcontractor, agents of the prime contractor, or any other assignees. The term may include payments for the costs of hiring leased employees from an employee leasing firm meeting all relevant Federal and State regulatory requirements. Leased employees may only be included in this term if the prime contractor meets all of the following conditions:

(1) the prime contractor maintains control over the supervision of the day-to-day activities of the leased employees;
(2) the prime contractor remains responsible for the quality of the work of the leased employees;
(3) the prime contractor retains all power to accept or exclude individual employees from work on the project; and
(4) the prime contractor remains ultimately responsible for the payment of predetermined minimum wages, the submission of payrolls, statements of compliance and all other Federal regulatory requirements.

b. "Specialty Items" shall be construed to be limited to work that requires highly specialized knowledge, abilities, or equipment not ordinarily available in the type of contracting organizations qualified and expected to bid or propose on the contract as a whole and in general are to be limited to minor components of the overall contract.

2. The contract amount upon which the requirements set forth in paragraph (1) of Section VI is computed includes the cost of material and manufactured products which are to be purchased or produced by the contractor under the contract provisions.

3. The contractor shall furnish (a) a competent superintendent or supervisor who is employed by the firm, has full authority to direct performance of the work in accordance with the contract requirements, and is in charge of all construction operations (regardless of who performs the work) and (b) such other of its own organizational resources (supervision, management, and engineering services) as the contracting officer determines is necessary to assure the performance of the contract.

4. No portion of the contract shall be sublet, assigned or otherwise disposed of except with the written consent of the contracting officer, or authorized representative, and such consent when given shall not be construed to relieve the contractor of any responsibility for the fulfillment of the contract. Written consent will be given only after the contracting agency has assured that each subcontract is evidenced in writing and that it contains all pertinent provisions and requirements of the prime contract.

5. The 30% self-performance requirement of paragraph (1) is not applicable to design-build contracts; however, contracting agencies may establish their own self-performance requirements.

VII. SAFETY: ACCIDENT PREVENTION

This provision is applicable to all Federal-aid construction contracts and to all related subcontracts.

1. In the performance of this contract the contractor shall comply with all applicable Federal, State, and local laws governing safety, health, and sanitation (23 CFR 635). The contractor shall provide all safeguards, safety devices and protective equipment and take any other needed actions as it determines, or as the contracting officer may determine, to be reasonably necessary to protect the life and health of employees on the job and the safety of the public and to protect property in connection with the performance of the work covered by the contract.

2. It is a condition of this contract, and shall be made a condition of each subcontract, which the contractor enters into pursuant to this contract, that the contractor and any subcontractor shall not permit any employee, in performance of the contract, to work in surroundings or under conditions which are unsanitary, hazardous or dangerous to his/her health or safety, as determined under construction safety and health standards (29 CFR 1926) promulgated by the Secretary of Labor, in accordance with Section 107 of the Contract Work Hours and Safety Standards Act (40 U.S.C. 3704).

3. Pursuant to 29 CFR 1926.3, it is a condition of this contract that the Secretary of Labor or authorized representative thereof, shall have right of entry to any site of contract performance to inspect or investigate the matter of compliance with the construction safety and health standards and to carry out the duties of the Secretary under Section 107 of the Contract Work Hours and Safety Standards Act (40 U.S.C.3704).

VIII. FALSE STATEMENTS CONCERNING HIGHWAY PROJECTS

This provision is applicable to all Federal-aid construction contracts and to all related subcontracts.

In order to assure high quality and durable construction in conformity with approved plans and specifications and a high degree of reliability on statements and representations made by engineers, contractors, suppliers, and workers on Federal-aid highway projects, it is essential that all persons concerned with the project perform their functions as carefully, thoroughly, and honestly as possible. Willful falsification, distortion, or misrepresentation with respect to any facts related to the project is a violation of Federal law. To prevent any misunderstanding regarding the seriousness of these and similar acts, Form FHWA-1022 shall be posted on each Federal-aid highway project (23 CFR 635) in one or more places where it is readily available to all persons concerned with the project:

18 U.S.C. 1020 reads as follows:

"Whoever, being an officer, agent, or employee of the United States, or of any State or Territory, or whoever, whether a person, association, firm, or corporation, knowingly makes any false statement, false representation, or false report as to the character, quality, quantity, or cost of the material used or to be used, or the quantity or quality of the work performed or to be performed, or the cost thereof in connection with the submission of plans, maps, specifications, contracts, or costs of construction on any highway or related project submitted for approval to the Secretary of Transportation; or

Whoever knowingly makes any false statement, false representation, false report or false claim with respect to the character, quality, quantity, or cost of any work performed or to be performed, or materials furnished or to be furnished, in connection with the construction of any highway or related project approved by the Secretary of Transportation; or

Whoever knowingly makes any false statement or false representation as to material fact in any statement, certificate, or report submitted pursuant to provisions of the Federal-aid Roads Act approved July 1, 1916, (39 Stat. 355), as amended and supplemented;

Shall be fined under this title or imprisoned not more than 5 years or both."

IX. IMPLEMENTATION OF CLEAN AIR ACT AND FEDERAL WATER POLLUTION CONTROL ACT

This provision is applicable to all Federal-aid construction contracts and to all related subcontracts.

By submission of this bid/proposal or the execution of this contract, or subcontract, as appropriate, the bidder, proposer, Federal-aid construction contractor, or subcontractor, as appropriate, will be deemed to have stipulated as follows:

1. That any person who is or will be utilized in the performance of this contract is not prohibited from receiving an award due to a violation of Section 508 of the Clean Water Act or Section 306 of the Clean Air Act.
2. That the contractor agrees to include or cause to be included the requirements of paragraph (1) of this Section X in every subcontract, and further agrees to take such action as the contracting agency may direct as a means of enforcing such requirements.

X. CERTIFICATION REGARDING DEBARMENT, SUSPENSION, INELIGIBILITY AND VOLUNTARY EXCLUSION

This provision is applicable to all Federal-aid construction contracts, design-build contracts, subcontracts, lower-tier subcontracts, purchase orders, lease agreements, consultant contracts or any other covered transaction requiring FHWA approval or that is estimated to cost $25,000 or more – as defined in 2 CFR Parts 180 and 1200.

1**. Instructions for Certification – First Tier Participants:**

a. By signing and submitting this proposal, the prospective first tier participant is providing the certification set out below.

b. The inability of a person to provide the certification set out below will not necessarily result in denial of participation in this covered transaction. The prospective first tier participant shall submit an explanation of why it cannot provide the certification set out below. The certification or explanation will be considered in connection with the department or agency's determination whether to enter into this transaction. However, failure of the prospective first tier participant to furnish a certification or an explanation shall disqualify such a person from participation in this transaction.

c. The certification in this clause is a material representation of fact upon which reliance was placed when the contracting agency determined to enter into this transaction. If it is later determined that the prospective participant knowingly rendered an erroneous certification, in addition to other remedies available to the Federal Government, the contracting agency may terminate this transaction for cause of default.

d. The prospective first tier participant shall provide immediate written notice to the contracting agency to whom this proposal is submitted if any time the prospective first tier participant learns that its certification was erroneous when submitted or has become erroneous by reason of changed circumstances.

e. The terms "covered transaction," "debarred," "suspended," "ineligible," "participant," "person," "principal," and "voluntarily excluded," as used in this clause, are defined in 2 CFR Parts 180 and 1200. “First Tier Covered Transactions” refers to any covered transaction between a grantee or subgrantee of Federal funds and a participant (such as the prime or general contract). “Lower Tier Covered Transactions” refers to any covered transaction under a First Tier Covered Transaction (such as subcontracts). “First Tier Participant” refers to the participant who has entered into a covered transaction with a grantee or subgrantee of Federal funds (such as the prime or general contractor). “Lower Tier Participant” refers any participant who has entered into a covered transaction with a First Tier Participant or other Lower Tier Participants (such as subcontractors and suppliers).

f. The prospective first tier participant agrees by submitting this proposal that, should the proposed covered transaction be entered into, it shall not knowingly enter into any lower tier covered transaction with a person who is debarred, suspended, declared ineligible, or voluntarily excluded from participation in this covered transaction, unless authorized by the department or agency entering into this transaction.

g. The prospective first tier participant further agrees by submitting this proposal that it will include the clause titled "Certification Regarding Debarment, Suspension, Ineligibility and Voluntary Exclusion-Lower Tier Covered Transactions," provided by the department or contracting agency, entering into this covered transaction, without modification, in all lower tier covered transactions and in all solicitations for lower tier covered transactions exceeding the $25,000 threshold.

h. A participant in a covered transaction may rely upon a certification of a prospective participant in a lower tier covered transaction that is not debarred, suspended, ineligible, or voluntarily excluded from the covered transaction, unless it knows that the certification is erroneous. A participant is responsible for ensuring that its principals are not suspended, debarred, or otherwise ineligible to participate in covered transactions. To verify the eligibility of its principals, as well as the eligibility of any lower tier prospective participants, each participant may, but is not required to, check the Excluded Parties List System website (https://www.epls.gov/), which is compiled by the General Services Administration.

i. Nothing contained in the foregoing shall be construed to require the establishment of a system of records in order to render in good faith the certification required by this clause. The knowledge and information of the prospective participant is not required to exceed that which is normally possessed by a prudent person in the ordinary course of business dealings.

j. Except for transactions authorized under paragraph (f) of these instructions, if a participant in a covered transaction knowingly enters into a lower tier covered transaction with a person who is suspended, debarred, ineligible, or voluntarily excluded from participation in this transaction, in addition to other remedies available to the Federal Government, the department or agency may terminate this transaction for cause or default.

* * * * *

2. Certification Regarding Debarment, Suspension, Ineligibility and Voluntary Exclusion – First Tier Participants:

a. The prospective first tier participant certifies to the best of its knowledge and belief, that it and its principals:

(1) Are not presently debarred, suspended, proposed for debarment, declared ineligible, or voluntarily excluded from participating in covered transactions by any Federal department or agency;

(2) Have not within a three-year period preceding this proposal been convicted of or had a civil judgment rendered against them for commission of fraud or a criminal offense in connection with obtaining, attempting to obtain, or performing a public (Federal, State or local) transaction or contract under a public transaction; violation of Federal or State antitrust statutes or commission of embezzlement, theft, forgery, bribery, falsification or destruction of records, making false statements, or receiving stolen property;

(3) Are not presently indicted for or otherwise criminally or civilly charged by a governmental entity (Federal, State or local) with commission of any of the offenses enumerated in paragraph (a)(2) of this certification; and

(4) Have not within a three-year period preceding this application/proposal had one or more public transactions (Federal, State or local) terminated for cause or default.

b. Where the prospective participant is unable to certify to any of the statements in this certification, such prospective participant shall attach an explanation to this proposal.

2. **Instructions for Certification - Lower Tier Participants:**

(Applicable to all subcontracts, purchase orders and other lower tier transactions requiring prior FHWA approval or estimated to cost $25,000 or more - 2 CFR Parts 180 and 1200)

a. By signing and submitting this proposal, the prospective lower tier is providing the certification set out below.

b. The certification in this clause is a material representation of fact upon which reliance was placed when this transaction was entered into. If it is later determined that the prospective lower tier participant knowingly rendered an erroneous certification, in addition to other remedies available to the Federal Government, the department, or agency with which this transaction originated may pursue available remedies, including suspension and/or debarment.

c. The prospective lower tier participant shall provide immediate written notice to the person to which this proposal is submitted if at any time the prospective lower tier participant learns that its certification was erroneous by reason of changed circumstances.

d. The terms "covered transaction," "debarred," "suspended," "ineligible," "participant," "person," "principal," and "voluntarily excluded," as used in this clause, are defined in 2 CFR Parts 180 and 1200. You may contact the person to which this proposal is submitted for assistance in obtaining a copy of those regulations. “First Tier Covered Transactions” refers to any covered transaction between a grantee or subgrantee of Federal funds and a participant (such as the prime or general contract). “Lower Tier Covered Transactions” refers to any covered transaction under a First Tier Covered Transaction (such as subcontracts). “First Tier Participant” refers to the participant who has entered into a covered transaction with a grantee or subgrantee of Federal funds (such as the prime or general contractor). “Lower Tier Participant” refers any participant who has entered into a covered transaction with a First Tier Participant or other Lower Tier Participants (such as subcontractors and suppliers).

e. The prospective lower tier participant agrees by submitting this proposal that, should the proposed covered transaction be entered into, it shall not knowingly enter into any lower tier covered transaction with a person who is debarred, suspended, declared ineligible, or voluntarily excluded from participation in this covered transaction, unless authorized by the department or agency with which this transaction originated.

f. The prospective lower tier participant further agrees by submitting this proposal that it will include this clause titled "Certification Regarding Debarment, Suspension, Ineligibility and Voluntary Exclusion-Lower Tier Covered Transaction," without modification, in all lower tier covered transactions and in all solicitations for lower tier covered transactions exceeding the $25,000 threshold.

g. A participant in a covered transaction may rely upon a certification of a prospective participant in a lower tier covered transaction that is not debarred, suspended, ineligible, or voluntarily excluded from the covered transaction, unless it knows that the certification is erroneous. A participant is responsible for ensuring that its principals are not suspended, debarred, or otherwise ineligible to participate in covered transactions. To verify the eligibility of its principals, as well as the eligibility of any lower tier prospective participants, each participant may, but is not required to, check the Excluded Parties List System website (https://www.epls.gov/), which is compiled by the General Services Administration.

h. Nothing contained in the foregoing shall be construed to require establishment of a system of records in order to render in good faith the certification required by this clause. The knowledge and information of participant is not required to exceed that which is normally possessed by a prudent person in the ordinary course of business dealings.

i. Except for transactions authorized under paragraph e of these instructions, if a participant in a covered transaction knowingly enters into a lower tier covered transaction with a person who is suspended, debarred, ineligible, or voluntarily excluded from participation in this transaction, in addition to other remedies available to the Federal Government, the

department or agency with which this transaction originated may pursue available remedies, including suspension and/or debarment.

* * * * *

Certification Regarding Debarment, Suspension, Ineligibility and Voluntary Exclusion--Lower Tier Participants:

1. The prospective lower tier participant certifies, by submission of this proposal, that neither it nor its principals is presently debarred, suspended, proposed for debarment, declared ineligible, or voluntarily excluded from participating in covered transactions by any Federal department or agency.

2. Where the prospective lower tier participant is unable to certify to any of the statements in this certification, such prospective participant shall attach an explanation to this proposal.

* * * * *

XI. CERTIFICATION REGARDING USE OF CONTRACT FUNDS FOR LOBBYING

This provision is applicable to all Federal-aid construction contracts and to all related subcontracts which exceed $100,000 (49 CFR 20).

1. The prospective participant certifies, by signing and submitting this bid or proposal, to the best of his or her knowledge and belief, that:

a. No Federal appropriated funds have been paid or will be paid, by or on behalf of the undersigned, to any person for influencing or attempting to influence an officer or employee of any Federal agency, a Member of Congress, an officer or employee of Congress, or an employee of a Member of Congress in connection with the awarding of any Federal contract, the making of any Federal grant, the making of any Federal loan, the entering into of any cooperative agreement, and the extension, continuation, renewal, amendment, or modification of any Federal contract, grant, loan, or cooperative agreement.

b. If any funds other than Federal appropriated funds have been paid or will be paid to any person for influencing or attempting to influence an officer or employee of any Federal agency, a Member of Congress, an officer or employee of Congress, or an employee of a Member of Congress in connection with this Federal contract, grant, loan, or cooperative agreement, the undersigned shall complete and submit Standard Form-LLL, "Disclosure Form to Report Lobbying," in accordance with its instructions.

2. This certification is a material representation of fact upon which reliance was placed when this transaction was made or entered into. Submission of this certification is a prerequisite for making or entering into this transaction imposed by 31 U.S.C. 1352. Any person who fails to file the required certification shall be subject to a civil penalty of not less than $10,000 and not more than $100,000 for each such failure.

3. The prospective participant also agrees by submitting its bid or proposal that the participant shall require that the language of this certification be included in all lower tier subcontracts, which exceed $100,000 and that all such recipients shall certify and disclose accordingly.

ATTACHMENT A - EMPLOYMENT AND MATERIALS PREFERENCE FOR APPALACHIAN DEVELOPMENT HIGHWAY SYSTEM OR APPALACHIAN LOCAL ACCESS ROAD CONTRACTS

This provision is applicable to all Federal-aid projects funded under the Appalachian Regional Development Act of 1965.

1. During the performance of this contract, the contractor undertaking to do work which is, or reasonably may be, done as on-site work, shall give preference to qualified persons who regularly reside in the labor area as designated by the DOL wherein the contract work is situated, or the subregion, or the Appalachian counties of the State wherein the contract work is situated, except:

a. To the extent that qualified persons regularly residing in the area are not available.

b. For the reasonable needs of the contractor to employ supervisory or specially experienced personnel necessary to assure an efficient execution of the contract work.

c. For the obligation of the contractor to offer employment to present or former employees as the result of a lawful collective bargaining contract, provided that the number of nonresident persons employed under this subparagraph (1c) shall not exceed 20 percent of the total number of employees employed by the contractor on the contract work, except as provided in subparagraph (4) below.

2. The contractor shall place a job order with the State Employment Service indicating (a) the classifications of the laborers, mechanics and other employees required to perform the contract work, (b) the number of employees required in each classification, (c) the date on which the participant estimates such employees will be required, and (d) any other pertinent information required by the State Employment Service to complete the job order form. The job order may be placed with the State Employment Service in writing or by telephone. If during the course of the contract work, the information submitted by the contractor in the original job order is substantially modified, the participant shall promptly notify the State Employment Service.

3. The contractor shall give full consideration to all qualified job applicants referred to him by the State Employment Service. The contractor is not required to grant employment to any job applicants who, in his opinion, are not qualified to perform the classification of work required.

4. If, within one week following the placing of a job order by the contractor with the State Employment Service, the State Employment Service is unable to refer any qualified job applicants to the contractor, or less than the number requested, the State Employment Service will forward a certificate to the contractor indicating the unavailability of applicants. Such certificate shall be made a part of the contractor's permanent project records. Upon receipt of this certificate, the contractor may employ persons who do not normally reside in the labor area to fill positions covered by the certificate, notwithstanding the provisions of subparagraph (1c) above.

5. The provisions of 23 CFR 633.207(e) allow the contracting agency to provide a contractual preference for the use of mineral resource materials native to the Appalachian region.

6. The contractor shall include the provisions of Sections 1 through 4 of this Attachment A in every subcontract for work which is, or reasonably may be, done as on-site work.

KENTUCKY TRANSPORTATION CABINET
DEPARTMENT OF HIGHWAYS

EMPLOYMENT REQUIREMENTS
RELATING TO
NONDISCRIMINATION OF EMPLOYEES
(APPLICABLE TO FEDERAL-AID SYSTEM CONTRACTS)

AN ACT OF THE KENTUCKY GENERAL ASSEMBLY TO PREVENT DISCRIMINATION IN EMPLOYMENT

KRS CHAPTER 344
EFFECTIVE JUNE 16, 1972

The contract on this project, in accordance with KRS Chapter 344, provides that during the performance of this contract, the contractor agrees as follows:

1. The contractor shall not fail or refuse to hire, or shall not discharge any individual, or otherwise discriminate against an individual with respect to his compensation, terms, conditions, or privileges of employment, because of such individual's race, color, religion, national origin, sex, disability or age (forty and above); or limit, segregate, or classify his employees in any way which would deprive or tend to deprive an individual of employment opportunities or otherwise adversely affect his status as an employee, because of such individual's race, color, religion, national origin, sex, disability or age forty (40) and over. The contractor agrees to post in conspicuous places, available to employees and applicants for employment, notices to be provided setting forth the provisions of this nondiscrimination clause.

2. The contractor shall not print or publish or cause to be printed or published a notice or advertisement relating to employment by such an employer or membership in or any classification or referral for employment by the employment agency, indicating any preference, limitation, specification, or discrimination, based on race, color, religion, national origin, sex, or age forty (40) and over, or because the person is a qualified individual with a disability, except that such a notice or advertisement may indicate a preference, limitation, or specification based on religion, national origin, sex, or age forty (40) and over, or because the person is a qualified individual with a disability, when religion, national origin, sex, or age forty (40) and over, or because the person is a qualified individual with a disability, is a bona fide occupational qualification for employment.

3. If the contractor is in control of apprenticeship or other training or retraining, including on-the-job training programs, he shall not discriminate against an individual because of his race, color, religion, national origin, sex, disability or age forty (40) and over, in admission to, or employment in any program established to provide apprenticeship or other training.

4. The contractor will send to each labor union or representative of workers with which he has a collective bargaining agreement or other contract or understanding, a notice to be provided advising the said labor union or workers' representative of the contractor's commitments under this section, and shall post copies of the notice in conspicuous places available to employees and applicants for employment. The contractor will take such action with respect to any subcontract or purchase order as the administrating agency may direct as a means of enforcing such provisions, including sanctions for non-compliance.

Revised: January 25, 2017

Standard Title VI/Non-Discrimination Assurances

During the performance of this contract, the contractor, for itself, its assignees, and successors in interest (hereinafter referred to as the "contractor") agrees as follows:

1. **Compliance with Regulations:** The contractor (hereinafter includes consultants) will comply with the Acts and the Regulations relative to Non-discrimination in Federally-assisted programs of the U.S. Department of Transportation, **Federal Highway Administration**, as they may be amended from time to time, which are herein incorporated by reference and made a part of this contract.

2. **Non-discrimination:** The contractor, with regard to the work performed by it during the contract, will not discriminate on the grounds of race, color, or national origin in the selection and retention of subcontractors, including procurements of materials and leases of equipment. The contractor will not participate directly or indirectly in the discrimination prohibited by the Acts and the Regulations, including employment practices when the contract covers any activity, project, or program set forth in Appendix B of 49 CFR Part 21.

3. **Solicitations for Subcontracts, Including Procurements of Materials and Equipment:** In all solicitations, either by competitive bidding, or negotiation made by the contractor for work to be performed under a subcontract, including procurements of materials, or leases of equipment, each potential subcontractor or supplier will be notified by the contractor of the contractor's obligations under this contract and the Acts and the Regulations relative to Non-discrimination on the grounds of race, color, or national origin.

4. **Information and Reports:** The contractor will provide all information and reports required by the Acts, the Regulations, and directives issued pursuant thereto and will permit access to its books, records, accounts, other sources of information, and its facilities as may be determined by the Recipient or the **Federal Highway Administration** to be pertinent to ascertain compliance with such Acts, Regulations, and instructions. Where any information required of a contractor is in the exclusive possession of another who fails or refuses to furnish the information, the contractor will so certify to the Recipient or the **Federal Highway Administration**, as appropriate, and will set forth what efforts it has made to obtain the information.

5. **Sanctions for Noncompliance:** In the event of a contractor's noncompliance with the Non-discrimination provisions of this contract, the Recipient will impose such contract sanctions as it or the **Federal Highway Administration** may determine to be appropriate, including, but not limited to:

    a. withholding payments to the contractor under the contract until the contractor complies; and/or
    b. cancelling, terminating, or suspending a contract, in whole or in part.

6. **Incorporation of Provisions:** The contractor will include the provisions of paragraphs one through six in every subcontract, including procurements of materials and leases of equipment, unless exempt by the Acts, the Regulations and directives issued pursuant thereto. The contractor will take action with respect to any subcontract or procurement as the Recipient or the **Federal Highway Administration** may direct as a means of enforcing such provisions including sanctions for noncompliance. Provided, that if the contractor becomes involved in, or is threatened with litigation by a subcontractor, or supplier because of such direction, the contractor may request the Recipient to enter into any litigation to protect the interests of the Recipient. In addition, the contractor may request the United States to enter into the litigation to protect the interests of the United States.

Standard Title VI/Non-Discrimination Statutes and Authorities

During the performance of this contract, the contractor, for itself, its assignees, and successors in interest (hereinafter referred to as the "contractor") agrees to comply with the following non-discrimination statutes and authorities; including but not limited to:

- Title VI of the Civil Rights Act of 1964 (42 U.S.C. § 2000d *et seq*., 78 stat. 252), (prohibits discrimination on the basis of race, color, national origin); and 49 CFR Part 21;
- The Uniform Relocation Assistance and Real Property Acquisition Policies Act of 1970, (42 U.S.C. § 4601), (prohibits unfair treatment of persons displaced or whose property has been acquired because of Federal or Federal-aid programs and projects);
- Federal-Aid Highway Act of 1973, (23 U.S.C. § 324 *et seq*.), (prohibits discrimination on the basis of sex);
- Section 504 of the Rehabilitation Act of 1973, (29 U.S.C. § 794 *et seq*.), as amended, (prohibits discrimination on the basis of disability); and 49 CFR Part 27;
- The Age Discrimination Act of 1975, as amended, (42 U.S.C. § 6101 *et seq*.), (prohibits discrimination on the basis of age);
- Airport and Airway Improvement Act of 1982, (49 USC § 471, Section 47123), as amended, (prohibits discrimination based on race, creed, color, national origin, or sex);
- The Civil Rights Restoration Act of 1987, (PL 100-209), (Broadened the scope, coverage and applicability of Title VI of the Civil Rights Act of 1964, The Age Discrimination Act of 1975 and Section 504 of the Rehabilitation Act of 1973, by expanding the definition of the terms "programs or activities" to include all of the programs or activities of the Federal-aid recipients, sub-recipients and contractors, whether such programs or activities are Federally funded or not);
- Titles II and III of the Americans with Disabilities Act, which prohibit discrimination on the basis of disability in the operation of public entities, public and private transportation systems, places of public accommodation, and certain testing entities (42 U.S.C. §§ 12131 -- 12189) as implemented by Department of Transportation regulations at 49 C.F.R. parts 37 and 38;
- The Federal Aviation Administration's Non-discrimination statute (49 U.S.C. § 47123) (prohibits discrimination on the basis of race, color, national origin, and sex);
- Executive Order 12898, Federal Actions to Address Environmental Justice in Minority Populations and Low-Income Populations, which ensures non-discrimination against minority populations by discouraging programs, policies, and activities with disproportionately high and adverse human health or environmental effects on minority and low-income populations;
- Executive Order 13166, Improving Access to Services for Persons with Limited English Proficiency, and resulting agency guidance, national origin discrimination includes discrimination because of limited English proficiency (LEP). To ensure compliance with Title VI, you must take reasonable steps to ensure that LEP persons have meaningful access to your programs (70 Fed. Reg. at 74087 to 74100);
- Title IX of the Education Amendments of 1972, as amended, which prohibits you from discriminating because of sex in education programs or activities (20 U.S.C. 1681 et seq).

EXECUTIVE BRANCH CODE OF ETHICS

In the 1992 regular legislative session, the General Assembly passed and Governor Brereton Jones signed Senate Bill 63 (codified as KRS 11A), the Executive Branch Code of Ethics, which states, in part:

> KRS 11A.040 (7) provides:
>
> No present or former public servant shall, within six (6) months following termination of his office or employment, accept employment, compensation, or other economic benefit from any person or business that contracts or does business with, or is regulated by, the state in matters in which he was directly involved during the last thirty-six (36) months of his tenure. This provision shall not prohibit an individual from returning to the same business, firm, occupation, or profession in which he was involved prior to taking office or beginning his term of employment, or for which he received, prior to his state employment, a professional degree or license, provided that, for a period of six (6) months, he personally refrains from working on any matter in which he was directly involved during the last thirty-six (36) months of his tenure in state government. This subsection shall not prohibit the performance of ministerial functions, including but not limited to filing tax returns, filing applications for permits or licenses, or filing incorporation papers, nor shall it prohibit the former officer or public servant from receiving public funds disbursed through entitlement programs.
>
> KRS 11A.040 (9) states:
>
> A former public servant shall not represent a person or business before a state agency in a matter in which the former public servant was directly involved during the last thirty-six (36) months of his tenure, for a period of one (1) year after the latter of:
>
> a) The date of leaving office or termination of employment; or
> b) The date the term of office expires to which the public servant was elected.

This law is intended to promote public confidence in the integrity of state government and to declare as public policy the idea that state employees should view their work as a public trust and not as a way to obtain private benefits.

If you have worked for the executive branch of state government within the past six months, you may be subject to the law's prohibitions. The law's applicability may be different if you hold elected office or are contemplating representation of another before a state agency.

Also, if you are affiliated with a firm which does business with the state and which employs former state executive-branch employees, you should be aware that the law may apply to them.

In case of doubt, the law permits you to request an advisory opinion from the Executive Branch Ethics Commission, 3 Fountain Place, Frankfort, Kentucky 40601; telephone (502) 564-7954.

Revised: January 27, 2017

"General Decision Number: KY20210107 01/01/2021

Superseded General Decision Number: KY20200107

State: Kentucky

Construction Type: Highway

Counties: Adair, Barren, Bell, Breathitt, Casey, Clay, Clinton, Cumberland, Estill, Floyd, Garrard, Green, Harlan, Hart, Jackson, Johnson, Knott, Knox, Laurel, Lawrence, Lee, Leslie, Letcher, Lincoln, Magoffin, Martin, McCreary, Menifee, Metcalfe, Monroe, Morgan, Owsley, Perry, Pike, Powell, Pulaski, Rockcastle, Russell, Taylor, Wayne, Whitley and Wolfe Counties in Kentucky.

HIGHWAY CONSTRUCTION PROJECTS

Note: Under Executive Order (EO) 13658, an hourly minimum wage of $10.95 for calendar year 2021 applies to all contracts subject to the Davis-Bacon Act for which the contract is awarded (and any solicitation was issued) on or after January 1, 2015. If this contract is covered by the EO, the contractor must pay all workers in any classification listed on this wage determination at least $10.95 per hour (or the applicable wage rate listed on this wage determination, if it is higher) for all hours spent performing on the contract in calendar year 2021. If this contract is covered by the EO and a classification considered necessary for performance of work on the contract does not appear on this wage determination, the contractor must pay workers in that classification at least the wage rate determined through the conformance process set forth in 29 CFR 5.5(a)(1)(ii) (or the EO minimum wage rate, if it is higher than the conformed wage rate). The EO minimum wage rate will be adjusted annually. Please note that this EO applies to the above-mentioned types of contracts entered into by the federal government that are subject to the Davis-Bacon Act itself, but it does not apply to contracts subject only to the Davis-Bacon Related Acts, including those set forth at 29 CFR 5.1(a)(2)-(60). Additional information on contractor requirements and worker protections under the EO is available at www.dol.gov/whd/govcontracts.

Modification Number	Publication Date
0	01/01/2021

SUKY2015-047 10/20/2015

	Rates	Fringes
BOILERMAKER.....	$ 24.65	12.94

BRICKLAYER
Bricklayer.....$ 22.90 8.50
Stone Mason.....$ 21.50 8.50

CARPENTER
Carpenter.....$ 24.90 14.50
Piledriver.....$ 24.55 14.50

CEMENT MASON.....$ 21.25 8.50

ELECTRICIAN
Electrician.....$ 29.36 10.55
Equipment Operator.....$ 26.90 10.31
Groundsman.....$ 17.79 8.51
Lineman.....$ 30.09 10.94

When workmen are required to work from bosum chairs, trusses, stacks, tanks, scaffolds, catwalks, radio and T.V. towers, structural steel (open, unprotected, unfloored raw steel), and bridges or similar hazardous locations where workmen are subject to fall, except where using JLG's and bucket trucks up to 75 feet: Add 25% to workman's base rate for 50 to 75 feet, and add 50% to workman's base rate for over 75 feet.

IRONWORKER.....$ 27.56 20.57

LABORER
Group 1.....$ 21.80 12.36
Group 2.....$ 22.05 12.36
Group 3.....$ 22.10 12.36
Group 4.....$ 22.70 12.36

GROUP 1: Aging and Curing of Concrete (Any Mode or Method), Asbestos Abatement Worker, Asphalt Plant Laborers, Asphalt Laborers, Batch Truck Dumpers, Carpenter Tenders, Cement Mason Tenders, Cleaning of Machines, Concrete Laborers, Demolition Laborers, Dredging Laborers, Drill Tender, Environmental Laborer - Nuclear, Radiation, Toxic and Hazardous Waste - Level D, Flagmen, Grade Checkers, All Hand Digging and Hand Back Filling, Highway Marker Placers, Landscaping Laborers, Mesh Handlers and Placers, Puddler, Railroad Laborers, Rip-rap and Grouters, Right of Way Laborers, Sign, Guard Rail and Fence Installers (All Types), Signalmen, Sound Barrier Installer, Storm and Sanitary Sewer Laborers, Swampers, Truck Spotters and Dumpers, Wrecking of Concrete Forms, General Cleanup

GROUP 2: Batter Board Men (Sanitary and Storm Sewer), Brickmason Tenders, Mortar Mixer Operator, Scaffold Builders, Burner and Welder, Bushammers, Chain Saw Operator, Concrete Saw Operators, Deckhand Scow Man, Dry Cement Handlers, Environmental Laborers - Nuclear, Radiation, Toxic and Hazardous Waste - Level C, Forklift Operators for Masonry, Form Setters, Green Concrete Cutting, Hand Operated Grouter and Grinder Machine Operator, Jack Hammers, Lead Paint Abatement, Pavement Breakers, Paving Joint Machine, Pipe Layers - Laser Operators (Non-metallic), Plastic Pipe Fusion, Power Driven Georgia Buggy and Wheel Barrow, Power Post Hole Diggers, Precast Manhole Setters, Walk-behind Tampers, Walk-behind Trenchers, Sand Blasters, Concrete Chippers, Surface Grinders, Vibrator Operators, Wagon Drillers

GROUP 3: Air Track Driller (All Types), Asphalt Luteman and Rakers, Gunnite Nozzleman, Gunnite Operators and Mixers, Grout

Pump Operator, Powderman and Blaster, Side Rail Setters, Rail Paved Ditches, Screw Operators, Tunnel Laborers (Free Air), Water Blasters

GROUP 4: Caisson Workers (Free Air), Cement Finishers, Environmental Laborer - Nuclear, Radiation, Toxic and Hazardous Waste - Level A and B, miners and Drillers (Free Air), Tunnel Blasters, and Tunnel Mockers (Free Air), Directional and Horizontal Boring, Air Track Drillers (All Types), Powder Man and Blasters, Troxler and Concrete Tester if Laborer is Utilized

PAINTER
All Excluding Bridges.....$ 19.92 9.57
Bridges.....$ 23.92 10.07

PLUMBER.....$ 22.52 7.80

POWER EQUIPMENT OPERATOR:
Group 1.....$ 29.95 14.40
Group 2.....$ 29.95 14.40
Group 3.....$ 27.26 14.40
Group 4.....$ 26.96 14.40

GROUP 1: Auto Patrol, Batcher Plant, Bituminous Paver, Cable-Way, Clamshell, Concrete Mixer (21 cu ft or over), Concrete Pump, Crane, Crusher Plant, Derrick, Derrick Boat, Ditching and Trenching Machine, Dragline, Dredge Engineer, Elevator (regardless of ownership when used for hoisting any building material), Elevating Grader and all types of Loaders, Hoe-type Machine, Hoisting Engine, Locomotive, LeTourneau or Carry-all Scoop, Bulldozer, Mechanic, Orangepeel Bucket, Piledriver, Power Blade, Roller (Bituminous), Roller (Earth), Roller (Rock), Scarifier, Shovel, Tractor Shovel, Truck Crane, Well Point, Winch Truck, Push Dozer, Grout Pump, High Lift, Fork Lift (regardless of lift height), all types of Boom Cats, Multiple Operator, Core Drill, Tow or Push Boat, A-Frame Winch Truck, Concrete Paver, Grade-All, Hoist, Hyster, Material Pump, Pumpcrete, Ross Carrier, Sheepfoot, Sideboom, Throttle-Valve Man, Rotary Drill, Power Generator, Mucking Machine, Rock Spreader attached to Equipment, Scoopmobile, KeCal Loader, Tower Cranes,(French, German and other types), Hydrocrane, Tugger, Backfiller Gurries, Self-propelled Compactor, Self-Contained Hydraulic Percussion Drill

GROUP 2: All Air Compressors (200 cu ft/min or greater), Bituminous Mixer, Concrete Mixer (21 cu. ft. or over), Welding Machine, Form Grader, Tractor (50 hp and over), Bull Float, Finish Machine, Outboard Motor Boat, Brakeman, Mechanic Tender, Whirly Oiler, Tract-air, Road Widening Trencher, Articulating Trucks

GROUP 3: Greaser on Grease Facilities servicing Heavy Equipment

GROUP 4: Bituminous Distributor, Cement Gun, Conveyor, Mud Jack, Paving Joint Machine, Pump, Tamping Machine, Tractor (under 50 hp), Vibrator, Oiler, Air Compressor (under 200 cu ft per minute), Concrete Saw, Burlap and Curing Machine, Hydro Seeder, Power Form Handling Equipment, Deckhand Oiler, Hydraulic Post Driver

SHEET METAL WORKER.....$ 20.40 7.80

```
TRUCK DRIVER
     Driver (3 Tons and Over),
     Driver (Truck Mounted
     Rotary Drill)...............$ 23.74           14.50
     Driver (3 Tons and Under),
     Tire Changer and Truck
     Mechanic Tender.............$ 23.53           14.50
     Driver (Semi-Trailer or
     Pole Trailer), Driver
     (Dump Truck, Tandem Axle),
     Driver of Distributor.......$ 23.40           14.50
     Driver on Mixer Trucks
     (All Types).................$ 23.45           14.50
     Driver on Pavement Breakers.$ 23.55           14.50
     Driver, Euclid and Other
     Heavy Earth Moving
     Equipment and Low Boy.......$ 24.31           14.50
     Driver, Winch Truck and A-
     Frame when used in
     Transporting Materials......$ 23.30           14.50
     Greaser on Greasing
     Facilities..................$ 24.40           14.50
     Truck Mechanic..............$ 23.50           14.50
     Truck Tender and
     Warehouseman................$ 23.20           14.50
----------------------------------------------------------------

WELDERS - Receive rate prescribed for craft performing
operation to which welding is incidental.

================================================================

Note: Executive Order (EO) 13706, Establishing Paid Sick Leave
for Federal Contractors applies to all contracts subject to the
Davis-Bacon Act for which the contract is awarded (and any
solicitation was issued) on or after January 1, 2017.  If this
contract is covered by the EO, the contractor must provide
employees with 1 hour of paid sick leave for every 30 hours
they work, up to 56 hours of paid sick leave each year.
Employees must be permitted to use paid sick leave for their
own illness, injury or other health-related needs, including
preventive care; to assist a family member (or person who is
like family to the employee) who is ill, injured, or has other
health-related needs, including preventive care; or for reasons
resulting from, or to assist a family member (or person who is
like family to the employee) who is a victim of, domestic
violence, sexual assault, or stalking.  Additional information
on contractor requirements and worker protections under the EO
is available at www.dol.gov/whd/govcontracts.

Unlisted classifications needed for work not included within
the scope of the classifications listed may be added after
award only as provided in the labor standards contract clauses
(29CFR 5.5 (a) (1) (ii)).


----------------------------------------------------------------


The body of each wage determination lists the classification
and wage rates that have been found to be prevailing for the
```

cited type(s) of construction in the area covered by the wage determination. The classifications are listed in alphabetical order of ""identifiers"" that indicate whether the particular rate is a union rate (current union negotiated rate for local), a survey rate (weighted average rate) or a union average rate (weighted union average rate).

Union Rate Identifiers

A four letter classification abbreviation identifier enclosed in dotted lines beginning with characters other than ""SU"" or ""UAVG"" denotes that the union classification and rate were prevailing for that classification in the survey. Example: PLUM0198-005 07/01/2014. PLUM is an abbreviation identifier of the union which prevailed in the survey for this classification, which in this example would be Plumbers. 0198 indicates the local union number or district council number where applicable, i.e., Plumbers Local 0198. The next number, 005 in the example, is an internal number used in processing the wage determination. 07/01/2014 is the effective date of the most current negotiated rate, which in this example is July 1, 2014.

Union prevailing wage rates are updated to reflect all rate changes in the collective bargaining agreement (CBA) governing this classification and rate.

Survey Rate Identifiers

Classifications listed under the ""SU"" identifier indicate that no one rate prevailed for this classification in the survey and the published rate is derived by computing a weighted average rate based on all the rates reported in the survey for that classification. As this weighted average rate includes all rates reported in the survey, it may include both union and non-union rates. Example: SULA2012-007 5/13/2014. SU indicates the rates are survey rates based on a weighted average calculation of rates and are not majority rates. LA indicates the State of Louisiana. 2012 is the year of survey on which these classifications and rates are based. The next number, 007 in the example, is an internal number used in producing the wage determination. 5/13/2014 indicates the survey completion date for the classifications and rates under that identifier.

Survey wage rates are not updated and remain in effect until a new survey is conducted.

Union Average Rate Identifiers

Classification(s) listed under the UAVG identifier indicate that no single majority rate prevailed for those classifications; however, 100% of the data reported for the classifications was union data. EXAMPLE: UAVG-OH-0010 08/29/2014. UAVG indicates that the rate is a weighted union average rate. OH indicates the state. The next number, 0010 in the example, is an internal number used in producing the wage determination. 08/29/2014 indicates the survey completion date for the classifications and rates under that identifier.

A UAVG rate will be updated once a year, usually in January of each year, to reflect a weighted average of the current negotiated/CBA rate of the union locals from which the rate is

based.

WAGE DETERMINATION APPEALS PROCESS

1.) Has there been an initial decision in the matter? This can be:

* an existing published wage determination
* a survey underlying a wage determination
* a Wage and Hour Division letter setting forth a position on a wage determination matter
* a conformance (additional classification and rate) ruling

On survey related matters, initial contact, including requests for summaries of surveys, should be with the Wage and Hour Regional Office for the area in which the survey was conducted because those Regional Offices have responsibility for the Davis-Bacon survey program. If the response from this initial contact is not satisfactory, then the process described in 2.) and 3.) should be followed.

With regard to any other matter not yet ripe for the formal process described here, initial contact should be with the Branch of Construction Wage Determinations. Write to:

Branch of Construction Wage Determinations
Wage and Hour Division
U.S. Department of Labor
200 Constitution Avenue, N.W.
Washington, DC 20210

2.) If the answer to the question in 1.) is yes, then an interested party (those affected by the action) can request review and reconsideration from the Wage and Hour Administrator (See 29 CFR Part 1.8 and 29 CFR Part 7). Write to:

Wage and Hour Administrator
U.S. Department of Labor
200 Constitution Avenue, N.W.
Washington, DC 20210

The request should be accompanied by a full statement of the interested party's position and by any information (wage payment data, project description, area practice material, etc.) that the requestor considers relevant to the issue.

3.) If the decision of the Administrator is not favorable, an interested party may appeal directly to the Administrative Review Board (formerly the Wage Appeals Board). Write to:

Administrative Review Board
U.S. Department of Labor
200 Constitution Avenue, N.W.
Washington, DC 20210

4.) All decisions by the Administrative Review Board are final.

==========

END OF GENERAL DECISION

"

Fringe benefit amounts are applicable for all hours worked except when otherwise noted.

No laborer, workman or mechanic shall be paid at a rate less than that of a Journeyman except those classified as bona fide apprentices.

Apprentices or trainees shall be permitted to work as such subject to Administrative Regulations adopted by the Commissioner of Workplace Standards. Copies of these regulations will be furnished upon request from any interested person.

Before using apprentices on the job the contractor shall present to the Contracting Officer written evidence of registration of such employees in a program of a State apprenticeship and training agency approved and recognized by the U. S. Bureau of Apprenticeship and Training. In the absence of such a State agency, the contractor shall submit evidence of approval and registration by the U. S. Bureau of Apprenticeship and Training.

The contractor shall submit to the Contracting Officer, written evidence of the established apprenticeship-journeyman ratios and wage rates in the project area, which will be the basis for establishing such ratios and rates for the project under the applicable contract provisions.

TO: EMPLOYERS/EMPLOYEES

PREVAILING WAGE SCHEDULE:

The wages indicated on this wage schedule are the least permitted to be paid for the occupations indicated. When an employee works in more than one classification, the employer must record the number of hours worked in each classification at the prescribed hourly base rate.

OVERTIME:

Overtime is to be paid to an employee at a rate not less than one and one-half times the basic rate of pay for all hours worked in excess of forty (40) hours in such workweek. Wage violations or questions should be directed to the designated Engineer or the undersigned.

Director
Division of Construction Procurement
Frankfort, Kentucky 40622
502-564-3500

NOTICE OF REQUIREMENT FOR AFFIRMATIVE ACTION TO ENSURE EQUAL EMPLOYMENT OPPORTUNITY (Executive Order 11246)

1. The Offeror's or Bidder's attention is called to the "Equal Opportunity Clause" and the "Standard Federal Equal Employment Specifications" set forth herein.

2. The goals and timetables for minority and female participation, expressed in percentage terms for the Contractor's aggregate work force in each trade on all construction work in the covered area, are as follows:

GOALS FOR MINORITY PARTICIPATION IN EACH TRADE	GOALS FOR FEMALE PARTICIPATION IN EACH TRADE
7.0%	6.9%

These goals are applicable to all the Contractor's construction work (whether or not it is Federal or federally-assisted) performed in the covered area. If the contractor performs construction work in a geographical area located outside of the covered area, it shall apply the goals established for such geographical area where the work is actually performed. With regard to this second area, the contractor also is subject to the goals for both its federally involved and non-federally involved construction.

The Contractor's compliance with the Executive Order and the regulations in CFR Part 60-4 shall be based on its implementation of the Equal Opportunity Clause, specific affirmative action obligations required by the specifications set forth in 41 CFR 60-4, 3(a), and its efforts to meet the goals. The hours of minority and female employment and training must be substantially uniform throughout the length of the contract, and in each trade, and the contractor shall make a good faith effort to employ minorities and women evenly on each of its projects. The transfer of minority or female employees or trainees from Contractor to Contractor or from project to project for the sole purpose of meeting the Contractor's goals shall be a violation of the contract, the Executive Order and the regulations in 41 CFR Part 60-4. Compliance with the goals will be measured against the total work hours performed.

3. The Contractor shall provide written notification to the Director of the Office of Federal Contract Compliance Programs within ten (10) working days of award of any construction subcontract in excess of $10,000.00 at any tier for construction work under the contract resulting from this solicitation. The notification shall list the name, address and telephone number of the subcontractor; employer identification number of the subcontractor; estimated dollar amount of the subcontract; estimated starting and completion dates of the subcontract; and the geographical area in which the subcontract is to be performed. The notification shall be mailed to:

Evelyn Teague, Regional Director
Office of Federal Contract Compliance Programs
61 Forsyth Street, SW, Suite 7B75
Atlanta, Georgia 30303-8609

4. As used in this Notice, and in the contract resulting from this solicitation, the **"covered area"** is Letcher County.

PART IV

INSURANCE

Refer to
Kentucky Standard Specifications for Road and Bridge Construction,
current edition

PART V

BID ITEMS

215182

PROPOSAL BID ITEMS

Report Date 2/25/21

Section: 0001 - BRIDGE - 067C00091N

LINE	BID CODE	ALT	DESCRIPTION	QUANTITY	UNIT	UNIT PRIC	FP	AMOUNT
0010	00001		DGA BASE	117.00	TON		$	
0020	00212		CL2 ASPH BASE 1.00D PG64-22	112.00	TON		$	
0030	00301		CL2 ASPH SURF 0.38D PG64-22	18.00	TON		$	
0040	00356		ASPHALT MATERIAL FOR TACK	.40	TON		$	
0050	00440		ENTRANCE PIPE-15 IN	52.00	LF		$	
0060	01987		DELINEATOR FOR GUARDRAIL BI DIRECTIONAL WHITE	8.00	EACH		$	
0070	02223		GRANULAR EMBANKMENT	28.00	CUYD		$	
0080	02230		EMBANKMENT IN PLACE	647.00	CUYD		$	
0090	02351		GUARDRAIL-STEEL W BEAM-S FACE	300.00	LF		$	
0100	02360		GUARDRAIL TERMINAL SECTION NO 1	3.00	EACH		$	
0110	02371		GUARDRAIL END TREATMENT TYPE 7	1.00	EACH		$	
0120	02399		EXTRA LENGTH GUARDRAIL POST	32.00	EACH		$	
0130	02484		CHANNEL LINING CLASS III	331.00	TON		$	
0140	02545		CLEARING AND GRUBBING Less than 1 acre	1.00	LS		$	
0150	02650		MAINTAIN & CONTROL TRAFFIC	1.00	LS		$	
0160	02671		PORTABLE CHANGEABLE MESSAGE SIGN	2.00	EACH		$	
0170	02726		STAKING	1.00	LS		$	
0180	02731		REMOVE STRUCTURE	1.00	LS		$	
0190	03299		ARMORED EDGE FOR CONCRETE	33.10	LF		$	
0200	05950		EROSION CONTROL BLANKET	83.00	SQYD		$	
0210	08002		STRUCTURE EXCAV-SOLID ROCK	64.60	CUYD		$	
0220	08003		FOUNDATION PREPARATION	1.00	LS		$	
0230	08019		CYCLOPEAN STONE RIP RAP	436.00	TON		$	
0240	08033		TEST PILES	40.00	LF		$	
0250	08046		PILES-STEEL HP12X53	60.60	LF		$	
0260	08094		PILE POINTS-12 IN	6.00	EACH		$	
0270	08100		CONCRETE-CLASS A	117.00	CUYD		$	
0280	08104		CONCRETE-CLASS AA	35.70	CUYD		$	
0290	08150		STEEL REINFORCEMENT	11,328.00	LB		$	
0300	08151		STEEL REINFORCEMENT-EPOXY COATED	7,880.00	LB		$	
0310	08662		PRECAST PC BOX BEAM CB17-48	501.30	LF		$	
0320	21415ND		EROSION CONTROL	1.00	LS		$	
0330	23378EC		CONCRETE SEALING	3,260.00	SQFT		$	
0340	25017ED		RAIL SYSTEM SIDE MOUNTED MGS	237.50	LF		$	

Section: 0002 - DEMOBILIZATION &/OR MOBILIZATION

LINE	BID CODE	ALT	DESCRIPTION	QUANTITY	UNIT	UNIT PRIC	FP	AMOUNT
0350	02569		DEMOBILIZATION	1.00	LS		$	