CALL NO. 107

CONTRACT ID. 232993

CAMPBELL COUNTY

FED/STATE PROJECT NUMBER BRX 0272 (122)

DESCRIPTION TAYLOR SOUTHGATE BRIDGE (US 27)

WORK TYPE BRIDGE REPAIR MISCELLANEOUS WORK

PRIMARY COMPLETION DATE 7/1/2024

LETTING DATE: September 28,2023

Sealed Bids will be received electronically through the Bid Express bidding service until 10:00 AM EASTERN DAYLIGHT TIME September 28,2023. Bids will be publicly announced at 10:00 AM EASTERN DAYLIGHT TIME.

NO PLANS ASSOCIATED WITH THIS PROJECT.

DBE CERTIFICATION REQUIRED - 0%

REQUIRED BID PROPOSAL GUARANTY: Not less than 5% of the total bid.

TABLE OF CONTENTS

PART I SCOPE OF WORK
- PROJECT(S), COMPLETION DATE(S), & LIQUIDATED DAMAGES
- CONTRACT NOTES
- FEDERAL CONTRACT NOTES
- SPECIAL NOTE(S) APPLICABLE TO PROJECT
- RIGHT OF WAY CERTIFICATION
- UTILITY IMPACT & RAIL CERTIFICATION NOTES
- PERMIT(S)
- BRIDGE DRAWINGS

PART II SPECIFICATIONS AND STANDARD DRAWINGS
- STANDARD AND SUPPLEMENTAL SPECIFICATIONS

PART III EMPLOYMENT, WAGE AND RECORD REQUIREMENTS
- FEDERAL-AID CONSTRUCTION CONTRACTS - FHWA 1273
- NONDISCRIMINATION OF EMPLOYEES
- EXECUTIVE BRANCH CODE OF ETHICS
- PROJECT WAGE RATES LOCALITY 4 / FEDERAL
- PROJECT WAGE RATES (HEAVY)
- NOTICE OF REQUIREMENT FOR AFFIRMATIVE ACTION TO ENSURE EEO CAMPBELL

PART IV INSURANCE

PART V BID ITEMS

PART I

SCOPE OF WORK

ADMINISTRATIVE DISTRICT - 06

CONTRACT ID - 232993

BRX 0272 (122)

COUNTY - CAMPBELL

PCN - MB01900272301
BRX 0272 (122)

TAYLOR SOUTHGATE BRIDGE (US 27) BRIDGE 019B00076N OVER OHIO RIVER AT MP 22.58BRIDGE REPAIR MISCELLANEOUS WORK SYP NO. 06-10007.00.

GEOGRAPHIC COORDINATES LATITUDE 39:05:46.00 LONGITUDE 84:30:05.00

ADT

COMPLETION DATE(S):

COMPLETED BY 07/01/2024 APPLIES TO ENTIRE CONTRACT

CONTRACT NOTES

PROPOSAL ADDENDA

All addenda to this proposal must be applied when calculating bid and certified in the bid packet submitted to the Kentucky Department of Highways. Failure to use the correct and most recent addenda may result in the bid being rejected.

BID SUBMITTAL

Bidder must use the Department's electronic bidding software. The Bidder must download the bid file located on the Bid Express website (www.bidx.com) to prepare a bid packet for submission to the Department. The bidder must submit electronically using Bid Express.

JOINT VENTURE BIDDING

Joint venture bidding is permissible. All companies in the joint venture must be prequalified in one of the work types in the Qualifications for Bidders for the project. The bidders must get a vendor ID for the joint venture from the Division of Construction Procurement and register the joint venture as a bidder on the project. Also, the joint venture must obtain a digital ID from Bid Express to submit a bid. A joint bid bond of 5% may be submitted for both companies or each company may submit a separate bond of 5%.

UNDERGROUND FACILITY DAMAGE PROTECTION

The contractor shall make every effort to protect underground facilities from damage as prescribed in the Underground Facility Damage Protection Act of 1994, Kentucky Revised Statute KRS 367.4901 to 367.4917. It is the contractor's responsibility to determine and take steps necessary to be in compliance with federal and state damage prevention directives. When prescribed in said directives, the contractor shall submit Excavation Locate Requests to the Kentucky Contact Center (KY811) via web ticket entry. The submission of this request does not relieve the contractor from the responsibility of contacting non-member facility owners, whom shall be contacted through their individual Protection Notification Center. Non-compliance with these directives can result in the enforcement of penalties.

REGISTRATION WITH THE SECRETARY OF STATE BY A FOREIGN ENTITY

Pursuant to KRS 176.085(1)(b), an agency, department, office, or political subdivision of the Commonwealth of Kentucky shall not award a state contract to a person that is a foreign entity required by KRS 14A.9-010 to obtain a certificate of authority to transact business in the Commonwealth ("certificate") from the Secretary of State under KRS 14A.9-030 unless the person produces the certificate within fourteen (14) days of the bid or proposal opening. If the foreign entity is not required to obtain a certificate as provided in KRS 14A.9-010, the foreign entity should identify the applicable exception. Foreign entity is defined within KRS 14A.1-070.

For all foreign entities required to obtain a certificate of authority to transact business in the Commonwealth, if a copy of the certificate is not received by the contracting agency within the time frame identified above, the foreign entity's solicitation response shall be deemed non-responsive or the awarded contract shall be cancelled.

Businesses can register with the Secretary of State at https://secure.kentucky.gov/sos/ftbr/welcome.aspx .

SPECIAL NOTE FOR PROJECT QUESTIONS DURING ADVERTISEMENT

Questions about projects during the advertisement should be submitted in writing to the Division of Construction Procurement. This may be done by fax (502) 564-7299 or email to kytc.projectquestions@ky.gov. The Department will attempt to answer all submitted questions. The Department reserves the right not to answer if the question is not pertinent or does not aid in clarifying the project intent.

The deadline for posting answers will be 3:00 pm Eastern Daylight Time, the day preceding the Letting. Questions may be submitted until this deadline with the understanding that the later a question is submitted, the less likely an answer will be able to be provided.

The questions and answers will be posted for each Letting under the heading "Questions & Answers" on the Construction Procurement website (www.transportation.ky.gov/contract). The answers provided shall be considered part of this Special Note and, in case of a discrepancy, will govern over all other bidding documents.

HARDWOOD REMOVAL RESTRICTIONS

The US Department of Agriculture has imposed a quarantine in Kentucky and several surrounding states, to prevent the spread of an invasive insect, the emerald ash borer. Hardwood cut in conjunction with the project may not be removed from the state. Chipping or burning on site is the preferred method of disposal.

INSTRUCTIONS FOR EXCESS MATERIAL SITES AND BORROW SITES

Identification of excess material sites and borrow sites shall be the responsibility of the Contractor. The Contractor shall be responsible for compliance with all applicable state and federal laws and may wish to consult with the US Fish and Wildlife Service to seek protection under Section 10 of the Endangered Species Act for these activities.

ACCESS TO RECORDS

The contractor, as defined in KRS 45A.030 (9) agrees that the contracting agency, the Finance and Administration Cabinet, the Auditor of Public Accounts, and the Legislative Research Commission, or their duly authorized representatives, shall have access to any books, documents, papers, records, or other evidence, which are directly pertinent to this contract for the purpose of financial audit or program review. Records and other prequalification information confidentially

disclosed as part of the bid process shall not be deemed as directly pertinent to the contract and shall be exempt from disclosure as provided in KRS 61.878(1)(c). The contractor also recognizes that any books, documents, papers, records, or other evidence, received during a financial audit or program review shall be subject to the Kentucky Open Records Act, KRS 61.870 to 61.884.

In the event of a dispute between the contractor and the contracting agency, Attorney General, or the Auditor of Public Accounts over documents that are eligible for production and review, the Finance and Administration Cabinet shall review the dispute and issue a determination, in accordance with Secretary's Order 11-004.

BUILD AMERICA, BUY AMERICA ACT (BABA)

On November 15, 2021, President Biden signed into law the Infrastructure Investment and Jobs Act (IIJA), Pub. L. No. 117-58, includes the Build America, Buy America Act ("the Act"). Pub. L. No. 117-58, §§70901-52. The Act strengthens the Buy America preference to include "construction materials." The current temporary waiver for **"construction materials"** will expire on November 10, 2022.

The Act will apply to construction materials as outlined in the guidance issued in OMB M-22-11.

Construction Materials – Includes an article, material, or supply – other than an item of primarily iron or steel; a manufactured product; cement and cementitious materials; aggregates such as stone, sand, or gravel; or aggregate binding agents or additives – that is or consists primarily of:

- Non-ferrous metals
- Plastic/polymer-based products (including polyvinylchloride, composite building materials, and polymers used in fiber optic cables);
- Glass (including optic glass);
- Lumber; or
- Drywall.

Construction Materials only applies to items, materials, and supplies that are consumed in, incorporated into, or affixed to an infrastructure project.

Construction Materials does not apply to tools, equipment or supplies brought to the jobsite and removed before completion.

BOYCOTT PROVISIONS

If applicable, the contractor represents that, pursuant to KRS 45A.607, they are not currently engaged in, and will not for the duration of the contract engage in, the boycott of a person or an entity based in or doing business with a jurisdiction with which Kentucky can enjoy open trade. **Note:** The term Boycott does not include actions taken for bona fide business or economic reasons, or actions specifically required by federal or state law.

If applicable, the contractor verifies that, pursuant to KRS 41.480, they do not engage in, and will not for the duration of the contract engage in, in energy company boycotts as defined by KRS 41.472.

LOBBYING PROHIBITIONS

The contractor represents that they, and any subcontractor performing work under the contract, have not violated the agency restrictions contained in KRS 11A.236 during the previous ten (10) years, and pledges to abide by the restrictions set forth in such statute for the duration of the contract awarded.

The contractor further represents that, pursuant to KRS 45A.328, they have not procured an original, subsequent, or similar contract while employing an executive agency lobbyist who was convicted of a crime related to the original, subsequent, or similar contract within five (5) years of the conviction of the lobbyist.

FEDERAL CONTRACT NOTES

The Kentucky Department of Highways, in accordance with the Regulations of the United States Department of Transportation 23 CFR 635.112 (h), hereby notifies all bidders that failure by a bidder to comply with all applicable sections of the current Kentucky Standard Specifications, including, but not limited to the following, may result in a bid not being considered responsive and thus not eligible to be considered for award:

102.02 Current Rating
102.13 Irregular Bid Proposals
102.09 Proposal Guaranty
102.08 Preparation and Delivery of Proposals
102.14 Disqualification of Bidders

CIVIL RIGHTS ACT OF 1964

The Kentucky Transportation Cabinet, Department of Highways, in accordance with the provisions of Title VI of the Civil Rights Act of 1964 (78 Stat. 252, 42 U.S.C. §§ 2000d to 2000d-4) and the Regulations, hereby notifies all bidders that it will affirmatively ensure that any contract entered into pursuant to this advertisement, disadvantaged business enterprises will be afforded full and fair opportunity to submit bids in response to this invitation and will not be discriminated against on the grounds of race, color, national origin, sex, age (over 40), religion, sexual orientation, gender identity, veteran status, disability, income- level, or Limited English Proficiency (LEP)in consideration for an award.

NOTICE TO ALL BIDDERS

To report bid rigging activities call: 1-800-424-9071.

The U.S. Department of Transportation (DOT) operates the above toll-free "hotline" Monday through Friday, 8:00 a.m. to 5:00 p.m. eastern time. Anyone with knowledge of possible bid rigging, bidder collusion, or other fraudulent activities should use the "hotline" to report such activities.

The "hotline" is part of the DOT's continuing effort to identify and investigate highway construction contract fraud and abuse and is operated under the direction of the DOT Inspector General. All information will be treated confidentially and caller anonymity will be respected.

SECOND TIER SUBCONTRACTS

Second tier subcontracts are acceptable per Section 108.01 of the Standard Specifications for Road and Bridge Construction. Sub-Contractors fulfilling a disadvantaged business enterprise goal on a project may enter into a 2nd tier subcontract with a Non-DBE Subcontractor. However, in this instance, none of the work subcontracted to the Non-DBE Contractor will count toward fulfilling the established Disadvantaged Goal for the project.

DISADVANTAGED BUSINESS ENTERPRISE PROGRAM

It is the policy of the Kentucky Transportation Cabinet ("the Cabinet") that Disadvantaged Business Enterprises ("DBE") shall have the opportunity to participate in the performance of highway construction projects financed in whole or in part by Federal Funds in order to create a level playing field for all businesses who wish to contract with the Cabinet. To that end, the Cabinet will comply with the regulations found in 49 CFR Part 26, and the definitions and requirements contained therein shall be adopted as if set out verbatim herein.

The Cabinet, contractors, subcontractors, and sub-recipients shall not discriminate on the basis of race, color, national origin, or sex in the performance of work performed pursuant to Cabinet contracts. The contractor shall carry out applicable requirements of 49 CFR 26 in the award and administration of federally assisted highway construction projects. The contractor will include this provision in all its subcontracts and supply agreements pertaining to contracts with the Cabinet.

Failure by the contractor to carry out these requirements is a material breach of its contract with the Cabinet, which may result in the termination of the contract or such other remedy as the Cabinet deems necessary.

DBE GOAL

The Disadvantaged Business Enterprise (DBE) goal established for this contract, as listed on the front page of the proposal, is the percentage of the total value of the contract.

The contractor shall exercise all necessary and reasonable steps to ensure that Disadvantaged Business Enterprises participate in a least the percent of the contract as set forth above as goals for this contract.

OBLIGATION OF CONTRACTORS **[MRA(1]**

Each contractor prequalified to perform work on Cabinet projects shall designate and make known to the Cabinet a liaison officer who is assigned the responsibility of effectively administering and promoting an active program for utilization of DBEs.

If a formal goal has not been designated for the contract, all contractors are encouraged to consider DBEs for subcontract work as well as for the supply of material and services needed to perform this work.

Contractors are encouraged to use the services of banks owned and controlled by minorities and women.

CERTIFICATION OF CONTRACT GOAL

Contractors shall include the following certification in bids for projects for which a DBE goal has been established. BIDS SUBMITTED WHICH DO NOT INCLUDE CERTIFICATION OF DBE PARTICIPATION WILL NOT BE ACCEPTED. These bids will not be considered for award by the Cabinet and they will be returned to the bidder.

"The bidder certifies that it has secured participation by Disadvantaged Business Enterprises ("DBE") in the amount of_____percent of the total value of this contract and that the DBE participation is in compliance with the requirements of 49 CFR 26 and the policies of the Kentucky Transportation Cabinet pertaining to the DBE Program."

The certification statement is located in the electronic bid file. All contractors must certify their DBE participation on that page. DBEs utilized in achieving the DBE goal must be certified and prequalified for the work items at the time the bid is submitted.

DBE PARTICIPATION PLAN

Lowest responsive bidders must submit the *DBE Plan/ Subcontractor Request*, form TC 14-35 DBE, within 5 days of the letting. This is necessary before the Awards Committee will review and make a recommendation. **The project will not be considered for award prior to submission and approval of the apparent low bidder's DBE Plan/Subcontractor Request.**

The DBE Participation Plan shall include the following:

1. Name and address of DBE Subcontractor(s) and/or supplier(s) intended to be used in the proposed project;
2. Description of the work each is to perform including the work item, unit, quantity, unit price and total amount of the work to be performed by the individual DBE. The Proposal Line Number, Category Number, and the Project Line Number can be found in the "material listing" on the Construction Procurement website under the specific letting;
3. The dollar value of each proposed DBE subcontract and the percentage of total project contract value this represents. DBE participation may be counted as follows;
   a) If DBE suppliers and manufactures assume actual and contractual responsibility, the dollar value of materials to be furnished will be counted toward the goal as follows:
      - The entire expenditure paid to a DBE manufacturer;
      - 60 percent of expenditures to DBE suppliers that are not manufacturers provided the supplier is a regular dealer in the product involved. A regular dealer must be engaged in, as its principal business and in its own name, the sale of products to the public, maintain an inventory and own and operate distribution equipment; and
      - The amount of fees or commissions charged by the DBE firms for a bona fide service, such as professional, technical, consultant, or managerial services and assistance in the procurement of essential personnel, facilities, equipment, materials, supplies, delivery of materials and supplies or for furnishing bonds, or insurance, providing such fees or commissions are determined to be reasonable and customary.
   b) The dollar value of services provided by DBEs such as quality control testing, equipment repair and maintenance, engineering, staking, etc.;

c) The dollar value of joint ventures. DBE credit for joint ventures will be limited to the dollar amount of the work actually performed by the DBE in the joint venture;

4. Written and signed documentation of the bidder's commitment to use a DBE contractor whose participation is being utilized to meet the DBE goal; and
5. Written and signed confirmation from the DBE that it is participating in the contract as provided in the prime contractor's commitment.

AFTER PROJECT AWARD AND BEFORE NOTICE TO PROCEED/WORK ORDER IS ISSUED (SEE SECTION 103.06, STANDARD SPECIFICATIONS FOR ROAD AND BRIDGE CONSTRUCTION

Prime Contractors awarded a federally funded project with a DBE Goal greater than zero will be required to submit DBE Subcontract Agreement Form, TC 14-36, along with the attached FHWA 1273 and Certificate of Liability Insurance for each DBE Firm submitted as part of the previously approved DBE Utilization Plan (TC 14-35). A signed quote or purchase order shall be attached when the DBE subcontractor is a material supplier or broker.

The Certificate of Liability Insurance submitted must meet the requirements outlined in Section 107.18 of the Standard Specifications for Road and Bridge Construction.

Changes to ***APPROVED*** DBE Participation Plans must be approved by the Cabinet. The Cabinet may consider extenuating circumstances including, but not limited to, changes in the nature or scope of the project, the inability or unwillingness of a DBE to perform the work in accordance with the bid, and/or other circumstances beyond the control of the prime contractor.

CONSIDERATION OF GOOD FAITH EFFORTS REQUESTS

If the DBE participation submitted in the bid by the apparent lowest responsive bidder does not meet or exceed the DBE contract goal, the apparent lowest responsive bidder must submit a Good Faith Effort Package to satisfy the Cabinet that sufficient good faith efforts were made to meet the contract goals prior to submission of the bid. Efforts to increase the goal after bid submission will not be considered in justifying the good faith effort, unless the contractor can show that the proposed DBE was solicited prior to the letting date. DBEs utilized in achieving the DBE goal must be certified and prequalified for the work items at the time the bid is submitted. One complete set (hard copy along with an electronic copy) of this information must be received in the Division of Contract Procurement no later than 12:00 noon of the tenth calendar day after receipt of notification that they are the apparent low bidder.

Where the information submitted includes repetitious solicitation letters it will be acceptable to submit a sample representative letter along with a distribution list of the firms solicited. Documentation of DBE quotations shall be a part of the good faith effort submittal as necessary to demonstrate compliance with the factors listed below which the Cabinet considers in judging good faith efforts. This documentation may include written subcontractors' quotations, telephone log notations of verbal quotations, or other types of quotation documentation.

The Good Faith Effort Package shall include, but may not be limited to information showing evidence of the following:

1. Whether the bidder attended any pre-bid meetings that were scheduled by the Cabinet to inform DBEs of subcontracting opportunities;
2. Whether the bidder provided solicitations through all reasonable and available means;
3. Whether the bidder provided written notice to all DBEs listed in the DBE directory at the time of the letting who are prequalified in the areas of work that the bidder will be subcontracting;
4. Whether the bidder followed up initial solicitations of interest by contacting DBEs to determine with certainly whether they were interested. If a reasonable amount of DBEs within the targeted districts do not provide an intent to quote or no DBEs are prequalified in the subcontracted areas, the bidder must notify the Disadvantaged Enterprise Business Liaison Officer (DEBLO) in the Office for Civil Rights and Small Business Development to give notification of the bidder's inability to get DBE quotes;
5. Whether the bidder selected portions of the work to be performed by DBEs in order to increase the likelihood of meeting the contract goals. This includes, where appropriate, breaking out contract work items into economically feasible units to facilitate DBE participation, even when the prime contractor might otherwise perform these work items with its own forces;
6. Whether the bidder provided interested DBEs with adequate and timely information about the plans, specifications, and requirements of the contract;
7. Whether the bidder negotiated in good faith with interested DBEs not rejecting them as unqualified without sound reasons based on a thorough investigation of their capabilities. Any rejection should be so noted in writing with a description as to why an agreement could not be reached;
8. Whether quotations were received from interested DBE firms but were rejected as unacceptable without sound reasons why the quotations were considered unacceptable. The fact that the DBE firm's quotation for the work is not the lowest quotation received will not in itself be considered as a sound reason for rejecting the quotation as unacceptable. The fact that the bidder has the ability and/or desire to perform the contract work with its own forces will not be considered a sound reason for rejecting a DBE quote. Nothing in this provision shall be construed to require the bidder to accept unreasonable quotes in order to satisfy DBE goals;
9. Whether the bidder specifically negotiated with subcontractors to assume part of the responsibility to meet the contract DBE goal when the work to be subcontracted includes potential DBE participation;
10. Whether the bidder made any efforts and/or offered assistance to interested DBEs in obtaining the necessary equipment, supplies, materials, insurance and/or bonding to satisfy the work requirements of the bid proposal; and
11. Any other evidence that the bidder submits which may show that the bidder has made reasonable good faith efforts to include DBE participation.

FAILURE TO MEET GOOD FAITH REQUIREMENT

Where the apparent lowest responsive bidder fails to submit sufficient participation by DBE firms to meet the contract goal and upon a determination by the Good Faith Committee based upon the information submitted that the apparent lowest responsive bidder failed to make sufficient reasonable efforts to meet the contract goal, the bidder will be offered the opportunity to meet in person for administrative reconsideration. The bidder will be notified of the Committee's decision within 24 hours of its decision. The bidder will have 24 hours to request reconsideration of the Committee's decision. The reconsideration meeting will be held within two days of the receipt of a request by the bidder for reconsideration.

The request for reconsideration will be heard by the Office of the Secretary. The bidder will have the opportunity to present written documentation or argument concerning the issue of whether it met the goal or made an adequate good faith effort. The bidder will receive a written decision on the reconsideration explaining the basis for the finding that the bidder did or did not meet the goal or made adequate Good Faith efforts to do so.

The result of the reconsideration process is not administratively appealable to the Cabinet or to the United States Department of Transportation.

The Cabinet reserves the right to award the contract to the next lowest responsive bidder or to rebid the contract in the event that the contract is not awarded to the low bidder as the result of a failure to meet the good faith requirement.

SANCTIONS FOR FAILURE TO MEET DBE REQUIREMENTS OF THE PROJECT

Failure by the prime contractor to fulfill the DBE requirements of a project under contract or to demonstrate good faith efforts to meet the goal constitutes a breach of contract. When this occurs, the Cabinet will hold the prime contractor accountable, as would be the case with all other contract provisions. Therefore, the contractor's failure to carry out the DBE contract requirements shall constitute a breach of contract and as such the Cabinet reserves the right to exercise all administrative remedies at its disposal including, but not limited to the following:

- Suspension of Prequalification;
- Disallow credit toward the DBE goal;
- Withholding progress payments;
- Withholding payment to the prime in an amount equal to the unmet portion of the contract goal; and/or
- Termination of the contract.

PROMPT PAYMENT

The prime contractor will be required to pay the DBE and Non-DBE Subcontractors within seven (7) working days after he or she has received payment from the Kentucky Transportation Cabinet for work performed or materials furnished.

CONTRACTOR REPORTING

All contractors must keep detailed records and provide reports to the Cabinet on their progress in meeting the DBE requirement on any highway contract. These records may include, but shall not be limited to payroll, lease agreements, cancelled payroll checks, executed subcontracting agreements, etc. Prime contractors will be required to complete and submit a ***signed and notarized*** Affidavit of Subcontractor Payment (TC 18-7) and copies of checks for any monies paid to each DBE subcontractor or supplier utilized to meet a DBE goal. These documents must be completed and signed within 7 days of being paid by the Cabinet.

Payment information that needs to be reported includes date the payment is sent to the DBE, check number, Contract ID, amount of payment and the check date. Before Final Payment is made on this contract, the Prime Contractor will certify that all payments were made to the DBE subcontractor and/or DBE suppliers.

********* IMPORTANT *********

Please mail the original, signed and completed TC (18-7) Affidavit of Subcontractor Payment form and all copies of checks for payments listed above to the following address:

Office for Civil Rights and Small Business Development
6th Floor West 200 Mero Street
Frankfort, KY 40622

The prime contractor should notify the KYTC Office for Civil Rights and Small Business Development seven (7) days prior to DBE contractors commencing work on the project. The contact in this office is Mr. Melvin Bynes. Mr. Bynes' current contact information is email address – melvin.bynes2@ky.gov and the telephone number is (502) 564-3601.

DEFAULT OR DECERTIFICATION OF THE DBE

If the DBE subcontractor or supplier is decertified or defaults in the performance of its work, and the overall goal cannot be credited for the uncompleted work, the prime contractor may utilize a substitute DBE or elect to fulfill the DBE goal with another DBE on a different work item. If after exerting good faith effort in accordance with the Cabinet's Good Faith Effort policies and procedures, the prime contractor is unable to replace the DBE, then the unmet portion of the goal may be waived at the discretion of the Cabinet.

PROHIBITION ON TELECOMMUNICATIONS EQUIPMENT OR SERVICES

In accordance with the FY 2019 National Defense Authorization Act (NDAA), 2 CFR 200.216, and 2 CFR 200.471, Federal agencies are prohibited, after August 13, 2020, from obligating or expending financial assistance to obtain certain telecommunications and video surveillance services and equipment from specific producers. As a result of these regulations, contractors and subcontractors are prohibited, on projects with federal funding participation, from providing telecommunication or video surveillance equipment, services, or systems produced by:

- Huawei Technologies Company or ZTE Corporation (or any subsidiary or affiliate of such entities)
- Hytera Communications Corporation, Hangzhou Hikvision Digital Technology Company, or Dahua Technology Company (or any subsidiary or affiliate of such entities)

LEGAL REQUIREMENTS AND RESPONSIBILITY TO THE PUBLIC – CARGO PREFERENCE ACT (CPA).

(REV 12-17-15) (1-16)

SECTION 7 is expanded by the following new Article:

102.10 **Cargo Preference Act – Use of United States-flag vessels.**

Pursuant to Title 46CFR Part 381, the Contractor agrees

- To utilize privately owned United States-flag commercial vessels to ship at least 50 percent of the gross tonnage (computed separately for dry bulk carriers, dry cargo liners, and tankers) involved, whenever shipping any equipment, material, or commodities pursuant to this contract, to the extent such vessels are available at fair and reasonable rates for United States-flag commercial vessels.
- To furnish within 20 days following the date of loading for shipments originating within the United States or within 30 working days following the date of loading for shipments originating outside the United States, a legible copy of a rated, 'on-board' commercial ocean bill-of-lading in English for each shipment of cargo described in paragraph 1 of this section to both the Contracting Officer (through the prime contractor in the case of subcontractor bills-of-lading) and to the Division of National Cargo, Office of Market Development, Maritime Administration, Washington, DC 20590.
- To insert the substance of the provisions of this clause in all subcontracts issued pursuant to this contract.

SPECIAL NOTES
DISTRICT NO. 6
BRIDGE REPAIRS MISCELLANEOUS WORK
CAMPBELL COUNTY
BRX 0272 (122) SYP ITEM NUMBER 6-10007.00
CID 232993

FD52 019 0027 022-023
Campbell County ~ US 27 over Ohio River **Bridge 019B00076N**

Geographic Coordinates
Latitude 39° 05’ 46.00” (39.0961)
Longitude -84° 30’ 05.00” (-85.5014)

Description
2298’ 3 Span Steel Continuous Through Truss.

SPECIAL NOTES FOR
BRIDGE REPAIRS MISCELLANEOUS WORK

GENERAL NOTES

SPECIAL NOTE FOR TRAFFIC CONTROL ON BRIDGE REPAIR CONTRACTS

SPECIAL NOTE FOR INSPECTION ACCESS REPAIR

GENERAL NOTES

SPECIFICATIONS

All references to the Standard Specifications are to the current edition of the Kentucky Department of Highways Standard Specifications for Road and Bridge Construction with current supplemental specifications. All references to the AASHTO Specifications are to the current edition of the AASHTO LRFD Bridge Design Specifications, with interims.

STANDARD DRAWINGS

Standard Drawings are not attached to these Plans. A Standard Drawing book may be obtained from the KYTC Policy Support Branch of the Department of Administrative Services in Frankfort, KY at (502) 564-3670. See other appropriate KYTC Standard Drawings where applicable.

MATERIALS DESIGN SPECIFICATIONS

Steel Reinforcement	Fy = 60,000 psi
Structural Steel	Fy = 50,000 psi

EXISTING PLANS

A copy of available original bridge construction contract plans will be made available to the successful bidder upon written request.

DETAILS AND DIMENSIONS

Dimensions shown on these plans are taken from the original construction contract plans and do not necessarily reflect revisions made during construction or repairs previously installed. The Contractor shall verify elevations and dimensions, including thickness of parts and fastener size/spacing, with field measurements prior to ordering materials or fabricating steelwork. All plan dimensions are for a normal temperature of 60°F.

ON SITE INSPECTION

Each Contractor submitting a bid for this work shall make a thorough inspection of the bridge and the work site prior to submitting a bid and shall be thoroughly familiarized with existing conditions so that work can be expeditiously performed after a contract is awarded. A suitable method of performing the work described herein should be investigated. Submission of a bid will be considered evidence of this inspection having been made. Any claims from site conditions will not be honored by the Department.

VERIFICATION OF FIELD CONDITIONS

Plan dimensions and details relative to the existing structure are subject to nominal construction variations. Additionally, changes may have been made during construction or during previous maintenance work which may have altered the structure. It shall be the Contractor's responsibility to verify such dimensions and details in the field and make the necessary approved adjustments prior to construction or ordering of materials. Such variations shall not be cause for additional compensation for a change in the scope of the work; however, the Contractor will be paid for the quantity actually furnished at the unit price bid for the work. In addition, the overrun

and underrun formulas may be applied to the appropriate repairs provided that the requirements of Article 104.02.02 of the Standard Specifications are satisfied.

COOPERATION BY CONTRACTOR

The Contractor is advised that additional contracts may be let within the project limits prior to the completion of this project. Contractors working on the same project or adjacent projects shall cooperate with each other.

RIVER NAVIGATION

Continuous maintenance and safety of river navigation throughout the term of the project shall be a prime consideration.

At least 30 days in advance of beginning construction, the Contractor shall submit to the Department (for submittal to the Coast Guard) a work plan for performing work over the Ohio River. This work plan shall include but is not limited to methods for containing debris and maintenance of existing navigational traffic during construction.

The Contractor must advise the Coast Guard of the Contractor's proposed schedule of work at least 10 days prior to commencement of any field operations.

DAMAGE TO THE STRUCTURE

The contractor is responsible for any and all damage to the structure during construction.

UTILITIES

The Contractor shall protect all utilities, traffic and decorative lighting, and signage attached to the structure during construction. All cost for protection of utilities and signage shall be incidental to this contract. Any damage to the utilities caused by the Contractor shall be repaired at no additional cost to the Department.

KENTUCKY ONE CALL

Call KY 811 or 1-800-752-6007 #13450 toll free a minimum of two and no more than ten business days prior to excavation for information on the location of existing underground utilities which subscribe to the Kentucky One Call service. Coordinate excavation with all utility owners, including those who do not subscribe to Kentucky One Call.

INCIDENTAL ITEMS

The Contractor is required to complete the structure in accordance with the Plans and Specifications. Material or labor not otherwise specified is to be considered incidental to the Contractor.

CONSTRUCTION MATERIAL DISPOSAL

All concrete, asphalt material, and any other material that is required to be removed shall be disposed of off-site by the contractor at no additional cost to KYTC.

COMPLETION OF THE STRUCTURE

The Contractor is required to complete the structures in accordance with the Plans and Specifications. Material, labor or construction operations, not otherwise specified, are to be included in the bid item most appropriate to the work involved. This may include shoring, excavations, backfilling, removal of all or parts of existing structures, incidental materials, labor or anything else required to complete the structure. After completion of all operations, the structure and site shall be left in a condition that is in accordance with Section 105.12 of the Specifications.

MILL TEST REPORTS

Notarized mill test reports shall be furnished in triplicate to the Department showing that all structural steel conforms to the requirements of the Specifications.

WELDING SPECIFICATIONS

All welding and welding materials except for reinforcement, shall conform to "Joint Specification ANSI/AASHTO/AWS D1.5 Bridge Welding Code". Modification and additions as stated on the plans shall supersede the joint specifications.

PROHIBITED FIELD WELDING

Except where shown in the Plans, no welding of any nature shall be performed on the load carrying members of the bridge without written consent of the Director, Division of Bridge Maintenance, and then only in the manner and at the locations designated in the authorization.

WELDING PROCEDURES

Qualification test of all welding procedures, when required by AWS, shall be completed by the Contractor and approved by the Engineer prior to final approval of the shop drawings and the start of fabrication.

HIGH STRENGTH BOLT CONNECTIONS

Unless otherwise specified in the Plans, all bolted connections shall be ASTM F3125 grade A325 high strength bolts, A563DH nuts, and F436 flat washers. Open holes shall be 1/16" greater than the bolt diameter, unless otherwise noted. Bolt threads shall be excluded from the shear plane in all bolted connections, unless otherwise noted.

Type 1 mechanically galvanized bolts shall be used as described in AASHTO M 164, all high strength bolted connections are to be installed using "Direct Tension Indicators" DTI's in accordance with the Standard Specifications and ASTM F959. All DTI's shall be mechanically zinc coated. Installation details of the DTI's shall be shown on the shop plans.

PAINTING DAMAGED AREAS

All areas of new or existing structural steel on which the paint has been damaged by the Contractor shall be cleaned and spot painted to the satisfaction of the Engineer and in accordance with the Section 607.03.23 "Cleaning and Painting". The cost of this touch-up painting is to be incidental to the contract.

LEAD PAINT

Residual lead paint may be present on the bridge. The Contractor is advised to take all necessary protective measures including worker safety and environmental regulations when performing surface preparation. The Department will not consider any claims based on residual lead paint.

SPECIAL NOTE FOR TRAFFIC CONTROL ON BRIDGE REPAIR CONTRACTS

1.0 TRAFFIC CONTROL GENERAL. Except as provided herein, traffic shall be maintained in accordance with Section 112 of the current Standard Specifications and the current edition of the Manual of Uniform Traffic Control Devices (MUTCD). Except for the roadway and traffic control bid items listed, all items of work necessary to maintain and control traffic will be paid at the lump sum bid price to "Maintain and Control Traffic".

Contrary to Section 106.01, traffic control devices used on this project may be new or used in new condition, at the beginning of work and maintained in like new condition until completion of the work.

2.0 TRAFFIC COORDINATOR. Furnish a Project Traffic Coordinator (PTC) as per Section 112. The PTC shall inspect the project maintenance of traffic, at least three times daily, or as directed by the Engineer, during the Contractor's operations and at any time a lane closure is in place. The personnel shall have access on the project to a radio or telephone to be used in case of emergencies or accidents.

The PTC shall report all incidents throughout the work zone to the Engineer on the project. The Contractor shall furnish the name and telephone number where the PTC can be contacted at all times.

3.0 SIGNS. The Contractor is responsible for all signage during construction. The Contractor shall adhere to the standard drawings and manual on uniform traffic control devices (MUTCD) for guidance. If, at any time, the Engineer requests a change in the maintenance of traffic signage, the Contractor shall implement the change within 8 hours. Failure to implement these changes within the required eight hours will result in liquidated damages of $5,000 per day.

The Department will not measure installation, maintenance, or removal for payment of any signage or standard construction signage and will consider these incidental to "Maintain and Control Traffic".

4.0 PROTECTION OF WATERWAY UNDERNEATH. No material should be allowed to drop into the waterway below. The contractor shall adhere to all applicable permits.

5.0 PROTECTION OF PEDESTRIANS. Protect any excavation, obstructions, or construction work so as not to expose pedestrians to hazards.

6.0 TRAFFIC RESTRICTIONS. The Contractor may utilize a single lane closure in accordance with Standard Drawing TTC-115-04. Contrary to the standard drawings, the spacing of channelization devices through the activity area shall be 40'. The Contractor is allotted a total of 60 calendar days of single lane closures throughout the duration of the contract. A day is counted if at any point during the day a single lane closure is in place. The sidewalk adjacent to work being performed shall be closed. One sidewalk must remain open on the bridge at all times. The Contractor should coordinate with KYTC 7 days in advance of any lane closure.

7.0 PAYMENT. The Department will consider payment as full compensation for all work necessary for maintenance of traffic. All signage, arrow panels, barricades, channelization devices, temporary pavement markings, and all other incidentals necessary for maintaining and controlling traffic are incidental to this bid item of work. The Department will not measure flaggers, project traffic coordinator, removal of temporary pavement markings, and will consider these items incidental to this item of work.

Code	Pay Item	Pay Unit
02650	Maintain & Control Traffic	Lump Sum

SPECIAL NOTE FOR INSPECTION ACCESS REPAIR

1. DESCRIPTION

Perform all work in accordance with the Kentucky Transportation Cabinet, Department of Highway's 2019 Standard Specifications for Road and Bridge Construction and applicable Supplemental Specifications, the Standard Drawings, this Note, and the attached detail drawings. Section references are to the Standard Specifications.

This work consists of the following:

(1) Furnish all labor, materials, tools, equipment, and incidental items necessary to complete the work.
(2) Provide safe access to the bridge, in accordance with Section 107.01.01, for workers to complete the construction and for the Engineer to approve the work.
(3) Repair the inspection access system in accordance with this note and the attached detail drawings.
(4) Maintain and control traffic.
(5) Any other work specified as part of this contract.

2. MATERIALS

2.1 Inspection Access Cable. Use new, 1/2" diameter ASTM A603 zinc coated steel structural wire rope with Class C zinc coating throughout. 1/2" cables shall have a minimum breaking strength of 13 tons.

2.2 Cable Fittings. All cable fittings (turnbuckles, thimbles, clips, shackles, etc.) to be hot-dipped galvanized and shall meet or exceed the capacity of the structural wire rope and shall be installed according to the manufacturer's specifications. The lower chord inspection access cable shall be attached with 1-inch diameter high strength ASTM A325 bolts, ASTM A563DH nuts, and ASTM F436 flat washers.

2.3 Ladder Safety System. The ladder safety system shall be a cable type system such as the 3M DBI-SALA Lad-Saf Cable Vertical Safety System, Galvanized Steel; Diversified Fall Protection Fixed Ladder Lifeline kits, or approved equal that meets the requirements of ANSI Z359.16. The steel cable shall be galvanized or stainless steel, and all other vertical climbing safety system components shall be corrosion resistant. Any stainless materials shall be 100 percent separated from contact with steel materials with approved means of galvanic protection. Install the vertical climbing safety system according to the manufacturer's specifications.

2.4 Ladder Access Gate. Use new, commercial grade plate steel with a minimum yield strength of 36,000 psi. The ladder access gate shall be connected to the truss member through existing bolt holes with 3/4-inch diameter high strength ASTM A325 bolts, ASTM A563DH nuts, and ASTM F436 flat washers.

2.5 High Strength Bolts, Nuts, and Washers. Ensure all bolted connections are AASHTO M164 (ASTM A325) high strength bolts, nuts, and washers. Type 1 galvanized bolts shall be used as described in AASHTO M164. All high strength bolted field connections are to be installed using "Direct Tension Indicators" (DTI's)

in accordance with the Standard Specifications and ASTM F959. All bolts, nuts, washers, and DTI's are to be mechanically galvanized in accordance with AASHTO M298, Class 50 ASTM B695-04, Class 50).

3. CONSTRUCTION

3.1 Dimensions. The Contractor shall verify all dimensions, including thickness of parts, with field measurements prior to ordering materials or fabricating steel. Original contract drawings for the structure may be available to the Contractor at his request.

3.2 Shop Drawings. Shop drawings and manufacturer's specifications will be required for the Ladder Safety System. The Contractor shall submit detailed shop drawings and specifications for the Ladder Safety System to the Department for review in accordance with Section 607.03.01.

3.3 Safety. Provide temporary fall protection for areas where the existing inspection access cables will be removed and elsewhere in accordance with Section 107.01.01.

3.4 Remove Existing Materials. Remove the existing upper and lower chord inspection access cables and attachments, existing rail type fall prevention devices attached to the ladders, and existing ladder gates in locations and as shown on the attached detail drawings or as directed by the Engineer. Dispose of all removed material entirely away from the job site.

3.5 Drill Holes. Drill holes in the upper chord inspection access posts as shown in the attached detail drawings or as directed by the Engineer.

3.6 Field Prepare Existing Surfaces. Existing areas of the bridge to be in contact with new materials shall be cleaned free of all corrosion, debris and deleterious substances before installing the new materials. Hand methods for field cleaning shall consist of scraping and wire brushing. No blast cleaning will be allowed.

3.7 Prohibited Field Welding. No welding of any nature shall be performed on the bridge except as shown on the attached drawings without the written consent of the Director, Division of Maintenance, and then only in the manner and at the locations designated in the authorization.

3.8 Install Inspection Access Cables, Ladder Safety System and Ladder Access Gate. Install Inspection Access Cables, Ladder Safety System and Ladder Access Gate in locations and as shown on the attached detail drawings or as directed by the Engineer.

3.9 Painting. Following the installation of the retrofit, clean and paint all new structural steel, including bolts and any areas of existing paint drilled or damaged by the Contractor in accordance with Section 607.03.23. Apply field coatings to new steel and steel to be overcoated in accordance with Section 614, except for the paint finish coat color specified in Section 614.02.01. Match the new paint finish coat color with the current color of the structure.

3.10 Damage to the Structure. The Contractor shall bear full responsibility and expense for any and all damage to the structure, should such damage result from the Contractor's actions.

4. MEASUREMENT

4.1 Inspection Safety Line. The Department will measure the quantity of "Inspection Safety Line" per linear foot as shown on the attached detail drawings.

4.2 Tie Off Cable System. The Department will measure the quantity of "Tie Off Cable System" per each as shown on the attached detail drawings.

5. PAYMENT

5.1 Inspection Safety Line. Payment at the contract unit price is full compensation for (1) removing the existing inspection access cable, (2) drilling through existing steel, (3) preparing the interface surfaces for bolting and painting, (4) furnishing and installing the inspection access cable and cable fittings, (5) painting the steel surfaces as specified in this Note, and (6) all other labor, equipment, tools and incidentals necessary to complete the work as shown on the attached detail drawings and as specified by this Note.

5.2 Tie Off Cable System. Payment at the contract unit price is full compensation for (1) removing the existing ladder access gate and existing rail type fall prevention device, (2) preparing the interface surfaces for bolting and painting, (3) furnishing and installing the ladder safety system and ladder access gate, (4) painting the steel surfaces as specified in this Note, and (5) all other labor, equipment, tools and incidentals necessary to complete the work as shown on the attached detail drawings and as specified by this Note.

The Department will consider payment as full compensation for all work required by this note and the attached detail drawings according to the following:

Code	Pay Item	Pay Unit
24730ED	Inspection Safety Line	Linear Foot
24840EC	Tie Off Cable System	Each

KENTUCKY TRANSPORTATION CABINET
Department of Highways
DIVISION OF RIGHT OF WAY & UTILITIES

TC 62-226
Rev. 01/2016
Page 1 of 1

RIGHT OF WAY CERTIFICATION

[X] Original	[ ] Re-Certification	RIGHT OF WAY CERTIFICATION	
ITEM #	**COUNTY**	**PROJECT # (STATE)**	**PROJECT # (FEDERAL)**
6-10007.00	Campbell	FD52 019 0027 022-023	BRX 0272(122)
PROJECT DESCRIPTION	Safety cable repair and preventive maintenance on Taylor Southgate Bridge over the Ohio River, 019B00076N, US 27 22.363 to 22.764		

[X] **No Additional Right of Way Required**

Construction will be within the limits of the existing right of way. The right of way was acquired in accordance to FHWA regulations under the Uniform Relocation Assistance and Real Property Acquisitions Policy Act of 1970, as amended. No additional right of way or relocation assistance were required for this project.

[ ] **Condition # 1 (Additional Right of Way Required and Cleared)**

All necessary right of way, including control of access rights when applicable, have been acquired including legal and physical possession. Trial or appeal of cases may be pending in court but legal possession has been obtained. There may be some improvements remaining on the right-of-way, but all occupants have vacated the lands and improvements, and KYTC has physical possession and the rights to remove, salvage, or demolish all improvements and enter on all land. Just Compensation has been paid or deposited with the court. All relocations have been relocated to decent, safe, and sanitary housing or that KYTC has made available to displaced persons adequate replacement housing in accordance with the provisions of the current FHWA directive.

[ ] **Condition # 2 (Additional Right of Way Required with Exception)**

The right of way has not been fully acquired, the right to occupy and to use all rights-of-way required for the proper execution of the project has been acquired. Some parcels may be pending in court and on other parcels full legal possession has not been obtained, but right of entry has been obtained, the occupants of all lands and improvements have vacated, and KYTC has physical possession and right to remove, salvage, or demolish all improvements. Just Compensation has been paid or deposited with the court for most parcels. Just Compensation for all pending parcels will be paid or deposited with the court prior to AWARD of construction contract

[ ] **Condition # 3 (Additional Right of Way Required with Exception)**

The acquisition or right of occupancy and use of a few remaining parcels are not complete and/or some parcels still have occupants. All remaining occupants have had replacement housing made available to them in accordance with 49 CFR 24.204. KYTC is hereby requesting authorization to advertise this project for bids and to proceed with bid letting even though the necessary right of way will not be fully acquired, and/or some occupants will not be relocated, and/or the just compensation will not be paid or deposited with the court for some parcels until after bid letting. KYTC will fully meet all the requirements outlined in 23 CFR 635.309(c)(3) and 49 CFR 24.102(j) and will expedite completion of all acquisitions, relocations, and full payments after bid letting and prior to AWARD of the construction contract or force account construction.

Total Number of Parcels on Project		**EXCEPTION (S) Parcel #**	**ANTICIPATED DATE OF POSSESSION WITH EXPLANATION**
Number of Parcels That Have Been Acquired			
Signed Deed			
Condemnation			
Signed ROE			

Notes/ Comments (Text is limited. Use additional sheet if necessary.)

LPA RW Project Manager		Right of Way Supervisor	
Printed Name		Printed Name	Lynn Whalen
Signature		Signature	
Date		Date	
Right of Way Director		**FHWA**	
Printed Name		Printed Name	
Signature		Signature	
Date		Date	

UTILITIES AND RAIL CERTIFICATION NOTE

Campbell County
BRX 0272 (122)
FD52 019 0027 022-023
US-27 Mile point: 22.363 TO 22.764
SAFETY CABLE REPAIR AND PREVENTIVE MAINTENANCE ON TAYLOR SOUTHGATE BRIDGE OVER THE OHIO RIVER. JOINT PROJECT WITH OHIO. (019B00076N) (BSBP)
ITEM NUMBER: 06-10007.00

PROJECT NOTES ON UTILITIES

Please Note: The information presented in this Utility Note is informational in nature and the information contained herein is not guaranteed.

The contractor will be responsible for contacting all utility facility owners on the subject project to coordinate his activities. The contractor will coordinate his activities to minimize and, where possible, avoid conflicts with utility facilities. Due to the nature of the work proposed, it is unlikely to conflict with the existing utilities beyond minor facility adjustments. Where conflicts with utility facilities are unavoidable, the contractor will coordinate any necessary relocation work with the facility owner and KYTC Section Engineer. The Kentucky Transportation Cabinet maintains the right to remove or alter portions of this contract if a utility conflict occurs. The utility facilities as noted in the following section(s) have been determined using data garnered by varied means and with varying degrees of accuracy: from the facility owners, a result of S.U.E., field inspections, and/or reviews of record drawings. The facilities defined may not be inclusive of all utilities in the project scope and are not Level A quality, unless specified as such. It is the contractor's responsibility to verify all utilities and their respective locations before excavating.

Utility coordination efforts determined that no significant utility relocation work is required to complete the project. Any work pertaining to these utility facilities is defined in the bid package and is to be carried out as instructed by the Kentucky Transportation Cabinet. The contractor will be responsible for any coordination or adjustments that are discussed or quantified in the proposal.

NOTE: DO NOT DISTURB THE FOLLOWING FACILITIES LOCATED WITHIN THE PROJECT DISTURB LIMITS

Electric and Communications facilities may be in the vicinity of the project. The contractor should use caution if and when working near utility facilities. If working in the area of electric facilities, the contractor should contact the utility owner so that any worker protection needed can be arranged.

The Contractor is fully responsible for protection of all workers from any hazardous utilities that may be present.

UTILITIES AND RAIL CERTIFICATION NOTE

Campbell County
BRX 0272 (122)
FD52 019 0027 022-023
US-27 Mile point: 22.363 TO 22.764
SAFETY CABLE REPAIR AND PREVENTIVE MAINTENANCE ON TAYLOR SOUTHGATE BRIDGE OVER THE OHIO RIVER. JOINT PROJECT WITH OHIO. (019B00076N) (BSBP)
ITEM NUMBER: 06-10007.00

THE FOLLOWING FACILITY OWNERS ARE RELOCATING/ADJUSTING THEIR FACILITIES WITHIN THE PROJECT LIMITS AND WILL BE COMPLETE PRIOR TO CONSTRUCTION

No relocations have been identified to be needed.

THE FOLLOWING FACILITY OWNERS HAVE FACILITIES TO BE RELOCATED/ADJUSTED BY THE OWNER OR THEIR SUBCONTRACTOR AND IS TO BE COORDINATED WITH THE ROAD CONTRACT

Not Applicable

THE FOLLOWING FACILITY OWNERS HAVE FACILITIES TO BE RELOCATED/ADJUSTED BY THE ROAD CONTRACTOR AS INCLUDED IN THIS CONTRACT

Not Applicable

RAIL COMPANIES HAVE FACILITIES IN CONJUNCTION WITH THIS PROJECT AS NOTED

☒ **No Rail Involvement** ☐ **Rail Involved** ☐ **Rail Adjacent**

FACILITY OWNER CONTACTS

Facility owner contacts will be provided at the preconstruction meeting as needed.

Form Revised 6/24/16

KENTUCKY TRANSPORTATION CABINET
Department of Highways
DIVISION OF ENVIRONMENTAL ANALYSIS

CATEGORICAL EXCLUSION DETERMINATION

TC 58-48
Rev. 10/2019
Page **1** of **1**

1. PROJECT SUMMARY

Item #:	**Project Sponsor:**
Route(s):	**County:**
Project Description:	

2. ENVIRONMENTAL DETERMINATION

Functional Area	Determination	Comments/Commitments/Mitigation
Public and Resource Agency Controversy		
Total acreage of fee simple ROW		
Number of Total Relocations		
Environmental Justice Impacts		
Section 106: Architectural Historic		
Section 106: Archaeological Resources		
Section 4(f)		
Section 6(f)		
Noise		
Air Quality Impacts		
Hazardous Materials Impacts		
Section 7: T&E Species		
Anticipated Feet of Stream Impacts		
Anticipated Acreage of Wetland Impacts		
Anticipated Permits		
Other:		
Other:		
Other:		

Based on the criteria listed above, in review of the most recent Categorical Exclusion Agreement between KYTC and FHWA, the subject project is determined to be considered a Categorical Exclusion, Level

3. ENVIRONMENTAL DOCUMENT APPROVAL

Based on the information obtained during the environmental review process and included as attachments to this form, the project is determined to be a Categorical Exclusion under 23 CFR part 771 pursuant to the National Environmental Policy Act and complies with all other applicable environmental laws, regulations, and Executive Orders. The project action does not individually or cumulatively have a significant effect on the natural and human environment.

Shawn James District Environmental Coordinator	Date	Tom Mathews Project Manager	8/21/2023 Date
Environmental Project Manager	Date	Director of Environmental Analysis	Date
Recommended by FHWA	Date	Federal Highway Administration	Date

KYTC Item No: 6-10007 County: Kenton

Route: US-27

KYTC Historic Architectural Investigation Form

Project Description: Maintenance repairs of the Taylor Southgate Bridge. Proposed work consists of repairing the ladder safety system, upper chord inspection access, and lower chord inspection access. All work will be within the existing ROW.

Project Type listed in Attachment 1 (in Section 106 Programmatic Agreement)?

☐ Yes

☑ No (Continue)

Project Type listed in Attachment 2 (in Section 106 Handbook)?

☑ Yes (List project activity types) #11 Bridge rehabilitation

☐ No (This project is not considered a small scale project under the Section 106 Programmatic Agreement. This checklist cannot be used. Process with full baseline or joint memorandum)

☐ No (However, SHPO has agreed that this project may be documented using the Historic Architectural Investigation Form)

Project Area of Potential Effect is defined as:

☑ Within 150 feet of project centerline (Small Scale Project - within existing corridor)

☐ Within view shed of project (Discuss): _____

☐ Other (Discuss): _____

Are there Historical Resources within the project APE (per KHC database)?

☐ Yes

☑ No

☐ N/A (Explain):

KYTC Item No: 6-10007 County: Kenton

Route: US-27

Are there Historical Resources (50 years old or older) identified within the project APE based on field investigations?

☐ Yes

☑ No

Date of Field Investigation:

Investigator Name(s): Stephanie Lechert

Discuss Basis for finding
(Historic Mapping, PVA, Building Permit, Date of Construction, Deed/Title, etc.):
KHC database; Site Photos; Google Earth; Google Street View; Historicaerials.com; USGS historic aerial imagery; KYTC records

NRHP listed or potentially eligible sites/districts (> 50 years old) are:

☑ Not Present within the APE

No Historic Properties Affected

As Determined By:

8/08/2023

KYTC Representative **Date**

8/10/2023

SHPO Representative **Date**

(Concurrence is assumed if no response is received within 30 days)

Attachments:

☑ Map showing topography, APE and identified Historic Resources

☑ Relevant Photos (Overview and individual resources)

☑ Project Plans

☐ Other (Describe): _____

☑ Copy EPM

☑ Copy DEC

☑ Copy DEA Architectural Historian

☑ Copy SHPO

Figure 1. Project location.

Figure 2. Project overview, south end of the Taylor Southgate Bridge (TSB), facing north. Photograph by Michael Baker International.

Figure 3. Project overview, north end of the TSB, facing south. Photograph by Michael Baker International.

Figure 4. Overview of TSB, facing west. The TSB is a 3-span, steel through truss bridge built in 1995 and carries US-27 over the Ohio River. Photograph by Michael Baker International.

Figure 5. Overview of TSB, facing north. Photograph by Michael Baker International.

KENTUCKY TRANSPORTATION CABINET
DEPARTMENT OF HIGHWAYS
BRIDGE REHABILITATION PLANS

019B00076N
TAYLOR SOUTHGATE BRIDGE
US-27 OVER THE OHIO RIVER
39.09611, -84.50139

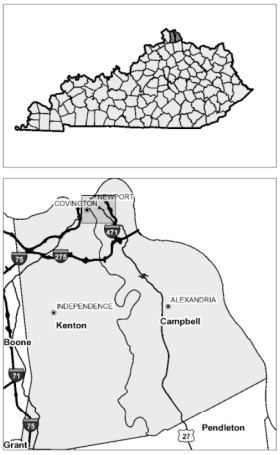

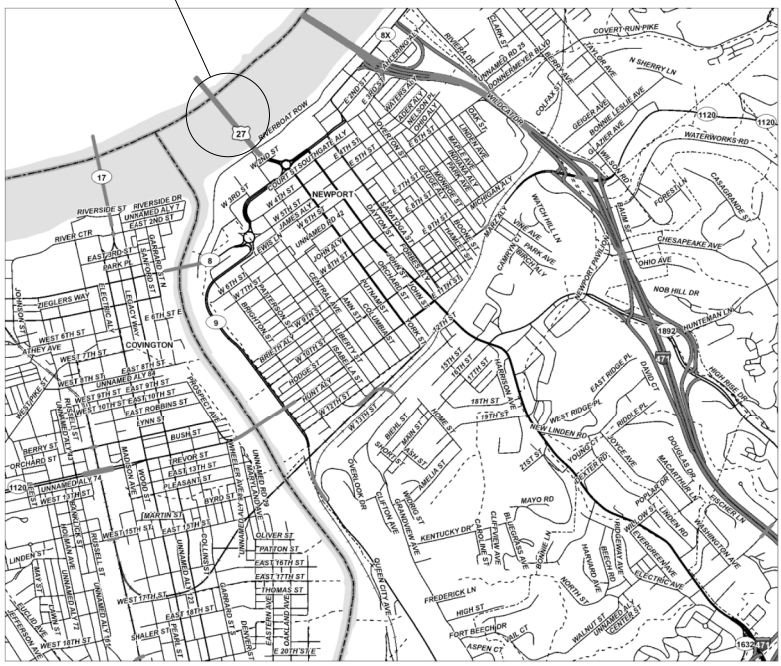

INDEX OF SHEETS

SHEET NO.	DESCRIPTION
1	TITLE & LOCATION MAP
2	LAYOUT
3	UPSTREAM TRUSS ELEVATION
4	DOWNSTREAM TRUSS ELEVATION
5	REPAIR 1: UPPER CHORD INSPECTION ACCESS
6	REPAIR 2: LOWER CHORD INSPECTION ACCESS
7	REPAIR 3: LADDER SAFETY SYSTEM

SPECIAL NOTES

GENERAL NOTES
SPECIAL NOTE FOR TRAFFIC CONTROL ON BRIDGE REPAIR CONTRACTS
SPECIAL NOTE FOR INSPECTION ACCESS REPAIR

APRIL 3, 2020
SHEET 1 OF 7

PREPARED BY AECOM

TITLE & LOCATION MAP

COUNTY CAMPBELL
STRUCTURE NAME TAYLOR SOUTHGATE

ROUTE US-27
CROSSING OHIO RIVER

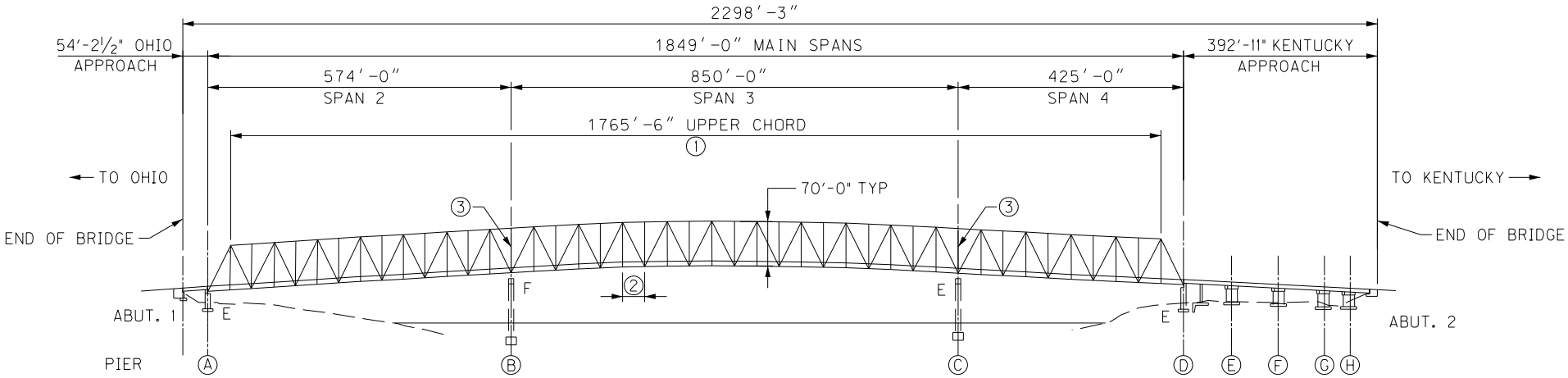

ELEVATION

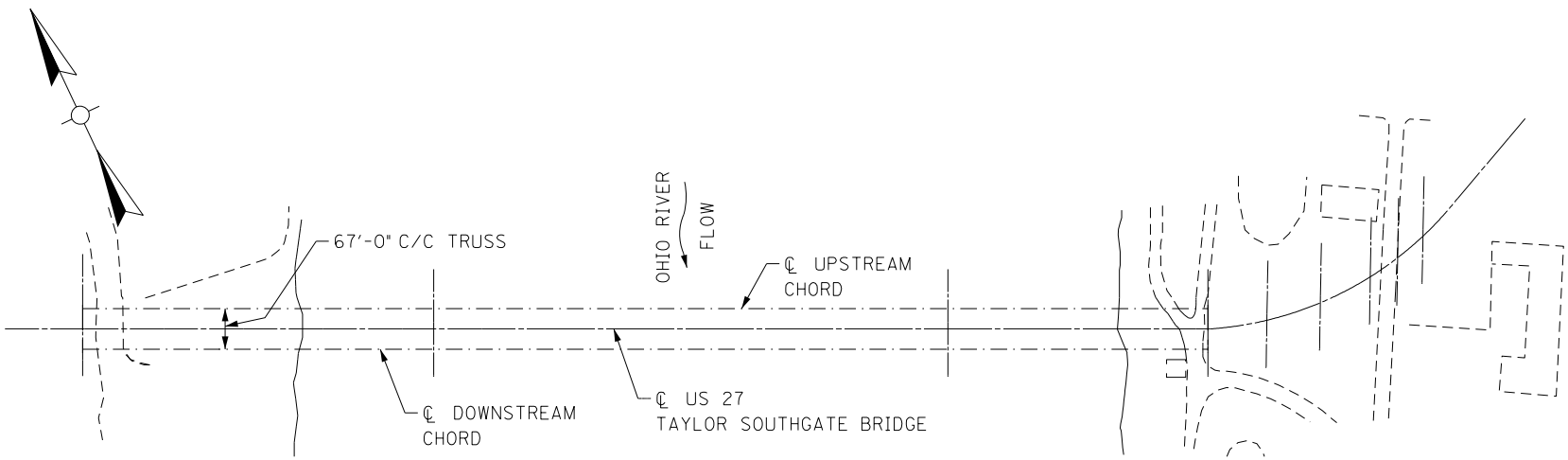

PLAN

REPAIRS

1. UPPER CHORD INSPECTION SAFETY LINE (UPSTREAM AND DOWNSTREAM)
2. LOWER CHORD INSPECTION SAFETY LINE (UPSTREAM ONLY)
3. LADDER SAFETY SYSTEM (UPSTREAM ONLY)

ROUTE	COUNTY		PREPARED BY	APRIL 3, 2020
US–27	CAMPBELL	LAYOUT	AECOM	SHEET 2 OF 7
CROSSING	STRUCTURE NAME			
OHIO RIVER	TAYLOR SOUTHGATE			

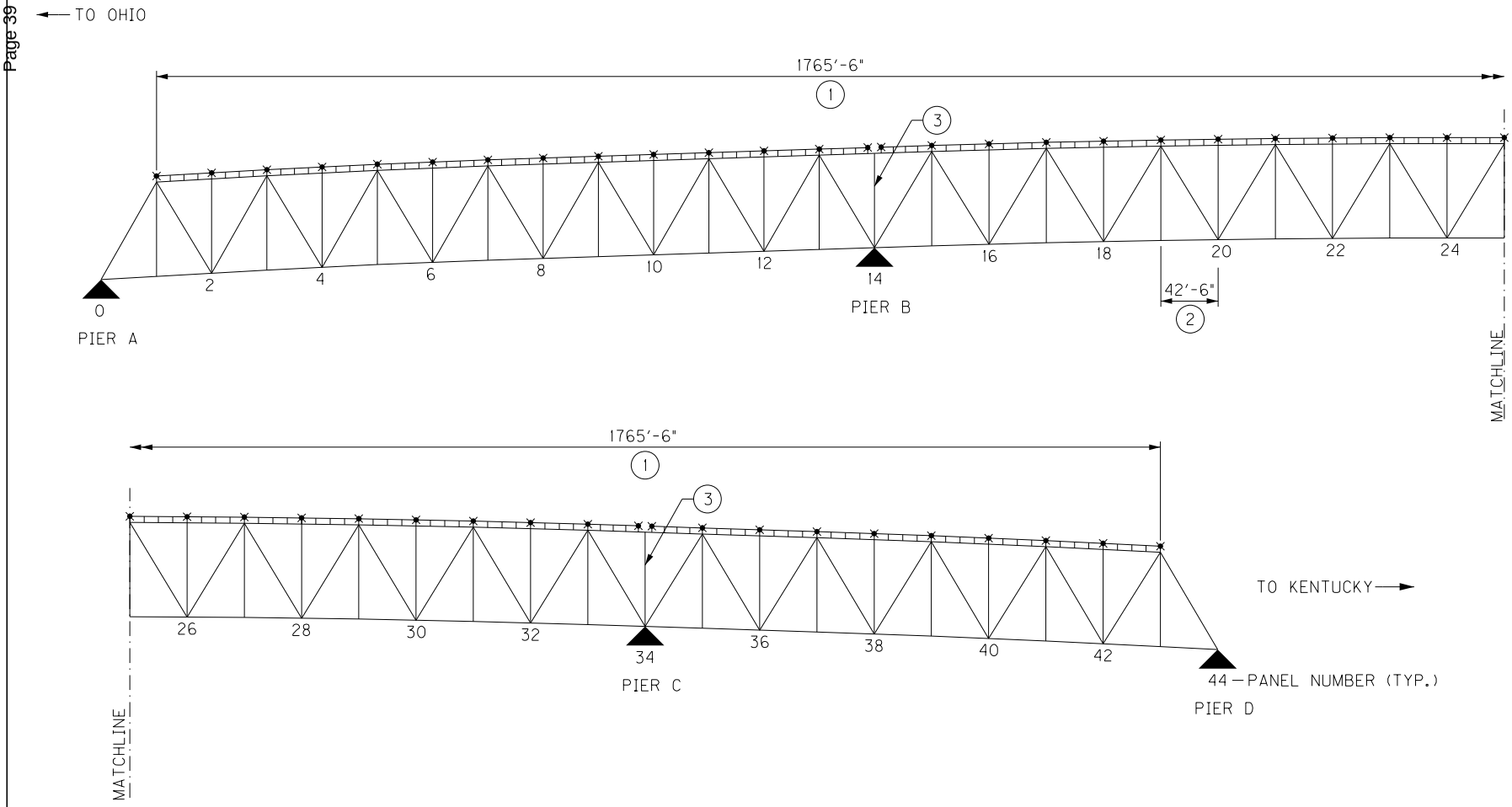

NOTES

1. UPPER CHORD INSPECTION ACCESS REPAIR, SEE SHEET 5
2. LOWER CHORD INSPECTION ACCESS REPAIR, SEE SHEET 6
3. LADDER SAFETY SYSTEM

LEGEND

✱ CABLE ANCHOR

ROUTE	COUNTY		PREPARED BY	APRIL 3, 2020
US–27	CAMPBELL	UPSTREAM TRUSS ELEVATION	AECOM	SHEET 3 OF 7
CROSSING	STRUCTURE NAME			
OHIO RIVER	TAYLOR SOUTHGATE			

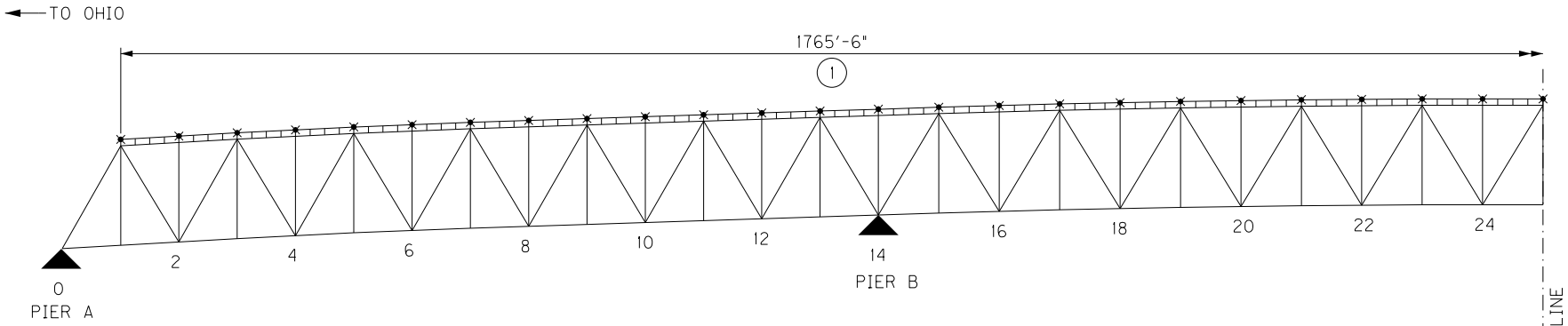

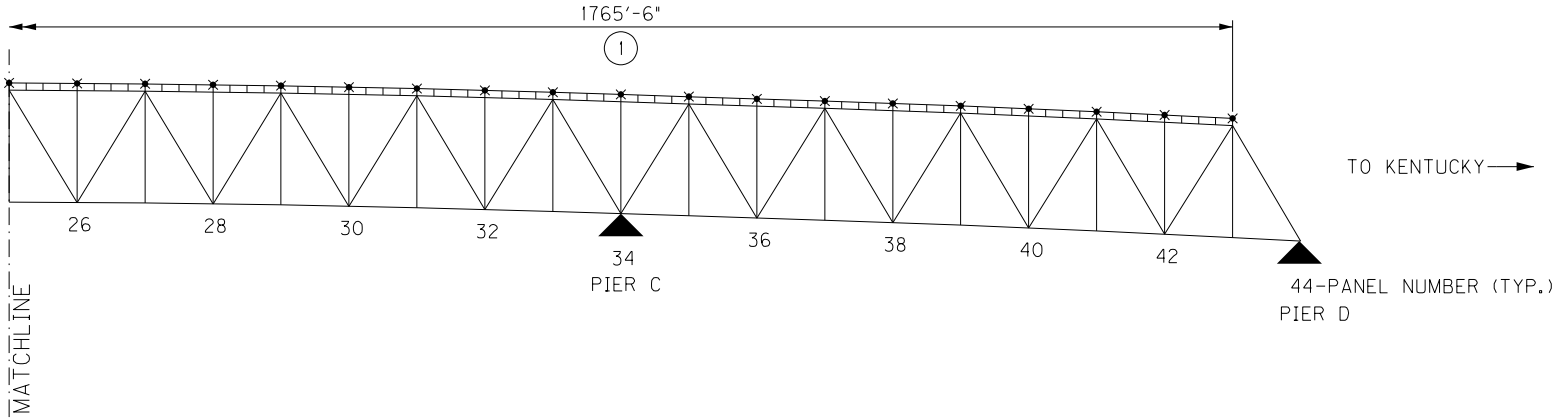

NOTES

(1) UPPER CHORD INSPECTION ACCESS REPAIR, SEE SHEET 5

LEGEND

✕ CABLE ANCHOR

ROUTE	COUNTY		PREPARED BY	
US–27	CAMPBELL	DOWNSTREAM TRUSS ELEVATION	AECOM	APRIL 3, 2020
CROSSING	STRUCTURE NAME			SHEET 4 OF 7
OHIO RIVER	TAYLOR SOUTHGATE			

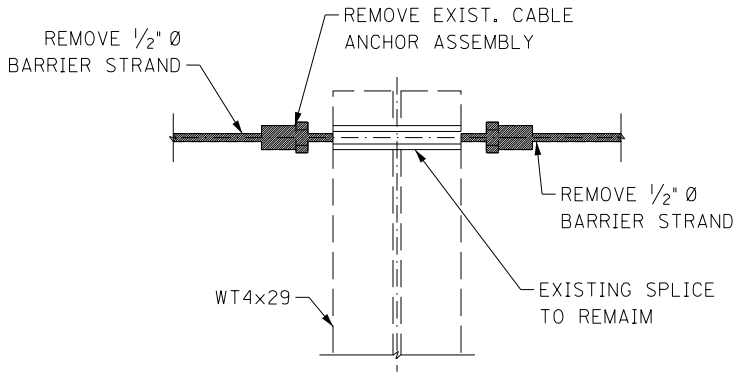

EXISTING UPPER CHORD INSPECTION ACCESS ANCHOR DETAIL

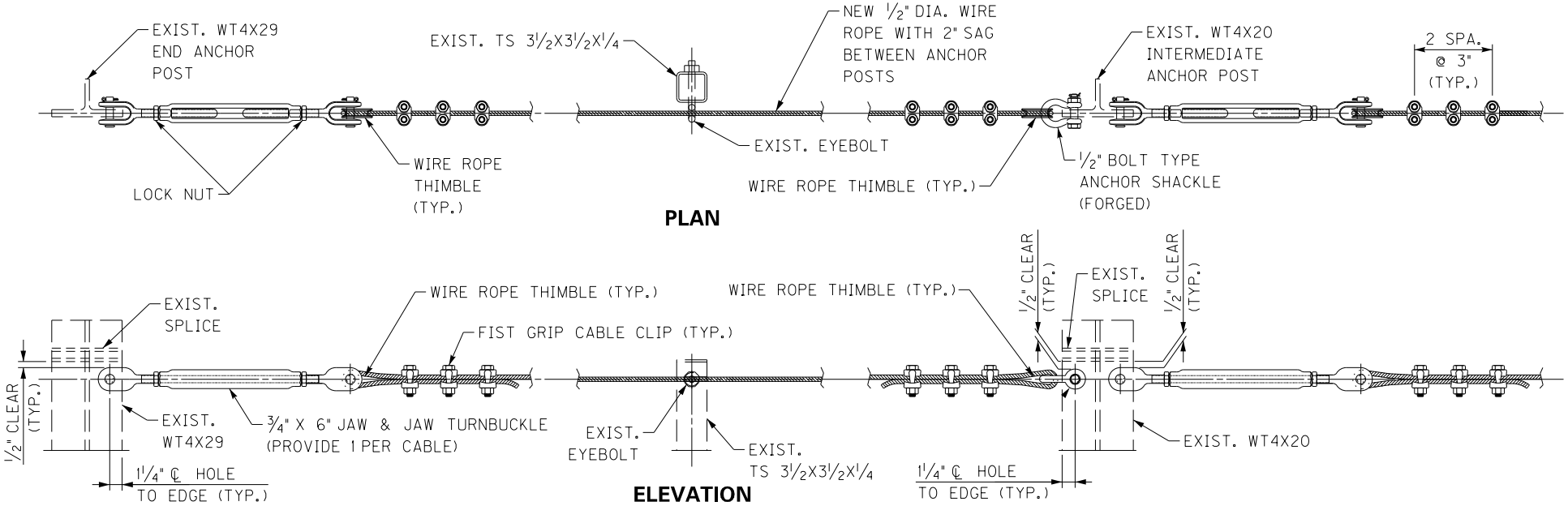

PROPOSED UPPER CHORD INSPECTION ACCESS

ROUTE	COUNTY		PREPARED BY	
US–27	CAMPBELL	REPAIR 1: UPPER CHORD INSPECTION ACCESS	AECOM	APRIL 3, 2020
CROSSING	STRUCTURE NAME			SHEET 5 OF 7
OHIO RIVER	TAYLOR SOUTHGATE			

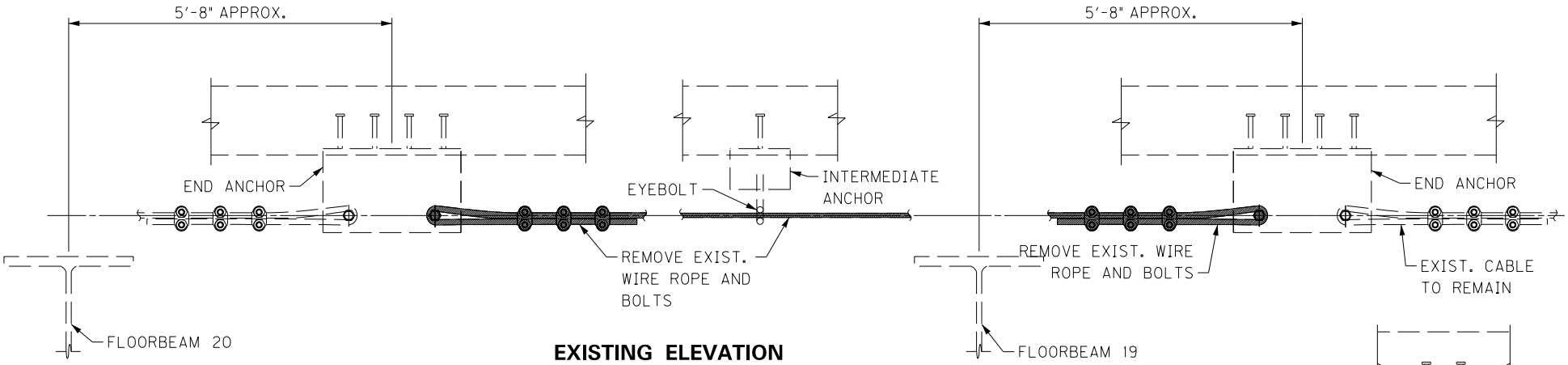

EXISTING ELEVATION

EXISTING LOWER CHORD INSPECTION ACCESS

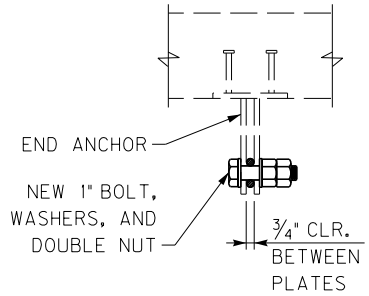

SECTION A–A

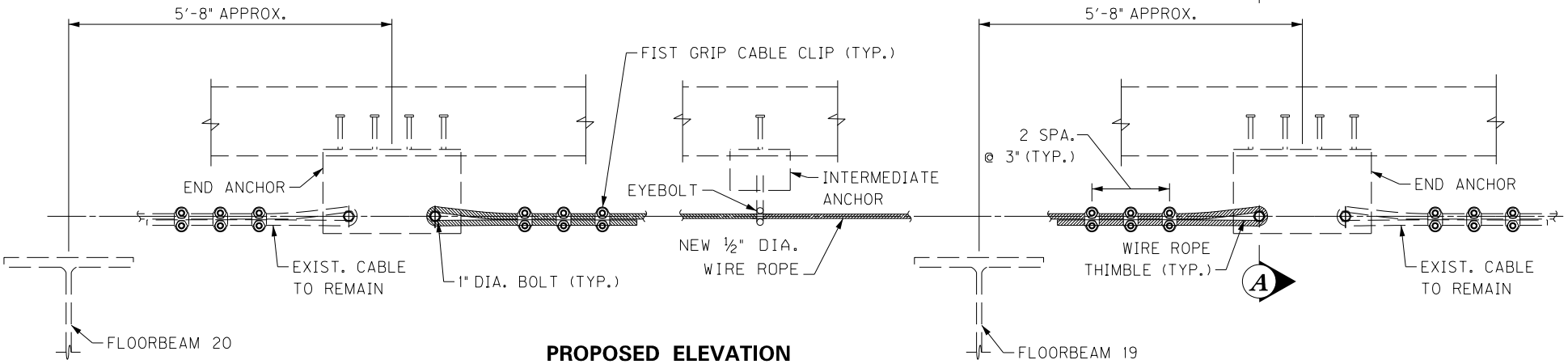

PROPOSED ELEVATION

PROPOSED LOWER CHORD INSPECTION ACCESS

ROUTE	COUNTY		PREPARED BY	APRIL 3, 2020
US–27	CAMPBELL	REPAIR 2: LOWER CHORD INSPECTION ACCESS	AECOM	SHEET 6 OF 7
CROSSING	STRUCTURE NAME			
OHIO RIVER	TAYLOR SOUTHGATE			

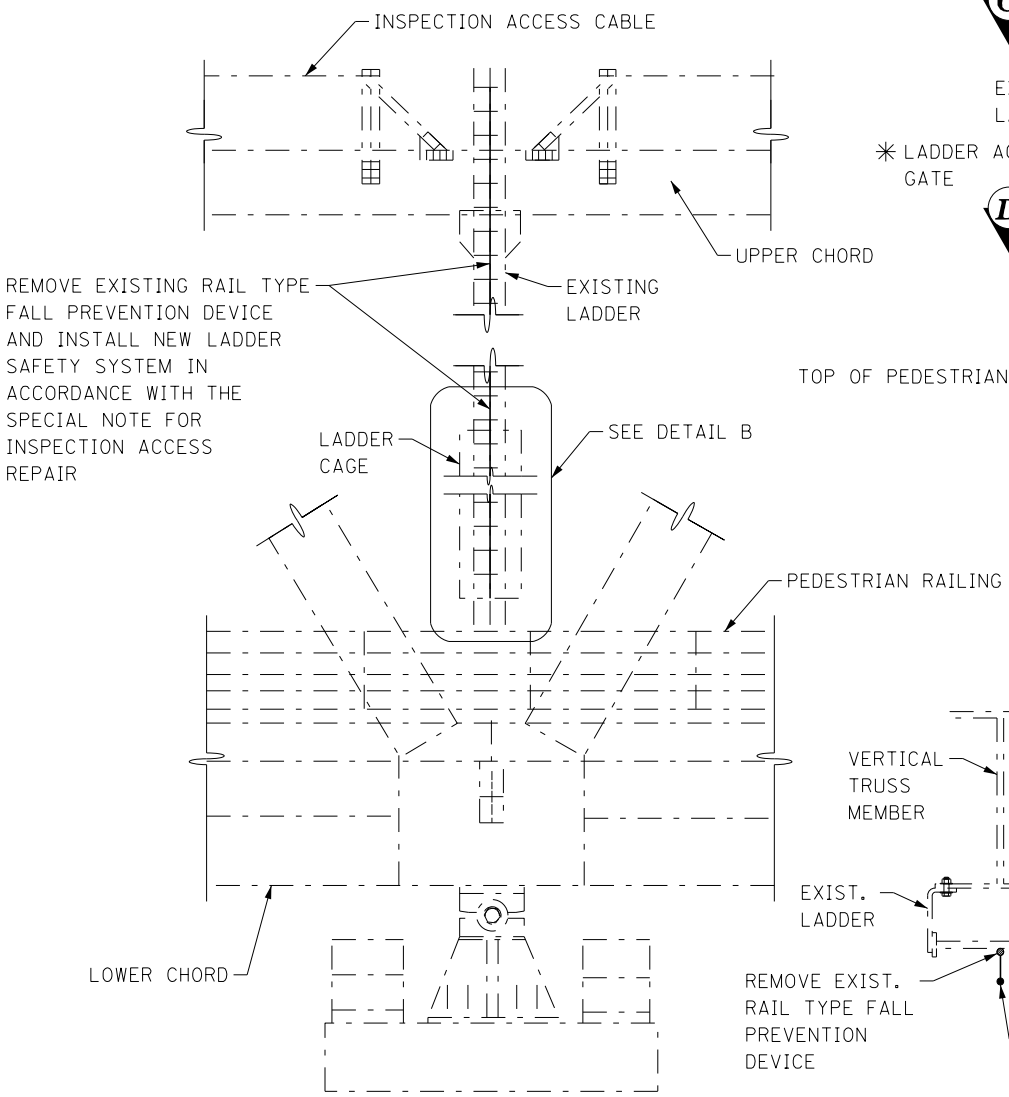

ELEVATION AT PIER B AND C

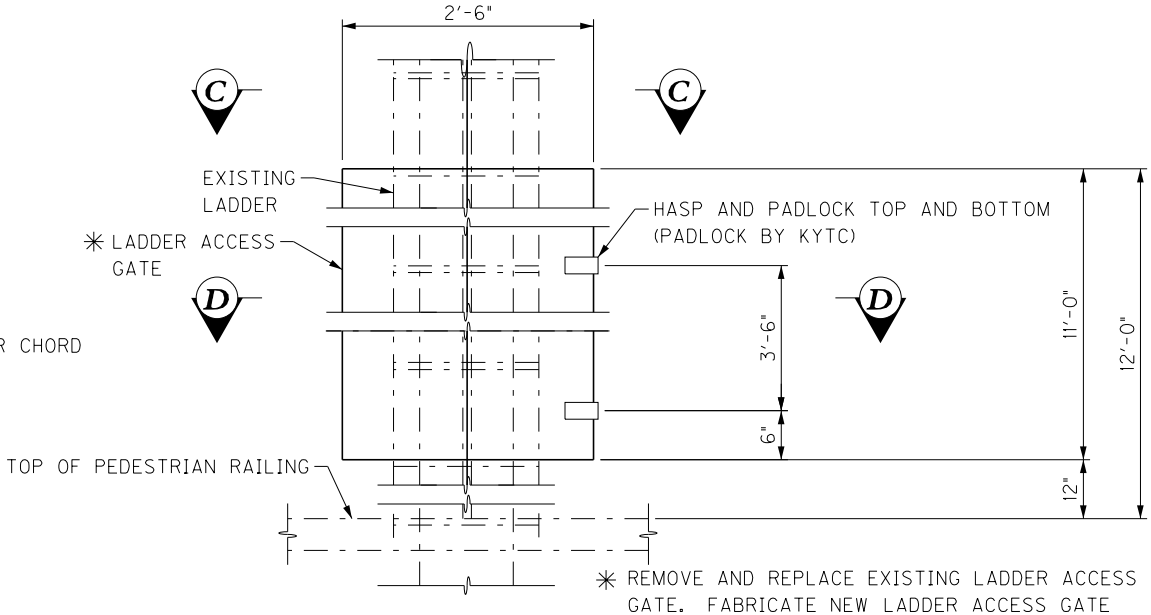

DETAIL B

✳ REMOVE AND REPLACE EXISTING LADDER ACCESS GATE. FABRICATE NEW LADDER ACCESS GATE WITH: 3/16" THICK PLATE STEEL, CONTINUOUS STAINLESS STEEL HINGE, AND TWO HASP AND PADLOCK ASSEMBLIES. PROVIDE 1/2" MINIMUM CLEARANCE BETWEEN THE NEW LADDER SAFETY SYSTEM AND THE NEW LADDER ACCESS GATE. NO HOLES SHALL BE DRILLED THROUGH THE TRUSS MEMBER.

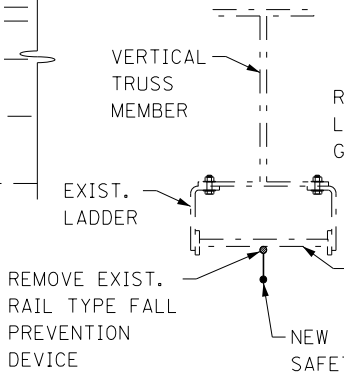

SECTION C–C

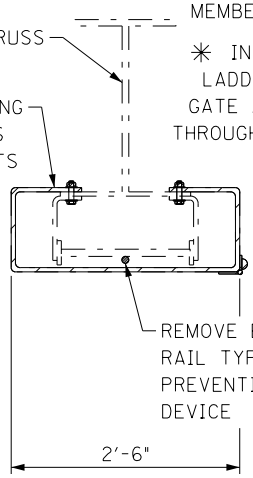

SECTION D–D EXISTING

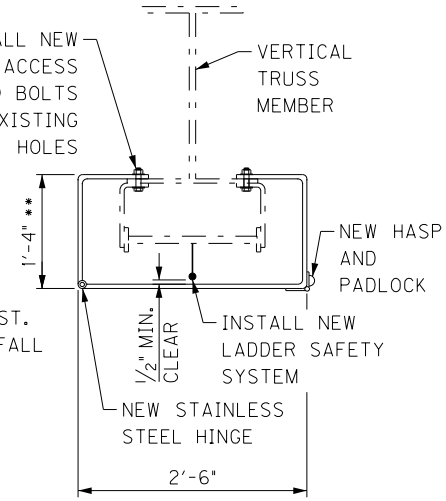

SECTION D–D PROPOSED

✳ ✳ FIELD VERIFY LADDER GATE SIDE PANEL DIMENSION. PROVIDE 1/2" CLEARANCE BETWEEN THE LADDER GATE AND THE NEW LADDER SAFETY SYSTEM. THE ACCESS GATE SHALL NOT PROTRUDE BEYOND THE BACK FACE OF THE PEDESTRIAN RAILING.

ROUTE	COUNTY		PREPARED BY	APRIL 3, 2020
US–27	CAMPBELL	REPAIR 3: LADDER SAFETY SYSTEM	AECOM	SHEET 7 OF 7
CROSSING	STRUCTURE NAME			
OHIO RIVER	TAYLOR SOUTHGATE			

COAST GUARD REQUIRMENTS

The Contractor shall submit their work plan for approval with the Cost Guard for approval 14 days prior to the pre-construction meeting along with completed following form.

PROMPTLY COMPLETE AND PROVIDE COPY TO:

Commander (dwb)
Eighth Coast Guard District
1222 Spruce Street
St. Louis, MO 63103-2832

(314) 269-2381
FAX (314) 269-2737

PROJECT INFORMATION RECORD

NAME OF BRIDGE: _____ RIVER/MILE: _____

PROJECT: _____

PERMITTEE: _____

RESIDENT ENGINEER OR INSPECTOR: _____
(NAME)

ADDRESS: _____

_____

PHONE: _____
(OFFICE) (HOME)

SUBCONTRACTOR: _____

SUBCONTRACTOR'S MAN IN CHARGE: _____

ALTERNATES: _____

START DATE: _____ EXPECTED COMPLETION DATE: _____

NAME OR WORK BOAT ON JOB: _____

RADIO CALL SIGN AND FREQUENCIES: _____

HOURS/DAYS OF OPERATION: _____

_____

_____
(SIGNATURE)

KENTUCKY TRANSPORTATION CABINET
DEPARTMENT OF HIGHWAYS
BRIDGE REHABILITATION PLANS

019B00076N
TAYLOR SOUTHGATE BRIDGE
US-27 OVER THE OHIO RIVER
39.09611, -84.50139

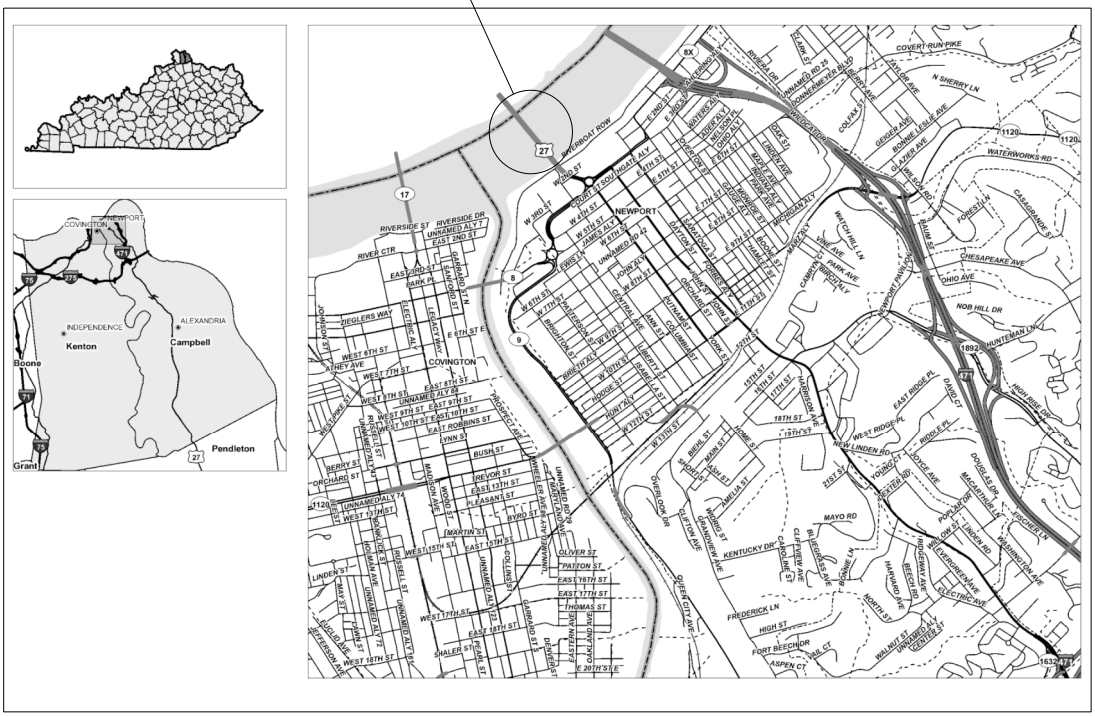

SPECIAL NOTES

GENERAL NOTES
SPECIAL NOTE FOR TRAFFIC CONTROL ON BRIDGE REPAIR CONTRACTS
SPECIAL NOTE FOR INSPECTION ACCESS REPAIR

INDEX OF SHEETS

SHEET NO.	DESCRIPTION
1	TITLE & LOCATION MAP
2	LAYOUT
3	UPSTREAM TRUSS ELEVATION
4	DOWNSTREAM TRUSS ELEVATION
5	REPAIR 1: UPPER CHORD INSPECTION ACCESS
6	REPAIR 2: LOWER CHORD INSPECTION ACCESS
7	REPAIR 3: LADDER SAFETY SYSTEM

APRIL 3, 2020
SHEET 1 OF 7

PREPARED BY AECOM

TITLE & LOCATION MAP

COUNTY CAMPBELL
STRUCTURE NAME TAYLOR SOUTHGATE

ROUTE US-27
CROSSING OHIO RIVER

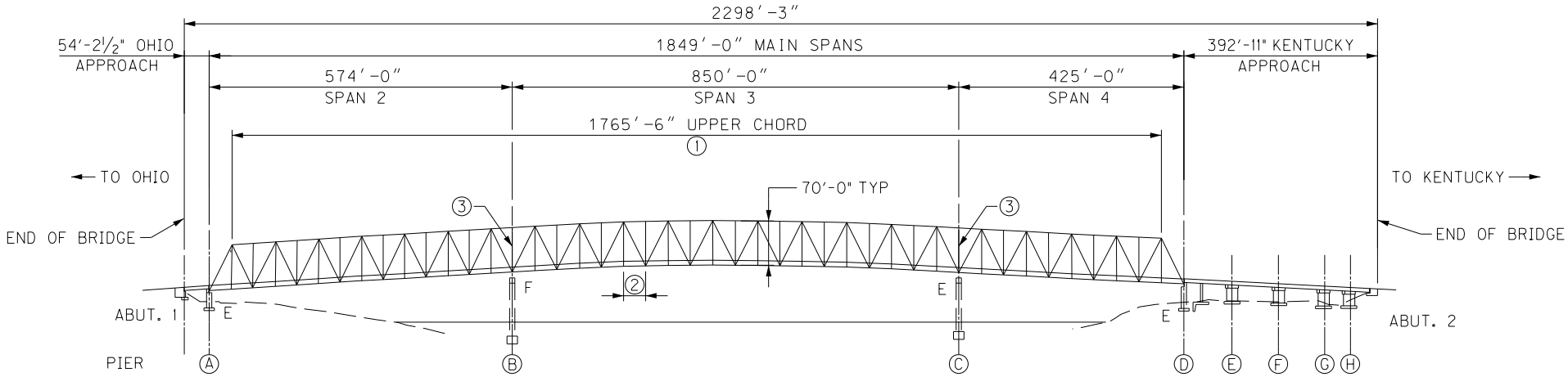

ELEVATION

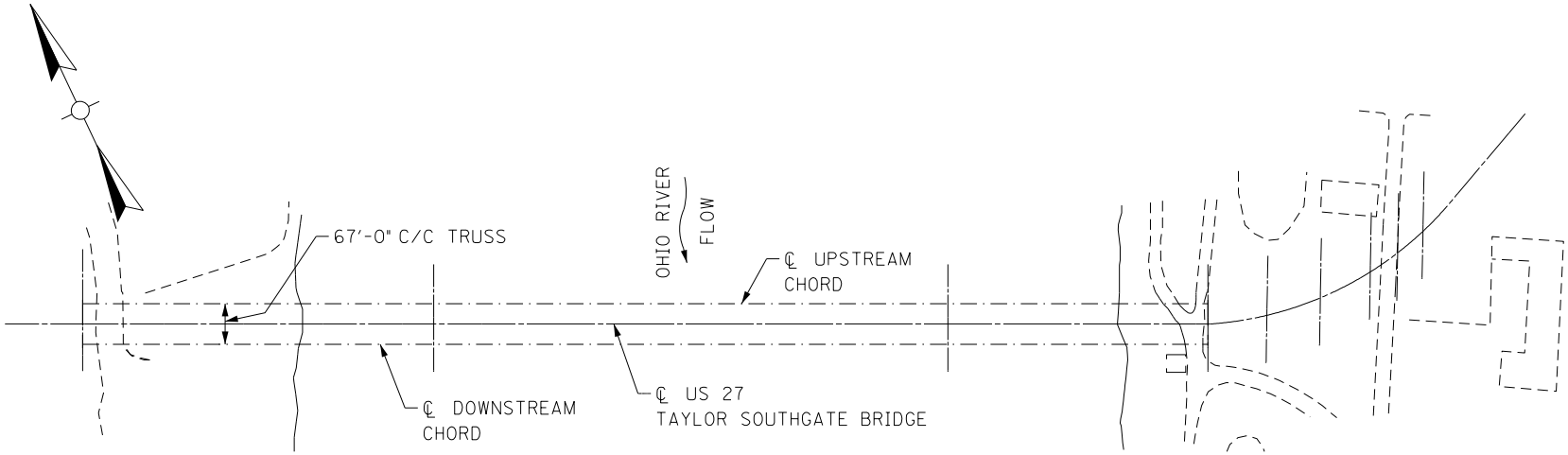

PLAN

REPAIRS

1. UPPER CHORD INSPECTION SAFETY LINE (UPSTREAM AND DOWNSTREAM)
2. LOWER CHORD INSPECTION SAFETY LINE (UPSTREAM ONLY)
3. LADDER SAFETY SYSTEM (UPSTREAM ONLY)

ROUTE	COUNTY		PREPARED BY	APRIL 3, 2020
US–27	CAMPBELL	LAYOUT	AECOM	SHEET 2 OF 7
CROSSING	STRUCTURE NAME			
OHIO RIVER	TAYLOR SOUTHGATE			

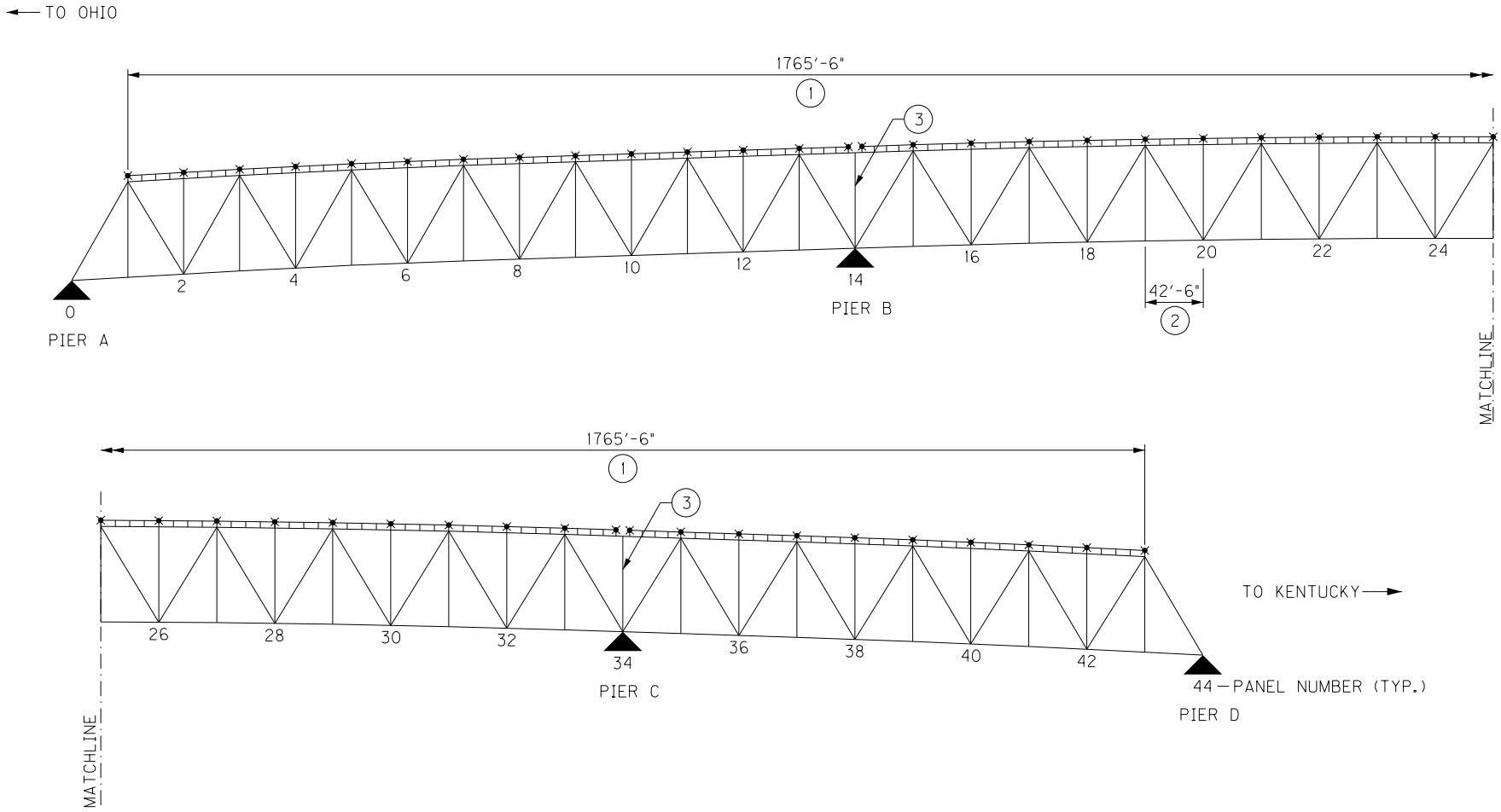

NOTES

1. UPPER CHORD INSPECTION ACCESS REPAIR, SEE SHEET 5
2. LOWER CHORD INSPECTION ACCESS REPAIR, SEE SHEET 6
3. LADDER SAFETY SYSTEM

LEGEND

✱ CABLE ANCHOR

ROUTE	COUNTY		PREPARED BY	APRIL 3, 2020
US–27	CAMPBELL	UPSTREAM TRUSS ELEVATION	AECOM	SHEET 3 OF 7
CROSSING	STRUCTURE NAME			
OHIO RIVER	TAYLOR SOUTHGATE			

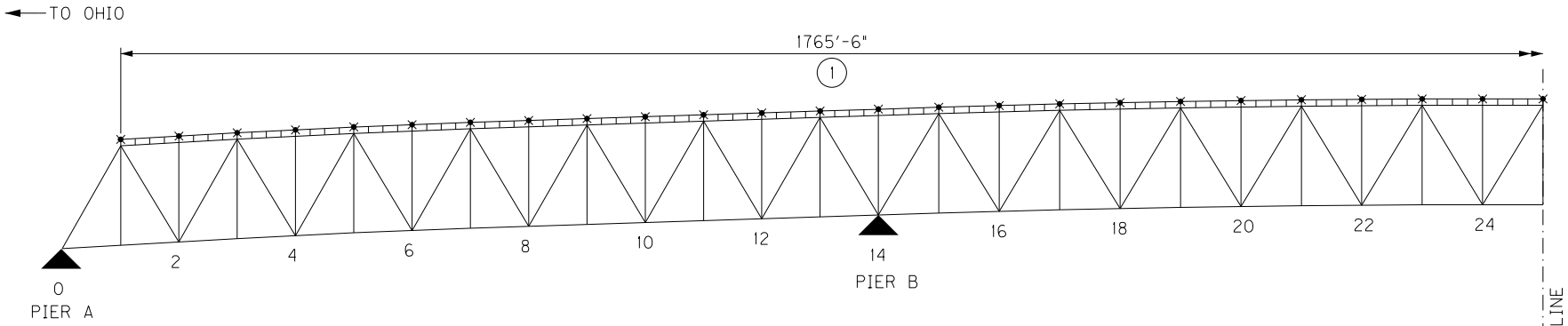

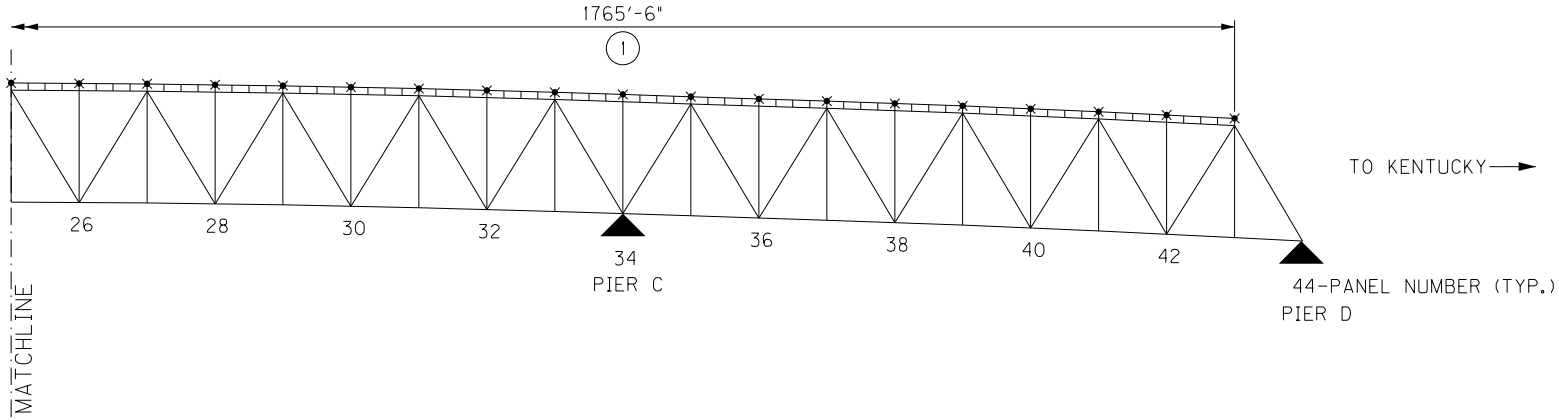

NOTES

(1) UPPER CHORD INSPECTION ACCESS REPAIR, SEE SHEET 5

LEGEND

✕ CABLE ANCHOR

ROUTE	COUNTY		PREPARED BY	
US–27	CAMPBELL	DOWNSTREAM TRUSS ELEVATION	AECOM	APRIL 3, 2020
CROSSING	STRUCTURE NAME			SHEET 4 OF 7
OHIO RIVER	TAYLOR SOUTHGATE			

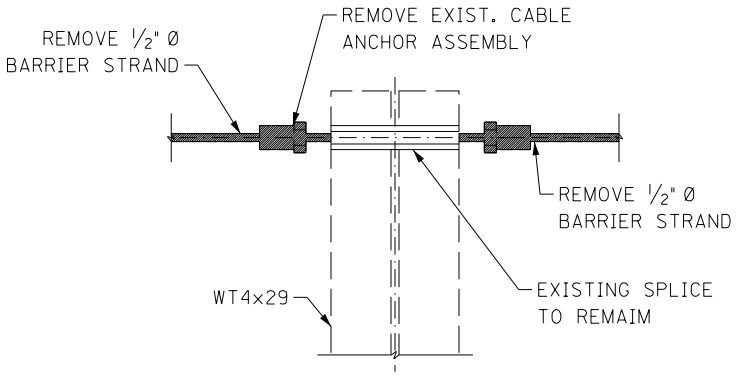

EXISTING UPPER CHORD INSPECTION ACCESS ANCHOR DETAIL

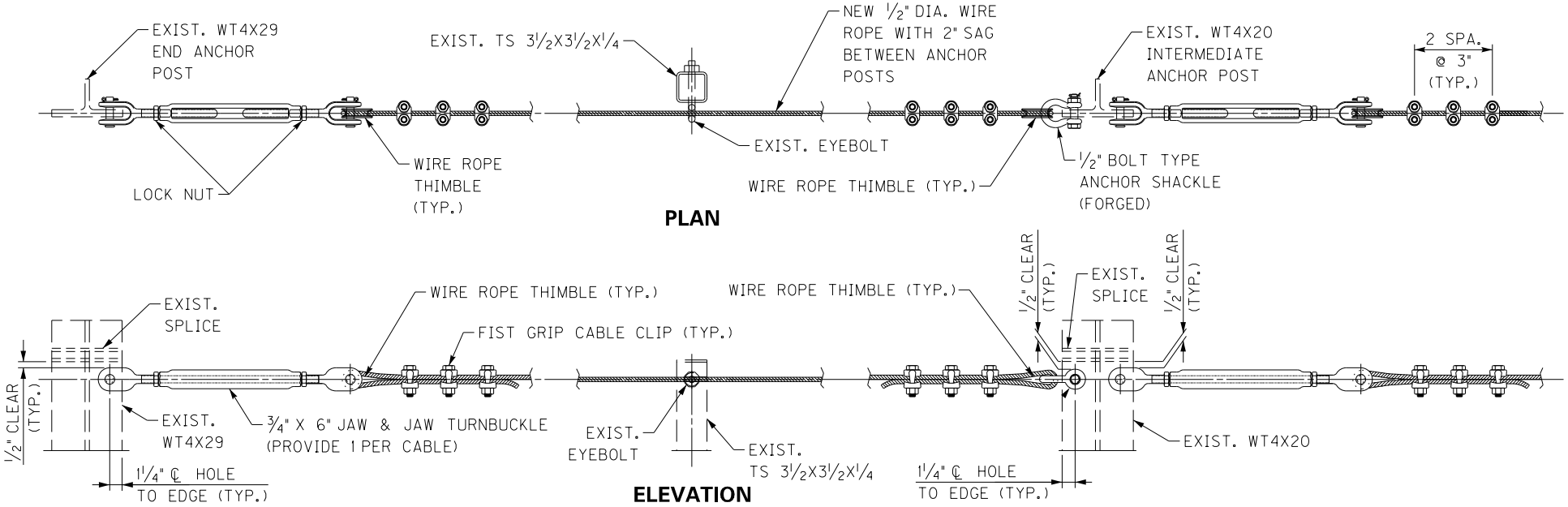

PROPOSED UPPER CHORD INSPECTION ACCESS

ROUTE	COUNTY		PREPARED BY	APRIL 3, 2020
US–27	CAMPBELL	REPAIR 1: UPPER CHORD INSPECTION ACCESS	AECOM	
CROSSING	STRUCTURE NAME			SHEET 5 OF 7
OHIO RIVER	TAYLOR SOUTHGATE			

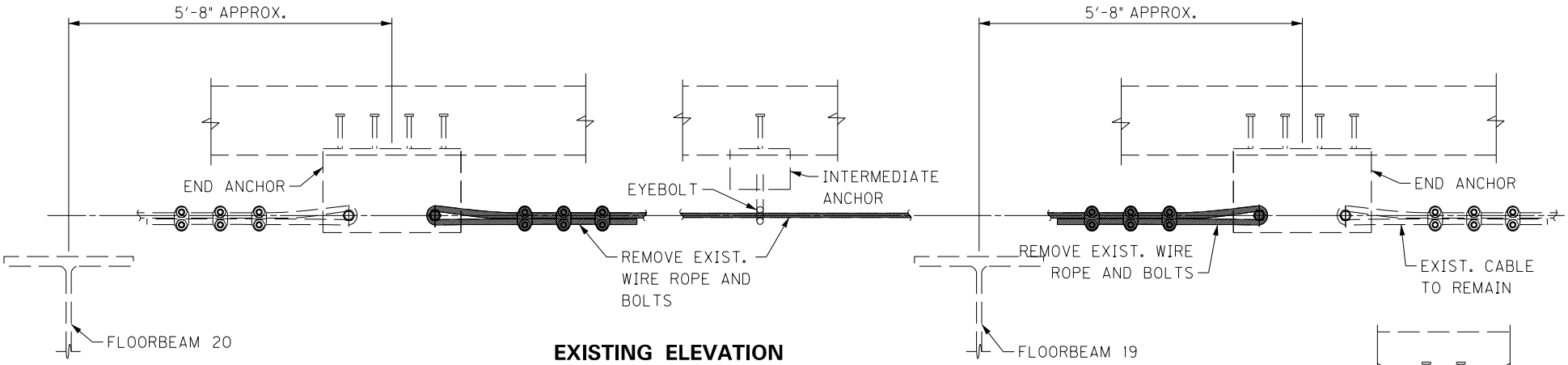

EXISTING ELEVATION

EXISTING LOWER CHORD INSPECTION ACCESS

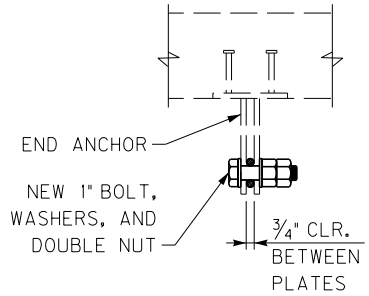

SECTION A–A

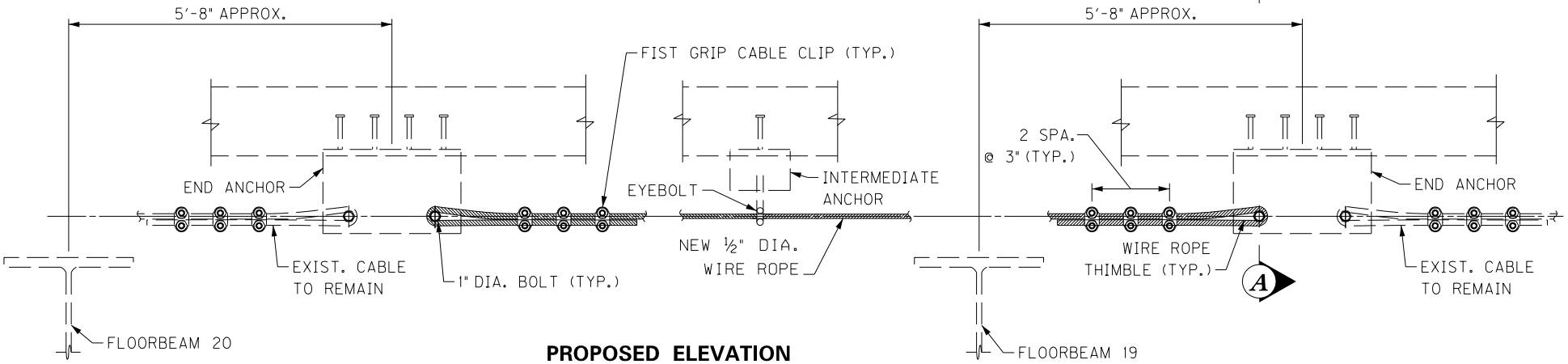

PROPOSED ELEVATION

PROPOSED LOWER CHORD INSPECTION ACCESS

ROUTE	COUNTY		PREPARED BY	APRIL 3, 2020
US–27	CAMPBELL	REPAIR 2: LOWER CHORD INSPECTION ACCESS	AECOM	
CROSSING	STRUCTURE NAME			SHEET 6 OF 7
OHIO RIVER	TAYLOR SOUTHGATE			

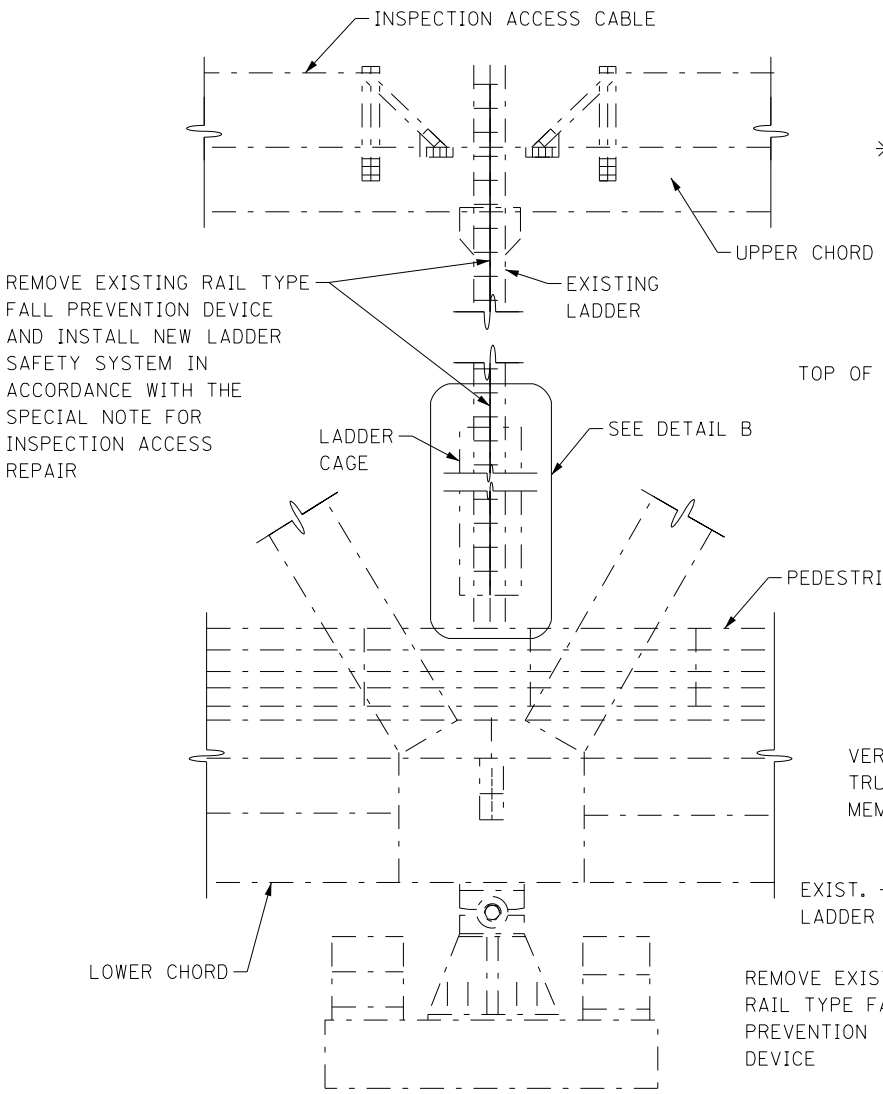

ELEVATION AT PIER B AND C

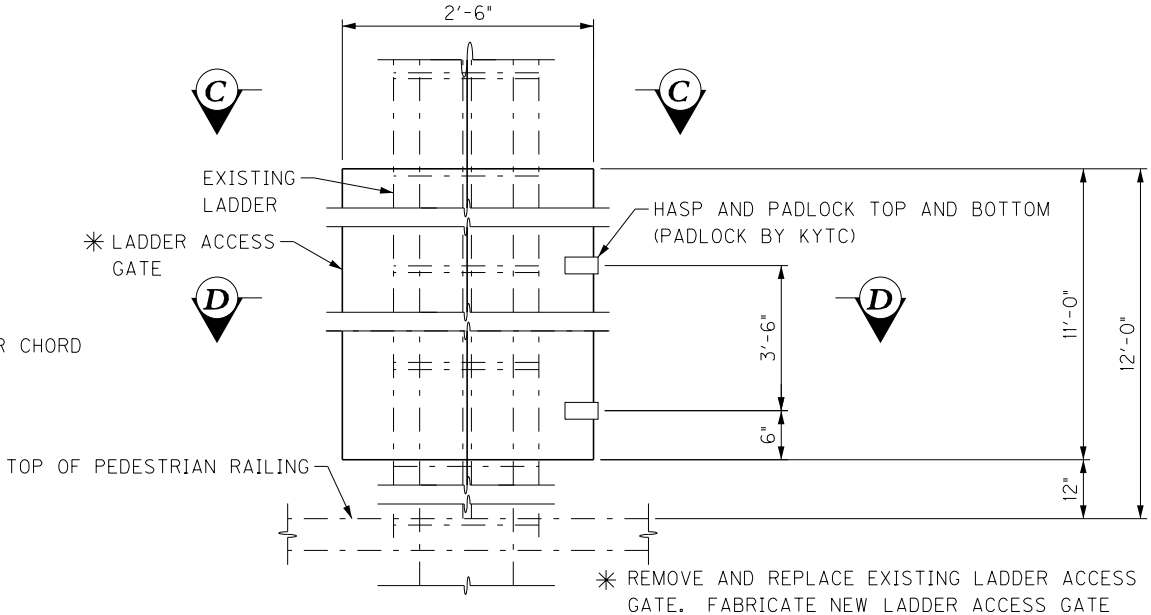

DETAIL B

✳ REMOVE AND REPLACE EXISTING LADDER ACCESS GATE. FABRICATE NEW LADDER ACCESS GATE WITH: 3/16" THICK PLATE STEEL, CONTINUOUS STAINLESS STEEL HINGE, AND TWO HASP AND PADLOCK ASSEMBLIES. PROVIDE 1/2" MINIMUM CLEARANCE BETWEEN THE NEW LADDER SAFETY SYSTEM AND THE NEW LADDER ACCESS GATE. NO HOLES SHALL BE DRILLED THROUGH THE TRUSS MEMBER.

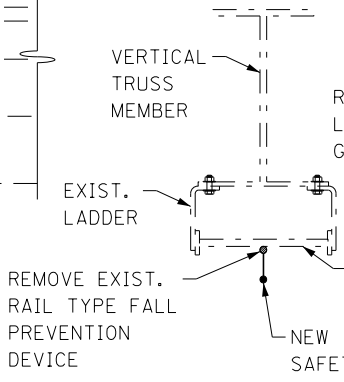

SECTION C–C

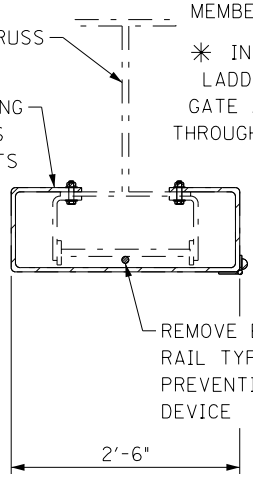

SECTION D–D EXISTING

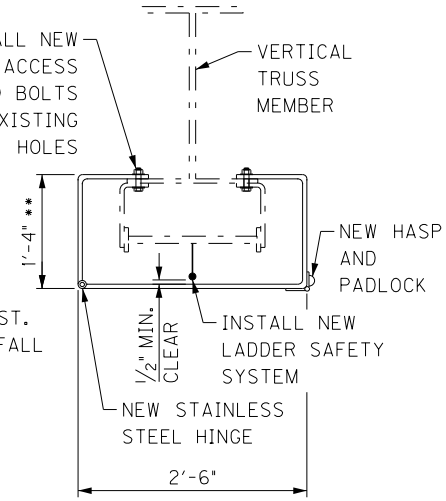

SECTION D–D PROPOSED

✳ ✳ FIELD VERIFY LADDER GATE SIDE PANEL DIMENSION. PROVIDE 1/2" CLEARANCE BETWEEN THE LADDER GATE AND THE NEW LADDER SAFETY SYSTEM. THE ACCESS GATE SHALL NOT PROTRUDE BEYOND THE BACK FACE OF THE PEDESTRIAN RAILING.

ROUTE	COUNTY		PREPARED BY	APRIL 3, 2020
US–27	CAMPBELL	REPAIR 3: LADDER SAFETY SYSTEM	AECOM	SHEET 7 OF 7
CROSSING	STRUCTURE NAME			
OHIO RIVER	TAYLOR SOUTHGATE			

PART II

SPECIFICATIONS AND STANDARD DRAWINGS

STANDARD SPECIFICATIONS

Any reference in the plans or proposal to previous editions of the *Standard Specifications for Road and Bridge Construction* and *Standard Drawings* are superseded by *Standard Specifications for Road and Bridge Construction, Edition of 2019* and *Standard Drawings, Edition of 2020.*

SUPPLEMENTAL SPECIFICATIONS

The contractor shall use the Supplemental Specifications that are effective at the time of letting. The Supplemental Specifications can be found at the following link:
http://transportation.ky.gov/Construction/Pages/Kentucky-Standard-Specifications.aspx

PART III

EMPLOYMENT, WAGE AND RECORD REQUIREMENTS

FHWA-1273 -- Revised July 5, 2022

REQUIRED CONTRACT PROVISIONS
FEDERAL-AID CONSTRUCTION CONTRACTS

I. General
II. Nondiscrimination
III. Non-segregated Facilities
IV. Davis-Bacon and Related Act Provisions
V. Contract Work Hours and Safety Standards Act Provisions
VI. Subletting or Assigning the Contract
VII. Safety: Accident Prevention
VIII. False Statements Concerning Highway Projects
IX. Implementation of Clean Air Act and Federal Water Pollution Control Act
X. Certification Regarding Debarment, Suspension, Ineligibility and Voluntary Exclusion
XI. Certification Regarding Use of Contract Funds for Lobbying
XII. Use of United States-Flag Vessels:

ATTACHMENTS

A. Employment and Materials Preference for Appalachian Development Highway System or Appalachian Local Access Road Contracts (included in Appalachian contracts only)

I. GENERAL

1. Form FHWA-1273 must be physically incorporated in each construction contract funded under title 23, United States Code, as required in 23 CFR 633.102(b) (excluding emergency contracts solely intended for debris removal). The contractor (or subcontractor) must insert this form in each subcontract and further require its inclusion in all lower tier subcontracts (excluding purchase orders, rental agreements and other agreements for supplies or services). 23 CFR 633.102(e).

The applicable requirements of Form FHWA-1273 are incorporated by reference for work done under any purchase order, rental agreement or agreement for other services. The prime contractor shall be responsible for compliance by any subcontractor, lower-tier subcontractor or service provider. 23 CFR 633.102(e).

Form FHWA-1273 must be included in all Federal-aid design-build contracts, in all subcontracts and in lower tier subcontracts (excluding subcontracts for design services, purchase orders, rental agreements and other agreements for supplies or services) in accordance with 23 CFR 633.102. The design-builder shall be responsible for compliance by any subcontractor, lower-tier subcontractor or service provider.

Contracting agencies may reference Form FHWA-1273 in solicitation-for-bids or request-for-proposals documents, however, the Form FHWA-1273 must be physically incorporated (not referenced) in all contracts, subcontracts and lower-tier subcontracts (excluding purchase orders, rental agreements and other agreements for supplies or services related to a construction contract). 23 CFR 633.102(b).

2. Subject to the applicability criteria noted in the following sections, these contract provisions shall apply to all work performed on the contract by the contractor's own organization and with the assistance of workers under the contractor's immediate superintendence and to all work performed on the contract by piecework, station work, or by subcontract. 23 CFR 633.102(d).

3. A breach of any of the stipulations contained in these Required Contract Provisions may be sufficient grounds for withholding of progress payments, withholding of final payment, termination of the contract, suspension / debarment or any other action determined to be appropriate by the contracting agency and FHWA.

4. Selection of Labor: During the performance of this contract, the contractor shall not use convict labor for any purpose within the limits of a construction project on a Federal-aid highway unless it is labor performed by convicts who are on parole, supervised release, or probation. 23 U.S.C. 114(b). The term Federal-aid highway does not include roadways functionally classified as local roads or rural minor collectors. 23 U.S.C. 101(a).

II. NONDISCRIMINATION (23 CFR 230.107(a); 23 CFR Part 230, Subpart A, Appendix A; EO 11246)

The provisions of this section related to 23 CFR Part 230, Subpart A, Appendix A are applicable to all Federal-aid construction contracts and to all related construction subcontracts of $10,000 or more. The provisions of 23 CFR Part 230 are not applicable to material supply, engineering, or architectural service contracts.

In addition, the contractor and all subcontractors must comply with the following policies: Executive Order 11246, 41 CFR Part 60, 29 CFR Parts 1625-1627, 23 U.S.C. 140, Section 504 of the Rehabilitation Act of 1973, as amended (29 U.S.C. 794), Title VI of the Civil Rights Act of 1964, as amended (42 U.S.C. 2000d et seq.), and related regulations including 49 CFR Parts 21, 26, and 27; and 23 CFR Parts 200, 230, and 633.

The contractor and all subcontractors must comply with: the requirements of the Equal Opportunity Clause in 41 CFR 60-1.4(b) and, for all construction contracts exceeding $10,000, the Standard Federal Equal Employment Opportunity Construction Contract Specifications in 41 CFR 60-4.3.

Note: The U.S. Department of Labor has exclusive authority to determine compliance with Executive Order 11246 and the policies of the Secretary of Labor including 41 CFR Part 60, and 29 CFR Parts 1625-1627. The contracting agency and the FHWA have the authority and the responsibility to ensure compliance with 23 U.S.C. 140, Section 504 of the Rehabilitation Act of 1973, as amended (29 U.S.C. 794), and Title VI of the Civil Rights Act of 1964, as amended (42 U.S.C. 2000d et seq.), and related regulations including 49 CFR Parts 21, 26, and 27; and 23 CFR Parts 200, 230, and 633.

The following provision is adopted from 23 CFR Part 230, Subpart A, Appendix A, with appropriate revisions to conform to the U.S. Department of Labor (US DOL) and FHWA requirements.

1. Equal Employment Opportunity: Equal Employment Opportunity (EEO) requirements not to discriminate and to take affirmative action to assure equal opportunity as set forth under laws, executive orders, rules, regulations (*see* 28 CFR Part 35, 29 CFR Part 1630, 29 CFR Parts 1625-1627, 41 CFR Part 60 and 49 CFR Part 27) and orders of the Secretary of Labor as modified by the provisions prescribed herein, and imposed pursuant to 23 U.S.C. 140, shall constitute the EEO and specific affirmative action standards for the contractor's project activities under this contract. The provisions of the Americans with Disabilities Act of 1990 (42 U.S.C. 12101 et seq.) set forth under 28 CFR Part 35 and 29 CFR Part 1630 are incorporated by reference in this contract. In the execution of this contract, the contractor agrees to comply with the following minimum specific requirement activities of EEO:

a. The contractor will work with the contracting agency and the Federal Government to ensure that it has made every good faith effort to provide equal opportunity with respect to all of its terms and conditions of employment and in their review of activities under the contract. 23 CFR 230.409 (g)(4) & (5).

b. The contractor will accept as its operating policy the following statement:

> "It is the policy of this Company to assure that applicants are employed, and that employees are treated during employment, without regard to their race, religion, sex, sexual orientation, gender identity, color, national origin, age or disability. Such action shall include: employment, upgrading, demotion, or transfer; recruitment or recruitment advertising; layoff or termination; rates of pay or other forms of compensation; and selection for training, including apprenticeship, pre-apprenticeship, and/or on-the-job training."

2. EEO Officer: The contractor will designate and make known to the contracting officers an EEO Officer who will have the responsibility for and must be capable of effectively administering and promoting an active EEO program and who must be assigned adequate authority and responsibility to do so.

3. Dissemination of Policy: All members of the contractor's staff who are authorized to hire, supervise, promote, and discharge employees, or who recommend such action or are substantially involved in such action, will be made fully cognizant of and will implement the contractor's EEO policy and contractual responsibilities to provide EEO in each grade and classification of employment. To ensure that the above agreement will be met, the following actions will be taken as a minimum:

a. Periodic meetings of supervisory and personnel office employees will be conducted before the start of work and then not less often than once every six months, at which time the contractor's EEO policy and its implementation will be reviewed and explained. The meetings will be conducted by the EEO Officer or other knowledgeable company official.

b. All new supervisory or personnel office employees will be given a thorough indoctrination by the EEO Officer, covering all major aspects of the contractor's EEO obligations within thirty days following their reporting for duty with the contractor.

c. All personnel who are engaged in direct recruitment for the project will be instructed by the EEO Officer in the contractor's procedures for locating and hiring minorities and women.

d. Notices and posters setting forth the contractor's EEO policy will be placed in areas readily accessible to employees, applicants for employment and potential employees.

e. The contractor's EEO policy and the procedures to implement such policy will be brought to the attention of employees by means of meetings, employee handbooks, or other appropriate means.

4. Recruitment: When advertising for employees, the contractor will include in all advertisements for employees the notation: "An Equal Opportunity Employer." All such advertisements will be placed in publications having a large circulation among minorities and women in the area from which the project work force would normally be derived.

a. The contractor will, unless precluded by a valid bargaining agreement, conduct systematic and direct recruitment through public and private employee referral sources likely to yield qualified minorities and women. To meet this requirement, the contractor will identify sources of potential minority group employees and establish with such identified sources procedures whereby minority and women applicants may be referred to the contractor for employment consideration.

b. In the event the contractor has a valid bargaining agreement providing for exclusive hiring hall referrals, the contractor is expected to observe the provisions of that agreement to the extent that the system meets the contractor's compliance with EEO contract provisions. Where implementation of such an agreement has the effect of discriminating against minorities or women, or obligates the contractor to do the same, such implementation violates Federal nondiscrimination provisions.

c. The contractor will encourage its present employees to refer minorities and women as applicants for employment. Information and procedures with regard to referring such applicants will be discussed with employees.

5. Personnel Actions: Wages, working conditions, and employee benefits shall be established and administered, and personnel actions of every type, including hiring, upgrading, promotion, transfer, demotion, layoff, and termination, shall be taken without regard to race, color, religion, sex, sexual orientation, gender identity, national origin, age or disability. The following procedures shall be followed:

a. The contractor will conduct periodic inspections of project sites to ensure that working conditions and employee facilities do not indicate discriminatory treatment of project site personnel.

b. The contractor will periodically evaluate the spread of wages paid within each classification to determine any evidence of discriminatory wage practices.

c. The contractor will periodically review selected personnel actions in depth to determine whether there is evidence of discrimination. Where evidence is found, the contractor will promptly take corrective action. If the review indicates that the discrimination may extend beyond the actions reviewed, such corrective action shall include all affected persons.

d. The contractor will promptly investigate all complaints of alleged discrimination made to the contractor in connection with its obligations under this contract, will attempt to resolve such complaints, and will take appropriate corrective action

within a reasonable time. If the investigation indicates that the discrimination may affect persons other than the complainant, such corrective action shall include such other persons. Upon completion of each investigation, the contractor will inform every complainant of all of their avenues of appeal.

6. Training and Promotion:

a. The contractor will assist in locating, qualifying, and increasing the skills of minorities and women who are applicants for employment or current employees. Such efforts should be aimed at developing full journey level status employees in the type of trade or job classification involved.

b. Consistent with the contractor's work force requirements and as permissible under Federal and State regulations, the contractor shall make full use of training programs (i.e., apprenticeship and on-the-job training programs for the geographical area of contract performance). In the event a special provision for training is provided under this contract, this subparagraph will be superseded as indicated in the special provision. The contracting agency may reserve training positions for persons who receive welfare assistance in accordance with 23 U.S.C. 140(a).

c. The contractor will advise employees and applicants for employment of available training programs and entrance requirements for each.

d. The contractor will periodically review the training and promotion potential of employees who are minorities and women and will encourage eligible employees to apply for such training and promotion.

7. Unions: If the contractor relies in whole or in part upon unions as a source of employees, the contractor will use good faith efforts to obtain the cooperation of such unions to increase opportunities for minorities and women. 23 CFR 230.409. Actions by the contractor, either directly or through a contractor's association acting as agent, will include the procedures set forth below:

a. The contractor will use good faith efforts to develop, in cooperation with the unions, joint training programs aimed toward qualifying more minorities and women for membership in the unions and increasing the skills of minorities and women so that they may qualify for higher paying employment.

b. The contractor will use good faith efforts to incorporate an EEO clause into each union agreement to the end that such union will be contractually bound to refer applicants without regard to their race, color, religion, sex, sexual orientation, gender identity, national origin, age, or disability.

c. The contractor is to obtain information as to the referral practices and policies of the labor union except that to the extent such information is within the exclusive possession of the labor union and such labor union refuses to furnish such information to the contractor, the contractor shall so certify to the contracting agency and shall set forth what efforts have been made to obtain such information.

d. In the event the union is unable to provide the contractor with a reasonable flow of referrals within the time limit set forth in the collective bargaining agreement, the contractor will, through independent recruitment efforts, fill the employment vacancies without regard to race, color, religion, sex, sexual orientation, gender identity, national origin, age, or disability; making full efforts to obtain qualified and/or qualifiable minorities and women. The failure of a union to provide sufficient referrals (even though it is obligated to provide exclusive referrals under the terms of a collective bargaining agreement) does not relieve the contractor from the requirements of this paragraph. In the event the union referral practice prevents the contractor from meeting the obligations pursuant to Executive Order 11246, as amended, and these special provisions, such contractor shall immediately notify the contracting agency.

8. Reasonable Accommodation for Applicants / Employees with Disabilities: The contractor must be familiar with the requirements for and comply with the Americans with Disabilities Act and all rules and regulations established thereunder. Employers must provide reasonable accommodation in all employment activities unless to do so would cause an undue hardship.

9. Selection of Subcontractors, Procurement of Materials and Leasing of Equipment: The contractor shall not discriminate on the grounds of race, color, religion, sex, sexual orientation, gender identity, national origin, age, or disability in the selection and retention of subcontractors, including procurement of materials and leases of equipment. The contractor shall take all necessary and reasonable steps to ensure nondiscrimination in the administration of this contract.

a. The contractor shall notify all potential subcontractors, suppliers, and lessors of their EEO obligations under this contract.

b. The contractor will use good faith efforts to ensure subcontractor compliance with their EEO obligations.

10. Assurances Required:

a. The requirements of 49 CFR Part 26 and the State DOT’s FHWA-approved Disadvantaged Business Enterprise (DBE) program are incorporated by reference.

b. The contractor, subrecipient or subcontractor shall not discriminate on the basis of race, color, national origin, or sex in the performance of this contract. The contractor shall carry out applicable requirements of 49 CFR part 26 in the award and administration of DOT-assisted contracts. Failure by the contractor to carry out these requirements is a material breach of this contract, which may result in the termination of this contract or such other remedy as the recipient deems appropriate, which may include, but is not limited to:
(1) Withholding monthly progress payments;
(2) Assessing sanctions;
(3) Liquidated damages; and/or
(4) Disqualifying the contractor from future bidding as non-responsible.

c. The Title VI and nondiscrimination provisions of U.S. DOT Order 1050.2A at Appendixes A and E are incorporated by reference. 49 CFR Part 21.

11. Records and Reports: The contractor shall keep such records as necessary to document compliance with the EEO requirements. Such records shall be retained for a period of three years following the date of the final payment to the contractor for all contract work and shall be available at reasonable times and places for inspection by authorized representatives of the contracting agency and the FHWA.

a. The records kept by the contractor shall document the following:

(1) The number and work hours of minority and non-minority group members and women employed in each work classification on the project;

(2) The progress and efforts being made in cooperation with unions, when applicable, to increase employment opportunities for minorities and women; and

(3) The progress and efforts being made in locating, hiring, training, qualifying, and upgrading minorities and women.

b. The contractors and subcontractors will submit an annual report to the contracting agency each July for the duration of the project indicating the number of minority, women, and non-minority group employees currently engaged in each work classification required by the contract work. This information is to be reported on Form FHWA-1391. The staffing data should represent the project work force on board in all or any part of the last payroll period preceding the end of July. If on-the-job training is being required by special provision, the contractor will be required to collect and report training data. The employment data should reflect the work force on board during all or any part of the last payroll period preceding the end of July.

III. NONSEGREGATED FACILITIES

This provision is applicable to all Federal-aid construction contracts and to all related construction subcontracts of more than $10,000. 41 CFR 60-1.5.

As prescribed by 41 CFR 60-1.8, the contractor must ensure that facilities provided for employees are provided in such a manner that segregation on the basis of race, color, religion, sex, sexual orientation, gender identity, or national origin cannot result. The contractor may neither require such segregated use by written or oral policies nor tolerate such use by employee custom. The contractor's obligation extends further to ensure that its employees are not assigned to perform their services at any location under the contractor's control where the facilities are segregated. The term "facilities" includes waiting rooms, work areas, restaurants and other eating areas, time clocks, restrooms, washrooms, locker rooms and other storage or dressing areas, parking lots, drinking fountains, recreation or entertainment areas, transportation, and housing provided for employees. The contractor shall provide separate or single-user restrooms and necessary dressing or sleeping areas to assure privacy between sexes.

IV. DAVIS-BACON AND RELATED ACT PROVISIONS

This section is applicable to all Federal-aid construction projects exceeding $2,000 and to all related subcontracts and lower-tier subcontracts (regardless of subcontract size), in accordance with 29 CFR 5.5. The requirements apply to all projects located within the right-of-way of a roadway that is functionally classified as Federal-aid highway. 23 U.S.C. 113. This excludes roadways functionally classified as local roads or rural minor collectors, which are exempt. 23 U.S.C. 101. Where applicable law requires that projects be treated as a project on a Federal-aid highway, the provisions of this subpart will apply regardless of the location of the project. Examples include: Surface Transportation Block Grant Program projects funded under 23 U.S.C. 133 [excluding recreational trails projects], the Nationally Significant Freight and Highway Projects funded under 23 U.S.C. 117, and National Highway Freight Program projects funded under 23 U.S.C. 167.

The following provisions are from the U.S. Department of Labor regulations in 29 CFR 5.5 “Contract provisions and related matters” with minor revisions to conform to the FHWA-1273 format and FHWA program requirements.

1. Minimum wages (29 CFR 5.5)

a. All laborers and mechanics employed or working upon the site of the work, will be paid unconditionally and not less often than once a week, and without subsequent deduction or rebate on any account (except such payroll deductions as are permitted by regulations issued by the Secretary of Labor under the Copeland Act (29 CFR part 3)), the full amount of wages and bona fide fringe benefits (or cash equivalents thereof) due at time of payment computed at rates not less than those contained in the wage determination of the Secretary of Labor which is attached hereto and made a part hereof, regardless of any contractual relationship which may be alleged to exist between the contractor and such laborers and mechanics.

Contributions made or costs reasonably anticipated for bona fide fringe benefits under section 1(b)(2) of the Davis-Bacon Act on behalf of laborers or mechanics are considered wages paid to such laborers or mechanics, subject to the provisions of paragraph 1.d. of this section; also, regular contributions made or costs incurred for more than a weekly period (but not less often than quarterly) under plans, funds, or programs which cover the particular weekly period, are deemed to be constructively made or incurred during such weekly period. Such laborers and mechanics shall be paid the appropriate wage rate and fringe benefits on the wage determination for the classification of work actually performed, without regard to skill, except as provided in 29 CFR 5.5(a)(4). Laborers or mechanics performing work in more than one classification may be compensated at the rate specified for each classification for the time actually worked therein: Provided, That the employer's payroll records accurately set forth the time spent in each classification in which work is performed. The wage determination (including any additional classification and wage rates conformed under paragraph 1.b. of this section) and the Davis-Bacon poster (WH–1321) shall be posted at all times by the contractor and its subcontractors at the site of the work in a prominent and accessible place where it can be easily seen by the workers.

b.(1) The contracting officer shall require that any class of laborers or mechanics, including helpers, which is not listed in the wage determination and which is to be employed under the contract shall be classified in conformance with the wage determination. The contracting officer shall approve an additional classification and wage rate and fringe benefits therefore only when the following criteria have been met:

(i) The work to be performed by the classification requested is not performed by a classification in the wage determination; and

(ii) The classification is utilized in the area by the construction industry; and

(iii) The proposed wage rate, including any bona fide fringe benefits, bears a reasonable relationship to the wage rates contained in the wage determination.

(2) If the contractor and the laborers and mechanics to be employed in the classification (if known), or their representatives, and the contracting officer agree on the classification and wage rate (including the amount designated for fringe benefits where appropriate), a report of the action taken shall be sent by the contracting officer to the Administrator of the Wage and Hour Division, U.S. Department of Labor, Washington, DC 20210. The Administrator, or an authorized representative, will approve, modify, or disapprove every additional classification action within 30 days of receipt and so advise the contracting officer or will notify the contracting officer within the 30-day period that additional time is necessary.

(3) In the event the contractor, the laborers or mechanics to be employed in the classification or their representatives, and the contracting officer do not agree on the proposed classification and wage rate (including the amount designated for fringe benefits, where appropriate), the contracting officer shall refer the questions, including the views of all interested parties and the recommendation of the contracting officer, to the Administrator for determination. The Administrator, or an authorized representative, will issue a determination within 30 days of receipt and so advise the contracting officer or will notify the contracting officer within the 30-day period that additional time is necessary.

(4) The wage rate (including fringe benefits where appropriate) determined pursuant to paragraphs 1.b.(2) or 1.b.(3) of this section, shall be paid to all workers performing work in the classification under this contract from the first day on which work is performed in the classification.

c. Whenever the minimum wage rate prescribed in the contract for a class of laborers or mechanics includes a fringe benefit which is not expressed as an hourly rate, the contractor shall either pay the benefit as stated in the wage determination or shall pay another bona fide fringe benefit or an hourly cash equivalent thereof.

d. If the contractor does not make payments to a trustee or other third person, the contractor may consider as part of the wages of any laborer or mechanic the amount of any costs reasonably anticipated in providing bona fide fringe benefits under a plan or program, Provided, That the Secretary of Labor has found, upon the written request of the contractor, that the applicable standards of the Davis-Bacon Act have been met. The Secretary of Labor may require the contractor to set aside in a separate account assets for the meeting of obligations under the plan or program.

2. Withholding (29 CFR 5.5)

The contracting agency shall upon its own action or upon written request of an authorized representative of the Department of Labor, withhold or cause to be withheld from the contractor under this contract, or any other Federal contract with the same prime contractor, or any other federally-assisted contract subject to Davis-Bacon prevailing wage requirements, which is held by the same prime contractor, so much of the accrued payments or advances as may be considered necessary to pay laborers and mechanics, including apprentices, trainees, and helpers, employed by the contractor or any subcontractor the full amount of wages required by the contract. In the event of failure to pay any laborer or mechanic, including any apprentice, trainee, or helper, employed or working on the site of the work, all or part of the wages required by the contract, the contracting agency may, after written notice to the contractor, take such action as may be necessary to cause the suspension of any further payment, advance, or guarantee of funds until such violations have ceased.

3. Payrolls and basic records (29 CFR 5.5)

a. Payrolls and basic records relating thereto shall be maintained by the contractor during the course of the work and preserved for a period of three years thereafter for all laborers and mechanics working at the site of the work. Such records shall contain the name, address, and social security number of each such worker, his or her correct classification, hourly rates of wages paid (including rates of contributions or costs anticipated for bona fide fringe benefits or cash equivalents thereof of the types described in section 1(b)(2)(B) of the Davis-Bacon Act), daily and weekly number of hours worked, deductions made and actual wages paid. Whenever the Secretary of Labor has found under 29 CFR 5.5(a)(1)(iv) that the wages of any laborer or mechanic include the amount of any costs reasonably anticipated in providing benefits under a plan or program described in section 1(b)(2)(B) of the Davis-Bacon Act, the contractor shall maintain records which show that the commitment to provide such benefits is enforceable, that the plan or program is financially responsible, and that the plan or program has been communicated in writing to the laborers or mechanics affected, and records which show the costs anticipated or the actual cost incurred in providing such benefits. Contractors employing apprentices or trainees under approved programs shall maintain written evidence of the registration of apprenticeship programs and certification of trainee programs, the registration of the apprentices and trainees, and the ratios and wage rates prescribed in the applicable programs.

b.(1) The contractor shall submit weekly for each week in which any contract work is performed a copy of all payrolls to the contracting agency. The payrolls submitted shall set out accurately and completely all of the information required to be maintained under 29 CFR 5.5(a)(3)(i), except that full social security numbers and home addresses shall not be included on weekly transmittals. Instead the payrolls shall only need to include an individually identifying number for each employee (e.g., the last four digits of the employee's social security number). The required weekly payroll information may be submitted in any form desired. Optional Form WH–347 is available for this purpose from the Wage and Hour Division Web site. The prime contractor is responsible for the submission of copies of payrolls by all subcontractors. Contractors and subcontractors shall maintain the full social security number and current address of each covered worker, and shall provide them upon request to the contracting agency for transmission to the State DOT, the FHWA or the Wage and Hour Division of the Department of Labor for purposes of an investigation or audit of compliance with prevailing wage requirements. It is not a violation of this section for a prime contractor to require a subcontractor to provide addresses and social security numbers to the prime contractor for its own records, without weekly submission to the contracting agency.

(2) Each payroll submitted shall be accompanied by a “Statement of Compliance,” signed by the contractor or

subcontractor or his or her agent who pays or supervises the payment of the persons employed under the contract and shall certify the following:

(i) That the payroll for the payroll period contains the information required to be provided under 29 CFR 5.5(a)(3)(ii), the appropriate information is being maintained under 29 CFR 5.5(a)(3)(i), and that such information is correct and complete;

(ii) That each laborer or mechanic (including each helper, apprentice, and trainee) employed on the contract during the payroll period has been paid the full weekly wages earned, without rebate, either directly or indirectly, and that no deductions have been made either directly or indirectly from the full wages earned, other than permissible deductions as set forth in 29 CFR part 3;

(iii) That each laborer or mechanic has been paid not less than the applicable wage rates and fringe benefits or cash equivalents for the classification of work performed, as specified in the applicable wage determination incorporated into the contract.

(3) The weekly submission of a properly executed certification set forth on the reverse side of Optional Form WH–347 shall satisfy the requirement for submission of the “Statement of Compliance” required by paragraph 3.b.(2) of this section.

(4) The falsification of any of the above certifications may subject the contractor or subcontractor to civil or criminal prosecution under 18 U.S.C. 1001 and 31 U.S.C. 231.

c. The contractor or subcontractor shall make the records required under paragraph 3.a. of this section available for inspection, copying, or transcription by authorized representatives of the contracting agency, the State DOT, the FHWA, or the Department of Labor, and shall permit such representatives to interview employees during working hours on the job. If the contractor or subcontractor fails to submit the required records or to make them available, the FHWA may, after written notice to the contractor, the contracting agency or the State DOT, take such action as may be necessary to cause the suspension of any further payment, advance, or guarantee of funds. Furthermore, failure to submit the required records upon request or to make such records available may be grounds for debarment action pursuant to 29 CFR 5.12.

4. Apprentices and trainees (29 CFR 5.5)

a. Apprentices (programs of the USDOL).

Apprentices will be permitted to work at less than the predetermined rate for the work they performed when they are employed pursuant to and individually registered in a bona fide apprenticeship program registered with the U.S. Department of Labor, Employment and Training Administration, Office of Apprenticeship Training, Employer and Labor Services, or with a State Apprenticeship Agency recognized by the Office, or if a person is employed in his or her first 90 days of probationary employment as an apprentice in such an apprenticeship program, who is not individually registered in the program, but who has been certified by the Office of Apprenticeship Training, Employer and Labor Services or a State Apprenticeship Agency (where appropriate) to be eligible for probationary employment as an apprentice.

The allowable ratio of apprentices to journeymen on the job site in any craft classification shall not be greater than the ratio permitted to the contractor as to the entire work force under the registered program. Any worker listed on a payroll at an apprentice wage rate, who is not registered or otherwise employed as stated above, shall be paid not less than the applicable wage rate on the wage determination for the classification of work actually performed. In addition, any apprentice performing work on the job site in excess of the ratio permitted under the registered program shall be paid not less than the applicable wage rate on the wage determination for the work actually performed. Where a contractor is performing construction on a project in a locality other than that in which its program is registered, the ratios and wage rates (expressed in percentages of the journeyman's hourly rate) specified in the contractor's or subcontractor's registered program shall be observed.

Every apprentice must be paid at not less than the rate specified in the registered program for the apprentice's level of progress, expressed as a percentage of the journeymen hourly rate specified in the applicable wage determination. Apprentices shall be paid fringe benefits in accordance with the provisions of the apprenticeship program. If the apprenticeship program does not specify fringe benefits, apprentices must be paid the full amount of fringe benefits listed on the wage determination for the applicable classification. If the Administrator determines that a different practice prevails for the applicable apprentice classification, fringes shall be paid in accordance with that determination.

In the event the Office of Apprenticeship Training, Employer and Labor Services, or a State Apprenticeship Agency recognized by the Office, withdraws approval of an apprenticeship program, the contractor will no longer be permitted to utilize apprentices at less than the applicable predetermined rate for the work performed until an acceptable program is approved.

b. Trainees (programs of the USDOL).

Except as provided in 29 CFR 5.16, trainees will not be permitted to work at less than the predetermined rate for the work performed unless they are employed pursuant to and individually registered in a program which has received prior approval, evidenced by formal certification by the U.S. Department of Labor, Employment and Training Administration.

The ratio of trainees to journeymen on the job site shall not be greater than permitted under the plan approved by the Employment and Training Administration.

Every trainee must be paid at not less than the rate specified in the approved program for the trainee's level of progress, expressed as a percentage of the journeyman hourly rate specified in the applicable wage determination. Trainees shall be paid fringe benefits in accordance with the provisions of the trainee program. If the trainee program does not mention fringe benefits, trainees shall be paid the full amount of fringe benefits listed on the wage determination unless the Administrator of the Wage and Hour Division determines that there is an apprenticeship program associated with the

corresponding journeyman wage rate on the wage determination which provides for less than full fringe benefits for apprentices. Any employee listed on the payroll at a trainee rate who is not registered and participating in a training plan approved by the Employment and Training Administration shall be paid not less than the applicable wage rate on the wage determination for the classification of work actually performed. In addition, any trainee performing work on the job site in excess of the ratio permitted under the registered program shall be paid not less than the applicable wage rate on the wage determination for the work actually performed.

In the event the Employment and Training Administration withdraws approval of a training program, the contractor will no longer be permitted to utilize trainees at less than the applicable predetermined rate for the work performed until an acceptable program is approved.

c. Equal employment opportunity. The utilization of apprentices, trainees and journeymen under this part shall be in conformity with the equal employment opportunity requirements of Executive Order 11246, as amended, and 29 CFR part 30.

d. Apprentices and Trainees (programs of the U.S. DOT).

Apprentices and trainees working under apprenticeship and skill training programs which have been certified by the Secretary of Transportation as promoting EEO in connection with Federal-aid highway construction programs are not subject to the requirements of paragraph 4 of this Section IV. 23 CFR 230.111(e)(2). The straight time hourly wage rates for apprentices and trainees under such programs will be established by the particular programs. The ratio of apprentices and trainees to journeymen shall not be greater than permitted by the terms of the particular program.

5. Compliance with Copeland Act requirements. The contractor shall comply with the requirements of 29 CFR part 3, which are incorporated by reference in this contract as provided in 29 CFR 5.5.

6. Subcontracts. The contractor or subcontractor shall insert Form FHWA-1273 in any subcontracts and also require the subcontractors to include Form FHWA-1273 in any lower tier subcontracts. The prime contractor shall be responsible for the compliance by any subcontractor or lower tier subcontractor with all the contract clauses in 29 CFR 5.5.

7. Contract termination: debarment. A breach of the contract clauses in 29 CFR 5.5 may be grounds for termination of the contract, and for debarment as a contractor and a subcontractor as provided in 29 CFR 5.12.

8. Compliance with Davis-Bacon and Related Act requirements. All rulings and interpretations of the Davis-Bacon and Related Acts contained in 29 CFR parts 1, 3, and 5 are herein incorporated by reference in this contract as provided in 29 CFR 5.5.

9. Disputes concerning labor standards. As provided in 29 CFR 5.5, disputes arising out of the labor standards provisions of this contract shall not be subject to the general disputes clause of this contract. Such disputes shall be resolved in accordance with the procedures of the Department of Labor set forth in 29 CFR parts 5, 6, and 7. Disputes within the meaning of this clause include disputes between the contractor (or any of its subcontractors) and the contracting agency, the U.S. Department of Labor, or the employees or their representatives.

10. Certification of eligibility (29 CFR 5.5)

a. By entering into this contract, the contractor certifies that neither it (nor he or she) nor any person or firm who has an interest in the contractor's firm is a person or firm ineligible to be awarded Government contracts by virtue of section 3(a) of the Davis-Bacon Act or 29 CFR 5.12(a)(1).

b. No part of this contract shall be subcontracted to any person or firm ineligible for award of a Government contract by virtue of section 3(a) of the Davis-Bacon Act or 29 CFR 5.12(a)(1).

c. The penalty for making false statements is prescribed in the U.S. Criminal Code, 18 U.S.C. 1001.

V. CONTRACT WORK HOURS AND SAFETY STANDARDS ACT

Pursuant to 29 CFR 5.5(b), the following clauses apply to any Federal-aid construction contract in an amount in excess of $100,000 and subject to the overtime provisions of the Contract Work Hours and Safety Standards Act. These clauses shall be inserted in addition to the clauses required by 29 CFR 5.5(a) or 29 CFR 4.6. As used in this paragraph, the terms laborers and mechanics include watchmen and guards.

1. Overtime requirements. No contractor or subcontractor contracting for any part of the contract work which may require or involve the employment of laborers or mechanics shall require or permit any such laborer or mechanic in any workweek in which he or she is employed on such work to work in excess of forty hours in such workweek unless such laborer or mechanic receives compensation at a rate not less than one and one-half times the basic rate of pay for all hours worked in excess of forty hours in such workweek. 29 CFR 5.5.

2. Violation; liability for unpaid wages; liquidated damages. In the event of any violation of the clause set forth in paragraph 1 of this section, the contractor and any subcontractor responsible therefor shall be liable for the unpaid wages. In addition, such contractor and subcontractor shall be liable to the United States (in the case of work done under contract for the District of Columbia or a territory, to such District or to such territory), for liquidated damages. Such liquidated damages shall be computed with respect to each individual laborer or mechanic, including watchmen and guards, employed in violation of the clause set forth in paragraph 1 of this section, in the sum currently provided in 29 CFR 5.5(b)(2)* for each calendar day on which such individual was required or permitted to work in excess of the standard workweek of forty hours without payment of the overtime wages required by the clause set forth in paragraph 1 of this section. 29 CFR 5.5.

* $27 as of January 23, 2019 (See 84 FR 213-01, 218) as may be adjusted annually by the Department of Labor; pursuant to the Federal Civil Penalties Inflation Adjustment Act of 1990).

3. Withholding for unpaid wages and liquidated damages. The FHWA or the contacting agency shall upon its own action or upon written request of an authorized representative of the Department of Labor withhold or cause to be withheld, from any moneys payable on account of work performed by the contractor or subcontractor under any such contract or any other Federal contract with the same prime contractor, or any other federally-assisted contract subject to the Contract Work Hours and Safety Standards Act, which is held by the same prime contractor, such sums as may be determined to be necessary to satisfy any liabilities of such contractor or subcontractor for unpaid wages and liquidated damages as provided in the clause set forth in paragraph 2 of this section. 29 CFR 5.5.

4. Subcontracts. The contractor or subcontractor shall insert in any subcontracts the clauses set forth in paragraphs 1 through 4 of this section and also a clause requiring the subcontractors to include these clauses in any lower tier subcontracts. The prime contractor shall be responsible for compliance by any subcontractor or lower tier subcontractor with the clauses set forth in paragraphs 1 through 4 of this section. 29 CFR 5.5.

VI. SUBLETTING OR ASSIGNING THE CONTRACT

This provision is applicable to all Federal-aid construction contracts on the National Highway System pursuant to 23 CFR 635.116.

1. The contractor shall perform with its own organization contract work amounting to not less than 30 percent (or a greater percentage if specified elsewhere in the contract) of the total original contract price, excluding any specialty items designated by the contracting agency. Specialty items may be performed by subcontract and the amount of any such specialty items performed may be deducted from the total original contract price before computing the amount of work required to be performed by the contractor's own organization (23 CFR 635.116).

a. The term “perform work with its own organization” in paragraph 1 of Section VI refers to workers employed or leased by the prime contractor, and equipment owned or rented by the prime contractor, with or without operators. Such term does not include employees or equipment of a subcontractor or lower tier subcontractor, agents of the prime contractor, or any other assignees. The term may include payments for the costs of hiring leased employees from an employee leasing firm meeting all relevant Federal and State regulatory requirements. Leased employees may only be included in this term if the prime contractor meets all of the following conditions: (based on longstanding interpretation)

(1) the prime contractor maintains control over the supervision of the day-to-day activities of the leased employees;
(2) the prime contractor remains responsible for the quality of the work of the leased employees;
(3) the prime contractor retains all power to accept or exclude individual employees from work on the project; and
(4) the prime contractor remains ultimately responsible for the payment of predetermined minimum wages, the submission of payrolls, statements of compliance and all other Federal regulatory requirements.

b. "Specialty Items" shall be construed to be limited to work that requires highly specialized knowledge, abilities, or equipment not ordinarily available in the type of contracting organizations qualified and expected to bid or propose on the contract as a whole and in general are to be limited to minor components of the overall contract. 23 CFR 635.102.

2. Pursuant to 23 CFR 635.116(a), the contract amount upon which the requirements set forth in paragraph (1) of Section VI is computed includes the cost of material and manufactured products which are to be purchased or produced by the contractor under the contract provisions.

3. Pursuant to 23 CFR 635.116(c), the contractor shall furnish (a) a competent superintendent or supervisor who is employed by the firm, has full authority to direct performance of the work in accordance with the contract requirements, and is in charge of all construction operations (regardless of who performs the work) and (b) such other of its own organizational resources (supervision, management, and engineering services) as the contracting officer determines is necessary to assure the performance of the contract.

4. No portion of the contract shall be sublet, assigned or otherwise disposed of except with the written consent of the contracting officer, or authorized representative, and such consent when given shall not be construed to relieve the contractor of any responsibility for the fulfillment of the contract. Written consent will be given only after the contracting agency has assured that each subcontract is evidenced in writing and that it contains all pertinent provisions and requirements of the prime contract. (based on long-standing interpretation of 23 CFR 635.116).

5. The 30-percent self-performance requirement of paragraph (1) is not applicable to design-build contracts; however, contracting agencies may establish their own self-performance requirements. 23 CFR 635.116(d).

VII. SAFETY: ACCIDENT PREVENTION

This provision is applicable to all Federal-aid construction contracts and to all related subcontracts.

1. In the performance of this contract the contractor shall comply with all applicable Federal, State, and local laws governing safety, health, and sanitation (23 CFR Part 635). The contractor shall provide all safeguards, safety devices and protective equipment and take any other needed actions as it determines, or as the contracting officer may determine, to be reasonably necessary to protect the life and health of employees on the job and the safety of the public and to protect property in connection with the performance of the work covered by the contract. 23 CFR 635.108.

2. It is a condition of this contract, and shall be made a condition of each subcontract, which the contractor enters into pursuant to this contract, that the contractor and any subcontractor shall not permit any employee, in performance of the contract, to work in surroundings or under conditions which are unsanitary, hazardous or dangerous to his/her health or safety, as determined under construction safety and health standards (29 CFR Part 1926) promulgated by the Secretary of Labor, in accordance with Section 107 of the Contract Work Hours and Safety Standards Act (40 U.S.C. 3704). 29 CFR 1926.10.

3. Pursuant to 29 CFR 1926.3, it is a condition of this contract that the Secretary of Labor or authorized representative thereof, shall have right of entry to any site of contract performance to inspect or investigate the matter of compliance

with the construction safety and health standards and to carry out the duties of the Secretary under Section 107 of the Contract Work Hours and Safety Standards Act (40 U.S.C. 3704).

VIII. FALSE STATEMENTS CONCERNING HIGHWAY PROJECTS

This provision is applicable to all Federal-aid construction contracts and to all related subcontracts.

In order to assure high quality and durable construction in conformity with approved plans and specifications and a high degree of reliability on statements and representations made by engineers, contractors, suppliers, and workers on Federal-aid highway projects, it is essential that all persons concerned with the project perform their functions as carefully, thoroughly, and honestly as possible. Willful falsification, distortion, or misrepresentation with respect to any facts related to the project is a violation of Federal law. To prevent any misunderstanding regarding the seriousness of these and similar acts, Form FHWA-1022 shall be posted on each Federal-aid highway project (23 CFR Part 635) in one or more places where it is readily available to all persons concerned with the project:

18 U.S.C. 1020 reads as follows:

"Whoever, being an officer, agent, or employee of the United States, or of any State or Territory, or whoever, whether a person, association, firm, or corporation, knowingly makes any false statement, false representation, or false report as to the character, quality, quantity, or cost of the material used or to be used, or the quantity or quality of the work performed or to be performed, or the cost thereof in connection with the submission of plans, maps, specifications, contracts, or costs of construction on any highway or related project submitted for approval to the Secretary of Transportation; or

Whoever knowingly makes any false statement, false representation, false report or false claim with respect to the character, quality, quantity, or cost of any work performed or to be performed, or materials furnished or to be furnished, in connection with the construction of any highway or related project approved by the Secretary of Transportation; or

Whoever knowingly makes any false statement or false representation as to material fact in any statement, certificate, or report submitted pursuant to provisions of the Federal-aid Roads Act approved July 11, 1916, (39 Stat. 355), as amended and supplemented;

Shall be fined under this title or imprisoned not more than 5 years or both."

IX. IMPLEMENTATION OF CLEAN AIR ACT AND FEDERAL WATER POLLUTION CONTROL ACT (42 U.S.C. 7606; 2 CFR 200.88; EO 11738)

This provision is applicable to all Federal-aid construction contracts in excess of $150,000 and to all related subcontracts. 48 CFR 2.101; 2 CFR 200.326.

By submission of this bid/proposal or the execution of this contract or subcontract, as appropriate, the bidder, proposer, Federal-aid construction contractor, subcontractor, supplier, or vendor agrees to comply with all applicable standards, orders or regulations issued pursuant to the Clean Air Act (42 U.S.C. 7401-7671q) and the Federal Water Pollution Control Act, as amended (33 U.S.C. 1251-1387). Violations must be reported to the Federal Highway Administration and the Regional Office of the Environmental Protection Agency. 2 CFR Part 200, Appendix II.

The contractor agrees to include or cause to be included the requirements of this Section in every subcontract, and further agrees to take such action as the contracting agency may direct as a means of enforcing such requirements. 2 CFR 200.326.

X. CERTIFICATION REGARDING DEBARMENT, SUSPENSION, INELIGIBILITY AND VOLUNTARY EXCLUSION

This provision is applicable to all Federal-aid construction contracts, design-build contracts, subcontracts, lower-tier subcontracts, purchase orders, lease agreements, consultant contracts or any other covered transaction requiring FHWA approval or that is estimated to cost $25,000 or more – as defined in 2 CFR Parts 180 and 1200. 2 CFR 180.220 and 1200.220.

1**. Instructions for Certification – First Tier Participants:**

a. By signing and submitting this proposal, the prospective first tier participant is providing the certification set out below.

b. The inability of a person to provide the certification set out below will not necessarily result in denial of participation in this covered transaction. The prospective first tier participant shall submit an explanation of why it cannot provide the certification set out below. The certification or explanation will be considered in connection with the department or agency's determination whether to enter into this transaction. However, failure of the prospective first tier participant to furnish a certification or an explanation shall disqualify such a person from participation in this transaction. 2 CFR 180.320.

c. The certification in this clause is a material representation of fact upon which reliance was placed when the contracting agency determined to enter into this transaction. If it is later determined that the prospective participant knowingly rendered an erroneous certification, in addition to other remedies available to the Federal Government, the contracting agency may terminate this transaction for cause of default. 2 CFR 180.325.

d. The prospective first tier participant shall provide immediate written notice to the contracting agency to whom this proposal is submitted if any time the prospective first tier participant learns that its certification was erroneous when submitted or has become erroneous by reason of changed circumstances. 2 CFR 180.345 and 180.350.

e. The terms "covered transaction," "debarred," "suspended," "ineligible," "participant," "person," "principal," and "voluntarily excluded," as used in this clause, are defined in 2 CFR Parts 180, Subpart I, 180.900-180.1020, and 1200. “First Tier Covered Transactions” refers to any covered transaction between a recipient or subrecipient of Federal funds and a participant (such as the prime or general contract). “Lower Tier Covered Transactions” refers to any covered transaction under a First Tier Covered Transaction (such as subcontracts). “First Tier Participant” refers to the participant

who has entered into a covered transaction with a recipient or subrecipient of Federal funds (such as the prime or general contractor). "Lower Tier Participant" refers any participant who has entered into a covered transaction with a First Tier Participant or other Lower Tier Participants (such as subcontractors and suppliers).

f. The prospective first tier participant agrees by submitting this proposal that, should the proposed covered transaction be entered into, it shall not knowingly enter into any lower tier covered transaction with a person who is debarred, suspended, declared ineligible, or voluntarily excluded from participation in this covered transaction, unless authorized by the department or agency entering into this transaction. 2 CFR 180.330.

g. The prospective first tier participant further agrees by submitting this proposal that it will include the clause titled "Certification Regarding Debarment, Suspension, Ineligibility and Voluntary Exclusion-Lower Tier Covered Transactions," provided by the department or contracting agency, entering into this covered transaction, without modification, in all lower tier covered transactions and in all solicitations for lower tier covered transactions exceeding the $25,000 threshold. 2 CFR 180.220 and 180.300.

h. A participant in a covered transaction may rely upon a certification of a prospective participant in a lower tier covered transaction that is not debarred, suspended, ineligible, or voluntarily excluded from the covered transaction, unless it knows that the certification is erroneous. 2 CFR 180.300; 180.320, and 180.325. A participant is responsible for ensuring that its principals are not suspended, debarred, or otherwise ineligible to participate in covered transactions. 2 CFR 180.335. To verify the eligibility of its principals, as well as the eligibility of any lower tier prospective participants, each participant may, but is not required to, check the System for Award Management website (https://www.sam.gov/). 2 CFR 180.300, 180.320, and 180.325.

i. Nothing contained in the foregoing shall be construed to require the establishment of a system of records in order to render in good faith the certification required by this clause. The knowledge and information of the prospective participant is not required to exceed that which is normally possessed by a prudent person in the ordinary course of business dealings.

j. Except for transactions authorized under paragraph (f) of these instructions, if a participant in a covered transaction knowingly enters into a lower tier covered transaction with a person who is suspended, debarred, ineligible, or voluntarily excluded from participation in this transaction, in addition to other remedies available to the Federal Government, the department or agency may terminate this transaction for cause or default. 2 CFR 180.325.

* * * * *

2. Certification Regarding Debarment, Suspension, Ineligibility and Voluntary Exclusion – First Tier Participants:

a. The prospective first tier participant certifies to the best of its knowledge and belief, that it and its principals:

(1) Are not presently debarred, suspended, proposed for debarment, declared ineligible, or voluntarily excluded from participating in covered transactions by any Federal department or agency, 2 CFR 180.335;.

(2) Have not within a three-year period preceding this proposal been convicted of or had a civil judgment rendered against them for commission of fraud or a criminal offense in connection with obtaining, attempting to obtain, or performing a public (Federal, State, or local) transaction or contract under a public transaction; violation of Federal or State antitrust statutes or commission of embezzlement, theft, forgery, bribery, falsification or destruction of records, making false statements, or receiving stolen property, 2 CFR 180.800;

(3) Are not presently indicted for or otherwise criminally or civilly charged by a governmental entity (Federal, State or local) with commission of any of the offenses enumerated in paragraph (a)(2) of this certification, 2 CFR 180.700 and 180.800; and

(4) Have not within a three-year period preceding this application/proposal had one or more public transactions (Federal, State or local) terminated for cause or default. 2 CFR 180.335(d).

(5) Are not a corporation that has been convicted of a felony violation under any Federal law within the two-year period preceding this proposal (USDOT Order 4200.6 implementing appropriations act requirements); and

(6) Are not a corporation with any unpaid Federal tax liability that has been assessed, for which all judicial and administrative remedies have been exhausted, or have lapsed, and that is not being paid in a timely manner pursuant to an agreement with the authority responsible for collecting the tax liability (USDOT Order 4200.6 implementing appropriations act requirements).

b. Where the prospective participant is unable to certify to any of the statements in this certification, such prospective participant should attach an explanation to this proposal. 2 CFR 180.335 and 180.340.

3. **Instructions for Certification - Lower Tier Participants:**

(Applicable to all subcontracts, purchase orders, and other lower tier transactions requiring prior FHWA approval or estimated to cost $25,000 or more - 2 CFR Parts 180 and 1200). 2 CFR 180.220 and 1200.220.

a. By signing and submitting this proposal, the prospective lower tier participant is providing the certification set out below.

b. The certification in this clause is a material representation of fact upon which reliance was placed when this transaction was entered into. If it is later determined that the prospective lower tier participant knowingly rendered an erroneous certification, in addition to other remedies available to the Federal Government, the department, or agency with which this transaction originated may pursue available remedies, including suspension and/or debarment.

c. The prospective lower tier participant shall provide immediate written notice to the person to which this proposal is submitted if at any time the prospective lower tier participant learns that its certification was erroneous by reason of changed circumstances. 2 CFR 180.365.

d. The terms "covered transaction," "debarred," "suspended," "ineligible," "participant," "person," "principal," and "voluntarily excluded," as used in this clause, are defined in 2 CFR Parts 180, Subpart I, 180.900 – 180.1020, and 1200. You may contact the person to which this proposal is

submitted for assistance in obtaining a copy of those regulations. “First Tier Covered Transactions” refers to any covered transaction between a recipient or subrecipient of Federal funds and a participant (such as the prime or general contract). “Lower Tier Covered Transactions” refers to any covered transaction under a First Tier Covered Transaction (such as subcontracts). “First Tier Participant” refers to the participant who has entered into a covered transaction with a recipient or subrecipient of Federal funds (such as the prime or general contractor). “Lower Tier Participant” refers any participant who has entered into a covered transaction with a First Tier Participant or other Lower Tier Participants (such as subcontractors and suppliers).

e. The prospective lower tier participant agrees by submitting this proposal that, should the proposed covered transaction be entered into, it shall not knowingly enter into any lower tier covered transaction with a person who is debarred, suspended, declared ineligible, or voluntarily excluded from participation in this covered transaction, unless authorized by the department or agency with which this transaction originated. 2 CFR 1200.220 and 1200.332.

f. The prospective lower tier participant further agrees by submitting this proposal that it will include this clause titled "Certification Regarding Debarment, Suspension, Ineligibility and Voluntary Exclusion-Lower Tier Covered Transaction," without modification, in all lower tier covered transactions and in all solicitations for lower tier covered transactions exceeding the $25,000 threshold. 2 CFR 180.220 and 1200.220.

g. A participant in a covered transaction may rely upon a certification of a prospective participant in a lower tier covered transaction that is not debarred, suspended, ineligible, or voluntarily excluded from the covered transaction, unless it knows that the certification is erroneous. A participant is responsible for ensuring that its principals are not suspended, debarred, or otherwise ineligible to participate in covered transactions. To verify the eligibility of its principals, as well as the eligibility of any lower tier prospective participants, each participant may, but is not required to, check the System for Award Management website (https://www.sam.gov/), which is compiled by the General Services Administration. 2 CFR 180.300, 180.320, 180.330, and 180.335.

h. Nothing contained in the foregoing shall be construed to require establishment of a system of records in order to render in good faith the certification required by this clause. The knowledge and information of participant is not required to exceed that which is normally possessed by a prudent person in the ordinary course of business dealings.

i. Except for transactions authorized under paragraph e of these instructions, if a participant in a covered transaction knowingly enters into a lower tier covered transaction with a person who is suspended, debarred, ineligible, or voluntarily excluded from participation in this transaction, in addition to other remedies available to the Federal Government, the department or agency with which this transaction originated may pursue available remedies, including suspension and/or debarment. 2 CFR 180.325.

* * * * *

Certification Regarding Debarment, Suspension, Ineligibility and Voluntary Exclusion--Lower Tier Participants:

1. The prospective lower tier participant certifies, by submission of this proposal, that neither it nor its principals:

(a) is presently debarred, suspended, proposed for debarment, declared ineligible, or voluntarily excluded from participating in covered transactions by any Federal department or agency, 2 CFR 180.355;

(b) is a corporation that has been convicted of a felony violation under any Federal law within the two-year period preceding this proposal (USDOT Order 4200.6 implementing appropriations act requirements); and

(c) is a corporation with any unpaid Federal tax liability that has been assessed, for which all judicial and administrative remedies have been exhausted, or have lapsed, and that is not being paid in a timely manner pursuant to an agreement with the authority responsible for collecting the tax liability. (USDOT Order 4200.6 implementing appropriations act requirements)

2. Where the prospective lower tier participant is unable to certify to any of the statements in this certification, such prospective participant should attach an explanation to this proposal.

* * * * *

XI. CERTIFICATION REGARDING USE OF CONTRACT FUNDS FOR LOBBYING

This provision is applicable to all Federal-aid construction contracts and to all related subcontracts which exceed $100,000. 49 CFR Part 20, App. A.

1. The prospective participant certifies, by signing and submitting this bid or proposal, to the best of his or her knowledge and belief, that:

a. No Federal appropriated funds have been paid or will be paid, by or on behalf of the undersigned, to any person for influencing or attempting to influence an officer or employee of any Federal agency, a Member of Congress, an officer or employee of Congress, or an employee of a Member of Congress in connection with the awarding of any Federal contract, the making of any Federal grant, the making of any Federal loan, the entering into of any cooperative agreement, and the extension, continuation, renewal, amendment, or modification of any Federal contract, grant, loan, or cooperative agreement.

b. If any funds other than Federal appropriated funds have been paid or will be paid to any person for influencing or attempting to influence an officer or employee of any Federal agency, a Member of Congress, an officer or employee of Congress, or an employee of a Member of Congress in connection with this Federal contract, grant, loan, or cooperative agreement, the undersigned shall complete and submit Standard Form-LLL, "Disclosure Form to Report Lobbying," in accordance with its instructions.

2. This certification is a material representation of fact upon which reliance was placed when this transaction was made or entered into. Submission of this certification is a prerequisite for making or entering into this transaction imposed by 31 U.S.C. 1352. Any person who fails to file the required certification shall be subject to a civil penalty of not less than $10,000 and not more than $100,000 for each such failure.

3. The prospective participant also agrees by submitting its bid or proposal that the participant shall require that the language of this certification be included in all lower tier

subcontracts, which exceed $100,000 and that all such recipients shall certify and disclose accordingly.

XII. USE OF UNITED STATES-FLAG VESSELS:

This provision is applicable to all Federal-aid construction contracts, design-build contracts, subcontracts, lower-tier subcontracts, purchase orders, lease agreements, or any other covered transaction. 46 CFR Part 381.

This requirement applies to material or equipment that is acquired for a specific Federal-aid highway project. 46 CFR 381.7. It is not applicable to goods or materials that come into inventories independent of an FHWA funded-contract.

When oceanic shipments (or shipments across the Great Lakes) are necessary for materials or equipment acquired for a specific Federal-aid construction project, the bidder, proposer, contractor, subcontractor, or vendor agrees:

1. To utilize privately owned United States-flag commercial vessels to ship at least 50 percent of the gross tonnage (computed separately for dry bulk carriers, dry cargo liners, and tankers) involved, whenever shipping any equipment, material, or commodities pursuant to this contract, to the extent such vessels are available at fair and reasonable rates for United States-flag commercial vessels. 46 CFR 381.7.

2. To furnish within 20 days following the date of loading for shipments originating within the United States or within 30 working days following the date of loading for shipments originating outside the United States, a legible copy of a rated, ‘on-board’ commercial ocean bill-of-lading in English for each shipment of cargo described in paragraph (b)(1) of this section to both the Contracting Officer (through the prime contractor in the case of subcontractor bills-of-lading) and to the Office of Cargo and Commercial Sealift (MAR-620), Maritime Administration, Washington, DC 20590. (MARAD requires copies of the ocean carrier's (master) bills of lading, certified onboard, dated, with rates and charges. These bills of lading may contain business sensitive information and therefore may be submitted directly to MARAD by the Ocean Transportation Intermediary on behalf of the contractor). 46 CFR 381.7.

ATTACHMENT A - EMPLOYMENT AND MATERIALS PREFERENCE FOR APPALACHIAN DEVELOPMENT HIGHWAY SYSTEM OR APPALACHIAN LOCAL ACCESS ROAD CONTRACTS (23 CFR 633, Subpart B, Appendix B)
This provision is applicable to all Federal-aid projects funded under the Appalachian Regional Development Act of 1965.

1. During the performance of this contract, the contractor undertaking to do work which is, or reasonably may be, done as on-site work, shall give preference to qualified persons who regularly reside in the labor area as designated by the DOL wherein the contract work is situated, or the subregion, or the Appalachian counties of the State wherein the contract work is situated, except:

a. To the extent that qualified persons regularly residing in the area are not available.

b. For the reasonable needs of the contractor to employ supervisory or specially experienced personnel necessary to assure an efficient execution of the contract work.

c. For the obligation of the contractor to offer employment to present or former employees as the result of a lawful collective bargaining contract, provided that the number of nonresident persons employed under this subparagraph (1c) shall not exceed 20 percent of the total number of employees employed by the contractor on the contract work, except as provided in subparagraph (4) below.

2. The contractor shall place a job order with the State Employment Service indicating (a) the classifications of the laborers, mechanics and other employees required to perform the contract work, (b) the number of employees required in each classification, (c) the date on which the participant estimates such employees will be required, and (d) any other pertinent information required by the State Employment Service to complete the job order form. The job order may be placed with the State Employment Service in writing or by telephone. If during the course of the contract work, the information submitted by the contractor in the original job order is substantially modified, the participant shall promptly notify the State Employment Service.

3. The contractor shall give full consideration to all qualified job applicants referred to him by the State Employment Service. The contractor is not required to grant employment to any job applicants who, in his opinion, are not qualified to perform the classification of work required.

4. If, within one week following the placing of a job order by the contractor with the State Employment Service, the State Employment Service is unable to refer any qualified job applicants to the contractor, or less than the number requested, the State Employment Service will forward a certificate to the contractor indicating the unavailability of applicants. Such certificate shall be made a part of the contractor's permanent project records. Upon receipt of this certificate, the contractor may employ persons who do not normally reside in the labor area to fill positions covered by the certificate, notwithstanding the provisions of subparagraph (1c) above.

5. The provisions of 23 CFR 633.207(e) allow the contracting agency to provide a contractual preference for the use of mineral resource materials native to the Appalachian region.

6. The contractor shall include the provisions of Sections 1 through 4 of this Attachment A in every subcontract for work which is, or reasonably may be, done as on-site work.

KENTUCKY TRANSPORTATION CABINET
DEPARTMENT OF HIGHWAYS

EMPLOYMENT REQUIREMENTS
RELATING TO
NONDISCRIMINATION OF EMPLOYEES
(APPLICABLE TO FEDERAL-AID SYSTEM CONTRACTS)

AN ACT OF THE KENTUCKY GENERAL ASSEMBLY TO PREVENT DISCRIMINATION IN EMPLOYMENT

KRS CHAPTER 344
EFFECTIVE JUNE 16, 1972

The contract on this project, in accordance with KRS Chapter 344, provides that during the performance of this contract, the contractor agrees as follows:

1. The contractor shall not fail or refuse to hire, or shall not discharge any individual, or otherwise discriminate against an individual with respect to his compensation, terms, conditions, or privileges of employment, because of such individual's race, color, religion, national origin, sex, disability or age (forty and above); or limit, segregate, or classify his employees in any way which would deprive or tend to deprive an individual of employment opportunities or otherwise adversely affect his status as an employee, because of such individual's race, color, religion, national origin, sex, disability or age forty (40) and over. The contractor agrees to post in conspicuous places, available to employees and applicants for employment, notices to be provided setting forth the provisions of this nondiscrimination clause.

2. The contractor shall not print or publish or cause to be printed or published a notice or advertisement relating to employment by such an employer or membership in or any classification or referral for employment by the employment agency, indicating any preference, limitation, specification, or discrimination, based on race, color, religion, national origin, sex, or age forty (40) and over, or because the person is a qualified individual with a disability, except that such a notice or advertisement may indicate a preference, limitation, or specification based on religion, national origin, sex, or age forty (40) and over, or because the person is a qualified individual with a disability, when religion, national origin, sex, or age forty (40) and over, or because the person is a qualified individual with a disability, is a bona fide occupational qualification for employment.

3. If the contractor is in control of apprenticeship or other training or retraining, including on-the-job training programs, he shall not discriminate against an individual because of his race, color, religion, national origin, sex, disability or age forty (40) and over, in admission to, or employment in any program established to provide apprenticeship or other training.

4. The contractor will send to each labor union or representative of workers with which he has a collective bargaining agreement or other contract or understanding, a notice to be provided advising the said labor union or workers' representative of the contractor's commitments under this section, and shall post copies of the notice in conspicuous places available to employees and applicants for employment. The contractor will take such action with respect to any subcontract or purchase order as the administrating agency may direct as a means of enforcing such provisions, including sanctions for non-compliance.

Revised: January 25, 2017

Standard Title VI/Non-Discrimination Assurances

During the performance of this contract, the contractor, for itself, its assignees, and successors in interest (hereinafter referred to as the "contractor") agrees as follows:

1. **Compliance with Regulations:** The contractor (hereinafter includes consultants) will comply with the Acts and the Regulations relative to Non-discrimination in Federally-assisted programs of the U.S. Department of Transportation, **Federal Highway Administration**, as they may be amended from time to time, which are herein incorporated by reference and made a part of this contract.

2. **Non-discrimination:** The contractor, with regard to the work performed by it during the contract, will not discriminate on the grounds of race, color, or national origin in the selection and retention of subcontractors, including procurements of materials and leases of equipment. The contractor will not participate directly or indirectly in the discrimination prohibited by the Acts and the Regulations, including employment practices when the contract covers any activity, project, or program set forth in Appendix B of 49 CFR Part 21.

3. **Solicitations for Subcontracts, Including Procurements of Materials and Equipment:** In all solicitations, either by competitive bidding, or negotiation made by the contractor for work to be performed under a subcontract, including procurements of materials, or leases of equipment, each potential subcontractor or supplier will be notified by the contractor of the contractor's obligations under this contract and the Acts and the Regulations relative to Non-discrimination on the grounds of race, color, or national origin.

4. **Information and Reports:** The contractor will provide all information and reports required by the Acts, the Regulations, and directives issued pursuant thereto and will permit access to its books, records, accounts, other sources of information, and its facilities as may be determined by the Recipient or the **Federal Highway Administration** to be pertinent to ascertain compliance with such Acts, Regulations, and instructions. Where any information required of a contractor is in the exclusive possession of another who fails or refuses to furnish the information, the contractor will so certify to the Recipient or the **Federal Highway Administration**, as appropriate, and will set forth what efforts it has made to obtain the information.

5. **Sanctions for Noncompliance:** In the event of a contractor's noncompliance with the Non-discrimination provisions of this contract, the Recipient will impose such contract sanctions as it or the **Federal Highway Administration** may determine to be appropriate, including, but not limited to:

    a. withholding payments to the contractor under the contract until the contractor complies; and/or
    b. cancelling, terminating, or suspending a contract, in whole or in part.

6. **Incorporation of Provisions:** The contractor will include the provisions of paragraphs one through six in every subcontract, including procurements of materials and leases of equipment, unless exempt by the Acts, the Regulations and directives issued pursuant thereto. The contractor will take action with respect to any subcontract or procurement as the Recipient or the **Federal Highway Administration** may direct as a means of enforcing such provisions including sanctions for noncompliance. Provided, that if the contractor becomes involved in, or is threatened with litigation by a subcontractor, or supplier because of such direction, the contractor may request the Recipient to enter into any litigation to protect the interests of the Recipient. In addition, the contractor may request the United States to enter into the litigation to protect the interests of the United States.

Standard Title VI/Non-Discrimination Statutes and Authorities

During the performance of this contract, the contractor, for itself, its assignees, and successors in interest (hereinafter referred to as the "contractor") agrees to comply with the following non-discrimination statutes and authorities; including but not limited to:

- Title VI of the Civil Rights Act of 1964 (42 U.S.C. § 2000d *et seq*., 78 stat. 252), (prohibits discrimination on the basis of race, color, national origin); and 49 CFR Part 21;
- The Uniform Relocation Assistance and Real Property Acquisition Policies Act of 1970, (42 U.S.C. § 4601), (prohibits unfair treatment of persons displaced or whose property has been acquired because of Federal or Federal-aid programs and projects);
- Federal-Aid Highway Act of 1973, (23 U.S.C. § 324 *et seq*.), (prohibits discrimination on the basis of sex);
- Section 504 of the Rehabilitation Act of 1973, (29 U.S.C. § 794 *et seq*.), as amended, (prohibits discrimination on the basis of disability); and 49 CFR Part 27;
- The Age Discrimination Act of 1975, as amended, (42 U.S.C. § 6101 *et seq*.), (prohibits discrimination on the basis of age);
- Airport and Airway Improvement Act of 1982, (49 USC § 471, Section 47123), as amended, (prohibits discrimination based on race, creed, color, national origin, or sex);
- The Civil Rights Restoration Act of 1987, (PL 100-209), (Broadened the scope, coverage and applicability of Title VI of the Civil Rights Act of 1964, The Age Discrimination Act of 1975 and Section 504 of the Rehabilitation Act of 1973, by expanding the definition of the terms "programs or activities" to include all of the programs or activities of the Federal-aid recipients, sub-recipients and contractors, whether such programs or activities are Federally funded or not);
- Titles II and III of the Americans with Disabilities Act, which prohibit discrimination on the basis of disability in the operation of public entities, public and private transportation systems, places of public accommodation, and certain testing entities (42 U.S.C. §§ 12131 -- 12189) as implemented by Department of Transportation regulations at 49 C.F.R. parts 37 and 38;
- The Federal Aviation Administration's Non-discrimination statute (49 U.S.C. § 47123) (prohibits discrimination on the basis of race, color, national origin, and sex);
- Executive Order 12898, Federal Actions to Address Environmental Justice in Minority Populations and Low-Income Populations, which ensures non-discrimination against minority populations by discouraging programs, policies, and activities with disproportionately high and adverse human health or environmental effects on minority and low-income populations;
- Executive Order 13166, Improving Access to Services for Persons with Limited English Proficiency, and resulting agency guidance, national origin discrimination includes discrimination because of limited English proficiency (LEP). To ensure compliance with Title VI, you must take reasonable steps to ensure that LEP persons have meaningful access to your programs (70 Fed. Reg. at 74087 to 74100);
- Title IX of the Education Amendments of 1972, as amended, which prohibits you from discriminating because of sex in education programs or activities (20 U.S.C. 1681 et seq).

EXECUTIVE BRANCH CODE OF ETHICS

In the 1992 regular legislative session, the General Assembly passed and Governor Brereton Jones signed Senate Bill 63 (codified as KRS 11A), the Executive Branch Code of Ethics, which states, in part:

> KRS 11A.040 (7) provides:
>
> No present or former public servant shall, within six (6) months following termination of his office or employment, accept employment, compensation, or other economic benefit from any person or business that contracts or does business with, or is regulated by, the state in matters in which he was directly involved during the last thirty-six (36) months of his tenure. This provision shall not prohibit an individual from returning to the same business, firm, occupation, or profession in which he was involved prior to taking office or beginning his term of employment, or for which he received, prior to his state employment, a professional degree or license, provided that, for a period of six (6) months, he personally refrains from working on any matter in which he was directly involved during the last thirty-six (36) months of his tenure in state government. This subsection shall not prohibit the performance of ministerial functions, including but not limited to filing tax returns, filing applications for permits or licenses, or filing incorporation papers, nor shall it prohibit the former officer or public servant from receiving public funds disbursed through entitlement programs.
>
> KRS 11A.040 (9) states:
>
> A former public servant shall not represent a person or business before a state agency in a matter in which the former public servant was directly involved during the last thirty-six (36) months of his tenure, for a period of one (1) year after the latter of:
>
> a) The date of leaving office or termination of employment; or
> b) The date the term of office expires to which the public servant was elected.

This law is intended to promote public confidence in the integrity of state government and to declare as public policy the idea that state employees should view their work as a public trust and not as a way to obtain private benefits.

If you have worked for the executive branch of state government within the past six months, you may be subject to the law's prohibitions. The law's applicability may be different if you hold elected office or are contemplating representation of another before a state agency.

Also, if you are affiliated with a firm which does business with the state and which employs former state executive-branch employees, you should be aware that the law may apply to them.

In case of doubt, the law permits you to request an advisory opinion from the Executive Branch Ethics Commission, 1025 Capital Center Drive, Suite 104, Frankfort, Kentucky 40601; telephone (502) 564-7954.

Revised: May 23, 2022

"General Decision Number: KY20230039 08/18/2023

Superseded General Decision Number: KY20220039

State: Kentucky

Construction Type: Highway

Counties: Boone, Campbell, Kenton and Pendleton Counties in Kentucky.

HIGHWAY CONSTRUCTION PROJECTS (excluding tunnels, building structures in rest area projects & railroad construction; bascule, suspension & spandrel arch bridges designed for commercial navigation, bridges involving marine construction; and other major bridges).

Note: Contracts subject to the Davis-Bacon Act are generally required to pay at least the applicable minimum wage rate required under Executive Order 14026 or Executive Order 13658. Please note that these Executive Orders apply to covered contracts entered into by the federal government that are subject to the Davis-Bacon Act itself, but do not apply to contracts subject only to the Davis-Bacon Related Acts, including those set forth at 29 CFR 5.1(a)(2)-(60).

If the contract is entered into on or after January 30, 2022, or the contract is renewed or extended (e.g., an option is exercised) on or after January 30, 2022:	. Executive Order 14026 generally applies to the contract. . The contractor must pay all covered workers at least $16.20 per hour (or the applicable wage rate listed on this wage determination, if it is higher) for all hours spent performing on the contract in 2023.
If the contract was awarded on or between January 1, 2015 and January 29, 2022, and the contract is not renewed or extended on or after January 30, 2022:	. Executive Order 13658 generally applies to the contract. . The contractor must pay all covered workers at least $12.15 per hour (or the applicable wage rate listed on this wage determination, if it is higher) for all hours spent performing on that contract in 2023.

The applicable Executive Order minimum wage rate will be adjusted annually. If this contract is covered by one of the Executive Orders and a classification considered necessary for performance of work on the contract does not appear on this wage determination, the contractor must still submit a conformance request.

Additional information on contractor requirements and worker protections under the Executive Orders is available at http://www.dol.gov/whd/govcontracts.

Modification Number	Publication Date
0	01/06/2023
1	02/10/2023
2	02/24/2023
3	06/09/2023
4	08/18/2023

BRKY0002-005 06/01/2022

	Rates	Fringes
BRICKLAYER	$ 31.87	16.39

BROH0001-005 06/01/2021

	Rates	Fringes
CEMENT MASON/CONCRETE FINISHER	$ 29.57	14.75

---

* CARP0698-001 05/01/2023

BOONE, CAMPBELL, KENTON & PENDLETON COUNTIES:

	Rates	Fringes
Carpenter & Piledrivermen	$ 33.28	12.12
Diver	$ 49.92	12.12

ELEC0212-007 06/06/2022

	Rates	Fringes
ELECTRICIAN	$ 33.29	20.05

ELEC0212-013 11/28/2022

	Rates	Fringes
Sound & Communication Technician	$ 26.70	13.41

ENGI0018-013 05/01/2019

	Rates	Fringes
POWER EQUIPMENT OPERATOR		
GROUP 1	$ 37.39	14.95
GROUP 2	$ 37.27	14.95
GROUP 3	$ 36.23	14.95
GROUP 4	$ 35.05	14.95
GROUP 5	$ 29.59	14.95
GROUP 6	$ 37.64	14.95
GROUP 7	$ 37.89	14.95

OPERATING ENGINEER CLASSIFICATIONS

GROUP 1 - Air Compressor on Steel Erection; Barrier Moving Machine; Boiler Operator on Compressor or Generator when mounted on a Rig; Cableway; Combination Concrete Mixer & Tower; Concrete Plant (over 4 yd. Capacity); Concrete Pump; Crane (All Types, Including Boom Truck, Cherry Picker); Crane-Compact, Track or Rubber over 4,000 lbs. capacity; Cranes-Self Erecting, Stationary, Track or Truck (All

Configurations); Derrick; Dragline; Dredge (Dipper, Clam or Suction); Elevating Grader or Euclid Loader; Floating Equipment (All Types); Gradall; Helicopter Crew (Operator-Hoist or Winch); Hoe (all types); Hoisting Engine on Shaft or Tunnel Work; Hydraulic Gantry (Lifting System); Industrial-Type Tractor; Jet Engine Dryer (D8 or D9) Diesel Tractor; Locomotive (Standard Gauge); Maintenance Operator Class A; Mixer, Paving (Single or Double Drum); Mucking Machine; Multiple Scraper; Piledriving Machine (All Types); Power Shovel; Prentice Loader; Quad 9 (Double Pusher); Rail Tamper (with auto lifting & aligning device); Refrigerating Machine (Freezer Operation); Rotary Drill, on Caisson work; Rough Terrain Fork Lift with Winch/Hoist; Side-Boom; Slip-Form Paver; Tower Derrick; Tree Shredder; Trench Machine (Over 24"" wide); Truck Mounted Concrete Pump; Tug Boat; Tunnel Machine and/or Mining Machine; & Wheel Excavator

GROUP 2 - Asphalt Paver; Automatic Subgrader Machine, Self-Propelled (CMI Type); Bobcat Type and/or Skid Steer Loader with Hoe Attachment Greater than 7,000 lbs.; Boring Machine More than 48""; Bulldozer; Endloader; Hydro Milling Machine; Horizontal Directional Drill (over 500,000 ft. lbs. thrust); Kolman-type Loader (production type-Dirt); Lead Greaseman; Lighting & Traffic Signal Installation Equipment (includes all groups or classifications); Material Transfer Equipment (Shuttle Buggy) Asphalt; Pettibone-Rail Equipment; Power Grader; Power Scraper; Push Cat; Rotomill (all), Grinders & Planers of All types; Trench Machine (24"" wide & under); & Vermeer type Concrete Saw

GROUP 3 - A-Frame; Air Compressor on Tunnel Work (low pressure); Asphalt Plant Engineer; Bobcat-type and/or Skid Steer Loader with or without Attachments; Highway Drills (all types); Locomotive (narrow gauge); Material Hoist/Elevator; Mixer, Concrete (more than one bag capacity); Mixer, one bag capacity (Side Loader); Power Boiler (Over 15 lbs. Pressure) Pump Operator installing & operating Well Points; Pump (4"" & over discharge); Roller, Asphalt; Rotovator (lime soil stabilizer); Switch & Tie Tampers (without lifting & aligning device); Utility Operator (Small equipment); & Welding Machines

GROUP 4 - Backfiller; Ballast Re-locator; Bars, Joint & Mesh Installing Machine; Batch Plant; Boring Machine Operator (48"" or less); Bull Floats; Burlap & Curing Machine; Concrete Plant (capacity 4 yd. & under); Concrete Saw (Multiple); Conveyor (Highway); Crusher; Deckhand; Farm-type Tractor with attachments (highway) except Masonry); Finishing Machine; Fireperson, Floating Equipment (all types); Fork Lift (highway); Form Trencher; Hydro Hammer; Hydro Seeder; Pavement Breaker; Plant Mixer; Post Driver; Post Hole Digger (Power Auger); Power Brush Burner; Power Form Handling Equipment; Road Widening Trencher; Roller (Brick, Grade & Macadam); Self-Propelled Power Spreader; Self-Propelled Power Subgrader; Steam Fireperson; Tractor (Pulling Sheepfoot, Roller or Grader); & Vibratory Compactor with Integral Power

GROUP 5 - Compressor (Portable, Sewer, Heavy & Highway); Drum Fireperson (Asphalt); Generator; Masonry Fork Lift; Inboard-Outboard Motor Boat Launch; Masonry Fork Lift; Oil Heater (asphalt plant); Oiler; Power Driven Heater; Power Sweeper & Scrubber; Pump (under 4"" discharge);

Signalperson; Tire Repairperson; & VAC/ALLS

GROUP 6 - Master Mechanic & Boom from 150 to 180

GROUP 7 - Boom from 180 and over

IRON0044-008 06/01/2023

	Rates	Fringes
Ironworkers:		
Fence Erector	$ 30.75	22.70
Structural	$ 32.37	22.70

IRON0044-018 06/01/2023

	Rates	Fringes
IRONWORKER, REINFORCING	$ 32.87	22.70

LABO0189-004 07/01/2022

PENDLETON COUNTY:

	Rates	Fringes
LABORER		
GROUP 1	$ 23.76	17.12
GROUP 2	$ 24.01	17.12
GROUP 3	$ 24.06	17.12
GROUP 4	$ 24.66	17.12

LABORERS CLASSIFICATIONS

GROUP 1 - Aging & Curing of Concrete; Asbestos Abatement Worker; Asphalt Plant; Asphalt; Batch Truck Dump; Carpenter Tender; Cement Mason Tender; Cleaning of Machines; Concrete; Demolition; Dredging; Environmental - Nuclear, Radiation, Toxic & Hazardous Waste - Level D; Flagperson; Grade Checker; Hand Digging & Hand Back Filling; Highway Marker Placer; Landscaping, Mesh Handler & Placer; Puddler; Railroad; Rip-rap & Grouter; Right-of-Way; Sign, Guard Rail & Fence Installer; Signal Person; Sound Barrier Installer; Storm & Sanitary Sewer; Swamper; Truck Spotter & Dumper; Wrecking of Concrete Forms; General Cleanup

GROUP 2 - Batter Board Man (Sanitary & Storm Sewer); Brickmason Tender; Mortar Mixer Operator; Scaffold Builder; Burner & Welder; Bushammer; Chain Saw Operator; Concrete Saw Operator; Deckhand Scow Man; Dry Cement Handler; Environmental - Nuclear, Radiation, Toxic & Hazardous Waste - Level C; Forklift Operator for Masonary; Form Setter; Green Concrete Cutting; Hand Operated Grouter & Grinder Machine Operator; Jackhammer; Pavement Breaker; Paving Joint Machine; Pipelayer; Plastic Pipe Fusion; Power Driven Georgia Buggy & Wheel Barrow; Power Post Hole Digger; Precast Manhole Setter; Walk-Behind Tamper; Walk-Behind Trencher; Sand Blaster; Concrete Chipper; Surface Grinder; Vibrator Operator; Wagon Driller

GROUP 3 - Asphalt Luteman & Raker; Gunnite Nozzleman; Gunnite Operator & Mixer; Grout Pump Operator; Side Rail Setter; Rail Paved Ditches; Screw Operator; Tunnel (Free Air); Water Blaster

GROUP 4 - Caisson Worker (Free Air); Cement Finisher; Environmental - Nuclear, Radiation, Toxic & Hazardous Waste - Levels A & B; Miner & Driller (Free Air); Tunnel Blaster; & Tunnel Mucker (Free Air); Directional & Horizontal Boring; Air Track Driller (All Types); Powderman & Blaster; Troxler & Concrete Tester if Laborer is Utilized

---

LABO0265-009 05/01/2022

BOONE, CAMPBELL & KENTON COUNTIES:

	Rates	Fringes
LABORER		
GROUP 1	$ 34.52	12.10
GROUP 2	$ 34.69	12.10
GROUP 3	$ 35.02	12.10
GROUP 4	$ 35.47	12.10

LABORER CLASSIFICATIONS

GROUP 1 - Asphalt Laborer; Carpenter Tender; Concrete Curing Applicator; Dump Man (Batch Truck); Guardrail and Fence Installer; Joint Setter; Laborer (Construction); Landscape Laborer; Highway Lighting Worker; Signalization Worker; Mesh Handlers & Placer; Right-of-way Laborer; Riprap Laborer & Grouter; Scaffold Erector; Seal Coating; Surface Treatment or Road Mix Laborer; Sign Installer; Slurry Seal; Utility Man; Bridge Man; Handyman; Waterproofing Laborer; Flagperson; Hazardous Waste (level D); Diver Tender; Zone Person & Traffic Control

GROUP 2 - Skid Steer; Asphalt Raker; Concrete Puddler; Kettle Man (Pipeline); Machine Driven Tools (Gas, Electric, Air); Mason Tender; Brick Paver; Mortar Mixer; Power Buggy or Power Wheelbarrow; Sheeting & Shoring Man; Surface Grinder Man; Plastic Fusing Machine Operator; Pug Mill Operator; & Vacuum Devices (wet or dry); Rodding Machine Operator; Diver; Screwman or Paver; Screed Person; Water Blast, Hand Held Wand; Pumps 4"" & Under (Gas, Air or Electric) & Hazardous Waste (level C); Air Track and Wagon Drill; Bottom Person; Cofferdam (below 25 ft. deep); Concrete Saw Person; Cutting with Burning Torch; Form Setter; Hand Spiker (Railroad); Pipelayer; Tunnel Laborer (without air) & Caisson; Underground Person (working in Sewer and Waterline, Cleaning, Repairing & Reconditioning); Sandblaster Nozzle Person; & Hazardous Waste (level B)

GROUP 3 - Blaster; Mucker; Powder Person; Top Lander; Wrencher (Mechanical Joints & Utility Pipeline); Yarner; Hazardous Waste (level A); Concrete Specialist; Concrete Crew in Tunnels (With Air-pressurized - $1.00 premium); Curb Setter & Cutter; Grade Checker; Utility Pipeline Tapper; Waterline; and Caulker

GROUP 4 - Miner; & Gunite Nozzle Person

TUNNEL LABORER WITH AIR-PRESSURIZED ADD $1.00 TO BASE RATE

SIGNAL PERSON WILL RECEIVE THE RATE EQUAL TO THE RATE PAID THE LABORER CLASSIFICATION FOR WHICH HE OR SHE IS SIGNALING.

PAIN0012-016 05/01/2015

	Rates	Fringes
PAINTER		
Bridge	$ 24.39	9.06
Bridge Equipment Tender and Containment Builder	$ 20.73	9.06
Brush & Roller	$ 23.39	9.06
Sandblasting & Water Blasting	$ 24.14	9.06
Spray	$ 23.89	9.06

PLUM0392-008 06/01/2023

	Rates	Fringes
PLUMBER	$ 38.62	25.73

---

* SUKY2010-161 02/05/1996

	Rates	Fringes
Truck drivers:		
GROUP 1	$ 15.85 **	4.60
GROUP 2	$ 16.29	4.60

TRUCK DRIVER CLASSIFICATIONS

GROUP 1 - Driver

GROUP 2 - Euclid Wagon; End Dump; Lowboy; Heavy Duty Equipment; Tractor-Trailer Combination; & Drag

---

WELDERS - Receive rate prescribed for craft performing operation to which welding is incidental.

==========

** Workers in this classification may be entitled to a higher minimum wage under Executive Order 14026 ($16.20) or 13658 ($12.15). Please see the Note at the top of the wage determination for more information.

Note: Executive Order (EO) 13706, Establishing Paid Sick Leave for Federal Contractors applies to all contracts subject to the Davis-Bacon Act for which the contract is awarded (and any solicitation was issued) on or after January 1, 2017. If this contract is covered by the EO, the contractor must provide employees with 1 hour of paid sick leave for every 30 hours they work, up to 56 hours of paid sick leave each year. Employees must be permitted to use paid sick leave for their own illness, injury or other health-related needs, including preventive care; to assist a family member (or person who is like family to the employee) who is ill, injured, or has other health-related needs, including preventive care; or for reasons resulting from, or to assist a family member (or person who is like family to the employee) who is a victim of, domestic violence, sexual assault, or stalking. Additional information on contractor requirements and worker protections under the EO is available at https://www.dol.gov/agencies/whd/government-contracts.

Unlisted classifications needed for work not included within the scope of the classifications listed may be added after award only as provided in the labor standards contract clauses (29CFR 5.5 (a) (1) (ii)).

The body of each wage determination lists the classification and wage rates that have been found to be prevailing for the cited type(s) of construction in the area covered by the wage determination. The classifications are listed in alphabetical order of ""identifiers"" that indicate whether the particular rate is a union rate (current union negotiated rate for local), a survey rate (weighted average rate) or a union average rate (weighted union average rate).

Union Rate Identifiers

A four letter classification abbreviation identifier enclosed in dotted lines beginning with characters other than ""SU"" or ""UAVG"" denotes that the union classification and rate were prevailing for that classification in the survey. Example: PLUM0198-005 07/01/2014. PLUM is an abbreviation identifier of the union which prevailed in the survey for this classification, which in this example would be Plumbers. 0198 indicates the local union number or district council number where applicable, i.e., Plumbers Local 0198. The next number, 005 in the example, is an internal number used in processing the wage determination. 07/01/2014 is the effective date of the most current negotiated rate, which in this example is July 1, 2014.

Union prevailing wage rates are updated to reflect all rate changes in the collective bargaining agreement (CBA) governing this classification and rate.

Survey Rate Identifiers

Classifications listed under the ""SU"" identifier indicate that no one rate prevailed for this classification in the survey and the published rate is derived by computing a weighted average rate based on all the rates reported in the survey for that classification. As this weighted average rate includes all rates reported in the survey, it may include both union and non-union rates. Example: SULA2012-007 5/13/2014. SU indicates the rates are survey rates based on a weighted average calculation of rates and are not majority rates. LA indicates the State of Louisiana. 2012 is the year of survey on which these classifications and rates are based. The next number, 007 in the example, is an internal number used in producing the wage determination. 5/13/2014 indicates the survey completion date for the classifications and rates under that identifier.

Survey wage rates are not updated and remain in effect until a new survey is conducted.

Union Average Rate Identifiers

Classification(s) listed under the UAVG identifier indicate that no single majority rate prevailed for those classifications; however, 100% of the data reported for the classifications was union data. EXAMPLE: UAVG-OH-0010

08/29/2014. UAVG indicates that the rate is a weighted union average rate. OH indicates the state. The next number, 0010 in the example, is an internal number used in producing the wage determination. 08/29/2014 indicates the survey completion date for the classifications and rates under that identifier.

A UAVG rate will be updated once a year, usually in January of each year, to reflect a weighted average of the current negotiated/CBA rate of the union locals from which the rate is based.

WAGE DETERMINATION APPEALS PROCESS

1.) Has there been an initial decision in the matter? This can be:

* an existing published wage determination
* a survey underlying a wage determination
* a Wage and Hour Division letter setting forth a position on a wage determination matter
* a conformance (additional classification and rate) ruling

On survey related matters, initial contact, including requests for summaries of surveys, should be with the Wage and Hour National Office because National Office has responsibility for the Davis-Bacon survey program. If the response from this initial contact is not satisfactory, then the process described in 2.) and 3.) should be followed.

With regard to any other matter not yet ripe for the formal process described here, initial contact should be with the Branch of Construction Wage Determinations. Write to:

Branch of Construction Wage Determinations
Wage and Hour Division
U.S. Department of Labor
200 Constitution Avenue, N.W.
Washington, DC 20210

2.) If the answer to the question in 1.) is yes, then an interested party (those affected by the action) can request review and reconsideration from the Wage and Hour Administrator (See 29 CFR Part 1.8 and 29 CFR Part 7). Write to:

Wage and Hour Administrator
U.S. Department of Labor
200 Constitution Avenue, N.W.
Washington, DC 20210

The request should be accompanied by a full statement of the interested party's position and by any information (wage payment data, project description, area practice material, etc.) that the requestor considers relevant to the issue.

3.) If the decision of the Administrator is not favorable, an interested party may appeal directly to the Administrative Review Board (formerly the Wage Appeals Board). Write to:

Administrative Review Board
U.S. Department of Labor
200 Constitution Avenue, N.W.

Washington, DC 20210

4.) All decisions by the Administrative Review Board are final.

==========

END OF GENERAL DECISIO"

Fringe benefit amounts are applicable for all hours worked except when otherwise noted.

No laborer, workman or mechanic shall be paid at a rate less than that of a Journeyman except those classified as bona fide apprentices.

Apprentices or trainees shall be permitted to work as such subject to Administrative Regulations adopted by the Commissioner of Workplace Standards. Copies of these regulations will be furnished upon request from any interested person.

Before using apprentices on the job the contractor shall present to the Contracting Officer written evidence of registration of such employees in a program of a State apprenticeship and training agency approved and recognized by the U. S. Bureau of Apprenticeship and Training. In the absence of such a State agency, the contractor shall submit evidence of approval and registration by the U. S. Bureau of Apprenticeship and Training.

The contractor shall submit to the Contracting Officer, written evidence of the established apprenticeship-journeyman ratios and wage rates in the project area, which will be the basis for establishing such ratios and rates for the project under the applicable contract provisions.

TO: EMPLOYERS/EMPLOYEES

PREVAILING WAGE SCHEDULE:

The wages indicated on this wage schedule are the least permitted to be paid for the occupations indicated. When an employee works in more than one classification, the employer must record the number of hours worked in each classification at the prescribed hourly base rate.

OVERTIME:

Overtime is to be paid to an employee at a rate not less than one and one-half times the basic rate of pay for all hours worked in excess of forty (40) hours in such workweek. Wage violations or questions should be directed to the designated Engineer or the undersigned.

Director
Division of Construction Procurement
Frankfort, Kentucky 40622
502-564-3500

TRANSPORTATION CABINET
PROJECT WAGE RATES

CAMPBELL COUNTY, BRX 0272 (122)

Taylor Southgate (US 27) bridge over Ohio River 019B00076N

NOTICE:

There are three (3) sets of wage rates established for this project. The contractor shall use the appropriate federal wage rates as it applies to the work being performed.

- Decision Number KY20230039 - Kentucky roadway work
- Decision Number KY20230065 - Kentucky bridge work
- Decision Number OH20230001 - Ohio roadway and bridge work

"General Decision Number: KY20230065 06/09/2023

Superseded General Decision Number: KY20220065

State: Kentucky

Construction Type: Heavy

County: Campbell County in Kentucky.

HEAVY CONSTRUCTION PROJECTS (including sewer/water construction).

Note: Contracts subject to the Davis-Bacon Act are generally required to pay at least the applicable minimum wage rate required under Executive Order 14026 or Executive Order 13658. Please note that these Executive Orders apply to covered contracts entered into by the federal government that are subject to the Davis-Bacon Act itself, but do not apply to contracts subject only to the Davis-Bacon Related Acts, including those set forth at 29 CFR 5.1(a)(2)-(60).

If the contract is entered into on or after January 30, 2022, or the contract is renewed or extended (e.g., an option is exercised) on or after January 30, 2022:	. Executive Order 14026 generally applies to the contract. . The contractor must pay all covered workers at least $16.20 per hour (or the applicable wage rate listed on this wage determination, if it is higher) for all hours spent performing on the contract in 2023.
If the contract was awarded on or between January 1, 2015 and January 29, 2022, and the contract is not renewed or extended on or after January 30, 2022:	. Executive Order 13658 generally applies to the contract. . The contractor must pay all covered workers at least $12.15 per hour (or the applicable wage rate listed on this wage determination, if it is higher) for all hours spent performing on that contract in 2023.

The applicable Executive Order minimum wage rate will be adjusted annually. If this contract is covered by one of the Executive Orders and a classification considered necessary for performance of work on the contract does not appear on this wage determination, the contractor must still submit a conformance request.

Additional information on contractor requirements and worker protections under the Executive Orders is available at http://www.dol.gov/whd/govcontracts.

Modification Number	Publication Date
0	01/06/2023
1	02/24/2023

2	05/05/2023
3	05/26/2023
4	06/09/2023

ASBE0008-007 03/01/2023

	Rates	Fringes
ASBESTOS WORKER/HEAT & FROST INSULATOR	$ 33.08	20.69

ELEC0369-008 06/01/2022

	Rates	Fringes
ELECTRICIAN	$ 34.60	19.57

ENGI0018-016 05/01/2019

	Rates	Fringes
POWER EQUIPMENT OPERATOR (Backhoe/Excavator/Trackhoe)	$ 37.39	14.95

ENGI0181-016 07/01/2021

	Rates	Fringes
POWER EQUIPMENT OPERATOR		
GROUP 1	$ 35.99	17.85

OPERATING ENGINEER CLASSIFICATIONS

GROUP 1 - Crane; Forklift

Operators on cranes with boom 150 feet and over, including jib, shall receive $0.75 above Group 1. All cranes with piling leads will receive $0.50 above Group 1 rate regardless of boom length. Combination rate shall mean $0.50 per hour above the basic hourly rate of pay.

Employees assigned to work below ground level are to be paid 10% above basic wage rate. This does not apply to open cut work.

ENGI0181-019 07/01/2021

	Rates	Fringes
POWER EQUIPMENT OPERATOR		
GROUP 1	$ 34.80	17.85
GROUP 2	$ 31.94	17.85
GROUP 3	$ 32.39	17.85
GROUP 4	$ 31.62	17.85

OPERATING ENGINEER CLASSIFICATIONS

GROUP 1 - Drill; Pumpcrete; Roller (Bituminous)

GROUP 2 - Bobcat/Skid Steer/Skid Loader; Concrete Pump; Roller (Rock)

GROUP 3 - Articulating Truck Operator

GROUP 4 - Pump; Roller (Earth)

Operators on cranes with booms 150 feet and over (including jib) shall receive $1.00 above Group 1 rate; 250 feet and over including jib shall receive $1.50 above Class 1 rate. Combination Rate: All crane operators operating cranes, where the length of the boom in combination with the length of the piling leads equal or exceeds 150 feet, shall receive $1.00 above the Group 1 rate.

Employees assigned to work below ground level are to be paid 10% above basic wage rate. This does not apply to open cut work.

---

* IRON0044-005 06/01/2023

	Rates	Fringes
IRONWORKER (STRUCTURAL AND REINFORCING)	$ 32.87	22.70

---

* IRON0070-011 06/01/2023

	Rates	Fringes
IRONWORKER, ORNAMENTAL	$ 32.59	24.50

LABO0189-016 07/01/2022

	Rates	Fringes
LABORER		
Concrete Worker & Grade Checker	$ 23.76	17.12
Tamper(Hand Held/Walk Behind)	$ 24.01	17.12

LABO0265-005 05/01/2022

	Rates	Fringes
LABORER		
Concrete Saw (Hand Held/Walk Behind) & Pipelayer	$ 34.69	17.35
Flagger & Landscape	$ 34.52	17.35

SUKY2011-021 06/25/2014

	Rates	Fringes
CARPENTER (Form Work Only)	$ 24.80	8.76
LABORER: Common or General	$ 22.24	9.63
LABORER: Concrete Finishing	$ 25.75	8.60
OPERATOR: Bulldozer	$ 28.04	13.00
OPERATOR: Loader	$ 26.68	13.00
OPERATOR: Mechanic	$ 28.60	11.83
OPERATOR: Oiler	$ 24.34	13.00

OPERATOR: Trencher.....$ 26.27 12.37

TRUCK DRIVER: Dump Truck.....$ 17.82 3.26

WELDERS - Receive rate prescribed for craft performing operation to which welding is incidental.

==========

Note: Executive Order (EO) 13706, Establishing Paid Sick Leave for Federal Contractors applies to all contracts subject to the Davis-Bacon Act for which the contract is awarded (and any solicitation was issued) on or after January 1, 2017. If this contract is covered by the EO, the contractor must provide employees with 1 hour of paid sick leave for every 30 hours they work, up to 56 hours of paid sick leave each year. Employees must be permitted to use paid sick leave for their own illness, injury or other health-related needs, including preventive care; to assist a family member (or person who is like family to the employee) who is ill, injured, or has other health-related needs, including preventive care; or for reasons resulting from, or to assist a family member (or person who is like family to the employee) who is a victim of, domestic violence, sexual assault, or stalking. Additional information on contractor requirements and worker protections under the EO is available at https://www.dol.gov/agencies/whd/government-contracts.

Unlisted classifications needed for work not included within the scope of the classifications listed may be added after award only as provided in the labor standards contract clauses (29CFR 5.5 (a) (1) (ii)).

The body of each wage determination lists the classification and wage rates that have been found to be prevailing for the cited type(s) of construction in the area covered by the wage determination. The classifications are listed in alphabetical order of ""identifiers"" that indicate whether the particular rate is a union rate (current union negotiated rate for local), a survey rate (weighted average rate) or a union average rate (weighted union average rate).

Union Rate Identifiers

A four letter classification abbreviation identifier enclosed in dotted lines beginning with characters other than ""SU"" or ""UAVG"" denotes that the union classification and rate were prevailing for that classification in the survey. Example: PLUM0198-005 07/01/2014. PLUM is an abbreviation identifier of the union which prevailed in the survey for this classification, which in this example would be Plumbers. 0198 indicates the local union number or district council number where applicable, i.e., Plumbers Local 0198. The next number, 005 in the example, is an internal number used in processing the wage determination. 07/01/2014 is the effective date of the most current negotiated rate, which in this example is July 1, 2014.

Union prevailing wage rates are updated to reflect all rate

changes in the collective bargaining agreement (CBA) governing this classification and rate.

Survey Rate Identifiers

Classifications listed under the ""SU"" identifier indicate that no one rate prevailed for this classification in the survey and the published rate is derived by computing a weighted average rate based on all the rates reported in the survey for that classification. As this weighted average rate includes all rates reported in the survey, it may include both union and non-union rates. Example: SULA2012-007 5/13/2014. SU indicates the rates are survey rates based on a weighted average calculation of rates and are not majority rates. LA indicates the State of Louisiana. 2012 is the year of survey on which these classifications and rates are based. The next number, 007 in the example, is an internal number used in producing the wage determination. 5/13/2014 indicates the survey completion date for the classifications and rates under that identifier.

Survey wage rates are not updated and remain in effect until a new survey is conducted.

Union Average Rate Identifiers

Classification(s) listed under the UAVG identifier indicate that no single majority rate prevailed for those classifications; however, 100% of the data reported for the classifications was union data. EXAMPLE: UAVG-OH-0010 08/29/2014. UAVG indicates that the rate is a weighted union average rate. OH indicates the state. The next number, 0010 in the example, is an internal number used in producing the wage determination. 08/29/2014 indicates the survey completion date for the classifications and rates under that identifier.

A UAVG rate will be updated once a year, usually in January of each year, to reflect a weighted average of the current negotiated/CBA rate of the union locals from which the rate is based.

WAGE DETERMINATION APPEALS PROCESS

1.) Has there been an initial decision in the matter? This can be:

* an existing published wage determination
* a survey underlying a wage determination
* a Wage and Hour Division letter setting forth a position on a wage determination matter
* a conformance (additional classification and rate) ruling

On survey related matters, initial contact, including requests for summaries of surveys, should be with the Wage and Hour National Office because National Office has responsibility for the Davis-Bacon survey program. If the response from this initial contact is not satisfactory, then the process described in 2.) and 3.) should be followed.

With regard to any other matter not yet ripe for the formal process described here, initial contact should be with the Branch of Construction Wage Determinations. Write to:

Branch of Construction Wage Determinations
Wage and Hour Division
U.S. Department of Labor
200 Constitution Avenue, N.W.
Washington, DC 20210

2.) If the answer to the question in 1.) is yes, then an interested party (those affected by the action) can request review and reconsideration from the Wage and Hour Administrator (See 29 CFR Part 1.8 and 29 CFR Part 7). Write to:

Wage and Hour Administrator
U.S. Department of Labor
200 Constitution Avenue, N.W.
Washington, DC 20210

The request should be accompanied by a full statement of the interested party's position and by any information (wage payment data, project description, area practice material, etc.) that the requestor considers relevant to the issue.

3.) If the decision of the Administrator is not favorable, an interested party may appeal directly to the Administrative Review Board (formerly the Wage Appeals Board). Write to:

Administrative Review Board
U.S. Department of Labor
200 Constitution Avenue, N.W.
Washington, DC 20210

4.) All decisions by the Administrative Review Board are final.

==========

END OF GENERAL DECISIO"

"General Decision Number: OH20230001 09/01/2023

Superseded General Decision Number: OH20220001

State: Ohio

Construction Types: Heavy and Highway

Counties: Ohio Statewide.

Heavy and Highway Construction Projects

Note: Contracts subject to the Davis-Bacon Act are generally required to pay at least the applicable minimum wage rate required under Executive Order 14026 or Executive Order 13658. Please note that these Executive Orders apply to covered contracts entered into by the federal government that are subject to the Davis-Bacon Act itself, but do not apply to contracts subject only to the Davis-Bacon Related Acts, including those set forth at 29 CFR 5.1(a)(2)-(60).

If the contract is entered into on or after January 30, 2022, or the contract is renewed or extended (e.g., an option is exercised) on or after January 30, 2022:	. Executive Order 14026 generally applies to the contract. . The contractor must pay all covered workers at least $16.20 per hour (or the applicable wage rate listed on this wage determination, if it is higher) for all hours spent performing on the contract in 2023.
If the contract was awarded on or between January 1, 2015 and January 29, 2022, and the contract is not renewed or extended on or after January 30, 2022:	. Executive Order 13658 generally applies to the contract. . The contractor must pay all covered workers at least $12.15 per hour (or the applicable wage rate listed on this wage determination, if it is higher) for all hours spent performing on that contract in 2023.

The applicable Executive Order minimum wage rate will be adjusted annually. If this contract is covered by one of the Executive Orders and a classification considered necessary for performance of work on the contract does not appear on this wage determination, the contractor must still submit a conformance request.

Additional information on contractor requirements and worker protections under the Executive Orders is available at http://www.dol.gov/whd/govcontracts.

Modification Number	Publication Date
0	01/06/2023
1	02/03/2023
2	03/03/2023

3	04/14/2023
4	06/30/2023
5	07/14/2023
6	08/04/2023
7	09/01/2023

BROH0001-001 06/01/2022

DEFIANCE, FULTON (Excluding Fulton, Amboy & Swan Creek Townships), HENRY (Excluding Monroe, Bartlow, Liberty, Washington, Richfield, Marion, Damascus & Townships & that part of Harrison Township outside corporate limits of city of Napoleon), PAULDING, PUTNAM and WILLIAMS COUNTIES

	Rates	Fringes
Bricklayer, Stonemason	$ 31.40	18.55

BROH0001-004 06/01/2022

	Rates	Fringes
CEMENT MASON/CONCRETE FINISHER	$ 31.40	18.55

BROH0003-002 06/01/2022

FULTON (Townships of Amboy, Swan Creek & Fulton), HENRY (Townships of Washington, Damascus, Richfield, Bartlow, Liberty, Harrison, Monroe, & Marion), LUCAS and WOOD (Townships of Perrysburg, Ross, Lake, Troy, Freedom, Montgomery, Webster, Center, Portage, Middleton, Plain, Liberty, Henry, Washington, Weston, Milton, Jackson & Grand Rapids) COUNTIES

	Rates	Fringes
Bricklayer, Stonemason	$ 31.40	18.55

BROH0005-003 06/01/2020

CUYAHOGA, LORAIN & MEDINA (Hinckley, Granger, Brunswick, Liverpool, Montville, York, Homer, Harrisville, Chatham, Litchfield & Spencer Townships and the city of Medina)

	Rates	Fringes
BRICKLAYER		
BRICKLAYERS; CAULKERS; CLEANERS; POINTERS; & STONEMASONS	$ 36.64	17.13
SANDBLASTERS	$ 36.39	17.13
SEWER BRICKLAYERS & STACK BUILDERS	$ 36.64	17.13
SWING SCAFFOLDS	$ 37.14	17.13

BROH0006-005 06/01/2022

CARROLL, COLUMBIANA (Knox, Butler, West & Hanover Townships), STARK & TUSCARAWAS

	Rates	Fringes

Bricklayer, Stonemason.....$ 31.40 18.55

BROH0007-002 06/01/2022

LAWRENCE

	Rates	Fringes
Bricklayer, Stonemason.....	$ 31.40	18.55

BROH0007-005 06/01/2022

PORTAGE & SUMMIT

	Rates	Fringes
BRICKLAYER.....	$ 31.40	18.55

BROH0007-010 06/01/2017

PORTAGE & SUMMIT

	Rates	Fringes
MASON - STONE.....	$ 28.65	14.55

BROH0008-001 06/01/2022

COLUMBIANA (Salem, Perry, Fairfield, Center, Elk Run, Middleton, & Unity Townships and the city of New Waterford), MAHONING & TRUMBULL

	Rates	Fringes
BRICKLAYER.....	$ 31.40	18.55

BROH0009-002 06/01/2022

BELMONT & MONROE COUNTIES and the Townships of Warren & Mt. Pleasant and the Village of Dillonvale in JEFFERSON COUNTY

	Rates	Fringes
Bricklayer, Stonemason.....	$ 31.40	18.55
Refractory.....	$ 31.45	19.01

BROH0010-002 06/01/2022

COLUMBIANA (St. Clair, Madison, Wayne, Franklin, Washington, Yellow Creek & Liverpool Townships) & JEFFERSON (Brush Creek & Saline Townships)

	Rates	Fringes
Bricklayer, Stonemason.....	$ 31.40	18.55

BROH0014-002 06/01/2022

HARRISON & JEFFERSON (Except Mt. Pleasant, Warren, Brush Creek, Saline & Salineville Townships & the Village of Dillonvale)

	Rates	Fringes
Bricklayer, Stonemason.....	$ 31.40	18.55

BROH0016-002 06/01/2022

ASHTABULA, GEAUGA, and LAKE COUNTIES

	Rates	Fringes
Bricklayer, Stonemason.....	$ 31.40	18.55

BROH0018-002 06/01/2022

BROWN, BUTLER, CLERMONT, HAMILTON, PREBLE (Gasper, Dixon, Israel, Lanier, Somers & Gratis Townships) & WARREN COUNTIES:

	Rates	Fringes
Bricklayer, Stonemason.....	$ 31.40	18.55

BROH0022-004 06/01/2022

CHAMPAIGN, CLARK, CLINTON, DARKE, GREENE, HIGHLAND, LOGAN, MIAMI, MONTGOMERY, PREBLE (Jackson, Monroe, Harrison, Twin, Jefferson & Washington Townships) and SHELBY COUNTIES

	Rates	Fringes
Bricklayer, Stonemason.....	$ 31.40	18.55

BROH0032-001 06/01/2022

GALLIA & MEIGS

	Rates	Fringes
Bricklayer, Stonemason.....	$ 31.40	18.55

BROH0035-002 06/01/2022

ALLEN, AUGLAIZE, MERCER and VAN WERT COUNTIES

	Rates	Fringes
Bricklayer, Stonemason.....	$ 31.40	18.55

BROH0039-002 06/01/2022

ADAMS & SCIOTO

	Rates	Fringes
Bricklayer, Stonemason.....	$ 31.40	18.55

BROH0040-003 06/01/2022

ASHLAND, CRAWFORD, HARDIN, HOLMES, MARION, MORROW, RICHLAND, WAYNE and WYANDOT (Except Crawford, Ridge, Richland & Tymochtee Townships) COUNTIES

	Rates	Fringes

Bricklayer, Stonemason.....$ 32.49 23.43

FOOTNOTE: Layout Man and Sawman rate: $1.00 per hour above journeyman rate.
Free standing stack work ground level to top of stack; Sandblasting and laying of carbon masonry material in swing stage and/or scaffold; Ramming and spading of plastics and gunniting: $1.50 per hour above journeyman rate.
""Hot"" work: $2.50 above journeyman rate.

BROH0044-002 06/01/2022

	Rates	Fringes
Bricklayer, Stonemason COSHOCTON, FAIRFIELD, GUERNSEY, HOCKING, KNOX, KICKING, MORGAN, MUSKINGUM, NOBLE (Beaver, Buffalo, Seneca & Wayne Townships) & PERRY COUNTIES:.....	$ 31.40	18.55

BROH0045-002 06/01/2021

FAYETTE, JACKSON, PIKE, ROSS and VINTON COUNTIES

	Rates	Fringes
Bricklayer, Stonemason.....	$ 30.40	17.66

BROH0046-002 06/01/2022

ERIE, HANCOCK, HURON, OTTAWA, SANDUSKY, SENECA, WOOD (Perry & Bloom Townships) and WYANDOT (Tymochtee, Crawford, Ridge & Richland Townships) COUNTIES & the Islands of Lake Erie north of Sandusky

	Rates	Fringes
Bricklayer, Stonemason.....	$ 31.40	18.55

FOOTNOTE: Layout Man and Sawman rate: $1.00 per hour above journeyman rate.
Free standing stack work ground level to top of stack; Sandblasting and laying of carbon masonry material in swing stage and/or scaffold; Ramming and spading of plastics and gunniting: $1.50 per hour above journeyman rate.
""Hot"" work: $2.50 above journeyman rate.

BROH0052-001 06/01/2022

ATHENS COUNTY

	Rates	Fringes
Bricklayer, Stonemason.....	$ 31.40	18.55

BROH0052-003 06/01/2022

NOBLE (Brookfield, Noble, Center, Sharon, Olive, Enoch, Stock,

Jackson, Jefferson & Elk Townships) and WASHINGTON COUNTIES

	Rates	Fringes
Bricklayer, Stonemason	$ 31.40	18.55

BROH0055-003 06/01/2022

DELAWARE, FRANKLIN, MADISON, PICKAWAY and UNION COUNTIES

	Rates	Fringes
Bricklayer, Stonemason	$ 31.40	18.55

CARP0003-004 05/01/2017

MAHONING & TRUMBULL

	Rates	Fringes
CARPENTER	$ 26.20	17.42

CARP0069-003 05/01/2017

CARROLL, STARK, TUSCARAWAS & WAYNE

	Rates	Fringes
CARPENTER	$ 25.98	15.98

CARP0069-006 05/01/2017

COSHOCTON, HOLMES, KNOX & MORROW

	Rates	Fringes
CARPENTER	$ 24.04	15.29

CARP0171-002 05/01/2019

BELMONT, COLUMBIANA, HARRISON, JEFFERSON & MONROE

	Rates	Fringes
CARPENTER	$ 27.37	20.02

CARP0200-002 05/01/2021

ADAMS, ATHENS, DELAWARE, FAIRFIELD, FAYETTE, FRANKLIN, GALLIA, GUERNSEY, HIGHLAND, HOCKING, JACKSON, LAWRENCE, LICKING, MADISON, MARION, MEIGS, MORGAN, MUSKINGUM, NOBLE, PERRY, PICKAWAY, PIKE, ROSS, SCIOTO, UNION, VINTON and WASHINGTON COUNTIES

	Rates	Fringes
CARPENTER	$ 30.28	20.08
Diver	$ 39.41	10.40
PILEDRIVERMAN	$ 30.28	20.08

CARP0248-005 07/01/2008

LUCAS & WOOD

```
                                   Rates          Fringes

CARPENTER.......................$ 27.27            14.58
----------------------------------------------------------------
 CARP0248-008 07/01/2008

                                   Rates          Fringes

CARPENTER
     DEFIANCE, FULTON, HANCOCK,
     HENRY, PAULDING & WILLIAMS
     COUNTIES...................$ 23.71            13.28
----------------------------------------------------------------
 CARP0254-002 05/01/2017

ASHTABULA, CUYAHOGA, GEAUGA & LAKE

                                   Rates          Fringes

CARPENTER.......................$ 32.40            16.97
----------------------------------------------------------------
 CARP0372-002 05/01/2016

ALLEN, AUGLAIZE, HARDIN, MERCER, PUTNAM & VAN WERT

                                   Rates          Fringes

CARPENTER.......................$ 24.54            18.21
----------------------------------------------------------------
 CARP0639-003 05/01/2017

MEDINA, PORTAGE & SUMMIT

                                   Rates          Fringes

CARPENTER.......................$ 30.42            16.99
----------------------------------------------------------------
 CARP0735-002 05/01/2019

ASHLAND, ERIE, HURON, LORAIN & RICHLAND

                                   Rates          Fringes

CARPENTER.......................$ 26.30            17.91
----------------------------------------------------------------
 CARP1311-001 05/01/2017

BROWN, BUTLER, CHAMPAIGN, CLARK, CLERMONT, CLINTON, DARKE,
GREENE, HAMILTON, LOGAN, MIAMI, MONTGOMERY, PREBLE, SHELBY &
WARREN


                                   Rates          Fringes

Carpenter & Piledrivermen........$ 29.34            15.95
Diver...........................$ 40.58             9.69
----------------------------------------------------------------
 CARP1393-002 07/01/2008

CRAWFORD, DEFIANCE, FULTON, HANCOCK, HENRY, LUCAS, OTTAWA,
PAULDING, SANDUSKY, SENECA, WILLIAMS & WOOD


                                   Rates          Fringes
```

Piledrivermen & Diver's Tender...$ 27.30 16.05

DIVERS - $250.00 per day

CARP1393-003 07/01/2008

ALLEN, AUGLAIZE, HARDIN, MERCER, PUTNAM, VAN WERT & WYANDOT

	Rates	Fringes
Piledrivermen & Diver's Tender...	$ 25.15	15.92

DIVERS - $250.00 per day

CARP1871-006 05/01/2017

BELMONT, HARRISON, & MONROE

	Rates	Fringes
Diver, Wet.....	$ 48.11	17.33
Piledrivermen; Diver, Dry.....	$ 32.07	17.33

CARP1871-008 05/01/2017

ASHLAND, ASHTABULA, CUYAHOGA, ERIE, GEAUGA, HURON, LAKE, LORAIN, MEDINA, PORTAGE, RICHLAND & SUMMIT

	Rates	Fringes
Diver, Wet.....	$ 45.80	18.84
Piledrivermen; Diver, Dry.....	$ 30.53	18.84

CARP1871-014 05/01/2017

CARROLL, STARK, TUSCARAWAS & WAYNE

	Rates	Fringes
Diver, Wet.....	$ 38.34	16.95
Piledrivermen; Diver, Dry.....	$ 25.56	16.95

CARP1871-015 05/01/2017

COSHOCTON, HOLMES, KNOX & MORROW

	Rates	Fringes
Diver, Wet.....	$ 37.34	16.07
Piledrivermen; Diver, Dry.....	$ 24.89	16.07

CARP1871-017 05/01/2017

MAHONING & TRUMBULL

	Rates	Fringes
Diver, Wet.....	$ 40.65	17.62
Piledrivermen; Diver, Dry.....	$ 27.10	17.62

CARP2235-012 01/01/2014

COLUMBIANA & JEFFERSON

	Rates	Fringes
PILEDRIVERMAN	$ 31.74	16.41

CARP2239-001 07/01/2008

CRAWFORD, OTTAWA, SANDUSKY, SENECA & WYANDOT

	Rates	Fringes
CARPENTER	$ 23.71	13.28

ELEC0008-002 05/23/2022

DEFIANCE, FULTON, HANCOCK, HENRY, LUCAS, OTTAWA, PAULDING, PUTNAM, SANDUSKY, SENECA, WILLIAMS & WOOD

	Rates	Fringes
CABLE SPLICER	$ 38.98	18.96
ELECTRICIAN	$ 44.79	4.5%+21.61

ELEC0032-003 12/05/2022

ALLEN, AUGLAIZE, HARDIN, LOGAN, MERCER, SHELBY, VAN WERT & WYANDOT (Crawford, Jackson, Marseilles, Mifflin, Ridgeland, Ridge & Salem Townships)

	Rates	Fringes
ELECTRICIAN	$ 34.67	21.48

---

* ELEC0038-002 04/24/2023

CUYAHOGA, GEAUGA (Bainbridge, Chester & Russell Townships) & LORAIN (Columbia Township)

	Rates	Fringes
ELECTRICIAN		
Excluding Sound & Communications Work	$ 43.13	23.31

FOOTNOTES;
a. 6 Paid Holidays: New Year's Day; Memorial Day; July 4th; Labor Day; Thanksgiving Day; & Christmas Day
b. 1 week's paid vacation for 1 year's service; 2 weeks' paid vacation for 2 or more years' service

---

* ELEC0038-008 04/24/2023

CUYAHOGA, GEAUGA (Bainbridge, Chester & Russell Townships) & LORAIN (Columbia Township)

	Rates	Fringes
Sound & Communication Technician		
Communications Technician	$ 29.80	13.80

Installer Technician.....$ 28.55 13.76

FOOTNOTES;
a. 6 Paid Holidays: New Year's Day; Memorial Day; July 4th; Labor Day; Thanksgiving Day; & Christmas Day
b. 1 week's paid vacation for 1 year's service; 2 weeks' paid vacation for 2 or more years' service

---

ELEC0064-003 11/28/2022

COLUMBIANA (Butler, Fairfield, Perry, Salem & Unity Townships) MAHONING (Austintown, Beaver, Berlin, Boardman, Canfield, Ellsworth, Coitsville, Goshen, Green, Jackson, Poland, Springfield & Youngstown Townships), & TRUMBULL (Hubbard & Liberty Townships)

	Rates	Fringes
ELECTRICIAN.....	$ 36.10	18.91

ELEC0071-001 01/01/2019

ASHLAND, CHAMPAIGN, CLARK, COSHOCTON, CRAWFORD, DELAWARE, FAIRFIELD, FAYETTE, FRANKLIN, GUERNSEY, HIGHLAND, HOCKING, JACKSON (Coal, Jackson, Liberty, Milton, Washington & Wellston Townships), KNOX, LICKING, MADISON, MARION, MONROE, MORGAN, MORROW, MUSKINGUM, NOBLE, PERRY, PICKAWAY, PIKE (Beaver, Benton, Jackson, Mifflin, Pebble, Peepee, Perry & Seal Townships), RICHLAND, ROSS, TUSCARAWAS (Auburn, Bucks, Clay, Jefferson, Oxford, Perry, Salem, Rush, Washington & York Townships), UNION, VINTON (Clinton, Eagle, Elk, Harrison, Jackson, Richland & Swan Townships), and WASHINGTON COUNTIES

	Rates	Fringes
Line Construction		
Equipment Operators.....	$ 33.62	13.40
Groundmen.....	$ 24.17	11.32
Linemen & Cable Splicers....	$ 38.27	14.42

ELEC0071-004 01/01/2019

AUGLAIZE, CLINTON, DARKE, GREENE, LOGAN, MERCER, MIAMI, MONTGOMERY, PREBLE, and SHELBY COUNTIES

	Rates	Fringes
Line Construction		
Equipment Operator.....	$ 33.62	13.40
Groundman.....	$ 24.17	11.32
Lineman & Cable Splicers....	$ 38.27	14.42

ELEC0071-005 12/31/2018

ASHTABULA, CUYAHOGA, GEAUGA, LAKE & LORAIN

	Rates	Fringes
LINE CONSTRUCTION: Equipment Operator		
DOT/Traffic Signal &		

```
     Highway Lighting Projects...$ 32.44            14.10
     Municipal Power/Transit
     Projects...................$ 40.10            16.42
LINE CONSTRUCTION:  Groundman
     DOT/Traffic Signal &
     Highway Lighting Projects...$ 25.06            12.26
     Municipal Power/Transit
     Projects...................$ 31.19            14.11
LINE CONSTRUCTION:
Linemen/Cable Splicer
     DOT/Traffic Signal &
     Highway Lighting Projects...$ 36.13            15.03
     Municipal Power/Transit
     Projects...................$ 44.56            17.58
-----------------------------------------------------------------
 ELEC0071-008 01/01/2019

COLUMBIANA, MAHONING, and  TRUMBULL COUNTIES

                                   Rates          Fringes

Line Construction
     Equipment Operator..........$ 33.62            13.40
     Groundman...................$ 24.17            11.32
     Lineman & Cable Splicers....$ 38.27            14.42
-----------------------------------------------------------------
 ELEC0071-010 01/01/2019

BELMONT, CARROLL, HARRISON, HOLMES, JEFFERSON, MEDINA, PORTAGE,
STARK, SUMMIT, and WAYNE COUNTIES


                                   Rates          Fringes

Line Construction
     Equipment Operator..........$ 33.62            13.40
     Groundman...................$ 24.17            11.32
     Lineman & Cable Splicers....$ 38.27            14.42
-----------------------------------------------------------------
 ELEC0071-013 01/01/2019

BROWN, BUTLER, CLERMONT, HAMILTON, and WARREN COUNTIES

                                   Rates          Fringes

Line Construction
     Equipment Operator..........$ 33.62            13.40
     Groundman...................$ 24.17            11.32
     Lineman & Cable Splicers....$ 38.27            14.42
-----------------------------------------------------------------
 ELEC0071-014 01/01/2019

ADAMS, ATHENS, GALLIA, JACKSON (Bloomfield, Franklin, Hamilton,
Lick, Jefferson, Scioto & Madison Townships), LAWRENCE, MEIGS,
PIKE (Camp Creek, Marion, Newton, Scioto, Sunfish & Union
Townships), SCIOTO & VINTON (Brown, Knox, Madison, Vinton &
Wilkesville Townships)


                                   Rates          Fringes

Line Construction
     Equipment Operator..........$ 33.62            13.40
     Groundman...................$ 24.17            11.32
     Lineman & Cable Splicers....$ 38.27            14.42
```

ELEC0082-002 12/05/2022

CLINTON, DARKE, GREENE, MIAMI, MONTGOMERY, PREBLE & WARREN
(Wayne, Clear Creek & Franklin Townships)

	Rates	Fringes
ELECTRICIAN.....	$ 34.25	21.26

---

* ELEC0082-006 11/28/2022

CLINTON, DARKE, GREENE, MIAMI, MONTGOMERY, PREBLE & WARREN
(Wayne, Clear Creek & Franklin Townships)

	Rates	Fringes
Sound & Communication Technician		
Cable Puller.....	$ 13.10 **	4.76
Installer/Technician.....	$ 26.20	13.89

ELEC0129-003 02/27/2023

LORAIN (Except Columbia Township) & MEDINA (Litchfield & Liverpool Townships)

	Rates	Fringes
ELECTRICIAN.....	$ 39.30	18.30

ELEC0129-004 02/27/2023

ERIE & HURON (Lyme, Ridgefield, Norwalk, Townsend, Wakeman, Sherman, Peru, Bronson, Hartland, Clarksfield, Norwich, Greenfield, Fairfield, Fitchville & New London Townships)

	Rates	Fringes
ELECTRICIAN.....	$ 39.30	18.30

ELEC0141-003 09/01/2019

BELMONT COUNTY

	Rates	Fringes
CABLE SPLICER.....	$ 30.63	25.87
ELECTRICIAN.....	$ 30.38	25.87

ELEC0212-003 11/26/2018

BROWN, CLERMONT & HAMILTON

	Rates	Fringes
Sound & Communication Technician.....	$ 24.35	10.99

ELEC0212-005 06/06/2022

BROWN, CLERMONT, and HAMILTON COUNTIES

	Rates	Fringes
ELECTRICIAN	$ 33.29	21.15

ELEC0245-001 08/29/2022

ALLEN, HARDIN, VAN WERT & WYANDOT (Crawford, Jackson, Marseilles, Mifflin, Richland, Ridge & Salem Townships)

	Rates	Fringes
Line Construction		
Equipment Operator	$ 32.37	26.5%+7.25
Groundman Truck Driver	$ 19.35	7.00+27.25%
Lineman	$ 44.22	7.00+27.25%

FOOTNOTE: a. Half day's Paid Holiday: The last 4 hours of the workday prior to Christmas or New Year's Day

---

ELEC0245-003 08/29/2022

DEFIANCE, FULTON, HANCOCK, HENRY, HURON, LUCAS, OTTAWA, PAULDING, PUTNAM, SANDUSKY, SENECA, WILLIAMS, and WOOD COUNTIES

	Rates	Fringes
Line Construction		
Cable Splicer	$ 50.85	7.00+27.25%
Groundman/Truck Driver	$ 19.35	7.00+27.25%
Heli-arc Welding	$ 40.76	7.00+27.25%
Lineman	$ 44.22	7.00+27.25%
Operator - Class 1	$ 35.38	7.00+27.25%
Operator - Class 2	$ 28.32	7.00+27.25%
Traffic Signal & Lighting Technician	$ 39.80	7.00+27.25%

FOOTNOTE: a. 6 Observed Holidays: New Year's Day; Memorial Day; Independence Day; Labor Day; Thanksgiving Day; & Christmas Day. Employees who work on a holiday shall be paid at a rate of double their applicable classified straight-time rates for the work performed on such holiday.

ELEC0245-004 08/29/2022

ERIE COUNTY

	Rates	Fringes
Line Construction		
Cable Splicer	$ 49.14	26.75%+6.75
Cablesplicer	$ 50.85	7.00+27.25%
Groundman/Truck Driver	$ 19.35	7.00+27.25%
Lineman	$ 44.22	7.00+27.25%
Operator - Class 1	$ 35.38	7.00+27.25%
Operator - Class 2	$ 28.32	7.00+27.25%

FOOTNOTE: a. 6 Observed Holidays: New Year's Day; Memorial Day; Independence Day; Labor Day; Thanksgiving Day; & Christmas Day. Employees who work on a holiday shall be

paid at a rate of double their applicable classified straight-time rates for the work performed on such holiday.

ELEC0246-001 10/31/2022

	Rates	Fringes
ELECTRICIAN.....	$ 40.50	84%+36.47

FOOTNOTE: a. 1 1/2 Paid Holidays: The last scheduled workday prior to Christmas & 4 hours on Good Friday.

ELEC0306-005 05/28/2018

MEDINA (Brunswick, Chatham, Granger, Guilford, Harrisville, Hinckley, Homer, Lafayette, Medina, Montville, Sharon, Spencer, Wadsworth, Westfield & York Townships), PORTAGE (Atwater, Aurora, Brimfield, Deerfield, Franklin, Mantua, Randolph, Ravenna, Rootstown, Shalersville, Streetsboro & Suffield Townships), SUMMIT & WAYNE (Baughman, Canaan, Chester, Chippewa, Congress, Green, Milton, & Wayne Townships)

	Rates	Fringes
CABLE SPLICER.....	$ 36.87	16.56
ELECTRICIAN.....	$ 34.54	5%+18.06

ELEC0317-002 05/30/2022

GALLIA & LAWRENCE

	Rates	Fringes
CABLE SPLICER.....	$ 32.68	18.13
ELECTRICIAN.....	$ 35.85	28.25

ELEC0540-005 12/26/2022

CARROLL (Northern half, including Fox, Harrison, Rose & Washington Townhships), COLUMBIANA (Knox Township), HOLMES, MAHONING (Smith Township), STARK, TUSCARAWAS (North of Auburn, Clay, Rush & York Townships), and WAYNE (South of Baughman, Chester, Green & Wayne Townships) COUNTIES

	Rates	Fringes
ELECTRICIAN.....	$ 36.28	27.04

ELEC0573-003 11/28/2022

ASHTABULA (Colebrook, Wayne, Williamsfield, Orwell & Windsor Townships), GEAUGA (Auburn, Middlefield, Parkman & Troy Townships), MAHONING (Milton Township), PORTAGE (Charlestown, Edinburg, Freedom, Hiram, Nelson, Palmyra, Paris & Windham Townships), and TRUMBULL (Except Liberty & Hubbard Townships)

	Rates	Fringes
ELECTRICIAN.....	$ 38.70	20.94

ELEC0575-001 11/21/2022

ADAMS, FAYETTE, HIGHLAND, HOCKING, JACKSON (Bloomfield, Franklin, Hamilton, Jefferson, Lick, Madison, Scioto, Coal, Jackson, Liberty, Milton & Washington Townships), PICKAWAY (Deer Creek, Perry, Pickaway, Salt Creek & Wayne Townships), PIKE (Beaver, Benton, Jackson, Mifflin, Pebble, PeePee, Perry, Seal, Camp Creek, Newton, Scioto, Sunfish, Union & Marion Townships), ROSS, SCIOTO & VINTON (Clinton, Eagle, Elk, Harrison, Jackson, Richland & Swan Townships)

	Rates	Fringes
ELECTRICIAN.....	$ 36.00	21.14

ELEC0648-001 08/29/2022

BUTLER and WARREN COUNTIES (Deerfield, Hamilton, Harlan, Massie, Salem, Turtle Creek, Union & Washington Townships)

	Rates	Fringes
CABLE SPLICER.....	$ 30.50	18.23
ELECTRICIAN.....	$ 33.00	21.44

ELEC0673-004 01/01/2023

ASHTABULA (Excluding Orwell, Colebrook, Williamsfield, Wayne & Windsor Townships), GEAUGA (Burton, Chardon, Claridon, Hambden, Huntsburg, Montville, Munson, Newbury & Thompson Townships) and LAKE COUNTIES

	Rates	Fringes
CABLE SPLICER.....	$ 33.81	21.47
ELECTRICIAN.....	$ 35.15	23.41

ELEC0683-002 05/30/2022

CHAMPAIGN, CLARK, DELAWARE, FAIRFIELD, FRANKLIN, MADISON, PICKAWAY (Circleville, Darby, Harrison, Jackson, Madison, Monroe, Muhlenberg, Scioto, Walnut & Washington Townships), and UNION COUNTIES

	Rates	Fringes
CABLE SPLICER.....	$ 37.50	23.15
ELECTRICIAN.....	$ 36.50	23.15

ELEC0688-003 05/30/2022

ASHLAND, CRAWFORD, HURON (Richmond, New Haven, Ripley & Greenwich Townships), KNOX (Liberty, Clinton, Union, Howard, Monroe, Middleberry, Morris, Wayne, Berlin, Pike, Brown & Jefferson Townships), MARION, MORROW, RICHLAND and WYANDOT (Sycamore, Crane, Eden, Pitt, Antrim & Tymochtee Townships) COUNTIES

	Rates	Fringes

ELECTRICIAN.....$ 32.30 21.83

ELEC0972-002 06/01/2021

ATHENS, MEIGS, MONROE, MORGAN, NOBLE, VINTON (Brown, Knox, Madison, Vinton & Wilkesville Townships), and WASHINGTON COUNITES

	Rates	Fringes
CABLE SPLICER	$ 37.35	27.81
ELECTRICIAN	$ 34.30	27.62

ELEC1105-001 05/29/2023

COSHOCTON, GUERNSEY, KNOX (Jackson, Clay, Morgan, Miller, Milford, Hilliar, Butler, Harrison, Pleasant & College Townships), LICKING, MUSKINGUM, PERRY, and TUSCARAWAS (Auburn, York, Clay, Jefferson, Rush, Oxford, Washington, Salem, Perry & Bucks Townships) COUNTIES

	Rates	Fringes
ELECTRICIAN	$ 36.45	24.22

ENGI0018-003 05/01/2019

ASHTABULA, CUYAHOGA, ERIE, GEAUGA, LAKE, LORAIN, MEDINA, PORTAGE, and SUMMIT COUNTIES

	Rates	Fringes
POWER EQUIPMENT OPERATOR		
GROUP 1	$ 38.63	15.20
GROUP 2	$ 38.53	15.20
GROUP 3	$ 37.49	15.20
GROUP 4	$ 36.27	15.20
GROUP 5	$ 30.98	15.20
GROUP 6	$ 38.88	15.20
GROUP 7	$ 39.13	15.20

OPERATING ENGINEER CLASSIFICATIONS

GROUP 1 - Air Compressor on Steel Erection; Barrier Moving Machine; Boiler Operator on Compressor or Generator when mounted on a Rig; Cableway; Combination Concrete Mixer & Tower; Concrete Plant (over 4 yd. Capacity); Concrete Pump; Crane (All Types, Including Boom Truck, Cherry Picker); Crane-Compact, Track or Rubber over 4,000 lbs. capacity; Cranes-Self Erecting, Stationary, Track or Truck (All Configurations); Derrick; Dragline; Dredge (Dipper, Clam or Suction); Elevating Grader or Euclid Loader; Floating Equipment (All Types); Gradall; Helicopter Crew (Operator-Hoist or Winch); Hoe (all types); Hoisting Engine on Shaft or Tunnel Work; Hydraulic Gantry (Lifting System); Industrial-Type Tractor; Jet Engine Dryer (D8 or D9) Diesel Tractor; Locomotive (Standard Gauge); Maintenance Operator Class A; Mixer, Paving (Single or Double Drum); Mucking Machine; Multiple Scraper; Piledriving Machine (All Types); Power Shovel; Prentice Loader; Quad 9 (Double Pusher); Rail Tamper (with auto lifting & aligning device); Refrigerating Machine (Freezer Operation); Rotary Drill, on Caisson work;

Rough Terrain Fork Lift with Winch/Hoist; Side-Boom; Slip-Form Paver; Tower Derrick; Tree Shredder; Trench Machine (Over 24"" wide); Truck Mounted Concrete Pump; Tug Boat; Tunnel Machine and/or Mining Machine; Wheel Excavator; and Asphalt Plant Engineer (Cleveland District Only).

GROUP 2 - Asphalt Paver; Automatic Subgrader Machine, Self-Propelled (CMI Type); Bobcat Type and/or Skid Steer Loader with Hoe Attachment Greater than 7,000 lbs.; Boring Machine More than 48""; Bulldozer; Endloader; Horizontal Directional Drill (Over 50,000 ft lbs thrust); Hydro Milling Machine; Kolman-type Loader (production type-Dirt); Lead Greaseman; Lighting & Traffic Signal Installation Equipment (includes all groups or classifications); Material Transfer Equipment (Shuttle Buggy) Asphalt; Pettibone-Rail Equipment; Power Grader; Power Scraper; Push Cat; Rotomill (all), Grinders & Planers of All types; Trench Machine (24"" wide & under); Vermeer type Concrete Saw; and Maintenance Operators (Portage and Summit Counties Only).

GROUP 3 - A-Frame; Air Compressor on Tunnel Work (low pressure); Asphalt Plant Engineer (Portage and Summit Counties Only); Bobcat-type and/or Skid Steer Loader with or without Attachments; Highway Drills (all types); Locomotive (narrow gauge); Material Hoist/Elevator; Mixer, Concrete (more than one bag capacity); Mixer, one bag capacity (Side Loader); Power Boiler (Over 15 lbs. Pressure) Pump Operator installing & operating Well Points; Pump (4"" & over discharge); Roller, Asphalt; Rotovator (lime soil stabilizer); Switch & Tie Tampers (without lifting & aligning device); Utility Operator (Small equipment); Welding Machines; and Railroad Tie Inserter/Remover; Articulating/straight bed end dumps if assigned (minus $4.00 per hour.

GROUP 4 - Backfiller; Ballast Re-locator; Bars, Joint & Mesh Installing Machine; Batch Plant; Boring Machine Operator (48"" or less); Bull Floats; Burlap & Curing Machine; Concrete Plant (capacity 4 yd. & under); Concrete Saw (Multiple); Conveyor (Highway); Crusher; Deckhand; Farm-type Tractor with attachments (highway); Finishing Machine; Fireperson, Floating Equipment (all types); Forklift; Form Trencher; Hydro Hammer expect masonary; Hydro Seeder; Pavement Breaker; Plant Mixer; Post Driver; Post Hole Digger (Power Auger); Power Brush Burner; Power Form Handling Equipment; Road Widening Trencher; Roller (Brick, Grade & Macadam); Self-Propelled Power Spreader; Self-Propelled Power Subgrader; Steam Fireperson; Tractor (Pulling Sheepfoot, Roller or Grader); and Vibratory Compactor with Integral Power.

GROUP 5 - Compressor (Portable, Sewer, Heavy & Highway); Drum Fireperson (Asphalt Plant); Generator; Masonry Fork Lift; Inboard-Outboard Motor Boat Launch; Oil Heater (asphalt plant); Oiler/Helper; Power Driven Heater; Power Sweeper & Scrubber; Pump (under 4"" discharge); Signalperson; Tire Repairperson; VAC/ALLS; Cranes - Compact, track or rubber under 4,000 pound capacity; fueling and greasing; and Chainmen.

GROUP 6 - Master Mechanic & Boom from 150 to 180.

GROUP 7 - Boom from 180 and over.

ENGI0018-004 05/01/2019

ADAMS, ALLEN, ASHLAND, ATHENS, AUGLAIZE, BELMONT, BROWN, BUTLER, CARROLL, CHAMPAIGN, CLARK, CLERMONT, CLINTON, COSHOCTON, CRAWFORD, DARKE, DEFIANCE, DELAWARE, FAIRFIELD, FAYETTE, FRANKLIN, FULTON, GALLIA, GREENE, GUERNSEY, HAMILTON, HANCOCK, HARDIN, HARRISON, HENRY, HIGHLAND, HOCKING, HOLMES, HURON, JACKSON, JEFFERSON, KNOX, LAWRENCE, LICKING, LOGAN, LUCAS, MADISON, MARION, MEIGS, MERCER, MIAMI, MONROE, MONTGOMERY, MORGAN, MORROW, MUSKINGUM, NOBLE, OTTAWA, PAULDING, PERRY, PICKAWAY, PIKE, PREBLE, PUTNAM, RICHLAND, ROSS, SANDUSKY, SCIOTO, SENECA, SHELBY, STARK, TUSCARAWAS, UNION, VAN WERT, VINTON, WARREN, WASHINGTON, WAYNE, WILLIAMS, WOOD, and YANDOT COUNTIES

	Rates	Fringes
POWER EQUIPMENT OPERATOR		
GROUP 1	$ 37.14	15.20
GROUP 2	$ 37.02	15.20
GROUP 3	$ 35.98	15.20
GROUP 4	$ 34.80	15.20
GROUP 5	$ 29.34	15.20
GROUP 6	$ 37.39	15.20
GROUP 7	$ 37.64	15.20

OPERATING ENGINEER CLASSIFICATIONS

GROUP 1 - Air Compressor on Steel Erection; Barrier Moving Machine; Boiler Operator on Compressor or Generator when mounted on a Rig; Cableway; Combination Concrete Mixer & Tower; Concrete Plant (over 4 yd. Capacity); Concrete Pump; Crane (All Types, Including Boom Truck, Cherry Picker); Crane-Compact, Track or Rubber over 4,000 lbs. capacity; Cranes-Self Erecting, Stationary, Track or Truck (All Configurations); Derrick; Dragline; Dredge (Dipper, Clam or Suction); Elevating Grader or Euclid Loader; Floating Equipment (All Types); Gradall; Helicopter Crew (Operator-Hoist or Winch); Hoe (all types); Hoisting Engine on Shaft or Tunnel Work; Hydraulic Gantry (Lifting System); Industrial-Type Tractor; Jet Engine Dryer (D8 or D9) Diesel Tractor; Locomotive (Standard Gauge); Maintenance Operator Class A; Mixer, Paving (Single or Double Drum); Mucking Machine; Multiple Scraper; Piledriving Machine (All Types); Power Shovel; Prentice Loader; Quad 9 (Double Pusher); Rail Tamper (with auto lifting & aligning device); Refrigerating Machine (Freezer Operation); Rotary Drill, on Caisson work; Rough Terrain Fork Lift with Winch/Hoist; Side-Boom; Slip-Form Paver; Tower Derrick; Tree Shredder; Trench Machine (Over 24"" wide); Truck Mounted Concrete Pump; Tug Boat; Tunnel Machine and/or Mining Machine; and Wheel Excavator.

GROUP 2 - Asphalt Paver; Automatic Subgrader Machine, Self-Propelled (CMI Type); Bobcat Type and/or Skid Steer Loader with Hoe Attachment Greater than 7,000 lbs.; Boring Machine More than 48""; Bulldozer; Endloader; Hydro Milling Machine; Horizontal Directional Drill (over 50,000 ft. lbs. thrust);Kolman-type Loader (production type-Dirt); Lead Greaseman; Lighting & Traffic Signal Installation Equipment (includes all groups or classifications); Material Transfer Equipment (Shuttle Buggy) Asphalt; Pettibone-Rail

Equipment; Power Grader; Power Scraper; Push Cat; Rotomill (all), Grinders & Planers of All types; Trench Machine (24"" wide & under); and Vermeer type Concrete Saw.

GROUP 3 - A-Frame; Air Compressor on Tunnel Work (low pressure); Asphalt Plant Engineer; Bobcat-type and/or Skid Steer Loader with or without Attachments; Highway Drills (all types); Locomotive (narrow gauge); Material Hoist/Elevator; Mixer, Concrete (more than one bag capacity); Mixer, one bag capacity (Side Loader); Power Boiler (Over 15 lbs. Pressure) Pump Operator installing & operating Well Points; Pump (4"" & over discharge); Railroad Tie Inserter/Remover; Roller, Asphalt; Rotovator (lime soil stabilizer); Switch & Tie Tampers (without lifting & aligning device); Utility Operator (Small equipment); and Welding Machines; Artiaculating/straight bed end dumps if assigned (minus $4.00 per hour.

GROUP 4 - Backfiller; Ballast Re-locator; Bars, Joint & Mesh Installing Machine; Batch Plant; Boring Machine Operator (48"" or less); Bull Floats; Burlap & Curing Machine; Concrete Plant (capacity 4 yd. & under); Concrete Saw (Multiple); Conveyor (Highway); Crusher; Deckhand; Farm-type Tractor with attachments (highway); Finishing Machine; Fireperson, Floating Equipment (all types); Fork Lift; Form Trencher; Hydro Hammer expect masonary; Hydro Seeder; Pavement Breaker; Plant Mixer; Post Driver; Post Hole Digger (Power Auger); Power Brush Burner; Power Form Handling Equipment; Road Widening Trencher; Roller (Brick, Grade & Macadam); Self-Propelled Power Spreader; Self-Propelled Power Subgrader; Steam Fireperson; Tractor (Pulling Sheepfoot, Roller or Grader); and Vibratory Compactor with Integral Power.

GROUP 5 - Compressor (Portable, Sewer, Heavy & Highway); Drum Fireperson (Asphalt Plant); Generator; Masonary Forklift; Inboard-Outboard Motor Boat Launch; Oil Heater (asphalt plant); Oiler/Helper; Power Driven Heater; Power Sweeper & Scrubber; Pump (under 4"" discharge); Signalperson; Tire Repairperson; VAC/ALLS; Cranes - Compact, track or rubber under 4,000 pound capacity; fueling and greasing; and Chainmen.

GROUP 6 - Master Mechanic & Boom from 150 to 180.

GROUP 7 - Boom from 180 and over.

ENGI0066-023 06/01/2017

COLUMBIANA, MAHONING & TRUMBULL COUNTIES

	Rates	Fringes
POWER EQUIPMENT OPERATOR		
ASBESTOS; HAZARDOUS/TOXIC WASTE PROJECTS GROUP 1 - A & B	$ 39.23	19.66
ASBESTOS; HAZARDOUS/TOXIC WASTE PROJECTS GROUP 2 - A & B	$ 38.90	19.66
ASBESTOS; HAZARDOUS/TOXIC WASTE PROJECTS GROUP 3 - A & B	$ 34.64	19.66
ASBESTOS; HAZARDOUS/TOXIC		

WASTE PROJECTS
GROUP 4 - A & B.....$ 30.70 19.66
ASBESTOS; HAZARDOUS/TOXIC
WASTE PROJECTS
GROUP 5 - A & B.....$ 27.30 19.66
HAZARDOUS/TOXIC WASTE
PROJECTS
GROUP 1 - C & D.....$ 35.96 19.66
HAZARDOUS/TOXIC WASTE
PROJECTS
GROUP 2 - C & D.....$ 35.66 19.66
HAZARDOUS/TOXIC WASTE
PROJECTS
GROUP 3 - C & D.....$ 31.76 19.66
HAZARDOUS/TOXIC WASTE
PROJECTS
GROUP 4 - C & D.....$ 28.14 19.66
HAZARDOUS/TOXIC WASTE
PROJECTS
GROUP 5 - C & D.....$ 25.03 19.66
ALL OTHER WORK
GROUP 1.....$ 32.69 19.66
ALL OTHER WORK
GROUP 2.....$ 32.42 19.66
ALL OTHER WORK
GROUP 3.....$ 28.87 19.66
ALL OTHER WORK
GROUP 4.....$ 25.58 19.66
ALL OTHER WORK
GROUP 5.....$ 22.75 19.66

GROUP 1 - Rig, Pile Driver or Caisson Type; & Rig, Pile Hydraulic Unit Attached

GROUP 2 - Asphalt Heater Planer; Backfiller with Drag Attachment; Backhoe; Backhoe with Shear attached; Backhoe-Rear Pivotal Swing; Batch Plant-Central Mix Concrete; Batch Plant, Portable concrete; Berm Builder-Automatic; Boat Derrick; Boat-Tug; Boring Machine Attached to Tractor; Bullclam; Bulldozer; C.M.I. Road Builder & Similar Type; Cable Placer & Layer; Carrier-Straddle; Carryall-Scraper or Scoop; Chicago Boom; Compactor with Blade Attached; Concrete Saw (Vermeer or similar type); Concrete Spreader Finisher; Combination, Bidwell Machine; Crane; Crane-Electric Overhead; Crane-Rough Terrain; Crane-Side Boom; Crane-Truck; Crane-Tower; Derrick-Boom; Derrick-Car; Digger-Wheel (Not trencher or road widener); Double Nine; Drag Line; Dredge; Drill-Kenny or Similar Type; Easy Pour Median Barrier Machine (or similar type); Electromatic; Frankie Pile; Gradall; Grader; Gurry; Self-Propelled; Heavy Equipment Robotics Operator/Mechanic; Hoist-Monorail; Hoist-Stationary & Mobile Tractor; Hoist, 2 or 3 drum; Horizontal Directional Drill Operator; Jackall; Jumbo Machine; Kocal & Kuhlman; Land-Seagoing Vehicle; Loader, Elevating; Loader, Front End; Loader, Skid Steer; Locomotive; Mechanic/Welder; Metro Chip Harvester with Boom; Mucking Machine; Paver-Asphalt Finishing Machine; Paver-Road Concrete; Paver-Slip Form (C.M.I. or similar); Place Crete Machine with Boom; Post Driver (Carrier mounted); Power Driven Hydraulic Pump & Jack (When used in Slip Form or Lift Slab Construction); Pump Crete Machine; Regulator-Ballast; Hydraulic Power Unit not attached to Rig for Pile Drillings; Rigs-Drilling; Roto Mill or similar Full Lane (8' Wide & Over); Roto Mill or similar type

(Under 8'); Shovel; Slip Form Curb Machine; Speedwing; Spikemaster; Stonecrusher; Tie Puller & Loader; Tie Tamper; Tractor-Double Boom; Tractor with Attachments; Truck-Boom; Truck-Tire; Trench Machine; Tunnel Machine (Mark 21 Java or similar); & Whirley (or similar type)

GROUP 3 - Asphalt Plant; Bending Machine (Pipeline or similar type); Boring machine, Motor Driven; Chip Harvester without Boom; Cleaning Machine, Pipeline Type; Coating Machine, Pipeline Type; Compactor; Concrete Belt Placer; Concrete Finisher; Concrete Planer or Asphalt; Concrete Spreader; Elevator; Fork Lift (Home building only); Fork lift & Lulls; Fork Lift Walk Behind (Hoisting over 1 buck high); Form Line Machine; Grease Truck operator; Grout Pump; Gunnite Machine; Horizontal Directional Drill Locator; Single Drum Hoist with or without Tower; Huck Bolting Machine; Hydraulic Scaffold (Hoisting building materials); Paving Breaker (Self-propelled or Ridden); Pipe Dream; Pot Fireperson (Power Agitated); Refrigeration Plant; Road Widener; Roller; Sasgen Derrick; Seeding Machine; Soil Stabilizer (Pump type); Spray Cure Machine, Self-Propelled; Straw Blower Machine; Sub-Grader; Tube Finisher or Broom C.M.I. or similar type; & Tugger Hoist

GROUP 4 - Air Curtain Destructor & Similar Type; Batch Plant-Job Related; Boiler Operator; Compressor; Conveyor; Curb Builder, self-propelled; Drill Wagon; Generator Set; Generator-Steam; Heater-Portable Power; Hydraulic Manipulator Crane; Jack-Hydraulic Power driven; Jack-Hydraulic (Railroad); Ladavator; Minor Machine Operator; Mixer-Concrete; Mulching Machine; Pin Puller; Power Broom; Pulverizer; Pump; Road Finishing Machine (Pull Type); Saw-Concrete-Self-Propelled (Highway Work); Signal Person; Spray Cure Machine-Motor Powered; Stump Cutter; Tractor; Trencher Form; Water Blaster; Steam Jenny; Syphon; Vibrator-Gasoline; & Welding Machine

GROUP 5 - Brakeperson; Fireperson; & Oiler

IRON0017-002 05/01/2023

ASHTABULA (North of Route 6, starting at the Geauga County Line, proceeding east to State Route 45), CUYAHOGA, ERIE (Eastern 2/3), GEAUGA, HURON (East of a line drawn from the north border through Monroeville & Willard), LAKE, LORAIN, MEDINA (North of Old Rte. #224), PORTAGE (West of a line from Middlefield to Shalersville to Deerfield), and SUMMIT (North of Old Rte. #224, including city limits of Barberton) COUNTIES

	Rates	Fringes
IRONWORKER		
Ornamental, Reinforcing, & Structural	$ 35.83	28.01

IRON0017-010 05/01/2023

ASHTABULA (Eastern part from Lake Erie on the north to route #322 on the south to include Conneaut, Kingsville, Sheffield, Denmark, Dorset, Cherry Valley, Wayne, Monroe, Pierpont, Richmond, Andover & Williamsfield Townships)

	Rates	Fringes
IRONWORKER		
Structural, including metal building erection & Reinforcing	$ 35.83	28.01

IRON0044-001 06/01/2022

ADAMS (Western Part), BROWN, BUTLER (Southern Part), CLERMONT, CLINTON (South of a line drawn from Blanchester to Lynchburg), HAMILTON, HIGHLAND (Excluding eastern one-fifth & portion of county inside lines drawn from Marshall to Lynchburg from the northern county line through E. Monroe to Marshall) and WARREN (South of a line drawn from Blanchester through Morrow to the west county line) COUNTIES

	Rates	Fringes
IRONWORKER, REINFORCING	$ 32.37	22.30
Beyond 30-mile radius of Hamilton County Courthouse	$ 28.67	21.20
Up to & including 30-mile radius of Hamilton County Courthouse	$ 27.60	20.70

IRON0044-002 06/01/2023

CLINTON (South of a line drawn from Blanchester to Lynchburg), HAMILTON, HIGHLAND (Excluding eastern one-fifth & portion of county inside lines drawn from Marshall to Lynchburg from the northern county line through E. Monroe to Marshall) & WARREN (South of a line drawn from Blanchester through Morrow to the west county line)

	Rates	Fringes
IRONWORKER		
Fence Erector	$ 30.75	23.30
Ornamental; Structural	$ 32.37	23.30

IRON0055-003 07/01/2023

CRAWFORD (Area Between lines drawn from where Hwy #598 & #30 meet through N. Liberty to the northern border & from said Hwy junction point due west to the border), DEFIANCE (S. of a line drawn from where Rte. #66 meets the northern line through Independence to the eastern county border), ERIE (Western 1/3), FULTON, HANCOCK, HARDIN (North of a line drawn from Maysville to a point 4 miles south of the northern line on the eastern line), HENRY, HURON (West of a line drawn from the northern border through Monroeville & Willard), LUCAS, OTTAWA, PUTNAM (East of a line drawn from the northern border down through Miller City to where #696 meets the southern border), SANDUSKY, SENECA, WILLIAMS (East of a line drawn from Pioneer through Stryker to the southern border), WOOD & WYANDOT (North of Rte. #30)

	Rates	Fringes
IRONWORKER		
Fence Erector	$ 25.40	23.87

Flat Road Mesh.....	$ 29.77	21.30
Tunnels & Caissons Under Pressure.....	$ 29.77	21.30
All Other Work.....	$ 34.25	28.20

IRON0147-002 06/01/2023

ALLEN (Northern half), DEFIANCE (Northern part, excluding south of a line drawn from where Rte. #66 meets the northern line through Independence to the eastern county border), MERCER (Northern half), PAULDING, PUTNAM (Western part, excluding east of a line drawn from the northern border down through Miller City to where #696 meets the southern border), VAN WERT, and WILLIAMS (Western part, excluding east of a line drawn from Pioneer through Stryker to the southern border) COUNTIES

	Rates	Fringes
IRONWORKER.....	$ 33.00	25.59

IRON0172-002 06/01/2023

CHAMPAIGN (Eastern one-third), CLARK (Eastern one-fourth), COSHOCTON (West of a line beginning at the northwestern county line going through Walhonding & Tunnel Hill to the southern county line), CRAWFORD (South of Rte. #30), DELAWARE, FAIRFIELD, FAYETTE, FRANKLIN, HARDIN (Excluding a line drawn from Roundhead to Maysville), HIGHLAND (Eastern one-fifth), HOCKING, JACKSON (Northern half), KNOX, LICKING, LOGAN (Eastern one-third), MADISON, MARION, MORROW, MUSKINGUM (West of a line starting at Adams Mill going to Adamsville & going from Adamsville through Blue Rock to the southern border), PERRY, PICKAWAY, PIKE (Northern half), ROSS, UNION, VINTON and WYANDOT (South of Rte. #30) COUNTIES

	Rates	Fringes
IRONWORKER.....	$ 34.07	22.55

IRON0207-004 06/01/2023

ASHTABULA (Southern part starting at the Geauga County line), COLUMBIANA (E. of a line from Damascus to Highlandtown), MAHONING (N. of Old Route #224), PORTAGE (E. of a line from Middlefield to Shalersville to Deerfield) & TRUMBULL

	Rates	Fringes
IRONWORKER		
Layout; Sheeter.....	$ 34.00	27.16
Ornamental; Reinforcing; Structural.....	$ 33.00	27.16
Ornamental; Reinforcing.....	$ 28.92	25.61

IRON0290-002 06/01/2023

ALLEN (Southern half), AUGLAIZE, BUTLER (North of a line drawn from east to the west county line going through Oxford, Darrtown & Woodsdale), CHAMPAIGN (Excluding east of a line drawn from Catawla to the point where #68 intersects the northern county line), CLARK (Western two-thirds), CLINTON (Excluding south of a line drawn from Blanchester to

Lynchburg), DARKE, GREENE, HIGHLAND (Inside lines drawn from Marshall to Lynchburg & from the northern county line through East Monroe to Marshall), LOGAN (West of a line drawn from West Liberty to where the northern county line meets the western county line of Hardin), MERCER (Southern half), MIAMI, MONTGOMERY, PREBLE, SHELBY & WARREN (Excluding south of a line drawn from Blanchester through Morrow to the western county line) COUNTIES

	Rates	Fringes
IRONWORKER	$ 32.69	24.05

IRON0549-003 12/01/2022

BELMONT, GUERNSEY, HARRISON, JEFFERSON, MONROE & MUSKINGUM (Excluding portion west of a line starting at Adams Mill going to Adamsville and going from Adamsville through Blue Rock to the south border)

	Rates	Fringes
IRONWORKER	$ 35.19	25.66

IRON0550-004 05/01/2023

ASHLAND, CARROLL, COLUMBIANA (W. of a line from Damascus to Highlandtown), COSHOCTON (E. of a line beginning at NW Co. line going through Walhonding & Tunnel Hill to the South Co. line), HOLMES, HURON (S. of Old Rte. #224), MAHONING (S. of Old Rte. #224), MEDINA (S. of Old Rte. #224), PORTAGE (S. of Old Rte. #224), RICHLAND, STARK, SUMMIT (S. of Old Rte. #224, Excluding city limits of Barberton), TUSCARAWAS, & WAYNE

	Rates	Fringes
Ironworkers:Structural, Ornamental and Reinforcing	$ 33.00	22.27

IRON0769-004 06/01/2023

ADAMS (Eastern Half), GALLIA, JACKSON (Southern Half), LAWRENCE & SCIOTO

	Rates	Fringes
IRONWORKER	$ 36.16	28.34

IRON0787-003 06/01/2023

ATHENS, MEIGS, MORGAN, NOBLE, and WASHINGTON COUNTIES

	Rates	Fringes
IRONWORKER	$ 32.30	23.95

LABO0265-008 05/01/2023

	Rates	Fringes
LABORER		

ASHTABULA, ERIE, HURON,
LORAIN, LUCAS, MAHONING,
MEDINA, OTTAWA, PORTAGE,
SANDUSKY, STARK, SUMMIT,
TRUMBULL & WOOD COUNTIES
GROUP 1.....$ 35.05 13.70
GROUP 2.....$ 35.22 13.70
GROUP 3.....$ 35.55 13.70
GROUP 4.....$ 36.00 13.70
CUYAHOGA AND GEAUGA
COUNTIES ONLY: SEWAGE
PLANTS, WASTE PLANTS,
WATER TREATMENT
FACILITIES, PUMPING
STATIONS, & ETHANOL PLANTS
CONSTRUCTION.....$ 37.66 13.70
CUYAHOGA, GEAUGA & LAKE
COUNTIES
GROUP 1.....$ 36.28 13.70
GROUP 2.....$ 36.45 13.70
GROUP 3.....$ 36.78 13.70
GROUP 4.....$ 37.23 13.70
REMAINING COUNTIES OF OHIO
GROUP 1.....$ 34.62 13.70
GROUP 2.....$ 34.79 13.70
GROUP 3.....$ 35.12 13.70
GROUP 4.....$ 35.57 13.70

LABORER CLASSIFICATIONS

GROUP 1 - Asphalt Laborer; Carpenter Tender; Concrete Curing Applicator; Dump Man (Batch Truck); Guardrail and Fence Installer; Joint Setter; Laborer (Construction); Landscape Laborer; Mesh Handlers & Placer; Right-of-way Laborer; Riprap Laborer & Grouter; Scaffold Erector; Seal Coating; Surface Treatment or Road Mix Laborer; Sign Installer; Slurry Seal; Utility Man; Bridge Man; Handyman; Waterproofing Laborer; Flagperson; Hazardous Waste (level D); Diver Tender; Zone Person & Traffic Control

GROUP 2 - Asphalt Raker; Concrete Puddler; Kettle Man Pipeline); Machine Driven Tools (Gas, Electric, Air); Mason Tender; Brick Paver; Mortar Mixer; Power Buggy or Power Wheelbarrow; Paint Striper; Sheeting & Shoring Man; Surface Grinder Man; Plastic Fusing Machine Operator; Pug Mill Operator; & Vacuum Devices (wet or dry); Rodding Machine Operator; Diver; Screwman or Paver; Screed Person; Water Blast, Hand Held Wand; Pumps 4"" & Under (Gas, Air or Electric) & Hazardous Waste (level C); Air Track and Wagon Drill; Bottom Person; Cofferdam (below 25 ft. deep); Concrete Saw Person; Cutting with Burning Torch; Form Setter; Hand Spiker (Railroad); Pipelayer; Tunnel Laborer (without air) & Caisson; Underground Person (working in Sewer and Waterline, Cleaning, Repairing & Reconditioning); Sandblaster Nozzle Person; & Hazardous Waste (level B)

GROUP 3 - Blaster; Mucker; Powder Person; Top Lander; Wrencher (Mechanical Joints & Utility Pipeline); Yarner; Hazardous Waste (level A); Concrete Specialist; Concrete Crew in Tunnels (With Air-pressurized - $1.00 premium); Curb Setter & Cutter; Grade Checker; Utility Pipeline Tapper; Waterline; and Caulker

GROUP 4 - Miner (With Air-pressurized - $1.00 premium); & Gunite Nozzle Person

TUNNEL LABORER WITH AIR-PRESSURIZED ADD $1.00 TO BASE RATE

SIGNAL PERSON WILL RECEIVE THE RATE EQUAL TO THE RATE PAID THE LABORER CLASSIFICATION FOR WHICH HE OR SHE IS SIGNALING.

PAIN0006-002 05/01/2023

ASHTABULA, CUYAHOGA, GEAUGA, LAKE, LORAIN, PORTAGE (N. of the East-West Turnpike) & SUMMIT (N. of the East-West Turnpike)

	Rates	Fringes
PAINTER		
COMMERCIAL NEW WORK; REMODELING; & RENOVATIONS		
GROUP 1	$ 30.75	18.95
GROUP 2	$ 31.15	18.95
GROUP 3	$ 31.45	18.95
GROUP 4	$ 37.01	18.95
COMMERCIAL REPAINT		
GROUP 1	$ 29.25	18.95
GROUP 2	$ 29.65	18.95
GROUP 3	$ 29.95	18.95

PAINTER CLASSIFICATIONS - COMMERCIAL NEW WORK; REMODELING; & RENOVATIONS

GROUP 1 - Brush; & Roller

GROUP 2 - Sandblasting & Buffing

GROUP 3 - Spray Painting; Closed Steel Above 55 feet; Bridges & Open Structural Steel; Tanks - Water Towers; Bridge Painters; Bridge Riggers; Containment Builders

GROUP 4 - Bridge Blaster

PAINTER CLASSIFICATIONS - COMMERCIAL REPAINT

GROUP 1 - Brush; & Roller

GROUP 2 - Sandblasting & Buffing

GROUP 3 - Spray Painting

PAIN0007-002 07/01/2021

FULTON, HENRY, LUCAS, OTTAWA (Excluding Allen, Bay, Bono, Catawba Island, Clay Center, Curtice, Danbury, Eagle Beach, Elliston, Elmore, Erie, Fishback, Gem Beach & Genova) & WOOD

	Rates	Fringes
PAINTER		
NEW COMMERCIAL WORK		
GROUP 1	$ 28.74	18.77
GROUP 2	$ 28.74	18.77
GROUP 3	$ 28.74	18.77
GROUP 4	$ 28.74	18.77
GROUP 5	$ 28.74	18.77

GROUP 6.....$ 28.74 18.77
GROUP 7.....$ 28.74 18.77
GROUP 8.....$ 28.74 18.77
GROUP 9.....$ 28.74 18.77

REPAINT IS 90% OF JR

PAINTER CLASSIFICATIONS

GROUP 1 - Brush; Spray & Sandblasting Pot Tender

GROUP 2 - Refineries & Refinery Tanks; Surfaces 30 ft. or over where material is applied to or labor performed on above ground level (exterior), floor level (interior)

GROUP 3 - Swing Stage & Chair

GROUP 4 - Lead Abatement

GROUP 5 - All Methods of Spray

GROUP 6 - Solvent-Based Catalized Epoxy Materials of 2 or More Component Materials, to include Solvent-Based Conversion Varnish (excluding water based)

GROUP 7 - Spray Solvent Based Material; Sand & Abrasive Blasting

GROUP 8 - Towers; Tanks; Bridges; Stacks Over 30 Feet

GROUP 9 - Epoxy Spray (excluding water based)

PAIN0012-008 05/01/2019

BUTLER COUNTY

	Rates	Fringes
PAINTER		
GROUP 1	$ 21.95	10.20
GROUP 2	$ 25.30	10.20
GROUP 3	$ 25.80	10.20
GROUP 4	$ 26.05	10.20
GROUP 5	$ 26.30	10.20

PAINTER CLASSIFICATIONS

GROUP 1: Bridge Equipment Tender; Bridge/Containment Builder

GROUP 2: Brush & Roller

GROUP 3: Spray

GROUP 4: Sandblasting; & Waterblasting

GROUP 5: Elevated Tanks; Steeplejack Work; Bridge; & Lead Abatement

---

PAIN0012-010 05/01/2019

BROWN, CLERMONT, CLINTON, HAMILTON & WARREN

	Rates	Fringes
PAINTER		
HEAVY & HIGHWAY BRIDGES-GUARDRAILS-LIGHTPOLES-STRIPING		
Bridge Equipment Tender and Containment Builder	$ 21.95	10.20
Bridges when highest point of clearance is 60 feet or more; & Lead Abatement Projects	$ 26.30	10.20
Brush & Roller	$ 25.30	10.20
Sandblasting & Hopper Tender; Water Blasting	$ 26.05	10.20
Spray	$ 25.80	10.20

PAIN0093-001 12/01/2022

ATHENS, GUERNSEY, HOCKING, MONROE, MORGAN, NOBLE and WASHINGTON COUNTIES

	Rates	Fringes
PAINTER		
Bridges; Locks; Dams; Tension Towers; & Energized Substations	$ 34.81	22.47
Power Generating Facilities	$ 31.66	22.47

PAIN0249-002 05/01/2023

CLARK, DARKE, GREENE, MIAMI, MONTGOMERY & PREBLE

	Rates	Fringes
PAINTER		
GROUP 1 - Brush & Roller	$ 26.23	12.56
GROUP 2 - Swing, Scaffold Bridges; Structural Steel; Open Acid Tank; High Tension Electrical Equipment; & Hot Pipes	$ 26.23	12.56
GROUP 3 - Spray; Sandblast; Steamclean; Lead Abatement	$ 26.98	12.56
GROUP 4 - Steeplejack Work	$ 27.18	12.56
GROUP 5 - Coal Tar	$ 27.73	12.56
GROUP 6 - Bridge Equipment Tender & or Containment Builder	$ 34.94	12.56
GROUP 7 - Tanks, Stacks & Towers	$ 29.87	12.56
GROUP 8 - Bridge Blaster, Rigger	$ 37.94	12.56

PAIN0356-002 09/01/2009

KNOX, LICKING, MUSKINGUM, and PERRY

	Rates	Fringes
PAINTER		
Bridge Equipment Tenders		

```
     and Containment Builders....$ 27.93            7.25
     Bridges; Blasters;
     andRiggers.................$ 34.60            7.25
     Brush and Roller...........$ 20.93            7.25
     Sandblasting; Steam
     Cleaning; Waterblasting;
     and Hazardous Work.........$ 25.82            7.25
     Spray......................$ 21.40            7.25
     Structural Steel and Swing
     Stage......................$ 25.42            7.25
     Tanks; Stacks; and Towers...$ 28.63            7.25
----------------------------------------------------------------
 PAIN0438-002 12/01/2021

BELMONT, HARRISON and JEFFERSON COUNTIES

                                  Rates          Fringes

PAINTER
     Bridges, Locks, Dams,
     Tension Towers & Energized
     Substations................$ 34.44           18.19
     Power Generating Facilities.$ 32.29           18.19
----------------------------------------------------------------
 PAIN0476-001 06/01/2023

COLUMBIANA, MAHONING, and TRUMBULL COUNITES

                                  Rates          Fringes

PAINTER
     GROUP 1....................$ 27.49           17.06
     GROUP 2....................$ 34.12           17.06
     GROUP 3....................$ 27.70           17.06
     GROUP 4....................$ 27.99           17.06
     GROUP 5....................$ 28.14           17.06
     GROUP 6....................$ 28.39           17.06
     GROUP 7....................$ 29.49           17.06

PAINTER CLASSIFICATIONS:

GROUP 1:  Painters, Brush & Roller

GROUP 2:  Bridges

GROUP 3:  Structural Steel

GROUP 4:  Spray, Except Bar Joist/Deck

  GROUP 5:  Epoxy/Mastic; Spray- Bar Joist/Deck; Working Above
  50 Feet; and Swingstages

GROUP 6:  Tanks; Sandblasting

GROUP 7:  Towers; Stacks

----------------------------------------------------------------
 PAIN0555-002 06/01/2021

ADAMS, HIGHLAND, JACKSON, PIKE & SCIOTO

                                  Rates          Fringes

PAINTER
     GROUP 1....................$ 31.95           17.05
```

GROUP 2.....$ 33.47 17.05
GROUP 3.....$ 34.99 17.05
GROUP 4.....$ 37.97 17.05

PAINTER CLASSIFICATIONS

GROUP 1 - Containment Builder

GROUP 2 - Brush; Roller; Power Tools, Under 40 feet

GROUP 3 - Sand Blasting; Spray; Steam Cleaning; Pressure Washing; Epoxy & Two Component Materials; Lead Abatement; Hazardous Waste; Toxic Materials; Bulk & Storage Tanks of 25,000 Gallon Capacity or More; Elevated Tanks

GROUP 4 - Stacks; Bridges

PAIN0639-001 05/01/2011

	Rates	Fringes
Sign Painter & Erector	$ 20.61	3.50+a+b+c

FOOTNOTES: a. 7 Paid Holidays: New Year's Day; Memorial Day; July 4th; Labor Day; Thanksgiving Day; Christmas Day & 1 Floating Day
b. Vacation Pay: After 1 year's service - 5 days' paid vacation; After 2, but less than 10 years' service - 10 days' paid vacation; After 10, but less than 20 years' service - 15 days' paid vacation; After 20 years' service - 20 days' paid vacation
c. Funeral leave up to 3 days maximum paid leave for death of mother, father, brother, sister, spouse, child, mother-in-law, father-in-law, grandparent and inlaw provided employee attends funeral

---

PAIN0788-002 06/01/2022

ASHLAND, CRAWFORD, ERIE, HANCOCK, HURON, MARION, MORROW, OTTAWA (Allen, Bay, Bono, Catawba Island, Clay Center, Curtice, Danbury, Eagle Beach, Elliston, Elmore, Erie, Fishback, Gem Beach & Genoa), RICHLAND, SANDUSKY, SENECA & WYANDOT

	Rates	Fringes
PAINTER		
Brush & Roller	$ 25.08	16.72
Structural Steel	$ 26.68	16.72

WINTER REPAINT: Between December 1 to March 31 - 90%JR

$.50 PER HOUR SHALL BE ADDED TO THE RATE OF PAY FOR THE CLASSIFICATION OF WORK:

While working swingstage, boatswain chair, needle beam and horizontal cable. While operating sprayguns, sandblasting, cobblasting and high pressure waterblasting (4000psi).

$1.00 PER HOUR SHALL BE ADDED TO THE RATE OF PAY FOR THE CLASSIFICATION OF WORK:

For the application of catalized epoxy, including latex epoxy

that is deemed hazardous, lead abatement, or for work or material where special precautions beyond normal work duties must be taken. For working on stacks, tanks, and towers over 40 feet in height.

PAIN0813-005 12/01/2008

GALLIA, LAWRENCE, MEIGS & VINTON

	Rates	Fringes
PAINTER		
Base Rate	$ 24.83	10.00
Bridges, Locks, Dams & Tension Towers	$ 27.83	10.00

---

* PAIN0841-001 06/01/2023

MEDINA, PORTAGE (South of and including Ohio Turnpike), and SUMMIT (South of and including Ohio Turnpike) COUNTIES

	Rates	Fringes
Painters:		
GROUP 1	$ 30.18	15.50
GROUP 2	$ 30.83	15.50
GROUP 3	$ 30.93	15.50
GROUP 4	$ 31.03	15.50
GROUP 5	$ 31.43	15.50
GROUP 6	$ 39.20	11.75
GROUP 7	$ 31.68	15.50

PAINTER CLASSIFICATIONS:

GROUP 1 - Brush, Roller & Paperhanger

GROUP 2 - Epoxy Application

GROUP 3 - Swing Scaffold, Bosum Chair, & Window Jack

GROUP 4 - Spray Gun Operator of Any & All Coatings

GROUP 5 - Sandblast, Painting of Standpipes, etc. from Scaffolds, Bridge Work and/or Open Structural Steel, Standpipes and/or Water Towers

GROUP 6 - Public & Commerce Transportation, Steel or Galvanized, Bridges, Tunnels & Related Support Items (concrete)

GROUP 7 - Synthetic Exterior, Drywall Finisher and/or Taper, Drywall Finisher and Follow-up Man Using Automatic Tools

---

PAIN0841-002 06/01/2022

CARROLL, COSHOCTON, HOLMES, STARK, TUSCARAWAS & WAYNE

	Rates	Fringes
PAINTER		
Bridges; Towers, Poles & Stacks; Sandblasting		

```
     Steel; Structural Steel &
     Metalizing.................$ 23.50           15.45
     Brush & Roller.............$ 28.18           15.45
     Spray; Tank Interior &
     Exterior...................$ 23.50           15.45
----------------------------------------------------------------
 PAIN1020-002 07/01/2023

ALLEN, AUGLAIZE, CHAMPAIGN, DEFIANCE, HARDIN, LOGAN, MERCER,
PAULDING, PUTNAM, SHELBY, VAN WERT, and WILLIAMS COUNTIES


                                   Rates          Fringes

PAINTER
     Brush & Roller.............$ 26.64           15.56
     Drywall Finishing & Taping..$ 27.39           15.56
     Lead Abatement.............$ 28.39           15.56
     Spray, Sandblasting
     Pressure Cleaning, &
     Refinery...................$ 27.39           15.56
     Swing Stage, Chair,
     Spiders, & Cherry Pickers...$ 26.89           15.56
     Wallcoverings..............$ 27.39           15.56

  All surfaces 40 ft. or over where material is applied to or
  labor performed on, above ground level (exterior), floor
  level (interior) - $.50 premium

Applying Coal Tar Products - $1.00 premium

----------------------------------------------------------------
 PAIN1275-002 05/01/2023

DELAWARE, FAIRFIELD, FAYETTE, FRANKLIN, MADISON, PICKAWAY, ROSS
& UNION


                                   Rates          Fringes

PAINTER
     Bridges....................$ 35.57           14.25
     Brush; Roller..............$ 29.96           14.25
     Sandblasting;
     Steamcleaning;
     Waterblasting (3500 PSI or
     Over)& Hazardous Work......$ 30.66           14.25
     Spray......................$ 30.46           14.25
     Stacks; Tanks; & Towers.....$ 32.77           14.25
     Structural Steel & Swing
     Stage......................$ 28.81           14.25
----------------------------------------------------------------
 PLAS0109-001 05/01/2018

MEDINA, PORTAGE, STARK, and SUMMIT COUNTIES

                                   Rates          Fringes

PLASTERER.......................$ 28.86           17.11
----------------------------------------------------------------
 PLAS0109-003 05/01/2018

CARROLL, HOLMES, TUSCARAWAS, and WAYNE COUNTIES

                                   Rates          Fringes
```

PLASTERER.....$ 28.21 17.11

PLAS0132-002 07/01/2023

BROWN, BUTLER, CLERMONT, HAMILTON, HIGHLAND, WARREN COUNTIES

	Rates	Fringes
PLASTERER	$ 28.40	16.24

PLAS0404-002 05/01/2018

ASHTABULA, CUYAHOGA, GEAUGA, AND LAKE COUNTIES

	Rates	Fringes
PLASTERER	$ 29.63	17.11

PLAS0404-003 05/01/2018

LORAIN COUNTY

	Rates	Fringes
PLASTERER	$ 28.86	17.11

PLAS0526-022 05/01/2018

COLUMBIANA, MAHONING, and TRUMBULL COUNTIES

	Rates	Fringes
PLASTERER	$ 28.86	17.11

PLAS0526-023 05/01/2018

BELMONT, HARRISON, and JEFFERSON COUNTIES

	Rates	Fringes
PLASTERER	$ 28.21	17.11

PLAS0886-001 05/01/2018

FULTON, HANCOCK, HENRY, LUCAS, PUTNAM, and WOOD COUNTIES

	Rates	Fringes
PLASTERER	$ 29.63	17.11

PLAS0886-003 05/01/2018

DEFIANCE, ERIE, HURON, OTTAWA, PAULDING, SANDUSKY, and SENECA COUNTIES

	Rates	Fringes
PLASTERER	$ 28.86	17.11

PLAS0886-004 05/01/2018

ALLEN, AUGLAIZE, HARDIN, LOGAN, MERCER, and VAN WERT COUNTIES

	Rates	Fringes
PLASTERER	$ 28.21	17.11

PLUM0042-002 07/01/2023

ASHLAND, CRAWFORD, ERIE, HURON, KNOX, LORAIN, MORROW, RICHLAND & WYANDOT

	Rates	Fringes
Plumber, Pipefitter, Steamfitter	$ 37.62	25.47

PLUM0050-002 07/04/2022

DEFIANCE, FULTON, HANCOCK, HENRY, LUCAS, OTTAWA, PAULDING, PUTNAM, SANDUSKY, SENECA, WILLIAMS & WOOD

	Rates	Fringes
Plumber, Pipefitter, Steamfitter	$ 44.60	28.51

PLUM0055-003 05/01/2022

ASHTABULA, CUYAHOGA, GEAUGA, LAKE, MEDINA (N. of Rte. #18 & Smith Road) & SUMMIT (N. of Rte. #303, including the corporate limits of the city of Hudson)

	Rates	Fringes
PLUMBER	$ 40.00	28.43

PLUM0083-001 07/01/2017

BELMONT & MONROE (North of Rte. #78)

	Rates	Fringes
Plumber and Steamfitter	$ 32.16	31.51

PLUM0094-002 05/01/2023

CARROLL (Northen Half), STARK, and WAYNE COUNTIES

	Rates	Fringes
PLUMBER/PIPEFITTER	$ 38.03	23.09

PLUM0120-002 05/01/2023

ASHTABULA, CUYAHOGA, GEAUGA, LAKE, LORAIN (the C.E.I. Power House in Avon Lake), MEDINA (N. of Rte. #18) & SUMMIT (N. of #303)

	Rates	Fringes
PIPEFITTER	$ 45.62	27.30

PLUM0162-002 06/01/2022

CHAMPAIGN, CLARK, CLINTON, DARKE, FAYETTE, GREENE, MIAMI, MONTGOMERY & PREBLE

	Rates	Fringes
Plumber, Pipefitter, Steamfitter	$ 36.47	26.80

PLUM0168-002 06/01/2023

MEIGS, MONROE (South of Rte. #78), MORGAN (South of Rte. #78) & WASHINGTON

	Rates	Fringes
PLUMBER/PIPEFITTER	$ 38.95	34.97

PLUM0189-002 06/01/2022

DELAWARE, FAIRFIELD, FRANKLIN, HOCKING, LICKING, MADISON, MARION, PERRY, PICKAWAY, ROSS & UNION

	Rates	Fringes
Plumber, Pipefitter, Steamfitter	$ 43.25	26.94

PLUM0219-002 06/01/2022

MEDINA (Rte. #18 from eastern edge of Medina Co., west to eastern corporate limits of the city of Medina, & on the county road from the west corporate limits of Medina running due west to and through community of Risley to the western edge of Medina County - All territory south of this line), PORTAGE, and SUMMIT (S. of Rte. #303) COUNTIES

	Rates	Fringes
Plumber and Steamfitter	$ 41.22	26.64

PLUM0392-002 06/01/2023

BROWN, BUTLER, CLERMONT, HAMILTON & WARREN

	Rates	Fringes
PLUMBER/PIPEFITTER	$ 38.62	25.83

PLUM0396-001 06/01/2023

COLUMBIANA (Excluding Washington & Yellow Creek Townships & Liverpool Twp. - Secs. 35 & 36 - West of County Road #427), MAHONING and TRUMBULL COUNTIES

	Rates	Fringes
PLUMBER/PIPEFITTER	$ 37.10	28.51

PLUM0495-002 06/01/2023

CARROLL (Rose, Monroe, Union, Lee, Orange, Perry & Loudon Townships), COLUMBIANA (Washington & Yellow Creek Townships & Liverpool Township, Secs. 35 & 36, West of County Rd. #427), COSHOCTON, GUERNSEY, HARRISON, HOLMES, JEFFERSON, MORGAN (South to State Rte. #78 & from McConnelsville west on State Rte. #37 to the Perry County line), MUSKINGUM, NOBLE, and TUSCARAWAS COUNTIES

	Rates	Fringes
Plumber, Pipefitter, Steamfitter	$ 36.82	35.40

PLUM0577-002 06/01/2023

ADAMS, ATHENS, GALLIA, HIGHLAND, JACKSON, LAWRENCE, PIKE, SCIOTO & VINTON

	Rates	Fringes
Plumber, Pipefitter, Steamfitter	$ 39.98	26.48

PLUM0776-002 07/01/2023

ALLEN, AUGLAIZE, HARDIN, LOGAN, MERCER, SHELBY and VAN WERT COUNTIES

	Rates	Fringes
Plumber, Pipefitter, Steamfitter	$ 40.07	28.95

TEAM0377-003 05/01/2023

STATEWIDE, EXCEPT CUYAHOGA, GEAUGA & LAKE

	Rates	Fringes
TRUCK DRIVER		
GROUP 1	$ 31.49	16.40
GROUP 2	$ 31.91	16.40

TRUCK DRIVER CLASSIFICATIONS

GROUP 1 - Asphalt Distributor; Batch; 4- Wheel Service; 4-Wheel Dump; Oil Distributor & Tandem

GROUP 2 - Tractor-Trailer Combination: Fuel; Pole Trailer; Ready Mix; Semi-Tractor; & Asphalt Oil Spraybar Man When Operated From Cab; 5 Axles & Over; Belly Dump; End Dump; Articulated Dump; Heavy Duty Equipment; Low Boy; & Truck Mechanic

---

TEAM0436-002 05/01/2023

CUYAHOGA, GEAUGA & LAKE

	Rates	Fringes

TRUCK DRIVER
GROUP 1.....$ 31.00 18.95
GROUP 2.....$ 32.50 18.95

GROUP 1: Straight & Dump, Straight Fuel

GROUP 2: Semi Fuel, Semi Tractor, Euclids, Darts, Tank, Asphalt Spreaders, Low Boys, Carry-All, Tourna-Rockers, Hi-Lifts, Extra Long Trailers, Semi-Pole Trailers, Double Hook-Up Tractor Trailers including Team Track & Railroad Siding, Semi-Tractor & Tri-Axle Trailer, Tandem Tractor & Tandem Trailer, Tag Along Trailer, Expandable Trailer or Towing Requiring Road Permits, Ready-Mix (Agitator or Non-Agitator), Bulk Concrete Driver, Dry Batch Truck, Articulated End Dump

---

WELDERS - Receive rate prescribed for craft performing operation to which welding is incidental.

==========

** Workers in this classification may be entitled to a higher minimum wage under Executive Order 14026 ($16.20) or 13658 ($12.15). Please see the Note at the top of the wage determination for more information.

Note: Executive Order (EO) 13706, Establishing Paid Sick Leave for Federal Contractors applies to all contracts subject to the Davis-Bacon Act for which the contract is awarded (and any solicitation was issued) on or after January 1, 2017. If this contract is covered by the EO, the contractor must provide employees with 1 hour of paid sick leave for every 30 hours they work, up to 56 hours of paid sick leave each year. Employees must be permitted to use paid sick leave for their own illness, injury or other health-related needs, including preventive care; to assist a family member (or person who is like family to the employee) who is ill, injured, or has other health-related needs, including preventive care; or for reasons resulting from, or to assist a family member (or person who is like family to the employee) who is a victim of, domestic violence, sexual assault, or stalking. Additional information on contractor requirements and worker protections under the EO is available at
https://www.dol.gov/agencies/whd/government-contracts.

Unlisted classifications needed for work not included within the scope of the classifications listed may be added after award only as provided in the labor standards contract clauses (29CFR 5.5 (a) (1) (ii)).

The body of each wage determination lists the classification and wage rates that have been found to be prevailing for the cited type(s) of construction in the area covered by the wage determination. The classifications are listed in alphabetical order of ""identifiers"" that indicate whether the particular rate is a union rate (current union negotiated rate for local), a survey rate (weighted average rate) or a union average rate (weighted union average rate).

Union Rate Identifiers

A four letter classification abbreviation identifier enclosed in dotted lines beginning with characters other than ""SU"" or ""UAVG"" denotes that the union classification and rate were prevailing for that classification in the survey. Example: PLUM0198-005 07/01/2014. PLUM is an abbreviation identifier of the union which prevailed in the survey for this classification, which in this example would be Plumbers. 0198 indicates the local union number or district council number where applicable, i.e., Plumbers Local 0198. The next number, 005 in the example, is an internal number used in processing the wage determination. 07/01/2014 is the effective date of the most current negotiated rate, which in this example is July 1, 2014.

Union prevailing wage rates are updated to reflect all rate changes in the collective bargaining agreement (CBA) governing this classification and rate.

Survey Rate Identifiers

Classifications listed under the ""SU"" identifier indicate that no one rate prevailed for this classification in the survey and the published rate is derived by computing a weighted average rate based on all the rates reported in the survey for that classification. As this weighted average rate includes all rates reported in the survey, it may include both union and non-union rates. Example: SULA2012-007 5/13/2014. SU indicates the rates are survey rates based on a weighted average calculation of rates and are not majority rates. LA indicates the State of Louisiana. 2012 is the year of survey on which these classifications and rates are based. The next number, 007 in the example, is an internal number used in producing the wage determination. 5/13/2014 indicates the survey completion date for the classifications and rates under that identifier.

Survey wage rates are not updated and remain in effect until a new survey is conducted.

Union Average Rate Identifiers

Classification(s) listed under the UAVG identifier indicate that no single majority rate prevailed for those classifications; however, 100% of the data reported for the classifications was union data. EXAMPLE: UAVG-OH-0010 08/29/2014. UAVG indicates that the rate is a weighted union average rate. OH indicates the state. The next number, 0010 in the example, is an internal number used in producing the wage determination. 08/29/2014 indicates the survey completion date for the classifications and rates under that identifier.

A UAVG rate will be updated once a year, usually in January of each year, to reflect a weighted average of the current negotiated/CBA rate of the union locals from which the rate is based.

WAGE DETERMINATION APPEALS PROCESS

1.) Has there been an initial decision in the matter? This can be:

* an existing published wage determination
* a survey underlying a wage determination
* a Wage and Hour Division letter setting forth a position on a wage determination matter
* a conformance (additional classification and rate) ruling

On survey related matters, initial contact, including requests for summaries of surveys, should be with the Wage and Hour National Office because National Office has responsibility for the Davis-Bacon survey program. If the response from this initial contact is not satisfactory, then the process described in 2.) and 3.) should be followed.

With regard to any other matter not yet ripe for the formal process described here, initial contact should be with the Branch of Construction Wage Determinations. Write to:

Branch of Construction Wage Determinations
Wage and Hour Division
U.S. Department of Labor
200 Constitution Avenue, N.W.
Washington, DC 20210

2.) If the answer to the question in 1.) is yes, then an interested party (those affected by the action) can request review and reconsideration from the Wage and Hour Administrator (See 29 CFR Part 1.8 and 29 CFR Part 7). Write to:

Wage and Hour Administrator
U.S. Department of Labor
200 Constitution Avenue, N.W.
Washington, DC 20210

The request should be accompanied by a full statement of the interested party's position and by any information (wage payment data, project description, area practice material, etc.) that the requestor considers relevant to the issue.

3.) If the decision of the Administrator is not favorable, an interested party may appeal directly to the Administrative Review Board (formerly the Wage Appeals Board). Write to:

Administrative Review Board
U.S. Department of Labor
200 Constitution Avenue, N.W.
Washington, DC 20210

4.) All decisions by the Administrative Review Board are final.

==========

END OF GENERAL DECISIO"

NOTICE OF REQUIREMENT FOR AFFIRMATIVE ACTION TO ENSURE EQUAL EMPLOYMENT OPPORTUNITY (Executive Order 11246)

1. The Offeror's or Bidder's attention is called to the "Equal Opportunity Clause" and the "Standard Federal Equal Employment Specifications" set forth herein.

2. The goals and timetables for minority and female participation, expressed in percentage terms for the Contractor's aggregate work force in each trade on all construction work in the covered area, are as follows:

GOALS FOR MINORITY PARTICIPATION IN EACH TRADE	GOALS FOR FEMALE PARTICIPATION IN EACH TRADE
11.0%	6.9%

These goals are applicable to all the Contractor's construction work (whether or not it is Federal or federally-assisted) performed in the covered area. If the contractor performs construction work in a geographical area located outside of the covered area, it shall apply the goals established for such geographical area where the work is actually performed. With regard to this second area, the contractor also is subject to the goals for both its federally involved and non-federally involved construction.

The Contractor's compliance with the Executive Order and the regulations in CFR Part 60-4 shall be based on its implementation of the Equal Opportunity Clause, specific affirmative action obligations required by the specifications set forth in 41 CFR 60-4, 3(a), and its efforts to meet the goals. The hours of minority and female employment and training must be substantially uniform throughout the length of the contract, and in each trade, and the contractor shall make a good faith effort to employ minorities and women evenly on each of its projects. The transfer of minority or female employees or trainees from Contractor to Contractor or from project to project for the sole purpose of meeting the Contractor's goals shall be a violation of the contract, the Executive Order and the regulations in 41 CFR Part 60-4. Compliance with the goals will be measured against the total work hours performed.

3. The Notification of Construction Contract Award Portal (NCAP) is OFCCP's preferred method for receiving construction contract award notifications. The NCAP can be found on OFCCP's website at https://www.dol.gov/agencies/ofccp/ncap. Users who prefer not to use the portal maintain the option to send their notifications via mail, email and facsimile to the OFCCP Regional office in which the work will be performed. The Contractor shall provide written notification to the Director of the Office of Federal Contract Compliance Programs within ten (10) working days of award of any construction subcontract in excess of $10,000.00 at any tier for construction work under the contract resulting from this solicitation. The notification must include: Prime Contract Number (issued by the federal agency or applicant); Name of Awarding Federal Agency, Applicant or Contractor; Contracting Officer, Applicant Representative or Contractor Representative Submitting Notification with name, phone number, email address; Contractor Awarded Contract or Subcontract with name, address, phone number, email address, EIN, dollar amount of the contract, estimated start date of the contract, estimated completion date of the contract, geographical area in which the contract is to be performed (state, county's city (if applicable)).
The notification shall be mailed to:

Regional Director
Office of Federal Contract Compliance Programs
61 Forsyth Street, SW, Suite 7B75
Atlanta, Georgia 30303-8931
Main Number: 404-893-4545 Fax: 404-893-4546
Regional Director Contact: OFCCP-SE@dol.gov
Construction Award Email: OFCCP-SE-ConstructionAward@dol.gov

4. As used in this Notice, and in the contract resulting from this solicitation, the **"covered area"** is Campbell County.

PART IV

INSURANCE

Refer to
Kentucky Standard Specifications for Road and Bridge Construction,
current edition

PART V

BID ITEMS

232993

PROPOSAL BID ITEMS

Report Date 8/30/23

Section: 0001 - BRIDGE

LINE	BID CODE	ALT	DESCRIPTION	QUANTITY	UNIT	UNIT PRIC	FP	AMOUNT
0010	02650		MAINTAIN & CONTROL TRAFFIC	1.00	LS		$	
0020	24730ED		INSPECTION SAFETY LINE	3,574.00	LF		$	
0030	24840EC		TIE OFF CABLE SYSTEM	2.00	EACH		$	

Section: 0002 - DEMOBILIZATION

LINE	BID CODE	ALT	DESCRIPTION	QUANTITY	UNIT	UNIT PRIC	FP	AMOUNT
0040	02569		DEMOBILIZATION	1.00	LS		$	