CALL NO. 104

CONTRACT ID. 255392

LESLIE COUNTY

FED/STATE PROJECT NUMBER STP BRZ 9030 (511)

DESCRIPTION KY 2057

WORK TYPE BRIDGE REPLACEMENT

PRIMARY COMPLETION DATE 11/1/2026

LETTING DATE: September 25,2025

Sealed Bids will be received electronically through the Bid Express bidding service until 10:00 AM EASTERN DAYLIGHT TIME September 25,2025. Bids will be publicly announced at 10:00 AM EASTERN DAYLIGHT TIME.

PLANS AVAILABLE FOR THIS PROJECT.

DBE CERTIFICATION REQUIRED - 4%

REQUIRED BID PROPOSAL GUARANTY: Not less than 5% of the total bid.

TABLE OF CONTENTS

PART I SCOPE OF WORK

- PROJECT(S), COMPLETION DATE(S), & LIQUIDATED DAMAGES
- CONTRACT NOTES
- FEDERAL CONTRACT NOTES
- ASPHALT MIXTURE
- DGA BASE
- DGA BASE FOR SHOULDERS
- INCIDENTAL SURFACING
- COMPACTION OPTION B
- SPECIAL NOTE(S) APPLICABLE TO PROJECT
- LIQUIDATED DAMAGES
- TREE REMOVAL
- ELECTRONIC DELIVERY MANAGEMENT SYSTEM (E-TICKETING) ASPHALT
- RECYCLED ASPHALT PAVEMENT (RAP) STOCKPILE MANAGEMENT
- BRIDGE DEMOLITION, RENOVATION AND ASBESTOS ABATEMENT
- ASBESTOS ABATEMENT REPORT
- RIGHT OF WAY CERTIFICATION
- UTILITY IMPACT & RAIL CERTIFICATION NOTES
- DEPT OF ARMY - NATIONWIDE PERMIT
- COMMUNICATING ALL PROMISES
- GEOTECHNICAL NOTES

PART II SPECIFICATIONS AND STANDARD DRAWINGS

- STANDARD AND SUPPLEMENTAL SPECIFICATIONS
- [SN-1I] PORTABLE CHANGEABLE MESSAGE SIGNS
- [SP-69] EMBANKMENT AT BRIDGE END BENT STRUCTURES

PART III EMPLOYMENT, WAGE AND RECORD REQUIREMENTS

- FEDERAL-AID CONSTRUCTION CONTRACTS - FHWA 1273
- NONDISCRIMINATION OF EMPLOYEES
- EXECUTIVE BRANCH CODE OF ETHICS
- PROJECT WAGE RATES LOCALITY 2 / FEDERAL

PART IV BID ITEMS

PART I

SCOPE OF WORK

ADMINISTRATIVE DISTRICT - 11

CONTRACT ID - 255392

STP BRZ 9030 (511)

COUNTY - LESLIE

PCN - BR06620572500
STP BRZ 9030 (511)

KY 2057 (MP 0.000) ADDRESS DEFICIENCIES OF KY 2057 OVER CUTSHIN CREEK (066B00055N) (MP 0.081), A DISTANCE OF 0.08 MILES.BRIDGE REPLACEMENT SYP NO. 11-10214.00.

GEOGRAPHIC COORDINATES LATITUDE 37:08:08.00 LONGITUDE 83:16:55.00

ADT 589

COMPLETION DATE(S):

COMPLETED BY 11/01/2026 APPLIES TO ENTIRE CONTRACT

CONTRACT NOTES

INSURANCE

Refer to Kentucky Standard Specifications for Road and Bridge Construction, current edition.

PROPOSAL ADDENDA

All addenda to this proposal must be applied when calculating bid and certified in the bid packet submitted to the Kentucky Department of Highways. Failure to use the correct and most recent addenda may result in the bid being rejected.

BID SUBMITTAL

Bidder must use the Department's electronic bidding software. The Bidder must download the bid file located on the Bid Express website (www.bidx.com) to prepare a bid packet for submission to the Department. The bidder must submit electronically using Bid Express.

JOINT VENTURE BIDDING

Joint venture bidding is permissible. All companies in the joint venture must be prequalified in one of the work types in the Qualifications for Bidders for the project. The bidders must get a vendor ID for the joint venture from the Division of Construction Procurement and register the joint venture as a bidder on the project. Also, the joint venture must obtain a digital ID from Bid Express to submit a bid. A joint bid bond of 5% may be submitted for both companies or each company may submit a separate bond of 5%.

UNDERGROUND FACILITY DAMAGE PROTECTION

The contractor shall make every effort to protect underground facilities from damage as prescribed in the Underground Facility Damage Protection Act of 1994, Kentucky Revised Statute KRS 367.4901 to 367.4917. It is the contractor's responsibility to determine and take steps necessary to be in compliance with federal and state damage prevention directives. When prescribed in said directives, the contractor shall submit Excavation Locate Requests to the Kentucky Contact Center (KY811) via web ticket entry. The submission of this request does not relieve the contractor from the responsibility of contacting non-member facility owners, whom shall be contacted through their individual Protection Notification Center. Non-compliance with these directives can result in the enforcement of penalties.

REGISTRATION WITH THE SECRETARY OF STATE BY A FOREIGN ENTITY

Pursuant to KRS 176.085(1)(b), an agency, department, office, or political subdivision of the Commonwealth of Kentucky shall not award a state contract to a person that is a foreign entity required by KRS 14A.9-010 to obtain a certificate of authority to transact business in the Commonwealth ("certificate") from the Secretary of State under KRS 14A.9-030 unless the person produces the certificate within fourteen (14) days of the bid or proposal opening. If the

foreign entity is not required to obtain a certificate as provided in KRS 14A.9-010, the foreign entity should identify the applicable exception. Foreign entity is defined within KRS 14A.1-070.

For all foreign entities required to obtain a certificate of authority to transact business in the Commonwealth, if a copy of the certificate is not received by the contracting agency within the time frame identified above, the foreign entity's solicitation response shall be deemed non-responsive or the awarded contract shall be cancelled.

Businesses can register with the Secretary of State at https://secure.kentucky.gov/sos/ftbr/welcome.aspx .

SPECIAL NOTE FOR PROJECT QUESTIONS DURING ADVERTISEMENT

Questions about projects during the advertisement should be submitted in writing to the Division of Construction Procurement. This may be done by email to kytc.projectquestions@ky.gov. The Department will attempt to answer all submitted questions. The Department reserves the right not to answer if the question is not pertinent or does not aid in clarifying the project intent.

The deadline for posting answers will be 3:00 pm Eastern Daylight Time, the day preceding the Letting. Questions may be submitted until this deadline with the understanding that the later a question is submitted, the less likely an answer will be able to be provided.

The questions and answers will be posted for each Letting under the heading "Questions & Answers" on the Construction Procurement website (www.transportation.ky.gov/construction-procurement). The answers provided shall be considered part of this Special Note and, in case of a discrepancy, will govern over all other bidding documents.

HARDWOOD REMOVAL RESTRICTIONS

The US Department of Agriculture has imposed a quarantine in Kentucky and several surrounding states, to prevent the spread of an invasive insect, the emerald ash borer. Hardwood cut in conjunction with the project may not be removed from the state. Chipping or burning on site is the preferred method of disposal.

INSTRUCTIONS FOR EXCESS MATERIAL SITES AND BORROW SITES

Identification of excess material sites and borrow sites shall be the responsibility of the Contractor. The Contractor shall be responsible for compliance with all applicable state and federal laws and may wish to consult with the US Fish and Wildlife Service to seek protection under Section 10 of the Endangered Species Act for these activities.

ACCESS TO RECORDS

The state agency certifies that it is in compliance with the provisions of KRS 45A.150, "Access to contractor's books, documents, papers, records, or other evidence directly pertinent to the contract." The Contractor, as defined in KRS 45A.030, agrees that the contracting agency, the

Finance and Administration Cabinet, the Auditor of Public Accounts, and the Legislative Research Commission, or their duly authorized representatives, shall have access to any books, documents, papers, records, or other evidence, which are directly pertinent to this agreement for the purpose of financial audit or program review. The Contractor also recognizes that any books, documents, papers, records, or other evidence, received during a financial audit or program review shall be subject to the Kentucky Open Records Act, KRS 61.870 to 61.884. Records and other prequalification information confidentially disclosed as part of the bid process shall not be deemed as directly pertinent to the agreement and shall be exempt from disclosure as provided in KRS 61.878(1)(c).

BOYCOTT PROVISIONS

If applicable, the contractor represents that, pursuant to KRS 45A.607, they are not currently engaged in, and will not for the duration of the contract engage in, the boycott of a person or an entity based in or doing business with a jurisdiction with which Kentucky can enjoy open trade. **Note:** The term Boycott does not include actions taken for bona fide business or economic reasons, or actions specifically required by federal or state law.

If applicable, the contractor verifies that, pursuant to KRS 41.480, they do not engage in, and will not for the duration of the contract engage in, in energy company boycotts as defined by KRS 41.472.

LOBBYING PROHIBITIONS

The contractor represents that they, and any subcontractor performing work under the contract, have not violated the agency restrictions contained in KRS 11A.236 during the previous ten (10) years, and pledges to abide by the restrictions set forth in such statute for the duration of the contract awarded.

The contractor further represents that, pursuant to KRS 45A.328, they have not procured an original, subsequent, or similar contract while employing an executive agency lobbyist who was convicted of a crime related to the original, subsequent, or similar contract within five (5) years of the conviction of the lobbyist.

1.0 BUY AMERICA REQUIREMENT.

Follow the "Buy America" provisions as required by 23 U.S.C. § 313 and 23 C.F.R. § 635.410. Except as expressly provided herein all manufacturing processes of steel or iron materials including but not limited to structural steel, guardrail materials, corrugated steel, culvert pipe, structural plate, prestressing strands, and steel reinforcing bars shall occur in the United States of America, including the application of:

- Coating,
- Galvanizing,
- Painting, and
- Other coating that protects or enhances the value of steel or iron products.

The following are exempt, unless processed or refined to include substantial amounts of steel or iron material, and may be used regardless of source in the domestic manufacturing process for steel or iron material:

- Pig iron,
- Processed, pelletized, and reduced iron ore material, or
- Processed alloys.

The Contractor shall submit a certification stating that all manufacturing processes involved with the production of steel or iron materials occurred in the United States.

Produce, mill, fabricate, and manufacture in the United States of America all aluminum components of bridges, tunnels, and large sign support systems, for which either shop fabrication, shop inspection, or certified mill test reports are required as the basis of acceptance by the Department.

Use foreign materials only under the following conditions:

1) When the materials are not permanently incorporated into the project; or
2) When the delivered cost of such materials used does not exceed 0.1 percent of the total Contract amount or $2,500.00, whichever is greater.

The Contractor shall submit to the Engineer the origin and value of any foreign material used.

2.0 – BUILD AMERICA, BUY AMERICA (BABA)

Contractor shall comply with the Federal Highway Administration (FHWA) Buy America Requirement in 23 C.F.R. § 635.410 and all relevant provisions of the Build America, Buy America Act (BABA), contained within the Infrastructure Investment and Jobs Act, Pub. L. No. 117-58, §§ 70901-52 enacted November 15, 2021. The BABA requires iron, steel, manufactured products, and construction materials used in infrastructure projects funded by federal financial assistance to be produced in the United States. Comply with 2 C.F.R § 184.

BABA permits FHWA participation in the Contract only if domestic steel and iron will be used on the Project. To be considered domestic, all steel and iron used, and all products manufactured from steel and iron must be produced in the United States and all manufacturing processes, including application of a coating, for these materials must occur in the United States. Coating includes all processes that protect or enhance the value of the material to which the coating is applied. This requirement does not preclude a minimal use of foreign steel and iron materials, provided the cost of such materials does not exceed 0.1% of the total contract amount under the Contract or $2,500.00 whichever is greater.

BABA permits FHWA participation in the Contract only if all "construction materials" as defined in the Act are made in the United States. The Buy America preference applies to the following construction materials incorporated into infrastructure projects: non-ferrous metals; plastic and polymer-based products (including polyvinylchloride, composite building materials, and polymers used in fiber optic cables); glass (including optic glass); Fiber optic cable; optical fiber; lumber; engineered wood; and drywall. Contractor will be

required to use construction materials produced in the United States on this Project. The Contractor shall submit a certification stating that all construction materials are certified to be BABA compliant.

3.0 FINAL RULE – FHWA'S BUY AMERICA REGULATION TO TERMINATE GENERAL APPLICABILITY WAIVER FOR MANUFACTURED PRODUCTS

- **March 17, 2025** (effective date): For all Federal-aid projects obligated on or after March 15, 2025, all iron or steel products, as defined in § 635.410(c)(1)(iii), must comply with FHWA's Buy America requirements for steel and iron in § 635.410(b). In addition, for all Federal-aid projects obligated on or after March 15, 2025, per § 635.410(c)(2), articles, materials, and supplies should be classified as an iron or steel product, a manufactured product, or another product as specified by law or in 2 CFR part 184 (such other products specified by law or in 2 CFR part 184 include "excluded materials" and "construction materials"); an article, material, or supply must not be considered to fall into multiple categories.
- **October 1, 2025:** The final assembly requirement will become effective for Federal-aid projects obligated on or after October 1, 2025. This means that, for manufactured product to be Buy America compliant, for Federal-aid projects obligated on or after October 1, 2025, final assembly of the manufactured product must occur in the United States.
- **October 1, 2026:** The 55 percent requirement will become effective for Federal-aid projects obligated on or after October 1, 2026. This means that, for manufactured product to be Buy America-compliant, for Federal-aid projects obligated on or after October 1, 2026, all manufactured products permanently incorporated into the project must both be manufactured in the United States (satisfy the final assembly requirement) and have the cost of the components of the manufactured product that are mined, produced, or manufactured in the United States be greater than 55 percent of the total cost of all components of the manufactured product (satisfy the 55 percent requirement).

4.0 – ADDITIONAL REQUIREMENTS

The Contractor has completed and submitted, or shall complete and submit, to the Cabinet a Buy America/ Build America, Buy America Certificate prior to the Cabinet issuing the notice to proceed, in the format below. After submittal, the Contractor is bound by its original certification.

A false certification is a criminal act in violation of 18 U.S.C. § 1001. The Contractor has the burden of proof to establish that it's in compliance.

At the Contractor's request, the Cabinet may, but is not obligated to, seek a waiver of Buy America requirements if grounds for the waiver exist under 23 C.F.R. § 635.410(c) or will comply with the applicable Buy America requirements if a waiver of those requirements is not available or not pursued by the Cabinet.

Please refer to the Federal Highway Administration's Buy America webpage for more information.

Buy America - Construction Program Guide - Contract Administration - Construction - Federal Highway Administration (dot.gov)

BUY AMERICA / BUILD AMERICA, BUY AMERICA (ACT) MATERIALS CERTIFICATE OF COMPLIANCE

The Contractor hereby certifies that it will comply with all relevant provisions of the Build America, Buy America Act, contained within the Infrastructure Investment and Jobs Act, Pub. L. NO. 117-58, §§ 70901-52, the requirements of 23 U.S.C. § 313, 23 C.F.R. § 635.410 and 2 C.F.R § 184.

Date Submitted:_____

Contractor:_____

Signature:_____

Printed Name:_____

Title:_____

NOTE: THIS CERTIFICATION IS IN ADDITION TO ANY AND ALL REQUIREMENTS OUTLINED IN THE CURRENT EDITION OF THE STANDARD SPECIFICATIONS FOR ROAD AND BRIDGE CONSTRUCTION AND/OR SPECIAL NOTES CONTAINED IN THE PROJECT PROPOSAL.

FEDERAL CONTRACT NOTES

The Kentucky Department of Highways, in accordance with the Regulations of the United States Department of Transportation 23 CFR 635.112 (h), hereby notifies all bidders that failure by a bidder to comply with all applicable sections of the current Kentucky Standard Specifications, including, but not limited to the following, may result in a bid not being considered responsive and thus not eligible to be considered for award:

102.02 Current Rating
102.13 Irregular Bid Proposals
102.09 Proposal Guaranty
102.08 Preparation and Delivery of Proposals
102.14 Disqualification of Bidders

CIVIL RIGHTS ACT OF 1964

The Kentucky Transportation Cabinet, Department of Highways, in accordance with the provisions of Title VI of the Civil Rights Act of 1964 (78 Stat. 252, 42 U.S.C. §§ 2000d to 2000d-4) and the Regulations, hereby notifies all bidders that it will affirmatively ensure that any contract entered into pursuant to this advertisement, disadvantaged business enterprises will be afforded full and fair opportunity to submit bids in response to this invitation and will not be discriminated against on the grounds of race, color, national origin, sex, age (over 40), religion, sexual orientation, gender identity, veteran status, disability, income- level, or Limited English Proficiency (LEP)in consideration for an award.

NOTICE TO ALL BIDDERS

To report bid rigging activities call: 1-800-424-9071.

The U.S. Department of Transportation (DOT) operates the above toll-free "hotline" Monday through Friday, 8:00 a.m. to 5:00 p.m. eastern time. Anyone with knowledge of possible bid rigging, bidder collusion, or other fraudulent activities should use the "hotline" to report such activities.

The "hotline" is part of the DOT's continuing effort to identify and investigate highway construction contract fraud and abuse and is operated under the direction of the DOT Inspector General. All information will be treated confidentially and caller anonymity will be respected.

SECOND TIER SUBCONTRACTS

Second tier subcontracts are acceptable per Section 108.01 of the Standard Specifications for Road and Bridge Construction. Sub-Contractors fulfilling a disadvantaged business enterprise goal on a project may enter into a 2nd tier subcontract with a Non-DBE Subcontractor. However, in this instance, none of the work subcontracted to the Non-DBE Contractor will count toward fulfilling the established Disadvantaged Goal for the project.

DISADVANTAGED BUSINESS ENTERPRISE PROGRAM

It is the policy of the Kentucky Transportation Cabinet ("the Cabinet") that Disadvantaged Business Enterprises ("DBE") shall have the opportunity to participate in the performance of highway construction projects financed in whole or in part by Federal Funds in order to create a level playing field for all businesses who wish to contract with the Cabinet. To that end, the Cabinet will comply with the regulations found in 49 CFR Part 26, and the definitions and requirements contained therein shall be adopted as if set out verbatim herein.

The Cabinet, contractors, subcontractors, and sub-recipients shall not discriminate on the basis of race, color, national origin, or sex in the performance of work performed pursuant to Cabinet contracts. The contractor shall carry out applicable requirements of 49 CFR 26 in the award and administration of federally assisted highway construction projects. The contractor will include this provision in all its subcontracts and supply agreements pertaining to contracts with the Cabinet.

Failure by the contractor to carry out these requirements is a material breach of its contract with the Cabinet, which may result in the termination of the contract or such other remedy as the Cabinet deems necessary.

DBE GOAL

The Disadvantaged Business Enterprise (DBE) goal established for this contract, as listed on the front page of the proposal, is the percentage of the total value of the contract.

The contractor shall exercise all necessary and reasonable steps to ensure that Disadvantaged Business Enterprises participate in a least the percent of the contract as set forth above as goals for this contract.

OBLIGATION OF CONTRACTORS

Each contractor prequalified to perform work on Cabinet projects shall designate and make known to the Cabinet a liaison officer who is assigned the responsibility of effectively administering and promoting an active program for utilization of DBEs.

If a formal goal has not been designated for the contract, all contractors are encouraged to consider DBEs for subcontract work as well as for the supply of material and services needed to perform this work.

Contractors are encouraged to use the services of banks owned and controlled by minorities and women.

CERTIFICATION OF CONTRACT GOAL

Contractors shall include the following certification in bids for projects for which a DBE goal has been established. BIDS SUBMITTED WHICH DO NOT INCLUDE CERTIFICATION OF DBE PARTICIPATION WILL NOT BE ACCEPTED. These bids will not be considered for award by the Cabinet and they will be returned to the bidder.

"The bidder certifies that it has secured participation by Disadvantaged Business Enterprises ("DBE") in the amount of_____percent of the total value of this contract and that the DBE participation is in compliance with the requirements of 49 CFR 26 and the policies of the Kentucky Transportation Cabinet pertaining to the DBE Program."

The certification statement is located in the electronic bid file. All contractors must certify their DBE participation on that page. DBEs utilized in achieving the DBE goal must be certified and prequalified for the work items at the time the bid is submitted.

DBE PARTICIPATION PLAN

Lowest responsive bidders must submit the *DBE Plan/ Subcontractor Request*, form TC 14-35 DBE, within 5 days of the letting. This is necessary before the Awards Committee will review and make a recommendation. **The project will not be considered for award prior to submission and approval of the apparent low bidder's DBE Plan/Subcontractor Request.**

The DBE Participation Plan shall include the following:

1. Name and address of DBE Subcontractor(s) and/or supplier(s) intended to be used in the proposed project;
2. Description of the work each is to perform including the work item, unit, quantity, unit price and total amount of the work to be performed by the individual DBE. The Proposal Line Number, Category Number, and the Project Line Number can be found in the "material listing" on the Construction Procurement website under the specific letting;
3. The dollar value of each proposed DBE subcontract and the percentage of total project contract value this represents. DBE participation may be counted as follows;
   a) If DBE suppliers and manufactures assume actual and contractual responsibility, the dollar value of materials to be furnished will be counted toward the goal as follows:
      - The entire expenditure paid to a DBE manufacturer;
      - 60 percent of expenditures to DBE suppliers that are not manufacturers provided the supplier is a regular dealer in the product involved. A regular dealer must be engaged in, as its principal business and in its own name, the sale of products to the public, maintain an inventory and own and operate distribution equipment; and
      - The amount of fees or commissions charged by the DBE firms for a bona fide service, such as professional, technical, consultant, or managerial services and assistance in the procurement of essential personnel, facilities, equipment, materials, supplies, delivery of materials and supplies or for furnishing bonds, or insurance, providing such fees or commissions are determined to be reasonable and customary.
   b) The dollar value of services provided by DBEs such as quality control testing, equipment repair and maintenance, engineering, staking, etc.;

c) The dollar value of joint ventures. DBE credit for joint ventures will be limited to the dollar amount of the work actually performed by the DBE in the joint venture;

4. Written and signed documentation of the bidder's commitment to use a DBE contractor whose participation is being utilized to meet the DBE goal; and
5. Written and signed confirmation from the DBE that it is participating in the contract as provided in the prime contractor's commitment.

AFTER PROJECT AWARD AND BEFORE NOTICE TO PROCEED/WORK ORDER IS ISSUED (SEE SECTION 103.06, STANDARD SPECIFICATIONS FOR ROAD AND BRIDGE CONSTRUCTION

Prime Contractors awarded a federally funded project with a DBE Goal greater than zero will be required to submit a fully executed DBE Subcontract, along with the attached FHWA 1273 and Certificate of Liability Insurance for each DBE Firm submitted as part of the previously approved DBE Utilization Plan (TC 14-35). A signed quote or purchase order shall be attached when the DBE subcontractor is a material supplier or broker.

The Certificate of Liability Insurance submitted must meet the requirements outlined in Section 107.18 of the Standard Specifications for Road and Bridge Construction.

Changes to ***APPROVED*** DBE Participation Plans must be approved by the Office for Civil Rights & Small Business Development. The Cabinet may consider extenuating circumstances including, but not limited to, changes in the nature or scope of the project, the inability or unwillingness of a DBE to perform the work in accordance with the bid, and/or other circumstances beyond the control of the prime contractor.

CONSIDERATION OF GOOD FAITH EFFORTS REQUESTS

If the DBE participation submitted in the bid by the apparent lowest responsive bidder does not meet or exceed the DBE contract goal, the apparent lowest responsive bidder must submit a Good Faith Effort Package to satisfy the Cabinet that sufficient good faith efforts were made to meet the contract goals prior to submission of the bid. Efforts to increase the goal after bid submission will not be considered in justifying the good faith effort, unless the contractor can show that the proposed DBE was solicited prior to the letting date. DBEs utilized in achieving the DBE goal must be certified and prequalified for the work items at the time the bid is submitted. One complete set (hard copy along with an electronic copy) of this information must be received in the Division of Contract Procurement no later than 12:00 noon of the tenth calendar day after receipt of notification that they are the apparent low bidder.

Where the information submitted includes repetitious solicitation letters it will be acceptable to submit a sample representative letter along with a distribution list of the firms solicited. Documentation of DBE quotations shall be a part of the good faith effort submittal as necessary to demonstrate compliance with the factors listed below which the Cabinet considers in judging good faith efforts. This documentation may include written subcontractors' quotations, telephone log notations of verbal quotations, or other types of quotation documentation.

The Good Faith Effort Package shall include, but may not be limited to information showing evidence of the following:

1. Whether the bidder attended any pre-bid meetings that were scheduled by the Cabinet to inform DBEs of subcontracting opportunities;
2. Whether the bidder provided solicitations through all reasonable and available means;
3. Whether the bidder provided written notice to all DBEs listed in the DBE directory at the time of the letting who are prequalified in the areas of work that the bidder will be subcontracting;
4. Whether the bidder followed up initial solicitations of interest by contacting DBEs to determine with certainly whether they were interested. If a reasonable amount of DBEs within the targeted districts do not provide an intent to quote or no DBEs are prequalified in the subcontracted areas, the bidder must notify the Disadvantaged Enterprise Business Liaison Officer (DEBLO) in the Office for Civil Rights and Small Business Development to give notification of the bidder's inability to get DBE quotes;
5. Whether the bidder selected portions of the work to be performed by DBEs in order to increase the likelihood of meeting the contract goals. This includes, where appropriate, breaking out contract work items into economically feasible units to facilitate DBE participation, even when the prime contractor might otherwise perform these work items with its own forces;
6. Whether the bidder provided interested DBEs with adequate and timely information about the plans, specifications, and requirements of the contract;
7. Whether the bidder negotiated in good faith with interested DBEs not rejecting them as unqualified without sound reasons based on a thorough investigation of their capabilities. Any rejection should be so noted in writing with a description as to why an agreement could not be reached;
8. Whether quotations were received from interested DBE firms but were rejected as unacceptable without sound reasons why the quotations were considered unacceptable. The fact that the DBE firm's quotation for the work is not the lowest quotation received will not in itself be considered as a sound reason for rejecting the quotation as unacceptable. The fact that the bidder has the ability and/or desire to perform the contract work with its own forces will not be considered a sound reason for rejecting a DBE quote. Nothing in this provision shall be construed to require the bidder to accept unreasonable quotes in order to satisfy DBE goals;
9. Whether the bidder specifically negotiated with subcontractors to assume part of the responsibility to meet the contract DBE goal when the work to be subcontracted includes potential DBE participation;
10. Whether the bidder made any efforts and/or offered assistance to interested DBEs in obtaining the necessary equipment, supplies, materials, insurance and/or bonding to satisfy the work requirements of the bid proposal; and
11. Any other evidence that the bidder submits which may show that the bidder has made reasonable good faith efforts to include DBE participation.

FAILURE TO MEET GOOD FAITH REQUIREMENT

Where the apparent lowest responsive bidder fails to submit sufficient participation by DBE firms to meet the contract goal and upon a determination by the Good Faith Committee based upon the information submitted that the apparent lowest responsive bidder failed to make sufficient reasonable efforts to meet the contract goal, the bidder will be offered the opportunity to meet in person for administrative reconsideration. The bidder will be notified of the Committee's decision within 24 hours of its decision. The bidder will have 24 hours to request reconsideration of the Committee's decision. The reconsideration meeting will be held within two days of the receipt of a request by the bidder for reconsideration.

The request for reconsideration will be heard by the Office of the Secretary. The bidder will have the opportunity to present written documentation or argument concerning the issue of whether it met the goal or made an adequate good faith effort. The bidder will receive a written decision on the reconsideration explaining the basis for the finding that the bidder did or did not meet the goal or made adequate Good Faith efforts to do so.

The result of the reconsideration process is not administratively appealable to the Cabinet or to the United States Department of Transportation.

The Cabinet reserves the right to award the contract to the next lowest responsive bidder or to rebid the contract in the event that the contract is not awarded to the low bidder as the result of a failure to meet the good faith requirement.

SANCTIONS FOR FAILURE TO MEET DBE REQUIREMENTS OF THE PROJECT

Failure by the prime contractor to fulfill the DBE requirements of a project under contract or to demonstrate good faith efforts to meet the goal constitutes a breach of contract. When this occurs, the Cabinet will hold the prime contractor accountable, as would be the case with all other contract provisions. Therefore, the contractor's failure to carry out the DBE contract requirements shall constitute a breach of contract and as such the Cabinet reserves the right to exercise all administrative remedies at its disposal including, but not limited to the following:

- Suspension of Prequalification;
- Disallow credit toward the DBE goal;
- Withholding progress payments;
- Withholding payment to the prime in an amount equal to the unmet portion of the contract goal; and/or
- Termination of the contract.

PROMPT PAYMENT

The prime contractor will be required to pay the DBE and Non-DBE Subcontractors within seven (7) working days after he or she has received payment from the Kentucky Transportation Cabinet for work performed or materials furnished.

CONTRACTOR REPORTING

All contractors must keep detailed records and provide reports to the Cabinet on their progress in meeting the DBE requirement on any highway contract. These records may include, but shall not be limited to payroll, lease agreements, cancelled payroll checks, executed subcontracting agreements, etc. Prime contractors will be required to complete and submit a ***signed and notarized*** Affidavit of Subcontractor Payment (TC 18-7) and copies of checks for any monies paid to each DBE subcontractor or supplier utilized to meet a DBE goal. These documents must be completed and signed within 7 days of being paid by the Cabinet.

Payment information that needs to be reported includes date the payment is sent to the DBE, check number, Contract ID, amount of payment and the check date. Before Final Payment is made on this contract, the Prime Contractor will certify that all payments were made to the DBE subcontractor and/or DBE suppliers.

********* IMPORTANT *********

Please mail the original, signed and completed TC (18-7) Affidavit of Subcontractor Payment form and all copies of checks for payments listed above to the following address:

Office for Civil Rights and Small Business Development
6th Floor West 200 Mero Street
Frankfort, KY 40622

The prime contractor should notify the KYTC Office for Civil Rights and Small Business Development seven (7) days prior to DBE contractors commencing work on the project. The contact in this office is Mr. Tony Youssefi. Mr. Youssefi's current contact information is email address – tyousseffi@ky.gov and the telephone number is (502) 564-3601.

DEFAULT OR DECERTIFICATION OF THE DBE

If the DBE subcontractor or supplier is decertified or defaults in the performance of its work, and the overall goal cannot be credited for the uncompleted work, the prime contractor may utilize a substitute DBE or elect to fulfill the DBE goal with another DBE on a different work item. If after exerting good faith effort in accordance with the Cabinet's Good Faith Effort policies and procedures, the prime contractor is unable to replace the DBE, then the unmet portion of the goal may be waived at the discretion of the Cabinet.

PROHIBITION ON TELECOMMUNICATIONS EQUIPMENT OR SERVICES

In accordance with the FY 2019 National Defense Authorization Act (NDAA), 2 CFR 200.216, and 2 CFR 200.471, Federal agencies are prohibited, after August 13, 2020, from obligating or expending financial assistance to obtain certain telecommunications and video surveillance services and equipment from specific producers. As a result of these regulations, contractors and subcontractors are prohibited, on projects with federal funding participation, from providing telecommunication or video surveillance equipment, services, or systems produced by:

- Huawei Technologies Company or ZTE Corporation (or any subsidiary or affiliate of such entities)
- Hytera Communications Corporation, Hangzhou Hikvision Digital Technology Company, or Dahua Technology Company (or any subsidiary or affiliate of such entities)

LEGAL REQUIREMENTS AND RESPONSIBILITY TO THE PUBLIC – CARGO PREFERENCE ACT (CPA).

(REV 12-17-15) (1-16)

SECTION 7 is expanded by the following new Article:

102.10 **Cargo Preference Act – Use of United States-flag vessels.**

Pursuant to Title 46CFR Part 381, the Contractor agrees

- To utilize privately owned United States-flag commercial vessels to ship at least 50 percent of the gross tonnage (computed separately for dry bulk carriers, dry cargo liners, and tankers) involved, whenever shipping any equipment, material, or commodities pursuant to this contract, to the extent such vessels are available at fair and reasonable rates for United States-flag commercial vessels.
- To furnish within 20 days following the date of loading for shipments originating within the United States or within 30 working days following the date of loading for shipments originating outside the United States, a legible copy of a rated, 'on-board' commercial ocean bill-of-lading in English for each shipment of cargo described in paragraph 1 of this section to both the Contracting Officer (through the prime contractor in the case of subcontractor bills-of-lading) and to the Division of National Cargo, Office of Market Development, Maritime Administration, Washington, DC 20590.
- To insert the substance of the provisions of this clause in all subcontracts issued pursuant to this contract.

ASPHALT MIXTURE

Unless otherwise noted, the Department estimates the rate of application for all asphalt mixtures to be 110 lbs/sy per inch of depth.

DGA BASE

Unless otherwise noted, the Department estimates the rate of application for DGA Base to be 115 lbs/sy per inch of depth.

DGA BASE FOR SHOULDERS

Unless otherwise noted, the Department estimates the rate of application for DGA Base for Shoulders to be 115 lbs/sy per inch of depth. The Department will not measure necessary grading and/or shaping of existing shoulders prior to placing of DGA Base, but shall be incidental to the Contract unit price per ton for DGA Base.

Accept payment at the Contract unit price per ton as full compensation for all labor, materials, equipment, and incidentals for grading and/or shaping of existing shoulders and furnishing, placing, and compacting the DGA Base.

INCIDENTAL SURFACING

The Department has included in the quantities of asphalt mixtures established in the proposal estimated quantities required for resurfacing or surfacing mailbox turnouts, farm field entrances, residential and commercial entrances, curve widening, ramp gores and tapers, and road and street approaches, as applicable. Pave these areas to the limits as shown on Standard Drawing RPM-110-06 or as directed by the Engineer. In the event signal detectors are present in the intersecting streets or roads, pave the crossroads to the right of way limit or back of the signal detector, whichever is the farthest back of the mainline. Surface or resurface these areas as directed by the Engineer. The Department will not measure placing and compacting for separate payment but shall be incidental to the Contract unit price for the asphalt mixtures.

OPTION B

Be advised that the Department will control and accept compaction of asphalt mixtures furnished on this project under OPTION B in accordance with Sections 402 and 403.

SPECIAL NOTE FOR TRAFFIC CONTROL ON BRIDGE REPAIR CONTRACTS

I. TRAFFIC CONTROL GENERAL

Except as provided herein, traffic shall be maintained in accordance with the current standard specifications, section 112. The contractor will be responsible for developing and implementing the maintenance of traffic details with guidance through standard drawings and the MUTCD current editions. The developed traffic control plan must be approved by the Engineer prior to implementation. The contractor is expected to provide at a minimum the items listed in this note, however this note does not relieve the contractor of other items that may be necessary to comply with current standards.

Contrary to section 106.01, traffic control devices used on this project may be new or used in new condition, at the beginning of the work and maintained in like new condition until completion of the work.

The contractor must notify the engineer and public information officer at least 14 calendar days prior to the beginning work. Please see the Special Note for Liquidated Damages for additional information.

For projects where full closure of the roadway has been specified in the contract closure signs, detour signs, and bi-directional lane closure signs should be placed no sooner than two weeks prior to the closing of the bridge (when applicable) or placing lane closures.

Wayfinding detour signs should be placed a maximum of 2 miles apart unless specified by the engineer. Signs shall be covered or removed within 24 hours of opening the bridge to traffic.

II. PROJECT PHASING & CONSTRUCTION PROCEDURES

Project phasing shall be as directed by the plans, special notes, and the approved Traffic Control Plan prepared by the contractor. Maintain traffic over the bridge as long as possible. Once work on the structure begins that impacts traffic, ensure work progresses to minimize the effected time to the public. All materials that must be made specific for the project should be ordered and made prior to closure of the bridge or implementation of bi-directional lane closures so that delivery does not delay progress of the work, unless approved by the Engineer.

For projects which require an on-site diversion to be constructed to maintain traffic, the traffic control plan and project schedule prepared by the contractor shall include provisions such that traffic is not switched to the diversion until all materials that must be made specific for the project are ordered and made so that use of the diversion is minimized, unless approved by the Engineer.

III. PAVEMENT DROP-OFF

Less than two inches - no protection required. Warning signs should be placed in advance and throughout the drop-off area.
Two to four inches - plastic drums, vertical panels or barricades every 100 feet on tangent sections for speeds of 50 mph or greater. Cones may be used in place of plastic drums, panels, and barricades during daylight hours. For tangent sections with speeds less than 50 mph and curves devices should be placed every 50 feet. Spacing of devices on tapered sections should be in accordance with the manual on uniform traffic control devices, current edition.

Greater than four inches - positive separation or wedge with 3:1 or flatter slope needed. If there is five feet or more distance between the edge of the pavement and the drop-off, then drums, panel, or barricades may be used. If the drop-off is greater than 12 inches, positive separation is strongly encouraged. If concrete barriers are used, special reflective devices or steady burn lights should be used for overnight installations.

For temporary conditions, drop-offs greater than four inches may be protected with plastic drums, vertical panels or barricades for short distances during daylight hours while work is being done in the drop-off area.

IV. DETOUR AND ON-SITE DIVERSIONS

For projects which allow a full closure of the bridge, or if necessary to detour trucks, the traffic control plan proposed by the contractor shall include a signed detour route for the road closure. The traffic control plan along with the proposed detour plan will be delivered to the engineer 7 days prior to the pre-construction meeting. The proposed detour route shall meet the following requirements:

1) Detour routes must remain at minimum on the same classification of roadway (i.e. AA, AAA, state, county, etc.) Unless written approval is obtained through the owner of the facility.
2) The contractor must coordinate with other projects along the detour route to avoid ongoing construction projects along those routes.
3) It may be determined that two detour routes would be needed if the first selected route cannot accommodate truck traffic. If this occurs, the contractor is expected to sign both detours per the standard drawings and MUTCD. Additional clarification signage between the detours may be needed at points where they diverge.
4) For projects that involve the use of bi-directional lane closures and the temporary lane width per the plans or as proposed by the contractor is less than 10 feet, the contractor shall be required to provide a signed detour for oversized vehicles.

The traffic control plan must be submitted and approved to allow for coordination of the KYTC District public information officer with the closure notification. The public must be notified of the proposed detour route when they are notified of the closure, 2 weeks before closure. All

time and expenses necessary for the development of the detour plan(s) will be incidental to the lump sum bid item “Maintain and Control Traffic”.

For projects with an on-site diversion included in the construction, the preparation of traffic control plans for a detour and implementation of a detour will not be required, unless specified in the plans.

IV. PAYMENT

Unless otherwise noted in this Special Note and contract documents, payment for Maintenance and Control of Traffic during construction shall be in accordance with Section 112 of the Kentucky Transportation Cabinet, Department of Highways Standard Specifications for Road and Bridge Construction, (latest edition).

SPECIAL NOTE FOR CONCRETE COATING

I. DESCRIPTION

Perform all work in accordance with the Kentucky Transportation Cabinet, Department of Highways current Standard Specifications for Road and Bridge Construction and applicable Supplemental Specifications, the Standard Drawings, this Note, and the Contract Documents. Section references are to the Standard Specifications.

This work consists of the following:

1. Furnish all labor, materials, tools, equipment, and incidental items necessary to complete the work.
2. Provide safe access to the bridge, in accordance with Section 107.01.01, for the Engineer to sound possible repair areas and for workers to complete the construction.
3. Repair cracks as applicable in accordance with the Special Note for Epoxy Injection Crack Repair.
4. Repair delaminated or spalled areas as applicable in accordance with the Special Note for Concrete Patching.
5. Apply Ordinary Surface Finish
6. Prepare the surfaces to receive coating.
7. Apply concrete coating.
8. Any other work as specified as part of this contract.

II. MATERIALS

Concrete Coatings

See The Division of Material's list of approved materials for concrete coatings and Section 821.

The finish product shall be opaque and satin or semi-gloss. The contractor must apply sufficient coats as required to achieve this goal. The finish coat shall be gray and will meet the following values:

	Fed. Standard 595B No.	L*	a*	b*
Gray	X6492	74.94	-1.54	3.92

Furnish to the Engineer copies of the manufacturer's technical data sheets, installation guidelines, material safety data sheets, and other pertinent data at least two (2) days prior to beginning the work.

III. CONSTRUCTION

A. **Perform Concrete Repairs.** Repair concrete surface in accordance with the Special Note for Epoxy Injection Crack Repair and/or the Special Note for Concrete Patching Repair if included in the contract documents.

B. Apply Ordinary Surface Finish. In addition to new concrete, areas receiving epoxy injection, concrete patching, and other surface imperfections, including areas of minor cracking, should receive Ordinary Surface Finish in accordance with Section 601.03.18 of the Standard Specifications. Use mortar of the same cement and fine aggregate as the concrete patching, or as directed by the Engineer. Payment will be incidental to Concrete Sealing.

C. Areas to Receive Concrete Coating:

1. Substructure Units under open, closed, and/or sealed transverse deck joints: Every exposed surface above a point 6" below ground or fill line of abutments, wing walls, end bent and pier caps, pedestals, back walls, columns, and exposed footings.
2. Other areas of the bridge as specified in the drawings.

D. Prepare Concrete Surfaces for Repair. All areas specified shall be pressure washed. Equip the pressure washers with calibrated gages and pressure regulators to ascertain and regulate water pressure. All equipment for pressure washing shall be operated at a minimum pressure of up 3,500 to 4,500 psi with 0-degree spinner tip and/or fan tips as determined by the engineer at the working location with a minimum flow rate of 3.5 gal/minute provided that these pressures do not damage any components of the structure. Pressure and flow rates shall be reduced to a level satisfactory to the Engineer should any damage occur due to power washing procedures. The washing wand must be approximately perpendicular to the washed surface and within a maximum of 12 inches of the surface. Wand extensions greater than 36 inches will be subject to Division of Construction approval. Pressure washing of any bridge element will proceed from top of wash area to bottom of wash area. Perform all pressure washing at temperatures above 40 degrees Fahrenheit.

E. Apply Concrete Coating. All areas specified shall have concrete coating applied to as specified after debris removal and power washing. New concrete shall be allowed to properly cure in accordance with the manufacturer's recommendations prior to application. Use compressed air to remove any loose debris from the surfaces that are to be coated after power washing. All coatings shall be applied within manufacturers recommended dry film thickness range. Comply with KYTC "Standard Specifications for Road and Bridge Construction" Section 614.03.02 and coatings supplier recommended conditions for application. Allow the surfaces to be coated to dry a minimum of 24 hours before any coating is applied. The coating must be applied with 72 hours of pressure washing. The coating must be applied to a clean and dry surface. All coating application shall be executed using brushes, rollers, etc. No spray application will be permitted. The Department requires acceptance testing of samples obtained on a per-lot basis per-shipment. The Division of Materials shall perform acceptance testing. Test samples shall be taken at the Contractor's paint storage site. Department personnel shall perform sampling. Allow (10) working days for testing and approval of the sampled paint. It is the Contractor's responsibility to maintain an adequate inventory of approved paint. The Department shall assume no responsibility for lost work due to rejection of paint or approved paint subsequently found to be defective during the application process. Perform all concrete coating application at temperatures above 40 degrees Fahrenheit or in accordance with manufactures specifications.

IV. MEASUREMENT

The Department will measure the quantity per square feet of each area coated. The Department will not measure preparation of the site for the Engineer's access or removal and reapplication of coatings that do not satisfy the Engineer's approval for payment and will consider them incidental to "Concrete Coating".

V. PAYMENT.

The Department will make payment for the completed and accepted quantities of concrete coating under the following:

Code	***Pay Item***	***Pay Unit***
26232EC	Concrete Coating	SQ FT

The Department will consider payment as full compensation for all work required as described in this note.

SPECIAL NOTE FOR CONCRETE SEALING

These Notes or designated portions thereof, apply where so indicated on the plans, proposals or bidding instruction.

I. DESCRIPTION. Perform all work in accordance with the Department's current Standard Specifications, and applicable Supplemental Specifications, the attached sketches, and these Notes. Section references are to the Standard Specifications.

This work consists of:

1. Furnish all labor, materials, tools, equipment, and incidental items necessary to complete the work.
2. Provide safe access to the bridge, in accordance with Section 107.01.01, for the Engineer to sound possible repair areas and for workers to complete the construction.
3. Repair cracks as applicable in accordance with the Special Note for Epoxy Injection Crack Repair.
4. Repair delaminated or spalled areas as applicable in accordance with the Special Note for Concrete Patching.
5. Apply Ordinary Surface Finish
6. Prepare the surfaces to receive sealing.
7. Apply concrete sealing.
8. Maintain & control traffic.
9. Any other work as specified as part of this contract.

II. MATERIALS.

A. Sealer. Use a sealer from the KYTC list of approved materials.

B. Coverage Rate: Follow all manufacturers recommendations for coverage rates except the application rate must not exceed the square footage coverage rate per gallon of sealer as given in the chart below. If the manufacturer recommends a coverage rate greater than given in the table below, apply sealer at the rate given in the table below for the chosen sealers silane percentage.

% Silane	Coverage rate (ft^2/gallon)
100	300
40	120
20	60

III. CONSTRUCTION.

A. Perform Concrete Repairs. Repair concrete surface in accordance with the Special Note for Epoxy Injection Crack Repair and/or the Special Note for Concrete Patching Repair if included in the contract documents.

B. **Curing Compound.** Contrary to Section 609.03.12 of the specifications, curing compound is not to be used on the deck due to potentially causing issues with the concrete sealer. During the deck pour, finishing, and tining operations the Class AA concrete shall be kept continuously moist with the use of a mister until burlap or curing blankets are applied to the surface. At no point should water be pooling or running off the surface or the surface of the concrete be allowed to become dry. After the burlap or curing blankets are installed, cure in accordance with the specifications. Include all costs in the unit price bid for Class AA concrete. Failure to properly cure the concrete in accordance with this note and the specifications may result in weakened or cracked concrete. If the concrete is weakened or cracked due to improper curing, the contractor will be responsible for providing alternates to fix the issues to the Engineer for review and the contractor will be solely responsible for all costs to do so, up to complete replacement. Do not begin any construction on fixing any issues without approval of the Engineer.

C. **Apply Ordinary Surface Finish.** In addition to new concrete, areas receiving epoxy injection, concrete patching, and other surface imperfections, including areas of minor cracking, should receive Ordinary Surface Finish in accordance with Section 601.03.18 of the Standard Specifications. Existing structural items not newly placed, patched, or repaired may be exempt from Ordinary Surface Finish. Use mortar of the same cement and fine aggregate as the concrete patching, or as directed by the Engineer. Payment will be incidental to Concrete Sealing. Finish surface of bridge decks in accordance with Section 609 of the Standard Specifications.

D. **Areas to Receive Concrete Sealing:**

1. Every exposed surface above a point 6” below ground or fill line of abutments, wing walls, end bent and pier caps, pedestals, back walls, columns, and exposed footings.
2. All exposed surfaces of concrete deck, barrier walls, parapets, curbs, and plinths.
3. Prestressed Concrete I-Girders, Concrete Beams, and Spread Prestressed Concrete Box Beams: The underneath surfaces of slab overhangs outside of exterior concrete girders and to the exterior side and bottom of exterior concrete girders and beams.
4. Adjacent Prestressed Concrete Composite Box Beams: Full length of the exterior face of all exterior beams from the top of the box beam to 1’-0” underneath the beams.
5. Prestressed Non-Composite Box Beams: All faces of all beams, excluding surfaces to be covered with a waterproofing membrane. Take care to ensure that the grout pockets are not sealed.
6. If the contract documents include the Special Note for Concrete Coating, do not apply concrete sealer to the areas where Concrete Coating is specified.

E. **Contract Time.** Concrete Sealing may need to be installed after contract time has elapsed in a separate mobilization and after the Engineer has declared the project otherwise complete. Liquidated damages shall not be charged provided Concrete Sealing is complete within 60 days after the last concrete pour on the structure. When the Contractor has not completed Concrete Sealing within the time frame allotted, Liquidated Damages shall be charged at 25 percent of the original contract daily charge from the expiration of the time allowed until the Contractor completes the work except the Department will not deduct liquated damages when weather limitations prohibit the Contractor from performing the work.

F. **Cleaning the Concrete Surfaces to be sealed.** Dry clean the concrete to remove all loose debris. Remove all visible hydrocarbons from the surface with detergent approved by the manufacturer of the deck sealant. Pressure wash all surfaces to be sealed at 2000 to 3000 psi. Install pressure gauges at each wand to verify pressure. Use 30° fan tip or as recommended by the manufacturer of the sealant. Hold pressure washing wand a minimum of 45° from the surfaces with a maximum stand-off distance of 12 inches.

G. **Sealing the Concrete.** Allow new concrete to cure a minimum 28 days prior to application of sealer. Monitor weather conditions prior to sealer application. Refer to manufacturer's recommendations for proper ambient conditions. Do not apply sealer if precipitation is anticipated within the time stated by the manufacturer. Allow the concrete to dry 24 hours (after washing or rain event) before sealer application. The bridge deck can be reopened to traffic while drying. Sealer must be applied within 48 hours of washing or the concrete must be rewashed. Divide the concrete into predefined areas of specific square footage to aid in determining usage. Comply with manufacturer's usage recommendation. Using a low-pressure pump, apply sealer and spread evenly with broom or squeegee; do not allow pooling to remain. When each predefined area is complete, measure the amount of sealer used to verify proper usage. After sealing, follow manufacturer's recommended cure time before opening to traffic. On vertical surfaces, apply the sealer in a flooding application from the bottom up, so the material runs down 6 to 8 inches below the spray pattern.

H. **Inspection:** Monitor all aspects of the project to assure compliance to this specification. Observe and document general conditions during the entirety of the project. Verify that each phase of work has been satisfactorily completed prior to beginning the next phase. Phases are described as follows:

1. Dry cleaning to remove loose debris, verify and document:
   a. All debris has been removed and disposed of properly.
2. Removal of hydrocarbons, verify and document:
   a. The manufacturer's recommended detergent is used for removal.
   b. Hydrocarbons have been satisfactorily removed.

3. Pressure washing, verify and document:
   a. Washing pressure at the wand.
   b. Tip size used.
   c. Wash angle and stand-off distance.
   d. The concrete is satisfactorily cleaned.
4. Sealer application, verify and document:
   a. Proper cure time for new concrete.
   b. Concrete surface is dry.
   c. Document time since washed.
   d. Was the bridge deck opened to traffic after washing?
   e. Document ambient temperature, surface temperature, relative humidity, and dew point.
   f. Application and distribution method.
   g. Coverage to be complete and even.
   h. Material is not allowed to remain pooled.
   i. Monitor material usage.
   j. No traffic on the bridge decks until proper cure time is allowed.

IV. MEASUREMENT

A. Concrete Sealing. The Department will measure the quantity per square feet of each area sealed.

B. Mobilization For Concrete Surf Treatment. The Department will pay the lump sum bid for an additional mobilization when Concrete Sealing must be performed after the Engineer has deemed the project complete except for Concrete Sealing and the structure is opened to traffic.

V. PAYMENT

A. 23378EC - Concrete Sealing – Sq. Ft. Payment at the contract unit price per square feet is full compensation for the following: (1) Furnish all labor, materials, tools, and equipment; (2) Clean the bridge deck; (3) Seal the bridge deck; (4) Maintain & control traffic; and, (5) Any other work specified as part of this contract.

B. 26233EC - Mobilization – For Concrete Surface Treatment – L.S. Payment at the contract lump sum price bid shall be full compensation for the Contractor to remobilize on the project to perform Concrete Sealing as detailed herein this special note.

SPECIAL NOTE FOR STRUCTURES WITH OVER THE SIDE DRAINAGE AND BRIDGE RAIL

1.0 DESCRIPTION. Perform all work in accordance with the Kentucky Transportation Cabinet, Department of Highway's current Standard Specifications for Road and Bridge Construction and applicable Supplemental Specifications, the Standard Drawings, this Note, and the attached detail drawings. Section references are to the Standard Specifications.

This note applies to structures with over the side drainage.

This work consists of: (1) Furnish all labor, materials, tools, and equipment; (2) Install the drip strip; (3) Maintain and control traffic as applicable; and (4) Any other work specified as part of this contract.

2.0 MATERIALS.

2.1 Drip Strip. Drip strip shall be hot dipped galvanized steel with a minimum of 22 gage.

3.0 CONSTRUCTION. The Contractor shall bear full responsibility and expense for any and all damage to the structure, should such damage result from the Contractor's actions.

3.1 Installation of Drip Strip. Install lower drip strip, as detailed, along the full length of each side of the bridge. If splices are required in the lower drip strip, tightly butt the individual pieces together, do not lap. Install a 1'-6" long upper drip strip at each railing post.

For concrete decks/slabs: Bend up strips at 90° against the inside face of the forms before concrete is placed. After the forms are removed, bend the drip strips into the final position of 45° as shown in the attached detail drawing. Use care when stripping formwork so as not to damage or wrinkle the drip strip. To further ensure that wrinkling of the strips does not occur, use an adequate length backup bar during the bending out operation.

For asphalt overlays: Prior to placing the asphalt overlay, install the bent drip strips along the edge of the prestressed box beam as shown. Fasten the drip strips with (1¼" length, 3/32" shank diameter) button head spikes with deformed shanks or expansion anchors at 1'-6" c/c max. All installation devices shall be galvanized or stainless steel. Other similar devices shall not be used unless approved by the Engineer.

4.0 PAYMENT.

5.1 Drip Strip. Cost of all work, including all materials, labor, equipment, tools, and incidentals necessary to complete the work as specified by this note, shall be considered incidental to the project.

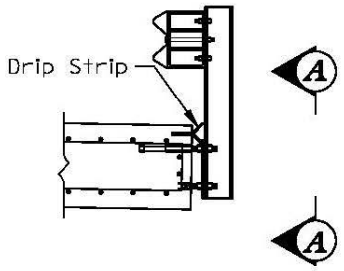

CONCRETE SLAB WITH BRIDGE RAIL

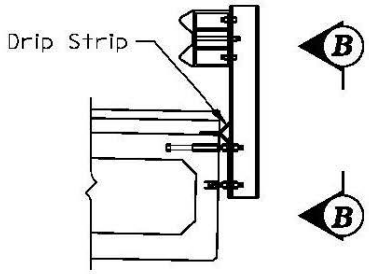

NONCOMPOSITE BOX BEAM WITH BRIDGE RAIL

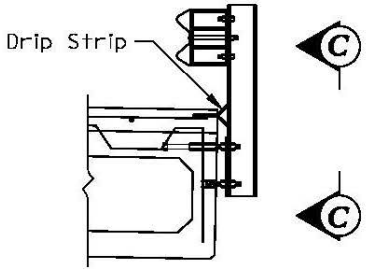

COMPOSITE BOX BEAM WITH BRIDGE RAIL

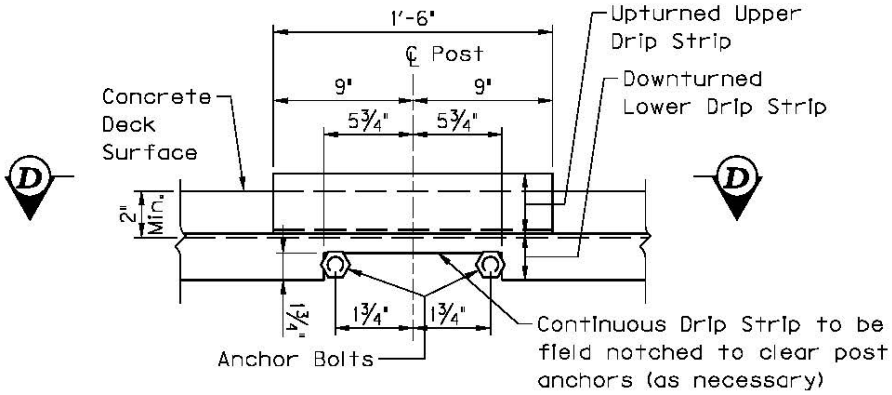

VIEW A–A

(Strip shown prior to concrete placement)

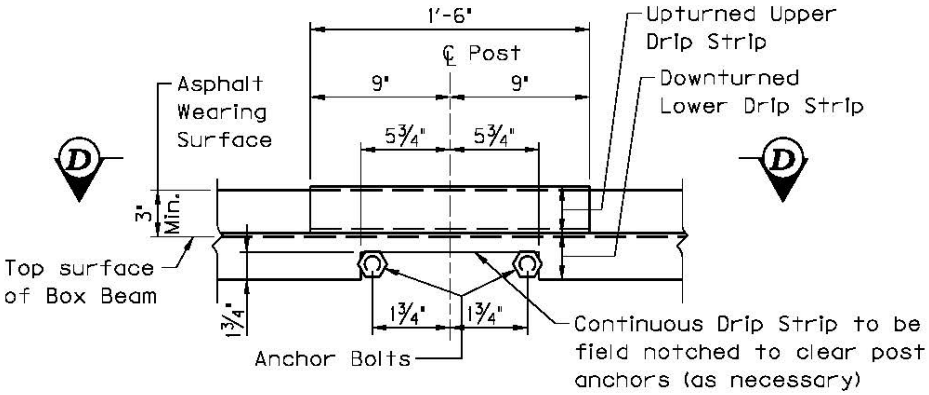

VIEW B–B

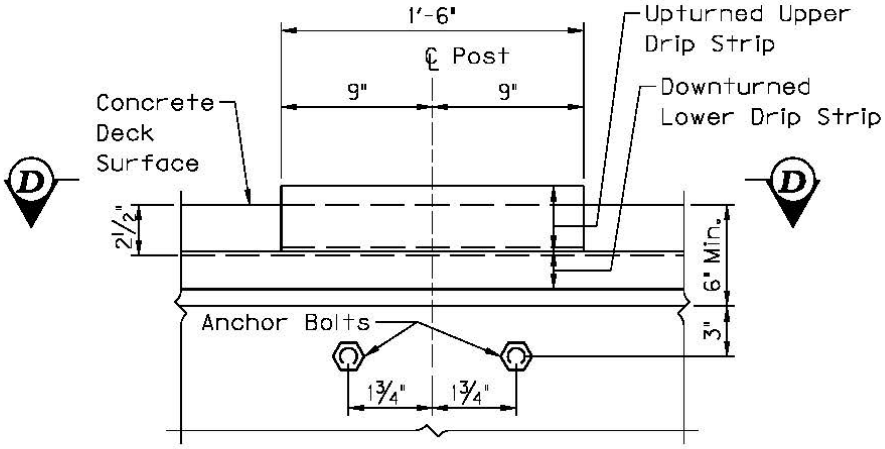

VIEW C–C

(Strip shown prior to concrete placement)

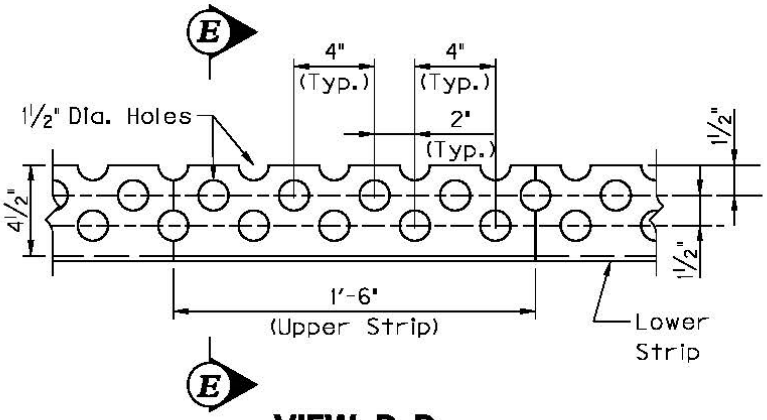

VIEW D–D

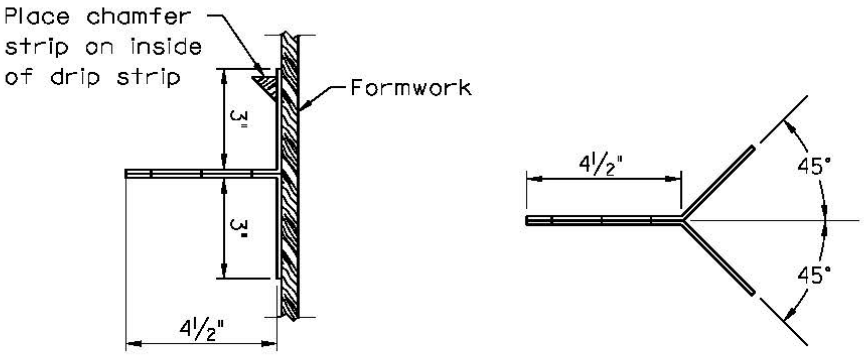

(For concrete deck prior to concrete placement)

(For concrete deck after concrete placement)

SECTION E–E

SPECIAL NOTE FOR PILE STRIKE ALTERNATE

As an alternate to striking the pile with a hammer once placed inside a pre-drilled hole, the contractor may include shear resisting devices on the pile as shown in Figure 1 below. Place pile in hole and use an excavator to apply full hydraulic load to the top of pile before filling hole with concrete. The cost of all labor and materials is incidental to Pre-drilling Piles.

Notes:

1. Alternate was designed for 125% of the pile design axial load. Required number of threaded rods is provided in Table 1. The piles on this project have a maximum pile design axial load of 133 tons (for HP14x117 End Bent piles) and 47 tons (for HP18x204 Retaining Wall piles).
2. Use ASTM F1554 Grade 36 threaded rods with a minimum tensile strength of 58 ksi.
3. The minimum depth of the rock socket is 10’-0”. Engineer to determine the top of rock elevation.
4. The minimum depth of the concrete backfill shall be 9” above the top threaded rod. Concrete to be Class A or B.
5. Pile points are not required.
6. Provide an excavator with sufficient capacity and reach to lift and place piles without contacting the ground or sides of the boring and to pull casing as the hole is being backfilled.
7. Contractor is to ensure hole is cleaned during and after excavation. The portion of the predrilled bore hole above the rock socket shall be excavated using casing to prevent collapsing. The rock socket shall be visually inspected. The bottom of the hole shall be visible to the Inspector by normal means from the surface elevation. If not adequately cleared of debris or water the contractor may be required to clean out the holes using a vacuum excavator and/or a pump. After the pile and concrete are placed the casing shall be backfilled with sand or pea gravel. Remove the casing as the hole above the rock socket is backfilled.
8. Measure final excavation depths with a weighted tape or other approved methods after final cleaning. Ensure the base of the excavation has less than ½” of sediment at the time of pile and concrete placement. Do not allow the depth of the water to exceed 3” during concrete placement.

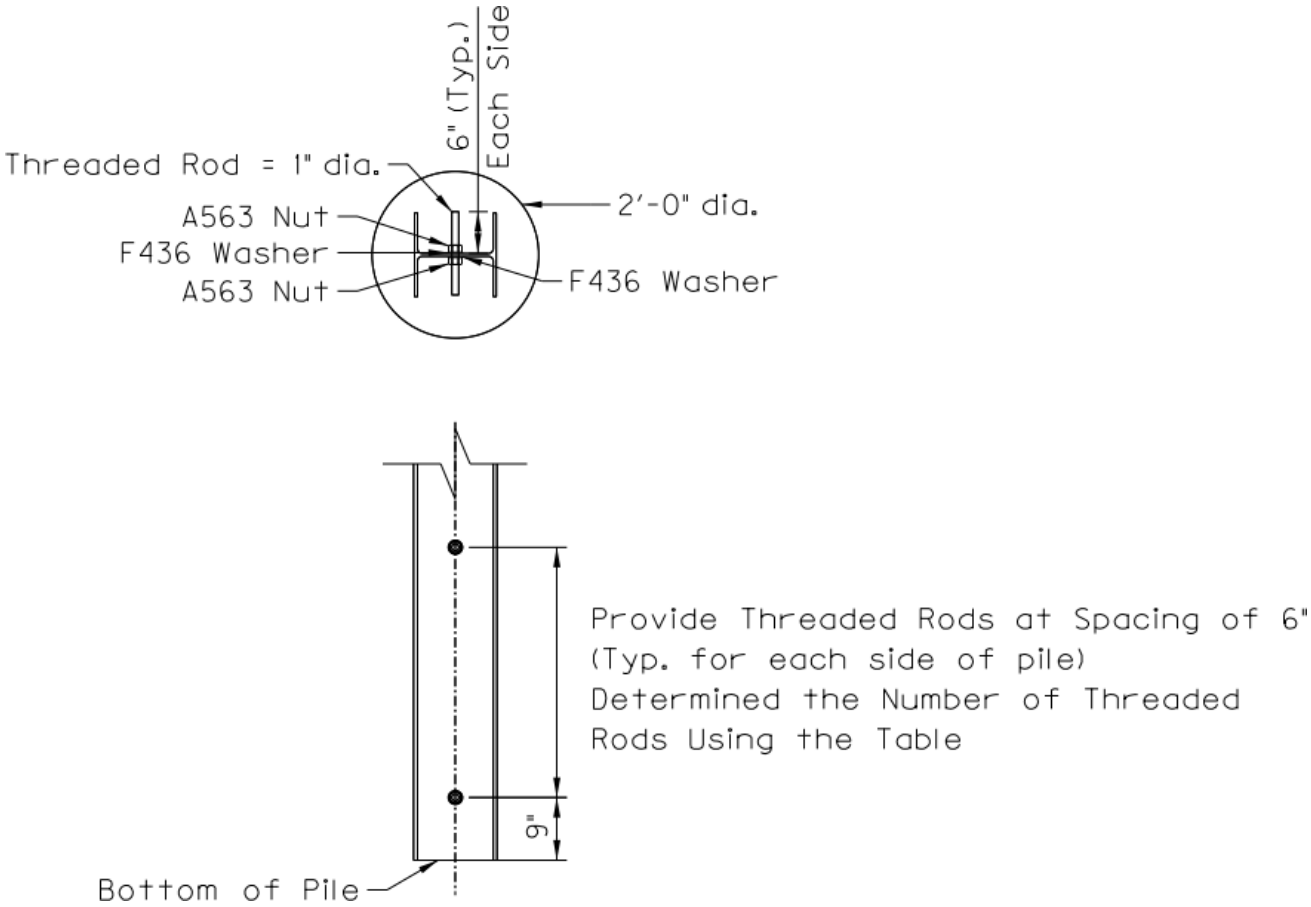

Figure 1: Threaded rod detail

Table 1: Number of threaded rods required based on pile design load

NUMBER OF THREADED RODS								
PILE DESIGN LOAD (TONS)	60	70	80	90	100	110	120	135
Grade 36 (fu = 58 ksi)	5	6	7	7	8	9	9	10
Grade 55 (fu = 75 ksi)	4	5	5	6	6	7	7	8
Grade 105 (fu = 125 ksi)	3	3	3	4	4	4	5	5

SPECIAL NOTE FOR TRUSS SCREEDS ON CONCRETE OVERLAYS

This Special Note will apply where indicated on the plans or in the proposal. Section references herein are to the Department's Current Standard Specifications for Road and Bridge Construction.

1.0 DESCRIPTION. This specification covers the use of vibratory truss screed use on side-by-side composite box beams with designed slab thickness equal to a nominal five inches. Contrary to Kentucky Transportation Cabinet Department of Highways Standard Specifications for Road and Bridge Construction, latest edition, the use of a Vibratory Truss Screed in lieu of a self-propelled finishing machine equipped as detailed in Section 609.02.09 of the Specifications will be considered for use provided the following requirements of this Special Note are met:

2.0 EQUIPMENT AND QUALIFYING PROJECTS.

2.1 Vibratory Truss Screed. The contractor shall submit for approval, prior to use, the manufacturer's literature confirming that the vibratory truss screed proposed shall be able to meet the required cross slope of bridge and provide a minimum of 8,000 vibration cycle modes per minute (VPM). The Central Office Division of Construction will make the determination of use for each project.

2.2 Qualifying Structures. The vibratory truss screed can only be considered on structures meeting the following criteria:

- **A.** Bridge design consists of side-by-side composite box beams with concrete overlay.
- **B.** The design for the thickness of concrete for the bridge deck shall be 5-inch depth as detailed on the typical section of the bridge plans.
- **C.** The actual maximum nominal depth thickness must be less than 8" at any point on the deck.
- **D.** The side-by-side box beam bridge deck shall have only a single mat of reinforcement steel.

3.0 CONSTRUCTION.

3.1 Submittal. Submit, to the Central Office, Division of Construction, manufacturer's specifications of equipment proposed for use.

3.2 Sampling and Testing. If approved, the bridge deck may be cored to verify density and voids, at the discretion of the Director of the Division of Construction. Failure to meet proper density and consolidation will incur a penalty up to removal and replacement.

4.0 MEASUREMENT. The Department will not measure for the use of vibratory truss screeds and are incidental to the work being performed.

5.0 PAYMENT. The Department will not make payment for the use of the vibratory truss screed and shall be incidental to the following:

Code	Pay Item	Pay Unit
08104	CONCRETE-CLASS AA	Cubic Yard

SPECIAL NOTE

For Additional Environmental Commitments

IN ADDITION TO OTHER ENVIRONMENTAL COMMITMENTS LISTED IN THIS CONTRACT, THE FOLLOWING COMMITMENTS ALSO APPLY, AS THIS IS A FEDERALLY FUNDED UNDERTAKING AS DEFINED IN SECTION 106 OF THE NATIONAL HISTORIC PRESERVATION ACT, 36 CFR 800.16(Z):

1) The KYTC has completed a Phase 1 archaeological survey for a site-specific area surrounding the bridge. The cleared area is shown as "Archaeologically Cleared Area" or "Environmentally Cleared Area" on the concept plans and/or the map attached to this note or included elsewhere in the proposal. Likewise, any areas that must be avoided have been labeled "Do Not Disturb." The contractor shall install snow fencing to clearly delineate the boundary of the project lying within the bounds of the archeologically cleared area and right of way/easements. This snow fence shall be paid for per linear foot measured. If the Contractor requests additional area, and as a result additional delineation is required, the additional snow fence will not be paid and will be considered incidental to the original line item for snow fence.

   If the Contractor deems it necessary to use additional areas outside the Archaeologically/ Environmentally Cleared Area for any purposes—e.g., laydown yards, vehicle parking, parking cranes, delivering beams, borrow areas, waste areas, etc.—the Contractor must first get a written agreement with the landowner (assuming the additional area is outside the right-of-way). Then the Contractor shall seek approval of the use of the site—whether within or outside the right-of-way—by both the KYTC Section Supervisor and the GEC Environmental Lead at tspringer@qk4.com. The Contractor shall provide a map of the area(s) to be used, including access points, and property-owner agreements. The Environmental Team will complete initial field investigations for archaeological, historical, ecological, and other environmental clearances. If any potentially significant site or resources are found, the KYTC has the right to deny the use of the proposed site. The maps and property owner agreements are to be submitted at least ten (10) business days prior to the Preconstruction Conference, or sixty (60) days prior to the Contractors access to the site, for coordination and review by the KYTC District and Bridging Kentucky Team.

   A Liquidated Damage of $50,000 will be assessed whenever the Contractor has used any restricted areas. The fee will be assessed on a *per bridge* basis, whether the contract involves bridge bundles or a single bridge. In addition, all fines, fees, penalties, remediation costs, and other damages related to breaches of Threatened and Endangered Species Act Section 7, National Historic Preservation Act Section 106, Clean Water Act Sections 401 and 404, Kentucky General Permit for Stormwater Discharges KYR10, Environmental Protection Agency requirements, State Historic Preservation Office requirements, and other related permitting agencies will be paid by the Contractor, including all associated costs and burdens placed upon the Kentucky Transportation Cabinet.

2) If human remains are encountered during project activities, all work should be immediately stopped in the area. The area should be cordoned off, and, in accordance with KRS

72.020, the county coroner and local law enforcement must be contacted immediately. Upon confirmation that the human remains are not of forensic interest, the unanticipated discovery must be reported to Nicolas Laracuente at the Kentucky Heritage Council at (502) 892-3614, George Crothers at the Office of State Archaeology at (859) 257-1944, and KYTC DEA archaeologists at (502) 564-7250.

For guidance regarding inadvertent discovery and treatment of human remains, refer to the KYTC's *Right of Way Guidance Manual* (Section ROW-1202), and the Advisory Council on Historic Preservation's (ACHP) *Policy Statement Regarding Treatment of Human Remains and Grave Goods* (adopted by ACHP February 23, 2007).

3) If, during the implementation of The Project, a previously unidentified historic/ archaeological property is discovered or a previously identified historic/archaeological property is affected in an unanticipated manner, the contractor shall (1) call KYTC DEA archaeologists at (502) 564-7250, (2) call SHPO archaeologists at (502) 892-3614, and (3) ensure that all work within a reasonable area of the discovery shall cease until such time as a treatment plan can be developed and implemented.

SPECIAL NOTE

FOR SEDIMENT PREVENTION AND EROSION CONTROL

FOR IMPACT REGARDLESS OF SIZE OF THE DISTRUBED AREA

Potential impacts to gray bat foraging habitat and habitat for federally listed fish and mussel species will be minimized by implementing erosion prevention and sediment control measures.

As required under Section 213 of the KYTC Standard Specifications, prior to onsite activities a **site-specific *Erosion Control Plan* including BMPs** to ensure continuous erosion control throughout the construction and post construction period. The plan will identify individual Disturbed Drainage Areas (DDA) where storm water from the construction area will be discharged off site or into waters of the Commonwealth.

Should the Contractor fail to create a BMP Plan or provide and maintain the necessary erosion control, Liquidated Damages will apply at the rate specified in the contract. If no rate is specified, Liquidated Damages will be applied at the rate specified in Section 108 of the Standard Specifications.

The erosion prevention and sediment controls proposed are presented below.

- The location of the individual erosion prevention/sediment control measures will be identified by the Resident Engineer and Contractor. The Contractor will place erosion control devices as identified in the site-specific BMP Plan prior to beginning work.
- Mulch will be placed, during grade and drain activities, across all areas where no work will be conducted for a period of 14 consecutive days.
- Tree clearing within the riparian zone will be minimized. Trees to be removed will be determined by the resident engineer and the contractor prior to disturbance. (Note: Any "Special Note for Tree Clearing Restrictions" must be adhered to.)
- Silt fence, or other approved method as appropriate, will be installed at the edge of waters within the project corridors to eliminate the deposition of rock and debris in the streams during construction activities. In the unforeseen event that unintended debris does enter the streams, the resident engineer will halt the contributing activity until appropriate remedial actions have been implemented.
- To the maximum extent plausible, construction activities will take place during low-flow periods.
- Equipment staging and cleaning areas will be located to eliminate direct inputs to waters of the Commonwealth. These areas will be located such that effluent will be filtered through vegetated areas and appropriate sediment controls prior to discharge offsite.

- Concrete will be poured in a manner to avoid spills into the streams. In the unforeseen event that a spill does occur, the USFWS will be notified, and the resident engineer will immediately halt the activity until remedial measures have been implemented.
- KYTC proposes to stabilize areas disturbed during construction activities through vegetation establishment and placement of riprap and geotextile fabric. Re-vegetation of the disturbed areas will allow thermoregulation of water within the streams, establish long-term, regenerative stabilization of the stream banks, and provide nutrients to the aquatic macroinvertebrate community through inputs of organic material.
- Areas disturbed during construction and not stabilized with rip rap and erosion blanket will be seeded using a standard seed mix. Depending on project slope and project location, application rates and seed mix types will vary. The Contractor shall perform all final seeding and protection, in accordance with the plans and Section 212 of KYTC Standard Specifications.
- Contrary to Section 213.03.03, paragraph 2, the Engineer shall conduct inspections as needed to verify compliance with Section 221 of KYTC Standard Specifications. The Engineer's inspections shall be performed a minimum of once per month and within seven (7) days after a storm of ½ inch or greater. Copies of the Engineer's inspections shall not be provided to the Contractor unless improvements to the BMPs are required. The Contractor shall initiate corrective action within 24 hours of any reported deficiency and complete the work within five (5) days. The Engineer shall use Form TC 63-61 A for this report. Inspections performed by the Engineer do not relieve the Contractor of any responsibility for compliance. If corrections are not made within the five (5) days specified, the liquidated damages will apply at the rate specified in the Liquidated Damages note in the contract.
- Contrary to Sections 212.05 and 213.05, unless listed in the proposal, bid items for temporary BMPs and items for permanent erosion control will not be measured for payment and will be replaced with one lump sum item for the services. Payment will be pro-rated based on the Project Schedule as submitted by the Contractor and as agreed to by the Engineer.
- The Contractor shall be responsible for applying "good engineering practices." The Contractor may use any temporary BMPs and permanent BMPs that fall within the guidance of the current Standard Specifications, KYTC's Best Management Practices manual, and with the approval of the KYTC Engineer.

<u>FOR IMPACT GREATER THAN 1.0 ACRE</u>

When the total disturbed area for a project, including laydown and waste/borrow areas, is greater than 1.0 acre, the Contractor shall be responsible for filing the Kentucky Pollution discharge Elimination System (KPDES) KYR10 permit Notice of Intent (NOI) with the Kentucky Division of Water (DOW). The Contractor will be responsible for following the KPDES requirements of local Municipal Separate Storm Sewer System (MS4) programs with jurisdiction. Required NOI shall name the Contractor as the Facility Operator and include the KYTC Contract ID Number (CID) for reference. For grouped contracts with more than one structure, each structure will be treated independently in regard to disturbed area unless another structure is within 0.25 mile of

the structure. For structures within 0.25 mile of each other, the total disturbed area will be the sum of the combined disturbed areas. The Contractor shall be responsible for filing the KPDES permit Notice of Termination (NOT) with the Kentucky DOW and any local MS4 Program that has jurisdiction. The NOT shall be filed after the Engineer agrees the project is stabilized or the project has been formally accepted.

The Contractor shall perform all temporary erosion/sediment control functions including providing a Best Management Practice (BMP) Plan, conducting required inspections, modifying the BMP Plan documents as construction progresses, and documenting the installation and maintenance of BMPs in conformance with the KPDES KYR10 permit effective on August 1, 2009, or a permit re-issued to replace that KYR10 permit. This work shall be conducted in conformance with the requirements of Section 213 of the KYTC current Department of Highways, Standard Specifications for Road and Bridge Construction (Standard Specifications).

The Contractor shall be responsible for the examination of the soils to be encountered and make his own independent determination of the temporary BMPs that will be required to accomplish effective erosion prevention and sediment control. The Contractor shall provide the Engineer copies of all documents required by the KPDES permit at the time they are prepared.

They KYR10 web page, which includes the General Permit and eNOI application is here: https://eec.ky.gov/Environmental-Protection/Water/PermitCert/KPDES/Documents/KYR10PermitPage.pdf

If there are any questions regarding this note, please contact Danny Peake, Director, Division of Environmental Analysis, 200 Mero Street, Frankfort, KY 40601, Phone (502) 564-7250.

Kentucky Transportation Cabinet

Highway District 11

And

_____(2), Construction

Kentucky Pollutant Discharge Elimination System Permit KYR10 Best Management Practices (BMP) plan

Groundwater protection plan

For Highway Construction Activities

For

Replacement

Project: CID ## -

Project Information

Note – (1) = Design (2) = Construction (3) = Contractor

1. Owner – Kentucky Transportation Cabinet, District 11 (1)
2. Resident Engineer: (2)
3. Contractor Name: (2)

   Address: (2)

   Phone number: (2)

   Contact: (2)

   Contractor's agent responsible for compliance with KPDES permit requirements: (3)
4. Project Control Number: (2)
5. Route (Address): KY-2057 over Cutshin Creek (1)
6. Latitude/Longitude (project mid-point): 37°08'08.3"N 83°16'55.3"W (1)
7. County (project mid-point): Leslie County (1)
8. Project start date (date work will begin): (2)
9. Projected completion date: (2)

A. Site Description

1. **Nature of Construction Activity (from letting project description):** Address deficiencies of KY-2057 over Cutshin Creek (066B00055N), SYP No. 11-10214.00. (1)

2. **Order of major soil disturbing activities:** (2) and (3)

3. **Projected volume of material to be moved:** (3)

4. **Estimate of total project area (acres):** (3)

5. **Estimate of area to be disturbed (acres):** (3)

6. **Post construction runoff coefficient** will be included in the project drainage folder. Persons needing information pertaining to the runoff coefficient will contact the resident engineer to request this information. (1)

7. **Data describing existing soil condition:** Two soil complexes (Udorthents-Urban land-Grisby and Shelocta-Cutshin-Gilpin) were mapped for the project area, the latter series consisting of the steep slops and cliffs along the west edge of the project area. (Note: Adapted from Archaeological Report). (1) and (2)

8. **Data describing existing discharge water quality (if any):** (2)

9. **Receiving water name:** Cutshin Creek(1)

10. **TMDLs and Pollutants of Concern in Receiving Waters:** N/A. (1 DEA)

11. **Site map:** Project layout sheet plus the erosion control sheets in the project plans that depict Disturbed Drainage Areas (DDAs) and related information. These sheets depict the existing project conditions with areas delineated by DDA (drainage area bounded by watershed breaks and right of way limits), the storm water discharge locations (either as a point discharge or as overland flow) and the areas that drain to each discharge point. These plans define the limits of areas to be disturbed and the location of control measures. Controls will be either site specific as designated by the designer or will be annotated by the contractor and resident engineer before disturbance commences. The project layout sheet shows the surface waters and wetlands.

12. **Potential sources of pollutants:** The primary source of pollutants is solids that are mobilized during storm events. Other sources of pollutants include oil/fuel/grease from servicing and operating construction equipment, concrete washout water, sanitary wastes and trash/debris. (3)

B. Sediment and Erosion Control Measures

1. Plans for highway construction projects will include erosion control sheets that depict Disturbed Drainage Areas (DDAs) and related information. These plan sheets will show the existing project conditions with areas delineated by DDA within the right of way limits, the discharge points and the areas that drain to each discharge point. Project managers and designers will analyze the DDAs and identify Best Management Practices (BMPs) that are site specific. The balance of the BMPs for the project will be listed in the bid documents for selection and use by the contractor on the project with approval by the resident engineer.

   Projects that do not have DDAs annotated on the erosion control sheets will employ the same concepts for development and managing BMP plans.

2. Following award of the contract, the contractor and resident engineer will annotate the erosion control sheets showing location and type of BMPs for each of the DDAs that will be disturbed at the outset of the project. This annotation will be accompanied by an order of work that reflects the order or sequence of major soil moving activities. The remaining DDAs are to be designated as "Do Not Disturb" until the contractor and resident engineer prepare the plan for BMPs to be employed. The initial BMP's shall be for the first phase (generally Clearing and Grubbing) and shall be modified as needed as the project changes phases. The BMP Plan will be modified to reflect disturbance in additional DDA's as the work progresses. <u>All DDA's will have adequate BMP's in place before being disturbed.</u>

3. As DDAs are prepared for construction, the following will be addressed for the project as a whole or for each DDA as appropriate:

   - **Construction Access**—This is the first land-disturbing activity. As soon as construction begins, bare areas will be stabilized with gravel and temporary mulch and/or vegetation.

   - **Sources**—At the beginning of the project, all DDAs for the project will be inspected for areas that are a source of storm water pollutants. Areas that are a source of pollutants will receive appropriate cover or BMPs to arrest the introduction of pollutants into storm water. Areas that have not been opened by the contractor will be inspected periodically (once per month) to determine if there is a need to employ BMPs to keep pollutants from entering storm water.

   - **Clearing and Grubbing**—The following BMP's will be considered and used where appropriate.
     - Leaving areas undisturbed when possible.
     - Silt basins to provide silt volume for large areas.

- Silt Traps Type A for small areas.
- Silt Traps Type C in front of existing and drop inlets which are to be saved.
- Diversion ditches to catch sheet runoff and carry it to basins or traps or to divert it around areas to be disturbed.
- Brush and/or other barriers to slow and/or divert runoff.
- Silt fences to catch sheet runoff on short slopes. For longer slopes, multiple rows of silt fence may be considered.
- Temporary mulch for areas which are not feasible for the fore mentioned types of protections.
- Non-standard or innovative methods.

➢ **Cut and Fill and Placement of Drainage Structures**—The BMP Plan will be modified to show additional BMP's such as:

- Silt Traps Type B in ditches and/or drainways as they are completed.
- Silt Traps Type C in front of pipes after they are placed.
- Channel Lining.
- Erosion Control Blanket.
- Non-standard or innovative methods.

➢ **Profile and X-Section in Place**—The BMP Plan will be modified to show elimination of BMP's which had to be removed and the addition of new BMP's as the roadway was shaped. Probably changes include:

- Silt Trap Type A, Brush and/or other barriers, Temporary mulch, and any other BMP which had to be removed for final grading to take place.
- Additional Silt Traps Type B and Type C to be placed as final drainage patterns are put in place.
- Additional Channel Lining and/or Erosion Control Blanket.
- Temporary mulch for areas where Permanent Seeding and Protection cannot be done within 21 days.
- Special BMP's such as Karst Policy.

➢ **Finish Work (Paving, Seeding, Protect, etc.)**—A final BMP Plan will result from modifications during this phase of construction. Probable changes include:

- Removal of Silt Traps Type B from ditches and drainways if they are protected with other BMP's which are sufficient to control erosion, i.e. Erosion Control Blanket, or Permanent Seeding and Protection on moderate grades.
- Permanent Seeding and Protection.

- Placing Sod.
- Planting trees and/or shrubs where they are included in the project.

➢ BMP's, including Storm Water Management Devices such as velocity dissipation devices and Karst policy BMP's, to be installed during construction to control the pollutants in storm water discharges that will occur after construction has been completed are: (3)

C. Other Control Measures

1. **Solid Materials**

   No solid materials, including building materials, shall be discharged to waters of the commonwealth, except as authorized by a Section 404 permit.

2. **Waste Materials**

   All waste materials that may leach pollutants (paint and paint containers, caulk tubes, oil/grease containers, liquids of any kind, soluble materials, etc.) will be collected and stored in appropriate covered waste containers. Waste containers shall be removed from the project site on a sufficiently frequent basis as to not allow wastes to become a source of pollution. All personnel will be instructed regarding the correct procedure for waste disposal. Wastes will be disposed in accordance with appropriate regulations. Notices stating these practices will be posted in the office.

3. **Hazardous Waste**

   All hazardous waste materials will be managed and disposed of in the manner specified by local or state regulation. The contractor shall notify the Section Engineer if there any hazardous wastes being generated at the project site and how these wastes are being managed. Site personnel will be instructed with regard to proper storage and handling of hazardous wastes when required. The Transportation Cabinet will file for generator, registration when appropriate, with the Division of Waste Management and advise the contractor regarding waste management requirements.

4. **Spill Prevention**

   The following material management practices will be used to reduce the risk of spills or other exposure of materials and substances to the weather and/or runoff. (3)

   ➢ **Good Housekeeping**

   The following good housekeeping practices will be followed onsite during the construction project.

- An effort will be made to store only enough product required to do the job.
- All materials stored onsite will be stored in a neat, orderly manner in their appropriate containers and, if possible, under a roof or other enclosure.
- Products will be kept in their original containers with the original manufacturer's label.
- Substances will not be mixed with one another unless recommended by the manufacturer.
- Whenever possible, all of the product will be used up before disposing of the container.
- Manufacturers' recommendations for proper use and disposal will be followed.
- The site contractor will inspect daily to ensure proper use and disposal of materials onsite.

➢ **Hazardous Products**

These practices will be used to reduce the risks associated with any and all hazardous materials.

- Products will be kept in original containers unless they are not resealable.
- Original labels and material safety data sheets (MSDS) will be reviewed and retained.
- Contractor will follow procedures recommended by the manufacturer when handling hazardous materials.
- If surplus product must be disposed of, manufacturers' or state/local recommended methods for proper disposal will be followed.

5. **Product-specific Practices**

The following product-specific practices will be followed onsite:

➢ **Petroleum Products**

- Vehicles and equipment that are fueled and maintained on site will be monitored for leaks, and receive regular preventative maintenance to reduce the chance of leakage. Petroleum products onsite will be stored in tightly sealed containers, which are clearly labeled and will be protected from exposure to weather.
- The contractor shall prepare an Oil Pollution Spill Prevention Control and Countermeasure plan when the project that involves

the storage of petroleum products in 55 gallon or larger containers with a total combined storage capacity of 1,320 gallons. This is a requirement of 40 CFR 112.

- This project (will / will not) (3) have over 1,320 gallons of petroleum products with a total capacity, sum of all containers 55 gallon capacity and larger.

➢ **Fertilizers**

Fertilizers will be applied at rates prescribed by the contract, standard specifications or as directed by the resident engineer. Once applied, fertilizer will be covered with mulch or blankets or worked into the soil to limit exposure to storm water. Storage will be in a covered shed. The contents of any partially used bags of fertilizer will be transferred to a sealable plastic bin to avoid spills.

➢ **Paints**

All containers will be tightly sealed and stored indoors or under roof when not being used. Excess paint or paint wash water will not be discharged to the drainage or storm sewer system but will be properly disposed of according to manufacturers' instructions or state and local regulations.

➢ **Concrete Truck Washout**

Concrete truck mixers and chutes will not be washed on pavement, near storm drain inlets, or within 75 feet of any ditch, stream, wetland, lake, or sinkhole. Where possible, excess concrete and wash water will be discharged to areas prepared for pouring new concrete, flat areas to be paved that are away from ditches or drainage system features, or other locations that will not drain off site. Where this approach is not possible, a shallow earthen wash basin will be excavated away from ditches to receive the wash water.

➢ **Spill Control Practices**

In addition to the good housekeeping and material management practices discussed in the previous sections of this plan, the following practices will be followed for spill prevention and cleanup**:**

- Manufacturers' recommended methods for spill cleanup will be clearly posted. All personnel will be made aware of procedures and the location of the information and cleanup supplies.
- Materials and equipment necessary for spill cleanup will be kept in the material storage area. Equipment and materials will include as appropriate, brooms, dust pans, mops, rags, gloves, oil absorbents, sand, sawdust, and plastic and metal trash containers.

- All spills will be cleaned up immediately after discovery.
- The spill area will be kept well ventilated and personnel will wear appropriate protective clothing to prevent injury from contract with a hazardous substance.
- Spills of toxic or hazardous material will be reported to the appropriate state/local agency as required by KRS 224 and applicable federal law.
- The spill prevention plan will be adjusted as needed to prevent spills from reoccurring and improve spill response and cleanup.
- Spills of products will be cleaned up promptly. Wastes from spill clean-up will be disposed in accordance with appropriate regulations.

D. Other State and Local Plans

This BMP plan shall include any requirements specified in sediment and erosion control plans, storm water management plans or permits that have been approved by other state or local officials. Upon submittal of the NOI, other requirements for surface water protection are incorporated by reference into and are enforceable under this permit (even if they are not specifically included in this BMP plan). This provision does not apply to master or comprehensive plans, non-enforceable guidelines or technical guidance documents that are not identified in a specific plan or permit issued for the construction site by state or local officials. (1)

E. Maintenance

1. The BMP plan shall include a clear description of the maintenance procedures necessary to keep the control measures in good and effective operating condition.

2. Maintenance of BMPs during construction shall be a result of weekly and post rain event inspections with action being taken by the contractor to correct deficiencies.

3. Post Construction maintenance will be a function of normal highway maintenance operations. Following final project acceptance by the cabinet, district highway crews will be responsible for identification and correction of deficiencies regarding ground cover and cleaning of storm water BMPs. The project manager shall identify any BMPs that will be for the purpose of post construction storm water management with specific guidance for any non-routine maintenance. (1)

F. Inspections

Inspection and maintenance practices that will be used to maintain erosion and sediment controls:

- All erosion prevention and sediment control measures will be inspected at least once each week and following any rain of one-half inch or more.
- Inspections will be conducted by individuals that have successfully completed KEPSC-RI course as required by Section 213.02.02 of the Standard Specifications for Road and Bridge Construction, current edition.
- Inspection reports will be written, signed, dated, and kept on file.
- Areas at final grade will be seeded and mulched within 14 days.
- Areas that are not at final grade where construction has ceased for a period of 21 days or longer and soil stock piles shall receive temporary mulch no later than 14 days from the last construction activity in that area.
- All measures will be maintained in good working order. If a repair is necessary, it will be initiated within 24 hours of being reported.
- Built-up sediment will be removed from behind the silt fence before it has reached halfway up the height of the fence.
- Silt fences will be inspected for bypassing, overtopping, undercutting, depth of sediment, tears, and to ensure attachment to secure posts.
- Sediment basins will be inspected for depth of sediment, and built-up sediment will be removed when it reaches 50 percent of the design capacity and at the end of the job.
- Diversion dikes and berms will be inspected and any breaches promptly repaired. Areas that are eroding or scouring will be repaired and re-seeded / mulched as needed.
- Temporary and permanent seeding and mulching will be inspected for bare spots, washouts, and healthy growth. Bare or eroded areas will be repaired as needed.
- All material storage and equipment servicing areas that involve the management of bulk liquids, fuels, and bulk solids will be inspected weekly for conditions that represent a release or possible release of pollutants to the environment.

G. Non–Storm Water Discharges

It is expected that non-storm water discharges may occur from the site during the construction period. Examples of non-storm water discharges include:

- Water from water line flushings.
- Water form cleaning concrete trucks and equipment.
- Pavement wash waters (where no spills or leaks of toxic or hazardous materials have occurred).
- Uncontaminated groundwater and rain water (from dewatering during excavation).

All non-storm water discharges will be directed to the sediment basin or to a filter fence enclosure in a flat vegetated infiltration area or be filtered via another approved commercial product.

H. Groundwater Protection Plan (3)

This plan serves as the groundwater protection plan as required by 401 KAR 5:037.

- Contractors statement: (3)

The following activities, as enumerated by 401 KAR 5:037 Section 2, require the preparation and implementation of a groundwater protection plan, and will or may be may be conducted as part of this construction project:

_____2. (e) Land treatment or land disposal of a pollutant;

_____2. (f) Storing…or related handling of hazardous waste, solid waste or special waste…in tanks, drums, or other containers, or in piles (does not include wastes managed in a container placed for collection and removal of municipal solid waste for disposal off site);

_____2. (g) …handling of materials in bulk quantities (equal or greater than 55 gallons or 100 pounds net dry weight transported held in an individual container) that, if released to the environment, would be a pollutant;

_____2. (j) Storing or related handling of road oils, dust suppressants at a central location;

_____2. (k) Application or related handling of road oils, dust suppressants or deicing materials (does not include use of chloride-based deicing materials applied to roads or parking lots);

_____2. (m) Installation, construction, operation, or abandonment of wells, bore holes, or core holes (does not include bore holes for the purpose of explosive demolition);

Or, check the following only if there are no qualifying activities:

_____ There are no activities for this project as listed in 401 KAR 5:037 Section 2 that require the preparation and implementation of a groundwater protection plan.

The contractor is responsible for the preparation of a plan that addresses the 401 KAR 5:037 Section 3. (3) Elements of site specific groundwater protection plan:

(a) General information about this project is covered in the Project information;

(b) Activities that require a groundwater protection plan have been identified above;

(c) Practices that will protect groundwater from pollution are addressed in *Section C: Other Control Measures*.

(d) Implementation schedule—all practices required to prevent pollution of groundwater are to be in place prior to conducting the activity;

(e) Training is required as a part of the ground water protection plan. All employees of the contractor, sub-contractor, and resident engineer personnel will be trained to understand the nature and requirements of this plan as they pertain to their job function(s). Training will be accomplished within one week of employment and annually thereafter. A record of training will be maintained by the contractor with a copy provided to the resident engineer.

(f) Areas of the project and groundwater plan activities will be inspected as part of the weekly sediment and erosion control inspections

(g) Certification (see signature page).

Contractor and Resident Engineer Plan Certification

The contractor that is responsible for implementing this BMP plan is identified in the Project Information section of this plan.

The following certification applies to all parties that are signatory to this BMP plan:

I certify under penalty of law that this document and all attachments were prepared under my direction or supervision in accordance with a system designed to assure that qualified personnel properly gathered and evaluated the information submitted. Based on my inquiry of the person or persons who manage the system, or those persons directly responsible for gathering the information, the information submitted is, to the best of my knowledge and belief, true, accurate, and complete. I am aware that there are significant penalties for submitting false information, including the possibility of fine and imprisonment for knowing violations. Further, this plan complies with the requirements of 401 KAR 5:037. By this certification, the undersigned state that the individuals signing the plan have reviewed the terms of the plan and will implement its provisions as they pertain to ground water protection.

Resident Engineer and Contractor Certification:

(2) Resident Engineer signature

Signed _____ _____, _____

Typed or printed name[2] Title Signature

(3) Signed _____ _____, _____

Typed or printed name[1] Title Signature

1. *Contractors Note: to be signed by a person who is the owner, a responsible corporate officer, a general partner or the proprietor or a person designated to have the authority to sign reports by such a person in accordance with 401 KAR 5:060 Section 9. This delegation shall be in writing to: Manager, KPDES Branch, Division of Water, 14 Reilly Road, Frankfort, Kentucky 40601. Reference the Project Control Number (PCN) and KPDES number when one has been issued.*

2. *KYTC note: to be signed by the Chief District Engineer or a person designated to have the authority to sign reports by such a person (usually the resident engineer) in accordance with 401 KAR 5:060 Section 9. This delegation shall be in writing to: Manager, KPDES Branch, Division of Water, 14 Reilly Road, Frankfort, Kentucky 40601. Reference the Project Control Number (PCN) and KPDES number when one has been issued.*

Sub-Contractor Certification

The following sub-contractor shall be made aware of the BMP plan and responsible for implementation of BMPs identified in this plan as follows:

Subcontractor Name:

Address:

Phone:

The part of BMP plan this subcontractor is responsible to implement is:

I certify under penalty of law that I understand the terms and conditions of the general Kentucky Pollutant Discharge Elimination System permit that authorizes the storm water discharges, the BMP plan that has been developed to manage the quality of water to be discharged as a result of storm events associated with the construction site activity and management of non-storm water pollutant sources identified as part of this certification.

Signed _____ _____, _____

Typed or printed name[1] Title Signature

1. *Sub-Contractor Note: to be signed by a person who is the owner, a responsible corporate officer, a general partner or the proprietor or a person designated to have the authority to sign reports by such a person in accordance with 401 KAR 5:060 Section 9. This delegation shall be in writing to: Manager, KPDES Branch, Division of Water, 14 Reilly Road, Frankfort, Kentucky 40601. Reference the Project Control Number (PCN) and KPDES number when one has been issued*.

SPECIAL NOTE FOR CONTRACT COMPLETION DATE AND LIQUIDATED DAMAGES ON BRIDGE REPAIR CONTRACTS

I. COMPLETION DATE.

Upon Notice to Proceed, the Contractor has the option of selecting the Begin Work date. Once selected, notify the Department in writing of the date selected at least two weeks prior to beginning work and provide a proposed project schedule. All work is to be completed by the specified contract completion date. The Contractor is allotted 150 calendar days once work begins to complete all work to safely reopen the structure with no lane closures. At a minimum, prior to reopening the lane to traffic, all strength requirements and curing for materials used shall be completed per Division 600 of the Standard Specifications.

The Engineer will begin charging calendar days for a structure on the day the Contractor begins work, with the exception of placement of signs, regardless of holidays or seasonal weather limitations.

II. LIQUIDATED DAMAGES.

Liquidated damages will be assessed to the Contractor in accordance with the Transportation Cabinet, Department of Highway's current Standard Specifications for Road and Bridge Construction, Section 112.03.15A, when the lane closures are used beyond the allotted number of calendar days. Liquidated Damages will be assessed per the Standard Specification Section 108.09 when the contract time extends beyond the contract date.

Contrary to the Standard Specifications, liquidated damages will be assessed to the Contractor during the months of December, January, February and March when the contract time has expired on any individual bridge. Contract time will be charged during these months. All construction must be completed in accordance with the weather limitations specified in Section 606 and/or Section 601 as applicable. No extension of Contract time will be granted due to inclement weather or temperature limitations that occur due to starting work on the Contract or a structure late in the construction season.

SPECIAL NOTE

For Tree Removal

Leslie County
KY-2057 Bridge Rehab
Item No. 11-10214

NO CLEARING OF TREES 5 INCHES OR GREATER (DIAMETER BREAST HEIGHT) FROM **May15 THROUGH JULY 31**

If there are any questions regarding this note, please contact Danny Peake, Director, Division of Environmental Analysis, 200 Mero Street, Frankfort, KY 40601, Phone: (502) 564-7250.

SPECIAL NOTE FOR ELECTRONIC DELIVERY MANAGEMENT SYSTEM (e-Ticketing) ASPHALT

This Special Note will apply when indicated on the plans or in the proposal. Section references herein are to the Department's Standard Specifications for Road and Bridge Construction current edition.

1.0 DESCRIPTION. Incorporate an e-Ticketing Delivery Software for weighed asphalt material delivered to the project to report loads and provide daily running totals of weighed asphalt material for pay items and incidental work during the construction processes from the point of measurement and loading to the point of incorporation to the project.

2.0 MATERIALS AND EQUIPMENT. Contractor shall supply material data in JavaScript Object Notation (JSON) documents to the KYTC e-Ticketing Delivery Software (KYTC e-Ticketing Portal) via Application Programming Interface (API) or direct connection. Test and verify that ticket data can be shared from the original source no fewer than 30 days prior to material placement activities. An e-Ticketing Delivery Software supplier can provide a qualified representative for on-site technical assistance during the initial setup, pre-construction verifications, and data management and processing as needed during the Project to maintain material data delivery capabilities. Virtual meetings may be hosted in lieu of on-site meetings when deemed appropriate by the Engineer.

Provide e-Ticketing Delivery Software that will meet the following:

1. The e-Ticketing Delivery Software shall be fully integrated with the Contractor's Load Read-Out scale system at the material source location.

2. The e-Ticketing Delivery Software shall provide real-time delivery to KYTC e-Ticketing Portal.

3. Transmit any updates to the ticket data within 5 minutes of a change.

3.0 CONSTRUCTION. Provide the Engineer with the manufacturer's specifications and all required documentation for data access at the pre-construction conference.

A. Construction Requirements

1. Install and operate software in accordance with the manufacturer's specifications.

2. Verify that all pertinent information is provided by the software within the requirements of this Special Note.

B. Data Deliverables

Provide to the Engineer a means in which to gather report summaries by way of iOS apps, web pages, or any other method at the disposal of the Engineer. The Engineer may request data at any time during the project.

1. Asphalt Material

a. **Real-time Continuous Data Items**

Provide the Engineer access to JSON documents capable of being transmitted through the KYTC's e-Ticketing Portal that displays the following information in real-time with a web-based system compatible with iOS and Windows environments.

- Each Truck
  - Supplier Name
  - Supplier Address
  - Supplier Phone
  - Plant location
  - Date
  - Time at source
  - Project Location

- Contract ID#
- Carrier Name
- Unique Truck ID
- Description of Material
- Mix Design Number
- Gross, Tare and Net Weight
- Weighmaster

4.0 MEASUREMENT. The Department will not measure the electronic delivery management system.

5.0 PAYMENT. The Department will not measure this work for payment and will consider all items contained in this note to be incidental to the asphalt mixtures on the project, as applicable.

May 5, 2025

SPECIAL NOTE FOR RECYCLED ASPHALT PAVEMENT (RAP) STOCKPILE MANAGEMENT

I. GENERAL

The use of reclaimed asphalt pavement (RAP) from Department projects or other approved sources in hot mix asphalt (HMA) or warm mix asphalt (WMA) shall be subject to stockpile management and handling of material as described in this section.

The Department approves RAP on a stockpile basis, following the process set forth in this method. The contractor's responsibilities in the process are as follows:

- To obtain the Department's approval of all RAP prior to its use on a Department project and to deliver test data and samples as required
- To monitor and preserve the quality and uniformity of the approved material during storage and handling, adding no unapproved material to the existing stockpile
- To comply with the Department's requirements regarding replenishment of approved stockpiles

The Department will approve RAP based on its composition and variability in gradation and asphalt content, and on visual inspections of the stockpile, which the Department may conduct at its discretion. The Department may withdraw approval of a stockpile if the requirements of this specification are not followed in good faith.

The Maximum Percentage Allowed in a mix design will be based on these criteria and on the category of RAP source, as defined in this document.

II. APPROVAL PROCESS

Qualified asphalt producers (listed in List of Approved Materials-Asphalt Mixing Plants) may submit requests for RAP stockpile approval to the Asphalt Branch, Division of Materials, in the Annual Certification for Previously Approved Asphalt Mixing Plants and Related Equipment. The requester shall provide test results as prescribed in Part IID. The Division of Materials may, at their discretion, collect samples or inspect a RAP stockpile consistent with Section IIE.

Upon completion of the review of testing results and, if applicable, visual inspection, the Division of Materials, Asphalt Branch will approve or disapprove the material by letter and will assign a Stockpile Identification Number for each approved RAP stockpile. Note: The contractor's average gradation and asphalt content, as listed in the approval letter, shall be the gradation used in subsequent mix designs. The approval letter will state the applicable limits on the use of the material in mix designs and will summarize the Department's findings, listing the average gradation and asphalt content from the contractor's tests and the corresponding values found by the Department. Where the Maximum Percentage Allowed is low due to variability, the contractor may elect to improve the uniformity of the material by further processing and may again sample, test, and request approval for the material.

No material shall be added to a stockpile after it has been approved, except as provided in Parts V, VI, and VII below.

IIA. RAP Quality Management Plan

For a contractor to receive approval to use RAP on any department project, a RAP Quality Management Plan must first be approved by the department. The RAP Quality Management Plan shall be submitted to the

Division of Materials annually for approval as part of the Contractor's Quality Control Plan/Checklist. The Quality Management Plan is required to demonstrate how the Contractor will provide consistency and quality of material utilized in all asphalt mixes produced for use on Department projects. The Quality Management Plan shall include:

- Unprocessed RAP Stockpiles
  - Designation of stockpile(s) as single or multiple source
  - Designation of stockpile(s) as classified or unclassified
  - Designation of stockpile(s) as captive or continuously replenishing
  - Plan for how stockpile(s) is built (layers, slope, etc.)
  - Plan to minimize stockpile(s) contamination
- Processing and Crushing
  - Equipment used to feed screener or crusher
  - Excavation process based on equipment type
- Processing Millings
  - Single Project or Source
    - Screening, Fractionation, or Crushing plan
  - Multiple Source
    - Process to achieve uniform material from stockpile
    - Screening, Fractionation, or Crushing plan
- Processed RAP Stockpiles
  - Minimization of segregation
  - Minimization of moisture

IIB. RAP Stockpile Placement

All processed RAP stockpiles shall be placed on a sloped, paved surface. The requirement for a paved surface may be waived by the Cabinet if the Contractor's RAP Quality Management Plan demonstrates effective material handling that will minimize deleterious material from beneath the processed stockpile entering the plant. *No processed stockpile will be placed directly on grass or dirt.*

IIC. Stockpile Identification Signs

RAP stockpiles shall be identified with posted signs displaying the gradation of material in the stockpile (course, intermediate, or fine). These signs shall be made of weatherproof material and shall be highly visible. Numerals shall be easily readable from outside the stockpile area. If a stockpile exists in two or more parts, each part must have its own sign.

IID. Standard Approval Procedure

The Contractor shall obtain random samples representative of the entire stockpile and shall have each sample tested for gradation and asphalt content according to KM 64-426, KM 64-427, and AASHTO T308. The material samples must be in its final condition after all crushing and screening. At least one sample shall be obtained for each 1,000 tons of processed RAP, with a minimum of five samples per stockpile. Sampling shall be performed according to the method prescribed for asphalt mix aggregates in the Department's Materials Field Testing and Sampling Manual and KM 64-601. The minimum sampling size (after quartering) for tests of RAP samples is 1,500 g. except for samples containing particles more than one inch in diameter, for which the minimum is 2,000 g.

To request approval of a RAP stockpile, submit the following documents to the Division of Materials. It is the requester's responsibility to correctly address, label, and deliver these submittals:

• Submit request for approval at beginning of the paving season as part of the Annual Certification for Previously Approved Asphalt Mixing Plants and Related Equipment.

• If requesting approval after paving season begins, submit memo, including stockpile portion of the inspection list for Annual Certification for Previously Approved Asphalt Mixing Plants and Related Equipment, to Division of Materials.

• Reports of the tests prescribed above using the Stockpile <INSERT NAME> document.

• A drawing of the plant site showing the location of the stockpile to be approved *and all other stockpiles on the premises*

Mail, deliver or email the request form, with test reports and site drawing, to:

Kentucky Transportation Cabinet
Division of Materials
ATTN: Asphalt Branch Manager
1227 Wilkinson Boulevard
Frankfort, Kentucky 40601

Robert.Semones@ky.gov

IIE. Tests and inspections by the Department

The Department shall have the right to observe the collection of samples, or to perform the sampling and testing as a verification of contractor submittal. As a condition of approval, the Department may at any time inspect and sample RAP stockpiles for which approval has been requested and may perform additional quality control tests to determine the consistency and quality of the material.

The approval letter issued by the Department will include any results of verification testing performed by the Cabinet. The approved contractor results should be used by mix design technicians in the design calculations.

III. RAP STOCKPILE TIERED MANAGEMENT AND EFFECTIVE BINDER CONTENT

The stockpile management and approval requirements will be tiered based on the maximum cold feed percentages as defined in this section and Table 1. below.

Table 1. Tiered Testing Requirements

Mix Type	**0-≤12%**	**12-≤20%**	**20-≤35%**
Surface	Tier 1	Tier 2	Tier 3
Base	Tier 1	Tier 2	Tier 3

NOTE: All asphalt mixes and binder selection will be subject to Section 409 of the current Standard Specifications.

The following requirements will apply based on the percentage of RAP in the mix.

<u>Tier 1</u>

Tier 1 mixes (less than or equal to 12% RAP) will be subject to the requirements of sections IIA, IIB, and IIC.

Tier 2

Tier 2 mixes (12% to less than 20% RAP) will be subject to the requirements of Section II in its entirety and Table 2 requirements.

Tier 3

Tier 3 Asphalt Base mixes with 20% to less than 35% RAP, Tier 3 Asphalt Surface mixes with 20% to less than 30% RAP will be subject to Section II in its entirety and Table 2 requirements.

IV. MAXIMUM PERCENTAGE OF RAP ALLOWED

The Maximum Percent of RAP allowed in mix designs shall be the lowest percentage determined by the gradation and asphalt content of the RAP, as established under the criteria below, and requirements listed in Section III.

Limits according to range in gradation and bitumen content

The Maximum Percent of RAP Allowed, based on gradation and asphalt content, shall be determined by the Department using the standard deviation of these values. This standard deviation will be calculated using data provided by the contractor from at least five samples. While the contractor is required to provide the data from these tested samples, the Department retains the discretion to perform its own sampling and testing to support or verify its findings. An apparent outlier shall not be considered in determining these ranges. Where one result appears to be unrepresentative of the whole, two or more additional samples shall be tested. The outlying value of all tests shall then be excluded from the range. The maximum percentage of RAP allowable shall be the lowest percentage determined according to Table 2 below.

Table 2. Maximum Percent RAP According to Variability in Test Results

	Standard Deviation as calculated above:		
Surface			
% asphalt content	< 0.4	< 0.5	
% passing No. 200 sieve	< 1.25	< 1.5	
% passing Median Sieve	< 4.0	< 5.0	
	Allowable RAP Cold Feed %		
	Tier 3 - 20%-30%	Tier 2 - 12%-20%	Tier 1 - 0%-12%
Base			
% asphalt content	< 0.5	< 0.75	
% passing No. 200 sieve	< 1.5	< 2.25	
% passing Median sieve	< 5.0	< 7.0	
	Allowable RAP Cold Feed %		
	Tier 3 - 20%-35%	Tier 2 - 12%-20%	Tier 1 - 0%-12%

NOTE: These allowances notwithstanding, the Contractor is required to maintain the mixture within the Mixture Control Tolerances of Kentucky Method 443.
The percentage allowable in mix designs shall be limited to meet the design criteria for viscosity established in the Standard Specifications.

V. GENERAL STOCKPILE REQUIREMENTS AND REPLENISHMENT

V.A. Single Pavement Source

Early approval of material from a single pavement source. When a new stockpile is to consist entirely of millings removed from a single existing pavement, the stockpile may be approved based on samples taken during the milling and processing operations, prior to completion of milling. The initial stockpile may be approved as either a new stockpile or a new stockpile in continual replenishment status.

For continual replenishment status, samples shall be taken from the processed stockpile after it reaches 1,000 tons. A total of five initial samples, plus one additional sample for every 1,000 tons, is required. As prescribed in Part II above, the contractor shall test all samples and deliver the test results, together with a letter request for approval in Continual Replenishment status, to the address indicated. The stockpile shall be subject to initial approval as prescribed above in Part II. Once approved, it may be replenished without further approvals as provided in Part VII below.

V.B. Heterogeneous or contaminated material

Asphalt pavement millings containing traffic detection loops, raised pavement markers, or other debris must be separated and excluded before stockpiling RAP for approval for use in KYTC asphaltic concrete mixtures.

No material other than RAP from an approved stockpile shall be included in mixtures for State projects. The following materials are specifically excluded:

• Material contaminated with foreign matter such as liquids, soil, concrete, or debris

• Plant waste, especially waste containing abnormal concentrations of bitumen, drum build-up, or material from spills or plant clean-up operations

The following materials shall not be added to or placed in proximity to an approved stockpile but may be accumulated in a separate stockpile and submitted for approval according to Part III:

- Production mixtures returned to the plant for any reason.
- Mis-proportioned mixtures, especially those generated at start-up.

VI. REPLENISHMENT OF STOCKPILES

An approved RAP stockpile may be replenished with Department approval, provided the replenishment material meets all necessary requirements for approval and maintains uniformity in gradation and asphalt content as outlined in this document.

VI.A. Procedure and approval criteria

The procedure for requesting approval of a stockpile replenishment, that is not in continual replenishment status, shall be the same as for approval of an original stockpile, and the material for the replenishment shall meet all criteria for approval as a new stockpile. RAP proposed for replenishment shall be sampled and tested by the Contractor for gradation and asphalt cement as prescribed in Section II above. The Laboratory shall

review these results and provide approval for use in Department asphalt mix designs, according to Table 2 above.

VI.B. Effect of replenishment on existing approved mix designs

Replenishment of a stockpile may render certain mix designs invalid, depending on the percent RAP allowed in the design and on the difference in average properties between the old and new stockpiles. A replenished stockpile may be used as the RAP ingredient in an existing approved design provided that:

1. The Maximum Percent Allowed for the replenishment stockpile equals or exceeds the percent RAP called for in the mix design. In no case may the Maximum Percent Allowed be exceeded.

However, if a mix design calls for up to 5.0 percent more than the Maximum Percent Allowed for the replenishment, the *design* may be adjusted, with approval, to use the lower percent allowed, provided that the production mixture continues to meet all acceptance criteria. For example, a design which calls for 20 percent RAP may be adjusted and produced with 15 percent if it continues to meet for acceptance.

VII. CONTINUAL REPLENISHMENT WITHOUT RE-APPROVAL

At the request of the contractor, a previously approved stockpile may be placed in Continual Replenishment Status and may be replenished any number of times without re-approval provided that:

1. Replenishment is within six months of the last stockpile addition.
2. The contractor shall continue to monitor and test the materials added to the stockpile and shall forward these results to the Division of Materials for every 1,000 tons of RAP added to the stockpile.
3. The contractor must certify that replenishment materials are free of contaminants.
4. The Department shall be notified by letter to the Director of the Division of Materials that the stockpile is being replenished on a continual basis.
5. The RAP Maximum Percent Allowed for continual replenishment shall be limited by Sections III and IV.

Note: Upon request, one 20-pound sample bag of RAP for each Continual Replenishment Stockpile shall be submitted to the Division of Materials for petrographic analysis every 12 months.

The Department may inspect, sample, and test such stockpiles at its discretion and may, upon determining that the stockpile is unsuitable, withdraw approval of the material and all mix designs which include it. Approval of the stockpile may be withdrawn at any time based upon extreme or erratic ingredient proportions, unsuitable ingredients, or poor performance, as determined by the Division of Materials, Asphalt Branch. The Department will conduct periodic comparison testing on the opposite quarters of samples submitted by the Contractor for special replenishment approval category. The approval of the stockpile may be withdrawn if

erroneous information was found on the contractor's testing and/or improper sampling procedures were involved after a thorough investigation.

VIII. DEPLETION OF STOCKPILE AND EXPIRATION OF APPROVAL

When a stockpile has been fully depleted, the Contractor may replenish it within 24 months after the date of depletion; a depleted stockpile not replenished after 24 months will be removed from the approved list and may not be replenished.

Approval of a stockpile may be withdrawn if, in the finding of the Division of Materials, Asphalt Branch, the total amount of material used in new mixtures equals the total tonnage of the original stockpile plus all approved replenishments. Six years from the original approval of a stockpile or from its most recent replenishment, a stockpile shall be presumed to be depleted, and its approval shall expire. This shall apply to all stockpiles, regardless of status or history of use.

IX. RECORDS

The Contractor shall maintain records at the plant site on all RAP stockpiles. These records shall be available for inspection by representatives of the Department and shall include the following:

- All test results.
- The Department's approval letter for each stockpile and replenishment, together with the Contractor's requests for approval and all data submitted therewith.
- A current drawing of all stockpile locations at the plant site, including unapproved stockpiles, showing stockpile numbers of all stockpiles approved for State work.

X. RELOCATION OF STOCKPILE

If material from an approved RAP stockpile is to be moved to another location, the contractor shall seek approval from the Department prior to its further use on State projects. A letter request shall be submitted to the Division of Materials indicating the current stockpile location, the total quantity of material to be moved, and the amount, if any, to remain in the current location. The Division of Materials will issue an approval letter applicable to the new location.

June 18, 2025

Special Note for Bridge Demolition, Renovation and Asbestos Abatement

If the project includes any bridge demolition or renovation, the successful bidder is required to notify Kentucky Division for Air Quality (KDAQ) via filing of form (DEP 7036) a minimum of 10 working days prior to commencement of any bridge demolition or renovation work.

Any available information regarding possible asbestos containing materials (ACM) on or within bridges to be affected by the project has been included in the bid documents. These are to be included with the Contractor's notification filed with the KDAQ. If not included in the bid documents, the Department will provide that information to the successful bidder for inclusion in the KDAQ notice as soon as possible. If there are no documents stating otherwise, the bidders should assume there are no asbestos containing materials that will in any way affect the work.

Linebach ▪ Funkhouser, Inc.
ENVIRONMENTAL COMPLIANCE & CONSULTING

Asbestos Inspection Report

To: Derek Adams, H W Lochner, Inc.

Date: October 24, 2022

Conducted By: Russell Brooks, LFI, Inc.

Project and Structure Identification

Project: Leslie County: Item No. 11-10214

Structure ID: #066B00055N

Structure Location: KY-2057 over Cutshin Creek, Leslie County, Kentucky

Sample Description: Mastic on bridge deck expansion joint

Inspection Date: October 18, 2022

Results and Recommendations

The asbestos inspection was performed in accordance with current United States Environmental Protection Agency (US EPA) regulations, specifically 40 CFR Part 61, Asbestos National Emissions Standards for Hazardous Air Pollutants (NESHAP) revision, final rule effective November 20, 1990.

It is recommended that this report accompany the 10-Day Notice of Intent for Demolition (DEP7036 Form) which is to be submitted to the Kentucky Division of Air Quality prior to abatement, demolition, or renovation of any building or structure in the Commonwealth through the e-portal at https://dep.gateway.ky.gov/eForms/Account/Home.aspx.

No suspect asbestos containing (ACM) were detected above the regulatory screening limit of 1%.

Commonwealth of Kentucky

Department for Environmental Protection
Division for Air Quality

Russell Henry Brooks

Has met the requirements of 401 KAR 58:005 and is accredited as an:

Asbestos Inspector

Agency Interest Id:	**138451**
License Number:	**71841**
Issue Date:	**03/24/2022**
Expiration Date:	**03/15/2023**

DEP 7036

PAGE 1 OF
INITIAL SUBMITTAL DATE
REVISION DATE
NOTIFICATION # -

NOTIFICATION OF ASBESTOS ABATEMENT/DEMOLITION/RENOVATION

(Instructions for completing form on back)

File this form with Regional Office where project will be performed

Kentucky Division for Air Quality
300 Sower Boulevard, 2nd Floor
Frankfort, KY 40601

OFFICE USE ONLY
ID #
LOG #

Contractor _____
Address _____
City _____ State _____ Zip _____
Phone _____ Contact Person _____
Owner _____
Address _____
City _____ State _____ Zip _____
Phone _____ Contact Person _____
Project Location _____
Address _____
City _____ State _____ Zip _____
Facility Age (yrs.) _____ Size of Facility or Affected Part (sq.ft.) _____
#Floors Affected _____ Present and Prior Use of Facility _____

TYPE OF PROJECT (CHECK ONLY ONE):

Renovation ☐ Demolition ☐ Ordered Demolition ☐ Emergency ☐ Long-term ☐

PROJECT DATES:

Start Removal _____ End Removal _____
Start Renovation/Demolition _____ End Renovation/Demolition _____

Amount of ACM to be Removed:

	Regulated ACM (RACM)	Category II nonfriable ACM (optional)	Category I nonfriable ACM (optional)
Linear Feet			
Square Feet			
Cubic Feet			

Description of planned renovation/demolition, including abatement methods & demo/reno methods. _____

Description of affected facility components _____

Asbestos detection technique _____

Amount of Cat. I & II nonfriable ACM involved but will not be removed:

Describe **physical characteristics** that make it nonfriable and **methods** to keep it nonfriable (optional): _____

Describe **contingency plan** should nonfriable ACM become friable or additional ACM be uncovered during renovation/ demolition: _____

Transporter _____
Address _____
City _____ State _____ Zip _____
Phone _____
Disposal Site _____
Address _____
City _____ State _____ Zip _____

I hereby certify that at least one person trained as required by 40 CFR 61.145(c)(8) will supervise the abatement work described herein. (optional for strictly non-friable work)

Submitted by: _____
Company Name: _____

INSTRUCTIONS FOR COMPLETING FORM DEP7036: NOTIFICATION OF ASBESTOS ABATEMENT/DEMOLITION/RENOVATION

Filing Deadline: This form must be completed and filed with the Kentucky Division for Air Quality at least ten (10) working days before starting any asbestos removal, demolition, or other work which will disturb asbestos-containing material (ACM) in Kentucky facilities outside Jefferson County and in schools statewide, including Jefferson County. File with appropriate Regional Office.
Renotification: If developments occur that invalidate information on a notification (e.g., changes in dates, amounts, locations), file a revised form within the time frames specified in 401 KAR 58:025. Notifications may be numbered in the top-left corner (optional). First two digits are project year; remaining digits are project number (e.g., the first project in 1999 is 99-1).
Attachments: Attachments may be included to provide additional information, propose alternative procedures, declare nonfriable removal, identify secondary transporters, etc.

Line-by-Line Instructions:
Contractor/Owner: the contractor is the asbestos remover (or, for zero-asbestos demolitions, the demolition contractor). The owner is the entity having the work done.
Project Location: The location at the address given where the work is taking place (e.g., which building/floor/room?).
Present/Prior Use: Enter the present and prior use(s) of the facility.
Type of Project: Each choice shown in this category has a specific description under 401 KAR 58:025:

Emergency renovations result from a sudden, unexpected event. If the project is an emergency renovation, attach a detailed description of the sudden, unexpected event that necessitated removal. Include the exact date and hour the event occurred and explain how the event caused an unsafe condition, or would cause equipment damage or unreasonable financial burden.

Planned renovations are renovations that do not qualify as emergency renovations.

A long-term notification is a type of planned renovation which involves a number of nonscheduled small-scale removals whose annual total exceeds the NESHAP threshold amounts and can be estimated based on past years' experience. File yearly estimate at least 10 working days before the beginning of the calendar year for which a long-term notification is being given.

Demolitions involve the wrecking or taking out of a load-supporting structural member, such as a load-bearing beam or wall. Tearing down a structure, dismantling it piecemeal, and moving it from one place to another are all considered demolitions.

Ordered demolitions must result from a demolition order issued by a government agency because the building is structurally unsound and in danger of imminent collapse. For ordered demolitions, attach to the notification a signed, dated copy of order that includes demolition deadlines and name/title/authority of the government representative issuing the order.

Project Dates: Schedules must be precise and accurate. The "start removal" date is the date the removers arrive on-site and begin physically preparing the work area for removal. "End removal" is the date the removers dismantle the work area after cleaning and clearing it. If circumstances arise that invalidate previously submitted start dates, a revised notification must be submitted showing the updated, correct start date. If the start date has been moved up, submit written renotification at least ten working days before the new start date. If the start date has been moved back, telephone the Division as soon as possible before the original date and submit written renotification no later than the original start date.
Schedules for renovation and demolition (next line after removal schedule) are handled similarly, except that renotification is required only for schedule changes involving demolitions, not renovations.
Amount of ACM: In this table, enter the amount and type (RACM , Category I, and/or Category II) of asbestos that will be removed. Although the regulation does not require you to identify the amount of nonfriable ACM that will be removed, the table provides space for nonfriable ACM to accommodate those notifiers who choose to document these removals.
Description of project: Describe the demolition or renovation work to be performed and method(s) to be used , including work practices and engineering controls to be used.
Asbestos Detection Technique: Give a general description of the asbestos survey, for example, "AHERA-style survey by accredited inspector; samples analyzed by PLM."
Amount of nonfriable ...: If all nonfriable ACM will be properly removed, enter "NA."
Contingency Plans: If Category II nonfriable ACM becomes crumbled, pulverized, or reduced to powder, or if additional RACM is discovered, describe procedures to be followed. For example, "Move demolition activity away from ACM immediately; remove the ACM using regulation-required procedures." Even "Stop work, call Division for Air Quality" is OK.

KENTUCKY TRANSPORTATION CABINET
Department of Highways
DIVISION OF RIGHT OF WAY & UTILITIES

TC 62-226
Rev. 01/2016
Page 1 of 1

RIGHT OF WAY CERTIFICATION

☒ Original	☐ Re-Certification	RIGHT OF WAY CERTIFICATION	
ITEM #	**COUNTY**	**PROJECT # (STATE)**	**PROJECT # (FEDERAL)**
11-10214.00	Leslie	1100 FD55 121 9414002R	
PROJECT DESCRIPTION			
Kentucky Bridge Program - 066B00055N - KY 2057 at Cutshin Creek Bridge Replacement			

☐ **No Additional Right of Way Required**

Construction will be within the limits of the existing right of way. The right of way was acquired in accordance to FHWA regulations under the Uniform Relocation Assistance and Real Property Acquisitions Policy Act of 1970, as amended. No additional right of way or relocation assistance were required for this project.

☒ **Condition # 1 (Additional Right of Way Required and Cleared)**

All necessary right of way, including control of access rights when applicable, have been acquired including legal and physical possession. Trial or appeal of cases may be pending in court but legal possession has been obtained. There may be some improvements remaining on the right-of-way, but all occupants have vacated the lands and improvements, and KYTC has physical possession and the rights to remove, salvage, or demolish all improvements and enter on all land. Just Compensation has been paid or deposited with the court. All relocations have been relocated to decent, safe, and sanitary housing or that KYTC has made available to displaced persons adequate replacement housing in accordance with the provisions of the current FHWA directive.

☐ **Condition # 2 (Additional Right of Way Required with Exception)**

The right of way has not been fully acquired, the right to occupy and to use all rights-of-way required for the proper execution of the project has been acquired. Some parcels may be pending in court and on other parcels full legal possession has not been obtained, but right of entry has been obtained, the occupants of all lands and improvements have vacated, and KYTC has physical possession and right to remove, salvage, or demolish all improvements. Just Compensation has been paid or deposited with the court for most parcels. Just Compensation for all pending parcels will be paid or deposited with the court prior to AWARD of construction contract

☐ **Condition # 3 (Additional Right of Way Required with Exception)**

The acquisition or right of occupancy and use of a few remaining parcels are not complete and/or some parcels still have occupants. All remaining occupants have had replacement housing made available to them in accordance with 49 CFR 24.204. KYTC is hereby requesting authorization to advertise this project for bids and to proceed with bid letting even though the necessary right of way will not be fully acquired, and/or some occupants will not be relocated, and/or the just compensation will not be paid or deposited with the court for some parcels until after bid letting. KYTC will fully meet all the requirements outlined in 23 CFR 635.309(c)(3) and 49 CFR 24.102(j) and will expedite completion of all acquisitions, relocations, and full payments after bid letting and prior to AWARD of the construction contract or force account construction.

Total Number of Parcels on Project	3	**EXCEPTION (S) Parcel #**	**ANTICIPATED DATE OF POSSESSION WITH EXPLANATION**
Number of Parcels That Have Been Acquired			
Signed Deed	2		
Condemnation	1		
Signed ROE	1		

Notes/ Comments (Text is limited. Use additional sheet if necessary.)

LPA RW Project Manager		Right of Way Supervisor	
Printed Name		Printed Name	Mark C. Askin, P.E.
Signature		Signature	Mark Askin, P.E. Digitally signed by Mark Askin, P.E. DN: cn=Mark Askin, P.E., email=mark.askin@strand.com Date: 2025.08.13 14:35:43 -04'00'
Date		Date	08/13/25
Right of Way Director		**FHWA**	
Printed Name	Dean M. Loy	Printed Name	
Signature	DM Loy Digitally signed by DM Loy Date: 2025.08.13 14:43:04 -04'00'	Signature	
Date		Date	

UTILITIES AND RAIL CERTIFICATION NOTE

Leslie County
No federal number available
FD55 121 94140 02U
Mile point: 0.009 TO 0.023
BRIDGE PROJECT IN LESLIE COUNTY ON (066B00055N) KY-2057 AT CUTSHIN CREEK
ITEM NUMBER: 11-10214.00

PROJECT NOTES ON UTILITIES

For all projects under 2000 Linear feet which require a normal excavation locate request pursuant to KRS 367.4901-4917, the awarded contractor shall field mark the proposed excavation or construction boundaries of the project (also called white lining) using the procedure set forth in KRS 367.4909(9)(k). For all projects over 2000 linear feet, which are defined as a "Large Project" in KRS 367.4903(18), the awarded contractor shall initially mark the first 2000 linear feet minimally of proposed excavation or construction boundaries of the project to be worked using the procedure set forth in KRS 367.4909(9)(k). This temporary field locating of the project excavation boundary shall take place prior to submitting an excavation location request to the underground utility protection Kentucky Contact Center. For large projects, the awarded contractor shall work with the impacted utilities to determine when additional white lining of the remainder of the project site will take place. This provision shall not alter or relieve the awarded contractor from complying with requirements of KRS 367.4905 to 367.4917 in their entirety.

Please Note: The information presented in this Utility Note is informational in nature and the information contained herein is not guaranteed.

The contractor will be responsible for contacting all utility facility owners on the subject project to coordinate his activities. The contractor will coordinate his activities to minimize and, where possible, avoid conflicts with utility facilities. Due to the nature of the work proposed, it is unlikely to conflict with the existing utilities beyond minor facility adjustments. Where conflicts with utility facilities are unavoidable, the contractor will coordinate any necessary relocation work with the facility owner and Resident Engineer. The Kentucky Transportation Cabinet maintains the right to remove or alter portions of this contract if a utility conflict occurs. The utility facilities as noted in the previous section(s) have been determined using data garnered by varied means and with varying degrees of accuracy: from the facility owners, a result of S.U.E., field inspections, and/or reviews of record drawings. The facilities defined may not be inclusive of all utilities in the project scope and are not Level A quality, unless specified as such. It is the contractor's responsibility to verify all utilities and their respective locations before excavating.

The contractor shall make every effort to protect underground facilities from damage as prescribed in the Underground Facility Damage Protection Act of 1994, Kentucky Revised Statute KRS 367.4901 to 367.4917. It is the contractor's responsibility to determine and take steps necessary to be in compliance

UTILITIES AND RAIL CERTIFICATION NOTE

Leslie County
No federal number available
FD55 121 94140 02U
Mile point: 0.009 TO 0.023
BRIDGE PROJECT IN LESLIE COUNTY ON (066B00055N) KY-2057 AT CUTSHIN CREEK
ITEM NUMBER: 11-10214.00

with federal and state damage prevention directives. The contractor is instructed to contact KY 811 for the location of existing underground utilities. Contact shall be made a minimum of two (2) and no more than ten (10) business days prior to excavation. The contractor shall submit Excavation Locate Requests to the Kentucky Contact Center (KY 811) via web ticket entry. The submission of this request does not relieve the contractor from the responsibility of contacting non-member facility owners, whom are to be contacted through their individual Protection Notification Center. It may be necessary for the contractor to contact the County Court Clerk to determine what utility companies have facilities in the area. Non-compliance with these directives can result in the enforcement of penalties.

NOTE: DO NOT DISTURB THE FOLLOWING FACILITIES LOCATED WITHIN THE PROJECT DISTURB LIMITS

Not Applicable

The Contractor is fully responsible for protection of all utilities listed above

THE FOLLOWING FACILITY OWNERS ARE RELOCATING/ADJUSTING THEIR FACILITIES WITHIN THE PROJECT LIMITS AND WILL BE COMPLETE PRIOR TO CONSTRUCTION

Hyden-Leslie County Water District – Water – A water service located west of the bridge which crosses under the highway north to the Eddie D Roberts & Karen Roberts property will be relocated. Existing water main and pressure reduction vault located south of the bridge structure should be avoided. Use caution when excavating in the area of the main.

UTILITIES AND RAIL CERTIFICATION NOTE

Leslie County
No federal number available
FD55 121 94140 02U
Mile point: 0.009 TO 0.023
BRIDGE PROJECT IN LESLIE COUNTY ON (066B00055N) KY-2057 AT CUTSHIN CREEK
ITEM NUMBER: 11-10214.00

Kentucky Power Company – Electric – Kentucky Power's aerial facilities and poles located south of the bridge will be relocated out of construction limits. Use caution when working in the area of overhead lines.

Thacker-Grigsby Telephone Company, Inc. – Comm. – TG aerial fiber will be relocated from existing poles located south of the bridge onto new Kentucky Power poles. Use caution when working in the area of overhead lines.

TDS telecom – Comm. – TDS' aerial fiber lines will be relocated from existing poles located south of the bridge onto new Kentucky Power poles. Use caution when working in the area of overhead lines.

THE FOLLOWING FACILITY OWNERS HAVE FACILITIES TO BE RELOCATED/ADJUSTED BY THE OWNER OR THEIR SUBCONTRACTOR AND IS TO BE COORDINATED WITH THE ROAD CONTRACT

Not Applicable

THE FOLLOWING FACILITY OWNERS HAVE FACILITIES TO BE RELOCATED/ADJUSTED BY THE ROAD CONTRACTOR AS INCLUDED IN THIS CONTRACT

Not Applicable

RAIL COMPANIES HAVE FACILITIES IN CONJUNCTION WITH THIS PROJECT AS NOTED

☒ **No Rail Involvement** ☐ **Rail Involved** ☐ **Rail Adjacent**

UTILITIES AND RAIL CERTIFICATION NOTE

Leslie County
No federal number available
FD55 121 94140 02U
Mile point: 0.009 TO 0.023
BRIDGE PROJECT IN LESLIE COUNTY ON (066B00055N) KY-2057 AT CUTSHIN CREEK
ITEM NUMBER: 11-10214.00

AREA FACILITY OWNER CONTACT LIST

Facility Owner	Address	Contact Name	Phone	Email
Hyden-Leslie County Water District - Water	325 Wendover Road Hyden KY 41749	LJ Turner	6066722791	hlwater@tds.net
Kentucky Power Company - Electric	1400 E. Main St. Hazard KY 41701	Ellis McKnight	6064361329	ermcknight@aep.com
Thacker-Grigsby Telephone Company, Inc. - Telephone	PO Box 789 Hindman KY 41822	Kris Hall	6067859500	k.hall@tgtel.net
TDS Telecom - Telecom	24 Depot Square, Northfield, VT 05663	Jamie Badams	6086642384	Jamie.Badams@tdstelecom.com

N O T I C E

DEPARTMENT OF THE ARMY
CORPS OF ENGINEERS
NATIONWIDE #14 PERMIT AUTHORIZATION
KENTUCKY DIVISION OF WATER 401 WQC

09-12-2023

PROJECT: Leslie County, Item No.
11-10214 Replacement of KY-2057

The Section 404 and 401 activities for this project have been previously permitted under the authority of the Department of the Army Nationwide Permit No. 14 "Linear Transportation Projects" and Division of Water General Water Quality Certification (WQC). In order for these authorizations to be valid, the attached conditions must be followed. The contractor shall post a copy of this Nationwide Permit and General WQC in a conspicuous location at the project site for the duration of construction and comply with the general conditions as required.

Station 9+73 to 11+72	The replacement of KY 2057 over Cutshin Creek, (Bridge # 066B00055N) will entail complete removal of the existing bridge and construction of a new bridge without load restrictions. The project will replace the bridge in the approximate same location with generally the same current geometrics (bridge width, length, hydraulic opening, etc.) to avoid environmental impacts, utility impacts, and minimize the need for new right of way. Approach roadway pavement will be replaced in the direct vicinity of the bridge. Part-width construction will be utilized. One lane of traffic will be maintained with temporary signals during the construction by phasing the work. There will not be an on-site diversion. Right-of-way and temporary construction easements will be required. The estimated area of impact is 48 linear ft./ 0.013 ac. The design layout is attached.

This project involves work near and/or within Jurisdictional Waters of the United States as defined by the United States Army Corps of Engineers and therefore requires a Nationwide 14 General 404 Permit. The Division of Water certified this General Permit with several conditions (See attached). One that should be brought to your attention is regarding the use of vehicles and/or heavy equipment in the stream channel. If there is need to cross the stream channel with vehicles and/or heavy equipment or conduct work from within the stream channel a working platform or temporary crossing is authorized. This should be constructed with clean rock and sufficient pipe to allow stream flow to continue unimpeded (see attached typical drawing).

In order for this authorization to be valid, the attached conditions must be followed. The

contractor shall post a copy of this Nationwide Approval in a conspicuous location at the project site for the duration of construction and comply with the general conditions as required.

To more readily expedite construction, the contractor may elect to alter the design or perform the work in a manner different from what was originally proposed and specified. Prior to commencing such alternative work, the contractor shall obtain written permission from the Division of Construction and the Division of Environmental Analysis. If such changes necessitate further permitting then the contractor will be responsible for applying to the Army Corps of Engineers and the Kentucky Division of Water (KDOW). A copy of any request to the Corps of Engineers or the KDOW to alter this proposal and subsequent responses shall be forwarded to the Division of Environmental Analysis, DA Permit Coordinator, for office records and for informational purposes.

ANDY BESHEAR
GOVERNOR

REBECCA W. GOODMAN
SECRETARY

ENERGY AND ENVIRONMENT CABINET
DEPARTMENT FOR ENVIRONMENTAL PROTECTION

ANTHONY R. HATTON
COMMISSIONER

300 SOWER BOULEVARD
FRANKFORT, KENTUCKY 40601

General Certification--Nationwide Permit # 14
Linear Transportation Projects

This General Certification is issued December 18, 2020, in conformity with the requirements of Section 401 of the Clean Water Act of 1977, as amended (33 U.S.C. §1341), as well as Kentucky Statute KRS 224.16-050.

For this General Certification and all General Certifications of Nationwide Permits (NWP), the term 'surface water' is defined pursuant to 401 KAR Chapter 10, Section 1(72): Surface Waters means those waters having well-defined banks and beds, either constantly or intermittently flowing; lakes and impounded waters; marshes and wetlands; and any subterranean waters flowing in well-defined channels and having a demonstrable hydrologic connection with the surface. Lagoons used for waste treatment and effluent ditches that are situated on property owned, leased, or under valid easement by a permitted discharger are not considered to be surface waters of the Commonwealth.

As required by 40 CFR Part 121 – State Certification of Activities Requiring a Federal License or Permit, all conditions include a statement explaining why the condition is necessary to assure that any discharge authorized under the general permit will comply with water quality requirements and a citation to federal, state, or tribal law that authorizes the condition. The statements and citations are included with each condition. The statements are written entirely at the end of the certification under the section Statements of Necessity.

Agricultural operations, as defined by KRS 224.71-100(1) conducting activities pursuant to KRS 224.71-100 (3), (4), (5), (6), or 10 are deemed to have certification if they are implementing an Agriculture Water Quality Plan pursuant to KRS 224.71-145.

For all other operations, the Commonwealth of Kentucky hereby certifies under Section 401 of the Clean Water Act (CWA) that it has reasonable assurances that applicable water quality standards under Kentucky Administrative Regulations Title 401, Chapter 10, established pursuant to Sections 301, 302, 303, 306 and 307 of the CWA, will not be violated for the activity covered under NATIONWIDE PERMIT 14, namely Linear Transportation Projects, provided that the conditions in this certification are met. Activities that do not meet the conditions of this General Certification require an Individual Section 401 Water Quality Certification.

1. Activities occurring within surface waters assessed by the Kentucky Division of Water as designated Outstanding State Resource Waters, National Resource Waters, Cold Water Aquatic Habitat, Exceptional Waters, or identified as candidate Outstanding State Resource Waters or candidate Exceptional Waters are not authorized under this General Certification and require an Individual Certification. [Statement A and citations KRS 224.70-110, 401 KAR 10:030, Section 1(1), Section 1(2), & Section 1(3); and 401 KAR 10:031, Section 4(2) & Section 8]

2. Activities impacting surface waters assessed by the Kentucky Division of Water as impaired for warm water or cold water aquatic habitat where the parameter or source is related to habitat* are not authorized under this General Certification and require an Individual Certification. [Statement B and citations KRS 224.70-110 and 401 KAR 10:031, Section 2 & Section 4]

   *These include waters impaired by the parameter 'habitat assessment', 'combined biota/habitat bioassessment' or any parameter from the parameter group 'habitat alterations, and/or waters where the parameter identified as a cause of impairment has a source from the source group 'habitat impacts'.

3. Activities impacting surface waters assessed by the Kentucky Division of Water as full support for warm water or cold water aquatic habitat are not authorized under this General Certification and require an Individual Certification. [Statements A and B and citations KRS 224.70-110 and 401 KAR 10:031, Section 2 & Section 4]

4. The activity will not occur within surface waters identified as perpetually-protected mitigation sites (e.g., deed restriction or conservation easement). [Statement C and citations KRS 224.70-110, 401 KAR 10:030, Section 1(3); and 40 C.F.R. 230.97]

5. Activities with cumulative temporary and permanent impacts greater than 1/2 acre of wetland or 300 linear feet of surface waters are not authorized under this General Certification and require an Individual Certification. This General Certification shall not apply to projects where multiple Nationwide Permits are issued for individual crossings which are part of a single, larger transportation projects. [Statement A and citations KRS 224.70-110, 401 KAR 10:030, Section 1(3)(b) & Section 1(4)(b); and 401 KAR 10:031, Section 2 & Section 4]

6. For complete linear transportation projects, all impacts shall not exceed a cumulative length of 500 linear feet within each Hydrologic Unit Code (HUC) 14. [401 KAR 10:030 and 401 KAR 10:031]

7. Stream realignment greater than 100 feet is not authorized under this General Certification and require and Individual Certification. [Statement A and citations KRS 224.70-110, 401 KAR 10:030, Section 1(3)(b) & Section 1(4)(b); and 401 KAR 10:031, Section 2 & Section 4]

8. Surface water impacts covered under this General Certification and undertaken by those persons defined as an agricultural operation under the Agricultural Water Quality Act must be completed in compliance with the Kentucky Agricultural Water Quality Plan (KAWQP). [Statements A and F and citations KRS 224.71-145(1), 401 KAR 10:030, Section 1(3)(b) & Section 1(4)(b); and 401 KAR 10:031, Section 2 & Section 4]

9. Any crossings must be constructed in a manner that does not impede natural water flow. [Statement A and citations KRS 224.70-110, 401 KAR 10:030, Section 1(3)(b) & Section 1(4)(b); and 401 KAR 10:031, Section 2 & Section 4]

10. The use of creek rock for bank stabilization; grouted rip-rap; unformed, poured grout; unformed, poured concrete; poured asphalt; or asphalt pieces is not authorized under this General Certification and requires an Individual Certification. Poured concrete or grout will be authorized under this General Certification when contained by tightly sealed forms or cells. Equipment shall not discharge waste washwater into surface waters at any time without adequate wastewater treatments. [Statement A and citations 401 KAR 10:030, Section 1(3)(b) & 1(4)(b); and 401 KAR 10:031, Section 2 & Section 4]

11. New stormwater detention/ retention basins constructed in surface waters or modifications to stormwater detention/ retention basins resulting in the reduction in reach or that cause impairment of flow of surface waters are not authorized under this General Certification and require an Individual Certification. [Statement A and citations KRS 224.70-110, 401 KAR 10:030, Section 1(3)(b) & Section 1(4)(b); and 401 KAR 10:031, Section 2 & Section 4]

12. Erosion and sedimentation pollution control plans and Best Management Practices (BMPs) must be designed, installed, and maintained in effective operating condition at all times during construction activities so that violations of state water quality standards do not occur. [Statements A and D and citations KRS 224.70-110, 401 KAR 10:030, Section 1(3)(b) & Section 1(4)(b); and 401 KAR 10:031, Section 2 & Section 4]

13. Sediment and erosion control measures, such as check-dams constructed of any material, silt fencing, hay bales, etc., shall not be placed within surface waters, either temporarily or permanently, without prior approval by the Kentucky Division of Water's Water Quality Certification Section. If placement of sediment and erosion control measures in surface waters is unavoidable, design and placement of temporary erosion control measures shall not be conducted in such a manner that may result in instability of streams that are adjacent to, upstream, or downstream of the structures. All sediment and erosion control devices shall be removed and the natural grade restored within the completion timeline of the activities. [Statements A and D and citations KRS 224.70-110, 401 KAR 10:030, Section 1(3)(b) & Section 1(4)(b); and 401 KAR 10:031, Section 2 & Section 4]

14. Measures shall be taken to prevent or control spills of fuels, lubricants, or other toxic materials used in construction from entering surface waters. [Statements A and D and citations. [KRS 224.70-110, 401 KAR 10:030, Section 1(3)(b) & Section 1(4)(b); and 401 KAR 10:031, Section 2 & Section 4]

15. Removal of riparian vegetation shall be limited to that necessary for equipment access. [Statements A and D and citations KRS 224.70-110, 401 KAR 10:030, Section 1(3)(b) & Section 1(4)(b); and 401 KAR 10:031, Section 2 & Section 4]

16. To the maximum extent practicable, all in-stream work under this certification shall be performed under low-flow conditions [Statements A and D and citations KRS 224.70-110, 401 KAR 10:030, Section 1(3)(b) & Section 1(4)(b); and 401 KAR 10:031, Section 2 & Section 4]

17. Heavy equipment (e.g., bulldozers, backhoes, and draglines), if required for this project, should not be used or operated within the stream channel. In those instances in which such in-stream work is unavoidable, then it shall be performed in such a manner and duration as to minimize turbidity and disturbance to substrates and bank or riparian vegetation. [Statements A and D and citations KRS 224.70-110, 401 KAR 10:030, Section 1(3)(b) & Section 1(4)(b); and 401 KAR 10:031, Section 2 & Section 4]

18. Any fill shall be of such composition that it will not adversely affect the biological, chemical, or physical properties of the receiving waters and/or cause violations of water quality standards. If rip-rap is utilized, it should be of such weight and size that bank stress or slump conditions will not be created because of its placement. [Statements A and D and citations KRS 224.70-110, 401 KAR 10:030, Section 1(3)(b) & Section 1(4)(b); and 401 KAR 10:031, Section 2 & Section 4]

19. If domestic water supply intakes are located downstream that may be affected by increased turbidity and suspended solids, the permittee shall notify the operator when such work will be done prior to construction. [Statement E and citations KRS 224.70-110, 401 KAR 10:030, Section 1(3)(b) & Section 1(4)(b); and 401 KAR 10:031, Section 2 & Section 4]

20. Should evidence of stream pollution or jurisdictional wetland impairment and/or violations of water quality standards occur as a result of this activity (either from a spill or other forms of water pollution), the Kentucky Division of Water shall be notified immediately by calling (800) 928-2380. [Statement A and D and citations KRS 224.70-110, 401 KAR 10:030, Section 1(3)(b) & Section 1(4)(b); and 401 KAR 10:031, Section 2 & Section 4]

21. The Kentucky Division of Water requires submission of a formal application for any federal applicant that is not required to submit a Preconstruction Notification that would typically be required of any non-federal applicant. [Statements A and D and citations KRS 224.70-110, 401 KAR 10:030, Section 1(3)(b) & Section 1(4)(b); and 401 KAR 10:031, Section 2 & Section 4]

22. The Kentucky Division of Water may require submission of a formal application for an Individual Certification for any project that has been determined to likely have a significant adverse effect upon water quality or degrade surface waters so that existing uses of the water body or downstream waters are precluded. [Statement A and citations KRS 224.70-110, 401 KAR 10:030, Section 1(3)(b) & Section 1(4)(b); and 401 KAR 10:031, Section 2 & Section 4]

23. If the final issued General Permit for Nationwide Permit 14 Linear Transportation Projects changes significantly, the Division of Water may opt to deny certification for this permit. [Statements A and D and citations KRS 224.70-110, 401 KAR 10:030, Section 1(3)(b) & Section 1(4)(b); and 401 KAR 10:031, Section 2 & Section 4]

Statements of Necessity:

A. This condition is necessary to protect waters categorized under the anti-degradation policy to protect the designated and existing uses and to maintain the associated water quality criteria necessary to protect these water resources.

B. This condition is necessary to protect existing uses and the level of water quality necessary to protect those existing uses shall be assured in impaired water.

C. This condition is necessary for long-term protection of compensatory mitigation sites.

D. This condition is necessary to provide for the prevention, abatement, and control of all water pollution and to conserve water resources for legitimate uses, safeguard from pollution the uncontaminated waters, prevent the creation of any new pollution, and abate any existing pollution.

E. This condition is necessary to protect domestic water supply use.

F. This condition is necessary to evaluate, develop, and improve best-management practices in conservation plans, compliance plans, and forest stewardship management plans; establish statewide and regional agriculture water quality plans; and otherwise promote soil and water conservation activities that protect surface waters from the adverse impacts of agriculture operations within the Commonwealth.

Violation of Kentucky state water quality standards may result in civil penalties and remediation actions.

For assistance contact the Kentucky Division of Water, Water Quality Certification Section by email (401WQC@ky.gov) or by phone (502)-564-3410.

2021 KENTUCKY REGIONAL GENERAL CONDITIONS

These regional conditions are in addition to, but do not supersede, the requirements in the Federal Register (See volume 86, date January 13, 2021, pp 2867-2874 for the text of Section C, General Conditions).

Notifications for all Nationwide Permits (NWPs) shall be in accordance with General Condition No. 32.

1. For activities that would result in a loss of Outstanding State or National Resource Waters (OSNRWs), Exceptional Waters (EWs), Coldwater Aquatic Habitat Waters (CAHs) and waters with Designated Critical Habitat (DCH) under the Endangered Species Act for the NWPs listed below, a Pre-Construction Notification (PCN) will be required to the Corps. The Corps will coordinate with the appropriate resource agencies (see attached list) on these NWPs for impacts to these waters.

   NWP 3 (Maintenance)
   NWP 4 (Fish and Wildlife Harvesting, Enhancement, and Attraction Devices and Activities)
   NWP 5 (Scientific Measurement Devices)
   NWP 6 (Survey Activities)
   NWP 12 (Oil or Natural Gas Pipeline Activities)
   NWP 13 (Bank Stabilization)
   NWP 14 (Linear Transportation Projects)
   NWP 15 (U.S. Coast Guard Approved Bridges)
   NWP 16 (Return Water from Upland Contained Disposal Areas)
   NWP 17 (Hydropower Projects)
   NWP 18 (Minor Discharges)
   NWP 19 (Minor Dredging)
   NWP 20 (Response Operations for Oil or Hazardous Substances)
   NWP 22 (Removal of Vessels)
   NWP 23 (Approved Categorical Exclusions)
   NWP 25 (Structural Discharges)
   NWP 30 (Moist Soil Management for Wildlife)
   NWP 32 (Completed Enforcement Actions)
   NWP 33 (Temporary Construction, Access, and Dewatering)
   NWP 36 (Boat Ramps)
   NWP 41 (Reshaping Existing Drainage Ditches)
   NWP 51 (Land-Based Renewable Energy Generation Facilities)
   NWP 57 (Electric Utility Line and Telecommunications Activities)
   NWP 58 (Utility Line Activities for Water and Other Substances)

2. In addition to the notification and agency coordination requirements in the NWPs, for impacts greater than 0.25 acres in all "waters of the U.S." for the NWPs listed below, a PCN will be required to the Corps. The Corps will coordinate with the appropriate resource agencies (see attached list) on these NWPs:

NWP 3 (Maintenance)
NWP 14 (Linear Transportation Projects)

3. Nationwide Permit No. 14 – Linear Transportation Projects.

(a) New road alignments or realignments are limited to a permanent loss of 500 linear feet of intermittent or perennial stream length or the stream bed acreages listed in the table below at each crossing. Road crossings with permanent losses greater than 500 linear feet of intermittent or perennial stream or the stream bed acreages listed in the table below associated with new alignments or realignments will be evaluated as an individual permit (i.e., a Letter of Permission or Standard Permit).

Table of Acreages at Varying Stream Widths for 500 Linear Feet of Impact	
Stream Width (Feet)	Acres of Stream at Varying Widths for 500 Linear Feet of Stream
1	0.011
2	0.023
3	0.034
4	0.046
5	0.057
6	0.069
7	0.080
8	0.092
9	0.103
10	0.115

(b) In addition to the notification requirements contained in NWP 14, the permittee must submit a PCN to the district engineer prior to commencing the activity for the permanent loss of greater than 300 linear feet of stream bed or the stream bed acreages listed in the table below. (See General Condition 32 and the definition of "loss of waters of the United States" in the Nationwide Permits for further information.)

Table of Acreages at Varying Stream Widths for 300 Linear Feet of Impact	
Stream Width (Feet)	Acres of Stream at Varying Widths for 300 Linear Feet of Stream
1	0.007
2	0.014
3	0.021
4	0.028
5	0.034
6	0.041
7	0.048
8	0.055
9	0.062
10	0.069

4. Notification in accordance with General Condition 32 is required to the Corps for all activities located in the following Section 10 waterways, to include the portion of their tributaries below the Ordinary High Water Mark or navigation pool, or otherwise subject to inundation, by the Section 10 waterway:

- Mississippi River
- Ohio River
- Licking River
- Kentucky River
- Salt River
- Green River
- Cumberland River
- Tennessee River
- Big Sandy River (from mouth to Louisa, KY)

5. All applications and requests should be submitted electronically. To submit applications or other requests electronically, all documents should be saved as a PDF document, and then submitted as an attachment in an email to the following email address:

CELRL.Door.To.The.Corps@usace.army.mil

Your email should include the following:
a) Subject Line with the name of the applicant, type of request, and location (County and State). Example: RE: Doe, John, DA Permit Application, Jefferson County, KY
b) Brief description of the request and contact information (phone number, mailing address, and email address) for the applicant and/or their agent.

c) Project Location: Address and Latitude/Longitude in decimal degrees (e.g. 42.927883, -88.362576).

All forms that require signature must be digitally signed or signed manually, scanned and then sent electronically.

Electronic documents must have sufficient resolution to show project details. In order to have the highest quality documents, the original digital documents should be converted to PDF rather than providing scanned copies of original documents.

The electronic application and attached documents must not exceed 10 megabytes (10MB).

6. For all activities, the applicant shall review the U.S. Fish and Wildlife Service's IPaC website: http://ecos.fws.gov/ipac to determine if the activity might affect threatened and/or endangered species or designated critical habitat. If federally-listed species or designated critical habitat are identified, a PCN in accordance with General Condition 18 and 32 would be triggered and the official species list generated from the IPaC website must be submitted with the PCN.

Further information:

Outstanding State or National Resource Water (OSNRWs), Exceptional Waters (EWs), and Coldwater Aquatic Habitat Waters (CAHs) are waters designated by the Commonwealth of Kentucky, Natural Resources and Environmental Protection Cabinet. The list can be found at the following link: http://eppcapp.ky.gov/spwaters/

Designated Critical Habitat (DCH) under the Endangered Species Act is determined within the Commonwealth of Kentucky by the U.S. Fish and Wildlife Service. The current list of Kentucky's Threatened, Endangered, and Federal Candidate Species can be found at the following link: http://www.fws.gov/frankfort/EndangeredSpecies.html

Information on Pre-Construction Notification (PCN) can be found at NWP General Condition No. 32 in the Federal Register (See volume 86, date January 13, 2021, pp 2867-2874 for the text of Section C, General Conditions).

COORDINATING RESOURCE AGENCIES

Chief, Wetlands Regulatory Section
U.S. Environmental Protection Agency
Region IV
Atlanta Federal Center
61 Forsyth Street, SW
Atlanta, Georgia 30303

Supervisor
U.S. Fish & Wildlife Service
JC Watts Federal Building, Room 265
330 West Broadway
Frankfort, Kentucky 40601

Supervisor
401 Water Quality Certification
Kentucky Division of Water
300 Sower Boulevard, 3rd Floor
Frankfort, KY 40601

Commissioner
Department of Fish and Wildlife Resources
#1 Sportsman's Lane
Frankfort, KY 40601

Executive Director and State Historic Preservation Officer
Kentucky Heritage Council
410 High Street
Frankfort, KY 40601

Terms for Nationwide Permit No. 14
Linear Transportation Projects

Activities required for crossings of waters of the United States associated with the construction, expansion, modification, or improvement of linear transportation projects (e.g., roads, highways, railways, trails, airport runways, and taxiways) in waters of the United States. For linear transportation projects in non-tidal waters, the discharge cannot cause the loss of greater than 1/2-acre of waters of the United States. For linear transportation projects in tidal waters, the discharge cannot cause the loss of greater than 1/3-acre of waters of the United States. Any stream channel modification, including bank stabilization, is limited to the minimum necessary to construct or protect the linear transportation project; such modifications must be in the immediate vicinity of the project.

This NWP also authorizes temporary structures, fills, and work, including the use of temporary mats, necessary to construct the linear transportation project. Appropriate measures must be taken to maintain normal downstream flows and minimize flooding to the maximum extent practicable, when temporary structures, work, and discharges, including cofferdams, are necessary for construction activities, access fills, or dewatering of construction sites. Temporary fills must consist of materials, and be placed in a manner, that will not be eroded by expected high flows. Temporary fills must be removed in their entirety and the affected areas returned to pre-construction elevations. The areas affected by temporary fills must be revegetated, as appropriate.

This NWP cannot be used to authorize non-linear features commonly associated with transportation projects, such as vehicle maintenance or storage buildings, parking lots, train stations, or aircraft hangars.

Notification: The permittee must submit a pre-construction notification to the district engineer prior to commencing the activity if: (1) the loss of waters of the United States exceeds 1/10-acre; or (2) there is a discharge in a special aquatic site, including wetlands. (See general condition 32.) (Authorities: Sections 10 and 404)

Note 1: For linear transportation projects crossing a single waterbody more than one time at separate and distant locations, or multiple waterbodies at separate and distant locations, each crossing is considered a single and complete project for purposes of NWP authorization. Linear transportation projects must comply with 33 CFR 330.6(d).

Note 2: Some discharges for the construction of farm roads or forest roads, or temporary roads for moving mining equipment, may qualify for an exemption under section 404(f) of the Clean Water Act (see 33 CFR 323.4).

Note 3: For NWP 14 activities that require pre-construction notification, the PCN must include any other NWP(s), regional general permit(s), or individual permit(s) used or intended to be used to authorize any part of the proposed project or any related activity, including other separate and distant crossings that require Department of the Army authorization but do not require pre-construction notification (see paragraph (b) of general condition 32). The district engineer will evaluate the PCN in accordance with Section D, "District Engineer's Decision." The district engineer may require mitigation to ensure that the authorized activity results in no more than minimal individual and cumulative adverse environmental effects (see general condition 23).

Source: USA Topo Maps, (2013) National Geographic Society, USGS 7.5-minute Topographic Map Hyden East, Kentucky Quadrangle.

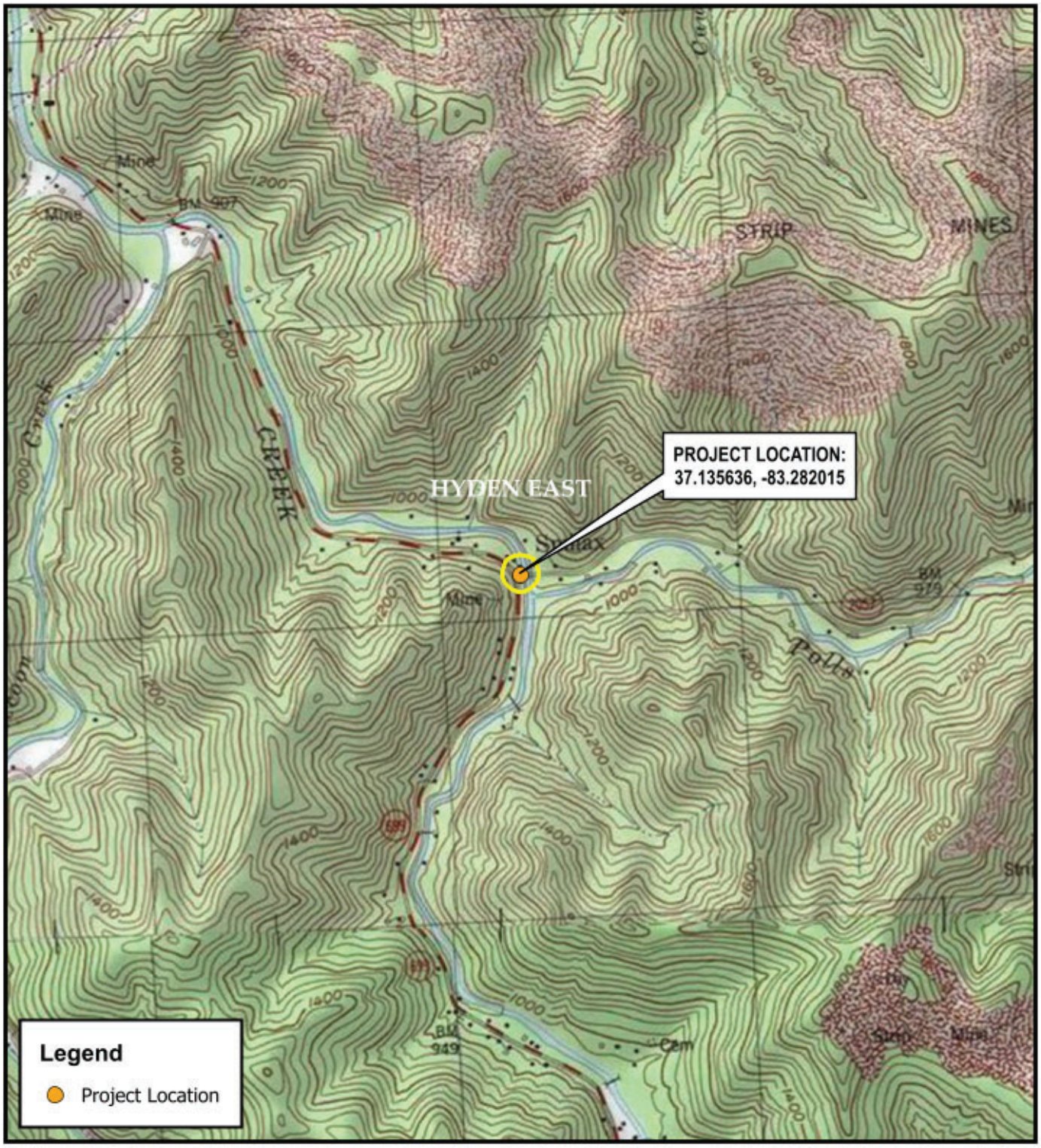

0 2,000 4,000 6,000 8,000 Feet

BRIDGE NO.: 066B00055N
LESLIE COUNTY, KENTUCKY
ITEM NO.: 11-10214

TEAM KENTUCKY
TRANSPORTATION CABINET

PROJECT LOCATION MAP

REVISED DATE: 10-03-22 | DRAWN BY: JTC

FIGURE 1

Z:\Projects\1300-1399\1308 Lochner_Bridges Environmental Support, KY\Map Documents\Lochner Bridges- KY.aprx, 10-3-2022, tculbertson

COMMONWEALTH OF KENTUCKY
DEPARTMENT OF HIGHWAYS

PLANS OF
PROPOSED PROJECT

TEAM KENTUCKY
TRANSPORTATION CABINET

LESLIE COUNTY
KY 2057 OVER CUTSHIN CREEK
STA 9+73.00 TO STA 11+72.00

THIS PROJECT IS OFF THE NH SYSTEM

THE CONTROL OF ACCESS ON THIS PROJECT SHALL BE BY PERMIT

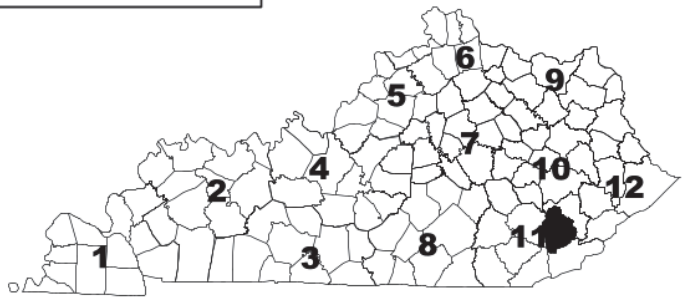

BEGIN CONSTRUCTION STA.9+73

STA. 10+48.25 CONST.
SIMPLE SPAN (96.5')
CB 42X48 PPC BOX BEAM
BRIDGE @ 0° SKEW

END CONSTRUCTION STA. 11+72

LAYOUT MAP

DESIGN CRITERIA

CLASS OF HIGHWAY: RURAL LOCAL
TYPE OF TERRAIN: MOUNTAINOUS
DESIGN SPEED: 40MPH
REQUIRED NPSD:
REQUIRED PSD:
LEVEL OF SERVICE:
ADT PRESENT (2019) 589
ADT FUTURE ( )
DHV:
D %:
T %:

GEOGRAPHIC COORDINATES

LATITUDE 37 DEGREES 08 MINUTES 08 SECONDS NORTH
LONGITUDE 83 DEGREES 16 MINUTES 55 SECONDS WEST

DESIGNED

% RESTRICTED SD:
LEVEL OF SERVICE:
MAX. DISTANCE W/O PASSING:

INDEX OF SHEETS

R1	LAYOUT SHEET
R2-R2B	LEGEND, TYPICAL SECTIONS, RIGHT OF WAY, COORDINATE CONTROL AND GENERAL NOTES
R3-R4	ROADWAY PLAN AND PROFILE SHEETS
R5	MAINTENANCE OF TRAFFIC
R6	ENVIRONMENTALLY CLEARED AREA
X1-X6	ROADWAY CROSS SECTIONS

STANDARD DRAWINGS

RBI-001-12	Typical Guardrail Installation
RBI-002-07	Typical Guardrail Installation
RBM-115-10	Concrete Barrier Wall Type 9T (Temporary)
RBM-120-02	Box Beam Stiffening PF Temporary Concrete Barrier
RBR-001-13	Steel Beam Guardrail ("W" Beam)
RBR-005-11	Guardrail Components
RBR-010-06	Guardrail Terminal Sections
RBR-015-06	Steel Guardrail Posts
RBR-035-12	Guardrail End Treatment Type 4A
RBR-055-01	Delineators For Guardrail
RGX-001-06	Miscellaneous Standards
RGX-100-07	Treatment of Embankments at End Bents
RGX-105-09	Treatment of Embankments at End Bents-Details
RGX-200-01	One Point Proctor Family of Curves
BBP-002-04	Bearing Details
BGX-006-10	Stencils for Structures
BGX-015-04	Bridge Drains
BHS-010	Railing System 40 Inch Single Slope
BHS-014	Thrie-Beam Guardrail Transition (TL-3)
BJE-001-14	Armored Edges
BPS-003-09	HP12X53 Steel Piles
BSD-007	PPC I-Beam HN36 Diaphragm Details

ACTIVE SEPIAS	
017	Pavement Striping Details for Two Way Two Lane Roadways
001	Railing System Type II Guardrail System

SPECIAL NOTES

- Sediment Prevention and Erosion Control
- Traffic Control on Bridge Repair Contracts
- Seasonal Clearing Restriction
- Contract Completion Date and Liquidated
- Damages on Bridge Repair Contracts
- Additional Environmental Commitments
- Concrete Sealing
- Foundation Preparation

SPECIAL PROVISIONS

- 69 Embankment at Bridge End Bent Structures

SPECIFICATIONS

- Standard Specifications for Road and Bridge Construction, Current Edition
- AASHTO LRFD Bridge Design Specifications With Current Interims

PROJECT NUMBER:
EXISTING BRIDGE ID #: 066B00055N
DRAWING NO:

RECOMMENDED BY: PROJECT MANAGER DATE:
PLAN APPROVED BY: STATE HIGHWAY ENGINEER DATE:

LETTING DATE:
ITEM NO. 11-10214 COUNTY OF LESLIE
SHEET NO. R1

OpenRoads Designer v10.16.2.267 USER: gdchilders FILE NAME: C:\PWWORKING\JMT\D0552767\066B00055NLAYOUT.DGN

Corporate Limits
County Line
Easement
Fence COA
Mineral Parcel
Property Line
Right of Way Line
All Overhead Utility Lines
Cable Underground Electric With Quality Levels
Duct Underground Electric With Quality Levels
Cable Underground Fiber With Quality Levels
Cable Underground Telephone With Quality Levels
Duct Underground Telephone With Quality Levels
Cable Underground TV With Quality Levels
Main Gas With Quality Levels
Main Water With Quality Levels
Main Water Greater Than 12 With Quality Levels
Sewer Sanitary With Quality Levels
Sewer Sanitary Force Main With Quality Levels
Sewer Storm WIth Quality Levels
Multi Utility Bank Quality Levels
Oil Line Quality Levels
Steam Line Quality Levels
Cable Underground Electric Marker
Duct Underground Electric Marker
Cable Underground Fiber Marker
Cable Underground Telephone Marker
Duct Underground Telephone Marker
Cable Underground TV Marker
Main Gas Marker

Main Water Marker
Main Water Greater Than 12 Marker
Sewer Sanitary Marker
Sewer Sanitary Force Main Marker
Sewer Storm Marker
Multi Utility Bank Marker
Oil Line Marker
Steam Line Marker
Cable Guardrail
Ditch
Edge of Water
Fence Hedge
Fence
Flow Line/Thalweg/ Int. Stream or Ditch
Guardrail
Railroad
Shrub Line
Sink Hole
Tree Line
Wall (WSM or DSM)
Blue Line Stream
Lakes and Ponds
Regulated Floodway
RDZ Line
ADA Ramp
Anchor Pole
Benchmark
Bike Lane Symbol
Bollard
Centerline
Centerline Stationing
Control Monument
Control Point
Core Hole
Crash Cushion TY 6 D
Crash Cushion TY 6 A
Crash Cushion TY 9A

Crash Cushion TY 9
Cross Notch
Curb Box Inlet
Curb Notch
Combination Pole
Delineator Post
Drop Box
Existing Spring
Electric Manhole
Electric Meter
Electric Pedestal
Electric Pole
Electric Junction Box
Fire Hydrant
Flag Pole
Force Main Sewer Valve
Fuel Tank Inlet
Fuel Tank Vent
Gas Meter
Gas Monitoring Well
Gas Valve
Gas Vent
Gas Well
Guidewires & Anchors
Headstone
Interstate Shield
Iron Pin
Light Pole
Low Wire
Mag Nail
Mailbox
Manhole
Mile Marker Post
Mineral Parcel
Misc Location Point
Monitoring Well
Parking Meter
Pedestrian Signal
Pins/Pipes
PK Nail

Point (Misc)
Pole
Pole (Light)
Post
Power Pole
Quarry
Random (Ground Shot)
Railroad Mile Marker
Railroad Spike
Right of Way Marker
Right of Way Monument
RR Traffic Signal Pole
RW Parcel
Sanitary Cleanout
Sanitary Manhole
Satelite Dish
Septic Tank Cleanout
Service Pole
Sewer Air Release Valve
Shrub
Sign
Sign Post (Single)
Sign with 2 posts
Sign group (4)
Station Stamp
Storm Manhole
Stub Power
Stub Telephone
Survey Cross Notch
Survey Curb Notch
Survey Nail
Survey Spike
Survey Stone Marker
Swamp
Telephone Booth
Telephone Junction Box
Telephone Line Overhead
Telephone Manhole

Telephone Pedestal
Telephone Pole
Temporary Benchmark
Traffic Light
Traffic Signal Control Box
Traffic Signal Junction Box
Traffic Signal Pole
Traverse Point
Tree
TV Junction Box
Utility Pole
Underground Storage Tank
Utility Test Hole
Water Line Marker
Water Meter
Water Spigot
Water Valve
Water Well
Yard Light
Yard Sprinkler
Yard Sprinkler Water Valve

Utility Owners

Utility #1

COMMONWEALTH OF KENTUCKY
DEPARTMENT OF HIGHWAYS
TEAM KENTUCKY TRANSPORTATION CABINET

DRAWING TITLE: LEGEND
KY 2057 OVER CUTSHIN CREEK

ITEM NO.	COUNTY OF
11-10214	LESLIE

SHEET NO. R2

OpenRoads Designer v10.16.2.267 USER: gdchilders FILE NAME: C:\PWWORKING\JMT\D0552767\068B00055N_TYPICAL.DGN

TYPICAL SECTIONS

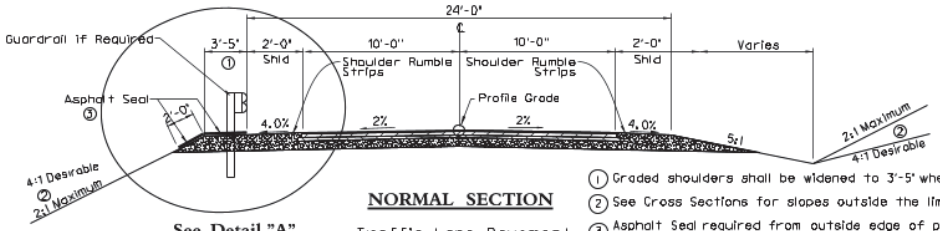

NORMAL SECTION

1. Graded shoulders shall be widened to 3'-5" where guardrail is to be installed.
2. See Cross Sections for slopes outside the limits of the shoulders.
3. Asphalt Seal required from outside edge of paved shoulder to a point 2' down the ditch or fill slope. Two Applications Required.

See Detail "A"

Traffic Lane Pavement	
DGA Base	4" Depth
Asphalt Base	9¼" Depth (3"+3"+3¼") Cl. 2 Asphalt Base 1.00D PG 64-22
Asphalt Surface	1¼" Depth Cl. 2 Asphalt Surface 0.38D PG64-22
Asphalt Material for Tack, Non Tracking	Apply at rate of 0.70 lbs per square yards
Shoulder 2' Pavement	
DGA Base	10¼" Depth
Asphalt Base	3" Depth Cl. 2 Asphalt Base 1.00D PG 64-22
Asphalt Surface	1¼" Depth Cl. 2 Asphalt Surface 0.38D PG64-22
Asphalt Seal	2.40 LBS/SY Asphalt Seal Coat (Two Applications) 20 LBS/SY Asphalt Seal Aggregate Size #8 (Two Applications)
Asphalt Material for Tack, Non Tracking	Apply at rate of 0.70 lbs per square yards

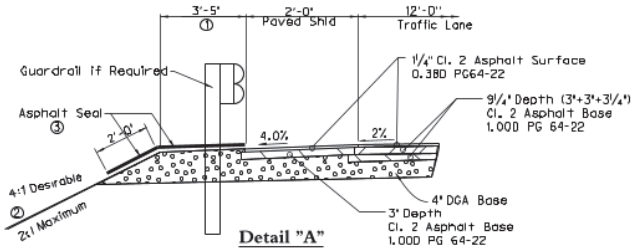

Detail "A"

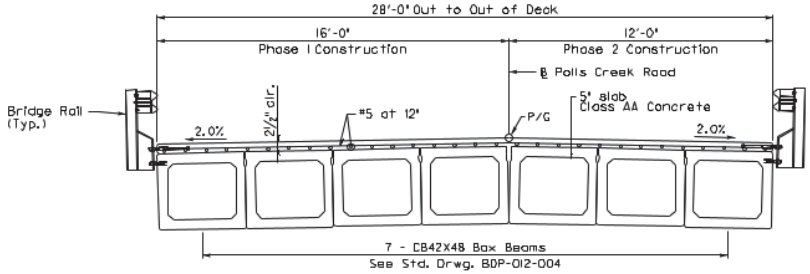

TYPICAL BRIDGE SECTION

COMMONWEALTH OF KENTUCKY
DEPARTMENT OF HIGHWAYS

DRAWING TITLE: TYPICAL SECTIONS
KY 2057 OVER CUTSHIN CREEK

ITEM NO. 11-10214 | COUNTY OF LESLIE
SHEET NO. R2A

OpenRoads Designer v10.16.2.267 USER: gdchilders FILE NAME: C:\PWWORKING\JMT\D0552767\066B00055N_TYPICAL.DGN

GENERAL NOTES

DIVISION 100 -- GENERAL PROVISIONS

165 BEFORE YOU DIG

THE CONTRACTOR IS INSTRUCTED TO CALL 1-800-752-6007 TO REACH KY 811, THE ONE-CALL SYSTEM FOR INFORMATION ON THE LOCATION OF EXISTING UNDERGROUND UTILITIES. THE CALL IS TO BE PLACED A MINIMUM OF TWO (2) AND NO MORE THAN TEN (10) BUSINESS DAYS PRIOR TO EXCAVATION. THE CONTRACTOR SHOULD BE AWARE THAT OWNERS OF UNDERGROUND FAVILITIES ARE NOT REQUIRED TO BE MEMBERS OF THE KY 811 ONE-CALL BEFORE-U-DIG (BUD) SERVICE. THE CONTRACTOR MUST COORDINATE EXCAVATION WITH THE UTILITY OWNERS, INCLUDING THOSE WHOM DO NOT SUBSCRIBE TO KY 811. IT MAY BE NECESSARY FOR THE CONTRACTOR TO CONTACT THE COUNTY COURT CLERK TO DETERMINE WHAT UTILITY COMPANIES HAVE FACILITIES IN THE AREA.

DIVISION 400 -- ASPHALT PAVEMENTS

448 COMPACTION OF ASPHALT MIXTURES

WILL ACCEPT THE COMPACTION OF ASPHALT MIXTURES FURNISHED ON THIS PROJECT BY OPTION B ACCORDING TO SUBSECTIONS 402.03.02 AND 403.03.10 OF THE STANDARD SPECIFICATIONS.

DIVISION 600 -- STRUCTURES AND CONCRETE

650 STANDARD DRAWINGS

STANDARD DRAWINGS ARE NOT ATTACHED TO THESE PLANS. A STANDARD DRAWING BOOK AND THE HEADWALL SUPPLEMENTAL BOOK MAY BE OBTAINED FROM THE POLICY SUPPORT BRANCH OF THE DEPARTMENT OF ADMINSTRATIVE SERVICES IN FRANKFORT, KY. AT (502)564-4610

LESLIE COUNTY
BRIDGE# 066B00055N
KY 2057 OVER CUTSHIN CREEK

Point	Description	Northing	Easting	Elevation	Station	Offset
CP #1	IRON PIN AND CAP	3582443.03	5640657.73	921.27	10+91.52	51.53' RT
CP #2	IRON PIN AND CAP	3582433.00	5640548.97	928.42	9+82.87	40.78' RT
CP #3	IRON PIN AND CAP	3582535.46	5640797.17	923.70	12+45.98	12.76' LT

PROJECT CONTROL

COORDINATES FOR HORIZONTAL CONTROL WERE OBTAINED BY GPS OBSERVATIONS USING TRIMBLE R12 GNSS RECIEVERS ON THE NAD83 KENTUCKY STATE PLANE COORDINATE SYSTEM, KY SINGLE ZONE, US SURVEY FEET UTILIZING THE KYCORS RTN GPS NETWORK ON AUGUST 11, 2022. COORDINATES SHOWN ARE STATE PLANE COORDINATES, US SURVEY FEET. VALUES FOR CP'S WERE ESTABLISHED USING KY CORS WITH RTK IN A BASE ROVER CONFIGURATION USING CP 1 AS THE BASE. NO PROJECT DATUM FACTOR WAS CALCULATED OR USED FOR THIS PROJECT.

BASIS OF ELEVATIONS

ELEVATIONS WERE ESTABLISHED BY REDUNDANT GPS OBSERVATIONS USING TRIMBLE R12 GNSS RECIEVERS ON THE NAVD88 VERTICAL DATUM, GEOID18 UTILIZING KY-CORS RTN SOLUTIONS DATED NOVEMBER 11, 2022, AND WERE CHECKED BY CLOSED DIFFERENTIAL LOOP BASED ON THE ELEVATIONS OF CP2=928.423

MOT GENERAL NOTES

1. TRAFFIC SHALL BE MAINTAINED IN ACCORDANCE WITH THE MANUAL ON UNIFORM TRAFFIC CONTROL DEVICES, THE STANDARD SPECIFICATIONS FOR ROAD AND BRIDGE CONSTRUCTION AND THE STANDARD DRAWINGS, CURRENT EDITIONS.

2. EXCEPT FOR THE ROADWAY AND TRAFFIC CONTROL BID ITEMS LISTED, ALL ITEMS OF WORK NECESSARY TO MAINTAIN AND CONTROL TRAFFIC WILL BE PAID AT THE LUMP SUM BID PRICE TO "MAINTAIN AND CONTROL TRAFFIC" AS SET FORTH IN THE CURRENT STANDARD SPECIFICATIONS FOR ROAD AND BRIDGE CONSTRUCTION. THE LUMP SUM BID TO "MAINTAIN AND CONTROL TRAFFIC" SHALL ALSO INCLUDE, BUT IS NOT LIMITED TO, THE FOLLOWING ITEMS AND OPERATIONS:

   A. ALL LABOR AND MATERIALS NECESSARY FOR CONSTRUCTION AND MAINTENANCE OF TRAFFIC CONTROL DEVICES.

   B. ALL TRAFFIC CONTROL DEVICES SUCH AS, BUT NOT LIMITED TO, FLASHERS, SIGNS AND VERTICAL PANELS, PLASTIC DRUMS (STEEL DRUMS WILL NOT BE PERMITTED) AND CONES NECESSARY FOR THE CONTROL AND PROTECTION OF VEHICULAR TRAFFIC AS SPECIFIED IN THESE NOTES, THE PLANS, THE MUTCD OR THE ENGINEER.

3. ANY TEMPORARY TRAFFIC CONTROL ITEMS, DEVICES, MATERIALS AND INCIDENTALS SHALL REMAIN THE PROPERTY OF THE CONTRACTOR WHEN NO LONGER NEEDED.

SPECIAL NOTES

THE CONTRACTOR IS ADVISED THAT THE EARTHWORK CALCULATIONS SHOWN ARE FOR INFORMATION ONLY. ASSUMPTIONS FOR SHRINKAGE AND SWELL FACTORS ARE THE CONTRACTOR'S RESPONSIBILITY.

TOTAL EXCAVATION: 2940 CY
TOTAL EMBANKMENT: 4541 CY
TOTAL EMBANKMENT BENCHING: 4111 CY

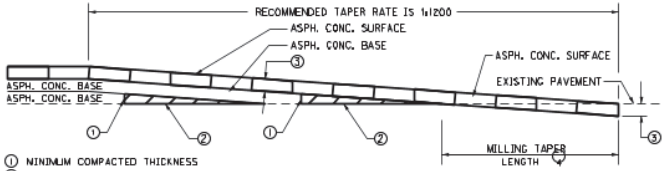

① MINIMUM COMPACTED THICKNESS
② ASPHALT MIXTURE FOR LEVELING AND WEDGING OR NEXT COURSE OF ASPHALT MIXTURE.
③ ASPHALT SURFACE THICKNESS (FULL DEPTH)
④ MILL EXISTING PAVEMENT TO RECEIVE ASPHALT SURFACE FULL DEPTH (EDGE KEY).

$$\text{TAPER LENGTH (ft)} = \frac{T\ (\text{in}) \times \text{TAPER RATE}}{12}$$

FOR A TAPER RATE OF 1x200
TAPER LENGTH = 125 FEET WHEN T = 1.25 inches
TAPER LENGHT = 150 FEET WHEN T = 1.50 inches

EDGE KEY

Work under this item shall include cutting out the existing asphalt surface to a minimum depth and width as shown, so the new surface may heel into the existing surface. The contract unit price bid per linear foot for EDGE KEY shall include all necessary materials, labor equipment, etc. to perform the work and dispose of the bituminous material removed.

RIGHT OF WAY SUMMARY

PARCEL NO.	OWNER(S)	TOTAL AREA OF TRACT		PERMANENT R/W ACQUIRED		EASEMENTS		AREA SEVERED				EXCESS PURCHASED		PORTION REMAINING		SEWER SYSTEM TYPE	SEWER SYSTEM AFFECTED BY PROJECT		BUILDINGS ACQUIRED NUMBER				SOURCE OF TITLE
						PERMANENT	TEMPORARY	LEFT		RIGHT													
		ACRES	SQ. FT.	ACRES	SQ. FT.	SQ. FT.	SQ. FT.	ACRES	SQ. FT.	ACRES	SQ. FT.	ACRES	SQ. FT.	ACRES	SQ. FT.		YES	NO	C	R	F	S	
P-1	EDDIE D ROBERTS KAREN ROBERTS	1.35			2924									1.28									DB 108 PG 436
P-2	REDONNA EVANS		9583		1784										7799								DB 203 PG 759
P-3	HOMER ROBERTS RUTH ROBERTS HEIRS	16.93			958									16.91									DB PG
P-4	GLENN ALLEN BOGGS	1.84			2367									1.79									DB 203 PG 598

COMMONWEALTH OF KENTUCKY
DEPARTMENT OF HIGHWAYS
TEAM KENTUCKY TRANSPORTATION CABINET

DRAWING TITLE: COORDINATE CONTROL AND RIGHT OF WAY SUMMARY
KY 2057 OVER CUTSHIN CREEK

ITEM NO. 11-10214
COUNTY OF LESLIE
SHEET NO. R2B

OpenRoads Designer v10.16.2.267
USER: gdchilders
FILE NAME: C:\PWWORKING\MT\D0552767\066B00055N_TYPICAL.DGN

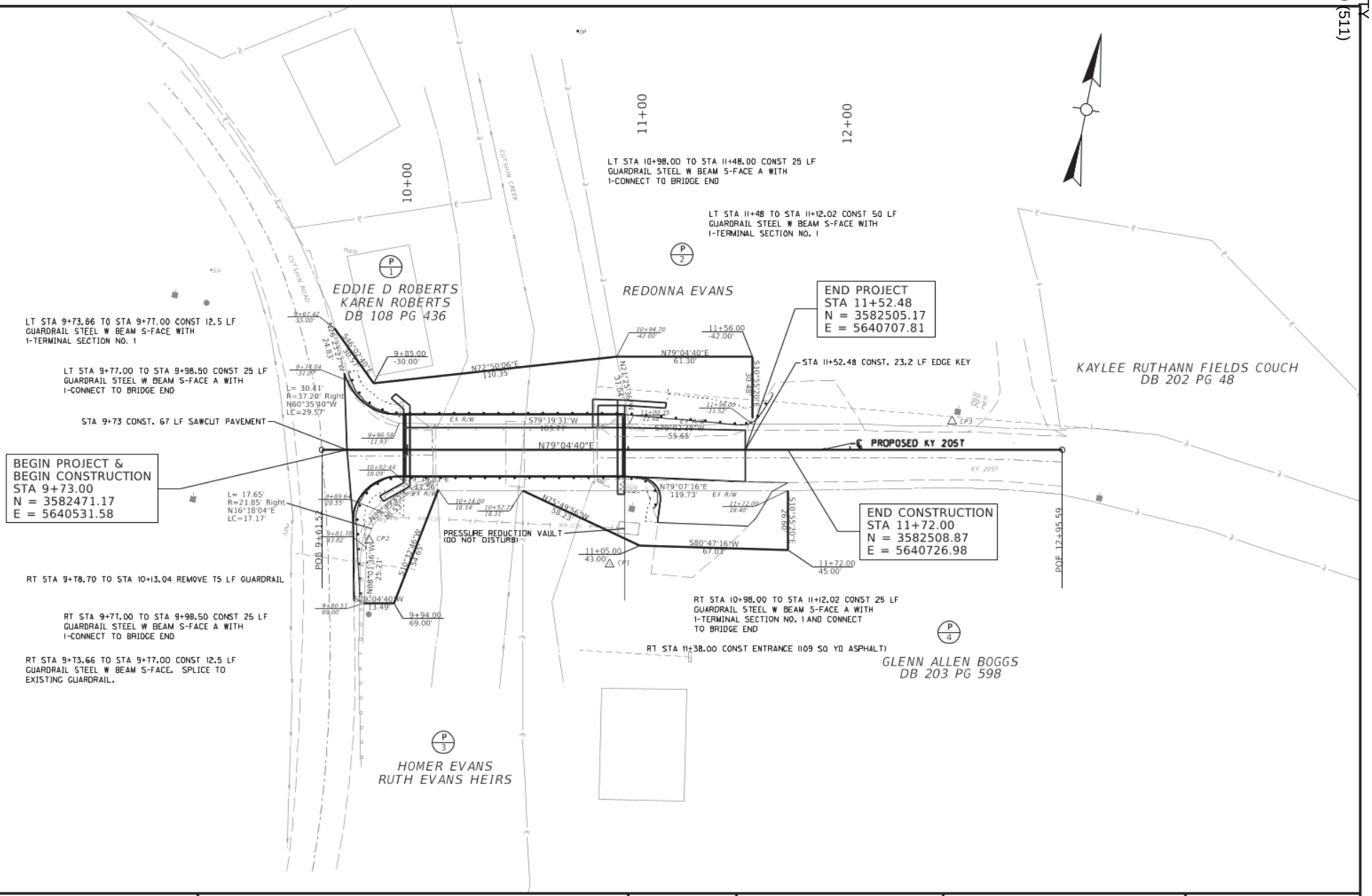

COMMONWEALTH OF KENTUCKY
DEPARTMENT OF HIGHWAYS

DRAWING TITLE: PLAN
KY 2057 OVER CUTSHIN CREEK

HORIZONTAL SCALE
SCALE: 1"=20'

0' 20' 40' 80'

STA 9+73 TO 11+72

ITEM NO. 11-10214
COUNTY OF LESLIE
SHEET NO. R3

OpenRoads Designer v10.16.2.267
USER: gdchilders
FILE NAME: C:\PWWORKING\JMT\D0552767\068B055N_PLAN_PROFILE.DGN

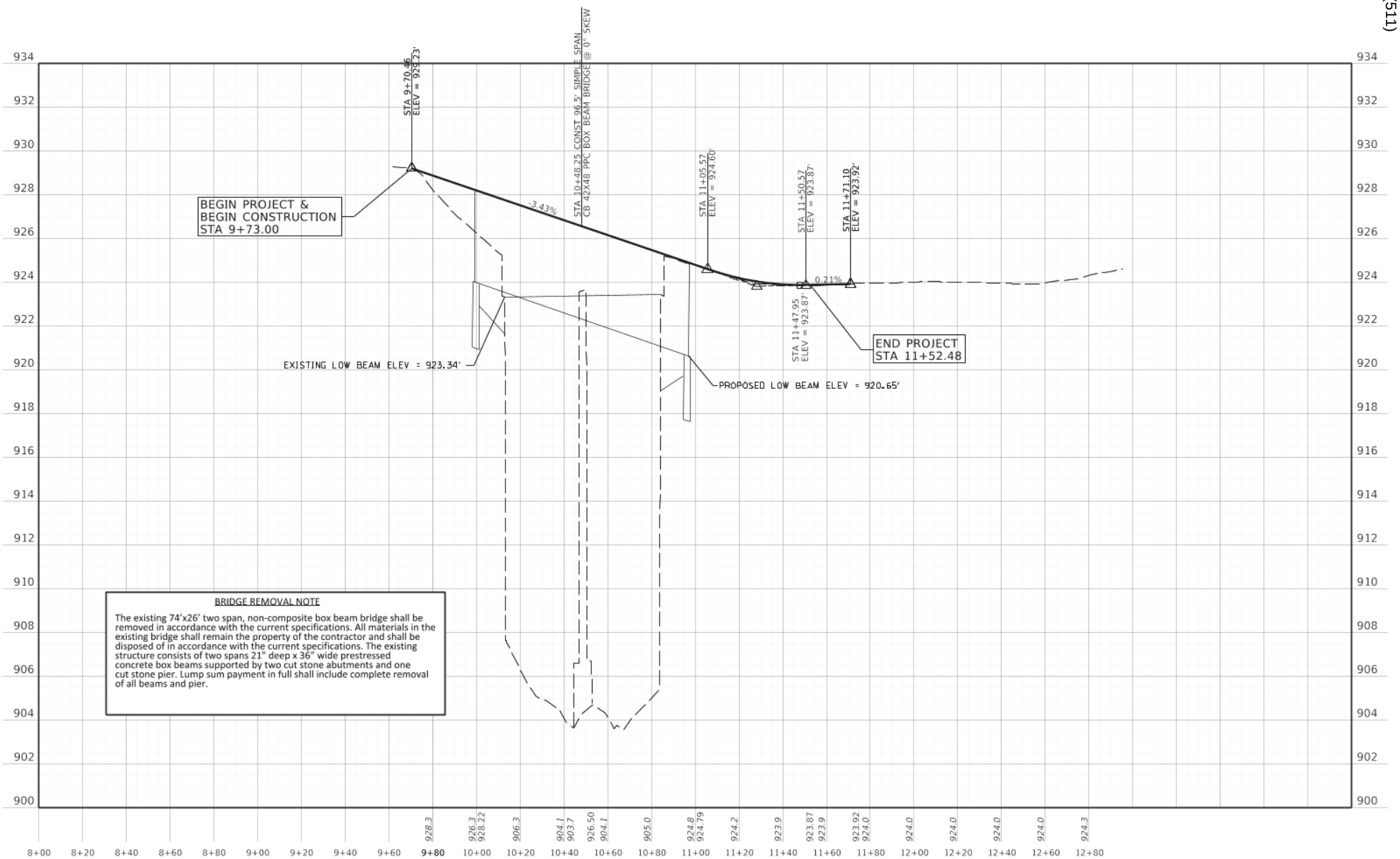

BRIDGE REMOVAL NOTE

The existing 74'x26' two span, non-composite box beam bridge shall be removed in accordance with the current specifications. All materials in the existing bridge shall remain the property of the contractor and shall be disposed of in accordance with the current specifications. The existing structure consists of two spans 21" deep x 36" wide prestressed concrete box beams supported by two cut stone abutments and one cut stone pier. Lump sum payment in full shall include complete removal of all beams and pier.

COMMONWEALTH OF KENTUCKY DEPARTMENT OF HIGHWAYS	DRAWING TITLE: PROFILE KY 2057 OVER CUTSHIN CREEK	0' 20' 40' 80' HORIZONTAL SCALE: 1"=20'	0' 2' 4' 8' VERTICAL SCALE: 1"=2'	STA 9+73 TO 11+52.48	ITEM NO. 11-10214 COUNTY OF LESLIE SHEET NO. R4

OpenRoads Designer v10.16.2.267 USER: gdchilders FILE NAME: C:\PWWORKING\JMT\D0552767\068B055N_PLAN_PROFILE.DGN

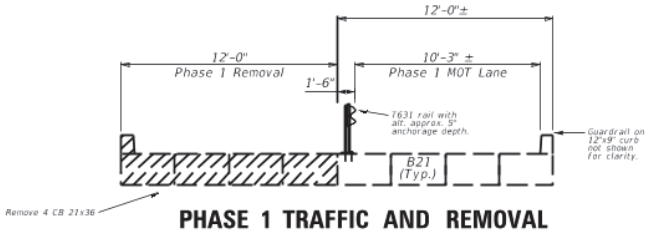

PHASE 1 TRAFFIC AND REMOVAL
(EXIST BRIDGE)

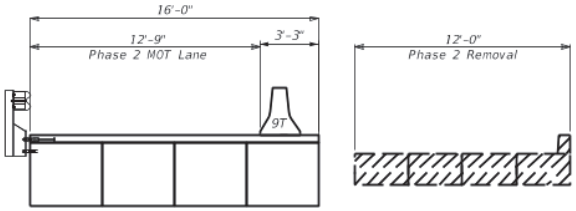

PHASE 2 TRAFFIC AND REMOVAL

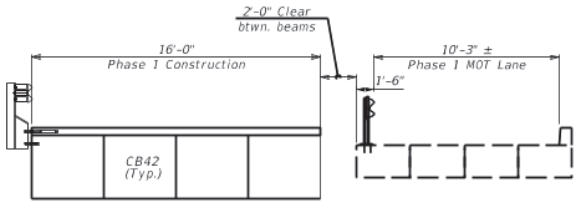

PHASE 1 CONSTRUCTION

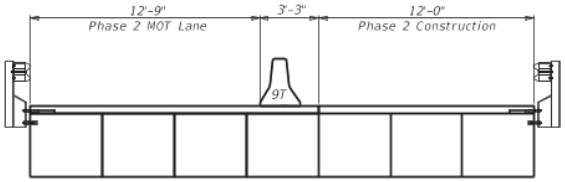

PHASE 2 CONSTRUCTION

UTILIZE TEMP BARRIER STIFFENING IN ACCORDANCE
TO STANDARD DRAWINGS (RBM-115, RBM-120-02) AS NECESSARY

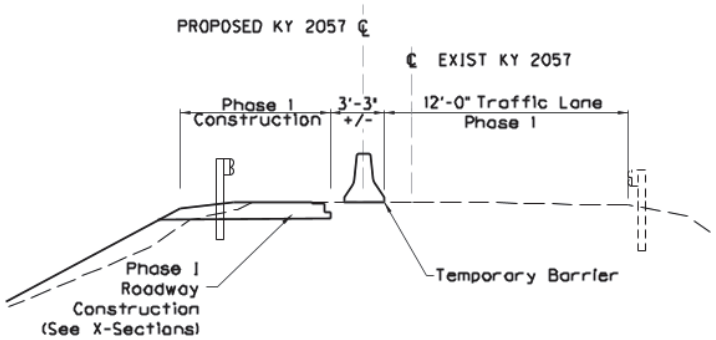

PHASE 1 CONSTRUCTION

LOOKING AHEAD
BEYOND END BENT 2

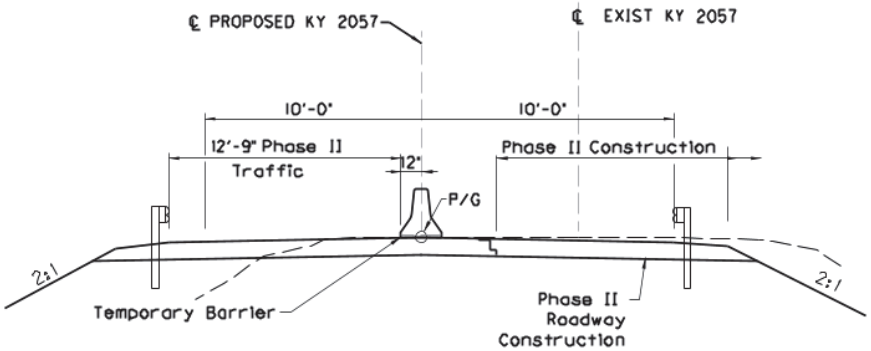

PHASE 2 CONSTRUCTION

LOOKING AHEAD

COMMONWEALTH OF KENTUCKY
DEPARTMENT OF HIGHWAYS
TEAM KENTUCKY TRANSPORTATION CABINET

DRAWING TITLE: MAINTENANCE OF TRAFFIC
KY 2057 OVER TYE FORK

ITEM NO. 11-10214
COUNTY OF LESLIE
SHEET NO. R5

OpenRoads Designer v10.16.2.267
USER: gdchilders
FILE NAME: C:\PWWORKING\JMT\D0552767\066B00055N_MOT.DGN

ECA COORDINATES

ID	EASTING	NORTHING	LATITUDE	LONGITUDE	ELEV (FT)
A	3582622.98	5640386.74	37.136044	-83.282761	953
B	3582670.38	5640781.64	37.136146	-83.281403	940
C	3582555.48	5640853.76	37.135825	-83.281166	943
D	3582342.48	5640868.83	37.135239	-83.281134	919
E	3582304.06	5640482.16	37.135162	-83.282463	983

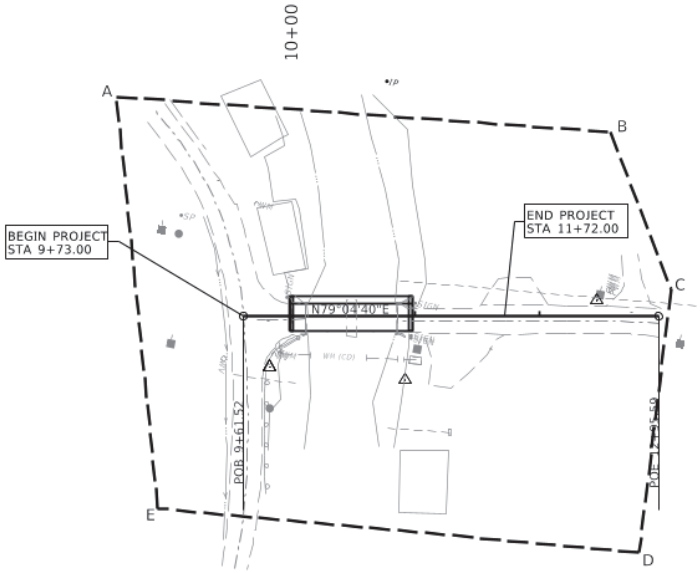

COMMONWEALTH OF KENTUCKY
DEPARTMENT OF HIGHWAYS

DRAWING TITLE: ENVIRONMENTALLY CLEARED AREA
KY 2057 OVER CUTSHIN CREEK

HORIZONTAL SCALE
SCALE: 1"=50'

0' 50' 100' 200

STA 9+73 TO 11+72

ITEM NO. 11-10214
COUNTY OF LESLIE
SHEET NO. R6

OpenRoads Designer v10.16.2.267
USER: gdchilders
FILE NAME: C:\PWWORKING\JMT\D0552767\066B00055N_ECA.DGN

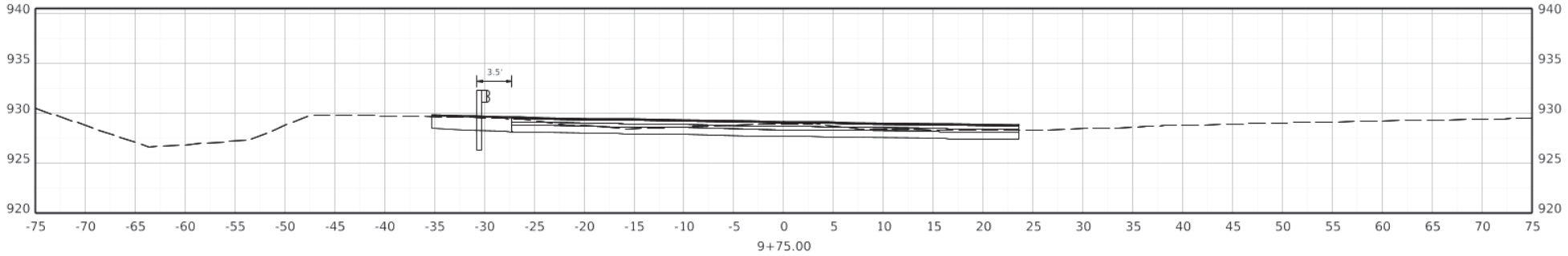

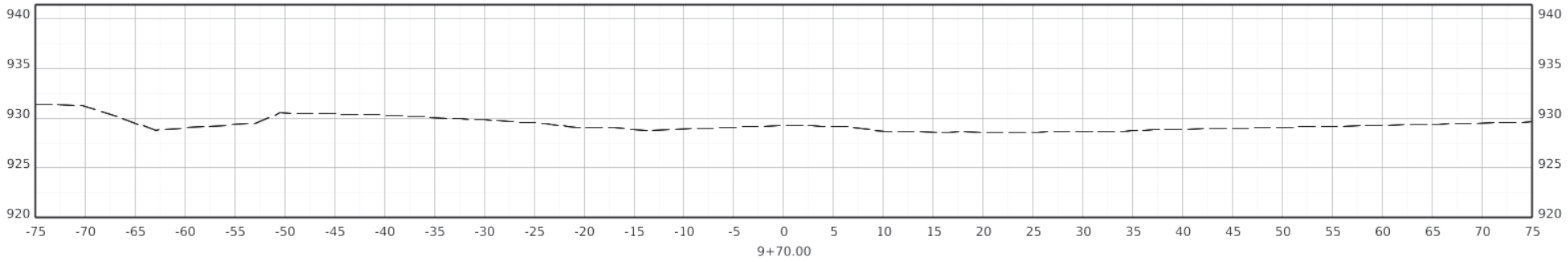

COMMONWEALTH OF KENTUCKY
DEPARTMENT OF HIGHWAYS
TEAM KENTUCKY

DRAWING TITLE: CROSS SECTIONS
KY 2057 OVER CUTSHIN CREEK

HORIZONTAL SCALE
SCALE: 1" = 5'
0' 5' 10' 20'

STA 9+70 TO 9+75

ITEM NO. 11-10214
COUNTY OF LESLIE
SHEET NO. X1

OpenRoads Designer v10.16.2.267
USER: gdchilders
FILE NAME: C:\PWWORKING\MT\D0552767\066B00055N_XS.DGN

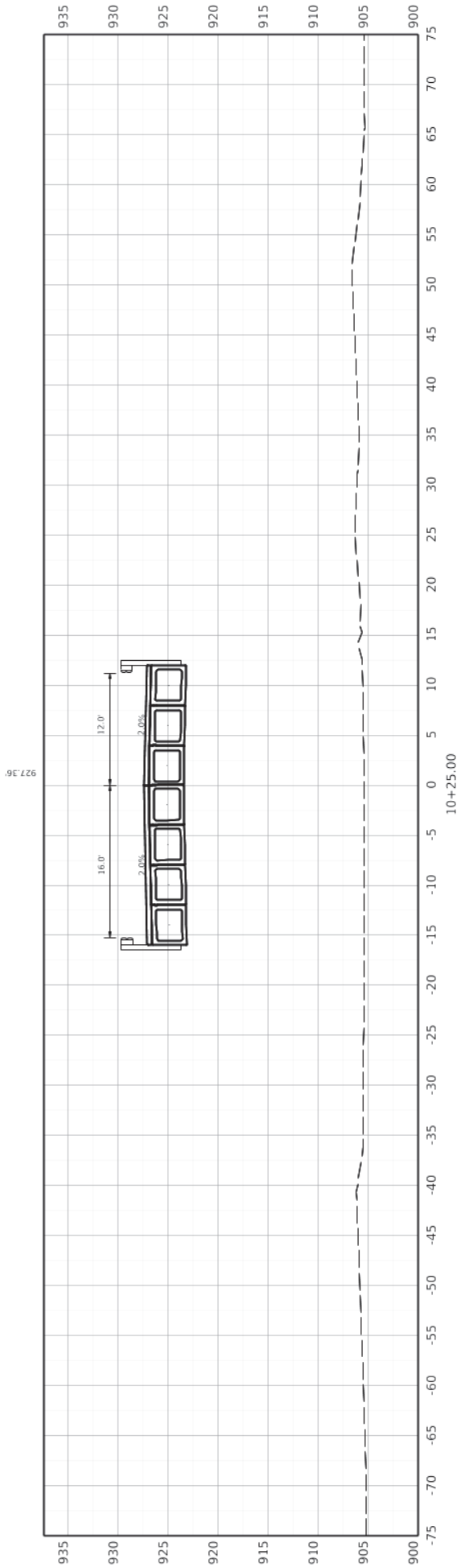

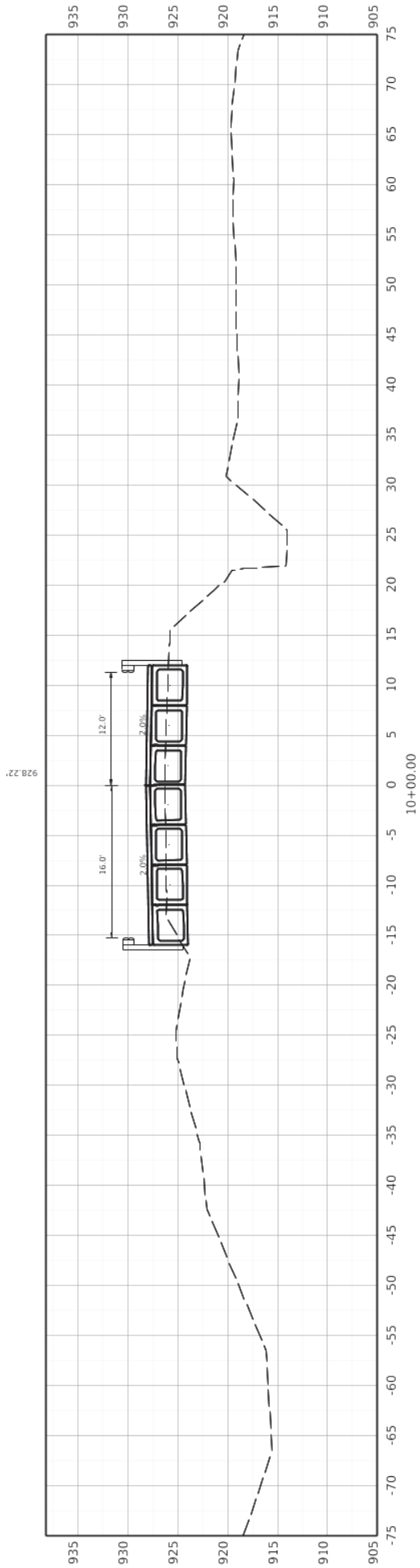

COMMONWEALTH OF KENTUCKY
DEPARTMENT OF HIGHWAYS

DRAWING TITLE: CROSS SECTIONS
KY 2057 OVER CUTSHIN CREEK

HORIZONTAL SCALE
SCALE: 1" = 5'

0' 5' 10' 20'

STA 10+00 TO 10+25

ITEM NO. 11-10214
COUNTY OF LESLIE
SHEET NO. X2

FILE NAME: C:\PWWORKING\JMTD\052767\068\B00058N_XS.DGN

USER: gotchdbrs

OpenRoads Designer v10.16.2.267

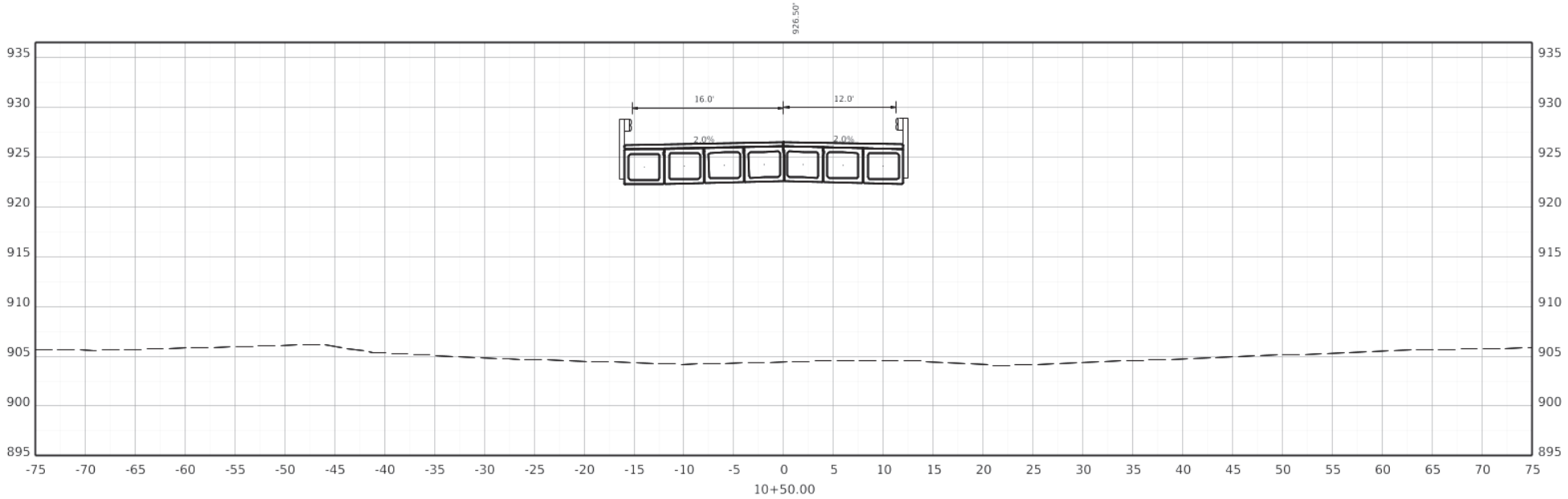

COMMONWEALTH OF KENTUCKY
DEPARTMENT OF HIGHWAYS
TEAM KENTUCKY

DRAWING TITLE: CROSS SECTIONS
KY 2057 OVER CUTSHIN CREEK

HORIZONTAL SCALE
SCALE: 1" = 5'
0' 5' 10' 20'

STA 10+50 TO 10+50

ITEM NO. 11-10214
COUNTY OF LESLIE
SHEET NO. X3

OpenRoads Designer v10.16.2.267
USER: gdchilders
FILE NAME: C:\PWWORKINGJMT\D0552767\066B00055N_XS.DGN

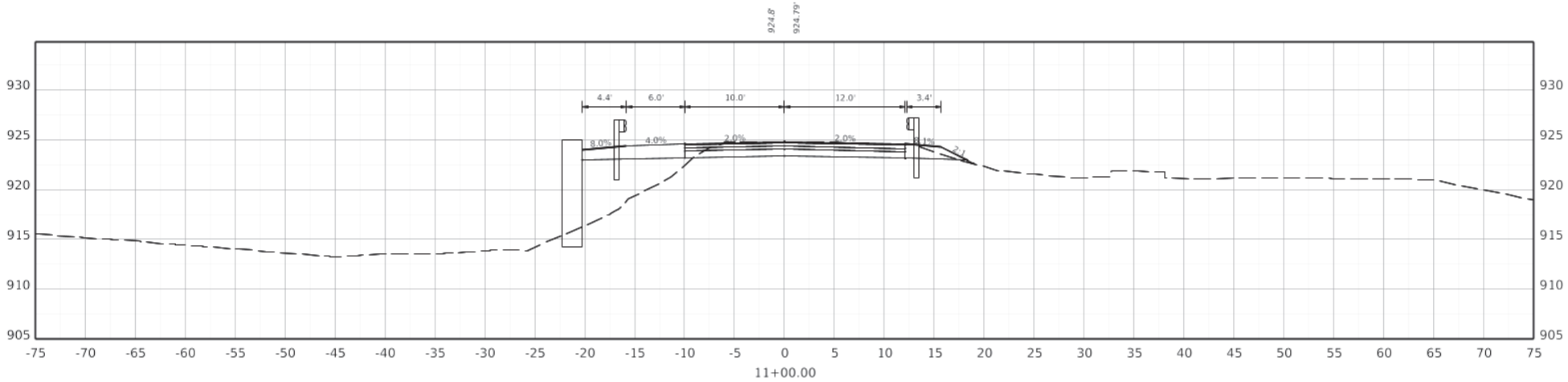

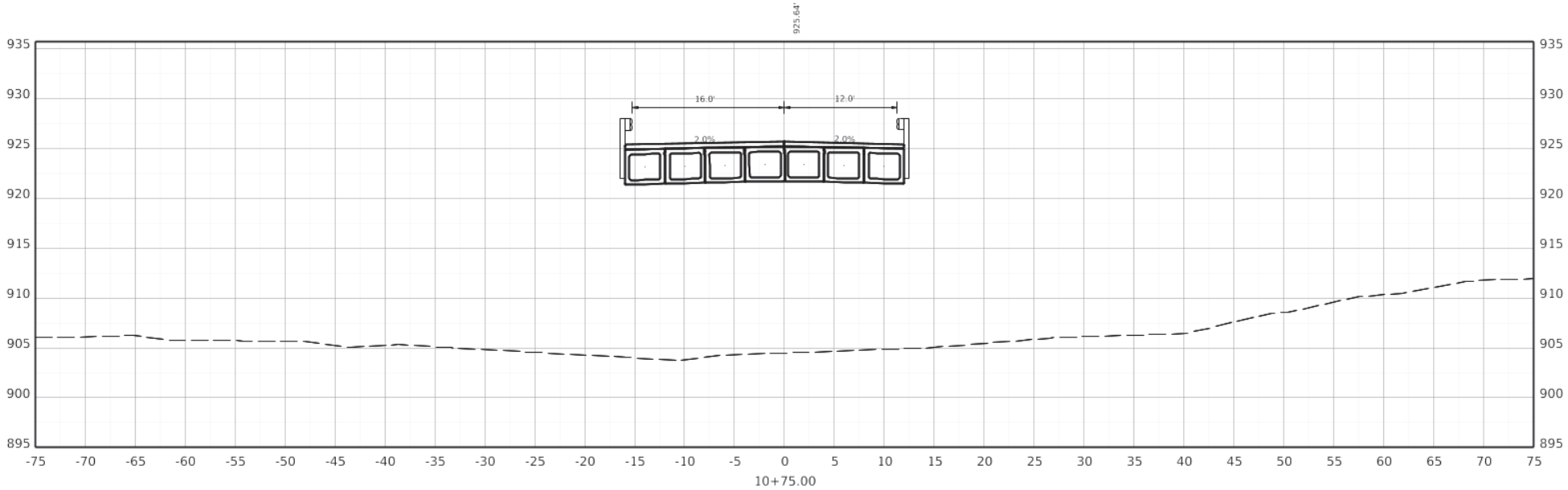

COMMONWEALTH OF KENTUCKY
DEPARTMENT OF HIGHWAYS
TEAM KENTUCKY

DRAWING TITLE: CROSS SECTIONS
KY 2057 OVER CUTSHIN CREEK

HORIZONTAL SCALE
SCALE: 1" = 5'
0' 5' 10' 20'

STA 10+75 TO 11+00

ITEM NO. 11-10214
COUNTY OF LESLIE
SHEET NO. X4

OpenRoads Designer v10.16.2.267
USER: gdchilders
FILE NAME: C:\PWWORKING\MT\D0552767\066B00055N_XS.DGN

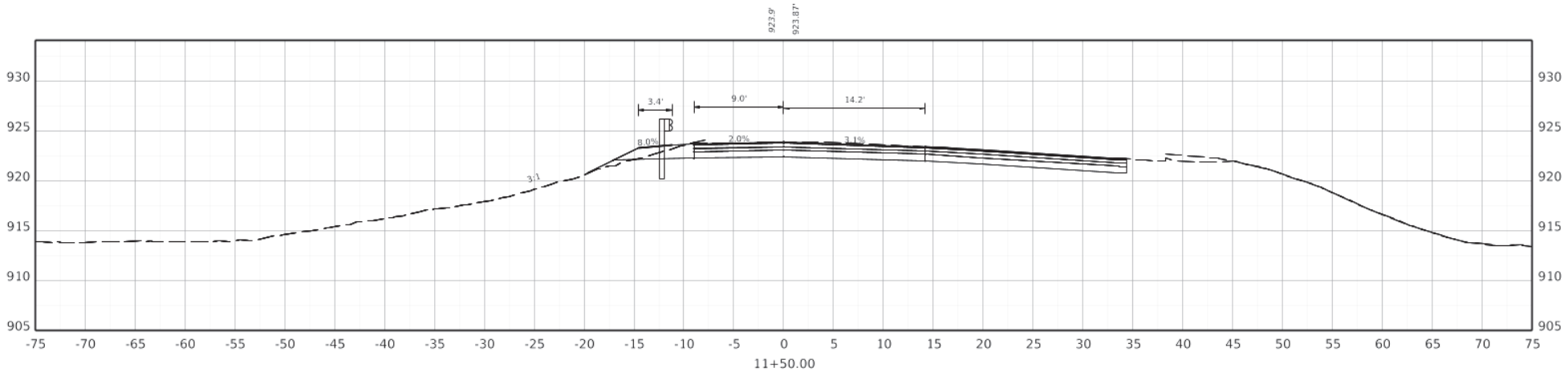

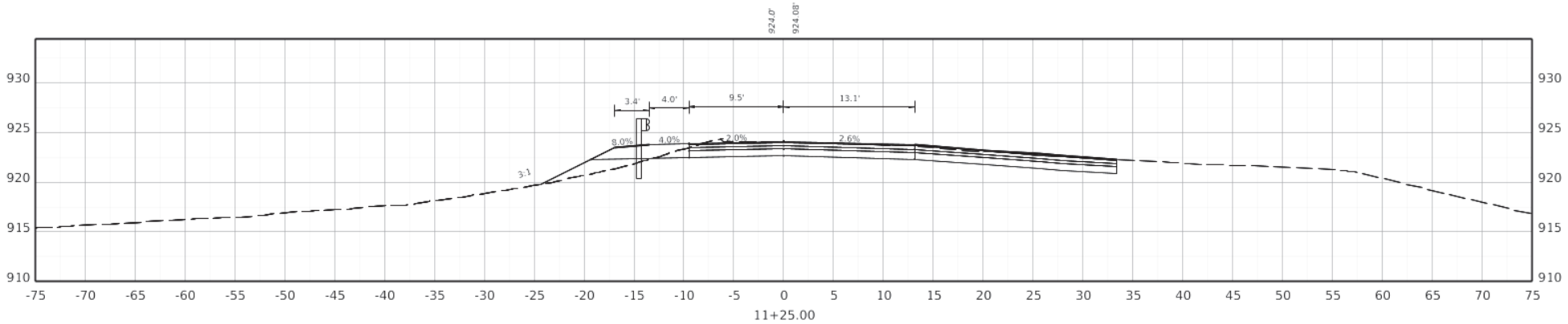

COMMONWEALTH OF KENTUCKY
DEPARTMENT OF HIGHWAYS

DRAWING TITLE: CROSS SECTIONS
KY 2057 OVER CUTSHIN CREEK

HORIZONTAL SCALE
SCALE: 1" = 5'

STA 11+25 TO 11+50

ITEM NO. 11-10214
COUNTY OF LESLIE
SHEET NO. X5

OpenRoads Designer v10.16.2.267
USER: gdchilders
FILE NAME: C:\PWWORKING\JMT\D0552767\066B00055N_XS.DGN

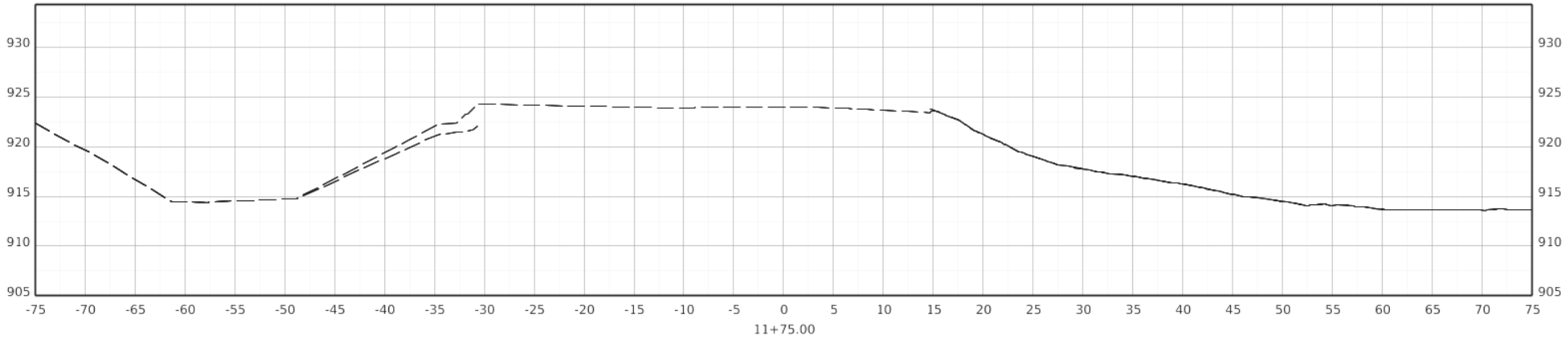

COMMONWEALTH OF KENTUCKY
DEPARTMENT OF HIGHWAYS
TEAM KENTUCKY

DRAWING TITLE: CROSS SECTIONS
KY 2057 OVER CUTSHIN CREEK

HORIZONTAL SCALE
SCALE: 1" = 5'

0' 5' 10' 20'

STA 11+75 TO 11+75

ITEM NO. 11-10214
COUNTY OF LESLIE
SHEET NO. X6

OpenRoads Designer v10.16.2.267
USER: gdchilders
FILE NAME: C:\PWWORKING\MT\D0552767\066B00055N_XS.DGN

SPECIFICATIONS : References to the Specifications are to the current edition of the Kentucky Department of Highways Standard Specifications for Road and Bridge Construction including any current supplemental Specifications. All references to the AASHTO Specifications are to the current edition of the AASHTO LRFD Bridge Design Specifications.

DESIGN LOAD: This bridge is designed for KYHL-93 live load, (i.e. 1.25xAASHTO HL93 live load). This bridge is designed for a future wearing surface of 15 psf.

MATERIAL SPECIFICATIONS: AASHTO Specifications or ASTM, current edition, as designated below shall govern the materials furnished.

MATERIALS DESIGN SPECIFICATIONS:

For Class "B" Concrete	f'c = 2500 psi
For Class "A" Reinforced Concrete	f'c = 3500 psi
For Class "AA" Reinforced Concrete	f'c = 4000 psi
For Steel Reinforcement	fy = 60000 psi
For Steel Piles	fy = 50000 psi

PREFORMED CORK EXPANSION JOINT MATERIAL: Preformed Cork Expansion Joint Material shall conform to subsection 807.04.02 (Type II) of the Kentucky Department of Highways Standard Specifications. Cost of preformed cork is to be included in the unit bid price for prestressed beams.

CONCRETE: Class "AA" Concrete is to be used throughout the superstructure and in the portions of the substructure above the tops of caps. Class "A" concrete is to be used in the substructure below the caps. Prestressed beam concrete shall be in accordance with the plans and specifications.

REINFORCEMENT: Dimensions shown from the face of concrete to bars are to center of bars unless otherwise shown. Clear distance to face of concrete is 2" unless otherwise noted. Spacing of bars is from center to center of bars. Any reinforcing bars designated by suffix "e" in the plans shall be epoxy coated in accordance with section 811.10 of the Standard Specifications. Any reinforcing bars designated by suffix "s" in a Bill of Reinforcement shall be considered a stirrup for purposes of bend diameters.

CONSTRUCTION IDENTIFICATION: Apply stencils for structures in accordance with Standard Drawing BGX-006, c.e. The Contractor shall furnish all plans, equipment, and labor necessary to do the work for which no direct payment will be made.

BEVELED EDGES: All exposed edges shall be beveled 3/4", unless otherwise shown.

SLOPE PROTECTION: Slope Protection at abutments shall be dry cyclopean stone riprap in accordance with the plans and specifications. Geotextile Fabric, Class 1 shall be placed between the embankment and the slope protection in accordance with Standard Specifications 214 and 843. Payment for Geotextile Fabric, Class 1, shall be considered incidental to the unit price bid for Dry Cyclopean Stone Riprap.

COMPLETION OF THE STRUCTURE: The Contractor is required to complete the structure in accordance with the plans and specifications. Material, labor, or construction operations not otherwise specified, are to be included in the bid item most appropriate to the work involved and otherwise considered incidental to the Contract. This may include cofferdams, shoring, excavations, backfilling, removal of all or parts of existing structures, phase construction, incidental materials, labor, or anything else required to complete the structure.

SHOP DRAWINGS: The fabricator shall submit all required shop plans, by email to SHOP_066B00055N@docs.e-Builder.net, for review. These submissions shall depict the shop plans in .PDF format, as either 11"x17" or 22"x36" sheets. When any changes to the design plans are proposed, the shop drawings shall identify the proposed changes with revision clouds and notes. Designers will make review comments on these electronic submissions as needed and, if required, shall return them to the fabricator for corrections and resubmittal. Upon acceptable reconciliation of all comments, files shall be sent to the Bridge Program GEC Shop Plan Coordinator for distribution. Only plans submitted directly to the Shop Plan Coordinator will be distributed. Additionally, only plans electronically stamped "Distributed by The Bridge Program GEC Team" are to be used for fabrication.

UTILITIES: Before beginning work, locate all existing utilities. Consider location of utilities shown on the drawings to be approximate and for informational purposes only. The Department does not warrant the locations and assumes no responsibility for the accuracy or completeness. The Contractor must make his own determination. Except as shown on the Plans, work around and do not disturb existing utilities.

VERIFYING FIELD CONDITIONS: The contractor shall field verify all dimensions before ordering material. New material that is unsuitable because of variations in the existing structure shall be replaced at the contractor's expense.

DIMENSIONS: Dimensions are for a normal temperature of 60 degrees Fahrenheit. Layout dimensions are horizontal dimensions.

SUPERSTRUCTURE SLAB: The superstructure slab shall be poured continuously from end to end of slab before the concrete is allowed to set. The Contractor may change the pouring sequence with the written approval of the Engineer.

SLAB THICKNESS: The slab thickness shown in the proposed typical section is taken at mid-span. Due to beam camber and in order to achieve the design profile, the slab will be approximately 5/8" thicker at the supports. No additional payment will be made for any additional slab concrete due to beam camber in excess of the Designer's assumption. No additional concrete above plan quantity should be placed without the approval of the Engineer. If applicable, guardrail inserts are to be placed in such a way that accommodates tolerances for guardrail height.

MASTIC TAPE: Apply mastic tape at bridge ends in accordance with Standard Drawing BGX-022, c.e. The Contractor shall furnish all plans, equipment, and labor necessary to do the work for which no direct payment will be made.

TEMPORARY SUPPORTS: Temporary Supports or shoring will not be permitted under the beams when pouring the concrete deck slab or when taking "top of beam" elevations.

ARMORED EDGE: Fabricate armored edge to match cross slope and parabolic crown at each end of bridge.

ELASTOMERIC BEARING PADS: Elastomeric Bearing Pads shall conform to the AASHTO LRFD Bridge Construction Specifications, Section 18.
(A) Bearings shall be Low Temperature Grade 3 with a durometer hardness of 50 and shall be subjected to the load testing requirements corresponding to Design Method A.

FOUNDATION PREPARATION: Foundation Preparation shall be in accordance with the Special Note for Foundation Preparation.

Foundation excavations should be properly braced/shored to provide adequate safety to persons working in or around excavations. Bracing should be performed in accordance with applicable federal, state and local guidelines. Temporary shoring, sheeting, cofferdams, and/or dewatering methods may be required to facilitate foundation construction. It should be anticipated that groundwater will be encountered at foundation locations within the flood plain.

Temporary shoring, bracing, sheeting, cofferdams and dewatering shall be included in the Lump Sum Bid for Foundation Preparation.

STRUCTURAL GRANULAR BACKFILL : Materials for Structural Granular Backfill shall be in accordance with Section 805 of the Specifications. Material is incidental to the lump sum bid price for Foundation Preparation.

CONCRETE SEALER: Apply concrete sealer in accordance with the Special Note for Concrete Sealing.

MECHANICAL REINFORCEMENT COUPLERS : Mechanical couplers are to be in accordance with Section 602 of the Specifications and are to provide a mechanical tension splice equivalent to 125% of the specified yield strength of the bar being spliced. Any adjustment to the bar lengths required for the coupler type being used shall be incidental to the unit bid price for Mechanical Reinforcement Couplers.

CONCRETE BONDING AGENTS : An epoxy bond coat conforming to Sections 511 and 826 of the Specifications or a structural adhesive conforming to the Special Note for Structural Adhesives with Extended Contact Time shall be used on the surface of any concrete joint specified as "bonded" in these plans. The cost of this work, including all labor, tools, and materials, is to be incidental to the unit bid price for the class of concrete being bonded.

DRIP STRIP: Install drip strips in accordance with the Special Note for Structures with Over the Side Drainage and Type II Railing.

PILING: Piling shall be driven to practical refusal as defined on the pile record sheet.
Test piles shall be driven where designated on the plans to determine the length of pile required.
All test piles shall be accurately located so that they may be used in the finished structure.

PILE POINTS: Per the Geotechnical Report, provide pile points for all piles. Pile points shall be in accordance with Section 604 of the Specifications and of the type shown on the pile record sheet.

PRE-DRILLING END BENT PILES: Use 30-inch diameter holes with a minimum embedment of 5 feet into sound bedrock and a minimum of 10 feet total embedment below the cap. The pile must be struck with a pile hammer once in place to ensure that adequate capacity and refusal has been achieved. The rock socket shall then be filled with Class B concrete conforming to Section 601 of the Standard Specifications; however, provide a mix with a 6 to 10 inch slump at the time of placement. High range water reducing and retarding admixtures and Class F flyash may be used to obtain this slump. Casing or other methods of maintaining an open hole above the rock socket may be needed for installation of the piles and concrete. If casing is used, it must be removed, as the hole above the rock socket is backfilled with sand or pea gravel. Care must be taken that the piling is located correctly since the piling is an integral part of the structure and protrudes up into the cap. The cost of all materials, labor, and equipment required to pre-drill, concrete, and backfill the holes shall be included in the price per linear foot for "Pre-drilling for Piles". Pay limits are measured from the bottom of the concrete substructure to the bottom of the hole.

DAMAGE TO THE STRUCTURE: The Contractor shall bear full responsibility and expense for repair of any and all damage to the structure, should such damage result from the Contractor's actions. The Contractor is completely responsible for the stability of the structure from the time of mobilization until after the bridge has been reopened to normal traffic following completion of all work required in the Contract. After completion of all operations, the structure and site shall be left in a condition that is in accordance with Section 105.12 of the Specifications.

REMOVE STRUCTURE: This pay item consists of the two-phase removal of the existing bridge as depicted in the plans. During Phase 1 concrete removal, care shall be taken to not damage the remaining bridge components.

The existing structure shall be removed in accordance with the current specifications. All material in the existing bridge shall remain the property of the contractor and shall be disposed of in accordance with the current specifications.

DISPOSAL OF MATERIALS: All materials and debris removed from or beneath the bridge shall become the property of the Contractor and shall be removed from the right-of-way.

BEFORE YOU DIG: The Contractor shall be responsible for all requirements and conformation with the Underground Facility Damage Prevention Act of 1994. The Contractor will be responsible for locating any utilities on this project. All underground utilities shall be located prior to construction. Any utilities disturbed or damaged as a result of the Contractor's operations will be repaired to the satisfaction of the utility owner at the Contractor's expense. The Contractor is advised to call (800) 752-6007 a minimum of two working days prior to excavation for information on the location of some, but not necessarily all underground utilities.

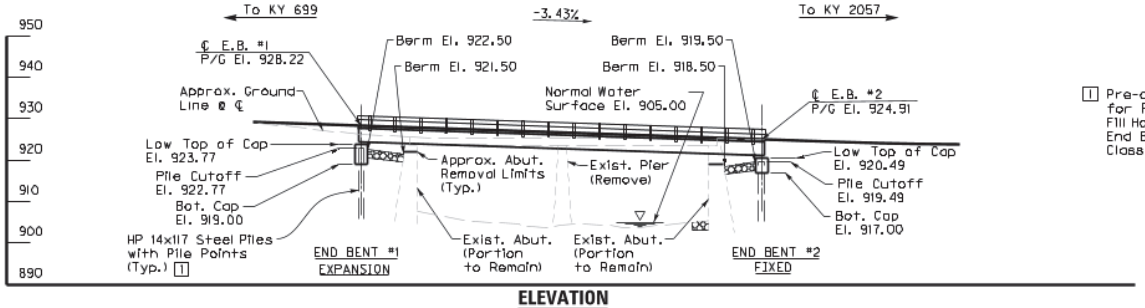

ELEVATION

96'-6" Simple Span CB42X48 PPC Box Beam Bridge
Live Load 125% of HL-93 (KYHL-93)
28'-0" Bridge Roadway Width - 90° Skew Rt.

1 Pre-drill 2'-6" Diameter Holes for Piles into Bedrock. Fill Holes up to Bottom of End Bent Caps with Class "B" Concrete.

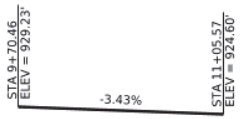

PROFILE GRADE

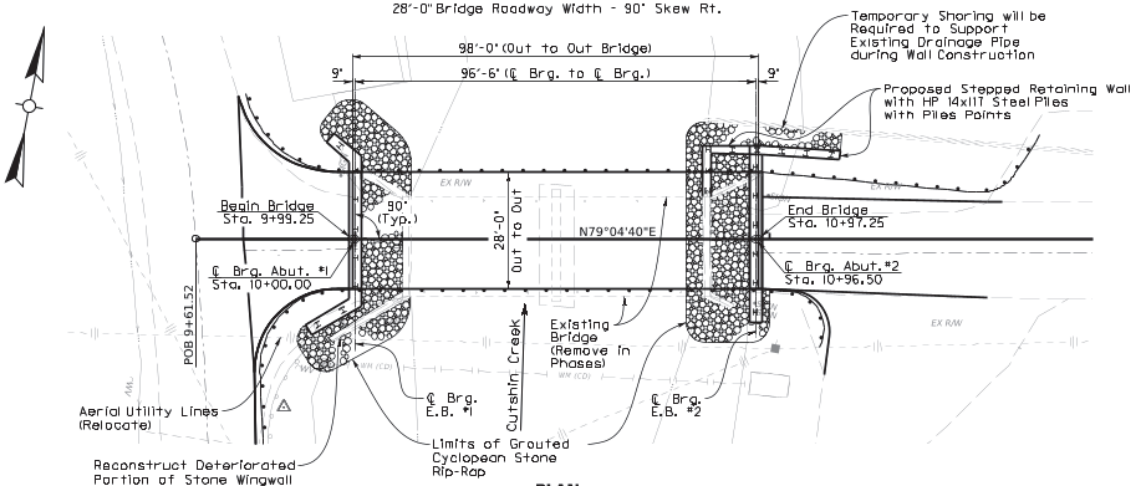

PLAN

(Superstructure Not Shown)

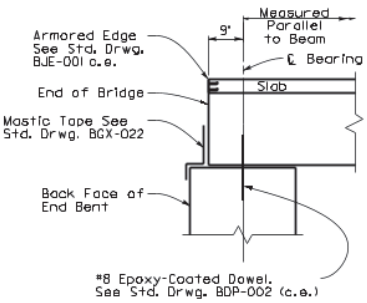

END OF BRIDGE DETAIL

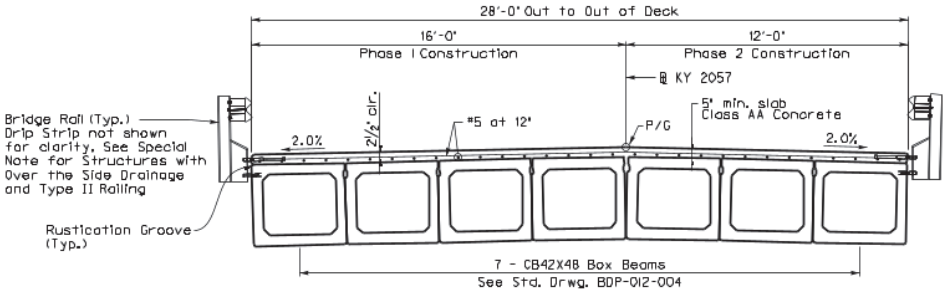

TYPICAL SECTION

Note: All reinforcement shall be epoxy coated.

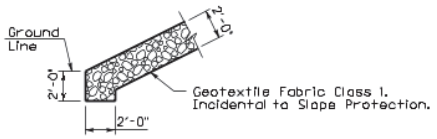

TOE OF SLOPE DETAIL

COMMONWEALTH OF KENTUCKY DEPARTMENT OF HIGHWAYS	REVISION / DATE	PREPARED BY JMT	DATE: 2/23/2023	CHECKED BY	LAYOUT	ROUTE KY 2057	ITEM NO. 11-10214	COUNTY OF LESLIE
			DESIGNED BY: Matthew Snyder	Michael Merritt	CROSSING CUTSHIN CREEK		SHEET NO. S2	DRAWING NUMBER XXXXX
			DETAILED BY: Amy Caplinger	Matthew Snyder				

OpenRoads Designer v10.16.2.267 USER: $$$$USER$$$$ DATE PLOTTED: $$$$DATE$$$$ FILE NAME: $$$$designfiles$specification$$$$

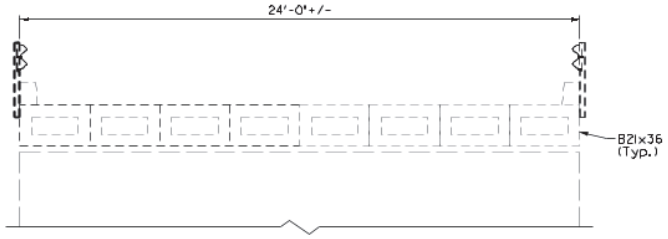

EXISTING TYPICAL SECTION

1 Remove cross-hatched portions of existing superstructure as indicated. Remove corresponding portions of abutments as necessary to facilitate Phase 1 and Phase 2 Construction. This work is incidental to the lump sum bid for Remove Structure.

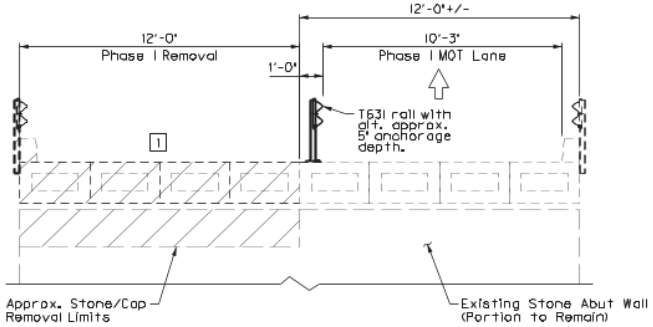

PHASE 1 REMOVAL

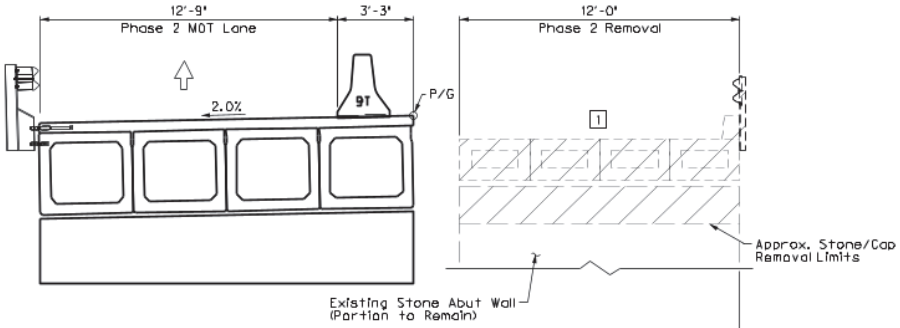

PHASE 2 REMOVAL

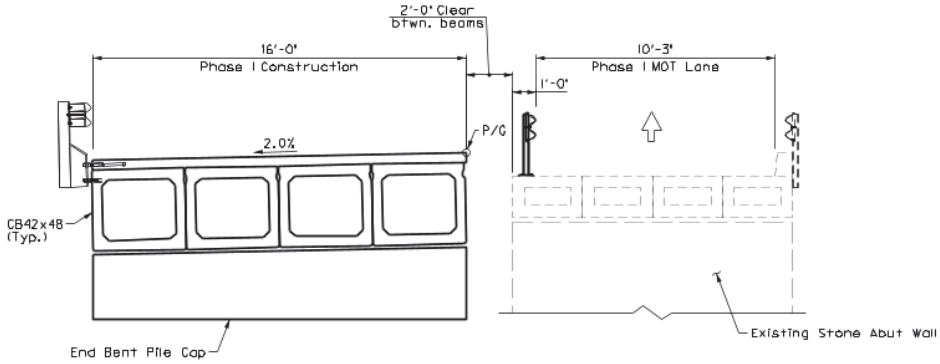

PHASE 1 CONSTRUCTION

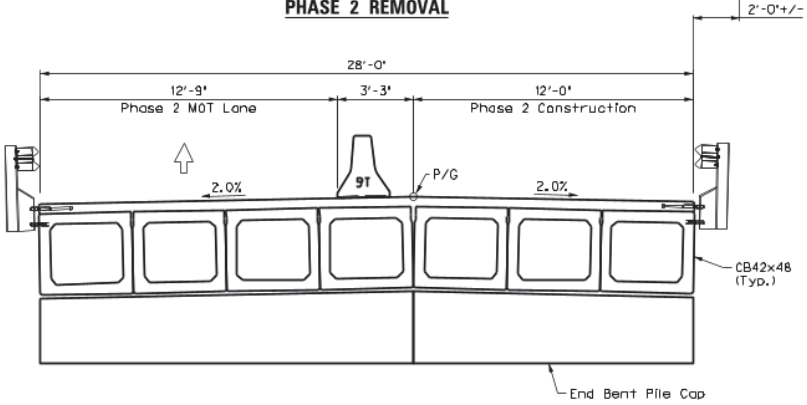

PHASE 2 CONSTRUCTION

COMMONWEALTH OF KENTUCKY DEPARTMENT OF HIGHWAYS	REVISION	DATE	PREPARED BY JMT	DATE: 2/23/2023	CHECKED BY	CONSTRUCTION PHASING	ROUTE KY 2057	ITEM NO. 11-10214	COUNTY OF LESLIE
				DESIGNED BY: Michael Merritt	Matthew Snyder	CROSSING CUTSHIN CREEK		SHEET NO. S3	DRAWING NUMBER XXXXX
				DETAILED BY: Amy Caplinger	Michael Merritt				

OpenRoads Designer v10.16.2.267 USER: $$$$USER$$$$ DATE PLOTTED: $$$$DATE$$$$ FILE NAME: $$$$designfile$specification$$$$

GEC Design Submittal (DT) (GDS1) - 1

Project:	VM D11 066B00055N Leslie	Project Number:	
Process Document:	GDS1 - 1	Overall Due Date:	
Current Workflow Step:	Finish	Step Due Date:	
Subject:	VM - SUB - Scope Verification-066B00055N		
Status:	Received		

Submittal

Submittal Type:	**Scope Verification**
Submittal Notes:	**Spawned from Design Start**

Bridge Details

District No.:	**11**	County Name:	**Leslie**
Bridge ID:	**066B00055N**	Original Bridge Scope:	**Replacement**
Facility Carried:	**KY-2057**	Bridge Scope:	
ADT:	**589**	Feature Intersect:	**CUTSHIN CREEK**
		Letting Date:	**11.16.2023**

Scope of Work Description:	**The replacement of KY 2057 over Chustin Creek, (Bridge # 066B00055N) will entail complete removal of the existing bridge and construction of a new bridge without load restrictions. The project will replace the bridge in the approximate same location with generally the same current geometrics (bridge width, length, hydraulic opening, etc.) to avoid environmental impacts, utility impacts, and minimize the need for new right of way. Approach roadway pavement will be replaced in the direct vicinity of the bridge. Part-width construction will be utilized. One lane of traffic will be maintained with temporary signals during the construction by phasing the work. There will not be an on-site diversion. Right-of-way and temporary construction easements will be required.**

Files

Plans:		Geotech Report:	
Bridge Hydraulic Report (.zip file):		Itemized Construction Cost Estimate:	
Quality Assurance Document:		Proposed Legal Description:	
KMZ (Google Earth):		Final Quantities and Estimate:	
Special Notes & Provision:		Bridge Load Rating:	
CAP Notes:		Design Calculation:	
Environmental Document(s):		Utility Agreements:	
ROW Clearance Letter:		Utility Impact Notes:	
DGN Files (.zip file):		Approved Detour Route:	

Scope Change Discussion

Recommended Bridge Scope:	**Replacement**
Scope Change Discussion:	

Due Date Assignment

Oversight Lead Review Due By:	**10.26.2022**	PD Oversight Lead Final Review Due By:	**10.28.2022**
DQM Audit Due By:			

Estimated Costs

SYP R Budget:	**0**	Current Estimate - ROW:	**8000**
SYP U Budget:	**0**	Current Estimate - Utility:	**25000**
SYP C Budget:	**1030000**	Current Estimate -	**1033902**

		Construction:	

Cost Estimate Discussion:	**Updated estimate will be provided with Preliminary Plan submittal.**

Existing Bridge Geometrics

Existing superstructure depth (feet to 0.1):	**1.8**	Existing Bridge Length (feet to 0.1):	**74.1**
Existing out-to-out bridge width (feet to 0.1):	**24.2**	Existing bridge skew (nearest degree):	**0**
Existing bridge roadway width (feet to 0.1):	**22.6**	Existing predominate approach roadway width (feet to 0.1):	**22**
Existing bridge railing:	**Guardrail**	Existing number of spans:	**2**

Hydraulics

Hydraulic Determination:	**Other reason for Level II analysis**	Existing hydraulic opening (nearest sq ft):	**9999**

Additional drainage concerns or notes:	**Existing hydraulic opening will be determined when survey is completed.**

Geotechnical

Geotechnical site conditions:	**Visual rock outcroppings at site, Visual observation of rock in stream bed, crossing or railroad, Rock Probe (provide depth in notes), Other (see Geotechnical site conditions notes)**	Additional geotechnical investigation required:	**Yes**
Sketch of proposed boring plan (if needed):	**Geotech_Scope_Verification_Report-066B00055N-Supplementary Info.pdf**		

Geotechnical site conditions notes from Geotech Engineer:	**Assuming not a Complex Bridge. Sandstone bedrock exposed consistently in west half of stream bed. Scour of existing center pier foundations of up to approximately 3 feet. Plan is to replace with a single span structure. Existing instability at Southwest corner of existing bridge. West bank is tall, over steepened, and marginally stable. Discussions on**

	site of soil nail wall being planned by District for west bank.

Right of Way

Railroad Parcel Involvement:	**No**	Approximate number of parcels impacted:	**2**
Dead-end route with four (4) or fewer lots from PVA Map?:	**No**	Right-Of-Way Expected:	**Yes**
ROW/Easements:	**Other reasons (define)**		

Existing Right of Way Notes:	
Existing improvements impacted within project footprint:	

Utilities

Existing Utilities:	**Transmission lines evident, Overhead utility lines that could be impacted by construction activities such as crane swing path, Water Line Location, Utility Poles (Type & Number of lines)**	Draft | Final | Change Order:	**Utility Agreement Submittals Only - Select One**
Potential utility impacts and providers:	**Transmission lines running along south side of approach, American Electric Power. Watermain trenched in bedrock and capped with concrete south side of bridge. The AEP poles are approximately 10-12 feet from edge of approach roadway. Do not anticipate impacting if widening is to the north.**	Agreement Type:	**Select One**
		Utility Type:	**Select One**
		Utility Type (Other):	**To be completed if Utility Type selected above is**

		Utility Cost:	**"Other"**
		KYTC Encroachment Permit Required?:	

Environmental

Cultural Resources:	**Houses/structures visible from the bridge, Buried utilities located adjacent to the structure, Bedrock visible in channel or along banks of stream**	Ecology:	**Sedimentation visible in stream, Visible evidence of scour or wood debris accumulation**
Hazmat:	**N/A**	Other:	**N/A**
Environmental Constraints Notes:	**Potential habitat for Bats, KY Arrow Darter and Snuffbox Mussel. Abandoned building in NW quadrant of bridge site. Estimate it has not been used in 30 years. No environmental concerns exist to prevent bridge from being replaced.**		

Construction Delivery Restrictions

Materials Delivery Access Restrictions:	**No**
Roadway/Bridge access restrictions Notes:	**No restrictions for construction equipment or delivery vehicles.**

MOT/Detour Routes

Anticipated MOT Type:	**03 Part-Width Construction**	Length of detour on similar owner/class/type roadway:	**12.4**
Have the detour routes been driven?:	**N/A**	Detour route has lower posting:	**No**
Truck Weight		Sketch of detour	

Classification of roadway on detour route:	**A**	route:	**Leslie 066B00055N Detour Map.pdf**

Detour Routes Notes:	**Approximately 60% of the detour route is class A and 12.4 miles in length. Part width construction and slight over build is practical and anticipated to be economical.**
Discussion of Crash History or concerns:	**There have been five collisions in the last 5 years within the general vicinity of this structure but the bridge does not seem to have contributed to any of these crashes.**

Site Meeting

Field Meeting Date:	**09.16.2022**	Meeting Attendees (PDF format):	**09162022-Scope Verification Attendees.pdf**
Site sketch attachment:	**Leslie 066B00055N Site Sketch.pdf**	Site photos attachment (PDF format):	**Leslie 066B00055N Scope Verification Photos Binder.pdf**

Discussion of Key Stakeholders:	**Field team discussed constructing an on-site diversion but came to the conclusion that a slight over build of the new bridge would provide enough width for part width construction and maintain one lane of traffic across the bridge.**
Meeting Comments:	

Bridge Aspect-Rehabilitation Scope

Deck/Slab:		Deck/Slab - Notes/Description:	
Depth of Exist. Asphalt Overlay:		Proposed Type of Overlay:	
Joints:		Joints - Notes/Description:	
Railings:		Railings - Notes/Description:	
Girders:		Girders - Notes/Description:	
Girder Painting:		Girder Painting - Notes/Description:	
Bearings:		Bearings - Notes/Description:	

Culvert:		Culvert - Notes/Description:	
Overhangs:		Overhangs - Notes/Description:	
Abutments:		Abutments - Notes/Description:	
Piers/Walls:		Piers/Walls - Notes/Description:	
Foundation:		Foundations - Notes/Description:	
Erosion/Scour:		Erosion/Scour - Notes/Description:	
Drains:		Drains - Notes/Description:	

Additional Rehabilitation Notes:	

Support

Start Support Request:	<<Support Request>>

Comments

Heather Lawler, Stantec Consulting Services, Inc., 10.13.2022 9:09 PM

In the scope of work section please add the sections: 1. Describe MOT 2. Describe ROW

Attached Documents

File Name	Attached By	Date Attached	Step
Geotech_Scope_Verification_Report-066B00055N-Supplementary Info.pdf	Nunley, Bob (Vaughn & Melton)	10.13.2022	DT Attach Scope Verification
Leslie 066B00055N Detour Map.pdf	Nunley, Bob (Vaughn & Melton)	10.13.2022	DT Attach Scope Verification
09162022-Scope Verification Attendees.pdf	Nunley, Bob (Vaughn & Melton)	10.13.2022	DT Attach Scope Verification
Leslie 066B00055N Site Sketch.pdf	Nunley, Bob (Vaughn &	10.13.2022	DT Attach Scope Verification

	Melton)		
Leslie 066B00055N Scope Verification Photos Binder.pdf	Nunley, Bob (Vaughn & Melton)	10.13.2022	DT Attach Scope Verification

Attached Processes

Process	Subject	Step	Since	Attached By	Date Attached
GEC Design Start #1	Notice to Proceed for VM Bridge 066B00055N	Finish	08.10.2022	Hunley (DEACTIVATED), Tony (Stantec Consulting Services, Inc.)	08.09.2022

GEC Design Submittal (DT) (GDS1) - 1

Project:	VM D11 066B00055N Leslie	Project Number:	
Process Document:	GDS1 - 1	Overall Due Date:	
Current Workflow Step:	Finish	Step Due Date:	
Subject:	VM - SUB - Scope Verification-066B00055N		
Status:	Received		

Submittal

Submittal Type:	**Scope Verification**
Submittal Notes:	**Spawned from Design Start**

Bridge Details

District No.:	**11**	County Name:	**Leslie**
Bridge ID:	**066B00055N**	Original Bridge Scope:	**Replacement**
Facility Carried:	**KY-2057**	Bridge Scope:	
ADT:	**589**	Feature Intersect:	**CUTSHIN CREEK**
		Letting Date:	**11.16.2023**

Scope of Work Description:	**The replacement of KY 2057 over Chustin Creek, (Bridge # 066B00055N) will entail complete removal of the existing bridge and construction of a new bridge without load restrictions. The project will replace the bridge in the approximate same location with generally the same current geometrics (bridge width, length, hydraulic opening, etc.) to avoid environmental impacts, utility impacts, and minimize the need for new right of way. Approach roadway pavement will be replaced in the direct vicinity of the bridge. Part-width construction will be utilized. One lane of traffic will be maintained with temporary signals during the construction by phasing the work. There will not be an on-site diversion. Right-of-way and temporary construction easements will be required.**

Files

Plans:		Geotech Report:	
Bridge Hydraulic Report (.zip file):		Itemized Construction Cost Estimate:	
Quality Assurance Document:		Proposed Legal Description:	
KMZ (Google Earth):		Final Quantities and Estimate:	
Special Notes & Provision:		Bridge Load Rating:	
CAP Notes:		Design Calculation:	
Environmental Document(s):		Utility Agreements:	
ROW Clearance Letter:		Utility Impact Notes:	
DGN Files (.zip file):		Approved Detour Route:	

Scope Change Discussion

Recommended Bridge Scope:	**Replacement**
Scope Change Discussion:	

Due Date Assignment

Oversight Lead Review Due By:	**10.26.2022**	PD Oversight Lead Final Review Due By:	**10.28.2022**
DQM Audit Due By:			

Estimated Costs

SYP R Budget:	**0**	Current Estimate - ROW:	**8000**
SYP U Budget:	**0**	Current Estimate - Utility:	**25000**
SYP C Budget:	**1030000**	Current Estimate -	**1033902**

		Construction:	

Cost Estimate Discussion:	**Updated estimate will be provided with Preliminary Plan submittal.**

Existing Bridge Geometrics

Existing superstructure depth (feet to 0.1):	**1.8**	Existing Bridge Length (feet to 0.1):	**74.1**
Existing out-to-out bridge width (feet to 0.1):	**24.2**	Existing bridge skew (nearest degree):	**0**
Existing bridge roadway width (feet to 0.1):	**22.6**	Existing predominate approach roadway width (feet to 0.1):	**22**
Existing bridge railing:	**Guardrail**	Existing number of spans:	**2**

Hydraulics

Hydraulic Determination:	**Other reason for Level II analysis**	Existing hydraulic opening (nearest sq ft):	**9999**

Additional drainage concerns or notes:	**Existing hydraulic opening will be determined when survey is completed.**

Geotechnical

Geotechnical site conditions:	**Visual rock outcroppings at site, Visual observation of rock in stream bed, crossing or railroad, Rock Probe (provide depth in notes), Other (see Geotechnical site conditions notes)**	Additional geotechnical investigation required:	**Yes**
Sketch of proposed boring plan (if needed):	**Geotech_Scope_Verification_Report-066B00055N-Supplementary Info.pdf**		

Geotechnical site conditions notes from Geotech Engineer:	**Assuming not a Complex Bridge. Sandstone bedrock exposed consistently in west half of stream bed. Scour of existing center pier foundations of up to approximately 3 feet. Plan is to replace with a single span structure. Existing instability at Southwest corner of existing bridge. West bank is tall, over steepened, and marginally stable. Discussions on**

	site of soil nail wall being planned by District for west bank.

Right of Way

Railroad Parcel Involvement:	**No**	Approximate number of parcels impacted:	**2**
Dead-end route with four (4) or fewer lots from PVA Map?:	**No**	Right-Of-Way Expected:	**Yes**
ROW/Easements:	**Other reasons (define)**		

Existing Right of Way Notes:	
Existing improvements impacted within project footprint:	

Utilities

Existing Utilities:	**Transmission lines evident, Overhead utility lines that could be impacted by construction activities such as crane swing path, Water Line Location, Utility Poles (Type & Number of lines)**	Draft | Final | Change Order:	**Utility Agreement Submittals Only - Select One**
Potential utility impacts and providers:	**Transmission lines running along south side of approach, American Electric Power. Watermain trenched in bedrock and capped with concrete south side of bridge. The AEP poles are approximately 10-12 feet from edge of approach roadway. Do not anticipate impacting if widening is to the north.**	Agreement Type:	**Select One**
		Utility Type:	**Select One**
		Utility Type (Other):	**To be completed if Utility Type selected above is**

		Utility Cost:	**"Other"**
		KYTC Encroachment Permit Required?:	

Environmental

Cultural Resources:	**Houses/structures visible from the bridge, Buried utilities located adjacent to the structure, Bedrock visible in channel or along banks of stream**	Ecology:	**Sedimentation visible in stream, Visible evidence of scour or wood debris accumulation**
Hazmat:	**N/A**	Other:	**N/A**
Environmental Constraints Notes:	**Potential habitat for Bats, KY Arrow Darter and Snuffbox Mussel. Abandoned building in NW quadrant of bridge site. Estimate it has not been used in 30 years. No environmental concerns exist to prevent bridge from being replaced.**		

Construction Delivery Restrictions

Materials Delivery Access Restrictions:	**No**
Roadway/Bridge access restrictions Notes:	**No restrictions for construction equipment or delivery vehicles.**

MOT/Detour Routes

Anticipated MOT Type:	**03 Part-Width Construction**	Length of detour on similar owner/class/type roadway:	**12.4**
Have the detour routes been driven?:	**N/A**	Detour route has lower posting:	**No**
Truck Weight		Sketch of detour	

Classification of roadway on detour route:	**A**	route:	**Leslie 066B00055N Detour Map.pdf**

Detour Routes Notes:	**Approximately 60% of the detour route is class A and 12.4 miles in length. Part width construction and slight over build is practical and anticipated to be economical.**
Discussion of Crash History or concerns:	**There have been five collisions in the last 5 years within the general vicinity of this structure but the bridge does not seem to have contributed to any of these crashes.**

Site Meeting

Field Meeting Date:	**09.16.2022**	Meeting Attendees (PDF format):	**09162022-Scope Verification Attendees.pdf**
Site sketch attachment:	**Leslie 066B00055N Site Sketch.pdf**	Site photos attachment (PDF format):	**Leslie 066B00055N Scope Verification Photos Binder.pdf**

Discussion of Key Stakeholders:	**Field team discussed constructing an on-site diversion but came to the conclusion that a slight over build of the new bridge would provide enough width for part width construction and maintain one lane of traffic across the bridge.**
Meeting Comments:	

Bridge Aspect-Rehabilitation Scope

Deck/Slab:		Deck/Slab - Notes/Description:	
Depth of Exist. Asphalt Overlay:		Proposed Type of Overlay:	
Joints:		Joints - Notes/Description:	
Railings:		Railings - Notes/Description:	
Girders:		Girders - Notes/Description:	
Girder Painting:		Girder Painting - Notes/Description:	
Bearings:		Bearings - Notes/Description:	

Culvert:		Culvert - Notes/Description:	
Overhangs:		Overhangs - Notes/Description:	
Abutments:		Abutments - Notes/Description:	
Piers/Walls:		Piers/Walls - Notes/Description:	
Foundation:		Foundations - Notes/Description:	
Erosion/Scour:		Erosion/Scour - Notes/Description:	
Drains:		Drains - Notes/Description:	

Additional Rehabilitation Notes:	

Support

Start Support Request:	<<Support Request>>

Comments

Heather Lawler, Stantec Consulting Services, Inc., 10.13.2022 9:09 PM

In the scope of work section please add the sections: 1. Describe MOT 2. Describe ROW

Attached Documents

File Name	Attached By	Date Attached	Step
Geotech_Scope_Verification_Report-066B00055N-Supplementary Info.pdf	Nunley, Bob (Vaughn & Melton)	10.13.2022	DT Attach Scope Verification
Leslie 066B00055N Detour Map.pdf	Nunley, Bob (Vaughn & Melton)	10.13.2022	DT Attach Scope Verification
09162022-Scope Verification Attendees.pdf	Nunley, Bob (Vaughn & Melton)	10.13.2022	DT Attach Scope Verification
Leslie 066B00055N Site Sketch.pdf	Nunley, Bob (Vaughn &	10.13.2022	DT Attach Scope Verification

	Melton)		
Leslie 066B00055N Scope Verification Photos Binder.pdf	Nunley, Bob (Vaughn & Melton)	10.13.2022	DT Attach Scope Verification

Attached Processes

Process	Subject	Step	Since	Attached By	Date Attached
GEC Design Start #1	Notice to Proceed for VM Bridge 066B00055N	Finish	08.10.2022	Hunley (DEACTIVATED), Tony (Stantec Consulting Services, Inc.)	08.09.2022

Source: USA Topo Maps, (2013) National Geographic Society, USGS 7.5-minute Topographic Map - HYDEN EAST, Kentucky Quadrangle.

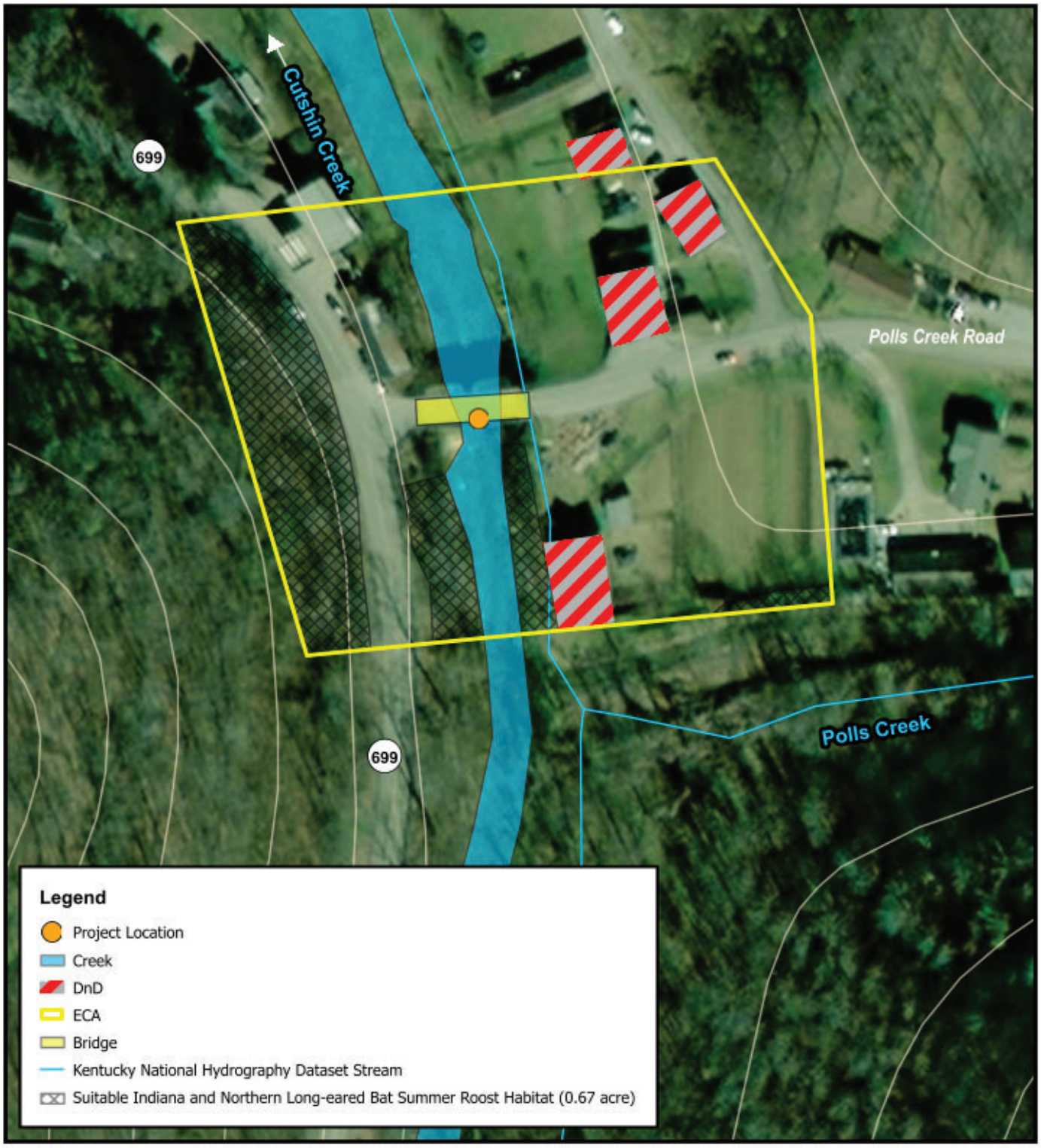

0 130 260 390 520 Feet

BRIDGE NO.: 066B00055N
LESLIE COUNTY, KENTUCKY
KYTC ITEM NO.: 11-10214

TEAM KENTUCKY
TRANSPORTATION CABINET

ECA MAP

REVISED DATE: 02-22-23 | DRAWN BY: JTC

FIGURE 2

Z:\Projects\1300-1399\1308 Lochner Bridges Environmental Support, KY\Map Documents\Lochner Bridges- TC3.aprx, 02-22-2023, tculbertson

COPPERHEAD ENVIRONMENTAL CONSULTING	Bridge No.: 066B00055N Habitat Assessment Photographic Record	
Project No.: 1308	**County, State:** Leslie County, Kentucky	**Client:** Lochner for KYTC

Description:
Overview of bridge no. 066B00055N over Cutshin Creek

Description:
Upstream view of Cutshin Creek

COPPERHEAD ENVIRONMENTAL CONSULTING	Bridge No.: 066B00055N Habitat Assessment Photographic Record	
Project No.: 1308	**County, State:** Leslie County, Kentucky	**Client:** Lochner for KYTC

Description:
Downstream view of Cutshin Creek

Description:
Pool underneath bridge deck

COPPERHEAD ENVIRONMENTAL CONSULTING	Bridge No.: 066B00055N Habitat Assessment Photographic Record	
Project No.: 1308	**County, State:** Leslie County, Kentucky	**Client:** Lochner for KYTC

Description: Abutment underneath bridge 066B00055N	

Description: Abutment underneath bridge 066B00055N	

COPPERHEAD ENVIRONMENTAL CONSULTING	Bridge No.: 066B00055N Habitat Assessment Photographic Record	
Project No.: 1308	**County, State:** Leslie County, Kentucky	**Client:** Lochner for KYTC

Description: View of the underside of the bridge deck	
Description: View of KY-2057 running over Cutshin Creek	

BATS IN BRIDGES DATASHEET

KYTC Structure ID 066B00055N **KYTC Item No** 11-10214

Bridge Location: Leslie County

County: Leslie **Lat:** 37.13564 **Long:** -83.28201

Date: Sep 29, 2022 **Time of Survey:** 14:24 **Investigator Name(s):** J. Murphy

Bridge Type: (check one)

☐ Parallel Box Beam

☒ Pre-stressed Girder

☐ Cast in Place 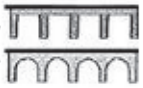

☐ Culvert – Box

☐ Steel I-beam

☐ Flat Slab / Box

☐ Trapezoidal Box

☐ Culvert – Pipe/Round ☐ Other: _____

Underdeck Material:

☒ Concrete

☐ Corrugated Steel

☐ Other: _____

Road Type: (check one) ☐ Interstate ☐ U.S. Highway ☒ State Road ☐ County Road

Surrounding Habitat: (check all that apply)

☒ Residential ☐ Row Crop ☐ Commercial ☐ Woodland ☐ Grassland ☐ Pasture ☐ Riparian ☐ Mixed ☒ Wetland

Conditions Under Bridge: (check all that apply)

☒ Bare ground /sediment ☐ Concrete ☐ Rip rap ☒ Flowing water ☒ Standing water

☐ Open vegetation (not obstructing flight path) ☐ Closed vegetation (may obstruct flight path)

☐ Two lane road ☐ Four (or more) lane highway ☐ Dirt road ☐ Railroad

☐ Evidence of superstructure flooding Bridge Height: _____

Bat indicators: (check all that apply) ☐ Visual ☐ Smell ☐ Sound ☐ Staining ☐ Guano ☒ None

Use intensity: (check one) ☐ Minor (scattered guano/staining – few bats or temporary usage)
☐ Major (guano piles/staining obvious – semipermanent colony)

Bats Present: ☐ YES ☒ NO

Species Present (record number of individuals if known)

_____ Myotis septentrionalis (Northern long-eared)
_____ Myotis sodalis (Indiana)
_____ Myotis leibii (Eastern small-footed)
_____ Myotis lucifugus (Little brown)
_____ Myotis grisescens (Gray)
_____ Myotis austroriparius (Southeastern)
_____ Lasiurus cinereus (Hoary)
_____ Lasiurus borealis (Eastern red)
_____ Lasiurus seminolus (Seminole)
_____ Lasiurus noctivagans (Silver-haired)
_____ Perimyotis subflavus (Tri-colored)
_____ Eptesicus fuscus (Big brown)
_____ Nycticeius humeralis (Evening)
_____ Tadarida brasiliensis (Braz. free-tailed)
_____ Corynorhinus t. townsendii (Virginia)
_____ Corynorhinus rafinesquii (Rafinesque's)
_____ UNKNOWN

Roost description (If known, check all that apply): ☐ Day Roost ☐ Nursery Roost ☐ Night Roost ☐ Unknown

Number of roosts _____

Roost feature: (check all that apply)

☐ Crack/crevice/expansion joint: underside of bridge ☐ Crack/crevice/expansion joint: top side of bridge

☐ Plugged drain ☐ Under/along the main bridge structure ☐ Rail ☐ Other:_____

Human disturbance or traffic under bridge or at structure? ☐ High ☐ Low ☒ None

Evidence of bats using bird nests? ☐ Yes ☒ No (if yes, please describe and photograph nest location)

Areas Inspected: (check all that apply)

☒ Vertical surfaces on I-beams ☒ Vertical surfaces between concrete end walls and bridge deck

☒ Expansion joints ☒ Rough surfaces ☒ Guardrails ☒ Crevices ☐ Other:_____

Areas NOT Inspected because of safety or inaccessibility:

_____

_____

Additional Comments / Sketch:

_____

_____

HABITAT ASSESSMENT FIELD DATA SHEET—HIGH GRADIENT STREAMS

STREAM NAME n/a		LOCATION Leslie	
SITE ID #_____ REACH ID _____		STREAM CLASS Perennial	
Lat., Long. (WGS 84 DD) 37.13564,-83.28201		RIVER BASIN	
STORET #		AGENCY Copperhead Consulting	
INVESTIGATORS		J. Murphy and S. Davis	
FORM COMPLETED BY J. Murphy	DATE TIME Sep 29 2022		REASON FOR SURVEY Preliminary bridge assessment

Parameters to be evaluated in sampling reach

Habitat Parameter	Condition Category: Optimal	Suboptimal	Marginal	Poor
1. Epifaunal Substrate/ Available Cover	Greater than 70% of substrate favorable for epifaunal colonization and fish cover; mix of snags, submerged logs, undercut banks, cobble or other stable habitat and at stage to allow full colonization potential (i.e., logs/snags that are not new fall and not transient).	40-70% mix of stable habitat; well-suited for full colonization potential; adequate habitat for maintenance of populations; presence of additional substrate in the form of newfall, but not yet prepared for colonization (may rate at high end of scale).	20-40% mix of stable habitat; habitat availability less than desirable; substrate frequently disturbed or removed.	Less than 20% stable habitat; lack of habitat is obvious; substrate unstable or lacking.
SCORE 18	20 19 X 17 16	15 14 13 12 11	10 9 8 7 6	5 4 3 2 1 0
2. Embeddedness	Gravel, cobble, and boulder particles are 0-25% surrounded by fine sediment. Layering of cobble provides diversity of niche space.	Gravel, cobble, and boulder particles are 25-50% surrounded by fine sediment.	Gravel, cobble, and boulder particles are 50-75% surrounded by fine sediment.	Gravel, cobble, and boulder particles are more than 75% surrounded by fine sediment.
SCORE 16	20 19 18 17 X	15 14 13 12 11	10 9 8 7 6	5 4 3 2 1 0
3. Velocity/Depth Regime	All four velocity/depth regimes present (slow-deep, slow-shallow, fast-deep, fast-shallow). (Slow is < 0.3 m/s, deep is > 0.5 m.)	Only 3 of the 4 regimes present (if fast-shallow is missing, score lower than if missing other regimes).	Only 2 of the 4 habitat regimes present (if fast-shallow or slow-shallow are missing, score low).	Dominated by 1 velocity/ depth regime (usually slow-deep).
SCORE 15	20 19 18 17 16	X 14 13 12 11	10 9 8 7 6	5 4 3 2 1 0
4. Sediment Deposition	Little or no enlargement of islands or point bars and less than 5% of the bottom affected by sediment deposition.	Some new increase in bar formation, mostly from gravel, sand or fine sediment; 5-30% of the bottom affected; slight deposition in pools.	Moderate deposition of new gravel, sand or fine sediment on old and new bars; 30-50% of the bottom affected; sediment deposits at obstructions, constrictions, and bends; moderate deposition of pools prevalent.	Heavy deposits of fine material, increased bar development; more than 50% of the bottom changing frequently; pools almost absent due to substantial sediment deposition.
SCORE 10	20 19 18 17 16	15 14 13 12 11	X 9 8 7 6	5 4 3 2 1 0
5. Channel Flow Status	Water reaches base of both lower banks, and minimal amount of channel substrate is exposed.	Water fills >75% of the available channel; or <25% of channel substrate is exposed.	Water fills 25-75% of the available channel, and/or riffle substrates are mostly exposed.	Very little water in channel and mostly present as standing pools.
SCORE 11	20 19 18 17 16	15 14 13 12 X	10 9 8 7 6	5 4 3 2 1 0

Form # EH - _____

HABITAT ASSESSMENT FIELD DATA SHEET—HIGH GRADIENT STREAMS

Parameters to be evaluated broader than sampling reach

Habitat Parameter	Condition Category: Optimal	Suboptimal	Marginal	Poor
6. Channel Alteration	Channelization or dredging absent or minimal; stream with normal pattern.	Some channelization present, usually in areas of bridge abutments; evidence of past channelization, i.e., dredging, (greater than past 20 yr) may be present, but recent channelization is not present.	Channelization may be extensive; embankments or shoring structures present on both banks; and 40 to 80% of stream reach channelized and disrupted.	Banks shored with gabion or cement; over 80% of the stream reach channelized and disrupted. Instream habitat greatly altered or removed entirely.
SCORE 17	20 19 18 X 16	15 14 13 12 11	10 9 8 7 6	5 4 3 2 1 0
7. Frequency of Riffles (or bends)	Occurrence of riffles relatively frequent; ratio of distance between riffles divided by width of the stream <7:1 (generally 5 to 7); variety of habitat is key. In streams where riffles are continuous, placement of boulders or other large, natural obstruction is important.	Occurrence of riffles infrequent; distance between riffles divided by the width of the stream is between 7 to 15.	Occasional riffle or bend; bottom contours provide some habitat; distance between riffles divided by the width of the stream is between 15 to 25.	Generally all flat water or shallow riffles; poor habitat; distance between riffles divided by the width of the stream is a ratio of >25.
SCORE 15	20 19 18 17 16	X 14 13 12 11	10 9 8 7 6	5 4 3 2 1 0
8. Bank Stability (score each bank) Note: determine left or right side by facing downstream.	Banks stable; evidence of erosion or bank failure absent or minimal; little potential for future problems. <5% of bank affected.	Moderately stable; infrequent, small areas of erosion mostly healed over. 5-30% of bank in reach has areas of erosion.	Moderately unstable; 30-60% of bank in reach has areas of erosion; high erosion potential during floods.	Unstable; many eroded areas; "raw" areas frequent along straight sections and bends; obvious bank sloughing; 60-100% of bank has erosional scars.
SCORE 8 (LB)	Left Bank 10 9	X 7 6	5 4 3	2 1 0
SCORE 8 (RB)	Right Bank 10 9	X 7 6	5 4 3	2 1 0
9. Vegetative Protection (score each bank)	More than 90% of the streambank surfaces and immediate riparian zone covered by native vegetation, including trees, understory shrubs, or nonwoody macrophytes; vegetative disruption through grazing or mowing minimal or not evident; almost all plants allowed to grow naturally.	70-90% of the streambank surfaces covered by native vegetation, but one class of plants is not well-represented; disruption evident but not affecting full plant growth potential to any great extent; more than one-half of the potential plant stubble height remaining.	50-70% of the streambank surfaces covered by vegetation; disruption obvious; patches of bare soil or closely cropped vegetation common; less than one-half of the potential plant stubble height remaining.	Less than 50% of the streambank surfaces covered by vegetation; disruption of streambank vegetation is very high; vegetation has been removed to 5 centimeters or less in average stubble height.
SCORE 6 (LB)	Left Bank 10 9	8 7 X	5 4 3	2 1 0
SCORE 6 (RB)	Right Bank 10 9	8 7 X	5 4 3	2 1 0
10. Riparian Vegetative Zone Width (score each bank riparian zone)	Width of riparian zone >18 meters; human activities (i.e., parking lots, roadbeds, clear-cuts, lawns, or crops) have not impacted zone.	Width of riparian zone 12-18 meters; human activities have impacted zone only minimally.	Width of riparian zone 6-12 meters; human activities have impacted zone a great deal.	Width of riparian zone <6 meters: little or no riparian vegetation due to human activities.
SCORE 5 (LB)	Left Bank 10 9	8 7 6	X 4 3	2 1 0
SCORE 5 (RB)	Right Bank 10 9	8 7 6	X 4 3	2 1 0

Total Score 140

Form # EH2 - _____

Water Quality Results
Bridge ID: 066B00055N
County: Leslie
Date: 29 Sept 2022

Temperature (C°)	15.3
Dissolved Oxygen (mg/L)	14.21
Conductivity (micro S/cm)	601.25
pH	8.03
Turbidity (NTU)	0.93

Communicating All Promises (CAP) Notes – Leslie County - 066B00055N

The following notes are required to be fulfilled as part of the Contract

SALVAGING EXISTING CUT STONE

The Contractor shall carefully dismantle the existing center pier cut stone and any cut stone that is not used for reconstructing the Southwest Wingwall (as detailed in the Structure Plans, Sheet S14) in such a manner that as many of the existing stones as possible remain intact.

All salvageable cut stone shall then be delivered to:

KYTC Storage Lot near Milepost 11.6 on south US 421.

Latitude: 37°03’07”

Longitude: -83°24’01”

Please coordinate and contact Daniel Hoffman, KYTC District 11 PD&P Branch Manager for Leslie County (606-598-2145) prior to delivering any cut stone for instructions on where to unload the salvaged stone.

All work necessary to dismantle and deliver the cut stones shall be paid for as follows:

02402 REMOVE STONE MASONRY WALL LF

Delivery to the above location shall be considered incidental to the bid item “REMOVE STONE MASONRY WALL”

MEMORIAL BRIDGE SIGN

The “Corporal Willie Boggs Memorial Bridge” sign at approximate Station 11+00, 9’ Left is to be removed, stored and re-installed at approximate Station 11+00, 18’ Left.

The sign will be paid for as follows:

21134ND REMOVE-STORE AND REINSTALL SIGN EACH

STRUCTURE GEOTECHNICAL REPORT
KY 2057 BRIDGE OVER CUTSHIN CREEK
LESLIE COUNTY, KENTUCKY

BRIDGE NO. 066B00055N
ITEM NO. 11-10214
KYTC STATEWIDE BRIDGE PROGRAM PROJECT DELIVERY

Prepared for:

JOHNSON, MIRMIRAN & THOMPSON, INC.
MIDDLESBORO, KENTUCKY

Prepared by:

ANDERSON PROFESSIONAL SERVICES, LLC
NICHOLASVILLE, KENTUCKY

Date:

SEPTEMBER 16, 2023

APS GEO Project No.:

APS230023

Corporate Office Address:
1060 Elizabeth St., Unit 7, Nicholasville, KY 40356

September 16, 2023

Mr. Adam Knuckles, PE
Johnson, Mirmiran & Thompson, Inc.
109 S. 24th Street
Middlesboro, Kentucky 40965

Re: Structure Geotechnical Report
KY 2057 Bridge over Cutshin Creek
Leslie County, Kentucky
Bridge No. 066B00055N
Item No. 11-10214
KYTC Statewide Bridge Program Project Delivery
APS GEO Project No. APS230023

Dear Mr. Knuckles:

Anderson Professional Services, LLC (APS GEO) is pleased to present with this letter the Structure Geotechnical Report for the KY 2057 Bridge over Cutshin Creek, located in Leslie County, Kentucky. This report was prepared as part of the Kentucky Transportation Cabinet (KYTC) Statewide Bridge Program Project Delivery (BPPD). The geotechnical work was performed in general accordance with the KYTC Geotechnical Guidance Manual and the project specific BPPD Manual. The geotechnical work for this structure included a site reconnaissance, geotechnical borings, laboratory testing, engineering analyses, and the preparation of this report.

We appreciate the opportunity to provide the geotechnical services for this project. If you have any questions regarding this report, or if we may be of any additional service to you, please do not hesitate to contact us.

Respectfully submitted,
ANDERSON PROFESSIONAL SERVICES, LLC

STATE OF KENTUCKY
WILLIAM T. BASICH
25627
LICENSED PROFESSIONAL ENGINEER

William T. Basich, PE
Principal Geotechnical Engineer

MGB/WTB:mgb/wtb

Copies submitted: Johnson, Mirmiran & Thompson, Inc. (email)

TABLE OF CONTENTS

1.0 Project Location and Description 1
2.0 Site Topography and Geology 2
3.0 Research of Historic Projects 2
4.0 Site Reconnaissance 2
5.0 Field Investigation and Laboratory Testing 3
6.0 Subsurface Conditions 3
7.0 Conclusions and Recommendations 4
7.1 Slope Stability 4
7.2 Settlement and Downdrag 4
7.3 Slope Protection 5
7.4 Foundations 5
7.4.1 Return Wall 5
7.4.2 Proposed Bridge Abutments 5
7.5 Lateral Earth Pressures 6
7.5.1 Earth Pressure Distributions for Return Wall and Proposed Abutment Foundations 6
7.6 Pile Lateral Capacity 7
7.7 Pile Refusal and Protective Pile Points 7
7.8 Pile Axial Capacity 7
7.9 Seismic Site Class 8
8.0 Plan Notes 8
8.1 General 8
8.2 Steel H-pile Foundations 8
9.0 Limitations 9
References 11

Appendix

LIST OF TABLES

Table 1. Summary of Global Stability Analyses 4
Table 2. Minimum Estimated Pile Tip Elevations 5
Table 3. Lateral Earth Pressures for Level (Horizontal) Ground Surfaces 6

STRUCTURE GEOTECHNICAL REPORT
KY 2057 BRIDGE OVER CUTSHIN CREEK
LESLIE COUNTY, KENTUCKY
BRIDGE NO. 066B00055N | ITEM NO. 11-10214

September 16, 2023 | APS GEO Project No. APS230023

1.0 PROJECT LOCATION AND DESCRIPTION

It should be recognized that Anderson Professional Services, LLC (APS GEO) completed engineering services, including geotechnical project management and the final engineering review of this report, as a subconsultant to Geotechnology, LLC (Geotechnology). Geotechnology completed all drilling and laboratory testing for this project.

The Kentucky Transportation Cabinet (KYTC) is planning to construct a new bridge on KY 2057 (Polls Creek Road) over Cutshin Creek in Leslie County, Kentucky. The new bridge will replace the existing two-span bridge, in approximately the same location as the existing bridge. A Project Location Map is included in the Appendix.

The Bridge Layout sheet, which presents plan and elevation views of the proposed bridge, was prepared by Johnson, Mirmiran & Thompson, Inc. (JMT) in September 2023, and is included in the Appendix. The Bridge Layout sheet indicates that the proposed bridge will be a 98-foot-long, 28-foot-wide, single-span structure between Stations 9+99.25 and 10+97.25.

The Bridge Layout also indicates that portions of the existing abutments will remain in place to serve as retaining walls in front of the proposed abutments primarily to prevent erosion of material through the pile foundations for the new abutments, and to protect the piles. We understand that the preference of the design team is to design the pile foundations for the bridge to resist lateral loads in the event that distress to the existing abutment walls results in exposure of the pile foundations until repairs can be performed.

In addition, a new retaining wall (return wall) is shown at the northeast corner of the bridge that runs parallel to the roadway, left of centerline, and just upstation of Abutment 2. The purpose of this wall is to prevent the roadway widening from extending beyond the existing right of way.

Grouted cyclopean stone rip rap is shown in front of the existing east abutment, the existing wingwalls, and the exposed portions of the proposed abutments on both sides of the bridge to provide scour protection. Based upon correspondence with JMT, and sketches provided by JMT on June 16, 2023, we understand that the grouted rip rap will be placed as a 2-foot-thick layer over geotextile fabric on the surface of the existing stream banks in front of the abutments at both bridge ends.

Roadway improvements are planned between Stations 9+73.00 and 11+72.00, and will consist of resurfacing and minor widening to the north side of the existing bridge. New embankment fills will be on the order of 2 feet tall or less, and new cuts will be negligible.

2.0 SITE TOPOGRAPHY AND GEOLOGY

The project is located in Eastern Kentucky within the Eastern Kentucky Coal Field, which is part of the Cumberland Plateau Physiographic Region. The Eastern Kentucky Coal Field is dominated by forested hills and is highly dissected by narrow to broad, v-shaped valleys. The uplands contain high relief and surface drainage that typically follows a dendritic pattern (McDowell, 1986).

The proposed bridge is located at the western edge of a relatively narrow and deep valley carved by Cutshin Creek, which flows from south to north in the area of the bridge. The bridge is also located approximately 200 feet downstream (north) of the confluence of Polls Creek and Cutshin Creek. At the west end of the bridge, KY 2057 intersects KY 699 (Cutshin Road), which is bounded by a fairly tall, near-vertical rock cut, followed by very steep mountainous terrain. To the east of the bridge, KY 2057 continues across relatively flat to gently rolling terrain within the combined floodplain of Cutshin Creek and Polls Creek.

The project area lies in the southeast part of the United States Geological Survey (USGS) map of the Geology of the Hyden East Quadrangle (GQ-423), Kentucky (Prostka, 1965). The referenced USGS map indicates that the bedrock underlying the overburden soils in the project area belongs to the Breathitt Formation, which is noted to consist of sandstone, shale, siltstone, limestone, and coal. The overburden soils are mapped as alluvium consisting of sand, silt, clay, and gravel.

3.0 RESEARCH OF HISTORIC PROJECTS

We have reviewed the KYTC Geotechnical Database for projects near the proposed bridge location. Our review indicates that there are no past KYTC geotechnical projects mapped within the project area.

4.0 SITE RECONNAISSANCE

On September 16, 2022, representatives from Geotechnology visited the existing bridge to perform an engineering reconnaissance of the site.

In the area of the existing bridge, bedrock was partially exposed in the streambed of Cutshin Creek, specifically between the existing pier and the west abutment. Where bedrock was not exposed, Cutshin Creek was noted to be flowing on alluvium. Rod probes in the alluvial portion of the channel near the existing east abutment indicated no refusal at 2.0 feet. At the existing pier, evidence of heavy scour was observed. In some areas, there were separation gaps between the bottom of the pier footing and the bearing surface that extended several feet back from the outer perimeter of the footing.

The banks of Cutshin Creek in the area of the bridge are upwards of approximately 17 feet in height with a surface geometry of approximately 1 horizontal to 1 vertical. We observed that the upper portion of the south wingwall of the existing west abutment appeared to have failed, given that several stone blocks were missing from the wall, and the soils behind the wall had slipped into the creek, exposing the bottoms of several guardrail posts. We understand that the soil and partial wall failure were the result of heavy rainfall/flooding that channeled surface water toward that corner of the bridge. Temporary repairs consisting of loose dumped rock have since been made at this location by District 11 maintenance personnel.

5.0 FIELD INVESTIGATION AND LABORATORY TESTING

The subsurface exploration for this project consisted of three borings completed in May 2023 by a Geotechnology drilling crew in general accordance with Section 300 of the KYTC Geotechnical Guidance Manual. The boring locations were staked by Geotechnology personnel in March 2023. The plan locations of the borings were estimated based on field tape measurements relative to existing bridge features. The boring surface elevations were estimated from the centerline profile prepared for this bridge. The boring locations are summarized on the Coordinate Data Submission Form included in the Appendix.

The soil and bedrock samples were visually reviewed by a geotechnical engineer. The laboratory testing of soil and bedrock samples was performed by Geotechnology personnel in compliance with the AASHTO and/or Kentucky Method (KM) test standards outlined in Section 500 of the KYTC Geotechnical Guidance Manual. The results of the drilling and laboratory testing and review are presented on the Subsurface Data Sheet included in the Appendix.

6.0 SUBSURFACE CONDITIONS

Two of the three borings performed for the bridge (i.e., Holes 1001 and 1002) were undisturbed sample and core borings. The third boring (i.e., Hole 1003) was a sounding performed in order to determine if, and at what depth, the back of the existing east abutment would be encountered. Hole 1001 was drilled a few feet up station of the location of the proposed east abutment, while Hole 1002 was drilled on the location of the proposed west abutment.

Each of the borings was drilled through the existing roadway. The asphalt thicknesses in Holes 1001 and 1002 measured 12 and 13 inches, respectively. The thicknesses of the granular base underlying the asphalt measured 5-1/2 and 10 inches in Holes 1001 and 1002, respectively. The overburden soils below the granular base classified primarily as sands with gravel; however, soils classifying as clays with sand and gravels with sand were also encountered. Holes 1001 and 1002 encountered refusal (top of bedrock) at depths of 24.4 and 20.7 feet below the pavement surface, which correspond to elevations of 900.4 and 905.3 feet, respectively. Hole 1003 refused on abutment concrete/stone at a depth of 15.3 feet below the pavement surface, which corresponds to an elevation of 909.7 feet. The cored bedrock consisted of durable sandstone, as well as durable interbedded shale (siltstone) and sandstone, from the Breathitt Formation.

7.0 CONCLUSIONS AND RECOMMENDATIONS

Based on our engineering reconnaissance of the site, our review of the geologic mapping, the borings, visual examination of the recovered samples, the laboratory test results, our understanding of the proposed construction, and our experience as Geotechnical Engineers in the Commonwealth of Kentucky, we have reached the following conclusions and make the following recommendations.

7.1 Slope Stability

Formal slope stability analyses were performed for the proposed grouted rip rap spill-through slopes where the proposed abutment foundations will be located beyond the existing abutments. The stabilities of the proposed spill-through slopes were evaluated using the geometries shown for the spill-throughs near the southwest and northwest corners of the bridge, labeled as Section A-A (SW Quadrant) and Section B-B (NW Quadrant), respectively, on the sketches prepared by JMT, and provided to APS GEO on June 16, 2023, which are included in the Appendix. The locations of the sections are shown by JMT on an outdated version of the Bridge Layout sheet, which is also included in the Appendix.

The results of the stability analyses for the proposed spill-throughs are presented in Table 1, as well as on the Stability Sections included in the Appendix. We note that the results of the analyses for the spill-throughs indicate that the proposed slope configurations do not meet the required target factor of safety of 1.6 for long term conditions outlined in the KYTC Geotechnical Guidance Manual; however, based on correspondence with the Design Team, we understand that for the purposes of this bridge program, the GEC/KYTC is willing to accept the lower factor of safety, and has been apprised of the potential risks associated with this decision, specifically, that if failure of the existing abutments or spill-throughs occurs, such that the piles for the proposed abutments are exposed, there is the potential for (1) failures of the soils between the piles, (2) erosion of the soils between / behind the piles, and (3) subsidence of the soils behind the piles that support the roadway.

Table 1. Summary of Global Stability Analyses

Scenario	Factor of Safety
NW Spill-Through	1.2[a]
SW Spill-Through	1.0[a]

[a] The computed factor of safety does not meet the required target factor of safety of 1.6 for long term conditions specified in the KYTC Geotechnical Guidance Manual.

7.2 Settlement and Downdrag

Settlement analyses are typically performed when bridge approach embankments are greater than 20 feet in height and the thickness of the foundation soils is greater than 10 feet, according to the KYTC Geotechnical Guidance Manual. Since the existing approach embankments have

been in place for over 50 years, and no new major fills are planned for this project, settlement and downdrag are not anticipated to be significant and were not evaluated.

7.3 Slope Protection

We recommend that slope protection be provided in front of the existing and proposed abutment walls to mitigate scour and erosion below the walls. We understand that KYTC's accepted standard is to require slope protection as laid out in Section 8.1.

7.4 Foundations

7.4.1 Return Wall

For the new return wall, we understand that the preferred wall type is either a cast concrete or large block gravity-type structure to match the existing abutment walls. We understand that the preferred foundation type for the wall is steel H-piles socketed into bedrock to resist lateral earth pressures.

We further understand that pre-drilling will be necessary to extend the pile foundations into the bedrock to provide lateral resistance. We recommend that the continuous concrete portion of the return wall extend a minimum of 2.0 feet below the bedrock surface to provide protection from scour. Due to the potential for scour and to assist with providing lateral resistance, we recommend that the pre-drilled holes for the pile foundations be backfilled with concrete, in lieu of sand or pea gravel, from the base of the holes up to bottoms of the continuous concrete or large block portion of the wall.

7.4.2 Proposed Bridge Abutments

We understand that the preferred foundation type for the new abutment walls is steel H-piles socketed into bedrock and driven to practical refusal. The pre-drilled holes for these piles should, in our opinion, be backfilled with concrete from the base of the holes up to the bottoms of the pile caps. The minimum estimated pile tip elevations for axial resistance are provided in Table 2. These elevations correspond to the top of competent unweathered bedrock encountered in the nearby borings. Required bedrock sockets for lateral resistance will extend below these minimum pile tip elevations and the socket depths will be determined by the Structural Engineer.

Table 2. Minimum Estimated Pile Tip Elevations

Substructure Element	Minimum Pile Tip Elevation (feet)[a]
Abutment 1	905.3
Abutment 2	900.2

[a] Design pile tip elevations may be lower to satisfy lateral design.

7.5 Lateral Earth Pressures

We recommend a maximum center to center spacing for laterally loaded deep foundation elements of 10 feet in order to allow for the development of soil arching between individual elements.

7.5.1 Earth Pressure Distributions for Return Wall and Proposed Abutment Foundations

Where the return wall and proposed abutment foundations will be subject to unbalanced lateral earth pressures, we recommend that the lateral earth pressures be computed on the basis of equivalent fluid weights of the backfill and in-situ soils, plus surcharges for applicable pavement loads, sloping backfill, etc. Table 3 provides the recommended equivalent fluid weights for soil for both drained and undrained conditions, and also the recommended earth pressure coefficients for proposed surcharges. Unless a site-specific analysis is performed, we recommend that surcharges be modeled as a uniform horizontal pressure equal to the vertical intensity of the surcharge multiplied by the recommended lateral earth pressure coefficient.

Table 3. Lateral Earth Pressures for Level (Horizontal) Ground Surfaces

	Active[a]	At-Rest[a]
Lateral earth pressure coefficient, K	0.31	0.47
Drained equivalent fluid weight, EFW (pcf)	42	64
Undrained equivalent fluid weight, EFW_u (pcf)[b]	85	97

[a] Parameters are based on level ground surfaces, a soil unit weight (γ) of 135 pcf, and a soil internal angle of friction (ϕ) of 32 degrees.
[b] Includes hydrostatic pressure of 62.4 pcf.

The values provided in Table 3 assume that the ground surface adjacent to the top of the return wall and proposed abutment walls is level and not sloping toward the walls. For ground sloping toward the top of the walls, we recommend that it be accounted for as a surcharge on the walls, as discussed above, unless site-specific equivalent fluid weights are computed on the basis of the backfill slope.

The decision to use active or at-rest earth pressures should be based upon the ability of the wall or structure to deflect as a result of the lateral earth pressures. In cohesionless granular backfill, active earth pressures are assumed to be applicable if the top of the wall is able to deflect a minimum of 0.002 times the height of the wall. In cohesive clayey backfill, the minimum deflection at the top of the wall for active earth pressures to develop is 0.02 times the height of the wall. If these minimum horizontal deflections at the top of the wall are restrained from occurring or unacceptable to the structure, at-rest earth pressures are applicable.

Undrained equivalent fluid weights should be used in computing the lateral loads on the return wall and proposed abutment foundations wherever the backfill and in-situ soils are unable to be drained by a drainage system.

For the return wall, we recommend that the lateral earth pressures in Table 3 be applied across the full unbalanced wall backfill height. For the proposed abutment foundations, the lateral earth pressures in Table 3 should be applied from the top of the proposed abutment wall to scour depth (i.e., 2.0 feet below finished grade on the low side of the structure).

7.6 Pile Lateral Capacity

We recommend that lateral load analyses be performed by the Structural Engineer using the geotechnical parameters provided in the Idealized Subsurface Profiles included in the Appendix. Profiles have been provided for pre-drilled piles extending into bedrock with concrete backfill. A profile has been provided for each bridge end. Some of the parameters may not be required to be input, depending on the analysis software and version of the software being used.

Where the spacing of laterally loaded deep foundations will be close enough that their areas of resistance overlap, we recommend that an appropriate p-multiplier be applied in the analyses to account for the overlap and reduction in lateral resistance. For piles spaced closer than 3.75 times the pile diameter or width and where the direction of pile spacing will be perpendicular to the load direction, we recommend that the p-multiplier (p_m) be defined by the empirical relationship presented in Reese et al. (2006):

$$p_m = 0.64(S/D)^{0.34} \leq 1.0$$

where S is the pile spacing and D is the pile diameter or width. For piles where the direction of pile spacing will be parallel to the load direction, the p-multipliers should be per Table 10.7.2.4-1 of the current edition of the *AASHTO LRFD Bridge Design Specifications* (AASHTO).

7.7 Pile Refusal and Protective Pile Points

We recommend that piles for the proposed abutment foundations be driven to practical refusal in the underlying bedrock. Piles for the return wall should not be required to be driven to practical refusal in the underlying bedrock. For determining practical refusal for point-bearing steel H-piles at the proposed abutments, we recommend using KYTC Case 1; Refusal into Hard Bedrock. KYTC Case 1 indicates that minimum blow count requirements are reached after total penetration becomes ¼ inch or less for 5 consecutive blows, and practical refusal is obtained after the pile is struck an additional 5 blows with total penetration of ¼ inch or less. Production piling should be advanced to the driving resistance specified above and to the depths determined by test pile(s) and the provided subsurface information.

We recommend that protective pile points be used on the piles for the proposed abutment foundations to protect the pile tips while driving to practical refusal in the bedrock. Installation of pile points should be in accordance with Section 604 of the current Kentucky Standard Specifications for Road and Bridge Construction.

7.8 Pile Axial Capacity

It is our understanding that KYTC's accepted standard is to design piles driven to practical refusal in sandstone bedrock in accordance with Section 10.7.3.2.3 (Piles Driven to Hard Rock) of

AASHTO, except that the nominal compressive resistance, P_n, is assumed to equal the nominal yield resistance, P_o, of the pile section. Therefore, the piles for the proposed abutment foundations can be designed using the structural limit state with a resistance factor of 0.5 for severe driving conditions. The factored axial resistance for HP 14x117 piles is 860 kips, assuming Grade 50 steel.

7.9 Seismic Site Class

The seismic design procedures outlined in AASHTO indicate that structural design loads are to be based on site class definitions determined by the shear wave velocity, average SPT N-values, and/or average undrained shear strength for the upper 100 feet of the subsurface profile. Based on the results of the exploration and the geology of the area, we recommend that Site Class C be used for design purposes at the site.

8.0 PLAN NOTES

8.1 General

Add the following plan notes at the appropriate locations in the plans:

- Slope protection shall be utilized at both bridge ends. The slope protection shall meet the requirements of Sections 703 and 805 of the Standard Specifications for Road and Bridge Construction, current edition. Fabric-Geotextile Class 1 (Slope Protection) shall be placed between the embankment and the slope protection in accordance with Sections 214 and 843 of the Standard Specifications for Road and Bridge Construction, current edition.

- Temporary shoring, sheeting, cofferdams, and/or dewatering methods may be required to facilitate foundation construction.

- The Contractor shall be responsible for the stability and safety of all excavations including the impact to adjacent properties and infrastructure. The Contractor shall be responsible for the evaluation of construction loads on the structures.

8.2 Steel H-pile Foundations

Add the following plan notes at the appropriate locations in the plans for Steel H-Pile Foundations:

- Solid rock excavation will be required for installation of the proposed pile and wall foundations.

- Where pre-drilling is required for pile installation for the proposed abutments, pile driving shall be accomplished prior to backfilling by utilizing bracing to help maintain a plumb pile. The pre-drilled holes shall then be backfilled with concrete up to the bottom of the concrete wall or pile cap. Temporary casing may be required to prevent collapse of the hole. If used, the temporary casing shall be removed as the hole is being backfilled. Include the cost of

all materials, labor, and equipment needed to pre-drill, backfill the holes, and drive piles to practical refusal in the price per linear foot for "Pre-drilling for Proposed Abutment Piles."

- Where pre-drilling is required for pile installation for the proposed return wall, pile driving to practical refusal is not required. The pre-drilled holes shall be backfilled with concrete up to the bottom of the concrete wall or pile cap. Temporary casing may be required to prevent collapse of the hole. If used, the temporary casing shall be removed as the hole is being backfilled. Include the cost of all materials, labor, and equipment needed to pre-drill and backfill the holes, in the price per linear foot for "Pre-drilling for Proposed Return Wall Piles."

- **PRACTICAL REFUSAL:** Drive piles for the proposed abutments to practical refusal. For this project, minimum blow count requirements are reached after total penetration becomes ¼ inch or less for 5 consecutive blows, and practical refusal is obtained after the pile is struck an additional 5 blows with total penetration of ¼ inch or less. Advance production piling to the driving resistance specified above and to depths determined by test pile(s) and available subsurface information. Immediately cease driving operations if the pile visibly yields or becomes damaged during driving. If hard driving is encountered because of dense strata or an obstruction, such as a boulder, before the pile is advanced to the depth anticipated, the Engineer will determine if more blows than the average driving resistance specified for practical refusal is required to further advance the pile. Drive additional production and test piles if directed by the Engineer.

- **HAMMER CRITERIA – HP 14x117:** A diesel pile driving hammer with a rated energy between 49.0 kip-ft and 54.0 kip-ft will be required to drive HP 14x117 piles for the proposed abutments to practical refusal, achieve the factored load, and maintain allowable driving stresses at the bridge ends. The Contractor shall submit the proposed pile driving system to the Engineer for approval prior to the installation of the first pile. Approval of the pile driving system by the Engineer will be subject to satisfactory field performance of the pile driving procedures.

9.0 LIMITATIONS

This report has been prepared on behalf of, and for the exclusive use of, the client for specific application to the named project as described herein. If this report is provided to other parties, it should be provided in its entirety with all supplementary information. In addition, the client should make it clear that the information is provided for factual data only, and not as a warranty of subsurface conditions presented in this report.

APS GEO has attempted to conduct the services reported herein in a manner consistent with that level of care and skill ordinarily exercised by members of the profession currently practicing in the same locality and under similar conditions. The recommendations and conclusions contained in this report are professional opinions. The report is not a bidding document and should not be used for that purpose.

Our scope for this phase of the project did not include any environmental assessment or investigation for the presence or absence of wetlands or hazardous or toxic materials in the soil, surface water, groundwater, or air, on or below or around this site. Our scope did not include an assessment of the effects of flooding and erosion of creeks or rivers adjacent to or on the project site.

The conclusions and recommendations presented in this report should not be used without APS GEO's review and assessment if the nature, design, or location of the facilities is changed, if there is a substantial lapse in time between the submittal of this report and the start of work at the site, or if there is a substantial interruption or delay during work at the site. If changes are contemplated or delays occur, APS GEO must be allowed to review them to assess their impact on the findings, conclusions, and/or design recommendations given in this report. APS GEO will not be responsible for any claims, damages, or liability associated with any other party's interpretations of the subsurface data or with reuse of the subsurface data or engineering analyses in this report.

REFERENCES

AASHTO (2020). *AASHTO LRFD Bridge Design Specifications, 9th Edition*, American Association of State Highway and Transportation Officials, Washington, DC.

KYTC (2005). *Geotechnical Guidance Manual*, Kentucky Transportation Cabinet, Department of Highways, Division of Materials, Geotechnical Branch.

KYTC (2019). *Geotechnical Guidance Manual Chapter 600 Engineering Analysis,* Transmittal Memorandum 19-02. Kentucky Transportation Cabinet, Division of Structural Design.

McDowell, R.C. (ed.) (1986). *The geology of Kentucky; a text to accompany the Geologic Map of Kentucky*, Professional Paper 1151-H, United States Geological Survey.

Prostka, H.J. (1965). *Geology of the Hyden East Quadrangle, Kentucky,* GQ-423, United States Geological Survey.

Reese, L.C., Isenhower, W.M., and Wang, S.T. (2006). *Analysis and Design of Shallow and Deep Foundations*, John Wiley & Sons, Inc., Hoboken, New Jersey.

APPENDIX

Project Location Map

Coordinate Data Submission Form

Bridge Layout Sheet

Unconfined Compressive Strength (QU) Test Forms

Geotechnical Symbols Sheet

Subsurface Data Sheet

Cross Section Layout and Sketches

Stability Sections

Idealized Subsurface Profiles

DRAFT

GEOTECHNOLOGY
A UES Company

PROJECT LOCATION MAP

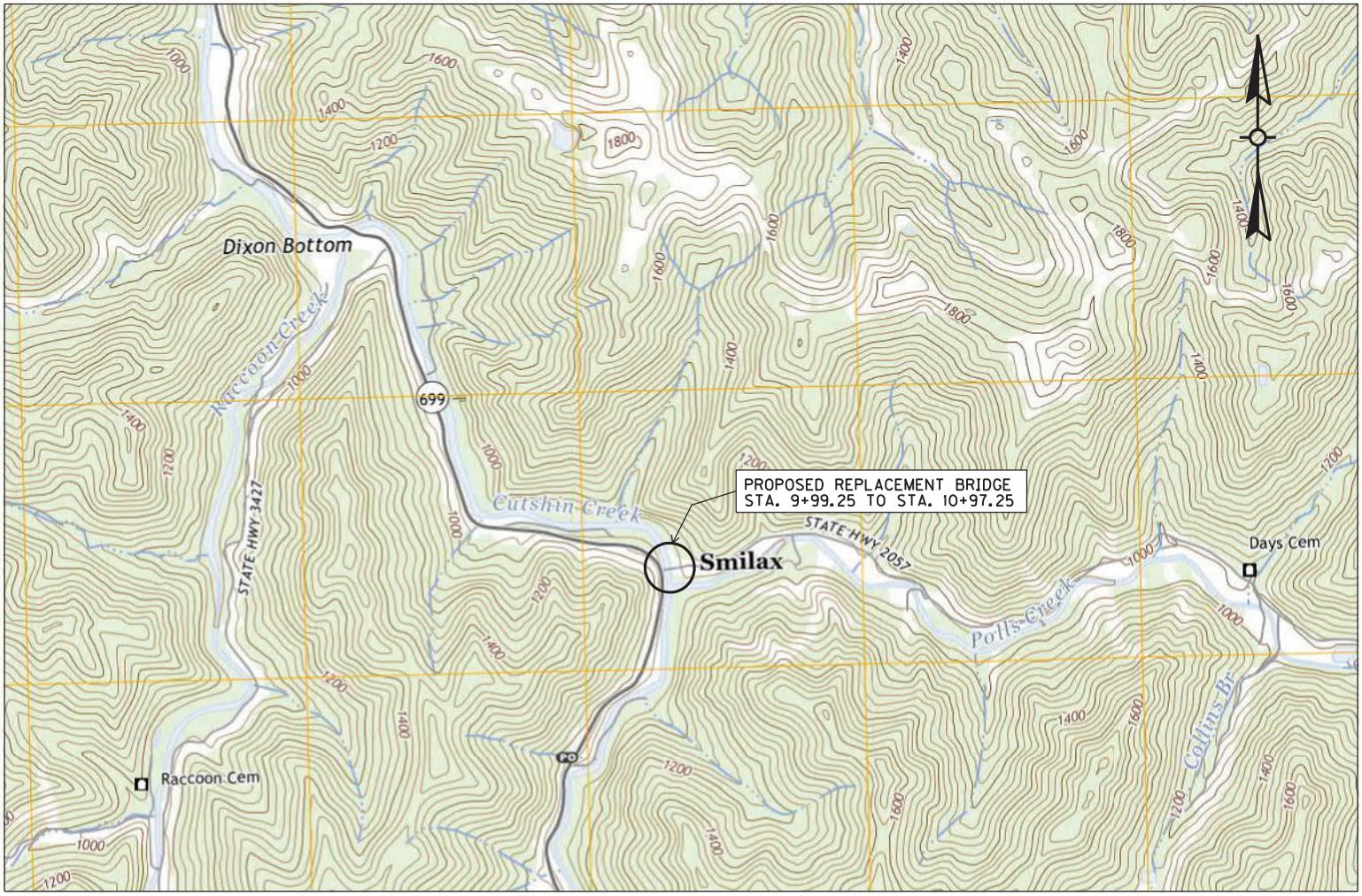

1" = 2000'

STRUCTURE GEOTECHNICAL REPORT

KY 2057 BRIDGE OVER CUTSHIN CREEK

LESLIE COUNTY, KENTUCKY

STA. 9 + 99.25 TO STA. 10 + 97.25

BRIDGE NO. 066B00055N

ITEM NO. 11–10214

BASEMAP FROM USGS 7.5–MINUTE SERIES MAP OF HYDEN QUADRANGLE (2022)

DRAFT

COORDINATE DATA SUBMISSION FORM
KYTC DIVISION OF STRUCTURAL DESIGN -- GEOTECHNICAL BRANCH

County: Leslie

Date: 3/23/2023

Road Number: KY 2057 Bridge over Cutshin Creek

Survey Crew/ Consultant: Geotechnology, LLC

Contact Person: Michael Baird

Item #: 11-10214

Mars #:

Bridge #: 066B00055N

Elevation Datum: ☐ Assumed ☑ NAVD88

Notes:
The plan locations of the borings were estimated based on field tape measurements relative to existing bridge features. The boring surface elevations were estimated from the centerline profile prepared for this bridge.

HOLE NUMBER	LATITUDE (Decimal Degrees)	LONGITUDE (Decimal Degrees)	HOLE NUMBER	STATION	OFFSET	ELEVATION (ft)
1001	37.135675196	-83.281844049	1001	11+00.7	2.9 Lt.	924.8
1002	37.135640243	-83.282184103	1002	10+00.8	6.6 Lt.	926.0
1003	37.135670707	-83.281877892	1003	10+90.7	2.9 Lt.	925.0

DRAFT

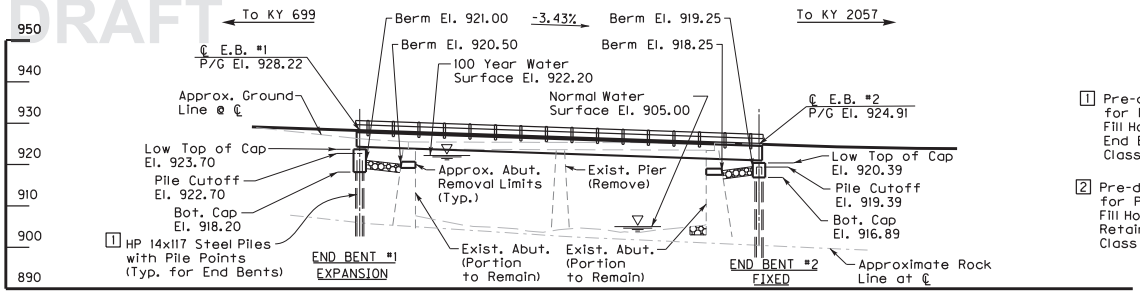

ELEVATION

96'-6" Simple Span CB42X48 PPC Box Beam Bridge
Live Load 125% of HL-93 (KYHL-93)
28'-0" Bridge Roadway Width - 90° Skew Rt.

1 Pre-drill 2'-6" Diameter Holes for Piles into Bedrock. Fill Holes up to Bottom of End Bent Caps with Class "B" Concrete.

2 Pre-drill 3'-0" Diameter Holes for Piles into Bedrock. Fill Holes up to Bottom of Retaining Wall Concrete with Class "B" Concrete.

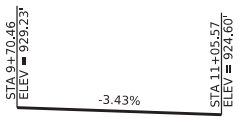

PROFILE GRADE

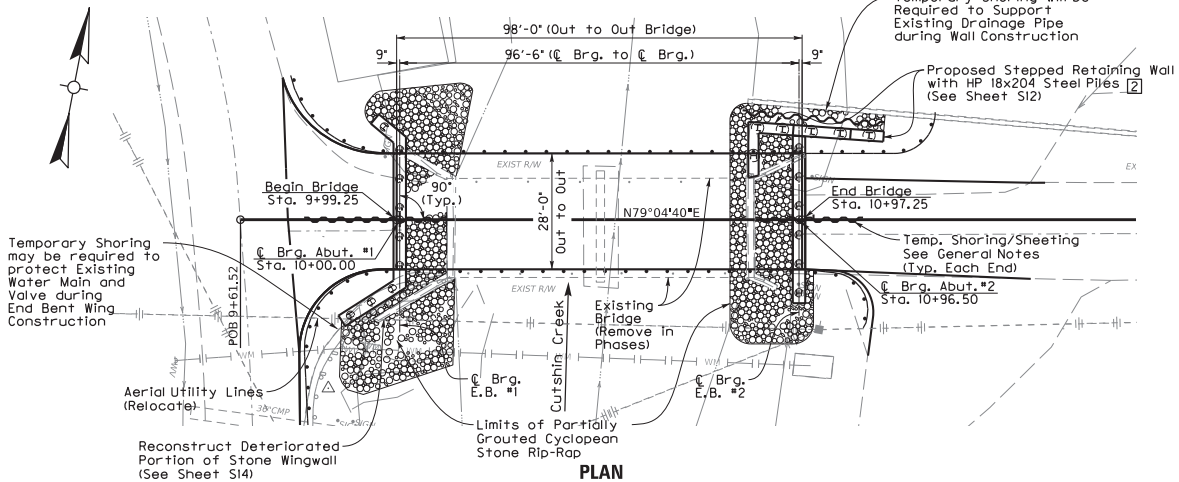

PLAN

(Superstructure Not Shown)

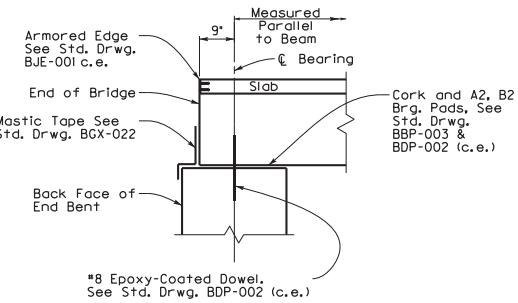

END OF BRIDGE DETAIL

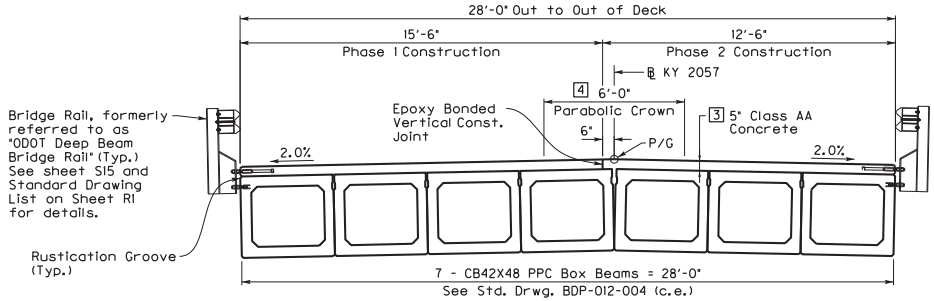

TYPICAL SECTION

Note: All reinforcement shall be epoxy coated.

3 See Note 1 on Sheet S9.

4 See Parabolic Crown detail on Sheet S10.

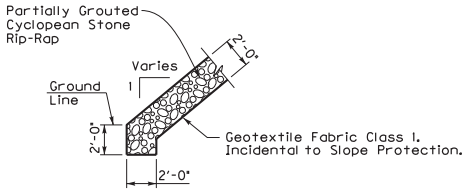

TOE OF SLOPE DETAIL

COMMONWEALTH OF KENTUCKY DEPARTMENT OF HIGHWAYS	REVISION / DATE	PREPARED BY JMT	DATE: 2/23/2023	CHECKED BY	LAYOUT	ROUTE	ITEM NO. 11-10214	COUNTY OF LESLIE
			DESIGNED BY: Matthew Snyder	Michael Merritt	CROSSING CUTSHIN CREEK	KY 2057	SHEET NO. S2	DRAWING NUMBER 28795
			DETAILED BY: Amy Caplinger	Matthew Snyder				

MicroStation v10.16.3.31 USER: $$$$USER$$$$ DATE PLOTTED: $$$$DATE$$$$ FILE NAME: $$$$designfiles$specification$$$$

DRAFT

GEOTECHNOLOGY
A UES Company

UNCONFINED COMPRESSIVE STRENGTH OF COHESIVE SOILS
AASHTO T 208 (KM 64-522)

CLIENT : Johnson, Mirmiran & Thompson, Inc. DATE: 5/24/2023
PROJECT NO.: J041928.20
PROJECT: KY 2057 Bridge over Cutshin Creek - Bridge No. 066B00055N - Item No. 11-10214
LOCATION: Leslie County, Kentucky

BORING NO.: 1001 SAMPLE NO.: 2 DEPTH (ft.): 7.0-9.0
SAMPLE OBTAINED BY: Shelby Tube CONDITION: Undisturbed
SAMPLE DESCRIPTION: Stiff, brown to dark brown, SANDY LEAN CLAY with GRAVEL (fill) (CL).

LIQUID LIMIT (%): 28 PLASTIC LIMIT (%): 20 PLASTICITY INDEX (%): 8 AASHTO: A-4 (2)
GRAVEL (%): 21 SAND (%): 27 SILT (%): 37 CLAY (%): 15
SPECIFIC GRAVITY OF SOLIDS: 2.71 (Per AASHTO T 100) LOAD CELL NO.: 1059

SAMPLE DATA	
DIAMETER (in.):	2.85
HEIGHT (in.):	5.59
HEIGHT TO DIAMETER RATIO:	1.96
WET UNIT WEIGHT (pcf):	136.4
DRY UNIT WEIGHT (pcf):	119.3
VOID RATIO:	0.42
MOISTURE CONTENT (%)*:	14.3
DEGREE OF SATURATION (%):	93

FAILURE DATA	
AVERAGE RATE OF AXIAL STRAIN TO FAILURE (%/min.):	**1.1**
AXIAL STRAIN AT FAILURE (%):	**4.5**
TIME TO FAILURE (min.):	**4.8**
UNCONFINED COMPRESSIVE STRENGTH, q_u (psf):	**2,900**
UNDRAINED SHEAR STRENGTH, s_u (psf):	**1,450**
SENSITIVITY, S_t:	**-**
LIMITING COMPRESSIVE STRESS @ 10% STRAIN (psf):	**N/A**

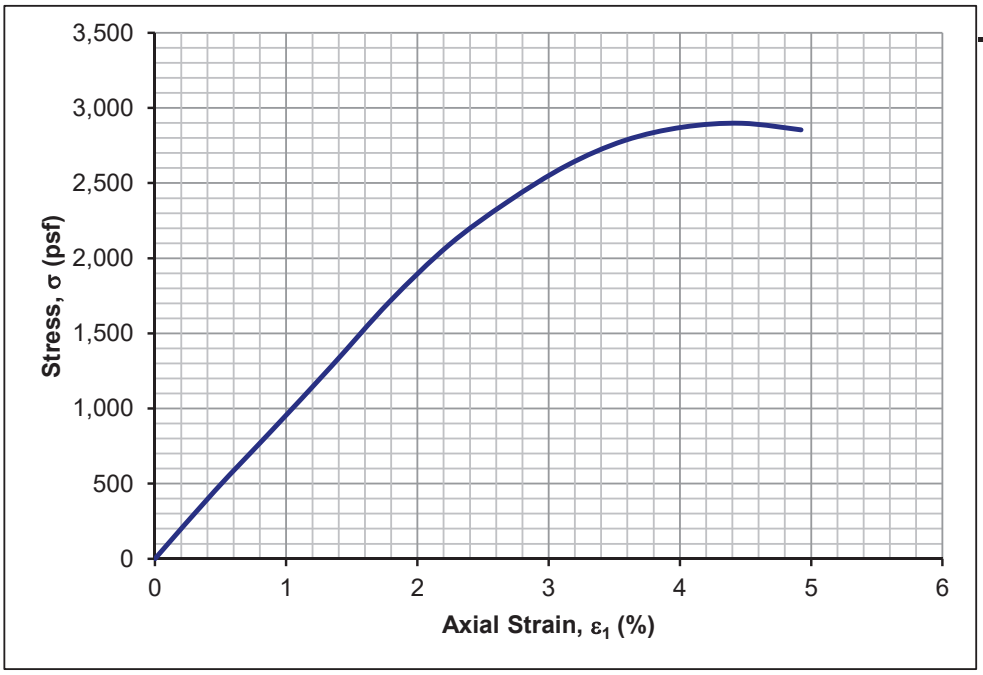

FAILURE SHAPES

FRONT VIEW

SIDE VIEW

REMARKS :

*Moisture content determined after shear from entire sample.

DRAFT

GEOTECHNOLOGY
A UES Company

UNCONFINED COMPRESSIVE STRENGTH OF COHESIVE SOILS
AASHTO T 208 (KM 64-522)

CLIENT : Johnson, Mirmiran & Thompson, Inc. DATE: 5/24/2023
PROJECT NO.: J041928.20
PROJECT: KY 2057 Bridge over Cutshin Creek - Bridge No. 066B00055N - Item No. 11-10214
LOCATION: Leslie County, Kentucky

BORING NO.: 1001 SAMPLE NO.: 3 DEPTH (ft.): 12.0-14.0
SAMPLE OBTAINED BY: Shelby Tube CONDITION: Undisturbed
SAMPLE DESCRIPTION: Stiff, brown, SILTY, CLAYEY SAND with GRAVEL (fill) (SC-SM).

LIQUID LIMIT (%): 24 PLASTIC LIMIT (%): 18 PLASTICITY INDEX (%): 6 AASHTO: A-2-4 (0)
GRAVEL (%): 42 SAND (%): 27 SILT (%): 22 CLAY (%): 10
SPECIFIC GRAVITY OF SOLIDS: 2.70 (Per AASHTO T 100) LOAD CELL NO.: 1059

SAMPLE DATA	
DIAMETER (in.):	2.84
HEIGHT (in.):	5.53
HEIGHT TO DIAMETER RATIO:	1.95
WET UNIT WEIGHT (pcf):	142.1
DRY UNIT WEIGHT (pcf):	128.0
VOID RATIO:	0.32
MOISTURE CONTENT (%)*:	11.0
DEGREE OF SATURATION (%):	94

FAILURE DATA	
AVERAGE RATE OF AXIAL STRAIN TO FAILURE (%/min.):	**1.1**
AXIAL STRAIN AT FAILURE (%):	**4.1**
TIME TO FAILURE (min.):	**4.5**
UNCONFINED COMPRESSIVE STRENGTH, q_u (psf):	**3,110**
UNDRAINED SHEAR STRENGTH, s_u (psf):	**1,555**
SENSITIVITY, S_t:	**-**
LIMITING COMPRESSIVE STRESS @ 10% STRAIN (psf):	**N/A**

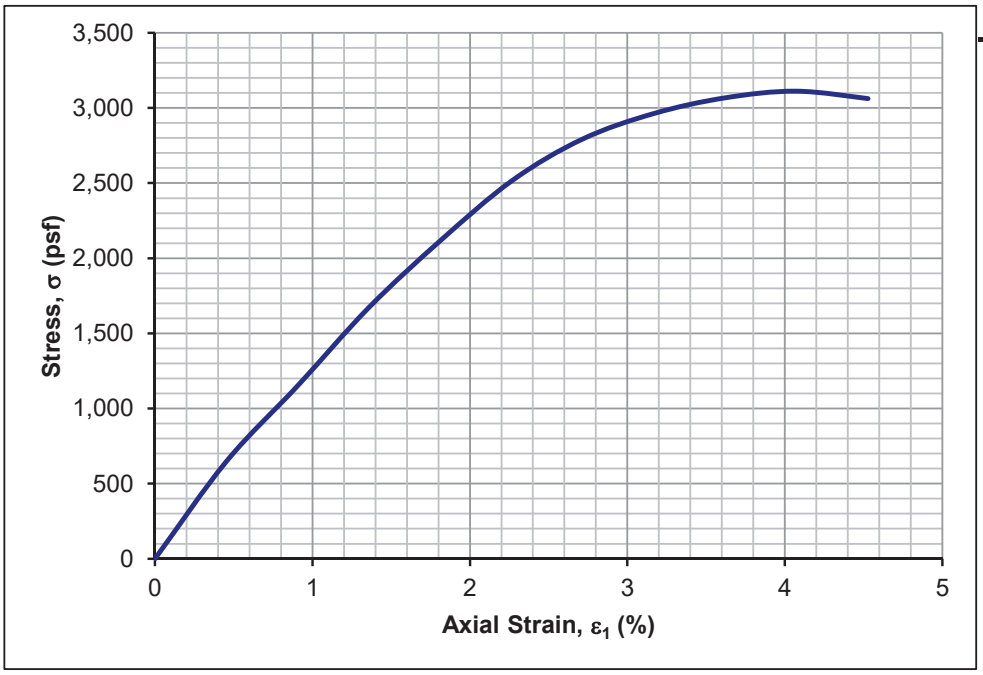

FAILURE SHAPES

FRONT VIEW

SIDE VIEW

REMARKS :

*Moisture content determined after shear from entire sample.

DRAFT

GEOTECHNOLOGY
A UES Company

UNCONFINED COMPRESSIVE STRENGTH OF COHESIVE SOILS
AASHTO T 208 (KM 64-522)

CLIENT : Johnson, Mirmiran & Thompson, Inc. DATE: 5/30/2023
PROJECT NO.: J041928.20
PROJECT: KY 2057 Bridge over Cutshin Creek - Bridge No. 066B00055N - Item No. 11-10214
LOCATION: Leslie County, Kentucky

BORING NO.: 1002 SAMPLE NO.: 3 DEPTH (ft.): 7.0-9.0
SAMPLE OBTAINED BY: Shelby Tube CONDITION: Undisturbed
SAMPLE DESCRIPTION: Stiff, brown, SILTY, CLAYEY GRAVEL with SAND (fill) (GC-GM).

LIQUID LIMIT (%): 24 PLASTIC LIMIT (%): 20 PLASTICITY INDEX (%): 4 AASHTO: A-4 (0)
GRAVEL (%): 39 SAND (%): 21 SILT (%): 29 CLAY (%): 11
SPECIFIC GRAVITY OF SOLIDS: 2.70 (Per AASHTO T 100) LOAD CELL NO.: 1059

SAMPLE DATA	
DIAMETER (in.):	2.85
HEIGHT (in.):	5.66
HEIGHT TO DIAMETER RATIO:	1.98
WET UNIT WEIGHT (pcf):	133.8
DRY UNIT WEIGHT (pcf):	116.0
VOID RATIO:	0.45
MOISTURE CONTENT (%)*:	15.3
DEGREE OF SATURATION (%):	92

FAILURE DATA	
AVERAGE RATE OF AXIAL STRAIN TO FAILURE (%/min.):	**1.1**
AXIAL STRAIN AT FAILURE (%):	**3.1**
TIME TO FAILURE (min.):	**3.3**
UNCONFINED COMPRESSIVE STRENGTH, q_u (psf):	**2,650**
UNDRAINED SHEAR STRENGTH, s_u (psf):	**1,325**
SENSITIVITY, S_t:	**-**
LIMITING COMPRESSIVE STRESS @ 10% STRAIN (psf):	**N/A**

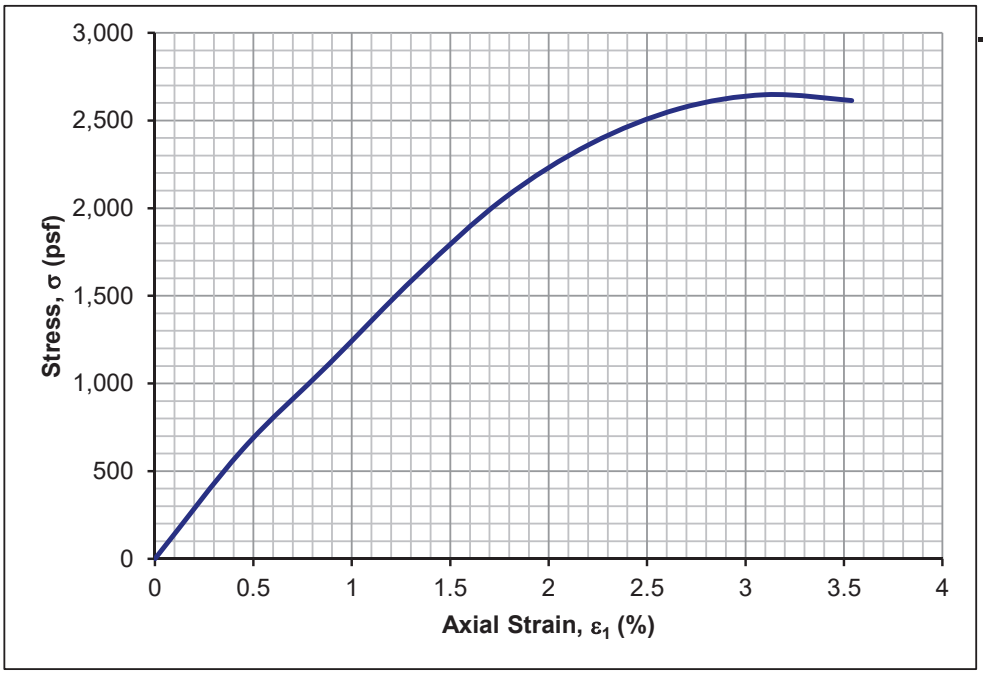

FAILURE SHAPES

FRONT VIEW

SIDE VIEW

REMARKS :

*Moisture content determined after shear from entire sample.

DRAFT

GEOTECHNOLOGY
A UES Company

UNCONFINED COMPRESSIVE STRENGTH OF COHESIVE SOILS
AASHTO T 208 (KM 64-522)

CLIENT : Johnson, Mirmiran & Thompson, Inc. DATE: 5/24/2023
PROJECT NO.: J041928.20
PROJECT: KY 2057 Bridge over Cutshin Creek - Bridge No. 066B00055N - Item No. 11-10214
LOCATION: Leslie County, Kentucky

BORING NO.: 1002 SAMPLE NO.: 4 DEPTH (ft.): 12.0-14.0
SAMPLE OBTAINED BY: Shelby Tube CONDITION: Undisturbed
SAMPLE DESCRIPTION: Stiff, brown, SILTY, CLAYEY GRAVEL with SAND (fill) (GC-GM).

LIQUID LIMIT (%): 24 PLASTIC LIMIT (%): 20 PLASTICITY INDEX (%): 4 AASHTO: A-4 (0)
GRAVEL (%): 39 SAND (%): 21 SILT (%): 29 CLAY (%): 11
SPECIFIC GRAVITY OF SOLIDS: 2.70 (Per AASHTO T 100) LOAD CELL NO.: 1059

SAMPLE DATA	
DIAMETER (in.):	2.84
HEIGHT (in.):	5.75
HEIGHT TO DIAMETER RATIO:	2.02
WET UNIT WEIGHT (pcf):	135.5
DRY UNIT WEIGHT (pcf):	119.0
VOID RATIO:	0.42
MOISTURE CONTENT (%)*:	13.9
DEGREE OF SATURATION (%):	90

FAILURE DATA	
AVERAGE RATE OF AXIAL STRAIN TO FAILURE (%/min.):	**1.0**
AXIAL STRAIN AT FAILURE (%):	**3.9**
TIME TO FAILURE (min.):	**4.1**
UNCONFINED COMPRESSIVE STRENGTH, q_u (psf):	**2,160**
UNDRAINED SHEAR STRENGTH, s_u (psf):	**1,080**
SENSITIVITY, S_t:	**-**
LIMITING COMPRESSIVE STRESS @ 10% STRAIN (psf):	**N/A**

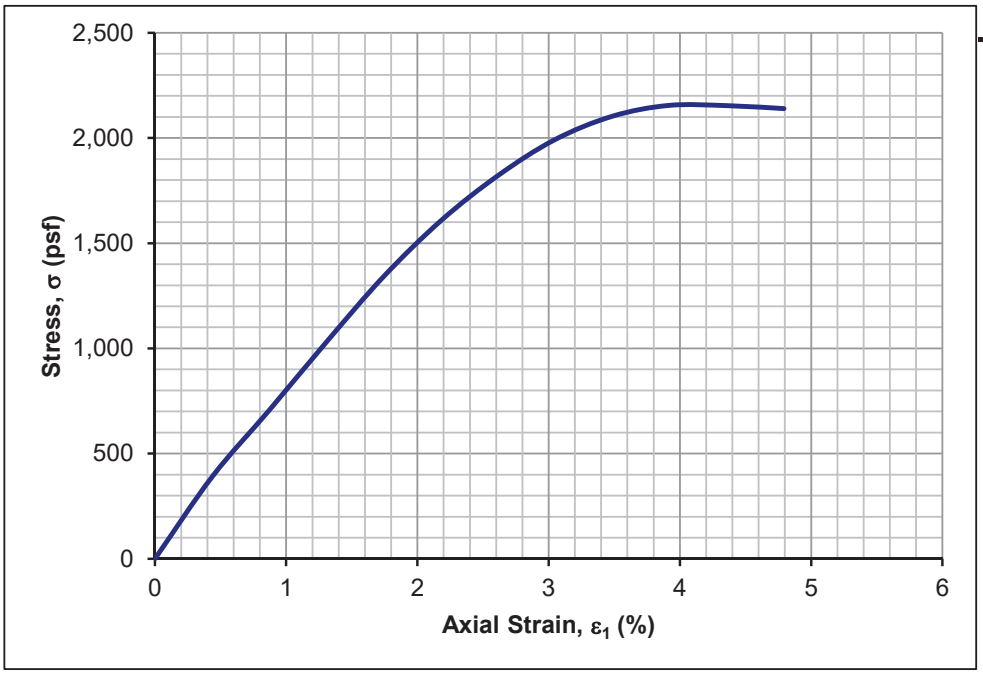

FAILURE SHAPES

FRONT VIEW

SIDE VIEW

REMARKS :

*Moisture content determined after shear from entire sample.

DRAFT

AASHTO CLASSIFICATION OF SOILS AND SOIL-AGGREGATE MIXTURES

General Classification	GRANULAR MATERIALS (35% or less passing 0.075 mm)							SILT-CLAY MATERIALS (More than 35% passing 0.075 mm)			
Group Classification	A-1		A-3	A-2				A-4	A-5	A-6	A-7
	A-1-a	A-1-b		A-2-4	A-2-5	A-2-6	A-2-7				A-7-5 A-7-6
Sieve Analysis, Percent Passing											
2.00 mm (No. 10)	50 max	--	--	--	--	--	--	--	--	--	--
0.425 mm (No. 40)	30 max	50 max	51 min	--	--	--	--	--	--	--	--
0.075 mm (No. 200)	15 max	25 max	10 max	35 max	35 max	35 max	35 max	36 min	36 min	36 min	36 min
Characteristics of Fractions Passing 0.425 mm (No. 40)											
Liquid Limit	--		--	40 max	41 min	40 max	41 min	40 max	41 min	40 max	41 min
Pasticity Index	6 max		N.P.	10 max	10 max	11 min	11 min	10 max	10 max	11 min	11 min

AI	Activity Index
LI	Liquidity Index
S+C	Silt + Clay (% finer than No.200 Sieve)
○	Rockline Soundings
◐	Disturbed Sample Boring
◎	Undisturbed Sample Boring
⊙	Undisturbed Sample Boring & Rock Core
●	Rock Core
	Slope Inclinometer Installation typical applications:
OW	Observation Well
▼ (Date)	Water Elevation

VS (psf)	Field Vane Shear Strength
■	Thin-walled Tube Sample
<	Standard Penetration Test Sample
N	Penetration Resistance
Qu (psf)	Unconfined Compressive Strength
UU (psf)	Unconsolidated Undrained Triaxial Strength
w%	Moisture Content
KY RQD	Rock Quality Designation (Kentucky Method)
STD RQD	Rock Quality Designation (Standard Method)
SDI(JS)	Slake Durability Index (Jar Slake Test)
REC	Core Recovery
ϕ	Angle of Internal Friction (Total Stress)
ϕ'	Angle of Internal Friction (Effective Stress)
c (psf)	Cohesion (Total Stress)
c' (psf)	Cohesion (Effective Stress)
γ (pcf)	Total Unit Weight
RDZ	Rock Disintegration Zone
OB	Overburden Bench
IB	Intermediate Bench
R	Refusal
NR	Refusal Not Encountered
➡	Approximate Footing Elevation

UNIFIED SOIL CLASSIFICATIONS

MAJOR DIVISIONS		SYMBOL	NAME
COARSE GRAINED SOILS	GRAVEL AND GRAVELLY SOILS	GW	Well-graded gravels or gravel-sand mixtures, little or no fines.
		GP	Poorly graded gravels or gravel-sand mixtures, little or no fines.
		GM	Silty gravels, gravel-sand-silt mixtures.
		GC	Clayey gravels, gravel-sand-clay mixtures.
	SAND AND SANDY SOILS	SW	Well-graded sands or gravelly sands, little or no fines.
		SP	Poorly graded sands or gravelly sands, little or no fines.
		SM	Silty sands, sand-silt mixtures.
		SC	Clayey sands, sand-clay mixtures.
FINE GRAINED SOILS	SILTS AND CLAYS (LL < 50)	ML	Inorganic silts and very fine sands, rock flour, silty or clayey fine sands or clayey silts with slight plasticity.
		CL	Inorganic clays of low to medium plasticity, lean clays.
		CL-ML	Silty clay, silty clay with sand and/or gravel, sandy silty clay, sandy silty clay with gravel, gravelly silty clay with sand.
	SILTS AND CLAYS (LL ≥ 50)	MH	Inorganics silts, micaceous or diatomaceous fine sandy or silty soils, elastic silts.
		CH	Inorganic clays at high plasticity, fat clays.

UNIFIED SOIL CLASSIFICATIONS (CONT.)

MAJOR DIVISIONS		SYMBOL	NAME
COARSE GRAINED SOILS	GRAVEL AND GRAVELLY SOILS	GP-GC	Poorly graded gravel with clay (or silty clay), Poorly graded gravel with clay and sand (or silty clay and sand).
		GP-GM	Poorly graded gravel with silt, Poorly graded gravel with silt and sand.
		GW-GC	Well-graded gravel with clay (or silty clay), Well-graded gravel with clay and sand (or silty clay and sand).
		GW-GM	Well-graded gravel with silt, Well-graded gravel with silt and sand.
		GC-GM	Silty clayey gravel, Silty clayey gravel with sand.
	SAND AND SANDY SOILS	SP-SC	Poorly graded sand with clay (or silty clay), Poorly graded sand with clay and gravel (or silty clay and gravel).
		SP-SM	Poorly graded sand with silt, Poorly graded sand with silt and gravel.
		SW-SC	Well-graded sand with clay (or silty clay), Well-graded sand with clay and gravel (or silty clay and gravel).
		SW-SM	Well-graded sand with silt, Well-graded sand with silt and gravel.
		SC-SM	Silty clayey sand, silty clayey sand with gravel.
UNCLASSIFIED MATERIAL		OH	Inorganic silts and very fine sands, rock flour, silty or clayey fine sands or clayey silts with slight plasticity.
		OL	Inorganic clays of low to medium plasticity, gravelly clays, lean clays.

LIMESTONE

TALUS, MINE WASTE, FILL MATERIAL, BOULDERS, & ETC.

SANDSTONE

COAL

DURABLE SHALE (SDI ≥ 95)

DOLOMITE

NONDURABLE SHALE (SDI < 95)

LIMESTONE (ARGILLACEOUS)

GRANULAR EMBANKMENT

SLOPE PROTECTION

STRUCTURE GRANULAR BACKFILL

COMMONWEALTH OF KENTUCKY
DEPARTMENT OF HIGHWAYS

REVISION	DATE

PREPARED BY GEOTECHNOLOGY

DATE: August 2, 2023	CHECKED BY
DESIGNED BY:	
DETAILED BY: M. Baird	W. Baskin / R. Bach

GEOTECHNICAL SYMBOL SHEET

ROUTE	ITEM NO.	COUNTY OF
KY 2057	11-10214	LESLIE
	SHEET NO. —	DRAWING NUMBER S-XXX-202X-

MicroStation v10.15.0.74 USER: mbaird DATE PLOTTED: August 2, 2023 FILE NAME: C:\USERS\MBAIRD\ONEDRIVE - UNIVERSAL ENGINEERING-TEAM UES\GENERAL - MIDWEST KYTC TEAM\KYTC\J041928.20-KYTC BPPD - 9066B00055N - KY 2057 CUTS\DRAW\PLANS FOR SUBMITTAL\066B00055N_GEOTECHNICAL SYMBOLS_KY 2057 BRIDGE.dgn

DRAFT

SUBSURFACE DATA

Plan Scale 1" = 10'

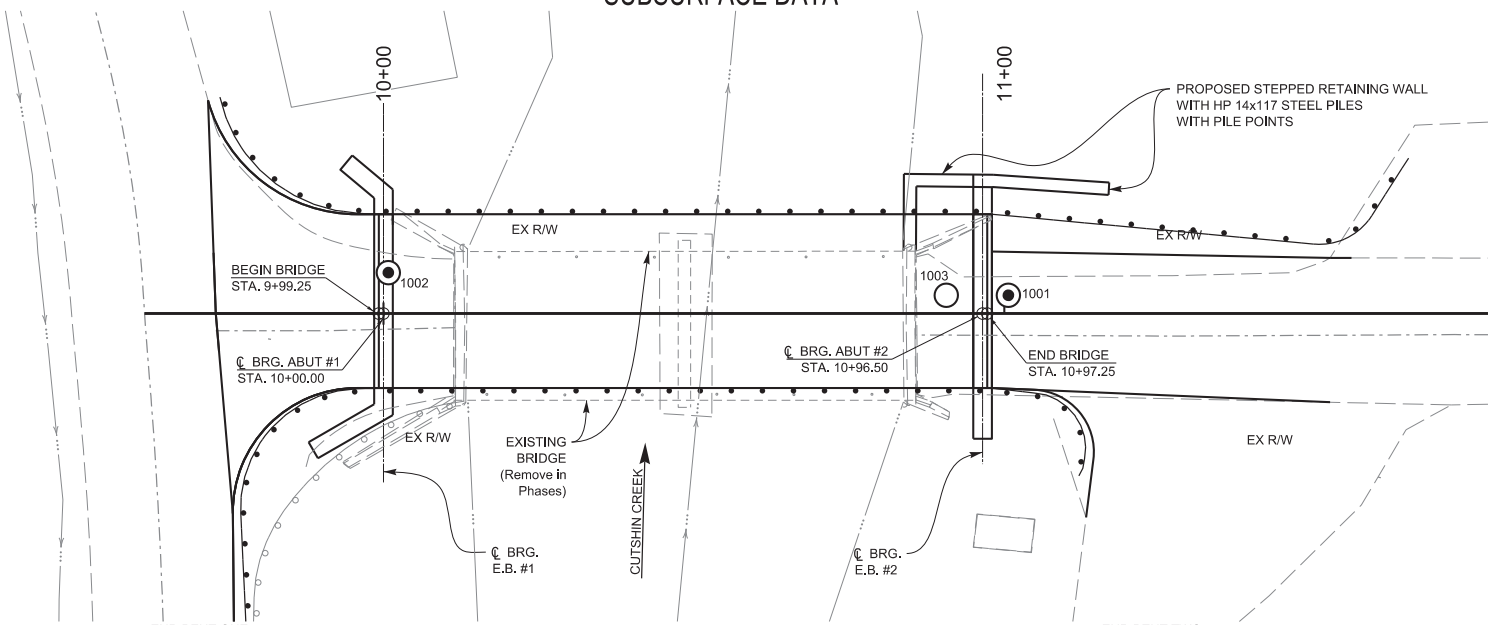

Profile Scale:
Vertical 1" = 10'
Horizontal N.T.S.

APPROXIMATE ROADWAY GRADE ELEV. = 928.22'

APPROXIMATE ROADWAY GRADE ELEV. = 924.91'

Hole No.	1002	1003	1001
Station	10+00.8	10+90.7	11+00.7
Offset	6.6' Lt.	2.9' Lt.	2.9' Lt.
Elev.	926.0'	925.0'	924.8'

(Sea level datum)

930 920 910 900 890 880

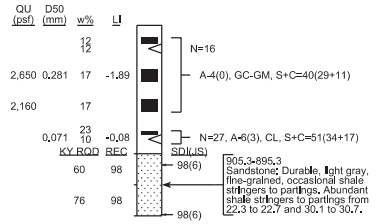

Top of Rock Elev. = 905.3'
Base of Weathered Rock Elev. = 905.3'

Abutment Concrete Elev. = 909.7'

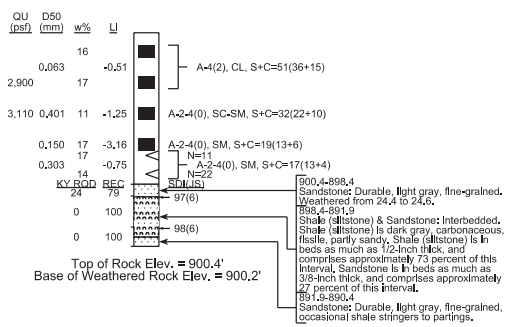

Top of Rock Elev. = 900.4'
Base of Weathered Rock Elev. = 900.2'

930 920 910 900 890 880 870

Datum

Note: This sheet presents geotechnical data and recommendations. Refer to the roadway plans, profiles, cross sections, and structure plans for final alignments, grades, and details.

SHEET 1 of 1

COMMONWEALTH OF KENTUCKY DEPARTMENT OF HIGHWAYS	REVISION	DATE	PREPARED BY GEOTECHNOLOGY	DATE: June 26, 2023	CHECKED BY	SUBSURFACE DATA	ROUTE KY 2057	ITEM NO. 11-10214	COUNTY OF LESLIE
				DESIGNED BY:		CROSSING CUTSHIN CREEK		SHEET NO.	DRAWING NUMBER S-XXX-202X
				DETAILED BY: M. Baird	W. Basich / R. Bach				

MicroStation v10.15.0.74 USER: mbaird DATE PLOTTED: June 26, 2023 FILE NAME: C:\USERS\MBAIRD\ONEDRIVE - UNIVERSAL ENGINEERING-TEAM UES\GENERAL - MIDWEST KYTC TEAM\KYTC\J041928.20-KYTC BPPD - 9066B00055N - KY 2057 CUTS\DRAW\PLANS FOR SUBMITTAL\066B00055N_SUBSURFACE DATA_KY 2057 BRIDGE.DGN

DRAFT

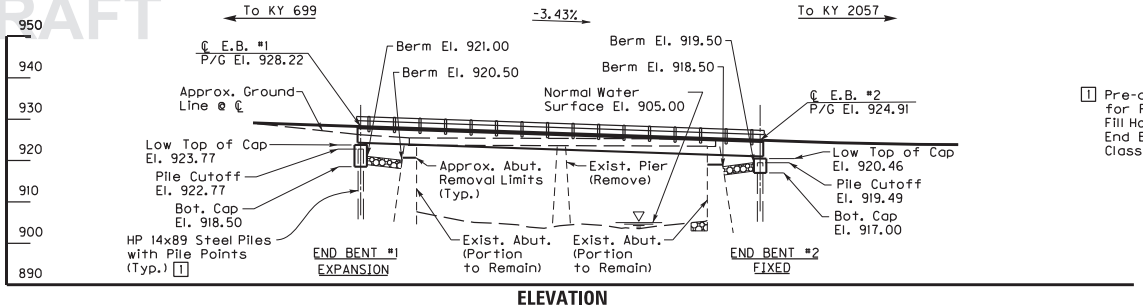

1 Pre-drill 2'-0" Diameter Holes for Piles into Bedrock. Fill Holes up to Bottom of End Bent Caps with Class "B" Concrete.

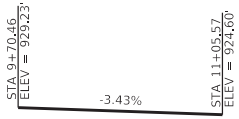

PROFILE GRADE

ELEVATION

96'-6" Simple Span CB42X48 PPC Box Beam Bridge
Live Load 125% of HL-93 (KYHL-93)
28'-0" Bridge Roadway Width - 90° Skew Rt.

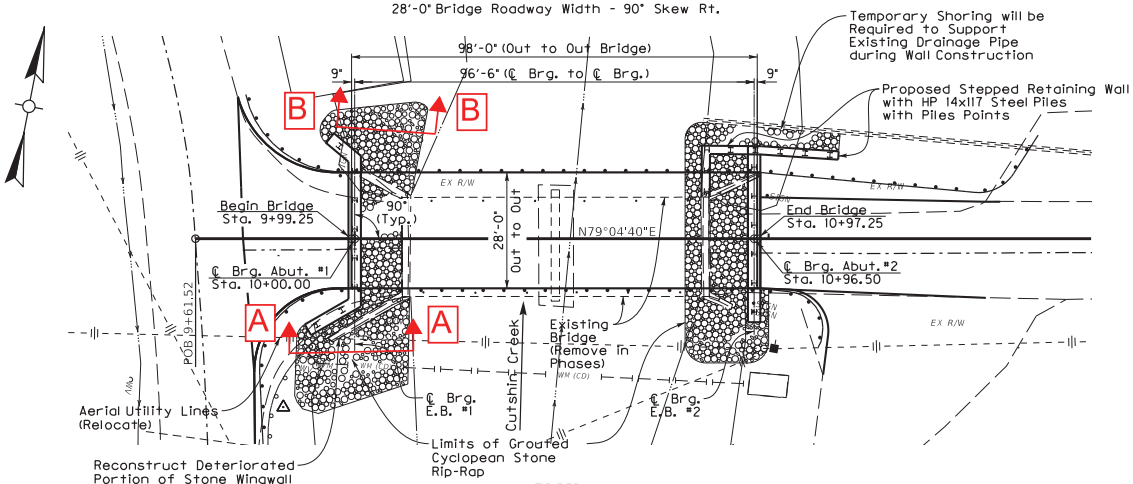

PLAN

(Superstructure Not Shown)

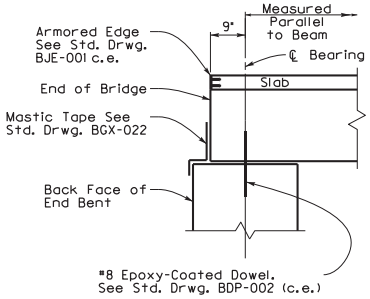

END OF BRIDGE DETAIL

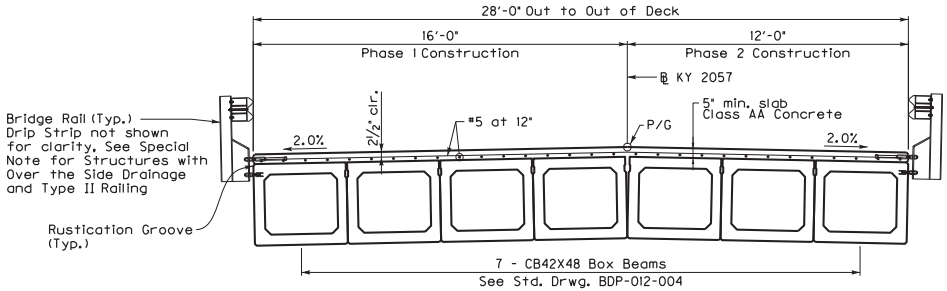

TYPICAL SECTION

Note: All reinforcement shall be epoxy coated.

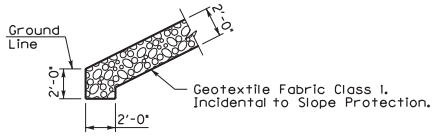

TOE OF SLOPE DETAIL

COMMONWEALTH OF KENTUCKY DEPARTMENT OF HIGHWAYS	REVISION	DATE	PREPARED BY	DATE: 2/23/2023	CHECKED BY	LAYOUT	ROUTE	ITEM NO.	COUNTY OF
			JMT	DESIGNED BY: Matthew Snyder	Michael Merritt	CROSSING: CUTSHIN CREEK	KY 2057	11-10214	LESLIE
				DETAILED BY: Amy Caplinger	Matthew Snyder			SHEET NO. S2	DRAWING NUMBER X-1

MicroStation v10.16.3.31 USER: $$$$USER$$$$ DATE PLOTTED: $$$$DATE$$$$ FILE NAME: $$$$designs\fileespecifications$$$$

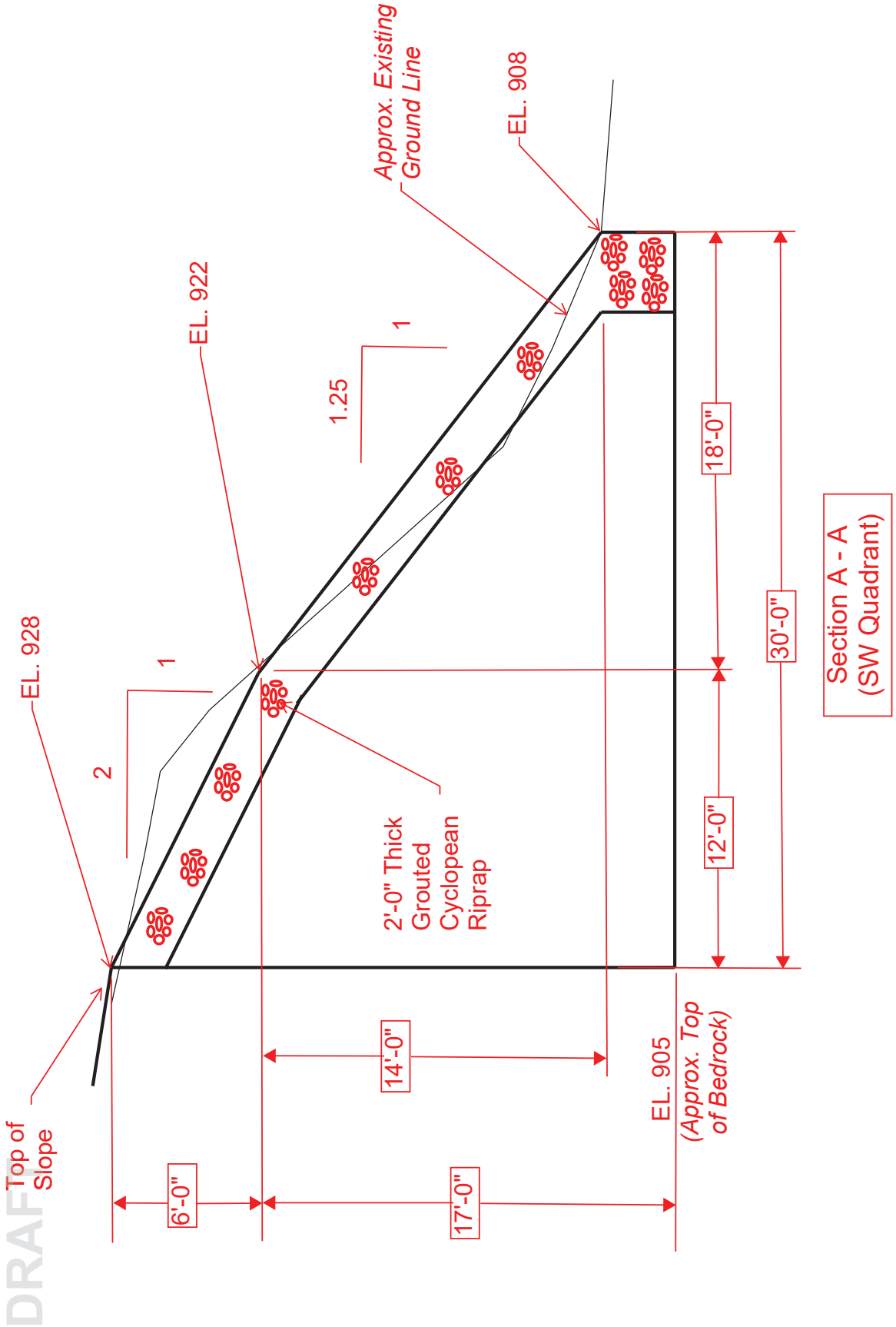
Approx. Existing Ground Line
EL. 908
EL. 922
1
1.25
18'-0"
30'-0"
Section A - A
(SW Quadrant)
EL. 928
1
2
2'-0" Thick
Grouted
Cyclopean
Riprap
12'-0"
14'-0"
EL. 905
(Approx. Top of Bedrock)
Top of Slope
6'-0"
17'-0"
DRAFT

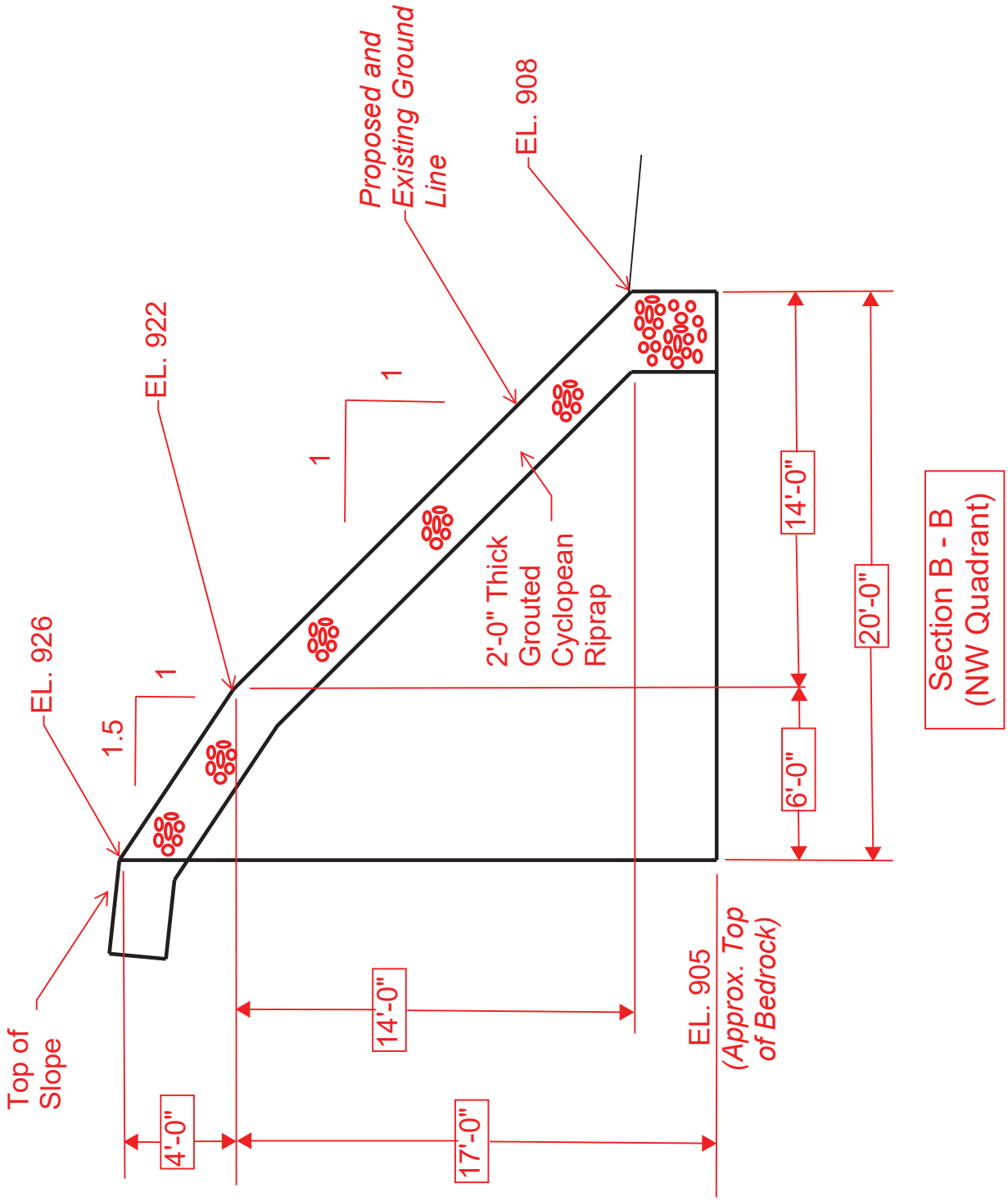
Proposed and Existing Ground Line
EL. 908
EL. 922
1
1
EL. 926
1.5
1
2'-0" Thick Grouted Cyclopean Riprap
14'-0"
20'-0"
6'-0"
Section B - B
(NW Quadrant)
Top of Slope
4'-0"
14'-0"
17'-0"
EL. 905
(Approx. Top of Bedrock)

DRAFT

DRAFT

SCALE: 1" = 10' HORIZONTAL
1" = 10' VERTICAL

ASSUMED SOIL STRENGTH PARAMETERS		
SOIL	1	2
LONG TERM	γ = 135 pcf c' = 0 psf ϕ' = 32°	γ = 120 pcf c' = 1000 psf ϕ' = 38°

See Structure Geotechnical Report for discussion of soil strength parameter selection.
*Subsurface conditions were interpolated / extrapolated from nearby borings.

Note: This sheet presents geotechnical data and recommendations. We note that the grades and stations presented on this sheet are approximate, and were developed based upon sketches provided by Johnson, Mirmiran, & Thompson, Inc. on June 16, 2023. Refer to the Subsurface Data Sheet for boring log descriptions and laboratory test results.

FACTORS OF SAFETY PROPOSED GROUTED RIP RAP SLOPE		
LONG TERM	A	1.2*

*The computed factor of safety for the proposed conditions does not meet the required target factor of safety for long term stability specified in the KYTC Geotechnical Guidance Manual.

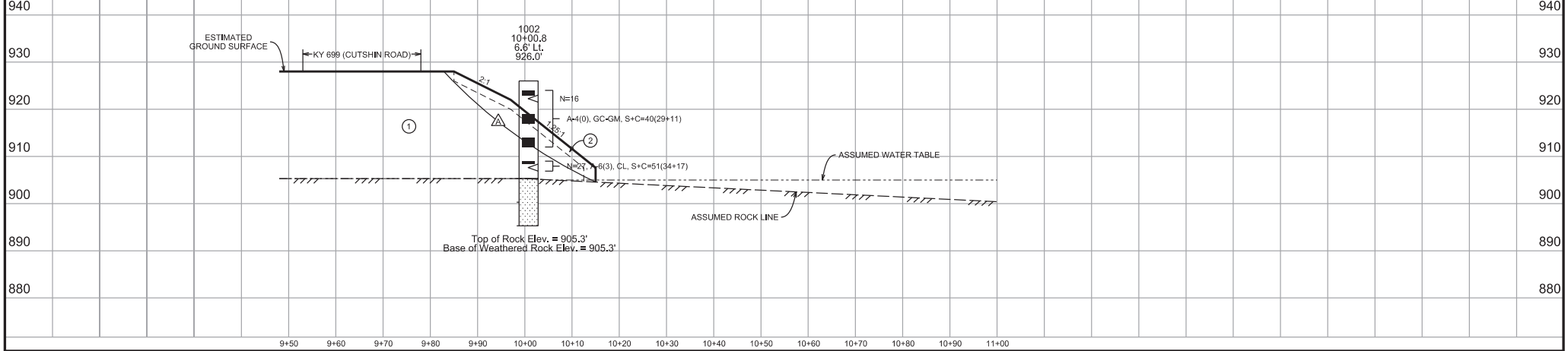

COMMONWEALTH OF KENTUCKY
DEPARTMENT OF HIGHWAYS

REVISION	DATE

PREPARED BY GEOTECHNOLOGY

DATE: August 29, 2023	CHECKED BY
DESIGNED BY:	
DETAILED BY: M. Baird	W. Basich / L. Czor

STABILITY SECTION
CROSS SECTION A-A

ROUTE	ITEM NO.	COUNTY OF
KY 2057	11-10214	LESLIE
	SHEET NO.	DRAWING NUMBER
	---	S-XXX-202X-

MicroStation v10.15.0.74 USER: mbaird DATE PLOTTED: August 29, 2023 FILE NAME: C:\USERS\MBAIRD\ONEDRIVE - UNIVERSAL ENGINEERING-TEAM UES\GENERAL - MIDWEST KYTC TEAM\KYTC\J041928.20-KYTC BPPD - 9066B00055N - KY 2057 CUTS\DRAW\PLANS FOR SUBMITTAL\066B00055N_STABILITY SECTION_XS-A_KY 2057 BRIDGE.dgn

DRAFT

SCALE: 1" = 10' HORIZONTAL
1" = 10' VERTICAL

ASSUMED SOIL STRENGTH PARAMETERS		
SOIL	1	2
LONG TERM	γ = 135 pcf c' = 0 psf ϕ' = 32°	γ = 120 pcf c' = 1000 psf ϕ' = 38°

See Structure Geotechnical Report for discussion of soil strength parameter selection.
*Subsurface conditions were interpolated / extrapolated from nearby borings.

Note: This sheet presents geotechnical data and recommendations. We note that the grades and stations presented on this sheet are approximate, and were developed based upon sketches provided by Johnson, Mirmiran, & Thompson, Inc. on June 16, 2023. Refer to the Subsurface Data Sheet for boring log descriptions and laboratory test results.

FACTORS OF SAFETY PROPOSED GROUTED RIP RAP SLOPE		
LONG TERM	A	1.0*

*The computed factor of safety for the proposed conditions does not meet the required target factor of safety for long term stability specified in the KYTC Geotechnical Guidance Manual.

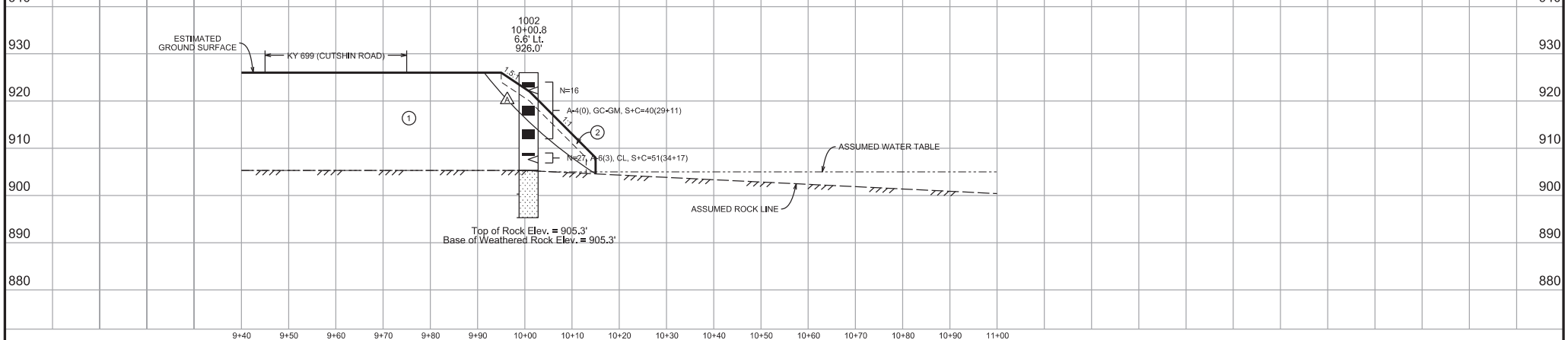

COMMONWEALTH OF KENTUCKY
DEPARTMENT OF HIGHWAYS
KENTUCKY TRANSPORTATION CABINET

REVISION	DATE

PREPARED BY GEOTECHNOLOGY

DATE: August 29, 2023	CHECKED BY
DESIGNED BY:	
DETAILED BY: M. Baird	W. Basich / L. Czor

STABILITY SECTION
CROSS SECTION B-B

ROUTE	ITEM NO.	COUNTY OF
KY 2057	11-10214	LESLIE
	SHEET NO.	DRAWING NUMBER
	---	S-XXX-202X-

MicroStation v10.15.0.74 USER: mbaird DATE PLOTTED: August 29, 2023 FILE NAME: C:\USERS\MBAIRD\ONEDRIVE - UNIVERSAL ENGINEERING-TEAM UES\GENERAL - MIDWEST KYTC TEAM\KYTC\J041928.20-KYTC BPPD - 9066B00055N - KY 2057 CUTS\DRAW\PLANS FOR SUBMITTAL\066B00055N_STABILITY SECTION_XS-B_KY 2057 BRIDGE.dgn

DRAFT

GEOTECHNOLOGY
A UES Company

CLIENT: Johnson, Mirmiran & Thompson, Inc.
PROJECT NO.: J041928.20
PROJECT: KY 2057 Bridge over Cutshin Creek
PROJECT LOCATION: Leslie County, Kentucky
BRIDGE NO.: 066B00055N
ITEM NO.: 11-10214

IDEALIZED SUBSURFACE PROFILE
PARAMETERS FOR LATERAL LOAD ANALYSES
AT
END BENT ONE & ABUTMENT WALLS / RETAINING WALLS
(PRE-DRILLED PILES BACKFILLED WITH CONCRETE)

El. (ft.)		
905.3	Top of Competent Unweathered Bedrock	
Varies	Top of Bedrock Socket	
805.3	Unweathered bedrock, pre-drilled and backfilled with concrete (weak rock model): γ = 140 pcf q_u = 200 psi RQD = 0%	 E_m = 10,000 psi k_{rm} = 0.0005

γ = Unit weight
q_u = Uniaxial compressive strength
E_m = Initial modulus of rock mass
RQD = Rock quality designation
k_{rm} = Bedrock strain factor

Notes:

- Laterally loaded deep foundations should be designed using the p-y approach using the above-provided parameters.
- Lateral resistance should be ignored for the uppermost 2.0 feet of unweathered bedrock due to the potential for scour.
- Appropriate reduction factors (p-multipliers) should be included in the analyses that account for pile width/diameter and pile spacing.

DRAFT

GEOTECHNOLOGY
A UES Company

CLIENT: Johnson, Mirmiran & Thompson, Inc.
PROJECT NO.: J041928.20
PROJECT: KY 2057 Bridge over Cutshin Creek
PROJECT LOCATION: Leslie County, Kentucky
BRIDGE NO.: 066B00055N
ITEM NO.: 11-10214

IDEALIZED SUBSURFACE PROFILE
PARAMETERS FOR LATERAL LOAD ANALYSES
AT
END BENT TWO & ABUTMENT WALLS / RETAINING WALLS
(PRE-DRILLED PILES BACKFILLED WITH CONCRETE)

El. (ft.)		
900.4	Top of Bedrock	
900.2	Top of Competent Unweathered Bedrock	
Varies	Top of Bedrock Socket	
800.2	Unweathered shale bedrock, pre-drilled and backfilled with concrete (weak rock model): γ = 140 pcf q_u = 200 psi RQD = 0%	 E_m = 10,000 psi k_{rm} = 0.0005

γ = Unit weight
q_u = Uniaxial compressive strength
E_m = Initial modulus of rock mass
RQD = Rock quality designation
k_{rm} = Bedrock strain factor

Notes:

- Laterally loaded deep foundations should be designed using the p-y approach using the above-provided parameters.
- Lateral resistance should be ignored for the uppermost 2.0 feet of unweathered bedrock due to the potential for scour.
- Appropriate reduction factors (p-multipliers) should be included in the analyses that account for pile width/diameter and pile spacing.

PART II

SPECIFICATIONS AND STANDARD DRAWINGS

STANDARD SPECIFICATIONS

Any reference in the plans or proposal to previous editions of the *Standard Specifications for Road and Bridge Construction* and *Standard Drawings* are superseded by *Standard Specifications for Road and Bridge Construction, Edition of 2019* and *Standard Drawings, Edition of 2020.*

SUPPLEMENTAL SPECIFICATIONS

The contractor shall use the Supplemental Specifications that are effective at the time of letting. The Supplemental Specifications can be found at the following link:
http://transportation.ky.gov/Construction/Pages/Kentucky-Standard-Specifications.aspx

1I

SPECIAL NOTE FOR PORTABLE CHANGEABLE MESSAGE SIGNS

This Special Note will apply when indicated on the plans or in the proposal.

1.0 DESCRIPTION. Furnish, install, operate, and maintain variable message signs at the locations shown on the plans or designated by the Engineer. Remove and retain possession of variable message signs when they are no longer needed on the project.

2.0 MATERIALS.

2.1 General. Use LED Variable Message Signs Class I, II, or III, as appropriate, from the Department's List of Approved Materials.

Unclassified signs may be submitted for approval by the Engineer. The Engineer may require a daytime and nighttime demonstration. The Engineer will make a final decision within 30 days after all required information is received.

2.2 Sign and Controls. All signs must:

1) Provide 3-line messages with each line being 8 characters long and at least 18 inches tall. Each character comprises 35 pixels.
2) Provide at least 40 preprogrammed messages available for use at any time. Provide for quick and easy change of the displayed message; editing of the message; and additions of new messages.
3) Provide a controller consisting of:
   a) Keyboard or keypad.
   b) Readout that mimics the actual sign display. (When LCD or LCD type readout is used, include backlighting and heating or otherwise arrange for viewing in cold temperatures.)
   c) Non-volatile memory or suitable memory with battery backup for storing pre-programmed messages.
   d) Logic circuitry to control the sequence of messages and flash rate.
4) Provide a serial interface that is capable of supporting complete remote control ability through land line and cellular telephone operation. Include communication software capable of immediately updating the message, providing complete sign status, and allowing message library queries and updates.
5) Allow a single person easily to raise the sign to a satisfactory height above the pavement during use, and lower the sign during travel.
6) Be Highway Orange on all exterior surfaces of the trailer, supports, and controller cabinet.
7) Provide operation in ambient temperatures from -30 to + 120 degrees Fahrenheit during snow, rain and other inclement weather.
8) Provide the driver board as part of a module. All modules are interchangeable, and have plug and socket arrangements for disconnection and reconnection. Printed circuit boards associated with driver boards have a conformable coating to protect against moisture.
9) Provide a sign case sealed against rain, snow, dust, insects, etc. The lens is UV stabilized clear plastic (polycarbonate, acrylic, or other approved material) angled to prevent glare.
10) Provide a flat black UV protected coating on the sign hardware, character PCB, and appropriate lens areas.
11) Provide a photocell control to provide automatic dimming.

12) Allow an on-off flashing sequence at an adjustable rate.
13) Provide a sight to aim the message.
14) Provide a LED display color of approximately 590 nm amber.
15) Provide a controller that is password protected.
16) Provide a security device that prevents unauthorized individuals from accessing the controller.
17) Provide the following 3-line messages preprogrammed and available for use when the sign unit begins operation:

/KEEP/RIGHT/⇒⇒⇒/
/KEEP/LEFT/⇐⇐⇐/
/LOOSE/GRAVEL/AHEAD/
/RD WORK/NEXT/**MILES/
/TWO WAY/TRAFFIC/AHEAD/
/PAINT/CREW/AHEAD/
/REDUCE/SPEED/**MPH/
/BRIDGE/WORK/***0 FT/
/MAX/SPEED/**MPH/
/SURVEY/PARTY/AHEAD/
/MIN/SPEED/**MPH/
/ICY/BRIDGE/AHEAD/ /ONE LANE/BRIDGE/AHEAD/
/ROUGH/ROAD/AHEAD/
/MERGING/TRAFFIC/AHEAD/
/NEXT/***/MILES/
/HEAVY/TRAFFIC/AHEAD/
/SPEED/LIMIT/**MPH/
/BUMP/AHEAD/
/TWO/WAY/TRAFFIC/

*Insert numerals as directed by the Engineer.
Add other messages during the project when required by the Engineer.

2.3 Power.

1) Design solar panels to yield 10 percent or greater additional charge than sign consumption. Provide direct wiring for operation of the sign or arrow board from an external power source to provide energy backup for 21 days without sunlight and an on-board system charger with the ability to recharge completely discharged batteries in 24 hours.

3.0 CONSTRUCTION. Furnish and operate the variable message signs as designated on the plans or by the Engineer. Ensure the bottom of the message panel is a minimum of 7 feet above the roadway in urban areas and 5 feet above in rural areas when operating. Use Class I, II, or III signs on roads with a speed limit less than 55 mph. Use Class I or II signs on roads with speed limits 55 mph or greater.

Maintain the sign in proper working order, including repair of any damage done by others, until completion of the project. When the sign becomes inoperative, immediately repair or replace the sign. Repetitive problems with the same unit will be cause for rejection and replacement.

Use only project related messages and messages directed by the Engineer, unnecessary messages lessen the impact of the sign. Ensure the message is displayed in either one or 2 phases with each phase having no more than 3 lines of text. When no message is needed, but it is necessary to know if the sign is operable, flash only a pixel.

When the sign is not needed, move it outside the clear zone or where the Engineer directs. Variable Message Signs are the property of the Contractor and shall be removed from the project when no longer needed. The Department will not assume ownership of these signs.

4.0 MEASUREMENT. The final quantity of Variable Message Sign will be

1I

the actual number of individual signs acceptably furnished and operated during the project. The Department will not measure signs replaced due to damage or rejection.

5.0 PAYMENT. The Department will pay for the Variable Message Signs at the unit price each. The Department will not pay for signs replaced due to damage or rejection. Payment is full compensation for furnishing all materials, labor, equipment, and service necessary to, operate, move, repair, and maintain or replace the variable message signs. The Department will make payment for the completed and accepted quantities under the following:

Code	Pay Item	Pay Unit
02671	Portable Changeable Message Sign	Each

Effective June 15, 2012

SPECIAL PROVISION FOR EMBANKMENT AT BRIDGE END BENT STRUCTURES

This Special Provision will apply when indicated on the plans or in the proposal. Section references herein are to the Department's Standard Specifications for Road and Bridge Construction, Current Edition.

1.0 DESCRIPTION. Construct a soil, granular, or rock embankment with soil, granular or cohesive pile core and place structure granular backfill, as the Plans require. Construct the embankment according to the requirements of this Special Provision, the Plans, Standard Drawing RGX 100 and 105, and the Standard Specifications, Current Edition.

2.0 MATERIALS.

2.1 Granular Embankment. Conform to Subsection 805.10. When Granular Embankment materials are erodible or unstable according to Subsection 805.03.04, use the Special Construction Methods found in 3.2 of the Special Provision.

2.2 Rock Embankment. Provide durable rock from roadway excavation that consists principally of Unweathered Limestone, Durable Shale (SDI equal to or greater than 95 according to KM 64-513), or Durable Sandstone.

2.3 Pile Core. Provide a pile core in the area of the embankments where deep foundations are to be installed unless otherwise specified. The Pile Core is the zone indicated on Standard Drawings RGX 100 and 105 designated as Pile Core. Material control of the pile core area during embankment construction is always required. Proper Pile Core construction is required for installation of foundation elements such as drilled or driven piles or drilled shafts. The type of material used to construct the pile core is as directed in the plans or below. Typically, the pile core area will be constructed from the same material used to construct the surrounding embankment. Pile Core can be classified as one of three types:

A) Pile Core - Conform to Section 206 of the Standard Specifications. Provide pile core material consisting of the same material as the adjacent embankment except the material in the pile core area shall be free of boulders or particle sizes larger than 4 inches in any dimension or any other obstructions that may hinder pile driving operations. If the pile core material hinders pile driving operations, take the appropriate means necessary to reach the required pile tip elevation, at no expense to the Department.

B) Granular Pile Core. Granular pile core is required only when specified in the plans. Select a gradation of durable rock to facilitate pile driving that conforms to Subsection 805.11. If granular pile core material hinders pile driving operations, take appropriate means necessary to reach the required pile tip elevation, at no expense to the Department.

C) Cohesive Pile Core. Cohesive Pile Core is required only when specified in the plans. Conform to Section 206 of the Standard Specifications and use soil with at least 50 percent passing a No. 4 sieve having a minimum Plasticity Index (PI) of 10. In addition, keep the cohesive pile core free of boulders, larger than 4 inches in any dimension, or any other obstructions, which would interfere with drilling operations. If cohesive pile core material interferes with drilling operations, take appropriate means necessary to maintain excavation stability, at no expense to the Department.

2.4 Structure Granular Backfill. Conform to Subsection 805.11

2.5 Geotextile Fabric. Conform to Class 1 or Class 2 in Section 214 and 843.

3.0 CONSTRUCTION.

3.1 General. Construct roadway embankments at end bents according to Section 206 and in accordance with the Special Provision, the Plans, and Standard Drawings for the full embankment section. In some instances, granular or rock embankment will be required for embankment construction for stability purposes, but this special provision does not prevent the use of soil when appropriate. Refer to the plans for specific details regarding material requirements for embankment construction.
Place and compact the pile core and structure granular backfill according to the applicable density requirements for the project. If the embankment and pile core are dissimilar materials (i.e., a granular pile core is used with a soil embankment or a cohesive pile core is used with a granular embankment), a Geotextile Fabric, will be required between the pile core and embankment in accordance with Sections 214 and 843 of the Standard Specifications.

When granular or rock embankment is required for embankment construction, conform to the general requirements of Subsection 206.03.02 B. In addition, place the material in no greater than 2-foot loose lifts and compact with a vibrating smooth wheel roller capable of producing a minimum centrifugal force of 15 tons. Apply these requirements to the full width of the embankment for a distance of half the embankment height or 50 feet, whichever is greater, as shown on Standard Drawing RGX-105.

When using granular pile core, install 8-inch perforated underdrain pipe at or near the elevation of the original ground in the approximate locations depicted on the standard drawing, and as the Engineer directs, to ensure positive drainage of the embankment. Wrap the perforated pipe with a fabric of a type recommended by the pipe manufacturer.

After constructing the embankment, excavate for the end bent cap, drive piling, install shafts or other foundation elements, place the mortar bed, construct the end bent, and complete the embankment to finish grade according to the construction sequence shown on the Plans or Standard Drawings and as specified hereinafter.

Certain projects may require widening of existing embankments and the removal of substructures. Construct embankment according to the plans. Substructure removal shall be completed according to the plans and Section 203. Excavation may be required at the existing embankment in order to place the structure granular backfill as shown in the Standard Drawings.
After piles are driven or shafts installed (see design drawings), slope the bottom of the excavation towards the ends of the trench as noted on the plans for drainage. Using a separate pour, place concrete mortar, or any class concrete, to provide a base for forming and placing the cap. Place side forms for the end bent after the mortar has set sufficiently to support workmen and forms without being disturbed.

Install 4-inch perforated pipe in accordance with the plans and Standard Drawings. In the event slope protection extends above the elevation of the perforated pipe, extend the pipe through the slope protection.

After placing the end bent cap and achieving required concrete cylinder strengths, remove adjacent forms and fill the excavation with compacted structure granular backfill material (maximum 1’ loose lifts) to the level of the berm prior to placing beams for the bridge. Place a geotextile fabric between embankment material and structure granular backfill. After completing the end bent backwall, or after completing the span end wall, place the compacted structure granular backfill (maximum 1’

loose lifts) to subgrade elevation. If the original excavation is enlarged, fill the entire volume with compacted structure granular backfill (maximum 1' loose lifts) at no expense to the Department. Do not place backfill before removing adjacent form work. Place structure granular backfill material in trench ditches at the ends of the excavation. Place Geotextile Fabric, over the surface of the compacted structure granular backfill prior to placing aggregate base course.

Tamp the backfill with hand tampers, pneumatic tampers, or other means approved by the Engineer. Thoroughly compact the backfill under the overhanging portions of the structure to ensure that the backfill is in intimate contact with the sides of the structure.

Do not apply seeding, sodding, or other vegetation to the exposed granular embankment.

3.2 Special Construction Methods. Erodible or unstable materials may erode even when protected by riprap or channel lining; use the special construction method described below when using these materials.

Use fine aggregates or friable sandstone granular embankment at "dry land" structures only. Do not use them at stream crossings or locations subject to flood waters.

For erodible or unstable materials having 50 percent or more passing the No. 4 sieve, protect with geotextile fabric. Extend the fabric from the original ground to the top of slope over the entire area of the embankment slopes on each side of, and in front of, the end bent. Cover the fabric with at least 12 inches of non-erodible material.

For erodible or unstable materials having less than 50 percent passing a No. 4 sieve, cover with at least 12 inches of non-erodible material.

Where erodible or unstable granular embankment will be protected by riprap or channel lining, place a geotextile fabric between the embankment and the specified slope protection.

4.0 MEASUREMENT.

4.1 Granular Embankment. The Department will measure the quantity in cubic yards using the plan quantity, increased or decreased by authorized adjustments as specified in Section 204. The Department will not measure for payment any Granular Embankment that is not called for in the plans.

The Department will not measure for payment any special construction caused by using erodible or unstable materials and will consider it incidental to the Granular Embankment regardless of whether the erodible or unstable material was specified or permitted.

4.2 Rock Embankment. The Department will not measure for payment any rock embankment and will consider it incidental to roadway excavation or embankment in place, as applicable. Rock embankments will be constructed using granular embankment on projects where there is no available rock present within the excavation limits of the project.

4.3 Pile Core. Pile core will be measured and paid under roadway excavation or embankment in place, as applicable. The Department will not measure the pile core for separate payment. The Department will not measure for payment the 8-inch perforated underdrain pipe and will consider it incidental to the Pile Core.

4.4 Structure Granular Backfill. The Department will measure the quantity in cubic yards using the plan quantity, increased or decreased by authorized adjustments as specified in Section 204. The

Department will not measure any additional material required for backfill outside the limits shown on the Plans and Standard Drawings for payment and will consider it incidental to the work.

The Department will not measure for payment the 4-inch perforated underdrain pipe and will consider it incidental to the Structure Granular Backfill.

4.5 Geotextile Fabric. The Department will not measure the quantity of fabric used for separating dissimilar materials when constructing the embankment and pile core and will consider it incidental to embankment construction.

The Department will not measure for payment the Geotextile Fabric used to separate the Structure Granular Backfill from the embankment and aggregate base course and will consider it incidental to Structure Granular Backfill.

The Department will not measure for payment the Geotextile Fabric required for construction with erodible or unstable materials and will consider it incidental to embankment construction.

4.6 End Bent. The Department will measure the quantities according to the Contract. The Department will not measure furnishing and placing the 2-inch mortar or concrete bed for payment and will consider it incidental to the end bent construction.

4.7 Structure Excavation. The Department will not measure structure excavation on new embankments for payment and will consider it incidental to the Structure Granular Backfill or Concrete as applicable.

5.0 PAYMENT. The Department will make payment for the completed and accepted quantities under the following:

Code	Pay Item	Pay Unit
02223	Granular Embankment	Cubic Yards
02231	Structure Granular Backfill	Cubic Yards

The Department will consider payment as full compensation for all work required in this provision.

August 5, 2019

PART III

EMPLOYMENT, WAGE AND RECORD REQUIREMENTS

FHWA-1273 – Revised October 23, 2023

REQUIRED CONTRACT PROVISIONS
FEDERAL-AID CONSTRUCTION CONTRACTS

I. General
II. Nondiscrimination
III. Non-segregated Facilities
IV. Davis-Bacon and Related Act Provisions
V. Contract Work Hours and Safety Standards Act Provisions
VI. Subletting or Assigning the Contract
VII. Safety: Accident Prevention
VIII. False Statements Concerning Highway Projects
IX. Implementation of Clean Air Act and Federal Water Pollution Control Act
X. Certification Regarding Debarment, Suspension, Ineligibility and Voluntary Exclusion
XI. Certification Regarding Use of Contract Funds for Lobbying
XII. Use of United States-Flag Vessels:

ATTACHMENTS

A. Employment and Materials Preference for Appalachian Development Highway System or Appalachian Local Access Road Contracts (included in Appalachian contracts only)

I. GENERAL

1. Form FHWA-1273 must be physically incorporated in each construction contract funded under title 23, United States Code, as required in 23 CFR 633.102(b) (excluding emergency contracts solely intended for debris removal). The contractor (or subcontractor) must insert this form in each subcontract and further require its inclusion in all lower tier subcontracts (excluding purchase orders, rental agreements and other agreements for supplies or services). 23 CFR 633.102(e).

The applicable requirements of Form FHWA-1273 are incorporated by reference for work done under any purchase order, rental agreement or agreement for other services. The prime contractor shall be responsible for compliance by any subcontractor, lower-tier subcontractor or service provider. 23 CFR 633.102(e).

Form FHWA-1273 must be included in all Federal-aid design-build contracts, in all subcontracts and in lower tier subcontracts (excluding subcontracts for design services, purchase orders, rental agreements and other agreements for supplies or services) in accordance with 23 CFR 633.102. The design-builder shall be responsible for compliance by any subcontractor, lower-tier subcontractor or service provider.

Contracting agencies may reference Form FHWA-1273 in solicitation-for-bids or request-for-proposals documents, however, the Form FHWA-1273 must be physically incorporated (not referenced) in all contracts, subcontracts and lower-tier subcontracts (excluding purchase orders, rental agreements and other agreements for supplies or services related to a construction contract). 23 CFR 633.102(b).

2. Subject to the applicability criteria noted in the following sections, these contract provisions shall apply to all work performed on the contract by the contractor's own organization and with the assistance of workers under the contractor's immediate superintendence and to all work performed on the contract by piecework, station work, or by subcontract. 23 CFR 633.102(d).

3. A breach of any of the stipulations contained in these Required Contract Provisions may be sufficient grounds for withholding of progress payments, withholding of final payment, termination of the contract, suspension / debarment or any other action determined to be appropriate by the contracting agency and FHWA.

4. Selection of Labor: During the performance of this contract, the contractor shall not use convict labor for any purpose within the limits of a construction project on a Federal-aid highway unless it is labor performed by convicts who are on parole, supervised release, or probation. 23 U.S.C. 114(b). The term Federal-aid highway does not include roadways functionally classified as local roads or rural minor collectors. 23 U.S.C. 101(a).

II. NONDISCRIMINATION (23 CFR 230.107(a); 23 CFR Part 230, Subpart A, Appendix A; EO 11246)

The provisions of this section related to 23 CFR Part 230, Subpart A, Appendix A are applicable to all Federal-aid construction contracts and to all related construction subcontracts of $10,000 or more. The provisions of 23 CFR Part 230 are not applicable to material supply, engineering, or architectural service contracts.

In addition, the contractor and all subcontractors must comply with the following policies: Executive Order 11246, 41 CFR Part 60, 29 CFR Parts 1625-1627, 23 U.S.C. 140, Section 504 of the Rehabilitation Act of 1973, as amended (29 U.S.C. 794), Title VI of the Civil Rights Act of 1964, as amended (42 U.S.C. 2000d et seq.), and related regulations including 49 CFR Parts 21, 26, and 27; and 23 CFR Parts 200, 230, and 633.

The contractor and all subcontractors must comply with: the requirements of the Equal Opportunity Clause in 41 CFR 60-1.4(b) and, for all construction contracts exceeding $10,000, the Standard Federal Equal Employment Opportunity Construction Contract Specifications in 41 CFR 60-4.3.

Note: The U.S. Department of Labor has exclusive authority to determine compliance with Executive Order 11246 and the policies of the Secretary of Labor including 41 CFR Part 60, and 29 CFR Parts 1625-1627. The contracting agency and the FHWA have the authority and the responsibility to ensure compliance with 23 U.S.C. 140, Section 504 of the Rehabilitation Act of 1973, as amended (29 U.S.C. 794), and Title VI of the Civil Rights Act of 1964, as amended (42 U.S.C. 2000d et seq.), and related regulations including 49 CFR Parts 21, 26, and 27; and 23 CFR Parts 200, 230, and 633.

The following provision is adopted from 23 CFR Part 230, Subpart A, Appendix A, with appropriate revisions to conform to the U.S. Department of Labor (US DOL) and FHWA requirements.

1. Equal Employment Opportunity: Equal Employment Opportunity (EEO) requirements not to discriminate and to take affirmative action to assure equal opportunity as set forth under laws, executive orders, rules, regulations (*see* 28 CFR Part 35, 29 CFR Part 1630, 29 CFR Parts 1625-1627, 41 CFR Part 60 and 49 CFR Part 27) and orders of the Secretary of Labor as modified by the provisions prescribed herein, and imposed pursuant to 23 U.S.C. 140, shall constitute the EEO and specific affirmative action standards for the contractor's project activities under this contract. The provisions of the Americans with Disabilities Act of 1990 (42 U.S.C. 12101 et seq.) set forth under 28 CFR Part 35 and 29 CFR Part 1630 are incorporated by reference in this contract. In the execution of this contract, the contractor agrees to comply with the following minimum specific requirement activities of EEO:

a. The contractor will work with the contracting agency and the Federal Government to ensure that it has made every good faith effort to provide equal opportunity with respect to all of its terms and conditions of employment and in their review of activities under the contract. 23 CFR 230.409 (g)(4) & (5).

b. The contractor will accept as its operating policy the following statement:

> "It is the policy of this Company to assure that applicants are employed, and that employees are treated during employment, without regard to their race, religion, sex, sexual orientation, gender identity, color, national origin, age or disability. Such action shall include: employment, upgrading, demotion, or transfer; recruitment or recruitment advertising; layoff or termination; rates of pay or other forms of compensation; and selection for training, including apprenticeship, pre-apprenticeship, and/or on-the-job training."

2. EEO Officer: The contractor will designate and make known to the contracting officers an EEO Officer who will have the responsibility for and must be capable of effectively administering and promoting an active EEO program and who must be assigned adequate authority and responsibility to do so.

3. Dissemination of Policy: All members of the contractor's staff who are authorized to hire, supervise, promote, and discharge employees, or who recommend such action or are substantially involved in such action, will be made fully cognizant of and will implement the contractor's EEO policy and contractual responsibilities to provide EEO in each grade and classification of employment. To ensure that the above agreement will be met, the following actions will be taken as a minimum:

a. Periodic meetings of supervisory and personnel office employees will be conducted before the start of work and then not less often than once every six months, at which time the contractor's EEO policy and its implementation will be reviewed and explained. The meetings will be conducted by the EEO Officer or other knowledgeable company official.

b. All new supervisory or personnel office employees will be given a thorough indoctrination by the EEO Officer, covering all major aspects of the contractor's EEO obligations within thirty days following their reporting for duty with the contractor.

c. All personnel who are engaged in direct recruitment for the project will be instructed by the EEO Officer in the contractor's procedures for locating and hiring minorities and women.

d. Notices and posters setting forth the contractor's EEO policy will be placed in areas readily accessible to employees, applicants for employment and potential employees.

e. The contractor's EEO policy and the procedures to implement such policy will be brought to the attention of employees by means of meetings, employee handbooks, or other appropriate means.

4. Recruitment: When advertising for employees, the contractor will include in all advertisements for employees the notation: "An Equal Opportunity Employer." All such advertisements will be placed in publications having a large circulation among minorities and women in the area from which the project work force would normally be derived.

a. The contractor will, unless precluded by a valid bargaining agreement, conduct systematic and direct recruitment through public and private employee referral sources likely to yield qualified minorities and women. To meet this requirement, the contractor will identify sources of potential minority group employees and establish with such identified sources procedures whereby minority and women applicants may be referred to the contractor for employment consideration.

b. In the event the contractor has a valid bargaining agreement providing for exclusive hiring hall referrals, the contractor is expected to observe the provisions of that agreement to the extent that the system meets the contractor's compliance with EEO contract provisions. Where implementation of such an agreement has the effect of discriminating against minorities or women, or obligates the contractor to do the same, such implementation violates Federal nondiscrimination provisions.

c. The contractor will encourage its present employees to refer minorities and women as applicants for employment. Information and procedures with regard to referring such applicants will be discussed with employees.

5. Personnel Actions: Wages, working conditions, and employee benefits shall be established and administered, and personnel actions of every type, including hiring, upgrading, promotion, transfer, demotion, layoff, and termination, shall be taken without regard to race, color, religion, sex, sexual orientation, gender identity, national origin, age or disability. The following procedures shall be followed:

a. The contractor will conduct periodic inspections of project sites to ensure that working conditions and employee facilities do not indicate discriminatory treatment of project site personnel.

b. The contractor will periodically evaluate the spread of wages paid within each classification to determine any evidence of discriminatory wage practices.

c. The contractor will periodically review selected personnel actions in depth to determine whether there is evidence of discrimination. Where evidence is found, the contractor will promptly take corrective action. If the review indicates that the discrimination may extend beyond the actions reviewed, such corrective action shall include all affected persons.

d. The contractor will promptly investigate all complaints of alleged discrimination made to the contractor in connection with its obligations under this contract, will attempt to resolve such complaints, and will take appropriate corrective action

within a reasonable time. If the investigation indicates that the discrimination may affect persons other than the complainant, such corrective action shall include such other persons. Upon completion of each investigation, the contractor will inform every complainant of all of their avenues of appeal.

6. Training and Promotion:

a. The contractor will assist in locating, qualifying, and increasing the skills of minorities and women who are applicants for employment or current employees. Such efforts should be aimed at developing full journey level status employees in the type of trade or job classification involved.

b. Consistent with the contractor's work force requirements and as permissible under Federal and State regulations, the contractor shall make full use of training programs (i.e., apprenticeship and on-the-job training programs for the geographical area of contract performance). In the event a special provision for training is provided under this contract, this subparagraph will be superseded as indicated in the special provision. The contracting agency may reserve training positions for persons who receive welfare assistance in accordance with 23 U.S.C. 140(a).

c. The contractor will advise employees and applicants for employment of available training programs and entrance requirements for each.

d. The contractor will periodically review the training and promotion potential of employees who are minorities and women and will encourage eligible employees to apply for such training and promotion.

7. Unions: If the contractor relies in whole or in part upon unions as a source of employees, the contractor will use good faith efforts to obtain the cooperation of such unions to increase opportunities for minorities and women. 23 CFR 230.409. Actions by the contractor, either directly or through a contractor's association acting as agent, will include the procedures set forth below:

a. The contractor will use good faith efforts to develop, in cooperation with the unions, joint training programs aimed toward qualifying more minorities and women for membership in the unions and increasing the skills of minorities and women so that they may qualify for higher paying employment.

b. The contractor will use good faith efforts to incorporate an EEO clause into each union agreement to the end that such union will be contractually bound to refer applicants without regard to their race, color, religion, sex, sexual orientation, gender identity, national origin, age, or disability.

c. The contractor is to obtain information as to the referral practices and policies of the labor union except that to the extent such information is within the exclusive possession of the labor union and such labor union refuses to furnish such information to the contractor, the contractor shall so certify to the contracting agency and shall set forth what efforts have been made to obtain such information.

d. In the event the union is unable to provide the contractor with a reasonable flow of referrals within the time limit set forth in the collective bargaining agreement, the contractor will, through independent recruitment efforts, fill the employment vacancies without regard to race, color, religion, sex, sexual orientation, gender identity, national origin, age, or disability; making full efforts to obtain qualified and/or qualifiable minorities and women. The failure of a union to provide sufficient referrals (even though it is obligated to provide exclusive referrals under the terms of a collective bargaining agreement) does not relieve the contractor from the requirements of this paragraph. In the event the union referral practice prevents the contractor from meeting the obligations pursuant to Executive Order 11246, as amended, and these special provisions, such contractor shall immediately notify the contracting agency.

8. Reasonable Accommodation for Applicants / Employees with Disabilities: The contractor must be familiar with the requirements for and comply with the Americans with Disabilities Act and all rules and regulations established thereunder. Employers must provide reasonable accommodation in all employment activities unless to do so would cause an undue hardship.

9. Selection of Subcontractors, Procurement of Materials and Leasing of Equipment: The contractor shall not discriminate on the grounds of race, color, religion, sex, sexual orientation, gender identity, national origin, age, or disability in the selection and retention of subcontractors, including procurement of materials and leases of equipment. The contractor shall take all necessary and reasonable steps to ensure nondiscrimination in the administration of this contract.

a. The contractor shall notify all potential subcontractors, suppliers, and lessors of their EEO obligations under this contract.

b. The contractor will use good faith efforts to ensure subcontractor compliance with their EEO obligations.

10. Assurances Required:

a. The requirements of 49 CFR Part 26 and the State DOT’s FHWA-approved Disadvantaged Business Enterprise (DBE) program are incorporated by reference.

b. The contractor, subrecipient or subcontractor shall not discriminate on the basis of race, color, national origin, or sex in the performance of this contract. The contractor shall carry out applicable requirements of 49 CFR part 26 in the award and administration of DOT-assisted contracts. Failure by the contractor to carry out these requirements is a material breach of this contract, which may result in the termination of this contract or such other remedy as the recipient deems appropriate, which may include, but is not limited to:
(1) Withholding monthly progress payments;
(2) Assessing sanctions;
(3) Liquidated damages; and/or
(4) Disqualifying the contractor from future bidding as non-responsible.

c. The Title VI and nondiscrimination provisions of U.S. DOT Order 1050.2A at Appendixes A and E are incorporated by reference. 49 CFR Part 21.

11. Records and Reports: The contractor shall keep such records as necessary to document compliance with the EEO requirements. Such records shall be retained for a period of three years following the date of the final payment to the contractor for all contract work and shall be available at reasonable times and places for inspection by authorized representatives of the contracting agency and the FHWA.

a. The records kept by the contractor shall document the following:

(1) The number and work hours of minority and non-minority group members and women employed in each work classification on the project;

(2) The progress and efforts being made in cooperation with unions, when applicable, to increase employment opportunities for minorities and women; and

(3) The progress and efforts being made in locating, hiring, training, qualifying, and upgrading minorities and women.

b. The contractors and subcontractors will submit an annual report to the contracting agency each July for the duration of the project indicating the number of minority, women, and non-minority group employees currently engaged in each work classification required by the contract work. This information is to be reported on Form FHWA-1391. The staffing data should represent the project work force on board in all or any part of the last payroll period preceding the end of July. If on-the-job training is being required by special provision, the contractor will be required to collect and report training data. The employment data should reflect the work force on board during all or any part of the last payroll period preceding the end of July.

III. NONSEGREGATED FACILITIES

This provision is applicable to all Federal-aid construction contracts and to all related construction subcontracts of more than $10,000. 41 CFR 60-1.5.

As prescribed by 41 CFR 60-1.8, the contractor must ensure that facilities provided for employees are provided in such a manner that segregation on the basis of race, color, religion, sex, sexual orientation, gender identity, or national origin cannot result. The contractor may neither require such segregated use by written or oral policies nor tolerate such use by employee custom. The contractor's obligation extends further to ensure that its employees are not assigned to perform their services at any location under the contractor's control where the facilities are segregated. The term "facilities" includes waiting rooms, work areas, restaurants and other eating areas, time clocks, restrooms, washrooms, locker rooms and other storage or dressing areas, parking lots, drinking fountains, recreation or entertainment areas, transportation, and housing provided for employees. The contractor shall provide separate or single-user restrooms and necessary dressing or sleeping areas to assure privacy between sexes.

IV. DAVIS-BACON AND RELATED ACT PROVISIONS

This section is applicable to all Federal-aid construction projects exceeding $2,000 and to all related subcontracts and lower-tier subcontracts (regardless of subcontract size), in accordance with 29 CFR 5.5. The requirements apply to all projects located within the right-of-way of a roadway that is functionally classified as Federal-aid highway. 23 U.S.C. 113. This excludes roadways functionally classified as local roads or rural minor collectors, which are exempt. 23 U.S.C. 101. Where applicable law requires that projects be treated as a project on a Federal-aid highway, the provisions of this subpart will apply regardless of the location of the project. Examples include: Surface Transportation Block Grant Program projects funded under 23 U.S.C. 133 [excluding recreational trails projects], the Nationally Significant Freight and Highway Projects funded under 23 U.S.C. 117, and National Highway Freight Program projects funded under 23 U.S.C. 167.

The following provisions are from the U.S. Department of Labor regulations in 29 CFR 5.5 “Contract provisions and related matters” with minor revisions to conform to the FHWA-1273 format and FHWA program requirements.

1. Minimum wages (29 CFR 5.5)

a. *Wage rates and fringe benefits.* All laborers and mechanics employed or working upon the site of the work (or otherwise working in construction or development of the project under a development statute), will be paid unconditionally and not less often than once a week, and without subsequent deduction or rebate on any account (except such payroll deductions as are permitted by regulations issued by the Secretary of Labor under the Copeland Act (29 CFR part 3)), the full amount of basic hourly wages and bona fide fringe benefits (or cash equivalents thereof) due at time of payment computed at rates not less than those contained in the wage determination of the Secretary of Labor which is attached hereto and made a part hereof, regardless of any contractual relationship which may be alleged to exist between the contractor and such laborers and mechanics. As provided in paragraphs (d) and (e) of 29 CFR 5.5, the appropriate wage determinations are effective by operation of law even if they have not been attached to the contract. Contributions made or costs reasonably anticipated for bona fide fringe benefits under the Davis-Bacon Act (40 U.S.C. 3141(2)(B)) on behalf of laborers or mechanics are considered wages paid to such laborers or mechanics, subject to the provisions of paragraph 1.e. of this section; also, regular contributions made or costs incurred for more than a weekly period (but not less often than quarterly) under plans, funds, or programs which cover the particular weekly period, are deemed to be constructively made or incurred during such weekly period. Such laborers and mechanics must be paid the appropriate wage rate and fringe benefits on the wage determination for the classification(s) of work actually performed, without regard to skill, except as provided in paragraph 4. of this section. Laborers or mechanics performing work in more than one classification may be compensated at the rate specified for each classification for the time actually worked therein: *Provided,* That the employer's payroll records accurately set forth the time spent in each classification in which work is performed. The wage determination (including any additional classifications and wage rates conformed under paragraph 1.c. of this section) and the Davis-Bacon poster (WH–1321) must be posted at all times by the contractor and its subcontractors at the site of the work in a prominent and accessible place where it can be easily seen by the workers.

b. *Frequently recurring classifications.* (1) In addition to wage and fringe benefit rates that have been determined to be prevailing under the procedures set forth in 29 CFR part 1, a wage determination may contain, pursuant to § 1.3(f), wage and fringe benefit rates for classifications of laborers and mechanics for which conformance requests are regularly submitted pursuant to paragraph 1.c. of this section, provided that:

(i) The work performed by the classification is not performed by a classification in the wage determination for which a prevailing wage rate has been determined;

(ii) The classification is used in the area by the construction industry; and

(iii) The wage rate for the classification bears a reasonable relationship to the prevailing wage rates contained in the wage determination.

(2) The Administrator will establish wage rates for such classifications in accordance with paragraph 1.c.(1)(iii) of this section. Work performed in such a classification must be paid at no less than the wage and fringe benefit rate listed on the wage determination for such classification.

c. *Conformance.* (1) The contracting officer must require that any class of laborers or mechanics, including helpers, which is not listed in the wage determination and which is to be employed under the contract be classified in conformance with the wage determination. Conformance of an additional classification and wage rate and fringe benefits is appropriate only when the following criteria have been met:

(i) The work to be performed by the classification requested is not performed by a classification in the wage determination; and

(ii) The classification is used in the area by the construction industry; and

(iii) The proposed wage rate, including any bona fide fringe benefits, bears a reasonable relationship to the wage rates contained in the wage determination.

(2) The conformance process may not be used to split, subdivide, or otherwise avoid application of classifications listed in the wage determination.

(3) If the contractor and the laborers and mechanics to be employed in the classification (if known), or their representatives, and the contracting officer agree on the classification and wage rate (including the amount designated for fringe benefits where appropriate), a report of the action taken will be sent by the contracting officer by email to *DBAconformance@dol.gov*. The Administrator, or an authorized representative, will approve, modify, or disapprove every additional classification action within 30 days of receipt and so advise the contracting officer or will notify the contracting officer within the 30–day period that additional time is necessary.

(4) In the event the contractor, the laborers or mechanics to be employed in the classification or their representatives, and the contracting officer do not agree on the proposed classification and wage rate (including the amount designated for fringe benefits, where appropriate), the contracting officer will, by email to *DBAconformance@dol.gov,* refer the questions, including the views of all interested parties and the recommendation of the contracting officer, to the Administrator for determination. The Administrator, or an authorized representative, will issue a determination within 30 days of receipt and so advise the contracting officer or will notify the contracting officer within the 30–day period that additional time is necessary.

(5) The contracting officer must promptly notify the contractor of the action taken by the Wage and Hour Division under paragraphs 1.c.(3) and (4) of this section. The contractor must furnish a written copy of such determination to each affected worker or it must be posted as a part of the wage determination. The wage rate (including fringe benefits where appropriate) determined pursuant to paragraph 1.c.(3) or (4) of this section must be paid to all workers performing work in the classification under this contract from the first day on which work is performed in the classification.

d. *Fringe benefits not expressed as an hourly rate.* Whenever the minimum wage rate prescribed in the contract for a class of laborers or mechanics includes a fringe benefit which is not expressed as an hourly rate, the contractor may either pay the benefit as stated in the wage determination or may pay another bona fide fringe benefit or an hourly cash equivalent thereof.

e. *Unfunded plans.* If the contractor does not make payments to a trustee or other third person, the contractor may consider as part of the wages of any laborer or mechanic the amount of any costs reasonably anticipated in providing bona fide fringe benefits under a plan or program, *Provided,* That the Secretary of Labor has found, upon the written request of the contractor, in accordance with the criteria set forth in § 5.28, that the applicable standards of the Davis-Bacon Act have been met. The Secretary of Labor may require the contractor to set aside in a separate account assets for the meeting of obligations under the plan or program.

f. *Interest.* In the event of a failure to pay all or part of the wages required by the contract, the contractor will be required to pay interest on any underpayment of wages.

2. Withholding (29 CFR 5.5)

a. *Withholding requirements.* The contracting agency may, upon its own action, or must, upon written request of an authorized representative of the Department of Labor, withhold or cause to be withheld from the contractor so much of the accrued payments or advances as may be considered necessary to satisfy the liabilities of the prime contractor or any subcontractor for the full amount of wages and monetary relief, including interest, required by the clauses set forth in this section for violations of this contract, or to satisfy any such liabilities required by any other Federal contract, or federally assisted contract subject to Davis-Bacon labor standards, that is held by the same prime contractor (as defined in § 5.2). The necessary funds may be withheld from the contractor under this contract, any other Federal contract with the same prime contractor, or any other federally assisted contract that is subject to Davis-Bacon labor standards requirements and is held by the same prime contractor, regardless of whether the other contract was awarded or assisted by the same agency, and such funds may be used to satisfy the contractor liability for which the funds were withheld. In the event of a contractor's failure to pay any laborer or mechanic, including any apprentice or helper working on the site of the work all or part of the wages required by the contract, or upon the contractor's failure to submit the required records as discussed in paragraph 3.d. of this section, the contracting agency may on its own initiative and after written notice to the contractor, take such action as may be necessary to cause the suspension of any further payment, advance, or guarantee of funds until such violations have ceased.

b. *Priority to withheld funds.* The Department has priority to funds withheld or to be withheld in accordance with paragraph

2.a. of this section or Section V, paragraph 3.a., or both, over claims to those funds by:

(1) A contractor's surety(ies), including without limitation performance bond sureties and payment bond sureties;

(2) A contracting agency for its reprocurement costs;

(3) A trustee(s) (either a court-appointed trustee or a U.S. trustee, or both) in bankruptcy of a contractor, or a contractor's bankruptcy estate;

(4) A contractor's assignee(s);

(5) A contractor's successor(s); or

(6) A claim asserted under the Prompt Payment Act, 31 U.S.C. 3901–3907.

3. Records and certified payrolls (29 CFR 5.5)

a. *Basic record requirements* (1) *Length of record retention.* All regular payrolls and other basic records must be maintained by the contractor and any subcontractor during the course of the work and preserved for all laborers and mechanics working at the site of the work (or otherwise working in construction or development of the project under a development statute) for a period of at least 3 years after all the work on the prime contract is completed.

(2) *Information required.* Such records must contain the name; Social Security number; last known address, telephone number, and email address of each such worker; each worker's correct classification(s) of work actually performed; hourly rates of wages paid (including rates of contributions or costs anticipated for bona fide fringe benefits or cash equivalents thereof of the types described in 40 U.S.C. 3141(2)(B) of the Davis-Bacon Act); daily and weekly number of hours actually worked in total and on each covered contract; deductions made; and actual wages paid.

(3) *Additional records relating to fringe benefits.* Whenever the Secretary of Labor has found under paragraph 1.e. of this section that the wages of any laborer or mechanic include the amount of any costs reasonably anticipated in providing benefits under a plan or program described in 40 U.S.C. 3141(2)(B) of the Davis-Bacon Act, the contractor must maintain records which show that the commitment to provide such benefits is enforceable, that the plan or program is financially responsible, and that the plan or program has been communicated in writing to the laborers or mechanics affected, and records which show the costs anticipated or the actual cost incurred in providing such benefits.

(4) *Additional records relating to apprenticeship.* Contractors with apprentices working under approved programs must maintain written evidence of the registration of apprenticeship programs, the registration of the apprentices, and the ratios and wage rates prescribed in the applicable programs.

b. *Certified payroll requirements* (1) *Frequency and method of submission.* The contractor or subcontractor must submit weekly, for each week in which any DBA- or Related Acts-covered work is performed, certified payrolls to the contracting agency. The prime contractor is responsible for the submission of all certified payrolls by all subcontractors. A contracting agency or prime contractor may permit or require contractors to submit certified payrolls through an electronic system, as long as the electronic system requires a legally valid electronic signature; the system allows the contractor, the contracting agency, and the Department of Labor to access the certified payrolls upon request for at least 3 years after the work on the prime contract has been completed; and the contracting agency or prime contractor permits other methods of submission in situations where the contractor is unable or limited in its ability to use or access the electronic system.

(2) *Information required.* The certified payrolls submitted must set out accurately and completely all of the information required to be maintained under paragraph 3.a.(2) of this section, except that full Social Security numbers and last known addresses, telephone numbers, and email addresses must not be included on weekly transmittals. Instead, the certified payrolls need only include an individually identifying number for each worker (*e.g.,* the last four digits of the worker's Social Security number). The required weekly certified payroll information may be submitted using Optional Form WH–347 or in any other format desired. Optional Form WH–347 is available for this purpose from the Wage and Hour Division website at *https://www.dol.gov/sites/dolgov/files/WHD/legacy/files/wh347/.pdf* or its successor website. It is not a violation of this section for a prime contractor to require a subcontractor to provide full Social Security numbers and last known addresses, telephone numbers, and email addresses to the prime contractor for its own records, without weekly submission by the subcontractor to the contracting agency.

(3) *Statement of Compliance.* Each certified payroll submitted must be accompanied by a “Statement of Compliance,” signed by the contractor or subcontractor, or the contractor's or subcontractor's agent who pays or supervises the payment of the persons working on the contract, and must certify the following:

(i) That the certified payroll for the payroll period contains the information required to be provided under paragraph 3.b. of this section, the appropriate information and basic records are being maintained under paragraph 3.a. of this section, and such information and records are correct and complete;

(ii) That each laborer or mechanic (including each helper and apprentice) working on the contract during the payroll period has been paid the full weekly wages earned, without rebate, either directly or indirectly, and that no deductions have been made either directly or indirectly from the full wages earned, other than permissible deductions as set forth in 29 CFR part 3; and

(iii) That each laborer or mechanic has been paid not less than the applicable wage rates and fringe benefits or cash equivalents for the classification(s) of work actually performed, as specified in the applicable wage determination incorporated into the contract.

(4) *Use of Optional Form WH–347.* The weekly submission of a properly executed certification set forth on the reverse side of Optional Form WH–347 will satisfy the requirement for submission of the “Statement of Compliance” required by paragraph 3.b.(3) of this section.

(5) *Signature.* The signature by the contractor, subcontractor, or the contractor's or subcontractor's agent must be an original handwritten signature or a legally valid electronic signature.

(6) *Falsification.* The falsification of any of the above certifications may subject the contractor or subcontractor to civil or criminal prosecution under 18 U.S.C. 1001 and 31 U.S.C. 3729.

(7) *Length of certified payroll retention.* The contractor or subcontractor must preserve all certified payrolls during the course of the work and for a period of 3 years after all the work on the prime contract is completed.

c. *Contracts, subcontracts, and related documents.* The contractor or subcontractor must maintain this contract or subcontract and related documents including, without limitation, bids, proposals, amendments, modifications, and extensions. The contractor or subcontractor must preserve these contracts, subcontracts, and related documents during the course of the work and for a period of 3 years after all the work on the prime contract is completed.

d. *Required disclosures and access* (1) *Required record disclosures and access to workers.* The contractor or subcontractor must make the records required under paragraphs 3.a. through 3.c. of this section, and any other documents that the contracting agency, the State DOT, the FHWA, or the Department of Labor deems necessary to determine compliance with the labor standards provisions of any of the applicable statutes referenced by § 5.1, available for inspection, copying, or transcription by authorized representatives of the contracting agency, the State DOT, the FHWA, or the Department of Labor, and must permit such representatives to interview workers during working hours on the job.

(2) *Sanctions for non-compliance with records and worker access requirements.* If the contractor or subcontractor fails to submit the required records or to make them available, or refuses to permit worker interviews during working hours on the job, the Federal agency may, after written notice to the contractor, sponsor, applicant, owner, or other entity, as the case may be, that maintains such records or that employs such workers, take such action as may be necessary to cause the suspension of any further payment, advance, or guarantee of funds. Furthermore, failure to submit the required records upon request or to make such records available, or to permit worker interviews during working hours on the job, may be grounds for debarment action pursuant to § 5.12. In addition, any contractor or other person that fails to submit the required records or make those records available to WHD within the time WHD requests that the records be produced will be precluded from introducing as evidence in an administrative proceeding under 29 CFR part 6 any of the required records that were not provided or made available to WHD. WHD will take into consideration a reasonable request from the contractor or person for an extension of the time for submission of records. WHD will determine the reasonableness of the request and may consider, among other things, the location of the records and the volume of production.

(3) *Required information disclosures.* Contractors and subcontractors must maintain the full Social Security number and last known address, telephone number, and email address of each covered worker, and must provide them upon request to the contracting agency, the State DOT, the FHWA, the contractor, or the Wage and Hour Division of the Department of Labor for purposes of an investigation or other compliance action.

4. Apprentices and equal employment opportunity (29 CFR 5.5)

a. *Apprentices* (1) *Rate of pay.* Apprentices will be permitted to work at less than the predetermined rate for the work they perform when they are employed pursuant to and individually registered in a bona fide apprenticeship program registered with the U.S. Department of Labor, Employment and Training Administration, Office of Apprenticeship (OA), or with a State Apprenticeship Agency recognized by the OA. A person who is not individually registered in the program, but who has been certified by the OA or a State Apprenticeship Agency (where appropriate) to be eligible for probationary employment as an apprentice, will be permitted to work at less than the predetermined rate for the work they perform in the first 90 days of probationary employment as an apprentice in such a program. In the event the OA or a State Apprenticeship Agency recognized by the OA withdraws approval of an apprenticeship program, the contractor will no longer be permitted to use apprentices at less than the applicable predetermined rate for the work performed until an acceptable program is approved.

(2) *Fringe benefits.* Apprentices must be paid fringe benefits in accordance with the provisions of the apprenticeship program. If the apprenticeship program does not specify fringe benefits, apprentices must be paid the full amount of fringe benefits listed on the wage determination for the applicable classification. If the Administrator determines that a different practice prevails for the applicable apprentice classification, fringe benefits must be paid in accordance with that determination.

(3) *Apprenticeship ratio.* The allowable ratio of apprentices to journeyworkers on the job site in any craft classification must not be greater than the ratio permitted to the contractor as to the entire work force under the registered program or the ratio applicable to the locality of the project pursuant to paragraph 4.a.(4) of this section. Any worker listed on a payroll at an apprentice wage rate, who is not registered or otherwise employed as stated in paragraph 4.a.(1) of this section, must be paid not less than the applicable wage rate on the wage determination for the classification of work actually performed. In addition, any apprentice performing work on the job site in excess of the ratio permitted under this section must be paid not less than the applicable wage rate on the wage determination for the work actually performed.

(4) *Reciprocity of ratios and wage rates.* Where a contractor is performing construction on a project in a locality other than the locality in which its program is registered, the ratios and wage rates (expressed in percentages of the journeyworker's hourly rate) applicable within the locality in which the construction is being performed must be observed. If there is no applicable ratio or wage rate for the locality of the project, the ratio and wage rate specified in the contractor's registered program must be observed.

b. *Equal employment opportunity.* The use of apprentices and journeyworkers under this part must be in conformity with

the equal employment opportunity requirements of Executive Order 11246, as amended, and 29 CFR part 30.

c. Apprentices and Trainees (programs of the U.S. DOT).

Apprentices and trainees working under apprenticeship and skill training programs which have been certified by the Secretary of Transportation as promoting EEO in connection with Federal-aid highway construction programs are not subject to the requirements of paragraph 4 of this Section IV. 23 CFR 230.111(e)(2). The straight time hourly wage rates for apprentices and trainees under such programs will be established by the particular programs. The ratio of apprentices and trainees to journeyworkers shall not be greater than permitted by the terms of the particular program.

5. Compliance with Copeland Act requirements. The contractor shall comply with the requirements of 29 CFR part 3, which are incorporated by reference in this contract as provided in 29 CFR 5.5.

6. Subcontracts. The contractor or subcontractor must insert FHWA-1273 in any subcontracts, along with the applicable wage determination(s) and such other clauses or contract modifications as the contracting agency may by appropriate instructions require, and a clause requiring the subcontractors to include these clauses and wage determination(s) in any lower tier subcontracts. The prime contractor is responsible for the compliance by any subcontractor or lower tier subcontractor with all the contract clauses in this section. In the event of any violations of these clauses, the prime contractor and any subcontractor(s) responsible will be liable for any unpaid wages and monetary relief, including interest from the date of the underpayment or loss, due to any workers of lower-tier subcontractors, and may be subject to debarment, as appropriate. 29 CFR 5.5.

7. Contract termination: debarment. A breach of the contract clauses in 29 CFR 5.5 may be grounds for termination of the contract, and for debarment as a contractor and a subcontractor as provided in 29 CFR 5.12.

8. Compliance with Davis-Bacon and Related Act requirements. All rulings and interpretations of the Davis-Bacon and Related Acts contained in 29 CFR parts 1, 3, and 5 are herein incorporated by reference in this contract as provided in 29 CFR 5.5.

9. Disputes concerning labor standards. As provided in 29 CFR 5.5, disputes arising out of the labor standards provisions of this contract shall not be subject to the general disputes clause of this contract. Such disputes shall be resolved in accordance with the procedures of the Department of Labor set forth in 29 CFR parts 5, 6, and 7. Disputes within the meaning of this clause include disputes between the contractor (or any of its subcontractors) and the contracting agency, the U.S. Department of Labor, or the employees or their representatives.

10. Certification of eligibility. a. By entering into this contract, the contractor certifies that neither it nor any person or firm who has an interest in the contractor's firm is a person or firm ineligible to be awarded Government contracts by virtue of 40 U.S.C. 3144(b) or § 5.12(a).

b. No part of this contract shall be subcontracted to any person or firm ineligible for award of a Government contract by virtue of 40 U.S.C. 3144(b) or § 5.12(a).

c. The penalty for making false statements is prescribed in the U.S. Code, Title 18 Crimes and Criminal Procedure, 18 U.S.C. 1001.

11. Anti-retaliation. It is unlawful for any person to discharge, demote, intimidate, threaten, restrain, coerce, blacklist, harass, or in any other manner discriminate against, or to cause any person to discharge, demote, intimidate, threaten, restrain, coerce, blacklist, harass, or in any other manner discriminate against, any worker or job applicant for:

a. Notifying any contractor of any conduct which the worker reasonably believes constitutes a violation of the DBA, Related Acts, this part, or 29 CFR part 1 or 3;

b. Filing any complaint, initiating or causing to be initiated any proceeding, or otherwise asserting or seeking to assert on behalf of themselves or others any right or protection under the DBA, Related Acts, this part, or 29 CFR part 1 or 3;

c. Cooperating in any investigation or other compliance action, or testifying in any proceeding under the DBA, Related Acts, this part, or 29 CFR part 1 or 3; or

d. Informing any other person about their rights under the DBA, Related Acts, this part, or 29 CFR part 1 or 3.

V. CONTRACT WORK HOURS AND SAFETY STANDARDS ACT

Pursuant to 29 CFR 5.5(b), the following clauses apply to any Federal-aid construction contract in an amount in excess of $100,000 and subject to the overtime provisions of the Contract Work Hours and Safety Standards Act. These clauses shall be inserted in addition to the clauses required by 29 CFR 5.5(a) or 29 CFR 4.6. As used in this paragraph, the terms laborers and mechanics include watchpersons and guards.

1. Overtime requirements. No contractor or subcontractor contracting for any part of the contract work which may require or involve the employment of laborers or mechanics shall require or permit any such laborer or mechanic in any workweek in which he or she is employed on such work to work in excess of forty hours in such workweek unless such laborer or mechanic receives compensation at a rate not less than one and one-half times the basic rate of pay for all hours worked in excess of forty hours in such workweek. 29 CFR 5.5.

2. Violation; liability for unpaid wages; liquidated damages. In the event of any violation of the clause set forth in paragraph 1. of this section the contractor and any subcontractor responsible therefor shall be liable for the unpaid wages and interest from the date of the underpayment. In addition, such contractor and subcontractor shall be liable to the United States (in the case of work done under contract for the District of Columbia or a territory, to such District or to such territory), for liquidated damages. Such liquidated damages shall be computed with respect to each individual laborer or

mechanic, including watchpersons and guards, employed in violation of the clause set forth in paragraph 1. of this section, in the sum currently provided in 29 CFR 5.5(b)(2)* for each calendar day on which such individual was required or permitted to work in excess of the standard workweek of forty hours without payment of the overtime wages required by the clause set forth in paragraph 1. of this section.

* $31 as of January 15, 2023 (See 88 FR 88 FR 2210) as may be adjusted annually by the Department of Labor, pursuant to the Federal Civil Penalties Inflation Adjustment Act of 1990.

3. Withholding for unpaid wages and liquidated damages

a. *Withholding process.* The FHWA or the contracting agency may, upon its own action, or must, upon written request of an authorized representative of the Department of Labor, withhold or cause to be withheld from the contractor so much of the accrued payments or advances as may be considered necessary to satisfy the liabilities of the prime contractor or any subcontractor for any unpaid wages; monetary relief, including interest; and liquidated damages required by the clauses set forth in this section on this contract, any other Federal contract with the same prime contractor, or any other federally assisted contract subject to the Contract Work Hours and Safety Standards Act that is held by the same prime contractor (as defined in § 5.2). The necessary funds may be withheld from the contractor under this contract, any other Federal contract with the same prime contractor, or any other federally assisted contract that is subject to the Contract Work Hours and Safety Standards Act and is held by the same prime contractor, regardless of whether the other contract was awarded or assisted by the same agency, and such funds may be used to satisfy the contractor liability for which the funds were withheld.

b. *Priority to withheld funds.* The Department has priority to funds withheld or to be withheld in accordance with Section IV paragraph 2.a. or paragraph 3.a. of this section, or both, over claims to those funds by:

(1) A contractor's surety(ies), including without limitation performance bond sureties and payment bond sureties;

(2) A contracting agency for its reprocurement costs;

(3) A trustee(s) (either a court-appointed trustee or a U.S. trustee, or both) in bankruptcy of a contractor, or a contractor's bankruptcy estate;

(4) A contractor's assignee(s);

(5) A contractor's successor(s); or

(6) A claim asserted under the Prompt Payment Act, 31 U.S.C. 3901–3907.

4. Subcontracts. The contractor or subcontractor must insert in any subcontracts the clauses set forth in paragraphs 1. through 5. of this section and a clause requiring the subcontractors to include these clauses in any lower tier subcontracts. The prime contractor is responsible for compliance by any subcontractor or lower tier subcontractor with the clauses set forth in paragraphs 1. through 5. In the event of any violations of these clauses, the prime contractor and any subcontractor(s) responsible will be liable for any unpaid wages and monetary relief, including interest from the date of the underpayment or loss, due to any workers of lower-tier subcontractors, and associated liquidated damages and may be subject to debarment, as appropriate.

5. Anti-retaliation. It is unlawful for any person to discharge, demote, intimidate, threaten, restrain, coerce, blacklist, harass, or in any other manner discriminate against, or to cause any person to discharge, demote, intimidate, threaten, restrain, coerce, blacklist, harass, or in any other manner discriminate against, any worker or job applicant for:

a. Notifying any contractor of any conduct which the worker reasonably believes constitutes a violation of the Contract Work Hours and Safety Standards Act (CWHSSA) or its implementing regulations in this part;

b. Filing any complaint, initiating or causing to be initiated any proceeding, or otherwise asserting or seeking to assert on behalf of themselves or others any right or protection under CWHSSA or this part;

c. Cooperating in any investigation or other compliance action, or testifying in any proceeding under CWHSSA or this part; or

d. Informing any other person about their rights under CWHSSA or this part.

VI. SUBLETTING OR ASSIGNING THE CONTRACT

This provision is applicable to all Federal-aid construction contracts on the National Highway System pursuant to 23 CFR 635.116.

1. The contractor shall perform with its own organization contract work amounting to not less than 30 percent (or a greater percentage if specified elsewhere in the contract) of the total original contract price, excluding any specialty items designated by the contracting agency. Specialty items may be performed by subcontract and the amount of any such specialty items performed may be deducted from the total original contract price before computing the amount of work required to be performed by the contractor's own organization (23 CFR 635.116).

a. The term “perform work with its own organization” in paragraph 1 of Section VI refers to workers employed or leased by the prime contractor, and equipment owned or rented by the prime contractor, with or without operators. Such term does not include employees or equipment of a subcontractor or lower tier subcontractor, agents of the prime contractor, or any other assignees. The term may include payments for the costs of hiring leased employees from an employee leasing firm meeting all relevant Federal and State regulatory requirements. Leased employees may only be included in this term if the prime contractor meets all of the following conditions: (based on longstanding interpretation)

(1) the prime contractor maintains control over the supervision of the day-to-day activities of the leased employees;
(2) the prime contractor remains responsible for the quality of the work of the leased employees;

(3) the prime contractor retains all power to accept or exclude individual employees from work on the project; and

(4) the prime contractor remains ultimately responsible for the payment of predetermined minimum wages, the submission of payrolls, statements of compliance and all other Federal regulatory requirements.

b. "Specialty Items" shall be construed to be limited to work that requires highly specialized knowledge, abilities, or equipment not ordinarily available in the type of contracting organizations qualified and expected to bid or propose on the contract as a whole and in general are to be limited to minor components of the overall contract. 23 CFR 635.102.

2. Pursuant to 23 CFR 635.116(a), the contract amount upon which the requirements set forth in paragraph (1) of Section VI is computed includes the cost of material and manufactured products which are to be purchased or produced by the contractor under the contract provisions.

3. Pursuant to 23 CFR 635.116(c), the contractor shall furnish (a) a competent superintendent or supervisor who is employed by the firm, has full authority to direct performance of the work in accordance with the contract requirements, and is in charge of all construction operations (regardless of who performs the work) and (b) such other of its own organizational resources (supervision, management, and engineering services) as the contracting officer determines is necessary to assure the performance of the contract.

4. No portion of the contract shall be sublet, assigned or otherwise disposed of except with the written consent of the contracting officer, or authorized representative, and such consent when given shall not be construed to relieve the contractor of any responsibility for the fulfillment of the contract. Written consent will be given only after the contracting agency has assured that each subcontract is evidenced in writing and that it contains all pertinent provisions and requirements of the prime contract. (based on long-standing interpretation of 23 CFR 635.116).

5. The 30-percent self-performance requirement of paragraph (1) is not applicable to design-build contracts; however, contracting agencies may establish their own self-performance requirements. 23 CFR 635.116(d).

VII. SAFETY: ACCIDENT PREVENTION

This provision is applicable to all Federal-aid construction contracts and to all related subcontracts.

1. In the performance of this contract the contractor shall comply with all applicable Federal, State, and local laws governing safety, health, and sanitation (23 CFR Part 635). The contractor shall provide all safeguards, safety devices and protective equipment and take any other needed actions as it determines, or as the contracting officer may determine, to be reasonably necessary to protect the life and health of employees on the job and the safety of the public and to protect property in connection with the performance of the work covered by the contract. 23 CFR 635.108.

2. It is a condition of this contract, and shall be made a condition of each subcontract, which the contractor enters into pursuant to this contract, that the contractor and any subcontractor shall not permit any employee, in performance of the contract, to work in surroundings or under conditions which are unsanitary, hazardous or dangerous to his/her health or safety, as determined under construction safety and health standards (29 CFR Part 1926) promulgated by the Secretary of Labor, in accordance with Section 107 of the Contract Work Hours and Safety Standards Act (40 U.S.C. 3704). 29 CFR 1926.10.

3. Pursuant to 29 CFR 1926.3, it is a condition of this contract that the Secretary of Labor or authorized representative thereof, shall have right of entry to any site of contract performance to inspect or investigate the matter of compliance with the construction safety and health standards and to carry out the duties of the Secretary under Section 107 of the Contract Work Hours and Safety Standards Act (40 U.S.C. 3704).

VIII. FALSE STATEMENTS CONCERNING HIGHWAY PROJECTS

This provision is applicable to all Federal-aid construction contracts and to all related subcontracts.

In order to assure high quality and durable construction in conformity with approved plans and specifications and a high degree of reliability on statements and representations made by engineers, contractors, suppliers, and workers on Federal-aid highway projects, it is essential that all persons concerned with the project perform their functions as carefully, thoroughly, and honestly as possible. Willful falsification, distortion, or misrepresentation with respect to any facts related to the project is a violation of Federal law. To prevent any misunderstanding regarding the seriousness of these and similar acts, Form FHWA-1022 shall be posted on each Federal-aid highway project (23 CFR Part 635) in one or more places where it is readily available to all persons concerned with the project:

18 U.S.C. 1020 reads as follows:

"Whoever, being an officer, agent, or employee of the United States, or of any State or Territory, or whoever, whether a person, association, firm, or corporation, knowingly makes any false statement, false representation, or false report as to the character, quality, quantity, or cost of the material used or to be used, or the quantity or quality of the work performed or to be performed, or the cost thereof in connection with the submission of plans, maps, specifications, contracts, or costs of construction on any highway or related project submitted for approval to the Secretary of Transportation; or

Whoever knowingly makes any false statement, false representation, false report or false claim with respect to the character, quality, quantity, or cost of any work performed or to be performed, or materials furnished or to be furnished, in connection with the construction of any highway or related project approved by the Secretary of Transportation; or

Whoever knowingly makes any false statement or false representation as to material fact in any statement, certificate, or report submitted pursuant to provisions of the Federal-aid Roads Act approved July 11, 1916, (39 Stat. 355), as amended and supplemented;

Shall be fined under this title or imprisoned not more than 5 years or both."

IX. IMPLEMENTATION OF CLEAN AIR ACT AND FEDERAL WATER POLLUTION CONTROL ACT (42 U.S.C. 7606; 2 CFR 200.88; EO 11738)

This provision is applicable to all Federal-aid construction contracts in excess of $150,000 and to all related subcontracts. 48 CFR 2.101; 2 CFR 200.327.

By submission of this bid/proposal or the execution of this contract or subcontract, as appropriate, the bidder, proposer, Federal-aid construction contractor, subcontractor, supplier, or vendor agrees to comply with all applicable standards, orders or regulations issued pursuant to the Clean Air Act (42 U.S.C. 7401-7671q) and the Federal Water Pollution Control Act, as amended (33 U.S.C. 1251-1387). Violations must be reported to the Federal Highway Administration and the Regional Office of the Environmental Protection Agency. 2 CFR Part 200, Appendix II.

The contractor agrees to include or cause to be included the requirements of this Section in every subcontract, and further agrees to take such action as the contracting agency may direct as a means of enforcing such requirements. 2 CFR 200.327.

X. CERTIFICATION REGARDING DEBARMENT, SUSPENSION, INELIGIBILITY AND VOLUNTARY EXCLUSION

This provision is applicable to all Federal-aid construction contracts, design-build contracts, subcontracts, lower-tier subcontracts, purchase orders, lease agreements, consultant contracts or any other covered transaction requiring FHWA approval or that is estimated to cost $25,000 or more – as defined in 2 CFR Parts 180 and 1200. 2 CFR 180.220 and 1200.220.

1**. Instructions for Certification – First Tier Participants:**

a. By signing and submitting this proposal, the prospective first tier participant is providing the certification set out below.

b. The inability of a person to provide the certification set out below will not necessarily result in denial of participation in this covered transaction. The prospective first tier participant shall submit an explanation of why it cannot provide the certification set out below. The certification or explanation will be considered in connection with the department or agency's determination whether to enter into this transaction. However, failure of the prospective first tier participant to furnish a certification or an explanation shall disqualify such a person from participation in this transaction. 2 CFR 180.320.

c. The certification in this clause is a material representation of fact upon which reliance was placed when the contracting agency determined to enter into this transaction. If it is later determined that the prospective participant knowingly rendered an erroneous certification, in addition to other remedies available to the Federal Government, the contracting agency may terminate this transaction for cause of default. 2 CFR 180.325.

d. The prospective first tier participant shall provide immediate written notice to the contracting agency to whom this proposal is submitted if any time the prospective first tier participant learns that its certification was erroneous when submitted or has become erroneous by reason of changed circumstances. 2 CFR 180.345 and 180.350.

e. The terms "covered transaction," "debarred," "suspended," "ineligible," "participant," "person," "principal," and "voluntarily excluded," as used in this clause, are defined in 2 CFR Parts 180, Subpart I, 180.900-180.1020, and 1200. “First Tier Covered Transactions” refers to any covered transaction between a recipient or subrecipient of Federal funds and a participant (such as the prime or general contract). “Lower Tier Covered Transactions” refers to any covered transaction under a First Tier Covered Transaction (such as subcontracts). “First Tier Participant” refers to the participant who has entered into a covered transaction with a recipient or subrecipient of Federal funds (such as the prime or general contractor). “Lower Tier Participant” refers any participant who has entered into a covered transaction with a First Tier Participant or other Lower Tier Participants (such as subcontractors and suppliers).

f. The prospective first tier participant agrees by submitting this proposal that, should the proposed covered transaction be entered into, it shall not knowingly enter into any lower tier covered transaction with a person who is debarred, suspended, declared ineligible, or voluntarily excluded from participation in this covered transaction, unless authorized by the department or agency entering into this transaction. 2 CFR 180.330.

g. The prospective first tier participant further agrees by submitting this proposal that it will include the clause titled "Certification Regarding Debarment, Suspension, Ineligibility and Voluntary Exclusion-Lower Tier Covered Transactions," provided by the department or contracting agency, entering into this covered transaction, without modification, in all lower tier covered transactions and in all solicitations for lower tier covered transactions exceeding the $25,000 threshold. 2 CFR 180.220 and 180.300.

h. A participant in a covered transaction may rely upon a certification of a prospective participant in a lower tier covered transaction that is not debarred, suspended, ineligible, or voluntarily excluded from the covered transaction, unless it knows that the certification is erroneous. 2 CFR 180.300; 180.320, and 180.325. A participant is responsible for ensuring that its principals are not suspended, debarred, or otherwise ineligible to participate in covered transactions. 2 CFR 180.335. To verify the eligibility of its principals, as well as the eligibility of any lower tier prospective participants, each participant may, but is not required to, check the System for Award Management website (https://www.sam.gov/). 2 CFR 180.300, 180.320, and 180.325.

i. Nothing contained in the foregoing shall be construed to require the establishment of a system of records in order to render in good faith the certification required by this clause. The knowledge and information of the prospective participant is not required to exceed that which is normally possessed by a prudent person in the ordinary course of business dealings.

j. Except for transactions authorized under paragraph (f) of these instructions, if a participant in a covered transaction knowingly enters into a lower tier covered transaction with a person who is suspended, debarred, ineligible, or voluntarily excluded from participation in this transaction, in addition to other remedies available to the Federal Government, the department or agency may terminate this transaction for cause or default. 2 CFR 180.325.

* * * * *

2. Certification Regarding Debarment, Suspension, Ineligibility and Voluntary Exclusion – First Tier Participants:

a. The prospective first tier participant certifies to the best of its knowledge and belief, that it and its principals:

(1) Are not presently debarred, suspended, proposed for debarment, declared ineligible, or voluntarily excluded from participating in covered transactions by any Federal department or agency, 2 CFR 180.335;.

(2) Have not within a three-year period preceding this proposal been convicted of or had a civil judgment rendered against them for commission of fraud or a criminal offense in connection with obtaining, attempting to obtain, or performing a public (Federal, State, or local) transaction or contract under a public transaction; violation of Federal or State antitrust statutes or commission of embezzlement, theft, forgery, bribery, falsification or destruction of records, making false statements, or receiving stolen property, 2 CFR 180.800;

(3) Are not presently indicted for or otherwise criminally or civilly charged by a governmental entity (Federal, State or local) with commission of any of the offenses enumerated in paragraph (a)(2) of this certification, 2 CFR 180.700 and 180.800; and

(4) Have not within a three-year period preceding this application/proposal had one or more public transactions (Federal, State or local) terminated for cause or default. 2 CFR 180.335(d).

(5) Are not a corporation that has been convicted of a felony violation under any Federal law within the two-year period preceding this proposal (USDOT Order 4200.6 implementing appropriations act requirements); and

(6) Are not a corporation with any unpaid Federal tax liability that has been assessed, for which all judicial and administrative remedies have been exhausted, or have lapsed, and that is not being paid in a timely manner pursuant to an agreement with the authority responsible for collecting the tax liability (USDOT Order 4200.6 implementing appropriations act requirements).

b. Where the prospective participant is unable to certify to any of the statements in this certification, such prospective participant should attach an explanation to this proposal. 2 CFR 180.335 and 180.340.

* * * * *

3. **Instructions for Certification - Lower Tier Participants:**

(Applicable to all subcontracts, purchase orders, and other lower tier transactions requiring prior FHWA approval or estimated to cost $25,000 or more - 2 CFR Parts 180 and 1200). 2 CFR 180.220 and 1200.220.

a. By signing and submitting this proposal, the prospective lower tier participant is providing the certification set out below.

b. The certification in this clause is a material representation of fact upon which reliance was placed when this transaction was entered into. If it is later determined that the prospective lower tier participant knowingly rendered an erroneous certification, in addition to other remedies available to the Federal Government, the department, or agency with which this transaction originated may pursue available remedies, including suspension and/or debarment.

c. The prospective lower tier participant shall provide immediate written notice to the person to which this proposal is submitted if at any time the prospective lower tier participant learns that its certification was erroneous by reason of changed circumstances. 2 CFR 180.365.

d. The terms "covered transaction," "debarred," "suspended," "ineligible," "participant," "person," "principal," and "voluntarily excluded," as used in this clause, are defined in 2 CFR Parts 180, Subpart I, 180.900 – 180.1020, and 1200. You may contact the person to which this proposal is submitted for assistance in obtaining a copy of those regulations. “First Tier Covered Transactions” refers to any covered transaction between a recipient or subrecipient of Federal funds and a participant (such as the prime or general contract). “Lower Tier Covered Transactions” refers to any covered transaction under a First Tier Covered Transaction (such as subcontracts). “First Tier Participant” refers to the participant who has entered into a covered transaction with a recipient or subrecipient of Federal funds (such as the prime or general contractor). “Lower Tier Participant” refers any participant who has entered into a covered transaction with a First Tier Participant or other Lower Tier Participants (such as subcontractors and suppliers).

e. The prospective lower tier participant agrees by submitting this proposal that, should the proposed covered transaction be entered into, it shall not knowingly enter into any lower tier covered transaction with a person who is debarred, suspended, declared ineligible, or voluntarily excluded from participation in this covered transaction, unless authorized by the department or agency with which this transaction originated. 2 CFR 1200.220 and 1200.332.

f. The prospective lower tier participant further agrees by submitting this proposal that it will include this clause titled "Certification Regarding Debarment, Suspension, Ineligibility and Voluntary Exclusion-Lower Tier Covered Transaction," without modification, in all lower tier covered transactions and in all solicitations for lower tier covered transactions exceeding the $25,000 threshold. 2 CFR 180.220 and 1200.220.

g. A participant in a covered transaction may rely upon a certification of a prospective participant in a lower tier covered transaction that is not debarred, suspended, ineligible, or voluntarily excluded from the covered transaction, unless it knows that the certification is erroneous. A participant is responsible for ensuring that its principals are not suspended, debarred, or otherwise ineligible to participate in covered transactions. To verify the eligibility of its principals, as well as the eligibility of any lower tier prospective participants, each participant may, but is not required to, check the System for Award Management website (https://www.sam.gov/), which is compiled by the General Services Administration. 2 CFR 180.300, 180.320, 180.330, and 180.335.

h. Nothing contained in the foregoing shall be construed to require establishment of a system of records in order to render in good faith the certification required by this clause. The knowledge and information of participant is not required to exceed that which is normally possessed by a prudent person in the ordinary course of business dealings.

i. Except for transactions authorized under paragraph e of these instructions, if a participant in a covered transaction knowingly enters into a lower tier covered transaction with a person who is suspended, debarred, ineligible, or voluntarily

excluded from participation in this transaction, in addition to other remedies available to the Federal Government, the department or agency with which this transaction originated may pursue available remedies, including suspension and/or debarment. 2 CFR 180.325.

* * * * *

4. Certification Regarding Debarment, Suspension, Ineligibility and Voluntary Exclusion--Lower Tier Participants:

a. The prospective lower tier participant certifies, by submission of this proposal, that neither it nor its principals:

(1) is presently debarred, suspended, proposed for debarment, declared ineligible, or voluntarily excluded from participating in covered transactions by any Federal department or agency, 2 CFR 180.355;

(2) is a corporation that has been convicted of a felony violation under any Federal law within the two-year period preceding this proposal (USDOT Order 4200.6 implementing appropriations act requirements); and

(3) is a corporation with any unpaid Federal tax liability that has been assessed, for which all judicial and administrative remedies have been exhausted, or have lapsed, and that is not being paid in a timely manner pursuant to an agreement with the authority responsible for collecting the tax liability. (USDOT Order 4200.6 implementing appropriations act requirements)

b. Where the prospective lower tier participant is unable to certify to any of the statements in this certification, such prospective participant should attach an explanation to this proposal.

* * * * *

XI. CERTIFICATION REGARDING USE OF CONTRACT FUNDS FOR LOBBYING

This provision is applicable to all Federal-aid construction contracts and to all related subcontracts which exceed $100,000. 49 CFR Part 20, App. A.

1. The prospective participant certifies, by signing and submitting this bid or proposal, to the best of his or her knowledge and belief, that:

a. No Federal appropriated funds have been paid or will be paid, by or on behalf of the undersigned, to any person for influencing or attempting to influence an officer or employee of any Federal agency, a Member of Congress, an officer or employee of Congress, or an employee of a Member of Congress in connection with the awarding of any Federal contract, the making of any Federal grant, the making of any Federal loan, the entering into of any cooperative agreement, and the extension, continuation, renewal, amendment, or modification of any Federal contract, grant, loan, or cooperative agreement.

b. If any funds other than Federal appropriated funds have been paid or will be paid to any person for influencing or attempting to influence an officer or employee of any Federal agency, a Member of Congress, an officer or employee of Congress, or an employee of a Member of Congress in connection with this Federal contract, grant, loan, or cooperative agreement, the undersigned shall complete and submit Standard Form-LLL, "Disclosure Form to Report Lobbying," in accordance with its instructions.

2. This certification is a material representation of fact upon which reliance was placed when this transaction was made or entered into. Submission of this certification is a prerequisite for making or entering into this transaction imposed by 31 U.S.C. 1352. Any person who fails to file the required certification shall be subject to a civil penalty of not less than $10,000 and not more than $100,000 for each such failure.

3. The prospective participant also agrees by submitting its bid or proposal that the participant shall require that the language of this certification be included in all lower tier subcontracts, which exceed $100,000 and that all such recipients shall certify and disclose accordingly.

XII. USE OF UNITED STATES-FLAG VESSELS:

This provision is applicable to all Federal-aid construction contracts, design-build contracts, subcontracts, lower-tier subcontracts, purchase orders, lease agreements, or any other covered transaction. 46 CFR Part 381.

This requirement applies to material or equipment that is acquired for a specific Federal-aid highway project. 46 CFR 381.7. It is not applicable to goods or materials that come into inventories independent of an FHWA funded-contract.

When oceanic shipments (or shipments across the Great Lakes) are necessary for materials or equipment acquired for a specific Federal-aid construction project, the bidder, proposer, contractor, subcontractor, or vendor agrees:

1. To utilize privately owned United States-flag commercial vessels to ship at least 50 percent of the gross tonnage (computed separately for dry bulk carriers, dry cargo liners, and tankers) involved, whenever shipping any equipment, material, or commodities pursuant to this contract, to the extent such vessels are available at fair and reasonable rates for United States-flag commercial vessels. 46 CFR 381.7.

2. To furnish within 20 days following the date of loading for shipments originating within the United States or within 30 working days following the date of loading for shipments originating outside the United States, a legible copy of a rated, ‘on-board’ commercial ocean bill-of-lading in English for each shipment of cargo described in paragraph (b)(1) of this section to both the Contracting Officer (through the prime contractor in the case of subcontractor bills-of-lading) and to the Office of Cargo and Commercial Sealift (MAR-620), Maritime Administration, Washington, DC 20590. (MARAD requires copies of the ocean carrier's (master) bills of lading, certified onboard, dated, with rates and charges. These bills of lading may contain business sensitive information and therefore may be submitted directly to MARAD by the Ocean Transportation Intermediary on behalf of the contractor). 46 CFR 381.7.

ATTACHMENT A - EMPLOYMENT AND MATERIALS PREFERENCE FOR APPALACHIAN DEVELOPMENT HIGHWAY SYSTEM OR APPALACHIAN LOCAL ACCESS ROAD CONTRACTS (23 CFR 633, Subpart B, Appendix B)
This provision is applicable to all Federal-aid projects funded under the Appalachian Regional Development Act of 1965.

1. During the performance of this contract, the contractor undertaking to do work which is, or reasonably may be, done as on-site work, shall give preference to qualified persons who regularly reside in the labor area as designated by the DOL wherein the contract work is situated, or the subregion, or the Appalachian counties of the State wherein the contract work is situated, except:

a. To the extent that qualified persons regularly residing in the area are not available.

b. For the reasonable needs of the contractor to employ supervisory or specially experienced personnel necessary to assure an efficient execution of the contract work.

c. For the obligation of the contractor to offer employment to present or former employees as the result of a lawful collective bargaining contract, provided that the number of nonresident persons employed under this subparagraph (1c) shall not exceed 20 percent of the total number of employees employed by the contractor on the contract work, except as provided in subparagraph (4) below.

2. The contractor shall place a job order with the State Employment Service indicating (a) the classifications of the laborers, mechanics and other employees required to perform the contract work, (b) the number of employees required in each classification, (c) the date on which the participant estimates such employees will be required, and (d) any other pertinent information required by the State Employment Service to complete the job order form. The job order may be placed with the State Employment Service in writing or by telephone. If during the course of the contract work, the information submitted by the contractor in the original job order is substantially modified, the participant shall promptly notify the State Employment Service.

3. The contractor shall give full consideration to all qualified job applicants referred to him by the State Employment Service. The contractor is not required to grant employment to any job applicants who, in his opinion, are not qualified to perform the classification of work required.

4. If, within one week following the placing of a job order by the contractor with the State Employment Service, the State Employment Service is unable to refer any qualified job applicants to the contractor, or less than the number requested, the State Employment Service will forward a certificate to the contractor indicating the unavailability of applicants. Such certificate shall be made a part of the contractor's permanent project records. Upon receipt of this certificate, the contractor may employ persons who do not normally reside in the labor area to fill positions covered by the certificate, notwithstanding the provisions of subparagraph (1c) above.

5. The provisions of 23 CFR 633.207(e) allow the contracting agency to provide a contractual preference for the use of mineral resource materials native to the Appalachian region.

6. The contractor shall include the provisions of Sections 1 through 4 of this Attachment A in every subcontract for work which is, or reasonably may be, done as on-site work.

KENTUCKY TRANSPORTATION CABINET
DEPARTMENT OF HIGHWAYS

EMPLOYMENT REQUIREMENTS
RELATING TO
NONDISCRIMINATION OF EMPLOYEES
(APPLICABLE TO FEDERAL-AID SYSTEM CONTRACTS)

AN ACT OF THE KENTUCKY GENERAL ASSEMBLY TO PREVENT DISCRIMINATION IN EMPLOYMENT

KRS CHAPTER 344
EFFECTIVE JUNE 16, 1972

The contract on this project, in accordance with KRS Chapter 344, provides that during the performance of this contract, the contractor agrees as follows:

1. The contractor shall not fail or refuse to hire, or shall not discharge any individual, or otherwise discriminate against an individual with respect to his compensation, terms, conditions, or privileges of employment, because of such individual's race, color, religion, national origin, sex, disability or age (forty and above); or limit, segregate, or classify his employees in any way which would deprive or tend to deprive an individual of employment opportunities or otherwise adversely affect his status as an employee, because of such individual's race, color, religion, national origin, sex, disability or age forty (40) and over. The contractor agrees to post in conspicuous places, available to employees and applicants for employment, notices to be provided setting forth the provisions of this nondiscrimination clause.

2. The contractor shall not print or publish or cause to be printed or published a notice or advertisement relating to employment by such an employer or membership in or any classification or referral for employment by the employment agency, indicating any preference, limitation, specification, or discrimination, based on race, color, religion, national origin, sex, or age forty (40) and over, or because the person is a qualified individual with a disability, except that such a notice or advertisement may indicate a preference, limitation, or specification based on religion, national origin, sex, or age forty (40) and over, or because the person is a qualified individual with a disability, when religion, national origin, sex, or age forty (40) and over, or because the person is a qualified individual with a disability, is a bona fide occupational qualification for employment.

3. If the contractor is in control of apprenticeship or other training or retraining, including on-the-job training programs, he shall not discriminate against an individual because of his race, color, religion, national origin, sex, disability or age forty (40) and over, in admission to, or employment in any program established to provide apprenticeship or other training.

4. The contractor will send to each labor union or representative of workers with which he has a collective bargaining agreement or other contract or understanding, a notice to be provided advising the said labor union or workers' representative of the contractor's commitments under this section, and shall post copies of the notice in conspicuous places available to employees and applicants for employment. The contractor will take such action with respect to any subcontract or purchase order as the administrating agency may direct as a means of enforcing such provisions, including sanctions for non-compliance.

Revised: January 25, 2017

Standard Title VI/Non-Discrimination Assurances

During the performance of this contract, the contractor, for itself, its assignees, and successors in interest (hereinafter referred to as the "contractor") agrees as follows:

1. **Compliance with Regulations:** The contractor (hereinafter includes consultants) will comply with the Acts and the Regulations relative to Non-discrimination in Federally-assisted programs of the U.S. Department of Transportation, **Federal Highway Administration**, as they may be amended from time to time, which are herein incorporated by reference and made a part of this contract.

2. **Non-discrimination:** The contractor, with regard to the work performed by it during the contract, will not discriminate on the grounds of race, color, or national origin in the selection and retention of subcontractors, including procurements of materials and leases of equipment. The contractor will not participate directly or indirectly in the discrimination prohibited by the Acts and the Regulations, including employment practices when the contract covers any activity, project, or program set forth in Appendix B of 49 CFR Part 21.

3. **Solicitations for Subcontracts, Including Procurements of Materials and Equipment:** In all solicitations, either by competitive bidding, or negotiation made by the contractor for work to be performed under a subcontract, including procurements of materials, or leases of equipment, each potential subcontractor or supplier will be notified by the contractor of the contractor's obligations under this contract and the Acts and the Regulations relative to Non-discrimination on the grounds of race, color, or national origin.

4. **Information and Reports:** The contractor will provide all information and reports required by the Acts, the Regulations, and directives issued pursuant thereto and will permit access to its books, records, accounts, other sources of information, and its facilities as may be determined by the Recipient or the **Federal Highway Administration** to be pertinent to ascertain compliance with such Acts, Regulations, and instructions. Where any information required of a contractor is in the exclusive possession of another who fails or refuses to furnish the information, the contractor will so certify to the Recipient or the **Federal Highway Administration**, as appropriate, and will set forth what efforts it has made to obtain the information.

5. **Sanctions for Noncompliance:** In the event of a contractor's noncompliance with the Non-discrimination provisions of this contract, the Recipient will impose such contract sanctions as it or the **Federal Highway Administration** may determine to be appropriate, including, but not limited to:

    a. withholding payments to the contractor under the contract until the contractor complies; and/or
    b. cancelling, terminating, or suspending a contract, in whole or in part.

6. **Incorporation of Provisions:** The contractor will include the provisions of paragraphs one through six in every subcontract, including procurements of materials and leases of equipment, unless exempt by the Acts, the Regulations and directives issued pursuant thereto. The contractor will take action with respect to any subcontract or procurement as the Recipient or the **Federal Highway Administration** may direct as a means of enforcing such provisions including sanctions for noncompliance. Provided, that if the contractor becomes involved in, or is threatened with litigation by a subcontractor, or supplier because of such direction, the contractor may request the Recipient to enter into any litigation to protect the interests of the Recipient. In addition, the contractor may request the United States to enter into the litigation to protect the interests of the United States.

Standard Title VI/Non-Discrimination Statutes and Authorities

During the performance of this contract, the contractor, for itself, its assignees, and successors in interest (hereinafter referred to as the "contractor") agrees to comply with the following non-discrimination statutes and authorities; including but not limited to:

- Title VI of the Civil Rights Act of 1964 (42 U.S.C. § 2000d *et seq*., 78 stat. 252), (prohibits discrimination on the basis of race, color, national origin); and 49 CFR Part 21;
- The Uniform Relocation Assistance and Real Property Acquisition Policies Act of 1970, (42 U.S.C. § 4601), (prohibits unfair treatment of persons displaced or whose property has been acquired because of Federal or Federal-aid programs and projects);
- Federal-Aid Highway Act of 1973, (23 U.S.C. § 324 *et seq*.), (prohibits discrimination on the basis of sex);
- Section 504 of the Rehabilitation Act of 1973, (29 U.S.C. § 794 *et seq*.), as amended, (prohibits discrimination on the basis of disability); and 49 CFR Part 27;
- The Age Discrimination Act of 1975, as amended, (42 U.S.C. § 6101 *et seq*.), (prohibits discrimination on the basis of age);
- Airport and Airway Improvement Act of 1982, (49 USC § 471, Section 47123), as amended, (prohibits discrimination based on race, creed, color, national origin, or sex);
- The Civil Rights Restoration Act of 1987, (PL 100-209), (Broadened the scope, coverage and applicability of Title VI of the Civil Rights Act of 1964, The Age Discrimination Act of 1975 and Section 504 of the Rehabilitation Act of 1973, by expanding the definition of the terms "programs or activities" to include all of the programs or activities of the Federal-aid recipients, sub-recipients and contractors, whether such programs or activities are Federally funded or not);
- Titles II and III of the Americans with Disabilities Act, which prohibit discrimination on the basis of disability in the operation of public entities, public and private transportation systems, places of public accommodation, and certain testing entities (42 U.S.C. §§ 12131 -- 12189) as implemented by Department of Transportation regulations at 49 C.F.R. parts 37 and 38;
- The Federal Aviation Administration's Non-discrimination statute (49 U.S.C. § 47123) (prohibits discrimination on the basis of race, color, national origin, and sex);
- Executive Order 12898, Federal Actions to Address Environmental Justice in Minority Populations and Low-Income Populations, which ensures non-discrimination against minority populations by discouraging programs, policies, and activities with disproportionately high and adverse human health or environmental effects on minority and low-income populations;
- Executive Order 13166, Improving Access to Services for Persons with Limited English Proficiency, and resulting agency guidance, national origin discrimination includes discrimination because of limited English proficiency (LEP). To ensure compliance with Title VI, you must take reasonable steps to ensure that LEP persons have meaningful access to your programs (70 Fed. Reg. at 74087 to 74100);
- Title IX of the Education Amendments of 1972, as amended, which prohibits you from discriminating because of sex in education programs or activities (20 U.S.C. 1681 et seq).

EXECUTIVE BRANCH CODE OF ETHICS

The Executive Branch Code of Ethics created by Kentucky Revised Statutes (KRS) Chapter 11A, effective July 14, 1992, establishes the ethical standards that govern the conduct of all executive branch employees. The Executive Branch Code of Ethics, which states, in part:

> KRS 11A.040 (7) provides:
>
> A present or former public servant listed in KRS 11A.010(9)(a) to (g) shall not, within one (1) year following termination of his or her office or employment, accept employment, compensation, or other economic benefit from any person or business that contracts or does business with, or is regulated by, the state in matters in which he was directly involved during the last thirty-six (36) months of his tenure. This provision shall not prohibit an individual from returning to the same business, firm, occupation, or profession in which he was involved prior to taking office or beginning his term of employment, or for which he received, prior to his state employment, a professional degree or license, provided that, for a period of one (1) year, he or she personally refrains from working on any matter in which he was directly involved during the last thirty-six (36) months of his or her tenure in state government. This subsection shall not prohibit the performance of ministerial functions, including but not limited to filing tax returns, filing applications for permits or licenses, or filing incorporation papers, nor shall it prohibit the former officer or public servant from receiving public funds disbursed through entitlement programs.
>
> KRS 11A.040 (9) states:
>
> A former public servant shall not represent a person or business before a state agency in a matter in which the former public servant was directly involved during the last thirty-six (36) months of his tenure, for a period of one (1) year after the latter of:
>
> a) The date of leaving office or termination of employment; or
> b) The date the term of office expires to which the public servant was elected.

This law is intended to promote public confidence in the integrity of state government and to declare as public policy the idea that state employees should view their work as a public trust and not to obtain private benefits.

If you have worked for the executive branch of state government within the past year, you may be subject to the law's prohibitions. The law's applicability may be different if you hold elected office or are contemplating representation of another before a state agency.

Also, if you are affiliated with a firm which does business with the state and which employs former state executive-branch employees, you should be aware that the law may apply to them.

In case of doubt, the law permits you to request an advisory opinion from the Executive Branch Ethics Commission, 1025 Capital Center Drive, Suite 105, Frankfort, Kentucky 40601; telephone (502) 564-7954.

Revised: March 11, 2025

"General Decision Number: KY20250107 01/03/2025

Superseded General Decision Number: KY20240107

State: Kentucky

Construction Type: Highway

Counties: Adair, Barren, Bell, Breathitt, Casey, Clay, Clinton, Cumberland, Estill, Floyd, Garrard, Green, Harlan, Hart, Jackson, Johnson, Knott, Knox, Laurel, Lawrence, Lee, Leslie, Letcher, Lincoln, Magoffin, Martin, McCreary, Menifee, Metcalfe, Monroe, Morgan, Owsley, Perry, Pike, Powell, Pulaski, Rockcastle, Russell, Taylor, Wayne, Whitley and Wolfe Counties in Kentucky.

HIGHWAY CONSTRUCTION PROJECTS

Note: Contracts subject to the Davis-Bacon Act are generally required to pay at least the applicable minimum wage rate required under Executive Order 14026 or Executive Order 13658. Please note that these Executive Orders apply to covered contracts entered into by the federal government that are subject to the Davis-Bacon Act itself, but do not apply to contracts subject only to the Davis-Bacon Related Acts, including those set forth at 29 CFR 5.1(a)(1).

If the contract is entered into on or after January 30, 2022, or the contract is renewed or extended (e.g., an option is exercised) on or after January 30, 2022:	. Executive Order 14026 generally applies to the contract. . The contractor must pay all covered workers at least $17.75 per hour (or the applicable wage rate listed on this wage determination, if it is higher) for all hours spent performing on the contract in 2025.
If the contract was awarded on or between January 1, 2015 and January 29, 2022, and the contract is not renewed or extended on or after January 30, 2022:	. Executive Order 13658 generally applies to the contract. . The contractor must pay all covered workers at least $13.30 per hour (or the applicable wage rate listed on this wage determination, if it is higher) for all hours spent performing on that contract in 2025.

The applicable Executive Order minimum wage rate will be adjusted annually. If this contract is covered by one of the Executive Orders and a classification considered necessary for performance of work on the contract does not appear on this wage determination, the contractor must still submit a conformance request.

Additional information on contractor requirements and worker protections under the Executive Orders is available at

http://www.dol.gov/whd/govcontracts.

Modification Number	Publication Date
0	01/03/2025

SUKY2015-047 10/20/2015

	Rates	Fringes
BOILERMAKER	$ 24.65	12.94
BRICKLAYER		
Bricklayer	$ 22.90	8.50
Stone Mason	$ 21.50	8.50
CARPENTER		
Carpenter	$ 24.90	14.50
Piledriver	$ 24.55	14.50
CEMENT MASON	$ 21.25	8.50
ELECTRICIAN		
Electrician	$ 29.36	10.55
Equipment Operator	$ 26.90	10.31
Groundsman	$ 17.79	8.51
Lineman	$ 30.09	10.94

When workmen are required to work from bosum chairs, trusses, stacks, tanks, scaffolds, catwalks, radio and T.V. towers, structural steel (open, unprotected, unfloored raw steel), and bridges or similar hazardous locations where workmen are subject to fall, except where using JLG's and bucket trucks up to 75 feet: Add 25% to workman's base rate for 50 to 75 feet, and add 50% to workman's base rate for over 75 feet.

IRONWORKER	$ 27.56	20.57
LABORER		
Group 1	$ 21.80	12.36
Group 2	$ 22.05	12.36
Group 3	$ 22.10	12.36
Group 4	$ 22.70	12.36

GROUP 1: Aging and Curing of Concrete (Any Mode or Method), Asbestos Abatement Worker, Asphalt Plant Laborers, Asphalt Laborers, Batch Truck Dumpers, Carpenter Tenders, Cement Mason Tenders, Cleaning of Machines, Concrete Laborers, Demolition Laborers, Dredging Laborers, Drill Tender, Environmental Laborer - Nuclear, Radiation, Toxic and Hazardous Waste - Level D, Flagmen, Grade Checkers, All Hand Digging and Hand Back Filling, Highway Marker Placers, Landscaping Laborers, Mesh Handlers and Placers, Puddler, Railroad Laborers, Rip-rap and Grouters, Right of Way Laborers, Sign, Guard Rail and Fence Installers (All Types), Signalmen, Sound Barrier Installer, Storm and Sanitary Sewer Laborers, Swampers, Truck Spotters and Dumpers, Wrecking of Concrete Forms, General Cleanup

GROUP 2: Batter Board Men (Sanitary and Storm Sewer), Brickmason Tenders, Mortar Mixer Operator, Scaffold Builders, Burner and Welder, Bushammers, Chain Saw Operator, Concrete Saw Operators, Deckhand Scow Man, Dry Cement Handlers, Environmental Laborers - Nuclear, Radiation, Toxic and Hazardous Waste - Level C, Forklift Operators for Masonry, Form Setters, Green Concrete Cutting, Hand Operated Grouter and Grinder Machine Operator, Jack Hammers, Lead Paint Abatement, Pavement Breakers, Paving Joint Machine, Pipe

Layers - Laser Operators (Non-metallic), Plastic Pipe Fusion, Power Driven Georgia Buggy and Wheel Barrow, Power Post Hole Diggers, Precast Manhole Setters, Walk-behind Tampers, Walk-behind Trenchers, Sand Blasters, Concrete Chippers, Surface Grinders, Vibrator Operators, Wagon Drillers
GROUP 3: Air Track Driller (All Types), Asphalt Luteman and Rakers, Gunnite Nozzleman, Gunnite Operators and Mixers, Grout Pump Operator, Powderman and Blaster, Side Rail Setters, Rail Paved Ditches, Screw Operators, Tunnel Laborers (Free Air), Water Blasters
GROUP 4: Caisson Workers (Free Air), Cement Finishers, Environmental Laborer - Nuclear, Radiation, Toxic and Hazardous Waste - Level A and B, miners and Drillers (Free Air), Tunnel Blasters, and Tunnel Mockers (Free Air), Directional and Horizontal Boring, Air Track Drillers (All Types), Powder Man and Blasters, Troxler and Concrete Tester if Laborer is Utilized

PAINTER
All Excluding Bridges.....$ 19.92 9.57
Bridges.....$ 23.92 10.07

PLUMBER.....$ 22.52 7.80

POWER EQUIPMENT OPERATOR:
Group 1.....$ 29.95 14.40
Group 2.....$ 29.95 14.40
Group 3.....$ 27.26 14.40
Group 4.....$ 26.96 14.40
GROUP 1: Auto Patrol, Batcher Plant, Bituminous Paver, Cable-Way, Clamshell, Concrete Mixer (21 cu ft or over), Concrete Pump, Crane, Crusher Plant, Derrick, Derrick Boat, Ditching and Trenching Machine, Dragline, Dredge Engineer, Elevator (regardless of ownership when used for hoisting any building material), Elevating Grader and all types of Loaders, Hoe-type Machine, Hoisting Engine, Locomotive, LeTourneau or Carry-all Scoop, Bulldozer, Mechanic, Orangepeel Bucket, Piledriver, Power Blade, Roller (Bituminous), Roller (Earth), Roller (Rock), Scarifier, Shovel, Tractor Shovel, Truck Crane, Well Point, Winch Truck, Push Dozer, Grout Pump, High Lift, Fork Lift (regardless of lift height), all types of Boom Cats, Multiple Operator, Core Drill, Tow or Push Boat, A-Frame Winch Truck, Concrete Paver, Grade-All, Hoist, Hyster, Material Pump, Pumpcrete, Ross Carrier, Sheepfoot, Sideboom, Throttle-Valve Man, Rotary Drill, Power Generator, Mucking Machine, Rock Spreader attached to Equipment, Scoopmobile, KeCal Loader, Tower Cranes,(French, German and other types), Hydrocrane, Tugger, Backfiller Gurries, Self-propelled Compactor, Self-Contained Hydraulic Percussion Drill
GROUP 2: All Air Compressors (200 cu ft/min or greater), Bituminous Mixer, Concrete Mixer (21 cu. ft. or over), Welding Machine, Form Grader, Tractor (50 hp and over), Bull Float, Finish Machine, Outboard Motor Boat, Brakeman, Mechanic Tender, Whirly Oiler, Tract-air, Road Widening Trencher, Articulating Trucks
GROUP 3: Greaser on Grease Facilities servicing Heavy Equipment
GROUP 4: Bituminous Distributor, Cement Gun, Conveyor, Mud Jack, Paving Joint Machine, Pump, Tamping Machine, Tractor (under 50 hp), Vibrator, Oiler, Air Compressor (under 200 cu ft per minute), Concrete Saw, Burlap and Curing Machine, Hydro Seeder, Power Form Handling Equipment, Deckhand Oiler, Hydraulic Post Driver

SHEET METAL WORKER.....$ 20.40 7.80

TRUCK DRIVER
Driver (3 Tons and Over),
Driver (Truck Mounted
Rotary Drill).....$ 23.74 14.50
Driver (3 Tons and Under),
Tire Changer and Truck
Mechanic Tender.....$ 23.53 14.50
Driver (Semi-Trailer or
Pole Trailer), Driver
(Dump Truck, Tandem Axle),
Driver of Distributor.....$ 23.40 14.50
Driver on Mixer Trucks
(All Types).....$ 23.45 14.50
Driver on Pavement Breakers.$ 23.55 14.50
Driver, Euclid and Other
Heavy Earth Moving
Equipment and Low Boy.....$ 24.31 14.50
Driver, Winch Truck and A-
Frame when used in
Transporting Materials.....$ 23.30 14.50
Greaser on Greasing
Facilities.....$ 24.40 14.50
Truck Mechanic.....$ 23.50 14.50
Truck Tender and
Warehouseman.....$ 23.20 14.50

WELDERS - Receive rate prescribed for craft performing operation to which welding is incidental.

==========

Note: Executive Order (EO) 13706, Establishing Paid Sick Leave for Federal Contractors applies to all contracts subject to the Davis-Bacon Act for which the contract is awarded (and any solicitation was issued) on or after January 1, 2017. If this contract is covered by the EO, the contractor must provide employees with 1 hour of paid sick leave for every 30 hours they work, up to 56 hours of paid sick leave each year. Employees must be permitted to use paid sick leave for their own illness, injury or other health-related needs, including preventive care; to assist a family member (or person who is like family to the employee) who is ill, injured, or has other health-related needs, including preventive care; or for reasons resulting from, or to assist a family member (or person who is like family to the employee) who is a victim of, domestic violence, sexual assault, or stalking. Additional information on contractor requirements and worker protections under the EO is available at
https://www.dol.gov/agencies/whd/government-contracts.

Unlisted classifications needed for work not included within the scope of the classifications listed may be added after award only as provided in the labor standards contract clauses (29CFR 5.5 (a) (1) (iii)).

The body of each wage determination lists the classifications and wage rates that have been found to be prevailing for the type(s) of construction and geographic area covered by the wage determination. The classifications are listed in alphabetical order under rate identifiers indicating whether the particular rate is a union rate (current union negotiated rate), a survey

rate, a weighted union average rate, a state adopted rate, or a supplemental classification rate.

Union Rate Identifiers

A four-letter identifier beginning with characters other than ""SU"", ""UAVG"", ?SA?, or ?SC? denotes that a union rate was prevailing for that classification in the survey. Example: PLUM0198-005 07/01/2024. PLUM is an identifier of the union whose collectively bargained rate prevailed in the survey for this classification, which in this example would be Plumbers. 0198 indicates the local union number or district council number where applicable, i.e., Plumbers Local 0198. The next number, 005 in the example, is an internal number used in processing the wage determination. The date, 07/01/2024 in the example, is the effective date of the most current negotiated rate.

Union prevailing wage rates are updated to reflect all changes over time that are reported to WHD in the rates in the collective bargaining agreement (CBA) governing the classification.

Union Average Rate Identifiers

The UAVG identifier indicates that no single rate prevailed for those classifications, but that 100% of the data reported for the classifications reflected union rates. EXAMPLE: UAVG-OH-0010 01/01/2024. UAVG indicates that the rate is a weighted union average rate. OH indicates the State of Ohio. The next number, 0010 in the example, is an internal number used in producing the wage determination. The date, 01/01/2024 in the example, indicates the date the wage determination was updated to reflect the most current union average rate.

A UAVG rate will be updated once a year, usually in January, to reflect a weighted average of the current rates in the collective bargaining agreements on which the rate is based.

Survey Rate Identifiers

The ""SU"" identifier indicates that either a single non-union rate prevailed (as defined in 29 CFR 1.2) for this classification in the survey or that the rate was derived by computing a weighted average rate based on all the rates reported in the survey for that classification. As a weighted average rate includes all rates reported in the survey, it may include both union and non-union rates. Example: SUFL2022-007 6/27/2024. SU indicates the rate is a single non-union prevailing rate or a weighted average of survey data for that classification. FL indicates the State of Florida. 2022 is the year of the survey on which these classifications and rates are based. The next number, 007 in the example, is an internal number used in producing the wage determination. The date, 6/27/2024 in the example, indicates the survey completion date for the classifications and rates under that identifier.

?SU? wage rates typically remain in effect until a new survey is conducted. However, the Wage and Hour Division (WHD) has the discretion to update such rates under 29 CFR 1.6(c)(1).

State Adopted Rate Identifiers

The ""SA"" identifier indicates that the classifications and prevailing wage rates set by a state (or local) government were

adopted under 29 C.F.R 1.3(g)-(h). Example: SAME2023-007 01/03/2024. SA reflects that the rates are state adopted. ME refers to the State of Maine. 2023 is the year during which the state completed the survey on which the listed classifications and rates are based. The next number, 007 in the example, is an internal number used in producing the wage determination. The date, 01/03/2024 in the example, reflects the date on which the classifications and rates under the ?SA? identifier took effect under state law in the state from which the rates were adopted.

WAGE DETERMINATION APPEALS PROCESS

1) Has there been an initial decision in the matter? This can be:

a) a survey underlying a wage determination
b) an existing published wage determination
c) an initial WHD letter setting forth a position on a wage determination matter
d) an initial conformance (additional classification and rate) determination

On survey related matters, initial contact, including requests for summaries of surveys, should be directed to the WHD Branch of Wage Surveys. Requests can be submitted via email to davisbaconinfo@dol.gov or by mail to:

Branch of Wage Surveys
Wage and Hour Division
U.S. Department of Labor
200 Constitution Avenue, N.W.
Washington, DC 20210

Regarding any other wage determination matter such as conformance decisions, requests for initial decisions should be directed to the WHD Branch of Construction Wage Determinations. Requests can be submitted via email to BCWD-Office@dol.gov or by mail to:

Branch of Construction Wage Determinations
Wage and Hour Division
U.S. Department of Labor
200 Constitution Avenue, N.W.
Washington, DC 20210

2) If an initial decision has been issued, then any interested party (those affected by the action) that disagrees with the decision can request review and reconsideration from the Wage and Hour Administrator (See 29 CFR Part 1.8 and 29 CFR Part 7). Requests for review and reconsideration can be submitted via email to dba.reconsideration@dol.gov or by mail to:

Wage and Hour Administrator
U.S. Department of Labor
200 Constitution Avenue, N.W.
Washington, DC 20210

The request should be accompanied by a full statement of the interested party's position and any information (wage payment data, project description, area practice material, etc.) that the requestor considers relevant to the issue.

3) If the decision of the Administrator is not favorable, an interested party may appeal directly to the Administrative Review Board (formerly the Wage Appeals Board). Write to:

Administrative Review Board
U.S. Department of Labor
200 Constitution Avenue, N.W.
Washington, DC 20210.

==========

END OF GENERAL DECISION"

Fringe benefit amounts are applicable for all hours worked except when otherwise noted.

No laborer, workman or mechanic shall be paid at a rate less than that of a Journeyman except those classified as bona fide apprentices.

Apprentices or trainees shall be permitted to work as such subject to Administrative Regulations adopted by the Commissioner of Workplace Standards. Copies of these regulations will be furnished upon request from any interested person.

Before using apprentices on the job the contractor shall present to the Contracting Officer written evidence of registration of such employees in a program of a State apprenticeship and training agency approved and recognized by the U. S. Bureau of Apprenticeship and Training. In the absence of such a State agency, the contractor shall submit evidence of approval and registration by the U. S. Bureau of Apprenticeship and Training.

The contractor shall submit to the Contracting Officer, written evidence of the established apprenticeship-journeyman ratios and wage rates in the project area, which will be the basis for establishing such ratios and rates for the project under the applicable contract provisions.

TO: EMPLOYERS/EMPLOYEES

PREVAILING WAGE SCHEDULE:

The wages indicated on this wage schedule are the least permitted to be paid for the occupations indicated. When an employee works in more than one classification, the employer must record the number of hours worked in each classification at the prescribed hourly base rate.

OVERTIME:

Overtime is to be paid to an employee at a rate not less than one and one-half times the basic rate of pay for all hours worked in excess of forty (40) hours in such workweek. Wage violations or questions should be directed to the designated Engineer or the undersigned.

Director
Division of Construction Procurement
Frankfort, Kentucky 40622
502-564-3500

PART IV

BID ITEMS

255392

PROPOSAL BID ITEMS

Report Date 9/3/25

255392

Section: 0001 - PAVING

LINE	BID CODE	ALT	DESCRIPTION	QUANTITY	UNIT	UNIT PRIC	FP	AMOUNT
0010	00001		DGA BASE	37.00	TON		$	
0020	00100		ASPHALT SEAL AGGREGATE	2.02	TON		$	
0030	00103		ASPHALT SEAL COAT	0.24	TON		$	
0040	00212		CL2 ASPH BASE 1.00D PG64-22	71.00	TON		$	
0050	00301		CL2 ASPH SURF 0.38D PG64-22	67.00	TON		$	
0060	24970EC		ASPHALT MATERIAL FOR TACK NON-TRACKING	0.48	TON		$	

Section: 0002 - ROADWAY

LINE	BID CODE	ALT	DESCRIPTION	QUANTITY	UNIT	UNIT PRIC	FP	AMOUNT
0070	01987		DELINEATOR FOR GUARDRAIL BI DIRECTIONAL WHITE	8.00	EACH		$	
0080	02230		EMBANKMENT IN PLACE	76.00	CUYD		$	
0090	02351		GUARDRAIL-STEEL W BEAM-S FACE	50.00	LF		$	
0100	02355		GUARDRAIL-STEEL W BEAM-S FACE A	75.00	LF		$	
0110	02360		GUARDRAIL TERMINAL SECTION NO 1	2.00	EACH		$	
0120	02371		GUARDRAIL END TREATMENT TYPE 7	1.00	EACH		$	
0130	02381		REMOVE GUARDRAIL	75.00	LF		$	
0140	02429		RIGHT-OF-WAY MONUMENT TYPE 1	7.00	EACH		$	
0150	02432		WITNESS POST	7.00	EACH		$	
0160	02545		CLEARING AND GRUBBING APPROX LESS THAN 1 ACRE	1.00	LS		$	
0170	02585		EDGE KEY	20.10	LF		$	
0180	02650		MAINTAIN & CONTROL TRAFFIC	1.00	LS		$	
0190	02671		PORTABLE CHANGEABLE MESSAGE SIGN	3.00	EACH		$	
0200	02726		STAKING	1.00	LS		$	
0210	02731		REMOVE STRUCTURE	1.00	LS		$	
0220	03171		CONC BARRIER WALL TYPE 9T	40.00	LF		$	
0230	06514		PAVE STRIPING-PERM PAINT-4 IN	704.00	LF		$	
0240	06555		PAVE STRIPING-DUR TY 1-4 IN Y	196.00	LF		$	
0250	08900		CRASH CUSHION TY 6 CLASS B TL2	2.00	EACH		$	
0260	20550ND		SAWCUT PAVEMENT	67.00	LF		$	
0270	21134ND		REMOVE-STORE AND REINSTALL SIGN	1.00	EACH		$	
0280	21415ND		EROSION CONTROL	1.00	LS		$	

Section: 0003 - BRIDGE

LINE	BID CODE	ALT	DESCRIPTION	QUANTITY	UNIT	UNIT PRIC	FP	AMOUNT
0290	02231		STRUCTURE GRANULAR BACKFILL	365.00	CUYD		$	
0300	02555		CONCRETE-CLASS B	31.00	CUYD		$	
0310	03299		ARMORED EDGE FOR CONCRETE	56.00	LF		$	
0320	08003		FOUNDATION PREPARATION	1.00	LS		$	

255392

PROPOSAL BID ITEMS

Report Date 9/3/25

LINE	BID CODE	ALT	DESCRIPTION	QUANTITY	UNIT	UNIT PRIC	FP	AMOUNT
0330	08019		CYCLOPEAN STONE RIP RAP	270.00	TON		$	
0340	08033		TEST PILES	66.00	LF		$	
0350	08039		PRE-DRILLING FOR PILES	470.00	LF		$	
0360	08041		PILES-STEEL HP18X204	196.00	LF		$	
0370	08052		PILES-STEEL HP14X117	365.00	LF		$	
0380	08095		PILE POINTS-14 IN	15.00	EACH		$	
0390	08100		CONCRETE-CLASS A	131.00	CUYD		$	
0400	08104		CONCRETE-CLASS AA	67.00	CUYD		$	
0410	08140		MECHANICAL REINF COUPLER #5 EPOXY COATED	115.00	EACH		$	
0420	08151		STEEL REINFORCEMENT-EPOXY COATED	23,708.00	LB		$	
0430	08666		PRECAST PC BOX BEAM CB42-48	686.00	LF		$	
0440	23378EC		CONCRETE SEALING	4,316.00	SQFT		$	
0450	24405EC		MECHANICAL REINF COUPLER #8-EPOXY COATED	18.00	EACH		$	
0460	24956ED		REMOVE STONE MASONRY WALL	128.00	LF		$	
0470	24978ED		RECONSTRUCT STONE MASONRY WALL	15.00	LF		$	
0480	25099ED		DEEP BEAM BRIDGE GUARDRAIL	196.00	LF		$	
0490	26232EC		CONCRETE COATING APPROX 690 SF	690.00	SQFT		$	
0500	26233EC		MOBILIZATION FOR CONCRETE SURF TREATMENT	1.00	LS		$	

Section: 0004 - DEMOBILIZATION &/OR MOBILIZATION

LINE	BID CODE	ALT	DESCRIPTION	QUANTITY	UNIT	UNIT PRIC	FP	AMOUNT
0510	02569		DEMOBILIZATION	1.00	LS		$	