CALL NO. **101**

CONTRACT ID. **235306**

HENRY COUNTY

FED/STATE PROJECT NUMBER **STP BRZ 9030 (409)**

DESCRIPTION **KY 1861 SUNNYSIDE ROAD**

WORK TYPE **BRIDGE SUPERSTRUCTURE REPLACEMENT**

PRIMARY COMPLETION DATE **11/30/2023**

LETTING DATE: **May 25,2023**

Sealed Bids will be received electronically through the Bid Express bidding service until 10:00 AM EASTERN DAYLIGHT TIME May 25,2023. Bids will be publicly announced at 10:00 AM EASTERN DAYLIGHT TIME.

NO PLANS ASSOCIATED WITH THIS PROJECT.

DBE CERTIFICATION REQUIRED - 0%

REQUIRED BID PROPOSAL GUARANTY: Not less than 5% of the total bid.

TABLE OF CONTENTS

PART I SCOPE OF WORK

- PROJECT(S), COMPLETION DATE(S), & LIQUIDATED DAMAGES
- CONTRACT NOTES
- FEDERAL CONTRACT NOTES
- ASPHALT MIXTURE
- DGA BASE
- DGA BASE FOR SHOULDERS
- INCIDENTAL SURFACING
- COMPACTION OPTION B
- SPECIAL NOTE(S) APPLICABLE TO PROJECT
- LIQUIDATED DAMAGES
- TREE REMOVAL
- BRIDGE DEMOLITION, RENOVATION AND ASBESTOS ABATEMENT
- ASBESTOS ABATEMENT REPORT
- RIGHT OF WAY CERTIFICATION
- UTILITY IMPACT & RAIL CERTIFICATION NOTES

PART II SPECIFICATIONS AND STANDARD DRAWINGS

- SPECIFICATIONS REFERENCE
- SUPPLEMENTAL SPECIFICATION
- [SN-1I] PORTABLE CHANGEABLE SIGNS
- [SP-69] EMBANKMENT AT BRIDGE END BENT STRUCTURES

PART III EMPLOYMENT, WAGE AND RECORD REQUIREMENTS

- FEDERAL-AID CONSTRUCTION CONTRACTS - FHWA 1273
- NONDISCRIMINATION OF EMPLOYEES
- EXECUTIVE BRANCH CODE OF ETHICS
- PROJECT WAGE RATES LOCALITY 3 / FEDERAL
- NOTICE OF REQUIREMENT FOR AFFIRMATIVE ACTION TO ENSURE EEO HENRY

PART IV INSURANCE

PART V BID ITEMS

PART I

SCOPE OF WORK

ADMINISTRATIVE DISTRICT - 05

CONTRACT ID - 235306

STP BRZ 9030 (409)

COUNTY - HENRY

PCN - BR05218612300
STP BRZ 9030 (409)

KY 1861 SUNNYSIDE ROAD (MP 3.925) ADDRESS DEFICIENCIES ON KY 1861 OVER JACKSON CREEK (052B00062N) (MP 3.935), A DISTANCE OF 0.01 MILES.BRIDGE SUPERSTRUCTURE REPLACEMENT SYP NO. 05-10049.00.

GEOGRAPHIC COORDINATES LATITUDE 38:24:17.00 LONGITUDE -85:13:50.00

ADT 521

COMPLETION DATE(S):

COMPLETED BY 11/30/2023 APPLIES TO ENTIRE CONTRACT

CONTRACT NOTES

PROPOSAL ADDENDA

All addenda to this proposal must be applied when calculating bid and certified in the bid packet submitted to the Kentucky Department of Highways. Failure to use the correct and most recent addenda may result in the bid being rejected.

BID SUBMITTAL

Bidder must use the Department's electronic bidding software. The Bidder must download the bid file located on the Bid Express website (www.bidx.com) to prepare a bid packet for submission to the Department. The bidder must submit electronically using Bid Express.

JOINT VENTURE BIDDING

Joint venture bidding is permissible. All companies in the joint venture must be prequalified in one of the work types in the Qualifications for Bidders for the project. The bidders must get a vendor ID for the joint venture from the Division of Construction Procurement and register the joint venture as a bidder on the project. Also, the joint venture must obtain a digital ID from Bid Express to submit a bid. A joint bid bond of 5% may be submitted for both companies or each company may submit a separate bond of 5%.

UNDERGROUND FACILITY DAMAGE PROTECTION

The contractor shall make every effort to protect underground facilities from damage as prescribed in the Underground Facility Damage Protection Act of 1994, Kentucky Revised Statute KRS 367.4901 to 367.4917. It is the contractor's responsibility to determine and take steps necessary to be in compliance with federal and state damage prevention directives. When prescribed in said directives, the contractor shall submit Excavation Locate Requests to the Kentucky Contact Center (KY811) via web ticket entry. The submission of this request does not relieve the contractor from the responsibility of contacting non-member facility owners, whom shall be contacted through their individual Protection Notification Center. Non-compliance with these directives can result in the enforcement of penalties.

REGISTRATION WITH THE SECRETARY OF STATE BY A FOREIGN ENTITY

Pursuant to KRS 176.085(1)(b), an agency, department, office, or political subdivision of the Commonwealth of Kentucky shall not award a state contract to a person that is a foreign entity required by KRS 14A.9-010 to obtain a certificate of authority to transact business in the Commonwealth ("certificate") from the Secretary of State under KRS 14A.9-030 unless the person produces the certificate within fourteen (14) days of the bid or proposal opening. If the foreign entity is not required to obtain a certificate as provided in KRS 14A.9-010, the foreign entity should identify the applicable exception. Foreign entity is defined within KRS 14A.1-070.

For all foreign entities required to obtain a certificate of authority to transact business in the Commonwealth, if a copy of the certificate is not received by the contracting agency within the time frame identified above, the foreign entity's solicitation response shall be deemed non-responsive or the awarded contract shall be cancelled.

Businesses can register with the Secretary of State at https://secure.kentucky.gov/sos/ftbr/welcome.aspx .

SPECIAL NOTE FOR PROJECT QUESTIONS DURING ADVERTISEMENT

Questions about projects during the advertisement should be submitted in writing to the Division of Construction Procurement. This may be done by fax (502) 564-7299 or email to kytc.projectquestions@ky.gov. The Department will attempt to answer all submitted questions. The Department reserves the right not to answer if the question is not pertinent or does not aid in clarifying the project intent.

The deadline for posting answers will be 3:00 pm Eastern Daylight Time, the day preceding the Letting. Questions may be submitted until this deadline with the understanding that the later a question is submitted, the less likely an answer will be able to be provided.

The questions and answers will be posted for each Letting under the heading "Questions & Answers" on the Construction Procurement website (www.transportation.ky.gov/contract). The answers provided shall be considered part of this Special Note and, in case of a discrepancy, will govern over all other bidding documents.

HARDWOOD REMOVAL RESTRICTIONS

The US Department of Agriculture has imposed a quarantine in Kentucky and several surrounding states, to prevent the spread of an invasive insect, the emerald ash borer. Hardwood cut in conjunction with the project may not be removed from the state. Chipping or burning on site is the preferred method of disposal.

INSTRUCTIONS FOR EXCESS MATERIAL SITES AND BORROW SITES

Identification of excess material sites and borrow sites shall be the responsibility of the Contractor. The Contractor shall be responsible for compliance with all applicable state and federal laws and may wish to consult with the US Fish and Wildlife Service to seek protection under Section 10 of the Endangered Species Act for these activities.

ACCESS TO RECORDS

The contractor, as defined in KRS 45A.030 (9) agrees that the contracting agency, the Finance and Administration Cabinet, the Auditor of Public Accounts, and the Legislative Research Commission, or their duly authorized representatives, shall have access to any books, documents, papers, records, or other evidence, which are directly pertinent to this contract for the purpose of financial audit or program review. Records and other prequalification information confidentially

disclosed as part of the bid process shall not be deemed as directly pertinent to the contract and shall be exempt from disclosure as provided in KRS 61.878(1)(c). The contractor also recognizes that any books, documents, papers, records, or other evidence, received during a financial audit or program review shall be subject to the Kentucky Open Records Act, KRS 61.870 to 61.884.

In the event of a dispute between the contractor and the contracting agency, Attorney General, or the Auditor of Public Accounts over documents that are eligible for production and review, the Finance and Administration Cabinet shall review the dispute and issue a determination, in accordance with Secretary's Order 11-004.

BUILD AMERICA, BUY AMERICA ACT (BABA)

On November 15, 2021, President Biden signed into law the Infrastructure Investment and Jobs Act (IIJA), Pub. L. No. 117-58, includes the Build America, Buy America Act ("the Act"). Pub. L. No. 117-58, §§70901-52. The Act strengthens the Buy America preference to include "construction materials." The current temporary waiver for **"construction materials"** will expire on November 10, 2022.

The Act will apply to construction materials as outlined in the guidance issued in OMB M-22-11.

Construction Materials – Includes an article, material, or supply – other than an item of primarily iron or steel; a manufactured product; cement and cementitious materials; aggregates such as stone, sand, or gravel; or aggregate binding agents or additives – that is or consists primarily of:

- Non-ferrous metals
- Plastic/polymer-based products (including polyvinylchloride, composite building materials, and polymers used in fiber optic cables);
- Glass (including optic glass);
- Lumber; or
- Drywall.

Construction Materials only applies to items, materials, and supplies that are consumed in, incorporated into, or affixed to an infrastructure project.

Construction Materials does not apply to tools, equipment or supplies brought to the jobsite and removed before completion.

BOYCOTT PROVISIONS

If applicable, the contractor represents that, pursuant to KRS 45A.607, they are not currently engaged in, and will not for the duration of the contract engage in, the boycott of a person or an entity based in or doing business with a jurisdiction with which Kentucky can enjoy open trade. **Note:** The term Boycott does not include actions taken for bona fide business or economic reasons, or actions specifically required by federal or state law.

If applicable, the contractor verifies that, pursuant to KRS 41.480, they do not engage in, and will not for the duration of the contract engage in, in energy company boycotts as defined by KRS 41.472.

LOBBYING PROHIBITIONS

The contractor represents that they, and any subcontractor performing work under the contract, have not violated the agency restrictions contained in KRS 11A.236 during the previous ten (10) years, and pledges to abide by the restrictions set forth in such statute for the duration of the contract awarded.

The contractor further represents that, pursuant to KRS 45A.328, they have not procured an original, subsequent, or similar contract while employing an executive agency lobbyist who was convicted of a crime related to the original, subsequent, or similar contract within five (5) years of the conviction of the lobbyist.

FEDERAL CONTRACT NOTES

The Kentucky Department of Highways, in accordance with the Regulations of the United States Department of Transportation 23 CFR 635.112 (h), hereby notifies all bidders that failure by a bidder to comply with all applicable sections of the current Kentucky Standard Specifications, including, but not limited to the following, may result in a bid not being considered responsive and thus not eligible to be considered for award:

102.02 Current Rating
102.13 Irregular Bid Proposals
102.09 Proposal Guaranty
102.08 Preparation and Delivery of Proposals
102.14 Disqualification of Bidders

CIVIL RIGHTS ACT OF 1964

The Kentucky Transportation Cabinet, Department of Highways, in accordance with the provisions of Title VI of the Civil Rights Act of 1964 (78 Stat. 252, 42 U.S.C. §§ 2000d to 2000d-4) and the Regulations, hereby notifies all bidders that it will affirmatively ensure that any contract entered into pursuant to this advertisement, disadvantaged business enterprises will be afforded full and fair opportunity to submit bids in response to this invitation and will not be discriminated against on the grounds of race, color, national origin, sex, age (over 40), religion, sexual orientation, gender identity, veteran status, disability, income- level, or Limited English Proficiency (LEP)in consideration for an award.

NOTICE TO ALL BIDDERS

To report bid rigging activities call: 1-800-424-9071.

The U.S. Department of Transportation (DOT) operates the above toll-free "hotline" Monday through Friday, 8:00 a.m. to 5:00 p.m. eastern time. Anyone with knowledge of possible bid rigging, bidder collusion, or other fraudulent activities should use the "hotline" to report such activities.

The "hotline" is part of the DOT's continuing effort to identify and investigate highway construction contract fraud and abuse and is operated under the direction of the DOT Inspector General. All information will be treated confidentially and caller anonymity will be respected.

SECOND TIER SUBCONTRACTS

Second tier subcontracts are acceptable per Section 108.01 of the Standard Specifications for Road and Bridge Construction. Sub-Contractors fulfilling a disadvantaged business enterprise goal on a project may enter into a 2nd tier subcontract with a Non-DBE Subcontractor. However, in this instance, none of the work subcontracted to the Non-DBE Contractor will count toward fulfilling the established Disadvantaged Goal for the project.

DISADVANTAGED BUSINESS ENTERPRISE PROGRAM

It is the policy of the Kentucky Transportation Cabinet ("the Cabinet") that Disadvantaged Business Enterprises ("DBE") shall have the opportunity to participate in the performance of highway construction projects financed in whole or in part by Federal Funds in order to create a level playing field for all businesses who wish to contract with the Cabinet. To that end, the Cabinet will comply with the regulations found in 49 CFR Part 26, and the definitions and requirements contained therein shall be adopted as if set out verbatim herein.

The Cabinet, contractors, subcontractors, and sub-recipients shall not discriminate on the basis of race, color, national origin, or sex in the performance of work performed pursuant to Cabinet contracts. The contractor shall carry out applicable requirements of 49 CFR 26 in the award and administration of federally assisted highway construction projects. The contractor will include this provision in all its subcontracts and supply agreements pertaining to contracts with the Cabinet.

Failure by the contractor to carry out these requirements is a material breach of its contract with the Cabinet, which may result in the termination of the contract or such other remedy as the Cabinet deems necessary.

DBE GOAL

The Disadvantaged Business Enterprise (DBE) goal established for this contract, as listed on the front page of the proposal, is the percentage of the total value of the contract.

The contractor shall exercise all necessary and reasonable steps to ensure that Disadvantaged Business Enterprises participate in a least the percent of the contract as set forth above as goals for this contract.

OBLIGATION OF CONTRACTORS

Each contractor prequalified to perform work on Cabinet projects shall designate and make known to the Cabinet a liaison officer who is assigned the responsibility of effectively administering and promoting an active program for utilization of DBEs.

If a formal goal has not been designated for the contract, all contractors are encouraged to consider DBEs for subcontract work as well as for the supply of material and services needed to perform this work.

Contractors are encouraged to use the services of banks owned and controlled by minorities and women.

CERTIFICATION OF CONTRACT GOAL

Contractors shall include the following certification in bids for projects for which a DBE goal has been established. BIDS SUBMITTED WHICH DO NOT INCLUDE CERTIFICATION OF DBE PARTICIPATION WILL NOT BE ACCEPTED. These bids will not be considered for award by the Cabinet and they will be returned to the bidder.

"The bidder certifies that it has secured participation by Disadvantaged Business Enterprises ("DBE") in the amount of_____percent of the total value of this contract and that the DBE participation is in compliance with the requirements of 49 CFR 26 and the policies of the Kentucky Transportation Cabinet pertaining to the DBE Program."

The certification statement is located in the electronic bid file. All contractors must certify their DBE participation on that page. DBEs utilized in achieving the DBE goal must be certified and prequalified for the work items at the time the bid is submitted.

DBE PARTICIPATION PLAN

Lowest responsive bidders must submit the *DBE Plan/ Subcontractor Request*, form TC 14-35 DBE, within 5 days of the letting. This is necessary before the Awards Committee will review and make a recommendation. **The project will not be considered for award prior to submission and approval of the apparent low bidder's DBE Plan/Subcontractor Request.**

The DBE Participation Plan shall include the following:

1. Name and address of DBE Subcontractor(s) and/or supplier(s) intended to be used in the proposed project;
2. Description of the work each is to perform including the work item, unit, quantity, unit price and total amount of the work to be performed by the individual DBE. The Proposal Line Number, Category Number, and the Project Line Number can be found in the "material listing" on the Construction Procurement website under the specific letting;
3. The dollar value of each proposed DBE subcontract and the percentage of total project contract value this represents. DBE participation may be counted as follows;
   a. If DBE suppliers and manufactures assume actual and contractual responsibility, the dollar value of materials to be furnished will be counted toward the goal as follows:
      - The entire expenditure paid to a DBE manufacturer;
      - 60 percent of expenditures to DBE suppliers that are not manufacturers provided the supplier is a regular dealer in the product involved. A regular dealer must be engaged in, as its principal business and in its own name, the sale of products to the public, maintain an inventory and own and operate distribution equipment; and
      - The amount of fees or commissions charged by the DBE firms for a bona fide service, such as professional, technical, consultant, or managerial services and assistance in the procurement of essential personnel, facilities, equipment, materials, supplies, delivery of materials and supplies or for furnishing bonds, or insurance, providing such fees or commissions are determined to be reasonable and customary.

b) The dollar value of services provided by DBEs such as quality control testing, equipment repair and maintenance, engineering, staking, etc.;
c) The dollar value of joint ventures. DBE credit for joint ventures will be limited to the dollar amount of the work actually performed by the DBE in the joint venture;

4. Written and signed documentation of the bidder's commitment to use a DBE contractor whose participation is being utilized to meet the DBE goal; and
5. Written and signed confirmation from the DBE that it is participating in the contract as provided in the prime contractor's commitment.

UPON AWARD AND BEFORE A WORK ORDER WILL BE ISSUED

Contractors must submit the signed subcontract between the contractor and the DBE contractor, along with the DBE's certificate of insurance. If the DBE is a supplier of materials for the project, a signed purchase order must be submitted to the Division of Construction Procurement.

Changes to DBE Participation Plans must be approved by the Cabinet. The Cabinet may consider extenuating circumstances including, but not limited to, changes in the nature or scope of the project, the inability or unwillingness of a DBE to perform the work in accordance with the bid, and/or other circumstances beyond the control of the prime contractor.

CONSIDERATION OF GOOD FAITH EFFORTS REQUESTS

If the DBE participation submitted in the bid by the apparent lowest responsive bidder does not meet or exceed the DBE contract goal, the apparent lowest responsive bidder must submit a Good Faith Effort Package to satisfy the Cabinet that sufficient good faith efforts were made to meet the contract goals prior to submission of the bid. Efforts to increase the goal after bid submission will not be considered in justifying the good faith effort, unless the contractor can show that the proposed DBE was solicited prior to the letting date. DBEs utilized in achieving the DBE goal must be certified and prequalified for the work items at the time the bid is submitted. One complete set (hard copy along with an electronic copy) of this information must be received in the Division of Contract Procurement no later than 12:00 noon of the tenth calendar day after receipt of notification that they are the apparent low bidder.

Where the information submitted includes repetitious solicitation letters it will be acceptable to submit a sample representative letter along with a distribution list of the firms solicited. Documentation of DBE quotations shall be a part of the good faith effort submittal as necessary to demonstrate compliance with the factors listed below which the Cabinet considers in judging good faith efforts. This documentation may include written subcontractors' quotations, telephone log notations of verbal quotations, or other types of quotation documentation.

The Good Faith Effort Package shall include, but may not be limited to information showing evidence of the following:

1. Whether the bidder attended any pre-bid meetings that were scheduled by the Cabinet to inform DBEs of subcontracting opportunities;
2. Whether the bidder provided solicitations through all reasonable and available means;
3. Whether the bidder provided written notice to all DBEs listed in the DBE directory at the time of the letting who are prequalified in the areas of work that the bidder will be subcontracting;
4. Whether the bidder followed up initial solicitations of interest by contacting DBEs to determine with certainly whether they were interested. If a reasonable amount of DBEs within the targeted districts do not provide an intent to quote or no DBEs are prequalified in the subcontracted areas, the bidder must notify the Disadvantaged Enterprise Business Liaison Officer (DEBLO) in the Office for Civil Rights and Small Business Development to give notification of the bidder's inability to get DBE quotes;
5. Whether the bidder selected portions of the work to be performed by DBEs in order to increase the likelihood of meeting the contract goals. This includes, where appropriate, breaking out contract work items into economically feasible units to facilitate DBE participation, even when the prime contractor might otherwise perform these work items with its own forces;
6. Whether the bidder provided interested DBEs with adequate and timely information about the plans, specifications, and requirements of the contract;
7. Whether the bidder negotiated in good faith with interested DBEs not rejecting them as unqualified without sound reasons based on a thorough investigation of their capabilities. Any rejection should be so noted in writing with a description as to why an agreement could not be reached;
8. Whether quotations were received from interested DBE firms but were rejected as unacceptable without sound reasons why the quotations were considered unacceptable. The fact that the DBE firm's quotation for the work is not the lowest quotation received will not in itself be considered as a sound reason for rejecting the quotation as unacceptable. The fact that the bidder has the ability and/or desire to perform the contract work with its own forces will not be considered a sound reason for rejecting a DBE quote. Nothing in this provision shall be construed to require the bidder to accept unreasonable quotes in order to satisfy DBE goals;
9. Whether the bidder specifically negotiated with subcontractors to assume part of the responsibility to meet the contract DBE goal when the work to be subcontracted includes potential DBE participation;
10. Whether the bidder made any efforts and/or offered assistance to interested DBEs in obtaining the necessary equipment, supplies, materials, insurance and/or bonding to satisfy the work requirements of the bid proposal; and
11. Any other evidence that the bidder submits which may show that the bidder has made reasonable good faith efforts to include DBE participation.

FAILURE TO MEET GOOD FAITH REQUIREMENT

Where the apparent lowest responsive bidder fails to submit sufficient participation by DBE firms to meet the contract goal and upon a determination by the Good Faith Committee based upon the information submitted that the apparent lowest responsive bidder failed to make sufficient reasonable efforts to meet the contract goal, the bidder will be offered the opportunity to meet in person for administrative reconsideration. The bidder will be notified of the Committee's decision within 24 hours of its decision. The bidder will have 24 hours to request reconsideration of the Committee's decision. The reconsideration meeting will be held within two days of the receipt of a request by the bidder for reconsideration.

The request for reconsideration will be heard by the Office of the Secretary. The bidder will have the opportunity to present written documentation or argument concerning the issue of whether it met the goal or made an adequate good faith effort. The bidder will receive a written decision on the reconsideration explaining the basis for the finding that the bidder did or did not meet the goal or made adequate Good Faith efforts to do so.

The result of the reconsideration process is not administratively appealable to the Cabinet or to the United States Department of Transportation.

The Cabinet reserves the right to award the contract to the next lowest responsive bidder or to rebid the contract in the event that the contract is not awarded to the low bidder as the result of a failure to meet the good faith requirement.

SANCTIONS FOR FAILURE TO MEET DBE REQUIREMENTS OF THE PROJECT

Failure by the prime contractor to fulfill the DBE requirements of a project under contract or to demonstrate good faith efforts to meet the goal constitutes a breach of contract. When this occurs, the Cabinet will hold the prime contractor accountable, as would be the case with all other contract provisions. Therefore, the contractor's failure to carry out the DBE contract requirements shall constitute a breach of contract and as such the Cabinet reserves the right to exercise all administrative remedies at its disposal including, but not limited to the following:

- Suspension of Prequalification;
- Disallow credit toward the DBE goal;
- Withholding progress payments;
- Withholding payment to the prime in an amount equal to the unmet portion of the contract goal; and/or
- Termination of the contract.

PROMPT PAYMENT

The prime contractor will be required to pay the DBE and Non-DBE Subcontractors within seven (7) working days after he or she has received payment from the Kentucky Transportation Cabinet for work performed or materials furnished.

CONTRACTOR REPORTING

All contractors must keep detailed records and provide reports to the Cabinet on their progress in meeting the DBE requirement on any highway contract. These records may include, but shall not be limited to payroll, lease agreements, cancelled payroll checks, executed subcontracting agreements, etc. Prime contractors will be required to complete and submit a ***signed and notarized*** Affidavit of Subcontractor Payment (TC 18-7) and copies of checks for any monies paid to each DBE subcontractor or supplier utilized to meet a DBE goal. These documents must be completed and signed within 7 days of being paid by the Cabinet.

Payment information that needs to be reported includes date the payment is sent to the DBE, check number, Contract ID, amount of payment and the check date. Before Final Payment is made on this contract, the Prime Contractor will certify that all payments were made to the DBE subcontractor and/or DBE suppliers.

********* IMPORTANT *********

Please mail the original, signed and completed TC (18-7) Affidavit of Subcontractor Payment form and all copies of checks for payments listed above to the following address:

Office for Civil Rights and Small Business Development
6th Floor West 200 Mero Street
Frankfort, KY 40622

The prime contractor should notify the KYTC Office for Civil Rights and Small Business Development seven (7) days prior to DBE contractors commencing work on the project. The contact in this office is Mr. Melvin Bynes. Mr. Bynes' current contact information is email address – melvin.bynes2@ky.gov and the telephone number is (502) 564-3601.

DEFAULT OR DECERTIFICATION OF THE DBE

If the DBE subcontractor or supplier is decertified or defaults in the performance of its work, and the overall goal cannot be credited for the uncompleted work, the prime contractor may utilize a substitute DBE or elect to fulfill the DBE goal with another DBE on a different work item. If after exerting good faith effort in accordance with the Cabinet's Good Faith Effort policies and procedures, the prime contractor is unable to replace the DBE, then the unmet portion of the goal may be waived at the discretion of the Cabinet.

PROHIBITION ON TELECOMMUNICATIONS EQUIPMENT OR SERVICES

In accordance with the FY 2019 National Defense Authorization Act (NDAA), 2 CFR 200.216, and 2 CFR 200.471, Federal agencies are prohibited, after August 13, 2020, from obligating or expending financial assistance to obtain certain telecommunications and video surveillance services and equipment from specific producers. As a result of these regulations, contractors and subcontractors are prohibited, on projects with federal funding participation, from providing telecommunication or video surveillance equipment, services, or systems produced by:

- Huawei Technologies Company or ZTE Corporation (or any subsidiary or affiliate of such entities)
- Hytera Communications Corporation, Hangzhou Hikvision Digital Technology Company, or Dahua Technology Company (or any subsidiary or affiliate of such entities)

LEGAL REQUIREMENTS AND RESPONSIBILITY TO THE PUBLIC – CARGO PREFERENCE ACT (CPA).

(REV 12-17-15) (1-16)

SECTION 7 is expanded by the following new Article:

102.10 **Cargo Preference Act – Use of United States-flag vessels.**

Pursuant to Title 46CFR Part 381, the Contractor agrees

- To utilize privately owned United States-flag commercial vessels to ship at least 50 percent of the gross tonnage (computed separately for dry bulk carriers, dry cargo liners, and tankers) involved, whenever shipping any equipment, material, or commodities pursuant to this contract, to the extent such vessels are available at fair and reasonable rates for United States-flag commercial vessels.
- To furnish within 20 days following the date of loading for shipments originating within the United States or within 30 working days following the date of loading for shipments originating outside the United States, a legible copy of a rated, 'on-board' commercial ocean bill-of-lading in English for each shipment of cargo described in paragraph 1 of this section to both the Contracting Officer (through the prime contractor in the case of subcontractor bills-of-lading) and to the Division of National Cargo, Office of Market Development, Maritime Administration, Washington, DC 20590.
- To insert the substance of the provisions of this clause in all subcontracts issued pursuant to this contract.

ASPHALT MIXTURE

Unless otherwise noted, the Department estimates the rate of application for all asphalt mixtures to be 110 lbs/sy per inch of depth.

DGA BASE

Unless otherwise noted, the Department estimates the rate of application for DGA Base to be 115 lbs/sy per inch of depth.

DGA BASE FOR SHOULDERS

Unless otherwise noted, the Department estimates the rate of application for DGA Base for Shoulders to be 115 lbs/sy per inch of depth. The Department will not measure necessary grading and/or shaping of existing shoulders prior to placing of DGA Base, but shall be incidental to the Contract unit price per ton for DGA Base.

Accept payment at the Contract unit price per ton as full compensation for all labor, materials, equipment, and incidentals for grading and/or shaping of existing shoulders and furnishing, placing, and compacting the DGA Base.

INCIDENTAL SURFACING

The Department has included in the quantities of asphalt mixtures established in the proposal estimated quantities required for resurfacing or surfacing mailbox turnouts, farm field entrances, residential and commercial entrances, curve widening, ramp gores and tapers, and road and street approaches, as applicable. Pave these areas to the limits as shown on Standard Drawing RPM-110-06 or as directed by the Engineer. In the event signal detectors are present in the intersecting streets or roads, pave the crossroads to the right of way limit or back of the signal detector, whichever is the farthest back of the mainline. Surface or resurface these areas as directed by the Engineer. The Department will not measure placing and compacting for separate payment but shall be incidental to the Contract unit price for the asphalt mixtures.

OPTION B

Be advised that the Department will control and accept compaction of asphalt mixtures furnished on this project under OPTION B in accordance with Sections 402 and 403.

SPECIAL NOTE FOR TRAFFIC CONTROL ON BRIDGE REPAIR CONTRACTS

I. TRAFFIC CONTROL GENERAL

Except as provided herein, traffic shall be maintained in accordance with the current standard specifications, section 112. The contractor will be responsible for developing and implementing the maintenance of traffic details with guidance through standard drawings and the MUTCD current editions. The developed traffic control plan must be approved by the Engineer prior to implementation. The contractor is expected to provide at a minimum the items listed in this note, however this note does not relieve the contractor of other items that may be necessary to comply with current standards. Except for the roadway and traffic control bid items listed, all items of work necessary to maintain and control traffic will be paid at the lump sum bid price to "Maintain and Control Traffic".

Contrary to section 106.01, traffic control devices used on this project may be new or used in new condition, at the beginning of the work and maintained in like new condition until completion of the work.

The contractor must notify the engineer and public information officer at least 14 calendar days prior to the beginning work. Please see the Special Note for Liquidated Damages for additional information.

II. TRAFFIC COORDINATOR

Furnish a traffic coordinator as per section 112. The traffic coordinator shall inspect the project maintenance of traffic, at least three times daily, or as directed by the engineer, during the contractor's operations and at any time a bi-directional lane closure or road closure is in place. The personnel shall have access on the project to a radio or telephone to be used in case of emergencies or accidents. The traffic coordinator shall report all incidents throughout the work zone to the engineer on the project. The contractor shall furnish the name and telephone number where the traffic coordinator can be always contacted.

III. SIGNS

The contractor is responsible for all signage during construction. The contractor shall adhere to the standard drawings and manual on uniform traffic control devices (MUTCD) for guidance. If, at any time, the engineer requests a change in the maintenance of traffic signage, the contractor shall implement the change within 8 hours. Failure to implement these changes within the required eight hours will result in liquidated damages of $5,000 per day.

The contractor shall provide all detour signing needed for the bridge closure, if allowed in the contract documents. All signing required will be incidental to the lump sum bid item "Maintain and Control Traffic".

The department will not measure installation, maintenance, or removal for payment of any detour signage or standard construction signage, and will consider these incidental to "Maintain and Control Traffic"

Closure signs, detour signs, and bi-directional lane closure signs should be placed no sooner than two weeks prior to the closing of the bridge (when applicable) or placing lane closures. Wayfinding detour signs should be placed a maximum of 2 miles apart unless specified by the engineer. Signs shall be covered or removed within 24 hours of opening the bridge to traffic.

Road closed signs (when applicable) should be double signed and placed a minimum of 1500', 1000', and 500' in advance of the closure, in addition to signage required by the MUTCD and standard drawings.

IV. TEMPORARY PAVEMENT STRIPING

For projects where road closures are allowed in the contract documents, it is not anticipated that temporary pavement striping will be needed since the bridge will be closed. However, if the contractor's means and methods allow for need for temporary striping, conflicting pavement marking will be covered with 6" black removable tape. However, for bi-directional lane closures or if the plans call for a diversion, temporary striping will be required per the plans and MUTCD. Contrary to the standard specifications, no direct payment will be made for any temporary striping, pavement striping removal, or any other temporary striping item. If temporary striping is used, the contractor shall replace any temporary striping that becomes damaged or fails to adhere to the pavement before dark on the day of the notification. Liquidated damages shall be assessed to the contractor at a rate of $500 per day for failing to replace temporary striping within this time limit.

V. PROJECT PHASING & CONSTRUCTION PROCEDURES

Project phasing shall be as directed by the plans, special notes, and the approved Traffic Control Plan prepared by the contractor. Maintain traffic over the bridge as long as possible. Once work on the structure begins that impacts traffic, ensure work progresses to minimize the effected time to the public. All materials that must be made specific for the project should be ordered and made prior to closure of the bridge or implementation of bi-directional lane closures so that delivery does not delay progress of the work, unless approved by the Engineer. If the bridge is reopened prior to safety devices being in place, an approved protective barrier wall shall be placed in accordance with the standard drawings. Contrary to standard specifications, no direct payment would be made for the barrier wall and will be considered incidental to "Maintain and Control Traffic".

For projects which require an on-site diversion to be constructed to maintain traffic, the traffic control plan and project schedule prepared by the contractor shall include provisions such that traffic is not switched to the diversion until all materials that must be made specific for the project are ordered and made so that use of the diversion is minimized, unless approved by the Engineer.

VI. PAVEMENT DROP-OFF

Less than two inches - no protection required. Warning signs should be placed in advance and throughout the drop-off area.
Two to four inches - plastic drums, vertical panels or barricades every 100 feet on tangent sections for speeds of 50 mph or greater. Cones may be used in place of plastic drums, panels, and barricades during daylight hours. For tangent sections with speeds less than 50 mph and curves devices should be placed every 50 feet. Spacing of devices on tapered sections should be in accordance with the manual on uniform traffic control devices, current edition.

Greater than four inches - positive separation or wedge with 3:1 or flatter slope needed. If there is five feet or more distance between the edge of the pavement and the drop-off, then drums, panel, or barricades may be used. If the drop-off is greater than 12 inches, positive separation is strongly encouraged. If concrete barriers are used, special reflective devices or steady burn lights should be used for overnight installations.

For temporary conditions, drop-offs greater than four inches may be protected with plastic drums, vertical panels or barricades for short distances during daylight hours while work is being done in the drop-off area.

VII. VARIABLE MESSAGE SIGNS AND TEMPORARY TRAFFIC SIGNALS

At the direction of the Engineer, the contractor is expected to provide up to four (4) message boards for use at locations determined by the Engineer. These message boards are expected to be in place one week prior to the closure of the roadway and remain in place for the duration of the closure. The message boards will be paid for as per the standard specifications.

For projects that involve the use of lane closures, all lane closures shall be bi-directional. The contractor shall provide temporary traffic signals and all labor, materials, and incidentals needed to maintain bi-directional traffic for the project. For short term bi-directional lane closures, the use of flaggers in lieu of temporary traffic signals may be acceptable if approved by the Engineer.

VIII. BARRICADES

For projects which allow full closure, ensure a minimum of (4) type III barricades are used at each end of the bridge for a total of (8) type III barricades. Contrary to the standard specifications, no direct payment will be made for barricades, but they will be included in the lump sum price for “Maintain and Control Traffic”.

VIII. DETOUR AND ON-SITE DIVERSIONS

For projects which allow a full closure of the bridge, or if necessary to detour trucks, the traffic control plan proposed by the contractor shall include a signed detour route for the road closure. The traffic control plan along with the proposed detour plan will be delivered to the engineer 7

days prior to the pre-construction meeting. The proposed detour route shall meet the following requirements:

1) Detour routes must remain at minimum on the same classification of roadway (i.e. AA, AAA, state, county, etc.) Unless written approval is obtained through the owner of the facility.
2) The contractor must coordinate with other projects along the detour route to avoid ongoing construction projects along those routes.
3) It may be determined that two detour routes would be needed if the first selected route cannot accommodate truck traffic. If this occurs, the contractor is expected to sign both detours per the standard drawings and MUTCD. Additional clarification signage between the detours may be needed at points where they diverge.
4) For projects that involve the use of bi-directional lane closures and the temporary lane width per the plans or as proposed by the contractor is less than 10 feet, the contractor shall be required to provide a signed detour for oversized vehicles.

The traffic control plan must be submitted and approved to allow for coordination of the public information officer with the closure notification. The public must be notified of the proposed detour route when they are notified of the closure, 2 weeks before closure. All time and expenses necessary for the development of the detour plan(s) will be incidental to the lump sum bid item “Maintain and Control Traffic”.

For projects with an on-site diversion included in the construction, the preparation of traffic control plans for a detour and implementation of a detour will not be required, unless specified in the plans.

IX. PAYMENT

Unless listed as a bid item in the contract documents, payment will only be made for the following items:

1. Portable Changeable Message Boards - Each
2. Maintain and Control Traffic - Lump Sum

All other items needed to maintain traffic in accordance with these contract documents and the approved traffic control plan shall be considered incidental to Maintain and Control Traffic. These items include but are not limited to traffic signals, signs, barrier wall, crash cushions, temporary guardrail, temporary pavement striping, cones, barrels, flaggers, etc.

SPECIAL NOTE FOR CONCRETE COATING

I. DESCRIPTION

Perform all work in accordance with the Kentucky Transportation Cabinet, Department of Highways current Standard Specifications for Road and Bridge Construction and applicable Supplemental Specifications, the Standard Drawings, this Note, and the Contract Documents. Section references are to the Standard Specifications.

This work consists of the following:

1. Furnish all labor, materials, tools, equipment, and incidental items necessary to complete the work.
2. Provide safe access to the bridge, in accordance with Section 107.01.01, for the Engineer to sound possible repair areas and for workers to complete the construction.
3. Repair cracks as applicable in accordance with the Special Note for Epoxy Injection Crack Repair.
4. Repair delaminated or spalled areas as applicable in accordance with the Special Note for Concrete Patching.
5. Apply Ordinary Surface Finish
6. Prepare the surfaces to receive coating.
7. Apply concrete coating.
8. Any other work as specified as part of this contract.

II. MATERIALS

One of the following coating systems shall be used:

Manufacturer	***Prime Coat***	***Finish Coat***
Sherwin Williams	Macropoxy 646	Acrolon 218 HS
PPG	Amerlock 2	Devoe Devflex HP
Carboline	Carboguard 890	Carbothane 133 HB
Tnemec	Elastogrip 151	Envirocrete 156

The finish product shall be opaque and satin or semi-gloss. The contractor must apply sufficient coats as required to achieve this goal. The finish coat shall be gray and will meet the following values:

	Fed. Standard 595B No.	L*	a*	b*
Gray	X6492	74.94	-1.54	3.92

Furnish to the Engineer copies of the manufacturer's technical data sheets, installation guidelines, material safety data sheets, and other pertinent data at least two (2) days prior to beginning the work.

III. CONSTRUCTION

A. Perform Concrete Repairs. Repair concrete surface in accordance with the Special Note for Epoxy Injection Crack Repair and/or the Special Note for Concrete Patching Repair if included in the contract documents.

B. Apply Ordinary Surface Finish. In addition to new concrete, areas receiving epoxy injection, concrete patching, and other surface imperfections, including areas of minor cracking, should receive Ordinary Surface Finish in accordance with Section 601.03.18 of the Standard Specifications. Use mortar of the same cement and fine aggregate as the concrete patching, or as directed by the Engineer. Payment will be incidental to Concrete Sealing.

C. Areas to Receive Concrete Coating:

1. Substructure Units under open, closed, and/or sealed transverse deck joints: Every exposed surface above a point 6" below ground or fill line of abutments, wing walls, end bent and pier caps, pedestals, back walls, columns, and exposed footings.
2. Other areas of the bridge as specified in the drawings.

D. Prepare Concrete Surfaces for Repair. All areas specified shall be pressure washed. Equip the pressure washers with calibrated gages and pressure regulators to ascertain and regulate water pressure. All equipment for pressure washing shall be operated at a minimum pressure of up 3,500 to 4,500 psi with 0 degree spinner tip and/or fan tips as determined by the engineer at the working location with a minimum flow rate of 3.5 gal/minute provided that these pressures do not damage any components of the structure. Pressure and flow rates shall be reduced to a level satisfactory to the Engineer should any damage occur due to power washing procedures. The washing wand must be approximately perpendicular to the washed surface and within a maximum of 12 inches of the surface. Wand extensions greater than 36 inches will be subject to Division of Construction approval. Pressure washing of any bridge element will proceed from top of wash area to bottom of wash area. Perform all pressure washing at temperatures above 40 degrees Fahrenheit.

E. Apply Concrete Coating. All areas specified shall have concrete coating applied to as specified after debris removal and power washing. New concrete shall be allowed to properly cure in accordance with the manufacturer's recommendations prior to application. Use compressed air to remove any loose debris from the surfaces that are to be coated after power washing. All coatings shall be applied within manufacturers recommended dry film thickness range. Comply with KYTC "Standard Specifications for Road and Bridge Construction" Section 614.03.02 and coatings supplier recommended conditions for application. Allow the surfaces to be coated to dry a minimum of 24 hours before any coating is applied. The coating must be applied with 72 hours of pressure washing. The coating must be applied to a clean and dry surface. All coating application shall be executed using brushes, rollers, etc. No spray application will be permitted.

The Department requires acceptance testing of samples obtained on a per-lot basis per-shipment. The Division of Materials shall perform acceptance testing. Test samples shall be taken at the Contractor's paint storage site. Department personnel shall perform sampling. Allow (10) working days for testing and approval of the sampled paint. It is the Contractor's responsibility to maintain an adequate inventory of approved paint. The Department shall assume no responsibility for lost work due to rejection of paint or approved paint subsequently found to be defective during the application process. Perform all concrete coating application at temperatures above 40 degrees Fahrenheit or in accordance with manufactures specifications.

IV. MEASUREMENT

The Department will measure the quantity as lump sum. The Department will not measure preparation of the site for the Engineer's access or removal and reapplication of coatings that do not satisfy the Engineer's approval for payment and will consider them incidental to "Concrete Coating".

V. PAYMENT.

The Department will make payment for the completed and accepted quantities of concrete coating under the following:

Code	***Pay Item***	***Pay Unit***
24982EC	Concrete Coating	Lump Sum

The plans may show an estimate quantity in square feet. The Department will consider payment as full compensation for all work required as described in this note.

SPECIAL NOTE FOR EPOXY INJECTION CRACK REPAIR

I. DESCRIPTION

Perform all work in accordance with the Kentucky Transportation Cabinet, Department of Highways current Standard Specifications for Road and Bridge Construction and applicable Supplemental Specifications, the Standard Drawings, this Note, and the Contract Documents. Section references are to the Standard Specifications.

This work consists of the following:

1. Furnish all labor, materials, tools, equipment, and incidental items necessary to complete the work.
2. Provide safe access to the bridge, in accordance with Section 107.01.01, for the Engineer to sound possible repair areas and for workers to complete the construction.
3. Drill injection port holes.
4. Epoxy injection.
5. Finish the repaired surface.
6. Obtain core samples for the Engineer's visual inspection.
7. Repair core holes.
8. Any other work specified as part of this contract.

II. MATERIALS, EQUIPMENT, PERSONNEL

A. Type IV Epoxy Resin. Use either Category I or II suitable for epoxy injection applications. See Section 826. All cracks shall be injected using an adhesive suitable for the field conditions (crack width, temperature, humidity, etc.) recommended by the adhesive manufacture as shown on material data sheets.

B. Equipment. Equipment used to inject the epoxy shall meet the recommendations of the epoxy injection material manufacturer.

C. Personnel. Arrange to have a manufacturer's representative at the job site to familiarize him and the Engineer with the epoxy materials, application procedures and recommended pressure practice. The representative shall direct at least one complete crack or area injection and be assured prior to his departure from the project that the personnel are adequately informed to satisfactorily perform the remaining repairs.

Furnish the Engineer a copy of the manufacturer's comprehensive preparation, mixing and application instructions which have been developed especially for use with the proposed epoxy injection system. Ensure that any significant changes to these instructions which are recommended by the representative for an unanticipated situation have been approved by the Engineer prior to the adoption of such changes.

III. CONSTRUCTION

A. Investigate Remedial Action. If the crack is larger than or equal to 0.025" wide or has rust stains, repair the crack by epoxy injection. If the crack is less than 0.025" wide, the crack shall be sealed in accordance with the Special Note for Concrete Sealing. Areas of map cracking are to be sounded by the Engineer with a hammer. If the areas are delaminated or spalled, they shall be repaired in accordance with the Special Note for Concrete Patching. Otherwise, the cracks shall be repaired in accordance with this Note.

B. Drill Injection Port Holes. Install injection ports or tees in cracks to be injected. Space injection ports or tees at 6 to 12 inches vertically and 6 to 18 inches horizontally but in no case closer together than the thickness of the concrete member if full depth penetration is desired unless otherwise specified or directed. Set ports or tees in dust free holes made either with vacuum drills or chipping hammers.

C. Epoxy Injection. Seal all surface cracks in the area to be repaired, after injection ports or tees have been inserted into the holes, with paste epoxy between ports to insure retention of the pressure injection within the confines of the member. An alternate procedure of sealing the cracks before the injection holes have been made can be submitted to the Engineer for approval. Limit the application of paste epoxy to clean and dry surfaces. Limit substrate temperatures to not less than 45°F during epoxy applications.

Begin the epoxy injection at the bottom of the fractured area and progress upward using a port or tee filling sequence that will ensure the filling of the lowermost injection ports or tees first.

Establish injection procedures and the depths and spacings of holes at injection ports or tees. Use epoxy with flow characteristics and injection pressure that ensure no further damage will be done to the member being repaired. Ensure that the epoxy will first fill the innermost portion of the cracked concrete and that the potential for creating voids within the crack or epoxy will be minimized.

D. Finish the Repaired Surface. Remove the injection ports or tees flush with the concrete surface after the fractured area has been filled and the epoxy has partially cured (24 hours at ambient temperature not less than 60°F, otherwise not less than 48 hours). Roughen the surfaces of the repaired areas to achieve uniform surface texture. Remove any injection epoxy runs or spills from concrete surfaces.

E. Obtain Core Samples. Obtain two 4-inch diameter core samples in the first 25 linear feet of crack repaired and one core for each 25 linear feet thereafter. Take the core samples from locations determined by the Engineer and for the full crack depth. Cores will be visibly examined by the Engineer to determine the extent of epoxy penetration.

F. Repair Core Holes. Repair core holes in the concrete with non-shrink grout in accordance with Section 601.03.03(B) within 24 hours.

IV. MEASUREMENT

The Department will measure the quantity in linear feet along the centerline of the cracks. The Department will not measure preparation of the site for the Engineer's access or removal and reapplication of repairs that do not satisfy the Engineer's approval for payment and will consider them incidental to "Epoxy Injection Crack Repair".

V. PAYMENT.

The Department will make payment for the completed and accepted quantities of concrete cracks repaired with epoxy injection under the following:

Code	***Pay Item***	***Pay Unit***
23744EC	Epoxy Injection Crack Repair	Linear Feet

The Department will consider payment as full compensation for all work required.

SPECIAL NOTE FOR STRUCTURES WITH OVER THE SIDE DRAINAGE AND MGS RAILING

1.0 DESCRIPTION. Perform all work in accordance with the Kentucky Transportation Cabinet, Department of Highway's current Standard Specifications for Road and Bridge Construction and applicable Supplemental Specifications, the Standard Drawings, this Note, and the attached detail drawings. Section references are to the Standard Specifications.

This note applies to structures with over the side drainage.

This work consists of: (1) Furnish all labor, materials, tools, and equipment; (2) Install the drip strip; (3) Maintain and control traffic as applicable; and (4) Any other work specified as part of this contract.

2.0 MATERIALS.

2.1 Drip Strip. Drip strip shall be hot dipped galvanized steel with a minimum of 22 gage.

3.0 CONSTRUCTION. The Contractor shall bear full responsibility and expense for any and all damage to the structure, should such damage result from the Contractor's actions.

3.1 Installation of Drip Strip. Install drip strip between railing mounting brackets, as detailed, along the full length of each side of the bridge. If splices are required in the lower drip strip, tightly butt the individual pieces together, do not lap.

For concrete decks/slabs: Bend down strip at 90° against the inside face of the forms before concrete is placed. After the forms are removed, bend the drip strip into the final position of 45° as shown in the attached details. Use care when stripping formwork so as not to damage or wrinkle the drip strip. To further ensure that wrinkling of the strips does not occur, use an adequate length backup bar during the bending out operation.

For asphalt overlays: Prior to placing the asphalt overlay, install the bent drip strips along the edge of the prestressed box beam as shown. Fasten the drip strips with (1¼" length, 3/32" shank diameter) button head spikes with deformed shanks or expansion anchors at 1'-6" c/c max. All installation devices shall be galvanized or stainless steel. Other similar devices shall not be used unless approved by the Engineer.

4.0 PAYMENT.

4.1 Drip Strip. Cost of all work, including all materials, labor, equipment, tools, and incidentals necessary to complete the work as specified by this note, shall be considered incidental to the project.

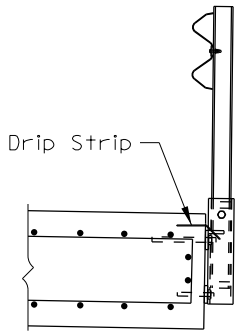

CONCRETE SLAB WITH MGS RAILING

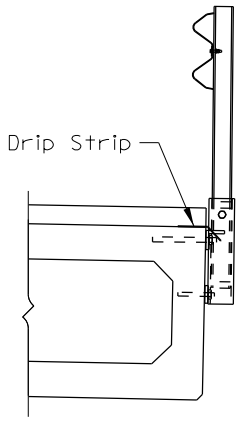

ASPHALT OVERLAY WITH MGS RAILING

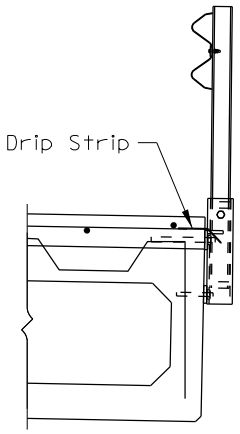

COMPOSITE BOX BEAM WITH MGS RAILING

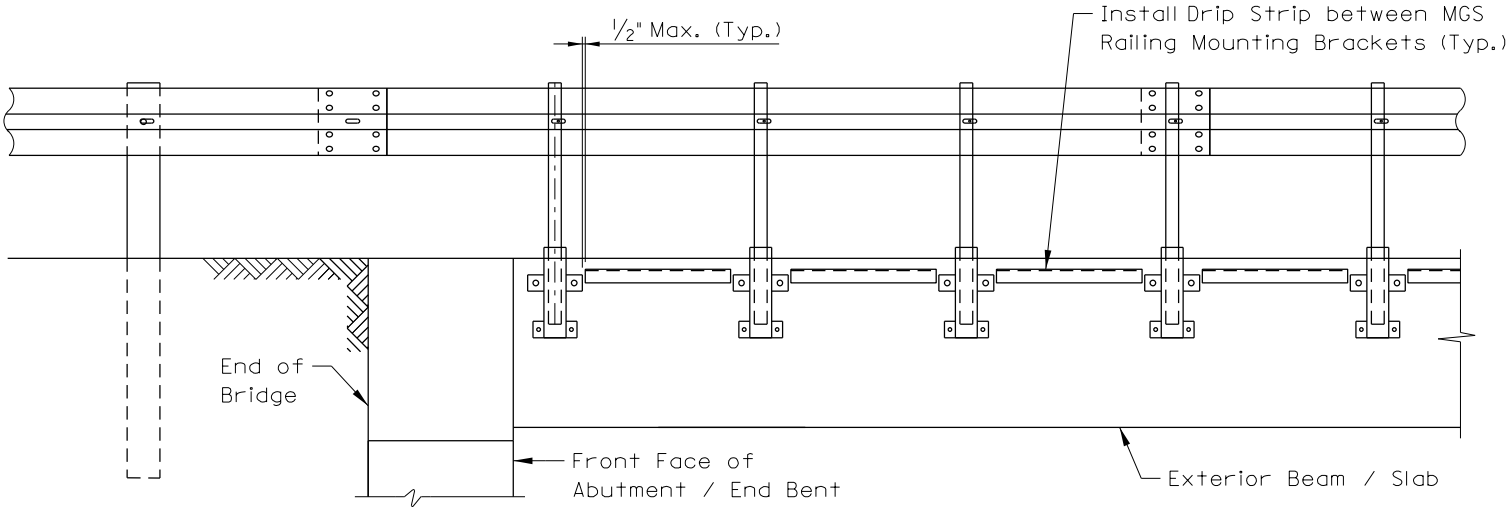

BRIDGE ELEVATION

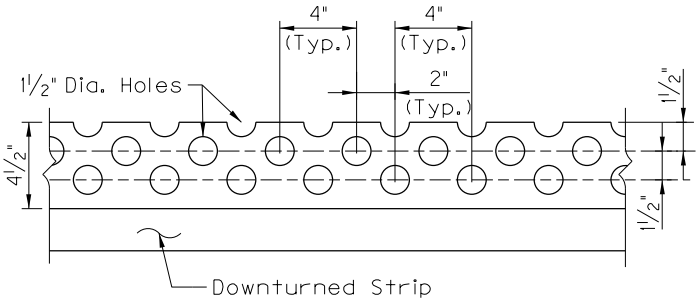

DRIP STRIP PLAN

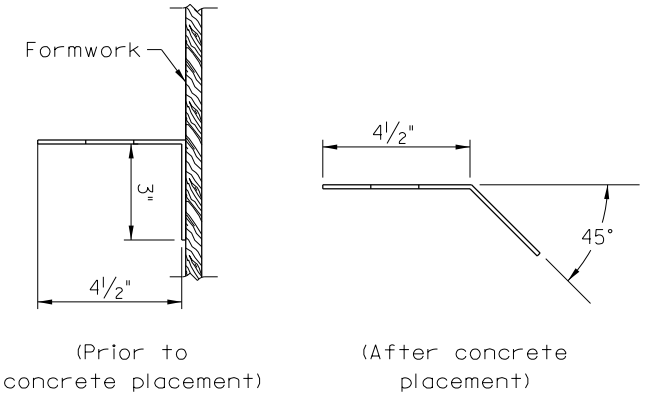

DRIP STRIP ELEVATION
(For Concrete Decks)

SPECIAL NOTE FOR FOUNDATION PREPARATION

04-10009.00 Green County 044B00013N

Foundation Preparation. For projects involving the removal and replacement of the asphalt and backfill behind the existing abutments and new abutments or end bents, the required excavation, geotextile fabric Class 1, 4" perforated pipe, and new Structural Granular Backfill as shown in Figure 1 as well as any excavation and grading needed to shape the bridge approaches to match the existing roadway template, will be paid for by the bid item for Foundation Preparation. See Special Provision 69 and the Standard Drawings regarding additional construction details as required.

Backfill material used behind newly constructed abutments on county routes may be constructed with Type III soil backfill. All existing abutments, abutments on state routes, and newly constructed or existing bents must be backfilled with material meeting Structural Granular Backfill specifications.

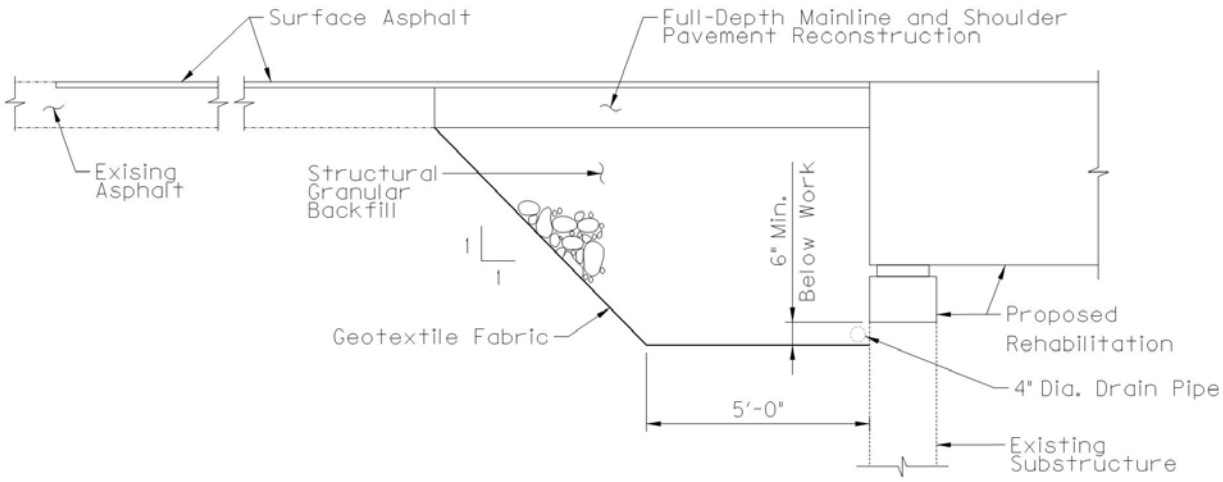

Figure 1: Detail showing proposed work for deck and superstructure replacements

I. MEASUREMENT

A. Foundation Preparation: See Section 603.

II. PAYMENT

A. Foundation Preparation: See Section 603. Payment for Structural Granular Backfill or Type III soil backfill to be incidental to Foundation Preparation.

SPECIAL NOTE FOR CONCRETE SEALING

These Notes or designated portions thereof, apply where so indicated on the plans, proposals or bidding instruction.

I. DESCRIPTION. Perform all work in accordance with the Department's current Standard Specifications, and applicable Supplemental Specifications, the attached sketches, and these Notes. Section references are to the Standard Specifications.

This work consists of:

1. Furnish all labor, materials, tools, equipment, and incidental items necessary to complete the work.
2. Provide safe access to the bridge, in accordance with Section 107.01.01, for the Engineer to sound possible repair areas and for workers to complete the construction.
3. Repair cracks as applicable in accordance with the Special Note for Epoxy Injection Crack Repair.
4. Repair delaminated or spalled areas as applicable in accordance with the Special Note for Concrete Patching.
5. Apply Ordinary Surface Finish
6. Prepare the surfaces to receive sealing.
7. Apply concrete sealing.
8. Any other work as specified as part of this contract.

II. MATERIALS.

A. Sealer. Use one of the following:

Product	**Supplier**
Protectosil BHN	Evonik Industries
Protectosil 300S	Evonik Industries
TK-590-40 Tri-Silane 40%	TK Products
SW-244-100	Chemical Products Industries, Inc.
TK-590-1 MS Tri-Silane	TK Products
MasterProtect H1000	BASF
Aquanil Plus 40	ChemMasters
SIL-ACT ATS-100	Advanced Chemical Technologies
Certivex Penseal BTS 100%	Vexcon
Pentreat 244-40	W.R. Meadows
Aquanil Plus 40A	ChemMasters

B. **Coverage Rate:** Follow all manufacturers recommendations for coverage rates except the application rate must not exceed the square footage coverage rate per gallon of sealer as given in the chart below. If the manufacturer recommends a coverage rate greater than given in the table below, apply sealer at the rate given in the table below for the chosen sealers silane percentage.

% Silane	Coverage rate (ft^2/gallon)
100	300
40	120
20	60

III. CONSTRUCTION.

A. **Perform Concrete Repairs.** Repair concrete surface in accordance with the Special Note for Epoxy Injection Crack Repair and/or the Special Note for Concrete Patching Repair if included in the contract documents.

B. **Curing Compound.** Contrary to Section 609.03.12 of the specifications, curing compound is not to be used on the deck due to potentially causing issues with the concrete sealer. During the deck pour, finishing, and tining operations the Class AA concrete shall be kept continuously moist with the use of a mister until burlap or curing blankets are applied to the surface. At no point should water be pooling or running off the surface or the surface of the concrete be allowed to become dry. After the burlap or curing blankets are installed, cure in accordance with the specifications. Include all costs in the unit price bid for Class AA concrete. Failure to properly cure the concrete in accordance with this note and the specifications may result in weakened or cracked concrete. If the concrete is weakened or cracked due to improper curing, the contractor will be responsible for providing alternates to fix the issues to the Engineer for review and the contractor will be solely responsible for all costs to do so, up to complete replacement. Do not begin any construction on fixing any issues without approval of the Engineer.

C. **Apply Ordinary Surface Finish.** In addition to new concrete, areas receiving epoxy injection, concrete patching, and other surface imperfections, including areas of minor cracking, should receive Ordinary Surface Finish in accordance with Section 601.03.18 of the Standard Specifications. Existing structural items not newly placed, patched, or repaired may be exempt from Ordinary Surface Finish. Use mortar of the same cement and fine aggregate as the concrete patching, or as directed by the Engineer. Payment will be incidental to Concrete Sealing. Finish surface of bridge decks in accordance with Section 609 of the Standard Specifications.

D. **Areas to Receive Concrete Sealing:**

1. Every exposed surface above a point 6” below ground or fill line of abutments, wing walls, end bent and pier caps, pedestals, back walls, columns, and exposed footings.

2. All exposed surfaces of concrete deck, barrier walls, parapets, curbs, and plinths.
3. Prestressed Concrete I-Girders, Concrete Beams, and Spread Prestressed Concrete Box Beams: The underneath surfaces of slab overhangs outside of exterior concrete girders and to the exterior side and bottom of exterior concrete girders and beams.
4. Adjacent Prestressed Concrete Composite Box Beams: Full length of the exterior face of all exterior beams from the top of the box beam to 1'-0" underneath the beams.
5. Prestressed Non-Composite Box Beams: All faces of all beams, excluding surfaces to be covered with a waterproofing membrane. Take care to ensure that the grout pockets are not sealed.
6. If the contract documents include the Special Note for Concrete Coating, do not apply concrete sealer to the areas where Concrete Coating is specified.

E. **Cleaning the Concrete Surfaces to be sealed.** Dry clean the concrete to remove all loose debris. Remove all visible hydrocarbons from the surface with detergent approved by the manufacturer of the deck sealant. Pressure wash all surfaces to be sealed at 2000 to 3000 psi. Install pressure gauges at each wand to verify pressure. Use 30° fan tip or as recommended by the manufacturer of the sealant. Hold pressure washing wand a minimum of 45° from the surfaces with a maximum stand-off distance of 12 inches.

F. **Sealing the Concrete.** Allow new concrete to cure a minimum 28 days prior to application of sealer. Monitor weather conditions prior to sealer application. Refer to manufacturer's recommendations for proper ambient conditions. Do not apply sealer if precipitation is anticipated within the time stated by the manufacturer. Allow the concrete to dry 24 hours (after washing or rain event) before sealer application. The bridge deck can be reopened to traffic while drying. Sealer must be applied within 48 hours of washing or the concrete must be rewashed. Divide the concrete into predefined areas of specific square footage to aid in determining usage. Comply with manufacturer's usage recommendation. Using a low-pressure pump, apply sealer and spread evenly with broom or squeegee; do not allow pooling to remain. When each predefined area is complete, measure the amount of sealer used to verify proper usage. After sealing, follow manufacturer's recommended cure time before opening to traffic. On vertical surfaces, apply the sealer in a flooding application from the bottom up, so the material runs down 6 to 8 inches below the spray pattern.

G. **Inspection:** Monitor all aspects of the project to assure compliance to this specification. Observe and document general conditions during the entirety of the project. Verify that each phase of work has been satisfactorily completed prior to beginning the next phase. Phases are described as follows:

1. Dry cleaning to remove loose debris, verify and document:
   a. All debris has been removed and disposed of properly.
2. Removal of hydrocarbons, verify and document:

a. The manufacturer's recommended detergent is used for removal.
b. Hydrocarbons have been satisfactorily removed.

3. Pressure washing, verify and document:
   a. Washing pressure at the wand.
   b. Tip size used.
   c. Wash angle and stand-off distance.
   d. The concrete is satisfactorily cleaned.
4. Sealer application, verify and document:
   a. Proper cure time for new concrete.
   b. Concrete surface is dry.
   c. Document time since washed.
   d. Was the bridge deck opened to traffic after washing?
   e. Document ambient temperature, surface temperature, relative humidity, and dew point.
   f. Application and distribution method.
   g. Coverage to be complete and even.
   h. Material is not allowed to remain pooled.
   i. Monitor material usage.
   j. No traffic on the bridge decks until proper cure time is allowed.

IV. MEASUREMENT

A. Concrete Sealing. The Department will measure the quantity per square feet of each area sealed.

V. PAYMENT

A. Concrete Sealing. Payment at the contract unit price per square feet is full compensation for the following: (1) Furnish all labor, materials, tools, and equipment; (2) Cleaning; (3) Sealing; (4) Maintain & control traffic; and, (5) Any other work specified as part of this contract.

SPECIAL NOTE

For Additional Environmental Commitments

IN ADDITION TO OTHER ENVIRONMENTAL COMMITMENTS LISTED IN THIS CONTRACT, THE FOLLOWING COMMITMENTS ALSO APPLY, AS THIS IS A FEDERALLY FUNDED UNDERTAKING AS DEFINED IN SECTION 106 OF THE NATIONAL HISTORIC PRESERVATION ACT, 36 CFR 800.16(Z):

1) The KYTC has completed a Phase 1 archaeological survey for a site-specific area surrounding the bridge. The cleared area is shown as "Archaeologically Cleared Area" or "Environmentally Cleared Area" on the concept plans and/or the map attached to this note or included elsewhere in the proposal. Likewise, any areas that must be avoided have been labeled "Do Not Disturb."

   If the Contractor deems it necessary to use additional areas outside the Archaeologically/ Environmentally Cleared Area for any purposes—e.g., laydown yards, vehicle parking, parking cranes, delivering beams, borrow areas, waste areas, etc.—the Contractor must first get a written agreement with the landowner (assuming the additional area is outside the right-of-way). Then the Contractor shall seek approval of the use of the site—whether within or outside the right-of-way—by both the KYTC Section Supervisor and the GEC Environmental Lead at tspringer@qk4.com. The Contractor shall provide a map of the area(s) to be used, including access points, and property-owner agreements. The Environmental Team will complete initial field investigations for archaeological, historical, ecological, and other environmental clearances. If any potentially significant site or resources are found, the KYTC has the right to deny the use of the proposed site. The maps and property owner agreements are to be submitted at least ten (10) business days prior to the Preconstruction Conference, or sixty (60) days prior to the Contractors access to the site, for coordination and review by the KYTC District and Bridging Kentucky Team.

   A Liquidated Damage of $50,000 will be assessed whenever the Contractor has used any restricted areas. The fee will be assessed on a *per bridge* basis, whether the contract involves bridge bundles or a single bridge. In addition, all fines, fees, penalties, remediation costs, and other damages related to breaches of Threatened and Endangered Species Act Section 7, National Historic Preservation Act Section 106, Clean Water Act Sections 401 and 404, Kentucky General Permit for Stormwater Discharges KYR10, Environmental Protection Agency requirements, State Historic Preservation Office requirements, and other related permitting agencies will be paid by the Contractor, including all associated costs and burdens placed upon the Kentucky Transportation Cabinet.

2) If human remains are encountered during project activities, all work should be immediately stopped in the area. The area should be cordoned off, and, in accordance with KRS

72.020, the county coroner and local law enforcement must be contacted immediately. Upon confirmation that the human remains are not of forensic interest, the unanticipated discovery must be reported to Nichole Konkol at the Kentucky Heritage Council at (502) 892-3614, George Crothers at the Office of State Archaeology at (859) 257-1944, and KYTC DEA archaeologists at (502) 564-7250.

For guidance regarding inadvertent discovery and treatment of human remains, refer to the KYTC's *Right of Way Guidance Manual* (Section ROW-1202), and the Advisory Council on Historic Preservation's (ACHP) *Policy Statement Regarding Treatment of Human Remains and Grave Goods* (adopted by ACHP February 23, 2007).

3) If, during the implementation of The Project, a previously unidentified historic/ archaeological property is discovered or a previously identified historic/archaeological property is affected in an unanticipated manner, the contractor shall (1) call KYTC DEA archaeologists at (502) 564-7250, (2) call SHPO archaeologists at (502) 892-3614, and (3) ensure that all work within a reasonable area of the discovery shall cease until such time as a treatment plan can be developed and implemented.

SPECIAL NOTE

FOR SEDIMENT PREVENTION AND EROSION CONTROL

FOR IMPACT REGARDLESS OF SIZE OF THE DISTRUBED AREA

Potential impacts to gray bat foraging habitat and habitat for federally listed fish and mussel species will be minimized by implementing erosion prevention and sediment control measures.

As required under Section 213 of the KYTC Standard Specifications, prior to onsite activities a **site-specific *Erosion Control Plan* including BMPs** to ensure continuous erosion control throughout the construction and post construction period. The plan will identify individual Disturbed Drainage Areas (DDA) where storm water from the construction area will be discharged off site or into waters of the Commonwealth.

Should the Contractor fail to create a BMP Plan or provide and maintain the necessary erosion control, Liquidated Damages will apply at the rate specified in the contract. If no rate is specified, Liquidated Damages will be applied at the rate specified in Section 108 of the Standard Specifications.

The erosion prevention and sediment controls proposed are presented below.

- The location of the individual erosion prevention/sediment control measures will be identified by the Resident Engineer and Contractor. The Contractor will place erosion control devices as identified in the site-specific BMP Plan prior to beginning work.
- Mulch will be placed, during grade and drain activities, across all areas where no work will be conducted for a period of 14 consecutive days.
- Tree clearing within the riparian zone will be minimized. Trees to be removed will be determined by the resident engineer and the contractor prior to disturbance. (Note: Any "Special Note for Tree Clearing Restrictions" must be adhered to.)
- Silt fence, or other approved method as appropriate, will be installed at the edge of waters within the project corridors to eliminate the deposition of rock and debris in the streams during construction activities. In the unforeseen event that unintended debris does enter the streams, the resident engineer will halt the contributing activity until appropriate remedial actions have been implemented.
- To the maximum extent plausible, construction activities will take place during low-flow periods.
- Equipment staging and cleaning areas will be located to eliminate direct inputs to waters of the Commonwealth. These areas will be located such that effluent will be filtered through vegetated areas and appropriate sediment controls prior to discharge offsite.

- Concrete will be poured in a manner to avoid spills into the streams. In the unforeseen event that a spill does occur, the USFWS will be notified, and the resident engineer will immediately halt the activity until remedial measures have been implemented.
- KYTC proposes to stabilize areas disturbed during construction activities through vegetation establishment and placement of riprap and geotextile fabric. Re-vegetation of the disturbed areas will allow thermoregulation of water within the streams, establish long-term, regenerative stabilization of the stream banks, and provide nutrients to the aquatic macroinvertebrate community through inputs of organic material.
- Areas disturbed during construction and not stabilized with rip rap and erosion blanket will be seeded using a standard seed mix. Depending on project slope and project location, application rates and seed mix types will vary. The Contractor shall perform all final seeding and protection, in accordance with the plans and Section 212 of KYTC Standard Specifications.
- Contrary to Section 213.03.03, paragraph 2, the Engineer shall conduct inspections as needed to verify compliance with Section 221 of KYTC Standard Specifications. The Engineer's inspections shall be performed a minimum of once per month and within seven (7) days after a storm of ½ inch or greater. Copies of the Engineer's inspections shall not be provided to the Contractor unless improvements to the BMPs are required. The Contractor shall initiate corrective action within 24 hours of any reported deficiency and complete the work within five (5) days. The Engineer shall use Form TC 63-61 A for this report. Inspections performed by the Engineer do not relieve the Contractor of any responsibility for compliance. If corrections are not made within the five (5) days specified, the liquidated damages will apply at the rate specified in the Liquidated Damages note in the contract.
- Contrary to Sections 212.05 and 213.05, unless listed in the proposal, bid items for temporary BMPs and items for permanent erosion control will not be measured for payment and will be replaced with one lump sum item for the services. Payment will be pro-rated based on the Project Schedule as submitted by the Contractor and as agreed to by the Engineer.
- The Contractor shall be responsible for applying "good engineering practices." The Contractor may use any temporary BMPs and permanent BMPs that fall within the guidance of the current Standard Specifications, KYTC's Best Management Practices manual, and with the approval of the KYTC Engineer.

<u>FOR IMPACT GREATER THAN 1.0 ACRE</u>

When the total disturbed area for a project, including laydown and waste/borrow areas, is greater than 1.0 acre, the Contractor shall be responsible for filing the Kentucky Pollution discharge Elimination System (KPDES) KYR10 permit Notice of Intent (NOI) with the Kentucky Division of Water (DOW). The Contractor will be responsible for following the KPDES requirements of local Municipal Separate Storm Sewer System (MS4) programs with jurisdiction. Required NOI shall name the Contractor as the Facility Operator and include the KYTC Contract ID Number (CID) for reference. For grouped contracts with more than one structure, each structure will be treated independently in regard to disturbed area unless another structure is within 0.25 mile of

the structure. For structures within 0.25 mile of each other, the total disturbed area will be the sum of the combined disturbed areas. The Contractor shall be responsible for filing the KPDES permit Notice of Termination (NOT) with the Kentucky DOW and any local MS4 Program that has jurisdiction. The NOT shall be filed after the Engineer agrees the project is stabilized or the project has been formally accepted.

The Contractor shall perform all temporary erosion/sediment control functions including providing a Best Management Practice (BMP) Plan, conducting required inspections, modifying the BMP Plan documents as construction progresses, and documenting the installation and maintenance of BMPs in conformance with the KPDES KYR10 permit effective on August 1, 2009, or a permit re-issued to replace that KYR10 permit. This work shall be conducted in conformance with the requirements of Section 213 of the KYTC current Department of Highways, Standard Specifications for Road and Bridge Construction (Standard Specifications).

The Contractor shall be responsible for the examination of the soils to be encountered and make his own independent determination of the temporary BMPs that will be required to accomplish effective erosion prevention and sediment control. The Contractor shall provide the Engineer copies of all documents required by the KPDES permit at the time they are prepared.

If there are any questions regarding this note, please contact Danny Peake, Director, Division of Environmental Analysis, 200 Mero Street, Frankfort, KY 40601, Phone (502) 564-7250.

Kentucky Transportation Cabinet

Highway District 5

And

_____(2), Construction

Kentucky Pollutant Discharge Elimination System Permit KYR10 Best Management Practices (BMP) plan

Groundwater protection plan

For Highway Construction Activities

For

Replacement

Project: CID ## -

Project Information

Note – (1) = Design (2) = Construction (3) = Contractor

1. Owner – Kentucky Transportation Cabinet, District 5 (1)
2. Resident Engineer: (2)
3. Contractor Name: (2)

   Address: (2)

   Phone number: (2)

   Contact: (2)

   Contractor's agent responsible for compliance with KPDES permit requirements: (3)
4. Project Control Number: (2)
5. Route (Address): KY 1861 (Sunnyside Road) over Jackson Creek (1)
6. Latitude/Longitude (project mid-point): 38°24'17.0"N / 85°13'50.3"W (1)
7. County (project mid-point): Henry County (1)
8. Project start date (date work will begin): (2)
9. Projected completion date: (2)

A. Site Description

1. **Nature of Construction Activity (from letting project description):** Address deficiencies of KY 1861 Bridge over Jackson Creek (052B00062N), from MP 6.33 to MP 6.34, a distance of 0.01 mile. SYP No. 5-10049. (1)

2. **Order of major soil disturbing activities:** (2) and (3)

3. **Projected volume of material to be moved:** (3)

4. **Estimate of total project area (acres):** (3)

5. **Estimate of area to be disturbed (acres):** (3)

6. **Post construction runoff coefficient** will be included in the project drainage folder. Persons needing information pertaining to the runoff coefficient will contact the resident engineer to request this information. (1)

7. **Data describing existing soil condition:** The soils mapped for the location by the USDA-NRCS consist of three soil types: Nolin soil loam (No), Lowell-Faywood silt loams (uLfC) and Faywood silty clay loam (FyD2) (Soil Survey Staff 2023). Most of the project area was mapped within Nolin silt loam. Nolin silt loam is a well-drained soil found on floodplains (0 to 2 percent slopes) and formed from mixed fine-silty alluvium. Lowell-Faywood silt loam are well-drained soils found on hillslopes and formed from clayey residuum weathered from limestone and shale. Faywood silty clay loam is a well-drained soil found on backslopes and sideslopes of ridges (12 to 20 percent slopes). They are formed from clayey residuum weathered from limestone and shale. *(Note: borrowed from archaeology report)* (1) and (2)

8. **Data describing existing discharge water quality (if any):** (2)

9. **Receiving water name:** Jackson Creek (1)

10. **TMDLs and Pollutants of Concern in Receiving Waters:** (1 DEA)

11. **Site map:** Project layout sheet plus the erosion control sheets in the project plans that depict Disturbed Drainage Areas (DDAs) and related information. These sheets depict the existing project conditions with areas delineated by DDA (drainage area bounded by watershed breaks and right of way limits), the storm water discharge locations (either as a point discharge or as overland flow) and the areas that drain to each discharge point. These plans define the limits of areas to be disturbed and the location of control measures. Controls will be either site specific as designated by the designer or will be annotated by the contractor and resident engineer before disturbance commences. The project

layout sheet shows the surface waters and wetlands.

12. **Potential sources of pollutants:** The primary source of pollutants is solids that are mobilized during storm events. Other sources of pollutants include oil/fuel/grease from servicing and operating construction equipment, concrete washout water, sanitary wastes and trash/debris. (3)

B. Sediment and Erosion Control Measures

1. Plans for highway construction projects will include erosion control sheets that depict Disturbed Drainage Areas (DDAs) and related information. These plan sheets will show the existing project conditions with areas delineated by DDA within the right of way limits, the discharge points and the areas that drain to each discharge point. Project managers and designers will analyze the DDAs and identify Best Management Practices (BMPs) that are site specific. The balance of the BMPs for the project will be listed in the bid documents for selection and use by the contractor on the project with approval by the resident engineer.

   Projects that do not have DDAs annotated on the erosion control sheets will employ the same concepts for development and managing BMP plans.

2. Following award of the contract, the contractor and resident engineer will annotate the erosion control sheets showing location and type of BMPs for each of the DDAs that will be disturbed at the outset of the project. This annotation will be accompanied by an order of work that reflects the order or sequence of major soil moving activities. The remaining DDAs are to be designated as "Do Not Disturb" until the contractor and resident engineer prepare the plan for BMPs to be employed. The initial BMP's shall be for the first phase (generally Clearing and Grubbing) and shall be modified as needed as the project changes phases. The BMP Plan will be modified to reflect disturbance in additional DDA's as the work progresses. <u>All DDA's will have adequate BMP's in place before being disturbed.</u>

3. As DDAs are prepared for construction, the following will be addressed for the project as a whole or for each DDA as appropriate:

   - **Construction Access**—This is the first land-disturbing activity. As soon as construction begins, bare areas will be stabilized with gravel and temporary mulch and/or vegetation.

   - **Sources**—At the beginning of the project, all DDAs for the project will be inspected for areas that are a source of storm water pollutants. Areas that are a source of pollutants will receive appropriate cover or BMPs to arrest the introduction of pollutants into storm water. Areas that have not been opened by the contractor will be inspected periodically (once per month) to

determine if there is a need to employ BMPs to keep pollutants from entering storm water.

- **Clearing and Grubbing**—The following BMP's will be considered and used where appropriate.
  - Leaving areas undisturbed when possible.
  - Silt basins to provide silt volume for large areas.
  - Silt Traps Type A for small areas.
  - Silt Traps Type C in front of existing and drop inlets which are to be saved.
  - Diversion ditches to catch sheet runoff and carry it to basins or traps or to divert it around areas to be disturbed.
  - Brush and/or other barriers to slow and/or divert runoff.
  - Silt fences to catch sheet runoff on short slopes. For longer slopes, multiple rows of silt fence may be considered.
  - Temporary mulch for areas which are not feasible for the fore mentioned types of protections.
  - Non-standard or innovative methods.
- **Cut and Fill and Placement of Drainage Structures**—The BMP Plan will be modified to show additional BMP's such as:
  - Silt Traps Type B in ditches and/or drainways as they are completed.
  - Silt Traps Type C in front of pipes after they are placed.
  - Channel Lining.
  - Erosion Control Blanket.
  - Non-standard or innovative methods.
- **Profile and X-Section in Place**—The BMP Plan will be modified to show elimination of BMP's which had to be removed and the addition of new BMP's as the roadway was shaped. Probably changes include:
  - Silt Trap Type A, Brush and/or other barriers, Temporary mulch, and any other BMP which had to be removed for final grading to take place.
  - Additional Silt Traps Type B and Type C to be placed as final drainage patterns are put in place.
  - Additional Channel Lining and/or Erosion Control Blanket.
  - Temporary mulch for areas where Permanent Seeding and Protection cannot be done within 21 days.
  - Special BMP's such as Karst Policy.

- **Finish Work (Paving, Seeding, Protect, etc.)**—A final BMP Plan will result from modifications during this phase of construction. Probable changes include:
  - Removal of Silt Traps Type B from ditches and drainways if they are protected with other BMP's which are sufficient to control erosion, i.e. Erosion Control Blanket, or Permanent Seeding and Protection on moderate grades.
  - Permanent Seeding and Protection.
  - Placing Sod.
  - Planting trees and/or shrubs where they are included in the project.
- BMP's, including Storm Water Management Devices such as velocity dissipation devices and Karst policy BMP's, to be installed during construction to control the pollutants in storm water discharges that will occur after construction has been completed are: (3)

C. Other Control Measures

1. **Solid Materials**

   No solid materials, including building materials, shall be discharged to waters of the commonwealth, except as authorized by a Section 404 permit.

2. **Waste Materials**

   All waste materials that may leach pollutants (paint and paint containers, caulk tubes, oil/grease containers, liquids of any kind, soluble materials, etc.) will be collected and stored in appropriate covered waste containers. Waste containers shall be removed from the project site on a sufficiently frequent basis as to not allow wastes to become a source of pollution. All personnel will be instructed regarding the correct procedure for waste disposal. Wastes will be disposed in accordance with appropriate regulations. Notices stating these practices will be posted in the office.

3. **Hazardous Waste**

   All hazardous waste materials will be managed and disposed of in the manner specified by local or state regulation. The contractor shall notify the Section Engineer if there any hazardous wastes being generated at the project site and how these wastes are being managed. Site personnel will be instructed with regard to proper storage and handling of hazardous wastes when required. The Transportation Cabinet will file for generator, registration when appropriate, with the Division of Waste Management and advise the contractor regarding waste management requirements.

4. **Spill Prevention**

The following material management practices will be used to reduce the risk of spills or other exposure of materials and substances to the weather and/or runoff. (3)

- **Good Housekeeping**

The following good housekeeping practices will be followed onsite during the construction project.

- An effort will be made to store only enough product required to do the job.
- All materials stored onsite will be stored in a neat, orderly manner in their appropriate containers and, if possible, under a roof or other enclosure.
- Products will be kept in their original containers with the original manufacturer's label.
- Substances will not be mixed with one another unless recommended by the manufacturer.
- Whenever possible, all of the product will be used up before disposing of the container.
- Manufacturers' recommendations for proper use and disposal will be followed.
- The site contractor will inspect daily to ensure proper use and disposal of materials onsite.

- **Hazardous Products**

These practices will be used to reduce the risks associated with any and all hazardous materials.

- Products will be kept in original containers unless they are not resealable.
- Original labels and material safety data sheets (MSDS) will be reviewed and retained.
- Contractor will follow procedures recommended by the manufacturer when handling hazardous materials.
- If surplus product must be disposed of, manufacturers' or state/local recommended methods for proper disposal will be followed.

5. **Product-specific Practices**

The following product-specific practices will be followed onsite:

- **Petroleum Products**

  - Vehicles and equipment that are fueled and maintained on site will be monitored for leaks, and receive regular preventative maintenance to reduce the chance of leakage. Petroleum products onsite will be stored in tightly sealed containers, which are clearly labeled and will be protected from exposure to weather.
  - The contractor shall prepare an Oil Pollution Spill Prevention Control and Countermeasure plan when the project that involves the storage of petroleum products in 55 gallon or larger containers with a total combined storage capacity of 1,320 gallons. This is a requirement of 40 CFR 112.
  - This project (will / will not) (3) have over 1,320 gallons of petroleum products with a total capacity, sum of all containers 55 gallon capacity and larger.

- **Fertilizers**

  Fertilizers will be applied at rates prescribed by the contract, standard specifications or as directed by the resident engineer. Once applied, fertilizer will be covered with mulch or blankets or worked into the soil to limit exposure to storm water. Storage will be in a covered shed. The contents of any partially used bags of fertilizer will be transferred to a sealable plastic bin to avoid spills.

- **Paints**

  All containers will be tightly sealed and stored indoors or under roof when not being used. Excess paint or paint wash water will not be discharged to the drainage or storm sewer system but will be properly disposed of according to manufacturers' instructions or state and local regulations.

- **Concrete Truck Washout**

  Concrete truck mixers and chutes will not be washed on pavement, near storm drain inlets, or within 75 feet of any ditch, stream, wetland, lake, or sinkhole. Where possible, excess concrete and wash water will be discharged to areas prepared for pouring new concrete, flat areas to be paved that are away from ditches or drainage system features, or other locations that will not drain off site. Where this approach is not possible, a shallow earthen wash basin will be excavated away from ditches to receive the wash water.

- **Spill Control Practices**

  In addition to the good housekeeping and material management practices discussed in the previous sections of this plan, the following practices will be followed for spill prevention and cleanup**:**

  - Manufacturers' recommended methods for spill cleanup will be clearly posted. All personnel will be made aware of procedures and the location of the information and cleanup supplies.
  - Materials and equipment necessary for spill cleanup will be kept in the material storage area. Equipment and materials will include as appropriate, brooms, dust pans, mops, rags, gloves, oil absorbents, sand, sawdust, and plastic and metal trash containers.
  - All spills will be cleaned up immediately after discovery.
  - The spill area will be kept well ventilated and personnel will wear appropriate protective clothing to prevent injury from contract with a hazardous substance.
  - Spills of toxic or hazardous material will be reported to the appropriate state/local agency as required by KRS 224 and applicable federal law.
  - The spill prevention plan will be adjusted as needed to prevent spills from reoccurring and improve spill response and cleanup.
  - Spills of products will be cleaned up promptly. Wastes from spill clean-up will be disposed in accordance with appropriate regulations.

D. Other State and Local Plans

This BMP plan shall include any requirements specified in sediment and erosion control plans, storm water management plans or permits that have been approved by other state or local officials. Upon submittal of the NOI, other requirements for surface water protection are incorporated by reference into and are enforceable under this permit (even if they are not specifically included in this BMP plan). This provision does not apply to master or comprehensive plans, non-enforceable guidelines or technical guidance documents that are not identified in a specific plan or permit issued for the construction site by state or local officials. (1)

E. Maintenance

1. The BMP plan shall include a clear description of the maintenance procedures necessary to keep the control measures in good and effective operating condition.

2. Maintenance of BMPs during construction shall be a result of weekly and post rain event inspections with action being taken by the contractor to correct deficiencies.

3. Post Construction maintenance will be a function of normal highway maintenance operations. Following final project acceptance by the cabinet, district highway crews will be responsible for identification and correction of deficiencies regarding ground cover and cleaning of storm water BMPs. The project manager shall identify any BMPs that will be for the purpose of post construction storm water management with specific guidance for any non-routine maintenance. (1)

F. Inspections

Inspection and maintenance practices that will be used to maintain erosion and sediment controls:

- All erosion prevention and sediment control measures will be inspected at least once each week and following any rain of one-half inch or more.
- Inspections will be conducted by individuals that have successfully completed KEPSC-RI course as required by Section 213.02.02 of the Standard Specifications for Road and Bridge Construction, current edition.
- Inspection reports will be written, signed, dated, and kept on file.
- Areas at final grade will be seeded and mulched within 14 days.
- Areas that are not at final grade where construction has ceased for a period of 21 days or longer and soil stock piles shall receive temporary mulch no later than 14 days from the last construction activity in that area.
- All measures will be maintained in good working order. If a repair is necessary, it will be initiated within 24 hours of being reported.
- Built-up sediment will be removed from behind the silt fence before it has reached halfway up the height of the fence.
- Silt fences will be inspected for bypassing, overtopping, undercutting, depth of sediment, tears, and to ensure attachment to secure posts.
- Sediment basins will be inspected for depth of sediment, and built-up sediment will be removed when it reaches 50 percent of the design capacity and at the end of the job.
- Diversion dikes and berms will be inspected and any breaches promptly repaired. Areas that are eroding or scouring will be repaired and re-seeded / mulched as needed.

- Temporary and permanent seeding and mulching will be inspected for bare spots, washouts, and healthy growth. Bare or eroded areas will be repaired as needed.

- All material storage and equipment servicing areas that involve the management of bulk liquids, fuels, and bulk solids will be inspected weekly for conditions that represent a release or possible release of pollutants to the environment.

G. Non–Storm Water Discharges

It is expected that non-storm water discharges may occur from the site during the construction period. Examples of non-storm water discharges include:

- Water from water line flushings.

- Water form cleaning concrete trucks and equipment.

- Pavement wash waters (where no spills or leaks of toxic or hazardous materials have occurred).

- Uncontaminated groundwater and rain water (from dewatering during excavation).

All non-storm water discharges will be directed to the sediment basin or to a filter fence enclosure in a flat vegetated infiltration area or be filtered via another approved commercial product.

H. Groundwater Protection Plan (3)

This plan serves as the groundwater protection plan as required by 401 KAR 5:037.

- Contractors statement: (3)

The following activities, as enumerated by 401 KAR 5:037 Section 2, require the preparation and implementation of a groundwater protection plan, and will or may be may be conducted as part of this construction project:

_____2. (e) Land treatment or land disposal of a pollutant;

_____2. (f) Storing…or related handling of hazardous waste, solid waste or special waste…in tanks, drums, or other containers, or in piles (does not include wastes managed in a container placed for collection and removal of municipal solid waste for disposal off site);

_____2. (g) …handling of materials in bulk quantities (equal or greater than 55 gallons or 100 pounds net dry weight transported held in an individual container) that, if released to the environment, would be a pollutant;

_____2. (j) Storing or related handling of road oils, dust suppressants at a central location;

_____2. (k) Application or related handling of road oils, dust suppressants or deicing materials (does not include use of chloride-based deicing materials applied to roads or parking lots);

_____2. (m) Installation, construction, operation, or abandonment of wells, bore holes, or core holes (does not include bore holes for the purpose of explosive demolition);

Or, check the following only if there are no qualifying activities:

_____ There are no activities for this project as listed in 401 KAR 5:037 Section 2 that require the preparation and implementation of a groundwater protection plan.

The contractor is responsible for the preparation of a plan that addresses the 401 KAR 5:037 Section 3. (3) Elements of site specific groundwater protection plan:

(a) General information about this project is covered in the Project information;

(b) Activities that require a groundwater protection plan have been identified above;

(c) Practices that will protect groundwater from pollution are addressed in *Section C: Other Control Measures*.

(d) Implementation schedule—all practices required to prevent pollution of groundwater are to be in place prior to conducting the activity;

(e) Training is required as a part of the ground water protection plan. All employees of the contractor, sub-contractor, and resident engineer personnel will be trained to understand the nature and requirements of this plan as they pertain to their job function(s). Training will be accomplished within one week of employment and annually thereafter. A record of training will be maintained by the contractor with a copy provided to the resident engineer.

(f) Areas of the project and groundwater plan activities will be inspected as part of the weekly sediment and erosion control inspections

(g) Certification (see signature page).

Contractor and Resident Engineer Plan Certification

The contractor that is responsible for implementing this BMP plan is identified in the Project Information section of this plan.

The following certification applies to all parties that are signatory to this BMP plan:

I certify under penalty of law that this document and all attachments were prepared under my direction or supervision in accordance with a system designed to assure that qualified personnel properly gathered and evaluated the information submitted. Based on my inquiry of the person or persons who manage the system, or those persons directly responsible for gathering the information, the information submitted is, to the best of my knowledge and belief, true, accurate, and complete. I am aware that there are significant penalties for submitting false information, including the possibility of fine and imprisonment for knowing violations. Further, this plan complies with the requirements of 401 KAR 5:037. By this certification, the undersigned state that the individuals signing the plan have reviewed the terms of the plan and will implement its provisions as they pertain to ground water protection.

Resident Engineer and Contractor Certification:

(2) Resident Engineer signature

Signed _____ _____, _____

Typed or printed name[2] Title Signature

(3) Signed _____ _____, _____

Typed or printed name[1] Title Signature

1. *Contractors Note: to be signed by a person who is the owner, a responsible corporate officer, a general partner or the proprietor or a person designated to have the authority to sign reports by such a person in accordance with 401 KAR 5:060 Section 9. This delegation shall be in writing to: Manager, KPDES Branch, Division of Water, 14 Reilly Road, Frankfort, Kentucky 40601. Reference the Project Control Number (PCN) and KPDES number when one has been issued.*

2. *KYTC note: to be signed by the Chief District Engineer or a person designated to have the authority to sign reports by such a person (usually the resident engineer) in accordance with 401 KAR 5:060 Section 9. This delegation shall be in writing to: Manager, KPDES Branch, Division of Water, 14 Reilly Road, Frankfort, Kentucky 40601. Reference the Project Control Number (PCN) and KPDES number when one has been issued.*

Sub-Contractor Certification

The following sub-contractor shall be made aware of the BMP plan and responsible for implementation of BMPs identified in this plan as follows:

Subcontractor Name:

Address:

Phone:

The part of BMP plan this subcontractor is responsible to implement is:

I certify under penalty of law that I understand the terms and conditions of the general Kentucky Pollutant Discharge Elimination System permit that authorizes the storm water discharges, the BMP plan that has been developed to manage the quality of water to be discharged as a result of storm events associated with the construction site activity and management of non-storm water pollutant sources identified as part of this certification.

Signed _____ _____, _____

Typed or printed name[1] Title Signature

1. *Sub-Contractor Note: to be signed by a person who is the owner, a responsible corporate officer, a general partner or the proprietor or a person designated to have the authority to sign reports by such a person in accordance with 401 KAR 5:060 Section 9. This delegation shall be in writing to: Manager, KPDES Branch, Division of Water, 14 Reilly Road, Frankfort, Kentucky 40601. Reference the Project Control Number (PCN) and KPDES number when one has been issued*.

COMMONWEALTH OF KENTUCKY
DEPARTMENT OF HIGHWAYS

TEAM KENTUCKY
TRANSPORTATION CABINET

PLANS OF
KY 1861 (SUNNYSIDE ROAD) OVER JACKSON CREEK
Henry County

12+39.36

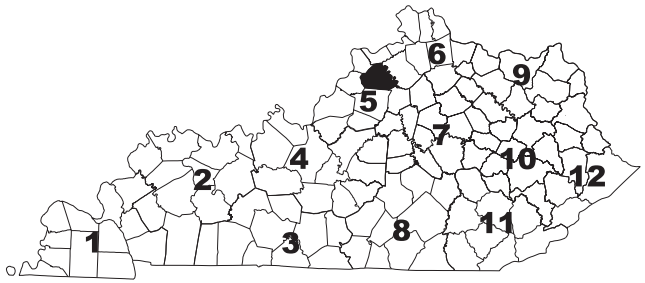

BEGIN CONST.
STA. 10+86.40

END CONST.
STA. 13+67.66

N

LAYOUT MAP

REV. NO.	SHEETS REVISED	DATE

TABLE OF REVISIONS

DESIGN CRITERIA

CLASS OF HIGHWAY: RURAL LOCAL
TYPE OF TERRAIN: ROLLING
DESIGN SPEED: 35 MPH
REQUIRED NPSD:
REQUIRED PSD:
LEVEL OF SERVICE:
ADT PRESENT (2021) 521
ADT FUTURE ( )
DHV:
D %:
T %:

GEOGRAPHIC COORDINATES

LATITUDE 38 DEGREES 24 MINUTES 17 SECONDS NORTH
LONGITUDE 85 DEGREES 13 MINUTES 50 SECONDS WEST

DESIGNED

% RESTRICTED SD:
LEVEL OF SERVICE:
MAX. DISTANCE W/O PASSING:

INDEX OF SHEETS

R1 LAYOUT SHEET
R2 TYPICALS, RW SUMMARY, & COORDINATE CONTROL
R3 LEGEND
R4 PLAN SHEET
R5 PROFILE SHEET

S1 GENERAL NOTES
S2 LAYOUT
S3 TYPICAL SECTION
S4 ABUTMENT 1
S5 ABUTMENT 2
S6 FRAMING PLAN
S7 PPC BOX BEAM SB21 DETAILS
S8 SUPERSTRUCTURE
S9 SUPERSTRUCTURE
S10-S11 CONSTRUCTION ELEVATIONS

SPECIFICATIONS
STANDARD SPECIFICATIONS FOR ROAD AND BRIDGE CONSTRUCTION, CURRENT EDITION
AASHTO LRFD BRIDGE CONSTRUCTION SPECIFICATIONS WITH CURRENT INTERIMS.

STANDARD DRAWINGS		STANDARD DRAWINGS		ACTIVE SEPIAS		SPECIAL PROVISIONS
BBP-003-02	ELASTOMERIC BEARING PADS FOR BOX BEAMS	RBI-001-12	TYPICAL GUARDRAIL INSTALLATIONS	017	PAVEMENT STRIPING DETAILS FOR TWO LANE TWO WAY ROADWAYS	69 EMBANKMENT AT BRIDGE END BENT STRUCTURES
		RBI-002-07	TYPICAL GUARDRAIL INSTALLATIONS			
BDP-002-03	BOX BEAM BEARING DETAILS	RBR-001-13	STEEL BEAM GUARDRAIL ("W" BEAM)	022	TURF MAT SLOPE INSTALLATION	
BDP-003-03	BOX BEAM BEARING MISCELLANEOUS DETAILS	RBR-005-11	GUARDRAIL COMPONENTS	023	TURF MAT CHANNEL INSTALLATION	**SPECIAL NOTES**
		RBR-010-06	GUARDRAIL TERMINAL SECTIONS			TRAFFIC CONTROL ON BRIDGE REPAIR CONTRACTS
BGX-006-10	STENCILS FOR STRUCTURES	RBR-015-06	STEEL GUARDRAIL POSTS			
		RBR-016-05	TIMBER GUARDRAIL POSTS			SEDIMENT PREVENTION AND EROSION CONTROL
BGX-022	JOINT WATERPROOFING	RBR-018	GUARDRAIL SYSTEM TRANSITION			FOUNDATION PREPARATION
BGX-026	AIR VENT DETAILS	RBR-055-01	DELINEATORS FOR GUARDRAIL			CONTRACT COMPLETION DATE AND LIQUIDATED DAMAGES ON BRIDGE REPAIR CONTRACTS
BHS-011	RAILILNG SYSEM SIDE MOUNTED MGS DETAILS	RGS-001-07	CURVE WIDENING AND SUPERELEVATION TRANSITIONS			
BJE-001-14	ARMORED EDGES					CONCRETE SEALING
		RGX-001-06	MISCELLANEOUS STANDARDS PART 1			ADDITIONAL ENVIRONMENTAL COMMITMENTS
RDJ-040-01	EROSION CONTROL BLANKET SLOPE INSTALLATION	RGX-200-01	ONE POINT PROCTER FAMILY OF CURVES			CONCRETE COATING
RDX-210-03	TEMPORARY SILT FENCE					EPOXY INJECTION CRACK REPAIRS
RDX-220-05	SILT TRAP TYPE A					OVER THE SIDE DRAINAGE AND MGS RAILING
RDX-225-01	SILT TRAP TYPE B					

PROJECT NUMBER: 5-10049
EXISTING BRIDGE ID #: 052B00062N
DRAWING NO: 28668

RECOMMENDED BY: _____ PROJECT MANAGER DATE:
PLAN APPROVED BY: _____ STATE HIGHWAY ENGINEER DATE:

AECOM
STATE OF KENTUCKY DARRELL ANDREW SMITH 30964 LICENSED PROFESSIONAL ENGINEER
DESIGNED BY: Darrell Smith, AECOM USA, Darrell.Smith@aecom.com, Date: 2023.03.31 10:12:00 -04'00'

AECOM
STATE OF KENTUCKY JASON DWAYNE JONES 37615 LICENSED PROFESSIONAL ENGINEER
DESIGNED BY: Jason Jones, AECOM USA, Jason.Jones@aecom.com, Date: 2023.03.31 10:11:15 -04'00'

LETTING DATE: MAY 25, 2023
ITEM NO. 5-10049
COUNTY OF HENRY
SHEET NO. R1

OpenRoads Designer v10.16.2.267
USER: Darrell Smith
FILE NAME: C:\PW_WORKING\INFRA01\R00100LS.DGN

TYPICAL SECTIONS
KY 1861 SUNNYSIDE RD

PAVEMENT DESIGN – FULL DEPTH MAINLINE & SHOULDER

CL2 ASPH SURF 0.38D PG64-22	1.25" DEPTH
CL2 ASPH BASE 1.00D PG64-22	4.00" DEPTH
CL2 ASPH BASE 1.00D PG64-22	4.00" DEPTH
DGA BASE	8.00" DEPTH

PAVEMENT DESIGN – ENTRANCE RECONSTRUCTION

TRAFFIC BOUND BASE	4.00"

NOTES:

① PAVEMENT CROSS SLOPE TO TRANSITION FROM EXISTING TO BRIDGE CROSS SLOPE INCLUDING PARABOLIC CROWN

MATERIAL NEEDED FOR SHOULDERS OUTSIDE OF PAVED AREA WILL BE MEASURED AND PAID AS GRANULAR EMBANKMENT IN ACCORDANCE WITH THE SPECIAL NOTE FOR BRIDGE OVERLAY APPROACH PAVEMENT. GEOTEXTILE FABRIC CLASS 2 (SEPARATION) SHALL BE INCIDENTAL TO GRANULAR EMBANKMENT.

SHOULDERS SHALL BE WIDENED 3 FEET 5 INCHES WHERE GUARDRAIL IS TO BE INSTALLED ALLOWING FOR 2 FEET OF FILL BEHIND THE POSTS. IF IT IS NOT PRACTICAL TO WIDEN THE SHOULDER BY 2 FEET, THEN LONGER POSTS MAY BE USED.

ASPHALT SEAL REQUIRED FROM OUTSIDE EDGE OF PAVED SHOULDER TO A POINT 2' DOWN THE DITCH OR FILL SLOPE. TWO APPLICATIONS OF THE FOLLOWING:

ASPHALT SEAL COAT	2.40 LBS/SY
ASPHALT SEAL AGGREGATE	20 LBS/SY (SIZE NO. 8 OR 9M)

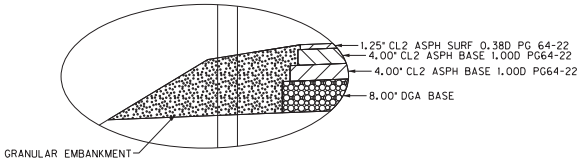

DETAIL "A"

ROADWAY SECTION

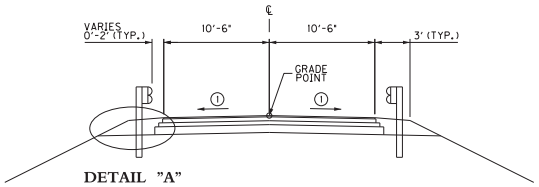

DETAIL "A"

BRIDGE SECTION

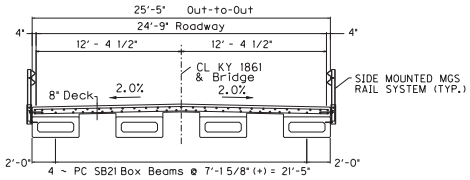

KY 1861 Sunnyside Road over Jackson Creek
Bridge #052B00062N

COORDINATE CONTROL POINTS

POINT	DESCRIPTION	State Plane Coordinates			STATION	OFFSET
		NORTH (Y)	EAST (X)	ELEV. (Z)		
CP 101	5/8" REBAR & CAP	4035390.62	5069860.93	839.92	10+00.65	26.84' RT
CP 102	5/8" REBAR & CAP	4035509.07	5070107.64	836.04	12+77.02	15.60' LT
CP 103	5/8" REBAR & CAP	4035544.36	5070322.24	835.18	N/A	N/A
CP 104	MAG NAIL SPIKE	4035516.63	5070052.76	827.10	12+24.18	34.71' LT

PROJECT COORDINATES
Coordinates for horizontal control were obtained by redundant GPS observations using Trimble R12 GNSS receivers on the NAD83 Kentucky State Plane Coordinate System, KY Single Zone, US Survey Feet utilizing the KYCORS RTN GPS Network on 11/17/22. Coordinates shown are State Plane Coordinates, US Survey Feet. No project datum factor was calculated or used for this project.

BASIS OF ELEVATIONS
Elevations were established by redundant GPS observations using Trimble R12 GNSS receivers on the NAVD88 vertical datum, GEOID 18 utilizing the KYCORS RTN Network on 11/17/22 and were adjusted by closed differential level loop based on the elevation of CP 101 = 839.92'.

GEOFABRIC USED FOR STRUCTURE GRANUALR BACKFILL SHALL BE INCIDENTAL TO FOUNDATION PREPARATION

ANY GEOFABRIC USED FOR PAVEMENT SEPARATION FOR FULL DEPTH REPLACEMENT SHALL BE INCIDENTAL TO DGA BASE

RIGHT OF WAY SUMMARY

PARCEL NO.	OWNER(S)	TOTAL AREA OF TRACT		PERMANENT R/W ACQUIRED		EASEMENTS		PORTION REMAINING		SEWER SYSTEM TYPE	SEWER SYSTEM AFFECTED BY PROJECT		BUILDINGS ACQUIRED NUMBER				SOURCE OF TITLE	REMARKS
						PERMANENT	TEMPORARY											
		ACRES	SQ. FT.	ACRES	SQ. FT.	SQ. FT.	SQ. FT.	ACRES	SQ. FT.		YES	NO	C	R	F	S		
P1	CHARLES E. BANTA	0.75					1396.69	0.75									DB 326 PG 761	AREA FROM DEED
P2	COLE/BROOKE, INC.	100					6505.48	100									DB 302 PG 863	AREA FROM DEED

COMMONWEALTH OF KENTUCKY
DEPARTMENT OF HIGHWAYS

DRAWING TITLE: TYPICAL SECTIONS, RIGHT OF WAY SUMMARY, AND COORDINATE CONTROL

ITEM NO. 5-10049 COUNTY OF HENRY
SHEET NO. R2

OpenRoads Designer v10.16.0.80 USER: Darrell Smith FILE NAME: C:\pw_working\infra01\darrell.smith\d0164908

Corporate Limits
County Line
Easement
Fence COA
Mineral Parcel
Property Line
Right of Way Line
All Overhead Utility Lines
Electric Line Underground
Electric Line Underground Duct
Gas Main
Sanitary Force Main
Telephone Underground Cable
Telephone Underground Duct
Fiber Optic Cable
Television Line Underground
Water Main
Storm Sewer
Cable Guardrail
Ditch
Edge of Water
Fence Hedge
Fence
Flow Line/Thalweg/ Int. Stream or Ditch
Guardrail
Railroad
Shrub Line
Sink Hole
Tree Line
Wall (WSM or DSM)
Blue Line Stream
Lakes and Ponds
Regulated Floodway
RDZ Line

ADA Ramp
Anchor Pole
Benchmark
Bike Lane Symbol
Bollard
Centerline
Centerline Stationing
Control Monument
Control Point
Core Hole
Crash Cushion TY 6 D
Crash Cushion TY 6 A
Crash Cushion TY 9A
Crash Cushion TY 9
Cross Notch
Curb Box Inlet
Curb Notch
Combination Pole
Delineator Post
Drop Box
Existing Spring
Electric Manhole
Electric Meter
Electric Pedestal
Electric Pole
Electric Junction Box
Fire Hydrant
Flag Pole
Force Main Sewer Valve
Fuel Tank Inlet
Fuel Tank Vent
Gasline Marker
Gas Meter
Gas Monitoring Well
Gas Valve
Gas Vent
Gas Well
Guidewires & Anchors

Headstone
Interstate Shield
Iron Pin
Light Pole
Low Wire
Mag Nail
Mailbox
Manhole
Mile Marker Post
Mineral Parcel
Misc Location Point
Monitoring Well
Parking Meter
Pedestrian Signal
Pins/Pipes
PK Nail
Point (Misc)
Pole
Pole (Light)
Post
Power Pole
Quarry
Random (Ground Shot)
Railroad Mile Marker
Railroad Spike
Right of Way Marker
Right of Way Monument
RR Traffic Signal Pole
RW Parcel
Sanitary Cleanout
Sanitary Manhole
Satelite Dish
Septic Tank Cleanout
Service Pole
Sewer Air Release Valve
Shrub
Sign
Sign Post (Single)
Sign with 2 posts

Sign group (4)
Station Stamp
Storm Manhole
Stub Power
Stub Telephone
Survey Cross Notch
Survey Curb Notch
Survey Nail
Survey Spike
Survey Stone Marker
Swamp
Telephone Booth
Telephone Junction Box
Telephone Line Overhead
Telephone Manhole
Telephone Pedestal
Telephone Pole

Temporary Benchmark

Traffic Light
Traffic Signal Control Box
Traffic Signal Junction Box
Traffic Signal Pole
Traverse Point
Tree
TV Junction Box
Utility Pole
Underground Storage Tank
Utility Test Hole
Water Line Marker
Water Meter
Water Spigot
Water Valve
Water Well
Yard Light
Yard Sprinkler
Yard Sprinkler Water Valve

Utility Owners

COMMONWEALTH OF KENTUCKY
DEPARTMENT OF HIGHWAYS

DRAWING TITLE: KY 1861 SUNNYSIDE ROAD LEGEND

ITEM NO.	COUNTY OF
5-10049	HENRY
SHEET NO.	
R3	

OpenRoads Designer v10.16.0.80 USER: Darrell Smith DATE PLOTTED: 9/7/2005 7:08:02 PM FILE NAME: C:\PW_WORKING\INFRA01\DARRELL.SMITH\DD164908\R00300LG.DGN

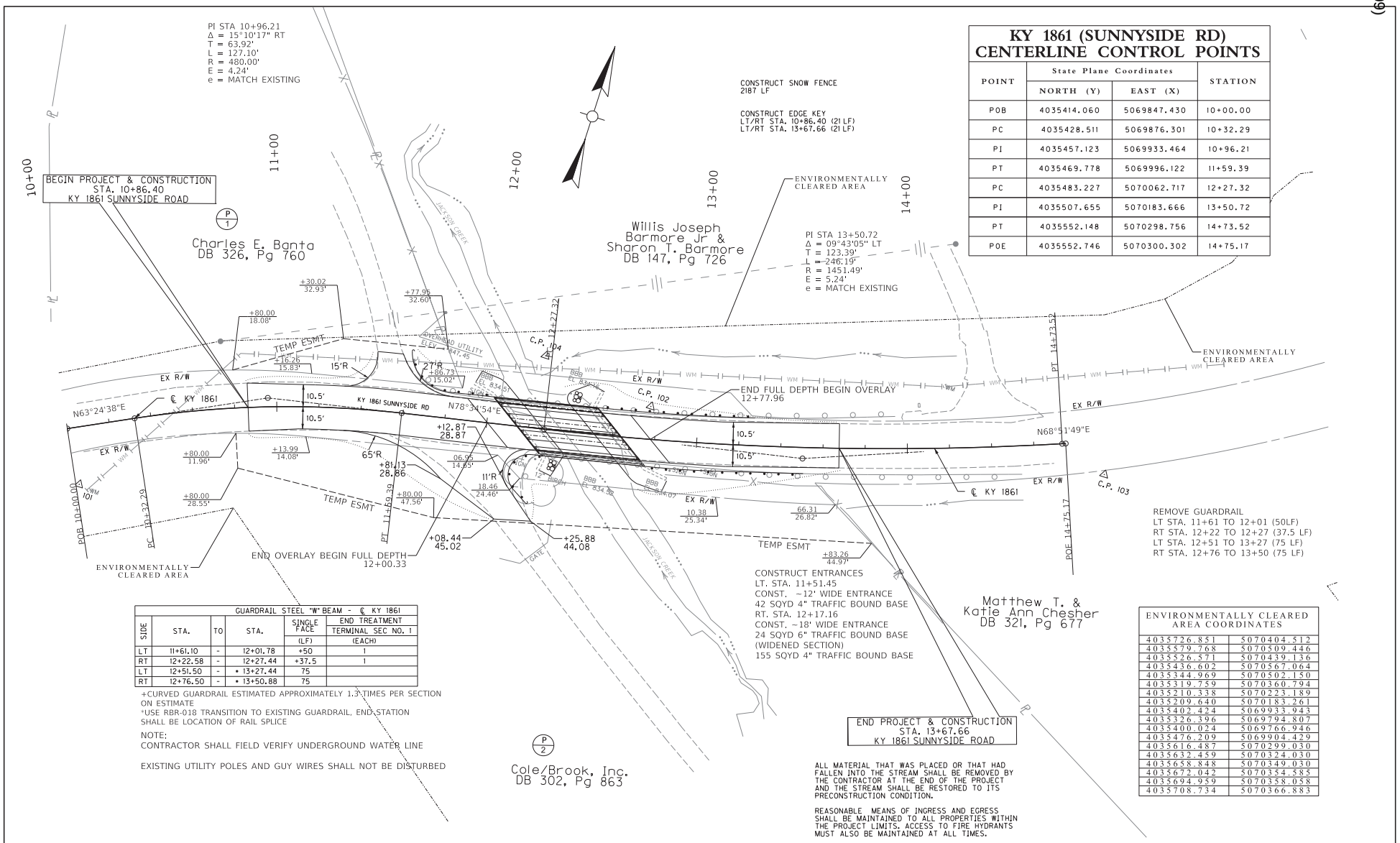

KY 1861 (SUNNYSIDE RD) CENTERLINE CONTROL POINTS

POINT	State Plane Coordinates		STATION
	NORTH (Y)	EAST (X)	
POB	4035414.060	5069847.430	10+00.00
PC	4035428.511	5069876.301	10+32.29
PI	4035457.123	5069933.464	10+96.21
PT	4035469.778	5069996.122	11+59.39
PC	4035483.227	5070062.717	12+27.32
PI	4035507.655	5070183.666	13+50.72
PT	4035552.148	5070298.756	14+73.52
POE	4035552.746	5070300.302	14+75.17

GUARDRAIL STEEL "W" BEAM - ℄ KY 1861					
SIDE	STA.	TO	STA.	SINGLE FACE	END TREATMENT
					TERMINAL SEC NO. 1
				(LF)	(EACH)
LT	11+61.10	-	12+01.78	+50	1
RT	12+22.58	-	12+27.44	+37.5	1
LT	12+51.50	-	• 13+27.44	75	
RT	12+76.50	-	• 13+50.88	75	

+CURVED GUARDRAIL ESTIMATED APPROXIMATELY 1.3 TIMES PER SECTION ON ESTIMATE
*USE RBR-018 TRANSITION TO EXISTING GUARDRAIL. END STATION SHALL BE LOCATION OF RAIL SPLICE

NOTE:
CONTRACTOR SHALL FIELD VERIFY UNDERGROUND WATER LINE

EXISTING UTILITY POLES AND GUY WIRES SHALL NOT BE DISTURBED

ALL MATERIAL THAT WAS PLACED OR THAT HAD FALLEN INTO THE STREAM SHALL BE REMOVED BY THE CONTRACTOR AT THE END OF THE PROJECT AND THE STREAM SHALL BE RESTORED TO ITS PRECONSTRUCTION CONDITION.

REASONABLE MEANS OF INGRESS AND EGRESS SHALL BE MAINTAINED TO ALL PROPERTIES WITHIN THE PROJECT LIMITS. ACCESS TO FIRE HYDRANTS MUST ALSO BE MAINTAINED AT ALL TIMES.

ENVIRONMENTALLY CLEARED AREA COORDINATES	
4035726.851	5070404.512
4035579.768	5070509.446
4035526.571	5070439.136
4035436.602	5070567.064
4035344.969	5070502.150
4035319.759	5070360.794
4035210.338	5070223.189
4035209.640	5070183.261
4035402.424	5069933.943
4035326.396	5069794.807
4035400.024	5069766.946
4035476.209	5069904.429
4035616.487	5070299.030
4035632.459	5070324.030
4035658.848	5070349.030
4035672.042	5070354.585
4035694.959	5070358.058
4035708.734	5070366.883

COMMONWEALTH OF KENTUCKY
DEPARTMENT OF HIGHWAYS

DRAWING TITLE: KY 1861 PLAN SHEET

HORIZONTAL SCALE
SCALE: 1"=20'

0' 20' 40' 80'

STA 10+00.00 TO STA 14+75.17

ITEM NO. 5-10049
COUNTY OF HENRY
SHEET NO. R4

OpenRoads Designer v10.16.0.80 USER: darrell.smith FILE NAME: C:\PW_WORKING\INFRA01\DARRELL.SMITH\D0164908\R4_052B00062N PLAN.DGN

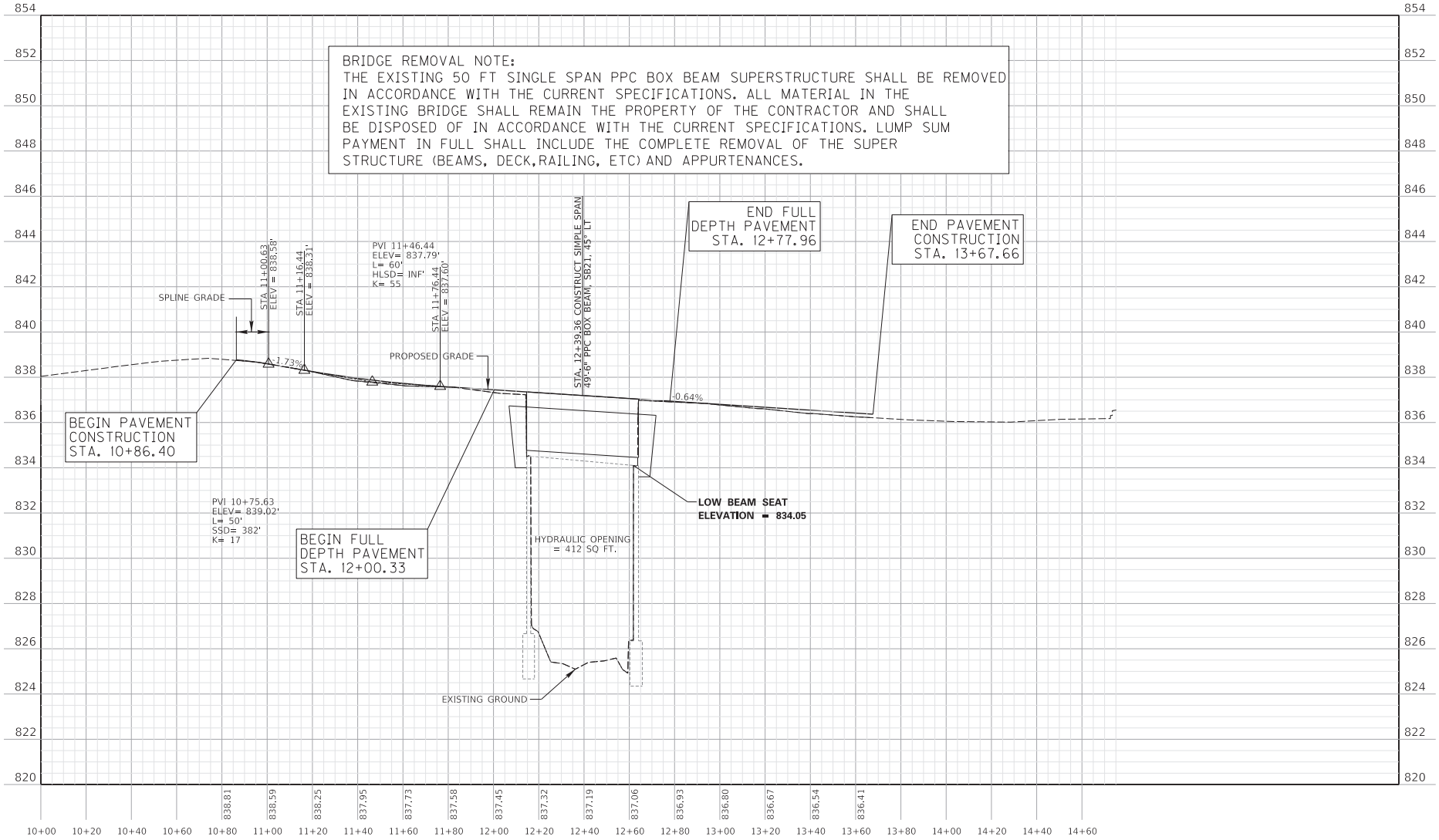

COMMONWEALTH OF KENTUCKY
DEPARTMENT OF HIGHWAYS

DRAWING TITLE: KY 1861 PROFILE SHEET

HORIZONTAL SCALE: 1"=20' (0' 20' 40' 80')

VERTICAL SCALE: 1"=2' (0' 2' 4' 8')

STA 10+00 TO STA 14+75

ITEM NO. 5-10049 | COUNTY OF HENRY | SHEET NO. R5

OpenRoads Designer v10.16.0.80 | USER: darrell.smith | FILE NAME: C:\PW_WORKING\INFRA01\DARRELL.SMITH\D0164908\R5_052B00062N PROFILE.DGN

GENERAL NOTES

SPECIFICATIONS:
REFERENCES TO THE SPECIFICATIONS ARE TO THE CURRENT EDITION OF THE KENTUCKY DEPARTMENT OF HIGHWAYS STANDARD SPECIFICATIONS FOR ROAD AND BRIDGE CONSTRUCTION INCLUDING ANY CURRENT SUPPLEMENTAL SPECIFICATIONS. ALL REFERENCES TO THE AASHTO SPECIFICATIONS ARE TO THE CURRENT EDITION OF THE AASHTO LRFD BRIDGE CONSTRUCTION SPECIFICATIONS, WITH INTERIMS.

DESIGN LOAD:
THIS BRIDGE IS DESIGNED FOR KYHL-93 LIVE LOAD, (I.E. 1.25xAASHTO HL93 LIVE LOAD). THIS BRIDGE IS DESIGNED FOR A FUTURE WEARING SURFACE OF 15 PSF.

MATERIALS DESIGN SPECIFICATIONS:
FOR CLASS "AA" REINFORCED CONCRETE f'c = 4000 psi
FOR STEEL REINFORCEMENT fy = 60000 psi

PREFORMED CORK EXPANSION JOINT MATERIAL:
PREFORMED CORK EXPANSION JOINT MATERIAL SHALL CONFORM TO SUBSECTION 807.04.02 (TYPE II) OF THE KENTUCKY DEPARTMENT OF HIGHWAYS STANDARD SPECIFICATIONS. COST OF PREFORMED CORK IS TO BE INCLUDED IN THE UNIT BID PRICE FOR "PRESTRESSED BEAMS".

CONCRETE:
CLASS "AA" CONCRETE IS TO BE USED THROUGHOUT THE SUPERSTRUCTURE AND IN THE PORTIONS OF THE SUBSTRUCTURE ABOVE THE TOPS OF CAPS. PRESTRESSED BEAM CONCRETE SHALL BE IN ACCORDANCE WITH THE PLANS AND SPECIFICATIONS.

REINFORCEMENT:
DIMENSIONS SHOWN FROM THE FACE OF CONCRETE TO BARS ARE TO CENTER OF BARS UNLESS OTHERWISE SHOWN. CLEAR DISTANCE TO FACE OF CONCRETE IS 2" UNLESS OTHERWISE NOTED. SPACING OF BARS IS FROM CENTER TO CENTER OF BARS. ANY REINFORCING BARS DESIGNATED BY SUFFIX "e" IN THE PLANS SHALL BE EPOXY COATED IN ACCORDANCE WITH SECTION 811.10 OF THE STANDARD SPECIFICATIONS. ANY REINFORCING BARS DESIGNATED BY SUFFIX "s" IN A BILL OF REINFORCEMENT SHALL BE CONSIDERED A STIRRUP FOR PURPOSES OF BEND DIAMETERS.

CONSTRUCTION IDENTIFICATION:
APPLY STENCILS FOR STRUCTURES IN ACCORDANCE WITH STANDARD DRAWING BGX-006-CE. THE CONTRACTOR SHALL FURNISH ALL PLANS, EQUIPMENTS, AND LABOR NECESSARY TO DO THE WORK FOR WHICH NO DIRECT PAYMENT WILL BE MADE.

BEVELED EDGES:
ALL EXPOSED EDGES SHALL BE BEVELED ¾", UNLESS OTHERWISE SHOWN.

COMPLETION OF THE STRUCTURE:
THE CONTRACTOR IS REQUIRED TO COMPLETE THE STRUCTURE IN ACCORDANCE WITH THE PLANS AND SPECIFICATIONS. MATERIAL, LABOR, OR CONSTRUCTION OPERATIONS NOT OTHERWISE SPECIFIED, ARE TO BE INCLUDED IN THE BID ITEM MOST APPROPRIATE TO THE WORK INVOLVED AND OTHERWISE CONSIDERED INCIDENTAL TO THE CONTRACT. THIS MAY INCLUDE COFFERDAMS, SHORING, EXCAVATIONS, BACKFILLING, REMOVAL OF ALL OR PARTS OF EXISTING STRUCTURES, PHASE CONSTRUCTION, INCIDENTAL MATERIALS, LABOR, OR ANYTHING ELSE REQUIRED TO COMPLETE THE STRUCTURE.

DISPOSAL OF MATERIALS: ALL MATERIALS AND DEBRIS REMOVED FROM OR BENEATH THE BRIDGE SHALL BECOME THE PROPERTY OF THE CONTRACTOR AND SHALL BE REMOVED FROM THE RIGHT-OF-WAY.

DAMAGE TO THE STRUCTURE: THE CONTRACTOR SHALL BEAR FULL RESPONSIBILITY AND EXPENSE FOR REPAIR OF ANY AND ALL DAMAGE TO THE STRUCTURE, SHOULD SUCH DAMAGE RESULT FROM THE CONTRACTOR'S ACTIONS. THE CONTRACTOR IS COMPLETELY RESPONSIBLE FOR THE STABILITY OF THE STRUCTURE FROM THE TIME OF MOBILIZATION UNTIL AFTER THE BRIDGE HAS BEEN REOPENED TO NORMAL TRAFFIC FOLLOWING COMPLETION OF ALL WORK REQUIRED IN THE CONTRACT. AFTER COMPLETION OF ALL OPERATIONS, THE STRUCTURE AND SITE SHALL BE LEFT IN A CONDITION THAT IS IN ACCORDANCE WITH SECTION 105.12 OF THE SPECIFICATIONS.

BEFORE YOU DIG:
THE CONTRACTOR SHALL BE RESPONSIBLE FOR ALL REQUIREMENTS AND CONFORMATION WITH THE UNDERGROUND FACILITY DAMAGE PREVENTION ACT OF 1994. THE CONTRACTOR WILL BE RESPONSIBLE FOR LOCATING ANY UTILITIES ON THIS PROJECT. ALL UNDERGROUND UTILITIES SHALL BE LOCATED PRIOR TO CONSTRUCTION. ANY UTILITIES DISTURBED OR DAMAGED AS A RESULT OF THE CONTRACTOR'S OPERATIONS WILL BE REPAIRED TO THE SATISFACTION OF THE UTILITY OWNER AT THE CONTRACTOR'S EXPENSE. THE CONTRACTOR IS ADVISED TO CALL (800) 752-6007 A MINIMUM OF TWO WORKING DAYS PRIOR TO EXCAVATION FOR INFORMATION ON THE LOCATION OF SOME, BUT NOT NECESSARILY ALL UNDERGROUND UTILITIES.

UTILITIES:
BEFORE BEGINNING WORK, LOCATE ALL EXISTING UTILITIES. CONSIDER LOCATION OF UTILITIES SHOWN ON THE DRAWINGS TO BE APPROXIMATE AND FOR INFORMATIONAL PURPOSES ONLY. THE DEPARTMENT DOES NOT WARRANT THE LOCATIONS AND ASSUMES NO RESPONSIBILITY FOR THE ACCURACY OR COMPLETENESS. THE CONTRACTOR MUST MAKE HIS OWN DETERMINATION. EXCEPT AS SHOWN ON THE PLANS, WORK AROUND AND DO NOT DISTURB EXISTING UTILITIES.

SHOP DRAWING:
SHOP DRAWING: THE FABRICATOR SHALL SUBMIT ALL REQUIRED SHOP PLANS, BY EMAIL TO SHOP_052B00062N@DOCS.E-BUILDER.NET, FOR REVIEW. THESE SUBMISSIONS SHALL DEPICT THE SHOP PLANS IN .PDF FORMAT, AS EITHER 11"X17" OR 22"x36" SHEETS. WHEN ANY CHANGES TO THE DESIGN PLANS ARE PROPOSED, THE SHOP DRAWINGS SHALL IDENTIFY THE PROPOSED CHANGES WITH REVISION CLOUDS AND NOTES. DESIGNERS WILL MAKE REVIEW COMMENTS ON THESE ELECTRONIC SUBMISSIONS AS NEEDED AND, IF REQUIRED, SHALL RETURN THEM TO THE FABRICATOR FOR CORRECTIONS AND RESUBMITTAL. UPON ACCEPTABLE RECONCILIATION OF ALL COMMENTS, FILES SHALL BE SENT TO THE BRIDGE PROGRAM GEC SHOP PLAN COORDINATOR FOR DISTRIBUTION. ONLY PLANS SUBMITTED DIRECTLY TO THE SHOP PLAN COORDINATOR WILL BE DISTRIBUTED. ADDITIONALLY, ONLY PLANS ELECTRONICALLY STAMPED "DISTRIBUTED BY THE BRIDGE PROGRAM GEC TEAM" ARE TO BE USED FOR FABRICATION. WHEN ANY CHANGES TO THE DESIGN PLANS ARE PROPOSED, THE SHOP DRAWINGS REFLECTING THESE CHANGES SHALL BE SUBMITTED THROUGH THE PROCESS ABOVE.

DIMENSIONS:
DIMENSIONS ARE FOR A NORMAL TEMPERATURE OF 60 DEGREES FAHRENHEIT. LAYOUT DIMENSIONS ARE HORIZONTAL DIMENSIONS.

SUPERSTRUCTURE SLAB:
THE SUPERSTRUCTURE SLAB SHALL BE POURED CONTINUOUSLY FROM END TO END OF SLAB BEFORE THE CONCRETE IS ALLOWED TO SET. THE CONTRACTOR MAY CHANGE THE POURING SEQUENCE WITH WRITTEN APPROVAL OF THE ENGINEER.

MASTIC TAPE:
APPLY MASTIC TAPE AT BRIDGE IN ACCORDANCE WITH STANDARD DRAWING BGX-022-CE. THE CONTRACTOR SHALL FURNISH ALL PLANS, EQUIPMENT, AND LABOR NECESSARY TO DO THE WORK FOR WHICH NO DIRECT PAYMENT WILL BE MADE.

TEMPORARY SUPPORTS:
TEMPORARY SUPPORTS OR SHORING WILL NOT BE PERMITTED UNDER THE BEAMS WHEN POURING THE CONCRETE DECK SLAB OR WHEN TAKING "TOP OF BEAM" ELEVATIONS.

ARMORED EDGE:
FABRICATE ARMORED EDGE TO MATCH CROSS SLOPE AND PARABOLIC CROWN AT EACH END OF BRIDGE.

STAY-IN-PLACE METAL FORMS:
STAY-IN-PLACE METAL FORMS MAY BE USED ON BRIDGE DECKS UNDER THE FOLLOWING ADDITIONAL CONDITIONS:

DESIGN INCLUDES 16 PSF FOR STAY-IN-PLACE FORM WEIGHT AND ALLOWS FOR CONCRETE FILLING THE VOIDS. CONTRACTOR SHALL ENSURE FORM WEIGHT (INCLUDING CONCRETE IN THE VOIDS) AND DOES NOT EXCEED 16 PSF AVERAGE AND SHALL FILL ALTERNATING VOIDS WITH STYROFOAM AS NECESSARY TO MAINTAIN AN AVERAGE FORM WEIGHT OF 16 PSF OR LESS.

VERIFYING FIELD CONDITIONS:
THE CONTRACTOR IS NOT TO ORDER ANY MATERIALS, PRODUCE ANY SHOP DRAWINGS, OR BEGIN ANY CONSTRUCTION ACTIVITIES UNTIL AFTER VERIFYING DIMENSIONS AND CONDITIONS IN THE FIELD. DIMENSIONS AND DETAILS SHOWN ON THESE PLANS IN RELATION TO THE EXISTING STRUCTURE SHALL BE CONSIDERED APPROXIMATE. EXISTING PLANS, IF AVAILABLE, SHALL NOT BE CONSIDERED ACCURATE. IT SHALL BE THE CONTRACTOR'S RESPONSIBILITY TO VERIFY SUCH DIMENSIONS AND DETAILS IN THE FIELD AND TO NOTIFY THE PROJECT ENGINEER AND THE DESIGNER OF ANY DIFFERENCES. FAILURE TO NOTIFY EITHER MAY DELAY DRAWING AND OTHER APPROVALS. THEREAFTER MAKE THE NECESSARY APPROVED ADJUSTMENTS PRIOR TO CONSTRUCTION OR ORDERING MATERIALS. ALL SPECIFICATION REQUIREMENTS SHALL REMAIN IN EFFECT. ANY VARIATIONS SHALL NOT BE CAUSE FOR ADDITIONAL COMPENSATION FOR A CHANGE IN THE SCOPE OF WORK; HOWEVER, THE CONTRACTOR WILL BE PAID FOR THE QUANTITY ACTUALLY FURNISHED AT THE UNIT PRICE BID FOR THE WORK. IN ADDITION, THE OVERRUN AND UNDERRUN FORMULAS MAY BE APPLIED TO APPROPRIATE REPAIRS PROVIDED THAT THE REQUIREMENT OF ARTICLE 104.02.02 OF THE STANDARD SPECIFICATIONS IS SATISFIED. THE COST OF ALL LABOR, EQUIPMENT, SURVEYING, AND MATERIALS NECESSARY TO VERIFY FIELD DIMENSIONS SHALL BE INCLUDEDIN THE LUMP SUM PRICE FOR "STAKING".

PLANS OF EXISTING STRUCTURE:
PLANS OF THE EXISTING STRUCTURE ARE NOT AVAILABLE.

DAMAGE OUTSIDE ENVIRONMENTALLY-CLEARED AREA:
ANY AREA USED OUTSIDE THE ENVIRONMENTALLY-CLEARED AREA SHALL OBTAIN FULL ENVIRONMENTAL APPROVALS PRIOR TO USE. ONCE CLEARED, ANY AREA THAT IS DISTURBED OUTSIDE OF THE MODIFIED ENVIRONMENTALLY-CLEARED AREA DURING THE LIFE OF THE PROJECT SHALL BE REPAIRED BY THE CONTRACTOR AT THEIR EXPENSE, SHOULD ANY DAMAGE RESULT FROM THE CONTRACTOR'S ACTIONS.

ELASTOMERIC BEARING PADS: ELASTOMERIC BEARING PADS SHALL CONFORM TO THE AASHTO LRFD BRIDGE CONSTRUCTION SPECIFICATIONS, SECTION 18.
(A) BEARINGS SHALL BE LOW TEMPERATURE GRADE 3 WITH A DUROMETER HARDNESS OF 5 AND SHALL BE SUBJECTED TO THE LOAD TESTING REQUIREMENTS CORRESPONDING TO DESIGN METHOD A.

THE COST OF BEARING PADS IS TO BE INCLUDED IN THE UNIT PRICE PER LINEAR FEET FOR THE PRECAST BEAMS.

FOUNDATION PREPARATION:
FOUNDATION PREPARATION SHALL BE IN ACCORDANCE WITH THE SPECIAL NOTE FOR FOUNDATION PREPARATION.

FOUNDATION EXCAVATIONS SHOULD BE PROPERLY BRACED/SHORED TO PROVIDE ADEQUATE SAFETY TO PERSONS WORKING IN OR AROUND EXCAVATIONS. BRACING SHOULD BE PERFORMED IN ACCORDANCE WITH APPLICABLE FEDERAL, STATE AND LOCAL GUIDELINES.

TEMPORARY SHORING, SHEETING,COFFERDAMS, AND/OR DEWATERING METHODS MAY BE REQUIRED TO FACILITATE FOUNDATION CONSTRUCTION. IT SHOULD BE ANTICIPATED THAT GROUNDWATER WILL BE ENCOUNTERED AT FOUNDATION LOCATIONS WITHIN THE FLOOD PLAIN.

TEMPORARY SHORING, BRACING, SHEETING, COFFERDAMS AND DEWATERING SHALL BE INCLUDED IN THE LUMP SUM BID FOR FOUNDATION PREPARATION.

STRUCTURAL GRANULAR BACKFILL:
MATERIALS FOR STRUCTURAL GRANULAR BACKFILL SHALL BE IN ACCORDANCE WITH SECTION 805 OF THE SPECIFICATIONS.

CONCRETE SEALING:
APPLY CONCRETE SEALING IN ACCORDANCE WITH THE SPECIAL NOTE FOR CONCRETE SEALING.

CONCRETE COATING:
APPLY CONCRETE COATING IN ACCORDANCE WITH THE SPECIAL NOTE FOR CONCRETE COATING. CONCRETE COATING IS ESTIMATED AT 1400 SF. IT IS THE RESPONSIBILITY OF THE CONTRACTOR TO VERIFY THIS ESTIMATE AND BID APPROPRIATELY. NO PAYMENT ADJUSTMENTS WILL BE MADE IF THE ACTUAL QUANTITY IS DIFFERENT THAN THE ESTIMATE.

REMOVE SUPERSTRUCTURE: THIS PAY ITEM FOR "REMOVE SUPERSTRUCTURE" SHALL CONSIST OF THE REMOVAL OF THE SUPERSTRUCTURE (BEAMS), AND PARTIAL REMOVAL OF THE ABUTMENTS AND WINGWALLS AS SHOWN IN THE PLANS. PORTIONS OF THE EXISTING ABUTMENTS AND WINGWALLS SHALL REMAIN IN PLACE TO BE REUSED IN THE REHABILITATED STRUCTURE. CARE SHALL BE EXERCISED NOT TO DAMAGE AREAS OF REMAINING CONCRETE OR REINFORCING STEEL DURING CONCRETE REMOVAL OPERATIONS.

REMOVE CONCRETE BY MEANS OF APPROVED PNEUMATIC HAMMERS EMPLOYING POINTED AND BLUNT CHISEL TOOLS. HYDRAULIC HOE-RAM TYPE HAMMERS WILL NOT BE PERMITTED. THE WEIGHT OF THE HAMMER SHALL NOT BE MORE THAN 35 POUNDS FOR REMOVAL WITHIN 18 INCHES OF PORTIONS TO BE PRESERVED. OUTSIDE THE 18 INCH LIMIT, THE CONTRACTOR MAY USE HAMMERS NOT EXCEEDING 90 POUNDS UPON THE APPROVAL OF THE ENGINEER. DO NOT PLACE PNEUMATIC HAMMERS IN DIRECT CONTACT WITH REINFORCING STEEL THAT IS TO BE RETAINED. CARE SHALL BE TAKEN TO NOT DAMAGE BOND TO ADJACENT NON-EXPOSED REINFORCING STEEL DURING CONCRETE REMOVAL PROCESSES. THE PERIMETER OF ALL AREAS WHERE CONCRETE IS REMOVED SHALL BE TAPERED AT AN APPROXIMATELY 45° ANGLE, EXCEPT THAT THE OUTER EDGES OF ALL CHIPPED AREAS SHALL BE SAW CUT TO MINIMUM DEPTH OF 1 INCH TO PREVENT FEATHER EDGING UNLESS OTHERWISE APPROVED BY THE ENGINEER. AFTER ALL CONCRETE HAS BEEN REMOVED, THE REPAIR SURFACE SHALL BE PREPARED BY ABRASIVE BLAST CLEANING. ABRASIVE BLAST CLEANING SHALL REMOVE ALL FRACTURED SURFACE CONCRETE AND ALL TRACES OF ANY UNSOUND MATERIAL OR CONTAMINANTS SUCH AS OIL, GREASE, DIRT, SLURRY, OR ANY MATERIALS WHICH COULD INTERFERE WITH THE BOND OF FRESHLY PLACED CONCRETE. THE CONTRACTOR SHALL DISPOSE ALL REMOVED MATERIAL OFF STATE RIGHT OF WAY IN AN APPROVED SITE.

SLOPE PROTECTION:
SLOPE PROTECTION AT ABUTMENTS SHALL BE DRY CYCLOPEAN STONE RIPRAP IN ACCORDANCE WITH THE PLANS AND SPECIFICATIONS. GEOTEXTILE FABRIC, CLASS 1 SHALL BE PLACED BETWEEN THE EMBANKMENT AND THE SLOPE PROTECTION IN ACCORDANCE WITH STANDARD SPECIFICATIONS 214 AND 843. PAYMENT FOR GEOTEXTILE FABRIC, CLASS 1, SHALL BE CONSIDERED INCIDENTAL TO THE UNIT PRICE BID FOR DRY CYCLOPEAN STONE RIPRAP.

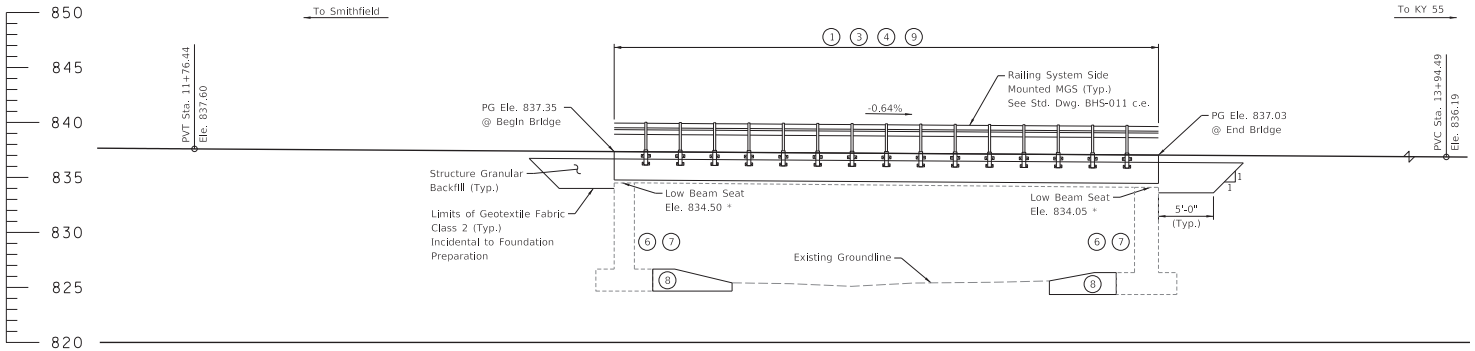

* Low beam seat elevations are from survey data of existing abutments. The Contractor shall verify the existing beam seat elevations.

Abutment 1
Exp.

Abutment 2
Fix

ELEVATION

48'-0" PPC Box Beam, SB21, Simple Span
HL93 x 125% Live Load – 45° Left Skew
24'-9" Bridge Roadway Width

REPAIRS

Repair No.	Description
1	Remove Existing Superstructure
2	Remove Concrete Wingwalls Above Beam Seat Elevation
3	Construct New Superstructure
4	Construct Railing System Side Mounted MGS
5	Place Concrete Wingwalls Above Beam Seat Elevation
6	Epoxy Injection Crack Repair
7	Concrete Coating
8	Place Cyclopean Stone Rip Rap
9	Concrete Sealing

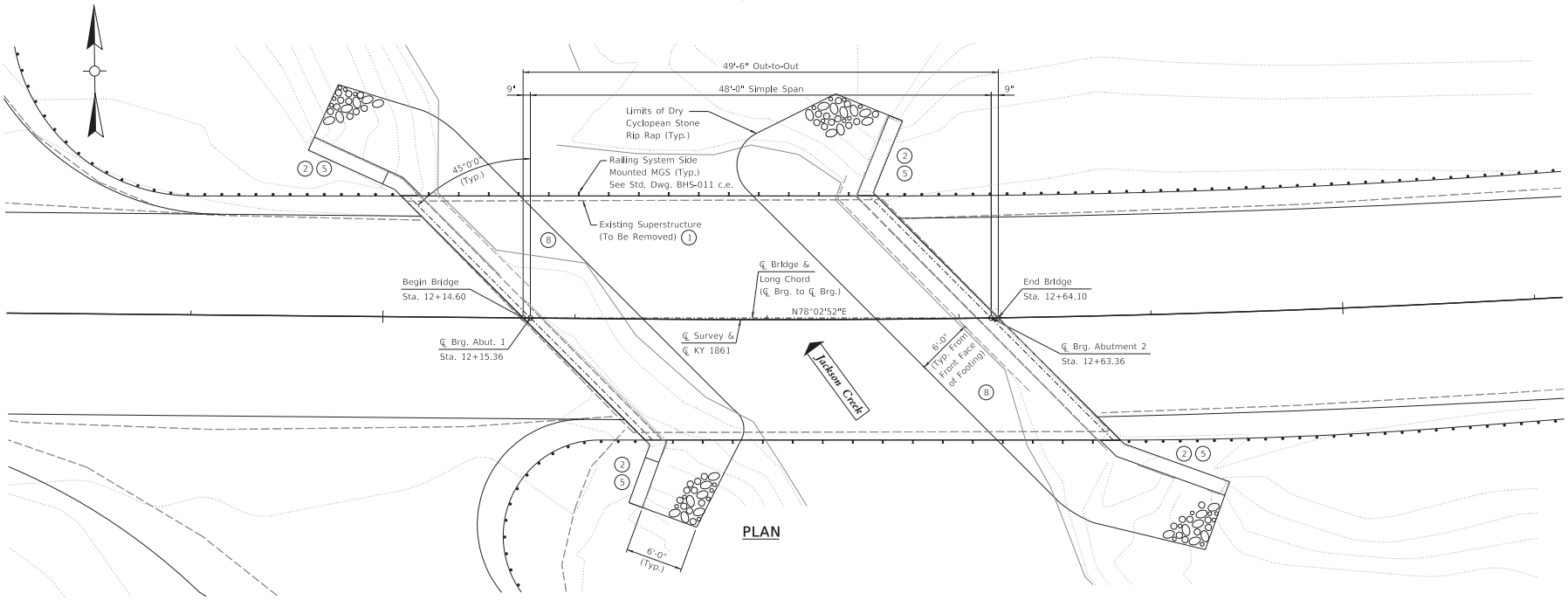

PLAN

COMMONWEALTH OF KENTUCKY DEPARTMENT OF HIGHWAYS	REVISION	DATE	PREPARED BY AECOM	DATE: 3/28/2023 DESIGNED BY: J. JONES DETAILED BY: J. JONES	CHECKED BY J. WHELAN J. WHELAN	LAYOUT CROSSING JACKSON CREEK	ROUTE KY 1861	ITEM NO. 5-10049 SHEET NO. S02	COUNTY OF HENRY DRAWING NUMBER 28668

MicroStation v10.16.0.80 USER: jason.jones1 DATE PLOTTED: 3/8/2023 3:36 PM FILE NAME: S02 LAYOUTCOPY.DGN

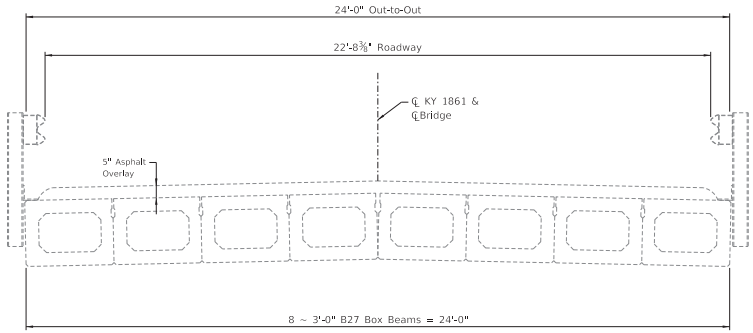

EXISTING TYPICAL SECTION

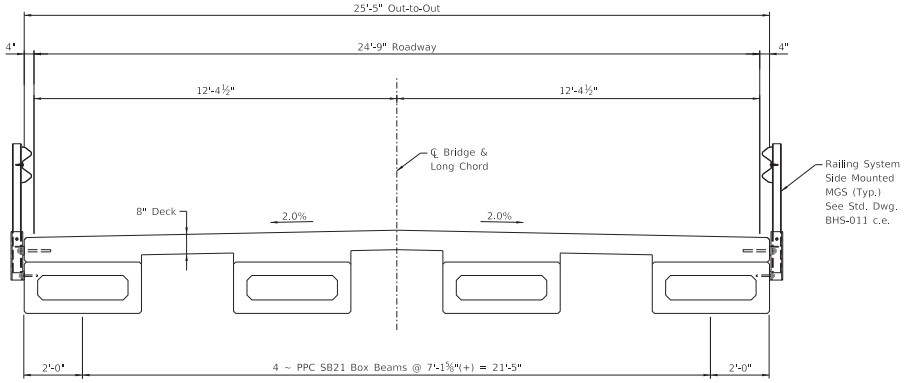

PROPOSED TYPICAL SECTION

NOTE:

1. Install drip strips in accordance with the Special Note For Stuctures With Over The Side Drainage And MGS Railing.

COMMONWEALTH OF KENTUCKY DEPARTMENT OF HIGHWAYS	REVISION	DATE	PREPARED BY AECOM	DATE: 3/28/2023	CHECKED BY	TYPICAL SECTION	ROUTE	ITEM NO. 5-10049	COUNTY OF HENRY
				DESIGNED BY: J. JONES	J. WHELAN	CROSSING JACKSON CREEK	KY 1861	SHEET NO. S03	DRAWING NUMBER 28668
				DETAILED BY: J. JONES	J. WHELAN				

MicroStation v10.16.0.80 USER: jason.jones1 DATE PLOTTED: 3/8/2023 2:39 PM FILE NAME: S03 TYPICAL SECTION.DGN

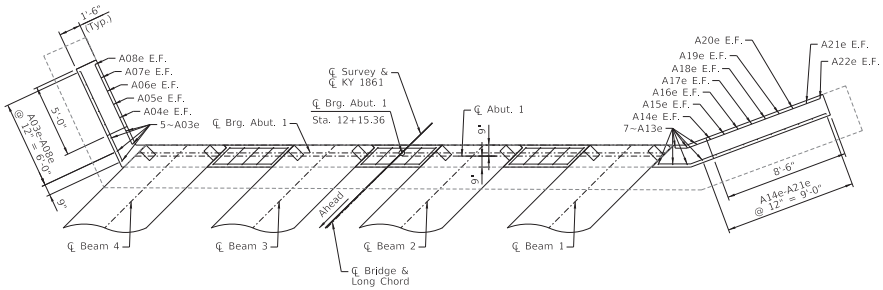

PLAN

BILL OF REINFORCEMENT - ABUTMENT 1

MARK	TYPE	SIZE	NO.	LENGTH FT.	LENGTH IN.	LOCATION	A FT.	A IN.	B FT.	B IN.	C FT.	C IN.	D FT.	D IN.
A01e	14	5	15	9	0	Diaphragm	2	5	1	7				
A02e	Str	5	18	4	1	Diaphragm								
A03e	Str	5	5	3	4	Wingwall								
A04e	Str	5	2	3	3	Wingwall								
A05e	Str	5	2	3	2	Wingwall								
A06e	Str	5	2	3	0	Wingwall								
A07e	Str	5	2	2	11	Wingwall								
A08e	Str	5	2	2	9	Wingwall								
A09e	Str	6	1	6	10	Wingwall								
A10e	Str	6	1	6	1	Wingwall								
A11e	Str	5	2	6	9	Wingwall								
A12e	Str	5	2	6	0	Wingwall								
A13e	Str	5	7	3	6	Wingwall								
A14e	Str	5	2	3	5	Wingwall								
A15e	Str	5	2	3	4	Wingwall								
A16e	Str	5	2	3	3	Wingwall								
A17e	Str	5	2	3	2	Wingwall								
A18e	Str	5	2	3	1	Wingwall								
A19e	Str	5	2	3	0	Wingwall								
A20e	Str	5	2	2	11	Wingwall								
A21e	Str	5	2	2	10	Wingwall								
A22e	Str	5	2	2	9	Wingwall								
A23e	Str	6	1	12	2	Wingwall								
A24e	Str	6	1	10	7	Wingwall								
A25e	Str	5	2	12	1	Wingwall								
A26e	Str	5	2	10	6	Wingwall								

TYPE 14

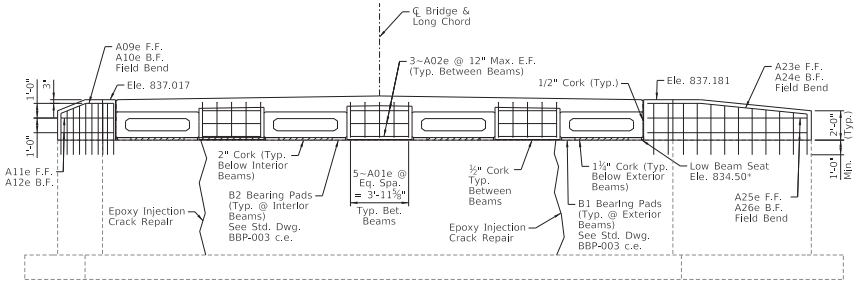

* Low beam seat elevation is from survey data of existing abutment. The Contractor shall verify the existing beam seat elevations.

ELEVATION

NOTE:

1. Remove and replace portions of the wingwalls above the beam seat elevations.

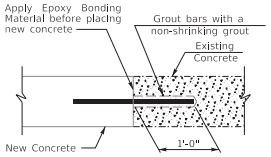

DOWEL DETAILS

NOTE: The cost of drilling holes, grouting, and epoxy bonding material shall be incidental to the cost of Class "AA" Concrete.

COMMONWEALTH OF KENTUCKY
DEPARTMENT OF HIGHWAYS

REVISION	DATE

PREPARED BY AECOM

DATE: 3/28/2023	CHECKED BY
DESIGNED BY: J. JONES	D. CIUCU
DETAILED BY: J. JONES	D. CIUCU

ABUTMENT 1

CROSSING: JACKSON CREEK

ROUTE: KY 1861

ITEM NO.: 5-10049

SHEET NO.: S04

COUNTY OF: HENRY

DRAWING NUMBER: 28668

MicroStation v10.16.0.80 USER: jason.jones1 DATE PLOTTED: 3/8/2023 2:14 PM FILE NAME: S04 ABUTMENT 1.DGN

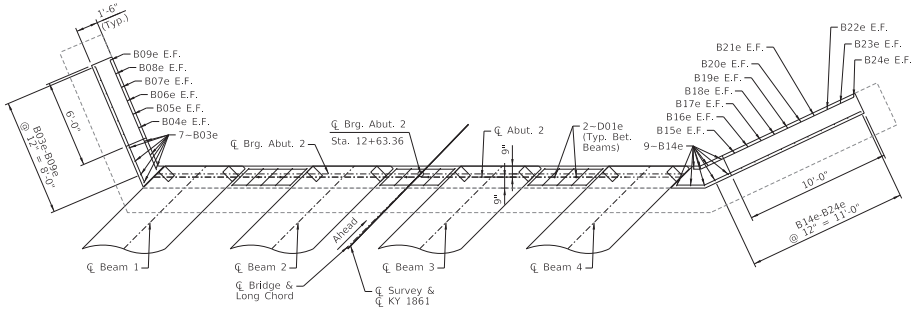

PLAN

BILL OF REINFORCEMENT - ABUTMENT 2

MARK	TYPE	SIZE	NO.	LENGTH FT.	LENGTH IN.	LOCATION	A FT.	A IN.	B FT.	B IN.	C FT.	C IN.	D FT.	D IN.
B01e	14	5	15	9	0	Diaphragm	2	5	1	7				
B02e	Str	5	18	4	1	Diaphragm								
B03e	Str	5	7	3	6	Wingwall								
B04e	Str	5	2	3	5	Wingwall								
B05e	Str	5	2	3	3	Wingwall								
B06e	Str	5	2	3	2	Wingwall								
B07e	Str	5	2	3	0	Wingwall								
B08e	Str	5	2	2	11	Wingwall								
B09e	Str	5	2	2	9	Wingwall								
B10e	Str	6	1	8	8	Wingwall								
B11e	Str	6	1	8	2	Wingwall								
B12e	Str	5	2	8	7	Wingwall								
B13e	Str	5	2	8	1	Wingwall								
B14e	Str	5	9	3	5	Wingwall								
B15e	Str	5	2	3	5	Wingwall								
B16e	Str	5	2	3	4	Wingwall								
B17e	Str	5	2	3	3	Wingwall								
B18e	Str	5	2	3	2	Wingwall								
B19e	Str	5	2	3	2	Wingwall								
B20e	Str	5	2	3	1	Wingwall								
B21e	Str	5	2	3	0	Wingwall								
B22e	Str	5	2	2	11	Wingwall								
B23e	Str	5	2	2	10	Wingwall								
B24e	Str	5	2	2	9	Wingwall								
B25e	Str	6	1	13	9	Wingwall								
B26e	Str	6	1	12	1	Wingwall								
B27e	Str	5	2	13	8	Wingwall								
B28e	Str	5	2	12	0	Wingwall								
D01e	Str	8	6	2	0	Dowel								

TYPE 14

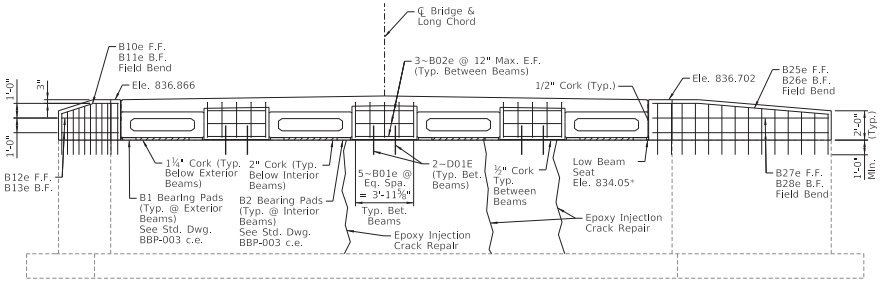

* Low beam seat elevation is from survey data of existing abutment. The Contractor shall verify the existing beam seat elevations.

ELEVATION

NOTE:

1. Remove and replace portions of the wingwalls above the beam seat elevations.

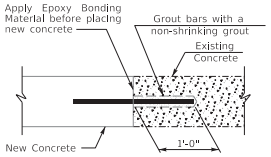

DOWEL DETAILS

NOTE: The cost of drilling holes, grouting, and epoxy bonding material shall be incidental to the cost of Class "AA" Concrete.

COMMONWEALTH OF KENTUCKY DEPARTMENT OF HIGHWAYS	REVISION	DATE	PREPARED BY AECOM	DATE: 3/28/2023	CHECKED BY	ABUTMENT 2	ROUTE	ITEM NO.	COUNTY OF
				DESIGNED BY: J. JONES	D. CIUCU	CROSSING	KY 1861	5-10049	HENRY
				DETAILED BY: J. JONES	D. CIUCU	JACKSON CREEK		SHEET NO. S05	DRAWING NUMBER 28668

MicroStation v10.16.0.80 USER: jason.jones1 DATE PLOTTED: 3/8/2023 2:17 PM FILE NAME: S05 ABUTMENT 2.DGN

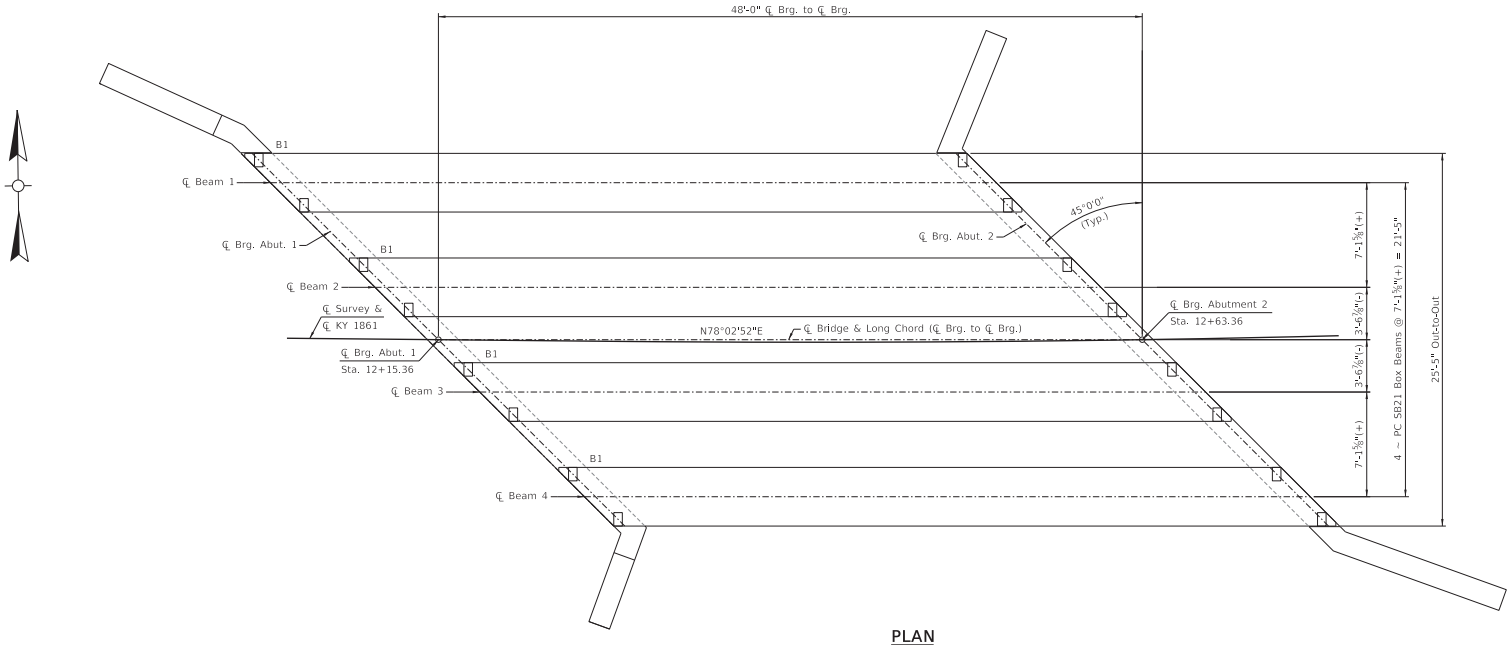

PLAN

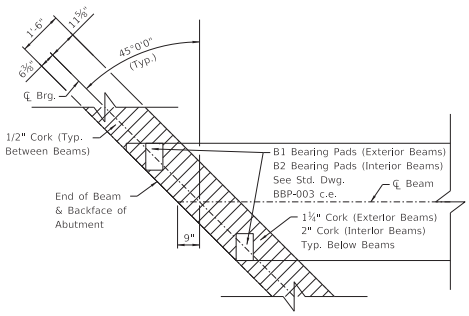

ABUTMENT BEARING DETAIL

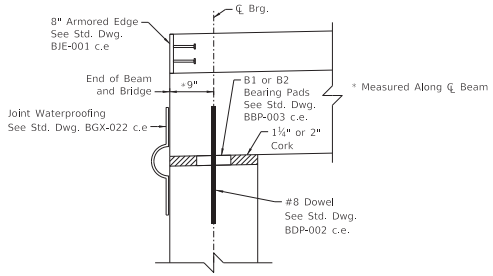

END OF BEAM DETAIL

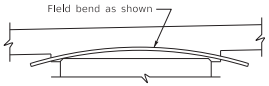

NOTE: Place 1" I.D. plastic pipe over beam, 4'-0" from each end, to vent air between bays. Work and material is incidental to superstructure concrete.

AIR VENT DETAIL

COMMONWEALTH OF KENTUCKY DEPARTMENT OF HIGHWAYS	REVISION	DATE	PREPARED BY AECOM	DATE: 3/28/2023	CHECKED BY	FRAMING PLAN	ROUTE	ITEM NO.	COUNTY OF
				DESIGNED BY: J. JONES	J. WHELAN	CROSSING	KY 1861	5-10049	HENRY
				DETAILED BY: J. JONES	J. WHELAN	JACKSON CREEK		SHEET NO. S06	DRAWING NUMBER 28668

MicroStation v10.16.0.80 USER: jason.jones1 DATE PLOTTED: 3/8/2023 2:44 PM FILE NAME: S06 FRAMING PLAN.DGN

Strand Data with number indicated in rows															Box Beam Data																			
Mark	Midspan							End							Total # of Strands	Concrete Stress (psi)		Total # of Beams	Approx. Weight (lbs.)	No. of C Bars			Dimensions						Straight Reinforcement				Maximum Allowable Camber
	Fully Stressed							Fully Stressed																										
	1	2						1	2							f'ci	f'c			C1e	C2e	C3e	A	B	C	D	E	F	Mark	Size	No.	Length	
B1	17	3						17	3						20	6000	7000	4	33309	56	52	4	49'-6"	7	6"	15"	32	15"	A1e	#4	7	49'-3"	3"

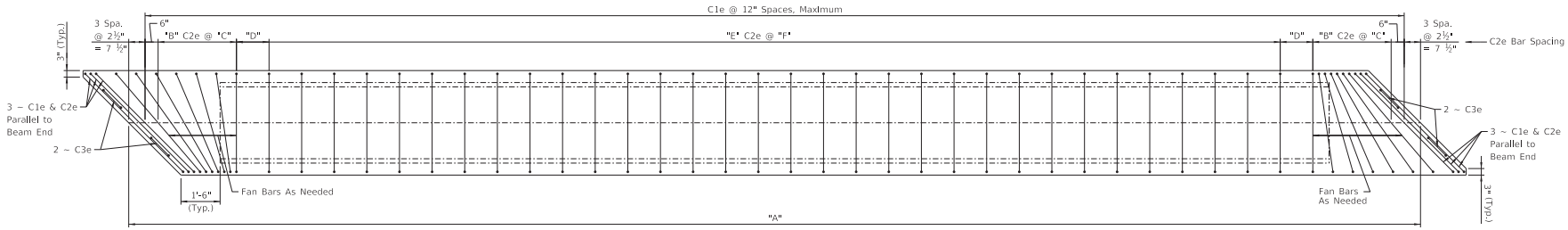

PLAN OF BEAM

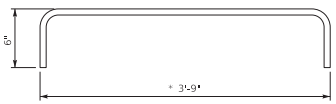

C1e Bar

#5 Stirrup Bar

* 3'-9" Or Varies As Necessary On Fanned/Skewed Bars

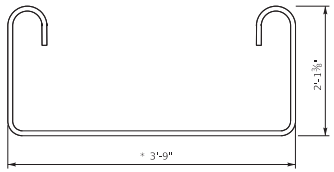

C2e Bar

#5 Stirrup Bar

* 3'-9" Or Varies As Necessary On Fanned/Skewed Bars

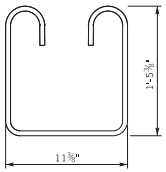

C3e Bar

#5 Stirrup Bar

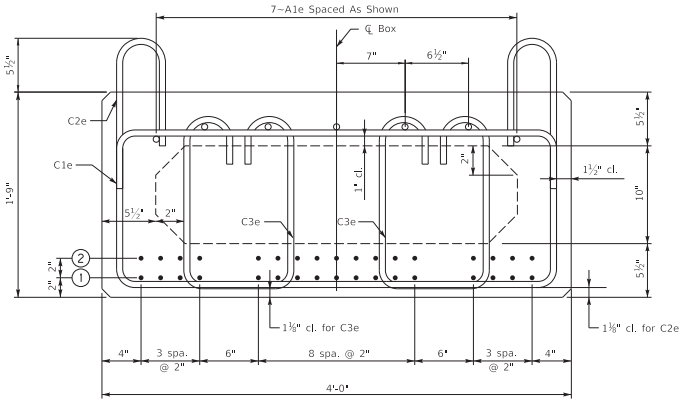

TYPICAL SECTION THROUGH BEAM

GENERAL NOTES

CONCRETE: Ensure prestressed girder concrete is in accordance with these plans and the specifications.

MATERIALS DESIGN SPECIFICATIONS: For prestressed beams:
FY = 60,000 psi F'S = 270,000 psi

PRESTRESSING REINFORCEMENT: Ensure that strands are ½" oversize (0.167 sq. in.), uncoated seven-wire stress relieved, low-relaxation conforming to AASHTO M 203, Grade 270. Billing of the cost for redesign of beam and subsequent plan modifications will be made for any request of alternate strand type of arrangment. The designer of the original plans is responsible for the billing and work.

CONSTRUCTION METHOD: Pretension all beams. Ensure concrete has attained f'ci (shown in the table) in standard test cylinders that are made and cured identically with the beams without bond stresses being transferred to the concrete or releasing the end anchors. Attain f'c (shown in the table) at or prior to 28 days. Apply an initial force of 33,817 lbs. per low-relaxation strand to develop a stress of 202,500 psi. No beam will be accepted that is honeycombed to the extent that strength of the beam or resistance to deterioration has been affected. An allowance of 0.0005L is made for shortening of beams due to shrinkage and elastic change. Show a detensioning plan by sequential numbering of the strand pattern on the shop plans.

LIFTING DEVICES: Detail lifting devices on the shop plans. Loads are to be distributed equally to each device.

BEARING DEVICES: Include the price for lead plates and/or bearing pads and any necessary galvanized metal shims in the bid for precast beams.

FABRICATION: The "Maximum Allowable Camber" shown on the beam sheet is the amount of camber, measured prior to casting the deck, above which the beam will begin to encorach into the slab. If the measured camber is greater than the "Maximum Allowable Camber" the Contractor will be responsible for any necessary adjustments to assure a minimum slab thickness of eight (8) inches as shown in the plans. This work will be considered incidental to the completion of the structure and have the approval of the Engineer.

REINFORCEMENT: Dimensions shown from the face of concrete to reinforcement are clear distances. Spacing of reinforcement is from center to center of reinforcement. Epoxy Coated Reinforcement shall be in accordance with Section 811.10 of the Specifications. All bars marked "s" shall be considered a stirrup for purposes of bend diameters.

MISCELLANEOUS DETAILS: See Std. Dwg. BDP-003 c.e. for typical box beam miscellaneous details.

COMMONWEALTH OF KENTUCKY DEPARTMENT OF HIGHWAYS	REVISION	DATE	PREPARED BY AECOM	DATE: 3/28/2023	CHECKED BY	PPC BOX BEAM SB21 DETAILS	ROUTE	ITEM NO.	COUNTY OF
				DESIGNED BY: D. CIUCU	J. WHELAN	CROSSING	KY 1861	5-10049	HENRY
				DETAILED BY: J. JONES	D. CIUCU	JACKSON CREEK		SHEET NO. S07	DRAWING NUMBER 28668

MicroStation v10.16.0.80 USER: jason.jones1 DATE PLOTTED: 3/9/2023 10:01 AM FILE NAME: S07 PPC BOX BEAM SB21 DETAILS.DGN

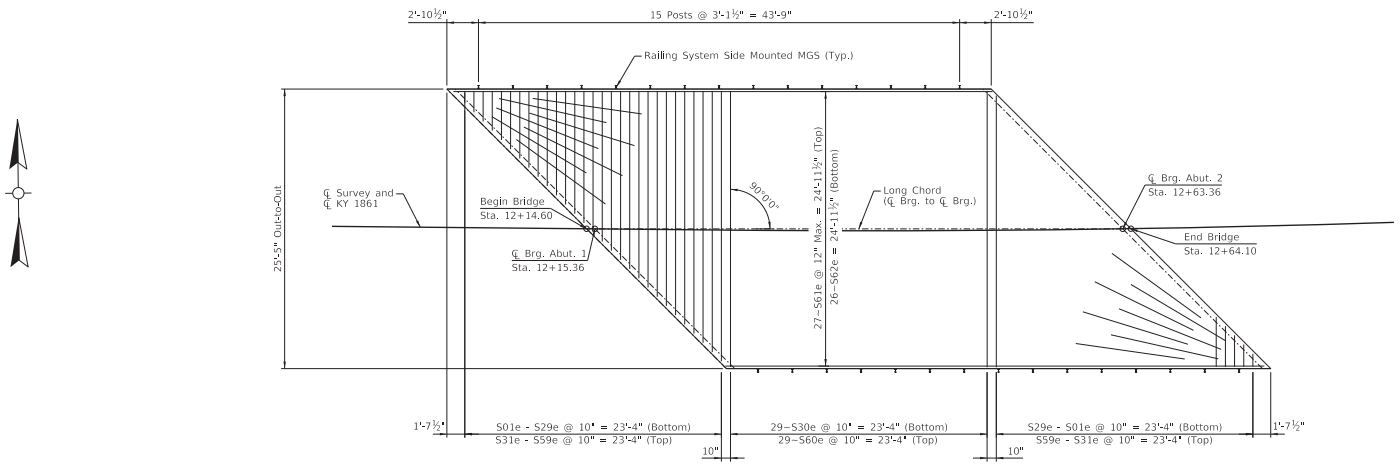

PLAN OF SLAB

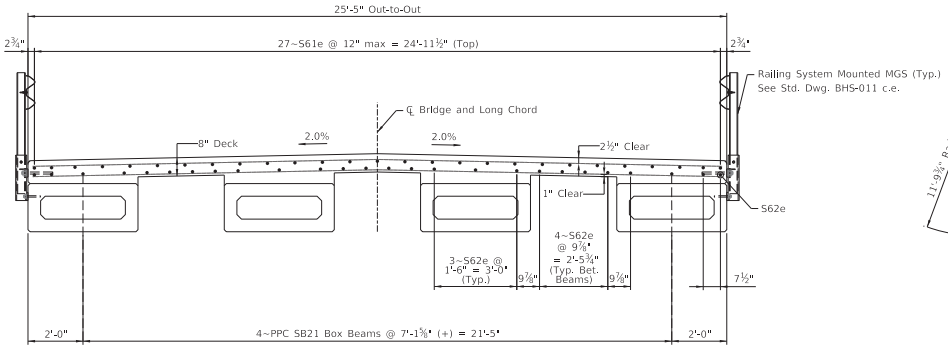

TYPICAL SECTION

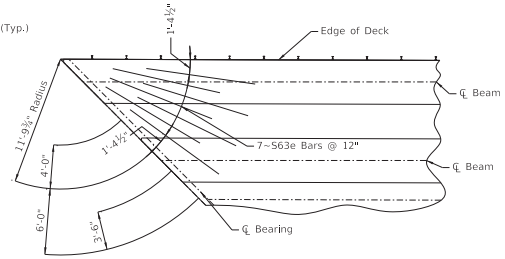

TYPICAL CORNER REINFORCING DETAILS

COMMONWEALTH OF KENTUCKY DEPARTMENT OF HIGHWAYS	REVISION	DATE	PREPARED BY AECOM	DATE: 3/28/2023	CHECKED BY	*SUPERSTRUCTURE*	ROUTE	ITEM NO. 5-10049	COUNTY OF HENRY
				DESIGNED BY: D. CIUCU	J. JONES	CROSSING JACKSON CREEK	KY 1861	SHEET NO. S08	DRAWING NUMBER 28668
				DETAILED BY: D. CIUCU	J. JONES				

MicroStation v10.16.0.80 USER: jason.jones1 DATE PLOTTED: 3/8/2023 3:05 PM FILE NAME: S08 SUPERSTRUCTURE.DGN

BILL OF REINFORCEMENT - SUPERSTRUCTURE

MARK	TYPE	SIZE	NO.	LENGTH		LOCATION	A		B		C		D	
				FT.	IN.		FT.	IN.	FT.	IN.	FT.	IN.	FT.	IN.
S01e	Str	6	2	1	1	Bottom Slab								
S02e	Str	6	2	1	11	Bottom Slab								
S03e	Str	6	2	2	9	Bottom Slab								
S04e	Str	6	2	3	7	Bottom Slab								
S05e	Str	6	2	4	5	Bottom Slab								
S06e	Str	6	2	5	3	Bottom Slab								
S07e	Str	6	2	6	1	Bottom Slab								
S08e	Str	6	2	6	11	Bottom Slab								
S09e	Str	6	2	7	9	Bottom Slab								
S10e	Str	6	2	8	7	Bottom Slab								
S11e	Str	6	2	9	5	Bottom Slab								
S12e	Str	6	2	10	4	Bottom Slab								
S13e	Str	6	2	11	2	Bottom Slab								
S14e	Str	6	2	12	0	Bottom Slab								
S15e	Str	6	2	12	10	Bottom Slab								
S16e	Str	6	2	13	8	Bottom Slab								
S17e	Str	6	2	14	6	Bottom Slab								
S18e	Str	6	2	15	4	Bottom Slab								
S19e	Str	6	2	16	2	Bottom Slab								
S20e	Str	6	2	17	0	Bottom Slab								
S21e	Str	6	2	17	10	Bottom Slab								
S22e	Str	6	2	18	8	Bottom Slab								
S23e	Str	6	2	19	6	Bottom Slab								
S24e	Str	6	2	20	4	Bottom Slab								
S25e	Str	6	2	21	2	Bottom Slab								
S26e	Str	6	2	22	0	Bottom Slab								
S27e	Str	6	2	22	10	Bottom Slab								
S28e	Str	6	2	23	9	Bottom Slab								
S29e	Str	6	2	24	7	Bottom Slab								
S30e	Str	6	29	25	1	Bottom Slab								
S31e	Str	5	2	1	1	Top Slab								
S32e	Str	5	2	1	11	Top Slab								
S33e	Str	5	2	2	9	Top Slab								
S34e	Str	5	2	3	7	Top Slab								
S35e	Str	5	2	4	5	Top Slab								
S36e	Str	5	2	5	3	Top Slab								
S37e	Str	5	2	6	1	Top Slab								
S38e	Str	5	2	6	11	Top Slab								
S39e	Str	5	2	7	9	Top Slab								
S40e	Str	5	2	8	7	Top Slab								
S41e	Str	5	2	9	5	Top Slab								
S42e	Str	5	2	10	4	Top Slab								
S43e	Str	5	2	11	2	Top Slab								
S44e	Str	5	2	12	0	Top Slab								
S45e	Str	5	2	12	10	Top Slab								
S46e	Str	5	2	13	8	Top Slab								
S47e	Str	5	2	14	6	Top Slab								
S48e	Str	5	2	15	4	Top Slab								
S49e	Str	5	2	16	2	Top Slab								
S50e	Str	5	2	17	0	Top Slab								
S51e	Str	5	2	17	10	Top Slab								
S52e	Str	5	2	18	8	Top Slab								
S53e	Str	5	2	19	6	Top Slab								
S54e	Str	5	2	20	4	Top Slab								
S55e	Str	5	2	21	2	Top Slab								
S56e	Str	5	2	22	0	Top Slab								
S57e	Str	5	2	22	10	Top Slab								
S58e	Str	5	2	23	9	Top Slab								
S59e	Str	5	2	24	7	Top Slab								
S60e	Str	5	29	25	1	Top Slab								
S61e	Str	5	27	49	0	Top Slab								
S62e	Str	5	26	49	0	Bottom Slab								
S63e	Str	6	14	10	0	Corner Reinforcement								

COMMONWEALTH OF KENTUCKY
DEPARTMENT OF HIGHWAYS

REVISION	DATE

PREPARED BY AECOM

DATE: 3/28/2023	CHECKED BY	SUPERSTRUCTURE
DESIGNED BY: D. CIUCU	J. JONES	CROSSING: JACKSON CREEK
DETAILED BY: D. CIUCU	J. JONES	

ROUTE	ITEM NO.	COUNTY OF
KY 1861	5-10049	HENRY
	SHEET NO. S09	DRAWING NUMBER 28668

MicroStation v10.16.0.80 USER: jason.jones1 DATE PLOTTED: 3/8/2023 3:09 PM FILE NAME: S09 SUPERSTRUCTURE BILL OF REINFORCEMENT.DGN

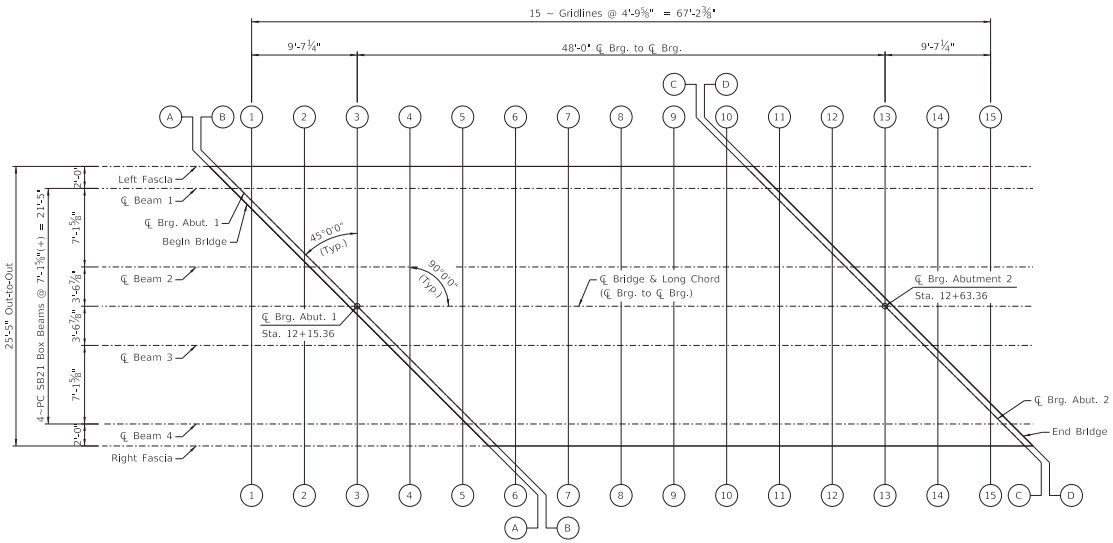

GRID LAYOUT

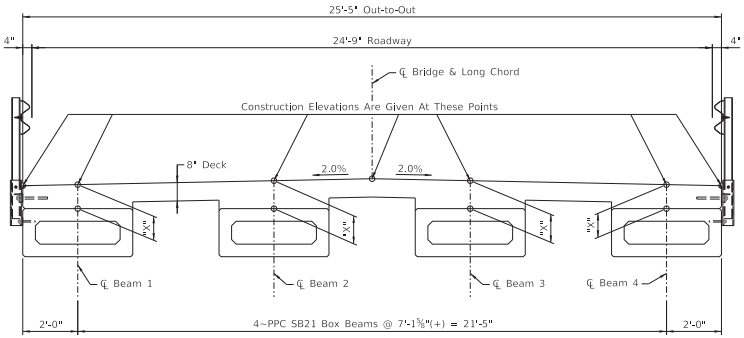

TYPICAL SECTION

NOTES FOR ELEVATIONS TAKEN ON PRESTRESSED CONCRETE BEAMS

Take elevations on top of beam at points indicated by the grid layout. The beam elevations are to be read to three decimals, and entered in tables under "Top of Beam" elevations.

Compute dimension "X" as follows: "Construction Elevation" minus" Top of Beam" elevation equals dimension "X". Construction Elevations include camber due to weight of the concrete slab and railing. Measuring of dimension "X" gives the final check on beam tolerances for camber, beam damage, and errors in erection that produce reverse cambers, sags, and unsightly fascia beams.

For setting templates, measure dimension "X" above top of beams for top of template. Do not set template by elevations.

Temporary supports or shoring will not be permitted under the girders when pouring the concrete floor slab or when taking "Top of Beam" elevations.

The elevations at centerline of bridge do not include the ⅜" deduction for parbolic crown.

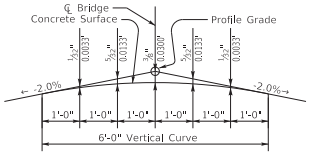

PARABOLIC CROWN

COMMONWEALTH OF KENTUCKY DEPARTMENT OF HIGHWAYS	REVISION	DATE	PREPARED BY AECOM	DATE: 3/28/2023	CHECKED BY	CONSTRUCTION ELEVATIONS	ROUTE	ITEM NO.	COUNTY OF
				DESIGNED BY: D. CIUCU	J. JONES	CROSSING	KY 1861	5-10049	HENRY
				DETAILED BY: J. JONES	D. CIUCU	JACKSON CREEK		SHEET NO.	DRAWING NUMBER
								S10	28668

MicroStation v10.16.0.80 USER: jason.jones1 DATE PLOTTED: 3/8/2023 3:50 PM FILE NAME: S10 CONSTRUCTION ELEVATIONS.DGN

CONSTRUCTION ELEVATIONS

LOCATION	LEFT FASCIA	℄ BEAM 1			℄ BEAM 2			℄ BRIDGE & LONG CHORD	℄ BEAM 3			℄ BEAM 4			RIGHT FASCIA
		CONSTR. ELEV.	TOP OF BEAM	DIM. "X"	CONSTR. ELEV.	TOP OF BEAM	DIM. "X"		CONSTR. ELEV.	TOP OF BEAM	DIM. "X"	CONSTR. ELEV.	TOP OF BEAM	DIM. "X"	
Skew Line AA	837.181	837.208			837.305			837.353	837.259			837.070			837.017
Skew Line BB	837.176	837.203			837.300			837.348	837.254			837.065			837.012
Skew Line CC	836.866	836.893			836.990			837.038	836.943			836.755			836.702
Skew Line DD	836.861	836.888			836.985			837.033	836.939			836.750			836.697
Grid Line 1	837.166	837.200			-			-	-			-			-
Grid Line 2	837.147	837.182			-			-	-			-			-
Grid Line 3	837.126	837.162			837.290			837.348	-			-			-
Grid Line 4	837.102	837.140			837.274			837.335	837.251			-			-
Grid Line 5	837.075	837.114			837.255			837.318	837.236			-			-
Grid Line 6	837.043	837.084			837.232			837.297	837.218			837.052			837.006
Grid Line 7	837.007	837.050			837.205			837.273	837.197			837.034			836.989
Grid Line 8	836.968	837.012			837.172			837.245	837.172			837.012			836.968
Grid Line 9	836.927	836.971			837.135			837.211	837.143			836.988			836.945
Grid Line 10	836.882	836.928			837.094			837.173	837.107			836.960			836.919
Grid Line 11	-	-			837.050			837.131	837.068			836.928			836.889
Grid Line 12	-	-			837.002			837.086	837.026			836.891			836.854
Grid Line 13	-	-			-			837.038	836.980			836.852			836.816
Grid Line 14	-	-			-			-	-			836.810			836.775
Grid Line 15	-	-			-			-	-			836.765			836.731

SPECIAL NOTE FOR CONTRACT COMPLETION DATE AND LIQUIDATED DAMAGES ON BRIDGE REPAIR CONTRACTS

I. COMPLETION DATE.

Upon Notice to Proceed, the Contractor has the option of selecting the Begin Work date. Once selected, notify the Department in writing of the date selected at least two weeks prior to beginning work and provide a proposed project schedule. All work is to be completed by the specified contract completion date. The Contractor is allotted 75 calendar days once the bridge is closed to complete all work to safely reopen the structure with no lane closures. At a minimum, prior to reopening the bridge to traffic, all strength requirements and curing for materials used shall be completed per Division 600 of the Standard Specifications. Guardrail shall be installed to the satisfaction of the Engineer prior to reopening the bridge to traffic unless prior approval is obtained from the engineer for use of temporary railing.

The Engineer will begin charging calendar days for a structure on the day the Contractor closes the structure to traffic, regardless of holidays or seasonal weather limitations.

II. LIQUIDATED DAMAGES.

Liquidated damages will be assessed to the Contractor in accordance with the Transportation Cabinet, Department of Highway's current Standard Specifications for Road and Bridge Construction, Section 108.09, when either the allotted number of calendar days or the specified completion date is exceeded.

Contrary to the Standard Specifications, liquidated damages will be assessed to the Contractor during the months of December, January, February and March when the contract time has expired on any individual bridge. Contract time will be charged during these months. All construction must be completed in accordance with the weather limitations specified in Section 606 and/or Section 601 as applicable. No extension of Contract time will be granted due to inclement weather or temperature limitations that occur due to starting work on the Contract or a structure late in the construction season.

Any approval of cold weather plans or allowance of construction operations to occur outside Section 606 and/or Section 601 does not alleviate the 75 day maximum bridge closure. In the event the closure lasts longer than 75 calendar days as specified, liquidated damages will apply to all excess days regardless of weather limitations.

SPECIAL NOTE

Seasonal Tree Clearing Restriction

DUE TO THE RECOVERY PLAN FOR ENDANGERED BATS, NO TREE CLEARING IS PERMITTED FROM JUNE 1 THROUGH JULY 31.

If there are any questions regarding this note, please contact Danny Peake, Director, Division of Environmental Analysis, 200 Mero Street, Frankfort, KY 40601, Phone (502) 564-7250.

Special Note for Bridge Demolition, Renovation and Asbestos Abatement

If the project includes any bridge demolition or renovation, the successful bidder is required to notify Kentucky Division for Air Quality (KDAQ) via filing of form (DEP 7036) a minimum of 10 working days prior to commencement of any bridge demolition or renovation work.

Any available information regarding possible asbestos containing materials (ACM) on or within bridges to be affected by the project has been included in the bid documents. These are to be included with the Contractor's notification filed with the KDAQ. If not included in the bid documents, the Department will provide that information to the successful bidder for inclusion in the KDAQ notice as soon as possible. If there are no documents stating otherwise, the bidders should assume there are no asbestos containing materials that will in any way affect the work.

Linebach ▪ Funkhouser, Inc.
ENVIRONMENTAL COMPLIANCE & CONSULTING

Asbestos Inspection Report

To: Tom Springer, QK4, Inc.

Date: November 1, 2022

Conducted By: Russell H. Brooks, LFI, Inc.
Kentucky Accredited Asbestos Inspector #71841

Project and Structure Identification

Project: Henry County: Item No. 5-10049

Structure ID: #052B00062N

Structure Location: Sunnyside Drive over Jackson Creek, Henry County, Kentucky

Sample Description: No suspect asbestos containing (ACM) were observed

Inspection Date: October 27, 2022

Results and Recommendations

The asbestos inspection was performed in accordance with current United States Environmental Protection Agency (US EPA) regulations, specifically 40 CFR Part 61, Asbestos National Emissions Standards for Hazardous Air Pollutants (NESHAP) revision, final rule effective November 20, 1990.

It is recommended that this report accompany the 10-Day Notice of Intent for Demolition (DEP7036 Form) which is to be submitted to the Kentucky Division of Air Quality prior to abatement, demolition, or renovation of any building or structure in the Commonwealth through the e-portal at https://dep.gateway.ky.gov/eForms/Account/Home.aspx.

No suspect asbestos containing (ACM) were observed.

Commonwealth of Kentucky

Department for Environmental Protection
Division for Air Quality

Russell Henry Brooks

Has met the requirements of 401 KAR 58:005 and is accredited as an:

Asbestos Inspector

Agency Interest Id:	**138451**
License Number:	**71841**
Issue Date:	**03/24/2022**
Expiration Date:	**03/15/2023**

PAGE 1 OF
INITIAL SUBMITTAL DATE
REVISION DATE
NOTIFICATION # -

NOTIFICATION OF ASBESTOS ABATEMENT/DEMOLITION/RENOVATION

(Instructions for completing form on back)

****File this form with Regional Office where project will be performed****

Kentucky Division for Air Quality
300 Sower Boulevard, 2nd Floor
Frankfort, KY 40601

OFFICE USE ONLY
ID #
LOG #

Contractor _____
Address _____
City _____ State _____ Zip _____
Phone _____ Contact Person _____

Owner _____
Address _____
City _____ State _____ Zip _____
Phone _____ Contact Person _____

Project Location _____
Address _____
City _____ State _____ Zip _____
Facility Age (yrs.) _____ Size of Facility or Affected Part (sq.ft.) _____
#Floors Affected _____ Present and Prior Use of Facility _____

TYPE OF PROJECT (CHECK ONLY ONE):

Renovation ☐ Demolition ☐ Ordered Demolition ☐ Emergency ☐ Long-term ☐

PROJECT DATES:

Start Removal _____ End Removal _____
Start Renovation/Demolition _____ End Renovation/Demolition _____

Amount of ACM to be Removed:

	Regulated ACM (RACM)	Category II nonfriable ACM (optional)	Category I nonfriable ACM (optional)
Linear Feet			
Square Feet			
Cubic Feet			

Description of planned renovation/demolition, including abatement methods & demo/reno methods. _____

Description of affected facility components _____

Asbestos detection technique _____

Amount of Cat. I & II nonfriable ACM involved but will not be removed:

Describe **physical characteristics** that make it nonfriable and **methods** to keep it nonfriable (optional): _____

Describe **contingency plan** should nonfriable ACM become friable or additional ACM be uncovered during renovation/ demolition: _____

Transporter _____
Address _____
City _____ State _____ Zip _____
Phone _____

Disposal Site _____
Address _____
City _____ State _____ Zip _____

I hereby certify that at least one person trained as required by 40 CFR 61.145(c)(8) will supervise the abatement work described herein. (optional for strictly non-friable work)

Submitted by: _____

Company Name: _____

INSTRUCTIONS FOR COMPLETING FORM DEP7036: NOTIFICATION OF ASBESTOS ABATEMENT/DEMOLITION/RENOVATION

Filing Deadline: This form must be completed and filed with the Kentucky Division for Air Quality at least ten (10) working days before starting any asbestos removal, demolition, or other work which will disturb asbestos-containing material (ACM) in Kentucky facilities outside Jefferson County and in schools statewide, including Jefferson County. File with appropriate Regional Office.
Renotification: If developments occur that invalidate information on a notification (e.g., changes in dates, amounts, locations), file a revised form within the time frames specified in 401 KAR 58:025. Notifications may be numbered in the top-left corner (optional). First two digits are project year; remaining digits are project number (e.g., the first project in 1999 is 99-1).
Attachments: Attachments may be included to provide additional information, propose alternative procedures, declare nonfriable removal, identify secondary transporters, etc.

Line-by-Line Instructions:
Contractor/Owner: the contractor is the asbestos remover (or, for zero-asbestos demolitions, the demolition contractor). The owner is the entity having the work done.
Project Location: The location at the address given where the work is taking place (e.g., which building/floor/room?).
Present/Prior Use: Enter the present and prior use(s) of the facility.
Type of Project: Each choice shown in this category has a specific description under 401 KAR 58:025:

Emergency renovations result from a sudden, unexpected event. If the project is an emergency renovation, attach a detailed description of the sudden, unexpected event that necessitated removal. Include the exact date and hour the event occurred and explain how the event caused an unsafe condition, or would cause equipment damage or unreasonable financial burden.

Planned renovations are renovations that do not qualify as emergency renovations.

A long-term notification is a type of planned renovation which involves a number of nonscheduled small-scale removals whose annual total exceeds the NESHAP threshold amounts and can be estimated based on past years' experience. File yearly estimate at least 10 working days before the beginning of the calendar year for which a long-term notification is being given.

Demolitions involve the wrecking or taking out of a load-supporting structural member, such as a load-bearing beam or wall. Tearing down a structure, dismantling it piecemeal, and moving it from one place to another are all considered demolitions.

Ordered demolitions must result from a demolition order issued by a government agency because the building is structurally unsound and in danger of imminent collapse. For ordered demolitions, attach to the notification a signed, dated copy of order that includes demolition deadlines and name/title/authority of the government representative issuing the order.

Project Dates: Schedules must be precise and accurate. The "start removal" date is the date the removers arrive on-site and begin physically preparing the work area for removal. "End removal" is the date the removers dismantle the work area after cleaning and clearing it. If circumstances arise that invalidate previously submitted start dates, a revised notification must be submitted showing the updated, correct start date. If the start date has been moved up, submit written renotification at least ten working days before the new start date. If the start date has been moved back, telephone the Division as soon as possible before the original date and submit written renotification no later than the original start date.
Schedules for renovation and demolition (next line after removal schedule) are handled similarly, except that renotification is required only for schedule changes involving demolitions, not renovations.
Amount of ACM: In this table, enter the amount and type (RACM , Category I, and/or Category II) of asbestos that will be removed. Although the regulation does not require you to identify the amount of nonfriable ACM that will be removed, the table provides space for nonfriable ACM to accommodate those notifiers who choose to document these removals.
Description of project: Describe the demolition or renovation work to be performed and method(s) to be used , including work practices and engineering controls to be used.
Asbestos Detection Technique: Give a general description of the asbestos survey, for example, "AHERA-style survey by accredited inspector; samples analyzed by PLM."
Amount of nonfriable ...: If all nonfriable ACM will be properly removed, enter "NA."
Contingency Plans: If Category II nonfriable ACM becomes crumbled, pulverized, or reduced to powder, or if additional RACM is discovered, describe procedures to be followed. For example, "Move demolition activity away from ACM immediately; remove the ACM using regulation-required procedures." Even "Stop work, call Division for Air Quality" is OK.

TEAM KENTUCKY TRANSPORTATION CABINET

KENTUCKY TRANSPORTATION CABINET
Department of Highways
DIVISION OF RIGHT OF WAY & UTILITIES

TC 62-226
Rev. 01/2016
Page 1 of 1

RIGHT OF WAY CERTIFICATION

☒ Original	☐ Re-Certification	RIGHT OF WAY CERTIFICATION	
ITEM #	COUNTY	PROJECT # (STATE)	PROJECT # (FEDERAL)
05-10049	Henry	1100 FD55 121 9414002R	
PROJECT DESCRIPTION			
Kentucky Bridge Program - 052B00062N - KY 1861 over Jackson Creek			

☐ No Additional Right of Way Required

Construction will be within the limits of the existing right of way. The right of way was acquired in accordance to FHWA regulations under the Uniform Relocation Assistance and Real Property Acquisitions Policy Act of 1970, as amended. No additional right of way or relocation assistance were required for this project.

☒ Condition # 1 (Additional Right of Way Required and Cleared)

All necessary right of way, including control of access rights when applicable, have been acquired including legal and physical possession. Trial or appeal of cases may be pending in court but legal possession has been obtained. There may be some improvements remaining on the right-of-way, but all occupants have vacated the lands and improvements, and KYTC has physical possession and the rights to remove, salvage, or demolish all improvements and enter on all land. Just Compensation has been paid or deposited with the court. All relocations have been relocated to decent, safe, and sanitary housing or that KYTC has made available to displaced persons adequate replacement housing in accordance with the provisions of the current FHWA directive.

☐ Condition # 2 (Additional Right of Way Required with Exception)

The right of way has not been fully acquired, the right to occupy and to use all rights-of-way required for the proper execution of the project has been acquired. Some parcels may be pending in court and on other parcels full legal possession has not been obtained, but right of entry has been obtained, the occupants of all lands and improvements have vacated, and KYTC has physical possession and right to remove, salvage, or demolish all improvements. Just Compensation has been paid or deposited with the court for most parcels. Just Compensation for all pending parcels will be paid or deposited with the court prior to AWARD of construction contract

☐ Condition # 3 (Additional Right of Way Required with Exception)

The acquisition or right of occupancy and use of a few remaining parcels are not complete and/or some parcels still have occupants. All remaining occupants have had replacement housing made available to them in accordance with 49 CFR 24.204. KYTC is hereby requesting authorization to advertise this project for bids and to proceed with bid letting even though the necessary right of way will not be fully acquired, and/or some occupants will not be relocated, and/or the just compensation will not be paid or deposited with the court for some parcels until after bid letting. KYTC will fully meet all the requirements outlined in 23 CFR 635.309(c)(3) and 49 CFR 24.102(j) and will expedite completion of all acquisitions, relocations, and full payments after bid letting and prior to AWARD of the construction contract or force account construction.

Total Number of Parcels on Project	2	EXCEPTION (S) Parcel #	ANTICIPATED DATE OF POSSESSION WITH EXPLANATION
Number of Parcels That Have Been Acquired			
Signed Deed	2		
Condemnation	0		
Signed ROE	0		

Notes/ Comments (Text is limited. Use additional sheet if necessary.)

LPA RW Project Manager		Right of Way Supervisor	
Printed Name		Printed Name	Mark C. Askin, P.E.
Signature		Signature	
Date		Date	04/10/2023
Right of Way Director		**FHWA**	
Printed Name	Dean M. Loy	Printed Name	
Signature		Signature	
Date		Date	

UTILITIES AND RAIL CERTIFICATION NOTE

Henry County
FD04 021 94140 02U
Mile point: 3.925 TO 3.935
BRIDGE PROJECT IN HENRY COUNTY ON (052B00062N) KY 1861 AT JACKSON CREEK
ITEM NUMBER: 05-10049.00

PROJECT NOTES ON UTILITIES

For all projects under 2000 Linear feet which require a normal excavation locate request pursuant to KRS 367.4901-4917, the awarded contractor shall field mark the proposed excavation or construction boundaries of the project (also called white lining) using the procedure set forth in KRS 367.4909(9)(k). For all projects over 2000 linear feet, which are defined as a "Large Project" in KRS 367.4903(18), the awarded contractor shall initially mark the first 2000 linear feet minimally of proposed excavation or construction boundaries of the project to be worked using the procedure set forth in KRS 367.4909(9)(k). This temporary field locating of the project excavation boundary shall take place prior to submitting an excavation location request to the underground utility protection Kentucky Contact Center. For large projects, the awarded contractor shall work with the impacted utilities to determine when additional white lining of the remainder of the project site will take place. This provision shall not alter or relieve the awarded contractor from complying with requirements of KRS 367.4905 to 367.4917 in their entirety.

Please Note: The information presented in this Utility Note is informational in nature and the information contained herein is not guaranteed.

The contractor will be responsible for contacting all utility facility owners on the subject project to coordinate his activities. The contractor will coordinate his activities to minimize and, where possible, avoid conflicts with utility facilities. Due to the nature of the work proposed, it is unlikely to conflict with the existing utilities beyond minor facility adjustments. Where conflicts with utility facilities are unavoidable, the contractor will coordinate any necessary relocation work with the facility owner and Resident Engineer. The Kentucky Transportation Cabinet maintains the right to remove or alter portions of this contract if a utility conflict occurs. The utility facilities as noted in the previous section(s) have been determined using data garnered by varied means and with varying degrees of accuracy: from the facility owners, a result of S.U.E., field inspections, and/or reviews of record drawings. The facilities defined may not be inclusive of all utilities in the project scope and are not Level A quality, unless specified as such. It is the contractor's responsibility to verify all utilities and their respective locations before excavating.

The contractor shall make every effort to protect underground facilities from damage as prescribed in the Underground Facility Damage Protection Act of 1994, Kentucky Revised Statute KRS 367.4901 to 367.4917. It is the contractor's responsibility to determine and take steps necessary to be in compliance with federal and state damage prevention directives. The contractor is instructed to contact KY 811 for

UTILITIES AND RAIL CERTIFICATION NOTE

Henry County
FD04 021 94140 02U
Mile point: 3.925 TO 3.935
BRIDGE PROJECT IN HENRY COUNTY ON (052B00062N) KY 1861 AT JACKSON CREEK
ITEM NUMBER: 05-10049.00

the location of existing underground utilities. Contact shall be made a minimum of two (2) and no more than ten (10) business days prior to excavation. The contractor shall submit Excavation Locate Requests to the Kentucky Contact Center (KY 811) via web ticket entry. The submission of this request does not relieve the contractor from the responsibility of contacting non-member facility owners, whom are to be contacted through their individual Protection Notification Center. It may be necessary for the contractor to contact the County Court Clerk to determine what utility companies have facilities in the area. Non-compliance with these directives can result in the enforcement of penalties.

Utility coordination efforts determined that no significant utility relocation work is required to complete the project. Any work pertaining to these utility facilities is defined in the bid package and is to be carried out as instructed by the Kentucky Transportation Cabinet. The contractor will be responsible for any coordination or adjustments that are discussed or quantified in the proposal.

NOTE: DO NOT DISTURB THE FOLLOWING FACILITIES LOCATED WITHIN THE PROJECT DISTURB LIMITS

Henry County Water District #2 – Water line in proximity to project. Contractor should locate and avoid impact to waterline.

AT&T - KY - Communication

Shelby Energy Cooperative, Inc. - Electric

The Contractor is fully responsible for protection of all utilities listed above

UTILITIES AND RAIL CERTIFICATION NOTE

Henry County
FD04 021 94140 02U
Mile point: 3.925 TO 3.935
BRIDGE PROJECT IN HENRY COUNTY ON (052B00062N) KY 1861 AT JACKSON CREEK
ITEM NUMBER: 05-10049.00

THE FOLLOWING FACILITY OWNERS ARE RELOCATING/ADJUSTING THEIR FACILITIES WITHIN THE PROJECT LIMITS AND WILL BE COMPLETE PRIOR TO CONSTRUCTION

Not Applicable

THE FOLLOWING FACILITY OWNERS HAVE FACILITIES TO BE RELOCATED/ADJUSTED BY THE OWNER OR THEIR SUBCONTRACTOR AND IS TO BE COORDINATED WITH THE ROAD CONTRACT

Not Applicable

THE FOLLOWING FACILITY OWNERS HAVE FACILITIES TO BE RELOCATED/ADJUSTED BY THE ROAD CONTRACTOR AS INCLUDED IN THIS CONTRACT

Not Applicable

RAIL COMPANIES HAVE FACILITIES IN CONJUNCTION WITH THIS PROJECT AS NOTED

☒ No Rail Involvement ☐ Rail Involved ☐ Rail Adjacent

Form Revised 6/24/16

UTILITIES AND RAIL CERTIFICATION NOTE

Henry County
FD04 021 94140 02U
Mile point: 3.925 TO 3.935
BRIDGE PROJECT IN HENRY COUNTY ON (052B00062N) KY 1861 AT JACKSON CREEK
ITEM NUMBER: 05-10049.00

Form Revised 6/24/16

UTILITIES AND RAIL CERTIFICATION NOTE

Henry County
FD04 021 94140 02U
Mile point: 3.925 TO 3.935
BRIDGE PROJECT IN HENRY COUNTY ON (052B00062N) KY 1861 AT JACKSON CREEK
ITEM NUMBER: 05-10049.00

AREA FACILITY OWNER CONTACT LIST

Facility Owner	Address	Contact Name	Phone	Email
AT&T - KY - Communication	1340 E. John Rowan Blvd Bardstown KY 40004	Scott Roche	5023484528	sr8832@att.com
Henry County Water District #2 - Water	PO Box 219 Campbellsburg KY 40011	Keith Morris	5025326279	kmorris@hcwd2.com
Shelby Energy Cooperative, Inc. - Electric	620 Old Finchville Road Shelbyville KY 40065	Jason Ginn	5026432778	jason@shelbyenergy.com

PART II

SPECIFICATIONS AND STANDARD DRAWINGS

SPECIFICATIONS REFERENCE

Any reference in the plans or proposal to previous editions of the *Standard Specifications for Road and Bridge Construction* and *Standard Drawings* are superseded by *Standard Specifications for Road and Bridge Construction, Edition of 2019* and *Standard Drawings, Edition of 2020.*

SUPPLEMENTAL SPECIFICATIONS

The contractor shall use the Supplemental Specifications that are effective at the time of letting. The Supplemental Specifications can be found at the following link:

http://transportation.ky.gov/Construction/Pages/Kentucky-Standard-Specifications.aspx

1I

SPECIAL NOTE FOR PORTABLE CHANGEABLE MESSAGE SIGNS

This Special Note will apply when indicated on the plans or in the proposal.

1.0 DESCRIPTION. Furnish, install, operate, and maintain variable message signs at the locations shown on the plans or designated by the Engineer. Remove and retain possession of variable message signs when they are no longer needed on the project.

2.0 MATERIALS.

2.1 General. Use LED Variable Message Signs Class I, II, or III, as appropriate, from the Department's List of Approved Materials.

Unclassified signs may be submitted for approval by the Engineer. The Engineer may require a daytime and nighttime demonstration. The Engineer will make a final decision within 30 days after all required information is received.

2.2 Sign and Controls. All signs must:

1) Provide 3-line messages with each line being 8 characters long and at least 18 inches tall. Each character comprises 35 pixels.
2) Provide at least 40 preprogrammed messages available for use at any time. Provide for quick and easy change of the displayed message; editing of the message; and additions of new messages.
3) Provide a controller consisting of:
   a) Keyboard or keypad.
   b) Readout that mimics the actual sign display. (When LCD or LCD type readout is used, include backlighting and heating or otherwise arrange for viewing in cold temperatures.)
   c) Non-volatile memory or suitable memory with battery backup for storing pre-programmed messages.
   d) Logic circuitry to control the sequence of messages and flash rate.
4) Provide a serial interface that is capable of supporting complete remote control ability through land line and cellular telephone operation. Include communication software capable of immediately updating the message, providing complete sign status, and allowing message library queries and updates.
5) Allow a single person easily to raise the sign to a satisfactory height above the pavement during use, and lower the sign during travel.
6) Be Highway Orange on all exterior surfaces of the trailer, supports, and controller cabinet.
7) Provide operation in ambient temperatures from -30 to + 120 degrees Fahrenheit during snow, rain and other inclement weather.
8) Provide the driver board as part of a module. All modules are interchangeable, and have plug and socket arrangements for disconnection and reconnection. Printed circuit boards associated with driver boards have a conformable coating to protect against moisture.
9) Provide a sign case sealed against rain, snow, dust, insects, etc. The lens is UV stabilized clear plastic (polycarbonate, acrylic, or other approved material) angled to prevent glare.
10) Provide a flat black UV protected coating on the sign hardware, character PCB, and appropriate lens areas.
11) Provide a photocell control to provide automatic dimming.

12) Allow an on-off flashing sequence at an adjustable rate.
13) Provide a sight to aim the message.
14) Provide a LED display color of approximately 590 nm amber.
15) Provide a controller that is password protected.
16) Provide a security device that prevents unauthorized individuals from accessing the controller.
17) Provide the following 3-line messages preprogrammed and available for use when the sign unit begins operation:

/KEEP/RIGHT/⇒⇒⇒/
/KEEP/LEFT/⇐⇐⇐/
/LOOSE/GRAVEL/AHEAD/
/RD WORK/NEXT/**MILES/
/TWO WAY/TRAFFIC/AHEAD/
/PAINT/CREW/AHEAD/
/REDUCE/SPEED/**MPH/
/BRIDGE/WORK/***0 FT/
/MAX/SPEED/**MPH/
/SURVEY/PARTY/AHEAD/
/MIN/SPEED/**MPH/
/ICY/BRIDGE/AHEAD/ /ONE LANE/BRIDGE/AHEAD/
/ROUGH/ROAD/AHEAD/
/MERGING/TRAFFIC/AHEAD/
/NEXT/***/MILES/
/HEAVY/TRAFFIC/AHEAD/
/SPEED/LIMIT/**MPH/
/BUMP/AHEAD/
/TWO/WAY/TRAFFIC/

*Insert numerals as directed by the Engineer.
Add other messages during the project when required by the Engineer.

2.3 Power.

1) Design solar panels to yield 10 percent or greater additional charge than sign consumption. Provide direct wiring for operation of the sign or arrow board from an external power source to provide energy backup for 21 days without sunlight and an on-board system charger with the ability to recharge completely discharged batteries in 24 hours.

3.0 CONSTRUCTION. Furnish and operate the variable message signs as designated on the plans or by the Engineer. Ensure the bottom of the message panel is a minimum of 7 feet above the roadway in urban areas and 5 feet above in rural areas when operating. Use Class I, II, or III signs on roads with a speed limit less than 55 mph. Use Class I or II signs on roads with speed limits 55 mph or greater.

Maintain the sign in proper working order, including repair of any damage done by others, until completion of the project. When the sign becomes inoperative, immediately repair or replace the sign. Repetitive problems with the same unit will be cause for rejection and replacement.

Use only project related messages and messages directed by the Engineer, unnecessary messages lessen the impact of the sign. Ensure the message is displayed in either one or 2 phases with each phase having no more than 3 lines of text. When no message is needed, but it is necessary to know if the sign is operable, flash only a pixel.

When the sign is not needed, move it outside the clear zone or where the Engineer directs. Variable Message Signs are the property of the Contractor and shall be removed from the project when no longer needed. The Department will not assume ownership of these signs.

4.0 MEASUREMENT. The final quantity of Variable Message Sign will be

1I

the actual number of individual signs acceptably furnished and operated during the project. The Department will not measure signs replaced due to damage or rejection.

5.0 PAYMENT. The Department will pay for the Variable Message Signs at the unit price each. The Department will not pay for signs replaced due to damage or rejection. Payment is full compensation for furnishing all materials, labor, equipment, and service necessary to, operate, move, repair, and maintain or replace the variable message signs. The Department will make payment for the completed and accepted quantities under the following:

Code	Pay Item	Pay Unit
02671	Portable Changeable Message Sign	Each

Effective June 15, 2012

SPECIAL PROVISION FOR EMBANKMENT AT BRIDGE END BENT STRUCTURES

This Special Provision will apply when indicated on the plans or in the proposal. Section references herein are to the Department's Standard Specifications for Road and Bridge Construction, Current Edition.

1.0 DESCRIPTION. Construct a soil, granular, or rock embankment with soil, granular or cohesive pile core and place structure granular backfill, as the Plans require. Construct the embankment according to the requirements of this Special Provision, the Plans, Standard Drawing RGX 100 and 105, and the Standard Specifications, Current Edition.

2.0 MATERIALS.

2.1 Granular Embankment. Conform to Subsection 805.10. When Granular Embankment materials are erodible or unstable according to Subsection 805.03.04, use the Special Construction Methods found in 3.2 of the Special Provision.

2.2 Rock Embankment. Provide durable rock from roadway excavation that consists principally of Unweathered Limestone, Durable Shale (SDI equal to or greater than 95 according to KM 64-513), or Durable Sandstone.

2.3 Pile Core. Provide a pile core in the area of the embankments where deep foundations are to be installed unless otherwise specified. The Pile Core is the zone indicated on Standard Drawings RGX 100 and 105 designated as Pile Core. Material control of the pile core area during embankment construction is always required. Proper Pile Core construction is required for installation of foundation elements such as drilled or driven piles or drilled shafts. The type of material used to construct the pile core is as directed in the plans or below. Typically, the pile core area will be constructed from the same material used to construct the surrounding embankment. Pile Core can be classified as one of three types:

A) Pile Core - Conform to Section 206 of the Standard Specifications. Provide pile core material consisting of the same material as the adjacent embankment except the material in the pile core area shall be free of boulders or particle sizes larger than 4 inches in any dimension or any other obstructions that may hinder pile driving operations. If the pile core material hinders pile driving operations, take the appropriate means necessary to reach the required pile tip elevation, at no expense to the Department.

B) Granular Pile Core. Granular pile core is required only when specified in the plans. Select a gradation of durable rock to facilitate pile driving that conforms to Subsection 805.11. If granular pile core material hinders pile driving operations, take appropriate means necessary to reach the required pile tip elevation, at no expense to the Department.

C) Cohesive Pile Core. Cohesive Pile Core is required only when specified in the plans. Conform to Section 206 of the Standard Specifications and use soil with at least 50 percent passing a No. 4 sieve having a minimum Plasticity Index (PI) of 10. In addition, keep the cohesive pile core free of boulders, larger than 4 inches in any dimension, or any other obstructions, which would interfere with drilling operations. If cohesive pile core material interferes with drilling operations, take appropriate means necessary to maintain

excavation stability, at no expense to the Department.

2.4 Structure Granular Backfill. Conform to Subsection 805.11

2.5 Geotextile Fabric. Conform to Type I or Type IV in Section 214 and 843.

3.0 CONSTRUCTION.

3.1 General. Construct roadway embankments at end bents according to Section 206 and in accordance with the Special Provision, the Plans, and Standard Drawings for the full embankment section. In some instances, granular or rock embankment will be required for embankment construction for stability purposes, but this special provision does not prevent the use of soil when appropriate. Refer to the plans for specific details regarding material requirements for embankment construction.

Place and compact the pile core and structure granular backfill according to the applicable density requirements for the project. If the embankment and pile core are dissimilar materials (i.e., a granular pile core is used with a soil embankment or a cohesive pile core is used with a granular embankment), a Geotextile Fabric, Type IV, will be required between the pile core and embankment in accordance with Sections 214 and 843 of the Standard Specifications.

When granular or rock embankment is required for embankment construction, conform to the general requirements of Subsection 206.03.02 B. In addition, place the material in no greater than 2-foot loose lifts and compact with a vibrating smooth wheel roller capable of producing a minimum centrifugal force of 15 tons. Apply these requirements to the full width of the embankment for a distance of half the embankment height or 50 feet, whichever is greater, as shown on Standard Drawing RGX-105.

When using granular pile core, install 8-inch perforated underdrain pipe at or near the elevation of the original ground in the approximate locations depicted on the standard drawing, and as the Engineer directs, to ensure positive drainage of the embankment. Wrap the perforated pipe with a fabric of a type recommended by the pipe manufacturer.

After constructing the embankment, excavate for the end bent cap, drive piling, install shafts or other foundation elements, place the mortar bed, construct the end bent, and complete the embankment to finish grade according to the construction sequence shown on the Plans or Standard Drawings and as specified hereinafter.

Certain projects may require widening of existing embankments and the removal of substructures. Construct embankment according to the plans. Substructure removal shall be completed according to the plans and Section 203. Excavation may be required at the existing embankment in order to place the structure granular backfill as shown in the Standard Drawings.

After piles are driven or shafts installed (see design drawings), slope the bottom of the excavation towards the ends of the trench as noted on the plans for drainage. Using a separate pour, place concrete mortar, or any class concrete, to provide a base for forming and placing the cap. Place side forms for the end bent after the mortar has set sufficiently to support workmen and forms without being disturbed.

Install 4-inch perforated pipe in accordance with the plans and Standard Drawings. In the event slope protection extends above the elevation of the perforated pipe, extend the pipe through the slope protection.

After placing the end bent cap and achieving required concrete cylinder strengths, remove adjacent forms and fill the excavation with compacted structure granular backfill material (maximum 1’ loose lifts) to the level of the berm prior to placing beams for the bridge. Place Type IV geotextile fabric between embankment material and structure granular backfill. After completing the end bent backwall, or after completing the span end

wall, place the compacted structure granular backfill (maximum 1' loose lifts) to subgrade elevation. If the original excavation is enlarged, fill the entire volume with compacted structure granular backfill (maximum 1' loose lifts) at no expense to the Department. Do not place backfill before removing adjacent form work. Place structure granular backfill material in trench ditches at the ends of the excavation. Place Geotextile Fabric, Type IV over the surface of the compacted structure granular backfill prior to placing aggregate base course.

Tamp the backfill with hand tampers, pneumatic tampers, or other means approved by the Engineer. Thoroughly compact the backfill under the overhanging portions of the structure to ensure that the backfill is in intimate contact with the sides of the structure.

Do not apply seeding, sodding, or other vegetation to the exposed granular embankment.

3.2 Special Construction Methods. Erodible or unstable materials may erode even when protected by riprap or channel lining; use the special construction method described below when using these materials.

Use fine aggregates or friable sandstone granular embankment at "dry land" structures only. Do not use them at stream crossings or locations subject to flood waters.

For erodible or unstable materials having 50 percent or more passing the No. 4 sieve, protect with geotextile fabric. Extend the fabric from the original ground to the top of slope over the entire area of the embankment slopes on each side of, and in front of, the end bent. Cover the fabric with at least 12 inches of non-erodible material.

For erodible or unstable materials having less than 50 percent passing a No. 4 sieve, cover with at least 12 inches of non-erodible material.

Where erodible or unstable granular embankment will be protected by riprap or channel lining, place Type IV geotextile fabric between the embankment and the specified slope protection.

4.0 MEASUREMENT.

4.1 Granular Embankment. The Department will measure the quantity in cubic yards using the plan quantity, increased or decreased by authorized adjustments as specified in Section 204. The Department will not measure for payment any Granular Embankment that is not called for in the plans.

The Department will not measure for payment any special construction caused by using erodible or unstable materials and will consider it incidental to the Granular Embankment regardless of whether the erodible or unstable material was specified or permitted.

4.2 Rock Embankment. The Department will not measure for payment any rock embankment and will consider it incidental to roadway excavation or embankment in place, as applicable. Rock embankments will be constructed using granular embankment on projects where there is no available rock present within the excavation limits of the project.

4.3 Pile Core. Pile core will be measured and paid under roadway excavation or embankment in place, as applicable. The Department will not measure the pile core for separate payment. The Department will not measure for payment the 8-inch perforated underdrain pipe and will consider it incidental to the Pile Core.

4.4 Structure Granular Backfill. The Department will measure the quantity in cubic yards using the plan quantity, increased or decreased by authorized adjustments as specified in Section 204. The Department will not measure any additional material required for backfill outside the limits shown on the Plans and Standard Drawings for payment and will

consider it incidental to the work.

The Department will not measure for payment the 4-inch perforated underdrain pipe and will consider it incidental to the Structure Granular Backfill.

4.5 Geotextile Fabric. The Department will not measure the quantity of fabric used for separating dissimilar materials when constructing the embankment and pile core and will consider it incidental to embankment construction.

The Department will not measure for payment the Geotextile Fabric used to separate the Structure Granular Backfill from the embankment and aggregate base course and will consider it incidental to Structure Granular Backfill.

The Department will not measure for payment the Geotextile Fabric required for construction with erodible or unstable materials and will consider it incidental to embankment construction.

4.6 End Bent. The Department will measure the quantities according to the Contract. The Department will not measure furnishing and placing the 2-inch mortar or concrete bed for payment and will consider it incidental to the end bent construction.

4.7 Structure Excavation. The Department will not measure structure excavation on new embankments for payment and will consider it incidental to the Structure Granular Backfill or Concrete as applicable.

5.0 PAYMENT. The Department will make payment for the completed and accepted quantities under the following:

Code	Pay Item	Pay Unit
02223	Granular Embankment	Cubic Yards
02231	Structure Granular Backfill	Cubic Yards

The Department will consider payment as full compensation for all work required in this provision.

September 16, 2016

PART III

EMPLOYMENT, WAGE AND RECORD REQUIREMENTS

FHWA-1273 -- Revised July 5, 2022

REQUIRED CONTRACT PROVISIONS
FEDERAL-AID CONSTRUCTION CONTRACTS

I. General
II. Nondiscrimination
III. Non-segregated Facilities
IV. Davis-Bacon and Related Act Provisions
V. Contract Work Hours and Safety Standards Act Provisions
VI. Subletting or Assigning the Contract
VII. Safety: Accident Prevention
VIII. False Statements Concerning Highway Projects
IX. Implementation of Clean Air Act and Federal Water Pollution Control Act
X. Certification Regarding Debarment, Suspension, Ineligibility and Voluntary Exclusion
XI. Certification Regarding Use of Contract Funds for Lobbying
XII. Use of United States-Flag Vessels:

ATTACHMENTS

A. Employment and Materials Preference for Appalachian Development Highway System or Appalachian Local Access Road Contracts (included in Appalachian contracts only)

I. GENERAL

1. Form FHWA-1273 must be physically incorporated in each construction contract funded under title 23, United States Code, as required in 23 CFR 633.102(b) (excluding emergency contracts solely intended for debris removal). The contractor (or subcontractor) must insert this form in each subcontract and further require its inclusion in all lower tier subcontracts (excluding purchase orders, rental agreements and other agreements for supplies or services). 23 CFR 633.102(e).

The applicable requirements of Form FHWA-1273 are incorporated by reference for work done under any purchase order, rental agreement or agreement for other services. The prime contractor shall be responsible for compliance by any subcontractor, lower-tier subcontractor or service provider. 23 CFR 633.102(e).

Form FHWA-1273 must be included in all Federal-aid design-build contracts, in all subcontracts and in lower tier subcontracts (excluding subcontracts for design services, purchase orders, rental agreements and other agreements for supplies or services) in accordance with 23 CFR 633.102. The design-builder shall be responsible for compliance by any subcontractor, lower-tier subcontractor or service provider.

Contracting agencies may reference Form FHWA-1273 in solicitation-for-bids or request-for-proposals documents, however, the Form FHWA-1273 must be physically incorporated (not referenced) in all contracts, subcontracts and lower-tier subcontracts (excluding purchase orders, rental agreements and other agreements for supplies or services related to a construction contract). 23 CFR 633.102(b).

2. Subject to the applicability criteria noted in the following sections, these contract provisions shall apply to all work performed on the contract by the contractor's own organization and with the assistance of workers under the contractor's immediate superintendence and to all work performed on the contract by piecework, station work, or by subcontract. 23 CFR 633.102(d).

3. A breach of any of the stipulations contained in these Required Contract Provisions may be sufficient grounds for withholding of progress payments, withholding of final payment, termination of the contract, suspension / debarment or any other action determined to be appropriate by the contracting agency and FHWA.

4. Selection of Labor: During the performance of this contract, the contractor shall not use convict labor for any purpose within the limits of a construction project on a Federal-aid highway unless it is labor performed by convicts who are on parole, supervised release, or probation. 23 U.S.C. 114(b). The term Federal-aid highway does not include roadways functionally classified as local roads or rural minor collectors. 23 U.S.C. 101(a).

II. NONDISCRIMINATION (23 CFR 230.107(a); 23 CFR Part 230, Subpart A, Appendix A; EO 11246)

The provisions of this section related to 23 CFR Part 230, Subpart A, Appendix A are applicable to all Federal-aid construction contracts and to all related construction subcontracts of $10,000 or more. The provisions of 23 CFR Part 230 are not applicable to material supply, engineering, or architectural service contracts.

In addition, the contractor and all subcontractors must comply with the following policies: Executive Order 11246, 41 CFR Part 60, 29 CFR Parts 1625-1627, 23 U.S.C. 140, Section 504 of the Rehabilitation Act of 1973, as amended (29 U.S.C. 794), Title VI of the Civil Rights Act of 1964, as amended (42 U.S.C. 2000d et seq.), and related regulations including 49 CFR Parts 21, 26, and 27; and 23 CFR Parts 200, 230, and 633.

The contractor and all subcontractors must comply with: the requirements of the Equal Opportunity Clause in 41 CFR 60-1.4(b) and, for all construction contracts exceeding $10,000, the Standard Federal Equal Employment Opportunity Construction Contract Specifications in 41 CFR 60-4.3.

Note: The U.S. Department of Labor has exclusive authority to determine compliance with Executive Order 11246 and the policies of the Secretary of Labor including 41 CFR Part 60, and 29 CFR Parts 1625-1627. The contracting agency and the FHWA have the authority and the responsibility to ensure compliance with 23 U.S.C. 140, Section 504 of the Rehabilitation Act of 1973, as amended (29 U.S.C. 794), and Title VI of the Civil Rights Act of 1964, as amended (42 U.S.C. 2000d et seq.), and related regulations including 49 CFR Parts 21, 26, and 27; and 23 CFR Parts 200, 230, and 633.

The following provision is adopted from 23 CFR Part 230, Subpart A, Appendix A, with appropriate revisions to conform to the U.S. Department of Labor (US DOL) and FHWA requirements.

1. Equal Employment Opportunity: Equal Employment Opportunity (EEO) requirements not to discriminate and to take affirmative action to assure equal opportunity as set forth under laws, executive orders, rules, regulations (*see* 28 CFR Part 35, 29 CFR Part 1630, 29 CFR Parts 1625-1627, 41 CFR Part 60 and 49 CFR Part 27) and orders of the Secretary of Labor as modified by the provisions prescribed herein, and imposed pursuant to 23 U.S.C. 140, shall constitute the EEO and specific affirmative action standards for the contractor's project activities under this contract. The provisions of the Americans with Disabilities Act of 1990 (42 U.S.C. 12101 et seq.) set forth under 28 CFR Part 35 and 29 CFR Part 1630 are incorporated by reference in this contract. In the execution of this contract, the contractor agrees to comply with the following minimum specific requirement activities of EEO:

a. The contractor will work with the contracting agency and the Federal Government to ensure that it has made every good faith effort to provide equal opportunity with respect to all of its terms and conditions of employment and in their review of activities under the contract. 23 CFR 230.409 (g)(4) & (5).

b. The contractor will accept as its operating policy the following statement:

"It is the policy of this Company to assure that applicants are employed, and that employees are treated during employment, without regard to their race, religion, sex, sexual orientation, gender identity, color, national origin, age or disability. Such action shall include: employment, upgrading, demotion, or transfer; recruitment or recruitment advertising; layoff or termination; rates of pay or other forms of compensation; and selection for training, including apprenticeship, pre-apprenticeship, and/or on-the-job training."

2. EEO Officer: The contractor will designate and make known to the contracting officers an EEO Officer who will have the responsibility for and must be capable of effectively administering and promoting an active EEO program and who must be assigned adequate authority and responsibility to do so.

3. Dissemination of Policy: All members of the contractor's staff who are authorized to hire, supervise, promote, and discharge employees, or who recommend such action or are substantially involved in such action, will be made fully cognizant of and will implement the contractor's EEO policy and contractual responsibilities to provide EEO in each grade and classification of employment. To ensure that the above agreement will be met, the following actions will be taken as a minimum:

a. Periodic meetings of supervisory and personnel office employees will be conducted before the start of work and then not less often than once every six months, at which time the contractor's EEO policy and its implementation will be reviewed and explained. The meetings will be conducted by the EEO Officer or other knowledgeable company official.

b. All new supervisory or personnel office employees will be given a thorough indoctrination by the EEO Officer, covering all major aspects of the contractor's EEO obligations within thirty days following their reporting for duty with the contractor.

c. All personnel who are engaged in direct recruitment for the project will be instructed by the EEO Officer in the contractor's procedures for locating and hiring minorities and women.

d. Notices and posters setting forth the contractor's EEO policy will be placed in areas readily accessible to employees, applicants for employment and potential employees.

e. The contractor's EEO policy and the procedures to implement such policy will be brought to the attention of employees by means of meetings, employee handbooks, or other appropriate means.

4. Recruitment: When advertising for employees, the contractor will include in all advertisements for employees the notation: "An Equal Opportunity Employer." All such advertisements will be placed in publications having a large circulation among minorities and women in the area from which the project work force would normally be derived.

a. The contractor will, unless precluded by a valid bargaining agreement, conduct systematic and direct recruitment through public and private employee referral sources likely to yield qualified minorities and women. To meet this requirement, the contractor will identify sources of potential minority group employees and establish with such identified sources procedures whereby minority and women applicants may be referred to the contractor for employment consideration.

b. In the event the contractor has a valid bargaining agreement providing for exclusive hiring hall referrals, the contractor is expected to observe the provisions of that agreement to the extent that the system meets the contractor's compliance with EEO contract provisions. Where implementation of such an agreement has the effect of discriminating against minorities or women, or obligates the contractor to do the same, such implementation violates Federal nondiscrimination provisions.

c. The contractor will encourage its present employees to refer minorities and women as applicants for employment. Information and procedures with regard to referring such applicants will be discussed with employees.

5. Personnel Actions: Wages, working conditions, and employee benefits shall be established and administered, and personnel actions of every type, including hiring, upgrading, promotion, transfer, demotion, layoff, and termination, shall be taken without regard to race, color, religion, sex, sexual orientation, gender identity, national origin, age or disability. The following procedures shall be followed:

a. The contractor will conduct periodic inspections of project sites to ensure that working conditions and employee facilities do not indicate discriminatory treatment of project site personnel.

b. The contractor will periodically evaluate the spread of wages paid within each classification to determine any evidence of discriminatory wage practices.

c. The contractor will periodically review selected personnel actions in depth to determine whether there is evidence of discrimination. Where evidence is found, the contractor will promptly take corrective action. If the review indicates that the discrimination may extend beyond the actions reviewed, such corrective action shall include all affected persons.

d. The contractor will promptly investigate all complaints of alleged discrimination made to the contractor in connection with its obligations under this contract, will attempt to resolve such complaints, and will take appropriate corrective action

within a reasonable time. If the investigation indicates that the discrimination may affect persons other than the complainant, such corrective action shall include such other persons. Upon completion of each investigation, the contractor will inform every complainant of all of their avenues of appeal.

6. Training and Promotion:

a. The contractor will assist in locating, qualifying, and increasing the skills of minorities and women who are applicants for employment or current employees. Such efforts should be aimed at developing full journey level status employees in the type of trade or job classification involved.

b. Consistent with the contractor's work force requirements and as permissible under Federal and State regulations, the contractor shall make full use of training programs (i.e., apprenticeship and on-the-job training programs for the geographical area of contract performance). In the event a special provision for training is provided under this contract, this subparagraph will be superseded as indicated in the special provision. The contracting agency may reserve training positions for persons who receive welfare assistance in accordance with 23 U.S.C. 140(a).

c. The contractor will advise employees and applicants for employment of available training programs and entrance requirements for each.

d. The contractor will periodically review the training and promotion potential of employees who are minorities and women and will encourage eligible employees to apply for such training and promotion.

7. Unions: If the contractor relies in whole or in part upon unions as a source of employees, the contractor will use good faith efforts to obtain the cooperation of such unions to increase opportunities for minorities and women. 23 CFR 230.409. Actions by the contractor, either directly or through a contractor's association acting as agent, will include the procedures set forth below:

a. The contractor will use good faith efforts to develop, in cooperation with the unions, joint training programs aimed toward qualifying more minorities and women for membership in the unions and increasing the skills of minorities and women so that they may qualify for higher paying employment.

b. The contractor will use good faith efforts to incorporate an EEO clause into each union agreement to the end that such union will be contractually bound to refer applicants without regard to their race, color, religion, sex, sexual orientation, gender identity, national origin, age, or disability.

c. The contractor is to obtain information as to the referral practices and policies of the labor union except that to the extent such information is within the exclusive possession of the labor union and such labor union refuses to furnish such information to the contractor, the contractor shall so certify to the contracting agency and shall set forth what efforts have been made to obtain such information.

d. In the event the union is unable to provide the contractor with a reasonable flow of referrals within the time limit set forth in the collective bargaining agreement, the contractor will, through independent recruitment efforts, fill the employment vacancies without regard to race, color, religion, sex, sexual orientation, gender identity, national origin, age, or disability; making full efforts to obtain qualified and/or qualifiable minorities and women. The failure of a union to provide sufficient referrals (even though it is obligated to provide exclusive referrals under the terms of a collective bargaining agreement) does not relieve the contractor from the requirements of this paragraph. In the event the union referral practice prevents the contractor from meeting the obligations pursuant to Executive Order 11246, as amended, and these special provisions, such contractor shall immediately notify the contracting agency.

8. Reasonable Accommodation for Applicants / Employees with Disabilities: The contractor must be familiar with the requirements for and comply with the Americans with Disabilities Act and all rules and regulations established thereunder. Employers must provide reasonable accommodation in all employment activities unless to do so would cause an undue hardship.

9. Selection of Subcontractors, Procurement of Materials and Leasing of Equipment: The contractor shall not discriminate on the grounds of race, color, religion, sex, sexual orientation, gender identity, national origin, age, or disability in the selection and retention of subcontractors, including procurement of materials and leases of equipment. The contractor shall take all necessary and reasonable steps to ensure nondiscrimination in the administration of this contract.

a. The contractor shall notify all potential subcontractors, suppliers, and lessors of their EEO obligations under this contract.

b. The contractor will use good faith efforts to ensure subcontractor compliance with their EEO obligations.

10. Assurances Required:

a. The requirements of 49 CFR Part 26 and the State DOT’s FHWA-approved Disadvantaged Business Enterprise (DBE) program are incorporated by reference.

b. The contractor, subrecipient or subcontractor shall not discriminate on the basis of race, color, national origin, or sex in the performance of this contract. The contractor shall carry out applicable requirements of 49 CFR part 26 in the award and administration of DOT-assisted contracts. Failure by the contractor to carry out these requirements is a material breach of this contract, which may result in the termination of this contract or such other remedy as the recipient deems appropriate, which may include, but is not limited to:
(1) Withholding monthly progress payments;
(2) Assessing sanctions;
(3) Liquidated damages; and/or
(4) Disqualifying the contractor from future bidding as non-responsible.

c. The Title VI and nondiscrimination provisions of U.S. DOT Order 1050.2A at Appendixes A and E are incorporated by reference. 49 CFR Part 21.

11. Records and Reports: The contractor shall keep such records as necessary to document compliance with the EEO requirements. Such records shall be retained for a period of three years following the date of the final payment to the contractor for all contract work and shall be available at reasonable times and places for inspection by authorized representatives of the contracting agency and the FHWA.

a. The records kept by the contractor shall document the following:

(1) The number and work hours of minority and non-minority group members and women employed in each work classification on the project;

(2) The progress and efforts being made in cooperation with unions, when applicable, to increase employment opportunities for minorities and women; and

(3) The progress and efforts being made in locating, hiring, training, qualifying, and upgrading minorities and women.

b. The contractors and subcontractors will submit an annual report to the contracting agency each July for the duration of the project indicating the number of minority, women, and non-minority group employees currently engaged in each work classification required by the contract work. This information is to be reported on Form FHWA-1391. The staffing data should represent the project work force on board in all or any part of the last payroll period preceding the end of July. If on-the-job training is being required by special provision, the contractor will be required to collect and report training data. The employment data should reflect the work force on board during all or any part of the last payroll period preceding the end of July.

III. NONSEGREGATED FACILITIES

This provision is applicable to all Federal-aid construction contracts and to all related construction subcontracts of more than $10,000. 41 CFR 60-1.5.

As prescribed by 41 CFR 60-1.8, the contractor must ensure that facilities provided for employees are provided in such a manner that segregation on the basis of race, color, religion, sex, sexual orientation, gender identity, or national origin cannot result. The contractor may neither require such segregated use by written or oral policies nor tolerate such use by employee custom. The contractor's obligation extends further to ensure that its employees are not assigned to perform their services at any location under the contractor's control where the facilities are segregated. The term "facilities" includes waiting rooms, work areas, restaurants and other eating areas, time clocks, restrooms, washrooms, locker rooms and other storage or dressing areas, parking lots, drinking fountains, recreation or entertainment areas, transportation, and housing provided for employees. The contractor shall provide separate or single-user restrooms and necessary dressing or sleeping areas to assure privacy between sexes.

IV. DAVIS-BACON AND RELATED ACT PROVISIONS

This section is applicable to all Federal-aid construction projects exceeding $2,000 and to all related subcontracts and lower-tier subcontracts (regardless of subcontract size), in accordance with 29 CFR 5.5. The requirements apply to all projects located within the right-of-way of a roadway that is functionally classified as Federal-aid highway. 23 U.S.C. 113. This excludes roadways functionally classified as local roads or rural minor collectors, which are exempt. 23 U.S.C. 101. Where applicable law requires that projects be treated as a project on a Federal-aid highway, the provisions of this subpart will apply regardless of the location of the project. Examples include: Surface Transportation Block Grant Program projects funded under 23 U.S.C. 133 [excluding recreational trails projects], the Nationally Significant Freight and Highway Projects funded under 23 U.S.C. 117, and National Highway Freight Program projects funded under 23 U.S.C. 167.

The following provisions are from the U.S. Department of Labor regulations in 29 CFR 5.5 “Contract provisions and related matters” with minor revisions to conform to the FHWA-1273 format and FHWA program requirements.

1. Minimum wages (29 CFR 5.5)

a. All laborers and mechanics employed or working upon the site of the work, will be paid unconditionally and not less often than once a week, and without subsequent deduction or rebate on any account (except such payroll deductions as are permitted by regulations issued by the Secretary of Labor under the Copeland Act (29 CFR part 3)), the full amount of wages and bona fide fringe benefits (or cash equivalents thereof) due at time of payment computed at rates not less than those contained in the wage determination of the Secretary of Labor which is attached hereto and made a part hereof, regardless of any contractual relationship which may be alleged to exist between the contractor and such laborers and mechanics.

Contributions made or costs reasonably anticipated for bona fide fringe benefits under section 1(b)(2) of the Davis-Bacon Act on behalf of laborers or mechanics are considered wages paid to such laborers or mechanics, subject to the provisions of paragraph 1.d. of this section; also, regular contributions made or costs incurred for more than a weekly period (but not less often than quarterly) under plans, funds, or programs which cover the particular weekly period, are deemed to be constructively made or incurred during such weekly period. Such laborers and mechanics shall be paid the appropriate wage rate and fringe benefits on the wage determination for the classification of work actually performed, without regard to skill, except as provided in 29 CFR 5.5(a)(4). Laborers or mechanics performing work in more than one classification may be compensated at the rate specified for each classification for the time actually worked therein: Provided, That the employer's payroll records accurately set forth the time spent in each classification in which work is performed. The wage determination (including any additional classification and wage rates conformed under paragraph 1.b. of this section) and the Davis-Bacon poster (WH–1321) shall be posted at all times by the contractor and its subcontractors at the site of the work in a prominent and accessible place where it can be easily seen by the workers.

b.(1) The contracting officer shall require that any class of laborers or mechanics, including helpers, which is not listed in the wage determination and which is to be employed under the contract shall be classified in conformance with the wage determination. The contracting officer shall approve an additional classification and wage rate and fringe benefits therefore only when the following criteria have been met:

(i) The work to be performed by the classification requested is not performed by a classification in the wage determination; and

(ii) The classification is utilized in the area by the construction industry; and

(iii) The proposed wage rate, including any bona fide fringe benefits, bears a reasonable relationship to the wage rates contained in the wage determination.

(2) If the contractor and the laborers and mechanics to be employed in the classification (if known), or their representatives, and the contracting officer agree on the classification and wage rate (including the amount designated for fringe benefits where appropriate), a report of the action taken shall be sent by the contracting officer to the Administrator of the Wage and Hour Division, U.S. Department of Labor, Washington, DC 20210. The Administrator, or an authorized representative, will approve, modify, or disapprove every additional classification action within 30 days of receipt and so advise the contracting officer or will notify the contracting officer within the 30-day period that additional time is necessary.

(3) In the event the contractor, the laborers or mechanics to be employed in the classification or their representatives, and the contracting officer do not agree on the proposed classification and wage rate (including the amount designated for fringe benefits, where appropriate), the contracting officer shall refer the questions, including the views of all interested parties and the recommendation of the contracting officer, to the Administrator for determination. The Administrator, or an authorized representative, will issue a determination within 30 days of receipt and so advise the contracting officer or will notify the contracting officer within the 30-day period that additional time is necessary.

(4) The wage rate (including fringe benefits where appropriate) determined pursuant to paragraphs 1.b.(2) or 1.b.(3) of this section, shall be paid to all workers performing work in the classification under this contract from the first day on which work is performed in the classification.

c. Whenever the minimum wage rate prescribed in the contract for a class of laborers or mechanics includes a fringe benefit which is not expressed as an hourly rate, the contractor shall either pay the benefit as stated in the wage determination or shall pay another bona fide fringe benefit or an hourly cash equivalent thereof.

d. If the contractor does not make payments to a trustee or other third person, the contractor may consider as part of the wages of any laborer or mechanic the amount of any costs reasonably anticipated in providing bona fide fringe benefits under a plan or program, Provided, That the Secretary of Labor has found, upon the written request of the contractor, that the applicable standards of the Davis-Bacon Act have been met. The Secretary of Labor may require the contractor to set aside in a separate account assets for the meeting of obligations under the plan or program.

2. Withholding (29 CFR 5.5)

The contracting agency shall upon its own action or upon written request of an authorized representative of the Department of Labor, withhold or cause to be withheld from the contractor under this contract, or any other Federal contract with the same prime contractor, or any other federally-assisted contract subject to Davis-Bacon prevailing wage requirements, which is held by the same prime contractor, so much of the accrued payments or advances as may be considered necessary to pay laborers and mechanics, including apprentices, trainees, and helpers, employed by the contractor or any subcontractor the full amount of wages required by the contract. In the event of failure to pay any laborer or mechanic, including any apprentice, trainee, or helper, employed or working on the site of the work, all or part of the wages required by the contract, the contracting agency may, after written notice to the contractor, take such action as may be necessary to cause the suspension of any further payment, advance, or guarantee of funds until such violations have ceased.

3. Payrolls and basic records (29 CFR 5.5)

a. Payrolls and basic records relating thereto shall be maintained by the contractor during the course of the work and preserved for a period of three years thereafter for all laborers and mechanics working at the site of the work. Such records shall contain the name, address, and social security number of each such worker, his or her correct classification, hourly rates of wages paid (including rates of contributions or costs anticipated for bona fide fringe benefits or cash equivalents thereof of the types described in section 1(b)(2)(B) of the Davis-Bacon Act), daily and weekly number of hours worked, deductions made and actual wages paid. Whenever the Secretary of Labor has found under 29 CFR 5.5(a)(1)(iv) that the wages of any laborer or mechanic include the amount of any costs reasonably anticipated in providing benefits under a plan or program described in section 1(b)(2)(B) of the Davis-Bacon Act, the contractor shall maintain records which show that the commitment to provide such benefits is enforceable, that the plan or program is financially responsible, and that the plan or program has been communicated in writing to the laborers or mechanics affected, and records which show the costs anticipated or the actual cost incurred in providing such benefits. Contractors employing apprentices or trainees under approved programs shall maintain written evidence of the registration of apprenticeship programs and certification of trainee programs, the registration of the apprentices and trainees, and the ratios and wage rates prescribed in the applicable programs.

b.(1) The contractor shall submit weekly for each week in which any contract work is performed a copy of all payrolls to the contracting agency. The payrolls submitted shall set out accurately and completely all of the information required to be maintained under 29 CFR 5.5(a)(3)(i), except that full social security numbers and home addresses shall not be included on weekly transmittals. Instead the payrolls shall only need to include an individually identifying number for each employee (e.g., the last four digits of the employee's social security number). The required weekly payroll information may be submitted in any form desired. Optional Form WH–347 is available for this purpose from the Wage and Hour Division Web site. The prime contractor is responsible for the submission of copies of payrolls by all subcontractors. Contractors and subcontractors shall maintain the full social security number and current address of each covered worker, and shall provide them upon request to the contracting agency for transmission to the State DOT, the FHWA or the Wage and Hour Division of the Department of Labor for purposes of an investigation or audit of compliance with prevailing wage requirements. It is not a violation of this section for a prime contractor to require a subcontractor to provide addresses and social security numbers to the prime contractor for its own records, without weekly submission to the contracting agency.

(2) Each payroll submitted shall be accompanied by a “Statement of Compliance,” signed by the contractor or

subcontractor or his or her agent who pays or supervises the payment of the persons employed under the contract and shall certify the following:

(i) That the payroll for the payroll period contains the information required to be provided under 29 CFR 5.5(a)(3)(ii), the appropriate information is being maintained under 29 CFR 5.5(a)(3)(i), and that such information is correct and complete;

(ii) That each laborer or mechanic (including each helper, apprentice, and trainee) employed on the contract during the payroll period has been paid the full weekly wages earned, without rebate, either directly or indirectly, and that no deductions have been made either directly or indirectly from the full wages earned, other than permissible deductions as set forth in 29 CFR part 3;

(iii) That each laborer or mechanic has been paid not less than the applicable wage rates and fringe benefits or cash equivalents for the classification of work performed, as specified in the applicable wage determination incorporated into the contract.

(3) The weekly submission of a properly executed certification set forth on the reverse side of Optional Form WH–347 shall satisfy the requirement for submission of the "Statement of Compliance" required by paragraph 3.b.(2) of this section.

(4) The falsification of any of the above certifications may subject the contractor or subcontractor to civil or criminal prosecution under 18 U.S.C. 1001 and 31 U.S.C. 231.

c. The contractor or subcontractor shall make the records required under paragraph 3.a. of this section available for inspection, copying, or transcription by authorized representatives of the contracting agency, the State DOT, the FHWA, or the Department of Labor, and shall permit such representatives to interview employees during working hours on the job. If the contractor or subcontractor fails to submit the required records or to make them available, the FHWA may, after written notice to the contractor, the contracting agency or the State DOT, take such action as may be necessary to cause the suspension of any further payment, advance, or guarantee of funds. Furthermore, failure to submit the required records upon request or to make such records available may be grounds for debarment action pursuant to 29 CFR 5.12.

4. Apprentices and trainees (29 CFR 5.5)

a. Apprentices (programs of the USDOL).

Apprentices will be permitted to work at less than the predetermined rate for the work they performed when they are employed pursuant to and individually registered in a bona fide apprenticeship program registered with the U.S. Department of Labor, Employment and Training Administration, Office of Apprenticeship Training, Employer and Labor Services, or with a State Apprenticeship Agency recognized by the Office, or if a person is employed in his or her first 90 days of probationary employment as an apprentice in such an apprenticeship program, who is not individually registered in the program, but who has been certified by the Office of Apprenticeship Training, Employer and Labor Services or a State Apprenticeship Agency (where appropriate) to be eligible for probationary employment as an apprentice.

The allowable ratio of apprentices to journeymen on the job site in any craft classification shall not be greater than the ratio permitted to the contractor as to the entire work force under the registered program. Any worker listed on a payroll at an apprentice wage rate, who is not registered or otherwise employed as stated above, shall be paid not less than the applicable wage rate on the wage determination for the classification of work actually performed. In addition, any apprentice performing work on the job site in excess of the ratio permitted under the registered program shall be paid not less than the applicable wage rate on the wage determination for the work actually performed. Where a contractor is performing construction on a project in a locality other than that in which its program is registered, the ratios and wage rates (expressed in percentages of the journeyman's hourly rate) specified in the contractor's or subcontractor's registered program shall be observed.

Every apprentice must be paid at not less than the rate specified in the registered program for the apprentice's level of progress, expressed as a percentage of the journeymen hourly rate specified in the applicable wage determination. Apprentices shall be paid fringe benefits in accordance with the provisions of the apprenticeship program. If the apprenticeship program does not specify fringe benefits, apprentices must be paid the full amount of fringe benefits listed on the wage determination for the applicable classification. If the Administrator determines that a different practice prevails for the applicable apprentice classification, fringes shall be paid in accordance with that determination.

In the event the Office of Apprenticeship Training, Employer and Labor Services, or a State Apprenticeship Agency recognized by the Office, withdraws approval of an apprenticeship program, the contractor will no longer be permitted to utilize apprentices at less than the applicable predetermined rate for the work performed until an acceptable program is approved.

b. Trainees (programs of the USDOL).

Except as provided in 29 CFR 5.16, trainees will not be permitted to work at less than the predetermined rate for the work performed unless they are employed pursuant to and individually registered in a program which has received prior approval, evidenced by formal certification by the U.S. Department of Labor, Employment and Training Administration.

The ratio of trainees to journeymen on the job site shall not be greater than permitted under the plan approved by the Employment and Training Administration.

Every trainee must be paid at not less than the rate specified in the approved program for the trainee's level of progress, expressed as a percentage of the journeyman hourly rate specified in the applicable wage determination. Trainees shall be paid fringe benefits in accordance with the provisions of the trainee program. If the trainee program does not mention fringe benefits, trainees shall be paid the full amount of fringe benefits listed on the wage determination unless the Administrator of the Wage and Hour Division determines that there is an apprenticeship program associated with the

corresponding journeyman wage rate on the wage determination which provides for less than full fringe benefits for apprentices. Any employee listed on the payroll at a trainee rate who is not registered and participating in a training plan approved by the Employment and Training Administration shall be paid not less than the applicable wage rate on the wage determination for the classification of work actually performed. In addition, any trainee performing work on the job site in excess of the ratio permitted under the registered program shall be paid not less than the applicable wage rate on the wage determination for the work actually performed.

In the event the Employment and Training Administration withdraws approval of a training program, the contractor will no longer be permitted to utilize trainees at less than the applicable predetermined rate for the work performed until an acceptable program is approved.

c. Equal employment opportunity. The utilization of apprentices, trainees and journeymen under this part shall be in conformity with the equal employment opportunity requirements of Executive Order 11246, as amended, and 29 CFR part 30.

d. Apprentices and Trainees (programs of the U.S. DOT).

Apprentices and trainees working under apprenticeship and skill training programs which have been certified by the Secretary of Transportation as promoting EEO in connection with Federal-aid highway construction programs are not subject to the requirements of paragraph 4 of this Section IV. 23 CFR 230.111(e)(2). The straight time hourly wage rates for apprentices and trainees under such programs will be established by the particular programs. The ratio of apprentices and trainees to journeymen shall not be greater than permitted by the terms of the particular program.

5. Compliance with Copeland Act requirements. The contractor shall comply with the requirements of 29 CFR part 3, which are incorporated by reference in this contract as provided in 29 CFR 5.5.

6. Subcontracts. The contractor or subcontractor shall insert Form FHWA-1273 in any subcontracts and also require the subcontractors to include Form FHWA-1273 in any lower tier subcontracts. The prime contractor shall be responsible for the compliance by any subcontractor or lower tier subcontractor with all the contract clauses in 29 CFR 5.5.

7. Contract termination: debarment. A breach of the contract clauses in 29 CFR 5.5 may be grounds for termination of the contract, and for debarment as a contractor and a subcontractor as provided in 29 CFR 5.12.

8. Compliance with Davis-Bacon and Related Act requirements. All rulings and interpretations of the Davis-Bacon and Related Acts contained in 29 CFR parts 1, 3, and 5 are herein incorporated by reference in this contract as provided in 29 CFR 5.5.

9. Disputes concerning labor standards. As provided in 29 CFR 5.5, disputes arising out of the labor standards provisions of this contract shall not be subject to the general disputes clause of this contract. Such disputes shall be resolved in accordance with the procedures of the Department of Labor set forth in 29 CFR parts 5, 6, and 7. Disputes within the meaning of this clause include disputes between the contractor (or any of its subcontractors) and the contracting agency, the U.S. Department of Labor, or the employees or their representatives.

10. Certification of eligibility (29 CFR 5.5)

a. By entering into this contract, the contractor certifies that neither it (nor he or she) nor any person or firm who has an interest in the contractor's firm is a person or firm ineligible to be awarded Government contracts by virtue of section 3(a) of the Davis-Bacon Act or 29 CFR 5.12(a)(1).

b. No part of this contract shall be subcontracted to any person or firm ineligible for award of a Government contract by virtue of section 3(a) of the Davis-Bacon Act or 29 CFR 5.12(a)(1).

c. The penalty for making false statements is prescribed in the U.S. Criminal Code, 18 U.S.C. 1001.

V. CONTRACT WORK HOURS AND SAFETY STANDARDS ACT

Pursuant to 29 CFR 5.5(b), the following clauses apply to any Federal-aid construction contract in an amount in excess of $100,000 and subject to the overtime provisions of the Contract Work Hours and Safety Standards Act. These clauses shall be inserted in addition to the clauses required by 29 CFR 5.5(a) or 29 CFR 4.6. As used in this paragraph, the terms laborers and mechanics include watchmen and guards.

1. Overtime requirements. No contractor or subcontractor contracting for any part of the contract work which may require or involve the employment of laborers or mechanics shall require or permit any such laborer or mechanic in any workweek in which he or she is employed on such work to work in excess of forty hours in such workweek unless such laborer or mechanic receives compensation at a rate not less than one and one-half times the basic rate of pay for all hours worked in excess of forty hours in such workweek. 29 CFR 5.5.

2. Violation; liability for unpaid wages; liquidated damages. In the event of any violation of the clause set forth in paragraph 1 of this section, the contractor and any subcontractor responsible therefor shall be liable for the unpaid wages. In addition, such contractor and subcontractor shall be liable to the United States (in the case of work done under contract for the District of Columbia or a territory, to such District or to such territory), for liquidated damages. Such liquidated damages shall be computed with respect to each individual laborer or mechanic, including watchmen and guards, employed in violation of the clause set forth in paragraph 1 of this section, in the sum currently provided in 29 CFR 5.5(b)(2)* for each calendar day on which such individual was required or permitted to work in excess of the standard workweek of forty hours without payment of the overtime wages required by the clause set forth in paragraph 1 of this section. 29 CFR 5.5.

* $27 as of January 23, 2019 (See 84 FR 213-01, 218) as may be adjusted annually by the Department of Labor; pursuant to the Federal Civil Penalties Inflation Adjustment Act of 1990).

3. Withholding for unpaid wages and liquidated damages. The FHWA or the contacting agency shall upon its own action or upon written request of an authorized representative of the Department of Labor withhold or cause to be withheld, from any moneys payable on account of work performed by the contractor or subcontractor under any such contract or any other Federal contract with the same prime contractor, or any other federally-assisted contract subject to the Contract Work Hours and Safety Standards Act, which is held by the same prime contractor, such sums as may be determined to be necessary to satisfy any liabilities of such contractor or subcontractor for unpaid wages and liquidated damages as provided in the clause set forth in paragraph 2 of this section. 29 CFR 5.5.

4. Subcontracts. The contractor or subcontractor shall insert in any subcontracts the clauses set forth in paragraphs 1 through 4 of this section and also a clause requiring the subcontractors to include these clauses in any lower tier subcontracts. The prime contractor shall be responsible for compliance by any subcontractor or lower tier subcontractor with the clauses set forth in paragraphs 1 through 4 of this section. 29 CFR 5.5.

VI. SUBLETTING OR ASSIGNING THE CONTRACT

This provision is applicable to all Federal-aid construction contracts on the National Highway System pursuant to 23 CFR 635.116.

1. The contractor shall perform with its own organization contract work amounting to not less than 30 percent (or a greater percentage if specified elsewhere in the contract) of the total original contract price, excluding any specialty items designated by the contracting agency. Specialty items may be performed by subcontract and the amount of any such specialty items performed may be deducted from the total original contract price before computing the amount of work required to be performed by the contractor's own organization (23 CFR 635.116).

a. The term “perform work with its own organization” in paragraph 1 of Section VI refers to workers employed or leased by the prime contractor, and equipment owned or rented by the prime contractor, with or without operators. Such term does not include employees or equipment of a subcontractor or lower tier subcontractor, agents of the prime contractor, or any other assignees. The term may include payments for the costs of hiring leased employees from an employee leasing firm meeting all relevant Federal and State regulatory requirements. Leased employees may only be included in this term if the prime contractor meets all of the following conditions: (based on longstanding interpretation)

(1) the prime contractor maintains control over the supervision of the day-to-day activities of the leased employees;
(2) the prime contractor remains responsible for the quality of the work of the leased employees;
(3) the prime contractor retains all power to accept or exclude individual employees from work on the project; and
(4) the prime contractor remains ultimately responsible for the payment of predetermined minimum wages, the submission of payrolls, statements of compliance and all other Federal regulatory requirements.

b. "Specialty Items" shall be construed to be limited to work that requires highly specialized knowledge, abilities, or equipment not ordinarily available in the type of contracting organizations qualified and expected to bid or propose on the contract as a whole and in general are to be limited to minor components of the overall contract. 23 CFR 635.102.

2. Pursuant to 23 CFR 635.116(a), the contract amount upon which the requirements set forth in paragraph (1) of Section VI is computed includes the cost of material and manufactured products which are to be purchased or produced by the contractor under the contract provisions.

3. Pursuant to 23 CFR 635.116(c), the contractor shall furnish (a) a competent superintendent or supervisor who is employed by the firm, has full authority to direct performance of the work in accordance with the contract requirements, and is in charge of all construction operations (regardless of who performs the work) and (b) such other of its own organizational resources (supervision, management, and engineering services) as the contracting officer determines is necessary to assure the performance of the contract.

4. No portion of the contract shall be sublet, assigned or otherwise disposed of except with the written consent of the contracting officer, or authorized representative, and such consent when given shall not be construed to relieve the contractor of any responsibility for the fulfillment of the contract. Written consent will be given only after the contracting agency has assured that each subcontract is evidenced in writing and that it contains all pertinent provisions and requirements of the prime contract. (based on long-standing interpretation of 23 CFR 635.116).

5. The 30-percent self-performance requirement of paragraph (1) is not applicable to design-build contracts; however, contracting agencies may establish their own self-performance requirements. 23 CFR 635.116(d).

VII. SAFETY: ACCIDENT PREVENTION

This provision is applicable to all Federal-aid construction contracts and to all related subcontracts.

1. In the performance of this contract the contractor shall comply with all applicable Federal, State, and local laws governing safety, health, and sanitation (23 CFR Part 635). The contractor shall provide all safeguards, safety devices and protective equipment and take any other needed actions as it determines, or as the contracting officer may determine, to be reasonably necessary to protect the life and health of employees on the job and the safety of the public and to protect property in connection with the performance of the work covered by the contract. 23 CFR 635.108.

2. It is a condition of this contract, and shall be made a condition of each subcontract, which the contractor enters into pursuant to this contract, that the contractor and any subcontractor shall not permit any employee, in performance of the contract, to work in surroundings or under conditions which are unsanitary, hazardous or dangerous to his/her health or safety, as determined under construction safety and health standards (29 CFR Part 1926) promulgated by the Secretary of Labor, in accordance with Section 107 of the Contract Work Hours and Safety Standards Act (40 U.S.C. 3704). 29 CFR 1926.10.

3. Pursuant to 29 CFR 1926.3, it is a condition of this contract that the Secretary of Labor or authorized representative thereof, shall have right of entry to any site of contract performance to inspect or investigate the matter of compliance

with the construction safety and health standards and to carry out the duties of the Secretary under Section 107 of the Contract Work Hours and Safety Standards Act (40 U.S.C. 3704).

VIII. FALSE STATEMENTS CONCERNING HIGHWAY PROJECTS

This provision is applicable to all Federal-aid construction contracts and to all related subcontracts.

In order to assure high quality and durable construction in conformity with approved plans and specifications and a high degree of reliability on statements and representations made by engineers, contractors, suppliers, and workers on Federal-aid highway projects, it is essential that all persons concerned with the project perform their functions as carefully, thoroughly, and honestly as possible. Willful falsification, distortion, or misrepresentation with respect to any facts related to the project is a violation of Federal law. To prevent any misunderstanding regarding the seriousness of these and similar acts, Form FHWA-1022 shall be posted on each Federal-aid highway project (23 CFR Part 635) in one or more places where it is readily available to all persons concerned with the project:

18 U.S.C. 1020 reads as follows:

"Whoever, being an officer, agent, or employee of the United States, or of any State or Territory, or whoever, whether a person, association, firm, or corporation, knowingly makes any false statement, false representation, or false report as to the character, quality, quantity, or cost of the material used or to be used, or the quantity or quality of the work performed or to be performed, or the cost thereof in connection with the submission of plans, maps, specifications, contracts, or costs of construction on any highway or related project submitted for approval to the Secretary of Transportation; or

Whoever knowingly makes any false statement, false representation, false report or false claim with respect to the character, quality, quantity, or cost of any work performed or to be performed, or materials furnished or to be furnished, in connection with the construction of any highway or related project approved by the Secretary of Transportation; or

Whoever knowingly makes any false statement or false representation as to material fact in any statement, certificate, or report submitted pursuant to provisions of the Federal-aid Roads Act approved July 11, 1916, (39 Stat. 355), as amended and supplemented;

Shall be fined under this title or imprisoned not more than 5 years or both."

IX. IMPLEMENTATION OF CLEAN AIR ACT AND FEDERAL WATER POLLUTION CONTROL ACT (42 U.S.C. 7606; 2 CFR 200.88; EO 11738)

This provision is applicable to all Federal-aid construction contracts in excess of $150,000 and to all related subcontracts. 48 CFR 2.101; 2 CFR 200.326.

By submission of this bid/proposal or the execution of this contract or subcontract, as appropriate, the bidder, proposer, Federal-aid construction contractor, subcontractor, supplier, or vendor agrees to comply with all applicable standards, orders or regulations issued pursuant to the Clean Air Act (42 U.S.C. 7401-7671q) and the Federal Water Pollution Control Act, as amended (33 U.S.C. 1251-1387). Violations must be reported to the Federal Highway Administration and the Regional Office of the Environmental Protection Agency. 2 CFR Part 200, Appendix II.

The contractor agrees to include or cause to be included the requirements of this Section in every subcontract, and further agrees to take such action as the contracting agency may direct as a means of enforcing such requirements. 2 CFR 200.326.

X. CERTIFICATION REGARDING DEBARMENT, SUSPENSION, INELIGIBILITY AND VOLUNTARY EXCLUSION

This provision is applicable to all Federal-aid construction contracts, design-build contracts, subcontracts, lower-tier subcontracts, purchase orders, lease agreements, consultant contracts or any other covered transaction requiring FHWA approval or that is estimated to cost $25,000 or more – as defined in 2 CFR Parts 180 and 1200. 2 CFR 180.220 and 1200.220.

1**. Instructions for Certification – First Tier Participants:**

a. By signing and submitting this proposal, the prospective first tier participant is providing the certification set out below.

b. The inability of a person to provide the certification set out below will not necessarily result in denial of participation in this covered transaction. The prospective first tier participant shall submit an explanation of why it cannot provide the certification set out below. The certification or explanation will be considered in connection with the department or agency's determination whether to enter into this transaction. However, failure of the prospective first tier participant to furnish a certification or an explanation shall disqualify such a person from participation in this transaction. 2 CFR 180.320.

c. The certification in this clause is a material representation of fact upon which reliance was placed when the contracting agency determined to enter into this transaction. If it is later determined that the prospective participant knowingly rendered an erroneous certification, in addition to other remedies available to the Federal Government, the contracting agency may terminate this transaction for cause of default. 2 CFR 180.325.

d. The prospective first tier participant shall provide immediate written notice to the contracting agency to whom this proposal is submitted if any time the prospective first tier participant learns that its certification was erroneous when submitted or has become erroneous by reason of changed circumstances. 2 CFR 180.345 and 180.350.

e. The terms "covered transaction," "debarred," "suspended," "ineligible," "participant," "person," "principal," and "voluntarily excluded," as used in this clause, are defined in 2 CFR Parts 180, Subpart I, 180.900-180.1020, and 1200. “First Tier Covered Transactions” refers to any covered transaction between a recipient or subrecipient of Federal funds and a participant (such as the prime or general contract). “Lower Tier Covered Transactions” refers to any covered transaction under a First Tier Covered Transaction (such as subcontracts). “First Tier Participant” refers to the participant

who has entered into a covered transaction with a recipient or subrecipient of Federal funds (such as the prime or general contractor). "Lower Tier Participant" refers any participant who has entered into a covered transaction with a First Tier Participant or other Lower Tier Participants (such as subcontractors and suppliers).

f. The prospective first tier participant agrees by submitting this proposal that, should the proposed covered transaction be entered into, it shall not knowingly enter into any lower tier covered transaction with a person who is debarred, suspended, declared ineligible, or voluntarily excluded from participation in this covered transaction, unless authorized by the department or agency entering into this transaction. 2 CFR 180.330.

g. The prospective first tier participant further agrees by submitting this proposal that it will include the clause titled "Certification Regarding Debarment, Suspension, Ineligibility and Voluntary Exclusion-Lower Tier Covered Transactions," provided by the department or contracting agency, entering into this covered transaction, without modification, in all lower tier covered transactions and in all solicitations for lower tier covered transactions exceeding the $25,000 threshold. 2 CFR 180.220 and 180.300.

h. A participant in a covered transaction may rely upon a certification of a prospective participant in a lower tier covered transaction that is not debarred, suspended, ineligible, or voluntarily excluded from the covered transaction, unless it knows that the certification is erroneous. 2 CFR 180.300; 180.320, and 180.325. A participant is responsible for ensuring that its principals are not suspended, debarred, or otherwise ineligible to participate in covered transactions. 2 CFR 180.335. To verify the eligibility of its principals, as well as the eligibility of any lower tier prospective participants, each participant may, but is not required to, check the System for Award Management website (https://www.sam.gov/). 2 CFR 180.300, 180.320, and 180.325.

i. Nothing contained in the foregoing shall be construed to require the establishment of a system of records in order to render in good faith the certification required by this clause. The knowledge and information of the prospective participant is not required to exceed that which is normally possessed by a prudent person in the ordinary course of business dealings.

j. Except for transactions authorized under paragraph (f) of these instructions, if a participant in a covered transaction knowingly enters into a lower tier covered transaction with a person who is suspended, debarred, ineligible, or voluntarily excluded from participation in this transaction, in addition to other remedies available to the Federal Government, the department or agency may terminate this transaction for cause or default. 2 CFR 180.325.

* * * * *

2. Certification Regarding Debarment, Suspension, Ineligibility and Voluntary Exclusion – First Tier Participants:

a. The prospective first tier participant certifies to the best of its knowledge and belief, that it and its principals:

(1) Are not presently debarred, suspended, proposed for debarment, declared ineligible, or voluntarily excluded from participating in covered transactions by any Federal department or agency, 2 CFR 180.335;.

(2) Have not within a three-year period preceding this proposal been convicted of or had a civil judgment rendered against them for commission of fraud or a criminal offense in connection with obtaining, attempting to obtain, or performing a public (Federal, State, or local) transaction or contract under a public transaction; violation of Federal or State antitrust statutes or commission of embezzlement, theft, forgery, bribery, falsification or destruction of records, making false statements, or receiving stolen property, 2 CFR 180.800;

(3) Are not presently indicted for or otherwise criminally or civilly charged by a governmental entity (Federal, State or local) with commission of any of the offenses enumerated in paragraph (a)(2) of this certification, 2 CFR 180.700 and 180.800; and

(4) Have not within a three-year period preceding this application/proposal had one or more public transactions (Federal, State or local) terminated for cause or default. 2 CFR 180.335(d).

(5) Are not a corporation that has been convicted of a felony violation under any Federal law within the two-year period preceding this proposal (USDOT Order 4200.6 implementing appropriations act requirements); and

(6) Are not a corporation with any unpaid Federal tax liability that has been assessed, for which all judicial and administrative remedies have been exhausted, or have lapsed, and that is not being paid in a timely manner pursuant to an agreement with the authority responsible for collecting the tax liability (USDOT Order 4200.6 implementing appropriations act requirements).

b. Where the prospective participant is unable to certify to any of the statements in this certification, such prospective participant should attach an explanation to this proposal. 2 CFR 180.335 and 180.340.

3. **Instructions for Certification - Lower Tier Participants:**

(Applicable to all subcontracts, purchase orders, and other lower tier transactions requiring prior FHWA approval or estimated to cost $25,000 or more - 2 CFR Parts 180 and 1200). 2 CFR 180.220 and 1200.220.

a. By signing and submitting this proposal, the prospective lower tier participant is providing the certification set out below.

b. The certification in this clause is a material representation of fact upon which reliance was placed when this transaction was entered into. If it is later determined that the prospective lower tier participant knowingly rendered an erroneous certification, in addition to other remedies available to the Federal Government, the department, or agency with which this transaction originated may pursue available remedies, including suspension and/or debarment.

c. The prospective lower tier participant shall provide immediate written notice to the person to which this proposal is submitted if at any time the prospective lower tier participant learns that its certification was erroneous by reason of changed circumstances. 2 CFR 180.365.

d. The terms "covered transaction," "debarred," "suspended," "ineligible," "participant," "person," "principal," and "voluntarily excluded," as used in this clause, are defined in 2 CFR Parts 180, Subpart I, 180.900 – 180.1020, and 1200. You may contact the person to which this proposal is

submitted for assistance in obtaining a copy of those regulations. “First Tier Covered Transactions” refers to any covered transaction between a recipient or subrecipient of Federal funds and a participant (such as the prime or general contract). “Lower Tier Covered Transactions” refers to any covered transaction under a First Tier Covered Transaction (such as subcontracts). “First Tier Participant” refers to the participant who has entered into a covered transaction with a recipient or subrecipient of Federal funds (such as the prime or general contractor). “Lower Tier Participant” refers any participant who has entered into a covered transaction with a First Tier Participant or other Lower Tier Participants (such as subcontractors and suppliers).

e. The prospective lower tier participant agrees by submitting this proposal that, should the proposed covered transaction be entered into, it shall not knowingly enter into any lower tier covered transaction with a person who is debarred, suspended, declared ineligible, or voluntarily excluded from participation in this covered transaction, unless authorized by the department or agency with which this transaction originated. 2 CFR 1200.220 and 1200.332.

f. The prospective lower tier participant further agrees by submitting this proposal that it will include this clause titled "Certification Regarding Debarment, Suspension, Ineligibility and Voluntary Exclusion-Lower Tier Covered Transaction," without modification, in all lower tier covered transactions and in all solicitations for lower tier covered transactions exceeding the $25,000 threshold. 2 CFR 180.220 and 1200.220.

g. A participant in a covered transaction may rely upon a certification of a prospective participant in a lower tier covered transaction that is not debarred, suspended, ineligible, or voluntarily excluded from the covered transaction, unless it knows that the certification is erroneous. A participant is responsible for ensuring that its principals are not suspended, debarred, or otherwise ineligible to participate in covered transactions. To verify the eligibility of its principals, as well as the eligibility of any lower tier prospective participants, each participant may, but is not required to, check the System for Award Management website (https://www.sam.gov/), which is compiled by the General Services Administration. 2 CFR 180.300, 180.320, 180.330, and 180.335.

h. Nothing contained in the foregoing shall be construed to require establishment of a system of records in order to render in good faith the certification required by this clause. The knowledge and information of participant is not required to exceed that which is normally possessed by a prudent person in the ordinary course of business dealings.

i. Except for transactions authorized under paragraph e of these instructions, if a participant in a covered transaction knowingly enters into a lower tier covered transaction with a person who is suspended, debarred, ineligible, or voluntarily excluded from participation in this transaction, in addition to other remedies available to the Federal Government, the department or agency with which this transaction originated may pursue available remedies, including suspension and/or debarment. 2 CFR 180.325.

* * * * *

Certification Regarding Debarment, Suspension, Ineligibility and Voluntary Exclusion--Lower Tier Participants:

1. The prospective lower tier participant certifies, by submission of this proposal, that neither it nor its principals:

(a) is presently debarred, suspended, proposed for debarment, declared ineligible, or voluntarily excluded from participating in covered transactions by any Federal department or agency, 2 CFR 180.355;

(b) is a corporation that has been convicted of a felony violation under any Federal law within the two-year period preceding this proposal (USDOT Order 4200.6 implementing appropriations act requirements); and

(c) is a corporation with any unpaid Federal tax liability that has been assessed, for which all judicial and administrative remedies have been exhausted, or have lapsed, and that is not being paid in a timely manner pursuant to an agreement with the authority responsible for collecting the tax liability. (USDOT Order 4200.6 implementing appropriations act requirements)

2. Where the prospective lower tier participant is unable to certify to any of the statements in this certification, such prospective participant should attach an explanation to this proposal.

* * * * *

XI. CERTIFICATION REGARDING USE OF CONTRACT FUNDS FOR LOBBYING

This provision is applicable to all Federal-aid construction contracts and to all related subcontracts which exceed $100,000. 49 CFR Part 20, App. A.

1. The prospective participant certifies, by signing and submitting this bid or proposal, to the best of his or her knowledge and belief, that:

a. No Federal appropriated funds have been paid or will be paid, by or on behalf of the undersigned, to any person for influencing or attempting to influence an officer or employee of any Federal agency, a Member of Congress, an officer or employee of Congress, or an employee of a Member of Congress in connection with the awarding of any Federal contract, the making of any Federal grant, the making of any Federal loan, the entering into of any cooperative agreement, and the extension, continuation, renewal, amendment, or modification of any Federal contract, grant, loan, or cooperative agreement.

b. If any funds other than Federal appropriated funds have been paid or will be paid to any person for influencing or attempting to influence an officer or employee of any Federal agency, a Member of Congress, an officer or employee of Congress, or an employee of a Member of Congress in connection with this Federal contract, grant, loan, or cooperative agreement, the undersigned shall complete and submit Standard Form-LLL, "Disclosure Form to Report Lobbying," in accordance with its instructions.

2. This certification is a material representation of fact upon which reliance was placed when this transaction was made or entered into. Submission of this certification is a prerequisite for making or entering into this transaction imposed by 31 U.S.C. 1352. Any person who fails to file the required certification shall be subject to a civil penalty of not less than $10,000 and not more than $100,000 for each such failure.

3. The prospective participant also agrees by submitting its bid or proposal that the participant shall require that the language of this certification be included in all lower tier

subcontracts, which exceed $100,000 and that all such recipients shall certify and disclose accordingly.

XII. USE OF UNITED STATES-FLAG VESSELS:

This provision is applicable to all Federal-aid construction contracts, design-build contracts, subcontracts, lower-tier subcontracts, purchase orders, lease agreements, or any other covered transaction. 46 CFR Part 381.

This requirement applies to material or equipment that is acquired for a specific Federal-aid highway project. 46 CFR 381.7. It is not applicable to goods or materials that come into inventories independent of an FHWA funded-contract.

When oceanic shipments (or shipments across the Great Lakes) are necessary for materials or equipment acquired for a specific Federal-aid construction project, the bidder, proposer, contractor, subcontractor, or vendor agrees:

1. To utilize privately owned United States-flag commercial vessels to ship at least 50 percent of the gross tonnage (computed separately for dry bulk carriers, dry cargo liners, and tankers) involved, whenever shipping any equipment, material, or commodities pursuant to this contract, to the extent such vessels are available at fair and reasonable rates for United States-flag commercial vessels. 46 CFR 381.7.

2. To furnish within 20 days following the date of loading for shipments originating within the United States or within 30 working days following the date of loading for shipments originating outside the United States, a legible copy of a rated, ‘on-board’ commercial ocean bill-of-lading in English for each shipment of cargo described in paragraph (b)(1) of this section to both the Contracting Officer (through the prime contractor in the case of subcontractor bills-of-lading) and to the Office of Cargo and Commercial Sealift (MAR-620), Maritime Administration, Washington, DC 20590. (MARAD requires copies of the ocean carrier's (master) bills of lading, certified onboard, dated, with rates and charges. These bills of lading may contain business sensitive information and therefore may be submitted directly to MARAD by the Ocean Transportation Intermediary on behalf of the contractor). 46 CFR 381.7.

ATTACHMENT A - EMPLOYMENT AND MATERIALS PREFERENCE FOR APPALACHIAN DEVELOPMENT HIGHWAY SYSTEM OR APPALACHIAN LOCAL ACCESS ROAD CONTRACTS (23 CFR 633, Subpart B, Appendix B)
This provision is applicable to all Federal-aid projects funded under the Appalachian Regional Development Act of 1965.

1. During the performance of this contract, the contractor undertaking to do work which is, or reasonably may be, done as on-site work, shall give preference to qualified persons who regularly reside in the labor area as designated by the DOL wherein the contract work is situated, or the subregion, or the Appalachian counties of the State wherein the contract work is situated, except:

a. To the extent that qualified persons regularly residing in the area are not available.

b. For the reasonable needs of the contractor to employ supervisory or specially experienced personnel necessary to assure an efficient execution of the contract work.

c. For the obligation of the contractor to offer employment to present or former employees as the result of a lawful collective bargaining contract, provided that the number of nonresident persons employed under this subparagraph (1c) shall not exceed 20 percent of the total number of employees employed by the contractor on the contract work, except as provided in subparagraph (4) below.

2. The contractor shall place a job order with the State Employment Service indicating (a) the classifications of the laborers, mechanics and other employees required to perform the contract work, (b) the number of employees required in each classification, (c) the date on which the participant estimates such employees will be required, and (d) any other pertinent information required by the State Employment Service to complete the job order form. The job order may be placed with the State Employment Service in writing or by telephone. If during the course of the contract work, the information submitted by the contractor in the original job order is substantially modified, the participant shall promptly notify the State Employment Service.

3. The contractor shall give full consideration to all qualified job applicants referred to him by the State Employment Service. The contractor is not required to grant employment to any job applicants who, in his opinion, are not qualified to perform the classification of work required.

4. If, within one week following the placing of a job order by the contractor with the State Employment Service, the State Employment Service is unable to refer any qualified job applicants to the contractor, or less than the number requested, the State Employment Service will forward a certificate to the contractor indicating the unavailability of applicants. Such certificate shall be made a part of the contractor's permanent project records. Upon receipt of this certificate, the contractor may employ persons who do not normally reside in the labor area to fill positions covered by the certificate, notwithstanding the provisions of subparagraph (1c) above.

5. The provisions of 23 CFR 633.207(e) allow the contracting agency to provide a contractual preference for the use of mineral resource materials native to the Appalachian region.

6. The contractor shall include the provisions of Sections 1 through 4 of this Attachment A in every subcontract for work which is, or reasonably may be, done as on-site work.

KENTUCKY TRANSPORTATION CABINET
DEPARTMENT OF HIGHWAYS

EMPLOYMENT REQUIREMENTS
RELATING TO
NONDISCRIMINATION OF EMPLOYEES
(APPLICABLE TO FEDERAL-AID SYSTEM CONTRACTS)

AN ACT OF THE KENTUCKY GENERAL ASSEMBLY TO PREVENT DISCRIMINATION IN EMPLOYMENT

KRS CHAPTER 344
EFFECTIVE JUNE 16, 1972

The contract on this project, in accordance with KRS Chapter 344, provides that during the performance of this contract, the contractor agrees as follows:

1. The contractor shall not fail or refuse to hire, or shall not discharge any individual, or otherwise discriminate against an individual with respect to his compensation, terms, conditions, or privileges of employment, because of such individual's race, color, religion, national origin, sex, disability or age (forty and above); or limit, segregate, or classify his employees in any way which would deprive or tend to deprive an individual of employment opportunities or otherwise adversely affect his status as an employee, because of such individual's race, color, religion, national origin, sex, disability or age forty (40) and over. The contractor agrees to post in conspicuous places, available to employees and applicants for employment, notices to be provided setting forth the provisions of this nondiscrimination clause.

2. The contractor shall not print or publish or cause to be printed or published a notice or advertisement relating to employment by such an employer or membership in or any classification or referral for employment by the employment agency, indicating any preference, limitation, specification, or discrimination, based on race, color, religion, national origin, sex, or age forty (40) and over, or because the person is a qualified individual with a disability, except that such a notice or advertisement may indicate a preference, limitation, or specification based on religion, national origin, sex, or age forty (40) and over, or because the person is a qualified individual with a disability, when religion, national origin, sex, or age forty (40) and over, or because the person is a qualified individual with a disability, is a bona fide occupational qualification for employment.

3. If the contractor is in control of apprenticeship or other training or retraining, including on-the-job training programs, he shall not discriminate against an individual because of his race, color, religion, national origin, sex, disability or age forty (40) and over, in admission to, or employment in any program established to provide apprenticeship or other training.

4. The contractor will send to each labor union or representative of workers with which he has a collective bargaining agreement or other contract or understanding, a notice to be provided advising the said labor union or workers' representative of the contractor's commitments under this section, and shall post copies of the notice in conspicuous places available to employees and applicants for employment. The contractor will take such action with respect to any subcontract or purchase order as the administrating agency may direct as a means of enforcing such provisions, including sanctions for non-compliance.

Revised: January 25, 2017

Standard Title VI/Non-Discrimination Assurances

During the performance of this contract, the contractor, for itself, its assignees, and successors in interest (hereinafter referred to as the "contractor") agrees as follows:

1. **Compliance with Regulations:** The contractor (hereinafter includes consultants) will comply with the Acts and the Regulations relative to Non-discrimination in Federally-assisted programs of the U.S. Department of Transportation, **Federal Highway Administration**, as they may be amended from time to time, which are herein incorporated by reference and made a part of this contract.

2. **Non-discrimination:** The contractor, with regard to the work performed by it during the contract, will not discriminate on the grounds of race, color, or national origin in the selection and retention of subcontractors, including procurements of materials and leases of equipment. The contractor will not participate directly or indirectly in the discrimination prohibited by the Acts and the Regulations, including employment practices when the contract covers any activity, project, or program set forth in Appendix B of 49 CFR Part 21.

3. **Solicitations for Subcontracts, Including Procurements of Materials and Equipment:** In all solicitations, either by competitive bidding, or negotiation made by the contractor for work to be performed under a subcontract, including procurements of materials, or leases of equipment, each potential subcontractor or supplier will be notified by the contractor of the contractor's obligations under this contract and the Acts and the Regulations relative to Non-discrimination on the grounds of race, color, or national origin.

4. **Information and Reports:** The contractor will provide all information and reports required by the Acts, the Regulations, and directives issued pursuant thereto and will permit access to its books, records, accounts, other sources of information, and its facilities as may be determined by the Recipient or the **Federal Highway Administration** to be pertinent to ascertain compliance with such Acts, Regulations, and instructions. Where any information required of a contractor is in the exclusive possession of another who fails or refuses to furnish the information, the contractor will so certify to the Recipient or the **Federal Highway Administration**, as appropriate, and will set forth what efforts it has made to obtain the information.

5. **Sanctions for Noncompliance:** In the event of a contractor's noncompliance with the Non-discrimination provisions of this contract, the Recipient will impose such contract sanctions as it or the **Federal Highway Administration** may determine to be appropriate, including, but not limited to:

    a. withholding payments to the contractor under the contract until the contractor complies; and/or
    b. cancelling, terminating, or suspending a contract, in whole or in part.

6. **Incorporation of Provisions:** The contractor will include the provisions of paragraphs one through six in every subcontract, including procurements of materials and leases of equipment, unless exempt by the Acts, the Regulations and directives issued pursuant thereto. The contractor will take action with respect to any subcontract or procurement as the Recipient or the **Federal Highway Administration** may direct as a means of enforcing such provisions including sanctions for noncompliance. Provided, that if the contractor becomes involved in, or is threatened with litigation by a subcontractor, or supplier because of such direction, the contractor may request the Recipient to enter into any litigation to protect the interests of the Recipient. In addition, the contractor may request the United States to enter into the litigation to protect the interests of the United States.

Standard Title VI/Non-Discrimination Statutes and Authorities

During the performance of this contract, the contractor, for itself, its assignees, and successors in interest (hereinafter referred to as the "contractor") agrees to comply with the following non-discrimination statutes and authorities; including but not limited to:

- Title VI of the Civil Rights Act of 1964 (42 U.S.C. § 2000d *et seq*., 78 stat. 252), (prohibits discrimination on the basis of race, color, national origin); and 49 CFR Part 21;
- The Uniform Relocation Assistance and Real Property Acquisition Policies Act of 1970, (42 U.S.C. § 4601), (prohibits unfair treatment of persons displaced or whose property has been acquired because of Federal or Federal-aid programs and projects);
- Federal-Aid Highway Act of 1973, (23 U.S.C. § 324 *et seq*.), (prohibits discrimination on the basis of sex);
- Section 504 of the Rehabilitation Act of 1973, (29 U.S.C. § 794 *et seq*.), as amended, (prohibits discrimination on the basis of disability); and 49 CFR Part 27;
- The Age Discrimination Act of 1975, as amended, (42 U.S.C. § 6101 *et seq*.), (prohibits discrimination on the basis of age);
- Airport and Airway Improvement Act of 1982, (49 USC § 471, Section 47123), as amended, (prohibits discrimination based on race, creed, color, national origin, or sex);
- The Civil Rights Restoration Act of 1987, (PL 100-209), (Broadened the scope, coverage and applicability of Title VI of the Civil Rights Act of 1964, The Age Discrimination Act of 1975 and Section 504 of the Rehabilitation Act of 1973, by expanding the definition of the terms "programs or activities" to include all of the programs or activities of the Federal-aid recipients, sub-recipients and contractors, whether such programs or activities are Federally funded or not);
- Titles II and III of the Americans with Disabilities Act, which prohibit discrimination on the basis of disability in the operation of public entities, public and private transportation systems, places of public accommodation, and certain testing entities (42 U.S.C. §§ 12131 -- 12189) as implemented by Department of Transportation regulations at 49 C.F.R. parts 37 and 38;
- The Federal Aviation Administration's Non-discrimination statute (49 U.S.C. § 47123) (prohibits discrimination on the basis of race, color, national origin, and sex);
- Executive Order 12898, Federal Actions to Address Environmental Justice in Minority Populations and Low-Income Populations, which ensures non-discrimination against minority populations by discouraging programs, policies, and activities with disproportionately high and adverse human health or environmental effects on minority and low-income populations;
- Executive Order 13166, Improving Access to Services for Persons with Limited English Proficiency, and resulting agency guidance, national origin discrimination includes discrimination because of limited English proficiency (LEP). To ensure compliance with Title VI, you must take reasonable steps to ensure that LEP persons have meaningful access to your programs (70 Fed. Reg. at 74087 to 74100);
- Title IX of the Education Amendments of 1972, as amended, which prohibits you from discriminating because of sex in education programs or activities (20 U.S.C. 1681 et seq).

EXECUTIVE BRANCH CODE OF ETHICS

In the 1992 regular legislative session, the General Assembly passed and Governor Brereton Jones signed Senate Bill 63 (codified as KRS 11A), the Executive Branch Code of Ethics, which states, in part:

KRS 11A.040 (7) provides:

No present or former public servant shall, within six (6) months following termination of his office or employment, accept employment, compensation, or other economic benefit from any person or business that contracts or does business with, or is regulated by, the state in matters in which he was directly involved during the last thirty-six (36) months of his tenure. This provision shall not prohibit an individual from returning to the same business, firm, occupation, or profession in which he was involved prior to taking office or beginning his term of employment, or for which he received, prior to his state employment, a professional degree or license, provided that, for a period of six (6) months, he personally refrains from working on any matter in which he was directly involved during the last thirty-six (36) months of his tenure in state government. This subsection shall not prohibit the performance of ministerial functions, including but not limited to filing tax returns, filing applications for permits or licenses, or filing incorporation papers, nor shall it prohibit the former officer or public servant from receiving public funds disbursed through entitlement programs.

KRS 11A.040 (9) states:

A former public servant shall not represent a person or business before a state agency in a matter in which the former public servant was directly involved during the last thirty-six (36) months of his tenure, for a period of one (1) year after the latter of:

a) The date of leaving office or termination of employment; or
b) The date the term of office expires to which the public servant was elected.

This law is intended to promote public confidence in the integrity of state government and to declare as public policy the idea that state employees should view their work as a public trust and not as a way to obtain private benefits.

If you have worked for the executive branch of state government within the past six months, you may be subject to the law's prohibitions. The law's applicability may be different if you hold elected office or are contemplating representation of another before a state agency.

Also, if you are affiliated with a firm which does business with the state and which employs former state executive-branch employees, you should be aware that the law may apply to them.

In case of doubt, the law permits you to request an advisory opinion from the Executive Branch Ethics Commission, 1025 Capital Center Drive, Suite 104, Frankfort, Kentucky 40601; telephone (502) 564-7954.

Revised: May 23, 2022

"General Decision Number: KY20230038 02/24/2023

Superseded General Decision Number: KY20220038

State: Kentucky

Construction Type: Highway

Counties: Anderson, Bath, Bourbon, Boyd, Boyle, Bracken, Breckinridge, Bullitt, Carroll, Carter, Clark, Elliott, Fayette, Fleming, Franklin, Gallatin, Grant, Grayson, Greenup, Hardin, Harrison, Henry, Jefferson, Jessamine, Larue, Lewis, Madison, Marion, Mason, Meade, Mercer, Montgomery, Nelson, Nicholas, Oldham, Owen, Robertson, Rowan, Scott, Shelby, Spencer, Trimble, Washington and Woodford Counties in Kentucky.

HIGHWAY CONSTRUCTION PROJECTS (excluding tunnels, building structures in rest area projects & railroad construction; bascule, suspension & spandrel arch bridges designed for commercial navigation, bridges involving marine construction; and other major bridges).

Note: Contracts subject to the Davis-Bacon Act are generally required to pay at least the applicable minimum wage rate required under Executive Order 14026 or Executive Order 13658. Please note that these Executive Orders apply to covered contracts entered into by the federal government that are subject to the Davis-Bacon Act itself, but do not apply to contracts subject only to the Davis-Bacon Related Acts, including those set forth at 29 CFR 5.1(a)(2)-(60).

If the contract is entered into on or after January 30, 2022, or the contract is renewed or extended (e.g., an option is exercised) on or after January 30, 2022:	. Executive Order 14026 generally applies to the contract. . The contractor must pay all covered workers at least $16.20 per hour (or the applicable wage rate listed on this wage determination, if it is higher) for all hours spent performing on the contract in 2023.
If the contract was awarded on or between January 1, 2015 and January 29, 2022, and the contract is not renewed or extended on or after January 30, 2022:	. Executive Order 13658 generally applies to the contract. . The contractor must pay all covered workers at least $12.15 per hour (or the applicable wage rate listed on this wage determination, if it is higher) for all hours spent performing on that contract in 2023.

The applicable Executive Order minimum wage rate will be adjusted annually. If this contract is covered by one of the Executive Orders and a classification considered necessary for performance of work on the contract does not appear on this wage determination, the contractor must still submit a

conformance request.

Additional information on contractor requirements and worker protections under the Executive Orders is available at http://www.dol.gov/whd/govcontracts.

Modification Number	Publication Date
0	01/06/2023
1	02/10/2023
2	02/24/2023

BRIN0004-003 06/01/2022

BRECKENRIDGE COUNTY

	Rates	Fringes
BRICKLAYER	$ 33.00	19.46

BRKY0001-005 06/01/2022

BULLITT, CARROLL, GRAYSON, HARDIN, HENRY, JEFFERSON, LARUE, MARION, MEADE, NELSON, OLDHAM, SHELBY, SPENCER, & TRIMBLE COUNTIES:

	Rates	Fringes
BRICKLAYER	$ 31.87	16.39

BRKY0002-006 06/01/2022

BRACKEN, GALLATIN, GRANT, MASON & ROBERTSON COUNTIES:

	Rates	Fringes
BRICKLAYER	$ 31.87	16.39

BRKY0007-004 06/01/2022

BOYD, CARTER, ELLIOT, FLEMING, GREENUP, LEWIS & ROWAN COUNTIES:

	Rates	Fringes
BRICKLAYER	$ 32.94	20.28

BRKY0017-004 06/01/2022

ANDERSON, BATH, BOURBON, BOYLE, CLARK, FAYETTE, FRANKLIN, HARRISON, JESSAMINE, MADISON, MERCER, MONTGOMERY, NICHOLAS, OWEN, SCOTT, WASHINGTON & WOODFORD COUNTIES:

	Rates	Fringes
BRICKLAYER	$ 31.87	16.39

CARP0064-001 04/01/2022

	Rates	Fringes
CARPENTER	$ 30.84	22.19
Diver	$ 46.64	22.19
PILEDRIVERMAN	$ 31.09	22.19

ELEC0212-008 06/07/2022

BRACKEN, GALLATIN and GRANT COUNTIES

	Rates	Fringes
ELECTRICIAN.....	$ 33.29	20.05

ELEC0212-014 11/28/2022

BRACKEN, GALLATIN & GRANT COUNTIES:

	Rates	Fringes
Sound & Communication Technician.....	$ 26.70	13.41

ELEC0317-012 05/30/2022

BOYD, CARTER, ELLIOT & ROWAN COUNTIES:

	Rates	Fringes
ELECTRICIAN (Wiremen).....	$ 35.85	28.25

ELEC0369-007 06/01/2022

ANDERSON, BATH, BOURBON, BOYLE, BRECKINRIDGE, BULLITT, CARROLL, CLARK, FAYETTE, FRAONKLIN, GRAYSON, HARDIN, HARRISON, HENRY, JEFFERSON, JESSAMINE, LARUE, MADISON, MARION, MEADE, MERCER, MONTGOMERY, NELSON, NICHOLAS, OLDHAM, OWEN, ROBERTSON, SCOTT, SHELBY, SPENCER, TRIMBLE, WASHINGTON, & WOODFORD COUNTIES:

	Rates	Fringes
ELECTRICIAN.....	$ 34.60	19.57

ELEC0575-002 11/21/2022

FLEMING, GREENUP, LEWIS & MASON COUNTIES:

	Rates	Fringes
ELECTRICIAN.....	$ 36.00	21.14

ENGI0181-018 07/01/2021

	Rates	Fringes
POWER EQUIPMENT OPERATOR		
GROUP 1.....	$ 34.80	17.85
GROUP 2.....	$ 31.94	17.85
GROUP 3.....	$ 32.39	17.85
GROUP 4.....	$ 31.62	17.85

OPERATING ENGINEER CLASSIFICATIONS

GROUP 1 - A-Frame Winch Truck; Auto Patrol; Backfiller; Batcher Plant; Bituminous Paver; Bituminous Transfer Machine; Boom Cat; Bulldozer; Mechanic; Cableway; Carry-All Scoop; Carry Deck Crane; Central Compressor Plant; Cherry Picker; Clamshell; Concrete Mixer (21 cu. ft. or Over); Concrete Paver; Truck-Mounted Concrete Pump; Core Drill;

Crane; Crusher Plant; Derrick; Derrick Boat; Ditching & Trenching Machine; Dragline; Dredge Operator; Dredge Engineer; Elevating Grader & Loaders; Grade-All; Gurries; Heavy Equipment Robotics Operator/Mechanic; High Lift; Hoe-Type Machine; Hoist (Two or More Drums); Hoisting Engine (Two or More Drums); Horizontal Directional Drill Operator; Hydrocrane; Hyster; KeCal Loader; LeTourneau; Locomotive; Mechanic; Mechanically Operated Laser Screed; Mechanic Welder; Mucking Machine; Motor Scraper; Orangepeel Bucket; Overhead Crane; Piledriver; Power Blade; Pumpcrete; Push Dozer; Rock Spreader, attached to equipment; Rotary Drill; Roller (Bituminous); Rough Terrain Crane; Scarifier; Scoopmobile; Shovel; Side Boom; Subgrader; Tailboom; Telescoping Type Forklift; Tow or Push Boat; Tower Crane (French, German & other types); Tractor Shovel; Truck Crane; Tunnel Mining Machines, including Moles, Shields or similar types of Tunnel Mining Equipment

GROUP 2 - Air Compressor (Over 900 cu. ft. per min.); Bituminous Mixer; Boom Type Tamping Machine; Bull Float; Concrete Mixer (Under 21 cu. ft.); Dredge Engineer; Electric Vibrator; Compactor/Self-Propelled Compactor; Elevator (One Drum or Buck Hoist); Elevator (When used to Hoist Building Material); Finish Machine; Firemen & Hoist (One Drum); Flexplane; Forklift (Regardless of Lift Height); Form Grader; Joint Sealing Machine; Outboard Motor Boat; Power Sweeper (Riding Type); Roller (Rock); Ross Carrier; Skid Mounted or Trailer Mounted Conrete Pump; Skid Steer Machine with all Attachments; Switchman or Brakeman; Throttle Valve Person; Tractair & Road Widening Trencher; Tractor (50 H.P. or Over); Truck Crane Oiler; Tugger; Welding Machine; Well Points; & Whirley Oiler

GROUP 3 - All Off Road Material Handling Equipment, including Articulating Dump Trucks; Greaser on Grease Facilities servicing Heavy Equipment

GROUP 4 - Bituminous Distributor; Burlap & Curing Machine; Cement Gun; Concrete Saw; Conveyor; Deckhand Oiler; Grout Pump; Hydraulic Post Driver; Hydro Seeder; Mud Jack; Oiler; Paving Joint Machine; Power Form Handling Equipment; Pump; Roller (Earth); Steerman; Tamping Machine; Tractor (Under 50 H.P.); & Vibrator

CRANES - with booms 150 ft. & Over (Including JIB), and where the length of the boom in combination with the length of the piling leads equals or exceeds 150 ft. - $1.00 over Group 1 rate

EMPLOYEES ASSIGNED TO WORK BELOW GROUND LEVEL ARE TO BE PAID 10%
ABOVE BASIC WAGE RATE. THIS DOES NOT APPLY TO OPEN CUT WORK.

IRON0044-009 06/01/2022

BRACKEN, GALLATIN, GRANT, HARRISON, ROBERTSON,
BOURBON (Northern third, including Townships of Jackson, Millersburg, Ruddel Mills & Shawhan);
CARROLL (Eastern third, including the Township of Ghent);
FLEMING (Western part, excluding Townships of Beechburg, Colfax, Elizaville, Flemingsburg, Flemingsburg Junction, Foxport, Grange City, Hillsboro, Hilltop, Mount Carmel, Muses Mills, Nepton, Pecksridge, Plummers Landing, Plummers Mill, Poplar Plains, Ringos Mills, Tilton & Wallingford);

MASON (Western two-thirds, including Townships of Dover, Lewisburg, Mays Lick, Maysville, Minerva, Moranburg, Murphysville, Ripley, Sardis, Shannon, South Ripley & Washington);
NICHOLAS (Townships of Barefoot, Barterville, Carlisle, Ellisville, Headquarters, Henryville, Morningglory, Myers & Oakland Mills);
OWEN (Townships of Beechwood, Bromley, Fairbanks, Holbrook, Jonesville, Long Ridge, Lusby's Mill, New, New Columbus, New Liberty, Owenton, Poplar Grove, Rockdale, Sanders, Teresita & Wheatley);
SCOTT (Northern two-thirds, including Townships of Biddle, Davis, Delaplain, Elmville, Longlick, Muddy Ford, Oxford, Rogers Gap, Sadieville, Skinnersburg & Stonewall)

	Rates	Fringes
IRONWORKER		
Fence Erector	$ 30.28	22.30
Structural	$ 31.87	22.30

IRON0070-006 06/01/2022

ANDERSON, BOYLE, BRECKINRIDGE, BULLITT, FAYETTE, FRANKLIN, GRAYSON, HARDIN, HENRY, JEFFERSON, JESSAMINE, LARUE, MADISON, MARION, MEADE, MERCER, NELSON, OLDHAM, SHELBY, SPENCER, TRIMBLE, WASHINGTON & WOODFORD
BOURBON (Southern two-thirds, including Townships of Austerlity, Centerville, Clintonville, Elizabeth, Hutchison, Littlerock, North Middletown & Paris);
CARROLL (Western two-thirds, including Townships of Carrollton, Easterday, English, Locust, Louis, Prestonville & Worthville);
CLARK (Western two-thirds, including Townships of Becknerville, Flanagan, Ford, Pine Grove, Winchester & Wyandotte);
OWEN (Eastern eighth, including Townships of Glenmary, Gratz, Monterey, Perry Park & Tacketts Mill);
SCOTT (Southern third, including Townships of Georgetown, Great Crossing, Newtown, Stampling Ground & Woodlake);

	Rates	Fringes
IRONWORKER	$ 31.79	24.30

IRON0769-007 06/01/2022

BATH, BOYD, CARTER, ELLIOTT, GREENUP, LEWIS, MONTGOMERY & ROWAN
CLARK (Eastern third, including townships of Bloomingdale, Hunt, Indian Fields, Kiddville, Loglick, Rightangele & Thomson);
FLEMING (Townships of Beechburg, Colfax, Elizaville, Flemingsburg, Flemingsburg Junction, Foxport, Grange City, Hillsboro, Hilltop, Mount Carmel, Muses Mills, Nepton, Pecksridge, Plummers Landing, Plummers Mill, Poplar Plains, Ringos Mills, Tilton & Wallingford);
MASON (Eastern third, including Townships of Helena, Marshall, Orangeburg, Plumville & Springdale);
NICHOLAS (Eastern eighth, including the Township of Moorefield Sprout)

	Rates	Fringes
IRONWORKER		
ZONE 1	$ 33.71	27.69

ZONE 2.....$ 34.11 27.69
ZONE 3.....$ 35.71 27.69

ZONE 1 - (no base rate increase) Up to 10 mile radius of Union Hall, 1643 Greenup Ave, Ashland, KY.

ZONE 2 - (add $0.40 per hour to base rate) 10 to 50 mile radius of Union Hall, 1643 Greenup Ave, Ashland, KY.

ZONE 3 - (add $2.00 per hour to base rate) 50 mile radius & over of Union Hall, 1643 Greenup Ave, Ashland, KY.

LABO0189-003 07/01/2022

BATH, BOURBON, BOYD, BOYLE, BRACKEN, CARTER, CLARK, ELLIOTT, FAYETTE, FLEMING, FRANKLIN, GALLATIN, GRANT, GREENUP, HARRISON, JESSAMINE, LEWIS, MADISON, MASON, MERCER, MONTGOMERY, NICHOLAS, OWEN, ROBERTSON, ROWAN, SCOTT, & WOOLFORD COUNTIES

	Rates	Fringes
Laborers:		
GROUP 1	$ 23.76	17.12
GROUP 2	$ 24.01	17.12
GROUP 3	$ 24.06	17.12
GROUP 4	$ 24.66	17.12

LABORERS CLASSIFICATIONS

GROUP 1 - Aging & Curing of Concrete; Asbestos Abatement Worker; Asphalt Plant; Asphalt; Batch Truck Dump; Carpenter Tender; Cement Mason Tender; Cleaning of Machines; Concrete; Demolition; Dredging; Environmental - Nuclear, Radiation, Toxic & Hazardous Waste - Level D; Flagperson; Grade Checker; Hand Digging & Hand Back Filling; Highway Marker Placer; Landscaping, Mesh Handler & Placer; Puddler; Railroad; Rip-rap & Grouter; Right-of-Way; Sign, Guard Rail & Fence Installer; Signal Person; Sound Barrier Installer; Storm & Sanitary Sewer; Swamper; Truck Spotter & Dumper; Wrecking of Concrete Forms; General Cleanup

GROUP 2 - Batter Board Man (Sanitary & Storm Sewer); Brickmason Tender; Mortar Mixer Operator; Scaffold Builder; Burner & Welder; Bushammer; Chain Saw Operator; Concrete Saw Operator; Deckhand Scow Man; Dry Cement Handler; Environmental - Nuclear, Radiation, Toxic & Hazardous Waste - Level C; Forklift Operator for Masonary; Form Setter; Green Concrete Cutting; Hand Operated Grouter & Grinder Machine Operator; Jackhammer; Pavement Breaker; Paving Joint Machine; Pipelayer; Plastic Pipe Fusion; Power Driven Georgia Buggy & Wheel Barrow; Power Post Hole Digger; Precast Manhole Setter; Walk-Behind Tamper; Walk-Behind Trencher; Sand Blaster; Concrete Chipper; Surface Grinder; Vibrator Operator; Wagon Driller

GROUP 3 - Asphalt Luteman & Raker; Gunnite Nozzleman; Gunnite Operator & Mixer; Grout Pump Operator; Side Rail Setter; Rail Paved Ditches; Screw Operator; Tunnel (Free Air); Water Blaster

GROUP 4 - Caisson Worker (Free Air); Cement Finisher; Environmental - Nuclear, Radiation, Toxic & Hazardous Waste - Levels A & B; Miner & Driller (Free Air); Tunnel Blaster;

& Tunnel Mucker (Free Air); Directional & Horizontal Boring; Air Track Drillers (All Types); Powdermen & Blasters; Troxler & Concrete Tester if Laborer is Utilized

---

LABO0189-008 07/01/2022

ANDERSON, BULLITT, CARROLL, HARDIN, HENRY, JEFFERSON, LARUE, MARION, MEADE, NELSON, OLDHAM, SHELBY, SPENCER, TRIMBLE & WASHINGTON COUNTIES

	Rates	Fringes
Laborers:		
GROUP 1	$ 23.76	17.12
GROUP 2	$ 24.01	17.12
GROUP 3	$ 24.06	17.12
GROUP 4	$ 24.66	17.12

LABORERS CLASSIFICATIONS

GROUP 1 - Aging & Curing of Concrete; Asbestos Abatement Worker; Asphalt Plant; Asphalt; Batch Truck Dump; Carpenter Tender; Cement Mason Tender; Cleaning of Machines; Concrete; Demolition; Dredging; Environmental - Nuclear, Radiation, Toxic & Hazardous Waste - Level D; Flagperson; Grade Checker; Hand Digging & Hand Back Filling; Highway Marker Placer; Landscaping, Mesh Handler & Placer; Puddler; Railroad; Rip-rap & Grouter; Right-of-Way; Sign, Guard Rail & Fence Installer; Signal Person; Sound Barrier Installer; Storm & Sanitary Sewer; Swamper; Truck Spotter & Dumper; Wrecking of Concrete Forms; General Cleanup

GROUP 2 - Batter Board Man (Sanitary & Storm Sewer); Brickmason Tender; Mortar Mixer Operator; Scaffold Builder; Burner & Welder; Bushammer; Chain Saw Operator; Concrete Saw Operator; Deckhand Scow Man; Dry Cement Handler; Environmental - Nuclear, Radiation, Toxic & Hazardous Waste - Level C; Forklift Operator for Masonary; Form Setter; Green Concrete Cutting; Hand Operated Grouter & Grinder Machine Operator; Jackhammer; Pavement Breaker; Paving Joint Machine; Pipelayer; Plastic Pipe Fusion; Power Driven Georgia Buggy & Wheel Barrow; Power Post Hole Digger; Precast Manhole Setter; Walk-Behind Tamper; Walk-Behind Trencher; Sand Blaster; Concrete Chipper; Surface Grinder; Vibrator Operator; Wagon Driller

GROUP 3 - Asphalt Luteman & Raker; Gunnite Nozzleman; Gunnite Operator & Mixer; Grout Pump Operator; Side Rail Setter; Rail Paved Ditches; Screw Operator; Tunnel (Free Air); Water Blaster

GROUP 4 - Caisson Worker (Free Air); Cement Finisher; Environmental - Nuclear, Radiation, Toxic & Hazardous Waste - Levels A & B; Miner & Driller (Free Air); Tunnel Blaster; & Tunnel Mucker (Free Air); Directional & Horizontal Boring; Air Track Drillers (All Types); Powdermen & Blasters; Troxler & Concrete Tester if Laborer is Utilized

---

LABO0189-009 07/01/2022

BRECKINRIDGE & GRAYSON COUNTIES

	Rates	Fringes
Laborers:		
GROUP 1	$ 23.76	17.12
GROUP 2	$ 24.01	17.12
GROUP 3	$ 24.06	17.12
GROUP 4	$ 24.66	17.12

LABORERS CLASSIFICATIONS

GROUP 1 - Aging & Curing of Concrete; Asbestos Abatement Worker; Asphalt Plant; Asphalt; Batch Truck Dump; Carpenter Tender; Cement Mason Tender; Cleaning of Machines; Concrete; Demolition; Dredging; Environmental - Nuclear, Radiation, Toxic & Hazardous Waste - Level D; Flagperson; Grade Checker; Hand Digging & Hand Back Filling; Highway Marker Placer; Landscaping, Mesh Handler & Placer; Puddler; Railroad; Rip-rap & Grouter; Right-of-Way; Sign, Guard Rail & Fence Installer; Signal Person; Sound Barrier Installer; Storm & Sanitary Sewer; Swamper; Truck Spotter & Dumper; Wrecking of Concrete Forms; General Cleanup

GROUP 2 - Batter Board Man (Sanitary & Storm Sewer); Brickmason Tender; Mortar Mixer Operator; Scaffold Builder; Burner & Welder; Bushammer; Chain Saw Operator; Concrete Saw Operator; Deckhand Scow Man; Dry Cement Handler; Environmental - Nuclear, Radiation, Toxic & Hazardous Waste - Level C; Forklift Operator for Masonary; Form Setter; Green Concrete Cutting; Hand Operated Grouter & Grinder Machine Operator; Jackhammer; Pavement Breaker; Paving Joint Machine; Pipelayer; Plastic Pipe Fusion; Power Driven Georgia Buggy & Wheel Barrow; Power Post Hole Digger; Precast Manhole Setter; Walk-Behind Tamper; Walk-Behind Trencher; Sand Blaster; Concrete Chipper; Surface Grinder; Vibrator Operator; Wagon Driller

GROUP 3 - Asphalt Luteman & Raker; Gunnite Nozzleman; Gunnite Operator & Mixer; Grout Pump Operator; Side Rail Setter; Rail Paved Ditches; Screw Operator; Tunnel (Free Air); Water Blaster

GROUP 4 - Caisson Worker (Free Air); Cement Finisher; Environmental - Nuclear, Radiation, Toxic & Hazardous Waste - Levels A & B; Miner & Driller (Free Air); Tunnel Blaster; & Tunnel Mucker (Free Air); Directional & Horizontal Boring; Air Track Drillers (All Types); Powdermen & Blasters; Troxler & Concrete Tester if Laborer is Utilized

---

PAIN0012-005 06/11/2005

BATH, BOURBON, BOYLE, CLARK, FAYETTE, FLEMING, FRANKLIN, HARRISON, JESSAMINE, MADISON, MERCER, MONTGOMERY, NICHOLAS, ROBERTSON, SCOTT & WOODFORD COUNTIES:

	Rates	Fringes
PAINTER		
Bridge/Equipment Tender and/or Containment Builder	$ 18.90	5.90
Brush & Roller	$ 21.30	5.90
Elevated Tanks; Steeplejack Work; Bridge & Lead Abatement	$ 22.30	5.90

```
     Sandblasting &
     Waterblasting...............$ 22.05            5.90
     Spray......................$ 21.80            5.90
-----------------------------------------------------------------
 PAIN0012-017 05/01/2015

BRACKEN, GALLATIN, GRANT, MASON & OWEN COUNTIES:

                                   Rates          Fringes

PAINTER (Heavy & Highway
Bridges - Guardrails -
Lightpoles - Striping)
     Bridge Equipment Tender
     and Containment Builder.....$ 20.73            9.06
     Brush & Roller..............$ 23.39            9.06
     Elevated Tanks;
     Steeplejack Work; Bridge &
     Lead Abatement..............$ 24.39            9.06
     Sandblasting & Water
     Blasting...................$ 24.14            9.06
     Spray......................$ 23.89            9.06
-----------------------------------------------------------------
 PAIN0118-004 06/01/2018

ANDERSON, BRECKINRIDGE, BULLITT, CARROLL, GRAYSON, HARDIN,
HENRY, JEFFERSON, LARUE, MARION, MEADE, NELSON, OLDHAM, SHELBY,
SPENCER, TRIMBLE & WASHINGTON COUNTIES:


                                   Rates          Fringes

PAINTER
     Brush & Roller..............$ 22.00           12.52
     Spray, Sandblast, Power
     Tools, Waterblast & Steam
     Cleaning...................$ 23.00           12.52
-----------------------------------------------------------------
* PAIN1072-003 12/01/2022

BOYD, CARTER, ELLIOTT, GREENUP, LEWIS and ROWAN COUNTIES

                                   Rates          Fringes

Painters:
     Bridges; Locks; Dams;
     Tension Towers & Energized
     Substations................$ 35.06           23.35
     Power Generating Facilities.$ 31.82          23.35
-----------------------------------------------------------------
 PLUM0248-003 06/01/2022

BOYD, CARTER, ELLIOTT, GREENUP, LEWIS & ROWAN COUNTIES:

                                   Rates          Fringes

Plumber and Steamfitter.........$ 38.50           22.40
-----------------------------------------------------------------
 PLUM0392-007 06/01/2022

BRACKEN, CARROLL (Eastern Half), GALLATIN, GRANT, MASON, OWEN &
ROBERTSON COUNTIES:


                                   Rates          Fringes
```

Plumbers and Pipefitters.....$ 36.81 27.35

PLUM0502-003 08/01/2021

BRECKINRIDGE, BULLITT, CARROLL (Western Half), FRANKLIN (Western three-fourths), GRAYSON, HARDIN, HENRY, JEFFERSON, LARUE, MARION, MEADE, NELSON, OLDHAM, SHELBY, SPENCER, TRIMBLE & WASHINGTON COUNTIES

	Rates	Fringes
PLUMBER	$ 38.07	20.78

SUKY2010-160 10/08/2001

	Rates	Fringes
Truck drivers:		
GROUP 1	$ 16.57	7.34
GROUP 2	$ 16.68	7.34
GROUP 3	$ 16.86	7.34
GROUP 4	$ 16.96	7.34

TRUCK DRIVER CLASSIFICATIONS

GROUP 1 - Mobile Batch Truck Tender

GROUP 2 - Greaser; Tire Changer; & Mechanic Tender

GROUP 3 - Single Axle Dump; Flatbed; Semi-trailer or Pole Trailer when used to pull building materials and equipment; Tandem Axle Dump; Distributor; Mixer; & Truck Mechanic

GROUP 4 - Euclid & Other Heavy Earthmoving Equipment & Lowboy; Articulator Cat; 5-Axle Vehicle; Winch & A-Frame when used in transporting materials; Ross Carrier; Forklift when used to transport building materials; & Pavement Breaker

---

WELDERS - Receive rate prescribed for craft performing operation to which welding is incidental.

==========

Note: Executive Order (EO) 13706, Establishing Paid Sick Leave for Federal Contractors applies to all contracts subject to the Davis-Bacon Act for which the contract is awarded (and any solicitation was issued) on or after January 1, 2017. If this contract is covered by the EO, the contractor must provide employees with 1 hour of paid sick leave for every 30 hours they work, up to 56 hours of paid sick leave each year. Employees must be permitted to use paid sick leave for their own illness, injury or other health-related needs, including preventive care; to assist a family member (or person who is like family to the employee) who is ill, injured, or has other health-related needs, including preventive care; or for reasons resulting from, or to assist a family member (or person who is like family to the employee) who is a victim of, domestic violence, sexual assault, or stalking. Additional information on contractor requirements and worker protections under the EO is available at

https://www.dol.gov/agencies/whd/government-contracts.

Unlisted classifications needed for work not included within the scope of the classifications listed may be added after award only as provided in the labor standards contract clauses (29CFR 5.5 (a) (1) (ii)).

The body of each wage determination lists the classification and wage rates that have been found to be prevailing for the cited type(s) of construction in the area covered by the wage determination. The classifications are listed in alphabetical order of ""identifiers"" that indicate whether the particular rate is a union rate (current union negotiated rate for local), a survey rate (weighted average rate) or a union average rate (weighted union average rate).

Union Rate Identifiers

A four letter classification abbreviation identifier enclosed in dotted lines beginning with characters other than ""SU"" or ""UAVG"" denotes that the union classification and rate were prevailing for that classification in the survey. Example: PLUM0198-005 07/01/2014. PLUM is an abbreviation identifier of the union which prevailed in the survey for this classification, which in this example would be Plumbers. 0198 indicates the local union number or district council number where applicable, i.e., Plumbers Local 0198. The next number, 005 in the example, is an internal number used in processing the wage determination. 07/01/2014 is the effective date of the most current negotiated rate, which in this example is July 1, 2014.

Union prevailing wage rates are updated to reflect all rate changes in the collective bargaining agreement (CBA) governing this classification and rate.

Survey Rate Identifiers

Classifications listed under the ""SU"" identifier indicate that no one rate prevailed for this classification in the survey and the published rate is derived by computing a weighted average rate based on all the rates reported in the survey for that classification. As this weighted average rate includes all rates reported in the survey, it may include both union and non-union rates. Example: SULA2012-007 5/13/2014. SU indicates the rates are survey rates based on a weighted average calculation of rates and are not majority rates. LA indicates the State of Louisiana. 2012 is the year of survey on which these classifications and rates are based. The next number, 007 in the example, is an internal number used in producing the wage determination. 5/13/2014 indicates the survey completion date for the classifications and rates under that identifier.

Survey wage rates are not updated and remain in effect until a new survey is conducted.

Union Average Rate Identifiers

Classification(s) listed under the UAVG identifier indicate that no single majority rate prevailed for those classifications; however, 100% of the data reported for the

classifications was union data. EXAMPLE: UAVG-OH-0010 08/29/2014. UAVG indicates that the rate is a weighted union average rate. OH indicates the state. The next number, 0010 in the example, is an internal number used in producing the wage determination. 08/29/2014 indicates the survey completion date for the classifications and rates under that identifier.

A UAVG rate will be updated once a year, usually in January of each year, to reflect a weighted average of the current negotiated/CBA rate of the union locals from which the rate is based.

WAGE DETERMINATION APPEALS PROCESS

1.) Has there been an initial decision in the matter? This can be:

* an existing published wage determination
* a survey underlying a wage determination
* a Wage and Hour Division letter setting forth a position on a wage determination matter
* a conformance (additional classification and rate) ruling

On survey related matters, initial contact, including requests for summaries of surveys, should be with the Wage and Hour National Office because National Office has responsibility for the Davis-Bacon survey program. If the response from this initial contact is not satisfactory, then the process described in 2.) and 3.) should be followed.

With regard to any other matter not yet ripe for the formal process described here, initial contact should be with the Branch of Construction Wage Determinations. Write to:

Branch of Construction Wage Determinations
Wage and Hour Division
U.S. Department of Labor
200 Constitution Avenue, N.W.
Washington, DC 20210

2.) If the answer to the question in 1.) is yes, then an interested party (those affected by the action) can request review and reconsideration from the Wage and Hour Administrator (See 29 CFR Part 1.8 and 29 CFR Part 7). Write to:

Wage and Hour Administrator
U.S. Department of Labor
200 Constitution Avenue, N.W.
Washington, DC 20210

The request should be accompanied by a full statement of the interested party's position and by any information (wage payment data, project description, area practice material, etc.) that the requestor considers relevant to the issue.

3.) If the decision of the Administrator is not favorable, an interested party may appeal directly to the Administrative Review Board (formerly the Wage Appeals Board). Write to:

Administrative Review Board
U.S. Department of Labor

200 Constitution Avenue, N.W.
Washington, DC 20210

4.) All decisions by the Administrative Review Board are final.

==========

END OF GENERAL DECISIO"

Fringe benefit amounts are applicable for all hours worked except when otherwise noted.

No laborer, workman or mechanic shall be paid at a rate less than that of a Journeyman except those classified as bona fide apprentices.

Apprentices or trainees shall be permitted to work as such subject to Administrative Regulations adopted by the Commissioner of Workplace Standards. Copies of these regulations will be furnished upon request from any interested person.

Before using apprentices on the job the contractor shall present to the Contracting Officer written evidence of registration of such employees in a program of a State apprenticeship and training agency approved and recognized by the U. S. Bureau of Apprenticeship and Training. In the absence of such a State agency, the contractor shall submit evidence of approval and registration by the U. S. Bureau of Apprenticeship and Training.

The contractor shall submit to the Contracting Officer, written evidence of the established apprenticeship-journeyman ratios and wage rates in the project area, which will be the basis for establishing such ratios and rates for the project under the applicable contract provisions.

TO: EMPLOYERS/EMPLOYEES

PREVAILING WAGE SCHEDULE:

The wages indicated on this wage schedule are the least permitted to be paid for the occupations indicated. When an employee works in more than one classification, the employer must record the number of hours worked in each classification at the prescribed hourly base rate.

OVERTIME:

Overtime is to be paid to an employee at a rate not less than one and one-half times the basic rate of pay for all hours worked in excess of forty (40) hours in such workweek. Wage violations or questions should be directed to the designated Engineer or the undersigned.

Director
Division of Construction Procurement
Frankfort, Kentucky 40622
502-564-3500

NOTICE OF REQUIREMENT FOR AFFIRMATIVE ACTION TO ENSURE EQUAL EMPLOYMENT OPPORTUNITY (Executive Order 11246)

1. The Offeror's or Bidder's attention is called to the "Equal Opportunity Clause" and the "Standard Federal Equal Employment Specifications" set forth herein.

2. The goals and timetables for minority and female participation, expressed in percentage terms for the Contractor's aggregate work force in each trade on all construction work in the covered area, are as follows:

GOALS FOR MINORITY PARTICIPATION IN EACH TRADE	GOALS FOR FEMALE PARTICIPATION IN EACH TRADE
9.6%	6.9%

These goals are applicable to all the Contractor's construction work (whether or not it is Federal or federally-assisted) performed in the covered area. If the contractor performs construction work in a geographical area located outside of the covered area, it shall apply the goals established for such geographical area where the work is actually performed. With regard to this second area, the contractor also is subject to the goals for both its federally involved and non-federally involved construction.

The Contractor's compliance with the Executive Order and the regulations in CFR Part 60-4 shall be based on its implementation of the Equal Opportunity Clause, specific affirmative action obligations required by the specifications set forth in 41 CFR 60-4, 3(a), and its efforts to meet the goals. The hours of minority and female employment and training must be substantially uniform throughout the length of the contract, and in each trade, and the contractor shall make a good faith effort to employ minorities and women evenly on each of its projects. The transfer of minority or female employees or trainees from Contractor to Contractor or from project to project for the sole purpose of meeting the Contractor's goals shall be a violation of the contract, the Executive Order and the regulations in 41 CFR Part 60-4. Compliance with the goals will be measured against the total work hours performed.

3. The Notification of Construction Contract Award Portal (NCAP) is OFCCP's preferred method for receiving construction contract award notifications. The NCAP can be found on OFCCP's website at https://www.dol.gov/agencies/ofccp/ncap. Users who prefer not to use the portal maintain the option to send their notifications via mail, email and facsimile to the OFCCP Regional office in which the work will be performed. The Contractor shall provide written notification to the Director of the Office of Federal Contract Compliance Programs within ten (10) working days of award of any construction subcontract in excess of $10,000.00 at any tier for construction work under the contract resulting from this solicitation. The notification must include: Prime Contract Number (issued by the federal agency or applicant); Name of Awarding Federal Agency, Applicant or Contractor; Contracting Officer, Applicant Representative or Contractor Representative Submitting Notification with name, phone number, email address; Contractor Awarded Contract or Subcontract with name, address, phone number, email address, EIN, dollar amount of the contract, estimated start date of the contract, estimated completion date of the contract, geographical area in which the contract is to be performed (state, county's city (if applicable)).
The notification shall be mailed to:

Regional Director
Office of Federal Contract Compliance Programs
61 Forsyth Street, SW, Suite 7B75
Atlanta, Georgia 30303-8931
Main Number: 404-893-4545 Fax: 404-893-4546
Regional Director Contact: OFCCP-SE@dol.gov
Construction Award Email: OFCCP-SE-ConstructionAward@dol.gov

4. As used in this Notice, and in the contract resulting from this solicitation, the **"covered area"** is Henry County.

PART IV

INSURANCE

Refer to
Kentucky Standard Specifications for Road and Bridge Construction,
current edition

PART V

BID ITEMS

235306

PROPOSAL BID ITEMS

Report Date 4/27/23

Section: 0001 - BRIDGE - 052B00062N

LINE	BID CODE	ALT	DESCRIPTION	QUANTITY	UNIT	UNIT PRIC	FP	AMOUNT
0010	00001		DGA BASE	29.00	TON		$	
0020	00020		TRAFFIC BOUND BASE	45.00	TON		$	
0030	00100		ASPHALT SEAL AGGREGATE	2.00	TON		$	
0040	00103		ASPHALT SEAL COAT	1.00	TON		$	
0050	00212		CL2 ASPH BASE 1.00D PG64-22	27.00	TON		$	
0060	00301		CL2 ASPH SURF 0.38D PG64-22	47.00	TON		$	
0070	00356		ASPHALT MATERIAL FOR TACK	.60	TON		$	
0080	01987		DELINEATOR FOR GUARDRAIL BI DIRECTIONAL WHITE	14.00	EACH		$	
0090	02223		GRANULAR EMBANKMENT	206.00	CUYD		$	
0100	02360		GUARDRAIL TERMINAL SECTION NO 1	2.00	EACH		$	
0110	02381		REMOVE GUARDRAIL	237.50	LF		$	
0120	02403		REMOVE CONCRETE MASONRY	5.00	CUYD		$	
0130	02545		CLEARING AND GRUBBING APPROX. LESS THAN 1 ACRE	1.00	LS		$	
0140	02585		EDGE KEY	42.00	LF		$	
0150	02650		MAINTAIN & CONTROL TRAFFIC	1.00	LS		$	
0160	02671		PORTABLE CHANGEABLE MESSAGE SIGN	2.00	EACH		$	
0170	02726		STAKING	1.00	LS		$	
0180	03299		ARMORED EDGE FOR CONCRETE	72.00	LF		$	
0190	06514		PAVE STRIPING-PERM PAINT-4 IN	420.00	LF		$	
0200	06555		PAVE STRIPING-DUR TY 1-4 IN Y	180.00	LF		$	
0210	08003		FOUNDATION PREPARATION INCLUDES GEOFABRIC	1.00	LS		$	
0220	08019		CYCLOPEAN STONE RIP RAP	170.00	TON		$	
0230	08104		CONCRETE-CLASS AA	46.00	CUYD		$	
0240	08151		STEEL REINFORCEMENT-EPOXY COATED	6,500.00	LB		$	
0250	08301		REMOVE SUPERSTRUCTURE	1.00	LS		$	
0260	08669		PRECAST PC BOX BEAM SB21	198.00	LF		$	
0270	21415ND		EROSION CONTROL	1.00	LS		$	
0280	21476ED		SNOW FENCE	2,187.00	LF		$	
0290	23378EC		CONCRETE SEALING	2,000.00	SQFT		$	
0300	23744EC		EPOXY INJECTION CRACK REPAIR	40.00	LF		$	
0310	24381EC		G/R STEEL W BEAM-S FACE (NESTED)	262.50	LF		$	
0320	24982EC		CONCRETE COATING APPROX. 1400 SF	1.00	LS		$	
0330	25017ED		RAIL SYSTEM SIDE MOUNTED MGS	88.00	LF		$	

Section: 0002 - DEMOBILIZATION &/OR MOBILIZATION

LINE	BID CODE	ALT	DESCRIPTION	QUANTITY	UNIT	UNIT PRIC	FP	AMOUNT
0340	02569		DEMOBILIZATION	1.00	LS		$	