CALL NO. **100**

CONTRACT ID. **221306**

GRAYSON COUNTY

FED/STATE PROJECT NUMBER **NHPP 9001 (014)**

DESCRIPTION **WESTERN KY PARKWAY (PW 9001)**

WORK TYPE **ASPHALT REHAB INTERSTATE/PARKWAY**

PRIMARY COMPLETION DATE **11/1/2022**

LETTING DATE: **February 24,2022**

Sealed Bids will be received electronically through the Bid Express bidding service until 10:00 am EASTERN STANDARD TIME February 24,2022. Bids will be publicly announced at 10:00 am EASTERN STANDARD TIME.

NO PLANS ASSOCIATED WITH THIS PROJECT.

DBE CERTIFICATION REQUIRED - 13%

REQUIRED BID PROPOSAL GUARANTY: Not less than 5% of the total bid.

TABLE OF CONTENTS

PART I SCOPE OF WORK

- PROJECT(S), COMPLETION DATE(S), & LIQUIDATED DAMAGES
- CONTRACT NOTES
- FEDERAL CONTRACT NOTES
- NATIONAL HIGHWAY
- SIGNIFICANT PROJECT -PROJECT TRAFFIC COORDINATOR
- ASPHALT MIXTURE
- DGA BASE
- DGA BASE FOR SHOULDERS
- FUEL AND ASPHALT PAY ADJUSTMENT
- ASPHALT PAVEMENT RIDE QUALITY CAT A
- COMPACTION OPTION A
- SPECIAL NOTE(S) APPLICABLE TO PROJECT
- PORTABLE QUEUE WARNING ALERT SYSTEM
- PAVER MOUNTED TEMPERATURE PROFILES
- NON-TRACKING TACK COAT
- EXPERIMENTAL KYCT AND HAMBURG TESTING
- BRIDGE DEMOLITION, RENOVATION AND ASBESTOS ABATEMENT
- ASBESTOS ABATEMENT REPORT
- RIGHT OF WAY CERTIFICATION
- UTILITY IMPACT & RAIL CERTIFICATION NOTES
- GUARDRAIL DELIVERY VERIFICATION SHEET

PART II SPECIFICATIONS AND STANDARD DRAWINGS

- SPECIFICATIONS REFERENCE
- SUPPLEMENTAL SPECIFICATION
- [SN-1I] PORTABLE CHANGEABLE SIGNS
- [SN-11N] LONGITUDINAL PAVEMENT JOINT ADHESIVE
- [SP-69] EMBANKMENT AT BRIDGE END BENT STRUCTURES

PART III EMPLOYMENT, WAGE AND RECORD REQUIREMENTS

- FEDERAL-AID CONSTRUCTION CONTRACTS - FHWA 1273
- NONDISCRIMINATION OF EMPLOYEES
- EXECUTIVE BRANCH CODE OF ETHICS
- PROJECT WAGE RATES LOCALITY 3 / FEDERAL
- NOTICE OF REQUIREMENT FOR AFFIRMATIVE ACTION TO ENSURE EEO GRAYSON

PART IV INSURANCE

PART V BID ITEMS

PART I

SCOPE OF WORK

ADMINISTRATIVE DISTRICT - 04

CONTRACT ID - 221306

NHPP 9001 (014)

COUNTY - GRAYSON

PCN - DE04390012206
NHPP 9001 (014)

WESTERN KY PARKWAY (PW 9001) FROM MP 111.25 TO MP 114.882, A DISTANCE OF 03.63 MILES.ASPHALT REHAB INTERSTATE/PARKWAY SYP NO. 04-20001.00.

GEOGRAPHIC COORDINATES LATITUDE 37:29:39.00 LONGITUDE 86:11:16.00

COMPLETION DATE(S):

COMPLETED BY 11/01/2022	APPLIES TO ENTIRE CONTRACT
COMPLETED BY 10/01/2022	SEE SPECIAL NOTE

CONTRACT NOTES

PROPOSAL ADDENDA

All addenda to this proposal must be applied when calculating bid and certified in the bid packet submitted to the Kentucky Department of Highways. Failure to use the correct and most recent addenda may result in the bid being rejected.

BID SUBMITTAL

Bidder must use the Department's electronic bidding software. The Bidder must download the bid file located on the Bid Express website (www.bidx.com) to prepare a bid packet for submission to the Department. The bidder must submit electronically using Bid Express.

JOINT VENTURE BIDDING

Joint venture bidding is permissible. All companies in the joint venture must be prequalified in one of the work types in the Qualifications for Bidders for the project. The bidders must get a vendor ID for the joint venture from the Division of Construction Procurement and register the joint venture as a bidder on the project. Also, the joint venture must obtain a digital ID from Bid Express to submit a bid. A joint bid bond of 5% may be submitted for both companies or each company may submit a separate bond of 5%.

UNDERGROUND FACILITY DAMAGE PROTECTION

The contractor shall make every effort to protect underground facilities from damage as prescribed in the Underground Facility Damage Protection Act of 1994, Kentucky Revised Statute KRS 367.4901 to 367.4917. It is the contractor's responsibility to determine and take steps necessary to be in compliance with federal and state damage prevention directives. When prescribed in said directives, the contractor shall submit Excavation Locate Requests to the Kentucky Contact Center (KY811) via web ticket entry. The submission of this request does not relieve the contractor from the responsibility of contacting non-member facility owners, whom shall be contacted through their individual Protection Notification Center. Non-compliance with these directives can result in the enforcement of penalties.

REGISTRATION WITH THE SECRETARY OF STATE BY A FOREIGN ENTITY

Pursuant to KRS 176.085(1)(b), an agency, department, office, or political subdivision of the Commonwealth of Kentucky shall not award a state contract to a person that is a foreign entity required by KRS 14A.9-010 to obtain a certificate of authority to transact business in the Commonwealth ("certificate") from the Secretary of State under KRS 14A.9-030 unless the person produces the certificate within fourteen (14) days of the bid or proposal opening. If the foreign entity is not required to obtain a certificate as provided in KRS 14A.9-010, the foreign entity should identify the applicable exception. Foreign entity is defined within KRS 14A.1-070.

For all foreign entities required to obtain a certificate of authority to transact business in the Commonwealth, if a copy of the certificate is not received by the contracting agency within the time frame identified above, the foreign entity's solicitation response shall be deemed non-responsive or the awarded contract shall be cancelled.

Businesses can register with the Secretary of State at https://secure.kentucky.gov/sos/ftbr/welcome.aspx .

SPECIAL NOTE FOR PROJECT QUESTIONS DURING ADVERTISEMENT

Questions about projects during the advertisement should be submitted in writing to the Division of Construction Procurement. This may be done by fax (502) 564-7299 or email to kytc.projectquestions@ky.gov. The Department will attempt to answer all submitted questions. The Department reserves the right not to answer if the question is not pertinent or does not aid in clarifying the project intent.

The deadline for posting answers will be 3:00 pm Eastern Daylight Time, the day preceding the Letting. Questions may be submitted until this deadline with the understanding that the later a question is submitted, the less likely an answer will be able to be provided.

The questions and answers will be posted for each Letting under the heading "Questions & Answers" on the Construction Procurement website (www.transportation.ky.gov/contract). The answers provided shall be considered part of this Special Note and, in case of a discrepancy, will govern over all other bidding documents.

HARDWOOD REMOVAL RESTRICTIONS

The US Department of Agriculture has imposed a quarantine in Kentucky and several surrounding states, to prevent the spread of an invasive insect, the emerald ash borer. Hardwood cut in conjunction with the project may not be removed from the state. Chipping or burning on site is the preferred method of disposal.

INSTRUCTIONS FOR EXCESS MATERIAL SITES AND BORROW SITES

Identification of excess material sites and borrow sites shall be the responsibility of the Contractor. The Contractor shall be responsible for compliance with all applicable state and federal laws and may wish to consult with the US Fish and Wildlife Service to seek protection under Section 10 of the Endangered Species Act for these activities.

ACCESS TO RECORDS

The contractor, as defined in KRS 45A.030 (9) agrees that the contracting agency, the Finance and Administration Cabinet, the Auditor of Public Accounts, and the Legislative Research Commission, or their duly authorized representatives, shall have access to any books, documents, papers, records, or other evidence, which are directly pertinent to this contract for the purpose of financial audit or program review. Records and other prequalification information confidentially

disclosed as part of the bid process shall not be deemed as directly pertinent to the contract and shall be exempt from disclosure as provided in KRS 61.878(1)(c). The contractor also recognizes that any books, documents, papers, records, or other evidence, received during a financial audit or program review shall be subject to the Kentucky Open Records Act, KRS 61.870 to 61.884.

In the event of a dispute between the contractor and the contracting agency, Attorney General, or the Auditor of Public Accounts over documents that are eligible for production and review, the Finance and Administration Cabinet shall review the dispute and issue a determination, in accordance with Secretary's Order 11-004.

April 30, 2018

FEDERAL CONTRACT NOTES

The Kentucky Department of Highways, in accordance with the Regulations of the United States Department of Transportation 23 CFR 635.112 (h), hereby notifies all bidders that failure by a bidder to comply with all applicable sections of the current Kentucky Standard Specifications, including, but not limited to the following, may result in a bid not being considered responsive and thus not eligible to be considered for award:

102.02 Current Rating
102.13 Irregular Bid Proposals
102.09 Proposal Guaranty
102.08 Preparation and Delivery of Proposals
102.14 Disqualification of Bidders

CIVIL RIGHTS ACT OF 1964

The Kentucky Department of Highways, in accordance with the provisions of Title VI of the Civil Rights Act of 1964 (78 Stat. 252) and the Regulations of the Federal Department of Transportation (49 C.F.R., Part 21), issued pursuant to such Act, hereby notifies all bidders that it will affirmatively insure that the contract entered into pursuant to this advertisement will be awarded to the lowest responsible bidder without discrimination on the ground of race, color, or national origin.

NOTICE TO ALL BIDDERS

To report bid rigging activities call: 1-800-424-9071.

The U.S. Department of Transportation (DOT) operates the above toll-free "hotline" Monday through Friday, 8:00 a.m. to 5:00 p.m. eastern time. Anyone with knowledge of possible bid rigging, bidder collusion, or other fraudulent activities should use the "hotline" to report such activities.

The "hotline" is part of the DOT's continuing effort to identify and investigate highway construction contract fraud and abuse and is operated under the direction of the DOT Inspector General. All information will be treated confidentially and caller anonymity will be respected.

SECOND TIER SUBCONTRACTS

Second tier subcontracts are acceptable per Section 108.01 of the Standard Specifications for Road and Bridge Construction. There are special rules to DBE subcontractors satisfying DBE goals on federal-aid projects. 1st-Tier DBE Subcontractors may only enter into a 2nd-Tier subcontract with another DBE contractor.

DISADVANTAGED BUSINESS ENTERPRISE PROGRAM

It is the policy of the Kentucky Transportation Cabinet ("the Cabinet") that Disadvantaged Business Enterprises ("DBE") shall have the opportunity to participate in the performance of highway construction projects financed in whole or in part by Federal Funds in order to create a level playing field for all businesses who wish to contract with the Cabinet. To that end, the Cabinet will comply with the regulations found in 49 CFR Part 26, and the definitions and requirements contained therein shall be adopted as if set out verbatim herein.

The Cabinet, contractors, subcontractors, and sub-recipients shall not discriminate on the basis of race, color, national origin, or sex in the performance of work performed pursuant to Cabinet contracts. The contractor shall carry out applicable requirements of 49 CFR 26 in the award and administration of federally assisted highway construction projects. The contractor will include this provision in all its subcontracts and supply agreements pertaining to contracts with the Cabinet.

Failure by the contractor to carry out these requirements is a material breach of its contract with the Cabinet, which may result in the termination of the contract or such other remedy as the Cabinet deems necessary.

DBE GOAL

The Disadvantaged Business Enterprise (DBE) goal established for this contract, as listed on the front page of the proposal, is the percentage of the total value of the contract.

The contractor shall exercise all necessary and reasonable steps to ensure that Disadvantaged Business Enterprises participate in a least the percent of the contract as set forth above as goals for this contract.

OBLIGATION OF CONTRACTORS

Each contractor prequalified to perform work on Cabinet projects shall designate and make known to the Cabinet a liaison officer who is assigned the responsibility of effectively administering and promoting an active program for utilization of DBEs.

If a formal goal has not been designated for the contract, all contractors are encouraged to consider DBEs for subcontract work as well as for the supply of material and services needed to perform this work.

Contractors are encouraged to use the services of banks owned and controlled by minorities and women.

CERTIFICATION OF CONTRACT GOAL

Contractors shall include the following certification in bids for projects for which a DBE goal has been established. BIDS SUBMITTED WHICH DO NOT INCLUDE CERTIFICATION OF DBE PARTICIPATION WILL NOT BE ACCEPTED. These bids will not be considered for award by the Cabinet and they will be returned to the bidder.

"The bidder certifies that it has secured participation by Disadvantaged Business Enterprises ("DBE") in the amount of_____percent of the total value of this contract and that the DBE participation is in compliance with the requirements of 49 CFR 26 and the policies of the Kentucky Transportation Cabinet pertaining to the DBE Program."

The certification statement is located in the electronic bid file. All contractors must certify their DBE participation on that page. DBEs utilized in achieving the DBE goal must be certified and prequalified for the work items at the time the bid is submitted.

DBE PARTICIPATION PLAN

Lowest responsive bidders must submit the *DBE Plan/ Subcontractor Request*, form TC 14-35 DBE, within 5 days of the letting. This is necessary before the Awards Committee will review and make a recommendation. **The project will not be considered for award prior to submission and approval of the apparent low bidder's DBE Plan/Subcontractor Request.**

The DBE Participation Plan shall include the following:

1. Name and address of DBE Subcontractor(s) and/or supplier(s) intended to be used in the proposed project;
2. Description of the work each is to perform including the work item, unit, quantity, unit price and total amount of the work to be performed by the individual DBE. The Proposal Line Number, Category Number, and the Project Line Number can be found in the "material listing" on the Construction Procurement website under the specific letting;
3. The dollar value of each proposed DBE subcontract and the percentage of total project contract value this represents. DBE participation may be counted as follows;
   a. If DBE suppliers and manufactures assume actual and contractual responsibility, the dollar value of materials to be furnished will be counted toward the goal as follows:
      - The entire expenditure paid to a DBE manufacturer;
      - 60 percent of expenditures to DBE suppliers that are not manufacturers provided the supplier is a regular dealer in the product involved. A regular dealer must be engaged in, as its principal business and in its own name, the sale of products to the public, maintain an inventory and own and operate distribution equipment; and
      - The amount of fees or commissions charged by the DBE firms for a bona fide service, such as professional, technical, consultant, or managerial services and assistance in the procurement of essential personnel, facilities, equipment, materials, supplies, delivery of materials and supplies or for furnishing bonds, or insurance, providing such fees or commissions are determined to be reasonable and customary.

b) The dollar value of services provided by DBEs such as quality control testing, equipment repair and maintenance, engineering, staking, etc.;
c) The dollar value of joint ventures. DBE credit for joint ventures will be limited to the dollar amount of the work actually performed by the DBE in the joint venture;

4. Written and signed documentation of the bidder's commitment to use a DBE contractor whose participation is being utilized to meet the DBE goal; and
5. Written and signed confirmation from the DBE that it is participating in the contract as provided in the prime contractor's commitment.

UPON AWARD AND BEFORE A WORK ORDER WILL BE ISSUED

Contractors must submit the signed subcontract between the contractor and the DBE contractor, along with the DBE's certificate of insurance. If the DBE is a supplier of materials for the project, a signed purchase order must be submitted to the Division of Construction Procurement.

Changes to DBE Participation Plans must be approved by the Cabinet. The Cabinet may consider extenuating circumstances including, but not limited to, changes in the nature or scope of the project, the inability or unwillingness of a DBE to perform the work in accordance with the bid, and/or other circumstances beyond the control of the prime contractor.

CONSIDERATION OF GOOD FAITH EFFORTS REQUESTS

If the DBE participation submitted in the bid by the apparent lowest responsive bidder does not meet or exceed the DBE contract goal, the apparent lowest responsive bidder must submit a Good Faith Effort Package to satisfy the Cabinet that sufficient good faith efforts were made to meet the contract goals prior to submission of the bid. Efforts to increase the goal after bid submission will not be considered in justifying the good faith effort, unless the contractor can show that the proposed DBE was solicited prior to the letting date. DBEs utilized in achieving the DBE goal must be certified and prequalified for the work items at the time the bid is submitted. One complete set (hard copy along with an electronic copy) of this information must be received in the Division of Contract Procurement no later than 12:00 noon of the tenth calendar day after receipt of notification that they are the apparent low bidder.

Where the information submitted includes repetitious solicitation letters it will be acceptable to submit a sample representative letter along with a distribution list of the firms solicited. Documentation of DBE quotations shall be a part of the good faith effort submittal as necessary to demonstrate compliance with the factors listed below which the Cabinet considers in judging good faith efforts. This documentation may include written subcontractors' quotations, telephone log notations of verbal quotations, or other types of quotation documentation.

The Good Faith Effort Package shall include, but may not be limited to information showing evidence of the following:

1. Whether the bidder attended any pre-bid meetings that were scheduled by the Cabinet to inform DBEs of subcontracting opportunities;
2. Whether the bidder provided solicitations through all reasonable and available means;
3. Whether the bidder provided written notice to all DBEs listed in the DBE directory at the time of the letting who are prequalified in the areas of work that the bidder will be subcontracting;
4. Whether the bidder followed up initial solicitations of interest by contacting DBEs to determine with certainly whether they were interested. If a reasonable amount of DBEs within the targeted districts do not provide an intent to quote or no DBEs are prequalified in the subcontracted areas, the bidder must notify the Disadvantaged Enterprise Business Liaison Officer (DEBLO) in the Office of Civil Rights and Small Business Development to give notification of the bidder's inability to get DBE quotes;
5. Whether the bidder selected portions of the work to be performed by DBEs in order to increase the likelihood of meeting the contract goals. This includes, where appropriate, breaking out contract work items into economically feasible units to facilitate DBE participation, even when the prime contractor might otherwise perform these work items with its own forces;
6. Whether the bidder provided interested DBEs with adequate and timely information about the plans, specifications, and requirements of the contract;
7. Whether the bidder negotiated in good faith with interested DBEs not rejecting them as unqualified without sound reasons based on a thorough investigation of their capabilities. Any rejection should be so noted in writing with a description as to why an agreement could not be reached;
8. Whether quotations were received from interested DBE firms but were rejected as unacceptable without sound reasons why the quotations were considered unacceptable. The fact that the DBE firm's quotation for the work is not the lowest quotation received will not in itself be considered as a sound reason for rejecting the quotation as unacceptable. The fact that the bidder has the ability and/or desire to perform the contract work with its own forces will not be considered a sound reason for rejecting a DBE quote. Nothing in this provision shall be construed to require the bidder to accept unreasonable quotes in order to satisfy DBE goals;
9. Whether the bidder specifically negotiated with subcontractors to assume part of the responsibility to meet the contract DBE goal when the work to be subcontracted includes potential DBE participation;
10. Whether the bidder made any efforts and/or offered assistance to interested DBEs in obtaining the necessary equipment, supplies, materials, insurance and/or bonding to satisfy the work requirements of the bid proposal; and
11. Any other evidence that the bidder submits which may show that the bidder has made reasonable good faith efforts to include DBE participation.

FAILURE TO MEET GOOD FAITH REQUIREMENT

Where the apparent lowest responsive bidder fails to submit sufficient participation by DBE firms to meet the contract goal and upon a determination by the Good Faith Committee based upon the information submitted that the apparent lowest responsive bidder failed to make sufficient reasonable efforts to meet the contract goal, the bidder will be offered the opportunity to meet in person for administrative reconsideration. The bidder will be notified of the Committee's decision within 24 hours of its decision. The bidder will have 24 hours to request reconsideration of the Committee's decision. The reconsideration meeting will be held within two days of the receipt of a request by the bidder for reconsideration.

The request for reconsideration will be heard by the Office of the Secretary. The bidder will have the opportunity to present written documentation or argument concerning the issue of whether it met the goal or made an adequate good faith effort. The bidder will receive a written decision on the reconsideration explaining the basis for the finding that the bidder did or did not meet the goal or made adequate Good Faith efforts to do so.

The result of the reconsideration process is not administratively appealable to the Cabinet or to the United States Department of Transportation.

The Cabinet reserves the right to award the contract to the next lowest responsive bidder or to rebid the contract in the event that the contract is not awarded to the low bidder as the result of a failure to meet the good faith requirement.

SANCTIONS FOR FAILURE TO MEET DBE REQUIREMENTS OF THE PROJECT

Failure by the prime contractor to fulfill the DBE requirements of a project under contract or to demonstrate good faith efforts to meet the goal constitutes a breach of contract. When this occurs, the Cabinet will hold the prime contractor accountable, as would be the case with all other contract provisions. Therefore, the contractor's failure to carry out the DBE contract requirements shall constitute a breach of contract and as such the Cabinet reserves the right to exercise all administrative remedies at its disposal including, but not limited to the following:

- Suspension of Prequalification;
- Disallow credit toward the DBE goal;
- Withholding progress payments;
- Withholding payment to the prime in an amount equal to the unmet portion of the contract goal; and/or
- Termination of the contract.

PROMPT PAYMENT

The prime contractor will be required to pay the DBE and Non-DBE Subcontractors within seven (7) working days after he or she has received payment from the Kentucky Transportation Cabinet for work performed or materials furnished.

CONTRACTOR REPORTING

All contractors must keep detailed records and provide reports to the Cabinet on their progress in meeting the DBE requirement on any highway contract. These records may include, but shall not be limited to payroll, lease agreements, cancelled payroll checks, executed subcontracting agreements, etc. Prime contractors will be required to complete and submit a ***signed and notarized*** Affidavit of Subcontractor Payment (TC 18-7) and copies of checks for any monies paid to each DBE subcontractor or supplier utilized to meet a DBE goal. These documents must be completed and signed within 7 days of being paid by the Cabinet.

Payment information that needs to be reported includes date the payment is sent to the DBE, check number, Contract ID, amount of payment and the check date. Before Final Payment is made on this contract, the Prime Contractor will certify that all payments were made to the DBE subcontractor and/or DBE suppliers.

********* IMPORTANT *********

Please mail the original, signed and completed TC (18-7) Affidavit of Subcontractor Payment form and all copies of checks for payments listed above to the following address:

Office of Civil Rights and Small Business Development
6th Floor West 200 Mero Street
Frankfort, KY 40622

The prime contractor should notify the KYTC Office of Civil Rights and Small Business Development seven (7) days prior to DBE contractors commencing work on the project. The contact in this office is Mr. Melvin Bynes. Mr. Bynes' current contact information is email address – melvin.bynes2@ky.gov and the telephone number is (502) 564-3601.

DEFAULT OR DECERTIFICATION OF THE DBE

If the DBE subcontractor or supplier is decertified or defaults in the performance of its work, and the overall goal cannot be credited for the uncompleted work, the prime contractor may utilize a substitute DBE or elect to fulfill the DBE goal with another DBE on a different work item. If after exerting good faith effort in accordance with the Cabinet's Good Faith Effort policies and procedures, the prime contractor is unable to replace the DBE, then the unmet portion of the goal may be waived at the discretion of the Cabinet.

PROHIBITION ON TELECOMMUNICATIONS EQUIPMENT OR SERVICES

In accordance with the FY 2019 National Defense Authorization Act (NDAA), 2 CFR 200.216, and 2 CFR 200.471, Federal agencies are prohibited, after August 13, 2020, from obligating or expending financial assistance to obtain certain telecommunications and video surveillance services and equipment from specific producers. As a result of these regulations, contractors and subcontractors are prohibited, on projects with federal funding participation, from providing telecommunication or video surveillance equipment, services, or systems produced by:

- Huawei Technologies Company or ZTE Corporation (or any subsidiary or affiliate of such entities)
- Hytera Communications Corporation, Hangzhou Hikvision Digital Technology Company, or Dahua Technology Company (or any subsidiary or affiliate of such entities)

LEGAL REQUIREMENTS AND RESPONSIBILITY TO THE PUBLIC – CARGO PREFERENCE ACT (CPA).

(REV 12-17-15) (1-16)

SECTION 7 is expanded by the following new Article:

102.10 **Cargo Preference Act – Use of United States-flag vessels.**

Pursuant to Title 46CFR Part 381, the Contractor agrees

- To utilize privately owned United States-flag commercial vessels to ship at least 50 percent of the gross tonnage (computed separately for dry bulk carriers, dry cargo liners, and tankers) involved, whenever shipping any equipment, material, or commodities pursuant to this contract, to the extent such vessels are available at fair and reasonable rates for United States-flag commercial vessels.
- To furnish within 20 days following the date of loading for shipments originating within the United States or within 30 working days following the date of loading for shipments originating outside the United States, a legible copy of a rated, 'on-board' commercial ocean bill-of-lading in English for each shipment of cargo described in paragraph 1 of this section to both the Contracting Officer (through the prime contractor in the case of subcontractor bills-of-lading) and to the Division of National Cargo, Office of Market Development, Maritime Administration, Washington, DC 20590.
- To insert the substance of the provisions of this clause in all subcontracts issued pursuant to this contract.

NATIONAL HIGHWAY

Be advised this project is on the NATIONAL HIGHWAY SYSTEM.

PROJECT TRAFFIC COORDINATOR (PTC)

Be advised this project is a significant project pursuant to section 112.03.12.

ASPHALT MIXTURE

Unless otherwise noted, the Department estimates the rate of application for all asphalt mixtures to be 110 lbs/sy per inch of depth.

DGA BASE

Unless otherwise noted, the Department estimates the rate of application for DGA Base to be 115 lbs/sy per inch of depth.

DGA BASE FOR SHOULDERS

Unless otherwise noted, the Department estimates the rate of application for DGA Base for Shoulders to be 115 lbs/sy per inch of depth. The Department will not measure necessary grading and/or shaping of existing shoulders prior to placing of DGA Base, but shall be incidental to the Contract unit price per ton for DGA Base.

Accept payment at the Contract unit price per ton as full compensation for all labor, materials, equipment, and incidentals for grading and/or shaping of existing shoulders and furnishing, placing, and compacting the DGA Base.

FUEL AND ASPHALT PAY ADJUSTMENT

The Department has included the Contract items Asphalt Adjustment and Fuel Adjustment for possible future payments at an established Contract unit price of $1.00. The Department will calculate actual adjustment quantities after work is completed. If existing Contract amount is insufficient to pay all items on the contract with the adjustments, the Department will establish additional monies with a change order.

ASPHALT PAVEMENT RIDE QUALITY CATEGORY A

The Department will apply Pavement Rideability Requirements on this project in accordance with Section 410, Category A.

OPTION A

Be advised that the Department will accept compaction of asphalt mixtures furnished for driving lanes and ramps, at 1 inch (25mm) or greater, on this project according to OPTION A in accordance with Section 402 and Section 403 of the current Standard Specifications. The Department will require joint cores as described in Section 402.03.02 for surface mixtures only. The Department will accept compaction of all other asphalt mixtures according to OPTION B.

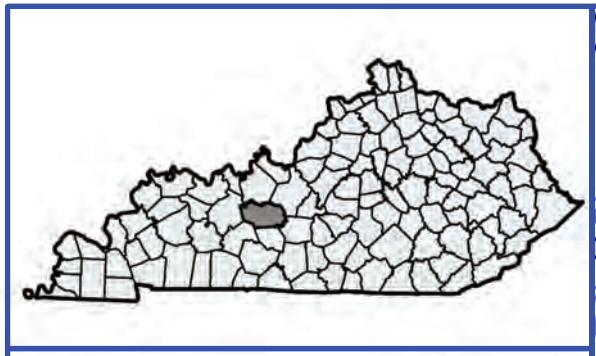

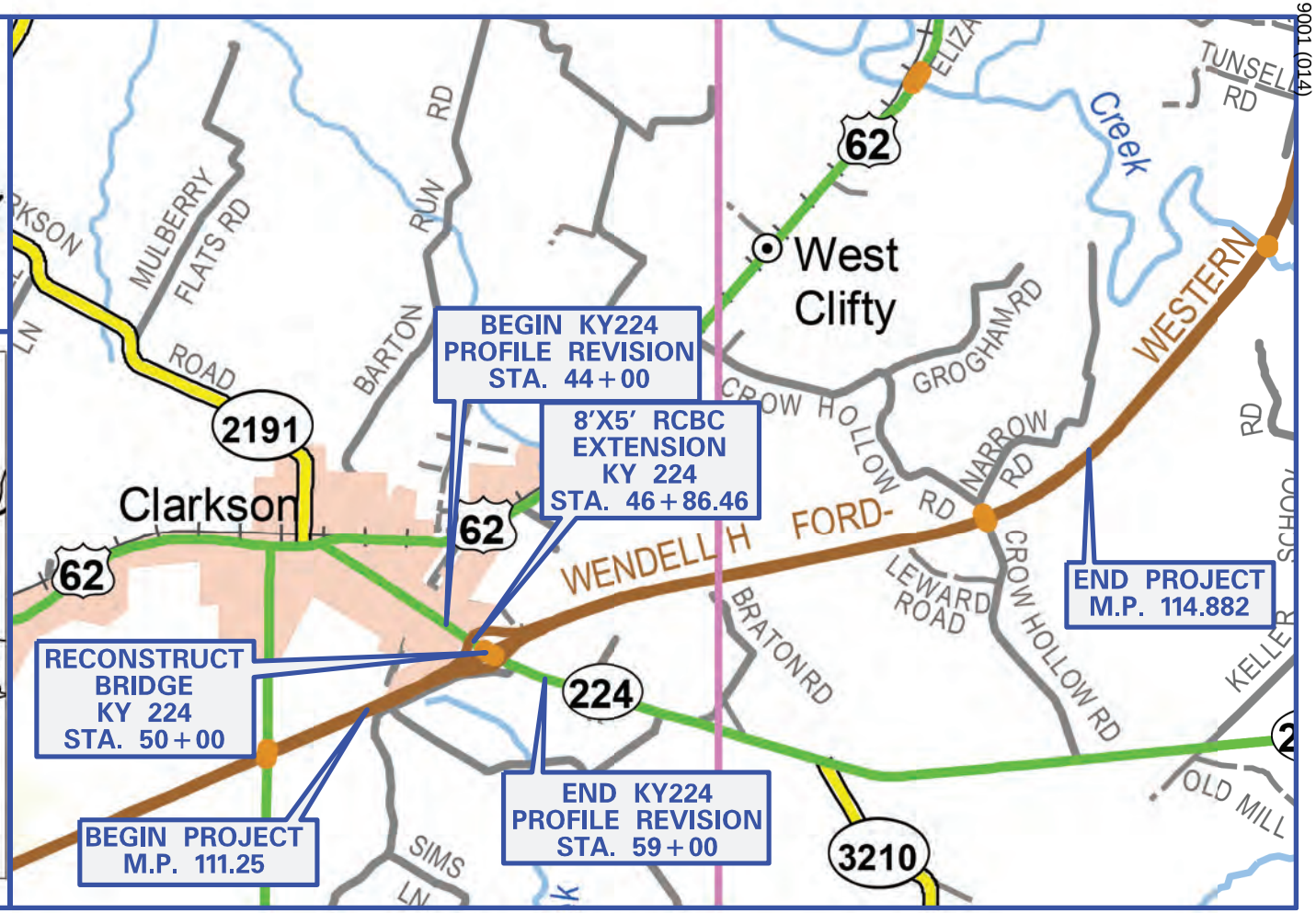

PROJECT NUMBER: FD52 043 9001 111–115, NHPP 9001 (014)

ITEM NUMBER: 4–20001, 4–20002 LETTING DATE: FEBRUARY 24, 2022

RECOMMENDED BY: ANDRE JOHANNES, P.E. DATE:
Project Manager

PLAN APPROVED BY: DATE:
State Highway Engineer

FHWA APPROVED BY: DATE:

3 HMB Circle, U.S. 460
Frankfort, KY 40601
502-695-9800

County	Item No.
GRAYSON	4-20001 4-20002

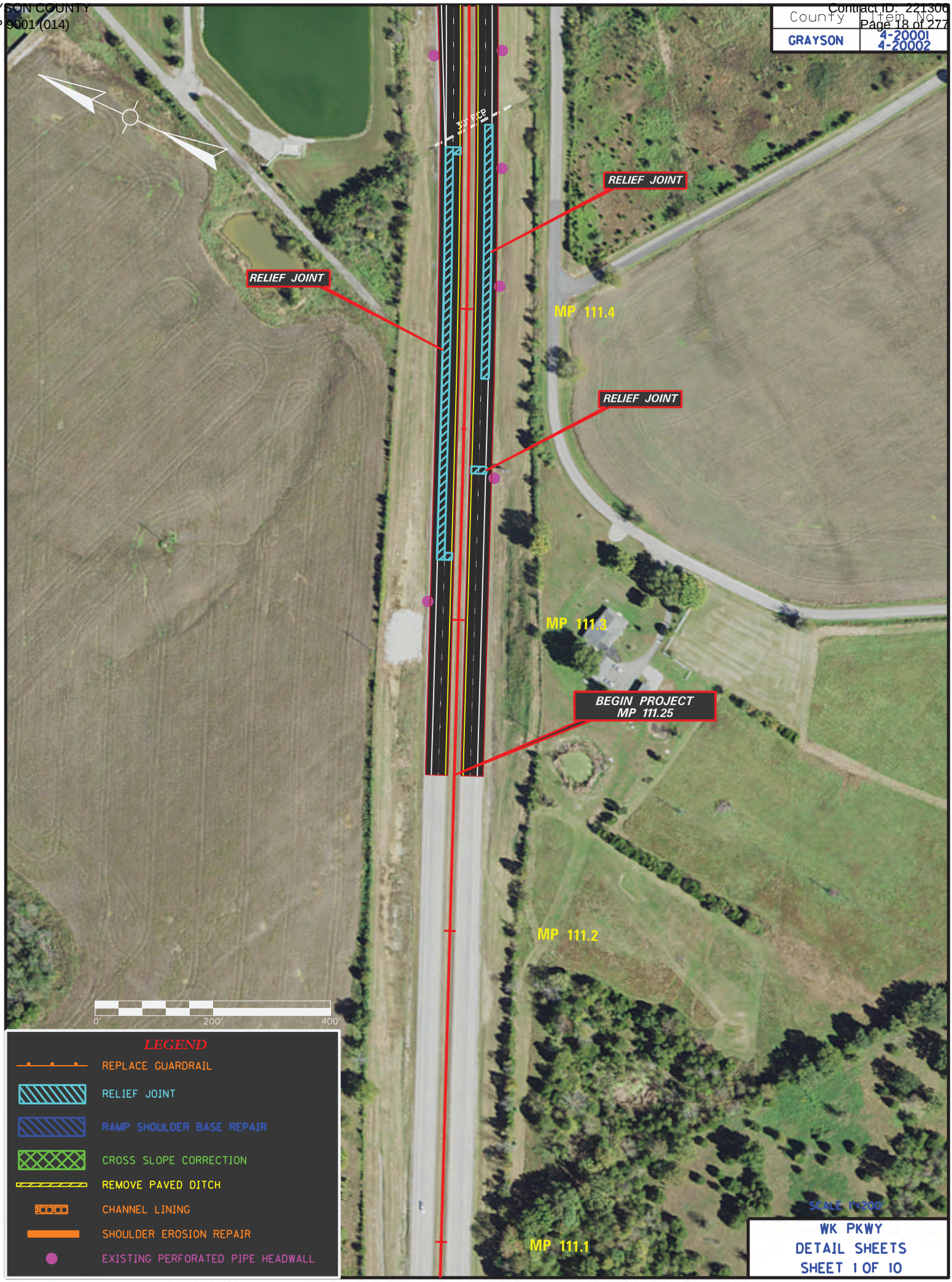

County	Item No.
GRAYSON	4-20001 4-20002

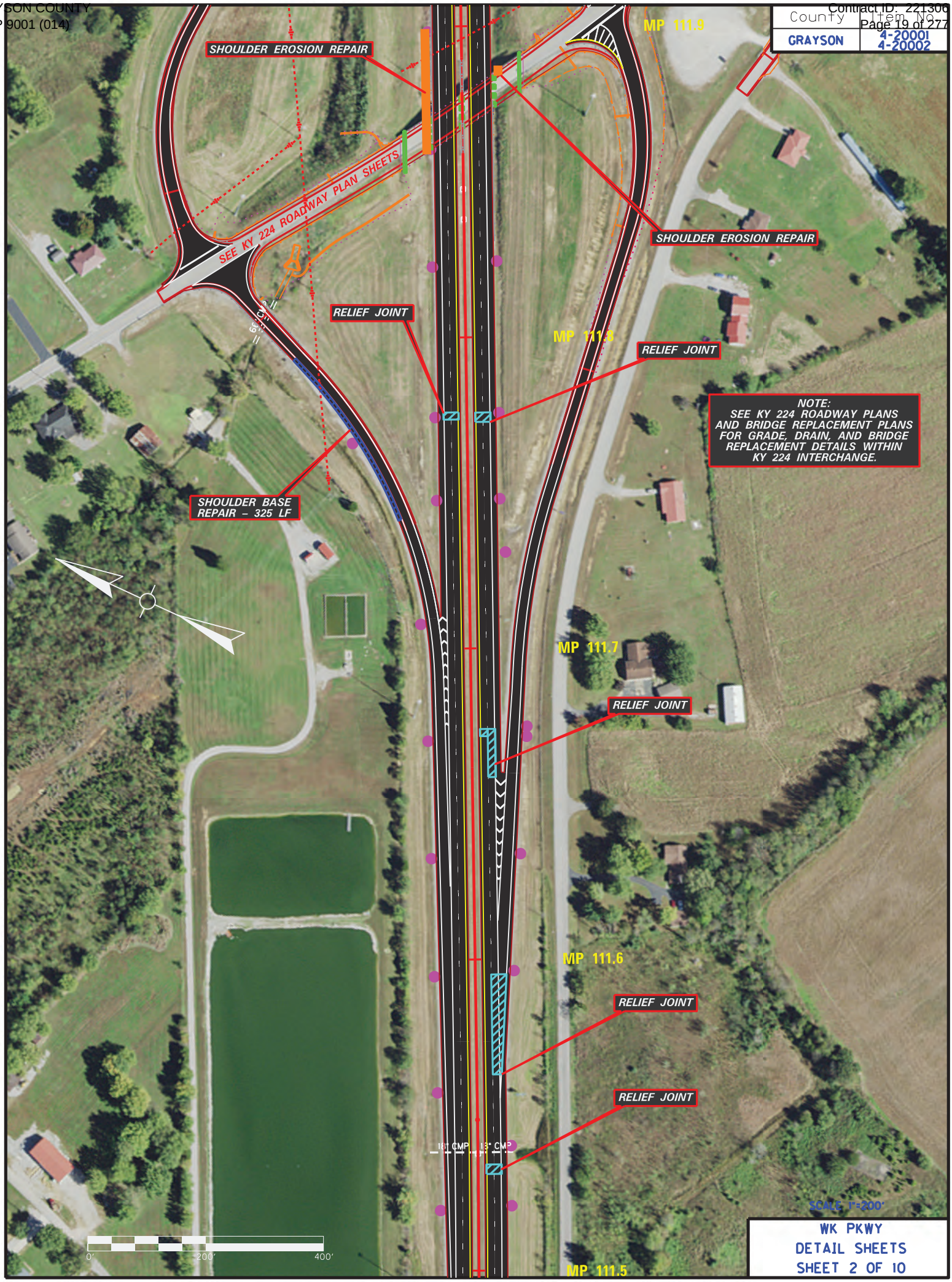

WK PKWY
DETAIL SHEETS
SHEET 2 OF 10

County	Item No.
GRAYSON	4-20001 4-20002

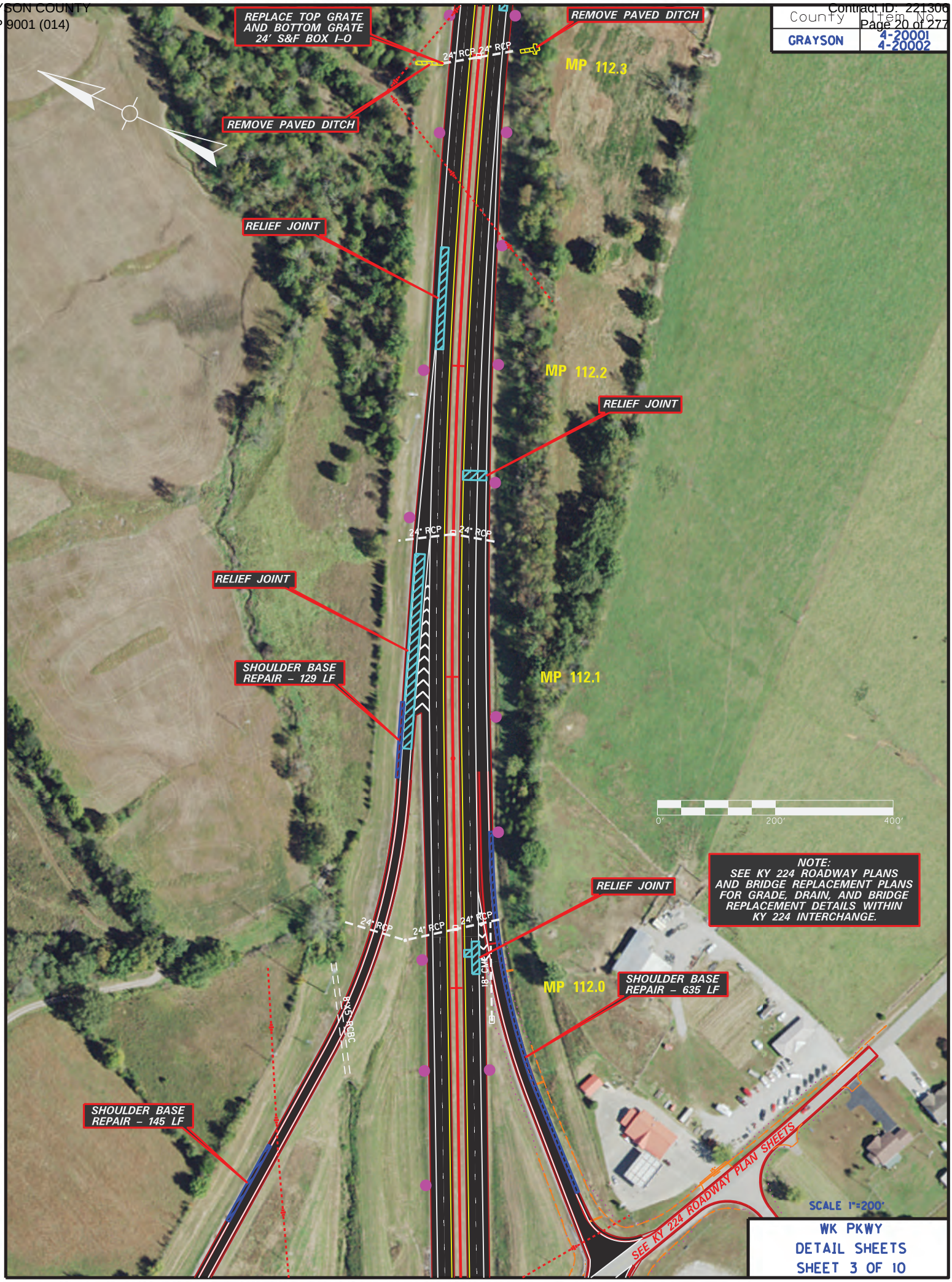

County	Item No.
GRAYSON	4-20001 4-20002

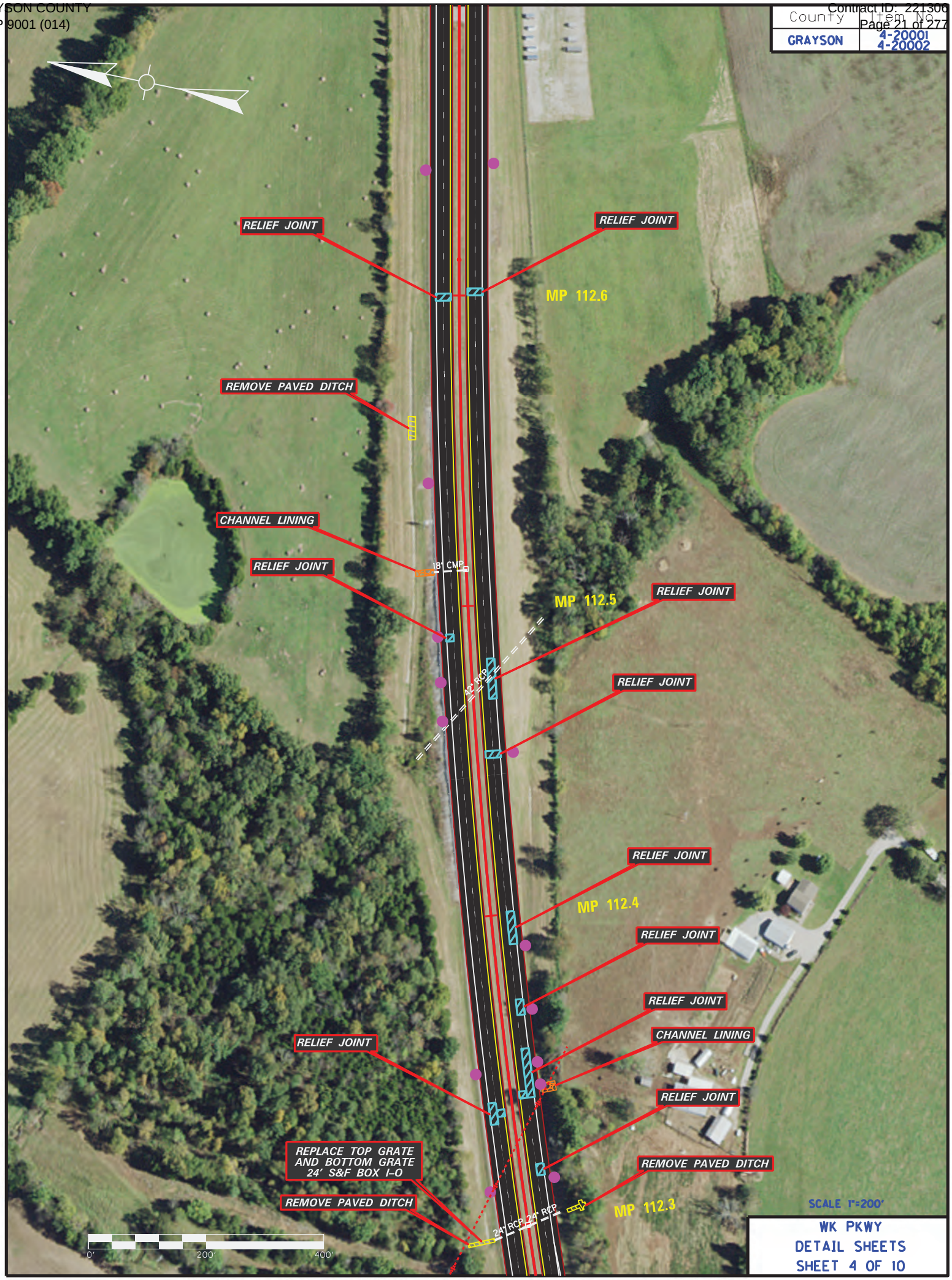

County	Item No.
GRAYSON	4-20001 4-20002

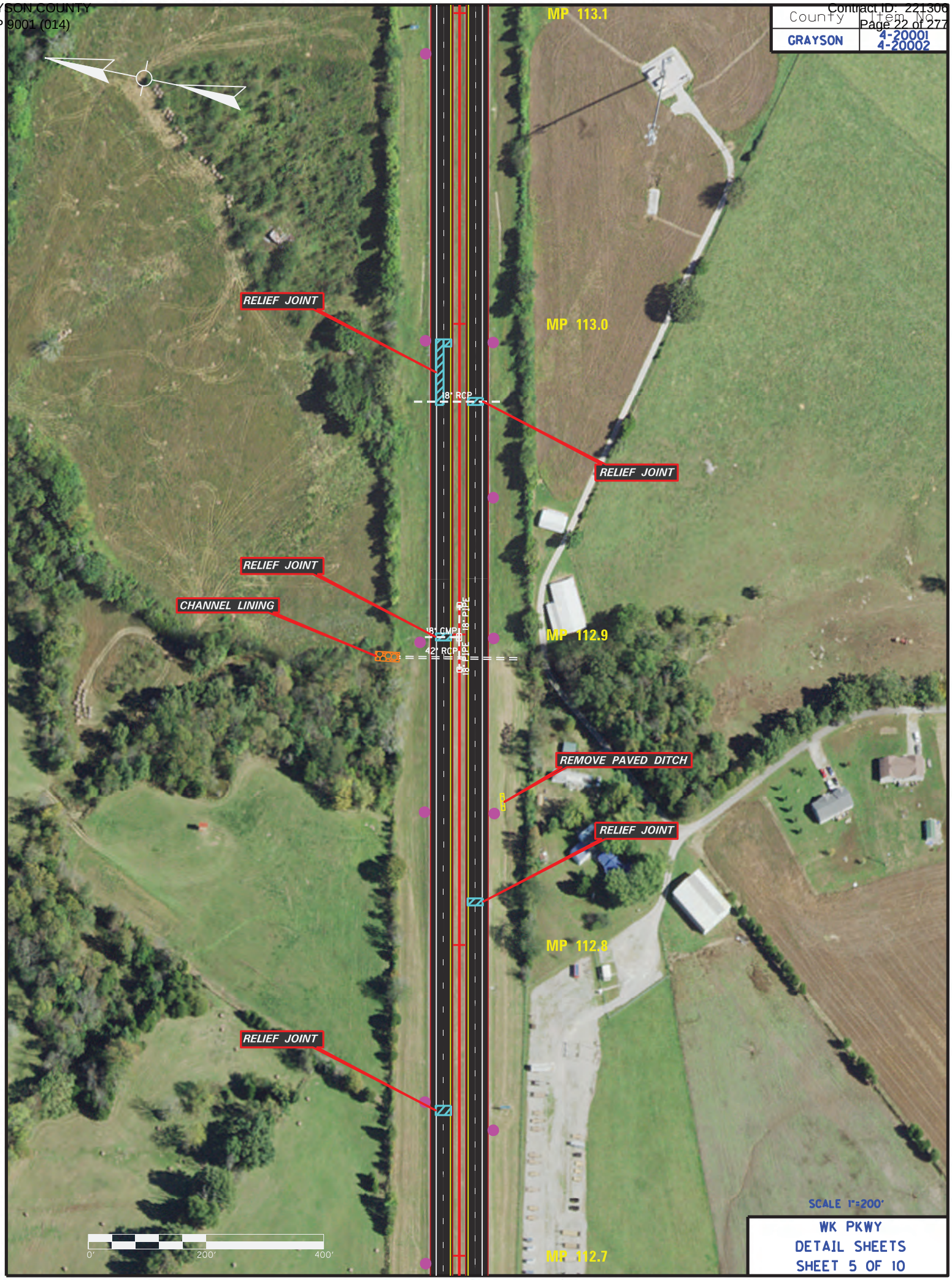

WK PKWY
DETAIL SHEETS
SHEET 5 OF 10

County	Item No.
GRAYSON	4-20001 4-20002

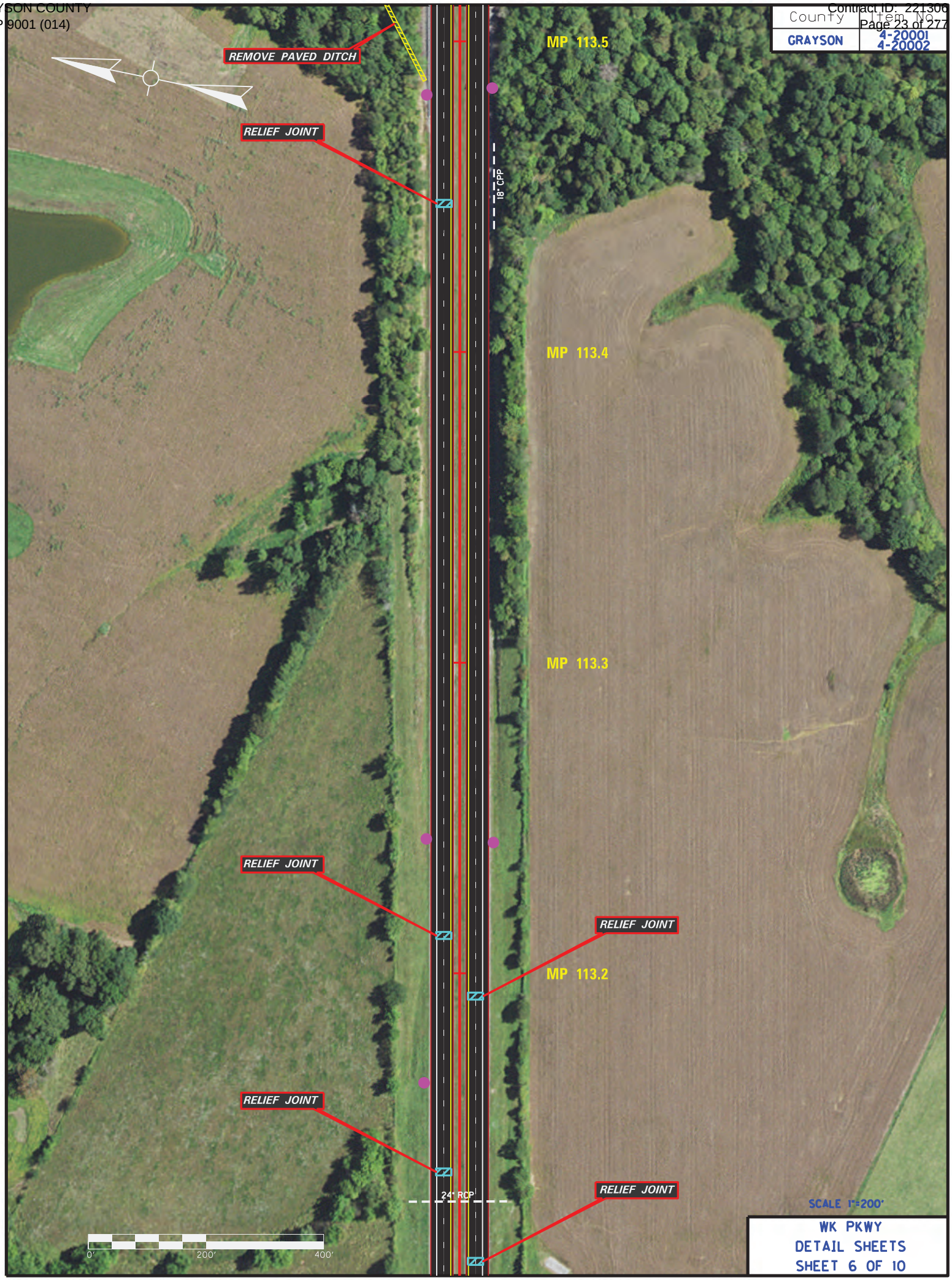

SCALE 1"=200'

WK PKWY
DETAIL SHEETS
SHEET 6 OF 10

County	Item No.
GRAYSON	4-20001 4-20002

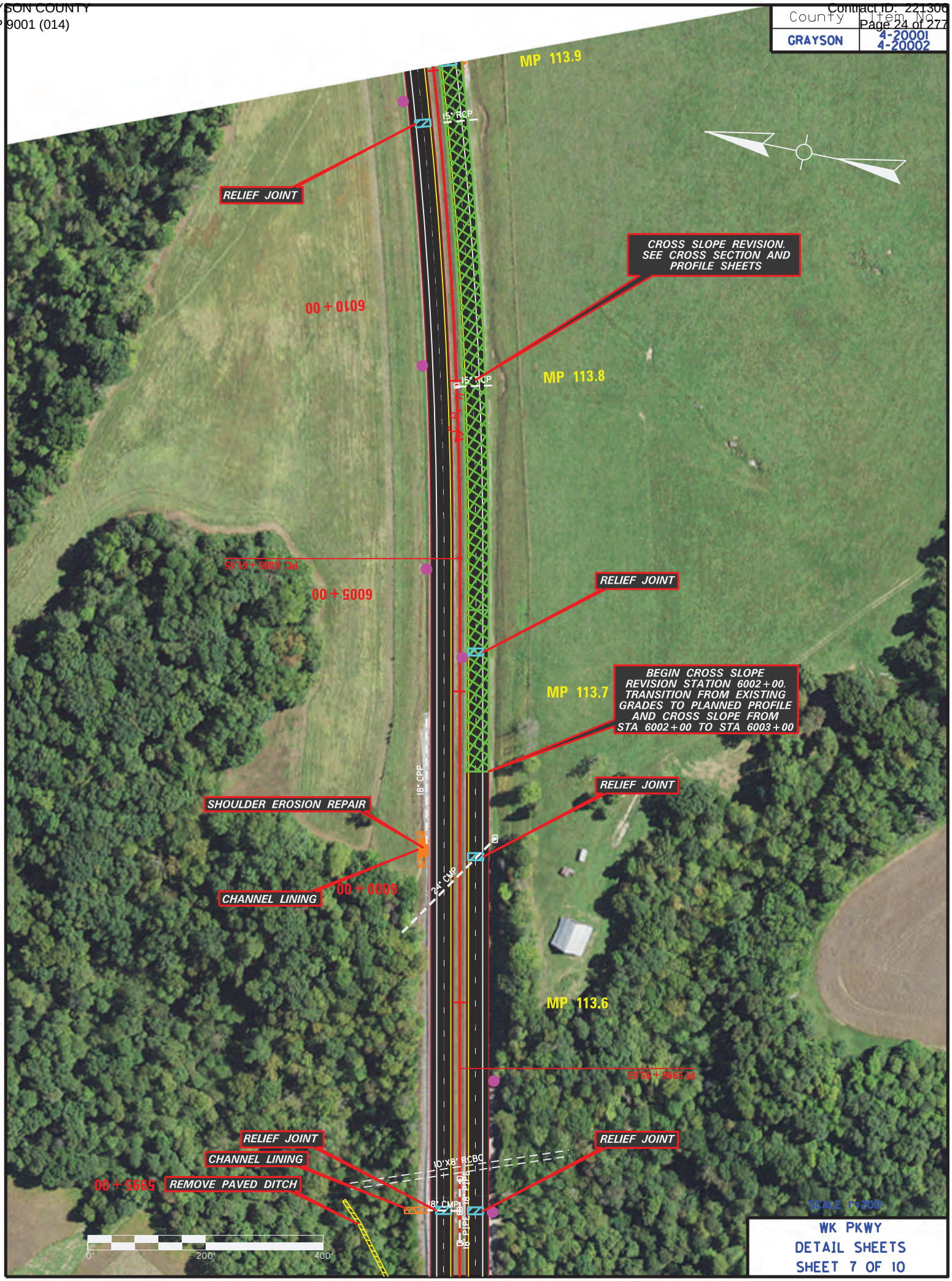

WK PKWY
DETAIL SHEETS
SHEET 7 OF 10

County	Item No.
GRAYSON	4-20001 4-20002

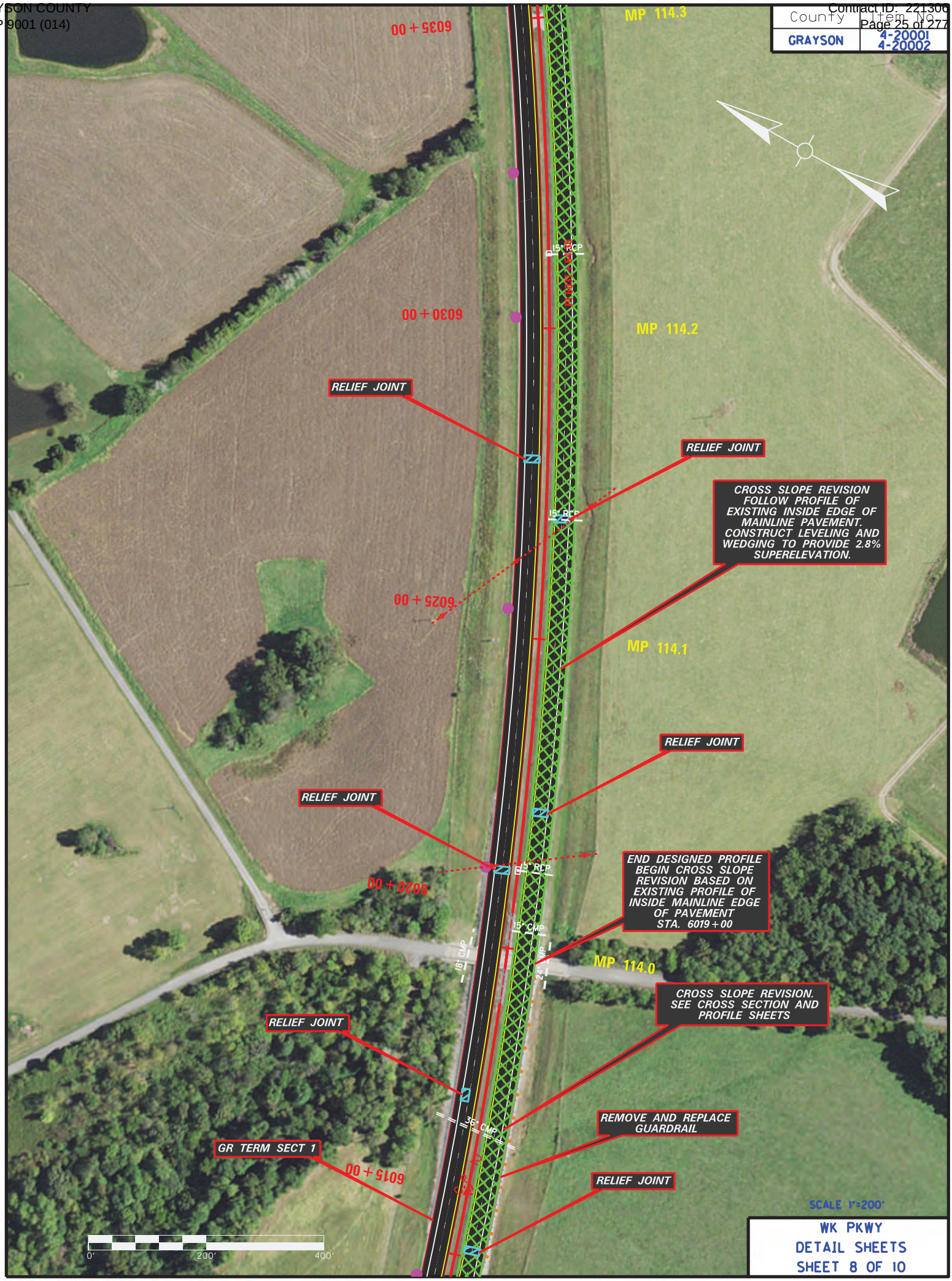

County	Item No.
GRAYSON	4-20001 4-20002

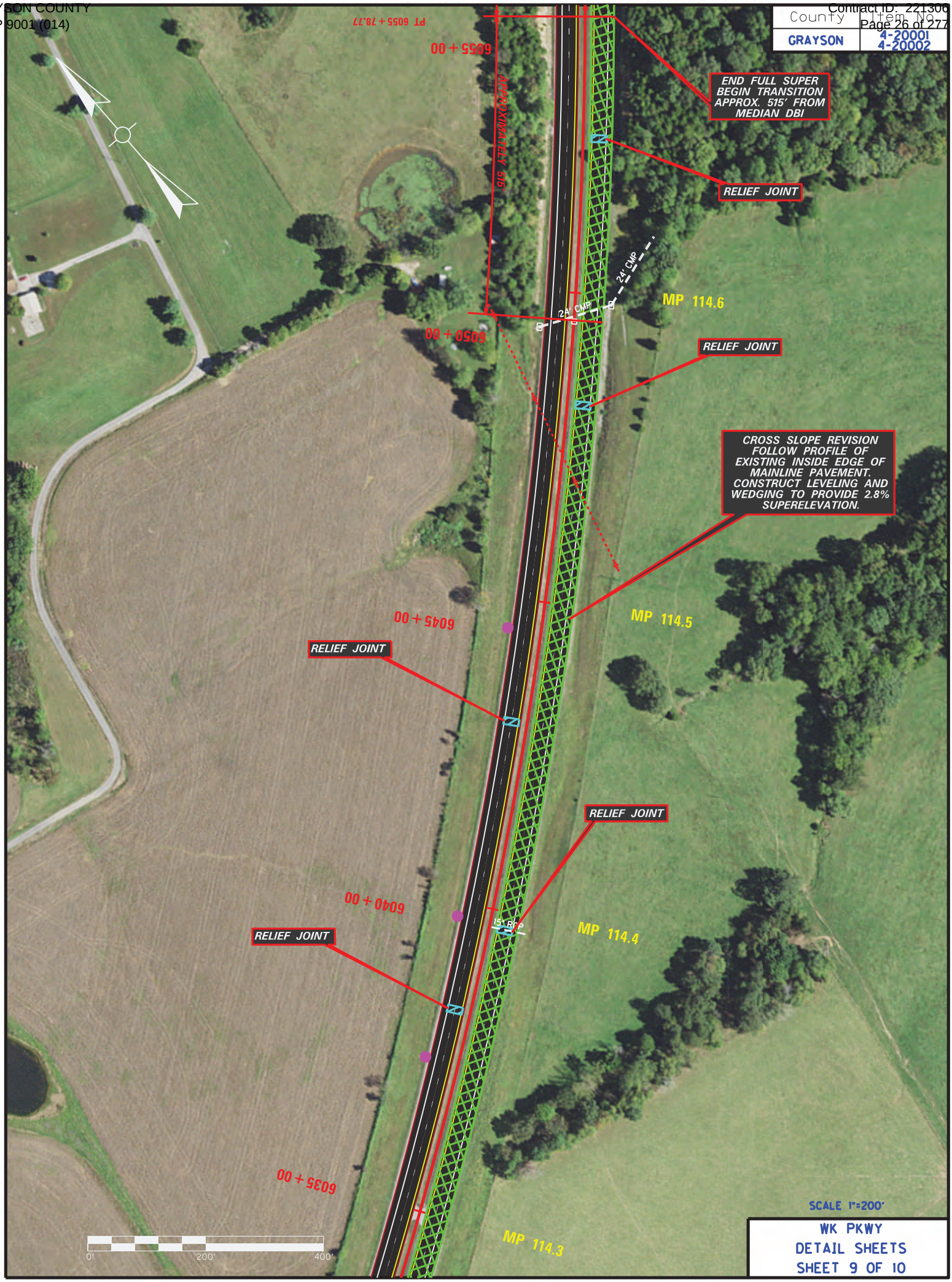

County	Item No.
GRAYSON	4-20001 4-20002

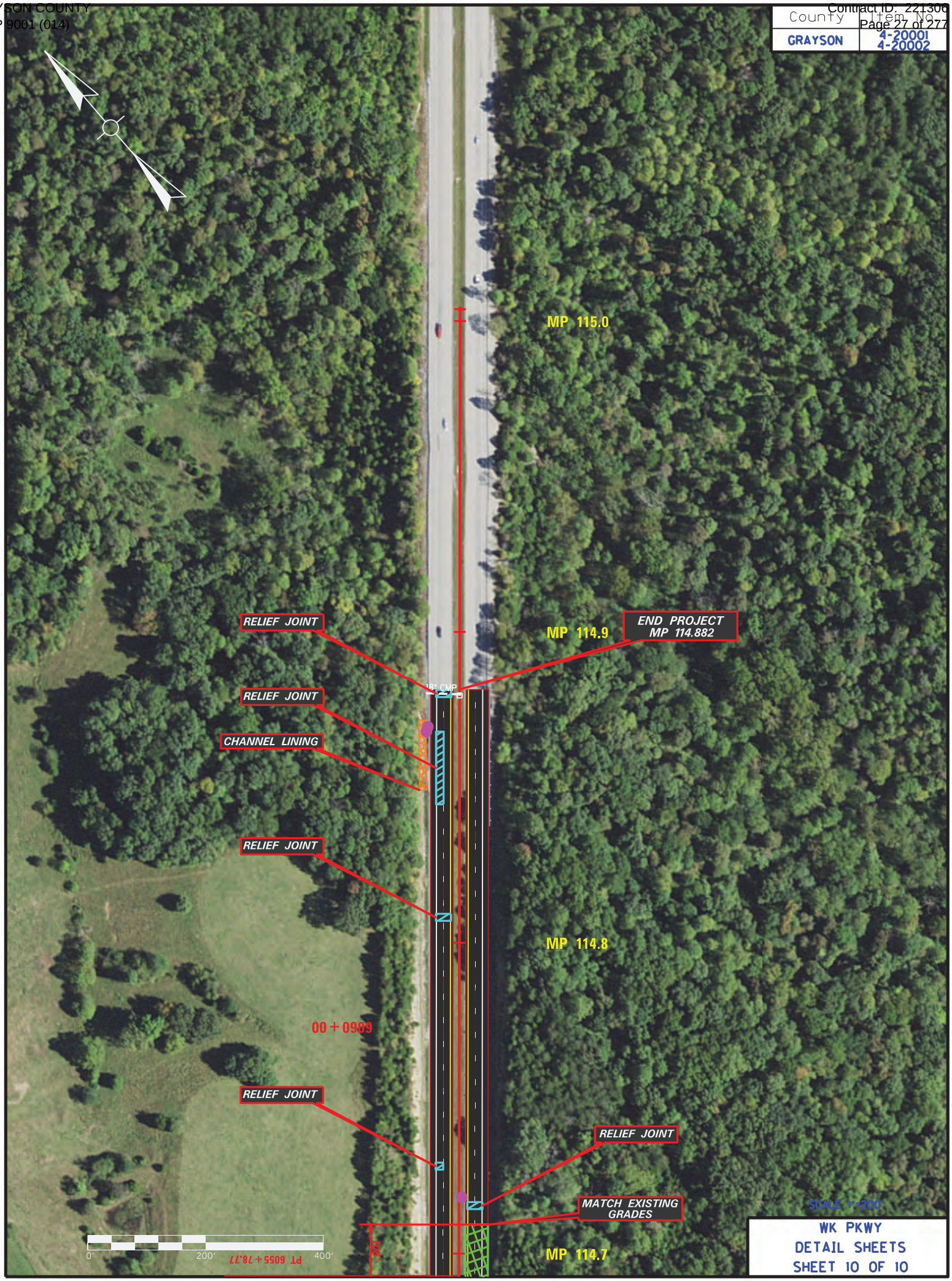

WK PKWY
DETAIL SHEETS
SHEET 10 OF 10

County	Item No.	Sheet
GRAYSON	4-20001 4-20002	

PROPOSED TYPICAL SECTIONS

WK 9001
MP 111.25 TO MP 112.4

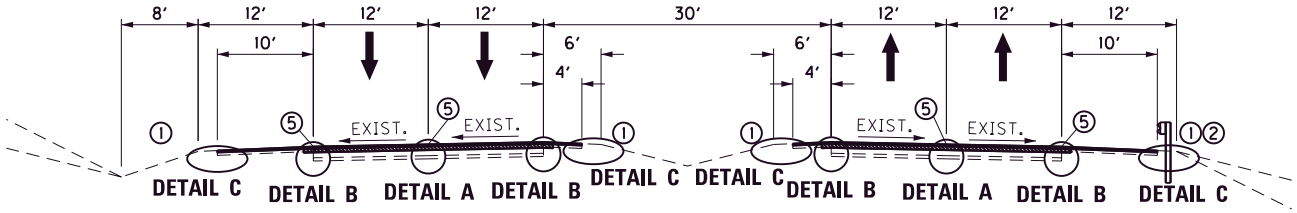

MAINLINE (NON–SUPERELEVATED)

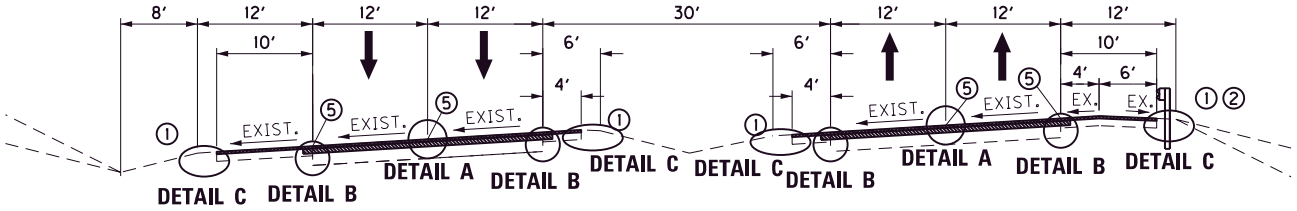

MAINLINE SUPERELEVATED SECTION

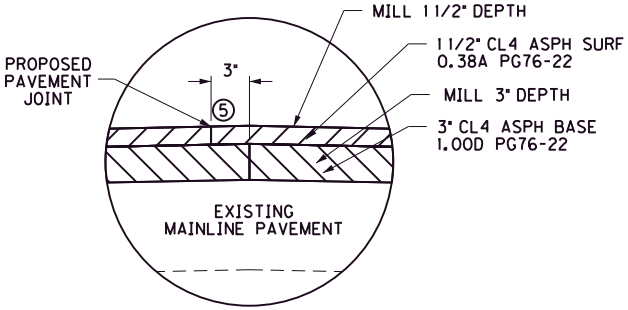

DETAIL A

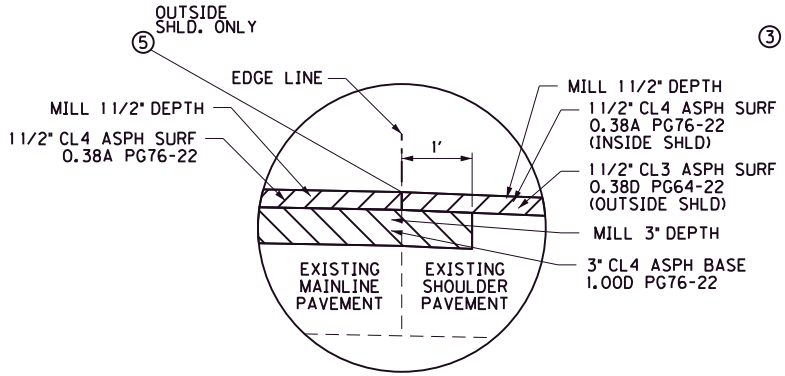

DETAIL B

SURFACING SCHEDULE

MAINLINE ④

ASPHALT PAVEMENT MILLING AND TEXTURING.....4 1/2" DEPTH
③ LEVELING AND WEDGING PG76-22.....AS DIRECTED
CL4 ASPH BASE 1.00D PG76-22.....3" DEPTH
CL4 ASPH SURFACE 0.38A PG76-22.....1 1/2" DEPTH

INSIDE SHOULDER ④

ASPHALT PAVEMENT MILLING AND TEXTURING.....1 1/2" DEPTH
③ LEVELING AND WEDGING PG76-22.....AS DIRECTED
CL4 ASPH SURFACE 0.38A PG76-22.....1 1/2" DEPTH

OUTSIDE SHOULDER ④

ASPHALT PAVEMENT MILLING AND TEXTURING.....1 1/2" DEPTH
③ LEVELING AND WEDGING PG76-22.....AS DIRECTED
CL3 ASPH SURFACE 0.38D PG64-22.....1 1/2" DEPTH

① ASPHALT SEAL REQUIRED FROM OUTSIDE EDGE OF PAVED SHOULDER TO A POINT 2 FOOT DOWN THE DITCH OR FILL SLOPE (Where Applicable). TWO APPLICATIONS OF THE FOLLOWING :
ASPHALT SEAL COAT ..... 2.4 lbs. / S.Y.
ASPHALT SEAL AGGREGATE ..... 20 lbs. / S.Y.

② USE 7' GUARDRAIL POSTS.

③ TO BE USED AS DIRECTED BY THE ENGINEER FOR PAVEMENT IRREGULARITIES.

④ APPLY ASPHALT MATERIAL FOR TACK AT A RATE OF 0.7 LBS/SY BETWEEN EACH LAYER OF ASPH. CONCRETE.

⑤ JOINT ADHESIVE

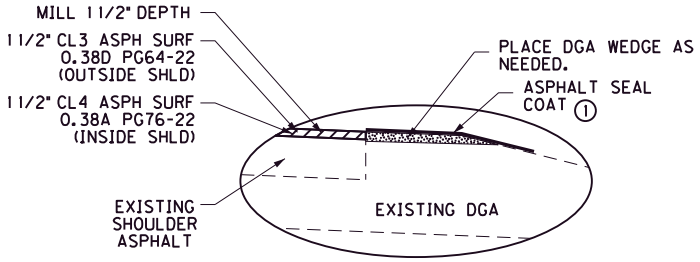

DETAIL C

NOT TO SCALE

WK 9001
TYPICAL SECTIONS

County	Item No.	Sheet
GRAYSON	4-20001 4-20002	

PROPOSED TYPICAL SECTIONS

WK 9001
MP 112.4 – MP 114.882

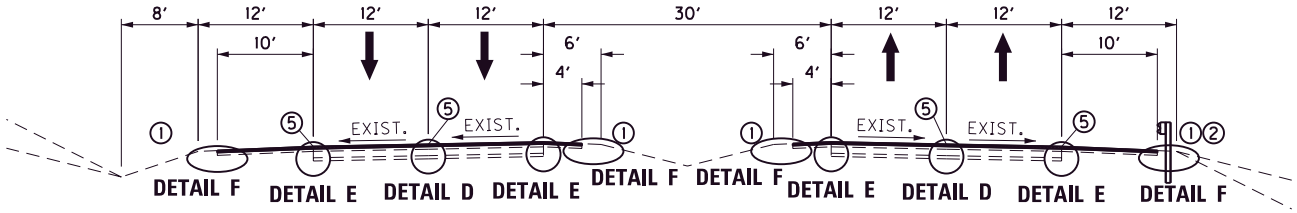

MAINLINE (NON–SUPERELEVATED)

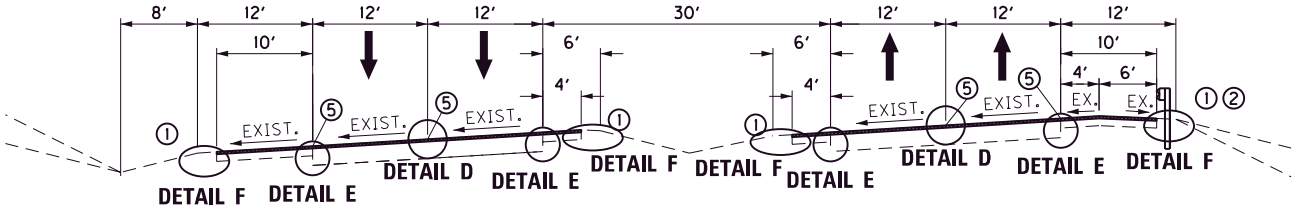

MAINLINE SUPERELEVATED SECTION

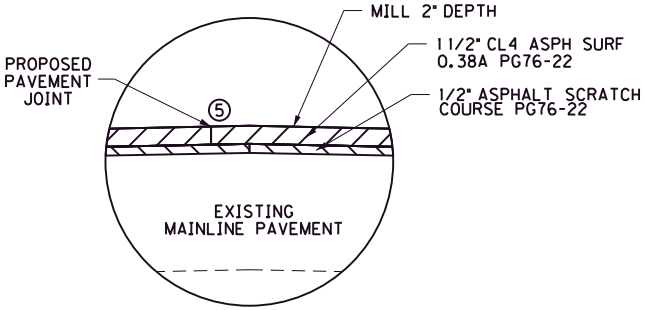

DETAIL D

SURFACING SCHEDULE

MAINLINE & INSIDE SHOULDER (4)

ASPHALT PAVEMENT MILLING AND TEXTURING.....2" DEPTH
(3) LEVELING AND WEDGING PG76-22.....AS DIRECTED
ASPHALT SCRATCH COURSE PG76-22.....1/2" DEPTH
CL4 ASPH SURFACE 0.38A PG76-22.....1 1/2" DEPTH

OUTSIDE SHOULDER (4)

ASPHALT PAVEMENT MILLING AND TEXTURING.....2" DEPTH
(3) LEVELING AND WEDGING PG76-22.....AS DIRECTED
ASPHALT SCRATCH COURSE PG76-22.....1/2" DEPTH
CL3 ASPH SURFACE 0.38D PG64-22.....1 1/2" DEPTH

(1) ASPHALT SEAL REQUIRED FROM OUTSIDE EDGE OF PAVED SHOULDER TO A POINT 2 FOOT DOWN THE DITCH OR FILL SLOPE (Where Applicable). TWO APPLICATIONS OF THE FOLLOWING :
ASPHALT SEAL COAT ..... 2.4 lbs. / S.Y.
ASPHALT SEAL AGGREGATE ..... 20 lbs. / S.Y.

(2) USE 7' GUARDRAIL POSTS.

(3) TO BE USED AS DIRECTED BY THE ENGINEER FOR PAVEMENT IRREGULARITIES.

(4) APPLY ASPHALT MATERIAL FOR TACK AT A RATE OF 0.7 LBS/SY BETWEEN EACH LAYER OF ASPH. CONCRETE.

(5) JOINT ADHESIVE

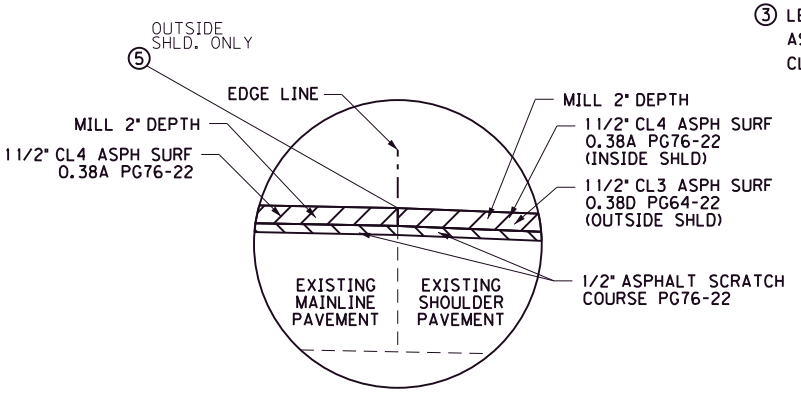

DETAIL E

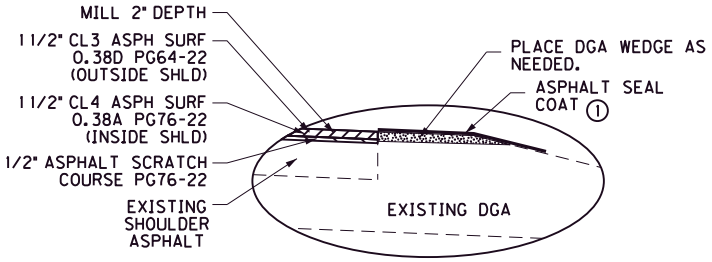

DETAIL F

NOT TO SCALE

WK 9001
TYPICAL SECTIONS

County	Item No.	Sheet
GRAYSON	4-20001 4-20002	

PROPOSED TYPICAL SECTIONS

WK 9001
RAMPS
SHOULDER BASE REPAIR DETAIL

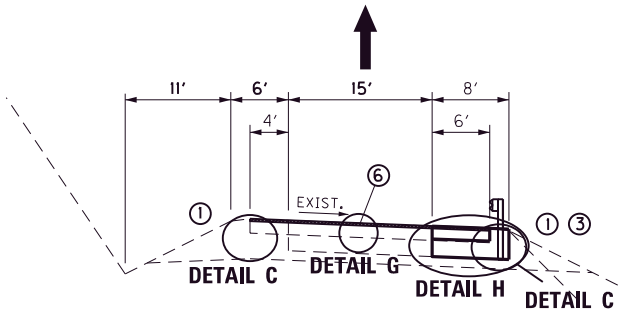

RAMP NORMAL SECTION

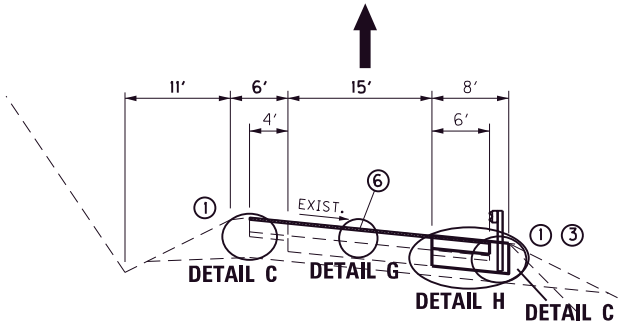

RAMP SUPERELEVATED

SURFACING SCHEDULE ②

RAMP TRAFFIC LANES AND SHOULDER

ASPHALT PAVEMENT MILLING AND TEXTURING.....1 1/2" DEPTH
LEVELING AND WEDGING PG76-22.....AS NEEDED
CL4 ASPH SURFACE 0.38A PG76-22.....1 1/2" DEPTH

RAMP SHOULDER BASE REPAIR ②

DGA BASE.....16" DEPTH
CL3 ASPH BASE 1.00D PG64-22.....3" DEPTH
CL3 ASPH BASE 1.00D PG64-22.....3" DEPTH
CL3 ASPH BASE 1.00D PG64-22.....3" DEPTH

① ASPHALT SEAL REQUIRED FROM OUTSIDE EDGE OF PAVED SHOULDER TO A POINT 2 FOOT DOWN THE DITCH OR FILL SLOPE (Where Applicable). TWO APPLICATIONS OF THE FOLLOWING :
ASPHALT SEAL COAT ..... 2.4 lbs. / S.Y.
ASPHALT SEAL AGGREGATE ..... 20 lbs. / S.Y.

② APPLY ASPHALT MATERIAL FOR TACK AT A RATE OF 0.7 LBS/SY BETWEEN EACH LAYER OF ASPH CONCRETE.

③ USE 7' GUARDRAIL POSTS

④ CONTAIN EXCAVATION WITHIN LIMITS OF EXISTING LIGHTING CONDUIT. EXCAVATION TO BE MEASURED AS TRENCHING (SHOULDER)

⑤ SAW CUT FULL DEPTH OF EXISTING PAVEMENT INCIDENTAL TO OTHER ITEMS IN THE CONTRACT.

⑥ JOINT ADHESIVE (SURFACE ONLY)

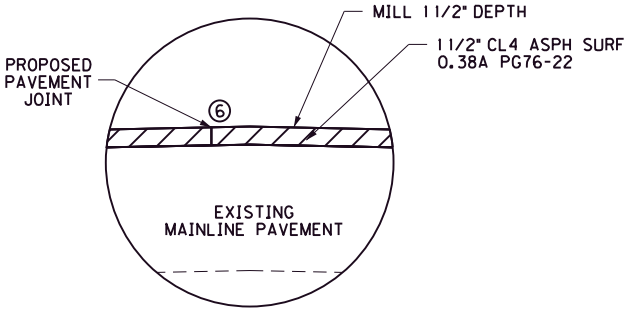

DETAIL G

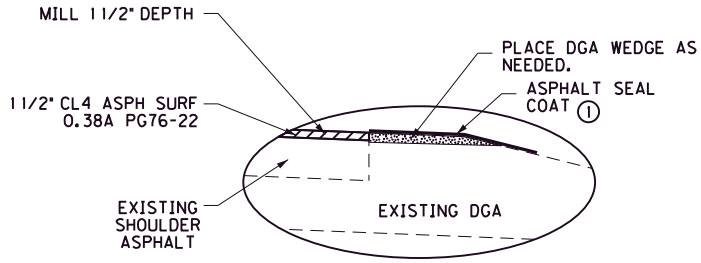

DETAIL C
(WITHOUT SHOULDER
BASE REPAIR)

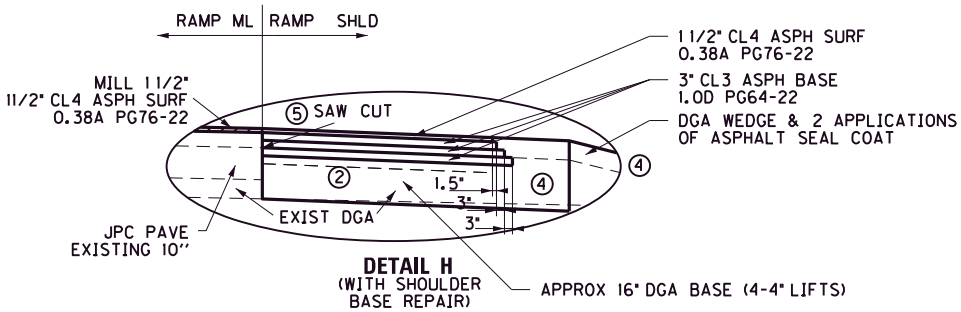

DETAIL H
(WITH SHOULDER
BASE REPAIR)

WARNING
DO NOT DISTURB EXISTING LIGHTING OR EXISTING LIGHTING CONDUIT

NOT TO SCALE

WK 9001
TYPICAL SECTIONS

County	Item No.	Sheet
GRAYSON	4-20001 4-20002	

PROPOSED TYPICAL SECTIONS

WK 9001
CROSS SLOPE CORRECTION
MP 113.674 E.B. TO 114.709 E.B.

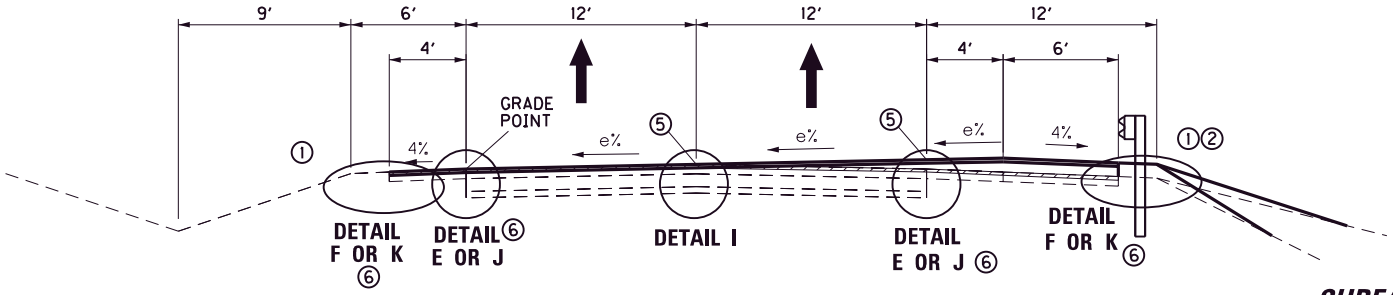

CROSS SLOPE CORRECTION

SURFACING SCHEDULE
MAINLINE & INSIDE SHOULDER ④

ASPHALT PAVEMENT MILLING AND TEXTURING.....2" DEPTH
③ LEVELING AND WEDGING PG76-22.....AS DIRECTED
ASPHALT SCRATCH COURSE PG76-22.....1/2" DEPTH
CL4 ASPH SURFACE 0.38A PG76-22.....1 1/2" DEPTH

SURFACING SCHEDULE
OUTSIDE SHOULDER ④

ASPHALT PAVEMENT MILLING AND TEXTURING.....2" DEPTH
③ LEVELING AND WEDGING PG76-22.....AS DIRECTED
ASPHALT SCRATCH COURSE PG76-22.....1/2" DEPTH
CL3 ASPH SURFACE 0.38D PG64-22.....1 1/2" DEPTH

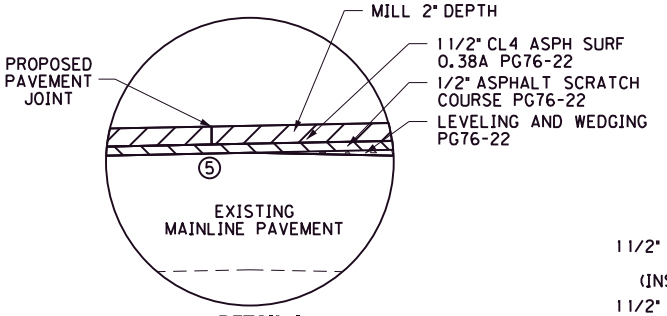

DETAIL I

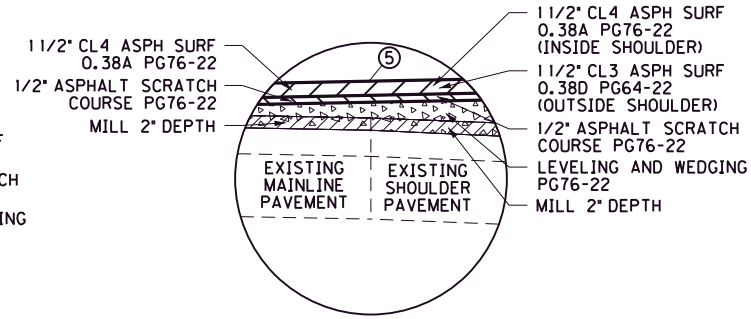

DETAIL J

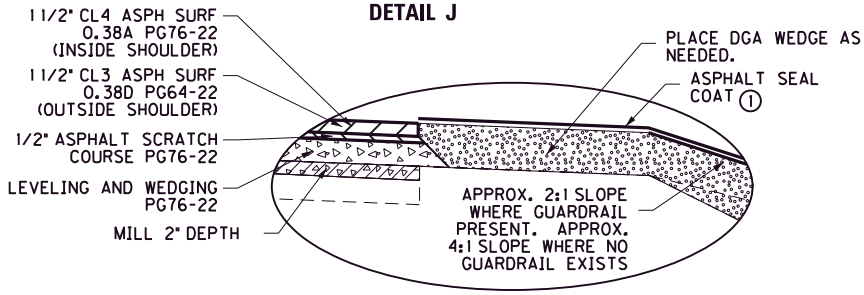

DETAIL K

DETAIL E & DETAIL F ⑥
SEE NORMAL TYPICAL SECTION SHEETS.

① ASPHALT SEAL REQUIRED FROM OUTSIDE EDGE OF PAVED SHOULDER TO A POINT 2 FOOT DOWN THE DITCH OR FILL SLOPE (Where Applicable). TWO APPLICATIONS OF THE FOLLOWING :
ASPHALT SEAL COAT ..... 2.4 lbs. / S.Y.
ASPHALT SEAL AGGREGATE ..... 20 lbs. / S.Y.

② USE 7' GUARDRAIL POSTS

③ TO BE USED AS DIRECTED BY THE ENGINEER FOR PAVEMENT IRREGULARITIES AND CROSS SLOPE CORRECTION. USE ASPHALT BASE MIXES FOR THICKNESSES GREATER THAN 2".

④ APPLY ASPHALT MATERIAL FOR TACK AT A RATE OF 0.7 LBS/SY BETWEEN EACH LAYER OF ASPH. CONCRETE.

⑤ JOINT ADHESIVE

⑥ USE DETAIL E AT MAINLINE EDGE AND DETAIL F AT SHOULDER EDGE AT LOCATIONS THAT LITTLE OR NO LEVELING AND WEDGING IS NEEDED. CROSS SECTIONS AND DESIGNED GRADE PROVIDED FOR CROSS SLOPE REVISION BETWEEN MP 113.674 AND MP 113.996. FROM MP 113.996 TO MP 114.709 USE EXISTING LEFT EDGE OF MAINLINE PAVEMENT TO ESTABLISH PROFILE GRADE AND CONTINUALLY MONITOR AND CONTROL CROSS SLOPE OF LEVELING AND WEDGING DURING PLACEMENT TO MODIFY THE GRADE OF THIS PORTION OF THE HORIZ. CURVE.

NOTE: COMPLETE RELIEF JOINT REPAIRS PRIOR TO THIS OPERATION

MILL TYPICAL 2" THICKNESS TO REMOVE EXISING OXIDIZED SURFACE COURSE PRIOR TO APPLICATION OF LEVELING AND WEDGING.

MP 113.674 (STA 6002+00) TO MP 113.996 (STA 6019+00) SEE PROFILE SHEETS AND CROSS SECTIONS.

MP 113.996 (STA 6019+00) TO MP 114.709 (STA 6056+66)
ALLOW THE EXISTING YELLOW LINE ELEVATION TO CONTROL THE PROPOSED PROFILE GRADE. BY USE OF GRADE CONTROL EQUIPMENT ON THE PAVER AND BY CHECKING CROSS SLOPES WITH A LEVEL, SMART LEVEL, OR OTHER APPROVED METHODS, PLACE LEVELING AND WEDGING TO THE DESIRED PAVEMENT CROSS SLOPE. USE 0.75 NOMINAL SIZE AGGREGATE BASE FOR LEVELING OVER 2" IN THICKNESS. PLACE LEVELING IN MULTIPLE PASSES WHERE REQUIRED BY SPECIFICATION TO NOT EXCEED ALLOWABLE LAY DOWN THICKNESSES. LEVELING SHOULD RESULT IN A WEDGE OF 0" THICKNESS AT THE EXISTING EASTBOUND YELLOW LINE, RANGING TO A DEPTH REQUIRED AT THE OUTSIDE OF THE OUTSIDE SHOULDER NEEDED TO ACHIEVE A 2.8% CROSS SLOPE. ROTATE FROM EXISTING PAVEMENT ELEVATIONS TO THE DESIRED CROSS SLOPES AT THE STATIONS DESIGNATED ON THE PLAN SHEETS.

WK 9001
TYPICAL SECTIONS
CROSS SLOPE CORRECTION

WK 9001
GRAYSON COUNTY
ITEM NO. 4-20001 & 4-20002 , PAVEMENT REHABILITIATION
MILEPOINT 111.250 TO 114.882
GENERAL SUMMARY

ITEM NUMBER	ITEM		UNIT	QUANTITY
00001	DGA BASE	1	TON	8,603
00100	ASPHALT SEAL AGGREGATE	1	TON	412
00103	ASPHALT SEAL COAT	1	TON	49
00193	ASPHALT SCRATCH COURSE PG76-22	1	TON	3,043
00194	LEVELING & WEDGING PG76-22	1	TON	2,956
00214	CL3 ASPH BASE 1.00D PG64-22	1	TON	9,800
00219	CL4 ASPH BASE 1.00D PG76-22	1	TON	5,789
00339	CL3 ASPH SURF 0.38D PG64-22	1	TON	3,714
00342	CL4 ASPH SURF 0.38A PG76-22	1	TON	11,596
02101	CEM CONC ENT PAVEMENT-8 IN	1	SQYD	93
02676	MOBILIZATION FOR MILL & TEXT	1	LS	1
02677	ASPHALT PAVE MILLING & TEXTURING	1	TON	24,164
20071EC	JOINT ADHESIVE	1	LF	87,009
20509ED	BLOW UP/RELIEF JOINT	1	SQYD	5,350
24970EC	ASPHALT MATERIAL FOR TACK NON-TRACKING	1	TON	128
02165	REMOVE PAVED DITCH	2	SQYD	326
02484	CHANNEL LINING CLASS III	2	TON	940
22660EN	REPLACE GRATE	2	LB	454
00440	ENTRANCE PIPE-15 IN	2	LF	75
22045NN	FLUME INLET TY 2-MOD	2	EACH	2
22766ED	TRENCH DRAIN	2	LF	207
24585EC	SECURITY PLATE ASSEMBLY	2	EACH	2
21802EN	G/R STEEL W BEAM-S FACE (7 FT POST)	3	LF	1,950
02381	REMOVE GUARDRAIL	3	LF	2,350
01982	DELINEATOR FOR GUARDRAIL MONO DIRECTIONAL WHITE	3	EACH	35
02360	GUARDRAIL TERMINAL SECTION NO 1	3	EACH	1
23979EC	CRASH CUSHION TY VI CLASS C TL3	3	EACH	2
02391	GUARDRAIL END TREATMENT TYPE 4A	3	EACH	2
20191ED	OBJECT MARKER TY 3	3	EACH	4
02369	GUARDRAIL END TREATMENT TYPE 2A	3	EACH	2
08100	CONCRETE-CLASS A	3	CUYD	12.16
08150	STEEL REINFORCEMENT	3	LB	368
25078ED	THRIE BEAM GUARDRAIL TRANSITION TL-3	3	EACH	3
02159	TEMP DITCH		LF	11,251
02160	CLEAN TEMP DITCH		LF	5,626
02703	SILT TRAP TYPE A		EACH	4

1 CARRIED OVER FROM PAVING SUMMARY
2 CARRIED OVER FROM PIPE DRAINAGE SUMMARY
3 CARRIED OVER FROM GUARDRAIL SUMMARY

WK 9001
GRAYSON COUNTY
ITEM NO. 4-20001 & 4-20002 , PAVEMENT REHABILITIATION
MILEPOINT 111.250 TO 114.882
GENERAL SUMMARY

ITEM NUMBER	ITEM	UNIT	QUANTITY
02704	SILT TRAP TYPE B	EACH	4
02705	SILT TRAP TYPE C	EACH	4
02706	CLEAN SILT TRAP TYPE A	EACH	4
02707	CLEAN SILT TRAP TYPE B	EACH	4
02708	CLEAN SILT TRAP TYPE C	EACH	4
02575	DITCHING AND SHOULDERING	LF	19,177
05950	EROSION CONTROL BLANKET	SQYD	18,505
05952	TEMP MULCH	SQYD	12,337
05953	TEMP SEEDING AND PROTECTION	SQYD	9,253
05963	INITIAL FERTILIZER	TON	1
05964	MAINTENANCE FERTILIZER	TON	0.6
05989	SPECIAL SEEDING CROWN VETCH	SQYD	2,221
05992	AGRICULTURAL LIMESTONE	TON	11.5
40030	TEMPORARY SILT FENCE	LF	11,251
01990	DELINEATOR FOR BARRIER WALL-B/W	EACH	96
02562	TEMPORARY SIGNS	SQFT	1,200
02650	MAINTAIN & CONTROL TRAFFIC	LS	1
02671	PORTABLE CHANGEABLE MESSAGE SIGN	EACH	4
02775	ARROW PANEL	EACH	2
06511	PAVE STRIPING-TEMP PAINT-6 IN	LF	174,316
06549	PAVE STRIPING-TEMP REM TAPE-B	LF	9,000
06550	PAVE STRIPING-TEMP REM TAPE-W	LF	3,600
06551	PAVE STRIPING-TEMP REM TAPE-Y	LF	3,600
02003	RELOCATE TEMP CONC BARRIER	LF	2,960
02898	RELOCATE CRASH CUSHION	EACH	7
03171	CONCRETE BARRIER WALL TYPE 9T	LF	1,360
04934	TEMP SIGNAL MULTI PHASE	EACH	1
08903	CRASH CUSHION TY VI CLASS BT TL3	EACH	3
06510	PAVE STRIPING-TEMP PAINT-4 IN	LF	18,000
02696	SHOULDER RUMBLE STRIPS	LF	84,798
06401	FLEXIBLE DELINEATOR POST-M/W	EACH	553
06404	FLEXIBLE DELINEATOR POST-M/Y	EACH	81
06542	PAVE STRIPING-THERMO-6 IN W	LF	52,188
06543	PAVE STRIPING-THERMO-6 IN Y	LF	42,399
06546	PAVE STRIPING-THERMO-12 IN W	LF	2,464
06547	PAVE STRIPING-THERMO-12 IN Y	LF	120
06568	PAVE MARKING-THERMO STOP BAR-24IN	LF	163
06569	PAVE MARKING-THERMO CROSS-HATCH	SQFT	152

WK 9001
GRAYSON COUNTY
ITEM NO. 4-20001 & 4-20002 , PAVEMENT REHABILITIATION
MILEPOINT 111.250 TO 114.882
GENERAL SUMMARY

ITEM NUMBER	ITEM	UNIT	QUANTITY
06613	INLAID PAVEMENT MARKER-B W/R	EACH	536
06614	INLAID PAVEMENT MARKER-B Y/R	EACH	51
24679ED	PAVE MARK THERMO CHEVRON	SQFT	922
24401EC	DURABLE WATERBORNE MARKING-4 IN W	LF	3,200
24402EC	DURABLE WATERBORNE MARKING-4 IN Y	LF	3,200
00078	CRUSHED AGGREGATE SIZE NO 2 (4)	TON	1,199
02230	EMBANKMENT IN PLACE (5)	CUYD	6,828
02603	FABRIC-GEOTEXTILE CLASS 2 (5)	SQYD	3,700
01005	PERFORATED PIPE EDGE DRAIN-4 IN	LF	19,177
01010	NON-PERFORATED PIPE-4 IN	LF	630
01015	INSPECT & CERTIFY EDGE DRAIN SYSTEM	LS	1
01020	PERF PIPE HEADWALL TY 1-4 IN	EACH	10
01024	PERF PIPE HEADWALL TY 2-4 IN	EACH	10
01028	PERF PIPE HEADWALL TY 3-4 IN	EACH	10
01740	CORED HOLE DRAINAGE BOX CON-4 IN	EACH	10
20758ED	REMOVE AND RESET PERF PIPE HEADWALL	EACH	2
00071	CRUSHED AGGREGATE SIZE NO 57 (6)	TON	46
02545	CLEARING AND GRUBBING (7)	LS	1
02726	STAKING	LS	1
06427	TRENCHING (8)	LF	1,234
00020	TRAFFIC BOUND BASE	TON	50
20756ED	RESHAPE MEDIAN (6)	LF	225
24891EC	PAVE MOUNT INFRARED TEMP EQUIPMENT	SQFT	1,367,033
26136EC	PORTABLE QUEUE WARNING ALERT SYSTEM	MONTH	8
26137EC	QUEUE WARNING PCMS	MONTH	32
26138EC	QUEUE WARNING PORTABLE RADAR SENSORS	MONTH	32
04798	CONDUIT-3 1/2 IN (9)	LF	90
04800	MARKER (9)	EACH	1
04820	TRENCHING AND BACKFILLING (9)	LF	515
04860	CABLE-NO. 8/3C DUCTED (9)	LF	825
04940	REMOVE LIGHTING (9)	LS	1
20391NS835	ELECTRICAL JUNCTION BOX TYPE A (9)	EACH	3
21543EN	BORE AND JACK CONDUIT (9)	LF	90
21579EN	FLEX CONDUIT-1 1/4 IN (9)	LF	50
02568	MOBILIZATION	LS	1
02569	DEMOBILIZATION	LS	1
10020NS	FUEL ADJUSTMENT	DOLL	60,529
10030NS	ASPHALT ADJUSTMENT	DOLL	144,256

(4) INCLUDES 42 TONS FOR P. PIPE HEADWALLS, 127 TONS FROM SHOULDER EROSION REPAIR DETAIL, AND 1,030 TONS FROM EARTHWORK SUMMARY.

(5) SEE EARTHWORK SUMMARY.

(6) FOR PREPARATION OF MEDIAN PIER TRANSITION AND CRASH CUSHION INSTALLATION.

(7) APPROXIMATELY 2 ACRES

(8) FOR RAMP SHOULDER REPAIRS.

(9) CARRIED OVER FROM LIGHTING SUMMARY.

*STRUCTURE QUANITIES NOT INCLUDED. SEE STRUCTURE PLANS.

WK 9001
GRAYSON COUNTY
ITEM NO. 4-20001 & 4-20002 , PAVEMENT REHABILITIATION
MILEPOINT 111.250 TO 114.882
EARTHWORK SUMMARY

EXCAVATION ITEMS

ROADWAY	EXC	EMB BENCH	UNDERCUT	TOTALS
WK 9001 CROSS SLOPE REVISION	0	0	0	0
KY 224	616	2277	691	3584
RAMP A	73	0	0	73
RAMP B	72	0	0	72
RAMP C	4	0	0	4
RAMP D	5	162	0	167
HICKORY FLATS	22	0	0	22
ROADWAY EXCAVATION TOTAL				3922

EMBANKMENT ITEMS

ROADWAY	EMB	EMB BENCH	UNDERCUT	
WK 9001 CROSS SLOPE REVISION	842	0	0	842
KY 224	2314	2277	691	5282
RAMP A	254	0	0	254
RAMP B	173	0	0	173
RAMP C	0	0	0	0
RAMP D	101	162	0	263
HICKORY FLATS	14	0	0	14
EMBANKMENT IN PLACE TOTAL				6828

NOTES:

PROPOSED UNDERCUT LOCATIONS ESTIMATED TO REMOVE SOFT OR SATURATED AREAS AS IDENTIFIED BY THE ENGINEER DURING CONSTRUCTION. POTENTIAL AREAS ARE IDENTIFIED ON THE CROSS SECTIONS HOWEVER, LOCATIONS AND LIMITS OF EXCAVATION ARE TO BE DETERMINED AT THE AT THE TIME OF CONSTRUCTION BY THE ENGINEER. A QUANTITY OF CRUSHED AGGREGATE #2 STONE OF 1,030 TONS AND A QUANTITY OF 3,700 SY OF GEOTEXTILE FABRIC CLASS 2 HAS BEEN ESTABLISHED TO REFILL THE UNDERCUT AREAS WITH FABRIC WRAPPED #2 CRUSHED AGGREGATE. FINAL PAYMENT OF UNDERCUT QUANTITIES WILL BE BASED ON FIELD MEASUREMENT OF ACTUAL ITEMS USED.

FINAL PAYMENT OF THE ITEM EMBANKMENT IN PLACE WILL BE BASED ON PLAN QUANTITY PLUS OR MINUS AUTHORIZED ADJUSTMENTS (INCLUDING ADDITIONS OR SUBTRACTIONS IN UNDERCUT QUANTITY).

WK 9001
GRAYSON COUNTY
ITEM NO. 4-20001 & 4-20002 , PAVEMENT REHABILITIATION
MILEPOINT 111.250 TO 114.882
PAVING SUMMARY (WK 9001 PAVEMENT REHABILITATION)

PAVING AREAS (SY) - SHEET 1

ITEM	TOTAL	ITEM	TOTAL
MP 111.25 - MP 112.4		**MP 112.4 - MP 114.882**	
MAINLINE AND 1' INTO SHOULDERS		**MAINLINE AND INSIDE SHOULDERS**	
3" MILLING AND TEXTURING	35,083	2" MILLING AND TEXTURING	81,542
3" CL4 ASPH BASE 1.00D PG76-22	35,083	.5" ASPHALT SCRATCH COURSE PG76-22	81,542
		1.5" CL4 ASPH SURF 0.38A PG76-22	81,542
MAINLINE AND INSIDE SHOULDER		**OUTSIDE SHOULDERS**	
1.5" MILLING AND TEXTURING	37,329	2" MILLING AND TEXTURING	29,122
1.5" CL4 ASPH SURF 0.38A PG76-22	37,329	.5 ASPHALT SCRATCH COURSE PG76-22	29,122
OUTSIDE SHOULDER		1.5" CL3 ASPH SURF 0.38D PG64-22	29,122
1.5" MILLING AND TEXTURING	10,128	**CROSS SLOPE REVISION**	
1.5" CL3 ASPH SURF 0.38D PG64-22	10,128	DGA BASE (WEDGE) (CY)	613
RAMPS		LEVELING AND WEDGING PG76-22 (CY)	929
1.5" MILLING AND TEXTURING	21,689		
1.5" CL4 ASPH SURF 0.38A PG76-22	21,689		
		MP 111.25 - MP 114.882 ALL SHOULDERS	
RAMP SHOULDER REPAIRS		PROJECT SHOULDERS 50% COVERAGE	
16" DGA BASE (CY)	640	ASPHALT SEAL AGGREGATE	18,844
3" CL3 ASPH BASE 1.00D PG64-22	2,622	ASPHALT SEAL COAT	18,844

PAVING SUMMARY

ITEM CODE	ITEM		UNIT	QUANTITY
00001	DGA BASE	1	TON	8,603
00100	ASPHALT SEAL AGGREGATE	2	TON	412
00103	ASPHALT SEAL COAT	3	TON	49
00193	ASPHALT SCRATCH COURSE PG76-22		TON	3,043
00194	LEVELING & WEDGING PG76-22	4	TON	2,956
00214	CL3 ASPH BASE 1.00D PG64-22	6	TON	9,800
00219	CL4 ASPH BASE 1.00D PG76-22		TON	5,789
00339	CL3 ASPH SURF 0.38D PG64-22	5	TON	3,714
00342	CL4 ASPH SURF 0.38A PG76-22		TON	11,596
02101	CEM CONC ENT PAVEMENT-8 IN		SQYD	93
02676	MOBILIZATION FOR MILL & TEXT		LS	1
02677	ASPHALT PAVE MILLING & TEXTURING	7	TON	24,164
20071EC	JOINT ADHESIVE	8	LF	87,009
20509ED	BLOW UP/RELIEF JOINT	9	SQYD	5,350
24970EC	ASPHALT MATERIAL FOR TACK NON-TRACKING	10	TON	128

1. INCL. 542 TONS FOR SHLD DROPOFFS, 29 TONS FROM EROSION REPAIR DETAIL, & 5,441 TONS FOR KY 224, RAMPS & HICK. FLATS.
2. BASED ON COVERAGE OF 50% OF SHOULDERS & 2 APPLICATION OF 20 LBS/SY. INCL. 35 TONS FOR KY 224 & HICKORY FLATS.
3. BASED ON COVERAGE OF 50% OF SHOULDERS & 2 APPLICATION OF 2.4 LBS/SY. INCL. 4 TONS FOR KY 224 & HICKORY FLATS.
4. INCL. 250 TONS TO BE USED AS DIRECTED AND 867 TONS FOR KY 224, RAMPS, AND HICKORY FLATS CONSTRUCTION.
5. INC. 480 TONS FOR KY 224 AND HICKORY FLATS & ENTRANCES.
6. INCL. 970 TONS P. PIPE TRENCH CAP & 8,397 TONS KY 224, RAMPS, & HICKORY FLATS CONSTRUCTION.
7. INCL. 497 TONS FOR KY224, RAMPS, HICK. FLATS KEY INS.
8. INCL. 2,256 LF FOR KY 224 AND HICKORY FLATS.
9. FROM RELIEF JOINT DETAIL.
10. BASED ON 0.7 LBS/SY. INCL 15 TONS FOR KY 224 & HICK. FLATS.

ALL ITEMS CARRIED OVER TO THE GENERAL SUMMARY.
DGA BASE CALC AT 115 LBS/SY/IN OR 2.07 TONS/CY.
ASPH. MIXES CALC. BASED ON 110 LBS/SY/IN OR 1.98 TONS/CY.

WK 9001
GRAYSON COUNTY
ITEM NO. 4-20001 & 4-20002 , PAVEMENT REHABILITIATION
MILEPOINT 111.250 TO 114.882
PAVING SUMMARY (KY 224 RECONSTRUCTION)

PAVING AREAS (SY) - SHEET 2

ITEM	TOTAL	ITEM	TOTAL
KY 224, RAMPS, HICKORY FLATS ML & SHLD		**KY 224, RAMPS, HICKORY FLATS WIDENING**	
4" CL3 ASPH BASE 1.00D PG64-22 TOTAL		**AND SHOULDER WEDGE**	
DEPTH AND NO. OF LIFTS VARY	38,164	DGA BASE (CY)	2,627
LEVELING AND WEDGING PG76-22 (CY)	438		
		KY224 AND HICKORY FLATS SHOULDERS	
KY 224 AND HICKORY FLATS ML & SHLD		ASPHALT SEAL AGGREGATE	1,750
1.5" CL3 ASPH SURF 0.38D PG64-22	5,588	ASPHALT SEAL COAT	1,750
ENTRANCES (KY 224 AND HICKORY FLATS)			
1.5" CL3 ASPH SURF 0.38D PG64-22	182		
8" CEM CONC ENT PAVEMENT-8 IN	93		

PAVING SUMMARY

ITEM CODE	ITEM		UNIT	QUANTITY
00001	DGA BASE	1	TON	SEE SH. 1
00100	ASPHALT SEAL AGGREGATE	1	TON	SEE SH. 1
00103	ASPHALT SEAL COAT	1	TON	SEE SH. 1
				-
00194	LEVELING & WEDGING PG76-22	1	TON	SEE SH. 1
00214	CL3 ASPH BASE 1.00D PG64-22	1	TON	SEE SH. 1
				-
00339	CL3 ASPH SURF 0.38D PG64-22	1	TON	SEE SH. 1
				-
02101	CEM CONC ENT PAVEMENT-8 IN	1	SQYD	SEE SH. 1
02676	MOBILIZATION FOR MILL & TEXT	1	LS	SEE SH. 1
02677	ASPHALT PAVE MILLING & TEXTURING		TON	SEE SH. 1
20071EC	JOINT ADHESIVE	1	LF	SEE SH. 1
				-
24970EC	ASPHALT MATERIAL FOR TACK NON-TRACKING	1	TON	SEE SH. 1

1 QUANTITIES INCLUDED IN SHEET 1 QUANTITIES

NOTE: ALL RAMP SURFACE INCLUDED IN MAINLINE
WKY PARKWAY REHAB AREAS ON SHEET 1.

DGA BASE CALCULATED AT 115 LBS/SY/IN OR AT
2.07 TONS PER CUBIC YARD
ASPH. MIXES CALCULATED BASED ON 110 LBS/SY/IN.

WK 9001
GRAYSON COUNTY
ITEM NO. 4-20001 & 4-20002 , PAVEMENT REHABILITIATION
MILEPOINT 111.250 TO 114.882
PIPE SUMMARY

MILEPOINT	REMOVE PAVED DITCH	CHANNEL LINING CLASS III	REPLACE GRATE	ENTRANCE PIPE-15 IN				FLUME INLET TY 2-MOD	TRENCH DRAIN	SECURITY PLATE ASSEMBLY									REMARKS
ITEM CODE	02165	02484	22660EN	00440				22045NN	22766ED	24585EC									
UNIT	SQYD	TON	LB	LF				EACH	LF	EACH									
112.296	30	30	454							2									W.B. OUTSIDE, 24" S&F ALL GRATES
112.303	29	29																	E.B. OUTSIDE
112.343		43																	E.B. OUTSIDE
112.511		35																	W.B. OUTSIDE
112.558	53	53																	W.B. OUTSIDE
112.846	19	19																	E.B. OUTSIDE
112.893		73																	W.B. OUTSIDE
113.521	195	195																	W.B. OUTSIDE
113.533		44																	W.B. OUTSIDE
113.649		81																	W.B. OUTSIDE
114.860		159																	W.B. OUTSIDE
STA 55+59 KY 224				75															ENTRANCE LT KY224
		179						2	207										KY 224, RAMP A, RAMP B, RAMP D
																			19
PROJECT TOTAL	326	940	454	75				2	207	2									

ALL ITEMS CARRIED OVER TO THE GENERAL SUMMARY.

WK 9001
GRAYSON COUNTY
ITEM NO. 4-20001 & 4-20002 , PAVEMENT REHABILITIATION
MILEPOINT 111.250 TO 114.882
GUARDRAIL SUMMARY

POINT NUMBERS	FROM MILEPOST	TO MILEPOST	G/R STEEL W BEAM-S FACE (7 FT POST)	REMOVE GUARDRAIL	DELINEATOR FOR GUARDRAIL MONO DIRECTIONAL WHITE	GUARDRAIL TERMINAL SECTION NO 1	CRASH CUSHION TY VI CLASS C TL3	GUARDRAIL END TREATMENT TYPE 4A	OBJECT MARKER TY 3	GUARDRAIL END TREATMENT TYPE 2A	CONCRETE-CLASS A	STEEL REINFORCEMENT	THRIE BEAM GUARDRAIL TRANSITION TL-3	DESCRIPTION
ITEM CODE			21802EN	02381	01982	02360	23979EC	02391	20191ED	02369	08100	08150	25078ED	
UNIT			LF	LF	EACH	EACH	EACH	EACH	EACH	EACH	CUYD	LB	EACH	
	113.909	113.909				1								WESTBOUND OUTSIDE
	113.898	113.993	462.5	512.5	10			1	1				1	CROSS SLOPE REVISION AREA, EASTBOUND OUTSIDE
			1,225	1,575	25		2	1	3	2	12.16	368	2	KY 224 ROADWAY PLANS
			262.5	262.5										CARRIED OVER FROM SHOULDER EROSION REPAIR SUMM.
PROJECT TOTAL			1,950	2,350	35	1	2	2	4	2	12.16	368	3	

ALL ITEMS CARRIED OVER TO GENERAL SUMMARY.

RELIEF JOINT DETAIL

County	Item No.	Sheet
GRAYSON	4-20001 4-20002	

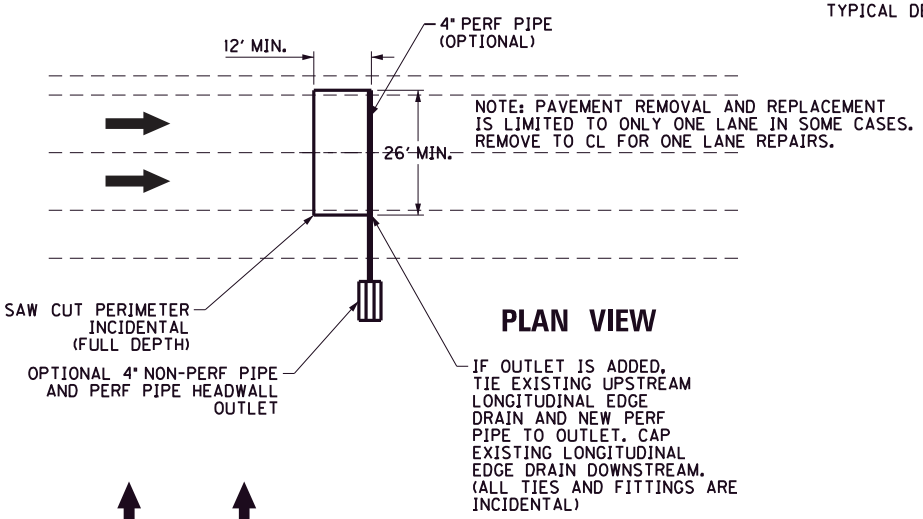

PLAN VIEW

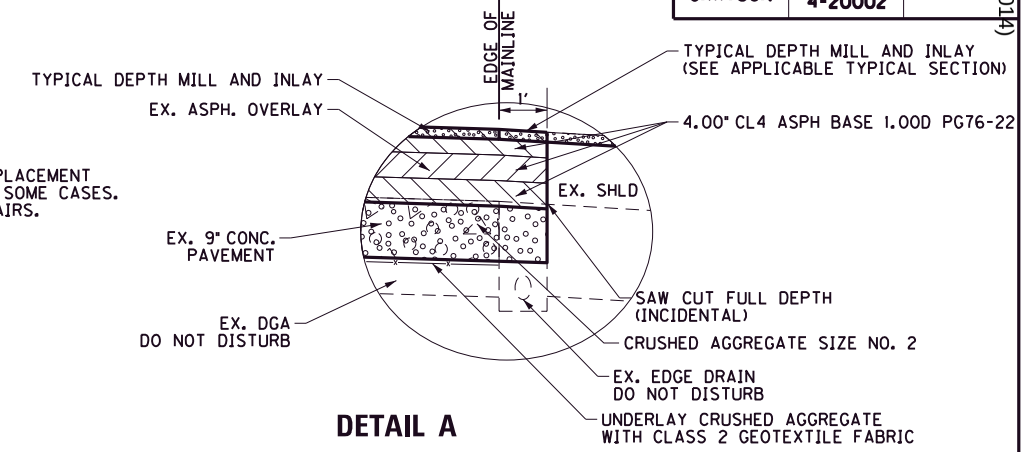

DETAIL A

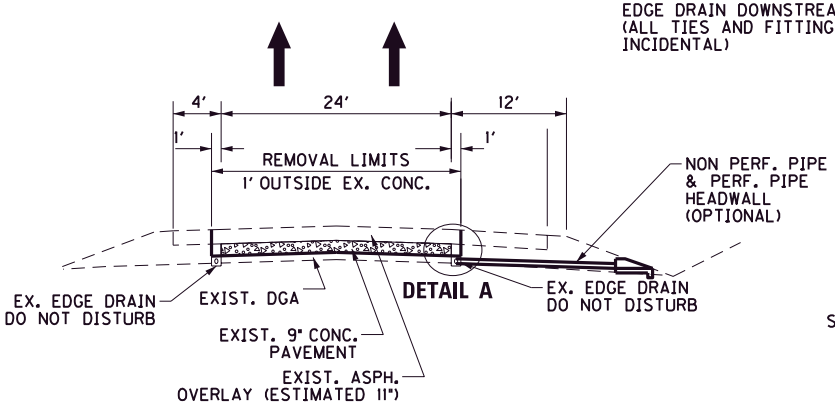

CROSS SECTION VIEW

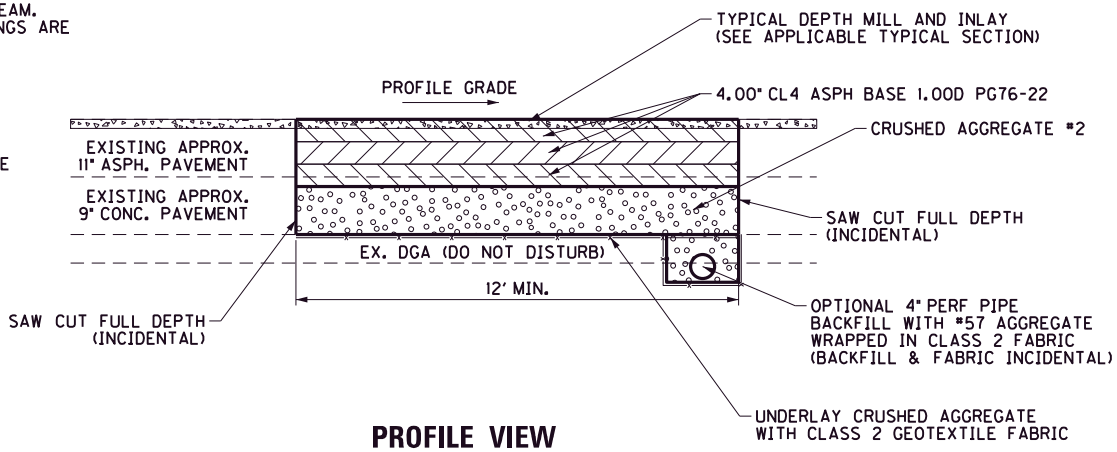

PROFILE VIEW

CONSTRUCT RELIEF JOINTS AT LOCATIONS LISTED OR AT LOCATIONS AS DIRECTED BY THE ENGINEER.

RELIEF JOINTS ARE GENERALLY INTENDED TO COINCIDE WITH AN EXISTING REFLECTIVE CRACK AND/OR PAVEMENT JOINT BLOWUP FAILURE. LOCATIONS CHOSEN WERE INTENDED TO PROVIDE RELIEF AT INTERVALS OF 500' TO 2500', PRIMARILY WITH SPACINGS LESS THAN 2000'. THE ENGINEER RESERVES THE RIGHT TO ADJUST LOCATIONS OF RELIEF JOINTS AS FIELD CONDITIONS WARRANT. ATTENTION: MILEPOINTS LISTED WERE DERIVED FROM AN ESTABLISHED CENTERLINE AND DO NOT MATCH THE LOCATION OF THE EXISTING REFERENCE MARKERS (MILE POST SIGNS).

SAW CUT, FULL DEPTH, TO THE BOTTOM OF EXISTING CONCRETE ELEVATION THE PERIMETER OF THE PROPOSED RELIEF JOINT. SAW CUT WILL BE CONSIDERED INCIDENTAL TO "BLOW UP/RELIEF JOINT". REMOVE EXISTING PAVEMENT TO THE TOP OF DGA LAYER EXERCISING CAUTION TO NOT DAMAGE SURROUNDING PAVEMENT. IF DGA IS DISTURBED IN THE REMOVAL PROCESS, RESHAPE AND COMPACT PRIOR TO CRUSHED STONE PLACEMENT. PLACE ASPHALT BASE IN LAYERS AT THE PRESCRIBED COMPACTED DEPTHS, AND IN ACCORDANCE WITH THE SPECIFICATIONS.

CONSTRUCT RELIEF JOINTS 12' MIN. IN LENGTH LONGITUDINALLY ALONG MAINLINE CENTERLINE AND EXTENDING APPROXIMATELY 1' INTO SHOULDERS OR TO CENTER OF LANES (FOR 1 LANE REPAIR).

THE CONTRACT UNIT PRICE FOR "BLOW UP/RELIEF JOINT" WILL INCLUDE AND BE CONSIDERED FULL COMPENSATION FOR ALL ITEMS OF WORK REQUIRED TO SAW CUT EXISTING PAVEMENT, REMOVE EXISTING PAVEMENT, PREPARE STONE BASE, CRUSHED AGGREGATE #2 BACKFILL, ASPHALT MATERIAL FOR TACK BETWEEN LAYERS, PLACEMENT OF AND COMPACTION OF ASPHALT BASE, AND ANY OTHER ITEM REQUIRED TO COMPLETE THE RELIEF JOINT.

DO NOT BEGIN MILL AND INLAY OF FINAL SURFACING UNTIL TRAFFIC HAS BEEN ALLOWED TO RUN ON THE RELIEF JOINT ASPHALT BASE FOR A MINIMUM OF 14 DAYS.

EXERCISE CAUTION TO NOT DAMAGE THE EXISTING EDGE DRAIN SYSTEM. COMPLETE RELIEF JOINTS PRIOR TO INSPECTION AND REPAIRS TO THE EDGE DRAIN SYSTEM. IF THE ENGINEER DETERMINES CONDITIONS WARRANT, A 4 INCH NON-PERFORATED PIPE OUTLET MAY BE ADDED AND A 4 INCH NON-PERFORATED PIPE HEADWALL ADDED AT THE LOW POINT IN THE RELIEF JOINT EXCAVATION. IF AN OUTLET IS ADDED, GRADE STONE AND OUTLET PIPE TO DRAIN AT 4% GRADE (3% MINIMUM). MEASUREMENT AND PAYMENT FOR ADDED PERFORATED PIPE, NON-PERFORATED PIPE, ASPHALT TRENCH CAP MATERIALS AND PERFORATED PIPE HEADWALLS WILL BE MADE AT THE CONTRACT UNIT PRICE.

REFILL TRENCHES TO THE EXISTING SURFACE LEVEL. THE TOP 2" OR 4.5" WILL BE CONSIDERED SACRIFICIAL, TO BE MILLED AND REPLACED WITH THE TYPICAL MILL AND INLAY OPERATIONS.

WK 9001
RELIEF JOINT DETAIL

County	Item No.	Sheet
GRAYSON	4-20001 4-20002	

NOTE: BIFURCATED STATIONING REFERENCE IS OFFSET SLIGHTLY BETWEEN E.B. & W.B. ACTUAL PATCH LOCATIONS TO BE FIELD IDENTIFIED BY THE ENGINEER.

LOCATIONS								BID ITEM	
WESTBOUND		EASTBOUND						20509ED	
OUTSIDE LANE	INSIDE LANE	INSIDE LANE	OUTSIDE LANE	BEGIN MP	END MP	LENGTH	WIDTH	BLOW UP / RELIEF JOINT (SY)	REMARKS
	X			111.319	111.321	12	13	18	STAGGERED
X				111.319	111.452	701	13	1013	STAGGERED
		X	X	111.347	111.349	12	26	35	
			X	111.378	111.459	431	13	623	
	X			111.450	111.452	12	13	18	STAGGERED
		X	X	111.531	111.534	16	26	47	
			X	111.563	111.595	170	VARIES	391	LANE AND EB OFF RAMP
			X	111.659	111.674	81	13	117	STAGGERED
		X		111.672	111.674	12	13	18	STAGGERED
		X	X	111.773	111.776	16	26	47	
X	X			111.774	111.776	12	26	35	
			X	112.004	112.015	55	13	80	STAGGERED
		X		112.010	112.012	12	13	18	STAGGERED
X				112.077	112.139	329	17	622	WB OFF RAMP
		X	X	112.163	112.166	16	40	72	LANE AND EB ON RAMP
X				112.205	112.238	173	13	250	
			X	112.315	112.319	20	13	29	
X				112.333	112.340	37	13	54	STAGGERED
	X			112.335	112.338	12	13	18	STAGGERED
		X		112.340	112.343	12	13	18	STAGGERED
			X	112.340	112.356	84	13	122	STAGGERED
			X	112.367	112.372	27	13	39	
			X	112.390	112.401	56	13	81	
		X	X	112.451	112.453	12	26	35	
			X	112.470	112.483	68	13	99	
X				112.489	112.491	12	13	18	
X	X			112.598	112.601	12	26	35	
		X	X	112.600	112.602	12	26	35	
X	X			112.745	112.748	16	26	47	
		X	X	112.813	112.815	12	26	35	
X	X			112.898	112.900	12	26	35	
X				112.974	112.995	111	13	161	STAGGERED
		X	X	112.974	112.976	12	26	35	
	X			112.993	112.995	12	13	18	STAGGERED
		X	X	113.106	113.108	12	26	35	
X	X			113.135	113.137	12	26	35	
		X	X	113.192	113.194	12	26	35	
X	X			113.211	113.213	12	26	35	
X	X			113.447	113.449	12	26	35	
		X	X	113.532	113.534	12	26	35	
X	X			113.532	113.534	12	26	35	
SHEET TOTAL								4563	

QUANTITIES CARRIED OVER TO THE PAVING SUMMARY

WK 9001
RELIEF JOINT DETAIL

County	Item No.	Sheet
GRAYSON	4-20001 4-20002	

LOCATIONS								BID ITEM	
WESTBOUND		EASTBOUND						20509ED	
OUTSIDE LANE	INSIDE LANE	INSIDE LANE	OUTSIDE LANE	BEGIN MP	END MP	LENGTH	WIDTH	BLOW UP / RELIEF JOINT (SY)	REMARKS
		X	X	113.646	113.648	12	26	35	
		X	X	113.712	113.714	12	26	35	
X	X			113.882	113.885	12	26	35	
		X	X	113.901	113.903	12	26	35	
X				113.949	113.953	21	13	31	
X	X			114.024	114.026	12	26	35	
		X	X	114.043	114.046	12	26	35	
		X	X	114.138	114.140	12	26	35	
X	X			114.157	114.159	12	26	35	
X	X			114.365	114.367	12	26	35	
		X	X	114.393	114.395	12	26	35	
X	X			114.459	114.462	12	26	35	
		X	X	114.563	114.565	12	26	35	
		X	X	114.649	114.651	12	26	35	
		X	X	114.714	114.717	12	26	35	
X				114.727	114.729	12	13	18	
X	X			114.807	114.809	12	26	35	
X				114.845	114.868	123	13	178	
X	X			114.879	114.881	12	26	35	
PROJECT TOTAL								5350	

QUANTITIES CARRIED OVER TO THE PAVING SUMMARY

WK 9001
RELIEF JOINT DETAIL

LONGITUDINAL EDGE DRAIN DETAIL

COUNTY OF	ITEM NO.	SHEET NO.
GRAYSON	4-20001 4-20002	

SPECIAL NOTE FOR PAVEMENT SUBSURFACE DRAINAGE OUTLET

A QUANTITY OF CRUSHED AGGREGATE SIZE NO. 2 AS DEFINED IN THE CURRENT "KENTUCKY STANDARD SPECIFICATIONS FOR ROAD AND BRIDGE CONSTRUCTION" SHALL BE USED AT ALL PERFORATED PIPE HEADWALL OUTLETS AS ILLUSTRATED IN THE DETAIL AT RIGHT. CRUSHED AGGREGATE SIZE NO. 2 SHALL BE PLACED A MINIMUM DEPTH OF 4 INCHES AS DETAILED BELOW.

DENSE GRADED AGGREGATE (DGA) REMOVED DURING PLACEMENT OF THE CRUSHED AGGREGATE SIZE NO. 2 SHALL BE USED TO DRESS THE EXISTING SHOULDERS WHERE DGA IS EXPOSED. OTHER MATERIALS REMOVED DURING PLACEMENT OF THE CRUSHED AGGREGATE SIZE NO. 2 SHALL BE WASTED AS DIRECTED BY THE ENGINEER. NO DIRECT PAYMENT WILL BE ALLOWED FOR DISPOSAL OF WASTED MATERIAL.

THE CONTRACT UNIT PRICE FOR "CRUSHED AGGREGATE SIZE NO. 2" SHALL BE FULL COMPENSATION FOR ALL MATERIALS, LABOR, AND OTHER INCIDENTALS NECESSARY TO PLACE CRUSHED AGGREGATE SIZE NO. 2 FOR CONTROL OF VEGETATION AND/OR EROSION CONTROL AT PAVEMENT EDGE DRAIN OUTLETS.

SEE CURRENT STANDARD DRAWING RDP-010 FOR DIMENSIONS AND OTHER DETAILS.

ESTIMATE ONE TON OF CRUSHED AGGREGATE SIZE NO. 2 FOR EACH PERFORATED PIPE HEADWALL OUTLET.

NOTES :

AN INITIAL CAMERA INSPECTION OF THE EXISTING LONGITUDINAL EDGE DRAIN SYSTEM WILL BE PERFORMED TO DETERMINE THE CONDITION OF THE EXISTING SYSTEM. THE CONTRACTOR WILL CONSULT WITH THE ENGINEER AFTER THE INITIAL INSPECTION TO DETERMINE THE EXTENT OF LOCATIONS THAT REQUIRE REPLACEMENT. A SECOND INSPECTION WILL BE REQUIRED AT THE LOCATION OF THE REPAIRS ONLY TO CERTIFY THE REPAIR WORK. THE ITEM "INSPECT AND CERTIFY EDGE DRAIN SYSTYEM WILL INCLUDE BOTH THE INITIAL INSPECTION AND THE RE-INSPECTION REQUIRED AFTER COMPLETION OF THE REPAIRS.

EXISTING LONGITUDINAL EDGE DRAINS ALONG THE EDGE OF EXISTING PAVEMENT SHALL BE REMOVED WHERE DAMAGED, OBSTRUCTED, OR DEEMED NON-FUNCTIONAL BY THE INITIAL CAMERA INSPECTION AND NEW EDGE DRAINS CONSTRUCTED. REMOVAL AND DISPOSAL OF THE EXISTING UNDERDRAIN SYSTEM SHALL BE INCINDENTAL TO THE OTHER ITEMS OF WORK. ASPHALT QUANTITIES HAVE BEEN ADDED FOR THE CAP REPLACEMENT (SEE DETAIL).

ALL LONGITUDINAL PIPE DRAINAGE SYSTEMS FOR THE PAVEMENT SHALL BE OUTLETTED TO A HEADWALL OR MEDIAN BOX INLET. OUTLETS SHALL BE IN FILL SECTION WHENEVER POSSIBLE. OUTLET SPACING FOR THE 4" PIPE ON THE OUTSIDE EDGE OF EXIST. PVMT. SHALL NOT EXCEED 500 FEET EXCEPT GRADES 1% OR LESS, THEN THE SPACING SHALL NOT EXCEED 250 FEET. ALL SAGS SHALL HAVE AN OUTLET. USE EXISTING OUTFALL LOCATIONS WHERE POSSIBLE. REUSE EXISTING PERFORATED PIPE HEADWALLS WHERE POSSIBLE. TYING TO EXISTING HEADWALLS WILL BE CONSIDERED INCIDENTAL TO OTHER ITEMS OF WORK.

FABRIC GEOTEXTILE CLASS 2 AND CRUSHED AGGREGATE SIZE NO. 57 ARE INCIDENTAL TO PERFORATED PIPE-4". REMOVAL OF EXISTING EDGE DRAIN ON THE INSIDE AND OUTSIDE SHOULDER SHALL BE INCLUDED IN THE UNIT PRICE BID FOR NEW PERFORATED PIPE. WASTE THE EXISTING UNDERDRAIN PIPE. EXISTING PERFORATED PIPE HEADWALLS NOT BEING USED SHALL BECOME THE PROPERTY OF THE CONTRACTOR.

LOCATIONS:

TO BE DETERMINED.
CONTINGENCY QUANTITIES HAVE BEEN ESTABLISHED AND ARE SHOWN ON THE GENERAL SUMMARY BASED ON AN ESTIMATION THAT APPROXIMATELY 25% OF THE EXISTING SYSTEM WILL REQUIRE REPLACEMENT. FINAL PAYMENT OF THESE ITEMS WILL BE BASED ON THE ACTUAL QUANTITIES PLACED. A QUANTITY OF REMOVE AND RESET PERF PIPE HEADWALL HAS BEENESTABLISHED TO BE USED AT THE ENGINEERS DISCRETION TO REUSE EXISTING HEADWALLS AND CORRECT ELEVATIONS.

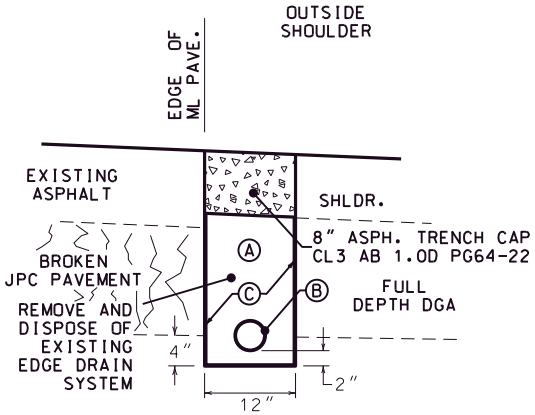

Ⓐ CRUSHED AGGREGATE SIZE No. 57 (NO SAND)
Ⓑ PERFORATED PIPE - 4" OR 6" (NO SOCK)
NON-PERFORATED PIPE - 4" OR 6" (OUTLET)
Ⓒ CLASS 2 GEOTEXTILE FABRIC
NOTE: MODIFY LOCATION AS NEEDED TO MATCH EXIST. LOC.

TRENCH DETAILS

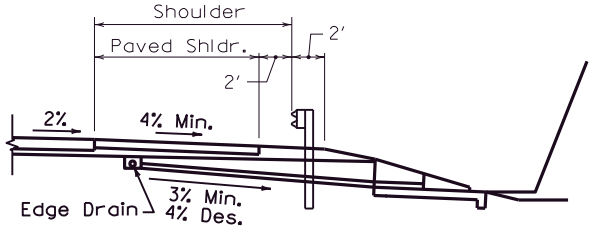

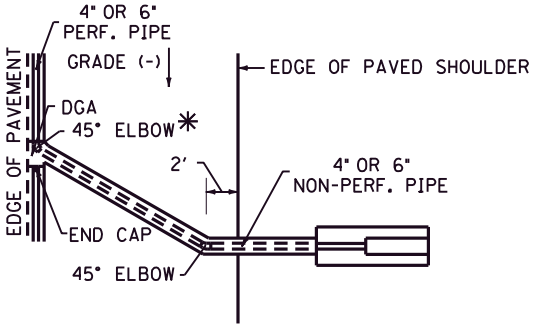

✱ Use Tee in Lieu of Elbow at Sump Conditions

(OUTSIDE SHOULDER DEPICTED)

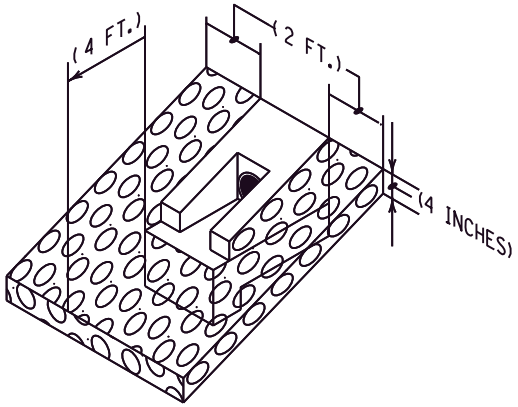

EDGE DRAIN OUTLET

NOT TO SCALE

WK-9001 PROPOSED EDGE DRAIN DETAIL

GRAYSON COUNTY
NHPP 9001 (014)
Contract ID: 221306
Page 43 of 277

COUNTY OF	ITEM NO.	SHEET NO.
GRAYSON	4-20001 4-20002	

SHOULDER EROSION REPAIR DETAIL

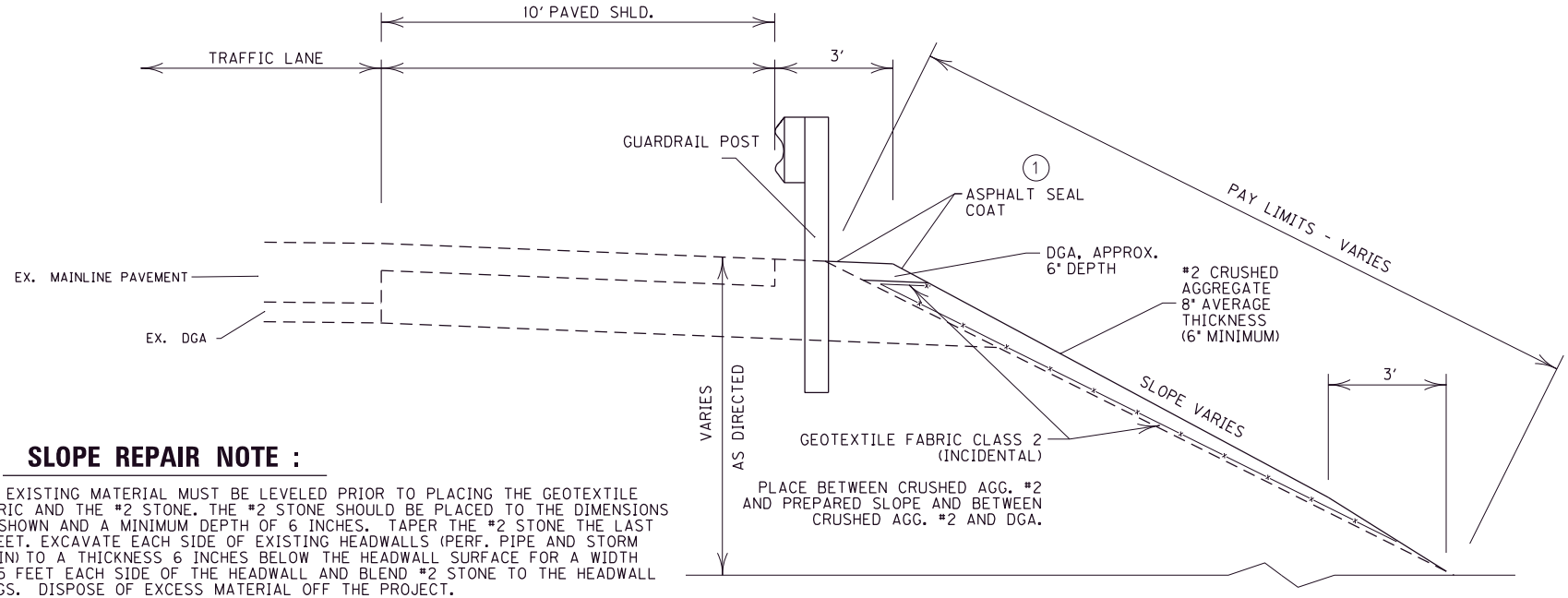

SLOPE REPAIR NOTE :

THE EXISTING MATERIAL MUST BE LEVELED PRIOR TO PLACING THE GEOTEXTILE FABRIC AND THE #2 STONE. THE #2 STONE SHOULD BE PLACED TO THE DIMENSIONS AS SHOWN AND A MINIMUM DEPTH OF 6 INCHES. TAPER THE #2 STONE THE LAST 3 FEET. EXCAVATE EACH SIDE OF EXISTING HEADWALLS (PERF. PIPE AND STORM DRAIN) TO A THICKNESS 6 INCHES BELOW THE HEADWALL SURFACE FOR A WIDTH OF 5 FEET EACH SIDE OF THE HEADWALL AND BLEND #2 STONE TO THE HEADWALL WINGS. DISPOSE OF EXCESS MATERIAL OFF THE PROJECT.

THE BID ITEM "CRUSHED AGGREGATE SIZE NO 2" INCLUDES ALL LABOR AND EQUIPMENT NECESSARY TO GRADE THE EXISTING SLOPE, FURNISH AND INSTALL GEOTEXTILE FABRIC CLASS 2, AND CAP THE SLOPE WITH A MINIMUM OF 6 INCHES OF #2 STONE. NO DIRECT MEASUREMENT OR PAYMENT WILL BE MADE FOR GEOTEXTILE FABRIC CLASS 2.

EXTEND THE REPAIRS ONLY THROUGH THE WASH AREA. DO NOT DISTURB AREAS WITH ESTABLISHED VEGETATION.

REMOVE GUARDRAIL WHERE NECESSARY TO PERFORM SHOULDER REPAIRS. PIN ENDS DOWN TO ELIMINATE EXPOSURE TO BLUNT ENDS AND PLACE TRAFFIC DRUMS ON SHOULDER AT 20' SPACING UNTIL GUARDRAIL IS RE-ESTABLISHED. QUANTITIES HAVE BEEN ESTABLISHED FOR PAYMENT OF GUARDRAIL REMOVAL AND INSTALLATION OF NEW RAIL FOR AREAS NOT RECEIVING NEW GUARDRAIL DUE TO DAMAGE.

LOCATIONS:

	BEGIN MP	END MP	LENGTH	CRUSHED AGG.	DGA	GUARDRAIL
W.B. OUT. SHLD	111.859	111.899	213'	103	23	225'
E.B. OUT. SHLD	111.884	111.887	18'	9	2	0'
W.B. OUT. SHLD	113.647	113.653	31'	15	4	37.5'
TOTAL:			262'	127	29	262.5'

THE ENGINEER MAY INCLUDE ADDITIONAL LOCATIONS AND ADDITIONAL QUANTITY HAS BEEN INCLUDED IN THE GENERAL SUMMARY.

BID ITEM

*	0078	CRUSHED AGGREGATE NO. 2	127	TONS
**	2381	REMOVE GUARDRAIL	262.5	LF
**	21802EN	G/R STEEL W BEAM S-FACE (7 FT POST)	262.5	LF
***	0001	DGA BASE	29	TONS

ASPHALT SEAL COAT QUANTITIES ESTABLISHED IN THE PAVING SUMMARY

1 ASPHALT SEAL REQUIRED FROM OUTSIDE EDGE OF PAVED SHOULDER TO A POINT 2 FOOT DOWN THE DITCH OR FILL SLOPE OR BOTTOM OF DGA LAYER. TWO APPLICATIONS OF THE FOLLOWING :
ASPHALT SEAL COAT..... 2.4 lbs. / S.Y.
ASPHALT SEAL AGGREGATE ..... 20 lbs. / S.Y.

* (CARRIED ON GENERAL SUMMARY)
** (CARRIED ON GUARDRAIL SUMMARY)
*** (CARRIED ON PAVING SUMMARY)

NOT TO SCALE

WK 9001
WEST KENTUCKY PARKWAY
EROSION REPAIR DETAIL

County	Item No.	Sheet
GRAYSON	4-20001 4-20002	-

PROPOSED MAINLINE ALIGNMENT

POINT	STATION	NORTHING (Y)	EASTING (X)
P.I.	5996+95.65	3704375.3427	4796711.4967
P.C.	6005+61.45	3704549.0709	4797559.6825
P.I.	6031+64.35	3705071.3632	4800109.6470
P.T.	6055+78.77	3707041.9068	4801810.2544
P.O.E.	6072+20.80	3708285.0145	4802883.0741

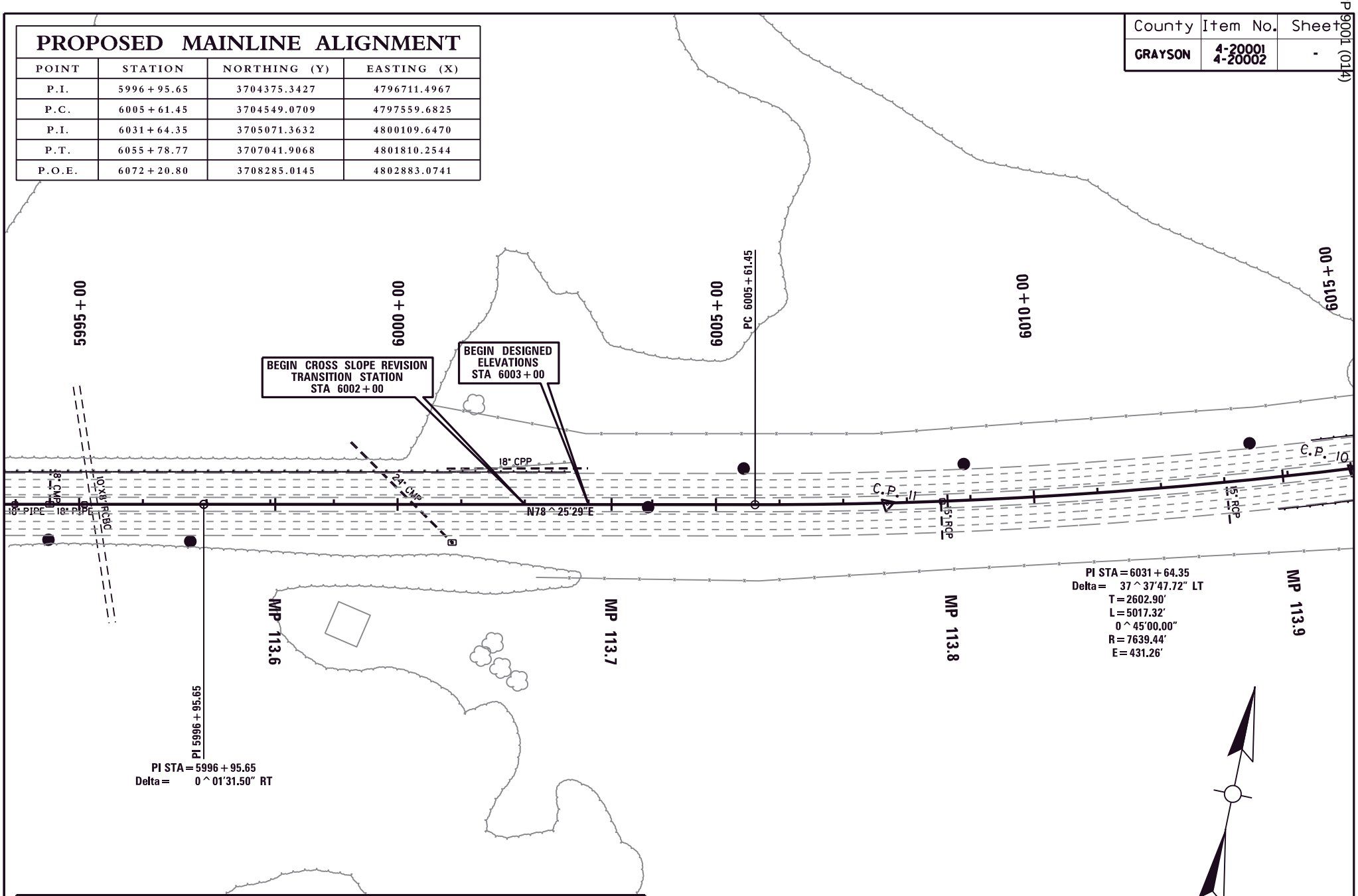

COORDINATE CONTROL POINTS

POINT	DESCRIPTION	State Plane Coordinates			STATION	OFFSET
		NORTH (Y)	EAST (X)	ELEV. (Z)		
10	IRON PIN AND CAP	3704791.592	4798469.186	744.544	6015+03.14	2.90' RT
11	IRON PIN AND CAP	3704591.274	4797763.247	735.240	6007+69.30	2.33' RT

WESTERN KY PARKWAY
CROSS SLOPE REVISION
COORDINATE CONTROL

County	Item No.	Sheet
GRAYSON	4-20001 4-20002	-

PROPOSED MAINLINE ALIGNMENT

POINT	STATION	NORTHING (Y)	EASTING (X)
P.I.	5996+95.65	3704375.3427	4796711.4967
P.C.	6005+61.45	3704549.0709	4797559.6825
P.I.	6031+64.35	3705071.3632	4800109.6470
P.T.	6055+78.77	3707041.9068	4801810.2544
P.O.E.	6072+20.80	3708285.0145	4802883.0741

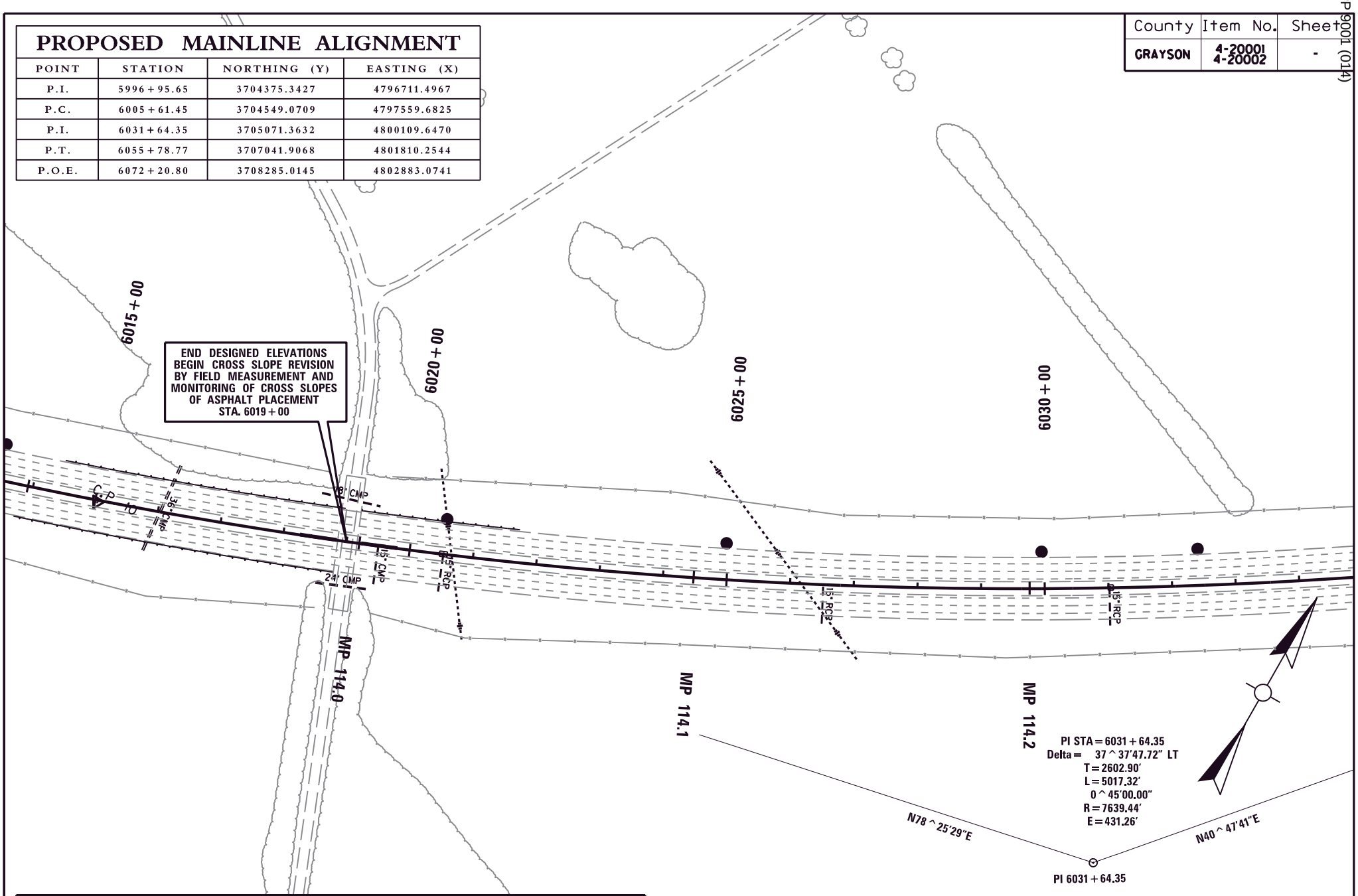

COORDINATE CONTROL POINTS

POINT	DESCRIPTION	State Plane Coordinates			STATION	OFFSET
		NORTH (Y)	EAST (X)	ELEV. (Z)		
10	IRON PIN AND CAP	3704791.592	4798469.186	744.544	6015+03.14	2.90' RT
11	IRON PIN AND CAP	3704591.274	4797763.247	735.240	6007+69.30	2.33' RT

WESTERN KY PARKWAY
CROSS SLOPE REVISION
COORDINATE CONTROL

County	Item No.	Sheet
GRAYSON	4-20001 4-20002	-

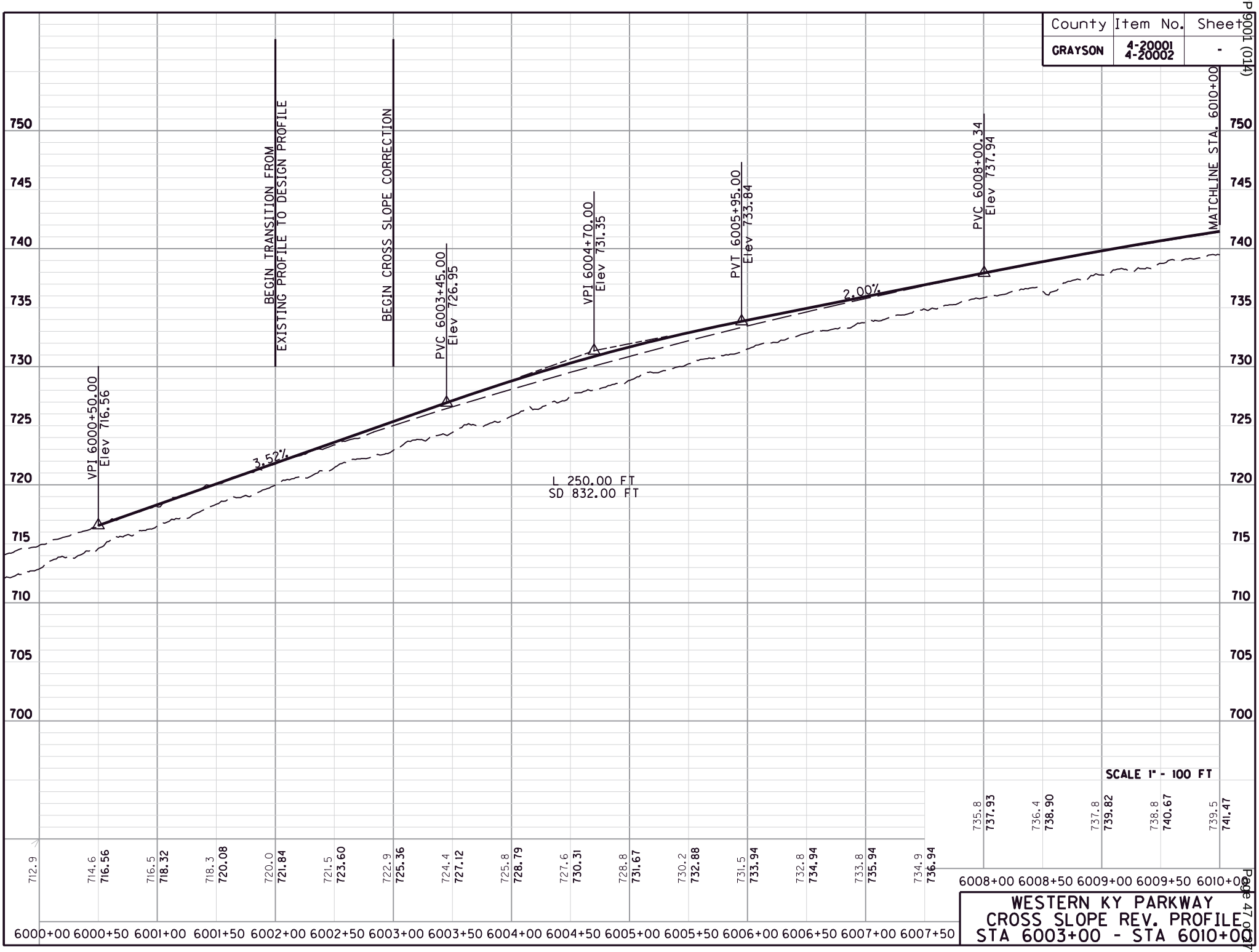

WESTERN KY PARKWAY
CROSS SLOPE REV. PROFILE
STA 6003+00 - STA 6010+00

County	Item No.	Sheet
GRAYSON	4-20001 4-20002	-

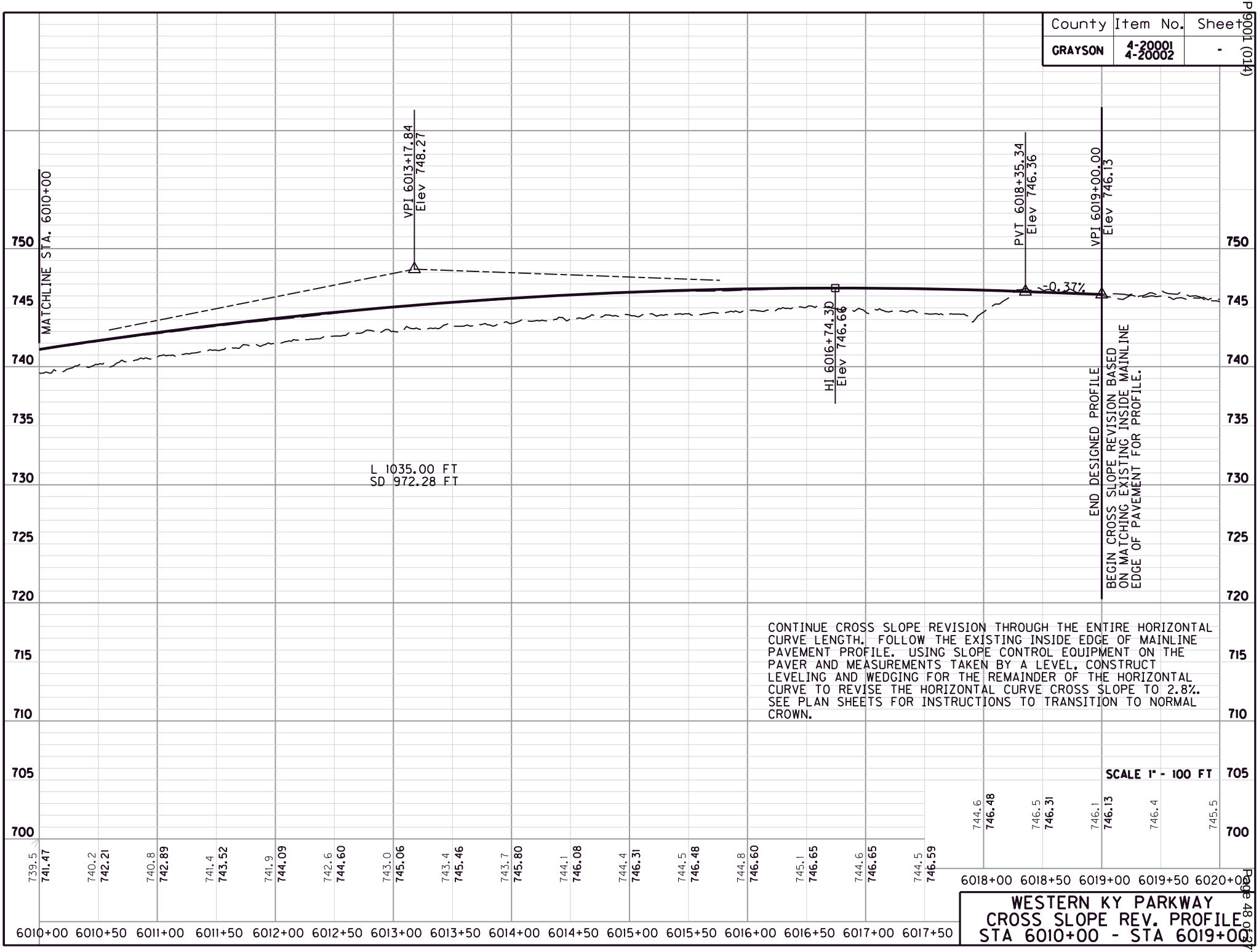

CONTINUE CROSS SLOPE REVISION THROUGH THE ENTIRE HORIZONTAL CURVE LENGTH. FOLLOW THE EXISTING INSIDE EDGE OF MAINLINE PAVEMENT PROFILE. USING SLOPE CONTROL EQUIPMENT ON THE PAVER AND MEASUREMENTS TAKEN BY A LEVEL, CONSTRUCT LEVELING AND WEDGING FOR THE REMAINDER OF THE HORIZONTAL CURVE TO REVISE THE HORIZONTAL CURVE CROSS SLOPE TO 2.8%. SEE PLAN SHEETS FOR INSTRUCTIONS TO TRANSITION TO NORMAL CROWN.

SCALE 1" - 100 FT

WESTERN KY PARKWAY
CROSS SLOPE REV. PROFILE
STA 6010+00 - STA 6019+00

COUNTY OF	ITEM NO.	SHEET NO.
GRAYSON	4-20001 4-20002	X1

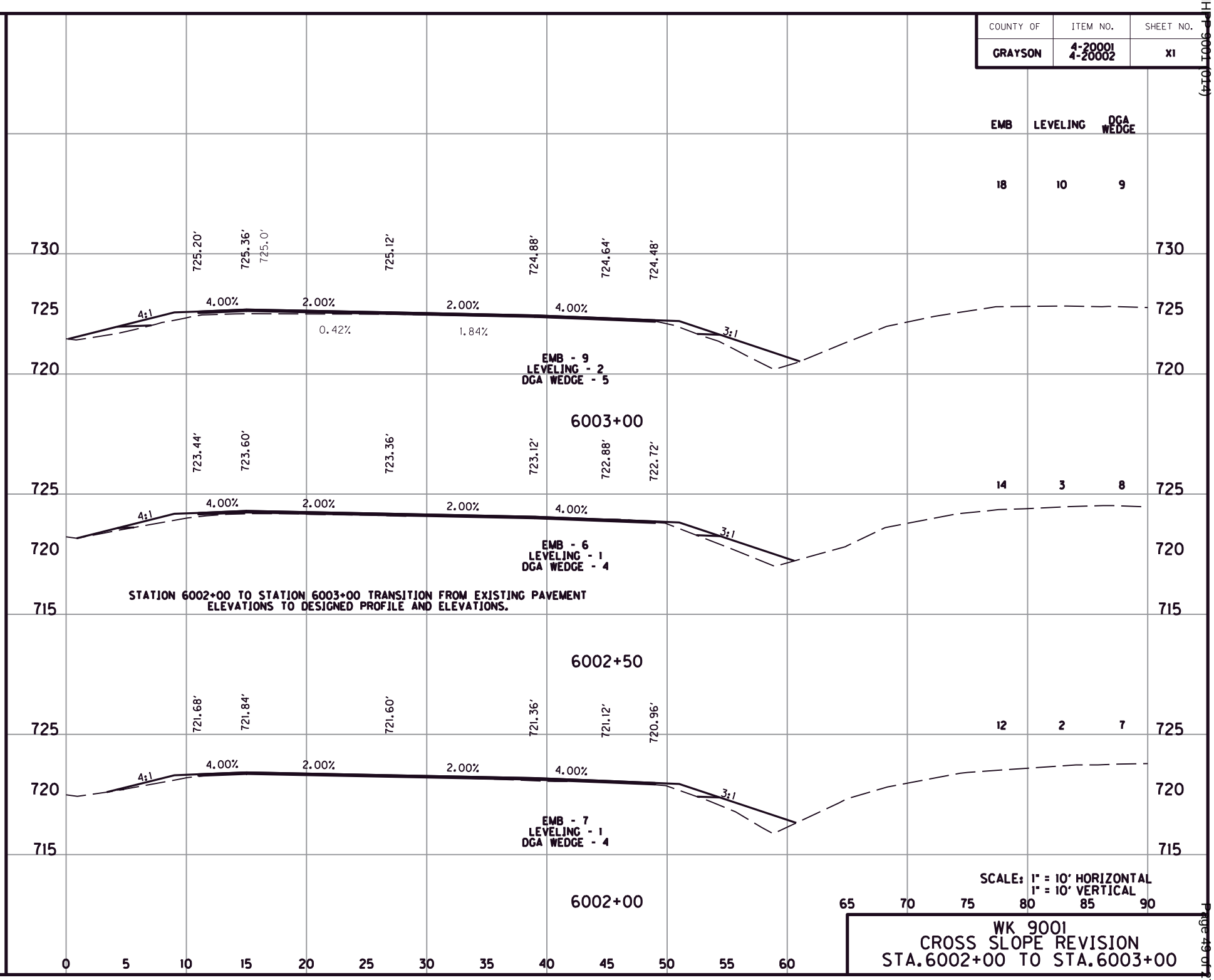

WK 9001
CROSS SLOPE REVISION
STA.6002+00 TO STA.6003+00

FILE NAME: G:\ENGR\HD1365.10 AND 1365.11 GRAYSON WK\CAD\PLAN\CROSS SECTIONS.DGN
USER: cbrunty
DATE PLOTTED: January 6, 2022
E-SHEET NAME:
MicroStation v8.11.9.459

COUNTY OF	ITEM NO.	SHEET NO.
GRAYSON	4-20001 4-20002	X2

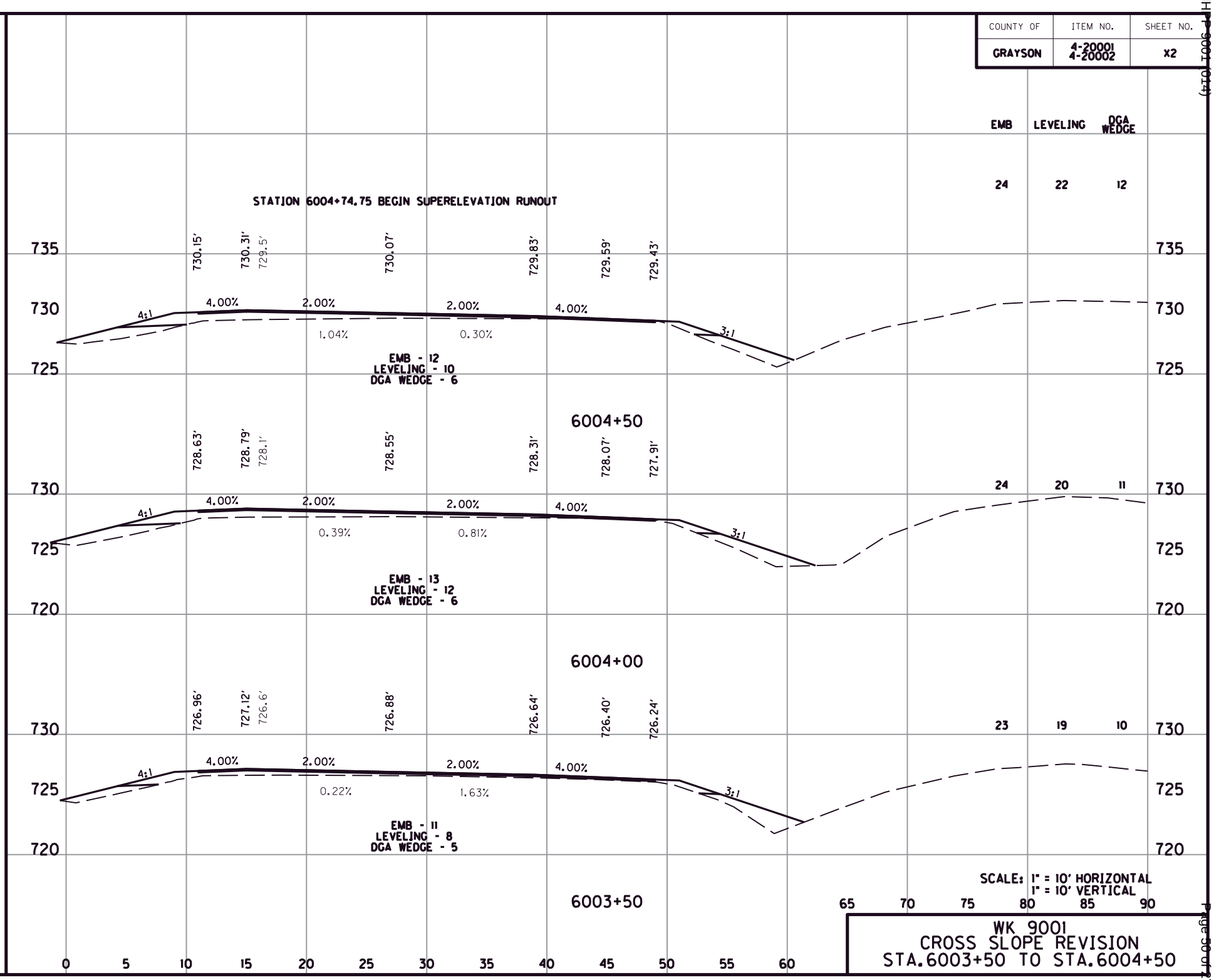

SCALE: 1" = 10' HORIZONTAL
1" = 10' VERTICAL

WK 9001
CROSS SLOPE REVISION
STA.6003+50 TO STA.6004+50

FILE NAME: G:\ENGR\HD1365.10 AND 1365.11 GRAYSON WK\CAD\PLAN\CROSS SECTIONS.DGN
USER: cbrunty
DATE PLOTTED: January 6, 2022
E-SHEET NAME:
MicroStation v8.11.9.459

COUNTY OF	ITEM NO.	SHEET NO.
GRAYSON	4-20001 4-20002	X3

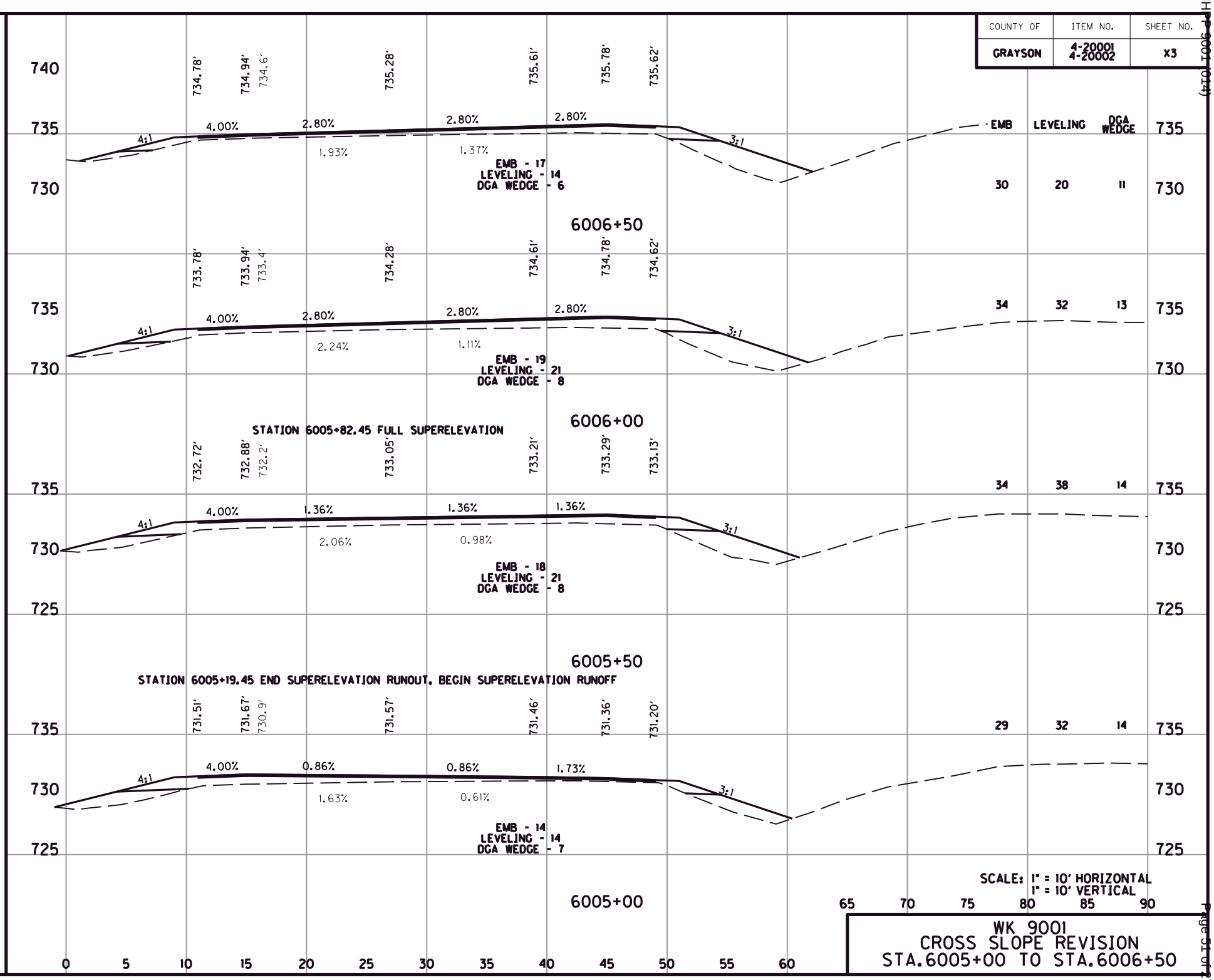

WK 9001
CROSS SLOPE REVISION
STA.6005+00 TO STA.6006+50

FILE NAME: G:\ENGR\HD1365.10 AND 1365.11 GRAYSON WK\CAD\PLAN\CROSS SECTIONS.DGN
USER: cbrunty
DATE PLOTTED: January 6, 2022
E-SHEET NAME:
MicroStation v8.11.9.459

COUNTY OF	ITEM NO.	SHEET NO.
GRAYSON	4-20001 4-20002	X4

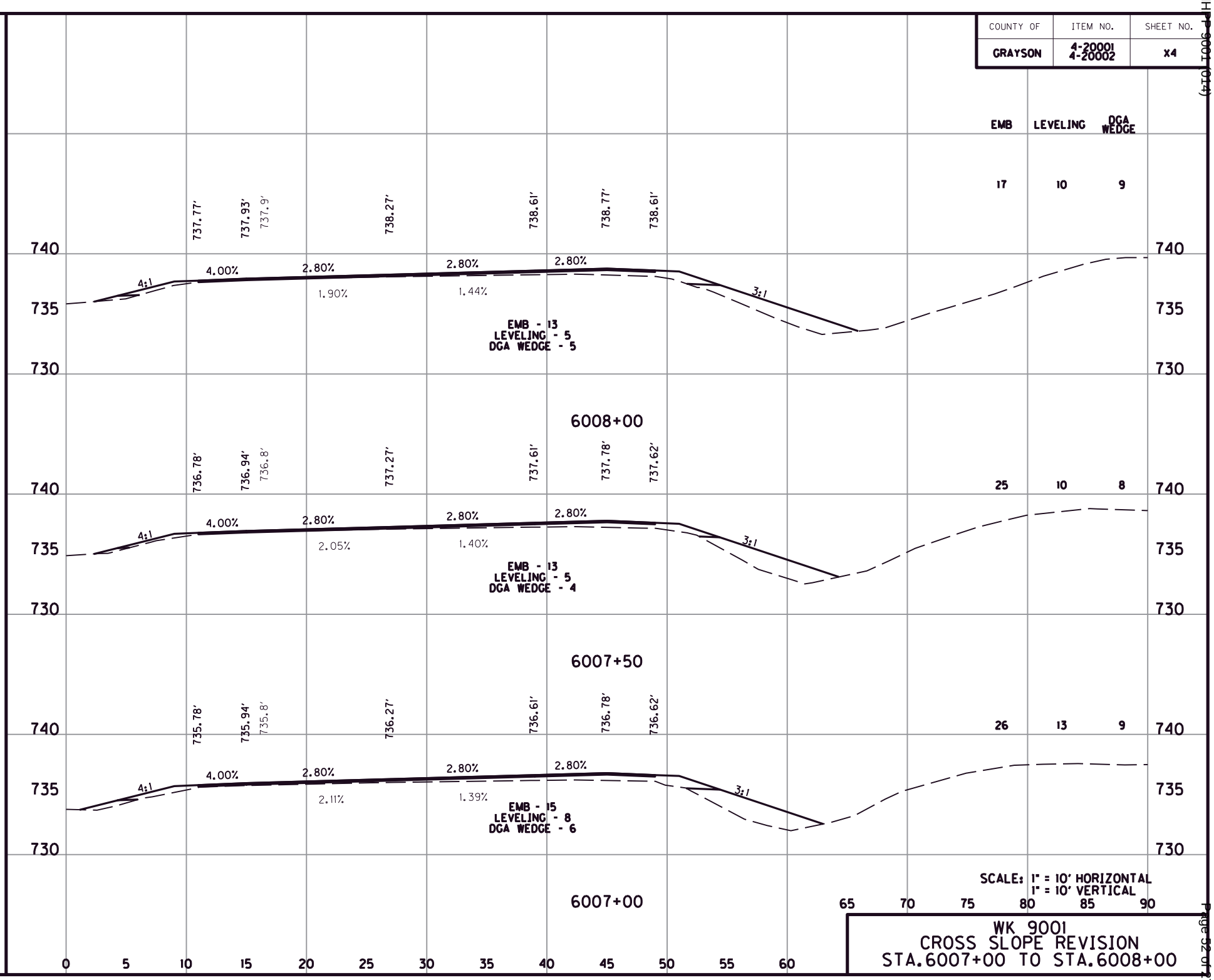

WK 9001
CROSS SLOPE REVISION
STA.6007+00 TO STA.6008+00

FILE NAME: G:\ENGR\HD1365.10 AND 1365.11 GRAYSON WK\CAD\PLAN\CROSS SECTIONS.DGN
USER: cbrunty
DATE PLOTTED: January 6, 2022
E-SHEET NAME:
MicroStation v8.11.9.459

COUNTY OF	ITEM NO.	SHEET NO.
GRAYSON	4-20001 4-20002	X5

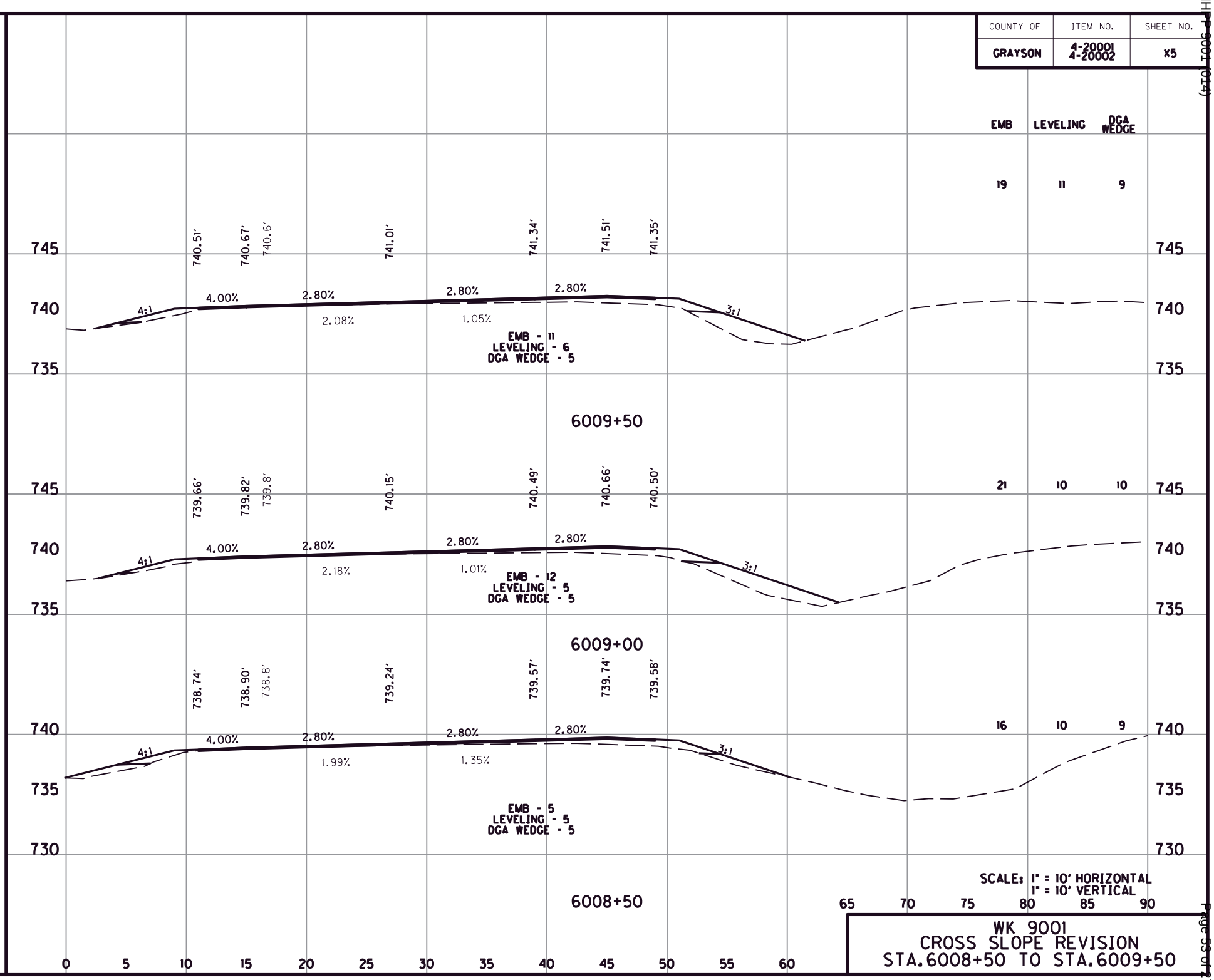

WK 9001
CROSS SLOPE REVISION
STA.6008+50 TO STA.6009+50

FILE NAME: G:\ENGR\HD1365.10 AND 1365.11 GRAYSON WK\CAD\PLAN\CROSS SECTIONS.DGN
USER: cbrunty
DATE PLOTTED: January 6, 2022
E-SHEET NAME:
MicroStation v8.11.9.459

COUNTY OF	ITEM NO.	SHEET NO.
GRAYSON	4-20001 4-20002	X6

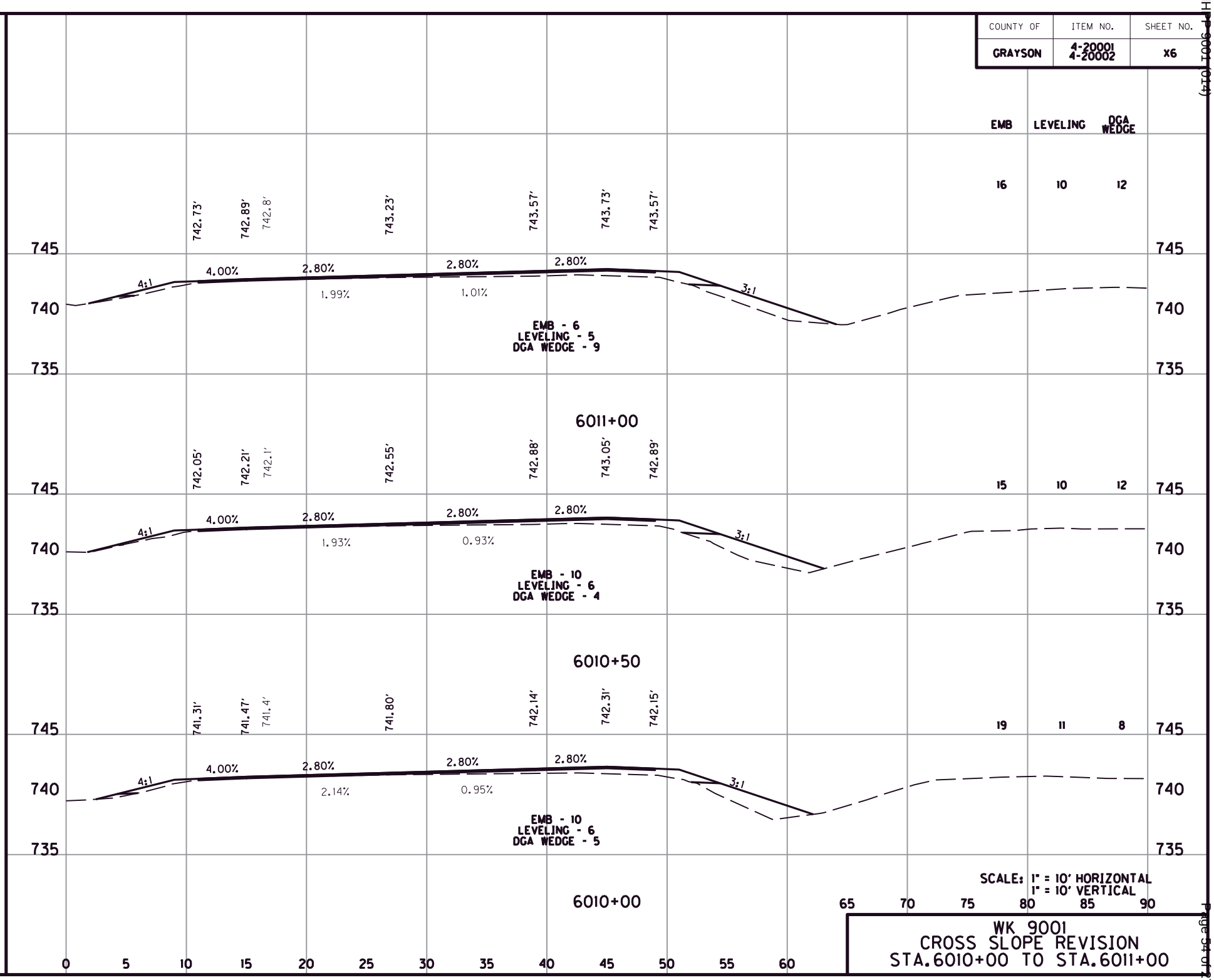

SCALE: 1" = 10' HORIZONTAL
1" = 10' VERTICAL

WK 9001
CROSS SLOPE REVISION
STA.6010+00 TO STA.6011+00

FILE NAME: G:\ENGR\HD1365.10 AND 1365.11 GRAYSON WK\CAD\PLAN\CROSS SECTIONS.DGN
USER: cbrunty
DATE PLOTTED: January 6, 2022
E-SHEET NAME:
MicroStation v8.11.9.459

COUNTY OF	ITEM NO.	SHEET NO.
GRAYSON	4-20001 4-20002	X7

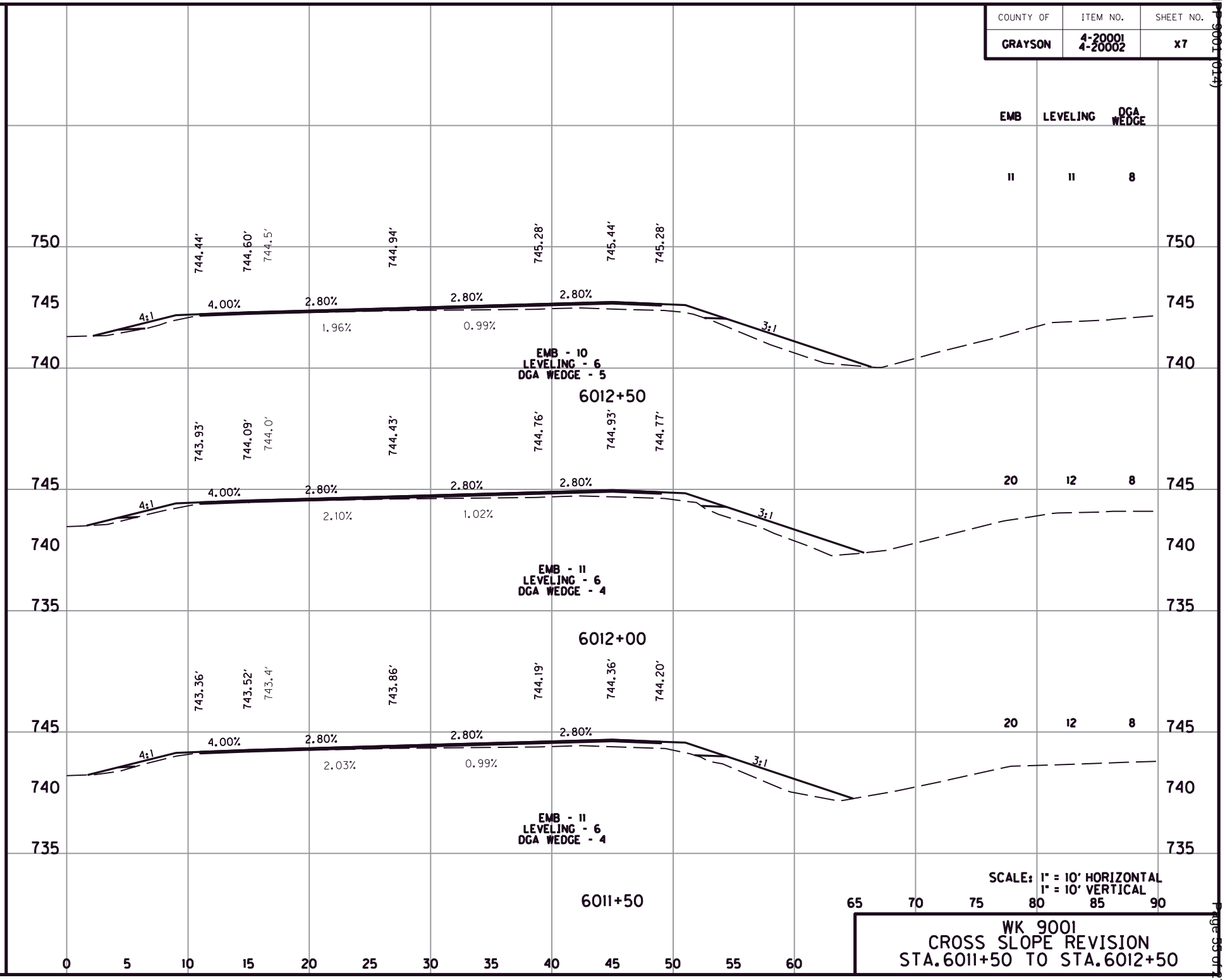

SCALE: 1" = 10' HORIZONTAL
1" = 10' VERTICAL

WK 9001
CROSS SLOPE REVISION
STA.6011+50 TO STA.6012+50

FILE NAME: G:\ENGR\HD1365.10 AND 1365.11 GRAYSON WK\CAD\PLAN\CROSS SECTIONS.DGN
USER: cbrunty
DATE PLOTTED: January 6, 2022
E-SHEET NAME:
MicroStation v8.11.9.459

COUNTY OF	ITEM NO.	SHEET NO.
GRAYSON	4-20001 4-20002	X8

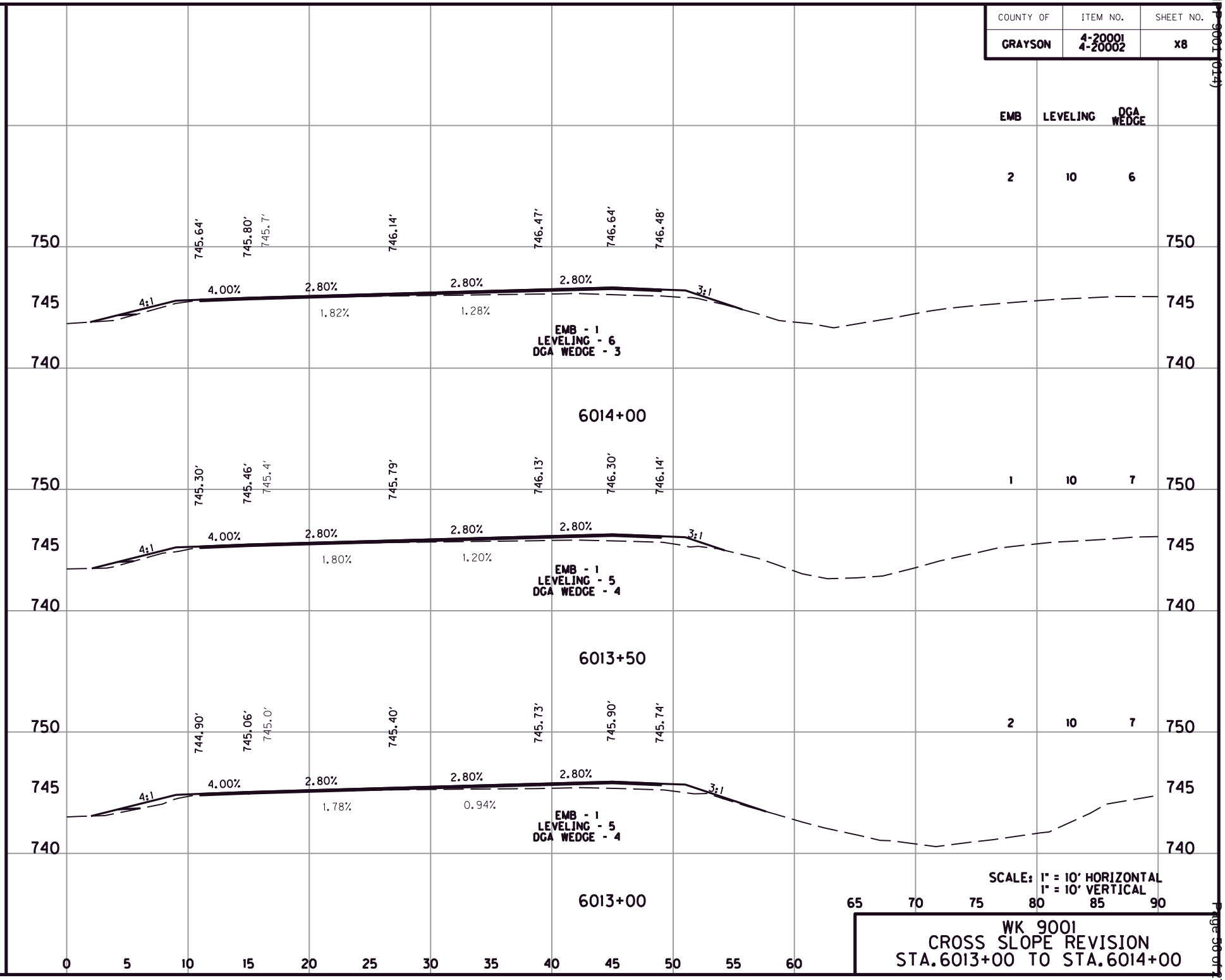

SCALE: 1" = 10' HORIZONTAL
1" = 10' VERTICAL

WK 9001
CROSS SLOPE REVISION
STA.6013+00 TO STA.6014+00

FILE NAME: G:\ENGR\HD1365.10 AND 1365.11 GRAYSON WK\CAD\PLAN\CROSS SECTIONS.DGN
USER: cbrunty
DATE PLOTTED: January 6, 2022
E-SHEET NAME:
MicroStation v8.11.9.459

COUNTY OF	ITEM NO.	SHEET NO.
GRAYSON	4-20001 4-20002	X9

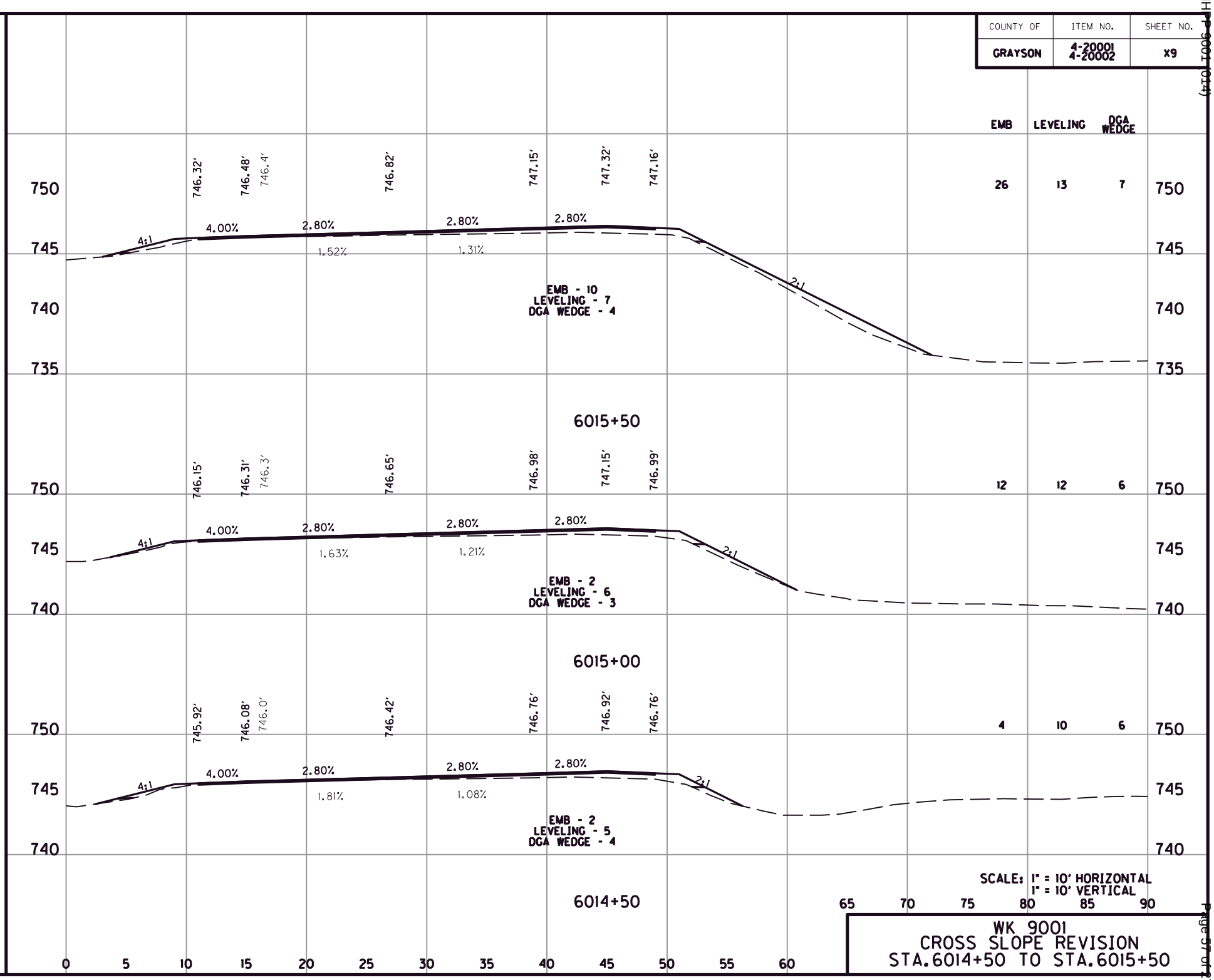

SCALE: 1" = 10' HORIZONTAL
1" = 10' VERTICAL

WK 9001
CROSS SLOPE REVISION
STA.6014+50 TO STA.6015+50

FILE NAME: G:\ENGR\HD1365.10 AND 1365.11 GRAYSON WK\CAD\PLAN\CROSS SECTIONS.DGN
USER: cbrunty
DATE PLOTTED: January 6, 2022
E-SHEET NAME:
MicroStation v8.11.9.459

COUNTY OF	ITEM NO.	SHEET NO.
GRAYSON	4-20001 4-20002	X10

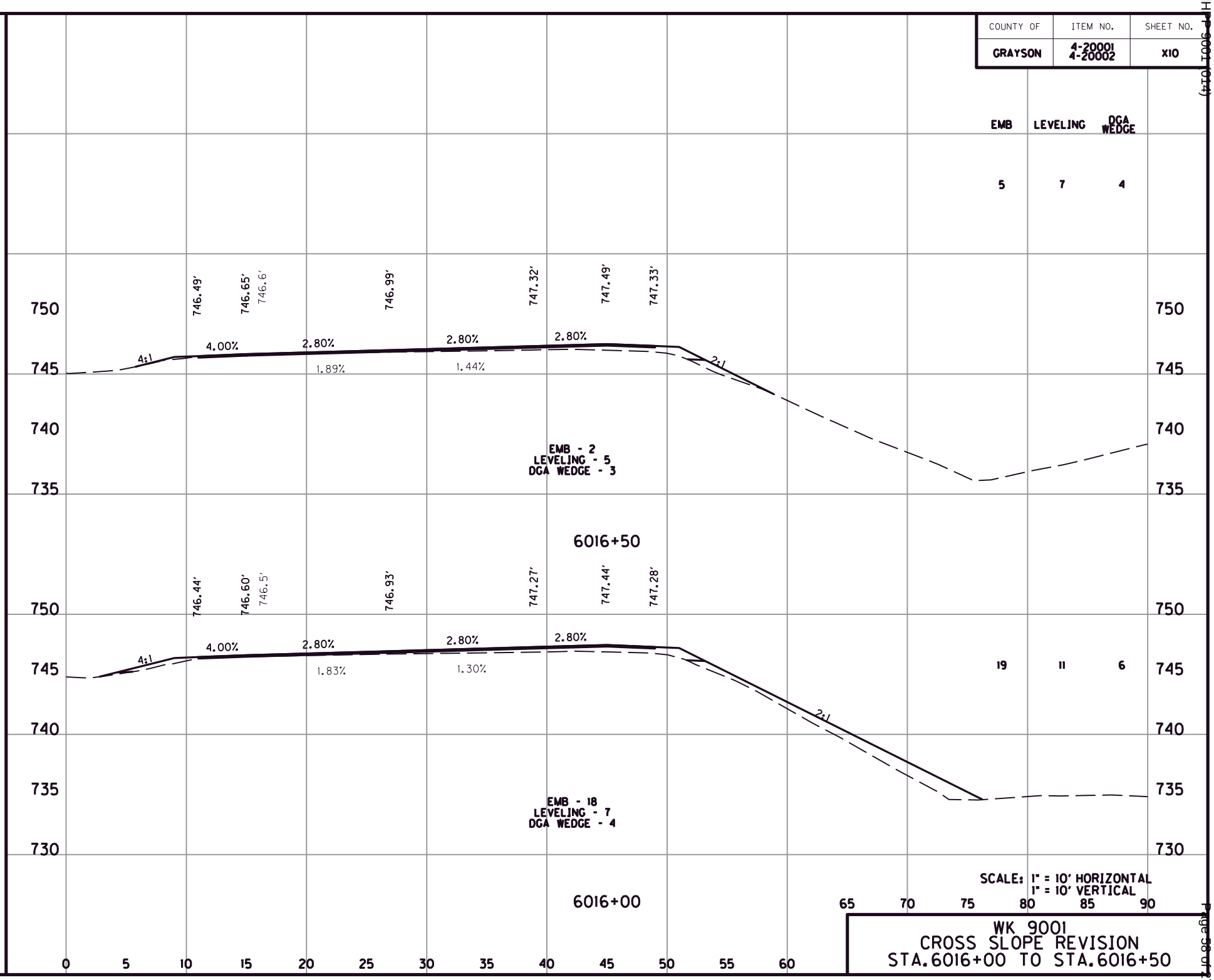

WK 9001
CROSS SLOPE REVISION
STA.6016+00 TO STA.6016+50

FILE NAME: G:\ENGR\HD\365.10 AND 1365.11 GRAYSON WK\CAD\PLAN\CROSS SECTIONS.DGN
USER: cbrunty
DATE PLOTTED: January 6, 2022
E-SHEET NAME:
MicroStation v8.11.9.459

COUNTY OF	ITEM NO.	SHEET NO.
GRAYSON	4-20001 4-20002	XII

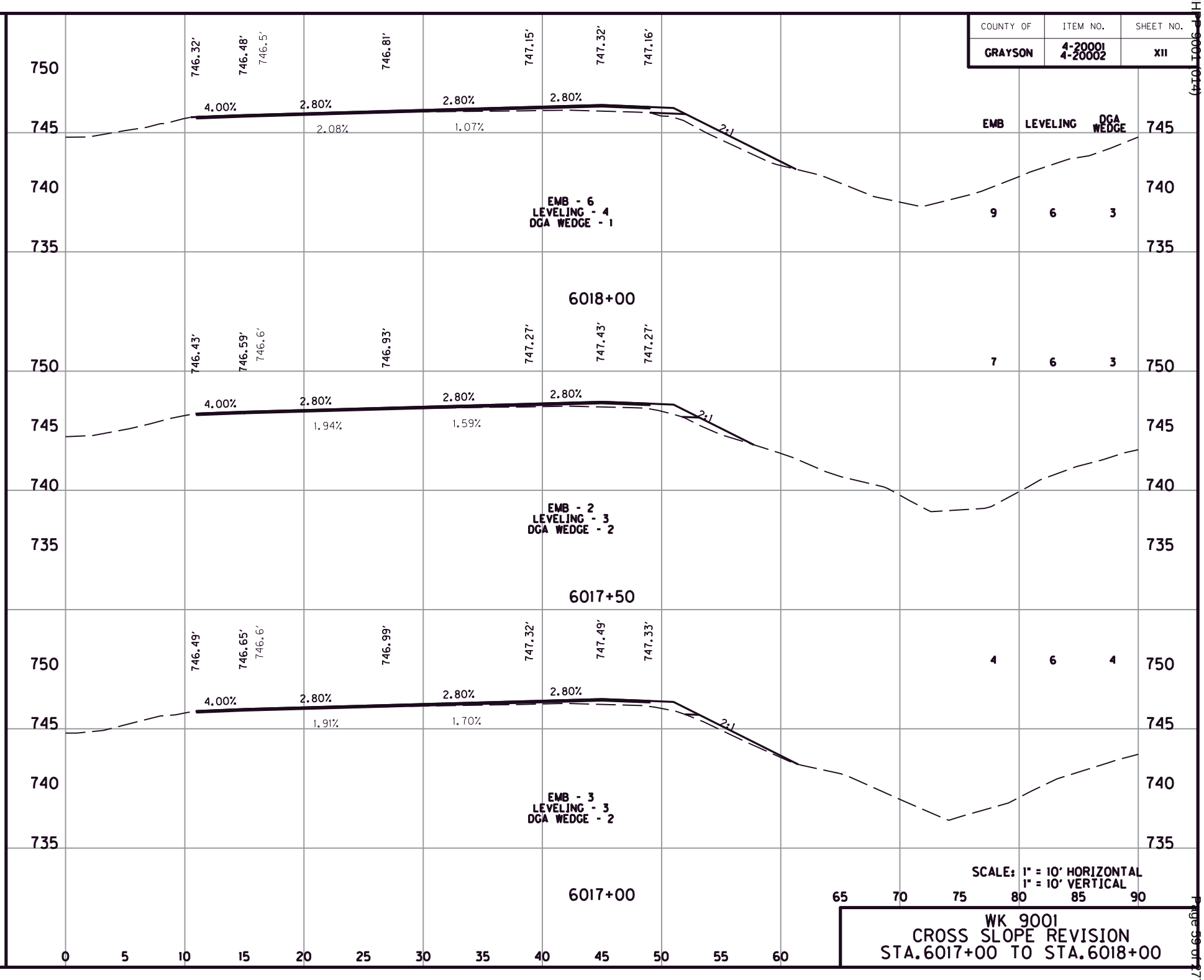

WK 9001
CROSS SLOPE REVISION
STA.6017+00 TO STA.6018+00

FILE NAME: G:\ENGR\HD1365.10 AND 1365.11 GRAYSON WK\CAD\PLAN\CROSS SECTIONS.DGN
USER: cbrunty
DATE PLOTTED: January 6, 2022
E-SHEET NAME:
MicroStation v8.11.9.459

COUNTY OF	ITEM NO.	SHEET NO.
GRAYSON	4-20001 4-20002	X12

	EMB	LEVELING	DGA WEDGE
CROSS SLOPE REVISION TOTALS (CY)	842	929	613
ESTIMATED FROM STATION 6019+00 TO MP 114.709	279	488	321
	1	4	2
	5	7	4

CONTINUE CROSS SLOPE REVISION THROUGH THE ENTIRE HORIZONTAL CURVE LENGTH. FOLLOW THE EXISTING INSIDE EDGE OF MAINLINE PAVEMENT PROFILE. USING SLOPE CONTROL EQUIPMENT ON THE PAVER AND MEASUREMENTS TAKEN BY A LEVEL, CONSTRUCT LEVELING AND WEDGING FOR THE REMAINDER OF THE HORIZONTAL CURVE TO REVISE THE PAVEMENT CROSS SLOPE TO 2.8%. SEE PLAN SHEETS FOR INSTRUCTIONS TO TRANSITION TO NORMAL CROWN.

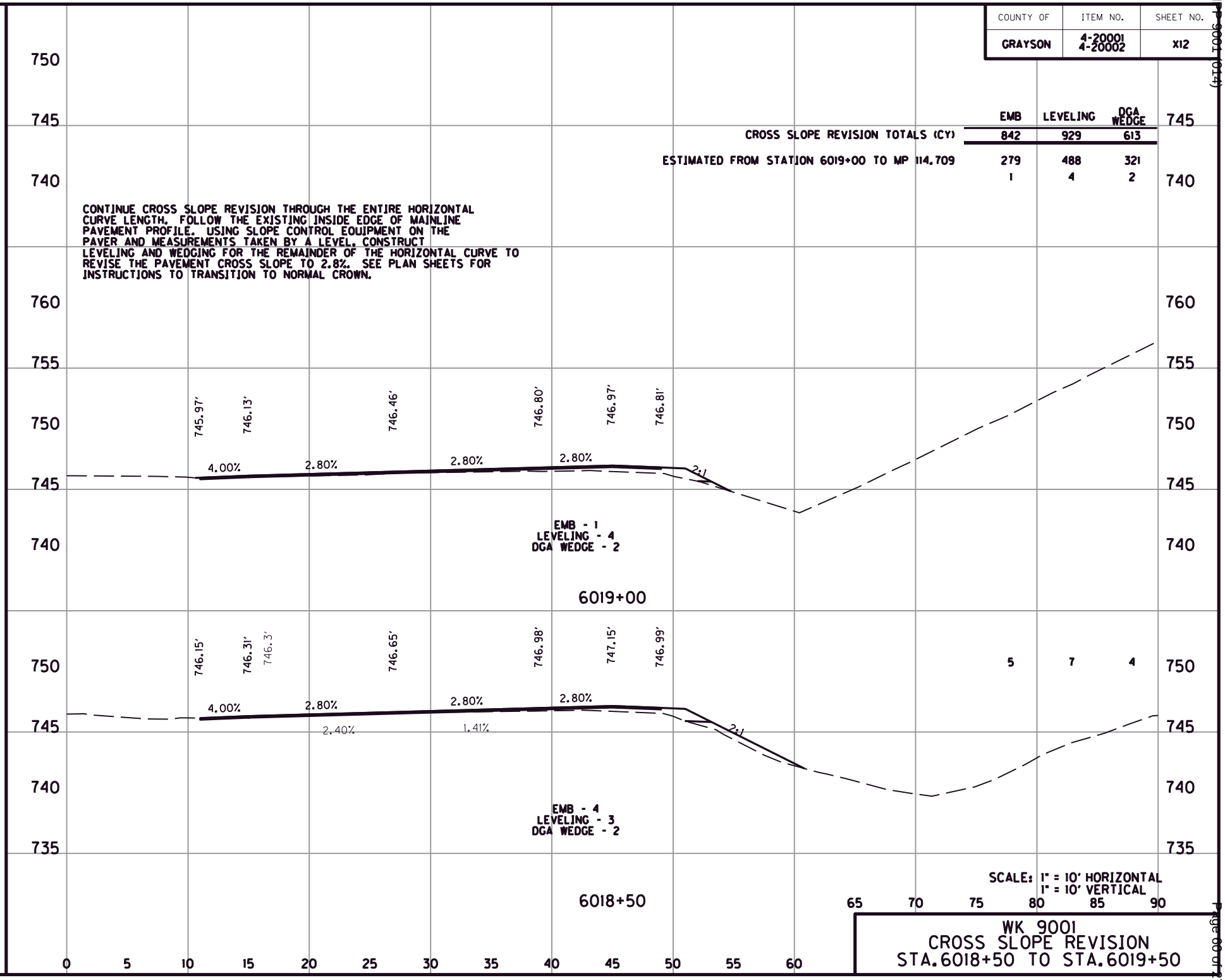

SCALE: 1" = 10' HORIZONTAL
1" = 10' VERTICAL

WK 9001
CROSS SLOPE REVISION
STA.6018+50 TO STA.6019+50

FILE NAME: G:\ENGR\HD1365.10 AND 1365.11 GRAYSON WK\CAD\PLAN\CROSS SECTIONS.DGN
USER: cbrunty
DATE PLOTTED: January 6, 2022
E-SHEET NAME:
MicroStation v8.11.9.459

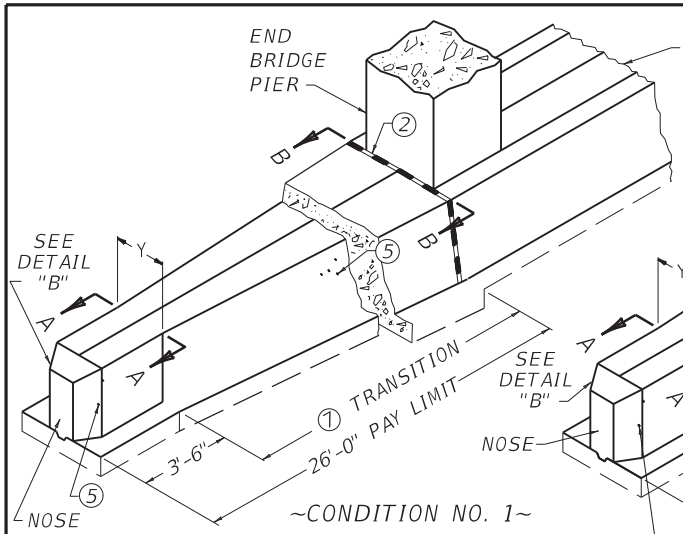

~CONDITION NO. 1~
FOR MEDIAN BARRIER SHAPE AROUND BRIDGE PIER

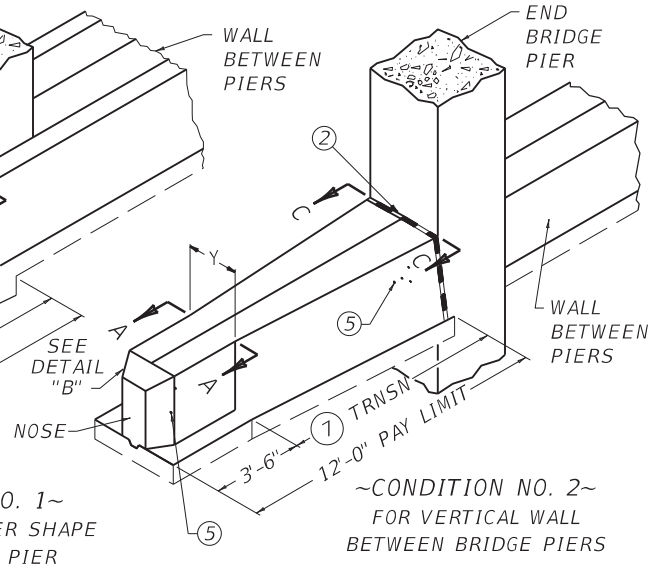

~CONDITION NO. 2~
FOR VERTICAL WALL BETWEEN BRIDGE PIERS

~ NOTES ~

SEE CURRENT SEPIA, SEPIA 005N, FOR ALL NOTES.

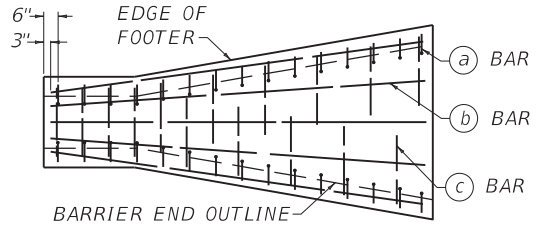

TYPICAL STEEL PLACEMENT

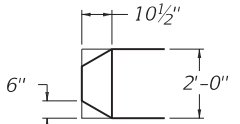

DETAIL "A" 5

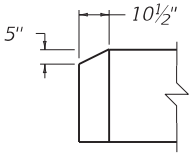

DETAIL "B"

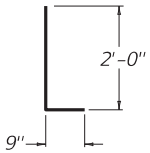

BAR a

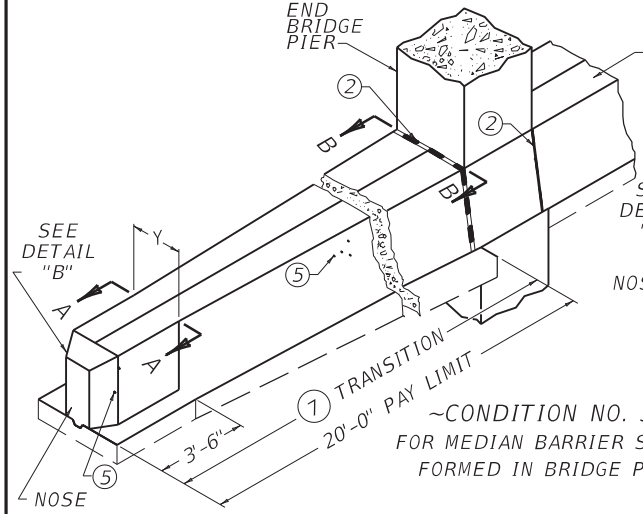

~CONDITION NO. 3~
FOR MEDIAN BARRIER SHAPE FORMED IN BRIDGE PIER

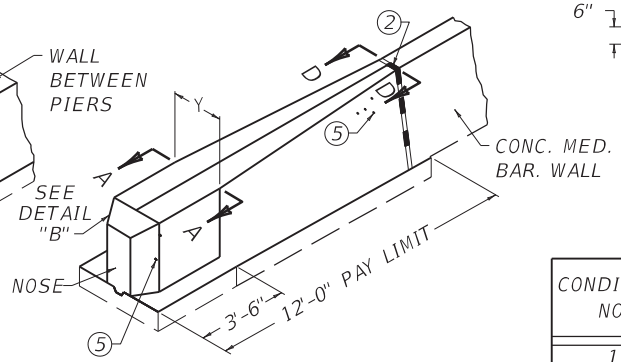

~CONDITION NO. 4~
FOR CONCRETE MEDIAN BARRIER

CONDITION NO.	NO. 5 STEEL REINFORCEMENT BARS								CUBIC YARD (4) CLASS "A" CONC.	
	W	BAR (a)		BAR (b)		BAR (c)		LBS.		
		QTY.	LGTH.	QTY.	LGTH.	QTY.	LGTH.		Y=2'-0"	Y=1'-6"
1	6"	52	2'-9"	5	25'-6"	26	2'-8"	354	11.56	10.19
2	-	24			11'-6"	12		163	4.07	3.58
3	-	40			19'-6"	20		272	7.70	6.96
4	12"	24			11'-6"	12		163	3.38	2.89
									3.51	3.03

(d) SEE NOTE 7 ON SEPIA 005N FOR LONGITUDINAL DOWELS

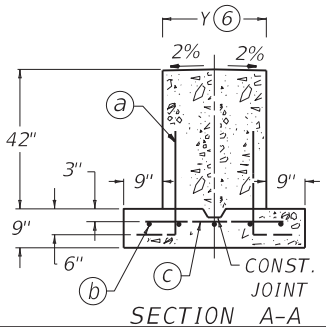

SECTION A-A

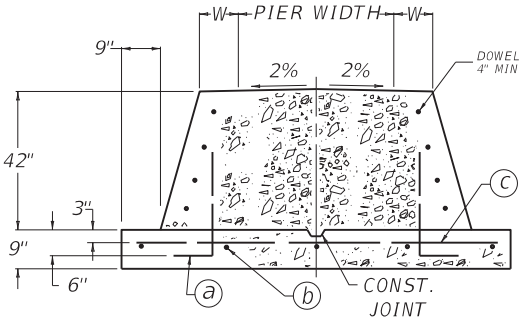

SECTION B-B

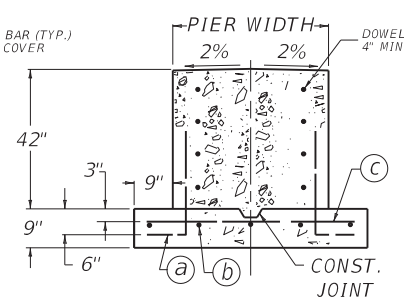

SECTION C-C

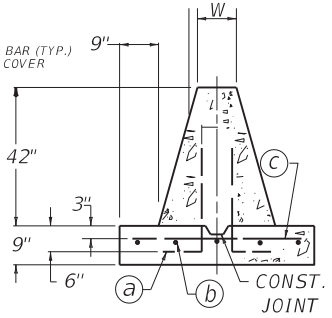

SECTION D-D

KENTUCKY
DEPARTMENT OF HIGHWAYS

CONCRETE BARRIER
END SECTIONS
(TL3 42" TALL WALL)

SUBMITTED W. T. Lawson 10-26-2020
DIVISION DIRECTOR DATE

005

~ NOTES ~

1. THE CONTRACT UNIT PRICE SHALL INCLUDE ALL MATERIALS, TOOLS, FORMS, LABOR, EXCAVATION, AND INCIDENTALS NECESSARY TO COMPLETE THE WORK IN ACCORDANCE WITH THIS DRAWING.

(2) ½" PREMOLDED EXPANSION JOINT MATERIAL REQUIRED.

3. STEEL REINFORCING BARS SHALL BE EVENLY SPACED AS SHOWN AND SHALL BE GRADE 40 MINIMUM.

(4) CONCRETE QUANTITIES FOR CONDITION NO.'S. 1, 2, AND 3 ARE BASED ON A BRIDGE PIER WIDTH OF 3'-0".

(5) USE DETAIL "A" FOR ENERGY ABSORPTION SYSTEM'S QUADGUARD CRASH CUSHION ALTERNATE. ALL OTHER CONNECTIONS REQUIRE A SQUARE NOSE.

(6) Y=2'-0" FOR CRASH CUSHION TYPE VI, AND Y=1'-6" FOR GUARDRAIL CONNECTOR TO CONCRETE MEDIAN BARRIER END.

WHEN THE CONCRETE MEDIAN BARRIER END IS PLACED AT A PIER WIDER THAN 3'-0" THE BARRIER END TRANSITION SHALL BE CONSTRUCTED ON A 12:1 MIN. TAPER AND ADDITIONAL CONCRETE AND STEEL QUANTITIES SHALL BE CALCULATED.

BID ITEMS AND UNIT TO BID:

STEEL REINFORCEMENT	LB
CONCRETE-CLASS AA	CUYD

(7) BARRIER RUNS WITH ABUTTING VERTICAL SURFACES AT EITHER REQUIRED OR PERMISSIBLE CONSTRUCTION JOINTS ARE TO BE DOWELED TO EACH OTHER BY USE OF ¾" DIAMETER BY 18" LONG EPOXY COATED DEFORMED DOWEL BARS. BARS ARE TO BE PLACED AS SHOWN ON THE DOWEL BAR PLACEMENT DETAIL ON SEPIA 003 . PROVIDE A 4" CLEARANCE TO BARRIER SURFACES AND TO ANY RACEWAYS.

KENTUCKY
DEPARTMENT OF HIGHWAYS

CONCRETE BARRIER
END SECTIONS
(TL3 42" TALL WALL)
NOTES

SUBMITTED W. T. Lyon 10-26-2020
DIVISION DIRECTOR DATE

005N

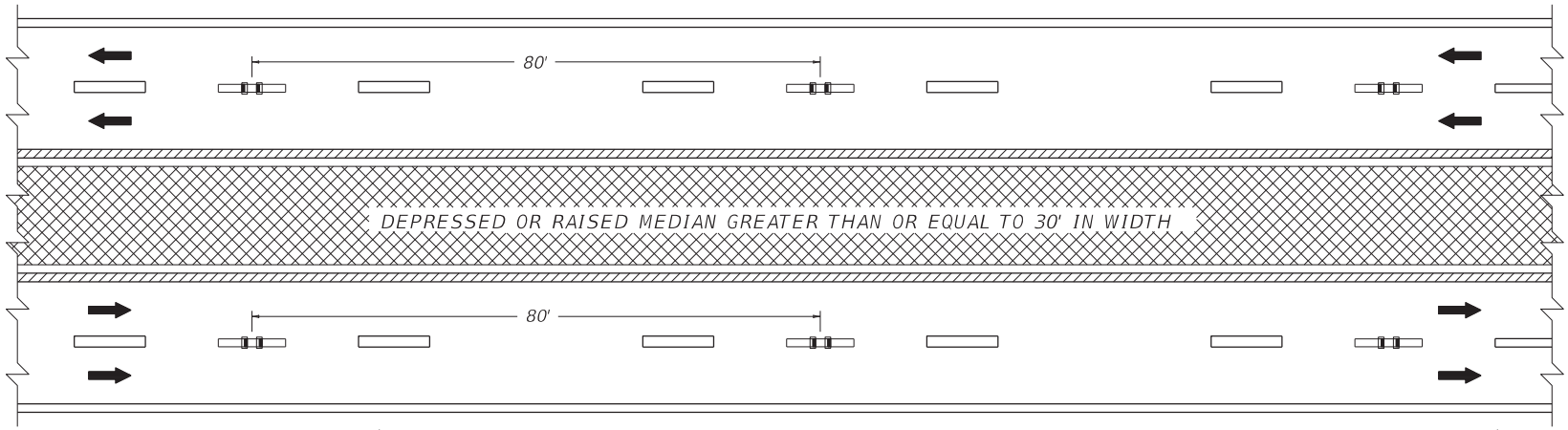

ARRANGEMENT "C" (DIVIDED HIGHWAY WITH DEPRESSED OR RAISED MEDIAN GREATER THAN OR EQUAL TO 30' IN WIDTH)

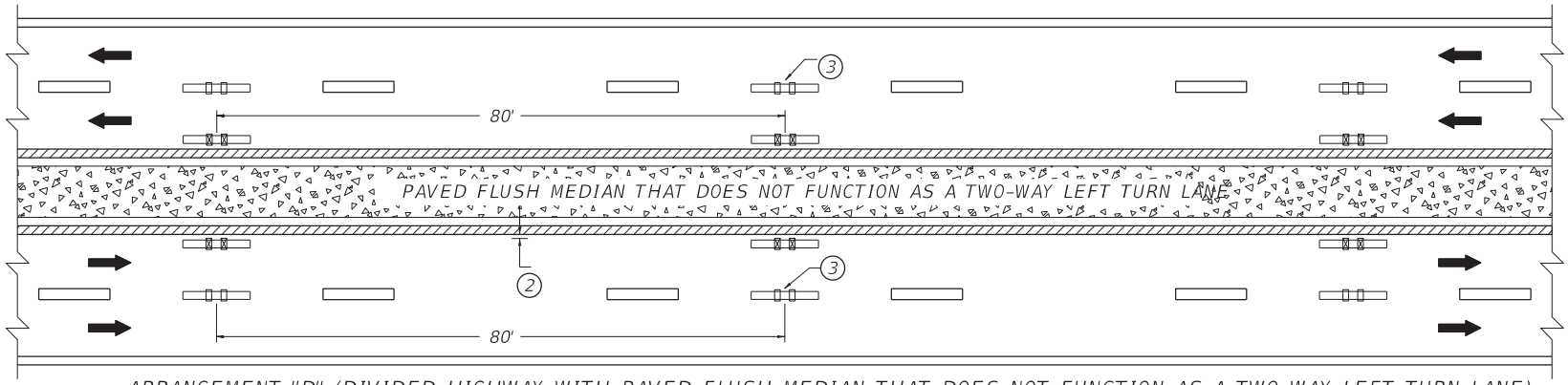

ARRANGEMENT "D" (DIVIDED HIGHWAY WITH PAVED FLUSH MEDIAN THAT DOES NOT FUNCTION AS A TWO-WAY LEFT TURN LANE)

~ NOTES ~

1. MARKERS INSTALLED ALONG LANE LINES SHOULD BE PLACED BETWEEN AND IN LINE WITH THE SKIPS.

(2) MARKERS INSTALLED ALONG EDGE LINES SHOULD BE PLACED SO THAT THE NEAR EDGE OF THE GROOVE IS NO MORE THAN 1" FROM THE NEAR EDGE OF THE LINE.

(3) IF WIDTH OF PAVED FLUSH MEDIAN IS GREATER THAN OR EQUAL TO 30', BI-DIRECTIONAL (WHITE-RED) MARKERS SHALL BE USED ALONG THE LANE LINES IN LIEU OF MONO-DIRECTIONAL (WHITE) MARKERS.

4. MARKERS SHALL NOT BE INSTALLED ON TOP OF THE PAVEMENT JOINT. OFFSET MARKERS A MINIMUM OF 2" FROM THE PAVEMENT JOINT. ENSURE THAT THE FINISHED LINE OF MARKERS IS STRAIGHT WITH MINIMAL LATERAL DEVIATION. MARKERS MAY BE ELIMINATED OR PLACEMENT ADJUSTED AT THE DISCRETION OF THE ENGINEER.

5. MARKERS SHALL BE INSTALLED AT 40' SPACING ALONG SOLID WHITE AUXILIARY LANES. MARKER COLOR SHALL MATCH THE MARKERS INSTALLED ALONG THE WHITE LANE LINES.

BID ITEMS	UNIT TO BID
06610 - INLAID PAVEMENT MARKER - MW	EACH
06612 - INLAID PAVEMENT MARKER - BY	EACH
06613 - INLAID PAVEMENT MARKER - B W/R	EACH

LEGEND

- BI-DIRECTIONAL PAVEMENT MARKER (YELLOW)
- BI-DIRECTIONAL PAVEMENT MARKER (WHITE-RED)
- MONO-DIRECTIONAL PAVEMENT MARKER (WHITE)
- MARKINGS (YELLOW)
- MARKINGS (WHITE)
- FLUSH MEDIAN
- DEPRESSED OR RAISED MEDIAN

DRAWING NOT TO SCALE

KENTUCKY
DEPARTMENT OF HIGHWAYS

INLAID PAVEMENT MARKER
ARRANGEMENTS
MULTI-LANE ROADWAYS

SUBMITTED _____ DIVISION DIRECTOR 06-09-21 DATE

007

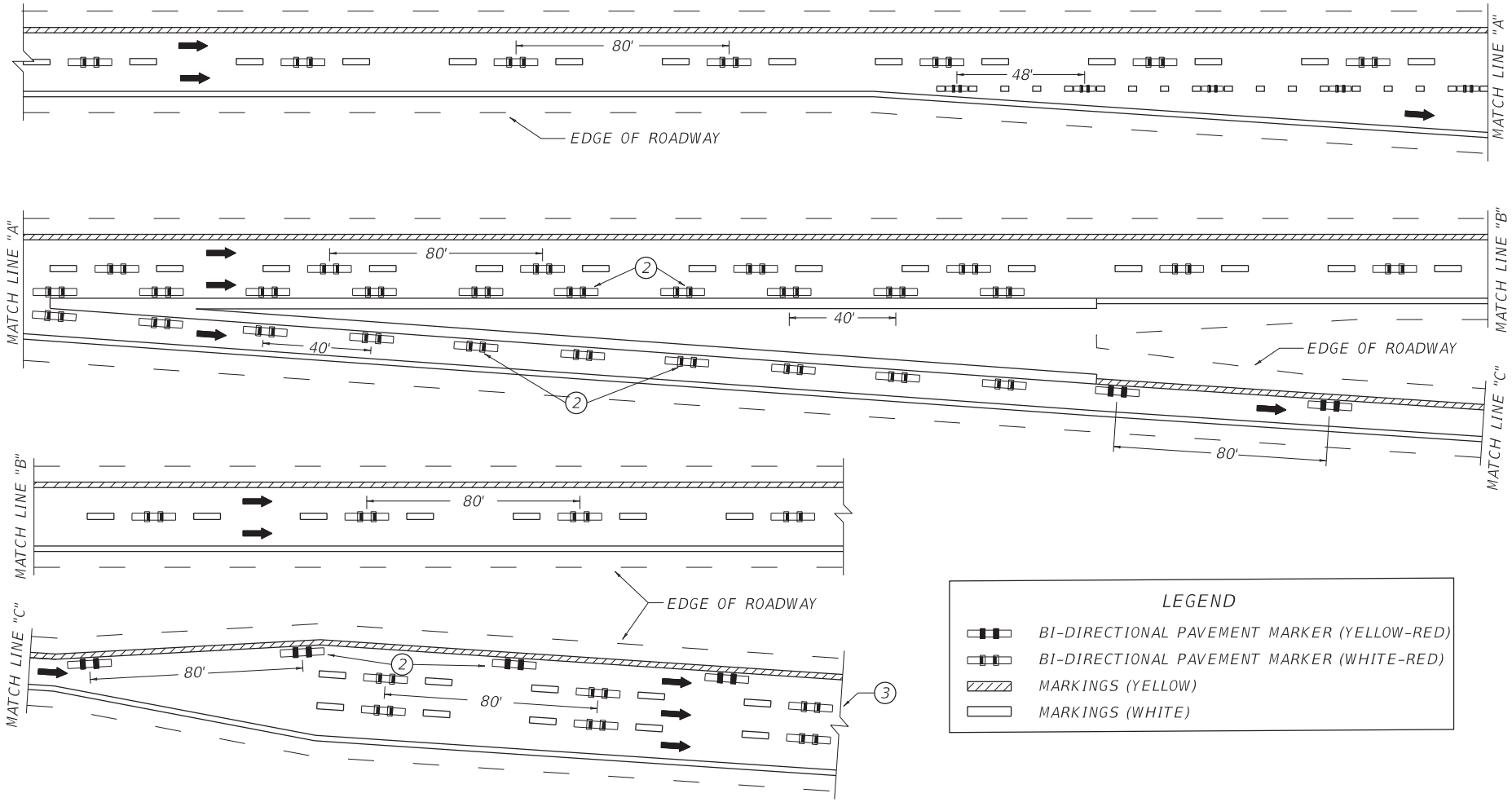

LEGEND

- BI-DIRECTIONAL PAVEMENT MARKER (YELLOW-RED)
- BI-DIRECTIONAL PAVEMENT MARKER (WHITE-RED)
- MARKINGS (YELLOW)
- MARKINGS (WHITE)

~ NOTES ~

1. MARKERS INSTALLED ALONG LANE LINES SHALL BE PLACED BETWEEN AND IN LINE WITH THE SKIPS.
2. MARKERS INSTALLED ALONG EDGE LINES SHALL BE PLACED SO THAT THE NEAR EDGE OF THE GROOVE IS NO MORE THAN 1" FROM THE NEAR EDGE OF THE LINE.
3. MARKERS SHALL BE CONTINUED ALONG THE ENTIRE LENGTH OF THE RAMP UNTIL THE INTERSECTION WITH THE CROSS-STREET.
4. MARKERS SHALL NOT BE INSTALLED ON TOP OF THE PAVEMENT JOINT. OFFSET MARKERS A MINIMUM OF 2" FROM THE PAVEMENT JOINT. ENSURE THAT THE FINISHED LINE OF MARKERS IS STRAIGHT WITH MINIMAL LATERAL DEVIATION. MARKERS MAY BE ELIMINATED OR PLACEMENT ADJUSTED AT THE DISCRETION OF THE ENGINEER.

BID ITEMS	UNIT TO BID
06613 - INLAID PAVEMENT MARKER - B-W/R	EACH
06614 - INLAID PAVEMENT MARKER - B-Y/R	EACH

DRAWING NOT TO SCALE

USE WITH CUR. STD. DWG. TPM-201

KENTUCKY
DEPARTMENT OF HIGHWAYS

INLAID PAVEMENT MARKER ARRANGEMENT
EXIT GORE AND OFF-RAMP

SUBMITTED _____ DIVISION DIRECTOR 06-09-21 DATE

011

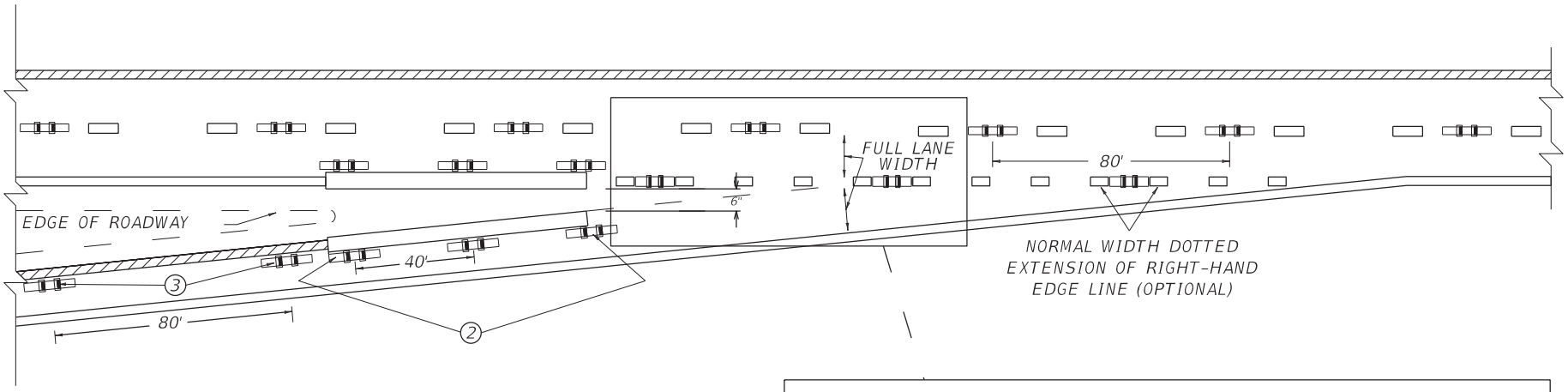

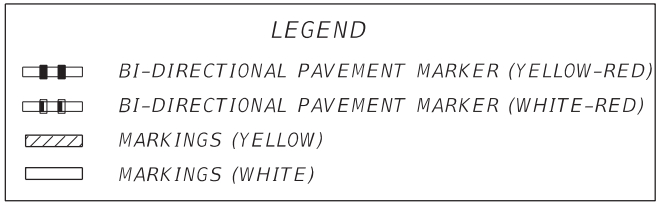

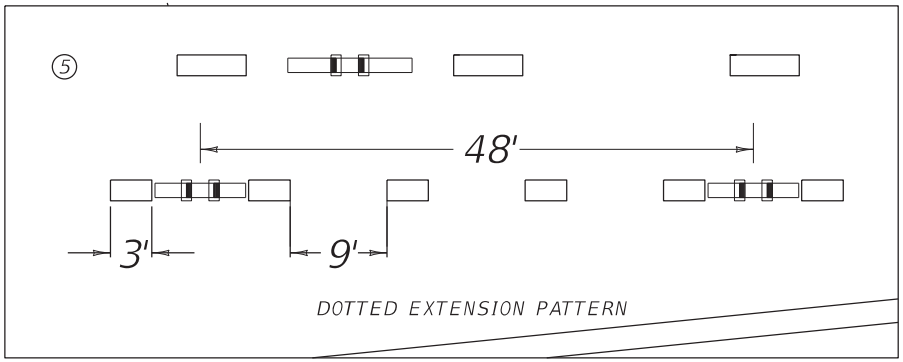

~ NOTES ~

1. MARKERS INSTALLED ALONG LANE LINES SHALL BE PLACED BETWEEN AND IN LINE WITH THE SKIPS.
2. MARKERS INSTALLED ALONG EDGE LINES SHALL BE PLACED SO THAT THE NEAR EDGE OF THE GROOVE IS NO MORE THAN 1" FROM THE NEAR EDGE OF THE LINE.
3. BI-DIRECTIONAL (YELLOW-RED) MARKERS ARE TO BE PLACED ALONG THE ENTIRE LENGTH OF THE YELLOW EDGE LINE FROM THE INTERSECTION OF THE CROSS-STREET TO THE BEGINNING OF THE GORE AREA.
4. ON TWO-LANE, TWO-WAY HIGHWAYS, MARKERS INSTALLED ALONG GORE MARKINGS SHALL BE MONO-DIRECTIONAL (WHITE).
5. IF DOTTED EXTENSIONS ARE USED IN THE TAPERED ACCELERATION LANE, MARKERS SHALL BE INSTALLED AS DEPICTED.
6. MARKERS SHALL NOT BE INSTALLED ON TOP OF THE PAVEMENT JOINT. OFFSET MARKERS A MINIMUM OF 2" FROM THE PAVEMENT JOINT. ENSURE THAT THE FINISHED LINE OF MARKERS IS STRAIGHT WITH MINIMAL LATERAL DEVIATION. MARKERS MAY BE ELIMINATED OR PLACEMENT ADJUSTED AT THE DISCRETION OF THE ENGINEER.

BID ITEMS	UNIT TO BID
06613 - INLAID PAVEMENT MARKER - B-W/R	EACH
06614 - INLAID PAVEMENT MARKER - B-Y/R	EACH

DRAWING NOT TO SCALE

USE WITH CUR. STD. DWG. TPM-200

KENTUCKY DEPARTMENT OF HIGHWAYS

INLAID PAVEMENT MARKER ARRANGEMENT ON-RAMP WITH TAPERED ACCELERATION LANE

SUBMITTED _____ DIVISION DIRECTOR 06-09-21 DATE

013

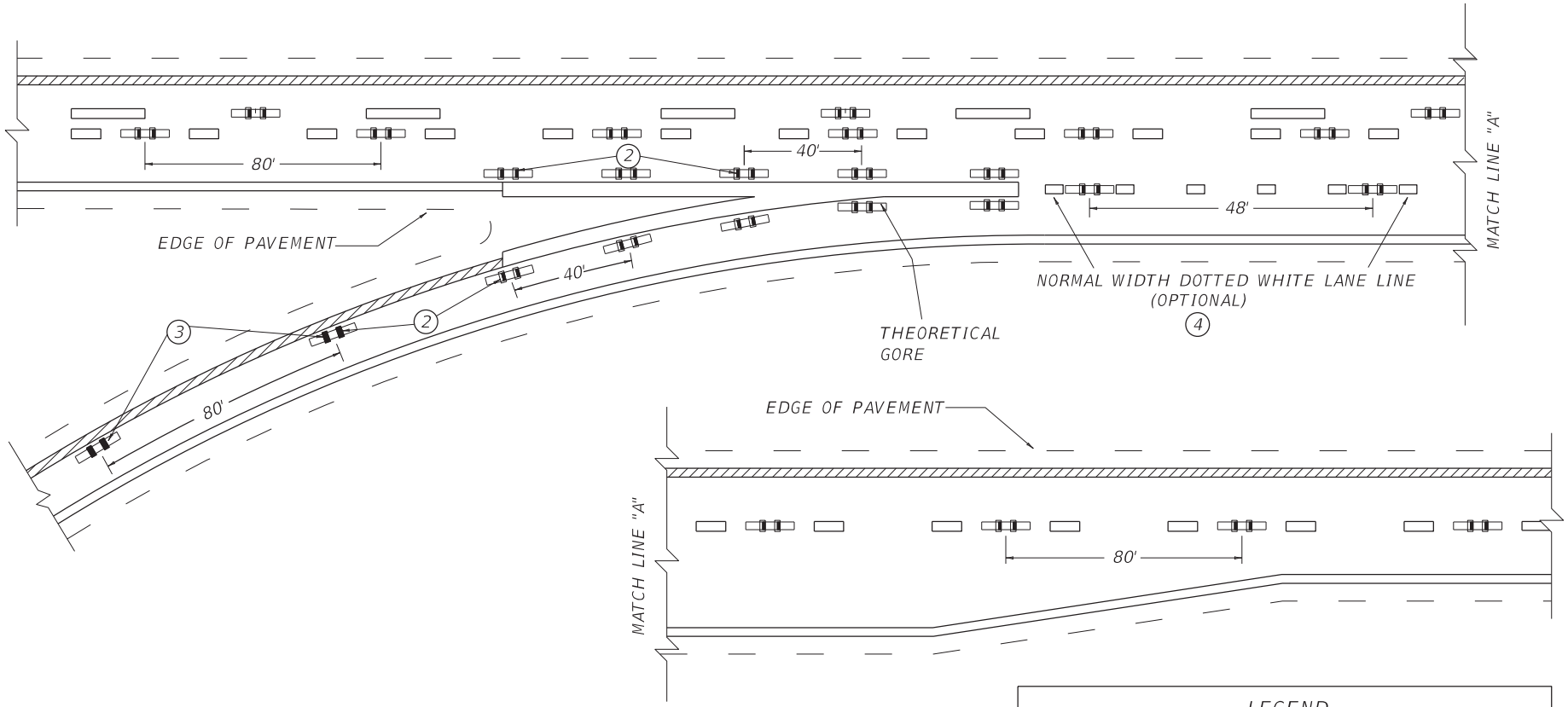

LEGEND

- BI-DIRECTIONAL PAVEMENT MARKER (YELLOW-RED)
- BI-DIRECTIONAL PAVEMENT MARKER (WHITE-RED)
- MARKINGS (YELLOW)
- MARKINGS (WHITE)

~ NOTES ~

1. MARKERS INSTALLED ALONG LANE LINES SHALL BE PLACED BETWEEN AND IN LINE WITH THE SKIPS.
2. MARKERS INSTALLED ALONG EDGE LINES SHALL BE PLACED SO THAT THE NEAR EDGE OF THE GROOVE IS NO MORE THAN 1" FROM THE NEAR EDGE OF THE LINE.
3. BI-DIRECTIONAL (YELLOW-RED) MARKERS ARE TO BE PLACED ALONG THE ENTIRE LENGTH OF THE YELLOW EDGE LINE FROM THE INTERSECTION OF THE CROSS-STREET TO THE BEGINNING OF THE GORE AREA.
4. IF DOTTED EXTENSIONS ARE USED IN THE TAPERED ACCELERATION LANE, MARKERS SHALL BE INSTALLED AS DEPICTED.
5. MARKERS SHALL NOT BE INSTALLED ON TOP OF THE PAVEMENT JOINT. OFFSET MARKERS A MINIMUM OF 2" FROM THE PAVEMENT JOINT. ENSURE THAT THE FINISHED LINE OF MARKERS IS STRAIGHT WITH MINIMAL LATERAL DEVIATION. MARKERS MAY BE ELIMINATED OR PLACEMENT ADJUSTED AT THE DISCRETION OF THE ENGINEER.
6. THE NORMAL WIDTH DOTTED WHITE LANE LINE SHALL EXTEND FOR AT LEAST HALF THE LENGTH OF THE FULL-WIDTH ACCELERATION LANE PLUS TAPER MEASURED FROM THE THEORETICAL GORE.

BID ITEMS AND UNIT TO BID
INLAID PAVEMENT MARKER (B-W/R, B-Y/R, BY, MW, MY) EACH

DRAWING NOT TO SCALE
USE WITH CUR. STD. DWG.
TPM-200

KENTUCKY
DEPARTMENT OF HIGHWAYS

INLAID PAVEMENT MARKER
ARRANGEMENT
ON-RAMP WITH PARALLEL
ACCELERATION LANE

SUBMITTED DIVISION DIRECTOR 06-09-21 DATE

014

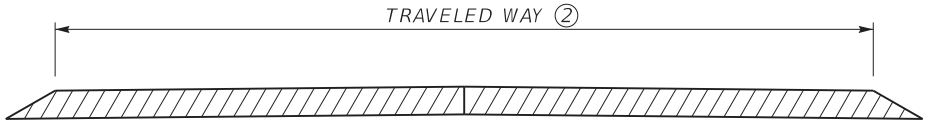

TWO LANE ROADWAY PAVEMENT CROSS-SECTION

TRAVELED WAY 2	TYPE OF PAVEMENT STRIPING	NON-STATE PRIMARY ROUTES				STATE PRIMARY ROUTES	
		< 1000 ADT		>= 1000 ADT		ANY ADT	
		WIDTH	MATERIAL	WIDTH	MATERIAL	WIDTH	MATERIAL*
< 16' 4	EDGELINE STRIPES ONLY	4"	PAINT	4"	PAINT	6"	THERMO (ASHPALT) TYPE I TAPE (CONCRETE)
16' TO < 20'	EDGELINE STRIPES ONLY OR CENTERLINE STRIPE ONLY	4"	PAINT	4"	PAINT	6"	THERMO (ASHPALT) TYPE I TAPE (CONCRETE)
>=20' 3	CENTERLINE AND EDGELINE STRIPES	4" 5	PAINT	6"	PAINT	6"	THERMO (ASHPALT) TYPE I TAPE (CONCRETE)

*OTHER DURABLE NON-WATERBORNE MARKINGS MAY BE USED WITH APPROVAL FROM THE DIVISION OF TRAFFIC OPERATIONS.

~ NOTES ~

1. INSTALL PAVEMENT STRIPING ON TWO LANE, TWO WAY ROADWAYS AS DETAILED IN THE ABOVE TABLE AND IN ACCORDANCE WITH THE PAVEMENT MARKINGS AND DELINEATION CHAPTER OF THE TRAFFIC OPERATIONS GUIDANCE MANUAL. CONTACT THE DIVISION OF TRAFFIC OPERATIONS FOR ADDITIONAL GUIDANCE IF NECESSARY.

2 THE TRAVELED WAY IS THE PORTION OF ROADWAY FOR THE MOVEMENT OF VEHICLES, EXCLUSIVE OF THE SHOULDERS.

3 ON TWO LANE, TWO WAY ROADWAYS THAT HAVE A TOTAL PAVEMENT WIDTH (W) THAT IS 20 FT OR GREATER, BUT LESS THAN 22 FT, EDGELINE RUMBLE STRIPS ARE NOT A STANDARD APPLICATION, BUT THEY MAY BE INSTALLED. THE DIVISION OF TRAFFIC OPERATIONS IS AVAILABLE TO ASSIST WITH THE DETERMINATION OF WHETHER OR NOT TO INSTALL EDGELINE RUMBLE STRIPS ON PAVEMENT WIDTHS LESS THAN 22 FT, AS WELL AS THE DIMENSION AND PLACEMENT DETAILS OF THE RUMBLE STRIPS AND PAVEMENT STRIPING.

ON TWO LANE, TWO WAY ROADWAYS THAT HAVE A TOTAL PAVEMENT WIDTH (W) THAT IS 22 FT OR GREATER, BUT LESS THAN 34 FT, INSTALL PAVEMENT STRIPING AS DETAILED IN THE ABOVE TABLE AND IN CONJUNCTION WITH CENTERLINE AND EDGELINE RUMBLE STRIPS AS DETAILED ON TPR-120 .

ON TWO LANE, TWO WAY ROADWAYS THAT HAVE A TOTAL PAVEMENT WIDTH (W) THAT IS 34 FT OR GREATER, INSTALL PAVEMENT STRIPING AS DETAILED IN THE ABOVE TABLE AND IN CONJUCTION WITH CENTERLINE AND SHOULDER RUMBLE STRIPS AS DETAILED ON TPR-125.

4 EDGELINES MAY BE OMITTED FROM ROADWAYS WITH A TRAVELED WAY WIDTH LESS THAN 16 FEET WITH THE APPROVAL OF THE DIVISION OF TRAFFIC OPERATIONS.

5 EDGELINES MAY BE OMITTED ON NON-STATE PRIMARY ROUTES WITH A TRAVELED WAY WIDTH GREATER THAN OR EQUAL TO 20 FEET AND AN ADT LESS THAN 1,000.

6. EDGELINES MAY BE OMITTED, BASED ON ENGINEERING JUDGMENT, IN AREAS WHERE THE PAVEMENT EDGE IS DELINEATED BY PHYSICAL OBJECTS SUCH AS CURBS, PARKING SPACES, OR OTHER MARKINGS. EDGELINES SHOULD BE INSTALLED ON ROADWAYS WITH CURB AND GUTTER IF THE POSTED SPEED LIMIT IS 45 MPH OR GREATER.

DRAWING NOT TO SCALE

USE WITH CUR. STD. DWGS.
TPR-120 & TPR-125

KENTUCKY
DEPARTMENT OF HIGHWAYS

PAVEMENT STRIPING DETAILS FOR TWO LANE TWO WAY ROADWAYS

SUBMITTED _____ DIVISION DIRECTOR 06-09-21 DATE

017

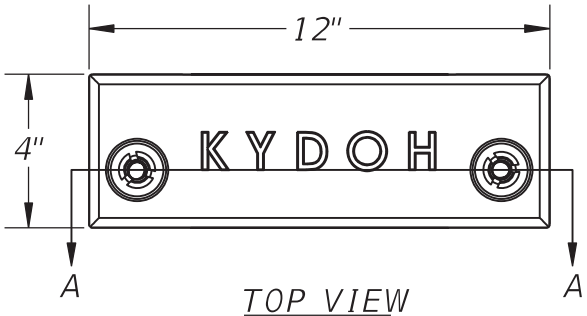

TOP VIEW

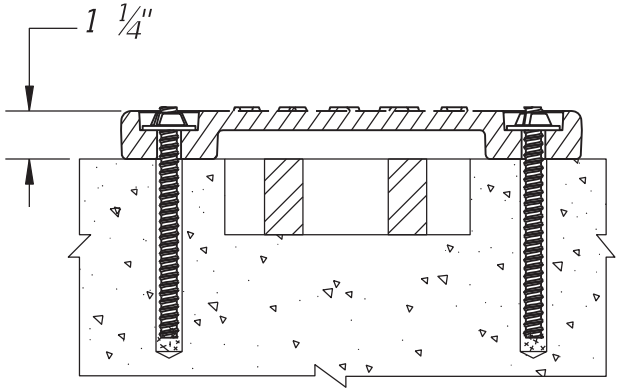

SECTION A-A

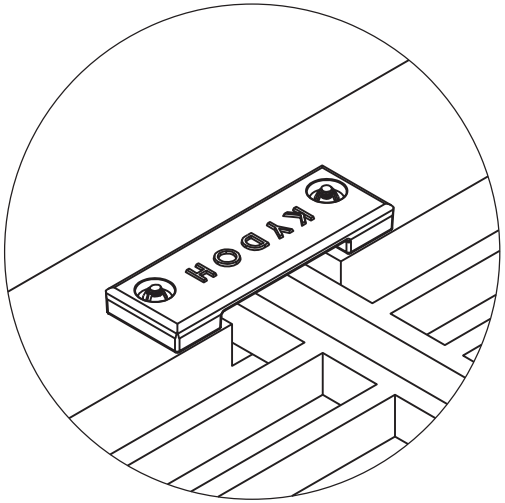

MOUNTED

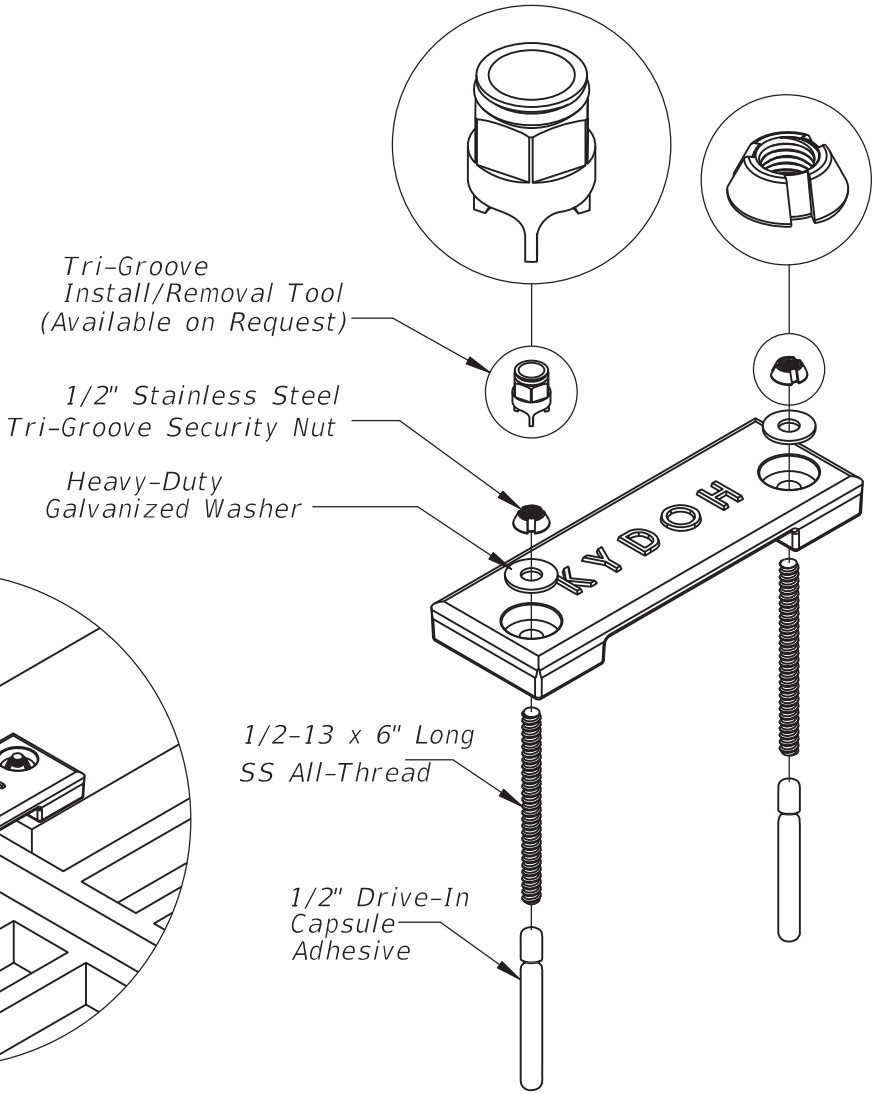

BID ITEMS AND UNITS TO BID

24585EC SECURITY PLATE ASSEMBLY	EACH	

KENTUCKY
DEPARTMENT OF HIGHWAYS

SECURITY PLATE
ASSEMBLY

SUBMITTED W. T. Lopan 02-26-2021
DIVISION DIRECTOR DATE

020

COUNTY OF	ITEM NO.	SHEET NO.
GRAYSON	4-20001 4-20002	R1

Commonwealth of Kentucky
DEPARTMENT OF HIGHWAYS

PLANS OF
PROPOSED PROJECT

GRAYSON COUNTY
KY 224 BRIDGE REPLACEMENT
FD52 043 9001 111-115
NHPP 9001 (014)
THESE PLANS ARE FOR GRADE, DRAIN, AND SURFACING

INDEX OF SHEETS

SHEET NO.	DESCRIPTION
R1	LAYOUT SHEET
R2 - R2B	TYPICAL SECTIONS
R3 - R9	PLAN AND PROFILE SHEETS UTILITY REFERENCE SHEETS RIGHT OF WAY SUMMARY SHEETS RIGHT OF WAY STRIP MAP SHEETS
R10 - R13	DETAIL SHEETS
R14 - R25	TRAFFIC CONTROL SHEETS
R26 - R28	EROSION CONTROL SHEETS MITIGATION PLAN SHEETS
R29	COORDINATE CONTROL SHEETS SOIL PROFILE SHEETS
R30 - R31	PIPE DRAINAGE SHEETS
S1 - S24	STRUCTURE PLANS - BRIDGE OVER WK 9001 DRAWING NO. 28464
S1 - S3	STRUCTURE PLANS - CULVERT 8'X5', STA. 46+86.46
T1 - T3	TRAFFIC PLANS
U	UTILITY RELOCATION PLANS
X1 - X30	CROSS SECTION SHEETS

SHEETS NOT INCLUDED IN TOTAL SHEETS
R2A

STANDARD DRAWINGS

NUMBER

SEE PROJECT PROPOSAL FOR LIST OF ROADWAY STANDARD DRAWINGS AND APPLICABLE SEPIAS.

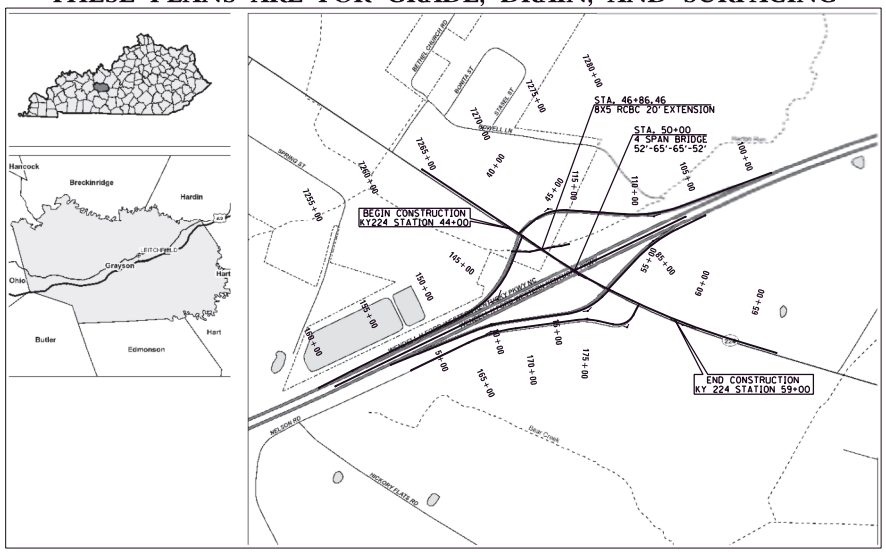

THIS PROJECT IS NOT ON THE NH SYSTEM

THE CONTROL OF ACCESS ON THIS PROJECT SHALL BE BY PERMIT

DESIGN CRITERIA

CLASS OF HIGHWAY	MAJOR COLLECTOR
TYPE OF TERRAIN	ROLLING
DESIGN SPEED	50 MPH
REQUIRED NPSD	425'
REQUIRED PSD	N/A
LEVEL OF SERVICE	N/A
ADT PRESENT (2020)	4050
ADT FUTURE ( )	
DHV	
D %	
T %	11.06%

GEOGRAPHIC COORDINATES

LATITUDE 37 DEGREES 29 MINUTES 21 SECONDS NORTH
LONGITUDE 86 DEGREES 12 MINUTES 32 SECONDS WEST

DESIGNED

% RESTRICTED SD
LEVEL OF SERVICE
MAX. DISTANCE W/O PASSING

LAYOUT MAP

0' 500' 1000' 2000'

SCALE 1" = 500'

KY 224

LENGTH 1.500 LIN. FT. 0.284 MILES	LENGTH ___ LIN. FT. ___ MILES	LENGTH ___ LIN. FT. ___ MILES	LENGTH ___ LIN. FT. ___ MILES
ADDED / DEDUCTED FOR EQUALITIES ___ LIN. FT.	ADDED / DEDUCTED FOR EQUALITIES ___ LIN. FT.	ADDED / DEDUCTED FOR EQUALITIES ___ LIN. FT.	ADDED / DEDUCTED FOR EQUALITIES ___ LIN. FT.
NOT INCLUDED	NOT INCLUDED	NOT INCLUDED	NOT INCLUDED
RAILROAD CROSSINGS NO. ___ LIN. FT.	RAILROAD CROSSINGS NO. ___ LIN. FT.	RAILROAD CROSSINGS NO. ___ LIN. FT.	RAILROAD CROSSINGS NO. ___ LIN. FT.
BRIDGES 239 LIN. FT.	BRIDGES ___ LIN. FT.	BRIDGES ___ LIN. FT.	BRIDGES ___ LIN. FT.

Commonwealth of Kentucky
DEPARTMENT OF HIGHWAYS
COUNTY OF
GRAYSON

ITEM NO. 4-20001 & 4-20002
PROJECT NUMBER: NHPP 9001 (014)
FD52 043 9001 111-115
LETTING DATE: FEBRUARY 24, 2022

RECOMMENDED BY: ANDRE JOHANNES, PE
PROJECT MANAGER DATE:

PLAN APPROVED BY:
STATE HIGHWAY ENGINEER DATE:

HMB Professional Engineers, Inc.
3 HMB Circle
Frankfort, KY 40601
(502) 695-8800
(502) 695-8810 FAX

FILE NAME: G:\ENGR\HD1365.10 AND 1365.11 GRAYSON WK\CAD\PLAN\R001 LAYOUT SHEET.DGN
USER: phoward
DATE PLOTTED: January 6, 2022
E-SHEET NAME:
MicroStation v8.11.9.459

COUNTY OF	ITEM NO.	SHEET NO.
GRAYSON	4-20001 4-20002	R2

TYPICAL SECTIONS
KY 224

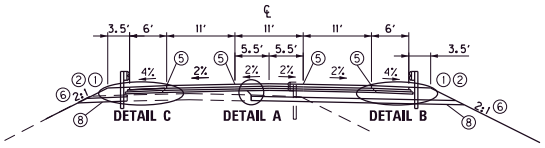

KY 224 NORMAL CROWN
STA. 45+00 TO STA. 53+00

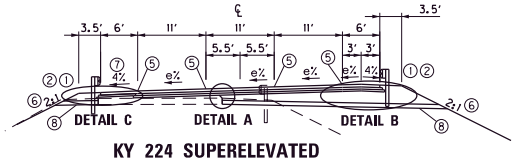

KY 224 SUPERELEVATED
STA. 45+00 TO STA 53+00

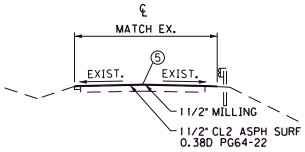

KY 224 NORMAL CROWN
STA. 44+00 TO STA. 45+00
MILL AND INLAY ONLY

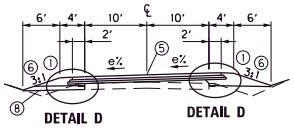

KY 224 SUPERELEVATED
STA. 53+00 TO STA 59+00

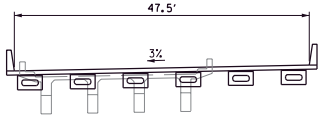

KY 224 OVER WESTERN KY PARKWAY

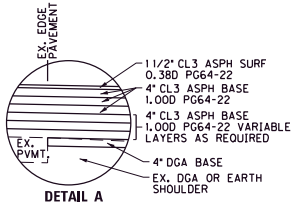

DETAIL A
(GREATER THAN 13.5" OVERLAY)

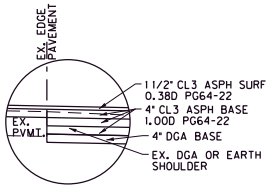

DETAIL A
(LESS THAN 13.5" OVERLAY)

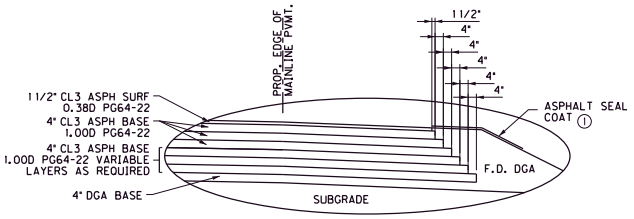

DETAIL B
(GREATER THAN 13.5" OVERLAY)

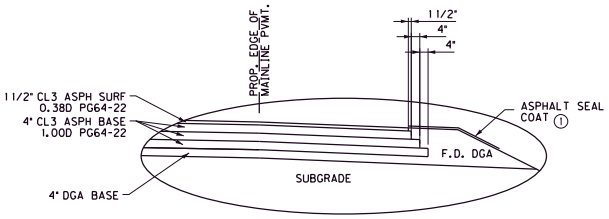

DETAIL B
(LESS THAN 13.5" OVERLAY)

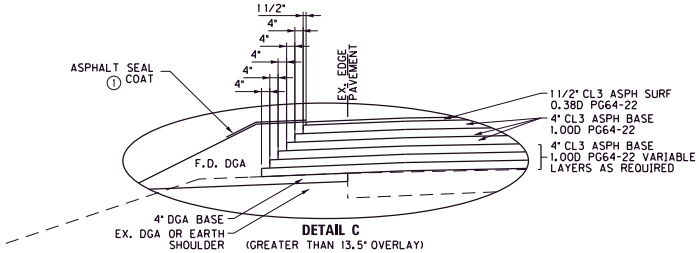

DETAIL C
(GREATER THAN 13.5" OVERLAY)

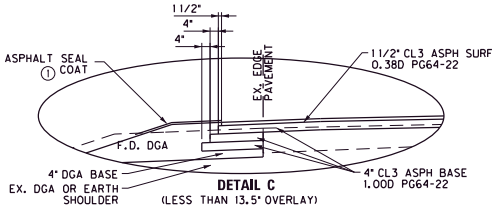

DETAIL C
(LESS THAN 13.5" OVERLAY)

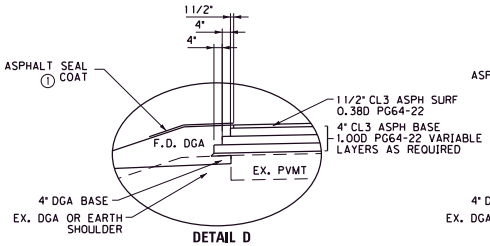

DETAIL D
(GREATER THAN 5.5" OVERLAY)

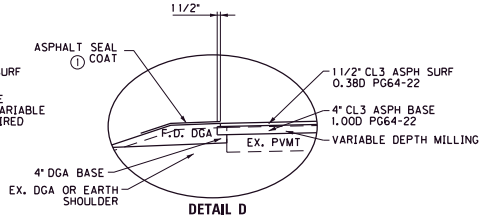

DETAIL D
(LESS THAN 5.5" OVERLAY)

1. ASPHALT SEAL REQUIRED FROM OUTSIDE EDGE OF PAVED SHOULDER TO A POINT 2 FOOT DOWN THE DITCH OR FILL SLOPE (Where Applicable). TWO APPLICATIONS OF THE FOLLOWING :
   ASPHALT SEAL COAT ..... 2.4 lbs. / S.Y.
   ASPHALT SEAL AGGREGATE ..... 20 lbs. / S.Y.
2. SHOULDER WIDENED 3.5' WHERE GUARDRAIL IS PRESENT
3. TO BE USED AS DIRECTED BY THE ENGINEER FOR PROFILE AND CROSS SLOPE REVISION.
4. APPLY ASPHALT MATERIAL FOR TACK AT A RATE OF 0.7 LBS/SY BETWEEN EACH LAYER OF ASPH. CONCRETE.
5. JOINT ADHESIVE
6. SEE CROSS SECTIONS FOR SLOPES OUTSIDE OF SHOULDER
7. SUPERELEVATED SHOULDERS CONSTRUCT TO STANDARD SUPERELEVATION EXCEPT NOT FLATTER THAN SLOPES INDICATED ON NORMAL SHOULDERS.
8. 24" WIDE TRENCH DRAIN. SEE PLANS FOR LOCATIONS.

SURFACING SCHEDULE
KY 224 WIDENING MAINLINE AND SHOULDERS

DGA BASE.....4" DEPTH
CL3 ASPH BASE 1.00D PG64-22.....4" DEPTH
CL3 ASPH BASE 1.00D PG64-22.....4" DEPTH
CL3 ASPH BASE 1.00D PG64-22.....4" DEPTH
CL3 ASPH BASE 1.00D PG64-22.....4" LIFTS DEPTH VARIES
CL3 ASPH SURFACE 0.38D PG64-22.....1 1/2" DEPTH

KY224 MAINLINE OVERLAY

ASPHALT PAVEMENT MILLING AND TEXTURING.....0"-4" TRANSVERSE KEYS
LEVELING AND WEDGING PG76-22.....AS NEEDED
CL3 ASPH BASE 1.00D PG64-22.....4" LIFTS DEPTH VARIES
CL3 ASPH SURFACE 0.38D PG64-22.....1 1/2" DEPTH

SCALE: 1"= N.T.S.

KY 224
TYPICAL SECTIONS

FILE NAME: G:\ENGR\H0365.10 AND 1365.11 GRAYSON WK\CAD\DETAILS\TYPICALS.DGN
USER: phoward
DATE PLOTTED: January 6, 2022
E-SHEET NAME:
MicroStation v8.11.9.459

COUNTY OF	ITEM NO.	SHEET NO.
GRAYSON	4-20001 4-20002	R2A

TYPICAL SECTIONS
RAMPS APPROACHES AND ENTRANCES

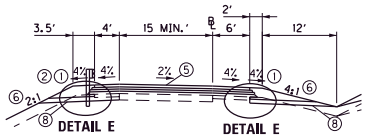

RAMPS NORMAL

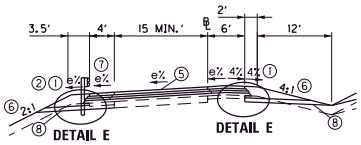

RAMPS SUPERELEVATED LEFT

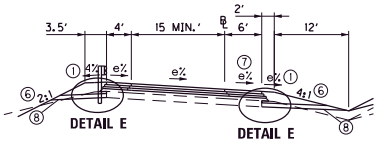

RAMPS SUPERELEVATED RIGHT

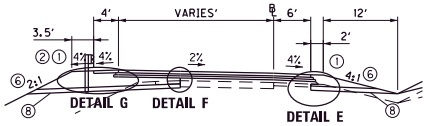

RAMPS WIDENING

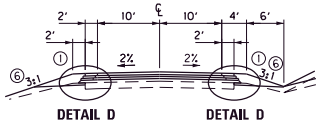

HICKORY FLATS ROAD NORMAL CROWN

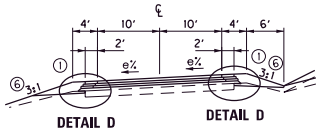

HICKORY FLATS ROAD SUPERELEVATED

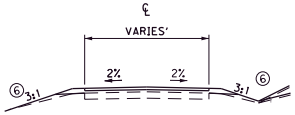

ENTRANCES

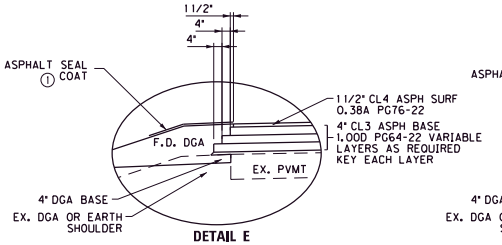

DETAIL E
(GREATER THAN 5.5" OVERLAY)

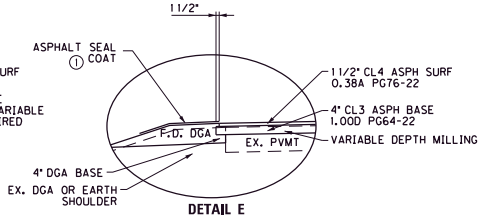

DETAIL E
(LESS THAN 5.5" OVERLAY)

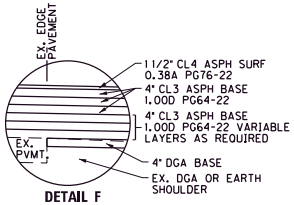

DETAIL F
(GREATER THAN 13.5" OVERLAY)

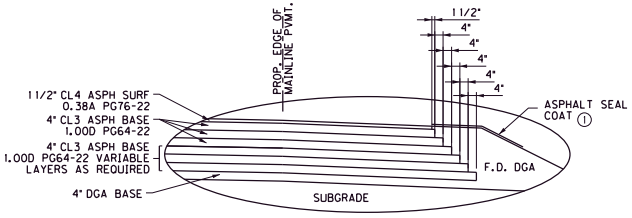

DETAIL G
(GREATER THAN 13.5" OVERLAY)

1. ASPHALT SEAL REQUIRED FROM OUTSIDE EDGE OF PAVED SHOULDER TO A POINT 2 FOOT DOWN THE DITCH OR FILL SLOPE (Where Applicable). TWO APPLICATIONS OF THE FOLLOWING :
   ASPHALT SEAL COAT ..... 2.4 lbs. / S.Y.
   ASPHALT SEAL AGGREGATE ..... 20 lbs. / S.Y.
2. SHOULDER WIDENED 3.5' WHERE GUARDRAIL IS PRESENT
3. TO BE USED AS DIRECTED BY THE ENGINEER FOR PROFILE AND CROSS SLOPE REVISION.
4. APPLY ASPHALT MATERIAL FOR TACK AT A RATE OF 0.7 LBS/SY BETWEEN EACH LAYER OF ASPH. CONCRETE.
5. JOINT ADHESIVE
6. SEE CROSS SECTIONS FOR SLOPES OUTSIDE OF SHOULDER
7. SUPERELEVATED SHOULDERS CONSTRUCT TO STANDARD SUPERELEVATION EXCEPT NOT FLATTER THAN SLOPES INDICATED ON NORMAL SHOULDERS.
8. 24" WIDE TRENCH DRAIN, SEE PLANS FOR LOCATIONS.

SURFACING SCHEDULE

RAMP TRAFFIC LANES AND SHOULDER

ASPHALT PAVEMENT MILLING AND TEXTURING.....11/2" DEPTH
ASPHALT PAVEMENT MILLING AND TEXTURING.....0"-3" TRANSVERSE KEYS
LEVELING AND WEDGING PG76-22.....AS NEEDED
CL3 ASPH BASE 1.00D PG64-22.....4" LIFTS DEPTH VARIES
CL3 ASPH BASE 1.00D PG76-22.....4" DEPTH
CL3 ASPH SURFACE 0.38A PG76-22.....11/2" DEPTH

RAMP WIDENING

DGA BASE.....4" LIFTS DEPTH VARIES
CL3 ASPH BASE 1.00D PG64-22.....4" DEPTH
CL3 ASPH BASE 1.00D PG64-22.....4" DEPTH
CL3 ASPH BASE 1.00D PG76-22.....4" DEPTH
CL3 ASPH SURFACE 0.38A PG76-22.....11/2" DEPTH

HICKORY FLATS MAINLINE AND SHOULDER

ASPHALT PAVEMENT MILLING AND TEXTURING.....0"-3" TRANSVERSE KEYS
LEVELING AND WEDGING PG64-22.....AS NEEDED
CL2 ASPH BASE 1.00D PG64-22.....4" LIFTS DEPTH VARIES
CL2 ASPH SURFACE 0.38D PG64-22.....11/2" DEPTH

ENTRANCES

DGA BASE.....4" DEPTH
CEM CONC ENT PAVEMENT - 8 INCH.....8" DEPTH
OR
LEVELING AND WEDGING PG76-22.....VARIABLE DEPTH
CL3 ASPH SURFACE 0.38D PG64-22.....11/2" DEPTH

SCALE: 1"= N.T.S.

KY 224
TYPICAL SECTIONS
RAMPS, APPROACHES, & ENTRANCES

FILE NAME: G:\ENGR\H0365.10 AND 1365.11 GRAYSON MK\CAD\DETAILS\TYPICALS.DGN
USER: phoward
DATE PLOTTED: January 6, 2022
E-SHEET NAME:
MicroStation v8.11.9.459

COUNTY OF	ITEM NO.	SHEET NO.
GRAYSON	4-20001 4-20002	R2B

TYPICAL SECTIONS
DETAILS

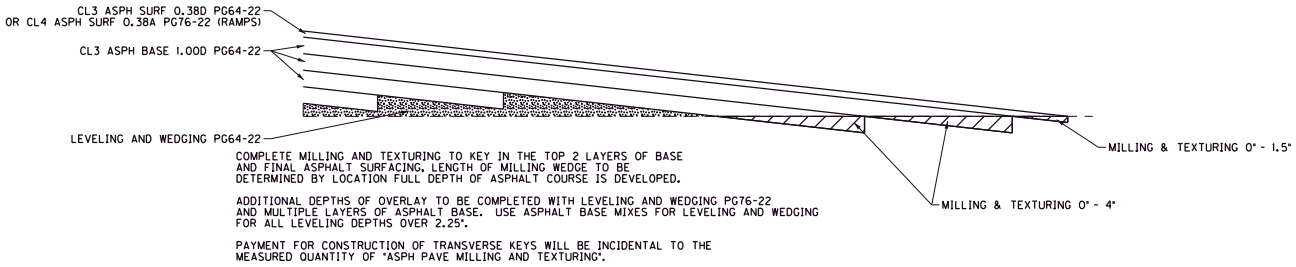

COMPLETE MILLING AND TEXTURING TO KEY IN THE TOP 2 LAYERS OF BASE AND FINAL ASPHALT SURFACING, LENGTH OF MILLING WEDGE TO BE DETERMINED BY LOCATION FULL DEPTH OF ASPHALT COURSE IS DEVELOPED.

ADDITIONAL DEPTHS OF OVERLAY TO BE COMPLETED WITH LEVELING AND WEDGING PG76-22 AND MULTIPLE LAYERS OF ASPHALT BASE. USE ASPHALT BASE MIXES FOR LEVELING AND WEDGING FOR ALL LEVELING DEPTHS OVER 2.25".

PAYMENT FOR CONSTRUCTION OF TRANSVERSE KEYS WILL BE INCIDENTAL TO THE MEASURED QUANTITY OF "ASPH PAVE MILLING AND TEXTURING".

MILLING & TEXTURING FOR TRANSVERSE KEY OF PAVEMENT LAYERS DETAIL

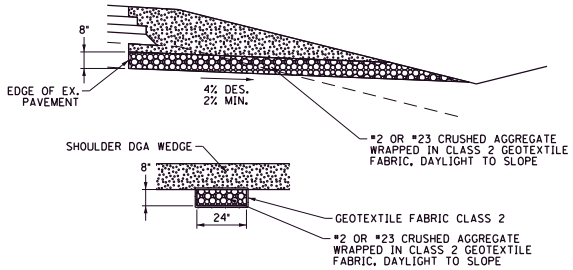

EXCAVATION, CLASS 2 GEOTEXTILE FABRIC, AND CRUSHED AGGREGATE INCIDENTAL TO THE PER LF PAY ITEM "TRENCH DRAIN".

TRENCH DRAIN DETAIL

SCALE: 1"= N.T.S.

KY 224
TYPICAL SECTIONS
DETAILS

FILE NAME: G:\ENGR\HD\365.10 AND 365.11 GRAYSON WK\CAD\DETAILS\TYPICALS.DGN
USER: phoward
DATE PLOTTED: January 6, 2022
E-SHEET NAME:
MicroStation v8.11.9.459

COUNTY OF	ITEM NO.	SHEET NO.
GRAYSON	4-20001 4-20002	R3

CONVENTIONAL SIGNS

SURVEY LINE
GRADE LINE — 400' V.C.
GROUND LINE
COUNTY LINE
CORPORATE LIMITS
EXIST. PROPERTY LINE
EXIST. RIGHT OF WAY & PROPERTY LINE
PROPOSED RIGHT OF WAY
RIGHT OF WAY MONUMENT
BENCH MARK — B.M. NO. 4
EXISTING R/W MARKER
RIGHT OF WAY MONUMENT EXISTING/PROPOSED
UTILITY TEST HOLE — TH
EXISTING ROAD
RAILROAD
FENCE (CONTROLLED ACCESS)
FENCE (EXCEPT STONE AND HEDGE)
TREE LINE
TREES
PIPE CULVERT
CULVERT
BRIDGE
BUILDINGS — 1-S FRAME, 1-S BRICK, SHED, 2-S BRICK
GUARDRAIL — END TREATMENT, GUARDRAIL, TERMINAL SECTION

EXISTING	PROPOSED
LIGHTING POLE	
POWER POLE	
JOINT POWER & TELEPHONE POLE	
TELEPHONE & TELEGRAPH POLE	
ANCHOR, POWER OR TELEPHONE	
STUB POWER	
STUB TELEPHONE	
WATER MAIN — WM	6" WM
GAS MAIN — GM	6" GM
TELEPHONE DUCT — T	T
ELECTRIC DUCT — E	E
DIRECT BURIAL TV CABLE — TV	TV
SANITARY SEWER (WITH MANHOLE) — SAN	SAN
STORM SEWER (WITH MANHOLE) — STORM	STORM
DIRECT BURIAL ELECTRIC CABLE — E	E
DIRECT BURIAL TELEPHONE CABLE — T	T
OVERHEAD WIRE	
TRAFFIC LIGHTS	
ELECTRIC MANHOLE — EMH	EMH
TELEPHONE MANHOLE — TMH	TMH
STONE FENCE	
HEDGE FENCE	
SWAMP OR MARSH	
SPRINGS	
SINKHOLE	
QUARRY SITE	
BLUE LINE STREAM	
INTERMITTENT STREAM OR DITCH	
LAKES OR PONDS	
REGULATED FLOODWAY	
NORTH POINT	

GUARDRAIL (KY 224)							
RT/LT	BEGINNING STATION	BEGINNING TREATMENT	ENDING STATION	ENDING TREATMENT	PAY LENGTH	GUARDRAIL TYPE	REMOVE GUARDRAIL
LT	45+31	END TREAT TY. 2A	48+89	SEE BRIDGE PLANS	350'	STEEL W BEAM	375'
RT	45+40	TIE TO EXISTING	48+60	SEE BRIDGE PLANS	375	STEEL W BEAM	400'
RT	51+09	SEE BRIDGE PLANS	52+00	MATCH LINE	75'	STEEL W BEAM	100'
LT	51+43	SEE BRIDGE PLANS	52+00	MATCH LINE	50'	STEEL W BEAM	62.5'
GUARDRAIL (WKY PARKWAY)							
RT/LT	BEGINNING STATION	BEGINNING TREATMENT	ENDING STATION	ENDING TREATMENT	PAY LENGTH	GUARDRAIL TYPE	REMOVE GUARDRAIL
LT	7271+64	THRIE BM GR TR TL3	7272+14	TIE TO EXISTING	37.5'	STEEL W BEAM	100'
RT	7271+16	TIE TO EXISTING	7271+66	THRIE BM GR TR TL3	37.5'	STEEL W BEAM	75'

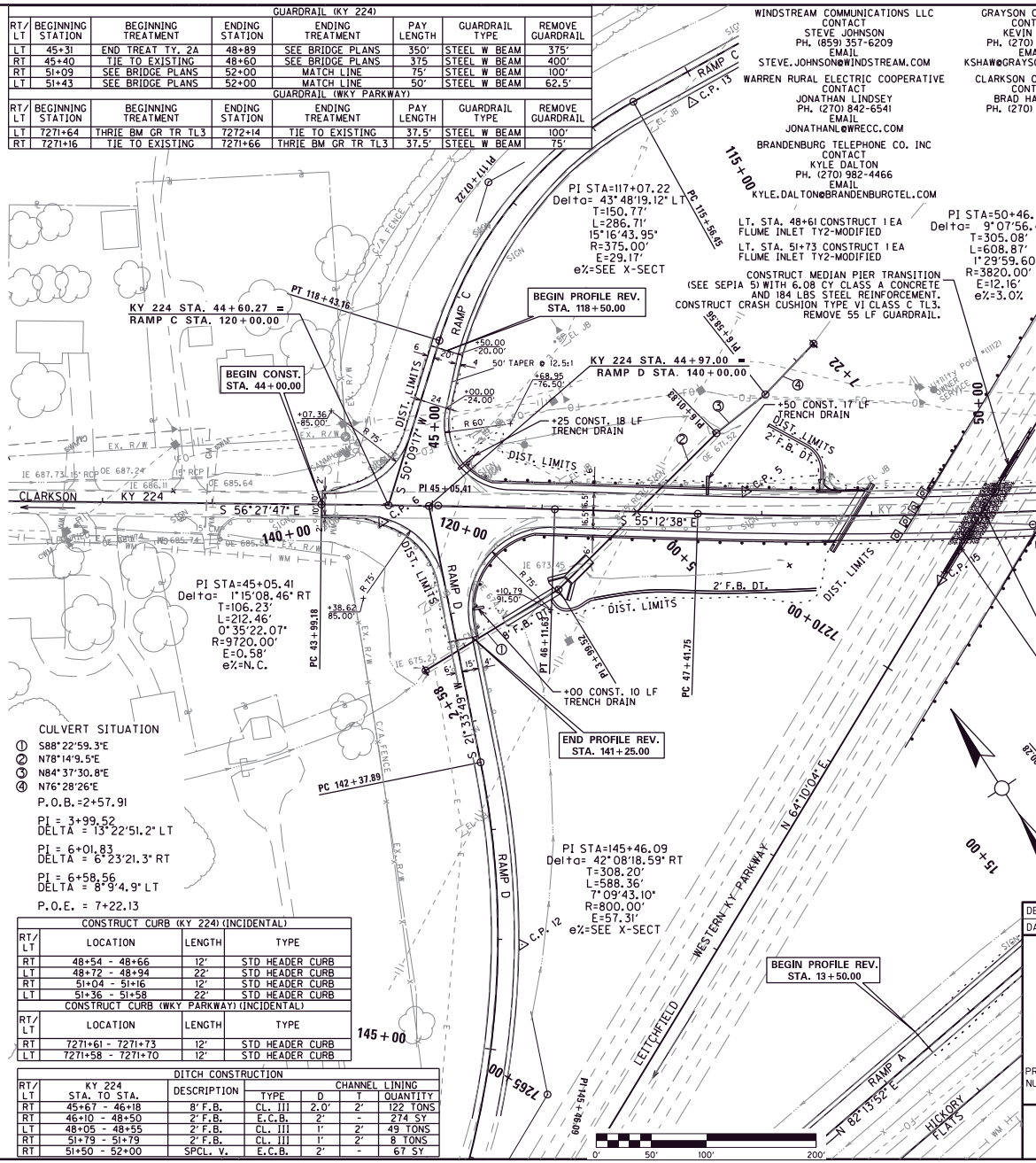

CONSTRUCT CURB (KY 224) (INCIDENTAL)			
RT/LT	LOCATION	LENGTH	TYPE
RT	48+54 - 48+66	12'	STD HEADER CURB
LT	48+72 - 48+94	22'	STD HEADER CURB
RT	51+04 - 51+16	12'	STD HEADER CURB
LT	51+36 - 51+58	22'	STD HEADER CURB
CONSTRUCT CURB (WKY PARKWAY) (INCIDENTAL)			
RT/LT	LOCATION	LENGTH	TYPE
RT	7271+61 - 7271+73	12'	STD HEADER CURB
LT	7271+58 - 7271+70	12'	STD HEADER CURB

DITCH CONSTRUCTION						
RT/LT	KY 224 STA. TO STA.	DESCRIPTION	CHANNEL LINING			
			TYPE	D	T	QUANTITY
RT	45+67 - 46+18	8' F.B.	CL. III	2.0'	2'	122 TONS
RT	46+10 - 48+50	2' F.B.	E.C.B.	2'	-	274 SY
LT	48+05 - 48+55	2' F.B.	CL. III	1'	2'	49 TONS
RT	51+79 - 51+79	2' F.B.	CL. III	1'	2'	8 TONS
RT	51+50 - 52+00	SPCL. V.	E.C.B.	2'	-	67 SY

DESIGNED BY:
DATE SUBMITTED:

Commonwealth of Kentucky
DEPARTMENT OF HIGHWAYS
COUNTY OF
GRAYSON

PROJECT NUMBERS: NHPP 9001 (014)
FD52 043 9001 111-115

KY 224
PLAN SHEET
STA. 44+00 TO STA. 52+00

FILE NAME: G:\ENGR\HD\365_10 AND 1365_11 GRAYSON WK\CAD\PLAN\R003.DGN
USER: phoward
DATE PLOTTED: January 6, 2022
E-SHEET NAME:
MicroStation v8.11.9.459

COUNTY OF	ITEM NO.	SHEET NO.
GRAYSON	4-20001 4-20002	R4

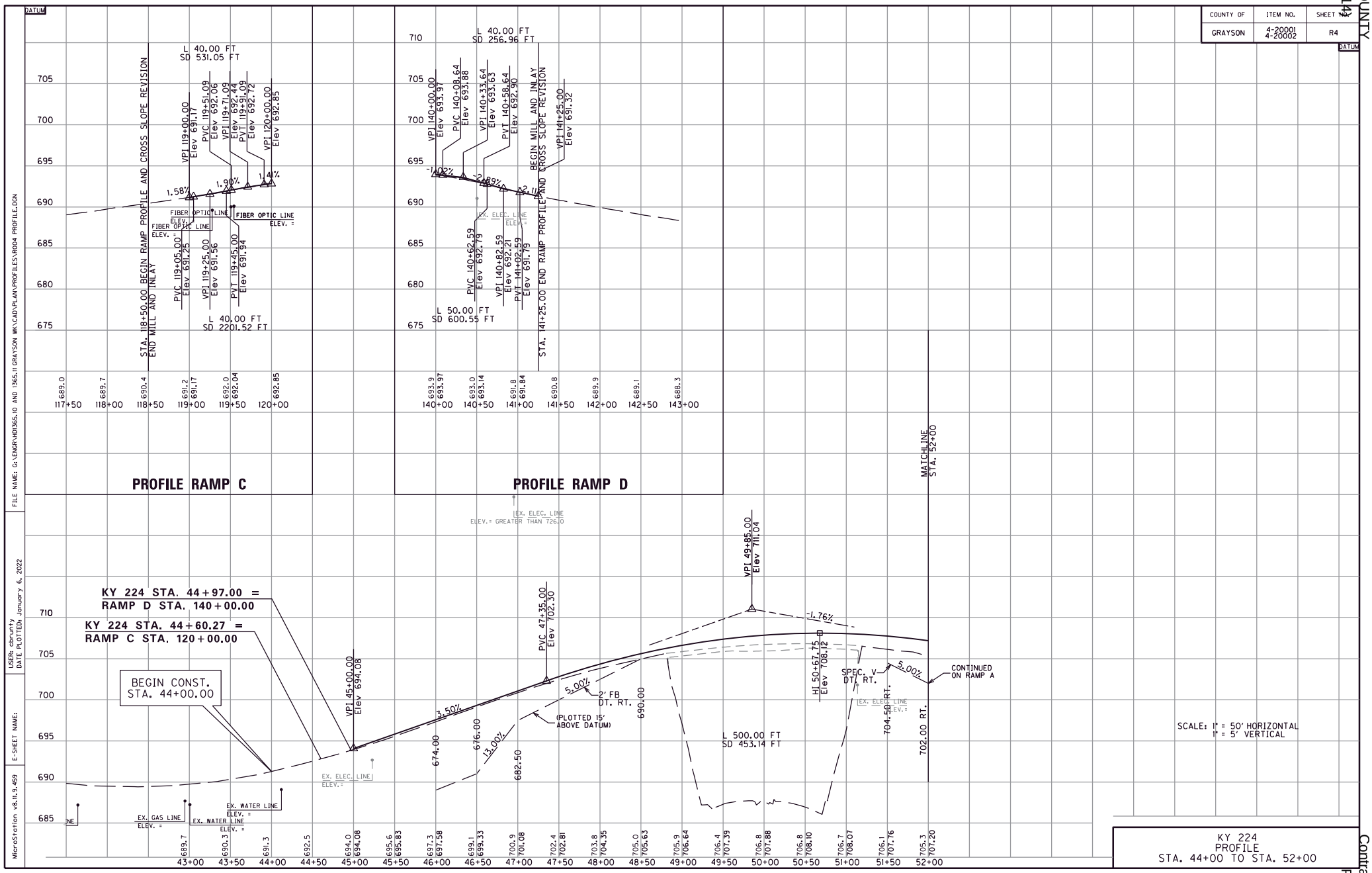

COUNTY OF	ITEM NO.	SHEET NO.
GRAYSON	4-20001 4-20002	R5

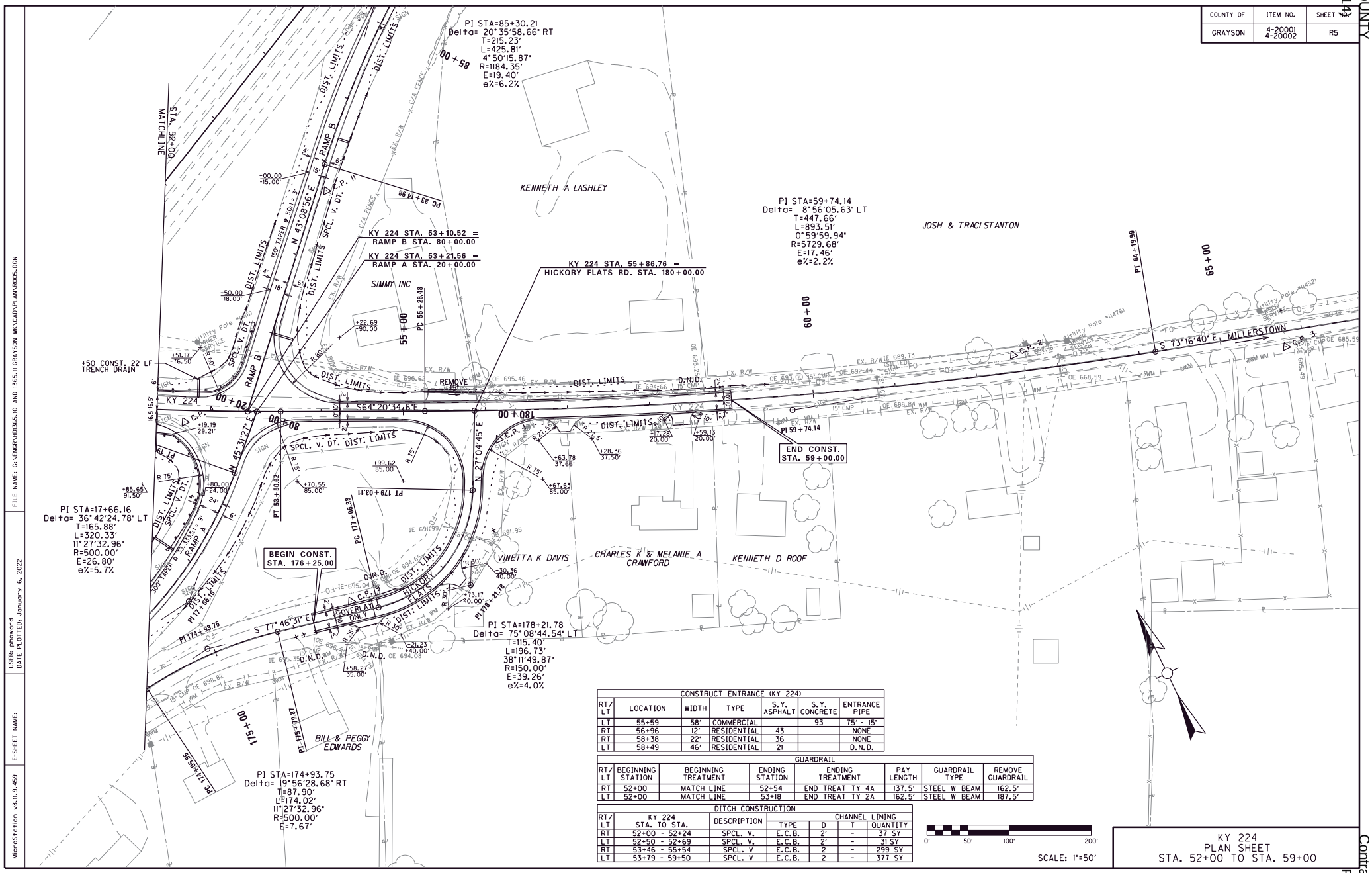

CONSTRUCT ENTRANCE (KY 224)						
RT/ LT	LOCATION	WIDTH	TYPE	S.Y. ASPHALT	S.Y. CONCRETE	ENTRANCE PIPE
LT	55+59	58'	COMMERCIAL		93	75' - 15"
RT	56+96	12'	RESIDENTIAL	43		NONE
RT	58+38	22'	RESIDENTIAL	36		NONE
LT	58+49	46'	RESIDENTIAL	21		D.N.D.

GUARDRAIL							
RT/ LT	BEGINNING STATION	BEGINNING TREATMENT	ENDING STATION	ENDING TREATMENT	PAY LENGTH	GUARDRAIL TYPE	REMOVE GUARDRAIL
RT	52+00	MATCH LINE	52+54	END TREAT TY 4A	137.5'	STEEL W BEAM	162.5'
LT	52+00	MATCH LINE	53+18	END TREAT TY 2A	162.5'	STEEL W BEAM	187.5'

DITCH CONSTRUCTION						
RT/ LT	KY 224 STA. TO STA.	DESCRIPTION	CHANNEL LINING			
			TYPE	D	T	QUANTITY
RT	52+00 - 52+24	SPCL. V.	E.C.B.	2'	-	37 SY
LT	52+50 - 52+69	SPCL. V.	E.C.B.	2'	-	31 SY
RT	53+46 - 55+54	SPCL. V	E.C.B.	2	-	299 SY
LT	53+79 - 59+50	SPCL. V	E.C.B.	2	-	377 SY

KY 224
PLAN SHEET
STA. 52+00 TO STA. 59+00

FILE NAME: G:\ENGR\H0365.10 AND 1365.11 GRAYSON MK\CAD\PLAN\R005.DGN
USER: phoward
DATE PLOTTED: January 6, 2022
E-SHEET NAME:
MicroStation v8.11.9.459

COUNTY OF	ITEM NO.	SHEET NO.
GRAYSON	4-20001 4-20002	R6

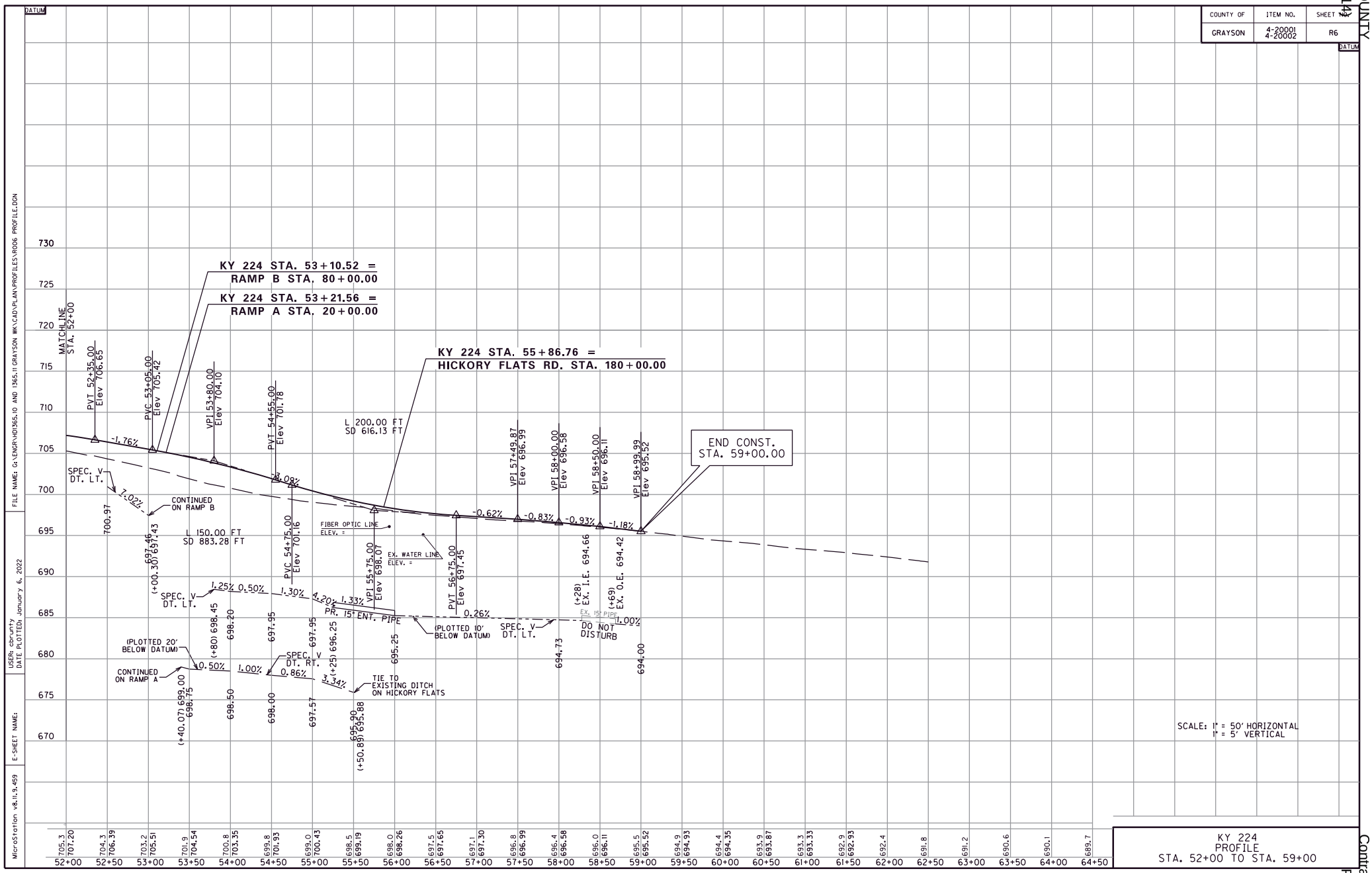

FILE NAME: G:\ENGR\HD1365.10 AND 1365.11 GRAYSON MK\CAD\PLAN\PROFILES\R006 PROFILE.DGN
USER: cbrunty
DATE PLOTTED: January 6, 2022
E-SHEET NAME:
MicroStation v8.11.9.459

COUNTY OF	ITEM NO.	SHEET NO.
GRAYSON	4-20001 4-20002	R7

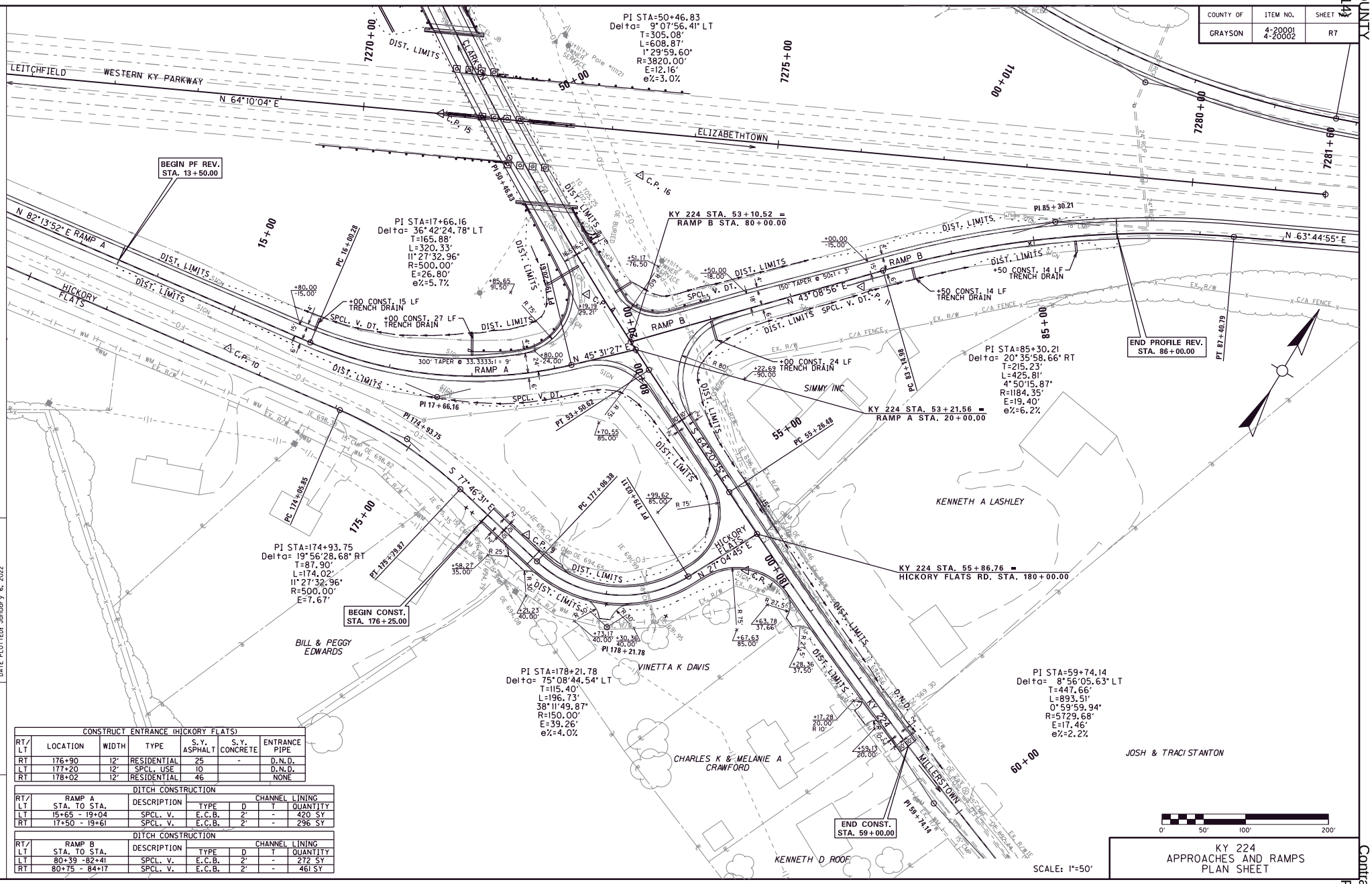

KY 224
APPROACHES AND RAMPS
PLAN SHEET

CONSTRUCT ENTRANCE (HICKORY FLATS)						
RT/LT	LOCATION	WIDTH	TYPE	S.Y. ASPHALT	S.Y. CONCRETE	ENTRANCE PIPE
RT	176+90	12'	RESIDENTIAL	25	-	D.N.D.
LT	177+20	12'	SPCL. USE	10		D.N.D.
RT	178+02	12'	RESIDENTIAL	46		NONE

DITCH CONSTRUCTION						
RT/LT	RAMP A STA. TO STA.	DESCRIPTION	CHANNEL LINING			
			TYPE	D	T	QUANTITY
LT	15+65 - 19+04	SPCL. V.	E.C.B.	2'	-	420 SY
RT	17+50 - 19+61	SPCL. V.	E.C.B.	2'	-	296 SY

DITCH CONSTRUCTION						
RT/LT	RAMP B STA. TO STA.	DESCRIPTION	CHANNEL LINING			
			TYPE	D	T	QUANTITY
LT	80+39 -82+41	SPCL. V.	E.C.B.	2'	-	272 SY
RT	80+75 - 84+17	SPCL. V.	E.C.B.	2'	-	461 SY

FILE NAME: G:\ENGR\H0365_10 AND 1365_11 GRAYSON WK\CAD\PLAN\R007.DGN
USER: cbrunty
DATE PLOTTED: January 6, 2022
E-SHEET NAME:
MicroStation v8.11.9.459

COUNTY OF	ITEM NO.	SHEET NO.
GRAYSON	4-20001 4-20002	R8

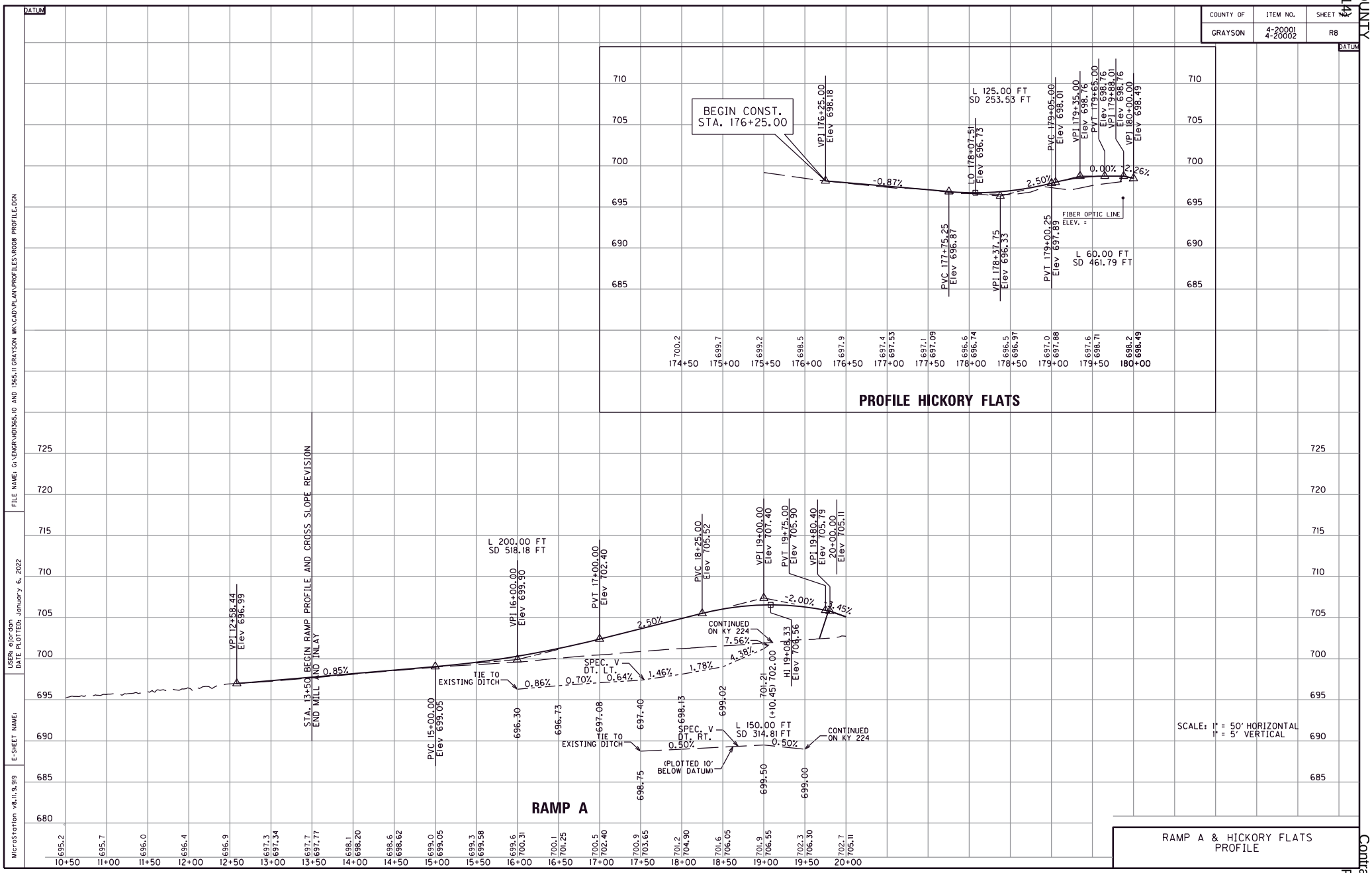

RAMP A & HICKORY FLATS
PROFILE

COUNTY OF	ITEM NO.	SHEET NO.
GRAYSON	4-20001 4-20002	R9

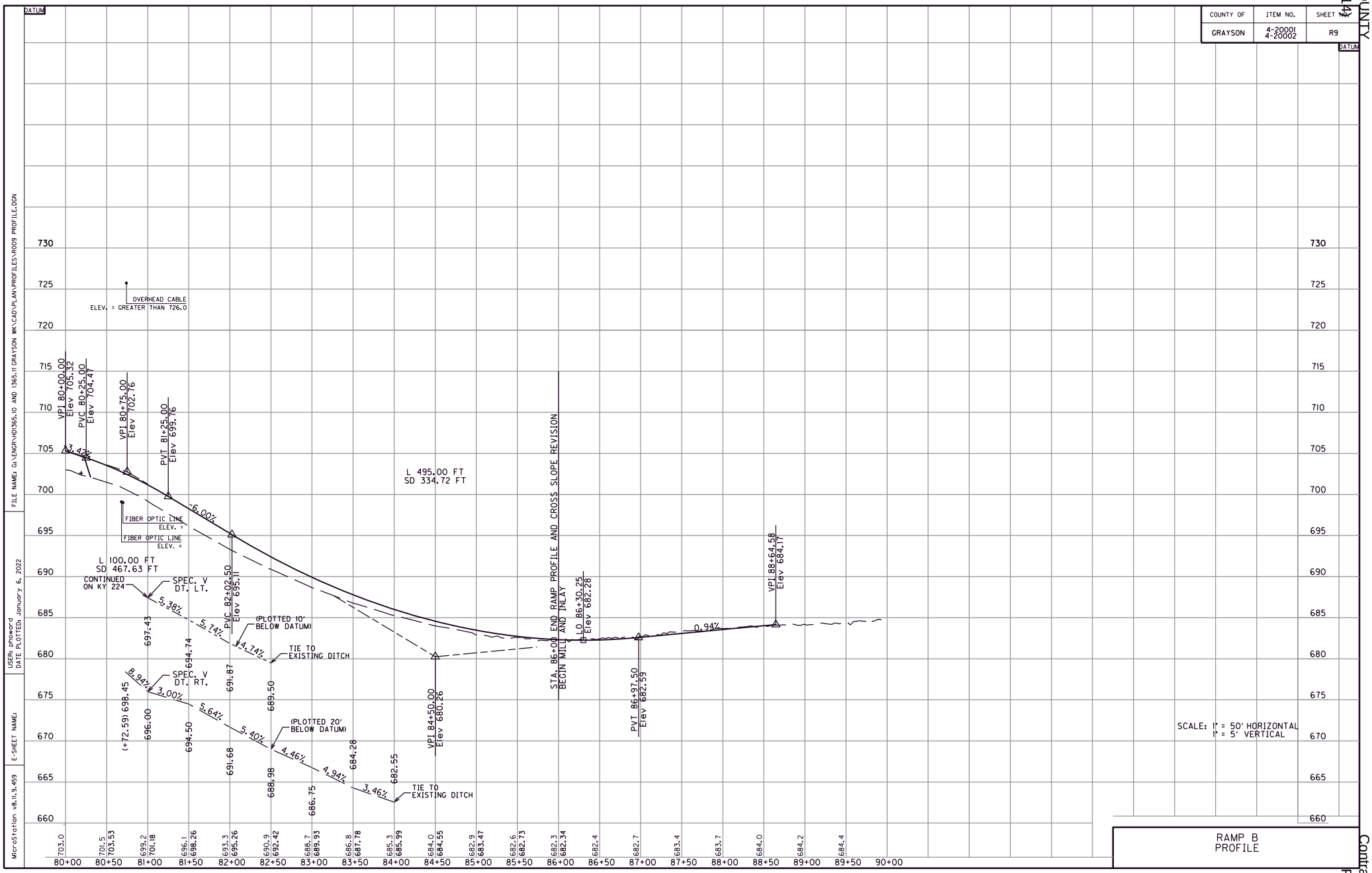

RAMP B
PROFILE

FILE NAME: G:\ENGR\H0365.10 AND 1365.11 GRAYSON MK\CAD\PLAN\PROFILES\R009 PROFILE.DGN
USER: phoward
DATE PLOTTED: January 6, 2022
E-SHEET NAME:
MicroStation v8.11.9.459

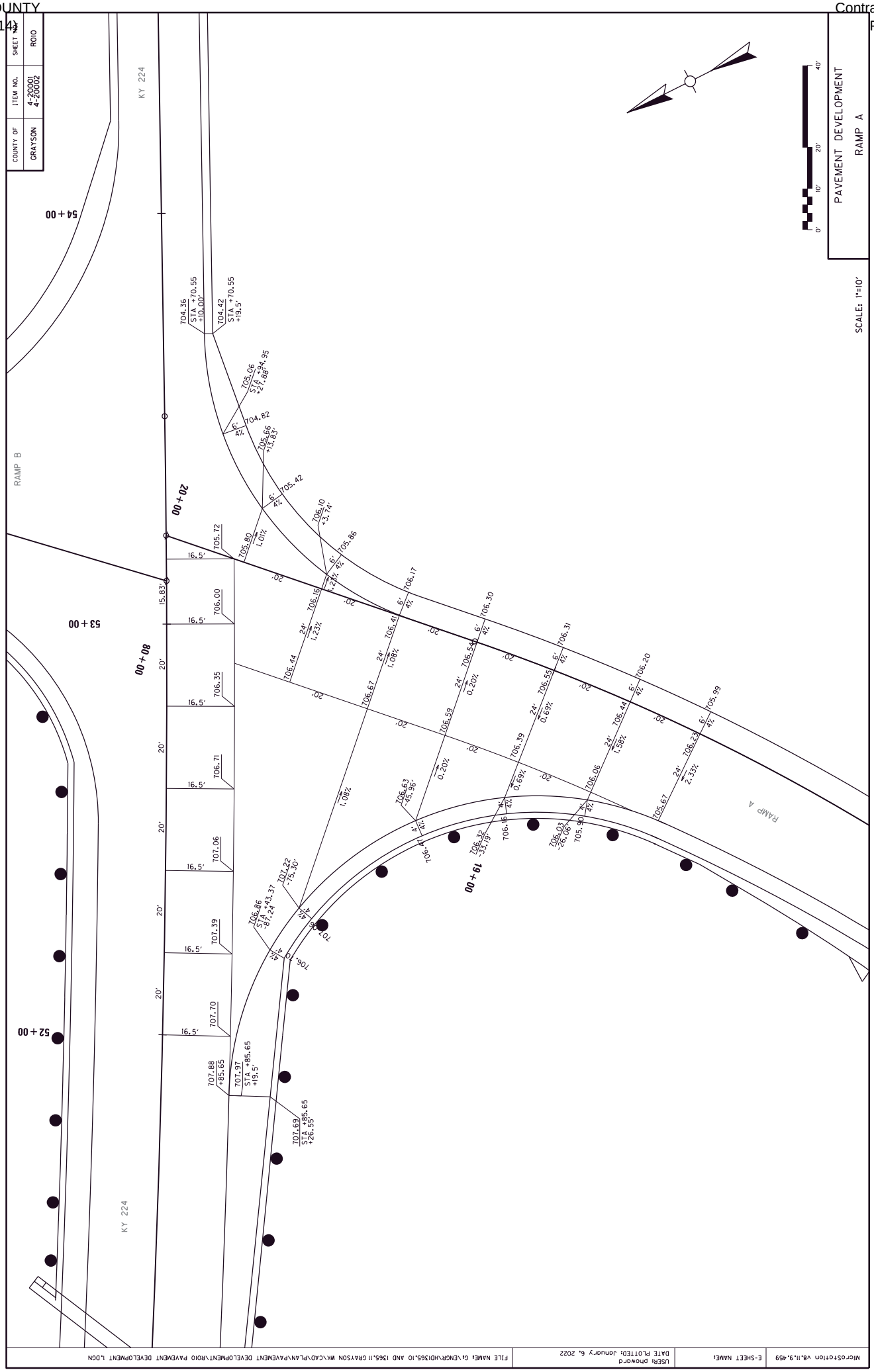
COUNTY OF
GRAYSON
ITEM NO.
4-20001
4-20002
SHEET NO.
ROIO
PAVEMENT DEVELOPMENT
RAMP A
SCALE: 1"=10'
0'
10'
20'
40'
KY 224
RAMP B
RAMP A
54+00
53+00
52+00
20+00
80+00
19+00
704.36
STA +70.55
+10.00'
704.42
STA +70.55
+19.5'
705.06
STA +94.95
+27.88'
704.82
705.66
+13.83'
705.42
706.10
+3.74
705.86
705.72
705.80
706.00
706.35
706.71
707.06
707.39
707.70
707.88
+85.65
707.97
STA +85.65
+19.5'
707.69
STA +85.65
+26.55'
706.17
706.30
706.31
706.20
705.99
706.16
706.41
706.44
706.67
706.54
706.59
706.55
706.44
706.23
706.39
706.06
705.67
706.63
-45.96'
706.32
-33.79'
706.03
-26.06'
705.90
706.86
STA +43.37
-31.24'
707.22
-15.30'
706.10
706.16
706.47
16.5'
20'
15.83'
6'
4%
24'
1.23%
1.08%
0.20%
0.69%
1.56%
2.33%
1.01%
-2.3%

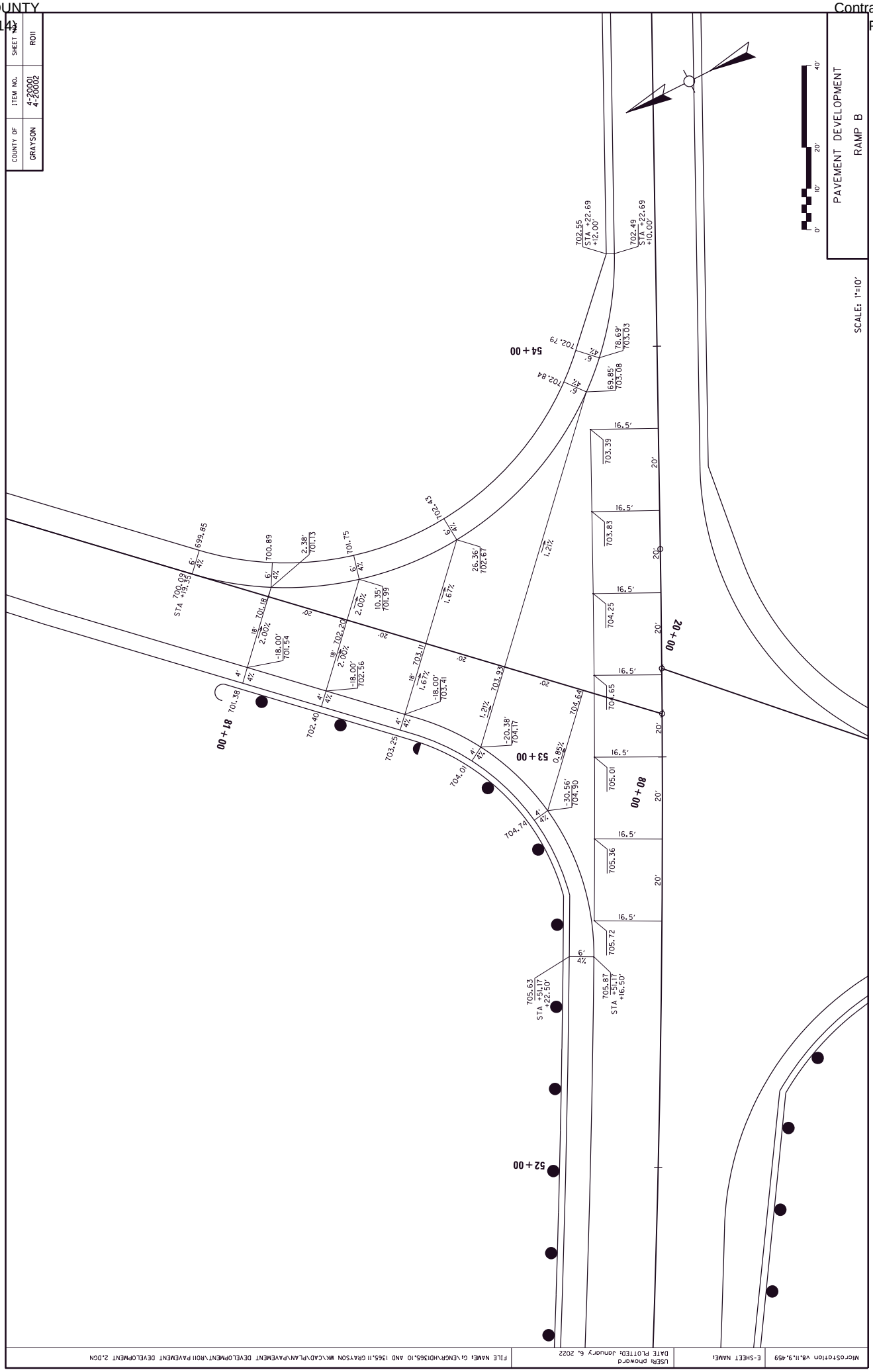
COUNTY OF
GRAYSON
ITEM NO.
4-20001
4-20002
SHEET NO.
R011
PAVEMENT DEVELOPMENT
RAMP B
SCALE: 1"=10'
0' 10' 20' 40'
52+00
53+00
54+00
20+00
80+00
81+00
STA +49.35
700.09
699.85
700.18
700.89
702.29
701.13
702.40
701.15
703.25
702.43
703.11
704.01
703.93
704.74
704.64
702.55
STA +22.69
+12.00'
702.49
STA +22.69
+10.00'
702.79
702.84
703.39
703.83
704.25
704.65
705.01
705.36
705.12
705.63
STA +51.17
+22.50'
705.87
STA +51.17
+16.50'
16.5'
20'
2.38'
10.35'
26.36'
-18.00'
-20.38'
-30.56'
69.85'
78.69'
2.00%
1.67%
1.21%
0.85%
4%
6'
18'
4'
20'
MicroStation V8.11.9.459
E-SHEET NAME:
USER Dhoward
DATE PLOTTED: January 6, 2022
FILE NAME: G:\ENGR\HD1365.10 AND 1365.11 GRAYSON WK\CAD\PLAN\PAVEMENT DEVELOPMENT\R011 PAVEMENT DEVELOPMENT 2.DGN

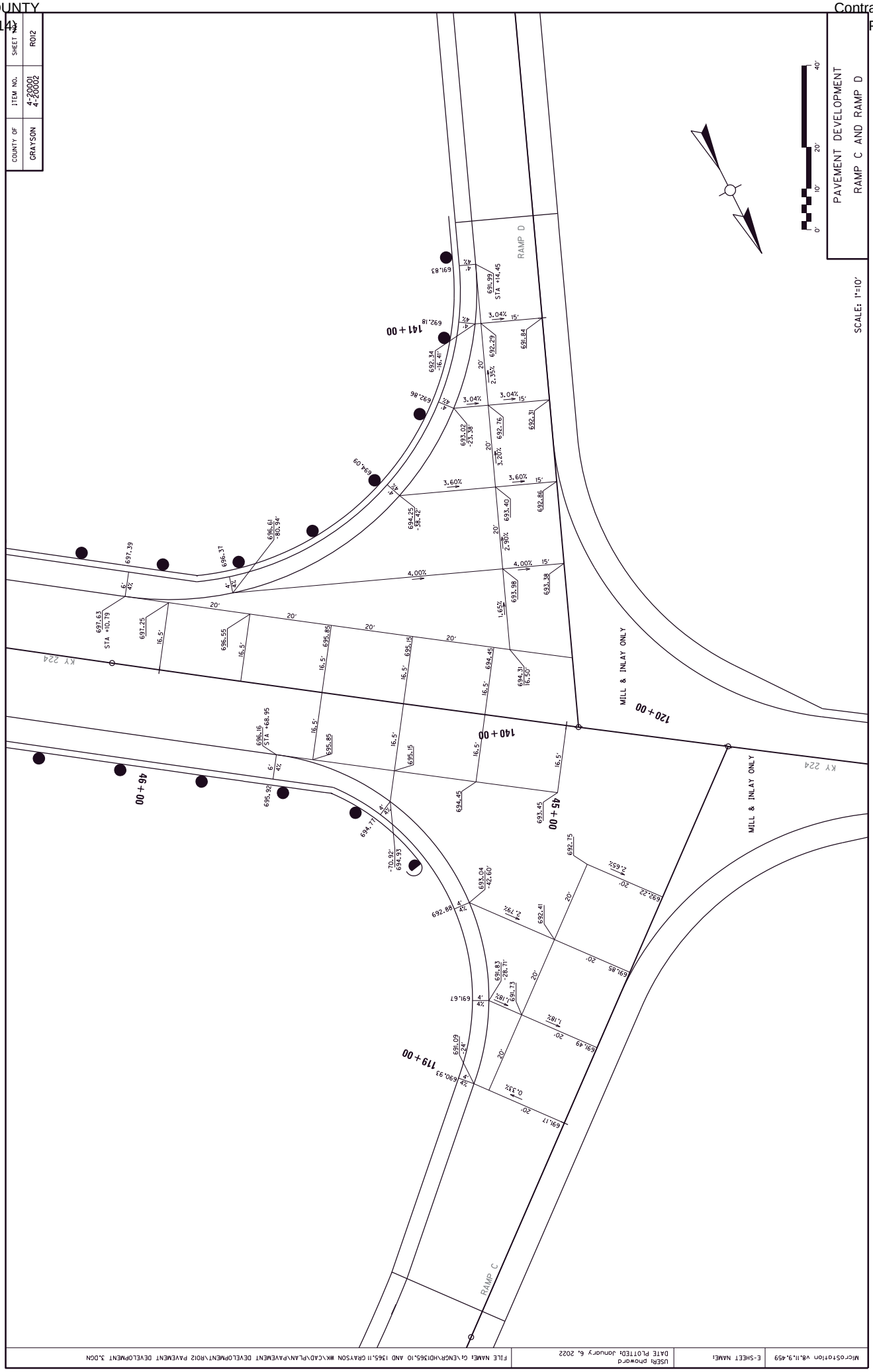
COUNTY OF
GRAYSON
ITEM NO.
4-20001
4-20002
SHEET NO.
RO12
PAVEMENT DEVELOPMENT
RAMP C AND RAMP D
SCALE: 1"=10'
0' 10' 20' 40'
RAMP D
RAMP C
MILL & INLAY ONLY
MILL & INLAY ONLY
KY 224
KY 224
STA +10.79
STA +68.95
STA +14.45
49 + 00
45 + 00
140 + 00
120 + 00
119 + 00
141 + 00
697.63
697.39
697.25
696.37
696.55
696.16
695.92
695.85
695.15
694.77
694.93
694.45
694.31
693.98
693.40
693.38
693.02
692.86
692.76
692.34
692.29
692.22
692.18
692.88
692.41
692.31
692.75
691.99
691.84
691.83
691.73
691.67
691.85
691.49
691.17
691.09
690.93
696.61'
-80.94'
694.25'
-38.42'
693.02'
-23.38'
692.34'
-16.41'
691.99'
694.31'
16.50'
693.04'
-42.60'
691.83'
-28.71'
691.09'
-24'
-70.92'
694.93'
3.60%
4.00%
3.04%
2.35%
3.20%
2.90%
1.65%
2.79%
2.65%
1.18%
0.33%
MICROSTATION V8.11.9.459
E-SHEET NAME:
USER PNOWARD
DATE PLOTTED: JANUARY 6, 2022
FILE NAME: G:\ENGR\HD1365.10 AND 1365.11 GRAYSON WK\CAD\PLAN\PAVEMENT DEVELOPMENT\RO12 PAVEMENT DEVELOPMENT 3.DGN

COUNTY OF	ITEM NO.	SHEET NO.
GRAYSON	4-20001 4-20002	R013

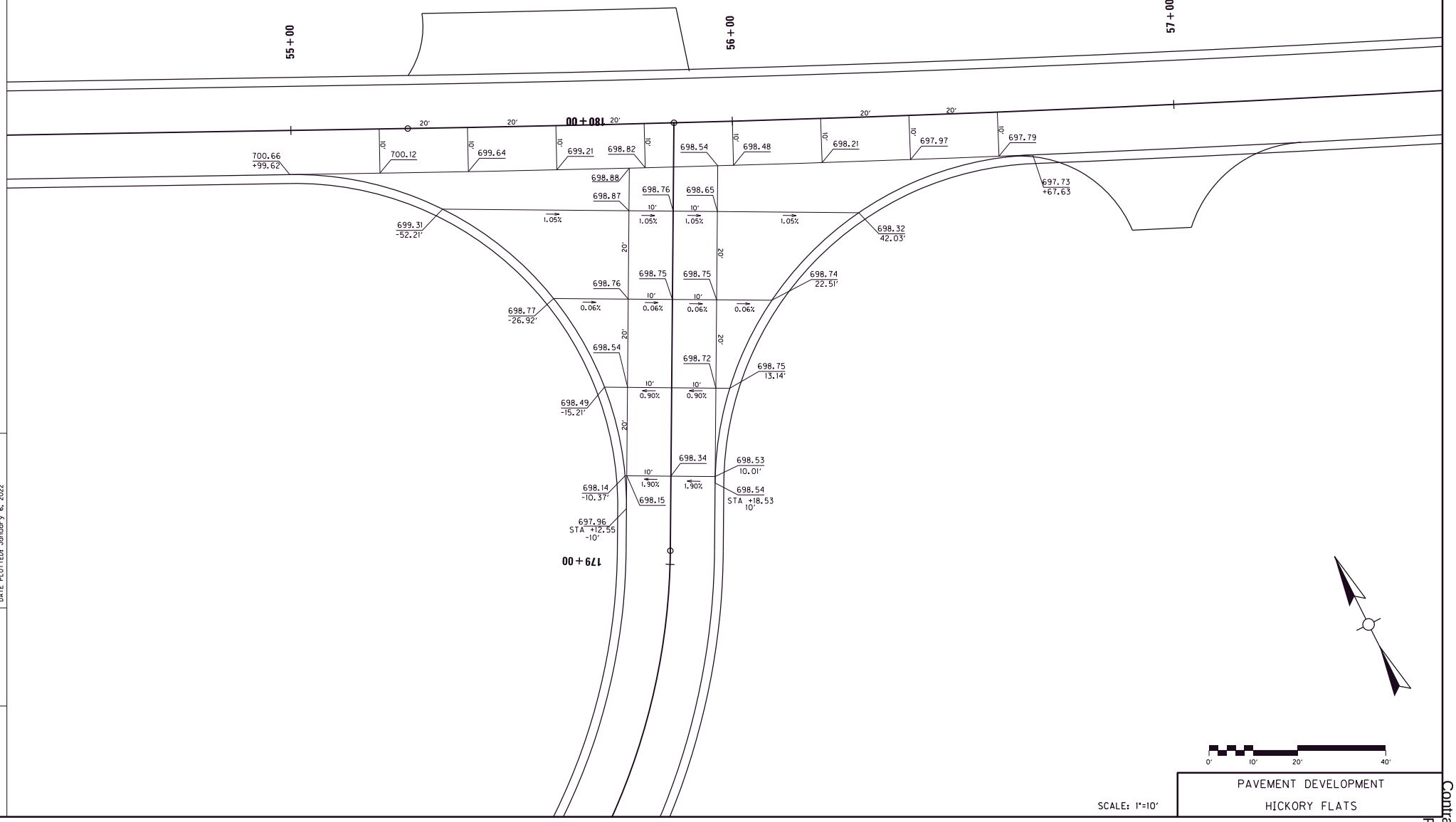

SCALE: 1"=10'

PAVEMENT DEVELOPMENT
HICKORY FLATS

MicroStation v8.11.9.459 | E-SHEET NAME: | USER: phoward DATE PLOTTED: January 6, 2022 | FILE NAME: G:\ENGR\H0365.10 AND 1365.11 GRAYSON WK\CAD\PLAN\PAVEMENT DEVELOPMENT\R013 PAVEMENT DEVELOPMENT 4.DGN

COUNTY OF	ITEM NO.	SHEET NO.
GRAYSON	4-20001 4-20002	R14

SEE PROJECT PROPOSAL FOR GENERAL TRAFFIC CONTROL NOTES.

PHASE I MAINTENACE OF TRAFFIC NOTES

1. KY 224 STATION 53+50 TO STATION 59+00 - USING FLAGGERS AND ALTERNATING LANE CLOSURES, PERFORM ANY REQUIRED EXCAVATION OR EMBANKMENT, EMBANKMENT UNDERCUT AND CUT PROPOSED DITCHES. REMOVE THE EXISTING SHOULDER TO THE PROPOSED SUBGRADE AND PLACE A DGA WEDGE MATCHING THE GRADE OF THE EXISTING MAINLINE PAVEMENT.
2. HICKORY FLATS ROAD ENTIRE LENGTH - USING FLAGGERS AND ALTERNATING LANE CLOSURES, PERFORM ANY REQUIRED EXCAVATION OR EMBANKMENT, EMBANKMENT UNDERCUT AND CUT PROPOSED DITCHES. REMOVE THE EXISTING SHOULDER TO THE PROPOSED SUBGRADE AND PLACE A DGA WEDGE MATCHING THE GRADE OF THE EXISTING MAINLINE PAVEMENT.
3. RAMPS A & B ENTIRE LENGTH - USING TRAFFIC DRUMS SHIFT TRAFFIC TO THE LEFT SIDE OF THE RAMP AND PERFORM ANY REQUIRED EXCAVATION OR EMBANKMENT, EMBANKMENT UNDERCUT AND CUT PROPOSED DITCHES. REMOVE THE EXISTING SHOULDER TO THE PROPOSED SUBGRADE AND PLACE A DGA WEDGE MATCHING THE GRADE OF THE EXISTING MAINLINE PAVEMENT.

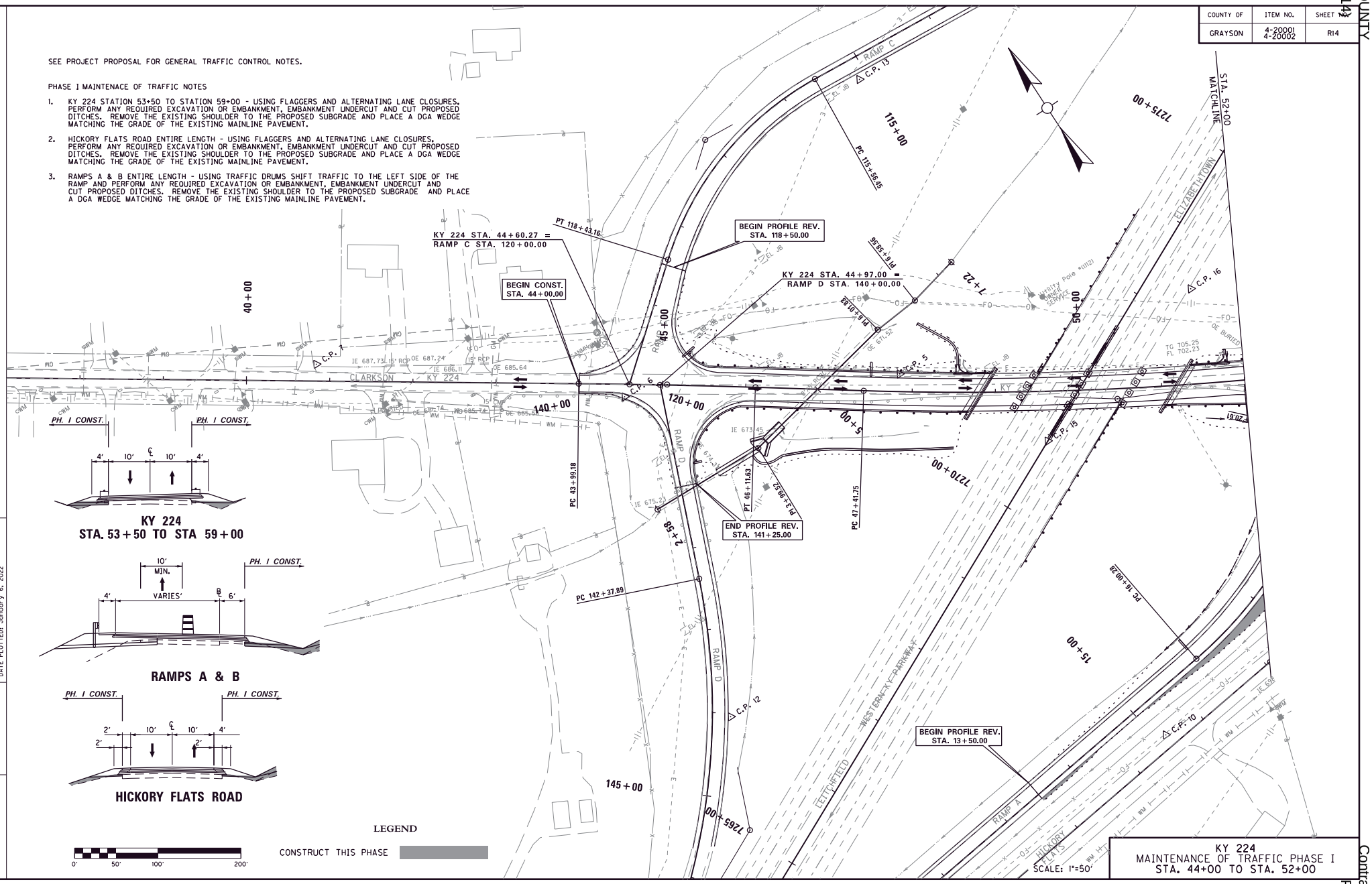

KY 224
STA. 53+50 TO STA 59+00

RAMPS A & B

HICKORY FLATS ROAD

LEGEND

CONSTRUCT THIS PHASE

0' 50' 100' 200'

SCALE: 1"=50'

KY 224
MAINTENANCE OF TRAFFIC PHASE I
STA. 44+00 TO STA. 52+00

FILE NAME: G:\ENGR\H0365.10 AND 1365.11 GRAYSON WK\CAD\PLAN\MOT\R014 MOT PH-I.DGN
USER: phoward
DATE PLOTTED: January 6, 2022
E-SHEET NAME:
MicroStation v8.11.9.459

COUNTY OF	ITEM NO.	SHEET NO.
GRAYSON	4-20001 4-20002	R15

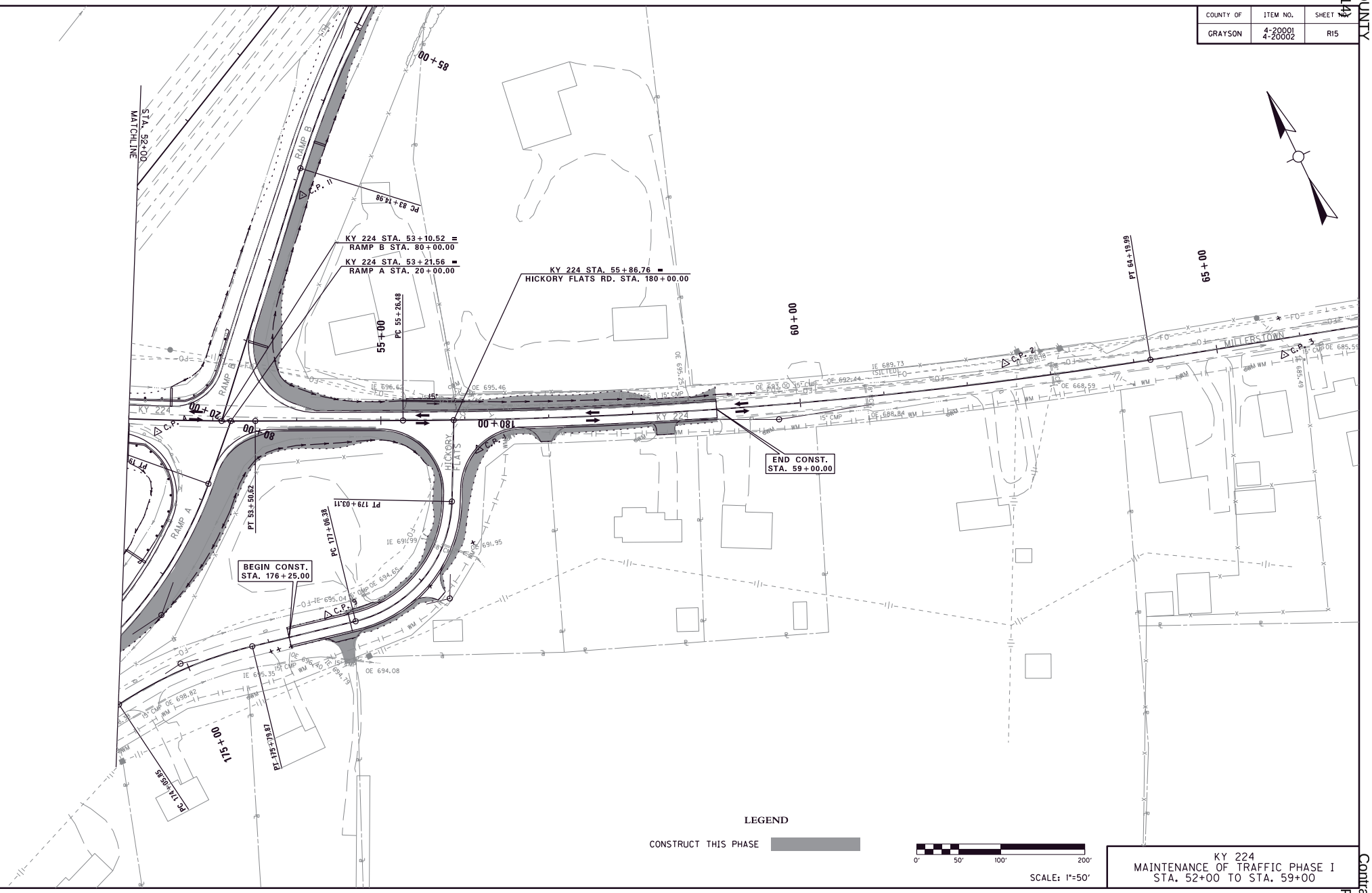

KY 224
MAINTENANCE OF TRAFFIC PHASE I
STA. 52+00 TO STA. 59+00

MicroStation v8.11.9.459 | E-SHEET NAME: | USER: phoward DATE PLOTTED: January 6, 2022 | FILE NAME: G:\ENGR\H0365.10 AND 1365.11 GRAYSON WK\CAD\PLAN\MOT\R015 MOT PH-2.DGN

COUNTY OF	ITEM NO.	SHEET NO.
GRAYSON	4-20001 4-20002	R16

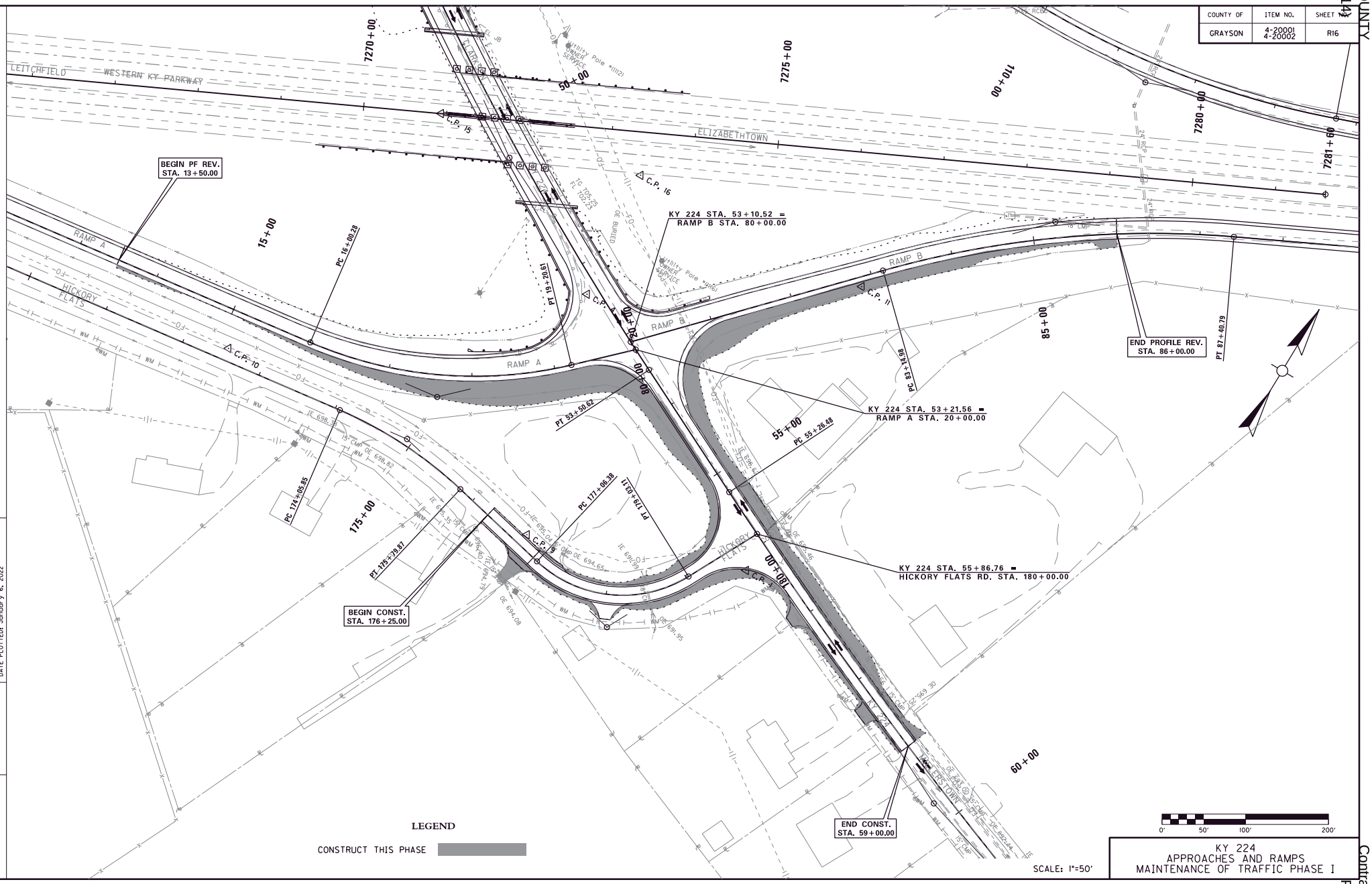

KY 224
APPROACHES AND RAMPS
MAINTENANCE OF TRAFFIC PHASE I

MicroStation v8.11.9.459 | E-SHEET NAME: | USER: phoward DATE PLOTTED: January 6, 2022 | FILE NAME: G:\ENGR\HD365.10 AND 365.11 GRAYSON WK\CAD\PLAN\MOT\R016 MOT PH-3.DGN

COUNTY OF	ITEM NO.	SHEET NO.
GRAYSON	4-20001 4-20002	R17

SEE PROJECT PROPOSAL FOR GENERAL TRAFFIC CONTROL NOTES.

PHASE IA MAINTENACE OF TRAFFIC NOTES

1. KY 224 STATION 45+50 TO STATION 52+50 - USING TEMPORARY SIGNALS, AND TEMPORARY BARRIER WALL, SHIFT TRAFFIC TO A ONE LANE DIVERSION IN THE WESTBOUND LANE OF KY 224. REMOVE THE OUTSIDE BEAM AND A PORTION OF THE DECK OF THE EXISTING BRIDGE. PERFORM ANY REQUIRED EXCAVATION OR EMBANKMENT. EMBANKMENT UNDERCUT AND CUT PROPOSED DITCHES ON THE RIGHT SIDE OF KY 224. REMOVE THE EXISTING SHOULDER TO THE PROPOSED SUBGRADE AND PLACE A DGA WEDGE MATCHING THE GRADE OF THE EXISTING MAINLINE PAVEMENT.

   WHEN REMOVAL OF THE PORTION OF THE EXISTING BRIDGE PRESENTS AN OVERHEAD DANGER TO WK 9001 TRAFFIC, CLOSE THE INSIDE LANE AND CHANNELIZE TRAFFIC ONTO THE INTERCHANGE RAMPS CLOSING THAT DIRECTION OF TRAVEL ON WK 9001 THROUGH THE INTERCHANGE VICINITY. USE FLAGGERS TO CONTROL TRAFFIC AT THE RAMP TERMINALS UNTIL WK 9001 TRAFFIC IS RESTORED.

2. RAMPS A, B & D ENTIRE LENGTH - USING TRAFFIC DRUMS SHIFT TRAFFIC TO THE RIGHT SIDE OF THE RAMP AND PERFORM ANY REQUIRED EXCAVATION OR EMBANKMENT. EMBANKMENT UNDERCUT AND CUT PROPOSED DITCHES ON THE LEFT SIDE. REMOVE THE EXISTING SHOULDER TO THE PROPOSED SUBGRADE AND PLACE A DGA WEDGE MATCHING THE GRADE OF THE EXISTING MAINLINE PAVEMENT.

3. PROTECT THE EXISTING LIGHTING CONDUIT TO CIRCUIT 6 AND MAINTAIN ALL LIGHTING THIS PHASE.

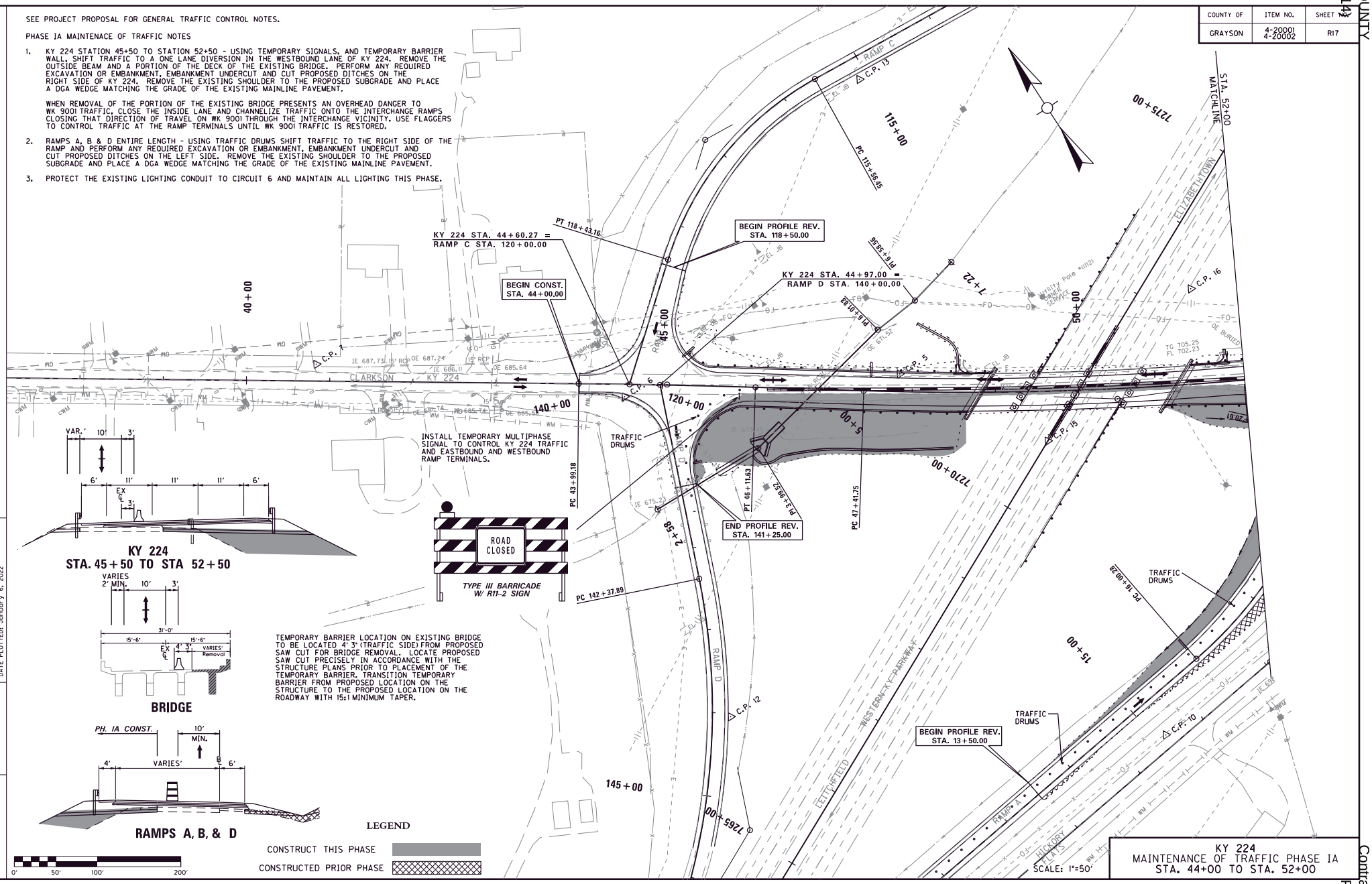

KY 224
MAINTENANCE OF TRAFFIC PHASE IA
STA. 44+00 TO STA. 52+00

FILE NAME: G:\ENGR\H0365.10 AND 1365.11 GRAYSON WK\CAD\PLAN\MOT\R017 MOT PHIA-1.DGN
USER: phoward
DATE PLOTTED: January 6, 2022
E-SHEET NAME:
MicroStation v8.11.9.459

COUNTY OF	ITEM NO.	SHEET NO.
GRAYSON	4-20001 4-20002	R18

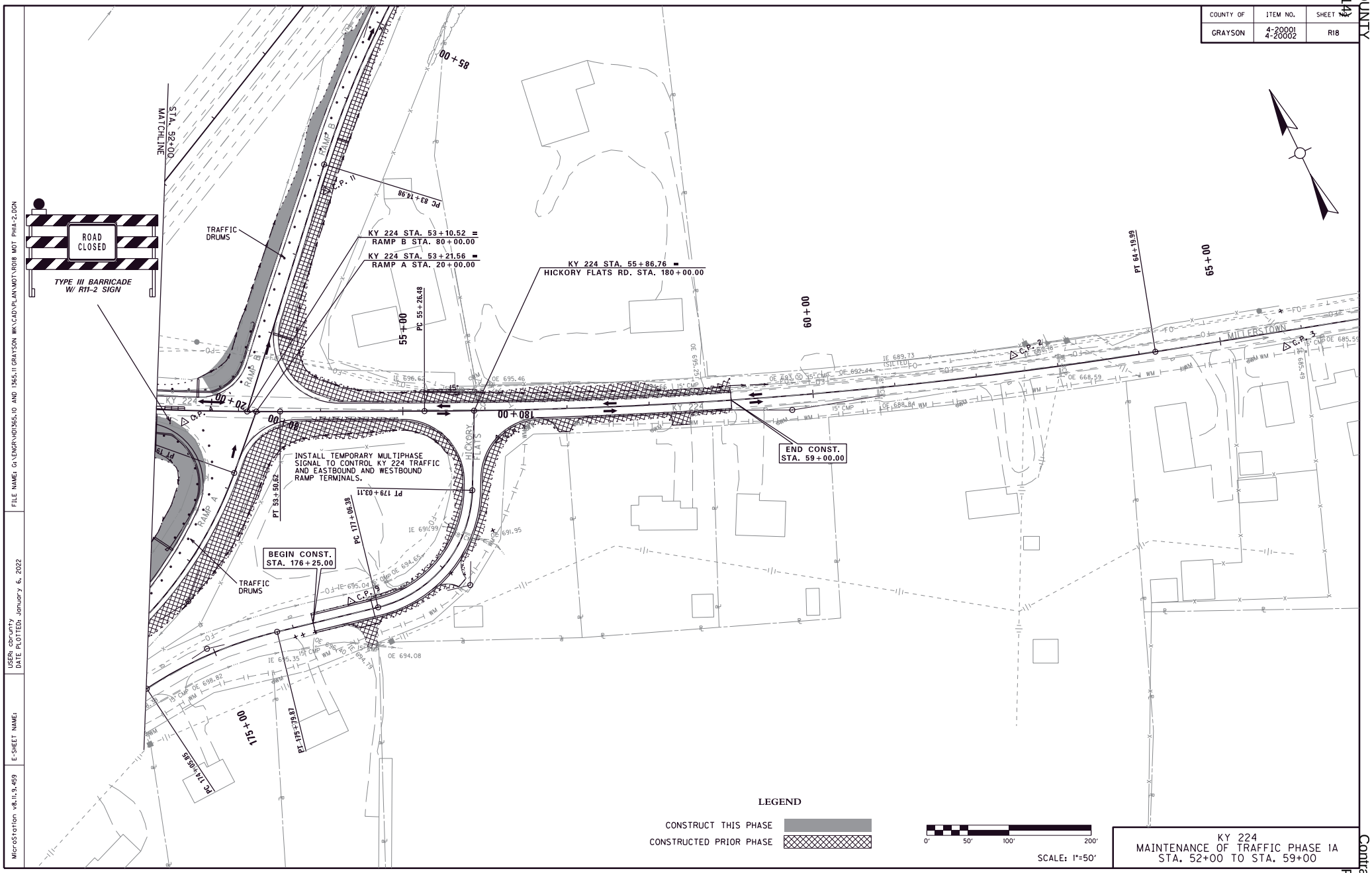

KY 224
MAINTENANCE OF TRAFFIC PHASE 1A
STA. 52+00 TO STA. 59+00

MicroStation v8.11.9.459 | E-SHEET NAME: | USER: cbrunty DATE PLOTTED: January 6, 2022 | FILE NAME: G:\ENGR\H0365.10 AND 1365.11 GRAYSON WK\CAD\PLAN\MOT\R018 MOT PHA-2.DGN

COUNTY OF	ITEM NO.	SHEET NO.
GRAYSON	4-20001 4-20002	R19

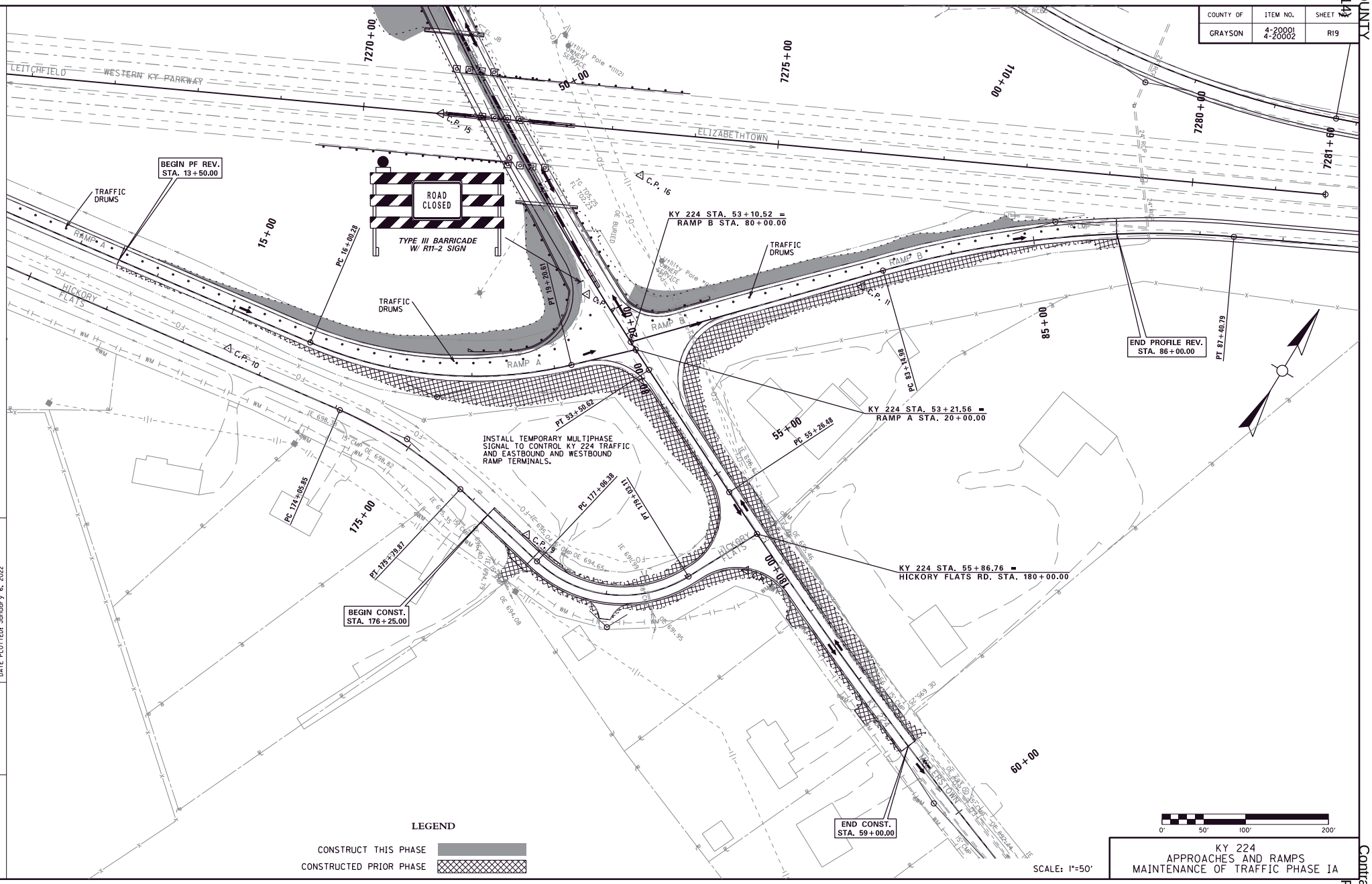

KY 224
APPROACHES AND RAMPS
MAINTENANCE OF TRAFFIC PHASE IA

MicroStation v8.11.9.459 | E-SHEET NAME: | USER: phoward DATE PLOTTED: January 6, 2022 | FILE NAME: G:\ENGR\H0365.10 AND 1365.11 GRAYSON WK\CAD\PLAN\MOT\R019 MOT PHIA-3.DGN

COUNTY OF	ITEM NO.	SHEET NO.
GRAYSON	4-20001 4-20002	R20

SEE PROJECT PROPOSAL FOR GENERAL TRAFFIC CONTROL NOTES.

PHASE IB MAINTENACE OF TRAFFIC NOTES

1. KY 224 STATION 45+50 TO STATION 59+00 - USING TEMPORARY SIGNALS, AND TEMPORARY BARRIER WALL, TRAFFIC REMAINS IN THE ONE LANE DIVERSION IN THE WESTBOUND LANE OF KY 224. CONSTRUCT THE RIGHT PORTION OF THE KY 224 BRIDGE TO THE LIMITS SHOWN IN THE BRIDGE PHASING. CONSTRUCT THE ASPHALT BASE OVERLAY FOR PROFILE REVISION IN THE CLOSED LANE. CONSTRUCT THE ASPHALT BASE OVERLAY IN AREAS OUTSIDE THE LIMITS OF THE DIVERSION BY USE OF FLAGGERS AND ALTERNATING LANE CLOSURES. PERFORM KEY-IN MILLING AND PLACE A LAYER OF ASPHALT BASE IN ONE LANE AND SHOULDER, ALLOW TO COOL, THEN SHIFT TRAFFIC ONTO THE NEWLY PLACED BASE LAYER AND CONSTRUCT ASPHALT BASE OVERLAY IN THE REMAINING LANES AND SHOULDER. CONTINUE ALTERNATING PLACEMENT OF 4" THICK ASPHALT BASE LAYER UNTIL THE PROPOSED TOP OF BASE GRADE IS ACHIEVED.

2. RAMPS A, B & D ENTIRE LENGTH - USING TRAFFIC DRUMS SHIFT TRAFFIC PARTIALLY ONTO EXISTING SHOULDERS AND CONSTRUCT ASPHALT BASE HALF WIDTH OF THE RAMP, ALLOW TO COOL, THEN SHIFT TRAFFIC ONTO THE NEWLY PLACED BASE LAYER AND CONSTRUCT ASPHALT BASE OVERLAY IN THE REMAINING WIDTH OF LANES AND OTHER SHOULDER. CONTINUE ALTERNATING PLACEMENT OF 4" THICK ASPHALT BASE LAYER UNTIL THE PROPOSED TOP OF BASE GRADE IS ACHIEVED.

3. HICKORY FLATS ROAD ENTIRE LENGTH - CONSTRUCT THE ASPHALT BASE OVERLAY BY USE OF FLAGGERS AND ALTERNATING LANE CLOSURES. PERFORM KEY-IN MILLING AND PLACE A LAYER OF ASPHALT BASE IN ONE LANE AND SHOULDER, ALLOW TO COOL, THEN SHIFT TRAFFIC ONTO THE NEWLY PLACED BASE LAYER AND CONSTRUCT ASPHALT BASE OVERLAY IN THE REMAINING LANES AND SHOULDER. CONTINUE ALTERNATING PLACEMENT OF 4" THICK ASPHALT BASE LAYER UNTIL THE PROPOSED TOP OF BASE GRADE IS ACHIEVED.

3. CONSTRUCT ABUTMENT 1, PIER 1, PIER 2, AND PIER 3 PRIOR TO DEMOLITION OF ABUTMENT 2. PROTECT THE EXISTING LIGHTING CONDUIT TO CIRCUIT 6 AND MAINTAIN ALL LIGHTING UNTIL DEMOLITION OF EXISTING ABUTMENT 2 BEGINS. USE LANE CLOSURES AND TEMPORARY BARRIER ON WK 9001 FOR PIER CONSTRUCTION. CLOSE THE INSIDE LANE OF WK 9001, AND CLOSE WK 9001 IN THE VICINITY OF THE INTERCHANGE AND DIVERT TRAFFIC ONTO THE RAMPS WHEN SETTING BEAMS. USE FLAGGERS TO CONTROL TRAFFIC AT THE RAMP TERMINALS.

4. CONSTRUCT NEW LIGHTING CIRCUIT 6 AND RESTORE LIGHTING TO POLE 6 AT THE CONCLUSION OF THIS PHASE.

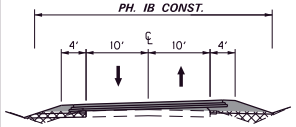

KY 224
STA. 53+50 TO STA 59+00

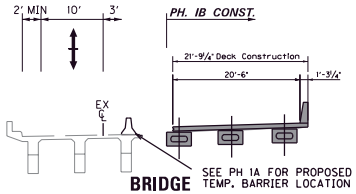

BRIDGE

SEE PH 1A FOR PROPOSED TEMP. BARRIER LOCATION

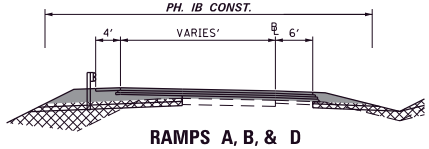

RAMPS A, B, & D

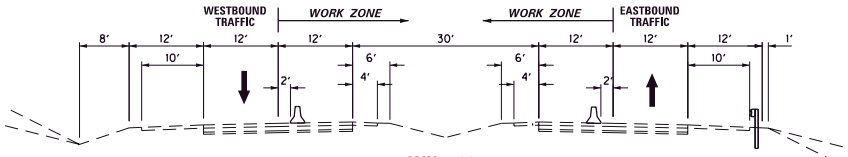

WK 9001
INSIDE LANE CLOSURES

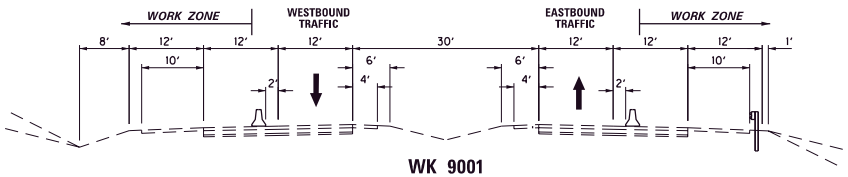

WK 9001
OUTSIDE LANE CLOSURES

LEGEND

CONSTRUCT THIS PHASE

CONSTRUCTED PRIOR PHASE

0' 50' 100' 200'

KY 224
STA. 45+50 TO STA 52+50

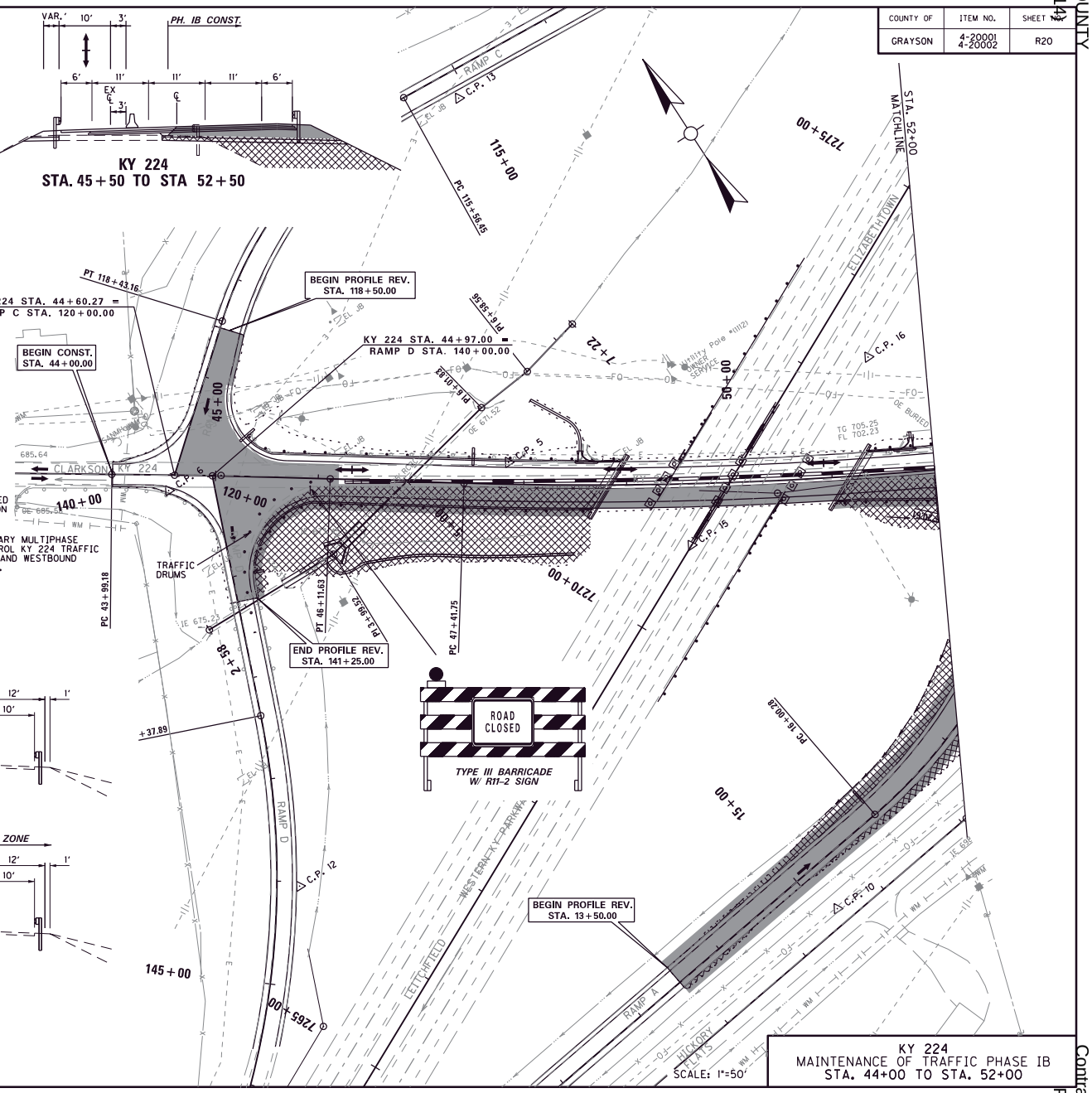

KY 224
MAINTENANCE OF TRAFFIC PHASE IB
STA. 44+00 TO STA. 52+00

FILE NAME: G:\ENGR\H0365.10 AND 1365.11 GRAYSON WK\CAD\PLAN\MOT\R020 MOT PHIB-1.DGN
USER: phoward
DATE PLOTTED: January 6, 2022
E-SHEET NAME:
MicroStation v8.11.9.459

COUNTY OF	ITEM NO.	SHEET NO.
GRAYSON	4-20001 4-20002	R21

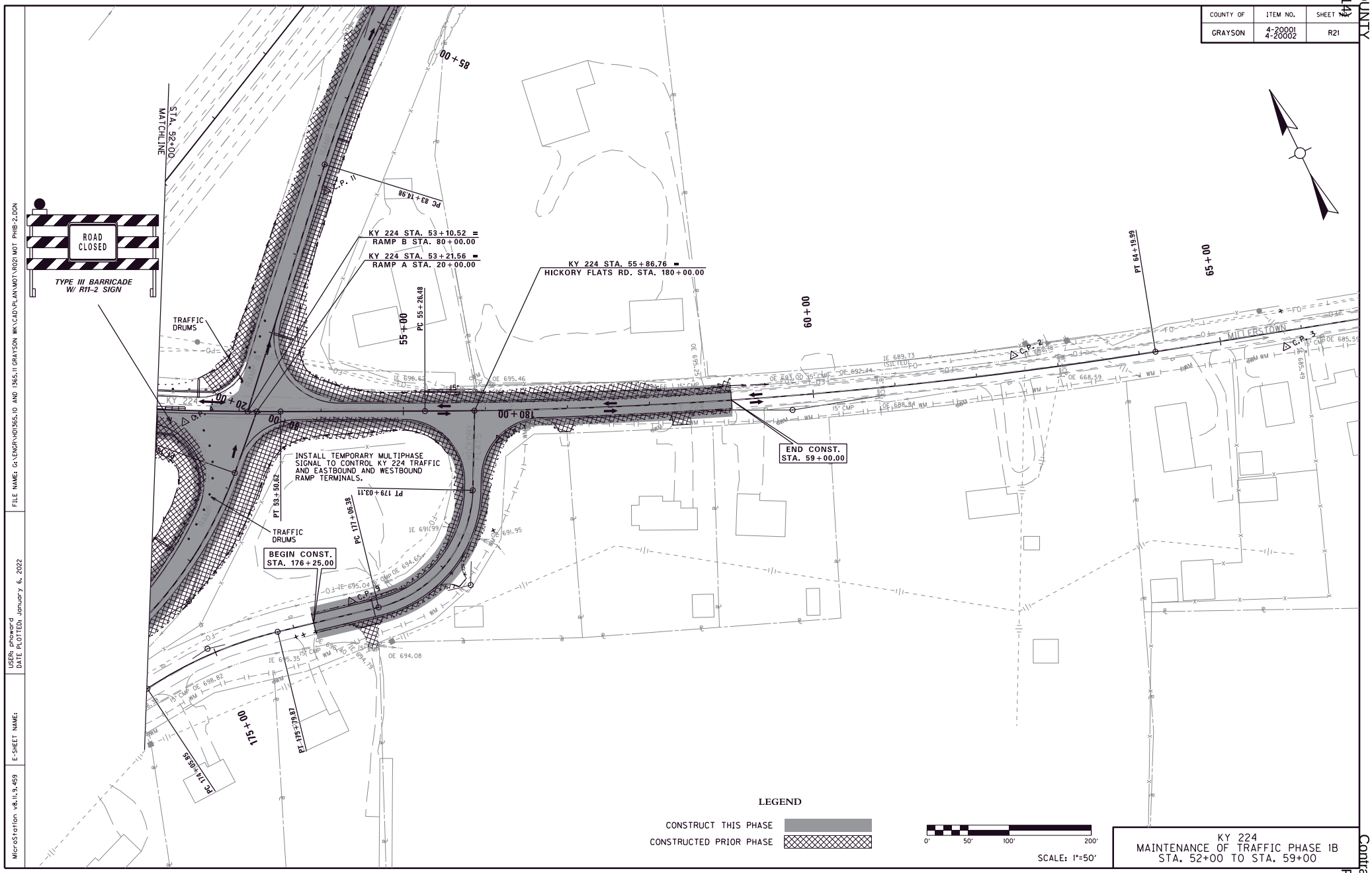

KY 224
MAINTENANCE OF TRAFFIC PHASE 1B
STA. 52+00 TO STA. 59+00

MicroStation v8.11.9.459 | E-SHEET NAME: | USER: phoward DATE PLOTTED: January 6, 2022 | FILE NAME: G:\ENGR\H0365.10 AND 1365.11 GRAYSON WK\CAD\PLAN\MOT\R021 MOT PHIB-2.DGN

COUNTY OF	ITEM NO.	SHEET NO.
GRAYSON	4-20001 4-20002	R22

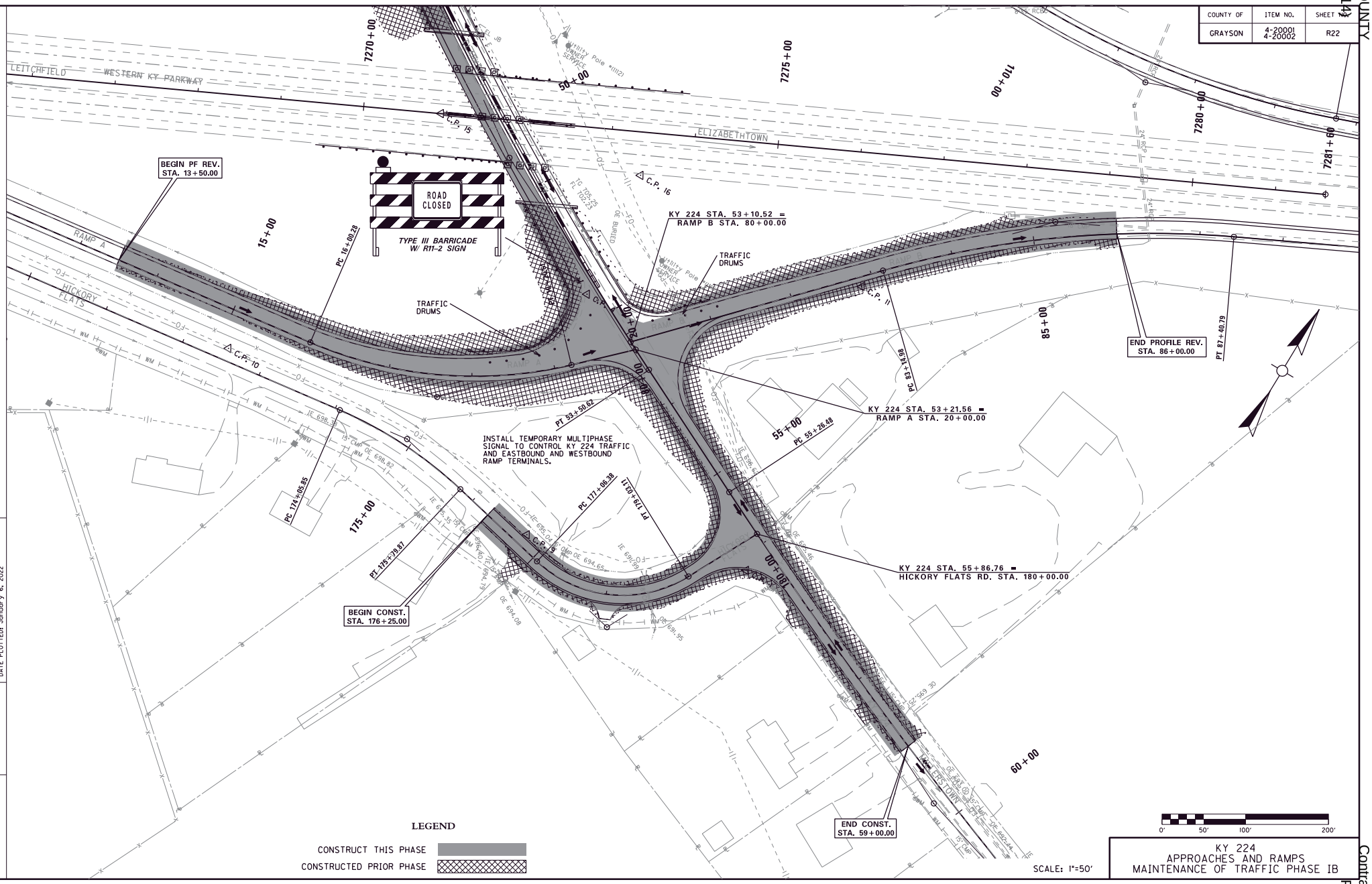

KY 224
APPROACHES AND RAMPS
MAINTENANCE OF TRAFFIC PHASE IB

MicroStation v8.11.9.459 | E-SHEET NAME: | USER: phoward DATE PLOTTED: January 6, 2022 | FILE NAME: G:\ENGR\H0365.10 AND 1365.11 GRAYSON WK\CAD\PLAN\MOT\R022 MOT PHIB-3.DGN

COUNTY OF	ITEM NO.	SHEET NO.
GRAYSON	4-20001 4-20002	R23

SEE PROJECT PROPOSAL FOR GENERAL TRAFFIC CONTROL NOTES.

PHASE II MAINTENACE OF TRAFFIC NOTES

1. KY 224 STATION 45+00 TO STATION 52+50 - USING TEMPORARY SIGNALS, AND TEMPORARY BARRIER WALL, SHIFT TRAFFIC TO A ONE LANE DIVERSION IN THE EASTBOUND LANE OF KY 224. CONSTRUCT THE LEFT PORTION OF THE KY 224 BRIDGE TO THE LIMITS SHOWN IN THE BRIDGE PHASING. CONSTRUCT THE ASPHALT BASE OVERLAY FOR PROFILE REVISION IN THE CLOSED LANE.

   USE LANE CLOSURES AND TEMPORARY BARRIER ON WK 9001 FOR PIER CONSTRUCTION. CLOSE THE INSIDE LANE OF WK 9001, AND CLOSE WK 9001 IN THE VICINITY OF THE INTERCHANGE AND DIVERT TRAFFIC ONTO THE RAMPS WHEN SETTING BEAMS. USE FLAGGERS TO CONTROL TRAFFIC AT THE RAMP TERMINALS.

2. RAMP C - USING TRAFFIC DRUMS SHIFT TRAFFIC TO THE RIGHT AND PARTIALLY ONTO THE EXISTING SHOULDER AND CONSTRUCT ALL EMBANKMENT, EXCAVATION, PREPARE SUBGRADE FOR WIDENING AND PLACE ASPHALT BASE AND ASPHALT BASE OVERLAY.

PHASE III MAINTENANCE OF TRAFFIC NOTES

1. REMOVE THE BARRIER WALL. USING ALTERNATING LANE CLOSURES AND FLAGGERS PLACE FINAL ASPHALT SURFACING ON KY 224 AND HICKORY FLATS ROAD. COMPLETE FINAL SURFACING OF THE RAMPS AS PART OF THE MAINLINE WESTERN KY PARKWAY PAVEMENT REHABILITATION PORTION OF THE PROJECT.

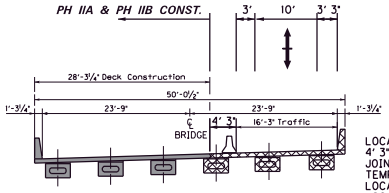

BRIDGE

LOCATE TEMPORARY BARRIER 4' 3" FROM PHASE I CONSTRUCTION JOINT (TRAFFIC SIDE). TRANSITION TEMPORARY BARRIER FROM STRUCTURE LOCATION TO ROADWAY OFFSET LOCATION OVER 15:1 MIN TAPER.

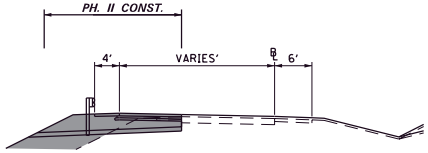

RAMP C

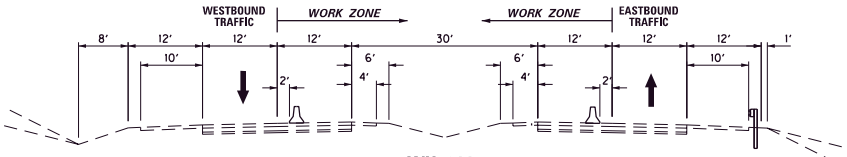

WK 9001
INSIDE LANE CLOSURES

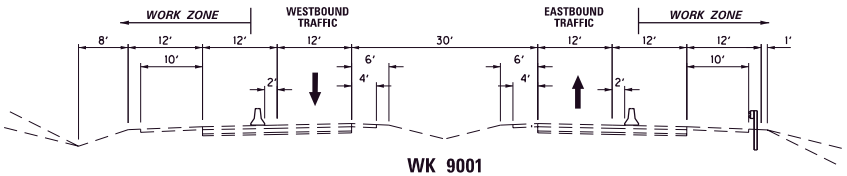

WK 9001
OUTSIDE LANE CLOSURES

LEGEND

CONSTRUCT THIS PHASE

CONSTRUCTED PRIOR PHASE

0' 50' 100' 200'

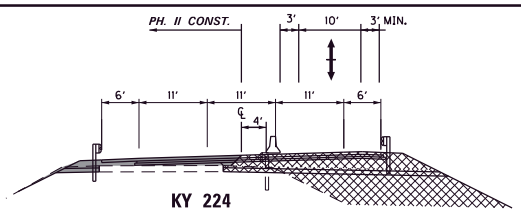

KY 224
STA. 45+00 TO STA 52+50

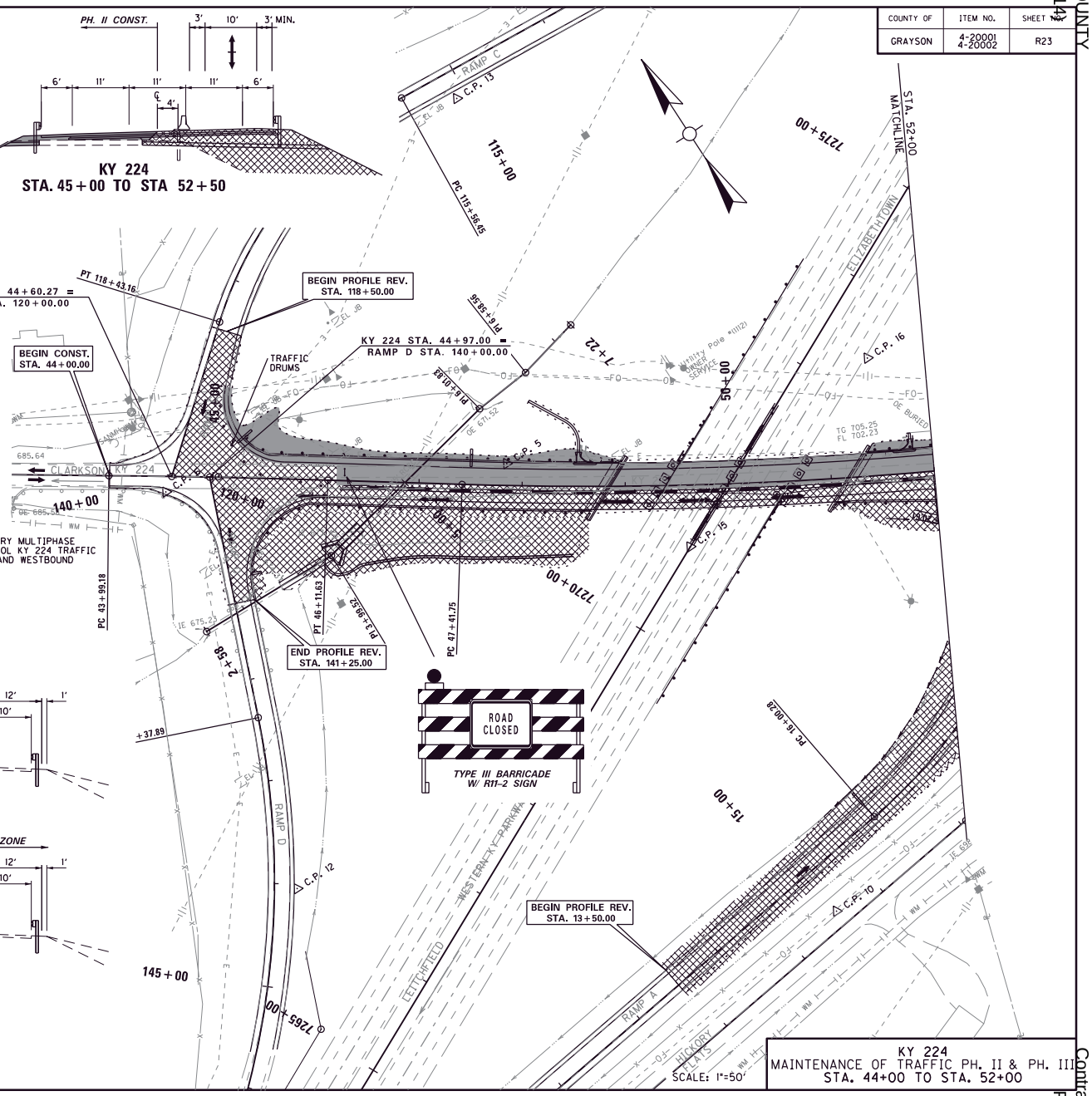

KY 224
MAINTENANCE OF TRAFFIC PH. II & PH. III
STA. 44+00 TO STA. 52+00

SCALE: 1"=50'

FILE NAME: G:\ENGR\H0365.10 AND 1365.11 GRAYSON WK\CAD\PLAN\MOT\R023 MOT PH2-1.DGN
USER: phoward
DATE PLOTTED: January 6, 2022
E-SHEET NAME:
MicroStation v8.11.9.459

COUNTY OF	ITEM NO.	SHEET NO.
GRAYSON	4-20001 4-20002	R24

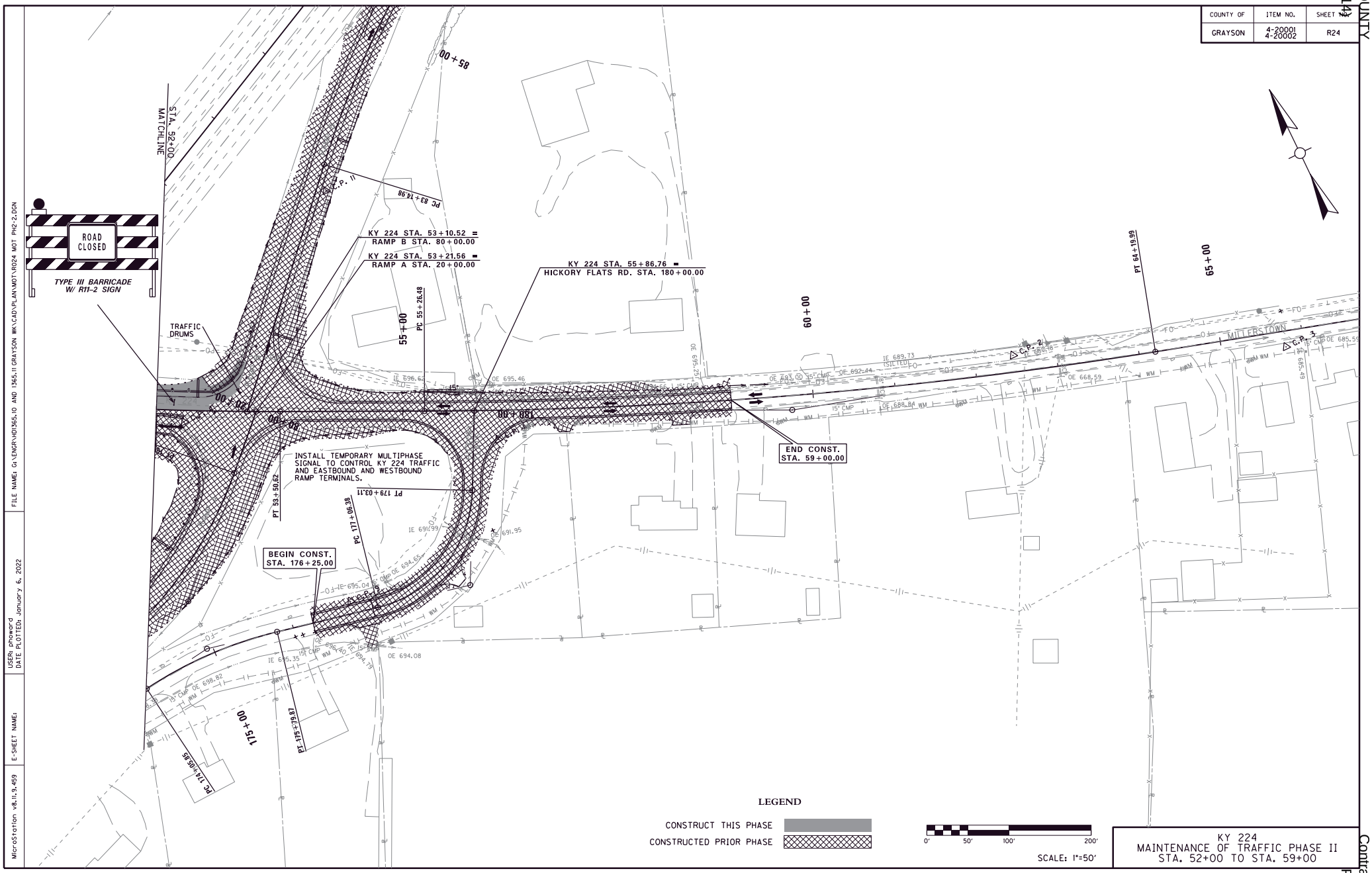

KY 224
MAINTENANCE OF TRAFFIC PHASE II
STA. 52+00 TO STA. 59+00

MicroStation v8.11.9.459 | E-SHEET NAME: | USER: phoward DATE PLOTTED: January 6, 2022 | FILE NAME: G:\ENGR\H0365.10 AND 1365.11 GRAYSON WK\CAD\PLAN\MOT\R024 MOT PH2-2.DGN

COUNTY OF	ITEM NO.	SHEET NO.
GRAYSON	4-20001 4-20002	R25

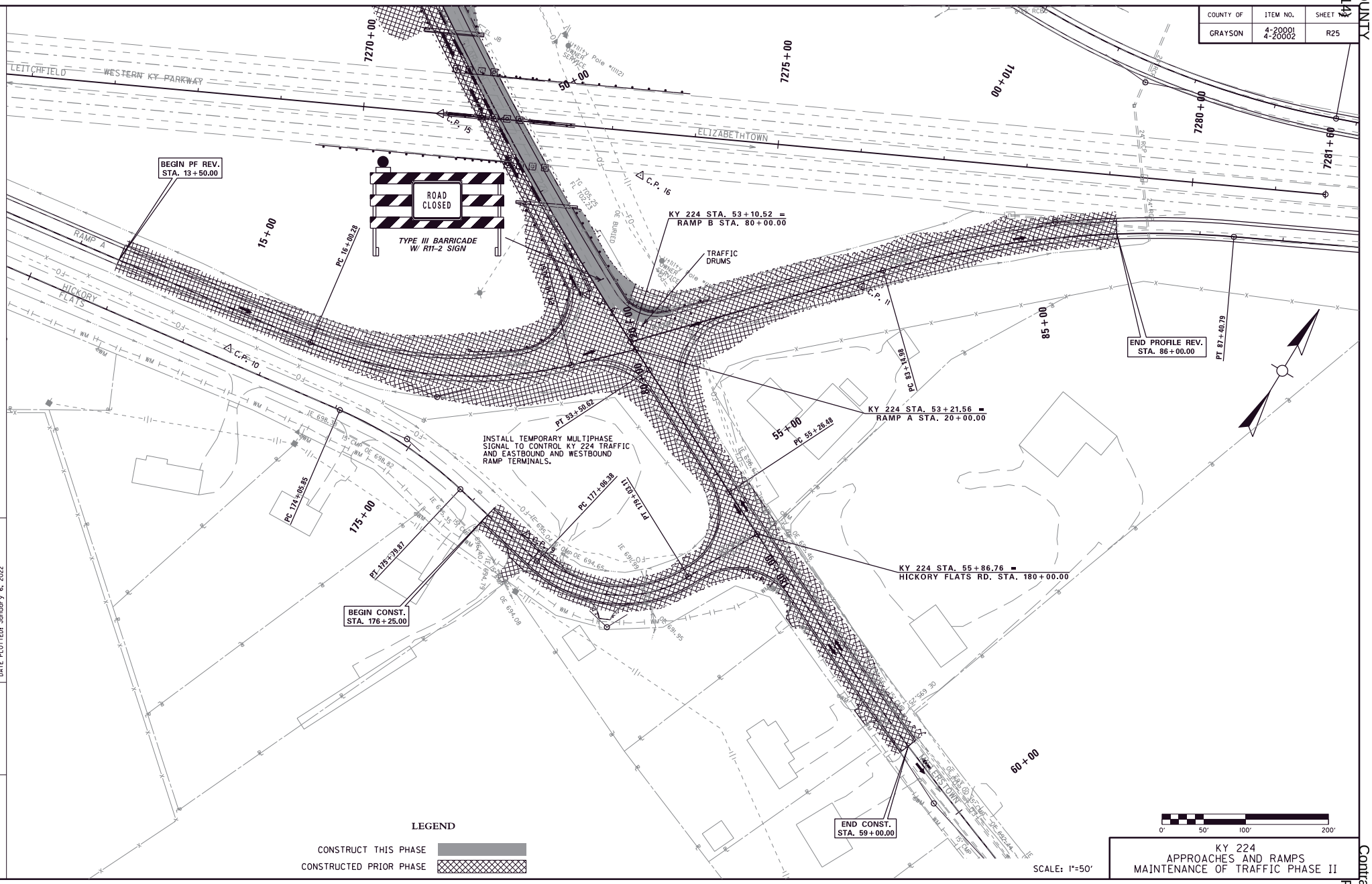

KY 224
APPROACHES AND RAMPS
MAINTENANCE OF TRAFFIC PHASE II

MicroStation v8.11.9.459 | E-SHEET NAME: | USER: phoward DATE PLOTTED: January 6, 2022 | FILE NAME: G:\ENGR\H0365.10 AND 1365.11 GRAYSON WK\CAD\PLAN\MOT\R025 MOT PH2-3.DGN

COUNTY OF	ITEM NO.	SHEET No.
GRAYSON	4-20001 4-20002	R26

DISTURBED DRAINAGE AREAS				
SECTION	DISTURBED AREA (ACRES)	MAXIMUM SEDIMENT VOLUME (CU FT)	OUTFALL LATITUDE	OUTFALL LONGITUDE
10	0.3111	1120	37°29'24.79"N	86°12'37.05"W
11	1.1506	4142	37°29'22.48"N	86°12'34.60"W
12	0.3225	1161	SF	SF
13	0.1434	516	37°29'22.29"N	86°12'34.05"W
14	0.0788	284	37°29'20.06"N	86°12'30.40"W
15	0.7936	2857	37°29'17.15"N	86°12'36.38"W
16	0.2830	1019	37°29'22.75"N	86°12'25.32"W
17	0.3322	1196	37°29'16.62"N	86°12'36.29"W
18	0.5572	2006	37°29'16.50"N	86°12'26.78"W
19	1.2642	4551	37°29'23.10"N	86°12'23.71"W
20	0.4414	1589	37°29'16.90"N	86°12'22.42"W
21	0.0577	208	37°29'15.84"N	86°12'28.79"W
22	0.4590	1652	SF	SF

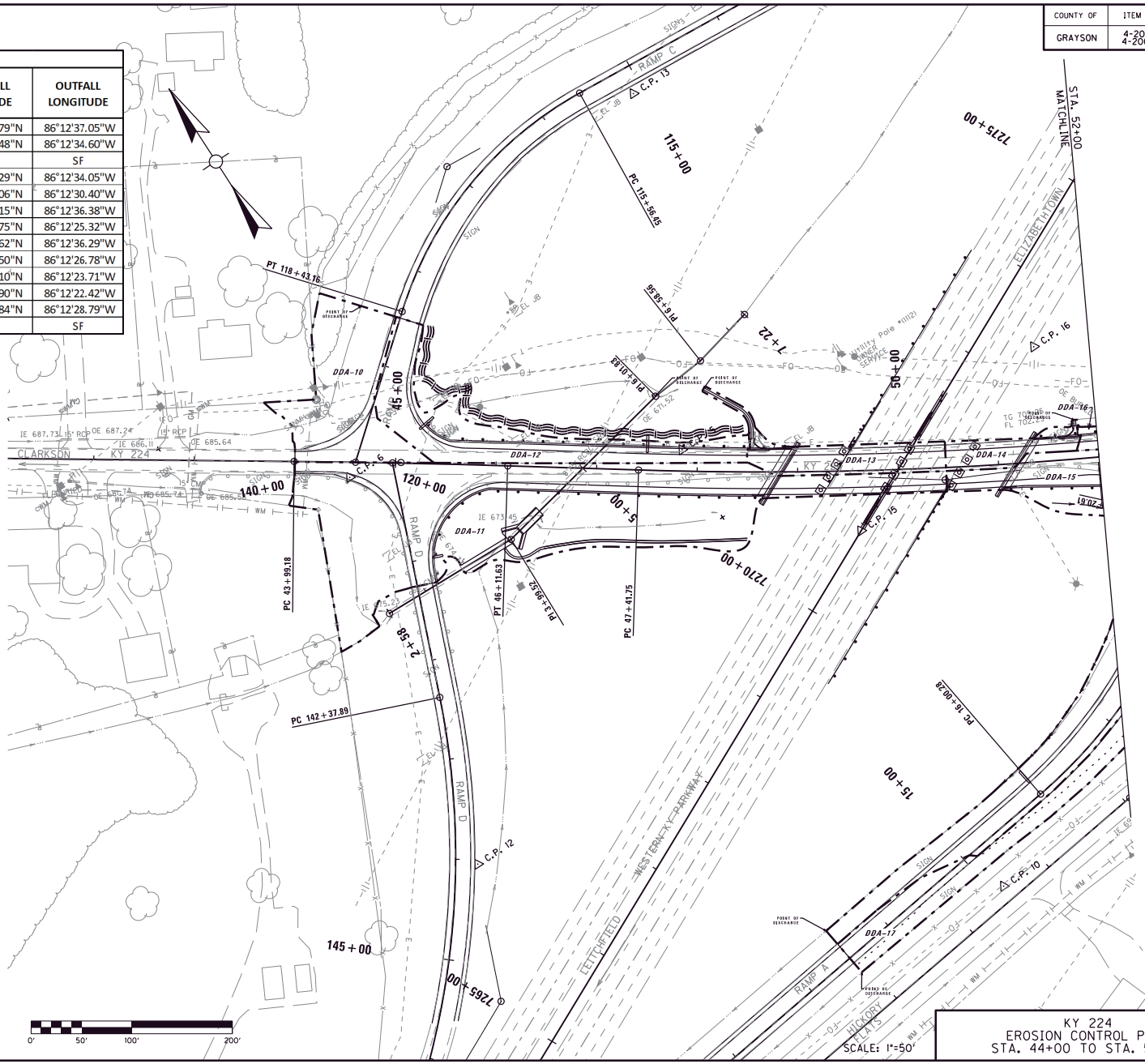

KY 224
EROSION CONTROL PLAN
STA. 44+00 TO STA. 52+00
SCALE: 1"=50'

EROSION CONTROL LEGEND

- SILT TRAP TYPE A ALTERNATE 1
- SILT TRAP TYPE A ALTERNATE 2
- SILT TRAP TYPE B
- SILT TRAP TYPE C
- SILT FENCE
- TEMPORARY SILT DITCH
- DISTURBED DRAINAGE AREA
- OVERLAND SHEET FLOW
- PROPOSED R/W
- PROPOSED EASEMENT

FILE NAME: G:\ENGR\H0365.10 AND 1365.11 GRAYSON WK\CAD\PLAN\EROSION CONTROL\R026 EC.DGN
USER: cbrunty
DATE PLOTTED: January 6, 2022
E-SHEET NAME:
MicroStation v8.11.9.459

COUNTY OF	ITEM NO.	SHEET NO.
GRAYSON	4-20001 4-20002	R27

DISTURBED DRAINAGE AREAS

SECTION	DISTURBED AREA (ACRES)	MAXIMUM SEDIMENT VOLUME (CU FT)	OUTFALL LATITUDE	OUTFALL LONGITUDE
10	0.3111	1120	37°29'24.79"N	86°12'37.05"W
11	1.1506	4142	37°29'22.48"N	86°12'34.60"W
12	0.3225	1161	SF	SF
13	0.1434	516	37°29'22.29"N	86°12'34.05"W
14	0.0788	284	37°29'20.06"N	86°12'30.40"W
15	0.7936	2857	37°29'17.15"N	86°12'36.38"W
16	0.2830	1019	37°29'22.75"N	86°12'25.32"W
17	0.3322	1196	37°29'16.62"N	86°12'36.29"W
18	0.5572	2006	37°29'16.50"N	86°12'26.78"W
19	1.2642	4551	37°29'23.10"N	86°12'23.71"W
20	0.4414	1589	37°29'16.90"N	86°12'22.42"W
21	0.0577	208	37°29'15.84"N	86°12'28.79"W
22	0.4590	1652	SF	SF

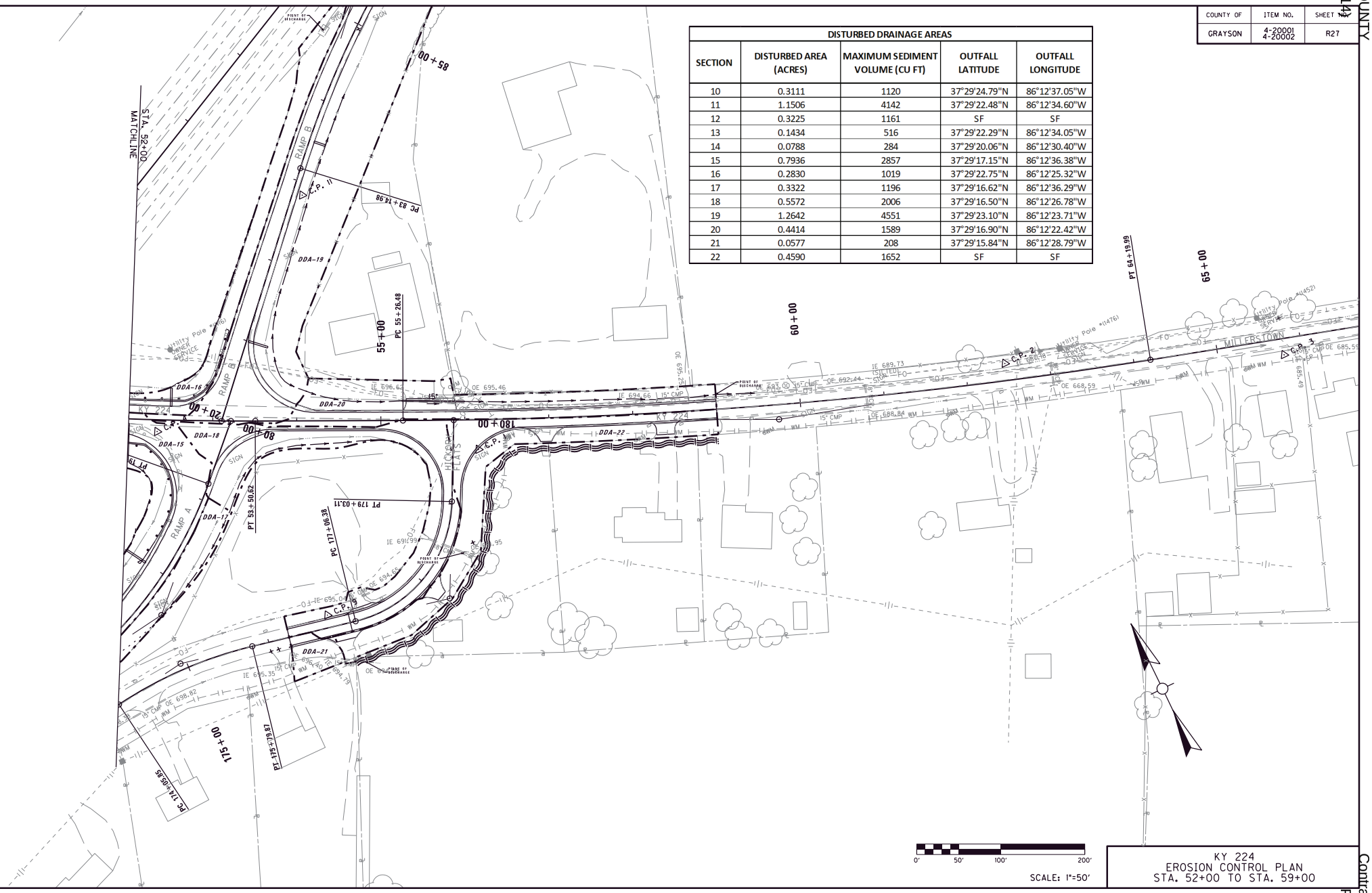

KY 224
EROSION CONTROL PLAN
STA. 52+00 TO STA. 59+00

MicroStation v8.11.9.459 | E-SHEET NAME: | USER: cbrunty DATE PLOTTED: January 6, 2022 | FILE NAME: G:\ENGR\HD\365.10 AND 365.11 GRAYSON MK\CAD\PLAN\EROSION CONTROL\R027 EC.DGN

COUNTY OF	ITEM NO.	SHEET NO.
GRAYSON	4-20001 4-20002	R28

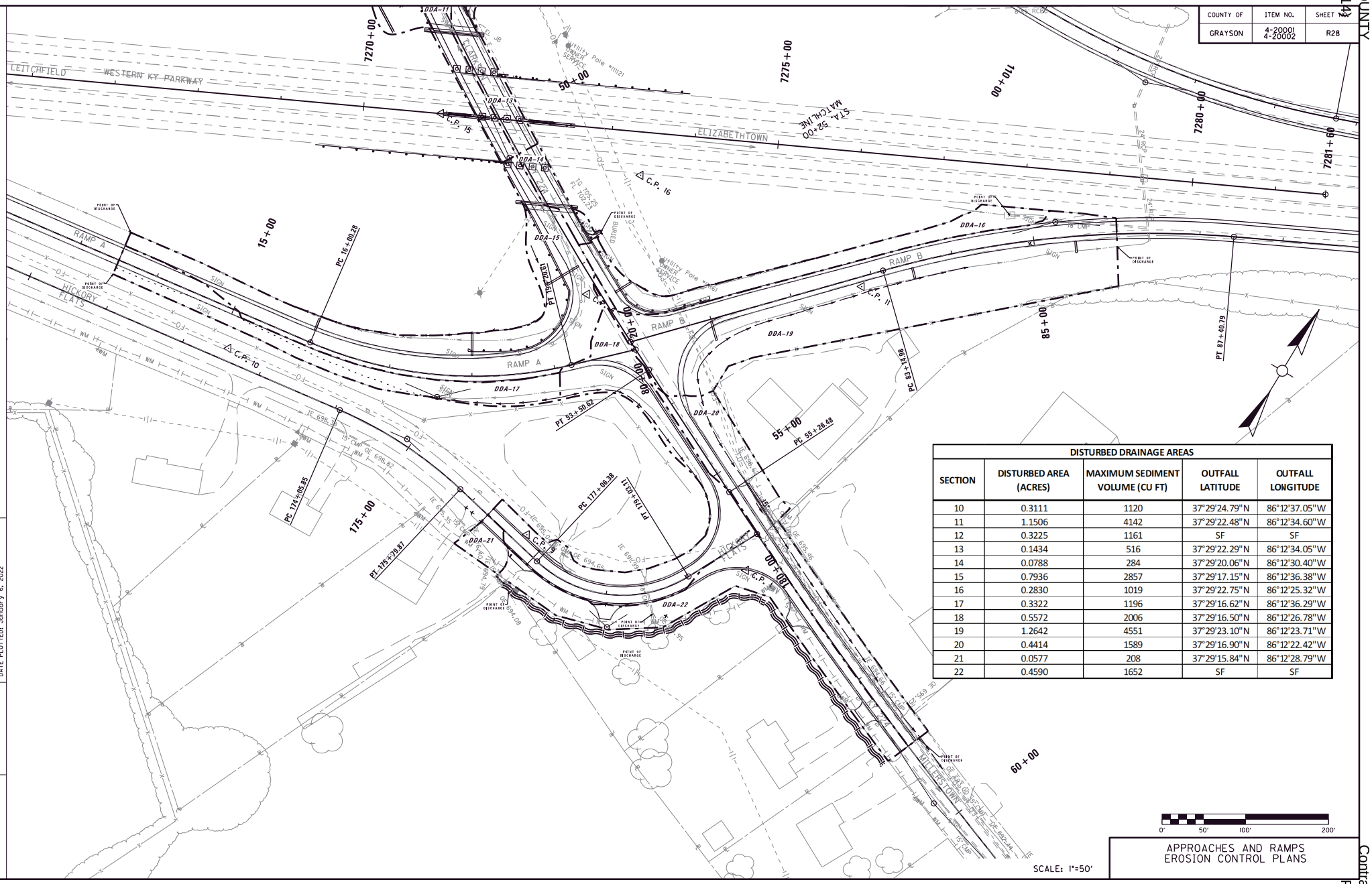

SCALE: 1"=50'

APPROACHES AND RAMPS
EROSION CONTROL PLANS

DISTURBED DRAINAGE AREAS

SECTION	DISTURBED AREA (ACRES)	MAXIMUM SEDIMENT VOLUME (CU FT)	OUTFALL LATITUDE	OUTFALL LONGITUDE
10	0.3111	1120	37°29'24.79"N	86°12'37.05"W
11	1.1506	4142	37°29'22.48"N	86°12'34.60"W
12	0.3225	1161	SF	SF
13	0.1434	516	37°29'22.29"N	86°12'34.05"W
14	0.0788	284	37°29'20.06"N	86°12'30.40"W
15	0.7936	2857	37°29'17.15"N	86°12'36.38"W
16	0.2830	1019	37°29'22.75"N	86°12'25.32"W
17	0.3322	1196	37°29'16.62"N	86°12'36.29"W
18	0.5572	2006	37°29'16.50"N	86°12'26.78"W
19	1.2642	4551	37°29'23.10"N	86°12'23.71"W
20	0.4414	1589	37°29'16.90"N	86°12'22.42"W
21	0.0577	208	37°29'15.84"N	86°12'28.79"W
22	0.4590	1652	SF	SF

MicroStation v8.11.9.459 | E-SHEET NAME: | USER: cbrunty; DATE PLOTTED: January 6, 2022 | FILE NAME: G:\ENGR\HD365.10 AND 365.11 GRAYSON WK\CAD\PLAN\EROSION CONTROL\R028 EC.DGN

COUNTY OF	ITEM NO.	SHEET NO.
GRAYSON	4-20001 4-20002	R29

KY 224

Point	Station	Northing (Y)	Easting (X)
POB	40+00.00	3702531.2200	4787235.5515
PC	43+99.18	3702310.6839	4787568.2777
PT	46+11.63	3702191.3811	4787744.0691
PC	47+41.75	3702117.1405	4787850.9295
PT	53+50.62	3701810.9793	4788376.4772
PC	55+26.48	3701734.8339	4788534.9996
PT	64+19.99	3701412.1986	4789367.2508
POE	65+00.00	3701389.1764	4789443.8800

WESTERN KENTUCKY PARKWAY

Point	Station	Northing (Y)	Easting (X)
POB	7265+00.00	3701687.5069	4787469.6975
POE	7280+00.00	3702341.1136	4788819.8080

CULVERT SITUATION

Point	Station	Northing (Y)	Easting (X)
POB	2+57.91	3702132.1960	4787565.6015
PI	3+99.52	3702128.2003	4787707.1552
PI	6+01.83	3702169.4470	4787905.2129
PI	6+58.56	3702174.7607	4787961.6923
POE	7+22.13	3702189.6288	4788023.4982

RAMP C

Point	Station	Northing (Y)	Easting (X)
POB	118+45.00	3702376.0817	4787738.1010
POE	120+00.00	3702276.7708	4787619.0953

RAMP D

Point	Station	Northing (Y)	Easting (X)
POB	140+00.00	3702256.2292	4787649.5433
POE	142+35.00	3702037.6770	4787563.1724

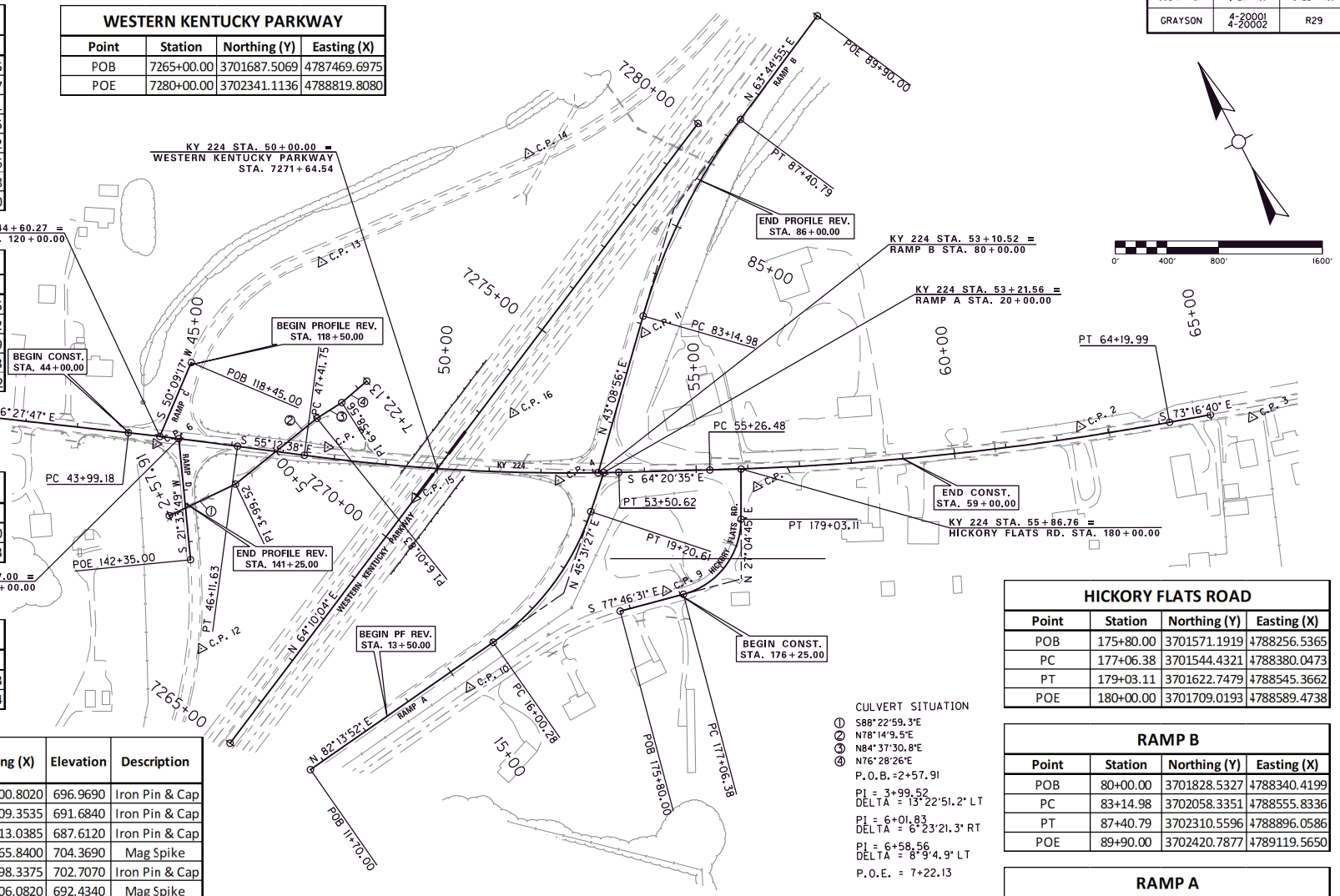

CULVERT SITUATION
① S88°22'59.3"E
② N78°14'9.5"E
③ N84°37'30.8"E
④ N76°28'26"E
P.O.B.=2+57.91
PI = 3+99.52
DELTA = 13°22'51.2" LT
PI = 6+01.83
DELTA = 6°23'21.3" RT
PI = 6+58.56
DELTA = 8°9'4.9" LT
P.O.E. = 7+22.13

HICKORY FLATS ROAD

Point	Station	Northing (Y)	Easting (X)
POB	175+80.00	3701571.1919	4788256.5365
PC	177+06.38	3701544.4321	4788380.0473
PT	179+03.11	3701622.7479	4788545.3662
POE	180+00.00	3701709.0193	4788589.4738

RAMP B

Point	Station	Northing (Y)	Easting (X)
POB	80+00.00	3701828.5327	4788340.4199
PC	83+14.98	3702058.3351	4788555.8336
PT	87+40.79	3702310.5596	4788896.0586
POE	89+90.00	3702420.7877	4789119.5650

RAMP A

Point	Station	Northing (Y)	Easting (X)
POB	11+70.00	3701571.2406	4787584.6317
PC	16+00.28	3701629.4048	4788010.9652
PT	19+20.61	3701768.0418	4788293.6804
POE	20+00.00	3701823.6624	4788350.3283

Control Point	Station	Offset	Northing (Y)	Easting (X)	Elevation	Description
C.P. #1	56+15.61	35.42	3701664.7100	4788600.8020	696.9690	Iron Pin & Cap
C.P. #2	62+47.53	-20.53	3701483.7775	4789209.3535	691.6840	Iron Pin & Cap
C.P. #3	65+78.02	19.32	3701348.2300	4789513.0385	687.6120	Iron Pin & Cap
C.P. #4	52+34.17	14.02	3701850.5505	4788265.8400	704.3690	Mag Spike
C.P. #5	47+84.66	-21.43	3702110.5935	4787898.3375	702.7070	Iron Pin & Cap
C.P. #6	44+54.72	15.08	3702267.3460	4787606.0820	692.4340	Mag Spike
C.P. #9	54+35.75	231.29	3701565.6380	4788353.0715	697.0570	Iron Pin & Cap
C.P. #10	50+81.08	418.65	3701572.5075	4787930.4100	701.2640	Iron Pin & Cap
C.P. #11	54+07.31	-268.61	3702028.5555	4788543.8775	688.1420	Iron Pin & Cap
C.P. #12	45+93.73	396.66	3701875.4080	4787503.6380	689.3520	Iron Pin & Cap
C.P. #13	47+24.73	-373.94	3702433.9540	4788050.3080	683.0540	Iron Pin & Cap
C.P. #14	51+60.96	-616.17	3702438.8025	4788501.6570	680.4240	Iron Pin & Cap
C.P. #15	49+61.33	59.81	3701946.1075	4788003.5105	688.7740	Iron Pin & Cap
C.P. #16	51+43.36	-114.58	3702006.1800	4788247.3215	685.9640	Iron Pin & Cap

KY 224
PI 45+05.41
(X) = 4787656.8254
(Y) = 3702251.9931
D = 01°15'08" RT
T = 106.23'
L = 212.46'
R = 9720.00'
E = 0.58'
C = S 55°50'12" E
e = N.C.
Runoff = N/A
Runout = N/A

KY 224
PI 50+46.83
(X) = 4788101.4777
(Y) = 3701943.0738
D = 09°07'56" LT
T = 305.08'
L = 608.87'
R = 3820.00'
E = 12.16'
C = S 59°46'36" E
e = 3.00%
Runoff = SEE X.S.
Runout = SEE X.S.

KY 224
PI 59+74.14
(X) = 4788938.5215
(Y) = 3701541.0043
D = 08°56'06" LT
T = 447.66'
L = 893.51'
R = 5729.68'
E = 17.46'
C = S 68°48'37" E
e = 2.20%
Runoff = SEE X.S.
Runout = SEE X.S

RAMP A
PI 17+66.16
(X) = 4788175.3195
(Y) = 3701651.8274
D = 36°42'25" LT
T = 165.88'
L = 320.33'
R = 500.00'
E = 26.80'
C = N 63°52'40" E
e = 5.70%
Runoff = SEE X.S.
Runout = SEE X.S.

RAMP B
PI 85+30.21
(X) = 4788703.0281
(Y) = 3702215.3615
D = 20°35'59" RT
T = 215.23'
L = 425.81'
R = 1184.35'
E = 19.40'
C = N 53°26'56" E
e = 6.20%
Runoff = SEE X.S.
Runout = SEE X.S.

HICKORY FLATS RD.
PI 178+21.78
(X) = 4788492.8328
(Y) = 3701519.9960
D = 75°08'45" LT
T = 115.40'
L = 196.73'
R = 150.00'
E = 39.26'
C = N 64°39'07" E
e = 4.00%
Runoff = SEE X.S.
Runout = SEE X.S.

SCALE: 1"=100'

COORDINATE CONTROL SHEET
KY 224
STA. 40+00.00 TO STA. 65+00.00

FILE NAME: G:\ENGR\H0365_10 AND 365_11 GRAYSON WK\CAD\PLAN\R029 COORDINATE CONTROL.DGN
USER: aijordan
DATE PLOTTED: January 6, 2022
E-SHEET NAME:
MicroStation v8.11.9.919

PIPE DRAINAGE SHEET 1 of 2

COUNTY OF	ITEM NO.	SHEET No.
GRAYSON	4-20001 4-20002	R30

STORM SEWER PIPE

L I N E A R F E E T

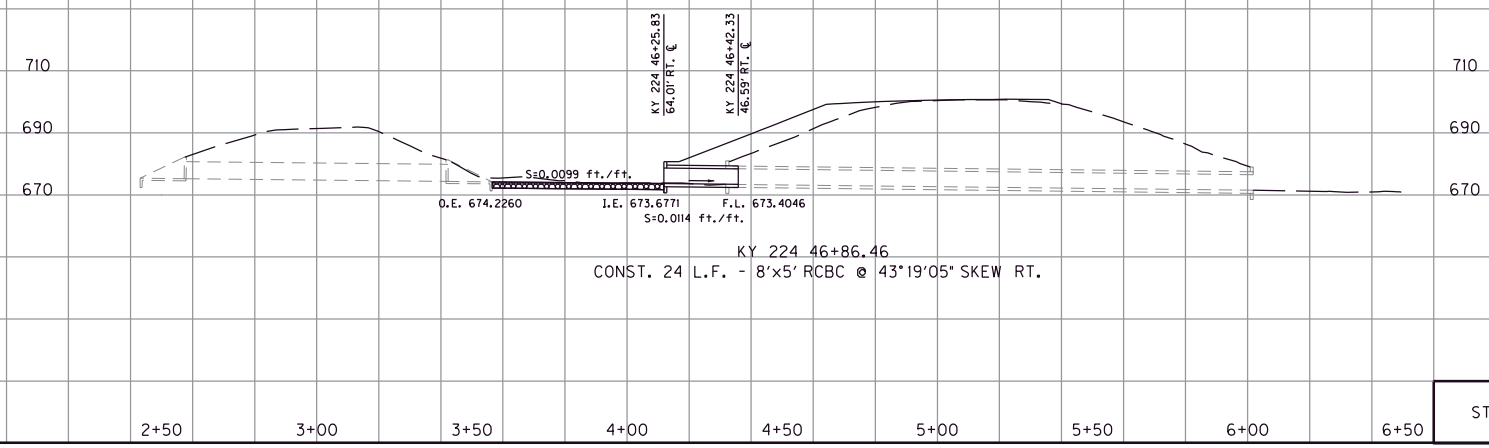

SCALE: 1"=10'

KY 224
STA 46+86.17 - 43°19'05" SKEW RT.
CULVERT SITUATION

FILE NAME: G:\ENGR\H0365.10 AND 1365.11 GRAYSON MK\CAD\PLAN\CROSS SECTION\R030 CULVERT SITUATION.DGN

USER: cbrurty
DATE PLOTTED: January 6, 2022

E-SHEET NAME:

MicroStation v8.11.9.459

PIPE DRAINAGE SHEET 2 of 2

COUNTY OF	ITEM NO.	SHEET No.
GRAYSON	4-20001 4-20002	R31

STORM SEWER PIPE

L I N E A R F E E T

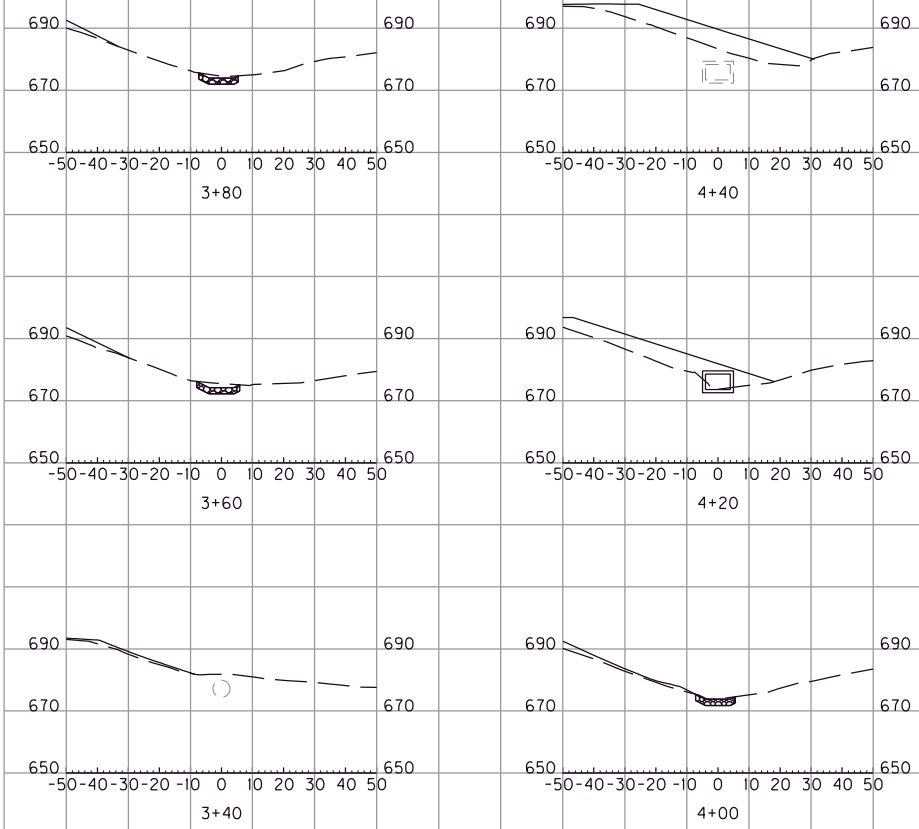

SCALE: 1"=10'

KY 224
STA 46+86.17 - 43°19'05" SKEW RT.
CULVERT SITUATION

FILE NAME: G:\ENGR\H0365.10 AND 1365.11 GRAYSON WK\CAD\PLAN\CROSS SECTION\R030 CULVERT SITUATION.DGN
USER: cbrurty
DATE PLOTTED: January 6, 2022
E-SHEET NAME:
MicroStation v8.11.9.459

COUNTY OF	ITEM NO.	SHEET NO.
GRAYSON	4-20001 4-20002	T1

ROADWAY LIGHTING ESTIMATE OF QUANTITIES

ITEM CODE	ITEM	UNIT	TOTAL
4798	CONDUIT - 3 1/2 INCH	LIN FT	90
4800	MARKER	EACH	1
4820	TRENCHING AND BACKFILLING	LIN FT	515
4860	CABLE - NO. 8/3C DUCTED	LIN FT	825
4940	REMOVE LIGHTING	LP SUM	1
20391NS835	ELECTRICAL JUNCTION BOX TYPE A	EACH	3
21543EN	BORE AND JACK CONDUIT	LIN FT	90
21579EN	FLEX CONDUIT - 1 1/4 INCH	LIN FT	50

THE STANDARD SPECIFICATIONS FOR ROAD AND BRIDGE CONSTRUCTION, CURRENT EDITION, AND OTHER SPECIAL NOTES AND SPECIFICATIONS WILL APPLY ON THIS PROJECT. SEE SECTION 716 FOR MEASUREMENT AND OTHER DETAILS. SEE SECTION 602 FOR SPIRAL REINFORCEMENT SPLICING

THE CONTRACTOR SHALL MAKE AN INSPECTION OF THE PROJECT SITE PRIOR TO SUBMITTING A BID AND SHALL BE THOROUGHLY FAMILIARIZED WITH EXISTING CONDITIONS. SUBMISSIONS OF A BID WILL BE CONSIDERED AN AFFIRMATION OF THIS INSPECTION HAVING BEEN COMPLETED.

ADD SENTENCE TO SECTION 834.06: ALL WIRE SHALL HAVE WORDING ADDED TO THE OUTER JACKET THAT STATES : "PROPERTY OF KENTUCKY TRANSPORTATION CABINET 502 564 0501".

ADD SENTENCE TO SECTION 834.10: ALL WIRE SHALL HAVE WORDING ADDED TO THE OUTER JACKET THAT STATES: "PROPERTY OF KENTUCKY TRANSPORTATION CABINET 502 564 0501".

CONSTRUCTION AND MEASUREMENT NOTES THAT ARE CONTRARY TO SECTION 834

SUBSECTION: 834.15.03 TRANSFORMER BASES.
REMOVE: REMOVE SENTENCE: CONSTRUCT THE DOOR OF A HIGH DENSITY POLYETHYLENE MATERIAL IN COLOR THAT MATCHES THE BASE.
REVISION: REPLACE THE FOLLOWING SENTENCE WITH THE FOLLOWING:
CONSTRUCT THE DOOR OF AN ALUMINUM MATERIAL IN A COLOR THAT MATCHES THE BASE. THE DOOR SHOULD HAVE A THEFT DETERRENT DEVICE THAT IS EQUAL TO THE LOCKDOWN LIGHTLOCK DOOR ASSEMBLY. THE DOOR LOCK WILL HAVE A LOCKING DEVICE WITH A KYTC CUSTOM KEY THAT WILL BE SEND TO CENTRAL OFFICE TRAFFIC OPERATIONS FROM THE MANUFACTURER AND BE ISSUED TO THE CONTRACTOR FOR THE INSTALLATION OF THE FINAL DOOR DEVICE. THE KEY FOR THE DOOR SHALL BE RETURNED TO CENTRAL OFFICE TRAFFIC OPERATIONS AFTER THE CLOSURE OF THE CONTRACT. THERE SHALL BE A 4" BY 6" ARC FLASH WARNING STICKER INSTALLED CENTER TOP OF EACH DOOR. THE STICKER SHALL BE METALCRAFT PLY695 PREM STYLEMARK LABEL WITH .007 THICKNESS, WITH UV WHITE POLYCARBINATE MATERIAL, AND WITH MC53FL PRESSURE SENSITIVE ADHESIVE. THE STICKER SHALL HAVE TWO COLORS OF BLACK AND CUSTOM COLOR ORANGE. THE WORDING FOR THE ARC FLASH STICKER SHALL BE THE FOLLOWING: "WARNING ARC FLASH HAZARD. APPROPRIATE PPE REQUIRED. FAILURE TO COMPLY CAN RESULT IN DEATH OR INJURY. REFER TO NFPA 70E."

SECTION: 834.15 LIGHTING POLES.

REVISION: ADD THE FOLLOWING TO THE FIRST PARAGRAGH:
THE CABINET WILL WAIVE THE REQUIREMENT STATED IN THE FIRST SENTENCE OF SECTION 5.14.6.2 - REINFORCED HOLES AND CUTOUT FOR HIGH MAST POLES (ONLY).

SECTION: 834.33 WARNING TAPE.

REVISION: REPLACE FIRST SENTENCE WITH THE FOLLOWING:
PROVIDE DETECTABLE TYPE TAPE THAT IS 6 INCHES WIDE AND 7.0 MILS (NOMINAL)THICK.

MEASUREMENT NOTE THAT ARE IN ADDITION TO SECTION 716:

REMOVE, STORE AND REINSTALL POLE- DEPARTMENT WILL MEASURE THE QUANTITY AS EACH INDIVIDUAL UNIT REMOVED, STORE AND REINSTALLED. THE DEPARTMENT WILL NOT MEASURE WORK AND MATERIAL NECESSARY TO RELOCATE AN EXISTING LIGHTING STANDARD AND WILL CONSIDERED THIS INCIDENTAL TO THIS ITEM OF WORK.

WOOD POLE- DEPARTMENT WILL MEASURE THE QUANTITY AS EACH INDIVIDUAL UNIT FURNISHED AND INSTALLED. THE DEPARTMENT WILL NOT MEASURE EXCAVATION, BACKFILLING, AND RESTORING DISTURBED AREAS.

ANCHOR- DEPARTMENT WILL MEASURE THE QUANTITY AS EACH INDIVIDUAL UNIT FURNISHED AND INSTALLED. THE DEPARTMENT WILL NOT MEASURE FURNISHING AND INSTALLING SPECIFIED ANCHOR, DOWN-GUY, MESSENGER, CLAMPS, GUY GUARD, AND INSULATORS (IF REQUIRED).

WIRE OR CABLE SHALL INCLUDE INSTALLING SPECIFIED WIRE OR CABLE WITHIN CONDUIT AS INDICATED ON THE PLAN SHEETS. INCIDENTAL TO THIS ITEM SHALL BE THE FURNISHING AND INSTALLING OF SPLICE BOOTS OR ANY OTHER HARDWARE REQUIRED FOR INSTALLING CABLE. THE CONTRACTOR SHALL INSTALL ALL CABLE OR WIRE RUNS SPLICE-FREE FROM THE CONTROLLER TO EACH POLE THE CABLE OR WIRE IS FEEDING. EXCEPTIONS TO THIS MUST BE APPROVED BY THE ENGINEER OR AS SPECIFIED ON THE PLANS. THE CONTRACTOR WILL RECEIVE WIRE IN 1000 FOOT ROLLS FROM OUR WAREHOUSE. THE CONTRACTOR SHALL RETURN ALL EXCESS WIRE TO THE TRAFFIC BARN IN DISTRICT 12. IF THE WIRE SUPPLIED DOES NOT EQUAL ENOUGH SUITABLE TO INSTALL ALL RUNS SPLICE FREE, THE CONTRACTOR CAN ASK FOR MORE WIRE TO BE SUPPLIED BY THE DIVISION OF TRAFFIC OPERATIONS. THIS REQUEST SHALL GO THROUGH THE RESIDENT ENGINEER TO CENTRAL OFFICE DIVISION OF TRAFFIC OPERATIONS. EACH RUN OF WIRE FROM POLE TO POLE (UP EACH POLE) SHALL BE THE FOLLOWING COLOR CODED: 2-BLACK (HOT) AND GREEN (GROUND). THIS NOTE ONLY APPLIES TO BID CODES 23675EC AND 24474ED.

WKP & KY 224
ROADWAY LIGHTING
ESTIMATE OF QUANTITIES

3-17-2021

MicroStation v8.11.9.459 | E-SHEET NAME: | USER: phoward DATE PLOTTED: January 6, 2022 | FILE NAME: G:\ENGR\HD1365.10 AND 1365.11 GRAYSON WK\CAD\PLAN\ROADWAY LIGHTING\T01ROADWAY LIGHTING QUANTITY SHEET.DGN

COUNTY OF	ITEM NO.	SHEET NO.
GRAYSON	4-20001 4-20002	T2

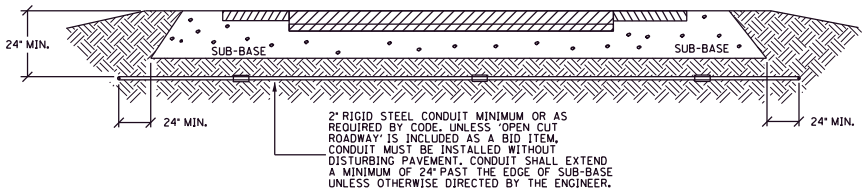

CONDUIT INSTALLATION UNDER EXISTING PAVEMENT DETAIL

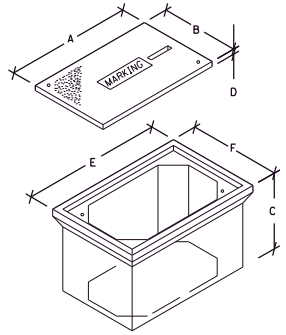

JUNCTION BOX DIMENSIONS (NOMINAL)						
	A	B	C	D	E	F
TYPE A	23"	14"	27"	2"	25"	15"
TYPE B	18"	11"	12"	1¾" *	20"	13"
TYPE C	36"	24"	30"	3"	38"	26"

* MINIMUM
NOTE: STACKABLE BOXES ARE PERMITTED

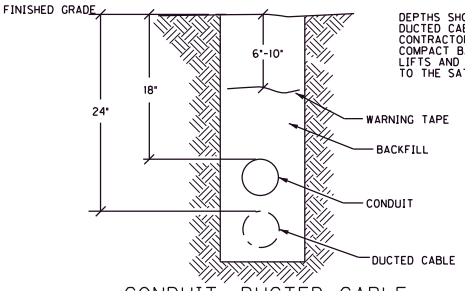

DEPTHS SHOWN FOR CONDUIT AND DUCTED CABLE ARE MINIMUMS. CONTRACTOR SHALL PLACE AND COMPACT BACKFILL IN 9" MAXIMUM LIFTS AND RETORE DISTURBED AREA TO THE SATISFACTION OF THE ENGINEER.

CONDUIT, DUCTED CABLE, AND WARNING TAPE TRENCH

ABOVE GROUND BOX SHALL BE FABRICATED FROM MINIMUM 12 GAUGE STEEL AND GALVANIZED AFTER FABRICATION. BOXES SHALL HAVE NO KNOCKOUTS AND SHALL BE PROVIDED WITH A PLATE COVER WITH A WEATHER RESISTANT GASKET AND A MINIMUM OF FOUR SCREWS FOR ATTACHING THE PLATE COVER TO THE BOX. CABLE CLAMPS SHALL BE PROVIDED FOR CABLES ENTERING AND EXITING THE BOX.

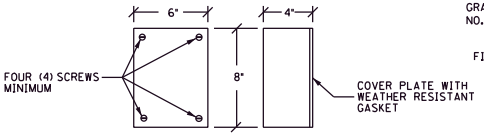

ABOVE GROUND BOX

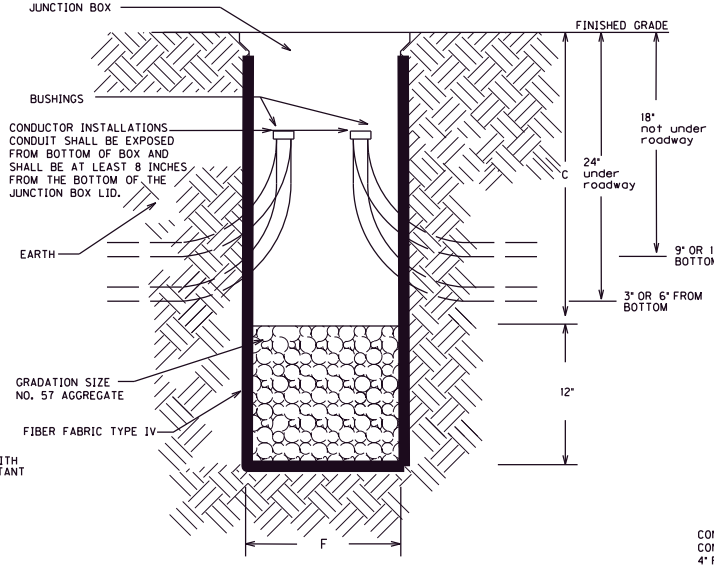

JUNCTION BOX INSTALLATION FOR CONVENTIONAL LIGHTING

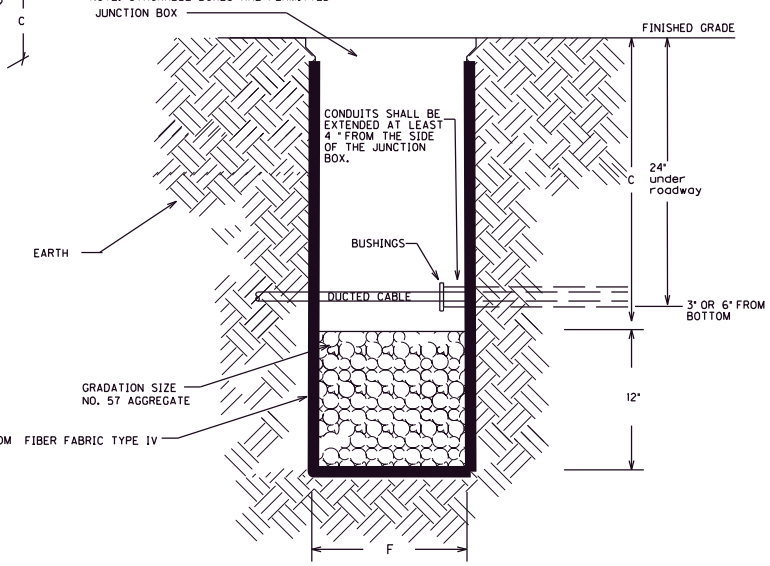

JUNCTION BOX INSTALLATION FOR HIGHMAST LIGHTING

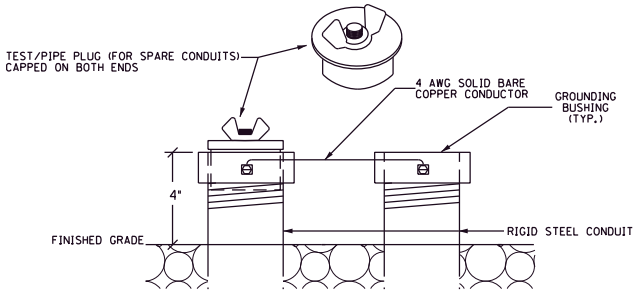

TEST/PIPE PLUG(FOR SPARE CONDUITS) AND GROUNDING DETAIL

BEFORE THE INSTALLATION OF THE #57 AGGREGATE AND JUNCTION BOX, THE CONTRACTOR SHALL INSTALL GEOTEXTILE FILTER FABRIC TYPE IV IN THE HOLE. THE FABRIC SHALL EXTEND TO JUST BELOW THE LIP OF THE JUNCTION BOX AND SHALL BE CONTINUOUSLY ADHERED TO THE EXTERIOR OF THE BOX WITH ADHESIVE. ANY LOCATIONS WHERE CONDUITS ENTER THE BOX, THE FABRIC SHALL BE "X CUT" ONLY AS MUCH AS NECESSARY TO ALLOW PASSAGE OF EACH INDIVIDUAL CONDUIT THROUGH THE FABRIC. THE FABRIC SHALL BE INCIDENTAL TO BID ITEMS 481I, 2039INS835, OR 2039ZNS835.

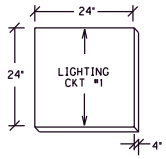

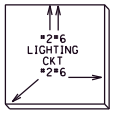

CONCRETE CABLE MARKERS

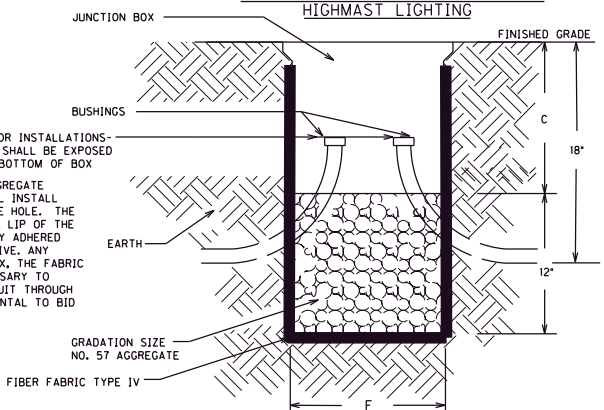

JUNCTION BOX INSTALLATION FOR TRAFFIC SIGNALS

WKP & KY 224
ROADWAY LIGHTING
_JUNCTION_BOX_AND_CONDUIT_DETAILS_

3/13/2017

FILE NAME: G:\ENGR\HD365.10 AND 365.11 GRAYSON WK\CAD\PLAN\ROADWAY LIGHTING\T02 JUNCTION BOX.DGN
USER: phoward
DATE PLOTTED: January 6, 2022
E-SHEET NAME:
MicroStation v8.11.9.459

COUNTY OF	ITEM NO.	SHEET NO.
GRAYSON	4-20001 4-20002	T3

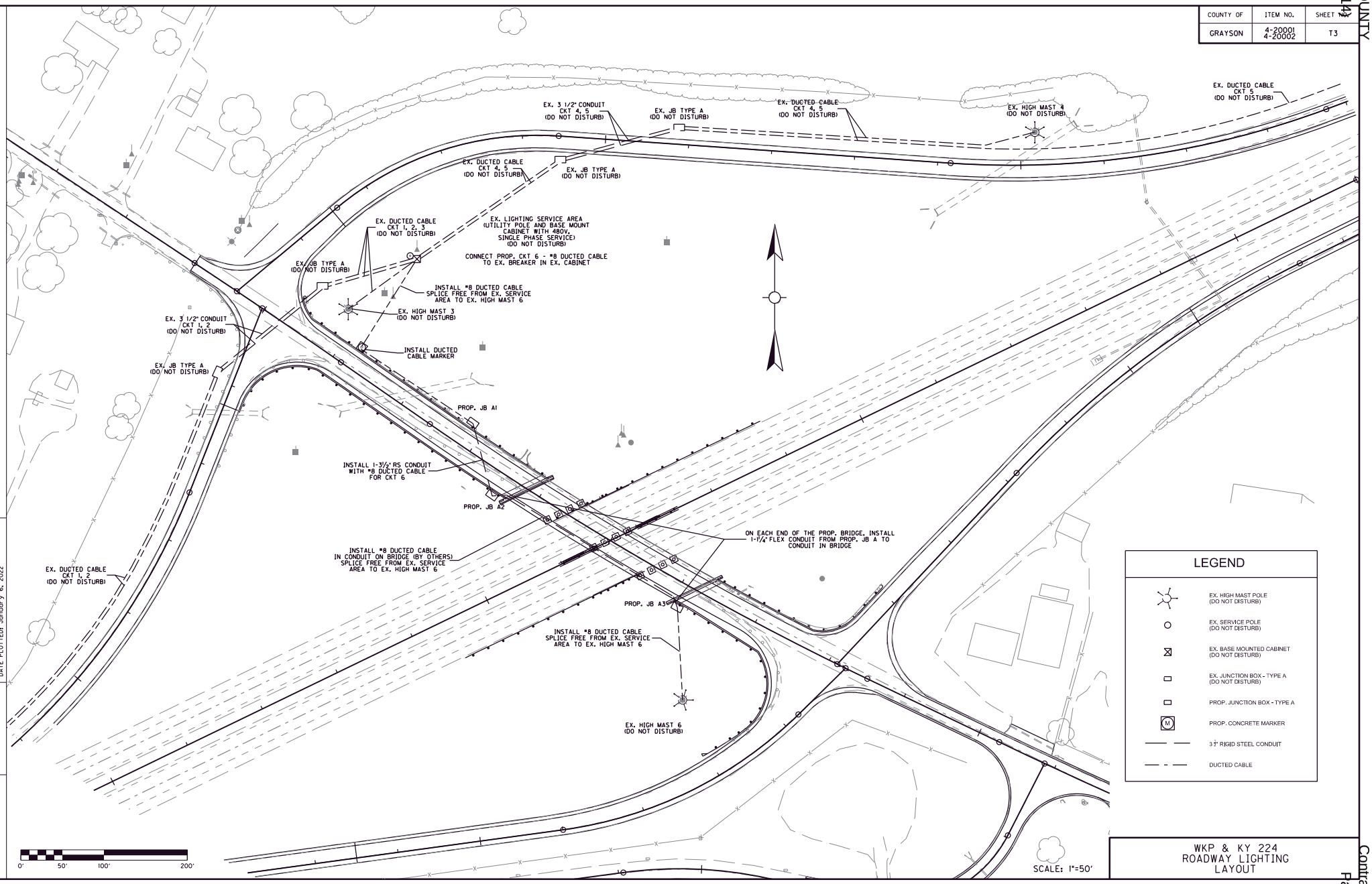

WKP & KY 224
ROADWAY LIGHTING
LAYOUT

FILE NAME: G:\ENGR\HD\365.10 AND 365.11 GRAYSON WK\CAD\PLAN\ROADWAY LIGHTING\T03 ROADWAY LIGHTING LAYOUT.DGN
USER: jtomlinson
DATE PLOTTED: January 6, 2022
E-SHEET NAME:
MicroStation v8.11.9.919

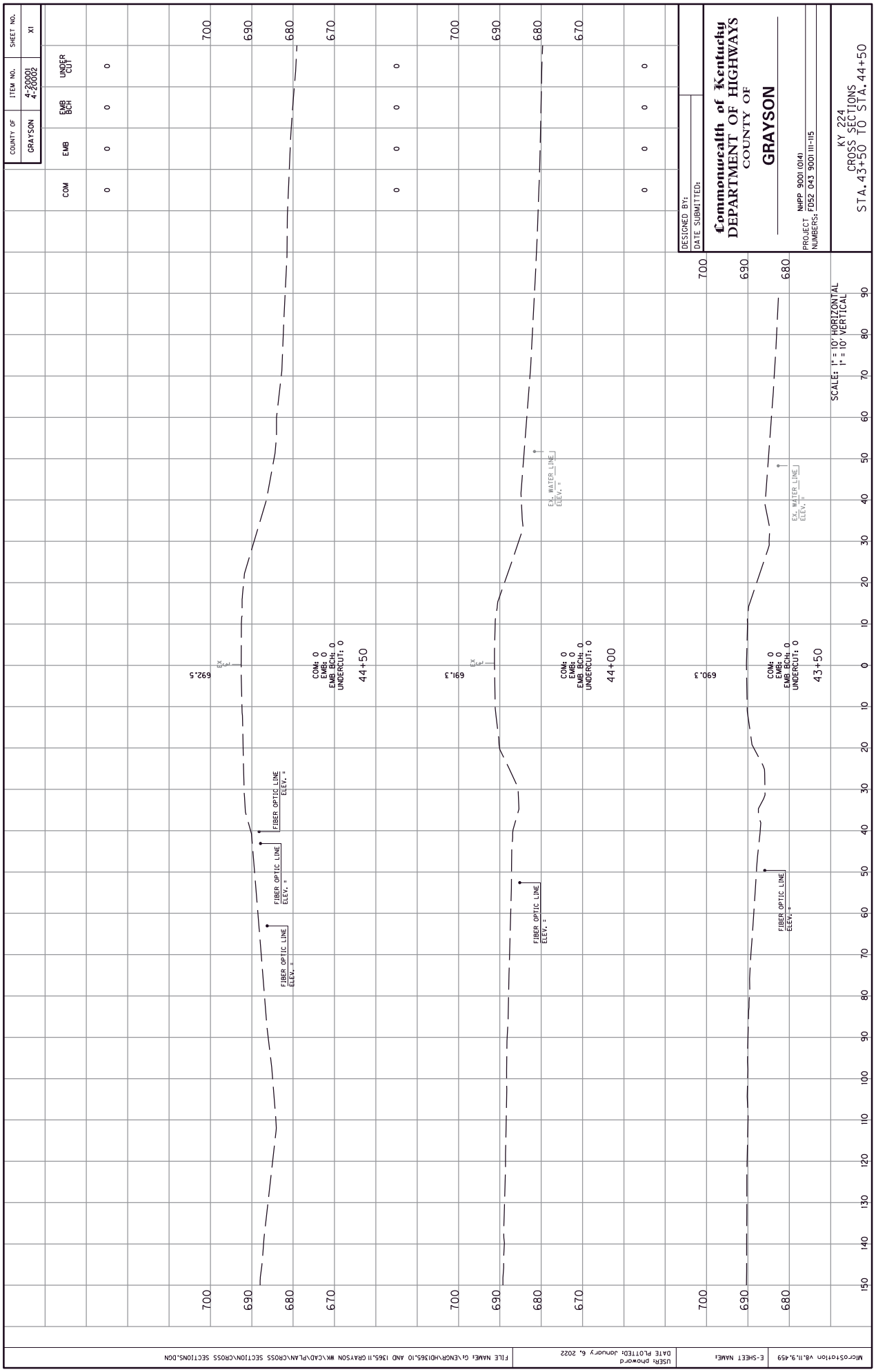
COUNTY OF
GRAYSON
ITEM NO.
4-20001
4-20002
SHEET NO.
XI
COM
EMB
EMB BCH
UNDER CUT
DESIGNED BY:
DATE SUBMITTED:
Commonwealth of Kentucky
DEPARTMENT OF HIGHWAYS
COUNTY OF
GRAYSON
PROJECT NUMBERS: NHPP 9001 (014)
FD52 043 9001 111-115
KY 224
CROSS SECTIONS
STA. 43+50 TO STA. 44+50
SCALE: 1" = 10' HORIZONTAL
1" = 10' VERTICAL
FIBER OPTIC LINE
ELEV. =
EX. WATER LINE
ELEV. =
COM: 0
EMB: 0
EMB BCH: 0
UNDERCUT: 0
692.5
691.3
690.3
44+50
44+00
43+50
700
690
680
670
MicroStation V8.11.9.459
E-SHEET NAME:
USER: phoward
DATE PLOTTED: January 6, 2022
FILE NAME: G:\ENGR\HD1365.10 AND 1365.11 GRAYSON WK\CAD\PLAN\CROSS SECTIONS\CROSS SECTIONS.DGN

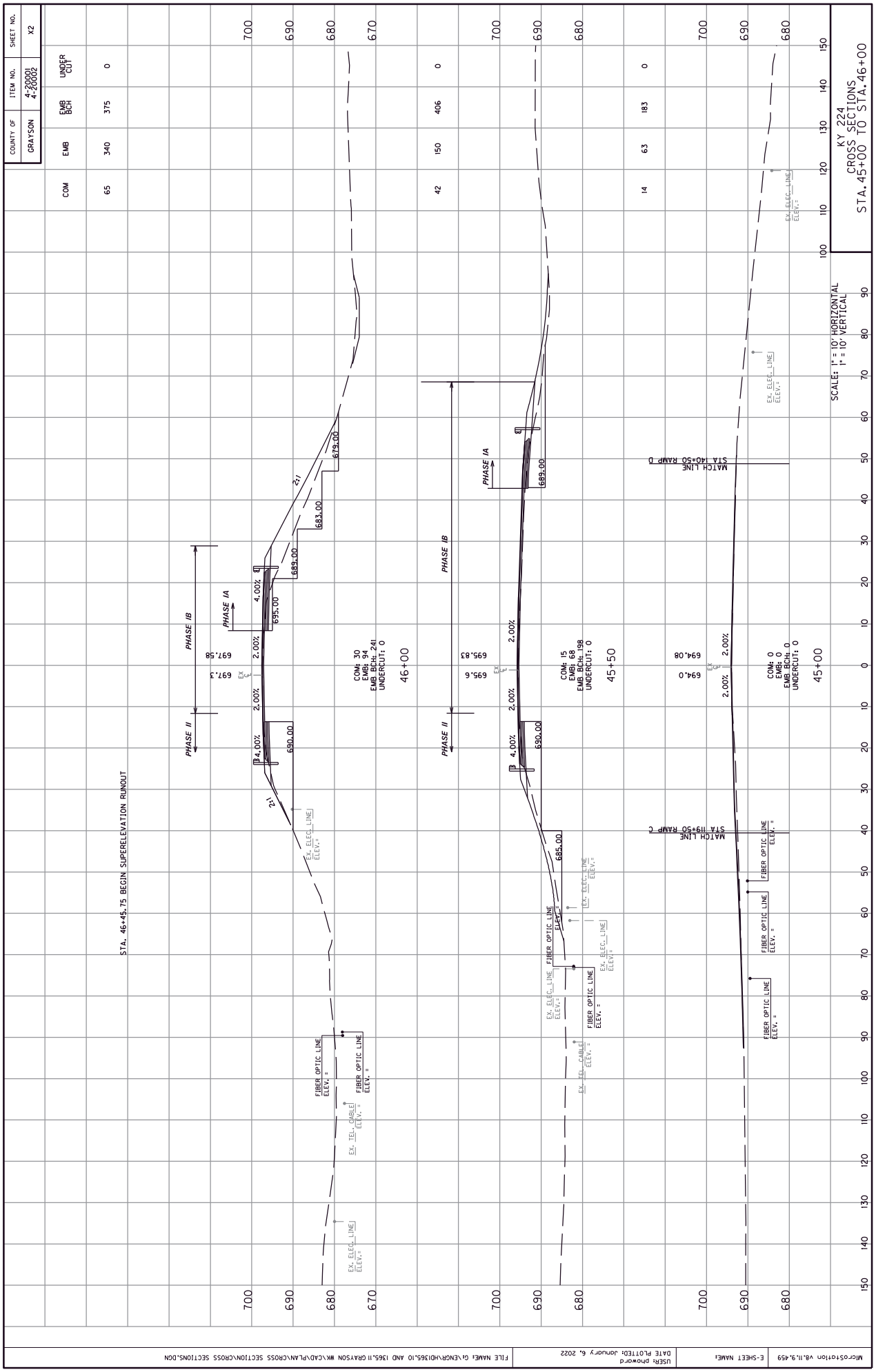
COUNTY OF
GRAYSON
ITEM NO.
4-20001
4-20002
SHEET NO.
X2
COM
EMB
EMB BCH
UNDER CUT
65
340
375
0
42
150
406
0
14
63
183
0
KY 224
CROSS SECTIONS
STA. 45+00 TO STA. 46+00
SCALE: 1" = 10' HORIZONTAL
1" = 10' VERTICAL
STA. 46+45.75 BEGIN SUPERELEVATION RUNOUT
PHASE II
PHASE IB
PHASE IA
697.58
697.3
695.00
689.00
683.00
679.00
690.00
2:1
4.00%
2.00%
COM: 30
EMB: 94
EMB BCH: 241
UNDERCUT: 0
46+00
695.83
695.6
689.00
685.00
COM: 15
EMB: 68
EMB BCH: 198
UNDERCUT: 0
45+50
694.08
694.0
COM: 0
EMB: 0
EMB BCH: 0
UNDERCUT: 0
45+00
MATCH LINE
STA 140+50 RAMP D
MATCH LINE
STA 119+50 RAMP C
EX. ELEC. LINE
ELEV.=
EX. TEL. CABLE
ELEV.=
FIBER OPTIC LINE
ELEV. =
700
690
680
670
100
110
120
130
140
150

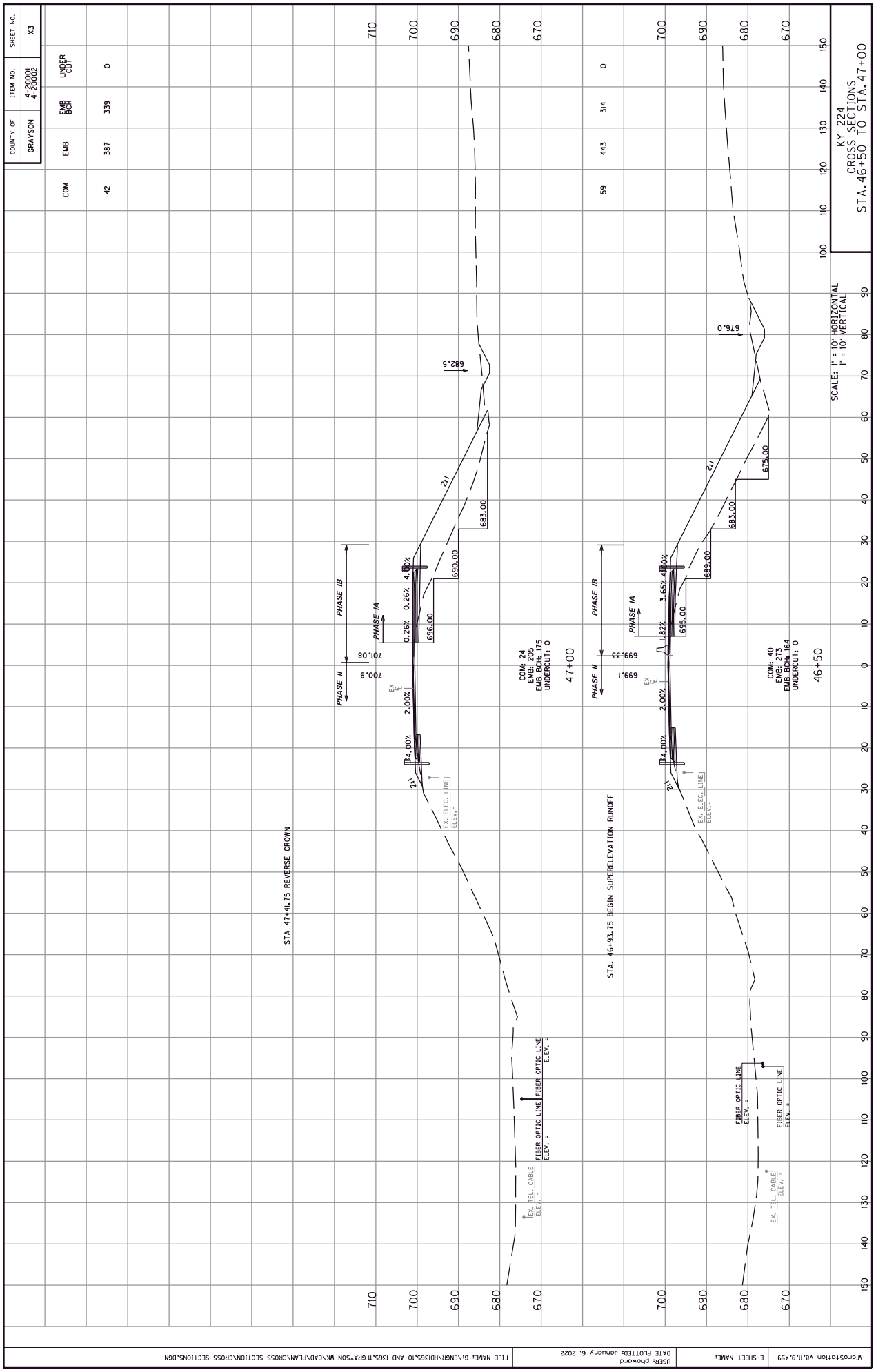
COUNTY OF
GRAYSON
ITEM NO.
4-20001
4-20002
SHEET NO.
X3
COM
EMB
EMB BCH
UNDER CUT
42
387
339
0
59
443
314
0
KY 224
CROSS SECTIONS
STA. 46+50 TO STA. 47+00
SCALE: 1" = 10' HORIZONTAL
1" = 10' VERTICAL
676.0
682.5
675.00
683.00
690.00
696.00
695.00
700.08
700.9
699.33
699.1
PHASE IB
PHASE IA
PHASE II
4.00%
2.00%
0.26%
3.65%
1.82%
2:1
EX. ELEC. LINE
ELEV.=
EX. TEL. CABLE
ELEV.=
FIBER OPTIC LINE
ELEV. =
COM: 24
EMB: 205
EMB BCH: 175
UNDERCUT: 0
47+00
COM: 40
EMB: 273
EMB BCH: 164
UNDERCUT: 0
46+50
STA 47+41.75 REVERSE CROWN
STA. 46+93.75 BEGIN SUPERELEVATION RUNOFF
710
700
690
680
670
150
140
130
120
110
100
90
80
70
60
50
40
30
20
10
0
MicroStation V8.11.9.459
E-SHEET NAME:
USER: phoward
DATE PLOTTED: January 6, 2022
FILE NAME: G:\ENGR\HD1365.10 AND 1365.11 GRAYSON WK\CAD\PLAN\CROSS SECTIONS\CROSS SECTIONS.DGN

COUNTY OF	ITEM NO.	SHEET NO.
GRAYSON	4-20001 4-20002	X4

COM	EMB	EMB BCH	UNDER CUT
53	332	242	0
42	396	322	0

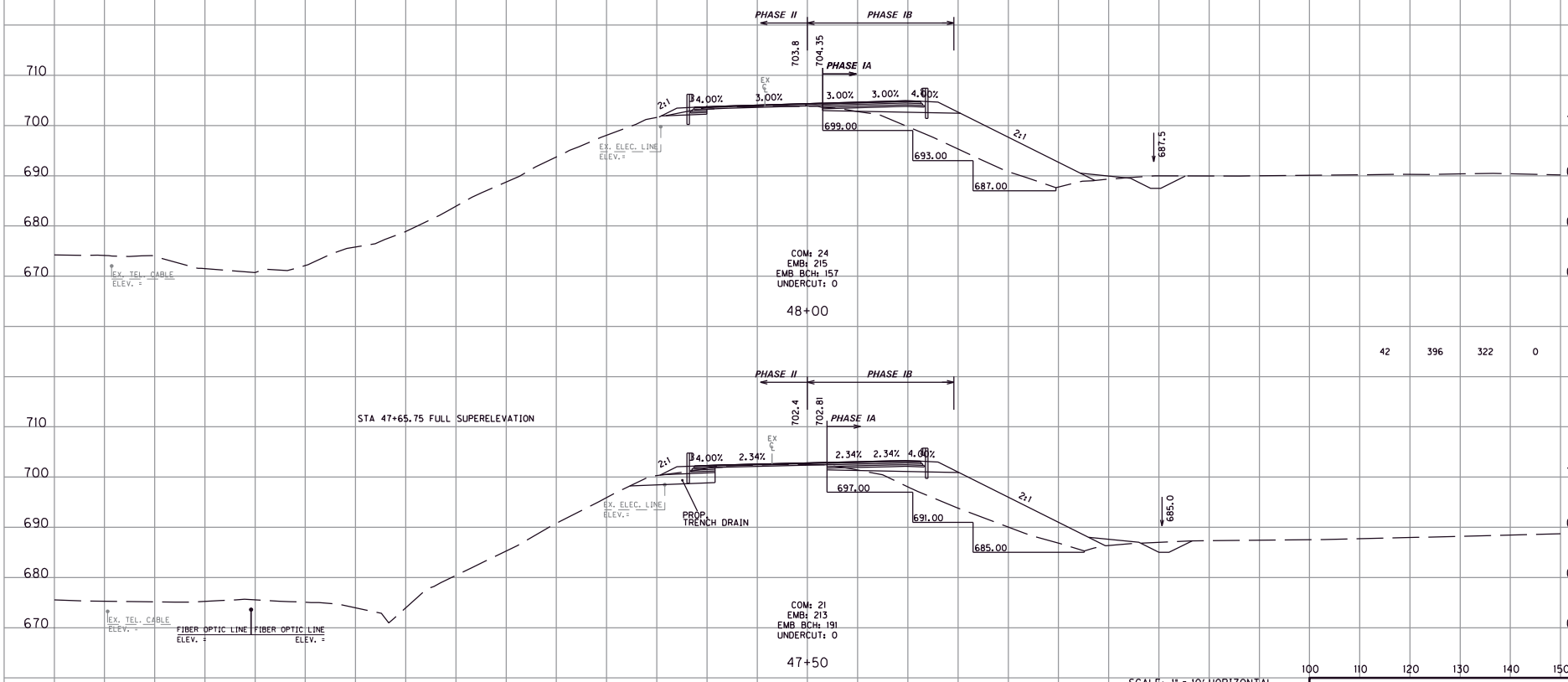

SCALE: 1" = 10' HORIZONTAL
1" = 10' VERTICAL

KY 224
CROSS SECTIONS
STA.47+50 TO STA.48+00

MicroStation v8.11.9.459 | E-SHEET NAME: | USER: phoward DATE PLOTTED: January 6, 2022 | FILE NAME: G:\ENGR\HD\365.10 AND 1365.11 GRAYSON WK\CAD\PLAN\CROSS SECTION\CROSS SECTIONS.DGN

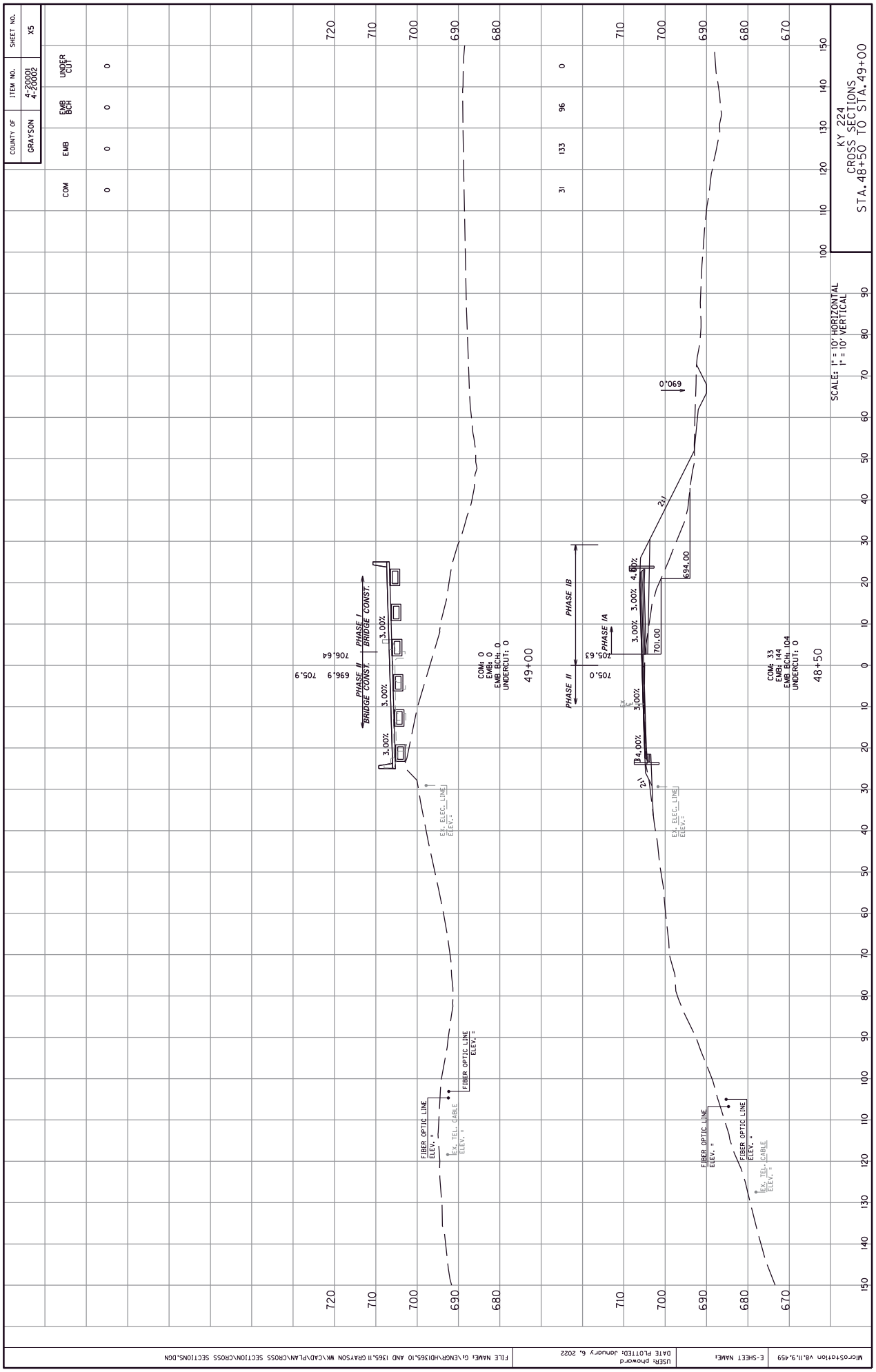
COUNTY OF
GRAYSON
ITEM NO.
4-20001
4-20002
SHEET NO.
X5
COM
EMB
EMB BCH
UNDER CUT
0
0
0
0
0
0
31
133
96
0
KY 224
CROSS SECTIONS
STA.48+50 TO STA.49+00
SCALE: 1" = 10' HORIZONTAL
1" = 10' VERTICAL
PHASE I
BRIDGE CONST.
PHASE II
BRIDGE CONST.
3.00%
706.64
696.9
705.9
COM: 0
EMB: 0
EMB BCH: 0
UNDERCUT: 0
49+00
PHASE IB
PHASE II
PHASE IA
705.0
705.63
3.00%
4.00%
2:1
694.00
701.00
690.0
COM: 33
EMB: 144
EMB BCH: 104
UNDERCUT: 0
48+50
EX. ELEC. LINE
ELEV.=
FIBER OPTIC LINE
ELEV. =
EX. TEL. CABLE
ELEV.=
720
710
700
690
680
670

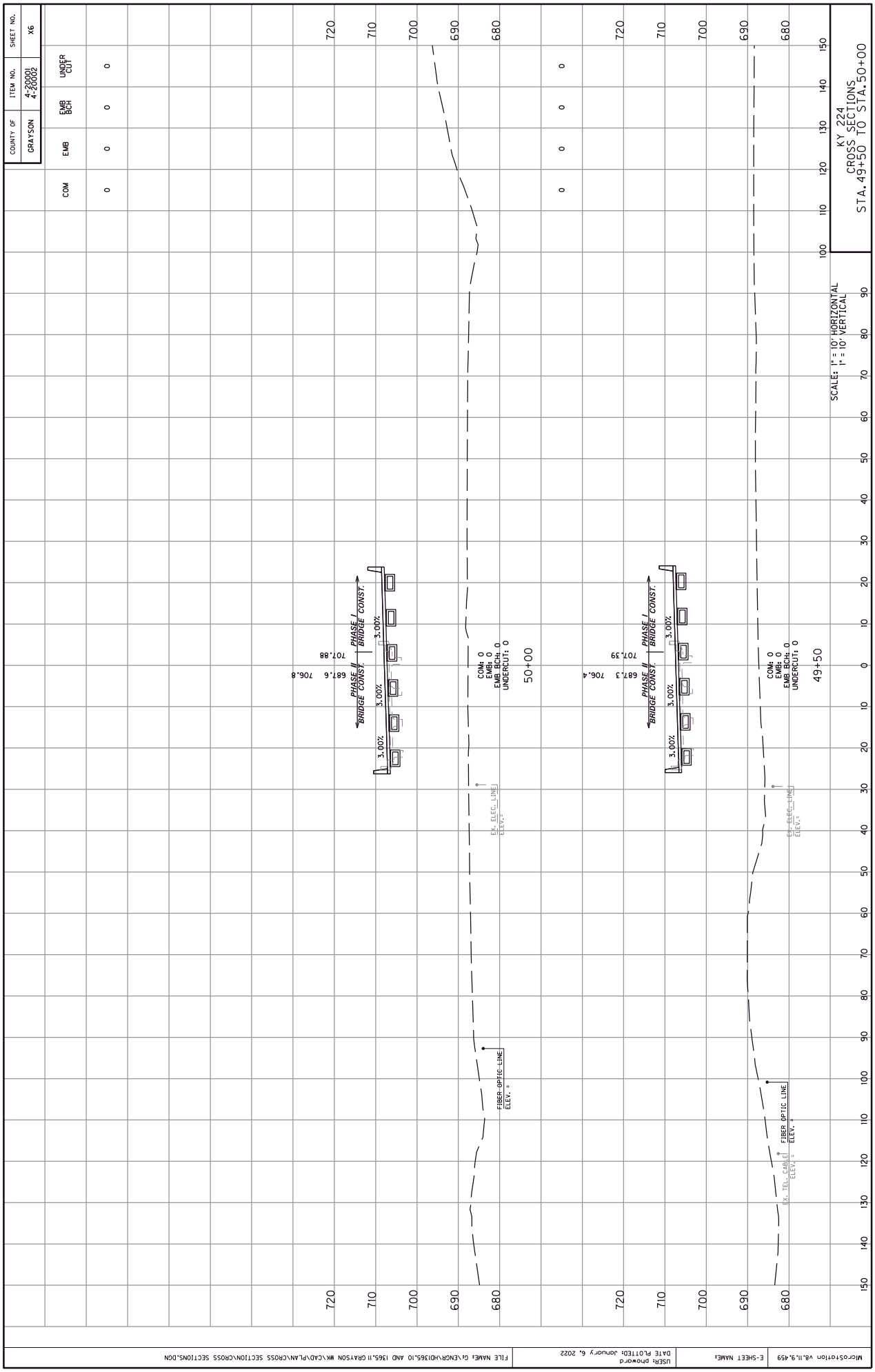
COUNTY OF
GRAYSON
ITEM NO.
4-20001
4-20002
SHEET NO.
X6
COM
EMB
EMB BCH
UNDER CUT
KY 224
CROSS SECTIONS
STA.49+50 TO STA.50+00
SCALE: 1" = 10' HORIZONTAL
1" = 10' VERTICAL
PHASE I
BRIDGE CONST.
PHASE II
BRIDGE CONST.
3.00%
687.6
706.8
707.88
687.3
706.4
707.39
COM: 0
EMB: 0
EMB BCH: 0
UNDERCUT: 0
50+00
49+50
EX. ELEC. LINE
ELEV. =
FIBER OPTIC LINE
ELEV. =
EX. TEL. CABLE
ELEV. =
720
710
700
690
680
100
110
120
130
140
150
MicroStation V8.11.9.459
E-SHEET NAME:
USER: phoward
DATE PLOTTED: January 6, 2022
FILE NAME: G:\ENGR\HD1365.10 AND 1365.11 GRAYSON WK\CAD\PLAN\CROSS SECTION\CROSS SECTIONS.DGN

COUNTY OF	ITEM NO.	SHEET NO.
GRAYSON	4-20001 4-20002	X7

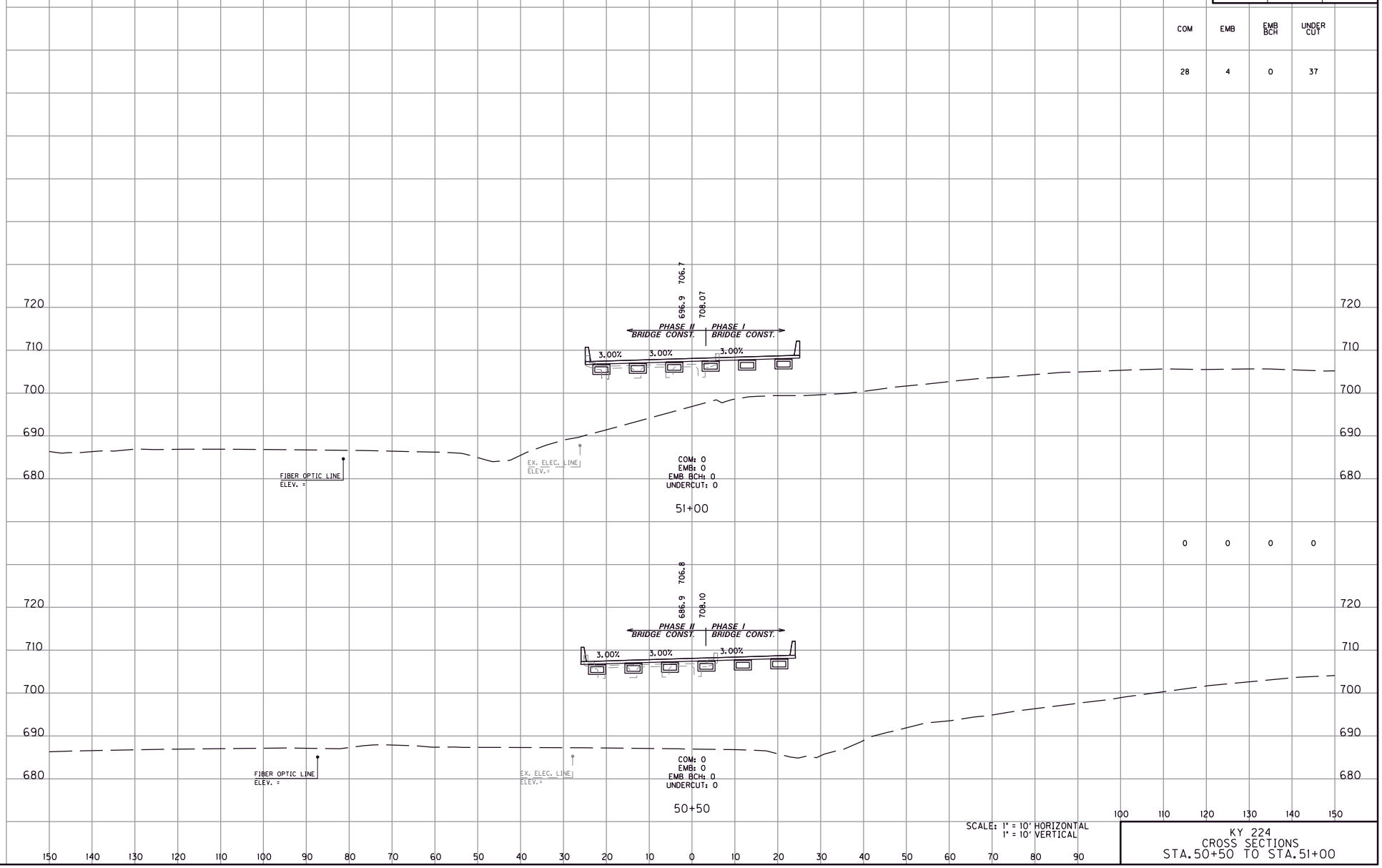

MicroStation v8.11.9.459 | E-SHEET NAME: | USER: phoward DATE PLOTTED: January 6, 2022 | FILE NAME: G:\ENGR\HD\365.10 AND 1365.11 GRAYSON WK\CAD\PLAN\CROSS SECTION\CROSS SECTIONS.DGN

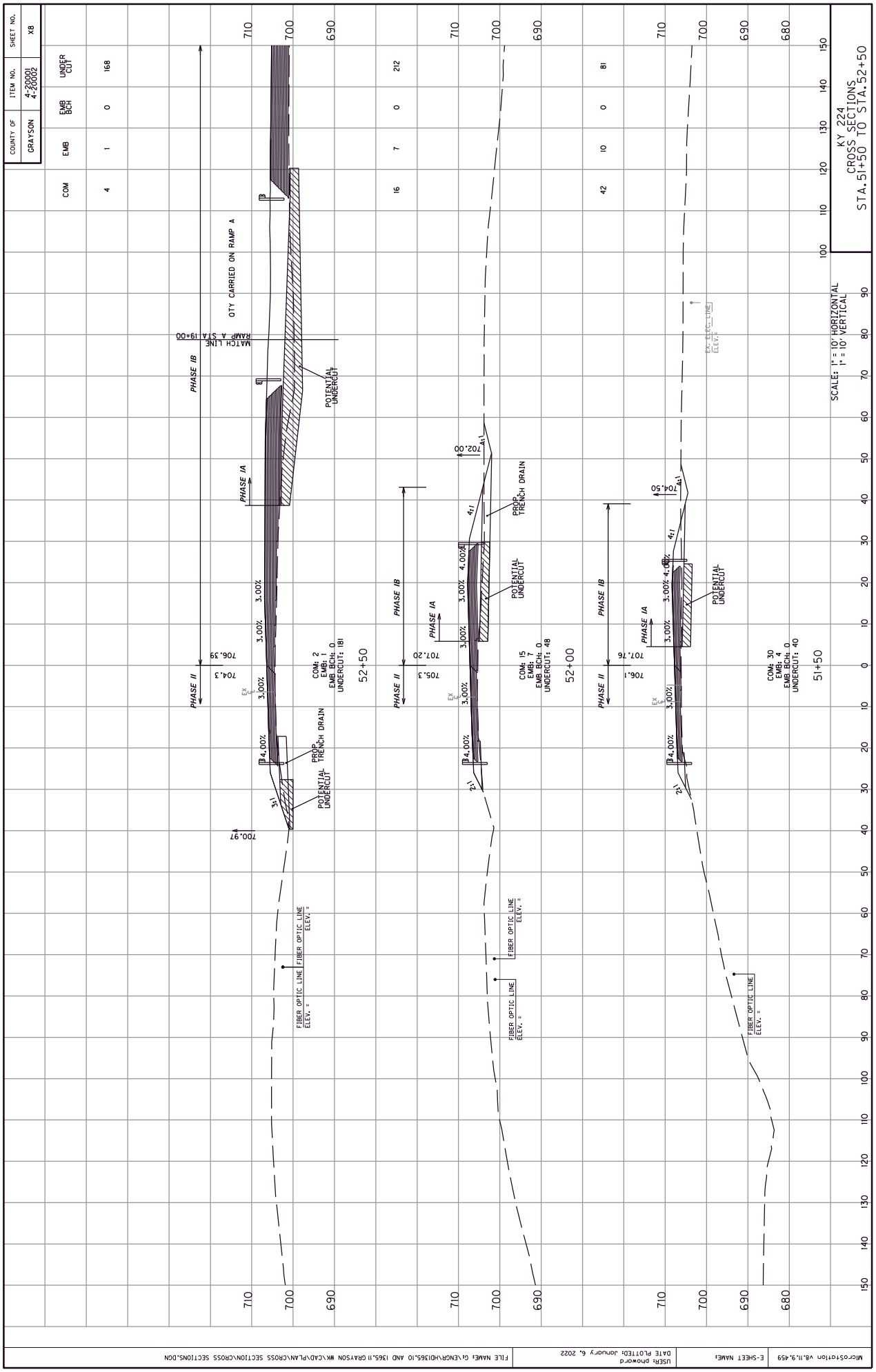
COUNTY OF
GRAYSON
ITEM NO.
4-20001
4-20002
SHEET NO.
X8
COM
EMB
EMB BCH
UNDER CUT
4
1
0
168
16
7
0
212
42
10
0
81
KY 224
CROSS SECTIONS
STA.51+50 TO STA.52+50
SCALE: 1" = 10' HORIZONTAL
1" = 10' VERTICAL
QTY CARRIED ON RAMP A
MATCH LINE
RAMP A STA 19+00
PHASE IB
PHASE IA
PHASE II
POTENTIAL UNDERCUT
PROP. TRENCH DRAIN
FIBER OPTIC LINE
ELEV. =
EX. ELEC. LINE
ELEV. =
COM: 2
EMB: 1
EMB BCH: 0
UNDERCUT: 181
52+50
COM: 15
EMB: 7
EMB BCH: 0
UNDERCUT: 48
52+00
COM: 30
EMB: 4
EMB BCH: 0
UNDERCUT: 40
51+50
700.97
706.39
704.3
705.3
707.20
702.00
706.1
707.76
704.50
3:1
4:1
2:1
4.00%
3.00%
MicroStation V8.11.9.459
E-SHEET NAME:
USER: phoward
DATE PLOTTED: January 6, 2022
FILE NAME: G:\ENGR\HD1365.10 AND 1365.11 GRAYSON WK\CAD\PLAN\CROSS SECTIONS\CROSS SECTIONS.DGN

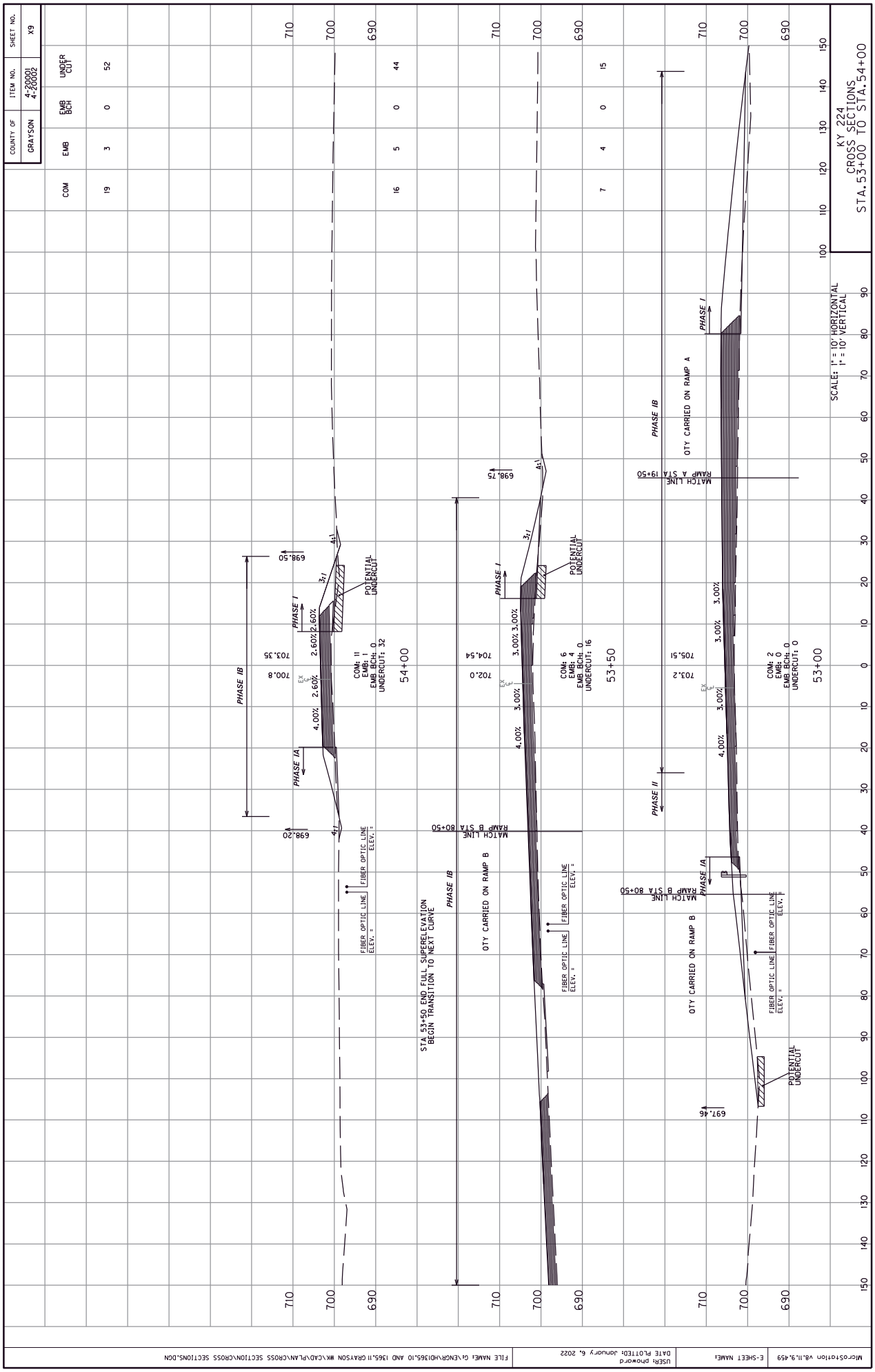
COUNTY OF
GRAYSON
ITEM NO.
4-20001
4-20002
SHEET NO.
X9
COM
EMB
EMB BCH
UNDER CUT
19
3
0
52
16
5
0
44
7
4
0
15
KY 224
CROSS SECTIONS
STA.53+00 TO STA.54+00
SCALE: 1" = 10' HORIZONTAL
1" = 10' VERTICAL
PHASE IB
PHASE I
PHASE IA
PHASE II
698.50
698.20
698.75
697.46
703.35
700.8
704.54
702.0
705.51
703.2
2.60%
4.00%
3.00%
4:1
3:1
POTENTIAL UNDERCUT
FIBER OPTIC LINE
ELEV. =
COM: 11
EMB: 1
EMB BCH: 0
UNDERCUT: 32
54+00
COM: 6
EMB: 4
EMB BCH: 0
UNDERCUT: 16
53+50
COM: 2
EMB: 0
EMB BCH: 0
UNDERCUT: 0
53+00
STA 53+50 END FULL SUPERELEVATION
BEGIN TRANSITION TO NEXT CURVE
MATCH LINE
RAMP B STA 80+50
RAMP A STA 19+50
OTY CARRIED ON RAMP B
OTY CARRIED ON RAMP A
710
700
690
100
110
120
130
140
150
0
10
20
30
40
50
60
70
80
90

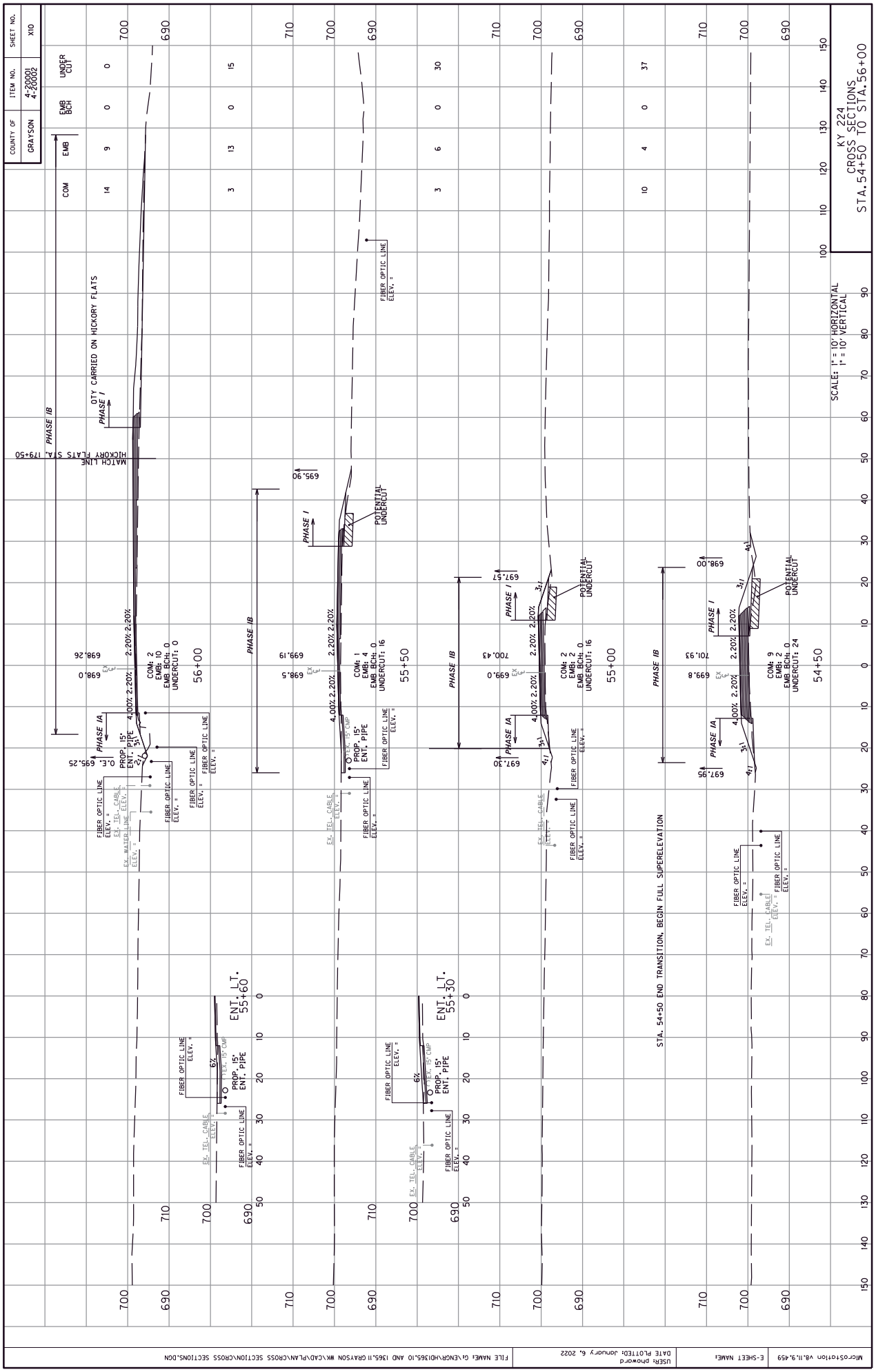
COUNTY OF
GRAYSON
ITEM NO.
4-20001
4-20002
SHEET NO.
X10
COM
EMB
EMB BCH
UNDER CUT
14 9 0 0
3 13 0 15
3 6 0 30
10 4 0 37
KY 224
CROSS SECTIONS
STA.54+50 TO STA.56+00
SCALE: 1" = 10' HORIZONTAL
1" = 10' VERTICAL
QTY CARRIED ON HICKORY FLATS
MATCH LINE
HICKORY FLATS STA. 179+50
PHASE I
PHASE IA
PHASE IB
COM: 2
EMB: 10
EMB BCH: 0
UNDERCUT: 0
56+00
COM: 1
EMB: 4
EMB BCH: 0
UNDERCUT: 16
55+50
COM: 2
EMB: 2
EMB BCH: 0
UNDERCUT: 16
55+00
COM: 9
EMB: 2
EMB BCH: 0
UNDERCUT: 24
54+50
POTENTIAL UNDERCUT
PROP. 15" ENT. PIPE
EX. 15" CMP
FIBER OPTIC LINE
ELEV. =
EX. TEL. CABLE
EX. WATER LINE
O.E. 695.25
ENT. LT. 55+60
ENT. LT. 55+30
STA. 54+50 END TRANSITION, BEGIN FULL SUPERELEVATION
MicroStation V8.11.9.459
E-SHEET NAME:
USER: pnoward
DATE PLOTTED: January 6, 2022
FILE NAME: G:\ENGR\HD1365.10 AND 1365.11 GRAYSON WK\CAD\PLAN\CROSS SECTIONS\CROSS SECTIONS.DGN

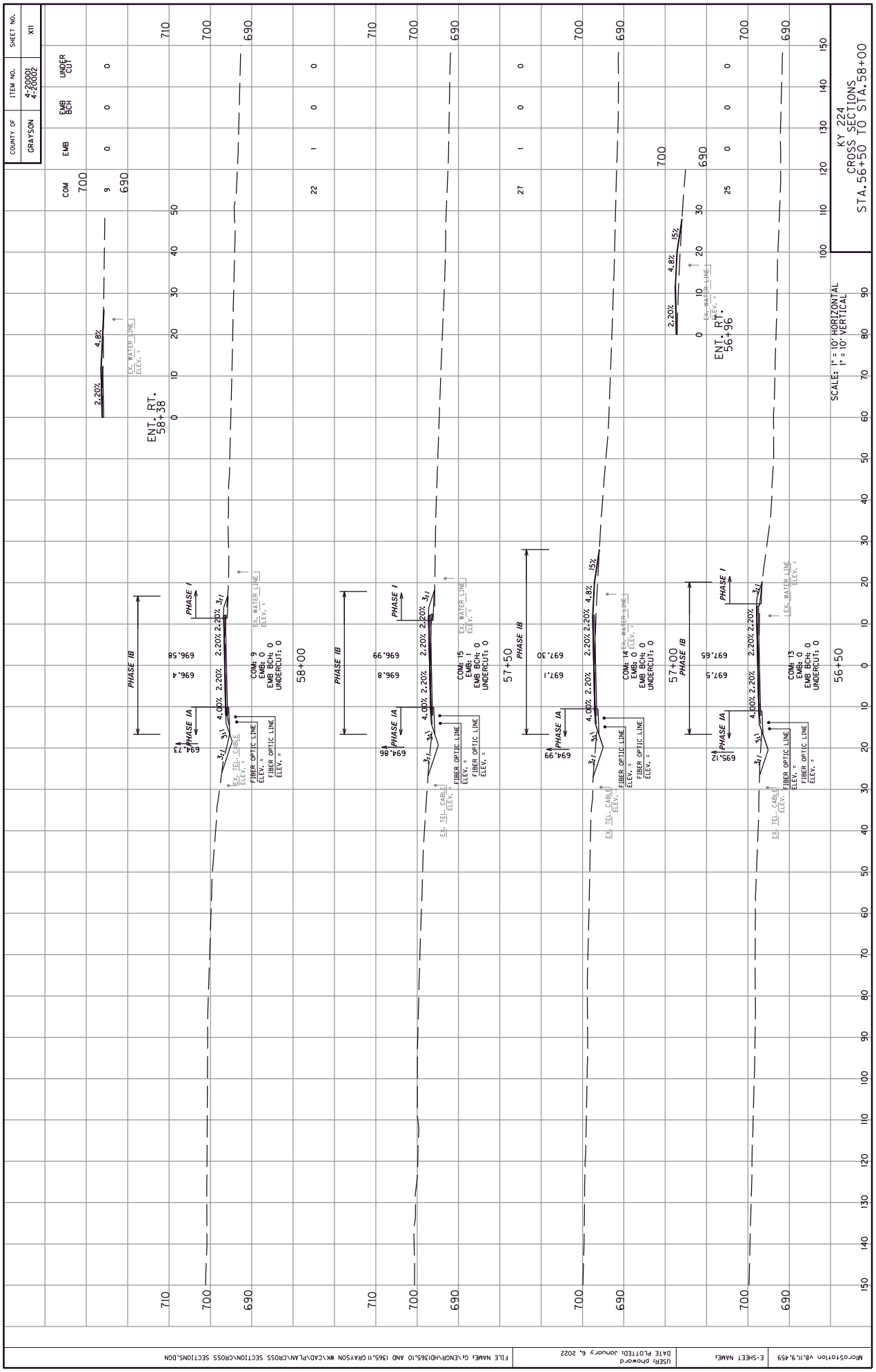
COUNTY OF
GRAYSON
ITEM NO.
4-20001
4-20002
SHEET NO.
XII
KY 224
CROSS SECTIONS
STA.56+50 TO STA.58+00
SCALE: 1" = 10' HORIZONTAL
1" = 10' VERTICAL
ENT. RT.
58+38
ENT. RT.
56+96
58+00
57+50
56+50
PHASE IA
PHASE IB
PHASE I
COM: 9
EMB: 0
EMB BCH: 0
UNDERCUT: 0
COM: 15
EMB: 1
EMB BCH: 0
UNDERCUT: 0
COM: 14
EMB: 0
EMB BCH: 0
UNDERCUT: 0
COM: 13
EMB: 0
EMB BCH: 0
UNDERCUT: 0
FIBER OPTIC LINE
EX. TEL. CABLE
EX. WATER LINE
ELEV. =
4.00%
2.20%
4.8%
15%
3:1
696.58
696.4
696.99
696.8
697.30
697.1
697.65
697.5
694.73
694.86
694.99
695.13
COM
EMB
EMB BCH
UNDER CUT
9
22
27
25
700
690
710
0
10
20
30
40
50
60
70
80
90
100
110
120
130
140
150
MicroStation V8.11.9.459
E-SHEET NAME:
USER: phoward
DATE PLOTTED: January 6, 2022
FILE NAME: G:\ENGR\HD1365.10 AND 1365.11 GRAYSON WK\CAD\PLAN\CROSS SECTIONS\CROSS SECTIONS.DGN

COUNTY OF	ITEM NO.	SHEET NO.
GRAYSON	4-20001 4-20002	X12

	COM	EMB	EMB BCH	UNDER CUT
KY 224 TOTALS:	616	2314	2277	691

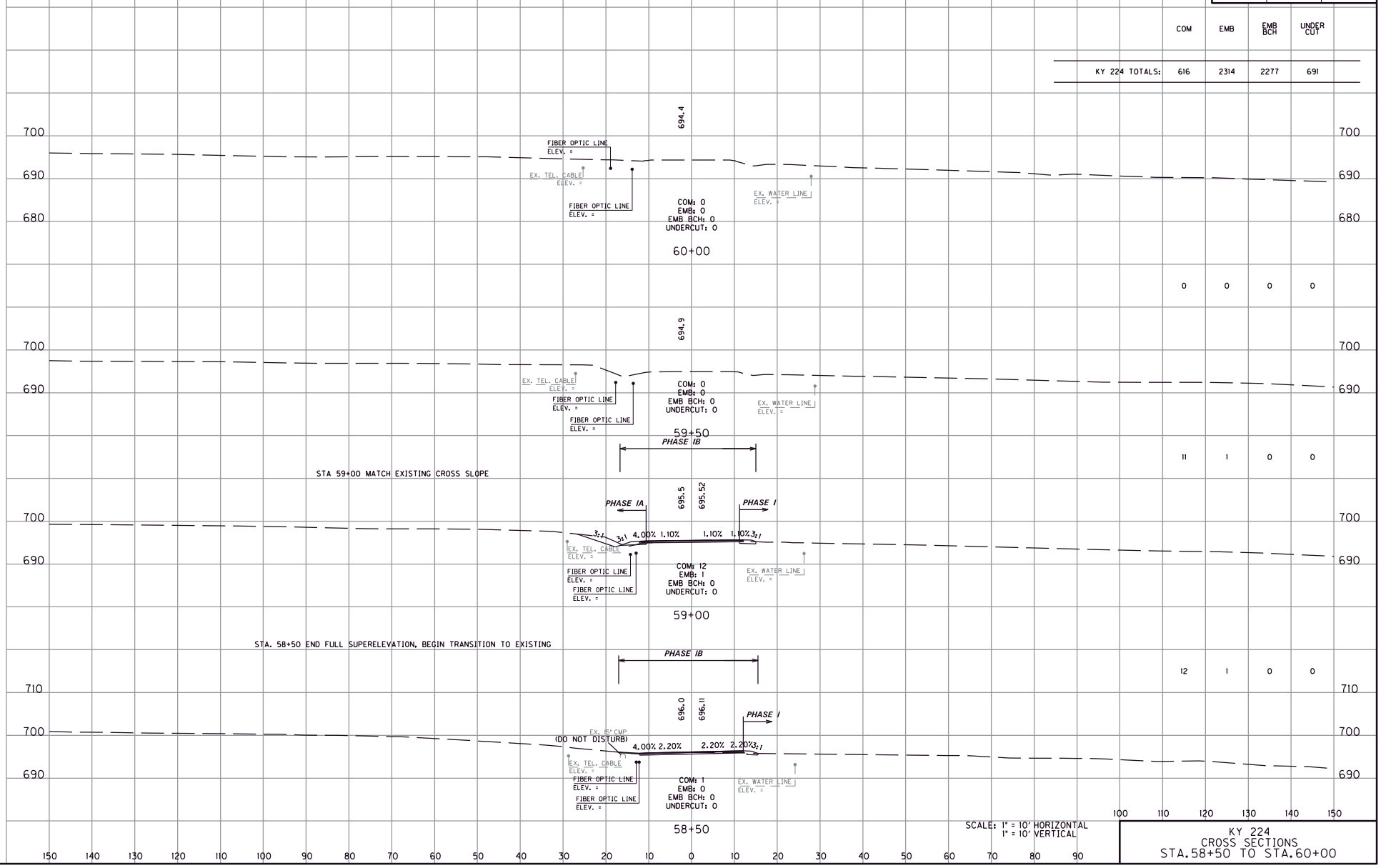

SCALE: 1" = 10' HORIZONTAL
1" = 10' VERTICAL

KY 224
CROSS SECTIONS
STA.58+50 TO STA.60+00

FILE NAME: G:\ENGR\HD365.10 AND 365.11 GRAYSON WK\CAD\PLAN\CROSS SECTION\CROSS SECTIONS.DGN
USER: phoward
DATE PLOTTED: January 6, 2022
E-SHEET NAME:
MicroStation v8.11.9.459

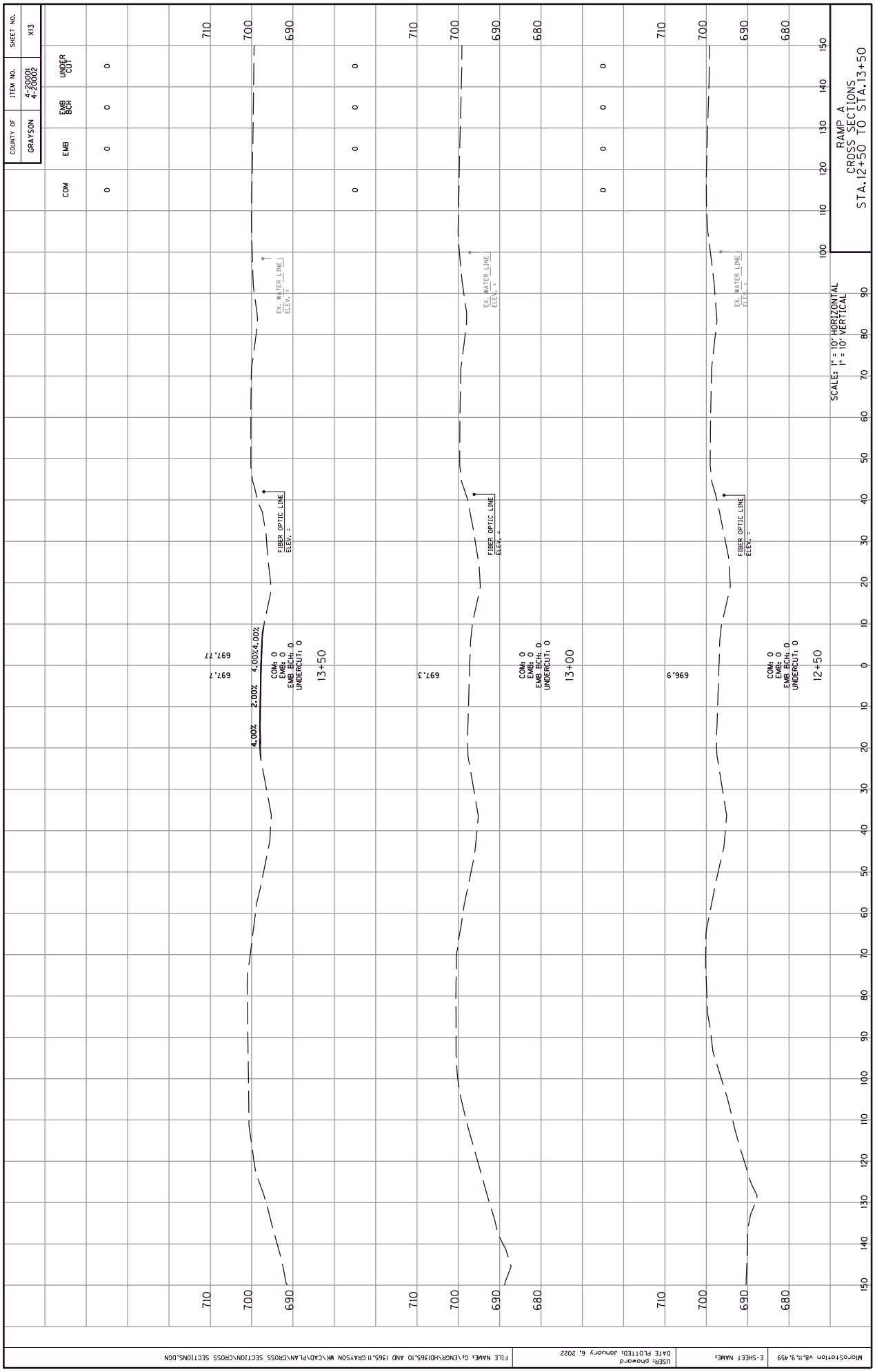
COUNTY OF
GRAYSON
ITEM NO.
4-20001
4-20002
SHEET NO.
X13
COM
EMB
EMB BCH
UNDER CUT
RAMP A
CROSS SECTIONS
STA.12+50 TO STA.13+50
SCALE: 1" = 10' HORIZONTAL
1" = 10' VERTICAL
EX. WATER LINE
ELEV. =
FIBER OPTIC LINE
ELEV. =
4.00%
2.00%
4.00%
697.77
697.7
COM: 0
EMB: 0
EMB BCH: 0
UNDERCUT: 0
13+50
697.3
COM: 0
EMB: 0
EMB BCH: 0
UNDERCUT: 0
13+00
696.9
COM: 0
EMB: 0
EMB BCH: 0
UNDERCUT: 0
12+50
MicroStation V8.11.9.459
E-SHEET NAME:
USER: phoward
DATE PLOTTED: January 6, 2022
FILE NAME: G:\ENGR\HD1365.10 AND 1365.11 GRAYSON WK\CAD\PLAN\CROSS SECTION\CROSS SECTIONS.DGN

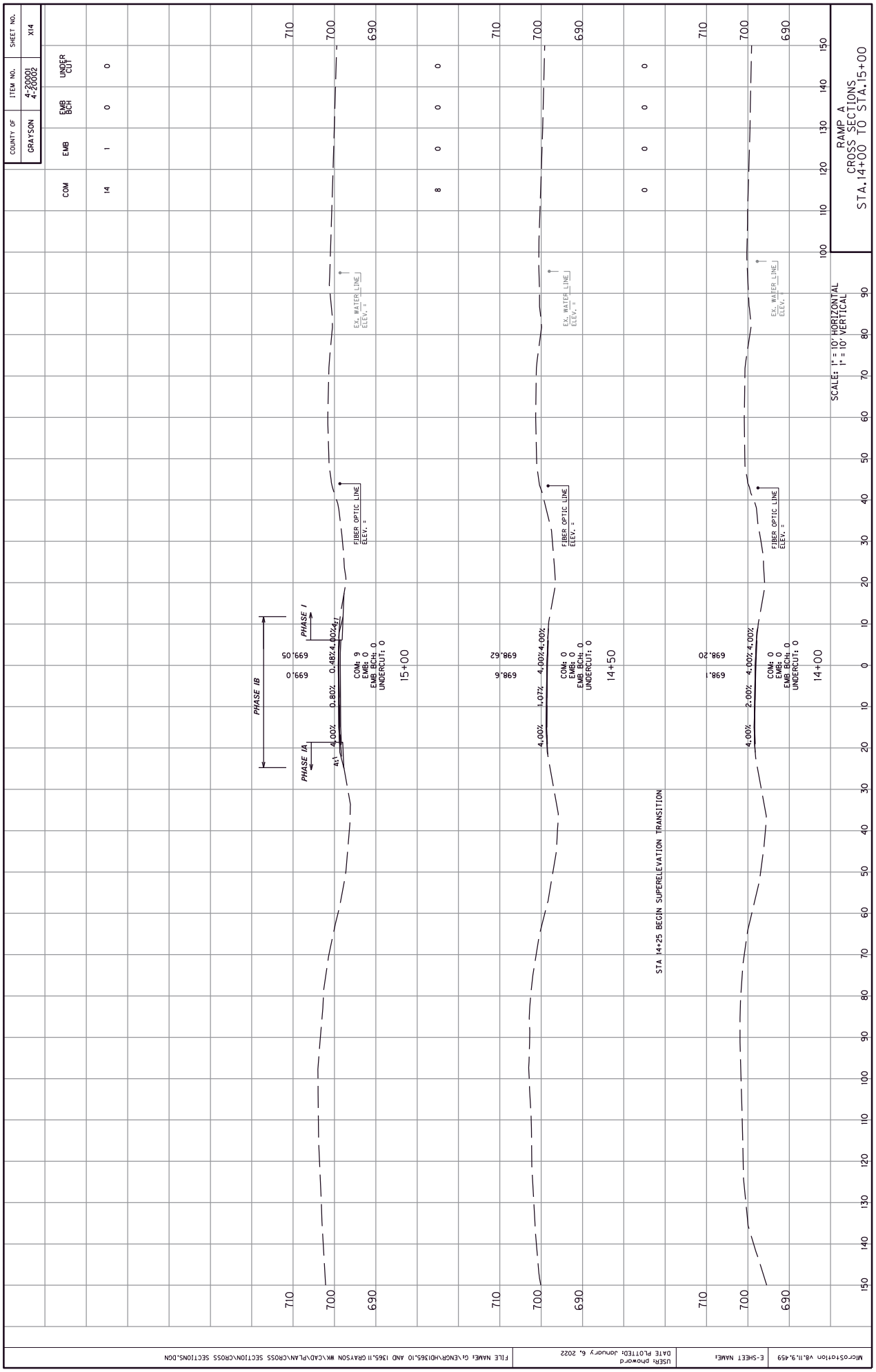
COUNTY OF
GRAYSON
ITEM NO.
4-20001
4-20002
SHEET NO.
X14
COM
EMB
EMB BCH
UNDER CUT
14
1
0
0
8
0
0
0
0
0
0
0
RAMP A
CROSS SECTIONS
STA.14+00 TO STA.15+00
SCALE: 1" = 10' HORIZONTAL
1" = 10' VERTICAL
EX. WATER LINE
ELEV. =
FIBER OPTIC LINE
ELEV. =
PHASE I
PHASE IA
PHASE IB
4:1
4.00%
0.80%
0.48%
4.00%
699.05
699.0
COM: 9
EMB: 0
EMB BCH: 0
UNDERCUT: 0
15+00
4.00%
1.07%
4.00%
698.62
698.6
COM: 0
EMB: 0
EMB BCH: 0
UNDERCUT: 0
14+50
STA 14+25 BEGIN SUPERELEVATION TRANSITION
4.00%
2.00%
4.00%
698.20
698.
COM: 0
EMB: 0
EMB BCH: 0
UNDERCUT: 0
14+00
710
700
690
100
110
120
130
140
150
MicroStation V8.11.9.459
E-SHEET NAME:
USER: phoward
DATE PLOTTED: January 6, 2022
FILE NAME: G:\ENGR\HD1365.10 AND 1365.11 GRAYSON WK\CAD\PLAN\CROSS SECTIONS\CROSS SECTIONS.DGN

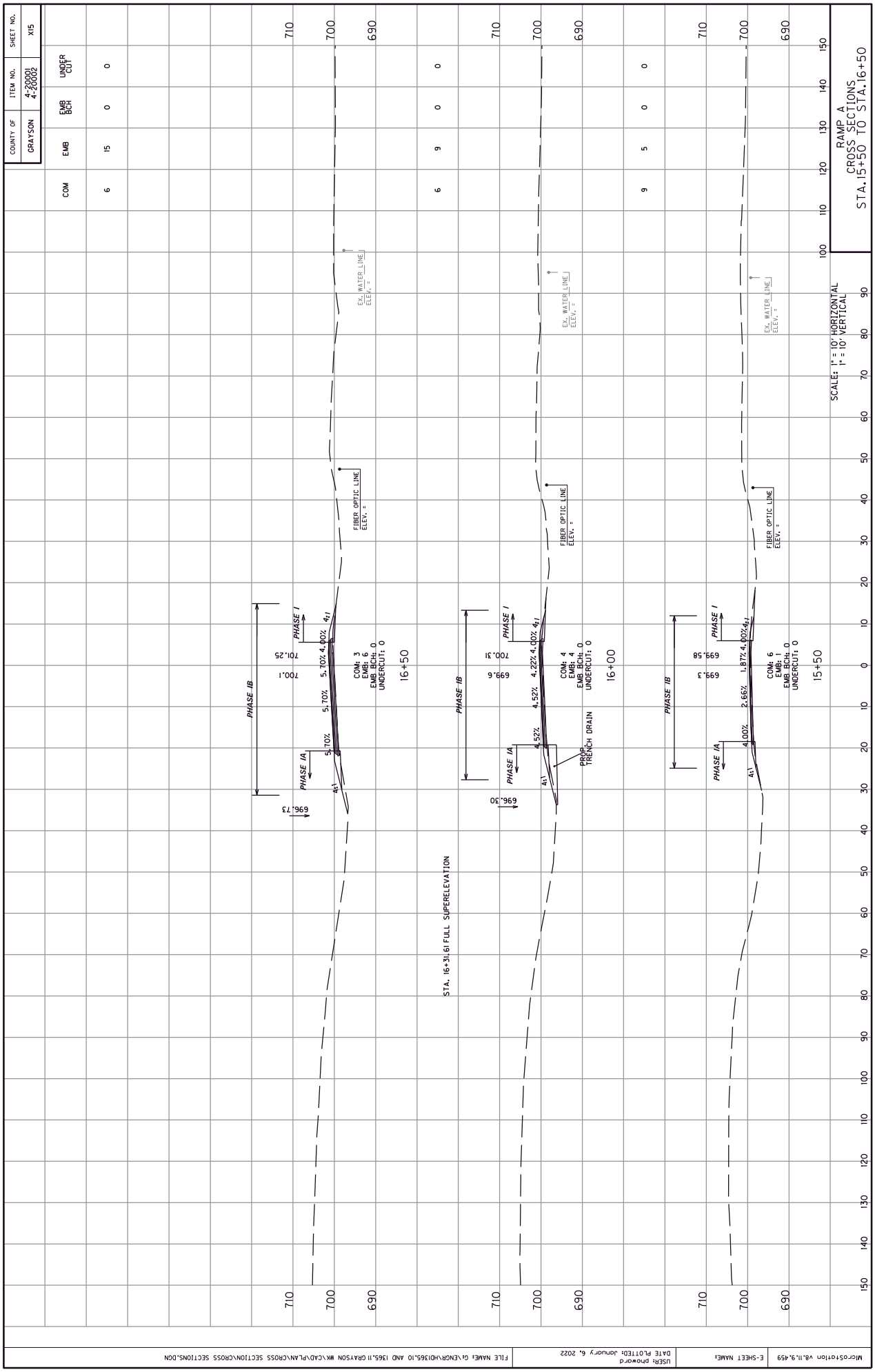
COUNTY OF
GRAYSON
ITEM NO.
4-20001
4-20002
SHEET NO.
X15
COM
EMB
EMB BCH
UNDER CUT
6 15 0 0
6 9 0 0
9 5 0 0
RAMP A
CROSS SECTIONS
STA. 15+50 TO STA. 16+50
SCALE: 1" = 10' HORIZONTAL
1" = 10' VERTICAL
EX. WATER LINE
ELEV. =
FIBER OPTIC LINE
ELEV. =
PHASE I
PHASE IA
PHASE IB
4:1
4.00%
5.70%
4.52%
4.22%
2.66%
1.87%
701.25
700.1
696.73
700.31
699.6
696.30
699.58
699.3
COM: 3
EMB: 6
EMB BCH: 0
UNDERCUT: 0
16+50
COM: 4
EMB: 4
EMB BCH: 0
UNDERCUT: 0
16+00
PROP. TRENCH DRAIN
COM: 6
EMB: 1
EMB BCH: 0
UNDERCUT: 0
15+50
STA. 16+31.61 FULL SUPERELEVATION
710
700
690
100
110
120
130
140
150
0
10
20
30
40
50
60
70
80
90
MicroStation V8.11.9.459
E-SHEET NAME:
USER: phoward
DATE PLOTTED: January 6, 2022
FILE NAME: G:\ENGR\HD1365.10 AND 1365.11 GRAYSON WK\CAD\PLAN\CROSS SECTIONS\CROSS SECTIONS.DGN

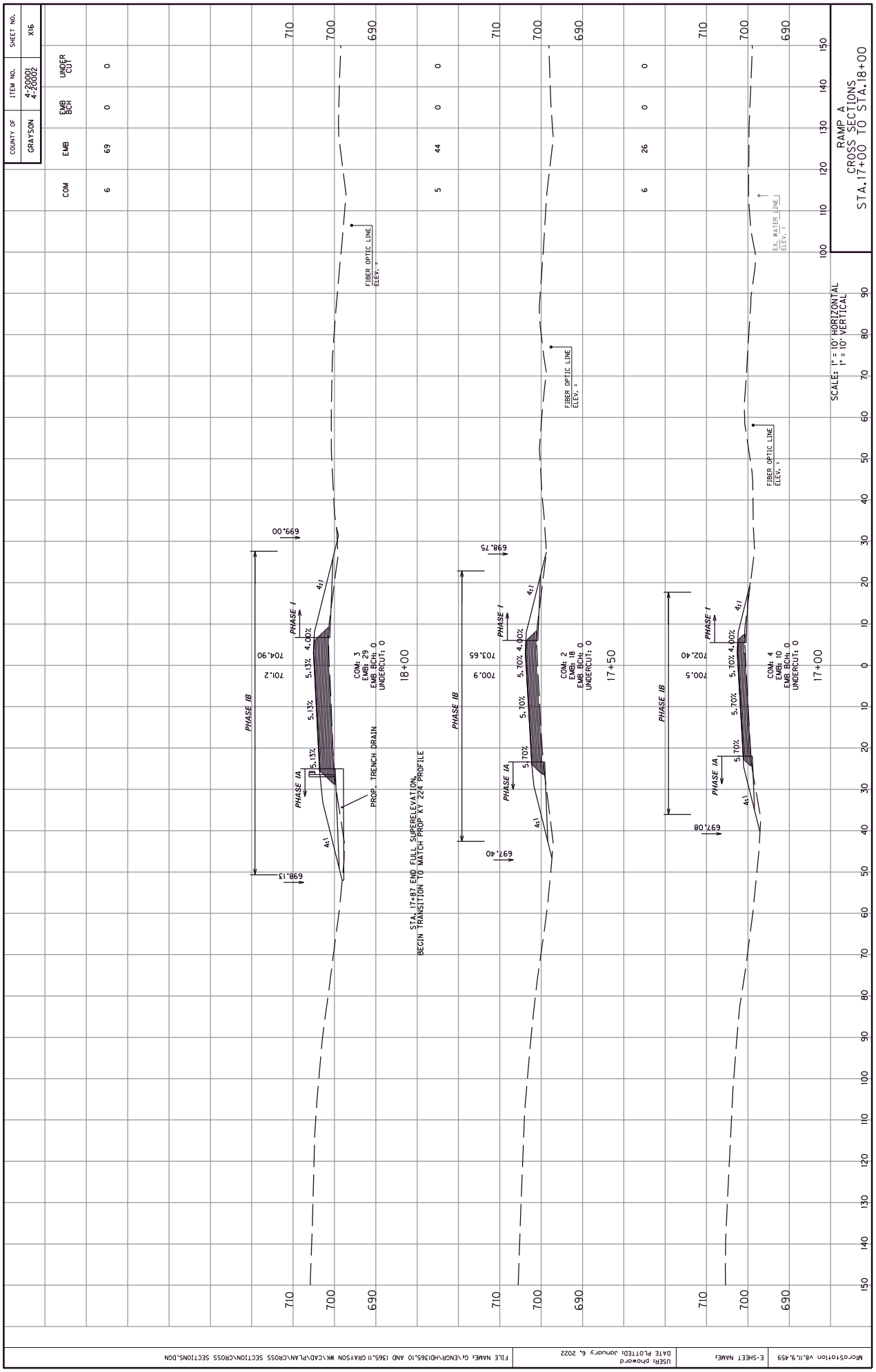
COUNTY OF
GRAYSON
ITEM NO.
4-20001
4-20002
SHEET NO.
X16
COM
EMB
EMB BCH
UNDER CUT
6
69
0
0
5
44
0
0
6
26
0
0
RAMP A
CROSS SECTIONS
STA.17+00 TO STA.18+00
SCALE: 1" = 10' HORIZONTAL
1" = 10' VERTICAL
FIBER OPTIC LINE
ELEV. =
EX. WATER LINE
ELEV. =
PHASE I
PHASE IA
PHASE IB
4:1
4.00%
5.13%
5.70%
699.00
698.13
704.90
701.2
COM: 3
EMB: 29
EMB BCH: 0
UNDERCUT: 0
18+00
PROP. TRENCH DRAIN
STA. 17+87 END FULL SUPERELEVATION,
BEGIN TRANSITION TO MATCH PROP KY 224 PROFILE
698.75
697.40
703.65
700.9
COM: 2
EMB: 18
EMB BCH: 0
UNDERCUT: 0
17+50
697.08
702.40
700.5
COM: 4
EMB: 10
EMB BCH: 0
UNDERCUT: 0
17+00
710
700
690
MicroStation V8.11.9.459
E-SHEET NAME:
USER: phoward
DATE PLOTTED: January 6, 2022
FILE NAME: G:\ENGR\HD1365.10 AND 1365.11 GRAYSON WK\CAD\PLAN\CROSS SECTIONS\CROSS SECTIONS.DGN

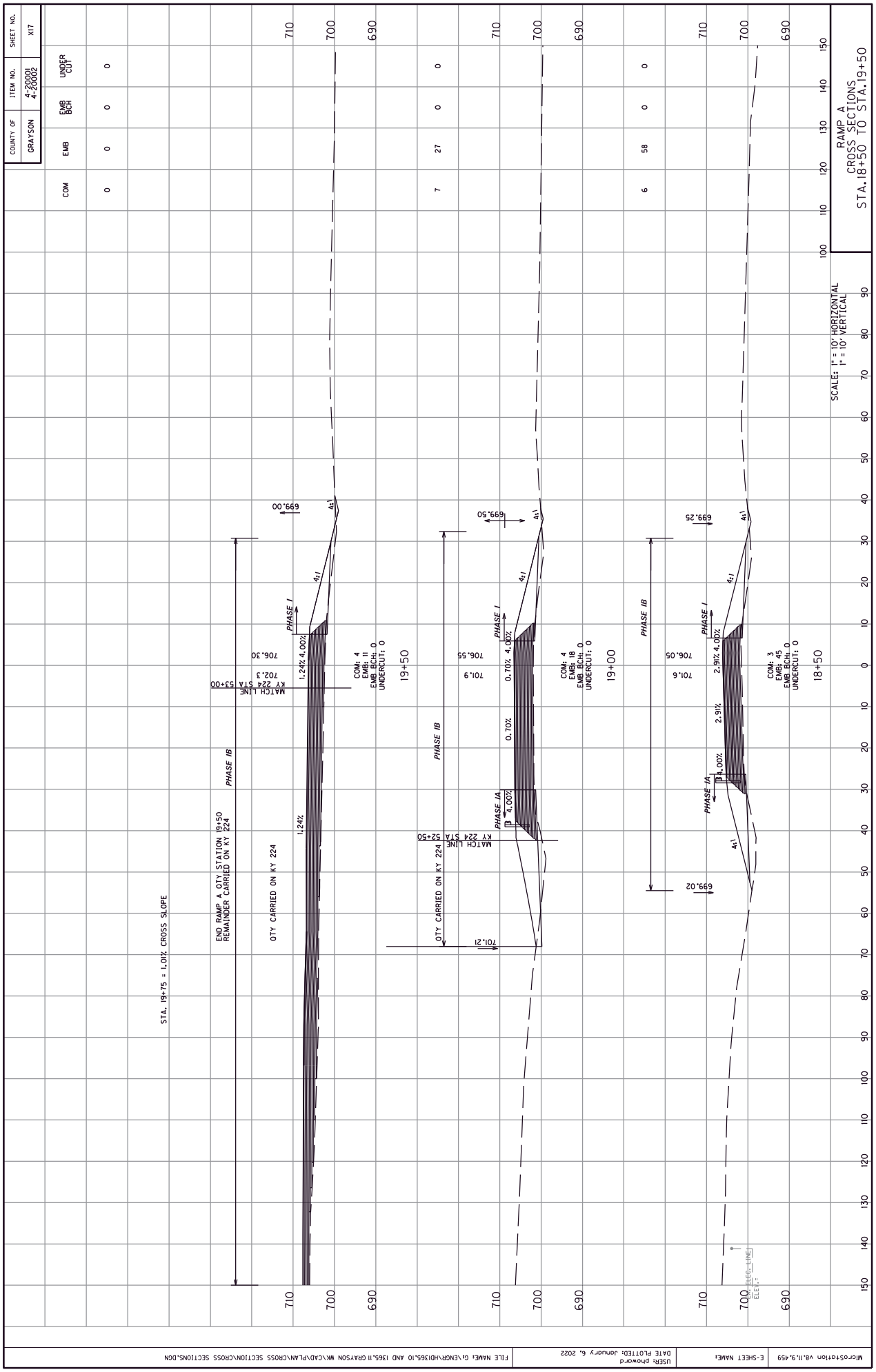
COUNTY OF
GRAYSON
ITEM NO.
4-20001
4-20002
SHEET NO.
X17
COM
EMB
EMB BCH
UNDER CUT
0 0 0 0
7 27 0 0
6 58 0 0
RAMP A
CROSS SECTIONS
STA. 18+50 TO STA. 19+50
SCALE: 1" = 10' HORIZONTAL
1" = 10' VERTICAL
18+50
COM: 3
EMB: 45
EMB BCH: 0
UNDERCUT: 0
19+00
COM: 4
EMB: 18
EMB BCH: 0
UNDERCUT: 0
19+50
COM: 4
EMB: 11
EMB BCH: 0
UNDERCUT: 0
PHASE I
PHASE IA
PHASE IB
4:1
2.91%
4.00%
0.70%
1.24%
699.25
699.50
699.02
699.00
701.6
706.05
701.9
706.55
701.21
706.30
702.3
MATCH LINE
KY 224 STA 52+50
KY 224 STA 53+00
QTY CARRIED ON KY 224
END RAMP A QTY STATION 19+50
REMAINDER CARRIED ON KY 224
STA. 19+75 = 1.01% CROSS SLOPE
710
700
690
MicroStation V8.11.9.459
E-SHEET NAME:
USER: phoward
DATE PLOTTED: January 6, 2022
FILE NAME: G:\ENGR\HD1365.10 AND 1365.11 GRAYSON WK\CAD\PLAN\CROSS SECTION\CROSS SECTIONS.DGN

COUNTY OF	ITEM NO.	SHEET NO.
GRAYSON	4-20001 4-20002	X18

	COM	EMB	EMB BCH	UNDER CUT
RAMP A TOTALS:	73	254	0	0

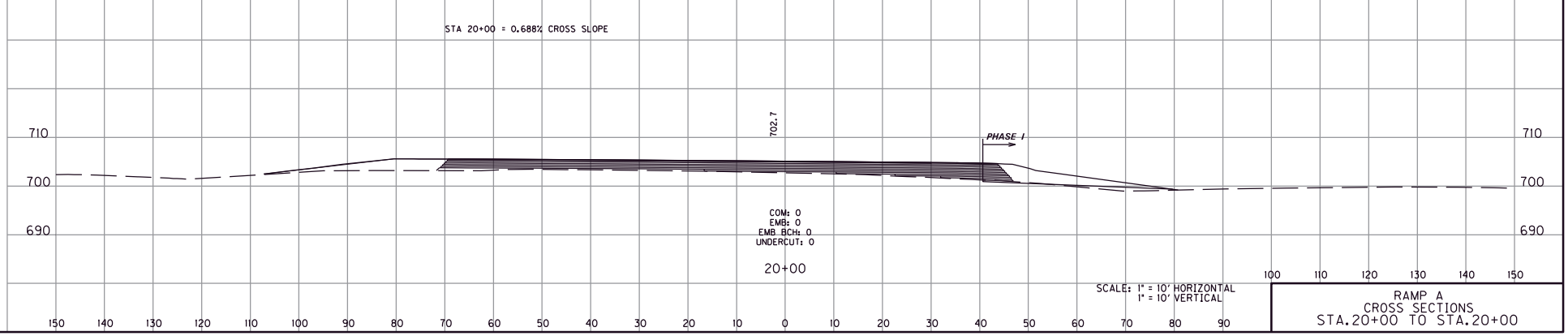

SCALE: 1" = 10' HORIZONTAL
1" = 10' VERTICAL

RAMP A
CROSS SECTIONS
STA.20+00 TO STA.20+00

MicroStation v8.11.9.459 | E-SHEET NAME: | USER: phoward DATE PLOTTED: January 6, 2022 | FILE NAME: G:\ENGR\HD\365.10 AND 1365.11 GRAYSON WK\CAD\PLAN\CROSS SECTION\CROSS SECTIONS.DGN

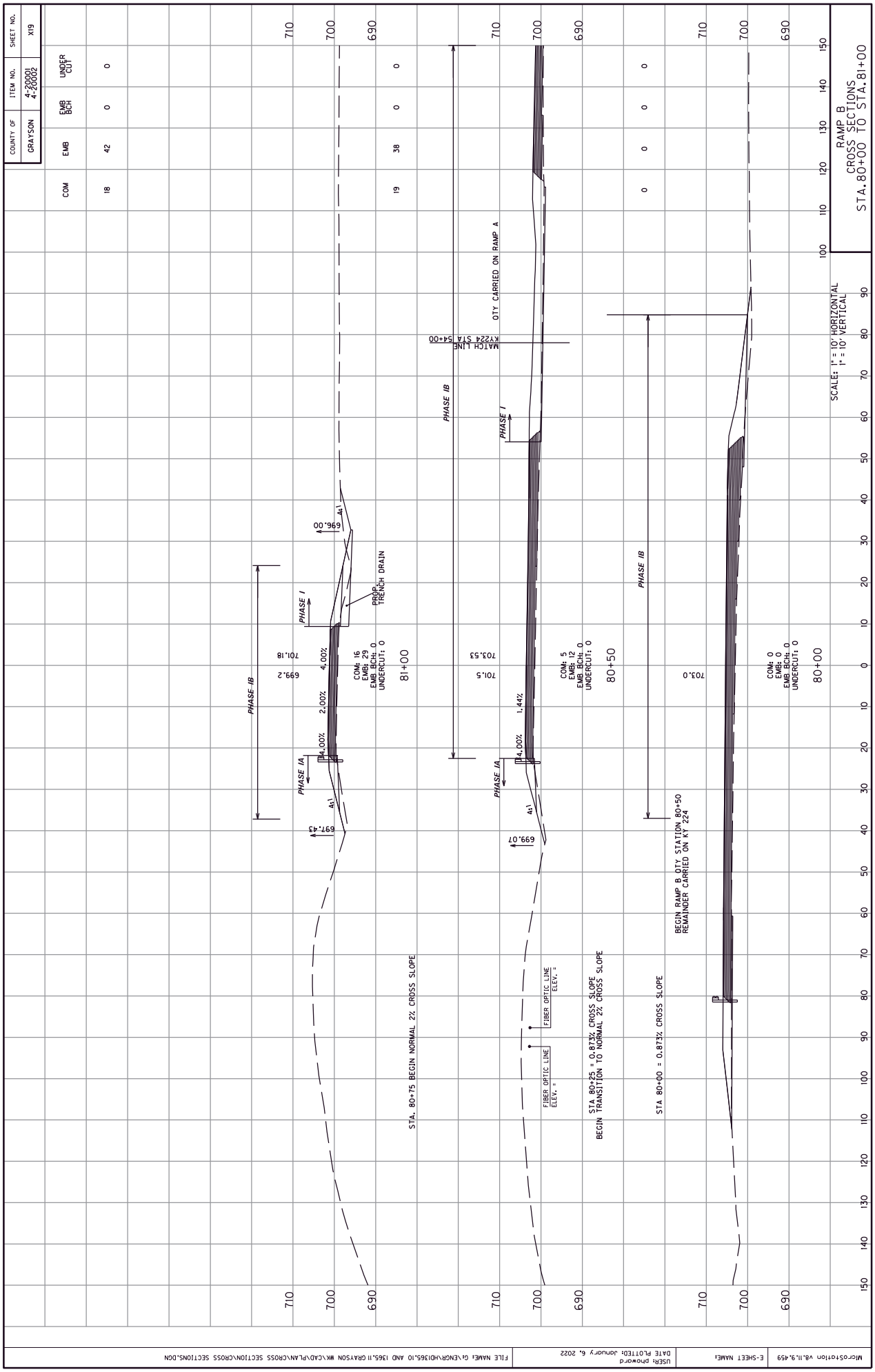
COUNTY OF
GRAYSON
ITEM NO.
4-20001
4-20002
SHEET NO.
X19
COM
EMB
EMB BCH
UNDER CUT
18
42
0
0
19
38
0
0
0
0
0
0
RAMP B
CROSS SECTIONS
STA.80+00 TO STA.81+00
SCALE: 1" = 10' HORIZONTAL
1" = 10' VERTICAL
PHASE IB
PHASE I
PHASE IA
4:1
696.00
697.43
699.2
701.18
4.00%
2.00%
4.00%
PROP. TRENCH DRAIN
COM: 16
EMB: 29
EMB BCH: 0
UNDERCUT: 0
81+00
STA. 80+75 BEGIN NORMAL 2% CROSS SLOPE
MATCH LINE
KY224 STA 54+00
OTY CARRIED ON RAMP A
703.53
701.5
1.44%
699.07
FIBER OPTIC LINE
ELEV. =
COM: 5
EMB: 12
EMB BCH: 0
UNDERCUT: 0
80+50
STA 80+25 = 0.873% CROSS SLOPE
BEGIN TRANSITION TO NORMAL 2% CROSS SLOPE
703.0
BEGIN RAMP B OTY STATION 80+50
REMAINDER CARRIED ON KY 224
STA 80+00 = 0.873% CROSS SLOPE
COM: 0
EMB: 0
EMB BCH: 0
UNDERCUT: 0
80+00
MicroStation V8.11.9.459
E-SHEET NAME:
USER: phoward
DATE PLOTTED: January 6, 2022
FILE NAME: G:\ENGR\HD1365.10 AND 1365.11 GRAYSON WK\CAD\PLAN\CROSS SECTION\CROSS SECTIONS.DGN

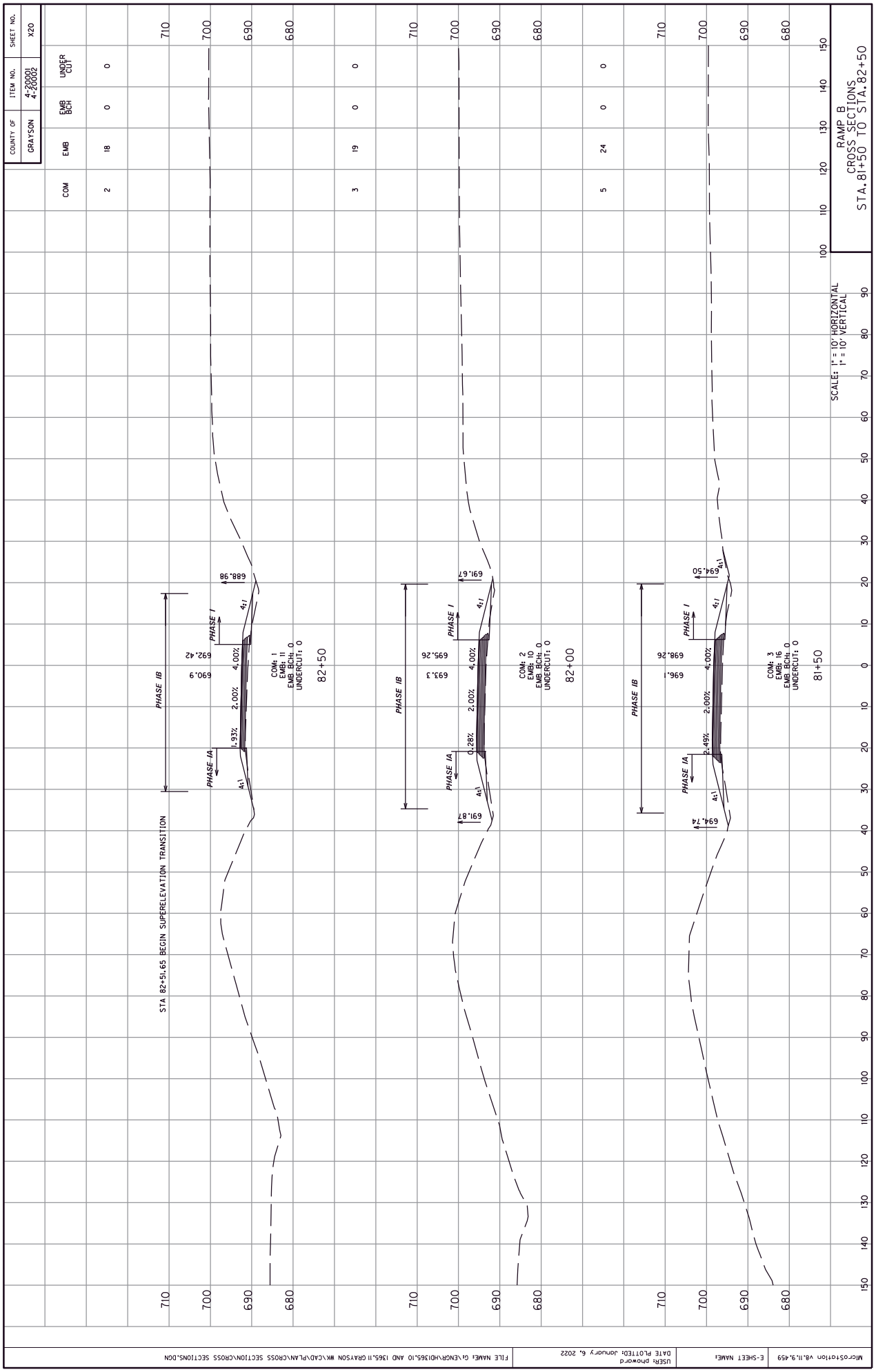
COUNTY OF
GRAYSON
ITEM NO.
4-20001
4-20002
SHEET NO.
X20
COM
EMB
EMB BCH
UNDER CUT
2
18
0
0
3
19
0
0
5
24
0
0
RAMP B
CROSS SECTIONS
STA. 81+50 TO STA. 82+50
SCALE: 1" = 10' HORIZONTAL
1" = 10' VERTICAL
STA 82+51.65 BEGIN SUPERELEVATION TRANSITION
PHASE IB
PHASE IA
PHASE I
4:1
688.98
692.42
690.9
1.93%
2.00%
4.00%
COM: 1
EMB: 11
EMB BCH: 0
UNDERCUT: 0
82+50
691.67
691.87
695.26
693.3
0.28%
2.00%
4.00%
COM: 2
EMB: 10
EMB BCH: 0
UNDERCUT: 0
82+00
694.50
694.74
698.26
696.1
2.49%
2.00%
4.00%
COM: 3
EMB: 16
EMB BCH: 0
UNDERCUT: 0
81+50
710
700
690
680
100
110
120
130
140
150
MicroStation V8.11.9.459
E-SHEET NAME:
USER: phoward
DATE PLOTTED: January 6, 2022
FILE NAME: G:\ENGR\HD1365.10 AND 1365.11 GRAYSON WK\CAD\PLAN\CROSS SECTION\CROSS SECTIONS.DGN

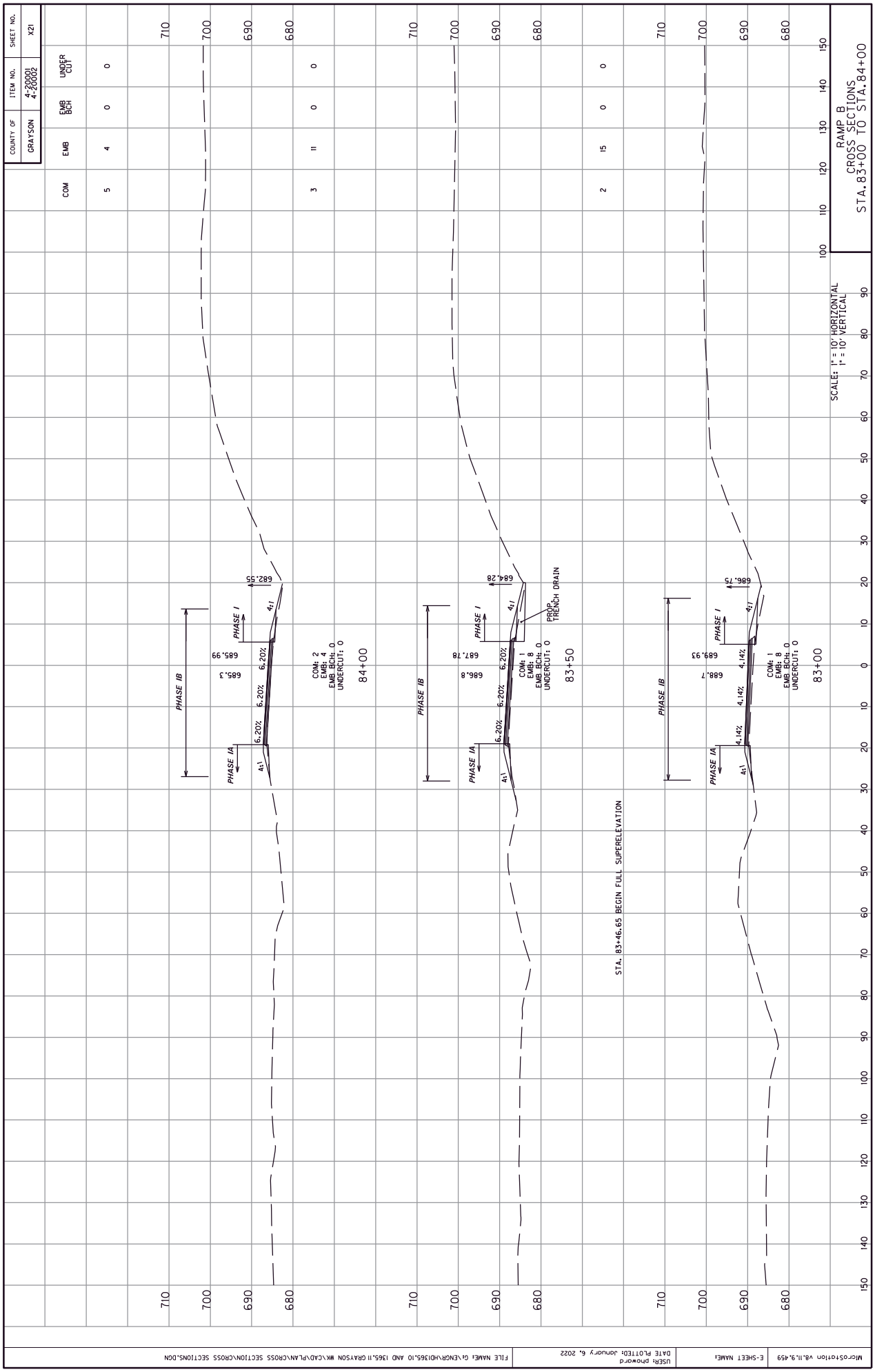
COUNTY OF
GRAYSON
ITEM NO.
4-20001
4-20002
SHEET NO.
X21
COM
EMB
EMB BCH
UNDER CUT
5
4
0
0
3
11
0
0
2
15
0
0
RAMP B
CROSS SECTIONS
STA.83+00 TO STA.84+00
SCALE: 1" = 10' HORIZONTAL
1" = 10' VERTICAL
PHASE IB
PHASE IA
PHASE I
4:1
6.20%
4.14%
682.55
685.99
685.3
COM: 2
EMB: 4
EMB BCH: 0
UNDERCUT: 0
84+00
684.28
687.78
686.8
PROP. TRENCH DRAIN
COM: 1
EMB: 8
EMB BCH: 0
UNDERCUT: 0
83+50
686.75
689.93
688.7
COM: 1
EMB: 8
EMB BCH: 0
UNDERCUT: 0
83+00
STA. 83+46.65 BEGIN FULL SUPERELEVATION
MicroStation V8.11.9.459
E-SHEET NAME:
USER: phoward
DATE PLOTTED: January 6, 2022
FILE NAME: G:\ENGR\HD1365.10 AND 1365.11 GRAYSON WK\CAD\PLAN\CROSS SECTIONS\CROSS SECTIONS.DGN

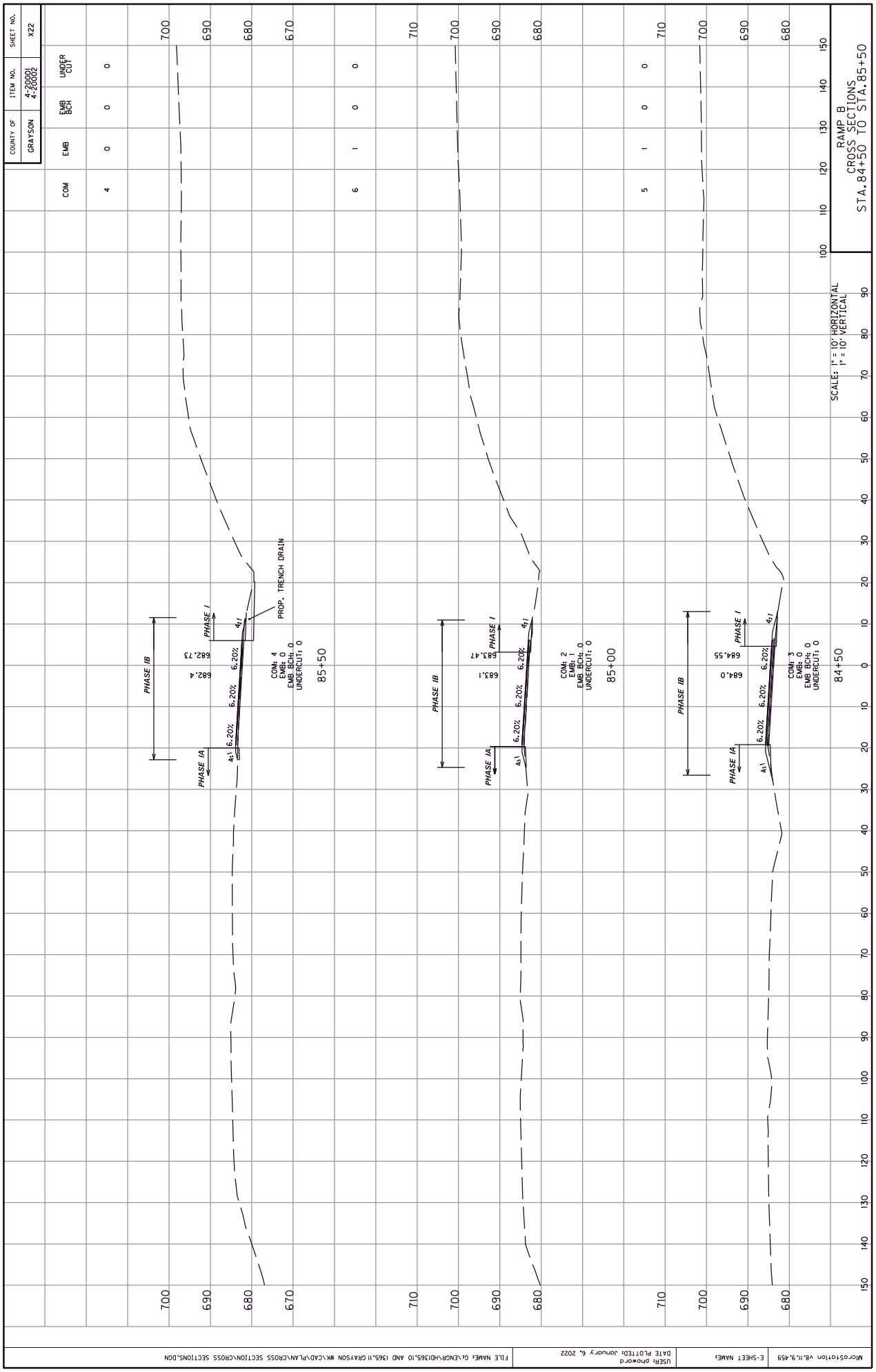
COUNTY OF
GRAYSON
ITEM NO.
4-20001
4-20002
SHEET NO.
X22
COM
EMB
EMB BCH
UNDER CUT
4 0 0 0
6 1 0 0
5 1 0 0
RAMP B
CROSS SECTIONS
STA.84+50 TO STA.85+50
SCALE: 1" = 10' HORIZONTAL
1" = 10' VERTICAL
PHASE IB
PHASE I
PHASE IA
682.4
682.73
4:1
6.20%
PROP. TRENCH DRAIN
COM: 4
EMB: 0
EMB BCH: 0
UNDERCUT: 0
85+50
683.1
683.47
COM: 2
EMB: 1
EMB BCH: 0
UNDERCUT: 0
85+00
684.0
684.55
COM: 3
EMB: 0
EMB BCH: 0
UNDERCUT: 0
84+50
700
690
680
670
710
MicroStation V8.11.9.459
E-SHEET NAME:
USER: phoward
DATE PLOTTED: January 6, 2022
FILE NAME: G:\ENGR\HD1365.10 AND 1365.11 GRAYSON WK\CAD\PLAN\CROSS SECTION\CROSS SECTIONS.DGN

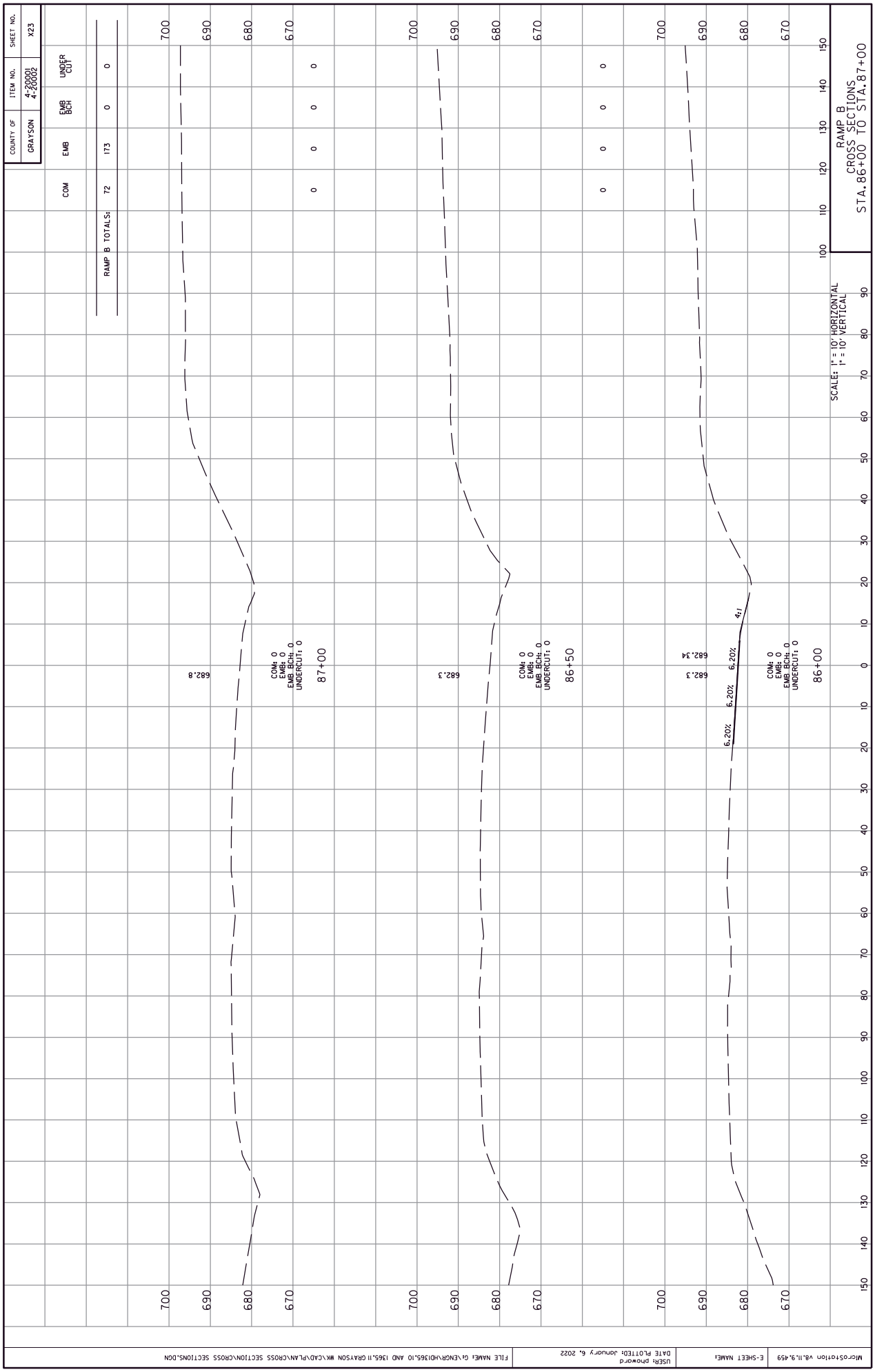
COUNTY OF
GRAYSON
ITEM NO.
4-20001
4-20002
SHEET NO.
X23
COM
EMB
EMB BCH
UNDER CUT
RAMP B TOTALS:
72
173
0
0
0

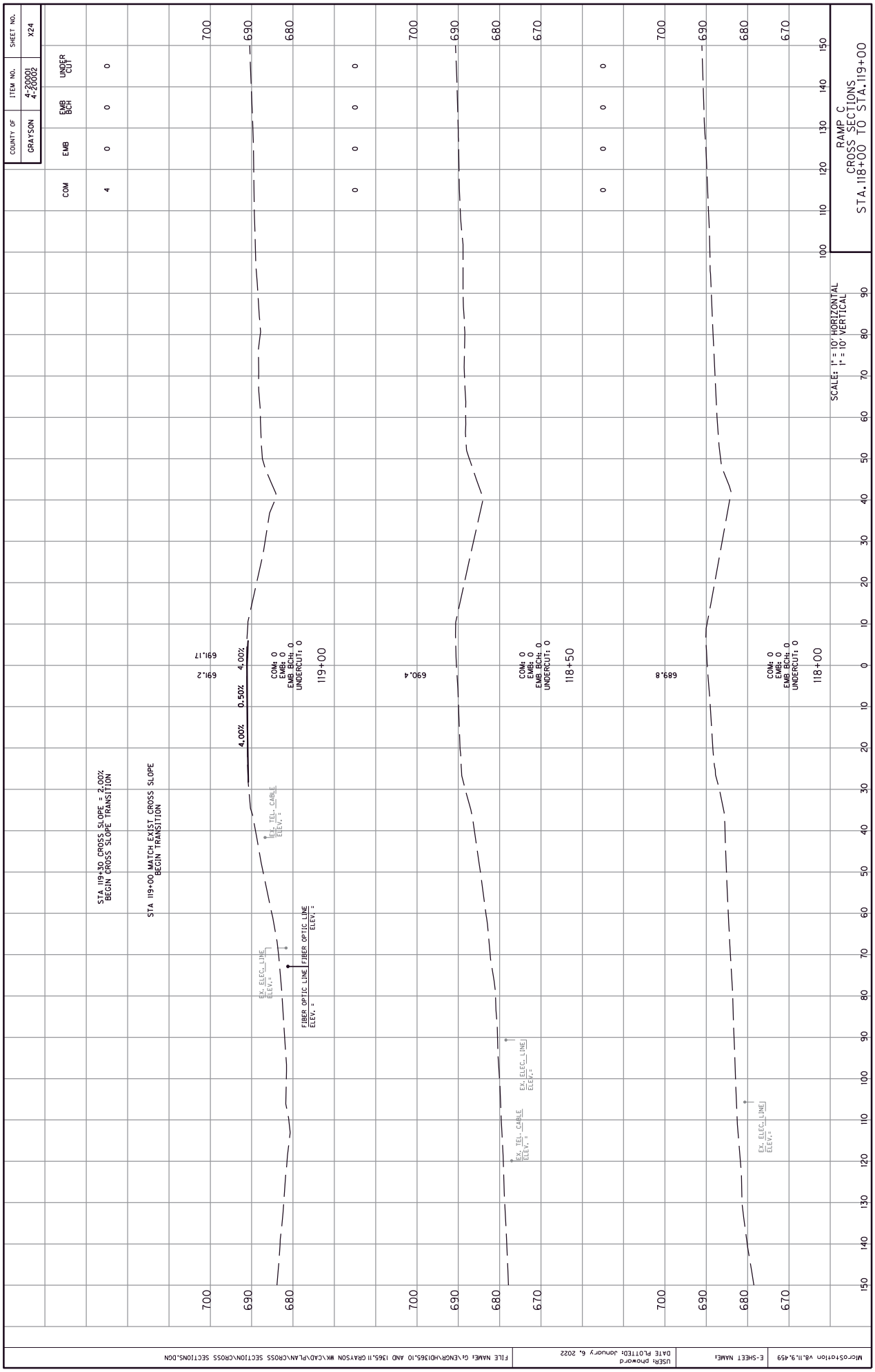
COUNTY OF
GRAYSON
ITEM NO.
4-20001
4-20002
SHEET NO.
X24
COM
EMB
EMB BCH
UNDER CUT
4
0
0
0
0
0
0
0
0
0
0
0
STA 119+30 CROSS SLOPE = 2.00%
BEGIN CROSS SLOPE TRANSITION
STA 119+00 MATCH EXIST CROSS SLOPE
BEGIN TRANSITION
4.00%
0.50%
4.00%
691.17
691.2
COM: 0
EMB: 0
EMB BCH: 0
UNDERCUT: 0
119+00
690.4
COM: 0
EMB: 0
EMB BCH: 0
UNDERCUT: 0
118+50
689.8
COM: 0
EMB: 0
EMB BCH: 0
UNDERCUT: 0
118+00
EX. TEL. CABLE
ELEV.=
EX. ELEC. LINE
ELEV.=
FIBER OPTIC LINE
ELEV.=
FIBER OPTIC LINE
ELEV.=
EX. ELEC. LINE
ELEV.=
EX. TEL. CABLE
ELEV.=
EX. ELEC. LINE
ELEV.=
700
690
680
670
100
110
120
130
140
150
RAMP C
CROSS SECTIONS
STA.118+00 TO STA.119+00
SCALE: 1" = 10' HORIZONTAL
1" = 10' VERTICAL
MicroStation V8.11.9.459
E-SHEET NAME:
USER: phoward
DATE PLOTTED: January 6, 2022
FILE NAME: G:\ENGR\HD1365.10 AND 1365.11 GRAYSON WK\CAD\PLAN\CROSS SECTIONS\CROSS SECTIONS.DGN

COUNTY OF	ITEM NO.	SHEET NO.
GRAYSON	4-20001 4-20002	X25

	COM	EMB	EMB BCH	UNDER CUT
RAMP C TOTALS:	4	0	0	0

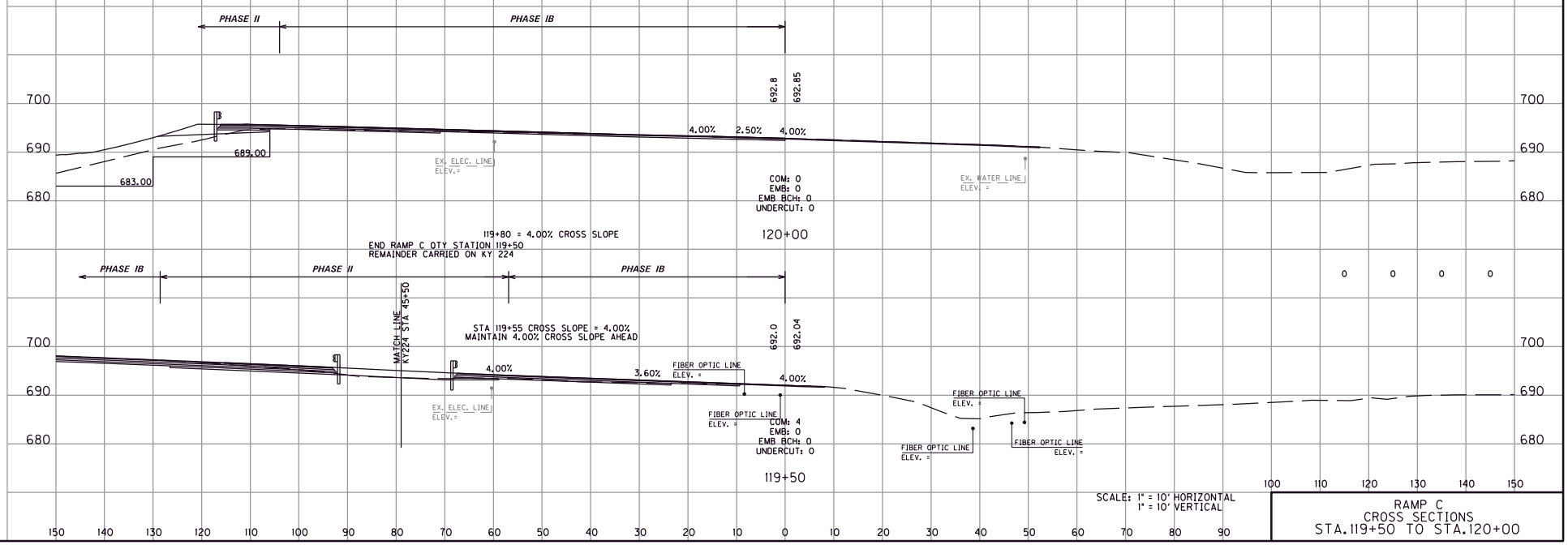

RAMP C
CROSS SECTIONS
STA.119+50 TO STA.120+00

FILE NAME: G:\ENGR\HD365.10 AND 365.11 GRAYSON WK\CAD\PLAN\CROSS SECTION\CROSS SECTIONS.DGN
USER: phoward
DATE PLOTTED: January 6, 2022
E-SHEET NAME:
MicroStation v8.11.9.459

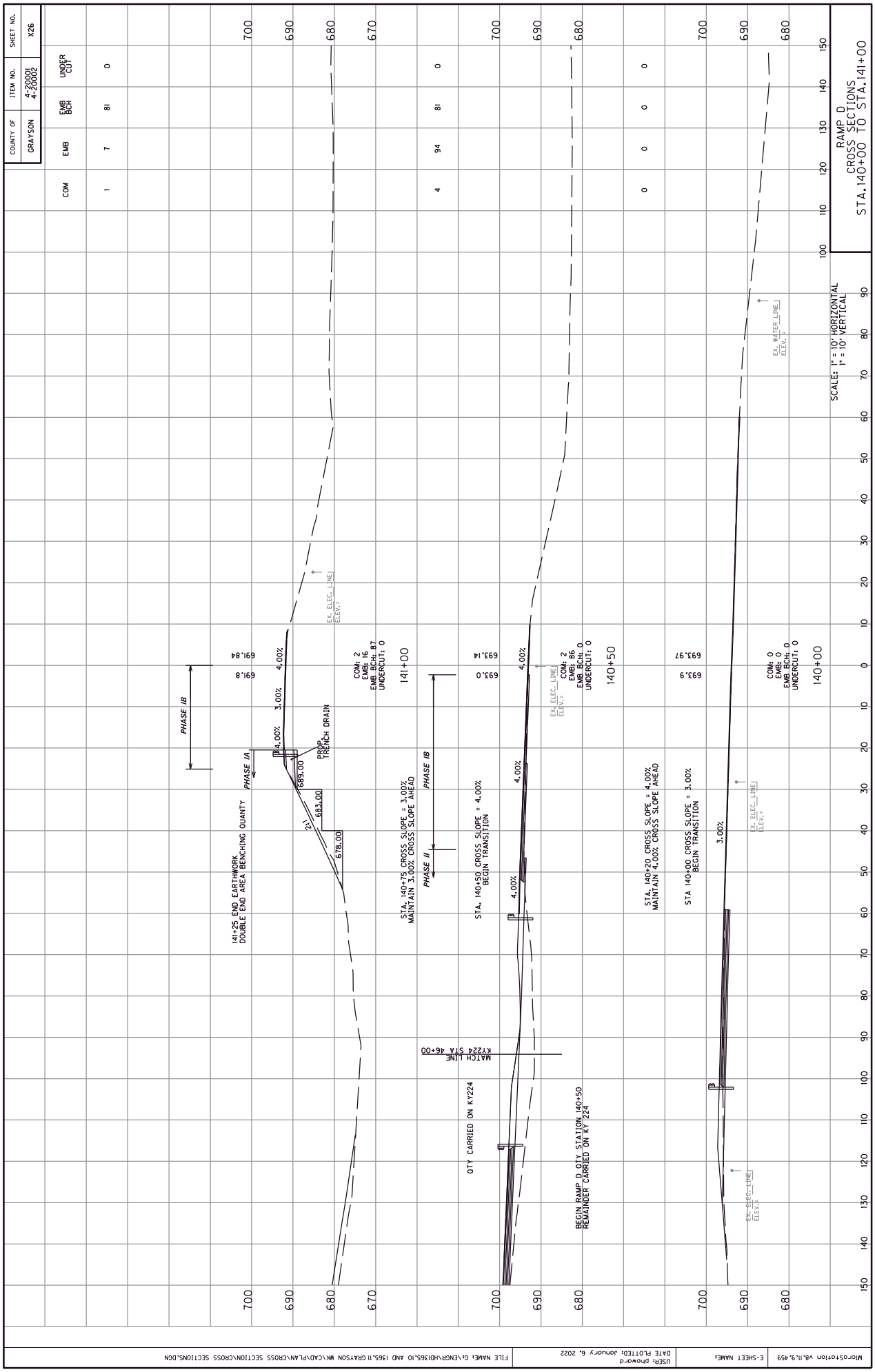
COUNTY OF
GRAYSON
ITEM NO.
4-20001
4-20002
SHEET NO.
X26
COM
EMB
EMB BCH
UNDER CUT
1
7
81
0
4
94
81
0
0
0
0
0
RAMP D
CROSS SECTIONS
STA.140+00 TO STA.141+00
SCALE: 1" = 10' HORIZONTAL
1" = 10' VERTICAL
PHASE IB
PHASE IA
PHASE II
PROP. TRENCH DRAIN
4.00%
3.00%
2:1
689.00
683.00
678.00
691.8
691.84
141+25 END EARTHWORK
DOUBLE END AREA BENCHING QUANTY
COM: 2
EMB: 16
EMB BCH: 87
UNDERCUT: 0
141+00
STA. 140+75 CROSS SLOPE = 3.00%
MAINTAIN 3.00% CROSS SLOPE AHEAD
693.0
693.14
STA. 140+50 CROSS SLOPE = 4.00%
BEGIN TRANSITION
COM: 2
EMB: 86
EMB BCH: 0
UNDERCUT: 0
140+50
693.9
693.97
STA. 140+20 CROSS SLOPE = 4.00%
MAINTAIN 4.00% CROSS SLOPE AHEAD
STA 140+00 CROSS SLOPE = 3.00%
BEGIN TRANSITION
COM: 0
EMB: 0
EMB BCH: 0
UNDERCUT: 0
140+00
EX. ELEC. LINE
ELEV.=
EX. WATER LINE
ELEV.=
MATCH LINE
KY224 STA 46+00
QTY CARRIED ON KY224
BEGIN RAMP D QTY STATION 140+50
REMAINDER CARRIED ON KY 224
700
690
680
670
100
110
120
130
140
150
FILE NAME: G:\ENGR\HD1365.10 AND 1365.11 GRAYSON WK\CAD\PLAN\CROSS SECTIONS\CROSS SECTIONS.DGN
DATE PLOTTED: January 6, 2022
USER: bhoward
E-SHEET NAME:
MicroStation V8.11.9.459

COUNTY OF	ITEM NO.	SHEET NO.
GRAYSON	4-20001 4-20002	X27

	COM	EMB	EMB BCH	UNDER CUT
RAMP D TOTALS:	5	101	162	0

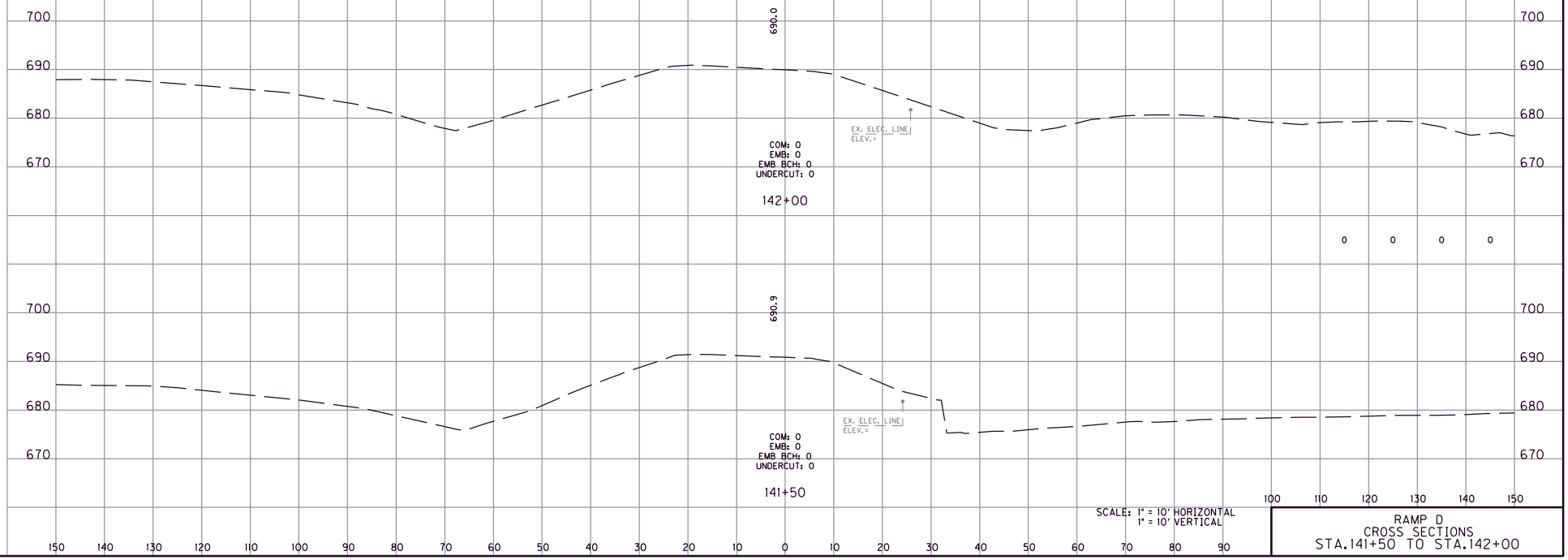

SCALE: 1" = 10' HORIZONTAL
1" = 10' VERTICAL

RAMP D
CROSS SECTIONS
STA.141+50 TO STA.142+00

MicroStation v8.11.9.459 | E-SHEET NAME: | USER: phoward DATE PLOTTED: January 6, 2022 | FILE NAME: G:\ENGR\HD\365.10 AND 1365.11 GRAYSON WK\CAD\PLAN\CROSS SECTION\CROSS SECTIONS.DGN

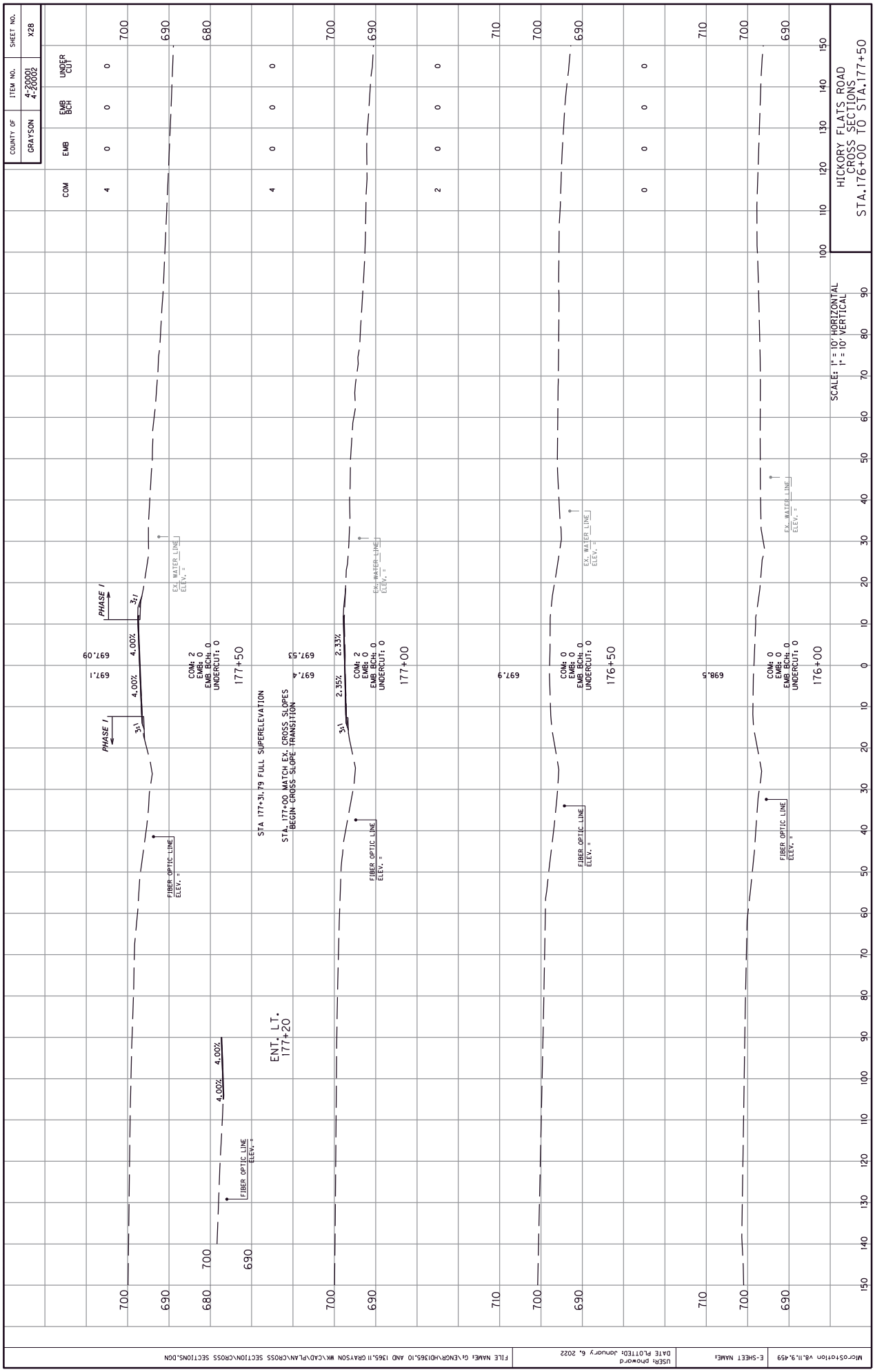
COUNTY OF
GRAYSON
ITEM NO.
4-20001
4-20002
SHEET NO.
X28
COM
EMB
EMB BCH
UNDER CUT
HICKORY FLATS ROAD
CROSS SECTIONS
STA.176+00 TO STA.177+50
SCALE: 1" = 10' HORIZONTAL
1" = 10' VERTICAL
PHASE I
PHASE I
4.00%
4.00%
3:1
3:1
697.09
697.1
COM: 2
EMB: 0
EMB BCH: 0
UNDERCUT: 0
177+50
STA 177+31.79 FULL SUPERELEVATION
STA. 177+00 MATCH EX. CROSS SLOPES
BEGIN CROSS SLOPE TRANSITION
697.53
697.4
2.33%
2.35%
3:1
COM: 2
EMB: 0
EMB BCH: 0
UNDERCUT: 0
177+00
697.9
COM: 0
EMB: 0
EMB BCH: 0
UNDERCUT: 0
176+50
698.5
COM: 0
EMB: 0
EMB BCH: 0
UNDERCUT: 0
176+00
ENT. LT.
177+20
4.00%
4.00%
EX. WATER LINE
ELEV. =
FIBER OPTIC LINE
ELEV. =
700
690
680
710

COUNTY OF	ITEM NO.	SHEET NO.
GRAYSON	4-20001 4-20002	X29

END HICKORY FLATS QTY STATION 179+50
REMAINDER CARRIED ON KY 224

STA 179+90 = 1.55% CROSS SLOPE

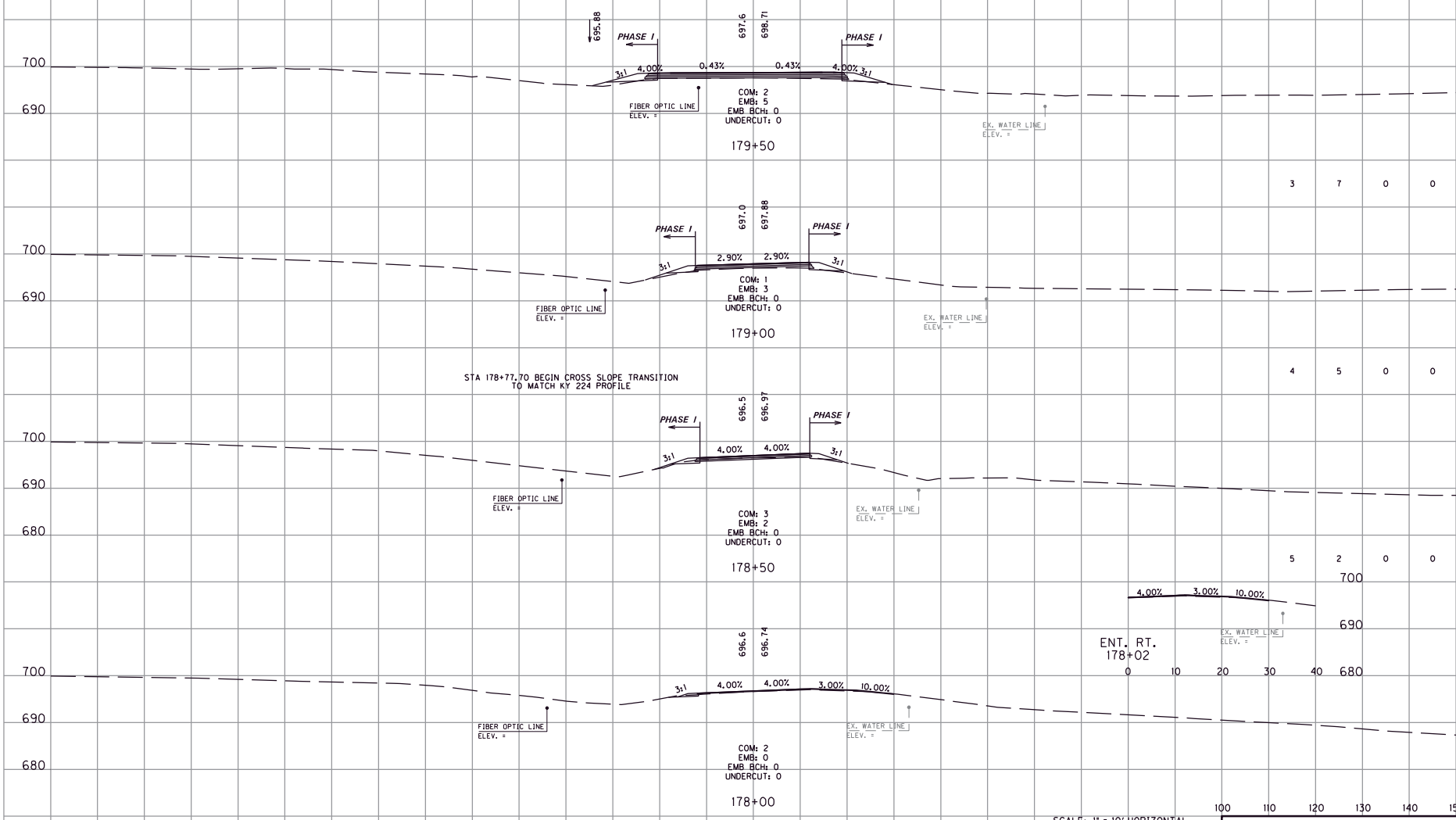

	COM	EMB	EMB BCH	UNDER CUT
179+50	0	0	0	0
179+00	3	7	0	0
178+50	4	5	0	0
178+00	5	2	0	0

SCALE: 1" = 10' HORIZONTAL
1" = 10' VERTICAL

HICKORY FLATS ROAD
CROSS SECTIONS
STA.178+00 TO STA.179+50

FILE NAME: G:\ENGR\HD365.10 AND 1365.11 GRAYSON WK\CAD\PLAN\CROSS SECTION\CROSS SECTIONS.DGN
USER: phoward
DATE PLOTTED: January 6, 2022
E-SHEET NAME:
MicroStation v8.11.9.459

COUNTY OF	ITEM NO.	SHEET NO.
GRAYSON	4-20001 4-20002	X30

	COM	EMB	EMB BCH	UNDER CUT
KY224 ROADWAY AND APPR. TOTALS	792	2,856	2,439	691
HICKORY FLATS RD. TOTALS:	22	14	0	0

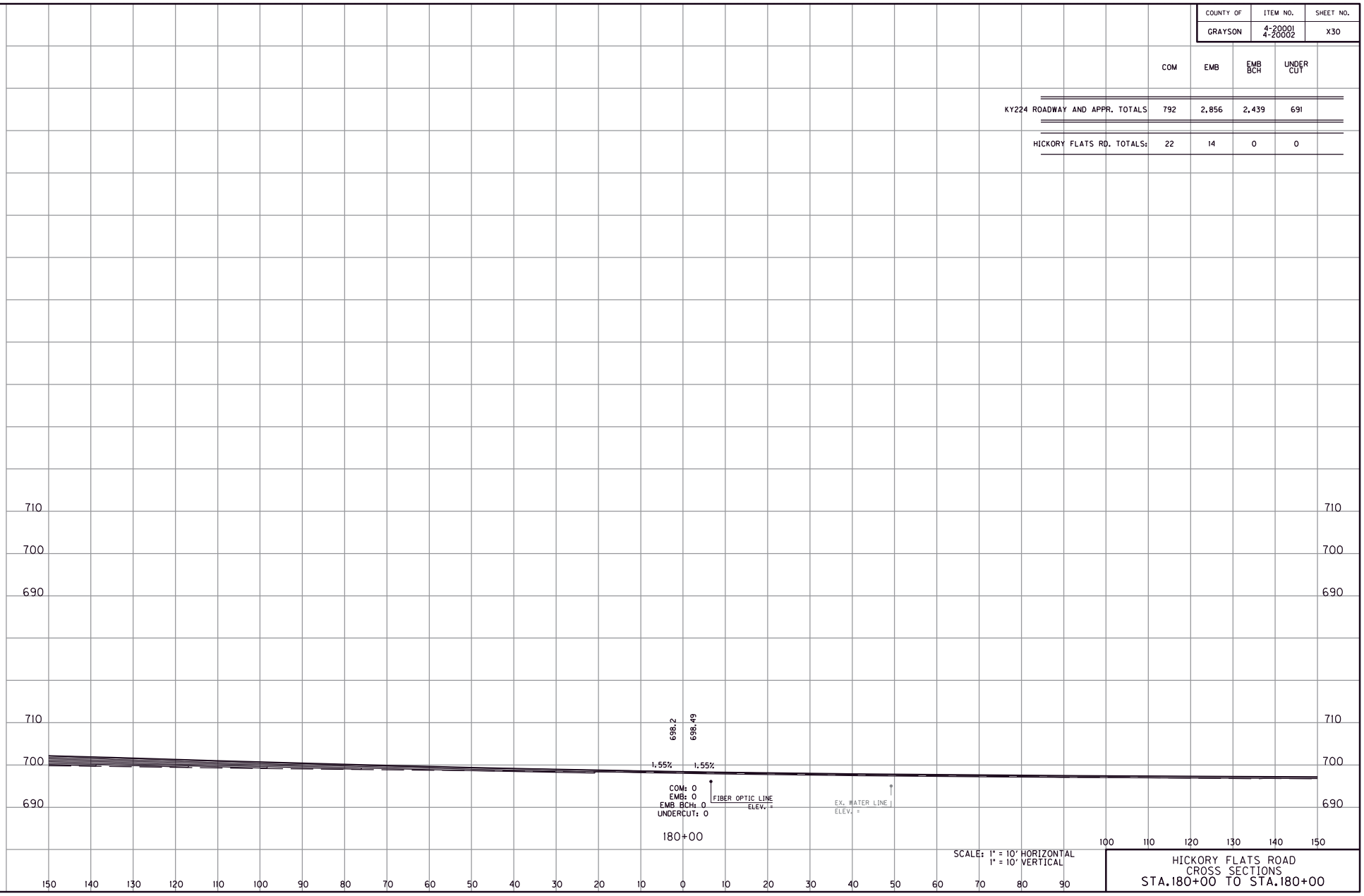

SCALE: 1" = 10' HORIZONTAL
1" = 10' VERTICAL

HICKORY FLATS ROAD
CROSS SECTIONS
STA.180+00 TO STA.180+00

MicroStation v8.11.9.459 | E-SHEET NAME: | USER: phoward DATE PLOTTED: January 6, 2022 | FILE NAME: G:\ENGR\HD\365.10 AND 1365.11 GRAYSON WK\CAD\PLAN\CROSS SECTION\CROSS SECTIONS.DGN

TRANSPORTATION CABINET
DEPARTMENT OF HIGHWAYS

GRAYSON COUNTY

KY-224 over WESTERN KENTUCKY PARKWAY

STA. 50+00.00

INDEX OF SHEETS

Sheet No.	Description
S1	Title Sheet & Quantities
S2	General Notes
S3	Layout
S4-S7	Construction Phasing
S8-S9	Foundation Layout
S10-S12	Abutment #1 & #2
S13-S14	Pier #1
S15-S16	Pier #2
S17-S18	Pier #3
S19	Framing Plan
S20	PPC Box Beam SB 27-48 Details
S21-S22	Superstructure
S23-S24	Construction Elevations

SPECIAL NOTES

Special Note for Concrete Sealing

SPECIAL PROVISIONS

69 Embankment at Bridge End Bent Structures

STANDARD DRAWINGS

BBP-001-12	Elastomeric Bearing Pads for Prestressed Beams
BBP-002-04	Bearing Details
BBP-003-02	Elastomeric Bearing Pads for Box Beams
BGX-006-10	Stencils for Structures
BGX-012-02	Geotechnical Legend
BGX-019	24 Inch Junction Box Single Slope and Vertical Barrier
BGX-021	Junction Box Type - A
BGX-022	Joint Waterproofing
BHS-010	Railing System 40 Inch Single Slope
BHS-014	Thrie-Beam Guardrail Transition (TL-3)
BJE-001-14	Armored Edges
BPS-003-09	HP12x53 Steel Pile

SPECIFICATIONS

2019 Standard Specifications for Road and Bridge Construction.

AASHTO LRFD Bridge Design Specifications, 9th Edition, 2020

ESTIMATE OF QUANTITIES

BID ITEM CODE		08100	08104	08150	08151	08002	08003	08020	02231	08046	08033	02998	08670	03299	25028ED	23378EC	02403	08305	08094	25078ED	08130	08133	08269
BID ITEM		CONCRETE-CLASS A	CONCRETE-CLASS AA	STEEL REINFORCEMENT	STEEL REINFORCEMENT-EPOXY COATED	STRUCTURE EXCAV-SOLID ROCK	FOUNDATION PREPARATION	CRUSHED AGGREGATE SLOPE PROT	STRUCTURE GRANULAR BACKFILL	PILES-STEEL HP12X53	TEST PILES	MASONRY COATING	PRECAST PC BOX BEAM SB27	ARMORED EDGE FOR CONCRETE	RAIL SYSTEM SINGLE SLOPE 40 IN	CONCRETE SEALING	REMOVE CONCRETE MASONRY	REMOVE REINF CONCRETE	PILE POINTS-12 IN	THRIE BEAM GUARDRAIL TRANSITION TL-3	MECHANICAL REINF COUPLER #5	MECHANICAL REINF COUPLER #8	ELECTRICAL CONDUIT
UNIT		CU'D	CUYD	LB	LB	CUYD	LS	TON	CUYD	LF	LF	SQYD	LF	LF	LF	SQFT	CUYD	LS	EACH	EACH	EACH	EACH	LS
SUBSTRUCTURE	END BENT #1	40.1		2774				121	167	154	27	40					24.4		8				
	PIER #1	128.7		19852		15						239					28.3				15	14	
	PIER #2	154.4		19864	120	15						390					29.3				15	14	
	PIER #3	128.5		19558		15						390					27.3				15	14	
	END BENT #2	47.8		3017				145	164	81	17	49					25.6		8				
SUPERSTRUCTURE			387.9		100884								1401.0	113.6	479	19012	426.9			4			1
BRIDGE TOTALS		499.5	387.9	65065	101004	45	1	266	331	235	44	1108	1401.0	113.6	479	19012	561.8	1	16	4	45	42	1

PLANS PREPARED BY:

STATE OF KENTUCKY
BRANDON T. PULLIAM
36761
LICENSED PROFESSIONAL ENGINEER

Brandon Pulliam, PE
KY No. 36761

COMMONWEALTH OF KENTUCKY
DEPARTMENT OF HIGHWAYS

REVISION	DATE

PREPARED BY
HMB PROFESSIONAL ENGINEERS, INC.

DATE: 12/30/2021	CHECKED BY
DESIGNED BY: B. Reid	L. Boller
DETAILED BY: B. Pulliam	B. Reid

TITLE SHEET & QUANTITIES

CROSSING: WESTERN KENTUCKY PARKWAY

ROUTE	ITEM NO.	COUNTY OF
KY-224	4-20001	GRAYSON
	SHEET NO.	DRAWING NUMBER
	S1	28464

MicroStation v8.11.7.443 USER: bpulliam DATE PLOTTED: 1/26/2022 9:55:49 AM FILE: G:\Engr\HD1365.10 and 1365.11 Grayson WK\BRIDGES\CAD\Title Sheet & Quantities.dgn

GENERAL NOTES

SPECIFICATIONS

ALL REFERENCES TO THE STANDARD SPECIFICATIONS ARE TO THE 2019 EDITION OF THE KENTUCKY DEPARTMENT OF HIGHWAYS STANDARD SPECIFICATIONS FOR ROAD AND BRIDGE CONSTRUCTION WITH CURRENT SUPPLEMENTAL SPECIFICATIONS. ALL REFERENCES TO THE AASHTO SPECIFICATIONS ARE TO THE 9TH EDITION OF THE AASHTO LRFD BRIDGE DESIGN SPECIFICATIONS WITH INTERIMS.

DESIGN LOAD

THIS BRIDGE IS DESIGNED FOR A MODIFIED HL-93 (KY HL-93) LIVE LOAD OBTAINED BY INCREASING THE AASHTO LOADING BY 25%. SEE EXISTING PLANS FOR THE DESIGN LOAD USED FOR THE SUBSTRUCTURE THAT WILL REMAIN IN-PLACE.

FUTURE WEARING SURFACE

THIS BRIDGE IS DESIGNED FOR A 15 PSF FUTURE WEARING SURFACE LOAD.

DESIGN METHOD

ALL REINFORCED CONCRETE MEMBERS ARE DESIGNED BY THE LOAD AND RESISTANCE FACTOR METHOD AS SPECIFIED IN THE CURRENT AASHTO SPECIFICATIONS. SEE EXISTING PLANS FOR THE DESIGN METHOD USED FOR THE SUBSTRUCTURE THAT WILL REMAIN IN-PLACE.

MATERIALS DESIGN SPECIFICATIONS

F'c = 3500 PSI FOR CLASS "A" REINFORCED CONCRETE
F'c = 4000 PSI FOR CLASS "AA" REINFORCED CONCRETE
Fy = 60000 PSI FOR STEEL REINFORCEMENT

FOR PRESTRESSED BEAM MATERIAL SPECIFICATIONS, SEE BEAM SHEET.

MATERIAL SPECIFICATIONS

ASTM OR AASHTO SPECIFICATIONS, CURRENT EDITION, AS DESIGNATED BELOW SHALL GOVERN THE MATERIALS FURNISHED.

STRUCTURAL STEEL, 36,000 PSI MIN. YIELD	AASHTO M-270, GRADE 36
UNCOATED SEVEN-WIRE LOW-RELAXATION STRAND FOR PRESTRESSED CONCRETE	AASHTO M-203, GRADE 270
STEEL REINFORCEMENT, GRADE 60	ASTM A615/A615M-96a

CONCRETE

CLASS "AA" CONCRETE IS TO BE USED IN THE SUPERSTRUCTURE. CLASS "A" CONCRETE IS TO BE USED IN THE SUBSTRUCTURE. PRESTRESSED BEAM CONCRETE SHALL BE IN ACCORDANCE WITH THE PLANS AND SPECIFICATONS.

STRUCTURE GRANULAR BACKFILL

EXCAVATION INTO EXISTING PAVEMENT OR GROUND BEHIND THE ABUTMENTS THAT MAY BE REQUIRED FOR ABUTMENT CONSTRUCTION SHALL BE BACKFILLED WITH STRUCTURE GRANULAR BACKFILL IN ACCORDANCE WITH SPECIAL PROVISION 69. WRAP ALL ROCK IN GEOTEXTILE FABRIC CLASS 2. ALL GEOTEXTILE FABRIC SHALL BE INCIDENTAL TO THE UNIT PRICE BID FOR STRUCTURE GRANULAR BACKFILL.

MASONRY COATING

CONTRARY TO THE SPECIFICATIONS, ONLY APPLY MASONRY COATING TO THE SUBSTRUCTURES. THE ENTIRE EXPOSED SUBSTRUCTURE INCLUDING THE EXISTING PORTIONS OF THE ABUTMENTS SHALL RECIEVE MASONRY COATING TO 6" BELOW THE FINISHED GROUND LINE.

ON-SITE INSPECTION

EACH CONTRACTOR SUBMITTING A BID FOR THIS WORK SHALL MAKE A THOROUGH INSPECTION OF THE PROJECT SITE PRIOR TO SUBMITTING A BID AND SHALL BE THOROUGHLY FAMILIARIZED WITH EXISTING CONDITIONS SO THAT WORK CAN BE EXPEDITIOUSLY PERFORMED AFTER A CONTRACT IS AWARDED. SUBMISSION OF A BID WILL BE CONSIDERED EVIDENCE OF THIS INSPECTION HAVING BEEN MADE. ANY CLAIMS RESULTING FROM SITE CONDITIONS WILL NOT BE HONORED BY THE DEPARTMENT OF HIGHWAYS.

DAMAGE TO THE SUBSTRUCTURES

THE CONTRACTOR IS RESPONSIBLE FOR ANY AND ALL DAMAGES TO THE EXISTING SUBSTRUCTURES DURING RECONSTRUCTION EVEN TO THE REPLACEMENT OF THE ENTIRE SUBSTRUCTURE, SHOULD THEY BE DAMAGED DUE TO HIS ACTIONS.

PILING

PILING SHALL BE DRIVEN TO PRACTICAL REFUSAL. TEST PILES SHALL BE DRIVEN WHERE DESIGNATED ON THE PLANS TO DETERMINE THE LENGTH OF PILE REQUIRED. ALL TEST PILES SHALL BE ACCURATELY LOCATED SO THAT THEY MAY BE USED IN THE FINISHED STRUCTURE.

PILE POINTS

PILE POINTS ARE REQUIRED. THE POINTS SHALL BE THE TYPE FOR KEYING INTO A SLOPING ROCK SURFACE. SEE SECTION 604.03.04(C) OF THE STANDARD SPECIFICATIONS.

SLOPE PROTECTION

SLOPE PROTECTION SHALL BE CRUSHED AGGREGATE SLOPE PROTECTION IN ACCORDANCE WITH SECTION 805.13 OF THE SPECIFICATIONS. GEOTEXTILE FABRIC UNDER THE SLOPE PROTECTION SHALL BE CONSIDERED INCIDENTAL TO THE UNIT PRICE BID FOR CRUSHED AGGREGATE SLOPE PROTECTION.

REINFORCEMENT

DIMENSIONS SHOWN FROM THE FACE OF CONCRETE TO BARS ARE TO CENTER OF BARS UNLESS OTHERWISE SHOWN OR NOTED. SPACING OF BARS IS FROM CENTER TO CENTER OF BARS. THE CLEAR DISTANCE TO FACE OF CONCRETE IS 2" UNLESS OTHERWISE NOTED. ANY REINFORCING BARS DESIGNATED BY THE SUFFIX (E) IN THE PLANS SHALL BE EPOXY COATED IN ACCORDANCE WITH SECTON 811.10 OF THE STANDARD SPECIFICATIONS. ANY REINFORCING BARS DESIGNATED BY THE SUFFIX (S) IN THE BENDING DIAGRAM SHALL BE CONSIDERED A STIRRUP FOR PURPOSES OF BEND DIAMETERS.

CONTRACTOR VERIFY DIMENSIONS

CONTRACTOR SHALL VERIFY DIMENSION AND ELEVATIONS SHOWN IN THE PLANS BEFORE AND DURING CONSTRUCTION AND ADJUST BAR LENGTHS AND OR BEAM LENGTHS TO ENSURE PROPER FIT AND FINISH IN THE FINAL PRODUCT. DIMENSIONS ARE FOR A NORMAL TEMPERATURE OF 60 DEGREES FAHRENHEIT. LAYOUT DIMENSIONS ARE HORIZONTAL DIMENSIONS.

BEVELED EDGES

ALL EXPOSED EDGES SHALL BE BEVELED ¾" UNLESS OTHERWISE NOTED.

COMPLETION OF THE STRUCTURE

THE CONTRACTOR IS REQUIRED TO COMPLETE THE STRUCTURE IN ACCORDANCE WITH THE PLANS AND SPECIFICATIONS. MATERIAL, LABOR OR CONSTRUCTION OPERATIONS, NOT OTHERWISE SPECIFIED, ARE TO BE INCLUDED IN THE BID ITEM MOST APPROPRIATE TO THE WORK INVOLVED. THIS MAY INCLUDE COFFERDAMS, SHORING, EXCAVATIONS, BACKFILLING, REMOVAL OF ALL OR PARTS OF EXISTING STRUCTURES, PHASE CONSTRUCTION, INCIDENTAL MATERIALS, LABOR, OR ANYTHING ELSE REQUIRED TO COMPLETE THE STRUCTURE.

BEFORE YOU DIG

THE CONTRACTOR SHALL BE RESPONSIBLE FOR ALL REQUIREMENTS AND CONFORMATION WITH THE UNDERGROUND FACILITY DAMAGE PREVENTION ACT OF 1994. THE CONTRACTOR WILL BE RESPONSIBLE FOR LOCATING ANY UTILITIES ON THIS PROJECT. ALL UNDERGROUND UTILITIES SHALL BE LOCATED PRIOR TO CONSTRUCTION. THE CONTRACTOR IS ADVISED TO CALL (800) 752-6007 A MINIMUM OF TWO WORKING DAYS PRIOR TO EXCAVATION FOR INFORMATION ON THE LOCATION OF SOME BUT NOT NECESSARILY ALL UNDERGROUND UTILITIES.

STAY-IN-PLACE METAL FORMS

THE USE OF STAY-IN-PLACE FORMWORK FOR THE BRIDGE DECK IS PERMITTED PROVIDED THE CORRUGATIONS ARE FILLED WITH EXPANDED POLYSTYRENE.

EXISTING REINFORCING STEEL

THE COST OF CUTTING, BENDING AND CLEANING EXISTING REINFORCING STEEL IS TO BE INCIDENTAL TO THE LUMP SUM BID FOR REMOVE CONCRETE MASONRY.

FOUNDATION PREPARATION

INCLUDE IN THIS LUMP SUM BID THE COST OF ANY REQUIRED COMMON EXCAVATION (INCLUDING MATERIALS, LABOR, EQUIPMENT, ETC.) IN ACCORDANCE WITH SECTION 603 OF THE SPECIFICATIONS. CONTRARY TO THE SPECIFICATIONS, BACKFILLING BEHIND THE ABUTMENTS SHALL BE PAID FOR IN THE UNIT PRICE BID FOR STRUCTURE GRANULAR BACKFILL.

CONCRETE SEALER

SUPERSTRUCTURE AREAS DETAILED IN THE SPECIFICATIONS AS REQUIRING MASONRY COATING SHALL BE SEALED IN ACCORDANCE WITH THE SPECIAL NOTE FOR CONCRETE SEALING AND IN THE AREAS SHOWN IN THE DETAIL ON S21. CONCRETE SURFACES (EXCEPT THE DECK) SHALL RECEIVE THE ORDINARY SURFACE FINISH AS DESCRIBED IN SECTION 601.03.18(A) PRIOR TO BEING SEALED.

EXISTING HANDRAIL

REMOVE AND RELOCATE THE EXISTING ALUMINUM HANDRAIL AS DIRECTED BY THE ENGINEER. ALL COSTS TO REMOVE, DELIVER TO A LOCATION AS SPECIFIED BY THE ENGINEER, OR DISPOSAL FEES SHALL BE INCIDENTAL TO THE BID FOR REMOVE CONCRETE MASONRY.

ELECTRICAL CONDUIT

THE LUMP SUM BID FOR THIS ITEM SHALL INCLUDE FURNISHING ALL CONDUIT, JUNCTION BOXES, ANCHOR BOLTS, OTHER RELATED MATERIALS, AND ALL LABOR NECESSARY FOR PLACEMENT IN ACCORDANCE WITH THE PLANS, SPECIFICATIONS, AND STANDARD DRAWINGS. ALL CONDUIT SHALL BE RIGID GALVANIZED CONDUIT. CONDUIT SHALL EXTEND 4' BEYOND END OF BRIDGE AND BE CAPPED. MARK END LOCATION WITH CONCRETE MARKER, 4 REQUIRED. LOCATION OF JUNCTION BOXES SHALL BE AS DIRECTED BY THE ENGINEER.

REMOVE REINFORCED CONCRETE

THE LUMP SUM BID FOR THIS ITEM SHALL INCLUDE ALL LABOR, MATERIALS, AND DISPOSAL COSTS ASSOCIATED WITH THE REMOVAL OF THE EXISTING PAVED CONCRETE SLOPEWALLS AT EACH ABUTMENT. THE ESTIMATED QUANTITY FOR THIS REMOVAL IS 88 CY AT ABUTMENT 1 AND 90 CY AT ABUTMENT 2.

TEMPORARY SUPPORTS

TEMPORARY SUPPORTS OR SHORING WILL NOT BE PERMITTED UNDER THE BEAMS WHEN POURING THE CONCRETE DECK SLAB OR WHEN TAKING "TOP OF BEAM" ELEVATIONS.

STRUCTURE EXCAVATION

SHEETING OR SHORING MAY BE NECESSARY FOR CONSTRUCTION. THE COST OF ANY SUCH WORK SHALL BE INCLUDED IN THE UNIT PRICE BID FOR FOUNDATION PREPARATION OR REMOVE CONCRETE MASONRY, AS APPROPRIATE.

CONSTRUCTION IDENTIFICATION

THE NAMES OF THE PRIME CONTRACTOR AND THE SUBCONTRACTOR SHALL BE IMPRINTED IN THE CONCRETE WITH ONE INCH LETTERS AT A LOCATION DESIGNATED BY THE ENGINEER. THE CONTRACTOR SHALL FURNISH ALL PLANS, EQUIPMENT AND LABOR NECESSARY TO DO THE WORK FOR WHICH NO DIRECT PAYMENT WILL BE MADE. SEE STD. DWG. BGX-006, C.E.

DISCLAIMER

ACCEPTANCE OF ANY CONTRACTOR'S SUBMISSION REQUIRED ON THIS PROJECT DOES NOT CONSTITUTE ENDORSEMENT OR APPROVAL. THE ACCEPTANCE IS ACKNOWLEDGEMENT OF THE WORK PERFORMED AND AUTHORIZATION FOR THE CONTRACTOR TO PROCEED. THE DEPARTMENT IS NOT BOUND BY ACCEPTANCE OF ANY SUBMISSIONS REQUIRED. FINAL ACCEPTANCE OR APPROVAL WILL BE CONTINGENT ON THE SATISFACTORY COMPLETION OF THE PROJECT.

SHOP DRAWINGS

WHEN CHANGES IN THE SHOP DRAWINGS ARE PROPOSED BY THE FABRICATOR OR SUPPLIER, THE SHOP DRAWINGS REFLECTING THESE CHANGES SHALL BE SUBMITTED TO THE CONSULTANT THROUGH THE CONTRACTOR. THE CONSULTANT SHALL PROVIDE THE DIVISION OF STRUCTURAL DESIGN ONE COPY OF THE FINAL APPROVED SHOP PLANS.

SLAB POURING SEQUENCE

SLAB SHALL BE POURED CONTINUOUSLY OUT TO OUT.

EXISTING PLANS

EXISTING PLANS CAN BE FOUND UNDER DRAWING NUMBER 14991.

BONDED CONSTRUCTION JOINT

WHERE A BONDED CONSTRUCTION JOINT IS CALLED FOR IN THE PLANS, BOND NEW PLASTIC CONCRETE TO HARDENED CONCRETE USING A TYPE V EPOXY RESIN OR OTHER APPROVED STRUCTURAL ADHESIVE AS PRESCRIBED IN SECTION 826 OF THE SPECIFICATIONS. FOLLOW THE MANUFACTURER'S RECOMMENDED APPLICATION INSTRUCTIONS. THIS WORK AND MATERIAL IS INCIDENTAL TO THE UNIT PRICE BIDS FOR CLASS "A" OR CLASS "AA" CONCRETE.

DRILLING AND GROUTING

IN ACCORDANCE WITH SECTION 826 OF THE SPECIFICATIONS, DRILL HOLES TO A DEPTH AS SHOWN HEREIN THESE PLANS AND APPLY A TYPE IV EPOXY BONDING ADHESIVE IN THE HOLES. ALSO, APPLY A TYPE V EPOXY BONDING MATERIAL TO THE INTERFACE BETWEEN THE EXISTING CONCRETE AND THE NEW CONCRETE PRIOR TO PLACING THE NEW CONCRETE. ALL COSTS ASSOCIATED WITH THIS WORK SHALL BE INCIDENTAL TO THE UNIT PRICE BID FOR CLASS "A" CONCRETE.

REMOVE CONCRETE MASONRY

THE CONTRACTOR SHALL USE HAND HELD JACK HAMMERS OR HYDRO-DEMOLITION TECHNIQUES TO REMOVE CONCRETE WITHOUT DAMAGING THE EXISTING REINFORCEMENT THAT IS TO REMAIN IN PLACE. ANY CONCRETE REMOVAL OUTSIDE THE DETAILED LIMITS SHALL BE REPLACED AT THE CONTRACTOR'S EXPENSE. THE CONTRACTOR SHALL MAKE A SAW CUT AT THE REMOVAL LIMITS TO FORM A NEAT CONSTRUCTION JOINT. ALL COSTS OF THIS PROCEEDURE ARE INCLUDED IN THE PRICE BID FOR, "REMOVE CONCRETE MASONRY."

MECHANICAL COUPLERS

MECHANICAL COUPLERS SHALL BE IN ACCORDANCE WITH SECTION 602.03.06 OF THE SPECIFICATIONS. CONTRACTOR SHALL FURNISH TWO ADDITIONAL TEST SPECIMENS TO THE DIVISION OF MATERIALS FOR APPROVAL.

BONDING NEW CONCRETE TO OLD CONCRETE

ALL NEW CONCRETE SHALL BE BONDED TO THE OLD CONCRETE WITH A TYPE V EPOXY RESIN SYSTEM CONFORMING TO SECTION 511 AND 826 OF THE SPECIFICATIONS. THE COST OF THIS WORK, INCLUDING ALL LABOR, TOOLS, AND MATERIALS IS TO BE INCIDENTAL TO THE UNIT PRICE BIDS FOR CLASS "A" OR CLASS "AA" CONCRETE.

SPIRAL COLUMN TIES

SPLICES FOR SPIRALS WHERE DESIRED BY THE CONTRACTOR SHALL BE MADE WITH A MINIMUM OF ONE AND ONE-HALF TURNS OF SPIRAL. NO ADDITIONAL PAYMENT WILL BE MADE FOR THESE SPLICES, AND THE COST WILL BE CONSIDERED INCIDENTAL TO THE COST OF THE DEVELOPED-LENGTH OF SPIRAL SHOWN ON THE PLANS. SPIRAL REINFORCEMENT SHALL MEET THE REQUIREMENTS OF SECTION 811 OF THE SPECIFICATIONS.

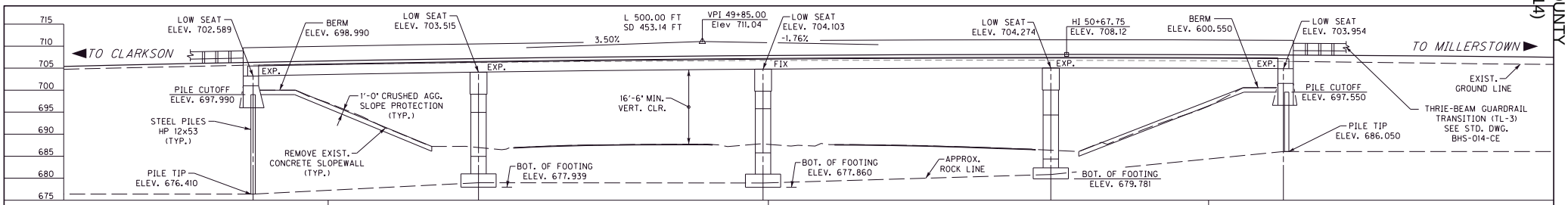

ELEVATION

52'-0", 65'-0", 65'-0", 52'-0" SB27-48 BOX BEAM
CONTINUOUS FOR LIVE LOAD, KY HL-93 LOADING
2:1 FILL SLOPES, 53'-0" SHOULDERS @ BRIDGE, 45'-0" ROADWAY, 33°13'26.8" SKEW RT.

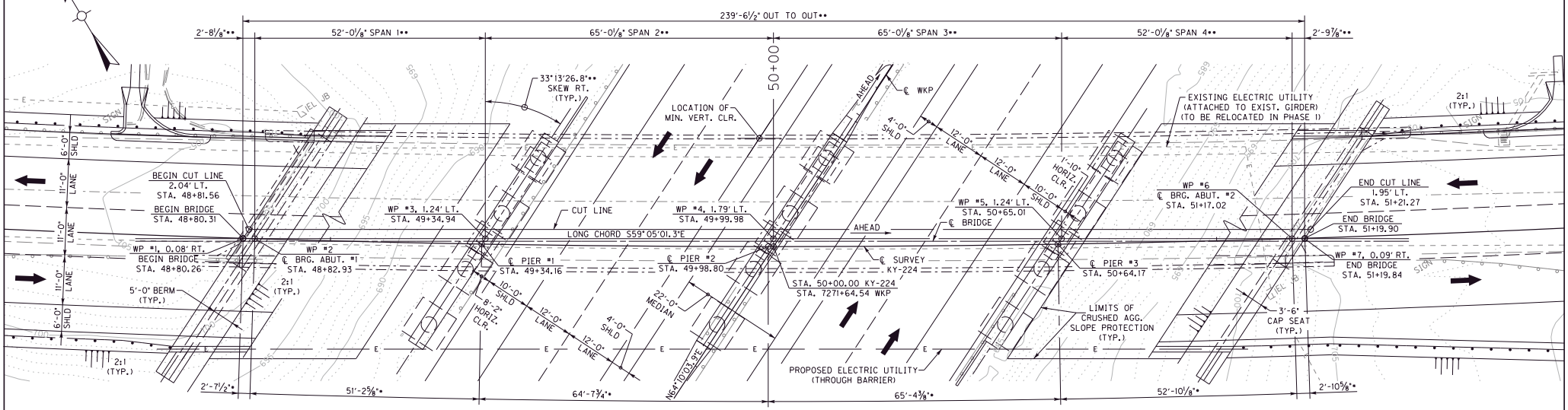

PLAN

(SUPERSTRUCTURE REMOVED)

KY-224 CURVE DATA

P.I. 50+46.83
Δ = 9°07'56" LT
T = 305.08'
L = 608.87'
R = 3820.00'
E = 12.16'
e = 3.00%

P.T. 53+50.62

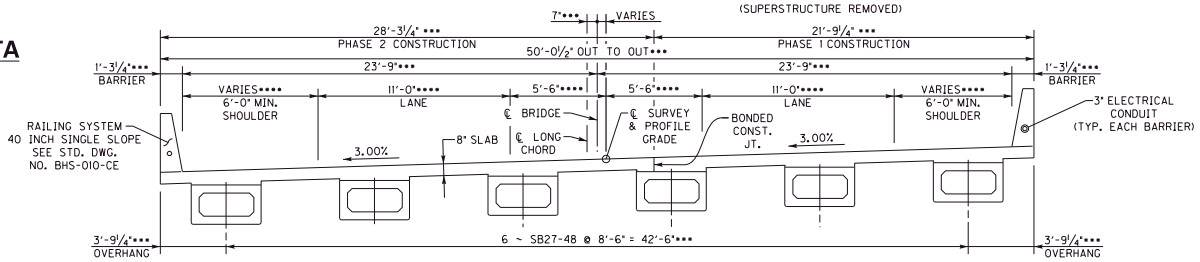

TYPICAL SECTION

(LOOKING AHEAD)

NOTES

1) • MEASURED ALONG ℄ SURVEY.
2) •• MEASURED ALONG LONG CHORD.
3) ••• MEASURED PERPENDICULAR TO LONG CHORD.
4) •••• MEASURED RADIAL TO ℄ SURVEY.
5) SEE S8 FOR LONG CHORD, WORKING POINTS, & GEOMETRY LAYOUT.
6) SEE SHEET S4 - S7 FOR LIMITS OF REMOVAL & NEW CONSTRUCTION.

COMMONWEALTH OF KENTUCKY DEPARTMENT OF HIGHWAYS	REVISION	DATE	PREPARED BY HMB PROFESSIONAL ENGINEERS, INC.	DATE: 12/30/2021	CHECKED BY	LAYOUT	ROUTE	ITEM NO. 4-20001	COUNTY OF GRAYSON
				DESIGNED BY: B. Pulliam	B. Reid	CROSSING WESTERN KENTUCKY PARKWAY	KY-224	SHEET NO. S3	DRAWING NUMBER 28464
				DETAILED BY: B. Pulliam	B. Reid				

MicroStation v8.11.7.443 USER: bpulliam DATE PLOTTED: 1/7/2022 9:48:28 AM FILE: G:\Engr\HD1365.10 and 1365.11 Grayson WK\BRIDGES\CAD\Layout.dgn

PHASE 1 CONSTRUCTION

PHASE 1A

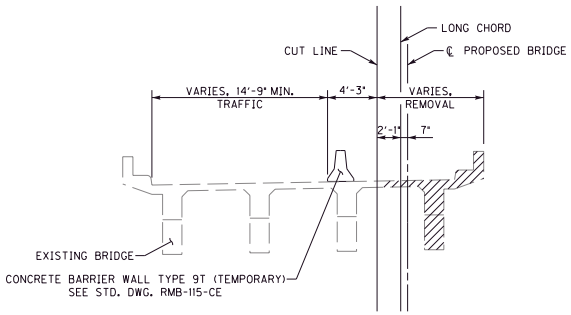

TYPICAL SECTION
(LOOKING AHEAD)

PHASE 1B

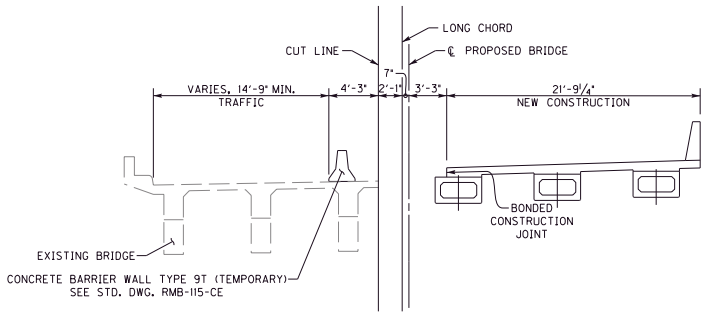

TYPICAL SECTION
(LOOKING AHEAD)

PHASE 2 CONSTRUCTION

PHASE 2A

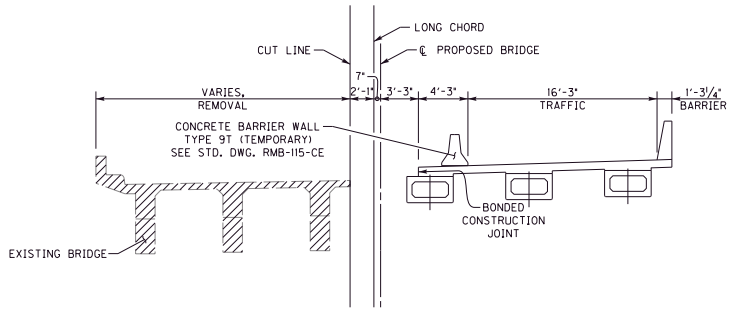

TYPICAL SECTION
(LOOKING AHEAD)

PHASE 2B

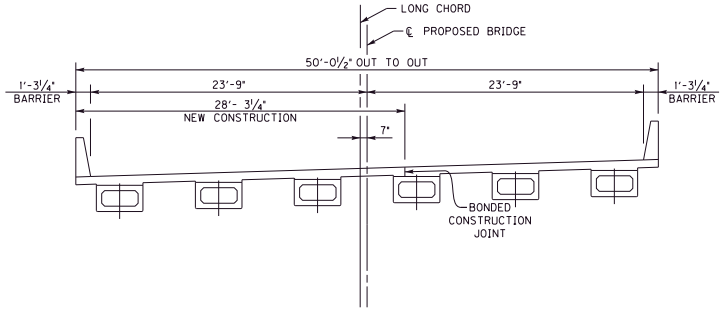

TYPICAL SECTION
(LOOKING AHEAD)

COMMONWEALTH OF KENTUCKY DEPARTMENT OF HIGHWAYS	REVISION	DATE	PREPARED BY HMB PROFESSIONAL ENGINEERS, INC.	DATE: 12/30/2021	CHECKED BY	CONSTRUCTION PHASING SUPERSTRUCTURE	ROUTE	ITEM NO.	COUNTY OF
				DESIGNED BY: B. Reid	B. Pulliam	CROSSING	KY-224	4-20001	GRAYSON
				DETAILED BY: B. Pulliam	B. Reid	WESTERN KENTUCKY PARKWAY		SHEET NO. S4	DRAWING NUMBER 28464

MicroStation v8.11.7.443 USER: bpulliam DATE PLOTTED: 1/7/2022 9:48:29 AM FILE: G:\Engr\HD1365.10 and 1365.11 Grayson WK\BRIDGES\CAD\Construction Phasing 1.dgn

PHASE 1 CONSTRUCTION

PHASE 1A

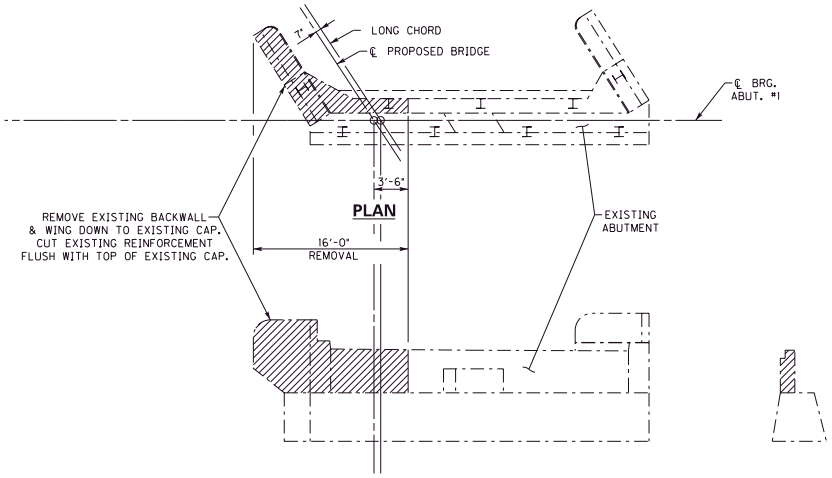

ELEVATION
(LOOKING BACK)

SECTION

PHASE 1B

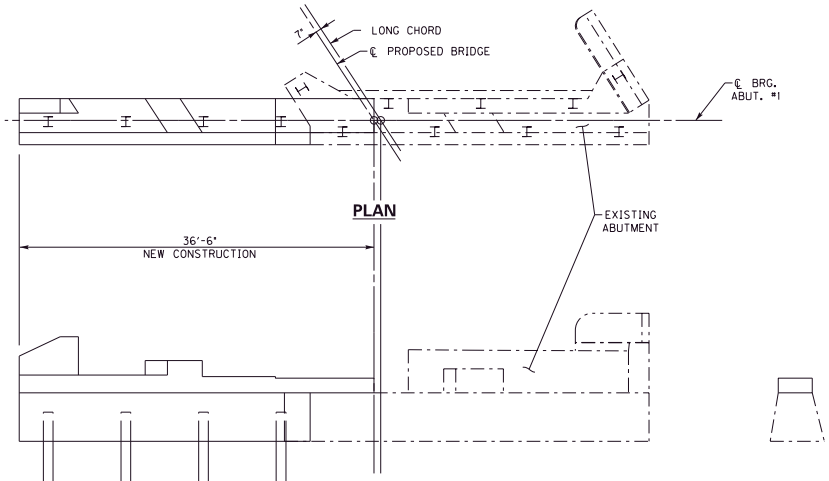

ELEVATION
(LOOKING BACK)

SECTION

PHASE 2 CONSTRUCTION

PHASE 2A

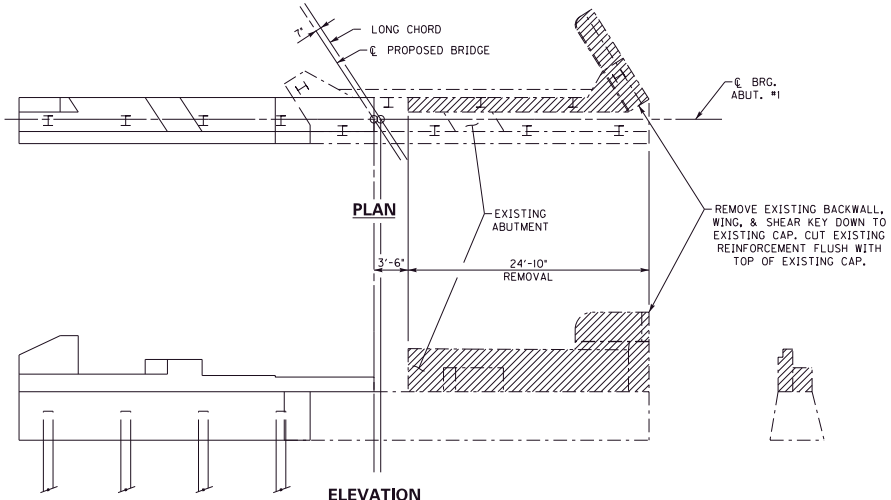

ELEVATION
(LOOKING BACK)

SECTION

PHASE 2B

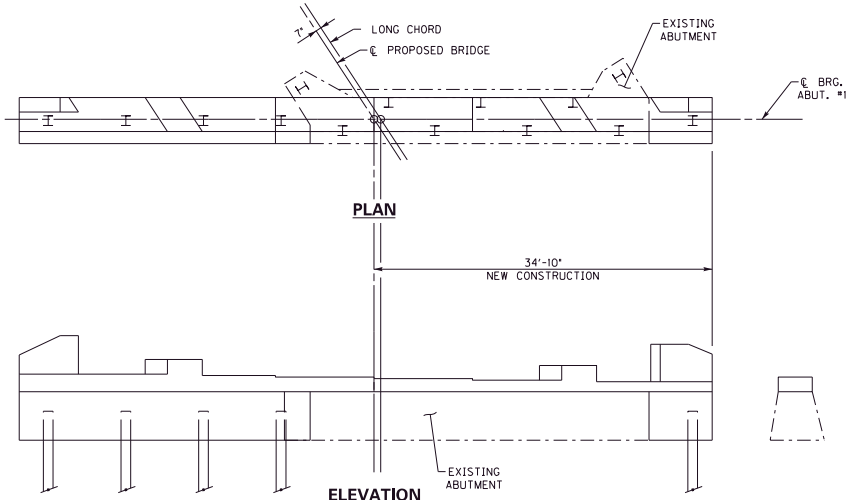

ELEVATION
(LOOKING BACK)

SECTION

COMMONWEALTH OF KENTUCKY DEPARTMENT OF HIGHWAYS	REVISION	DATE	PREPARED BY HMB PROFESSIONAL ENGINEERS, INC.	DATE: 12/30/2021	CHECKED BY	CONSTRUCTION PHASING ABUTMENT #1	ROUTE	ITEM NO.	COUNTY OF
				DESIGNED BY: B. Reid	B. Pulliam	CROSSING	KY-224	4-20001	GRAYSON
				DETAILED BY: B. Pulliam	B. Reid	WESTERN KENTUCKY PARKWAY		SHEET NO. S5	DRAWING NUMBER 28464

MicroStation v8.11.7.443 USER: bpulliam DATE PLOTTED: 1/7/2022 9:48:30 AM FILE: G:\Engr\HD1365.10 and 1365.11 Grayson WK\BRIDGES\CAD\Construction Phasing 2.dgn

PHASE 1 CONSTRUCTION

PHASE 1A

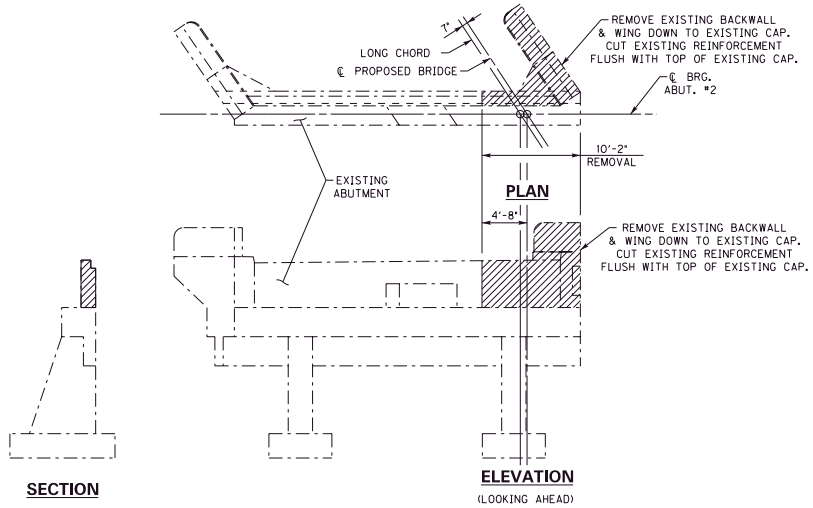

PHASE 1B

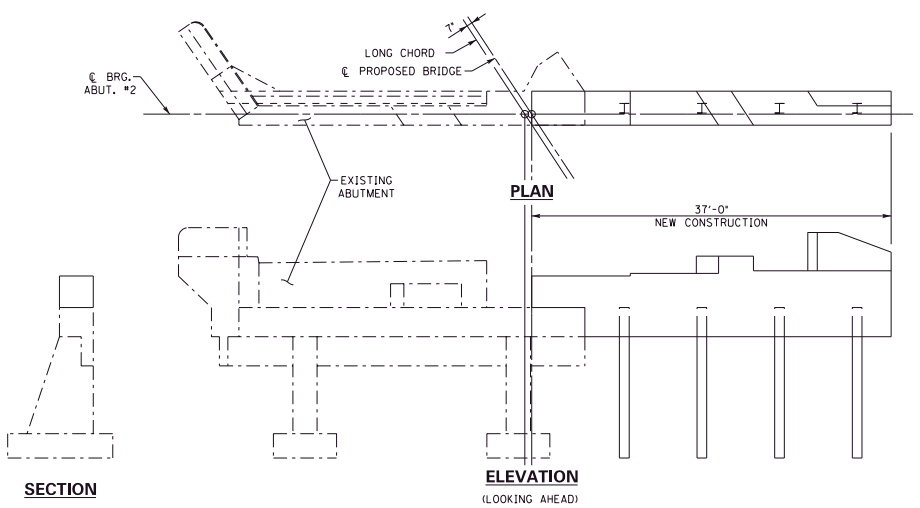

PHASE 2 CONSTRUCTION

PHASE 2A

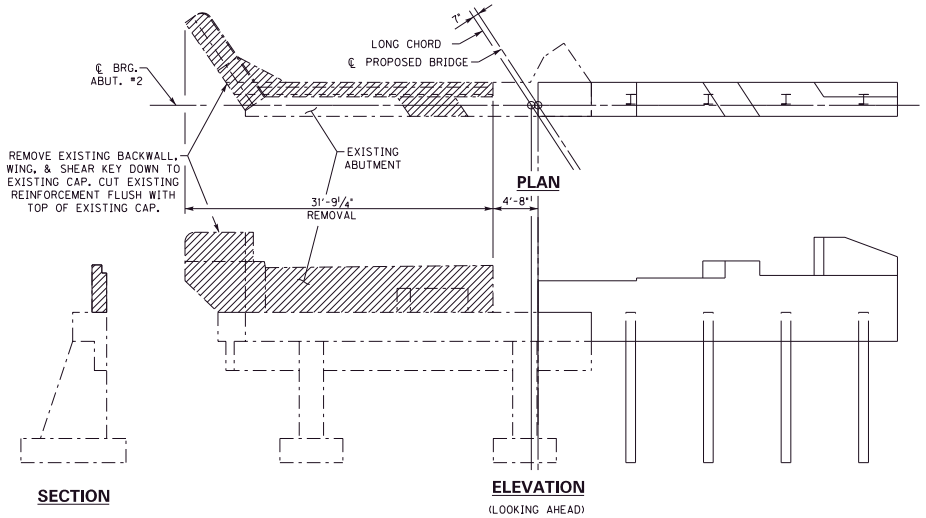

PHASE 2B

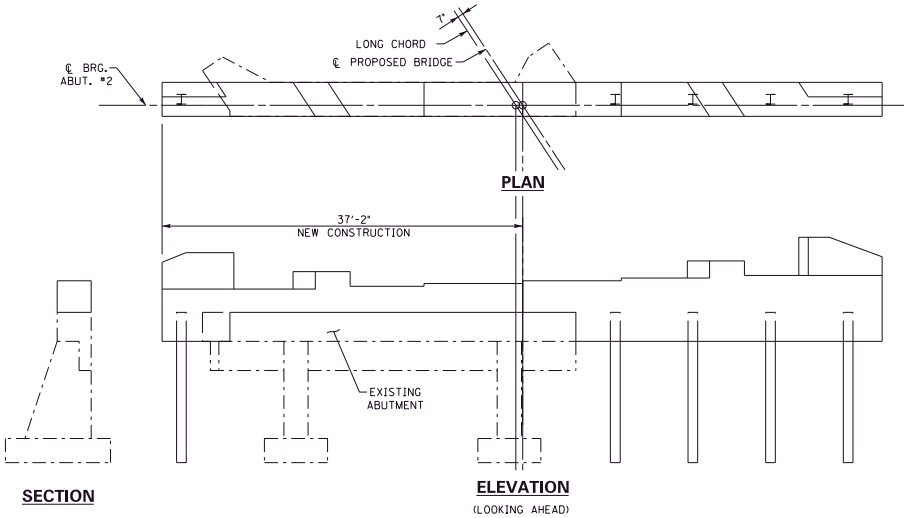

COMMONWEALTH OF KENTUCKY DEPARTMENT OF HIGHWAYS	REVISION	DATE	PREPARED BY HMB PROFESSIONAL ENGINEERS, INC.	DATE: 12/30/2021	CHECKED BY	CONSTRUCTION PHASING ABUTMENT #2	ROUTE	ITEM NO.	COUNTY OF
				DESIGNED BY: B. Reid	B. Pulliam	CROSSING	KY-224	4-20001	GRAYSON
				DETAILED BY: B. Pulliam	B. Reid	WESTERN KENTUCKY PARKWAY		SHEET NO. S6	DRAWING NUMBER 28464

MicroStation v8.11.7.443 USER: bpulliam DATE PLOTTED: 1/7/2022 9:48:30 AM FILE: G:\Engr\HD1365.10 and 1365.11 Grayson WK\BRIDGES\CAD\Construction Phasing 3.dgn

PHASE 1 CONSTRUCTION

PHASE 1A

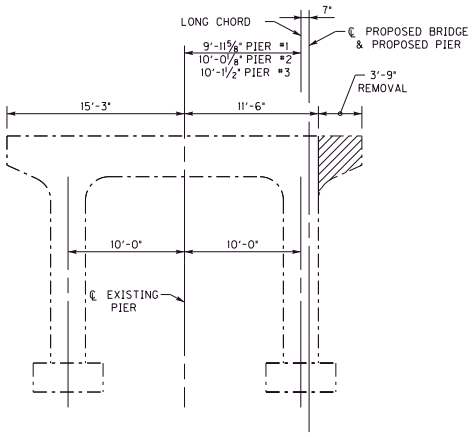

ELEVATION
(LOOKING AHEAD)

PHASE 1B

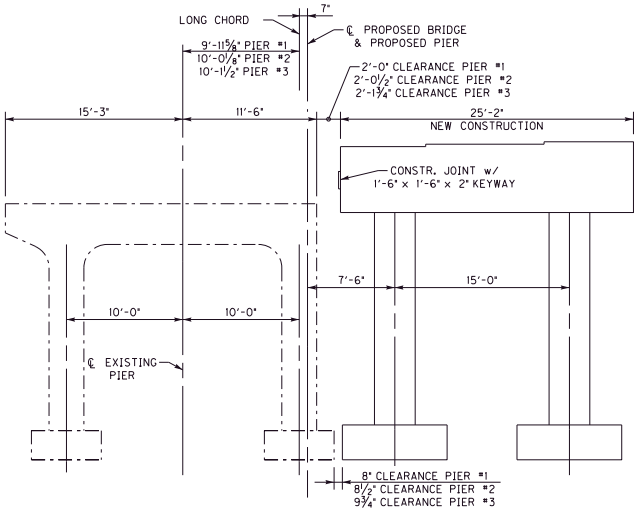

ELEVATION
(LOOKING AHEAD)

PHASE 2 CONSTRUCTION

PHASE 2A

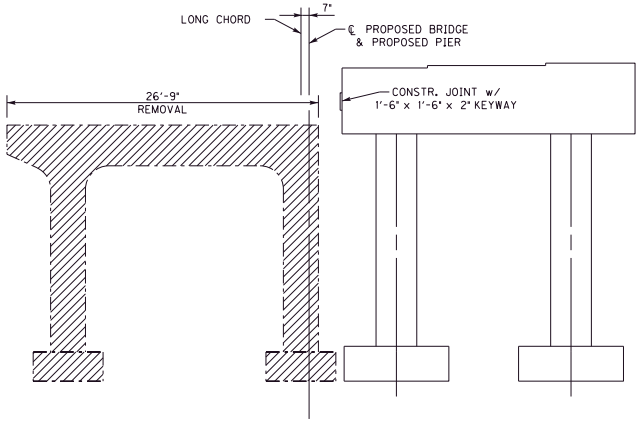

ELEVATION
(LOOKING AHEAD)

PHASE 2B

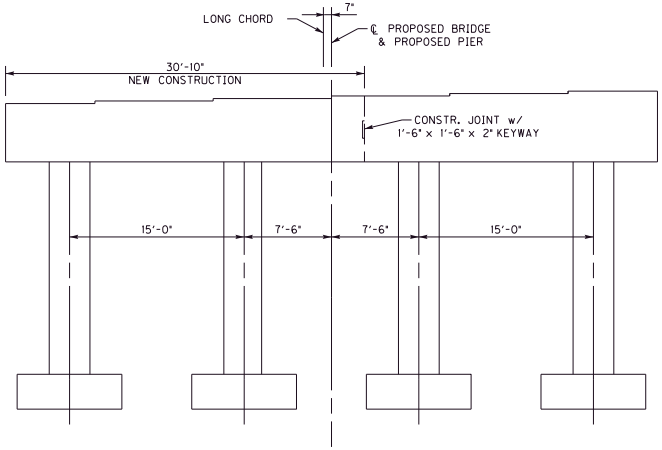

ELEVATION
(LOOKING AHEAD)

COMMONWEALTH OF KENTUCKY DEPARTMENT OF HIGHWAYS	REVISION	DATE	PREPARED BY HMB PROFESSIONAL ENGINEERS, INC.	DATE: 12/30/2021	CHECKED BY	CONSTRUCTION PHASING PIERS	ROUTE	ITEM NO. 4-20001	COUNTY OF GRAYSON
				DESIGNED BY: B. Reid	B. Pulliam	CROSSING	KY-224	SHEET NO. S7	DRAWING NUMBER 28464
				DETAILED BY: B. Pulliam	B. Reid	WESTERN KENTUCKY PARKWAY			

MicroStation v8.11.7.443 USER: bpulliam DATE PLOTTED: 1/7/2022 9:48:31 AM FILE: G:\Engr\HD1365.10 and 1365.11 Grayson WK\BRIDGES\CAD\Construction Phasing 4.dgn

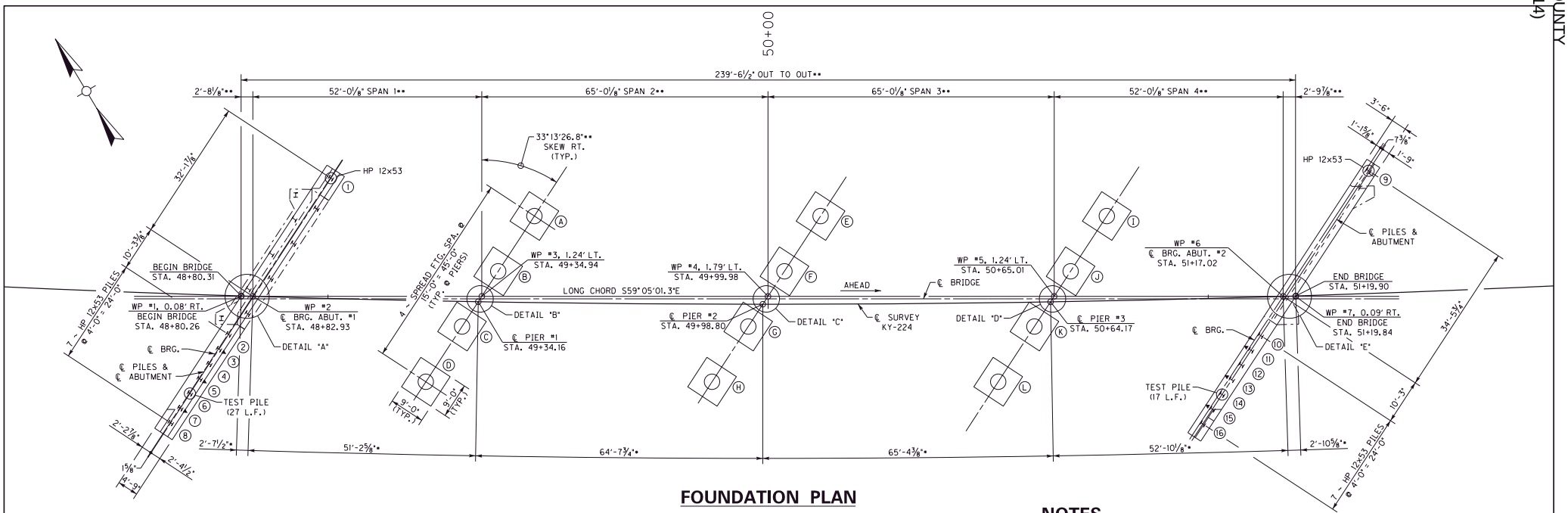

FOUNDATION PLAN

NOTES

1) • MEASURED ALONG ℄ SURVEY.
2) •• MEASURED ALONG LONG CHORD.
3) ▲ INDICATES DIRECTION OF 4:12 BATTER

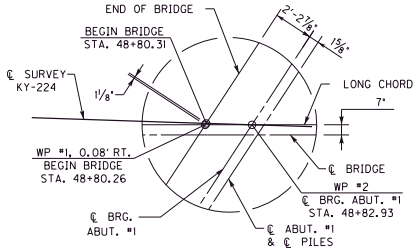

DETAIL A

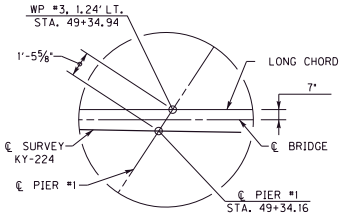

DETAIL B

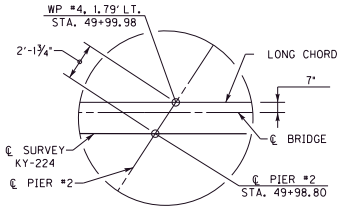

DETAIL C

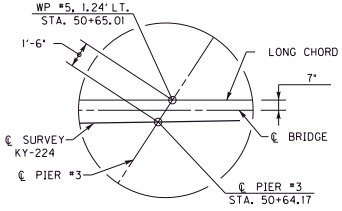

DETAIL D

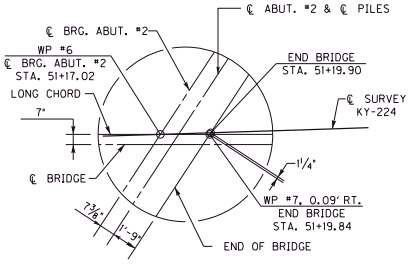

DETAIL E

COMMONWEALTH OF KENTUCKY DEPARTMENT OF HIGHWAYS	REVISION	DATE	PREPARED BY HMB PROFESSIONAL ENGINEERS, INC.	DATE: 12/30/2021	CHECKED BY	FOUNDATION LAYOUT	ROUTE	ITEM NO. 4-20001	COUNTY OF GRAYSON
				DESIGNED BY: B. Pulliam	B. Reid	CROSSING WESTERN KENTUCKY PARKWAY	KY-224	SHEET NO. S8	DRAWING NUMBER 28464
				DETAILED BY: B. Pulliam	B. Reid				

MicroStation v8.11.7.443 USER: bpulliam DATE PLOTTED: 1/7/2022 9:48:31 AM FILE: G:\Engr\HD1365.10 and 1365.11 Grayson WK\BRIDGES\CAD\Foundation Layout 1.dgn

PILE RECORD FOR POINT BEARING PILES

PILE NO.	PILE CUT-OFF ELEVATION (FEET)	TIP OF PILE ELEVATION AS DRIVEN (FEET)	LENGTH OF PILE IN PLACE (FEET)	DESIGN AXIAL LOAD (TONS)
1	697.990			72
2				
3				
4				
5				
6				
7				
8	697.990			
9	697.550			
10				
11				
12				
13				
14				
15				
16	697.550			72

FIELD DATA

FOR EACH PILE, THE PROJECT ENGINEER SHALL RECORD THE FOLLOWING ON THIS SHEET: PILE LENGTH IN PLACE AND POINT OF PILE ELEVATION AS DRIVEN. SUBMIT THIS RECORD TO:

DIRECTOR, DIVISION OF STRUCTURAL DESIGN
ROOM #322
200 MERO STREET
FRANKFORT, KY. 40622-0001

THIS PILE RECORD DOES NOT REPLACE OTHER PILE RECORDS THE PROJECT ENGINEER IS REQUIRED TO KEEP AND SUBMIT.

AFTER PIER FOUNDATIONS HAVE BEEN PLACED, THE PROJECT RESIDENT ENGINEER SHALL RECORD THE BOTTOM OF FOOTING ELEVATION "AS-BUILT" AND SHALL SUBMIT ONE COPY OF THIS SHEET WITH THIS DATA TO THE DIRECTOR, DIVISION OF BRIDGES.

USE HP 12X53 IN ACCORDANCE WITH BPS-003, C.E.
USE GRADE 50 STEEL H-PILES WITH PILE POINTS FOR END BEARING PILES.

DEFINITIONS OF TERMS

PILE CUT-OFF ELEVATION: Elevation of the top of pile in the finished structure.

PILE LENGTH IN PLACE: Actual pile length below the Pile Cut-Off Elevation in the finished structure.

POINT OF PILE ELEVATION AS DRIVEN: Actual point of pile elevation in the finished structure.

DESIGN AXIAL LOAD: Load carried by each pile as estimated from structural design calculations for Factored LRFD Loadings.

CALCULATED FIELD BEARING: Contrary to Section 604.03.07 of the Standard Specifications, in place bearing values are not required for piles bearing on rock when driven to practical refusal.

DRIVING CRITERIA: Drive point bearing piles to practical refusal.

PRACTICAL REFUSAL: FOR THIS PROJECT MINIMUM BLOW REQUIREMENTS ARE REACHED AFTER TOTAL PENETRATION BECOMES ½" OR LESS FOR 10 CONSECUTIVE BLOWS. PRACTICAL REFUSAL IS OBTAINED AFTER THE PILE IS STRUCK AN ADDITIONAL 10 BLOWS WITH TOTAL PENETRATION OF ½" OR LESS. IMMEDIATELY CEASE DRIVING OPERATIONS IF THE PILE VISIBLY YIELDS OR BECOMES DAMAGED DURING DRIVING. DRIVE ADDITIONAL PRODUCTION AND TEST PILES IF DIRECTED BY THE ENGINEER.

SPREAD FOOTING RECORD

PIER #1			PIER #2			PIER #3		
POINT	BOTTOM FTG. ELEV.	AS-BUILT FTG. ELEVATION	POINT	BOTTOM FTG. ELEV.	AS-BUILT FTG. ELEVATION	POINT	BOTTOM FTG. ELEV.	AS-BUILT FTG. ELEVATION
A	677.939		E	677.860		I	679.781	
B	677.939		F	677.860		J	679.781	
C	677.939		G	677.860		K	679.781	
D	677.939		H	677.860		L	679.781	

FOOTINGS ARE DESIGNED FOR A MAXIMUM SERVICE LIMIT BEARING PRESSURE OF 12 ksf.

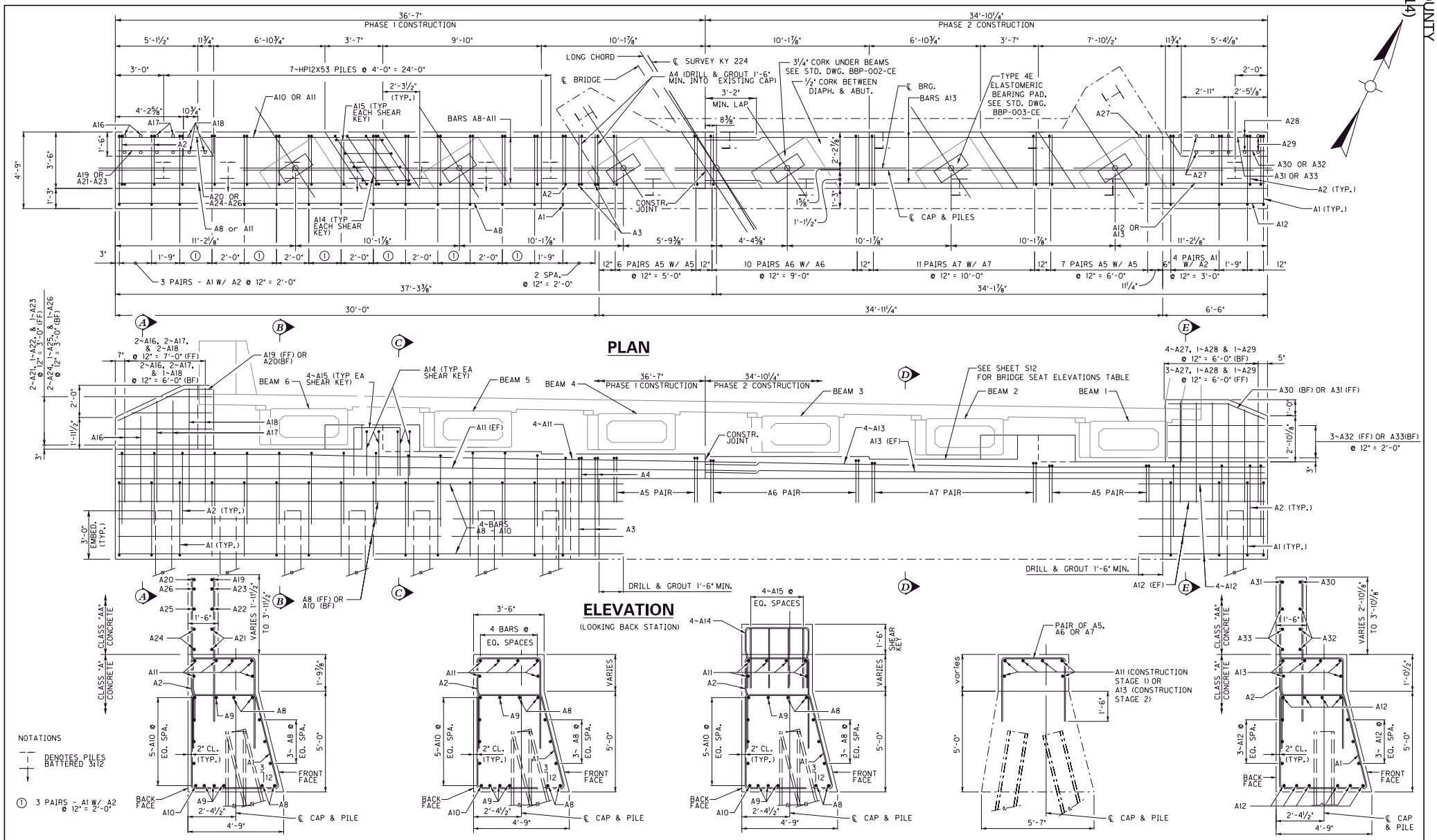

COMMONWEALTH OF KENTUCKY DEPARTMENT OF HIGHWAYS	REVISION / DATE	PREPARED BY HMB PROFESSIONAL ENGINEERS, INC.	DATE: 12/30/2021	CHECKED BY	ABUTMENT #1	ROUTE KY-224	ITEM NO. 4-20001 / COUNTY OF GRAYSON
			DESIGNED BY: B. Reid	B. Pulliam	CROSSING WESTERN KENTUCKY PARKWAY		SHEET NO. S10 / DRAWING NUMBER 28464
			DETAILED BY: B. Reid	B. Pulliam			

MicroStation v8.11.7.443 USER: bpulliam DATE PLOTTED: 1/7/2022 9:48:33 AM FILE: G:\Engr\HD1365.10 and 1365.11 Grayson WK\BRIDGES\CAD\Abutment1.dgn

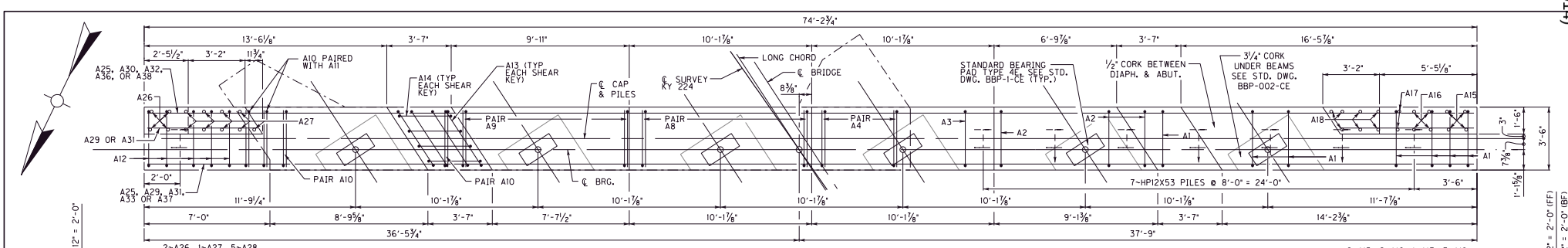

PLAN

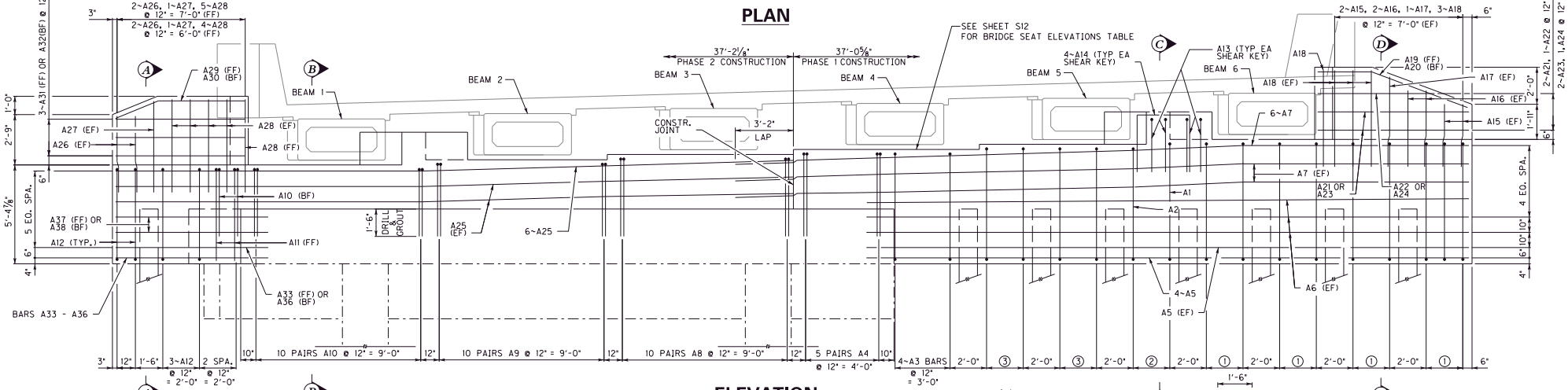

ELEVATION

(LOOKING AHEAD STATION)

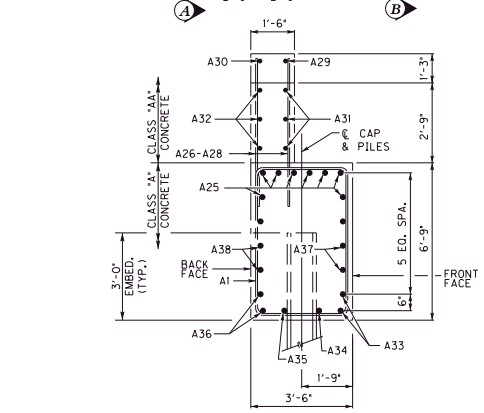

SECTION A–A

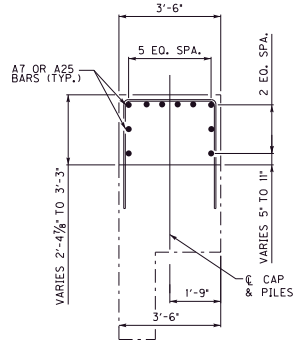

SECTION B–B

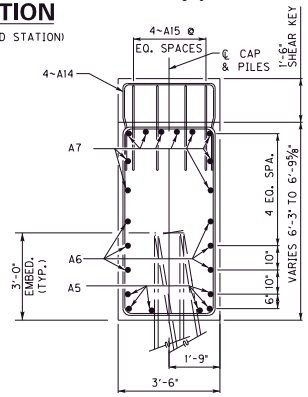

SECTION C–C

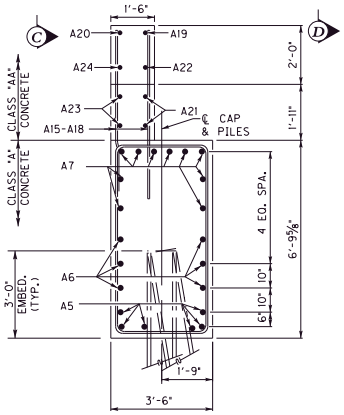

SECTION D–D

NOTATIONS

DENOTES PILES BATTERED 2:12

① 3~A1 @ 12" = 2'-0"

② 2~A1 & 1~A2 @ 12" = 2'-0"

③ 3~A2 @ 12" = 2'-0"

COMMONWEALTH OF KENTUCKY DEPARTMENT OF HIGHWAYS	REVISION	DATE	PREPARED BY HMB PROFESSIONAL ENGINEERS, INC.	DATE: 12/30/2021	CHECKED BY	ABUTMENT #2	ROUTE KY-224	ITEM NO. 4-20001	COUNTY OF GRAYSON
				DESIGNED BY: B. Reid	B. Pullam	CROSSING WESTERN KENTUCKY PARKWAY		SHEET NO. S11	DRAWING NUMBER 28464
				DETAILED BY: B. Reid	B. Pullam				

MicroStation v8.11.7.443 USER: bpullam DATE PLOTTED: 1/7/2022 9:48:34 AM FILE: G:\Engr\HD1365.10 and 1365.11 Grayson WK\BRIDGES\CAD\Abutment2.dgn

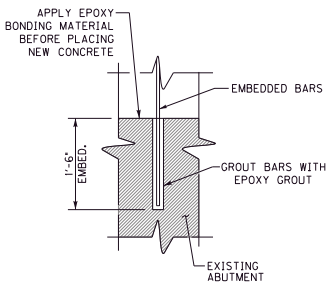

DRILL & GROUT DETAIL

BEAM SEAT ELEVATIONS

ABUTMENT #1	
BEAM 1	702.589
BEAM 2	702.750
BEAM 3	702.909
BEAM 4	703.066
BEAM 5	703.220
BEAM 6	703.373

BEAM SEAT ELEVATIONS

ABUTMENT #2	
BEAM 1	703.954
BEAM 2	704.241
BEAM 3	704.524
BEAM 4	704.803
BEAM 5	705.080
BEAM 6	705.352

ABUTMENT #1 BILL OF REINFORCEMENT

MARK	TYPE	NO.	SIZE	LENGTH		LOCATION	A		B		C		D		E		F	
				FT	IN		FT	IN	FT	IN	FT	IN	FT	IN	FT	IN	FT	IN
A1	29	28	#5	17	7	CAP	4	8	4	4 1/2	4	8	4	9 3/4	3	2 1/2	1	2
A2	2	28	#5	10	10	CAP	4	6	3	2								
A3	5	2	#5	9	4	CAP	6	2	3	2								
A4	5	2	#5	6	0	CAP	3	2	2	10								
A5	5	26	#5	6	0	CAP	3	2	2	10								
A6	5	20	#5	5	10	CAP	3	2	2	8								
A7	5	22	#5	5	9	CAP	3	2	2	7								
A8	STR	7	#5	31	2	CAP												
A9	STR	4	#5	30	4	CAP												
A10	STR	5	#5	29	9	CAP												
A11	STR	6	#5	39	7	BEARING SEAT												
A12	STR	16	#5	7	10	CAP												
A13	STR	6	#5	34	9	BEARING SEAT												
A14	7	8	#5	8	9	SHEAR KEY	2	6	3	9								
A15	7	8	#5	8	3	SHEAR KEY	2	6	3	3								
A16	STR	4	#5	5	5	WING												
A17	STR	4	#5	6	11	WING												
A18	STR	3	#5	7	2	WING												
A19	8	1	#6	6	4	WING	4	7	1	9	0	8 7/8	1	6 7/8				
A20	8	1	#6	5	3	WING	4	7	0	8	0	3 1/2	0	7 1/4				
A21	STR	2	#5	5	10	WING												
A22	STR	1	#5	5	0	WING												
A23	STR	1	#5	2	11	WING												
A24	STR	2	#5	4	10	WING												
A25	STR	1	#5	4	2	WING												
A26	STR	1	#5	2	0	WING												
A27	STR	7	#5	6	3	WING												
A28	STR	2	#5	5	10	WING												
A29	STR	2	#5	5	6	WING												
A30	8	1	#6	6	2	WING	3	8	2	6	0	11 3/8	2	3 3/4				
A31	8	1	#6	5	2	WING	2	8	2	6	0	11 3/8	2	3 3/4				
A32	STR	3	#5	6	0	WING												
A33	STR	3	#5	5	0	WING												

BAR TYPES

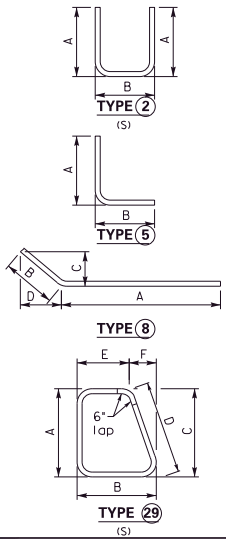

ABUTMENT #2 BILL OF REINFORCEMENT

MARK	TYPE	NO.	SIZE	LENGTH		LOCATION	A		B		C		D		E		F	
				FT	IN		FT	IN	FT	IN	FT	IN	FT	IN	FT	IN	FT	IN
A1	14	14	#5	19	8	CAP	6	5	3	2								
A2	14	7	#5	19	2	CAP	6	2	3	2								
A3	14	4	#5	18	8	CAP	5	11	3	2								
A4	5	10	#5	7	9	CAP	4	7	3	2								
A5	STR	6	#6	32	11	CAP												
A6	STR	6	#5	32	11	CAP												
A7	STR	10	#5	40	1	CAP												
A8	5	20	#5	7	6	CAP	4	4	3	2								
A9	5	20	#5	7	2	CAP	4	0	3	2								
A10	5	22	#5	6	11	CAP	3	9	3	2								
A11	5	2	#5	8	3	CAP	5	1	3	2								
A12	14	5	#5	17	0	CAP	5	1	3	2								
A13	7	8	#5	10	1	SHEAR KEY	3	2	3	9								
A14	7	8	#5	9	7	SHEAR KEY	3	2	3	3								
A15	STR	4	#5	3	6	WING												
A16	STR	4	#5	4	2	WING												
A17	STR	2	#5	4	11	WING												
A18	STR	7	#5	5	3	WING												
A19	8	1	#6	7	7	WING	5	7	2	0	0	8 3/8	1	10 1/2				
A20	8	1	#6	8	5	WING	5	7	2	10	0	11 7/8	2	7 7/8				
A21	STR	2	#5	7	5	WING												
A22	STR	1	#5	5	5	WING												
A23	STR	2	#5	8	3	WING												
A24	STR	1	#5	6	4	WING												
A25	STR	10	#5	37	0	CAP												
A26	STR	4	#5	4	2	WING												
A27	STR	2	#5	5	0	WING												
A28	STR	9	#5	5	1	WING												
A29	8	1	#6	7	3	WING	4	9	2	6	0	11 3/8	2	4				
A30	8	1	#6	6	3	WING	3	9	2	6	0	11 3/8	2	4				
A31	STR	3	#5	7	1	WING												
A32	STR	3	#5	6	1	WING												
A33	STR	2	#6	8	4	CAP												
A34	STR	1	#6	8	0	CAP												
A35	STR	1	#6	7	1	CAP												
A36	STR	2	#6	7	7	CAP												
A37	STR	2	#5	8	4	CAP												
A38	STR	2	#5	7	7	CAP												

BAR TYPES

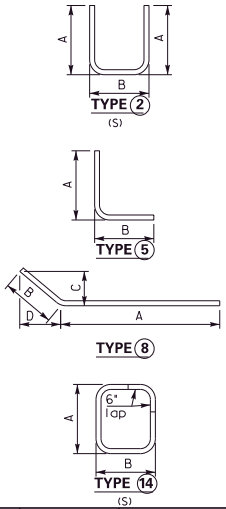

COMMONWEALTH OF KENTUCKY
DEPARTMENT OF HIGHWAYS

REVISION	DATE

PREPARED BY
HMB PROFESSIONAL ENGINEERS, INC.

DATE: 12/30/2021	CHECKED BY
DESIGNED BY: B. Reid	B. Pullam
DETAILED BY: B. Reid	B. Pullam

ABUTMENT DETAILS
CROSSING: WESTERN KENTUCKY PARKWAY

ROUTE	ITEM NO.	COUNTY OF
KY-224	4-20001	GRAYSON
	SHEET NO. S12	DRAWING NUMBER 28464

MicroStation v8.11.7.443 USER: bpullam DATE PLOTTED: 1/7/2022 9:48:34 AM FILE: G:\Engr\HD1365.10 and 1365.11 Grayson WK\BRIDGES\CAD\Abutment Reinf.dgn

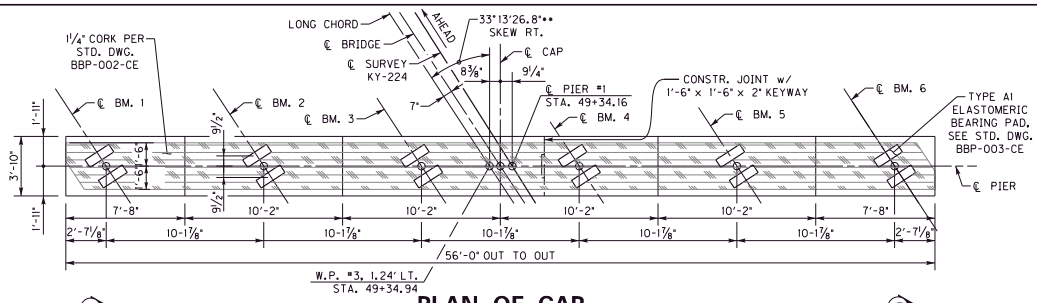

PLAN OF CAP

BRIDGE SEAT ELEVATIONS

PIER 1	
BEAM 1	703.515
BEAM 2	703.702
BEAM 3	703.887
BEAM 4	704.069
BEAM 5	704.248
BEAM 6	704.425

BAR CLEARANCE

CAP	2"
COLUMN	2"
FOOTING	3"

PIER #1 BILL OF REINFORCEMENT

MARK	TYPE	NO.	SIZE	LENGTH FT	LENGTH IN	LOCATION	A FT	A IN	B FT	B IN	C FT	C IN	D FT	D IN
P1	1	96	#7	10	5	FOOTING BOT								
P2	STR	96	#6	8	6	FOOTING TOP								
P3	3	56	#9	10	0	FOOTING DOWEL	8	1	1	11	0	11 3/4	8	6 3/4
P4	18	4	#4	17	9	COLUMN SPIRAL	74							
P5	STR	56	#9	22	1	COLUMN								
P6	STR	7	#8	26	0	CAP BOT								
P7	STR	7	#8	29	8	CAP BOT								
P8	STR	10	#5	26	0	CAP SIDE								
P9	STR	10	#5	29	8	CAP SIDE								
P10	4	7	#8	27	1	CAP TOP	25	8	1	5	0	8	26	0
P11	4	7	#8	30	9	CAP TOP	29	4	1	5	0	8	29	8
P12	14	138	#5	15	0	CAP STIRRUP								
P13	STR	5	#5	17	6	CAP STEP								
P14	STR	5	#5	8	4	CAP STEP								
P15	STR	5	#5	11	10	CAP STEP								
P16	2	39	#5	8	6	CAP STEP								
P17	STR	33	#6	13	0	CRASHWALL								
P18	STR	33	#6	11	2	CRASHWALL								
P19	STR	72	#5	9	8	CRASHWALL								
P20	STR	66	#6	4	6	CRASHWALL								
P21	8	66	#6	4	8	CRASHWALL								

BAR TYPES

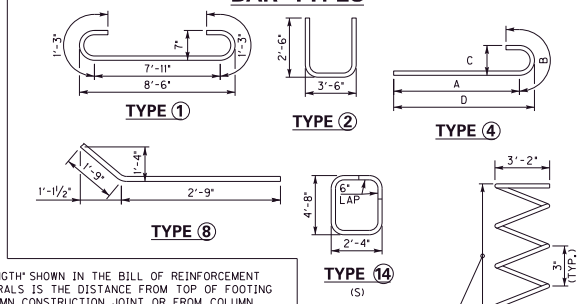

THE "LENGTH" SHOWN IN THE BILL OF REINFORCEMENT FOR SPIRALS IS THE DISTANCE FROM TOP OF FOOTING TO COLUMN CONSTRUCTION JOINT OR FROM COLUMN CONSTRUCTION JOINT TO CAP REINFORCEMENT.

THE "NUMBER OF TURNS" SHOWN IS THE "LENGTH" DIVIDED BY THE PITCH, PLUS THREE TURNS (TOTAL NUMBER OF CLOSED COILS) EXPRESSED TO THE NEAREST WHOLE NUMBER. ONE AND ONE HALF CLOSED COILS SHALL BE PROVIDED AT THE END OF EACH SPIRAL UNIT.

FOUR STEEL CHANNEL TEES OR ANGLE SPACERS, WEIGHING APPROXIMATELY 1.01 POUNDS PER LINEAR FOOT OF SPACER, SHALL BE PROVIDED FOR EACH SPIRAL UNIT. THEY SHALL BE EQUALLY SPACED ALONG THE PERIPHERY OF THE COIL. WEIGHT OF SPIRAL REINFORCEMENT AND SPACERS IS INCLUDED IN THE ESTIMATE OF QUANTITIES. SPIRAL REINFORCING BARS SHALL HAVE DEFORMATIONS.

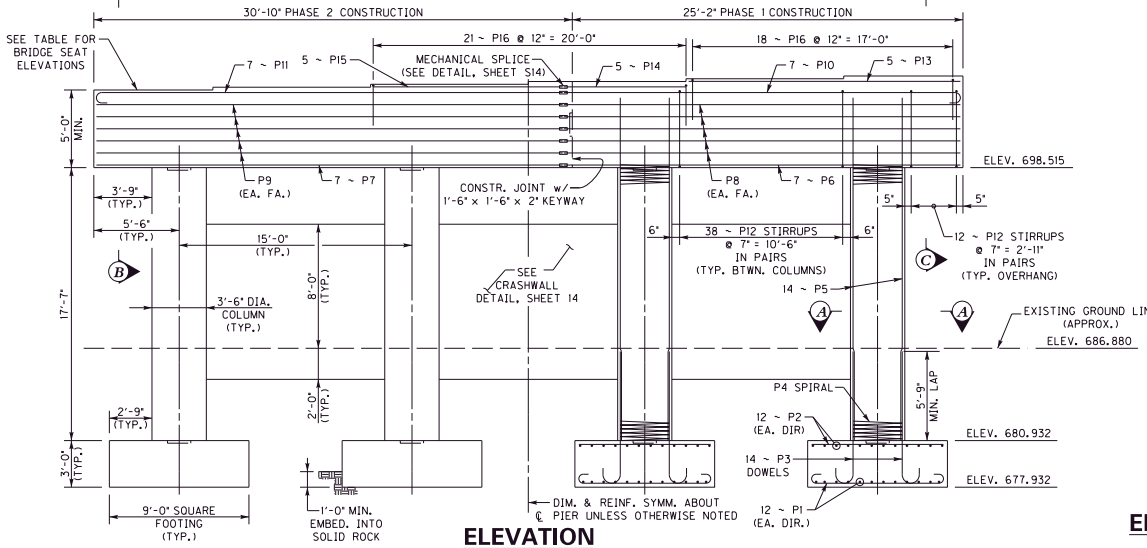

ELEVATION

(LOOKING AHEAD

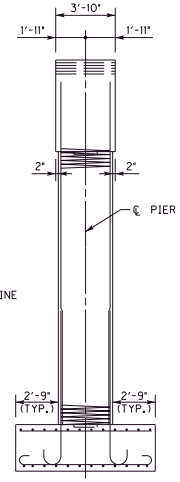

END ELEVATION

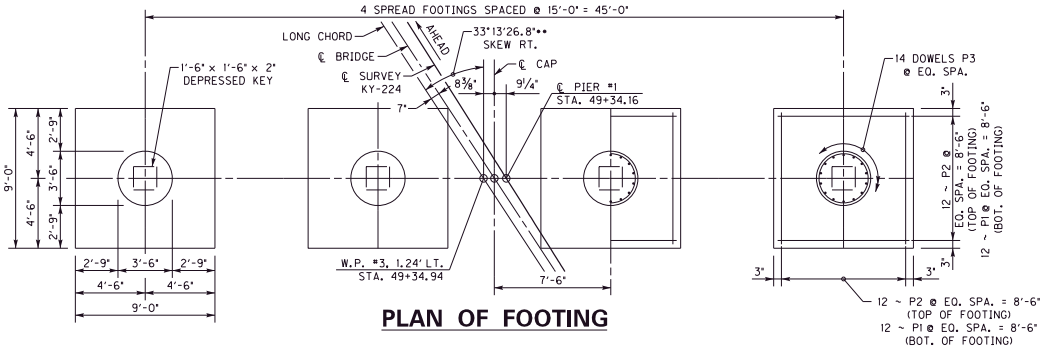

PLAN OF FOOTING

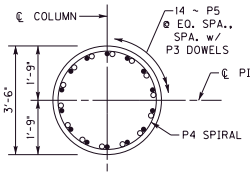

SECTION A–A

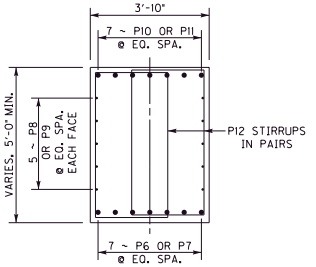

SECTION B–B

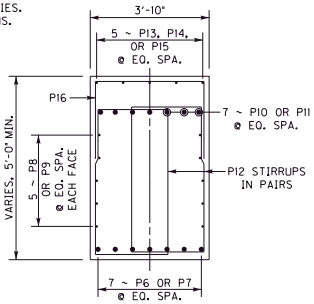

SECTION C–C

COMMONWEALTH OF KENTUCKY
DEPARTMENT OF HIGHWAYS

REVISION	DATE

PREPARED BY: HMB PROFESSIONAL ENGINEERS, INC.

DATE: 12/30/2021	CHECKED BY	
DESIGNED BY: B. Pulliam	B. Reid	
DETAILED BY: B. Pulliam	B. Reid	

PIER #1
CROSSING: WESTERN KENTUCKY PARKWAY

ROUTE	ITEM NO.	COUNTY OF
KY-224	4-20001	GRAYSON
	SHEET NO. S13	DRAWING NUMBER 28464

MicroStation v8.11.7.443 USER: bpulliam DATE PLOTTED: 1/7/2022 9:48:36 AM FILE: G:\Engr\HD1365.10 and 1365.11 Grayson WK\BRIDGES\CAD\Pier 1.dgn

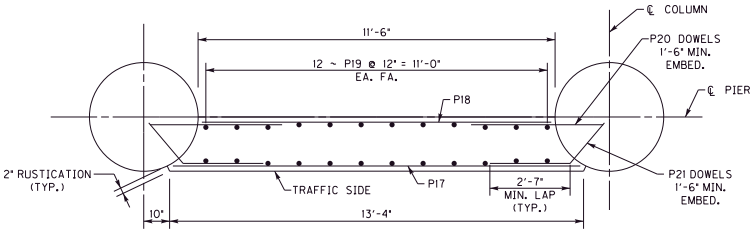

PLAN OF CRASHWALL

NOTE:
CONTRACTOR MAY SUBSTITUTE DOWELS AND INSERTS FOR P20 & P21 BARS AT THEIR DISCRETION FOR NO ADDITIONAL COSTS TO THE DEPARTMENT.

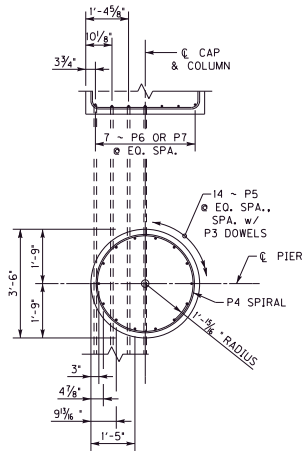

CAP / COLUMN INTERACTION DETAIL

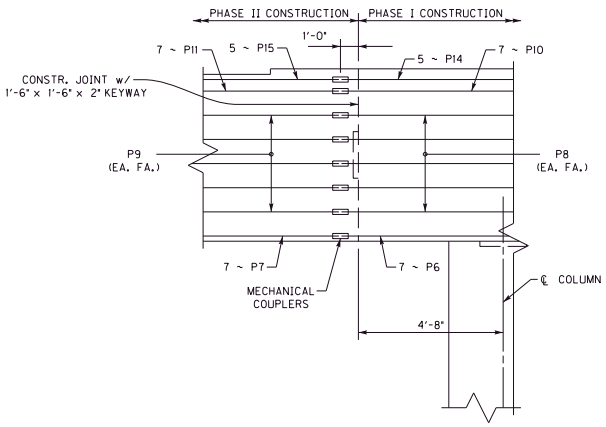

MECHANICAL SPLICE DETAIL

NOTE:
MECHANICAL COUPLER SHALL BE IN ACCORDANCE WITH SECTION 602.03.06 OF THE SPECIFICATIONS. THEY SHALL BE CAPABLE OF DEVELOPING 125% OF THE SPECIFIED YIELD STRENGTH.

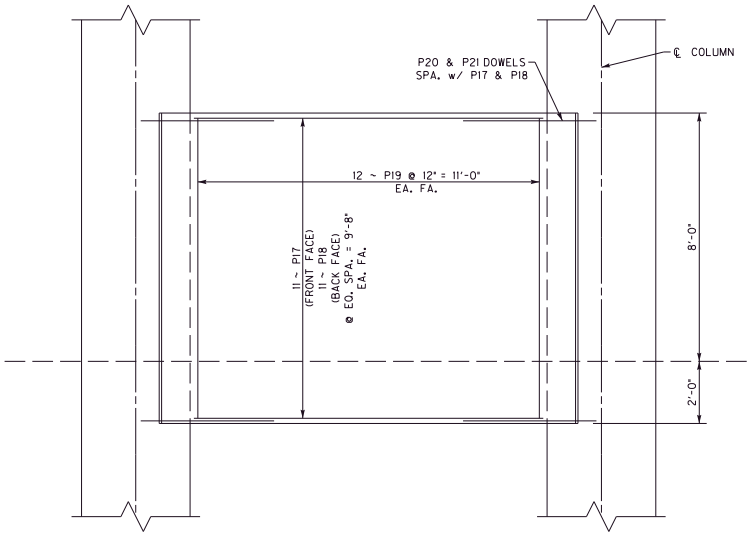

ELEVATION OF CRASHWALL

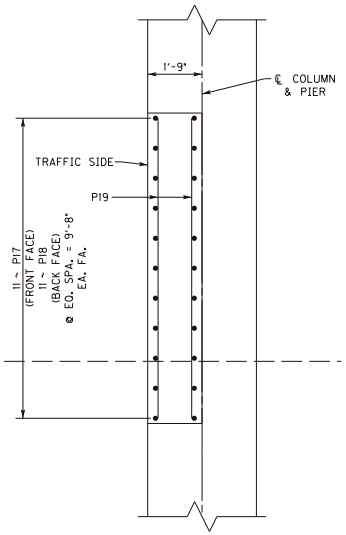

END ELEVATION

COMMONWEALTH OF KENTUCKY DEPARTMENT OF HIGHWAYS	REVISION	DATE	PREPARED BY HMB PROFESSIONAL ENGINEERS, INC.	DATE: 12/30/2021	CHECKED BY	PIER #1 DETAILS	ROUTE	ITEM NO. 4-20001	COUNTY OF GRAYSON
				DESIGNED BY: B. Pulliam	B. Reid	CROSSING WESTERN KENTUCKY PARKWAY	KY-224	SHEET NO. S14	DRAWING NUMBER 28464
				DETAILED BY: B. Pulliam	B. Reid				

MicroStation v8.11.7.443 USER: bpulliam DATE PLOTTED: 1/7/2022 9:48:38 AM FILE: G:\Engr\HD1365.10 and 1365.11 Grayson WK\BRIDGES\CAD\Pier 1 Details.dgn

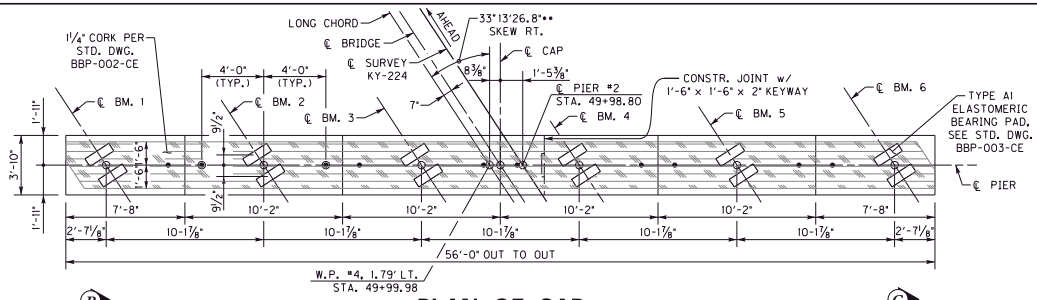

PLAN OF CAP

BRIDGE SEAT ELEVATIONS	
PIER 2	
BEAM 1	704.103
BEAM 2	704.324
BEAM 3	704.542
BEAM 4	704.757
BEAM 5	704.969
BEAM 6	705.178

BAR CLEARANCE	
CAP	2"
COLUMN	2"
FOOTING	3"

PIER #2 BILL OF REINFORCEMENT

MARK	TYPE	NO.	SIZE	LENGTH FT	LENGTH IN	LOCATION	A FT	A IN	B FT	B IN	C FT	C IN	D FT	D IN
Q1	1	96	#7	10	5	FOOTING BOT.								
Q2	STR	95	#6	8	6	FOOTING TOP								
Q3	3	56	#9	10	0	FOOTING DOWEL	8	1	1	11	0	11 3/4	8	6 3/4
Q4	6	4	#4	18	5	COLUMN SPIRAL	77							
Q5	STR	56	#9	21	0	COLUMN								
Q6	STR	7	#8	26	0	CAP BOT.								
Q7	STR	7	#8	29	8	CAP BOT.								
Q8	STR	10	#5	26	0	CAP SIDE								
Q9	STR	10	#5	29	8	CAP SIDE								
Q10	4	7	#8	27	1	CAP TOP	25	8	1	5	0	8	26	0
Q11	4	7	#8	30	9	CAP TOP	29	4	1	5	0	8	29	8
Q12	14	138	#5	15	0	CAP STIRRUP								
Q13	STR	7	#5	17	6	CAP STEP								
Q14	STR	5	#5	8	4	CAP STEP								
Q15	STR	5	#5	11	10	CAP STEP								
Q16	2	39	#5	8	6	CAP STEP								
Q17	STR	66	#6	13	0	CRASHWALL								
Q18	STR	72	#5	9	8	CRASHWALL								
Q19	STR	132	#6	4	6	CRASHWALL								
Q20(E)	STR	10	D	2	0	CAP DOWEL								

D INDICATES 1½" COMMERCIAL GRADE SMOOTH ROUND BAR.

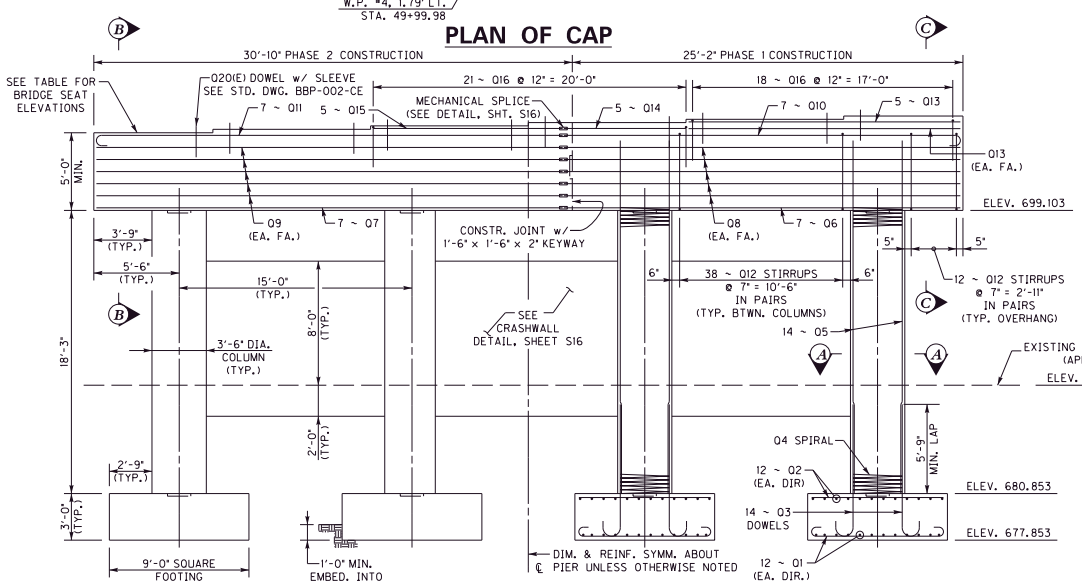

ELEVATION

(LOOKING AHEAD

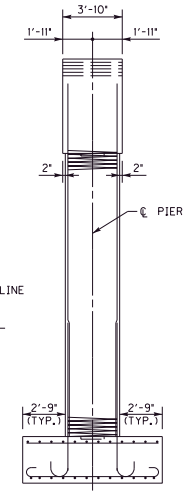

END ELEVATION

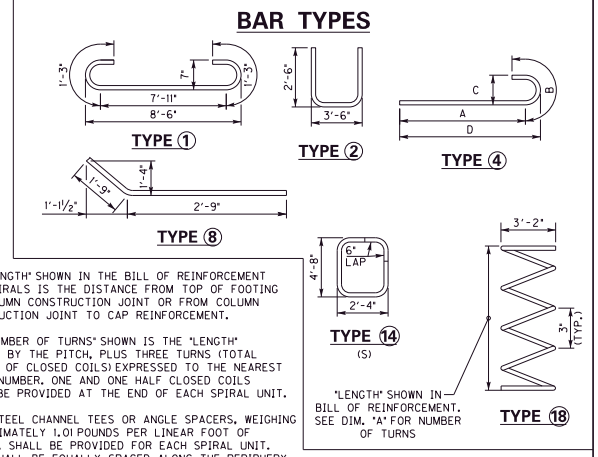

THE "LENGTH" SHOWN IN THE BILL OF REINFORCEMENT FOR SPIRALS IS THE DISTANCE FROM TOP OF FOOTING TO COLUMN CONSTRUCTION JOINT OR FROM COLUMN CONSTRUCTION JOINT TO CAP REINFORCEMENT.

THE "NUMBER OF TURNS" SHOWN IS THE "LENGTH" DIVIDED BY THE PITCH, PLUS THREE TURNS (TOTAL NUMBER OF CLOSED COILS) EXPRESSED TO THE NEAREST WHOLE NUMBER. ONE AND ONE HALF CLOSED COILS SHALL BE PROVIDED AT THE END OF EACH SPIRAL UNIT.

FOUR STEEL CHANNEL TEES OR ANGLE SPACERS, WEIGHING APPROXIMATELY 1.01 POUNDS PER LINEAR FOOT OF SPACER, SHALL BE PROVIDED FOR EACH SPIRAL UNIT. THEY SHALL BE EQUALLY SPACED ALONG THE PERIPHERY OF THE COIL. WEIGHT OF SPIRAL REINFORCEMENT AND SPACERS IS INCLUDED IN THE ESTIMATE OF QUANTITIES. SPIRAL REINFORCING BARS SHALL HAVE DEFORMATIONS.

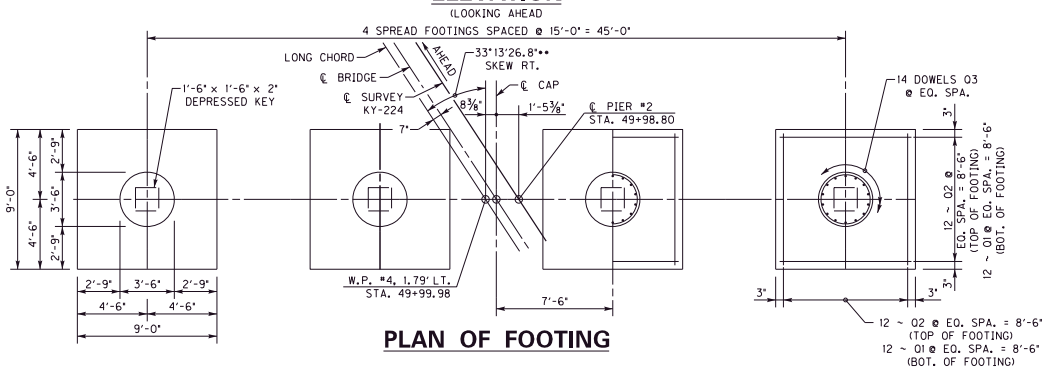

PLAN OF FOOTING

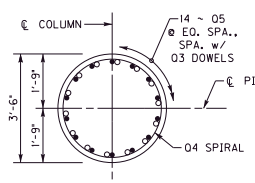

SECTION A–A

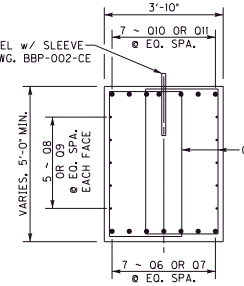

SECTION B–B

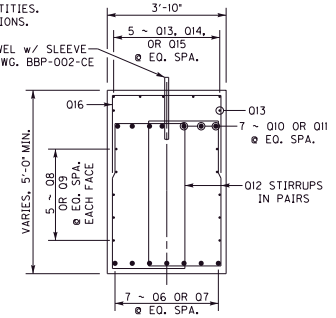

SECTION C–C

COMMONWEALTH OF KENTUCKY DEPARTMENT OF HIGHWAYS	REVISION	DATE	PREPARED BY HMB PROFESSIONAL ENGINEERS, INC.	DATE: 12/30/2021	CHECKED BY	PIER #2	ROUTE KY-224	ITEM NO. 4-20001	COUNTY OF GRAYSON
				DESIGNED BY: B. Pulliam	B. Reid	CROSSING WESTERN KENTUCKY PARKWAY		SHEET NO. S15	DRAWING NUMBER 28464
				DETAILED BY: B. Pulliam	B. Reid				

MicroStation v8.11.7.443 USER: bpulliam DATE PLOTTED: 1/7/2022 9:48:38 AM FILE: G:\Engr\HD1365.10 and 1365.11 Grayson WK\BRIDGES\CAD\Pier 2.dgn

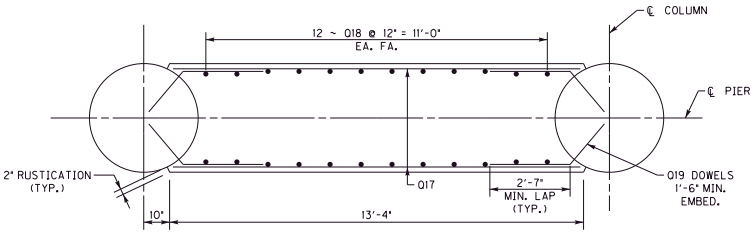

PLAN OF CRASHWALL

NOTE:
CONTRACTOR MAY SUBSTITUTE DOWELS AND INSERTS FOR Q19 BARS AT THEIR DISCRETION FOR NO ADDITIONAL COSTS TO THE DEPARTMENT.

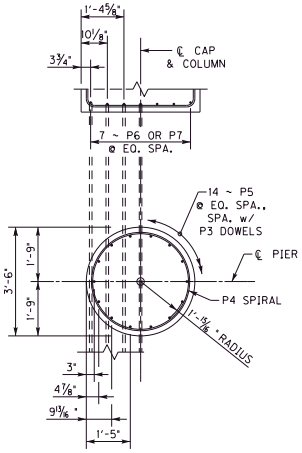

CAP / COLUMN INTERACTION DETAIL

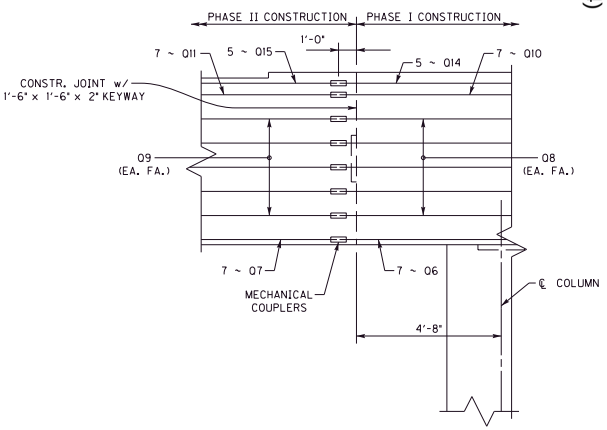

MECHANICAL SPLICE DETAIL

NOTE:
MECHANICAL COUPLER SHALL BE IN ACCORDANCE WITH SECTION 602.03.06 OF THE SPECIFICATIONS. THEY SHALL BE CAPABLE OF DEVELOPING 125% OF THE SPECIFIED YIELD STRENGTH.

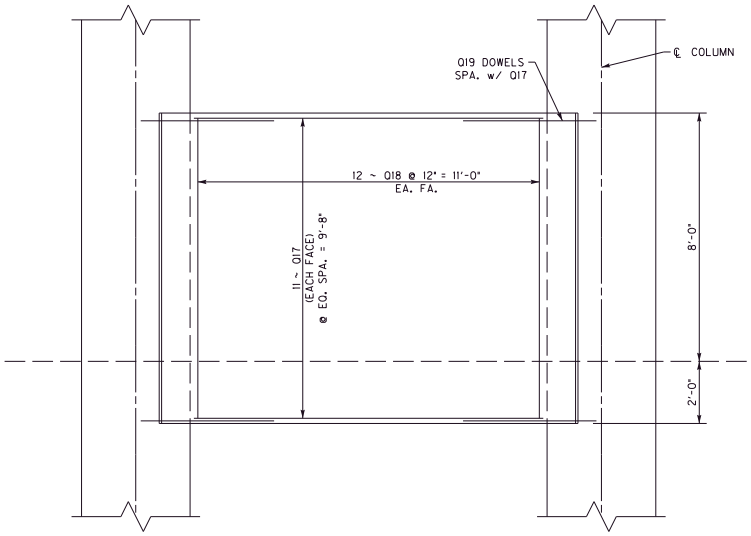

ELEVATION OF CRASHWALL

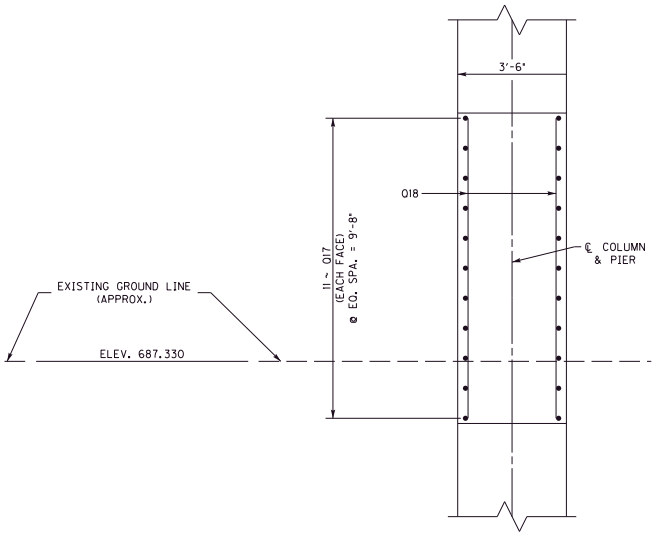

END ELEVATION

COMMONWEALTH OF KENTUCKY DEPARTMENT OF HIGHWAYS	REVISION	DATE	PREPARED BY HMB PROFESSIONAL ENGINEERS, INC.	DATE: 12/30/2021	CHECKED BY	PIER #2 DETAILS	ROUTE KY-224	ITEM NO. 4-20001	COUNTY OF GRAYSON
				DESIGNED BY: B. Pulliam	B. Reid	CROSSING WESTERN KENTUCKY PARKWAY		SHEET NO. S16	DRAWING NUMBER 28464
				DETAILED BY: B. Pulliam	B. Reid				

MicroStation v8.11.7.443 USER: bpulliam DATE PLOTTED: 1/7/2022 9:48:39 AM FILE: G:\Engr\HD1365.10 and 1365.11 Grayson WK\BRIDGES\CAD\Pier 2 Details.dgn

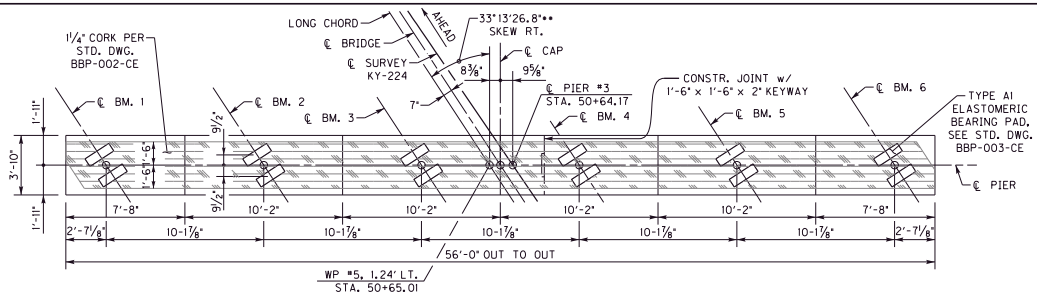

PLAN OF CAP

BRIDGE SEAT ELEVATIONS	
PIER 3	
BEAM 1	704.274
BEAM 2	704.531
BEAM 3	704.784
BEAM 4	705.034
BEAM 5	705.281
BEAM 6	705.525

BAR CLEARANCE	
CAP	2"
COLUMN	2"
FOOTING	3"

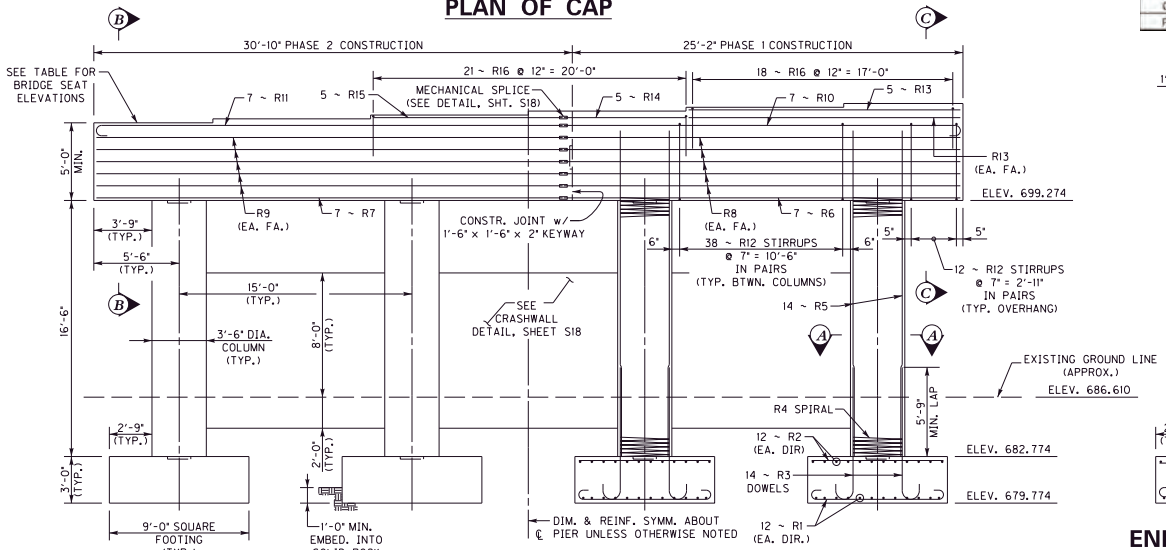

ELEVATION

(LOOKING AHEAD

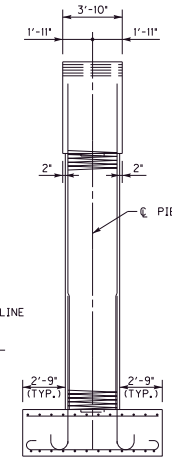

END ELEVATION

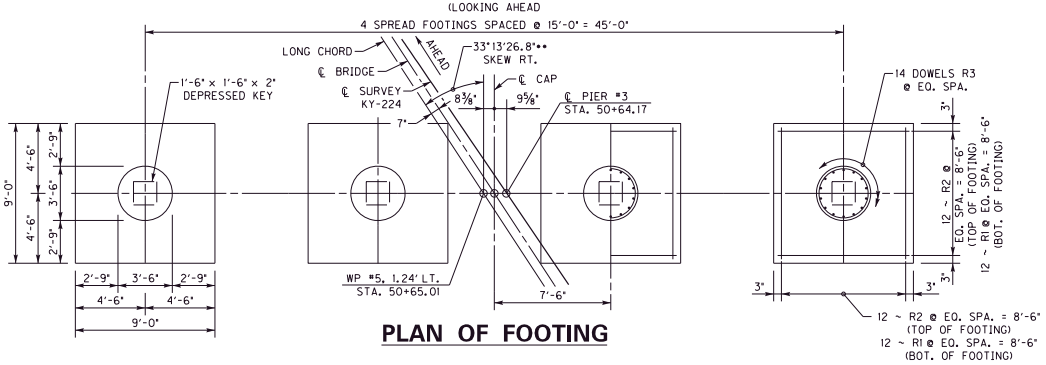

PLAN OF FOOTING

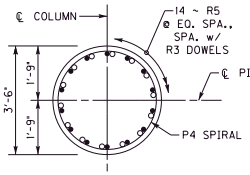

SECTION A–A

PIER #3 BILL OF REINFORCEMENT															
MARK	TYPE	NO.	SIZE	LENGTH		LOCATION	A		B		C		D	
				FT	IN		FT	IN	FT	IN	FT	IN	FT	IN
R1	1	96	#7	10	5	FOOTING BOT								
R2	STR	96	#6	8	6	FOOTING TOP								
R3	14	56	#9	10	0	FOOTING DOWEL	8	1	1	11	0	11 3/4	8	6 3/4
R4	18	4	#4	16	8	COLUMN SPIRAL	70							
R5	STR	56	#9	21	0	COLUMN								
R6	STR	7	#8	26	0	CAP BOT								
R7	STR	7	#8	29	8	CAP BOT								
R8	STR	10	#5	26	0	CAP SIDE								
R9	STR	10	#5	29	8	CAP SIDE								
R10	4	7	#8	27	1	CAP TOP	25	8	1	5	0	8	26	0
R11	4	7	#8	30	9	CAP TOP	29	4	1	5	0	8	29	8
R12	14	138	#5	15	0	CAP STIRRUP								
R13	STR	7	#5	17	6	CAP STEP								
R14	STR	5	#5	8	4	CAP STEP								
R15	STR	5	#5	11	10	CAP STEP								
R16	2	39	#5	8	6	CAP STEP								
R17	STR	33	#6	13	0	CRASHWALL								
R18	STR	33	#6	11	2	CRASHWALL								
R19	STR	72	#5	9	8	CRASHWALL								
R20	STR	66	#6	4	6	CRASHWALL								
R21	8	66	#6	4	6	CRASHWALL								

BAR TYPES

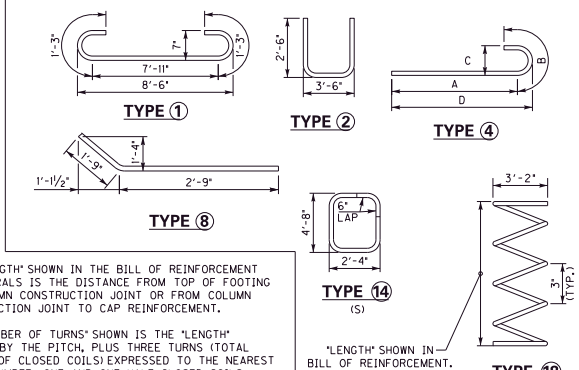

THE "LENGTH" SHOWN IN THE BILL OF REINFORCEMENT FOR SPIRALS IS THE DISTANCE FROM TOP OF FOOTING TO COLUMN CONSTRUCTION JOINT OR FROM COLUMN CONSTRUCTION JOINT TO CAP REINFORCEMENT.

THE "NUMBER OF TURNS" SHOWN IS THE "LENGTH" DIVIDED BY THE PITCH, PLUS THREE TURNS (TOTAL NUMBER OF CLOSED COILS) EXPRESSED TO THE NEAREST WHOLE NUMBER. ONE AND ONE HALF CLOSED COILS SHALL BE PROVIDED AT THE END OF EACH SPIRAL UNIT.

FOUR STEEL CHANNEL TEES OR ANGLE SPACERS, WEIGHING APPROXIMATELY 1.01 POUNDS PER LINEAR FOOT OF SPACER, SHALL BE PROVIDED FOR EACH SPIRAL UNIT. THEY SHALL BE EQUALLY SPACED ALONG THE PERIPHERY OF THE COIL. WEIGHT OF SPIRAL REINFORCEMENT AND SPACERS IS INCLUDED IN THE ESTIMATE OF QUANTITIES. SPIRAL REINFORCING BARS SHALL HAVE DEFORMATIONS.

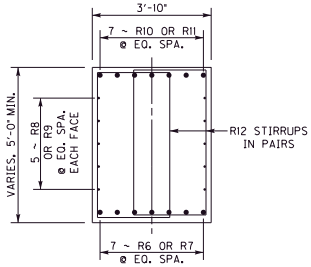

SECTION B–B

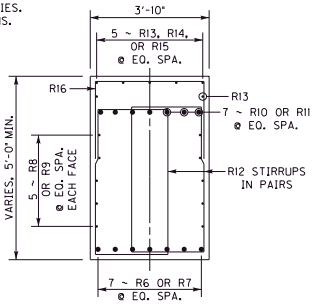

SECTION C–C

COMMONWEALTH OF KENTUCKY
DEPARTMENT OF HIGHWAYS

REVISION	DATE

PREPARED BY: HMB PROFESSIONAL ENGINEERS, INC.

DATE: 12/30/2021	CHECKED BY	PIER #3
DESIGNED BY: B. Pulliam	B. Reid	CROSSING: WESTERN KENTUCKY PARKWAY
DETAILED BY: B. Pulliam	B. Reid	

ROUTE	ITEM NO.	COUNTY OF
KY-224	4-20001	GRAYSON
	SHEET NO. S17	DRAWING NUMBER 28464

MicroStation v8.11.7.443 USER: bpulliam DATE PLOTTED: 1/7/2022 9:48:40 AM FILE: G:\Engr\HD1365.10 and 1365.11 Grayson WK\BRIDGES\CAD\Pier 3.dgn

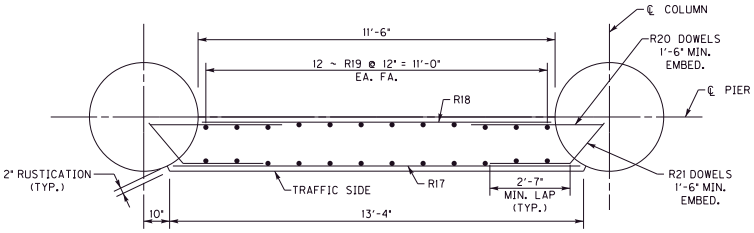

PLAN OF CRASHWALL

NOTE:
CONTRACTOR MAY SUBSTITUTE DOWELS AND INSERTS FOR R20 & R21 BARS AT THEIR DISCRETION FOR NO ADDITIONAL COSTS TO THE DEPARTMENT.

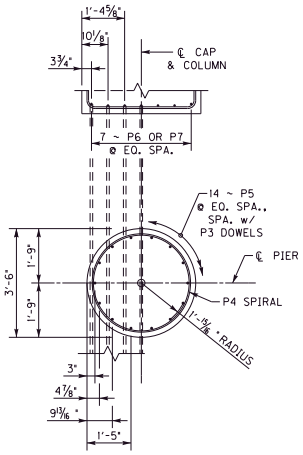

CAP / COLUMN INTERACTION DETAIL

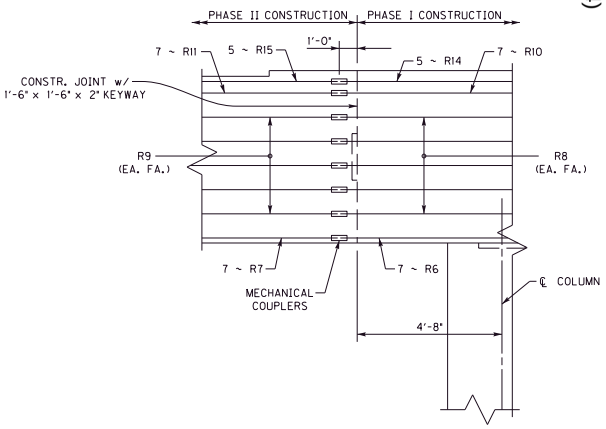

MECHANICAL SPLICE DETAIL

NOTE:
MECHANICAL COUPLER SHALL BE IN ACCORDANCE WITH SECTION 602.03.06 OF THE SPECIFICATIONS. THEY SHALL BE CAPABLE OF DEVELOPING 125% OF THE SPECIFIED YIELD STRENGTH.

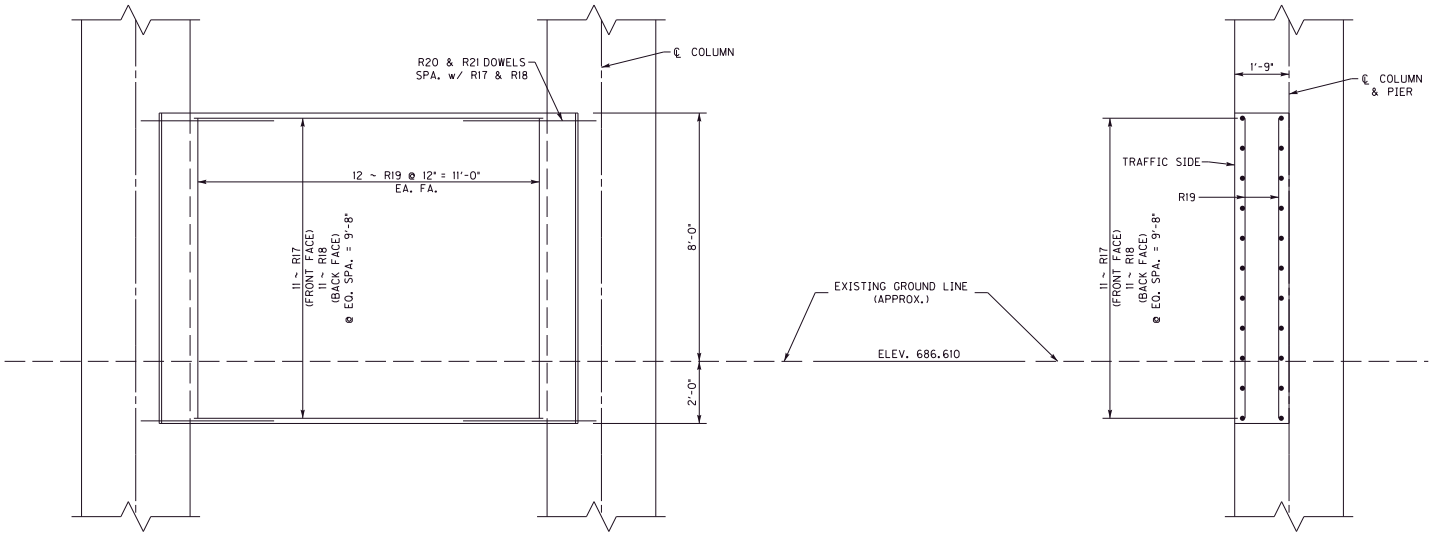

ELEVATION OF CRASHWALL

END ELEVATION

COMMONWEALTH OF KENTUCKY DEPARTMENT OF HIGHWAYS	REVISION	DATE	PREPARED BY HMB PROFESSIONAL ENGINEERS, INC.	DATE: 12/30/2021	CHECKED BY	PIER #3 DETAILS	ROUTE	ITEM NO.	COUNTY OF
				DESIGNED BY: B. Pulliam	B. Reid	CROSSING	KY-224	4-20001	GRAYSON
				DETAILED BY: B. Pulliam	B. Reid	WESTERN KENTUCKY PARKWAY		SHEET NO. S18	DRAWING NUMBER 28464

MicroStation v8.11.7.443 USER: bpulliam DATE PLOTTED: 1/7/2022 9:48:41 AM FILE: G:\Engr\HD1365.10 and 1365.11 Grayson WK\BRIDGES\CAD\Pier 3 Details.dgn

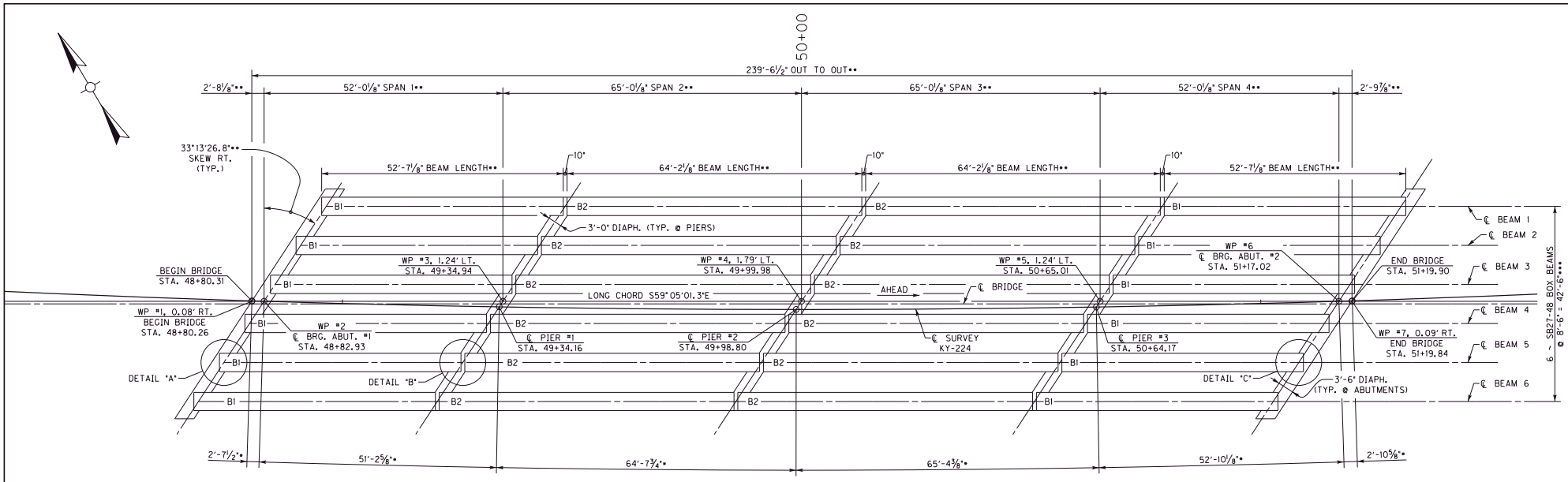

FRAMING PLAN

NOTES

1) • MEASURED ALONG ℄ SURVEY.
2) •• MEASURED ALONG LONG CHORD.
3) ••• MEASURED PERPENDICULAR TO LONG CHORD.
4) SEE SHEET S8 FOR GEOMETRY LAYOUT.

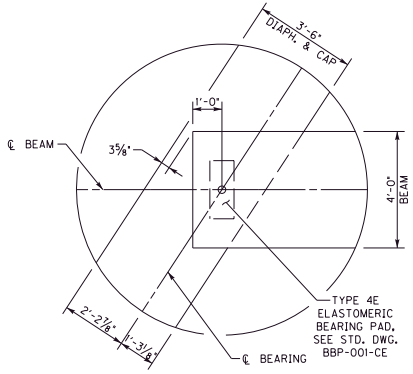

DETAIL A

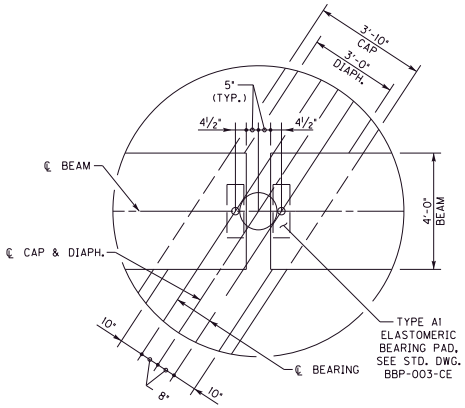

DETAIL B

(TYP. EACH PIER)

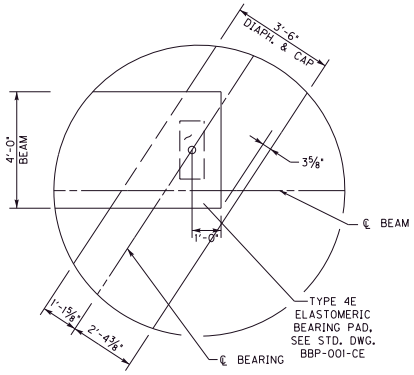

DETAIL C

COMMONWEALTH OF KENTUCKY DEPARTMENT OF HIGHWAYS	REVISION	DATE	PREPARED BY HMB PROFESSIONAL ENGINEERS, INC.	DATE: 12/30/2021	CHECKED BY	FRAMING PLAN	ROUTE KY-224	ITEM NO. 4-20001
				DESIGNED BY: B. Pulliam	B. Reid	CROSSING WESTERN KENTUCKY PARKWAY		SHEET NO. S19
				DETAILED BY: B. Pulliam	B. Reid			
								COUNTY OF GRAYSON
								DRAWING NUMBER 28464

MicroStation v8.11.7.443 USER: bpulliam DATE PLOTTED: 1/7/2022 9:48:41 AM FILE: G:\Engr\HD1365.10 and 1365.11 Grayson WK\BRIDGES\CAD\Framing Plan.dgn

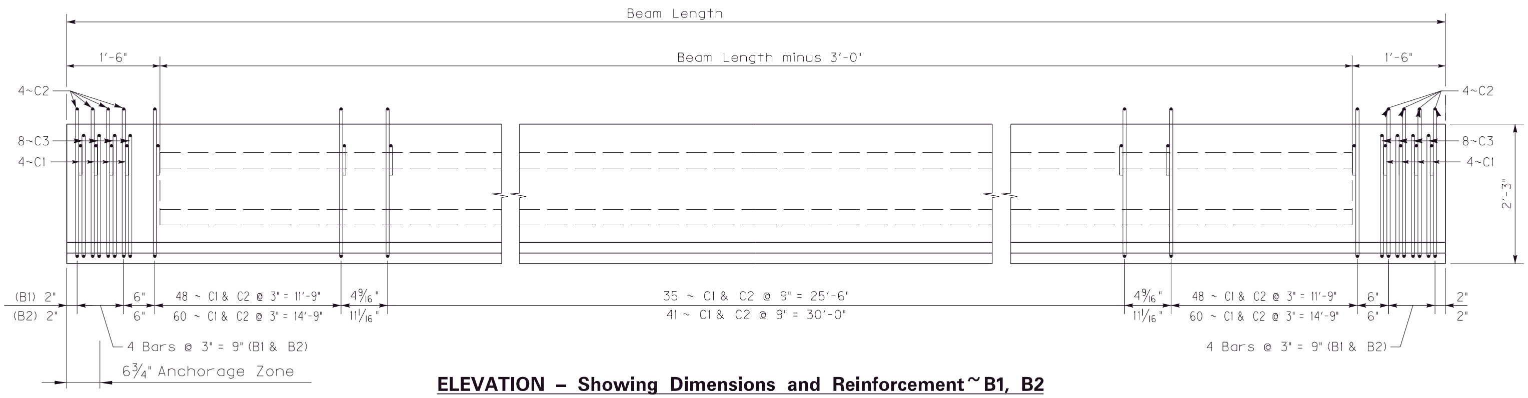

ELEVATION – Showing Dimensions and Reinforcement ~ B1, B2

(Measured along ℄ Beam)

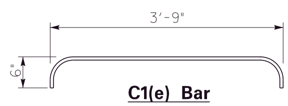

C1(e) Bar
#5 Top Bar

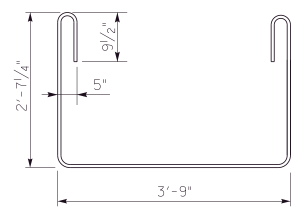

C2(e) Bar
#5 Stirrup

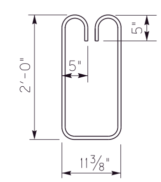

C3(e) Bar
#5 Stirrup

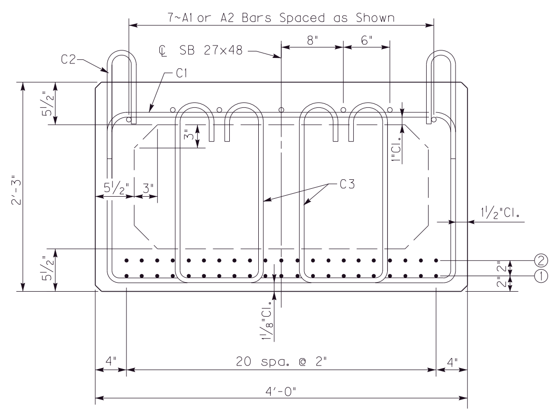

TYPICAL SECTION THROUGH BOX BEAM

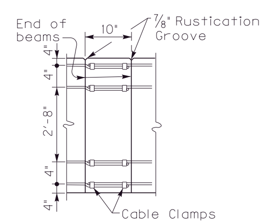

ELEVATION A–A

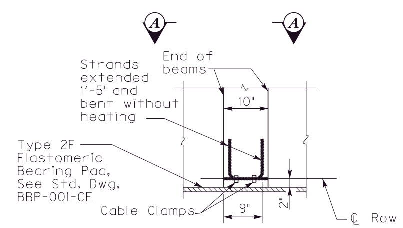

STRAND SPLICING DETAIL

~Typical at Fixed Pier~

GENERAL NOTES

CONCRETE: Ensure prestressed girder concrete is in accordance with these plans and the Specifications.

MATERIAL DESIGN SPECIFICATIONS:
for Steel Reinforcement FY = 60,000 psi
for Prestressed Strand F'S = 270,000 psi

PRESTRESSING STRANDS: Prestressing strands shall be 0.6" (nominal diameter, 0.217 sq. in.), uncoated seven-wire stress relieved, low-relaxation conforming to AASHTO M 203, Grade 270.
If an alternate strand arrangement or strand type is preferred by the Contractor, the designer that developed the original plans shall provide the design and also revise the original plans to reflect the changes. These design and plan modifications shall be done at the Contractor's expense.

CONSTRUCTION METHOD: No bond stress shall be transferred to the concrete, nor shall end anchors be released until the concrete has attained a minimum compressive strength of f'ci (shown in table) as shown by standard cylinders made and cured identically with the girders; f'c (shown in table) shall be attained at or prior to 28 days. An initial prestress force of 43,943 lbs. per low relaxation strand to develop a stress of 202,500 psi shall be applied. Beams with honeycomb of such extent as to affect the strength of resistance to deterioration will not be accepted. An allowance of .0005L (length) shall be made for shortening of beams due to shrinkage and elastic change. Shop plans shall show a detensioning plan by numbering in sequence, the strand pattern.

BEVELED EDGES: All exposed edges shall be beveled 3/4".

REINFORCEMENT: Dimensions shown from the face of concrete to reinforcement are clear distances. Spacing of reinforcement is from center to center of reinforcement. Epoxy Coated Reinforcement shall be in accordance with Section 811.10 of the Specifications. All bars marked "C" shall be considered a stirrup for purpose of bend diameters.

LIFTING DEVICES: Dimensions for lifting devices shall be shown on shop plans for approval. Lifting shall be by equal loads to each device.

BEARING DEVICES: The cost of preformed cork and bearing pads shall be included in the price bid for per linear foot of beam.

FABRICATION: The "Maximum Allowable Camber" shown on the beam sheet is the amount of camber, measured prior to casting the deck, above which the beam will begin to encroach into the slab. If the measured camber is greater than the "Maximum Allowable Camber" the contractor will be responsible for any necessary adjustments to assure a minimum slab thickness of eight (8) inches as shown in the plans. This work will be considered incidental to the completion of the structure and have the approval of the Engineer.

Mark	Strand Data with number indicated in rows: Midspan Fully Stressed (1)	Midspan (2)	End Fully Stressed (1)	End (2)	Total # of Strands	Box Beam Data: Concrete Stress (psi) f'ci	f'c	Total # of Beams	Beam Length	Approx. Weight (lbs)	No. of C Bars C1	C2	C3	Debond D	Straight Reinforcement Mark	Size	Length	Maximum Allowable Camber
B1	13		13		13	5500	7000	12	52'-7 1/8"	41272	139	139	16	-	A1	#5	52'-4"	1 5/8"
B2	17		17		17	5500	7000	12	64'-2 1/8"	50562	169	169	16	-	A2	#5	63'-11"	2 3/4"

Note: A2 Bars are to be lapped 2'-2" when necessary

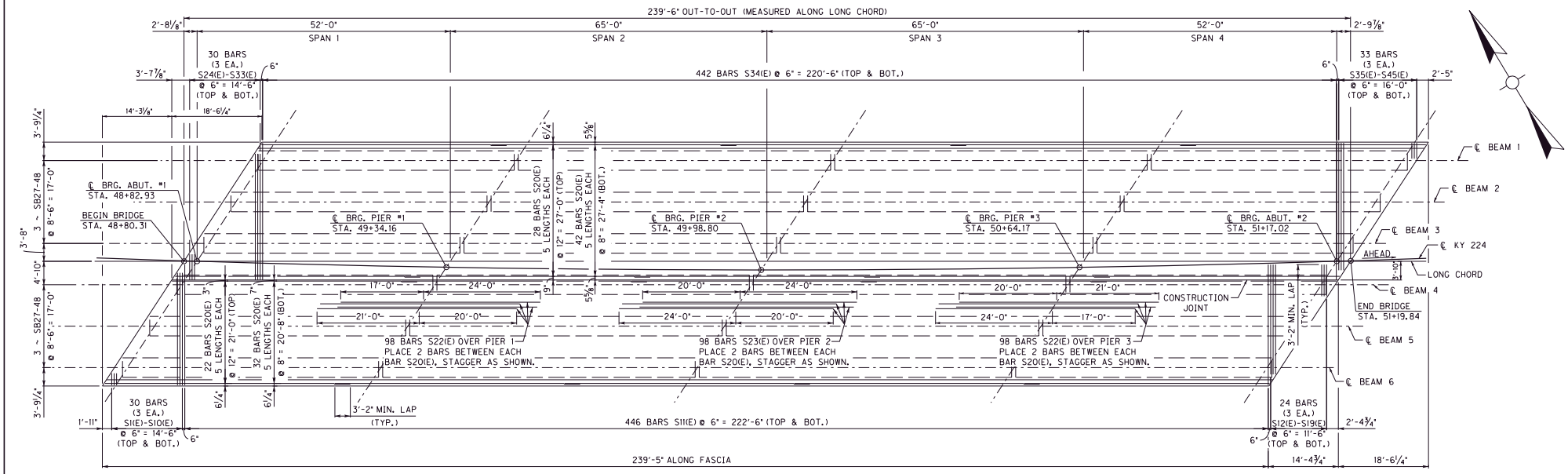

PLAN

ALL DIMENSIONS MEASURED PERPENDICULAR OR PARALLEL TO LONG CHORD.

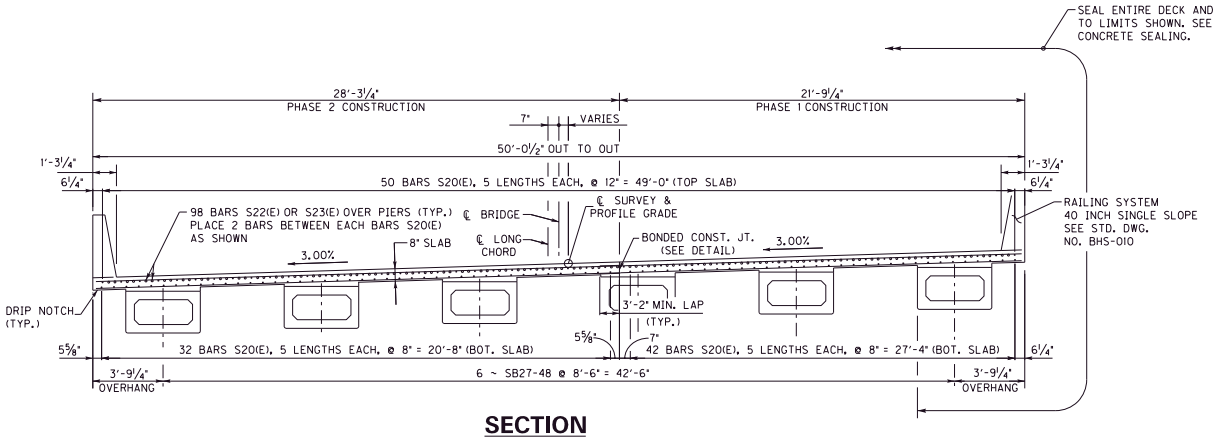

SECTION

ALL DIMENSIONS MEASURED PERPENDICULAR TO LONG CHORD.

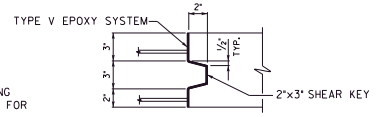

BONDED CONST. JOINT

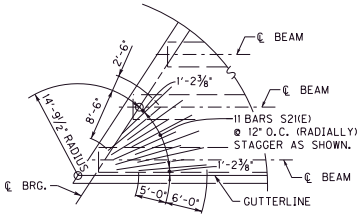

CORNER REINFORCEMENT

NOTE:
PLACE THE CORNER REINFORCEMENT BENEATH THE LONGITUDIAL & TRANSVERSE REINFORCEMENT IN THE TOP OF THE SLAP AT BOTH ACUTE CORNERS.

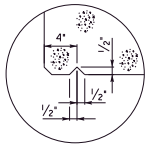

DRIP NOTCH

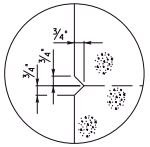

RUSTICATION GROOVE

COMMONWEALTH OF KENTUCKY DEPARTMENT OF HIGHWAYS	REVISION	DATE	PREPARED BY HMB PROFESSIONAL ENGINEERS, INC.	DATE: 12/30/2021	CHECKED BY	SUPERSTRUCTURE	ROUTE	ITEM NO. 4-20001	COUNTY OF GRAYSON
				DESIGNED BY: B. Reid	B. Pulliam	CROSSING WESTERN KENTUCKY PARKWAY	KY-224	SHEET NO. S21	DRAWING NUMBER 28464
				DETAILED BY: B. Reid	B. Pulliam				

MicroStation v8.11.7.443 USER: bpulliam DATE PLOTTED: 1/7/2022 9:48:43 AM FILE: G:\Engr\HD1365.10 and 1365.11 Grayson WK\BRIDGES\CAD\Superstructure.dgn

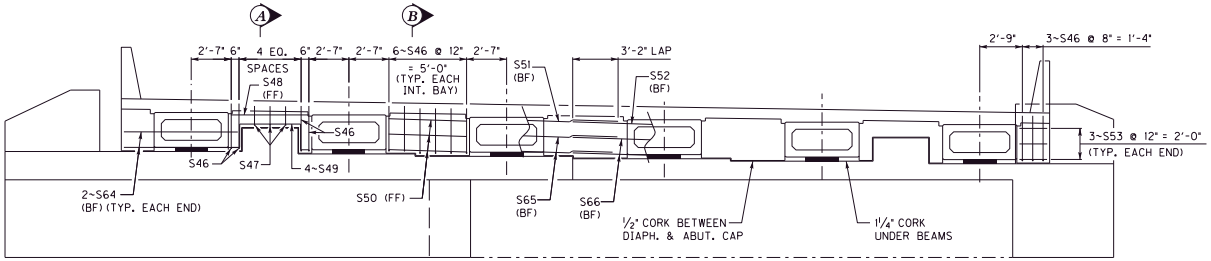

END BENT 1 DIAPHRAGM

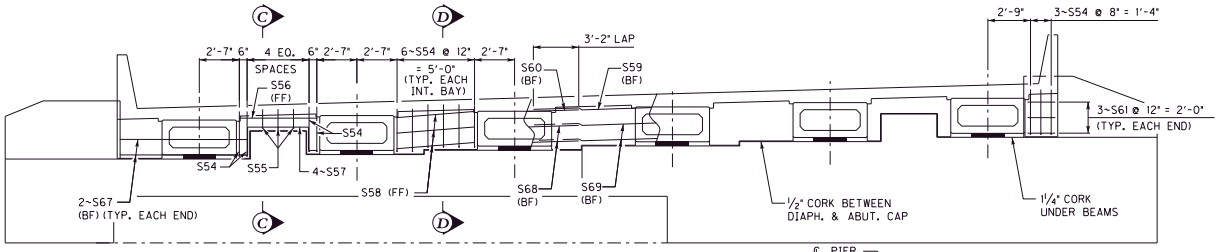

END BENT 2 DIAPHRAGM

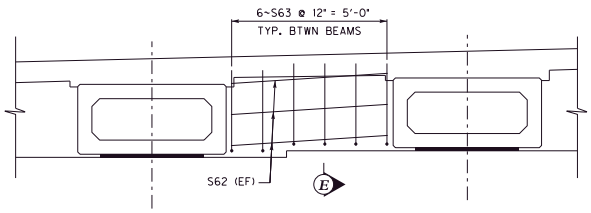

PIER DIAPHRAGM

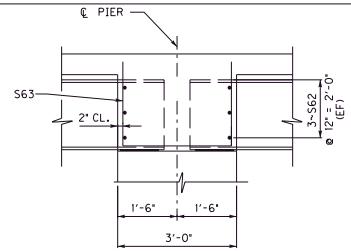

SECTION E–E

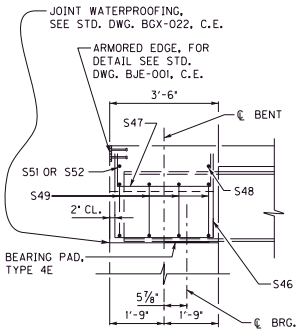

SECTION A–A

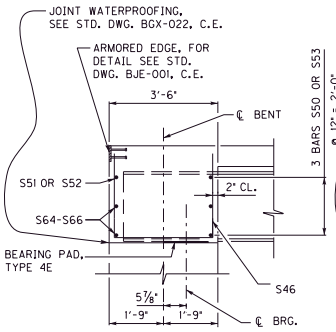

SECTION B–B

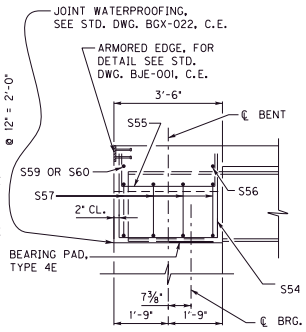

SECTION C–C

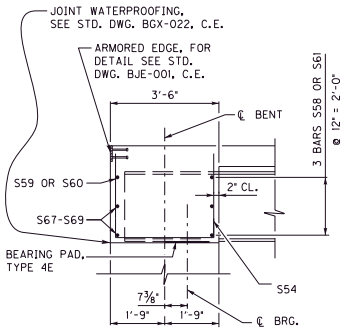

SECTION D–D

SUPERSTRUCTURE BILL OF REINFORCEMENT

MARK	TYPE	NO.	SIZE	LENGTH FT	LENGTH IN	LOCATION	A FT	A IN	B FT	B IN	C FT	C IN	D FT	D IN
S1 (E)	STR	6	#5	2	5	TOP & BOT. SLAB								
S2 (E)	STR	6	#5	4	9	TOP & BOT. SLAB								
S3 (E)	STR	6	#5	7	0	TOP & BOT. SLAB								
S4 (E)	STR	6	#5	9	4	TOP & BOT. SLAB								
S5 (E)	STR	6	#5	11	7	TOP & BOT. SLAB								
S6 (E)	STR	6	#5	13	11	TOP & BOT. SLAB								
S7 (E)	STR	6	#5	16	2	TOP & BOT. SLAB								
S8 (E)	STR	6	#5	18	6	TOP & BOT. SLAB								
S9 (E)	STR	6	#5	20	9	TOP & BOT. SLAB								
S10 (E)	STR	6	#5	23	0	TOP & BOT. SLAB								
S11 (E)	STR	892	#5	24	9	TOP & BOT. SLAB								
S12 (E)	STR	6	#5	22	7	TOP & BOT. SLAB								
S13 (E)	STR	6	#5	20	3	TOP & BOT. SLAB								
S14 (E)	STR	6	#5	18	0	TOP & BOT. SLAB								
S15 (E)	STR	6	#5	15	9	TOP & BOT. SLAB								
S16 (E)	STR	6	#5	13	5	TOP & BOT. SLAB								
S17 (E)	STR	6	#5	11	1	TOP & BOT. SLAB								
S18 (E)	STR	6	#5	8	10	TOP & BOT. SLAB								
S19 (E)	STR	6	#5	6	6	TOP & BOT. SLAB								
S20 (E)	STR	620	#5	50	5	TOP & BOT. SLAB								
S21 (E)	STR	22	#6	11	0	CORNER REINF								
S22 (E)	STR	196	#5	41	0	TOP SLAB OVER PIER								
S23 (E)	STR	98	#5	44	0	TOP SLAB OVER PIER								
S24 (E)	STR	6	#5	5	3	TOP & BOT. SLAB								
S25 (E)	STR	6	#5	7	7	TOP & BOT. SLAB								
S26 (E)	STR	6	#5	9	10	TOP & BOT. SLAB								
S27 (E)	STR	6	#5	12	2	TOP & BOT. SLAB								
S28 (E)	STR	6	#5	14	5	TOP & BOT. SLAB								
S29 (E)	STR	6	#5	16	9	TOP & BOT. SLAB								
S30 (E)	STR	6	#5	19	0	TOP & BOT. SLAB								
S31 (E)	STR	6	#5	21	4	TOP & BOT. SLAB								
S32 (E)	STR	6	#5	23	8	TOP & BOT. SLAB								
S33 (E)	STR	6	#5	25	10	TOP & BOT. SLAB								
S34 (E)	STR	884	#5	28	1	TOP & BOT. SLAB								
S35 (E)	STR	6	#5	26	1	TOP & BOT. SLAB								
S36 (E)	STR	6	#5	23	10	TOP & BOT. SLAB								
S37 (E)	STR	6	#5	21	6	TOP & BOT. SLAB								
S38 (E)	STR	6	#5	19	3	TOP & BOT. SLAB								
S39 (E)	STR	6	#5	16	11	TOP & BOT. SLAB								
S40 (E)	STR	6	#5	14	8	TOP & BOT. SLAB								
S41 (E)	STR	6	#5	12	4	TOP & BOT. SLAB								
S42 (E)	STR	6	#5	10	1	TOP & BOT. SLAB								
S43 (E)	STR	6	#5	7	9	TOP & BOT. SLAB								
S44 (E)	STR	6	#5	5	6	TOP & BOT. SLAB								
S45 (E)	STR	6	#5	3	2	TOP & BOT. SLAB								
S46 (E)	(2)	32	#5	9	7	DIAPHRAGM	2	11	3	9				
S47 (E)	(2)	6	#5	6	3	DIAPHRAGM	1	3	3	9				
S48 (E)	STR	2	#5	5	1	DIAPHRAGM								
S49 (E)	(19)	8	#5	8	1	DIAPHRAGM	1	6	1	8				
S50 (E)	STR	9	#5	5	1	DIAPHRAGM								
S51 (E)	STR	1	#5	34	5	DIAPHRAGM								
S52 (E)	STR	1	#5	28	4	DIAPHRAGM								
S53 (E)	STR	6	#5	1	9	DIAPHRAGM								
S54 (E)	(2)	32	#5	9	3	DIAPHRAGM	2	9	3	9				
S55 (E)	(2)	6	#5	6	3	DIAPHRAGM	1	3	3	9				
S56 (E)	STR	2	#5	5	1	DIAPHRAGM								
S57 (E)	(19)	8	#5	8	2	DIAPHRAGM	1	9	1	6				
S58 (E)	STR	9	#5	5	1	DIAPHRAGM								
S59 (E)	STR	1	#5	31	6	DIAPHRAGM								
S60 (E)	STR	1	#5	31	2	DIAPHRAGM								
S61 (E)	STR	6	#5	1	9	DIAPHRAGM								
S62 (E)	STR	90	#5	5	1	PIER DIAPHRAGM								
S63 (E)	(2)	90	#5	8	5	PIER DIAPHRAGM	2	8	3	2				
S64 (E)	STR	4	#5	7	4	DIAPHRAGM								
S65 (E)	STR	2	#5	23	0	DIAPHRAGM								
S66 (E)	STR	2	#5	16	11	DIAPHRAGM								
S67 (E)	STR	4	#5	8	2	DIAPHRAGM								
S68 (E)	STR	2	#5	19	11	DIAPHRAGM								
S69 (E)	STR	2	#5	20	0	DIAPHRAGM								

BAR TYPES

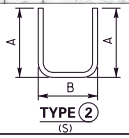

TYPE (2)
(S)

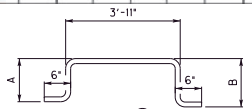

TYPE (19)

COMMONWEALTH OF KENTUCKY
DEPARTMENT OF HIGHWAYS

REVISION	DATE

PREPARED BY
HMB PROFESSIONAL ENGINEERS, INC.

DATE: 12/30/2021	CHECKED BY
DESIGNED BY: B. Reid	L. Boller
DETAILED BY: B. Reid	B. Pullam

SUPERSTRUCTURE
CROSSING: WESTERN KENTUCKY PARKWAY
ROUTE: KY-224
ITEM NO.: 4-20001
SHEET NO.: S22
COUNTY OF: GRAYSON
DRAWING NUMBER: 28464

MicroStation v8.11.7.443 USER: bpullam DATE PLOTTED: 1/7/2022 9:48:43 AM FILE: G:\Engr\HD1365.10 and 1365.11 Grayson WK\BRIDGES\CAD\Superstructure2.dgn

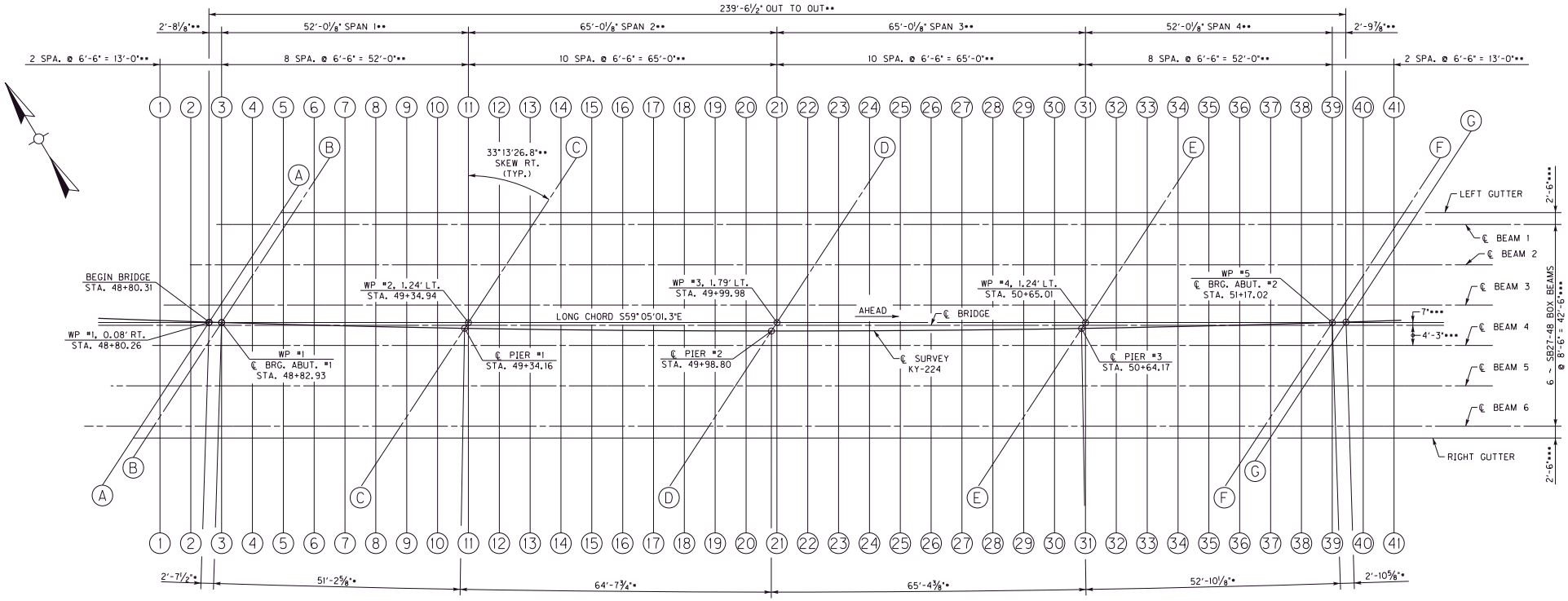

GRID LAYOUT

NOTES

1) • MEASURED ALONG ℄ SURVEY.

2) •• MEASURED ALONG LONG CHORD.

3) ••• MEASURED PERPENDICULAR TO LONG CHORD.

4) SEE FOUNDATION LAYOUT FOR GEOMETRY LAYOUT.

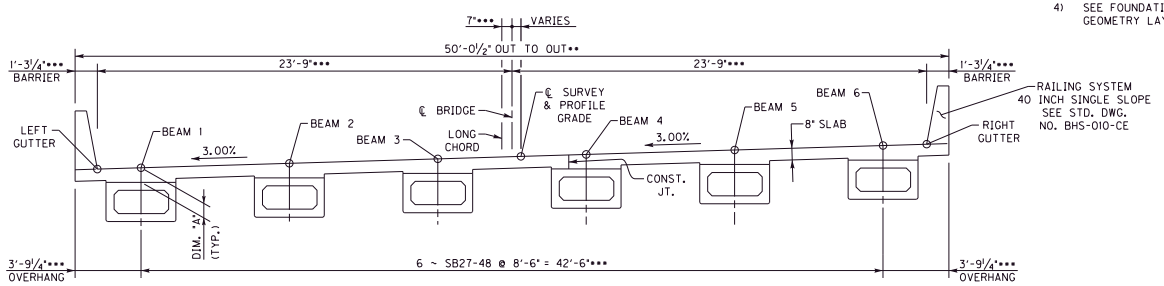

TYPICAL SECTION

(LOOKING AHEAD)

COMMONWEALTH OF KENTUCKY DEPARTMENT OF HIGHWAYS	REVISION	DATE	PREPARED BY HMB PROFESSIONAL ENGINEERS, INC.	DATE: 12/30/2021	CHECKED BY	CONSTRUCTION ELEVATIONS GRID	ROUTE	ITEM NO.	COUNTY OF
				DESIGNED BY: B. Pulliam	L. Boller		KY-224	4-20001	GRAYSON
				DETAILED BY: B. Pulliam	B. Reid	CROSSING WESTERN KENTUCKY PARKWAY		SHEET NO. S23	DRAWING NUMBER 28464

MicroStation v8.11.7.443 USER: bpulliam DATE PLOTTED: 1/7/2022 9:48:45 AM FILE: G:\Engr\HD1365.10 and 1365.11 Grayson WK\BRIDGES\CAD\Construction Elevations Grid.dgn

KY-224 CONSTRUCTION ELEVATIONS

LOCATION	LT. GUTTER	BEAM 1			BEAM 2			BEAM 3			PROFILE GRADE			BEAM 4			BEAM 5			BEAM 6			RT. GUTTER
		CONST. ELEV.	TOP OF BEAM	DIM "A"	CONST. ELEV.	TOP OF BEAM	DIM "A"	CONST. ELEV.	TOP OF BEAM	DIM "A"	CONST. ELEV.	TOP OF BEAM	DIM "A"	CONST. ELEV.	TOP OF BEAM	DIM "A"	CONST. ELEV.	TOP OF BEAM	DIM "A"	CONST. ELEV.	TOP OF BEAM	DIM "A"	
AA	705.842	705.890			706.050			706.208			706.274			706.363			706.517			706.668			706.712
BB	705.889	705.937			706.098			706.257			706.325			706.414			706.568			706.721			706.765
CC	706.650	706.705			706.892			707.077			707.182			707.259			707.438			707.615			707.667
DD	707.227	707.293			707.514			707.732			707.870			707.947			708.159			708.368			708.430
EE	707.388	707.464			707.721			707.974			708.119			708.224			708.471			708.715			708.787
FF	707.217	707.302			707.589			707.872			707.993			708.151			708.428			708.700			708.780
GG	707.200	707.285			707.574			707.859			707.977			708.140			708.418			708.692			708.772
1																				706.749			706.832
2																	706.617			706.890			706.971
3														706.481			706.754			707.025			707.103
4								706.341			706.464			706.614			706.883			707.150			707.227
5					706.199			706.470			706.597			706.740			707.004			707.265			707.340
6	705.973	706.053			706.324			706.592			706.721			706.855			707.114			707.369			707.443
7	706.095	706.174			706.440			706.703			706.834			706.961			707.214			707.464			707.537
8	706.208	706.286			706.548			706.804			706.937			707.057			707.306			707.550			707.622
9	706.311	706.388			706.644			706.895			707.030			707.143			707.388			707.641			707.725
10	706.405	706.480			706.730			706.977			707.114			707.221			707.481			707.765			707.848
11	706.488	706.562			706.808			707.051			707.197			707.318			707.601			707.882			707.962
12	706.562	706.634			706.878			707.150			707.317			707.433			707.713			707.986			708.066
13	706.629	706.700			706.980			707.263			707.429			707.540			707.814			708.080			708.156
14	706.723	706.806			707.088			707.364			707.528			707.636			707.901			708.160			708.234
15	706.827	706.908			707.184			707.455			707.617			707.719			707.975			708.225			708.297
16	706.921	707.001			707.270			707.532			707.690			707.788			708.036			708.278			708.348
17	707.003	707.081			707.343			707.596			707.751			707.843			708.083			708.318			708.386
18	707.072	707.148			707.401			707.646			707.798			707.885			708.119			708.349			708.416
19	707.128	707.201			707.445			707.684			707.832			707.916			708.145			708.386			708.469
20	707.170	707.240			707.477			707.709			707.856			707.938			708.187			708.470			708.552
21	707.199	707.268			707.499			707.727			707.884			707.986			708.267			708.546			708.626
22	707.216	707.283			707.511			707.779			707.961			708.060			708.338			708.610			708.689
23	707.226	707.293			707.569			707.850			708.028			708.126			708.398			708.663			708.739
24	707.273	707.355			707.636			707.910			708.085			708.181			708.445			708.702			708.776
25	707.335	707.416			707.691			707.960			708.129			708.223			708.478			708.726			708.798
26	707.387	707.467			707.735			707.996			708.159			708.251			708.498			708.738			708.808
27	707.427	707.505			707.766			708.019			708.174			708.265			708.504			708.738			708.806
28	707.455	707.531			707.783			708.027			708.176			708.266			708.499			708.729			708.796
29	707.469	707.542			707.786			708.024			708.165			708.256			708.484			708.721			708.800
30	707.470	707.540			707.776			708.008			708.145			708.237			708.481			708.749			708.828
31	707.457	707.526			707.757			707.984			708.122			708.235			708.503			708.769			708.846
32	707.433	707.500			707.728			707.986			708.138			708.254			708.519			708.781			708.857
33	707.400	707.467			707.732			708.000			708.148			708.265			708.525			708.782			708.856
34	707.395	707.474			707.741			708.005			708.147			708.266			708.521			708.772			708.845
35	707.400	707.478			707.742			708.001			708.136			708.257			708.507			708.753			708.826
36	707.396	707.474			707.733			707.987			708.115			708.237			708.484			708.727			708.798
37	707.384	707.460			707.714			707.963			708.082			708.209			708.452						
38	707.361	707.435			707.684			707.930			708.041			708.172									
39	707.327	707.401			707.646			707.888															
40	707.285	707.356			707.600																		
41	707.235	707.306																					

NOTES

TAKE ELEVATIONS ON TOP OF BEAM AT POINTS INDICATED BY THE GRID LAYOUT. THE BEAM ELEVATIONS ARE TO BE READ TO THREE DECIMALS AND ENTERED IN TABLES UNDER "TOP OF BEAM" ELEVATIONS. COMPUTE DIMENSION "A" AS FOLLOWS:

"CONSTRUCTION ELEVATION" MINUS "TOP OF BEAM ELEVATION" EQUALS DIMENSION "A". CONSTRUCTION ELEVATIONS INCLUDE CAMBER DUE TO WEIGHT OF CONCRETE SLAB AND BARRIER. MEASURING OF DIMENSION "A" GIVES THE FINAL CHECK ON BEAM TOLERANCES FOR CAMBER, BEAM DAMAGE AND ERRORS IN ERECTION THAT PRODUCE REVERSE CAMBERS, SAGS AND UNSIGHTLY FASCIA BEAMS.

FOR SETTING TEMPLATES, MEASURE DIMENSION "A" ABOVE TOP OF BEAMS FOR TOP OF TEMPLATE. DO NOT SET TEMPLATE BY ELEVATIONS.

TEMPORARY SUPPORTS OR SHORING WILL NOT BE PERMITTED UNDER THE BEAMS WHEN POURING THE CONCRETE FLOOR SLAB OR WHEN TAKING "TOP OF BEAM" ELEVATIONS.

CONSTRUCT BARRIER TO ROADWAY GRADE. DO NOT ADD CAMBER TO PARAPET.

NOTE TO RESIDENT: THE "MAXIMUM ALLOWABLE CAMBER" SHOWN ON THE BEAM SHEET IS THE AMOUNT OF CAMBER, MEASURED PRIOR TO CASTING THE DECK, ABOVE WHICH THE BEAM WILL BEGIN TO ENCROACH INTO THE SLAB. IF THE MEASURED CAMBER IS GREATER THAN THE "MAXIMUM ALLOWABLE CAMBER" THE CONTRACTOR WILL BE RESPONSIBLE FOR ANY NECESSARY ADJUSTMENTS TO ASSURE A MINIMUM SLAB THICKNESS OF EIGHT (8) INCHES AS SHOWN IN THE PLANS. THIS WORK WILL BE CONSIDERED INCIDENTAL TO THE COMPLETION OF THE STRUCTURE AND HAVE THE APPROVAL OF THE ENGINEER.

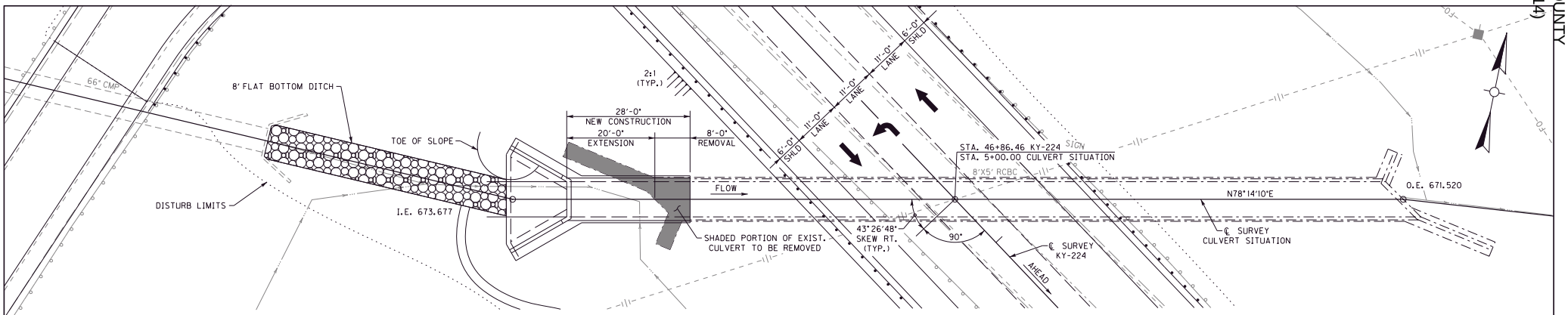

PLAN

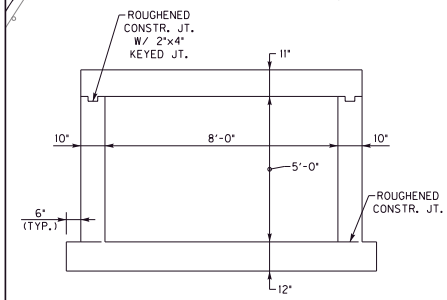

TYPICAL SECTION

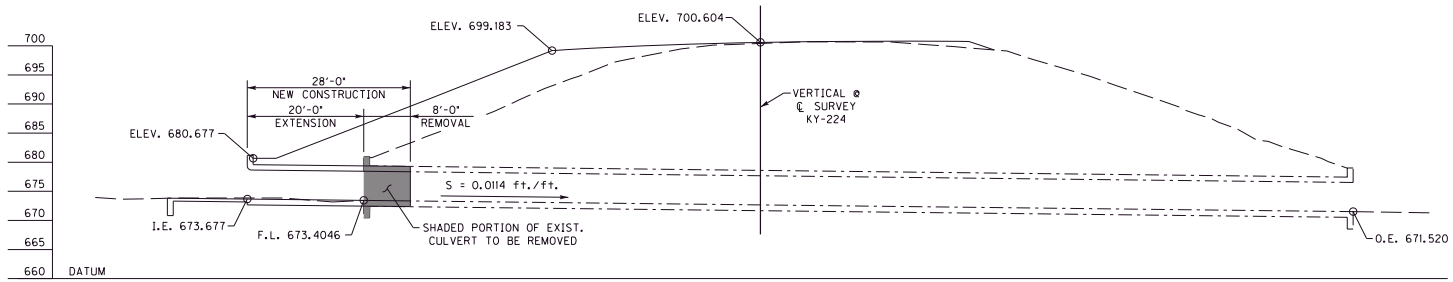

SECTION ALONG ℄ CULVERT

8'x5' RCBC EXTENSION ~ 43°26'48" SKEW RT.
28'-0" NEW CONSTRUCTION @ INLET ~ 2:1 MAX. FILL SLOPES
53'-0" SHOULDERS ~ 45'-0" ROADWAY ~ KY HL-93 LOADING
9'-0" MAXIMUM FILL HEIGHT ~ YIELDING FOUNDATION

GENERAL NOTES

SPECIFICATIONS

REFERENCES TO THE STANDARD SPECIFICATIONS ARE TO THE 2019 EDITION OF THE KENTUCKY DEPARTMENT OF HIGHWAYS STANDARD SPECIFICATIONS FOR ROAD AND BRIDGE CONSTRUCTION, WITH CURRENT SUPPLEMENTAL SPECIFICATIONS. REFERENCES TO AASHTO SPECIFICATIONS ARE TO THE AASHTO LRFD BRIDGE DESIGN SPECIFICATIONS, 9th EDITION WITH INTERIM REVISIONS.

DESIGN LOAD

THIS STRUCTURE IS DESIGNED FOR HL-93 LIVE LOAD INCREASED 25%.

WEIGHT OF FILL MATERIAL

THE ASSUMED WEIGHT OF FILL MATERIAL IS 120 LBS PER CUBIC FOOT.

DESIGN STRESSES

Fy = 60,000 psi
f'c = 3,500 psi

CONCRETE

CLASS "A" CONCRETE SHALL BE USED THROUGHOUT.

REINFORCEMENT

DIMENSIONS SHOWN FROM THE FACE OF CONCRETE TO BARS ARE CLEAR DISTANCES UNLESS OTHERWISE SHOWN. SPACING OF BARS IS FROM CENTER TO CENTER.

COMPLETION OF THE STRUCTURE

THE CONTRACTOR IS REQUIRED TO COMPLETE THE STRUCTURE IN ACCORDANCE WITH THE PLANS AND SPECIFICATIONS. MATERIAL, LABOR OR CONSTRUCTION OPERATIONS, NOT OTHERWISE SPECIFIED, ARE TO BE INCLUDED IN THE BID ITEM MOST APPROPRIATE TO THE WORK INVOLVED. THIS MAY INCLUDE COFFERDAMS, SHORING, EXCAVATIONS, BACKFILLING, REMOVAL OF ALL OR PARTS OF EXISTING STRUCTURES, PHASE CONSTRUCTION, INCIDENTAL MATERIALS, LABOR, OR ANYTHING ELSE REQUIRED TO COMPLETE THE STRUCTURE.

BONDING NEW CONCRETE TO OLD CONCRETE

ALL NEW CONCRETE SHALL BE BONDED TO THE OLD CONCRETE WITH A TYPE V EPOXY RESIN SYSTEM CONFORMING TO SECTION 511 AND 826 OF THE SPECIFICATIONS. THE COST OF THIS WORK, INCLUDING ALL LABOR, TOOLS, AND MATERIALS IS TO BE INCIDENTAL TO THE UNIT PRICE BID FOR CLASS "A" CONCRETE.

WELDED WIRE FABRIC

WELDED WIRE FABRIC SHALL CONFORM TO SECTION 811 OF THE SPECIFICATIONS. THE COSTS SHALL BE INCLUDED IN THE UNIT PRICE BID FOR CLASS "A" CONCRETE. APPROXIMATE QUANTITY, 17 S.Y., WWF6x6-D7xD7. REINFORCING BARS #4 AT 12" IN EACH DIRECTION MAY BE USED IN LIEU OF THE WELDED WIRE FABRIC.

SAWCUTTING CONCRETE

SAWCUT BARREL TO A DEPTH OF 1" PRIOR TO REMOVING EXISTING CONCRETE. COST SHALL BE INCLUDED IN THE UNIT BID FOR REMOVE CONCRETE MASONRY.

BEVELED EDGES

ALL EXPOSED EDGES SHALL BE BEVELED 3/4" UNLESS OTHERWISE NOTED.

CONSTRUCTION JOINTS

VERTICAL CONSTRUCTION JOINTS, IF REQUIRED, SHALL BE LOCATED IN THE FIELD, EXCEPT THAT NO JOINT SHALL BE LOCATED IN THE BARREL WITHIN 6' OF THE ENDS OF THE CULVERT. PLACE THE JOINT PERPENDICULAR TO THE BARREL USING EITHER LAP SPLICES OR MECHANICAL COUPLERS CAPABLE OF TRANSFERRING AT LEAST 125% OF THE YIELD STRENGTH OF THE "E" BARS, AT NO ADDITIONAL COST TO THE DEPARTMENT.

STRUCTURE EXCAVATION

STRUCTURE EXCAVATION SHALL BE PAID IN ACCORDANCE WITH SECTION 206 OF THE SPECIFICATIONS. COFFERDAMS, DEWATERING, SHEETING OR SHORING THAT MAY BE NECESSARY FOR CONSTRUCTION OF ANY PHASE OF WORK BUT WHICH NO PAY ITEM IS INCLUDED IN THE CONTRACT FOR THAT ITEM SHALL BE INCIDENTAL TO THE LUMP SUM BID FOR FOUNDATION PREPARATION.

GEOTECHNICAL

SEE GEOTECHNICAL REPORT S-114-2003 (FOR ADJACENT 66" CMP).

ANY BEDROCK OR BOULDERS ENCOUNTERED WITHIN 2 FEET BELOW THE BOTTOM OF THE CULVERT SLAB MUST BE EXCAVATED AND BACKFILLED WITH PROPERLY COMPACTED SOIL TO THE BASE OF THE SLAB.

FOOTING PRESSURE

FOUNDATION MATERIALS FOR WING FOOTINGS ARE REQUIRED TO RESIST A SERVICE LIMIT STATE MAXIMUM BEARING PRESSURE OF 2.5 KSF ON SOIL.

BEFORE YOU DIG

THE CONTRACTOR SHALL BE RESPONSIBLE FOR ALL REQUIREMENTS AND CONFORMATION WITH THE UNDERGROUND FACILITY DAMAGE PREVENTION ACT OF 1994. THE CONTRACTOR WILL BE RESPONSIBLE FOR LOCATING ANY UTILITIES ON THIS PROJECT. ALL UNDERGROUND UTILITIES SHALL BE LOCATED PRIOR TO CONSTRUCTION. THE CONTRACTOR IS ADVISED TO CALL (800) 752-6007 A MINIMUM OF TWO WORKING DAYS PRIOR TO EXCAVATION FOR INFORMATION ON THE LOCATION OF SOME BUT NOT NECESSARILY ALL UNDERGROUND UTILITIES.

ESTIMATE OF QUANTITIES

BID ITEM CODE	08100	08150	08003	02403
BID ITEM	CONCRETE-CLASS A	STEEL REINFORCEMENT	FOUNDATION PREPARATION	REMOVE CONCRETE MASONRY
UNIT	CUYD	LB	LS	CUYD
RCBC TOTALS	45.6	4005	1	17.5

REFERENCES

STANDARD DRAWINGS

BGX-006-CE STENCILS FOR STRUCTURES
BGX-012-CE GEOTECHNICAL LEGEND

EXISTING CULVERT

EXISTING CULVERT DWG. # 14992

PLANS PREPARED BY:

STATE OF KENTUCKY
BRANDON T. PULLIAM
36761
LICENSED PROFESSIONAL ENGINEER

Brandon Pulliam, PE
KY No. 36761

COMMONWEALTH OF KENTUCKY
DEPARTMENT OF HIGHWAYS

REVISION	DATE

PREPARED BY: HMB PROFESSIONAL ENGINEERS, INC.

DATE: 12/30/2021	CHECKED BY	
DESIGNED BY: B. PULLIAM	B. REID	
DETAILED BY: B. PULLIAM	B. REID	

8' x 5' RCBC STA. 46+86.46
CROSSING: DITCH

ROUTE	ITEM NO.	COUNTY OF
KY-224	4-20001	GRAYSON
	SHEET NO. S1	DRAWING NUMBER 28465

MicroStation v8.11.7.443 USER: bpulliam DATE PLOTTED: 1/6/2022 3:29:23 PM FILE: G:\Engr\HD1365.10 and 1365.11 Grayson WK\BRIDGES\CAD\Culvert\Culvert Layout.dgn

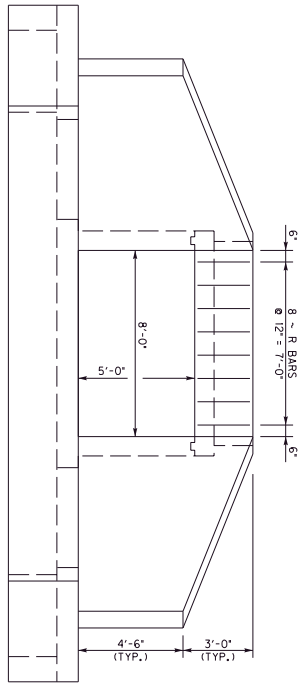

END ELEVATION

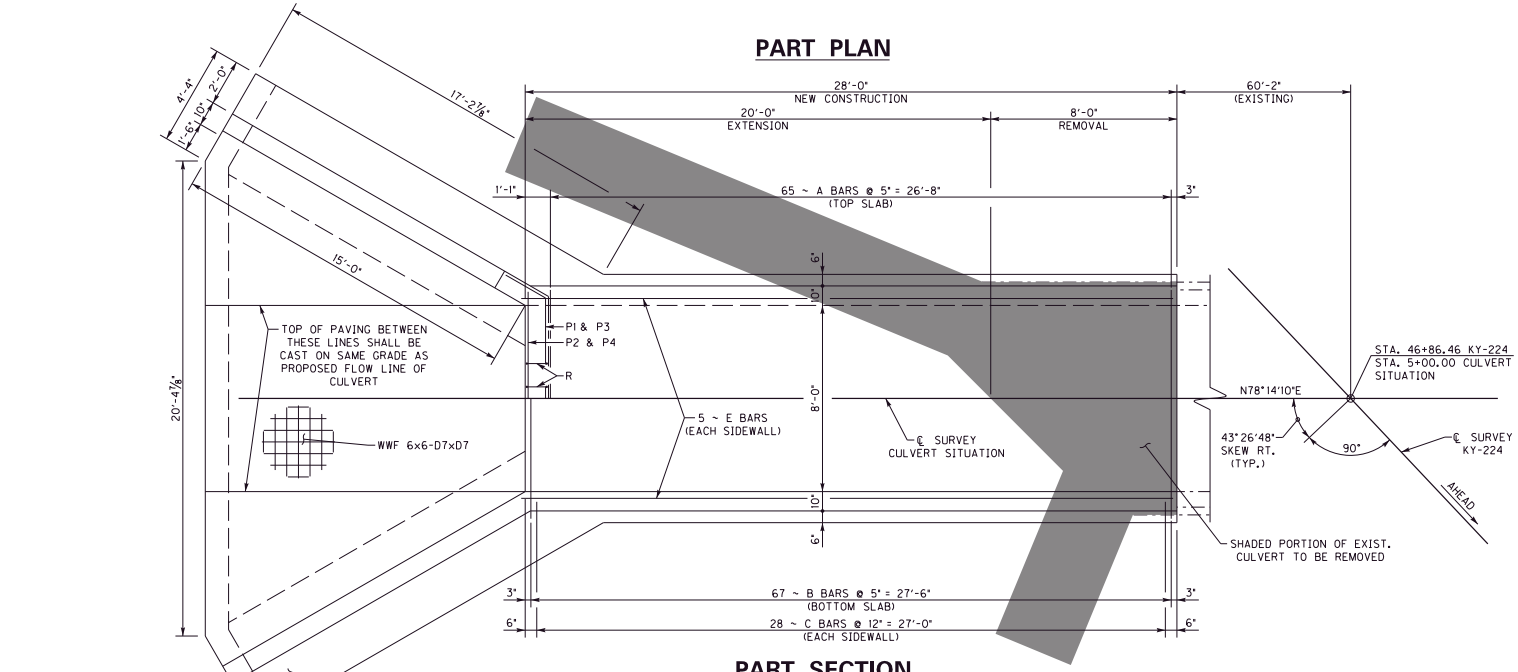

PART PLAN

PART SECTION

NOTE: CONTRACTOR MAY CLEAN AND STRAIGHTEN EXISTING E BAR REINFORCING TO LAP (1'-9") TO NEW E BARS OR HE MAY DRILL AND GROUT DOWEL BARS INTO THE EXISTING CULVERT AT NO EXTRA EXPENSE TO THE CABINET.

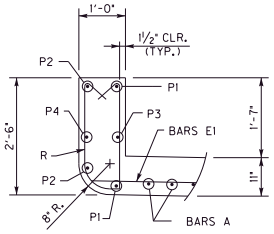

DETAIL "A"

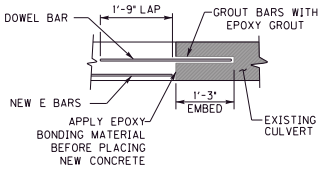

DOWEL DETAILS

(IF USED)

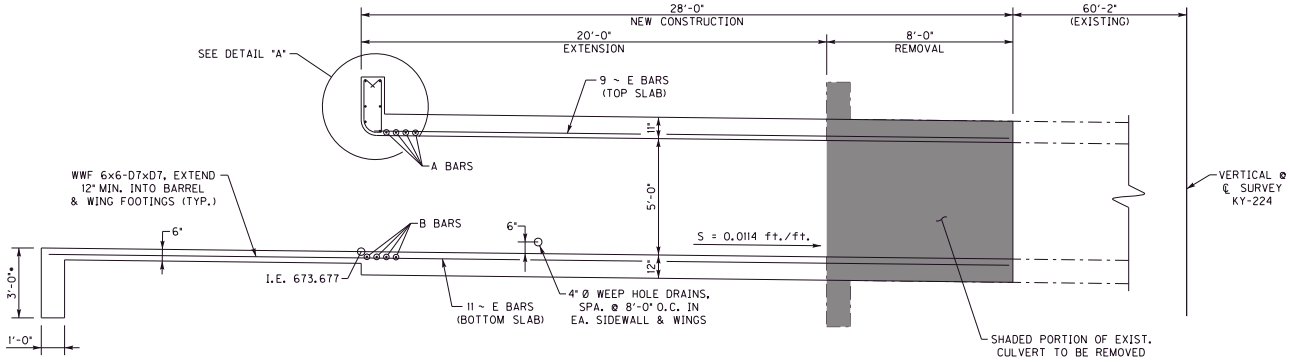

SECTION ALONG ℄ CULVERT

COMMONWEALTH OF KENTUCKY DEPARTMENT OF HIGHWAYS	REVISION	DATE	PREPARED BY HMB PROFESSIONAL ENGINEERS, INC.	DATE: 12/30/2021	CHECKED BY	8' x 5' RCBC STA. 46+86.46	ROUTE	ITEM NO. 4-20001	COUNTY OF GRAYSON
				DESIGNED BY: B. PULLIAM	B. REID	CROSSING DITCH	KY-224	SHEET NO. S2	DRAWING NUMBER 28465
				DETAILED BY: B. PULLIAM	B. REID				

MicroStation v8.11.7.443 USER: bpulliam DATE PLOTTED: 1/6/2022 3:29:24 PM FILE: G:\Engr\HD1365.10 and 1365.11 Grayson WK\BRIDGES\CAD\Culvert\Part Plan.dgn

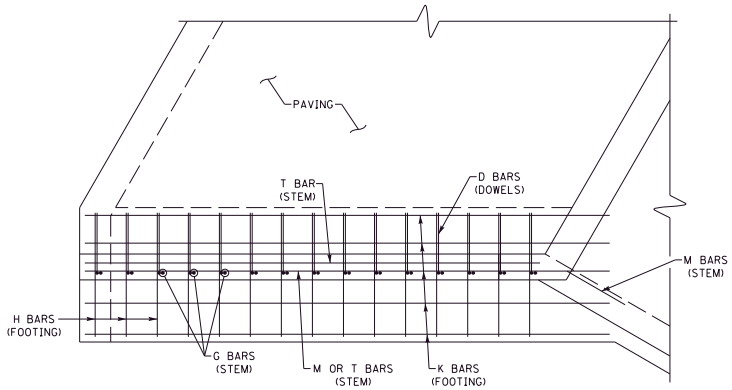

WING PLAN

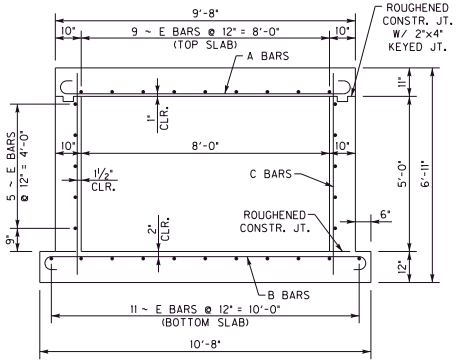

TYPICAL BARREL SECTION

MARK	TYPE	NO.	SIZE	LENGTH FT	LENGTH IN	LOCATION	A FT	A IN	B FT	B IN	C FT	C IN	D FT	D IN
A	1	65	#5	10	7	TOP SLAB	8	11	0	10	0	5	9	4
B	1	67	#5	11	7	BOTTOM SLAB	9	11	0	10	0	5	10	4
C	STR	56	#5	7	4	SIDEWALLS								
D	5	30	#5	5	0	WING DOWELS	3	0	2	0				
E	STR	30	#5	28	0	BARREL LONGITUDINAL								
G1	STR	6	#5	4	4	WING STEM VERTICAL								
G2	STR	4	#5	5	0	WING STEM VERTICAL								
G3	STR	4	#5	5	5	WING STEM VERTICAL								
G4	STR	4	#5	5	10	WING STEM VERTICAL								
G5	STR	4	#5	6	4	WING STEM VERTICAL								
G6	STR	4	#5	6	9	WING STEM VERTICAL								
G7	STR	4	#5	7	3	WING STEM VERTICAL								
H	STR	30	#5	4	0	WING FOOTING TRANSVERSE								
K	STR	16	#5	16	11	WING FOOTING LONGITUDINAL								
M1	8	8	#5	17	8	WING STEM LONGITUDINAL	15	6	2	2	1	10 1/2	1	1
M2	8	2	#5	15	7	WING STEM LONGITUDINAL	13	5	2	2	1	10 1/2	1	1
M3	8	2	#5	11	1	WING STEM LONGITUDINAL	8	11	2	2	1	10 1/2	1	1
P1	6	2	#6	12	6	PARAPET								
P2	STR	2	#6	9	2	PARAPET								
P3	6	1	#5	12	6	PARAPET								
P4	STR	1	#5	9	2	PARAPET								
R	11	8	#5	5	11	PARAPET								
T	5	4	#6	15	0	WING STEM TOP	13	8	1	4	1	3 1/4	0	3 3/8

BILL OF REINFORCEMENT

BAR TYPES

NOTE: BARS WITH SUBSCRIPT (S) ARE CONSIDERED STIRRUP BARS FOR BEND DIAMETERS

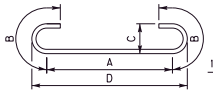

TYPE 1

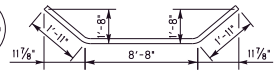

TYPE 6

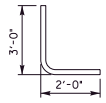

TYPE 5

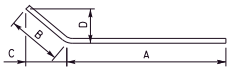

TYPE 8

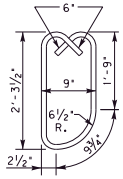

TYPE 11
(S)

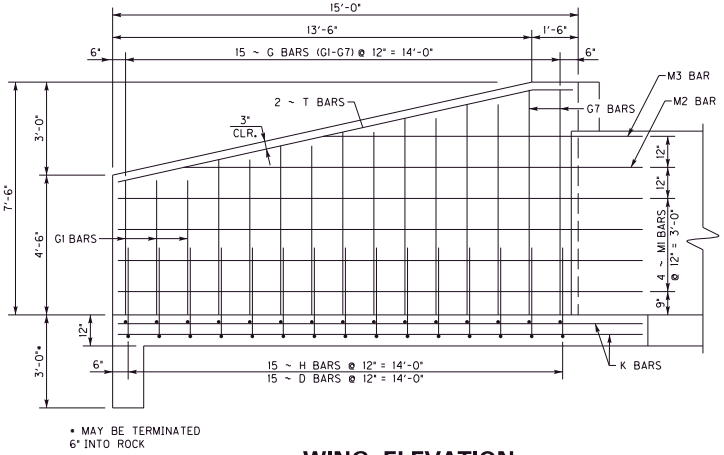

WING ELEVATION

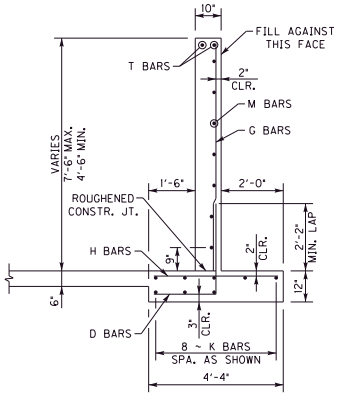

WING SECTION

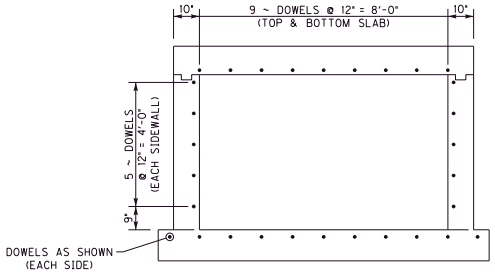

DOWEL LOCATIONS

(IF USED)

COMMONWEALTH OF KENTUCKY DEPARTMENT OF HIGHWAYS	REVISION	DATE	PREPARED BY HMB PROFESSIONAL ENGINEERS, INC.	DATE: 12/30/2021	CHECKED BY	8' x 5' RCBC STA. 46+86.46	ROUTE KY-224	ITEM NO. 4-20001	COUNTY OF GRAYSON
				DESIGNED BY: B. PULLIAM	B. REID	CROSSING DITCH		SHEET NO. S3	DRAWING NUMBER 28465
				DETAILED BY: B. PULLIAM	B. REID				

MicroStation v8.11.7.443 USER: bpulliam DATE PLOTTED: 1/6/2022 3:29:25 PM FILE: G:\Engr\HD1365.10 and 1365.11 Grayson WK\BRIDGES\CAD\Culvert\Wing Details.dgn

MAINTENANCE OF TRAFFIC

WK 9001
MP 111.25 TO MP 114.882

County	Item No.	Sheet
GRAYSON	4-20001 4-20002	

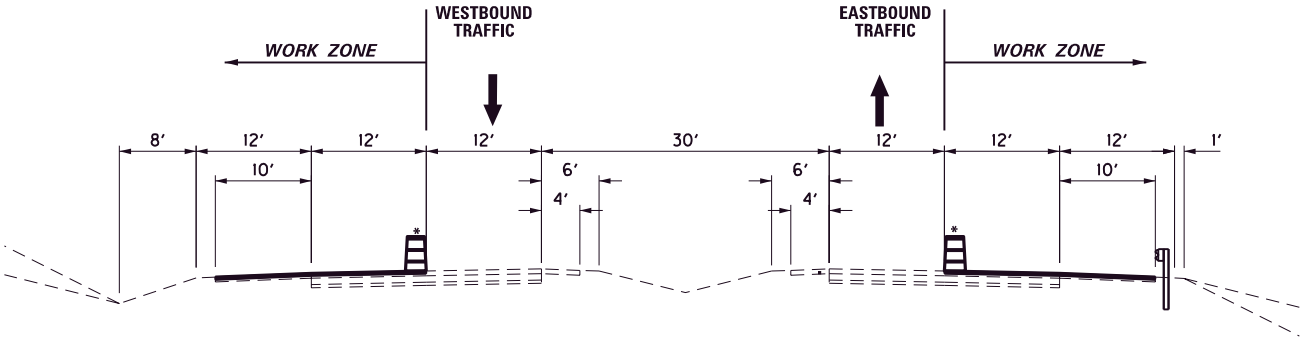

OUTSIDE LANE CLOSURES

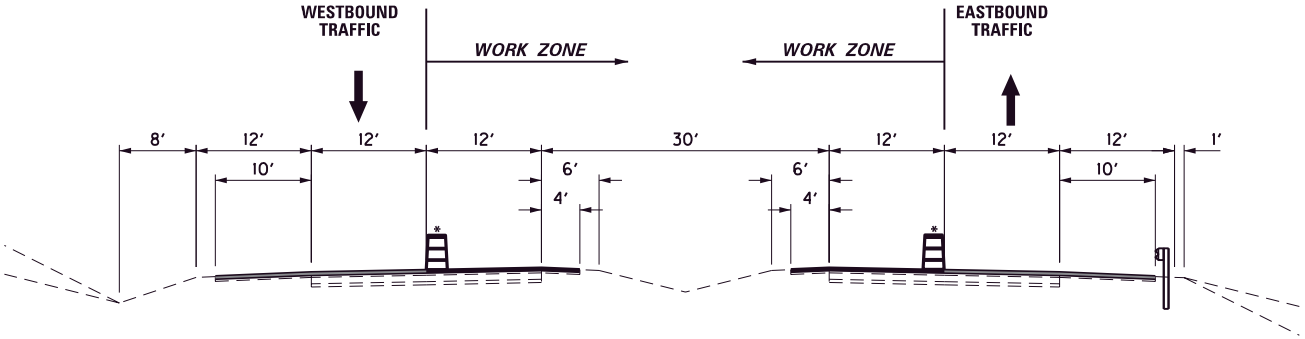

INSIDE LANE CLOSURES

- MOVE DRUM TEMPORARILY WHEN NECESSARY TO ALLOW PAVING EQUIPMENT TO PASS. IMMEDIATELY MOVE DRUMS AS SOON AS PRACTICAL TO RESTORE LANE WIDTHS.

LEGEND

CONSTRUCTED IN PREVIOUS PHASE

MILL AND INLAY

NOT TO SCALE

WK 9001
MAINTENANCE OF TRAFFIC

TRAFFIC CONTROL PLAN
GRAYSON COUNTY
WK 9001
NHPP 9001 (014)
FD52 043 9001 111-115
Item No. 4-20001 & Item 4-20002

THIS PROJECT IS A FULLY CONTROLLED ACCESS HIGHWAY

TRAFFIC CONTROL GENERAL

Except as provided herein, “Maintain and Control Traffic” shall be in accordance with the Standard Specifications and the Standard Drawings, and the Manual on Uniform Traffic Control Devices (MUTCD), current editions at the time of letting. Except for the roadway and traffic control bid items listed, all items of work necessary to maintain and control traffic will be paid at the lump sum bid price to "Maintain and Control Traffic". All lane closures used on the Project will be in compliance with the appropriate Standard Drawings.

Contrary to Section 106.01, traffic control devices used on this project may be new, or used in like new condition at the beginning of the work and maintained in like new condition until completion of the work. Traffic control devices will conform to current MUTCD.

Reduce the speed limit in work areas to 55 miles per hour (35 miles per hour for ramps if applicable) and establish double fines for work zone speeding violations. The extent of these areas within the project limits will be restricted to the proximity of actual work areas as determined by the Engineer. Notify the Engineer a minimum of 12 hours prior to using the double fine signs. At the beginning of the work zone, the “BEGIN DOUBLE FINES ZONE” signs will be dual mounted. At the end of the work zone, the “END DOUBLE FINES ZONE” signs will be dual mounted as well. Remove or cover the signs or turn off flashers when the highway work zone does not have workers present for more than a two-hour period of time. Payment for the signs will be at the unit bid price for Temporary Signs. Any relocation or covering of the signs or operation of flashers will be incidental to “Maintain and Control Traffic”, lump sum.

Night work will be allowed on this project. Obtain approval from the Engineer for the method of lighting prior to its use.

TRAFFIC PHASING OVERVIEW

This project generally consists of pavement rehabilitation of the Western KY Parkway (WK 9001) including the Clarkson interchange ramps and a profile revision of KY 224 including replacement of the KY 224 bridge over WK 9001 which is required to attain the desired vertical clearance over WK 9001 and to attain the desired sight distance on KY 224.

Maintenance of Traffic phasing for the pavement rehabilitation portion of the project is described in detail within this document. See KY 224 roadway plans for Maintenance of Traffic phasing for the KY 224 profile revision and bridge replacement.

Bridge pier replacement and other bridge construction activities adjacent WK 9001 will be required to be ongoing concurrently with the WK 9001 pavement rehabilitation activities. The contractor will be responsible for the scheduling of pavement rehabilitation activities during times that compliment and do not conflict with phasing and lane closures required by the bridge construction. The contractor may find it necessary to break the pavement rehabilitation construction into two segments at the approximate 112.4 mile point. While bridge construction is ongoing, pavement rehabilitation between MP 111.25 and MP 112.4 will be limited to activities that can be performed in the lanes actively closed for bridge construction. Between MP 112.4 and MP 114.882, while bridge construction is ongoing, the contractor may work in the same lane as closed for bridge construction or may elect to shift the one lane traffic to the other lane to provide contractor access to the desired lane. Details for a lane shift are addressed in the lane closure requirements.

Generally, for the pavement rehabilitation portion of the project, Phase I is intended to perform all work required prior to the typical mill and inlay operations. Phase II is intended to complete the mill and inlay depicted on the typical sections through final surfacing. Phase III is intended to complete final pavement markings and final cleanup. Phases I, II, and III may or may not coincide with phases of the same nomenclature of the KY 224 plans depending on the contractor’s management of activities on the project.

Project Phasing:

KY 224 PROFILE REVISION AND BRIDGE REPLACEMENT – See KY 224 Roadway Plans.

PAVEMENT REHABILITATION

PHASE IA

In this phase, close the outside lanes and complete Relief Joint Repairs, Perforated Pipe Inspection and Repairs, Drainage Repairs located in or adjacent the mainline outside lanes. Complete Erosion Remedial Measures, Paved Ditch Removal, Guardrail Repairs, Ramp Shoulder Repairs, and all other items of work, located in or adjacent the mainline outside lanes, required prior to the typical mill and inlay operations.

Remove lane closures and restore traffic to two lanes on the mainline for any period of time more than 3 days that no work will be performed requiring a lane closure.

PHASE IB

In this phase, close the inside lanes and complete Relief Joint Repairs, Perforated Pipe Inspection and Repairs located in or adjacent the mainline inside lanes. Complete Erosion Remedial Measures, Paved Ditch Removal, Guardrail Repairs, and all other items of work, located in or adjacent the mainline inside lanes, required prior to the typical mill and inlay operations.

Remove lane closures and restore traffic to two lanes on the mainline for any period of time more than 3 days that no work will be performed requiring a lane closure.

PHASE IIA – Eastbound Cross Slope Revision Inside Lane

Shift traffic to the outside lane eastbound, closing the inside eastbound mainline lane to traffic.

Complete the 2” milling of inside lane and shoulder and place Leveling and Wedging from MP 113.67 to MP 114.71 to revise cross slope to the bottom of proposed scratch course grade as calculated from the cross sections where provided, or as determined by monitoring of cross slope during placement where cross sections have not been provided. Construct a temporary 3:1 longitudinal wedge of leveling and wedging at the center of lanes from the top of leveling to eliminate pavement edge drop-offs of greater than 1”. Provide a temporary wedge of leveling and wedging of approximately 25’ length at each end of the cross slope revision to provide a temporary transition from the existing surface to the newly constructed leveling and wedging course. This temporary wedge will be removed as part of the final surfacing operation.

PHASE IIB – Eastbound Cross Slope Revision and Final Surfacing Outside Lane & Eastbound Ramps

Shift traffic to the inside lane eastbound, closing the outside eastbound mainline lane to traffic.

Complete the 2" milling in the outside lane and shoulder and place Leveling and Wedging from MP 113.67 to MP 114.71 to revise cross slope to the bottom of proposed scratch course grade as calculated from the cross sections where provided, or as determined by monitoring of cross slope during placement where cross sections have not been provided. Remove guardrail and widen outside embankment as necessary and place DGA wedge outside of the leveling and wedging course.

Complete 1.5" milling from MP 111.25 to MP 112.4 of the outside lane and shoulder and eastbound ramps. Complete additional 3" milling of outside lane and inlay of mainline base between MP 111.25 and MP 112.4. Complete 2" milling of outside lane and shoulder between MP 112.4 and MP 113.67 and between MP 114.71 and MP 114.882.

Place 0.5" Scratch course on outside lane and shoulder between MP 112.4 and MP 114.882.

Place final asphalt surface on outside lane and shoulder between MP 111.25 and MP 114.882 and on the eastbound ramps. Complete DGA shoulder wedge and asphalt seal coat and restore guardrail.

PHASE IIC – Final Surfacing Inside Lane Eastbound

Shift traffic to the eastbound outside lane, closing the eastbound inside mainline lane to traffic.

Complete 1.5" milling from MP 111.25 to MP 112.4 of the eastbound inside lane and shoulder. Complete additional 3" milling and inlay of mainline base of inside lane between MP 111.25 and MP 112.4. Complete 2" milling of inside lane and shoulder between MP 112.4 and MP 113.67 and between MP 114.71 and MP 114.882.

Place 0.5" Scratch course on inside lane and shoulder between MP 112.4 and MP 114.882.

Place final asphalt surface on inside lane and shoulder between MP 111.25 and MP 114.882. Place DGA wedge as needed and asphalt seal coat.

PHASE IID – Final Surfacing Outside Lane Westbound

Shift traffic to the westbound inside lane, closing the eastbound outside mainline lane to traffic.

Complete 1.5" milling from MP 111.25 to MP 112.4 of the outside lane and shoulder and westbound ramps. Complete additional outside lane 3" milling and inlay of mainline base between MP 111.25 and MP 112.4. Complete 2" milling of the outside lane and shoulder between MP 112.4 and MP 114.882.

Place 0.5" Scratch course on outside lane and shoulder between MP 112.4 and MP 114.882.

Place final asphalt surface on outside lane and shoulder between MP 111.25 and MP 114.882 and on the westbound ramps. Place DGA wedge as needed and asphalt seal coat.

PHASE IIE – Final Surfacing Inside Lane Westbound

Shift traffic to the westbound outside lane, closing the westbound inside mainline lane to traffic.

Complete 1.5" milling from MP 111.25 to MP 112.4 of the inside lane and shoulder. Complete additional 3" milling and inlay of mainline base between MP 111.25 and MP 112.4. Complete 2" milling of the inside lane and shoulder between MP 112.4 and MP 114.882.

Place 0.5" Scratch course on inside lane and shoulder between MP 112.4 and MP 114.882.

Place final asphalt surface on inside lane and shoulder between MP 111.25 and MP 114.882. Place DGA wedge as needed and asphalt seal coat.

PHASE III

Using alternating lane closures complete any remaining work including installation of final pavement markings, inlaid pavement markers, flexible delineators, shoulder rumble strips and final cleanup, etc.

PAVEMENT REHABILITATION SPECIFIC NOTES

RELIEF JOINT/PAVEMENT REPAIR LOCATIONS

Approximate Blowup/Relief Joint repair locations are listed elsewhere in the proposal. The Engineer will determine the exact location at the time of construction. Once removal of pavement at a particular repair location has begun, the contractor shall work continuously to complete the work required to bring the pavement up within 4 inches of the existing adjacent surface grade. Type III Barricades shall be placed immediately in front of all pavement removal areas.

MILL AND INLAY OF ASPHALT BASE

Inlay of asphalt base must be completed by the end of each day's shift for all areas milled for asphalt base placement, in order to eliminate the pavement edge drop-off created by the milling operation.

SHOULDER PREPARATION AND RESTORATION

Wide loads, errant vehicles, or traffic shying away from equipment or workers may inadvertently tend to travel for short distances on the shoulders. Clean any debris from the shoulders prior to beginning any work on the project and periodically when debris accumulates throughout the duration of the project. Monitor shoulder conditions and perform repairs as necessary if damage develops. Repairs to shoulders are to be paid by the tons of milling measured, asphalt material for tack, and the measured tons of the asphalt mixture used. Use asphalt base, asphalt surface or leveling and wedging for repairs as directed by the engineer. No direct payment for these repairs will be made other than measurement and payment of established contract work items necessary to make the repairs. No additional mobilization or traffic control will be considered for payment for these potential repairs.

LANE CLOSURES

Contrary to Section 112.04.17, Lane closures, whether long term or short term, will not be measured for payment and will be incidental to the bid item "Maintain and Control Traffic". Lane closures must be installed on both inside lanes while work is being performed in the common median.

Only one lane closure per direction of travel will be permitted on this project. The contractor will be permitted to perform one lane shift per direction between MP 112.3 and MP 112.4 if access to the opposite lane is required for construction east of the bridge replacement portion of the project. If a lane shift is employed, it shall be at a 55:1 taper for a minimum length of lane shift of 660 feet. Existing skip line striping shall be removed in the lane shift area. Temporary edge lines shall be present in the lane shift area. Drums shall be maintained on each side of traffic at 50' spacing for the length of the lane shift. Dual mounted lane shift signs will be installed approximately 500' in advance of any lane shift. PCMS may also be used to provide advance notice of the lane shift. All costs associated with the described lane shift will be borne by the contractor including all striping removal, temporary striping, lane shift signs, and all other labor, equipment, or other costs.

LANE WIDTHS

The minimum clear lane width will be 12'. Lane widths may be reduced for short durations in the local vicinity of paving operations or other operations that equipment or personnel is required to work in close proximity of adjacent traffic. Restore lane widths to 12' as soon as practical after the paving equipment has passed. Make provisions for the passage of wide loads up to 16'. Use a lane closure all times when work is performed in the lane or adjacent shoulder.

Maintain minimum 9' lane widths for ramps during active construction operations.

RAMPS

Maintain access to ramps at all times and conduct ramp work half width. Temporary shifts in the ramp gore locations required to maintain access to the ramps are to be approved by the engineer. Restore ramps to the original travel pattern as soon as is practical upon completion of the work.

ROAD CLOSURE

Mainline WK 9001 closures will be allowed for certain KY 224 bridge construction items. Traffic will be reduced to 1 lane in advance of the interchange and transitioned to the ramps by use of drums on 50' spacing. Flaggers at each ramp terminal will be required when diversion of WK 9001 traffic onto ramps is in place.

Closure of WK 9001 will only be allowed for the following activities: Demolition of existing structure and setting beams.

Closure of WK 9001 will only be permitted on the following times:

Nightly from 8:00 pm to 6:00 am the following morning.

SIGNS

Additional traffic control signs in addition to normal lane closure signing detailed on the Standard Drawings may be required by the Engineer. Additional signs needed for lane closures may include, but are not limited to, dual mounted LEFT/RIGHT LANE CLOSED 1 MILE, LEFT/RIGHT LANE CLOSED 2 MILE, LEFT/RIGHT LANE CLOSED 3 MILE, SLOWED/STOPPED TRAFFIC AHEAD, KEEP LEFT/RIGHT. Signage for reduced speed limits and double fine work zones will be furnished, relocated, and maintained by the Contractor.

Contrary to section 112, individual signs will be measured only once for payment, regardless of how many times they are set, reset, removed and relocated during the duration of the project. Replacements for damaged signs or signs directed to be replaced by the Engineer due to poor legibility or reflectivity will not be measured for payment.

A quantity of signs has been included for "Roadwork Ahead" signs on entrance ramps, extra double fine signs, keep left/keep right and speed limit signs between interchanges. These are to be paid for only once regardless of how many times they are moved or relocated.

SPEED LIMIT REDUCTIONS AND DOUBLE FINE ZONES

Install all signing for speed zone reductions in accordance with Standard Drawing TTD-130.

Reduce the speed limit to 55 MPH for the duration of the project.

Utilize double fine zone signs in strict accordance with Standard Drawing TTD-120-03.

FLASHING ARROWS

Flashing arrows will be paid for once, regardless of how many times they are moved or relocated. The Department **WILL NOT** take possession of the flashing arrows upon completion of the work.

PORTABLE CHANGEABLE MESSAGE SIGNS

Provide portable changeable message signs (PCMS) in advance of and within the project at locations to be determined by the Engineer. PCMS being bid independently of the Queue Warning System shall be used as directed by the engineer. The PCMS will be in operation at all times. In the event of damage or mechanical/electrical failure, the contractor will repair or replace the PCMS immediately. PCMS will be paid for once, no matter how many times they are moved or relocated. The Department **WILL NOT** take possession of the signs upon completion of the work.

TYPE III BARRICADES

Place Type III Barricades in advance of each area of pavement removal required by “Blow Up/Relief Joint” repairs. Utilize Type III Barricades at all other locations required by the Standard Drawings or MUTCD. Contrary to the specifications, no direct payment will be made for Type III Barricades and will be considered incidental to “Maintain and Control Traffic”.

GUARDRAIL

Guardrail may be removed and later reinstalled at the contractor’s expense to access the work areas. Reinstall guardrail that has been temporarily removed for access as soon as practical after completion of the activity necessitating the guardrail removal. Reinstall guardrail that has been removed for replacement of damaged guardrail, shoulder erosion repairs, or other scheduled removal activities as soon as possible and upon completion of the activity necessitating the guardrail removal.

A lane closure or shoulder closure will be required at all times guardrail is not in place. All blunt ends will be eliminated by removal of additional posts and pinning the blunt end to the ground and covering the end with soil or DGA. Maintain drums at 20’ spacing in any area in which guardrail has been removed until such time it is replaced.

PAVEMENT MARKINGS

Remove or cover the lenses of pavement markers that do not conform to the traffic control scheme in use, or as directed by the Engineer. Replace or uncover lenses before a closed lane is reopened to traffic. No direct payment will be made for removing or covering and uncovering the lenses but will be incidental to "Maintain and Control Traffic," lump sum.

Place temporary and permanent striping in accordance with Section 112 and Section 714, except that:

1. Temporary striping will be 6" in width.
2. Edge lines will be required for temporary striping during the lane closures.
3. Existing, temporary, or permanent striping will be in place before a lane is opened to traffic
4. Permanent striping will be extruded Thermoplastic Markings.
5. Striping removal will be performed by water blasting methods only in a non-destructive manner. The Contractor will be required to adjust his operations to ensure no damage results to ultimate pavement due to striping removal efforts. Temporary removable tape will be used to mask lines and for temporary striping on permanent pavement that is not to be replaced.

Should the Contractor change the existing striping pattern, the Contractor is to restripe the roadway back to its original configuration at his own expense if no work is anticipated for a period of time.

PAVEMENT EDGE DROP-OFFS

Pavement edge drop-offs will be protected by a lane or shoulder closure. Lane closures will be protected with plastic drums, vertical panels, or barricades as shown on the Standard Drawings.

Pavement edges that traffic is not expected to cross, except accidentally, shall be treated as follows:

Less than 2” – Protect with a lane closure.

2” to 4” – Protect with a lane closure. Place plastic drums, vertical panels, or barricades every 50 feet. Cones may not be used in place of plastic drums, panels, and barricades at any time. Place Type III Barricades at the beginning of the lane closures, and place additional Type III Barricades spaced at 2,500 feet during the time the lane closure is in place.

Greater than 4” – Relief Joint – In areas where pavement is to be removed, work should proceed continuously so that traffic is exposed to a drop-off for the minimum amount of time necessary to bring the pavement back up to existing grade or within 4 inches of existing grade. Barrel spacing should be 20 feet and appropriate lighting should be utilized to illuminate the area during nighttime operations.
Other than Relief Joint – If less than 6 feet from traffic, construct positive separation or construct a wedge with 3:1 or flatter slope of soil, DGA or asphalt millings. If there is 6 feet or more distance between the edge of pavement and drop-off, bridge panels or traffic drums will be placed every 50 feet throughout the drop-off area. Payment for CSB or DGA used for wedging will be allowed.

TRAFFIC COORDINATOR

Designate an employee to be traffic coordinator. The designated Traffic Coordinator must meet the requirements of section 112.03.12 of the Standard Specifications. The Traffic Coordinator will inspect the project maintenance of traffic once every two hours during the Contractor's operations and at any time a lane closure is in place. The Traffic Coordinator will report all incidents throughout the work zone to the Engineer on the project. The Contractor will furnish the name and telephone number where the Traffic Coordinator can be contacted at all times.

During any period when a lane closure is in place, the Traffic Coordinator will arrange for personnel to be present on the project at all times to inspect the traffic control, maintain the signing and devices, and relocate portable changeable message boards as queue lengths change. The personnel will have access on the project to a radio or telephone to be used in case of emergencies or accidents.

This project is designated a “Significant Project” and subject to the requirements of section 112.03.12 of the Specifications for projects of that designation.

COORDINATION OF WORK

The Contractor is advised that other projects may be in progress within or in the near vicinity of this project. The traffic control of those projects may affect this project and the traffic control of this project may affect those projects. The Contractor will coordinate the work on this project with the work of the other contractors. In case of conflict, the Engineer will determine the relative priority to give to work phasing on the various projects.

CONTRACTOR’S AND CONTRACTOR’S EMPLOYEES’ VEHICLES

Do not use or allow employees to use median crossovers at any time except when inside lanes are closed for construction. In all other phases of construction, change vehicular direction of travel only at interchanges.

Remove all contractor vehicles and equipment from the clear zone when not in use. Store all materials outside the clear zone.

WIDE LOADS

Wide load detours will not be established on this project. Provide for passage of wide loads up to 16 feet. Wide loads may use a portion of the shoulder to allow for passage. Temporarily shift traffic drums to allow for passage of wide loads when necessary.

KY224 SPECIFIC NOTES

LANE CLOSURES

Contrary to Section 112.04.17, Lane closures, whether long term or short term, will not be measured for payment and will be incidental to the bid item "Maintain and Control Traffic".

SIGNS

Contrary to section 112, individual signs will be measured only once for payment, regardless of how many times they are set, reset, removed and relocated during the duration of the project. Replacements for damaged signs or signs directed to be replaced by the Engineer due to poor legibility or reflectivity will not be measured for payment. Sign placement will be in accordance with the applicable Standard Drawings and MUTCD. All signing is to be approved by the engineer.

Contrary to the specifications "LOW SHOULDER" signs will not be measured for payment but will be considered incidental to "Maintain and Control Traffic".

Cover all existing signs that may be in conflict with traffic scheme employed.

PAVEMENT MARKINGS

Either permanent or temporary pavement markings will be required to be in place prior to any changes in traffic patterns. Removal of conflicting existing markings will be required prior to any traffic phase changes. Permanent pavement markings for KY 224 will be Durable Waterborne Paint.

TEMPORARY SIGNALS

A multiphase signal will be employed for control of one lane traffic during KY 224 construction and including bridge construction activities. Control of the mainline KY 224 traffic will be required as well as control of the exit ramps in the signal system. A temporary stop bar will be required on KY 224 in advance of each ramp terminal. The contractor shall develop a signal plan detailing the layout and the type of equipment to be used, for approval by the engineer and will work with District 4 Traffic to develop signal timing.

The temporary signal operation may need to be taken out of operation periodically during activities such as paving and while WK 9001 mainline traffic is diverted onto ramps. The contractor shall provide flaggers at each conflict point to control traffic until operation of the temporary signal system can be re-established.

The contractor shall provide a 24-hour contact person to be responsible for responding to signal malfunction. In the event of a malfunction, the contractor is to respond immediately to the notification and make repairs. If repairs cannot be made expediently, flaggers shall be provided by the contractor until such time that repairs can be made.

ALTERNATIVE PLANS

If the contractor wishes to deviate from the traffic phasing and schemes outlined in this document and in the KY 224 Roadway plans, he shall prepare an alternate plan and present it in writing to the engineer and obtain approval prior to implementation.

CONTRACTOR VEHICLES

Contractor vehicles and equipment shall move with and not against the flow of traffic. Construction traffic will only enter and exit at designated locations. Flaggers will be required at locations construction traffic enters or cross traffic. The contractor shall clean all debris or tracking of soil from paved surfaces and will place crushed aggregate at vehicle access point to prevent tracking onto paved surfaces if necessary and at the contractor's expense.

ROAD CLOSURE

Road Closures for KY 224, WK 9001 Ramps, and Hickory Flats will not be allowed. Maintain a minimum of one lane of traffic open for all roadways at all times. Traffic may be held for up to 15 minutes during times of low traffic volumes for traffic pattern changes or other activities as approved by the engineer.

An unusually thick asphalt overlay of KY 224, Ramps and Hickory Flats is required for profile correction. This thick overlay will be accomplished by placement of the asphalt overlay in layers, half width while maintaining one lane traffic. Pavements will be tapered at each access point to maintain continual access to all approaches and properties. The contractor will be allowed to place only the number of layers daily that can be compacted, cooled, and traffic applied without damage or rutting to the newly placed asphalt.

LOCAL ACCESS

Maintain access to local properties and approach roads at all times. Construct entrance and approach pavements part width and ramp pavements down to provide access during paving operations.

SCHOOL BUS AND EMERGENCY VEHICLES

If traffic is stopped due to construction and an emergency vehicle on an emergency run or a school bus arrives at the project site, the contractor shall make provisions for the passage of that vehicle as soon as possible.

BLASTING

No blasting will be allowed on the project.

PAVEMENT EDGE DROP-OFFS

Pavement edge drop-offs will be protected by a lane or shoulder closure. Lane closures will be protected with plastic drums, vertical panels, or barricades as shown on the Standard Drawings.

Pavement edges that traffic is not expected to cross, except accidentally, shall be treated as follows:

Less than 2" – Protect with a lane closure or shoulder closure.

2" to 4" – Protect with a lane closure or shoulder closure. Place plastic drums, vertical panels, or barricades every 50 feet. Cones may not be used in place of plastic drums, panels, and barricades at any time. Place Type III Barricades at the beginning of the lane closures, and place additional Type III Barricades spaced at 500 feet during the time the lane closure is in place if temporary barrier is not in place.

Greater than 2" – If less than 6 feet from traffic, construct positive separation (temporary barrier) or construct a wedge with 3:1 or flatter slope of soil, DGA or asphalt millings. If there is 6 feet or more distance between the edge of pavement and drop-off, bridge panels or traffic drums will be placed every 50 feet throughout the drop-off area. Payment for CSB or DGA used for wedging will be allowed.

WK 9001
Grayson County
NHPP 9001 (014)
FD52 043 9001 111-115
Item No. 4-20001 & 4-20002

MP 111.25 TO MP 114.882

THIS PROJECT IS A FULLY CONTROLLED ACCESS HIGHWAY

I. DESCRIPTION

Perform all work in accordance with the Department's 2019 Standard Specifications, Supplemental Specifications, Applicable Special Provisions, and Applicable Standard and Sepia Drawings, except as hereafter specified. Article references are to the Standard Specifications. Furnish all materials, labor, equipment, and incidentals for the following work:

(1) Maintain and Control Traffic; (2) Drainage structure work; (3) Relief Joint Repairs (4) Guardrail Repairs (5) Edge Drain Repairs (6) Cross Slope Correction (7) Asphalt Pavement and Milling and Texturing; (8) Pavement markers and markings; (9) Erosion Repairs and Grading Slopes and (10) Approach bridge replacement and profile revision (11) All other work specified as part of this contract.

II. MATERIALS

Except as specified in these notes or on the drawings, all materials will be according to the Standard Specifications and applicable Special Provisions and Special Notes. The Department will sample and test all materials according to Department's Sampling Manual and the Contractor will have the materials available for sampling a sufficient time in advance of the use of the materials to allow for the necessary time for testing, unless otherwise specified in these notes.

A. **Maintain and Control Traffic.** See Traffic Control Plan.

B. **Pavement Markings - 6 inch.** Use extruded Thermoplastic Pavement Markings for permanent striping.

C. **Pavement Markings – 4 inch.** Use durable waterborne paint for 4” wide markings for KY224 and for the KY 224 bridge surface.

D. **Channel Lining Class II & III.** Channel lining will be limestone and is to be placed at pipe outlets, ditch repair and eroded locations as directed by the Engineer.

E. **Asphalt Material for Tack Non-Tracking.** See "Special Note for Non Tracking Tack Coat".

F. **Joint Adhesive.** See "Special Note for Longitudinal Pavement Joint Adhesive"

G. **Guardrail.** Use 7' posts for all guardrail installations, both pavement rehabilitation and KY 224 profile revision and bridge replacement.

H. **Seeding and Protection.** Use erosion control blanket for all seeding applications.

III. CONSTRUCTION METHODS

A. **Maintain and Control Traffic.** See Traffic Control Plan. Use waterblasting methods only for striping removal when necessary in lieu of abrasive or other methods.

B. **Site Preparation.** Be responsible for all site preparation. Do not disturb existing signs. This item will include, but is not limited to, incidental excavation and backfilling; removal of all obstructions or any other items; disposal of materials; sweeping and removal of debris; shoulder preparation and restoration, temporary and permanent erosion and pollution control; and all incidentals. Site preparation will be only as approved or directed by the Engineer.

C. **Disposal of Waste.** Dispose of all cuttings, debris, and other waste off the right-of-way at approved sites obtained by the Contractor. The contractor will be responsible for obtaining any necessary permits for this work. Temporary openings in the right of way fence for direct access to waste sites off the right of way or for access to other public roads will not be allowed. No separate payment will be made for obtaining the necessary permits, but will be incidental to the other items of the work. Disposal of existing cuttings and brush shall adhere to Section 202 of the current Standard Specifications.

D. **Final Dressing, Clean Up, and Seeding and Protection.** After all work is completed, completely remove all debris from the job site. Perform Class A Final Dressing on all disturbed areas. Sow disturbed earthen areas with Seed Mixture No. I or Seed Mixture No. II as applicable and use erosion control blanket in lieu of "Seeding and Protection" in all seeding applications. Install erosion control blanket in all ditching areas not receiving aggregate channel lining.

E. **Guardrail.** Remove guardrail where necessary to perform erosion repairs, cross slope revision, or other activities necessary requiring removal of guardrail for access. Replace guardrail as soon as practical at the conclusion of the work requiring the removal of the guardrail.

F. **Pavement Striping and Inlaid Pavement Markers.** Permanent striping will be in accordance with Section 112 for temporary striping, Section 713 for Waterborne Paint, and Section 714 for Thermoplastic Markings, except that:

(1). Striping will be 6" in width on WK 9001 applications and 4" in width on KY 224.
(2). Permanent striping or temporary striping will be in place before a lane is opened to traffic.
(3). Pavement Markers shall be installed per Sepia 7, 11, 13 or 14.

G. **On-Site Inspection.** In accordance with section 102.06, each Contractor submitting a bid for this work will make a thorough inspection of the site prior to submitting a bid and will thoroughly familiarize himself with existing conditions so that the work can be expeditiously performed after a contract is awarded. Submission of a bid will be considered evidence of this inspection having been made. Any claims resulting from site conditions will not be honored by the Department.

H. **Caution:** Information shown on the drawings and in this proposal, and the types and quantities of work listed are not to be taken as an accurate or complete evaluation of the material and conditions to be encountered during construction. The bidder must draw his own conclusions as to the conditions encountered. The Department does not give any guarantee as to the accuracy of the data and no claim will be considered for additional compensation if the conditions encountered are not in accordance with the information above.

I. **Utility Clearance.** It is not anticipated that utility facilities will need to be relocated and/or adjusted; however, in the event that it is discovered that the work does require that utilities be relocated and/or adjusted, the utility companies will work concurrently with the Contractor while relocating their facilities.

J. **Joint Adhesive.** See "Special Note for Longitudinal Pavement Joint Adhesive".

K. **Crushed Aggregate No.** 2. Crushed Aggregate No. 2 will be used to refill undercut areas for KY 224 construction, for slope protection at shoulder erosion repair areas, and for border areas of perforated pipe headwalls.

L. **Remove Paved Ditch.** As individually approved by the engineer, paved ditches that are required to be removed due to failure or damage, may be broken into fragments no greater than 1 foot diameter and reshaped and allowed to remain in place. The ditches must be regraded, filling any voids, and the broken concrete used in the same manner as channel lining. The broken concrete will be supplemented by a 1 – 2 feet thick application of Channel Lining Class III as directed by the engineer.

M. **Relief Joint.** See Relief Joint Detail. It is intended that the relief joint crushed stone backfill empty into the existing edge drain system. If the engineer determines that conditions warrant, a 4 inch non-perforated pipe outlet may be added and 4 inch perforated pipe headwall added at the low point in the relief joint excavation.

N. **Trenching.** The item "Trenching" was established to excavate failing shoulder materials adjacent various ramps in preparation for ramp shoulder repairs. Excavate the existing shoulder materials to the depths and widths indicated on the Shoulder Base Repair Detail and prepare and cut subgrade in preparation for the proposed paving materials.

O. **Trenching and Backfilling.** The item "Trenching and Backfilling" was established to trench and backfill for placement of lighting conduit/ducted cable.

P. **Trench Drain.** Construct trench drains in accordance with the Trench Drain Detail to provide a drainage outlet for existing pavement. Construct Trench Drains at locations designated on the plans or as directed by the engineer.

Q. **Security Plate Assembly.** Install security plate assemblies for any newly constructed drainage structures with metal grates or at locations that grates are proposed to be replaced.

R. **Reshape Median.** The item "Reshape Median" was established to regrade the WK 9001 median in the vicinity of the KY 224 Bridge Replacement in accordance with RBI-007-09 to restore and prepare the median for the installation of Crash Cushion Type VI. Use Crushed Aggregate Size No. 57 for surface protection under the proposed bridge per the Standard Drawing. Conform to grading in accordance with RBI-007-09 except Crash Cushion Type VI will be used in lieu of Crash Cushion Type XI. Minor modification to berm grading at the location of the crash cushion will be necessary to accommodate the concrete pad for Crash Cushion Type VI.

IV. METHOD OF MEASUREMENT

A. **Maintain and Control Traffic.** See Traffic Control Plan. Only the bid items listed will be measured for payment. No measurement or payment for striping removal or removal or covering of existing pavement marker lenses will be made and will be considered incidental to "Maintain and Control Traffic".

B. **Site Preparation.** Other than the bid items listed, site preparation will not be measured for payment, but will be incidental to the other items of work.

C. **Clearing and Grubbing.** The item of Clearing and Grubbing will be measured for the KY224 bridge replacement and profile revision portion of the project. All other items of clearing, brush or sod removal, or removal of obstruction required at other locations on the project will be considered incidental to Site Preparation and will not be measured for payment.

D. **Erosion Control.** Erosion control items will be measured and paid in accordance with the Standard Specifications for Road and Bridge Construction. No direct measurement for seeding in locations that erosion control blanket is used will be made as the seeding is incidental to the erosion control blanket in accordance with the specifications.

E. **Relief Joint.** See Relief Joint Detail. Relief Joints will be measured by the square yard of pavement removed and replaced as specified in the Relief Joint Detail. Locations and quantities will be determined in the field by the engineer. Quantities for this item may be increased, reduced or eliminated at the discretion of the engineer.

   If the engineer directs the addition of a drainage outlet, measurement of the linear feet of perforated and non-perforated pipe installed and measurement of the perforated pipe headwall installed will be made. All other items of work required for installation of the relief joint repairs and pipe outlets will be considered incidental to the item "Relief Joint".

F. **Remove Existing Paved Ditch.** Removal of paved ditches will be measured by the square yard and will include the measured quantity that are broken, reshaped, supplemented by channel lining and allowed to remain on the project as approved by the engineer. Channel lining used will be measured separately for payment.

G. **Joint Adhesive.** See "Special Note for Longitudinal Pavement Joint Adhesive".

H. **Pavement Markers Removal.** No direct payment will be made for the removal of the existing pavement markers prior to the milling operation and shall be considered incidental to milling and texturing.

I. **Flume Inlet Ty 2-Mod.** Construct Flume Inlet Type 2 in accordance with RDD-021-07 except truncate construction at Section A-A of the Standard Drawing.

J. **Trench Drain.** Trench Drain will be measured along the bottom of the trench from the beginning of the trench at the edge of pavement to the point the trench daylights into the slope. No direct measurement or payment will be made for the excavation, geotextile fabric, stone backfill or disposal of waste.

K. **Temporary Signal Multi Phase.** The Temporary Signal Multi Phase will be measured once for payment only and will include a signal system capable of controlling one lane traffic on KY 224 and also the exit ramp terminals. Reconfiguration, relocation, or work required to take the system out of service and restore service will not be measured for payment.

L. **Pave Marking-Thermo Cross-Hatch.** Pave Marking-Thermo Cross-Hatch will be measured as the actual area of paint applied to construct the Chevron and not the total area of island.

M. **Pave Mark Thermo Chevron.** Pave Mark Thermo Chevron will be measured as the actual area of paint applied to construct the Chevron and not the total area of gore or island.

N. **Fabric-Geotextile Class 2.** No direct measurement or payment will be made for Fabric-Geotextile Class 2 used in conjunction with the placement of channel lining in channel lined ditches, Relief Joints, Trench Drain Backfill, Edge Drain backfill or other incidental applications. Only applications of Fabric-Geotextile Class 2 with established contract quantities will be measured and paid.

O. **Roadway Excavation, Borrow Excavation and Embankment in Place.** Except for KY 224 Roadway Plan Earthwork and Cross Slope Revision Earthwork, no direct payment will be made for the items “Roadway Excavation” or “Borrow Excavation” or “Embankment in Place”. All excavation, borrow, embankment or grading and dressing necessary to complete the work, such as excavating or dressing slopes, erosion repairs, regrading median, etc., will be considered incidental to the item of work requiring the grading.

A quantity of Embankment in Place has been established and will be measured for payment in accordance with the Specifications for the KY 224 bridge replacement and profile revision work and for the widening required for the WK 9001 cross slope revision. Only items of work included in the Earthwork Summary will be measured for payment.

P. **Trenching.** Trenching will be measured longitudinally along the centerline (baseline) of the ramp for the distance excavated regardless of the width or depth of the excavation.

Q. **Reshape Median.** Reshape median will be measured longitudinally along the centerline of WK 9001 for the distance required to grade the median in preparation for the Crash Cushion Type VI installation in accordance with RBI 007-09. No direct measurement will be made for excavation or embankment, clearing or disposal of waste. Crushed Aggregate #57 for surface protection will be measured for payment.

V. BASIS OF PAYMENT

No direct payment will be made other than for the bid items listed. All other items required to complete the construction will be incidental to the bid items listed. Existing signs damaged by the Contractor will be replaced by the Contractor at his expense. Payment will be made in accordance with the KYTC Standard Specifications, current edition with supplemental specifications and current Standard Drawings unless otherwise specified herein.

A. **Maintain and Control Traffic.** See Traffic Control Plan.

B. **Site Preparation.** Other than the bid items listed, no direct payment will be allowed for site preparation, but will be incidental to the other items of work.

C. **Pavement Marker Removal.** No direct payment will be made for the removal of the existing pavement markers prior to the milling operation and shall be considered incidental to milling and texturing.

D. **Temporary Striping.** In accordance with Section 714.04.01, the Department will **NOT** measure temporary paint used for interim markings for Thermoplastic Paint applications.

E. **Lane Closures.** Contrary to Section 112, lane closures will not be measured for payment but will be incidental to the bid item "Maintain and Control Traffic". Arrow boards, portable message boards, and signs shall be paid for one time regardless of how many times they are moved.

F. **Barricade Type III –** Contrary to the specifications, no direct measurement or payment will be made for Barricade Type III.

G. **Ditching and Shouldering.** In accordance with Section 209 of the Standard Specifications, the bid item "Ditching and shouldering" includes ditching on both sides of the roadway and the median for the entire length of the project. Cleaning of all drainage structures, including perforated pipe headwalls and pipe structures 36 inches in diameter or less is also included in this bid item. In addition to Section 209.04.06 shouldering shall include all materials required to complete the shoulder repairs as shown in the shoulder repair detail except the bid items listed for payment on the shoulder repair detail. Approximate locations for this repair is shown on the shoulder repair detail. Plan quantity of "Ditching and Shouldering" will be paid upon the completion of all items of work required.

H. **Remove Existing Paved Ditch.** The removal of the existing paved ditch shall be paid for as "square yards" and shall include the breaking and reshaping of the existing concrete in preparation for installation of the Class III Channel Lining.

I. **Milling and Texturing.** Milling and texturing will be paid for per section 408.05 of the 2019 Standard Specifications. No direct payment will be made

for disposal of millings. Additional and variable thickness of milling is required for profile and cross slope revisions. Payment per measured ton of "Asphalt Pave Milling and Texturing" will be considered full compensation for any work required to measure, control, and carry out the additional or variable depth of milling required to modify profile grade or cross slope.

J. **Waterblasting Striping Removal.** Waterblasting Striping Removal will be required for all striping removal applications and will be considered incidental to "Maintain and Control Traffic".

K. **Joint Adhesive.** See "Special Note for Longitudinal Pavement Joint Adhesive"

L. **Asphalt Material for Tack Non-Tracking.** See Special Note for Non Tracking Tack Coat.

M. **Crushed Aggregate Size No 2.** No direct measurement or payment will be made for Crushed Aggregate Size No. 2 used in "Relief Joint" construction. All other applications of Crushed Aggregate Size No. 2 will be measured and paid in accordance with the Standard Specifications.

N. **Fabric-Geotextile Class 2.** No direct measurement or payment will be made for Fabric-Geotextile Class 2 used in conjunction with the placement of channel lining in channel lined ditches, Relief Joints, Trench Drain Backfill, Edge Drain backfill or other incidental applications. Only applications of Fabric-Geotextile Class 2 with established contract quantities will be measured and paid.

O. **Relief Joint.** See Relief Joint Detail. Relief Joints will be measured by the square yard of pavement removed and replaced as specified in the Relief Joint Detail.

If the engineer directs the addition of a drainage outlet, payment at the contract unit price of the linear feet of perforated and non-perforated pipe installed and payment at the contract unit price for the perforated pipe headwall installed will be made. All other items of work required for installation of the relief joint repairs and pipe outlets will be considered incidental to the item "Relief Joint".

P. **Inspect and Certify Edge Drain System.** One payment for "Inspect and Certify Edge Drain System" will include both the initial camera inspection of the entire existing system which is required to identify damaged and nonfunctional areas in the existing system requiring replacement, and also includes the second inspection required for certification of the newly installed replacement areas.

Q. **Guardrail.** The Department will only measure and pay for the removal of guardrail and placement of new guardrail for items of work that have an established contract quantity of guardrail items. Removal of guardrail may be allowed for other work items for access to the work area, however the removal and reinstallation of guardrail for these applications will be at the contractor's expense.

WK 9001
Grayson County
NHPP 9001 (014)
FD52 043 9001 111-115
Item No. 4-20001 & Item 4-20002

MP 111.25 to MP 114.882

This project is intended to provide an intermediate mill and inlay from MP 111.25 to MP 112.4 and a thin mill and inlay from MP 112.4 to MP 114.882. The KY 224 overhead structure will be replaced to attain the required vertical clearance over the Western KY Parkway (WK 9001) and the profile of KY 224 revised to improve stopping sight distance and intersection sight distance. This project will include the resurfacing of both the inside and outside shoulder.

1. The dimensions shown on the typical section for pavement and shoulder widths and thickness are nominal or typical dimensions. The actual dimensions to be constructed may be varied to fit existing conditions as directed or approved by the Engineer. It is not intended that existing pavement or shoulders be widened unless otherwise specified in the Proposal.

2. The contractor is to be advised of the locations of overhead utility wires on the project. The following locations are approximate:

Mile 111.248	KY 224 STA. 46+95
Mile 112.26	RAMP A STA. 80+74
Mile 112.33	
Mile 114.13	
Mile 114.57	

CAUTION: Other overhead utility locations may exist. These and all other utilities should be avoided on this project. If any utility is impacted, it will be the contractor's responsibility to contact the affected utility and cover any costs associated with the impact.

3. The contractor is advised that the planned locations of work established by milepoints are referenced from the Kentucky Transportation Cabinet's Official Route Log. The existing reference markers may not correspond to the established work locations.

4. Quantities of guardrail removal and installation of new guardrail have been established for areas requiring removal for access for shoulder erosion repair work, cross slope repair, etc. The contractor will place traffic drums on 20' spacing in the areas and pin down exposed blunt ends until such time that guardrail is re-established. Either a lane closure or shoulder closure shall be in place at any time that a section of guardrail is not in place.

5. The Contractor shall deliver existing salvaged guardrail system materials to the Central Sign Shop and Recycle center at 1224 Wilkinson Blvd in Frankfort, KY. Contact Section Supervisor at (502) 564-8187 to schedule the delivery of material. Deliver the material between the hours of 8:00AM and 3:30PM, Monday through Friday. There is a Guardrail Delivery Verification Sheet which must be completed and signed by the Contractor, Engineer and a representative of the Central Sign Shop and Recycle Center. A copy of this sheet is included elsewhere in the proposal.

6. Flexible Delineators shall meet the requirements of Section 830 and 838 of the Standard Specifications, and be placed in accordance with Section 3D of the M.U.T.C.D., current edition and current Standard Drawing.

7. This project requires the use of a Material Transfer Vehicle. In accordance with Section A of 403.03.05.

8. The speed limit on the project will be reduced to 55 mph while lane closures are in place. Any time work is suspended the speed limit will revert back to 70 mph. Also, double fine signs are set up in the project to be installed while workers are present in the work zone.

9. Areas throughout the project have slopes that are eroding significantly. These areas shall be repaired in accordance with the "Shoulder Erosion Repair Detail" as shown elsewhere in the proposal. The repair locations listed may be lengthened, shortened, or eliminated by the Engineer. Locations and quantities for this item of work is shown on the "Shoulder Erosion Repair Detail".

10. The existing paved median U-turns within the project limits will be resurfaced.

11. The contractor will be allowed to access median U-turns and cross the median provided proper lane closures of the inside lanes are utilized at the entry and exit locations at the contractor's expense. Use only short duration lane closures and remove lane closures when median U-turn access is not needed.

12. Quantities of Channel Lining Class III have been included for use in KY 224 Roadway Plans and also to be used in eroded areas around pipe inlet/outlets or in ditches to be repaired as directed and/or approved by the Engineer. The actual limits of the channel lining will be as directed and/or approved by the Engineer. Geotextile Fabric Class 2, as outlined in Section 214 of the Standard Specifications, will not be measured for payment and will be considered incidental to channel lining.

13. The contractor is to take care not to damage any existing roadway signs. Any roadway signs that are damaged during construction are to be replaced at the contractor's expense in accordance with section 105.08 of the standard specifications.

14. The cleaning of existing pipe culvert inlets and outlets 36 inches or less in diameter are incidental to the bid item for "Ditching and Shouldering" in accordance with Section 209 of the 2019 Edition of the Standard Specifications for Road and Bridge Construction. This includes the cleaning of existing perforated pipe headwalls. Cleaning of all drainage structures and perforated pipe headwalls will be required whether or not they are identified on the plan sheets. Locations of existing drainage structures and perforated pipe headwalls are for informational purposes only and are not to be considered to consist of all possible structures.

15. Areas established as relief joint locations will be repaired as directed by the Engineer. After the contractor has closed the roadway the Engineer will mark the areas to be repaired. The engineer reserves the right to increase, decrease, or eliminate this item of work based on the field conditions encountered.

16. Quantities of Asphalt Seal Coat and Seal Aggregate, and DGA base have been established to wedge and eliminate greater than 1 inch drop offs. Due to the inconsistent nature of the slopes outside the paved shoulder, and due to the existence of existing guardrail, application of asphalt seal coat will not be practical in all locations. The intent is to provide a DGA wedge to eliminate dropoff situations and to re-establish the typical stone shoulder width where needed and where practical to do so. Place asphalt seal coat on all shoulders reconstructed as part of the KY 224 Roadway Plan work.

17. Approximate Right of Way limits are shown on the KY 224 Roadway Plans. All work is to be contained on existing Right of Way. The contractor shall be responsible to obtain a written agreement with any adjacent property owner if he chooses to perform activities that will encroach on property other than existing Right of Way.

18. Coordinate activities of any adjacent contracts with this contract. The engineer will decide the relative priority concerning phasing and maintenance of traffic when conflicts arise with projects in close proximity with this project.

19. There are quantities of perforated pipe headwalls, perforated and non-perforated pipe, remove and reset perforated pipe headwalls, and #2 crushed aggregate established to remove and replace some of the existing edge drain system. The bid item “Remove and Reset Perforated Pipe Headwalls” will be full compensation to remove the existing headwall, cleaning the headwall of debris, install a new rodent screen, and reinstall the headwall at a 4% slope to insure positive outflow. The existing pipe and headwalls to be removed and replaced instead of removed and reset shall become the property of the contractor and be disposed off the project. Outlet pipes and headwalls are to be located where existing perforated pipe headwalls occur in the field if practical. Some headwalls were not discovered during the initial survey. The contractor shall space outfall pipes and headwalls per notes on the edge drain detail. Removal and disposal of existing perforated pipe outlets is incidental to other items of work. There are quantities of Crushed Aggregate Size No. 2 to be utilized in accordance with standard drawing RDP-010-08 around the headwall for both new headwalls and re-installed headwalls.

20. The existing edge drain system is to be preserved except in areas designated or during the inspection determined to be removed and replaced. Any part of the edge drain system damaged during other construction activities will be replaced at the contractor's expense. The Contractor will clean existing perforated pipe headwalls and replace rodent screens as part of the bid items “Ditching and Shouldering”.

21. Perforated pipe headwall types are to be field verified prior to ordering. Class 3 Asphalt Base 1.0D PG64-22 shall be used in the trench cap to bring the top of trench elevation back to the original grade prior to milling and resurfacing (See Typical Section). Quantities for the asphalt cap have been included in the summaries.

22. Lighting quantities have been established for the replacement of circuit # 6. The contractor shall follow the bridge construction phasing as outlined in the Maintenance of Traffic in order to maintain power to pole #6 as long as possible. Circuit #6 may only be out of service the minimal amount of time required to construct end bent 2 and construct phase 1 of the bridge. The contractor shall install the replacement cabling to pole #6 immediately upon completion of phase 1 bridge construction.

23. A quantity of Traffic Bound Base has been established for temporary maintenance of traffic for entrances.

24. Crash Cushion Type VI will be used in lieu of Crash Cushion Type IX at the KY 224 median pier. Regrade median in accordance with RBI 007-09, except minor flattening or modification to the berm will be required for placement of the concrete pad required for the Crash Cushion Type VI. All reference to Crash Cushion Type IX in RBI-005-08 will be considered to mean Crash Cushion Type VI. Construct median pier transitions for Crash Cushion Type VI in accordance with Sepia 5 and Sepia 5N.

REFERENCES

1. Kentucky Transportation Cabinet, Department of Highways, Standard Specifications for Road and Bridge Construction, Edition of 2019.

2. FHWA Manual on Uniform Traffic Control Devices – 2009 Edition.

3. Kentucky Department of Highways Standard Drawings, Current Edition, as applicable:

BHS-014	THRIE-BEAM GUARDRAIL TRANSITION
RBE-060-15	CRASH CUSHION TYPE VI
RBI-001-12	TYPICAL GUARDRAIL INSTALLATIONS
RBI-002-07	TYPICAL GUARDRAIL INSTALLATIONS
RBI-005-08	GUARDRAIL INSTALLATION AT BRIDGE COLUMNS
RBI-007-09	CRASH CUSHION TYPE IX INSTALLATION AT MEDIAN PIERS (DEPRESSED MEDIAN)
RBM-020-09	DELINEATORS FOR CONCRETE BARRIERS
RBM-115-10	CONCRETE BARRIER WALL TYPE 9T (TEMPORARY)
RBM-120-02	BOX BEAM STIFFENING PF TEMPORARY CONCRETE BARRIER
RBR-001-13	STEEL BEAM GUARDRAIL (“W’ BEAM)
RBR-005-11	GUARDRAIL COMPONENTS
RBR-010-06	GUARDRAIL TERMINAL SECTIONS
RBR-015-06	STEEL GUARDRAIL POSTS
RBR-018	GUARDRAIL SYSTEM TRANSITION
RBR-025-06	GUARDRAIL END TREATMENT TYPE 2A
RBR-035-12	GUARDRAIL END TREATMENT TYPE 4A
RBR-055-01	DELINEATORS FOR GUARDRAIL
RDB-106-05	GRATES FOR SLOPED AND FLARED BOX INLET-OUTLET
RDD-021-07	FLUME INLET TYPE 2
RDD-040-05	CHANNEL LINING CLASS II AND III
RDI-011-03	CULVERT, ENTRANCE, AND STORM SEWER PIPE TYPES AND COVER HEIGHTS
RDI-020-10	PIPE BEDDING FOR CULVERTS, ENTRANCE PIPES AND STORM SEWER PIPE
RDI-021-01	PIPE BEDDING FOR CULVERTS, ENTRANCE, AND STORM SEWER REINFORCED CONC. PIPE
RDI-025-06	PIPE BEDDING TRENCH CONDITION
RDI-026-01	PIPE BEDDING TRENCH CONDITION REINFORCED CONC. PIPE
RDI-035-02	COATINGS, LININGS AND PAVINGS FOR NON-STRUCTURAL PLATE PIPE
RDI-040-01	EROSION CONTROL BLANKET SLOPE INSTALLATION
RDI-041-01	EROSION CONTROL BLANKET CHANNEL INSTALLATION
RDP-001-06	PERFORATED PIPE TYPES AND COVER HEIGHTS
RDP-010-09	PERFORATED PIPE HEADWALLS
RDX-210-03	TEMPORARY SILT FENCE
RDX-220-05	SILT TRAP - TYPE A
RDX-225-01	SILT TRAP - TYPE B
RDX-230-01	SILT TRAP - TYPE C
RGS-001-07	CURVE WIDENING AND SUPERELEVATION TRANSITIONS
RGS-002-06	SUPERELEVATION FOR MULTI-LANE PAVEMENT

RGX-001-06	MISCELLANEOUS STANDARDS
RGX-010-04	TYPICAL EMBANKMENT FOUNDATION BENCHES
RGX-200-01	ONE POINT PROCTOR FAMILY OF CURES
RPM-001-04	PERMANENT U-TURN MEDIAN OPENING
RPM-100-11	CURB AND GUTTER CURBS AND VALLEY GUTTER
RPM-110-07	APPROACHES, ENTRANCES, AND MAIL BOX TURNOUT
RPX-015-04	HOT-POURED ELASTIC JOINT SEALS FOR CONCRETE PAVEMENT
TPM-170-01	FLEXIBLE DELINEATOR POST ARRANGEMENTS FOR HORIZONTAL CURVES
TPM-171-01	FLEXIBLE DELINEATOR POST ARRANGEMENTS FOR INTERCHANGE RAMPS AND CROSSOVERS
TPM-200	TYPICAL ENTRANCE RAMP MARKINGS FOR INTERSTATES AND PARKWAYS
TPM-201	TYPICAL EXIT RAMP MARKINGS FOR INTERSTATES AND PARKWAYS
TPM-204	TYPICAL MARKINGS FOR GORE AREAS
TPM-205	TYPICAL MARKINGS FOR ISLANDS AND MEDIANS
TPR-130	RUMBLE STRIP DETAILS MULTI-LANE ROADWAYS
TTC-100-05	LANE CLOSURE TWO-LANE HIGHWAY
TTC 110-04	LANE CLOSURE USING TRAFFIC SIGNALS
TTC-115-04	LANE CLOSURE MULTI-LANE HIGHWAY CASE I
TTC-120-04	LANE CLOSURE MULTI-LANE HIGHWAY CASE II
TTC-135-03	SHOULDER CLOSURE
TTD-120-03	DOUBLE FINES ZONE SIGNS
TTD-125-03	PAVEMENT CONDITION WARNING SIGNS
TTD-130	SPEED ZONE SIGNING FOR WORK ZONES
TTS-105-02	MOBILE OPERATION FOR PAINT STRIPING CASE II
TTS-110-02	MOBILE OPERATION FOR PAINT STRIPING CASE III
TTS-115-02	MOBILE OPERATION FOR PAINT STRIPING CASE IV
TTS-120-02	MOBILE OPERATION FOR DURABLE STRIPING CASE 1

4. Kentucky Transportation Cabinet, Department of Highways, Standard Specifications for Road and Bridge Construction, Edition of 2019, Including - Supplemental Specifications, as applicable:

Special Note	Typical Section Dimensions *attached*
Special Note	Portable Changeable Message Signs *attached*
Special Note	Before You Dig *attached*
Special Note	Fixed Completion Date and Liquidated Damages *attached*
General Note	Asphalt Pavement Ride Quality (Cat A) *attached*
General Note	Compaction of Asphalt Mixtures (Option A) *attached*
Special Note	Asphalt Milling and Texturing *attached*
Special Note	Special Note for Significant Project *attached*
Special Note	Guardrail Delivery Verification Sheet *attached*
Special Note	Special Note for Longitudinal Pavement Joint Adhesive *attached*
Special Note	Special Note for Paver Mounted Temperature Profiles *attached*
Special Note	Special Note for Non-Tracking Tack Coat *attached*
Special Note	Special Note for Experimental KYCT and Hamburg Testing *attached*
Special Note	Special Note for Portable Queue Warning Alert System *attached*

SPECIAL NOTE FOR TYPICAL SECTION DIMENSIONS
WK 9001
GRAYSON COUNTY
ITEM NO. 4-20001 & 4-20002

The dimensions shown on the typical sections for pavement and shoulder widths are nominal or typical dimensions. The actual dimensions to be constructed may be varied to fit existing conditions as directed or approved by the Engineer. It is not intended that existing pavement or shoulders be widened or narrowed **EXCEPT** where specified elsewhere in the Proposal.

SPECIAL NOTE FOR BEFORE YOU DIG

WK 9001
GRAYSON COUNTY
ITEM NO. 4-20001 & 4-20002

Call 1-800-752-6007 toll free a minimum of two and no more than ten business days prior to excavation for information on the location of existing under-ground utilities which subscribe to the before-u-dig (BUD) service. Coordinate excavation with all utility owners, including those who do not subscribe to BUD.

Special Note for Fixed Completion Date and

Liquidated Damages

WK 9001
GRAYSON COUNTY
ITEM NO. 4-20001 & 4-20002

Liquidated Damages in the amount specified in the Standard Specifications, per calendar day, will be assessed for each day work remains incomplete beyond the Specified Project Completion Date. This project has a Fixed Project Completion Date of November 1, 2022.

Additionally, all work required by the WK 9001 rehabilitation portion of the project, including the Clarkson interchange ramps shall be required to be completed by October 1, 2022. Completion of all drainage work, perforated pipe repairs, ditching and shouldering, guardrail, cross slope revision, erosion repairs, milling and inlay including final asphalt surfacing, final pavement markings and pavement markers, and shoulder rumble strips for the mainline WK 9001 and the Clarkson interchange ramps shall be required to be complete by October 1, 2022. Failure to complete the work described for this required milestone specified completion date of October 1, 2022 will result in charges of liquidated damages in the amount specified in the Standard Specifications.

All penalties or Liquidated Damages will be assessed cumulatively and charged concurrently when applicable.

Also contrary to Section 108, liquidated damages will be charged during the months of December through March.

SPECIAL NOTE FOR
ASPHALT MILLING AND TEXTURING
WK 9001
GRAYSON COUNTY
ITEM NO. 4-20001 & 4-20002

Do not allow public traffic to drive on the milled surface on mainline WK 9001. Traffic may be allowed to travel on milled surfaces for up to 7 days on each ramp.

The Contractor will take possession and dispose of the millings at a location off the right of way.

Removal of the existing pavement markers prior to the milling operation is considered incidental to the bid item “Asphalt Pavement Milling and Texturing”.

Milling to key in the top 2 base courses on KY224, Hickory Flats, and Ramps, and final asphalt surface course on KY 224 and Hickory Flats will be measured and paid in tons of “Asphalt Pave Milling & Texturing”. Any reference to a key or keying in of the proposed asphalt pavement will be considered to be milling and texturing. Preparation for placement of all other base layers below the 2nd course will be accomplished by leveling and wedging the existing surface to prepare for placement of each course and by ramping up to the top of the proposed course with leveling and wedging.

Partial depth and variable depth milling will be required on the KY 224 profile correction portion of the project to prepare the existing surface grade to receive the proposed thickness of the top course of asphalt base at various locations. The contractor shall provide adequate staking and process control measures to ensure existing pavements are milled to the depths required to accept the proposed thickness of asphalt and at the proposed grade.

SPECIAL NOTE FOR CONCRETE SEALING

These Notes or designated portions thereof, apply where so indicated on the plans, proposals or bidding instruction.

I. **DESCRIPTION.** Perform all work in accordance with the Department's 2019 Standard Specifications, and applicable Supplemental Specifications, the attached sketches, and these Notes. Section references are to the Standard Specifications.
This work consists of: (1) Furnish all labor, materials, tools, and equipment; (2) Clean the bridge deck; (3) Seal the bridge deck; (4) Maintain & control traffic; and, (5) Any other work specified as part of this contract.

II. **MATERIALS**.

A. **Sealer.** Use one of the following:

Product	Supplier
Protectosil BHN	Evonik Industries
Protectosil 300S	Evonik Industries
TK-590-40 Tri-Silane 40%	TK Products
SW-244-100	Chemical Products Industries, Inc.
TK-590-1 MS Tri-Silane	TK Products
MasterProtect H1000	BASF
Aquanil Plus 40	ChemMasters
SIL-ACT ATS-100	Advanced Chemical Technologies
Certivex Penseal BTS 100%	Vexcon
Pentreat 244-40	W.R. Meadows
Aquanil Plus 40A	ChemMasters

B. **Coverage Rate:** Follow all manufacturers recommendations for coverage rates except the application rate must not exceed the square footage coverage rate per gallon of sealer as given in the chart below. If the manufacturer recommends a coverage rate greater than given in the table below, apply sealer at the rate given in the table below for the chosen sealers silane percentage.

% Silane	Coverage rate (ft^2/gallon)
100	300
40	120
20	60

III. CONSTRUCTION.

A. Curing Compound. Contrary to Section 609.03.12 of the specifications, curing compound is not to be used on this deck due to potentially causing issues with the concrete sealer. During the deck pour, finishing, and tining operations the Class AA concrete shall be kept continuously moist with the use of a mister until burlap or curing blankets are applied to the surface. At no point should water be pooling or running off the surface or the surface of the concrete be allowed to become dry. After the burlap or curing blankets are installed, cure in accordance with the specifications. Include all costs in the unit price bid for Class AA concrete. Failure to properly cure the concrete in accordance with this note and the specifications may result in weakened or cracked concrete. If the concrete is weakened or cracked due to improper curing, the contractor will be responsible for providing alternates to fix the issues to the Engineer for review and the contractor will be solely responsible for all costs to do so, up to complete replacement. Do not begin any construction on fixing any issues without approval of the Engineer.

B. Cleaning the Deck. Dry clean the deck to remove all loose debris. Remove all visible hydrocarbons from the surface with detergent approved by the manufacturer of the deck sealant. Pressure wash all surfaces to be sealed at 2000 to 3000 psi. Install pressure gauges at each wand to verify pressure. Use 30° fan tip or as recommended by the manufacturer of the deck sealant. Hold pressure washing wand a minimum of 45° from the deck with a maximum stand-off distance of 12 inches.

C. Sealing the Deck. Allow new concrete to cure a minimum 28 days prior to application of sealer. Monitor weather conditions prior to sealer application. Refer to manufacturer's recommendations for proper ambient conditions. Do not apply sealer if precipitation is anticipated within the time stated by the manufacturer. Allow the deck to dry 24 hours (after washing or rain event) before sealer application. The deck can be reopened to traffic while drying. Sealer must be applied within 48 hours of washing or the deck must be rewashed. Divide the deck into predefined areas of specific square footage to aid in determining usage. Comply with manufacturer's usage recommendation. Using a low

pressure pump, apply sealer and spread evenly with broom or squeegee; do not allow pooling to remain. When each predefined area is complete, measure the amount of sealer used to verify proper usage. After sealing, follow manufacturer's recommended cure time before opening to traffic. On vertical surfaces, apply the sealer in a flooding application from the bottom up, so the material runs down 6 to 8 inches below the spray pattern.

D. Inspection: Monitor all aspects of the project to assure compliance to this specification. Observe and document general conditions during the entirety of the project. Verify that each phase of work has been satisfactorily completed prior to beginning the next phase. Phases are described as follows:

1. Dry cleaning to remove loose debris, verify and document:
   a. All debris has been removed and disposed of properly.
2. Removal of hydrocarbons, verify and document:
   a. The manufacturer's recommended detergent is used for removal.
   b. Hydrocarbons have been satisfactorily removed.
3. Pressure washing, verify and document:
   a. Washing pressure at the wand.
   b. Tip size used.
   c. Wash angle and stand-off distance.
   d. The deck is satisfactorily cleaned.
4. Sealer application, verify and document:
   a. Proper cure time for new concrete.
   b. Deck surface is dry.
      1. Document time since washed.
      2. Was deck opened to traffic after washing?
   c. Ambient conditions.
      1. Document ambient temperature, surface temperature, relative humidity, and dew point.
   d. Application and distribution method.
   e. Coverage to be complete and even.
   f. Material is not allowed to remain pooled.
   g. Monitor material usage.
   h. No traffic until proper cure time is allowed.

IV. MEASUREMENT

A. Concrete Sealing. The Department will measure the quantity per square feet of each area sealed.

V. PAYMENT

A. **Concrete Sealing.** Payment at the contract unit price per square feet is full compensation for the following: (1) Furnish all labor, materials, tools, and equipment; (2) Clean the bridge deck; (3) Seal the bridge deck; (4) Maintain & control traffic; and, (5) Any other work specified as part of this contract.

Rev 8/2021

Special Note for Portable Queue Warning Alert System

1.0 Description

This item shall consist of furnishing, installing, relocating, operating, servicing, and removing various components of a portable, quickly deployable, real-time automated ITS queue warning alert system (PQWAS), in accordance with the standard specifications and this special provision. The Contractor shall also provide the maintenance of the complete system for the duration of the project or as directed by the Project Engineer. The Department is willing to look at different technologies (i.e. allow the use of crowd sourcing data to be used in lieu of the portable radar sensors). Any changes to the below requirements must be submitted and approved by the Engineer.

2.0 Materials

Materials shall be in accordance as follows:

All materials used shall meet the manufacturer's specifications and recommendations.

All PQWAS materials installed on the project shall be provided by the Contractor in excellent quality condition, shall be corrosion resistant and in strict accordance with all of the details shown within Contractor's Plans approved by KYTC. The Contractor shall maintain an adequate inventory of parts and replacement units to support maintenance and repair of the PQWAS. Pre-deployment is a condition of the system's acceptance and is based on the successful performance demonstration for a (5) day continuous period in accordance to this specification and as set forth in the plans. Ensure compliance to all FCC and Department specifications.

The Contractor shall maintain this system and shall be locally available to service and maintain system components, move portable devices as necessary and respond to emergency situations. The Contractor has oversight responsibility for directing placement of devices in the project area. The Contractor is to be accessible seven (7) days a week and twenty-four (24) hours a day while the system is deployed. The Contractor shall provide contact information for the system's coordinator and others responsible for maintenance of the system prior to installation of the system. Furnish a System Coordinator for monitoring the PQWAS throughout all periods of deployment.

A. General Capabilities and Performance Requirements

1. Overall PQWAS capabilities and performance requirements include the following:
   a. Furnish a system capable of providing advance traffic information to motorists when there is a queueing of traffic due to congestion resulting from lane reductions, emergency events or other conditions. The condition-responsive notification to the motorist occurs with the use of Portable Changeable Message Signs (PCMS) in accordance to the below capabilities and performance requirements, activated through real-time traffic data collected downstream of the PCMS locations. This equipment must

be a packaged system, pre-programmed and operates as a stand-alone PQWAS meeting this specification. Conditions might exist that require relocation of the portable sensors at any given time, the sensors shall be portable and shall not require re-calibration in the field for fast deployments. Due to the potential need to replace damaged sensors or to change the position of one or more sensors at any given time, sensors must be interchangeable and relocatable by an unskilled laborer. The system must continue to function if as many as half the sensors fail to function.

b. Provide a PQWAS that consists of the following field equipment: portable radar sensors and portable changeable message signs (PCMS). Provide a system capable of withstanding inclement weather conditions while continuing to provide adequate battery power. The portable radar sensor battery, in a stand-alone state and without a solar panel for recharging, shall be capable of keeping power and capable of sending data for (10) consecutive days or longer. The system shall notify drivers of real-time queue events via specifically placed PCMS units up stream of the work zone. All predetermined/preprogrammed messages are to be approved by KYTC. The number and location of portable radar sensors and PCMS units shall be as directed by the Project Engineer. The decision to deploy or relocate field equipment is made by the Project Engineer and instrumented through the System Coordinator. The decision for equipment removal is made by the Project Engineer after work is complete. The sensors and PCMS units shall be identifiable via global positioning system (GPS) and shall contain an accelerometer to detect and alert of unauthorized movement.

c. The portable radar sensor shall be capable of collecting traffic speed data. The processed data is used to remotely control PCMS units to display user definable, Engineer approved and locally stored messages. The message trigger state thresholds for slow and stopped speeds shall be user configurable and revisable in less than {1) hour from the Project Engineer's request. Weekly Traffic Data Reports shall be presented to the Project Engineer and shall include speed data per sensor location, travel times, and queue lengths in graphical and numerical formats. In the event the Project Engineer requires a report, other than a weekly report, for any reason; then the Contractor shall provide report within (48) hours of request. Unlimited data reports shall be included within price of system. Sensors shall require no calibration adjustments in the field. Sensor should begin transmitting data within (30) seconds of being turned on. Satellite (SAT) communications will be required when cellular service does not provide continuous communications. Contractor shall identify the most trustworthy cellular provider within the project area.

d. Data shall be accessible through a website and the Contractor shall provide a username and password for protection. The website shall be accessible seven (7) days a week and twenty - four (24) hours a day. The website shall provide historical & real-time data in graphical and numerical formats and shall have the capability of being integrated within the Department's Traffic Management Center (if requested). The website should be compatible to most hand held devices. Data shall be saved on the manufacturer's network for up to (5) years from the deployment date of system and shall be provided at the request

of the Department at any time within the (5) year window. The use of the website shall be included within the price of system.

e. Warning Alerts: queue events, low battery voltage warnings, sensor movement alerts, high and low speed alerts shall be provided via cellular text messaging and/or via email messaging at the request of select Contractor personnel and KYTC officials.

f. The PQWAS system shall have the capabilities to provide alternate route messaging on specifically placed portable changeable message units and/or fixed Variable Message Systems (VMS). The intent of this service is to provide alternate route messaging to motorists before entering the project limits from all directions and giving them appropriate time to adjust their routes. Alternative routes shall be predefined and approved by KYTC. Additional PCMS units may be required for alternate route messaging and will be as per Section 5.0 of this note. KYTC's Traffic Management Center will provide detour messages via fixed VMS units during the term of the project.

B. Portable Radar Sensor Capabilities and Performance Requirements

The PQWAS shall include portable radar sensors (PRD) to monitor and detect queue events.

1. The Radar Sensor shall be FHWA accepted to meet NCHRP 350 test requirements
2. The Radar Sensor shall be locatable at all times via an internal Global Positioning System (GPS) and shall be capable of Cellular or SAT Communications.
3. The Radar Sensor shall have a dry-cell battery capable of powering the system for (10) consecutive days or longer
4. The Radar sensor shall be K-Band technology and have a line of sight up to 200 linear feet without obstruction
5. The Radar sensor shall have the ability to be charged in the field through adaptable solar recharging technology in the case the sensor is utilized for more than 10 consecutive days

C. PCMS Capabilities and Performance Requirements

The PQWAS shall include portable changeable message signs (PCMS) designated to relay automated messaging of queue events, alternate route messages, and caution for the work area defined by the project limits. PCMS placements shall meet the requirements set forth by the Cabinet in each direction of the National Highway System (NHS).

1. The PCMS unit shall be a Full Matrix 24 rows x 50 columns and shall be capable of l line, 2line or 3 line messages
2. The PCMS unit shall be legible from a distance over twelve hundred feet (1200')
3. The height and size of characters shall be 18" to 58"
4. The PCMS shall be capable of storing up to 199 pre-programmed messages and up to 199 user-defined messages
5. The PCMS shall have a weather tight control cabinet with back lit LCD handheld controller.
6. The PCMS shall utilize a hydraulic lift to raise the unit to display height
7. The PCMS unit shall include solar recharging ports to allow for recharging of the portable radar sensors when they are not deployed.
8. The PCMS shall be NTCIP compliant and shall have an active Modem with active cellular service.

9. The user shall have the ability to communicate and override the PCMS remotely in the event of an emergency, Amber Alert, etc.
10. The PCMS unit shall have a docking station to include safety rails that allow a commercial safety strap to tie down the portable radar sensors while in transport. The docking station shall hold-up to (4) sensors safely and securely at all times

3.0 Construction Requirements

All communication costs include cellular telephone services, FCC licensing, wireless data networks, satellite and internet subscription charges, and battery charging and maintenance. Additional to these requirements, the Contractor shall assume all responsibility for any and all damaged equipment due to crashes, vandalism, and adverse weather that may occur during the contract period.

The PQWAS shall operate continuously (24 hours/ 7 Days) when deployed on the project. The system is in a constant "data collection" mode when deployed. The Contractor shall provide technical support for the PQWAS for all periods of operation.

In the event communication is lost with any component of the PQWAS, provide a means and staff to manually program a PCMS message. If communication is lost for more the 10 consecutive minutes, the system shall revert to a fail-safe ROADWORK/# MILES/AHEAD message displayed on the PCMS units until communication is restored.

System Operator, local control function and remote management operation must be password protected.

The PQWAS shall be capable of acquiring traffic information and selecting messages automatically without operator intervention after system utilization. The lag time between changes in threshold ranges and the posting of the appropriate PCMS message(s) shall be no greater than (60) seconds. The system operation and accuracy must not be appreciably degraded by inclement weather or degraded visibility conditions including precipitation, fog, darkness, excessive dust, and road debris.

The system shall be capable of storing ad-hoc messages created by the System Coordinator and logging this action when overriding any default or automatic advisory message.

The PQWAS communication system shall incorporate an error detection/correction mechanism to insure the integrity of all traffic conditions data and motorists information messages. Any required configuration of the PQWAS communication system shall be performed automatically during system initialization.

The system's acceptance is based on the successful performance demonstration of PQWAS for a (5) day continuous period in accordance to this specification and as set forth in the plans.

Ensure compliance to all FCC and Department specifications.

4.0 Equipment Maintenance.

Maintain system components in good working condition at all times. Repair or replace damaged or malfunctioning components, at no cost to the Department, as soon as possible and within (12) hours of notification by the Engineer. Periodically clean PCMS units if necessary.

5.0 Measurement. The Department will measure each item below in Months. For partial months the Department will pay in 0.25 increments based on the number of calendar days in the below table.

Partial Month Payment Schedule

Days	Increment
0-7 days	0.25
8-14 days	0.50
15-21 days	0.75
22-31 days	1.00

5.1 Portable Queue Warning Alert System includes cellular (SAT communications will be required if cellular is not available), all supporting field equipment, website, and unlimited data reports accessible by the Engineer. It will be measured by the number of months authorized by the Engineer for use on the project.

5.2 Queue Warning PCMS will be measured by each individual unit multiplied by the number of months authorized by the Engineer for use on the project.

5.3 Queue Warning Portable Radar Sensors will be measured by each individual unit multiplied by the number of months authorized by the Engineer for use on the project. Queue Warning Portable Radar Sensors will not be measured for payment if the Contractor utilizes a system operating on crowd sourcing data. Crowd sourcing data systems will only be allowed as approved by the engineer and will be considered incidental to Portable Queue Warning Alert System.

6.0 Payment.

Code	Pay Item	Pay Unit
26136EC	Portable Queue Warning Alert System	Month
26137EC	Queue Warning PCMS	Month
26138EC	Queue Warning Portable Radar Sensors	Month

Rev 9/2021

SPECIAL NOTE FOR PAVER MOUNTED TEMPERATURE PROFILES

This Special Note will apply when indicated on the plans or in the proposal. Section references herein are to the Department's Standard Specifications for Road and Bridge Construction current edition.

1.0 DESCRIPTION. Provide a paver mounted infrared temperature equipment to continually monitor the temperature of the asphalt mat immediately behind all paver(s) during the placement operations for all mainline pavements (including ramps for Interstates and Parkways) within the project limits. Provide thermal profiles that include material temperature and measurement locations.

2.0 MATERIALS AND EQUIPMENT. In addition to the equipment specified in Subsection 403.02 Utilize a thermal equipment supplier that can provide a qualified representative for on-site technical assistance during the initial setup, pre-construction verification, and data management and processing as needed during the Project to maintain equipment within specifications and requirements.

Provide operator settings, user manuals, required viewing/export software for analysis. Ensure the temperature equipment will meet the following:

(A) A device with one or more infrared sensors that is capable of measuring in at least 1 foot intervals across the paving width, with a minimum width of 12 feet, or extending to the recording limits of the equipment, whichever is greater. A Maximum of two (2) brackets are allowed in the influence area under the sensors. A temperature profile must be made on at least 1 foot intervals longitudinally down the road:

(B) Infrared sensor(s):

(1) Measuring from 32°F to 400°F with an accuracy of ± 2.0% of the sensor reading.

(C) Ability to measure the following:

(1) The placement distance using a Global Positioning System (GPS) or a Distance Measuring Instrument (DMI) and a Global Positioning System (GPS).

(2) Stationing

(D) GPS: Accuracy ± 4 feet in the X and Y Direction

(E) Latest version of software to collect, display, retain and analyze the mat temperature readings during placement. The software must have the ability to create and analyze:

(1) Full collected width of the thermal profiles,

(2) Paver speed and

(3) Paver stops and duration for the entire Project.

(F) Ability to export data automatically to a remote data server ("the cloud").

At the preconstruction meeting, provide the Cabinet with rights to allow for web access to the data file location. Access to the data is not to be hindered in any way. The Contractor will provide the Cabinet with any vendor specific software, user id, passwords, etc. needed to access the data through this service, cost of this access is incidental to the thermal profile bid item. The Cabinet is to have access to all data as it is being collected. If a third party is used for collecting and distributing the data the Cabinet is to have the same access rights and time as the Contractor.

This web-based software must also provide the Department with the ability to download the raw files and software and to convert them into the correct format.

(G) The thermal profile data files must provide the following data in a neat easy to read table format.

(1) Project information including Road Name and Number, PCN, Beginning and Ending MPs.

(2) IR Bar Manufacturer and Model number

(3) Number of Temperature Sensors (N)

(4) Spacing between sensors and height of sensors above the asphalt mat

(5) Total number of individual records taken each day (DATA BLOCK)

(a) Date and Time reading taken
(b) Latitude and Longitude
(c) Distance paver has moved from last test location
(d) Direction and speed of the paver
(e) Surface temperature of each of the sensors

3.0 CONSTRUCTION. Provide the Engineer with all required documentation at the pre-construction conference.

(A) Install and operate equipment in accordance with the manufacturer's specifications.

(B) Verify that the temperature sensors are within ± 2.0% using an independent temperature device on a material of known temperature. Collect and compare the GPS coordinates from the equipment with an independent measuring device.

(1) Ensure the independent survey grade GPS measurement device is calibrated to the correct coordinate system (using a control point), prior to using these coordinates to validate the equipment GPS.

(2) The comparison is considered acceptable if the coordinates are within 4 feet of each other in the X and Y direction.

(C) Collect thermal profiles on all Driving Lanes during the paving operation and transfer the data to the "cloud" network or if automatic data transmission is not available, transfer the data to the Engineer at the end of daily paving.

(D) Contact the Department immediately when System Failure occurs. Daily Percent Coverage will be considered zero when the repairs are not completed within two (2) working days of System Failure. The start of this two (2) working day period begins the next working day after System Failure.

(E) Evaluate thermal profile segments, every 150 feet, and summarize the segregation of temperature results. Results are to be labeled as Minimal 0°-25°F, Moderate 25.1°-50°F and Severe >50°. Severe readings over 3 consecutive segments or over 4 or more segments in a day warrant investigation on the cause of the differential temperature distribution.

4.0 MEASUREMENT. The Department will measure the total area of the pavement lanes mapped by the infrared scanners. Full payment will be provided for all lanes with greater than 85% coverage. Partial payment will be made for all areas covered from 50% coverage to 85% coverage at the following rate Coverage area percentage X Total bid amount. And area with less than 50% coverage will not be measured for payment.

5.0 PAYMENT. The Department will make payment for the completed and accepted quantities under the following:

1. Payment is full compensation for all work associated with providing all required equipment, training, and documentation.
2. Delays due to GPS satellite reception of signals or equipment breakdowns will not be considered justification for contract modifications or contract extensions.

Code	Pay Item	Pay Unit
24891EC	PAVE MOUNT INFRARED TEMP EQUIPMENT	SQFT

October 2021

SPECIAL NOTE FOR NON-TRACKING TACK COAT

1. DESCRIPTION AND USEAGE. This specification covers the requirements and practices for applying a non-tracking tack asphalt coating. Place this material on the existing pavement course, prior to placement of a new asphalt pavement layer. Use when expedited paving is necessary or when asphalt tracking would negatively impact the surrounding area. This material is not suitable for other uses. Ensure material can "break" within 15 minutes under conditions listed in 3.2.

2. MATERIALS, EQUIPMENT, AND PERSONNEL.

2.1 Non-Tracking Tack. Provide material conforming to Subsection 2.1.1.

2.1.1 Provide a tack conforming to the following material requirements:

Property	Specification	Test Procedure
Viscosity, SFS, 77 ˚ F	20 – 100	AASHTO T 72
Sieve, %	0.3 max.	AASHTO T 59
Asphalt Residue[1], %	50 min.	AASHTO T 59
Oil Distillate, %	1.0 max.	AASHTO T 59
Residue Penetration, 77 ˚ F	20 max.	AASHTO T 49
Original Dynamic Shear (G*/sin δ), 82 ˚ C	1.0 min.	AASHTO T 315
Softening Point, ˚ F	149 min.	AASHTO T 53
Solubility, %	97.5 min.	AASHTO T 44

[1] Bring sample to 212 ˚F over a 10-15 minute period. Maintain 212 ˚F for 15-20 minutes or until 30-40 mL of water has distilled. Continue distillation as specified in T59.

2.2. Equipment. Provide a distributor truck capable of heating, circulating, and spraying the tack between 170 ˚F and 180 ˚F. Do not exceed 180 ˚F. Circulate the material while heating. Provide the correct nozzles that is recommend by the producer to ensure proper coverage of tack is obtained. Ensure the bar can be raised to between 14" and 18" from the roadway.

2.3. Personnel. Ensure the tack supplier has provided training to the contractor on the installation procedures for this product. Make a technical representative from the supplier available at the request of the Engineer.

3. CONSTRUCTION.

3.1 Surface Preparation. Prior to the application of the non-tracking tack, ensure the pavement surface is thoroughly dry and free from dust or any other debris that would inhibit adhesion. Clean the surface by scraping, sweeping, and the use of compressed air. Ensure this preparation process occurs shortly before application to prevent the return of debris on to the pavement. If rain is expected within one hour after application, do not apply material. Apply material only when the surface is dry, and no precipitation is expected.

3.2 Non-tracking Tack Application. Placement of non-tracking tack is not permitted from October 1st to May 15th. When applying material, ensure the roadway temperature is a minimum of 40˚F and rising. Prior to application, demonstrate competence in applying the tack according to this note to the satisfaction of the Engineer. Heat the tack in the distributor to between 170 – 180 ˚F. After the initial heating, between 170 – 180 ˚F, the material may be sprayed between 165 ˚F and 180 ˚F. Do not apply outside this temperature range. Apply material at a minimum rate of 0.70 pounds (0.08 gallons) per square yard. Ensure full coverage of the material on the pavement surface. Full coverage of this material is critical. Increase material application rate if needed to achieve full coverage. Schedule the work so that, at the end of the day's production, all non-tracking tack is covered with the asphalt mixture. If for some reason the non-tracking tack cannot be covered by an asphalt mixture, ensure the non-tracking tack material is clean and reapply the non-tracking tack prior to placing the asphalt mixture. Do not heat material more than twice in one day.

3.3 Non-tracking Tack Certification. Furnish the tack certification to the Engineer stating the material conforms to all requirements herein prior to use.

3.4 Sampling and Testing. The Department will require a sample of non-tracking tack be taken from the distributor at a rate of one sample per 15,000 tons of mix. Take two 1 gallon samples of the heated material and forward the sample to the Division of Materials for testing within 7 days. Ensure the product temperature is between 170 and 180 °F at the time of sampling.

4. MEASUREMENT. The Department will measure the quantity of non-tracking tack in tons. The Department will not measure for payment any extra materials, labor, methods, equipment, or construction techniques used to satisfy the requirements of this note. The Department will not measure for payment any trial applications of non-tracking tack, the cleaning of the pavement surface, or furnishing and placing the non-tracking tack. The Department will consider all such items incidental to the non-tracking tack.

5. PAYMENT. The Department will pay for the non-tracking tack at the Contract unit bid price and apply an adjustment for each manufacturer's lot of material based on the degree of compliance as defined in the following schedule. Non-tracking tack will not be permitted for use from October 1st to May 15th. From September 1st to June 1st, the department will allow the use of an approved asphalt emulsion in lieu of a non-tracking tack product but will not adjust the unit bid price of the material. When a sample fails on two or more tests, the Department may add the deductions, but the total deduction will not exceed 100 percent.

October 2021

Non-Tracking Tack Price Adjustment Schedule						
Test	Specification	100% Pay	90% Pay	80% Pay	50% Pay	0% Pay
Viscosity, SFS, 77 ˚ F	20 – 100	19 - 102	17 - 18 103 - 105	15 - 16 106 - 107	14 108 - 109	≤13 ≥ 110
Sieve, %	0.30 max.	≤ 0.40	0.41 - 0.50	0.51 - 0.60	0.61 - 0.70	≥ 0.71
Asphalt Residue, %	50 min.	≥49.0	48.5 – 48.9	48.0 – 48.4	47.5-47.9	≤ 47.4
Oil Distillate, %	1.0 max.	≤1.0	1.1-1.5	1.6 - 1.7	1.8-1.9	>2.0
Residue Penetration, 77 ° F	20 max.	≤ 21	22 - 23	24 - 25	26 - 27	≥ 28
Original Dynamic Shear (G*/sin δ), 82 ˚ C	1.0 min.	≥0.95	0.92 – 0.94	0.90 – 0.91	0.85 - 0.89	≤ 0.84
Softening Point, º F	149 min.	≥145	142 - 144	140 - 141	138 - 139	≤ 137
Solubility, %	97.5 min.	≥ 97.0	96.8 – 96.9	96.6 – 96.7	96.4 – 96.5	≤ 96.3

Code	Pay Item	Pay Unit
24970EC	Asphalt Material for Tack Non-Tracking	Ton

SPECIAL NOTE FOR EXPERIMENTAL KYCT AND HAMBURG TESTING

1.0 General

1.1 Description. The KYCT (Kentucky Method for Cracking Test) and the Hamburg test results will help determine if the mixture is susceptible to cracking and rutting. During the experimental phase, data will be gathered and analyzed by the Department to determine the durability of the bituminous mixes. Additionally, the data will help the Department to create future performance based specifications which will include the KYCT and Hamburg test methods.

2.0 Equipment

2.1 KYCT Testing Equipment. The Department will require a Marshall Test Press with digital recordation capabilities. Other CT testing equipment may be used for testing with prior approval by the Department.

2.2 Water Baths. One or more water baths will be required that can maintain a temperature of 77° +/- 1.8^{o} F with a digital thermometer showing the water bath temperature. Also, one water bath shall have the ability to suspend gyratory specimen fully submerged in water in accordance with AASHTO T-166, current edition.

2.3 Hamburg Wheel Track Testing. The department encourages the use of the PTI APA/Hamburg Jr. test equipment to perform the loaded wheel testing. The Department will allow different equipment for the Hamburg testing, but the testing device must be approved by the Department prior to testing.

2.4 Gyratory Molds. Gyratory molds will be required to assist in the production of gyratory specimens in accordance with AASHTO T-312, current edition.

2.5 Ovens. Adequate (minimum of two ovens) will be required to accommodate the additional molds and asphalt mixture necessary to perform the acceptance testing as outlined in Section 402 of the Kentucky Standard Specifications for Road and Bridge Construction, current edition.

2.6 Department Equipment. The Department will provide gyratory molds, PINE 850 Test Press with digital recordation, and CT testing equipment to assist during this experimental phase so data can be gathered. Hamburg test specimens will be submitted to the Division of Materials for testing on the PTI APA/Hamburg Jr if the asphalt contractor or district materials office does not have an approved Hamburg testing device.

3.0 Testing Requirements

3.1 Acceptance Testing. Perform all acceptance testing and aggregate gradation as according with Section 402 and Section 403 of the Kentucky Standard Specifications for Road and Bridge Construction, current edition.

3.2 KYCT Testing. Perform crack resistance analysis (KYCT) in accordance with the current Kentucky Method for KYCT Index Testing during the mix design phase and during the plant production of all surface mixtures. For mix design approvals, submit KYCT results on the Department MixPack. For Class 4 mixtures, submit ingredient materials to the Division of Materials for informational verification.

3.2.1 KYCT Frequency. Obtain an adequate sample of hot mix asphalt to insure the acceptance testing, gradation, and KYCT gyratory samples can be fabricated and is representative of the bituminous mixture. Acceptance specimens shall be fabricated first, then immediately after, fabricate the KYCT samples with the gyratory compactor in accordance with Section 2.4 of this Special Note. Analysis of the KYCT specimens and gradation will be required one per sublot produced from the same asphalt material and at the same time as the acceptance specimen is sampled and tested.

3.2.2 Number of Specimens and Conditioning. Fabricate specimens in accordance with the Kentucky Method for KYCT Index Testing. Contrary to the method, fabricate a minimum of 3 and up to 6 test specimens. The specimens shall be compacted at the temperature in accordance to KM 64-411. KYCT mix design specimens shall be short-term conditioned for four hours at compaction temperature in accordance to KM 64-411. Contrary to the Kentucky Method, plant produced bituminous material shall be short-term conditioned immediately after sampling for two hours at compaction temperature in accordance to KM 64-411. Additionally, fabricated specimens shall be allowed to cool in air (fan is permissible) for 30 minutes +/- 5 minutes and conditioned in a 77 °F water bath for 30 minutes +/- 5 minutes. To insure confidence and reliability of the test results provided by KYCT testing and Hamburg testing, reheating of the asphalt mixture is prohibited.

3.2.3 Record Times. For each sublot, record the time required between drying aggregates in the plant to KYCT specimen fabrication. The production time may vary due to the time that the bituminous material is held in the silo. Record the preconditioning time when the time exceeds the one hour specimen cool down time as required in accordance to The Kentucky Method for KYCT Index Testing. The preconditioning time may exceed an hour if the technician is unable to complete the test on the same day or within the specified times as outlined in The Kentucky Method for KYCT Index Testing. The production time and the preconditioning time shall be recorded on the AMAW.

3.2.4 File Name. As according to section 7.12 of The Kentucky Method for KYCT Index Testing, save the filename with the following format; “CID_Approved Mix Number_Lot Number_Sublot Number_ Date”

3.3 Hamburg Testing. Perform the rut resistance analysis (Hamburg) in accordance to AASTHO T-324, not to exceed 20,000 passes for all bituminous mixtures during the mix design phase and production. For mix design approvals, submit Hamburg results on the Department MixPack. For Class 4 mixtures, submit ingredient materials to the Division of Materials for informational verification.

3.3.1 Hamburg Testing Frequency. Perform testing and analysis per lot of material. The plant produced bituminous material sampled for the Hamburg test does not have to be obtained at the same time as the acceptance and KYCT sample. If the Hamburg test sample is not obtained at the same time as the KYCT sample, determine the Maximum Specific Gravity of the KYCT sample in accordance with AASHTO T-209 coinciding with the Hamburg specimens.

3.3.2 Record Times. Record the production time as according to section 3.2.3 in this special note. Also record the time that the specimens were fabricated and the time the Hamburg testing was started. All times shall be recorded on the AMAW.

3.3.3 File Name. Save the Excel spreadsheet with the following file name; "Hamburg_CID_Approved Mix Number_Lot Number_Sublot Number_Date" and upload the file into the AMAW.

4.0 Data

Submit the AMAW and all test data that was obtained for acceptance, gradation, KYCT, and Hamburg testing within five working days once all testing has been completed for a lot to Central Materials Lab and the District Materials Engineer. Also, any data and or comments that the asphalt contractor or district personnel deem informational during this experimental phase, shall also be submitted to the Central Materials Lab and the District Materials Engineer. Any questions or comments regarding any item in this Special Note can be directed to the Central Office, Division of Materials, Asphalt Branch.

5.0 KYCT Video Demonstration

https://youtu.be/84j0bM45-hg

6.0 Payment

Any additional labor and testing equipment that is required to fabricate and test the KYCT and Hamburg specimens shall be considered to be incidental to the asphalt surface line item. The Department will perform the testing for the KYCT and Hamburg specimens if a producer does not possess the proper equipment.

October 8, 2020

Special Note for Bridge Demolition, Renovation and Asbestos Abatement

If the project includes any bridge demolition or renovation, the successful bidder is required to notify Kentucky Division for Air Quality (KDAQ) via filing of form (DEP 7036) a minimum of 10 working days prior to commencement of any bridge demolition or renovation work.

Any available information regarding possible asbestos containing materials (ACM) on or within bridges to be affected by the project has been included in the bid documents. These are to be included with the Contractor's notification filed with the KDAQ. If not included in the bid documents, the Department will provide that information to the successful bidder for inclusion in the KDAQ notice as soon as possible. If there are no documents stating otherwise, the bidders should assume there are no asbestos containing materials that will in any way affect the work.

COMMONWEALTH OF KENTUCKY
TRANSPORTATION CABINET
transportation.ky.gov

Andy Beshear
GOVERNOR

Jim Gray
SECRETARY

Asbestos Inspection Report

To: Ross Mills

District: Central Office

Date: November 4, 2021

Conducted By: O'Dail Lawson

Report Prepared By: O'Dail Lawson

Project and Structure Identification

Project Number: Grayson 04-20001.00

Structure ID: Grayson 043B00003N

Structure Location: KY-224 over Western Kentucky Parkway

Sample Description: Any suspect materials collected were negative for asbestos.

Inspection Date: November 2, 2021

Results and Recommendations

The results of the samples collected were negative for the presence of asbestos above 1%. No abatement is required at this time.

It is recommended that this report accompany the 10-Day Notice of Intent for Demolition (Notification Form DEP 7036) which is to be submitted to the Kentucky Division of Air Quality prior to abatement, demolition, or renovation of any building or structure in the Commonwealth.

PLEASE REMIT TO:
MRS., Inc.
P.O. Box 19424
Louisville, Kentucky 40259-0424
(502) 495-1212

Date: November 03, 2021
Invoice Number: # 3111033

KY Transportation Cabinet
200 Mero Street, Frankfort, KY - 40601

KY Contract # MA - 785 1300000018 2

DATE		CHARGES	PAYMENT CREDITS
11/3/2021	Analyzed The Following Samples From : Grayson County - 043B00003N For The Presence Of Asbestos Following The EPA Method : 600/R-93-116 Rate/Sample = $ 12.00 $ 12 X 3 = $ 36.00	3 Samples $36.00	
			Please Pay This Amount $ 36.00 Thanks !!!

Terms : Net ((30) Days

MRS, Inc. Analytical Laboratory Division

332 West Broadway, S Suite # 902 *Phone # : (502) 495-1212*
Louisville, Kentucky 40202 *E-Mail Address : CEOMRSInc@AOL.Com*

Client:	**KYTC**	**Project No:**	**# 3111033**
Address:	**200 Mero Street**	**Sample ID:**	**# G 1**
	Frankfort, KY	**Sampled:**	**2-Nov-21**
	40601	**Received:**	**2-Nov-21**
		Analyzed:	**3-Nov-21 - Point Count -**
	Attention : O'Dail Lawson		

Bulk Sample Analysis

Sampled By : **O'Dail Lawson**
Facility/Location: **Grayson County - Item # 043 B00003N (KY 224 Over WKY Parkway)**
Field Description: **Guard Rail Mastic**
Laboratory Description:
Gray Material

Asbestos Materials:
Chrysotile = 1/400 = 0.25 % (< 1 %) Sample Is Negative

Non-Asbestos Fibrous Materials :

Cellulose	0.25 %
Binders	99.50 %

Remarks: The sample was analyzed for asbestos content following the EPA Methodology (600/R-93/116). The test relates only to the items tested. This report does not represent endorsement by NVLAP or any agency of the U.S. Government.

Analyst: Winterford Mensah Reviewed By: Winterford Mensah Signature

AIHA #102459 / AIHA #102459 / AIHA #102459

MRS, Inc. Analytical Laboratory Division

332 West Broadway, S Suite # 902 *Phone # : (502) 495-1212*
Louisville, Kentucky 40202 *E-Mail Address : CEOMRSInc@AOL.Com*

Client:	**KYTC**	**Project No:**	**# 3111033**
Address:	**200 Mero Street**	**Sample ID:**	**# G 2**
	Frankfort, KY	**Sampled:**	**2-Nov-21**
	40601	**Received:**	**2-Nov-21**
		Analyzed:	**3-Nov-21 - Point Count -**
	Attention : O'Dail Lawson		

Bulk Sample Analysis

Sampled By : **O'Dail Lawson**
Facility/Location: **Grayson County - Item # 043 B00003N (KY 224 Over WKY Parkway)**
Field Description: **Trowel On Sealant**
Laboratory Description:
Thick Brown Material

Asbestos Materials:
Chrysotile = 1/400 = 0.25 % (< 1 %) Sample Is Negative

Non-Asbestos Fibrous Materials :

Cellulose	0.25 %
Binders	99.50 %

Remarks: The sample was analyzed for asbestos content following the EPA Methodology (600/R-93/116). The test relates only to the items tested. This report does not represent endorsement by NVLAP or any agency of the U.S. Government.

Analyst: Winterford Mensah Reviewed By: Winterford Mensah Signature

AIHA #102459 / AIHA #102459 / AIHA #102459

Chain of Custody Record

Kentucky Transportation Cabinet
200 Mero Street, 5th Floor West
Frankfort, Kentucky 40622
(502) 564-7250 fax (502) 564-5655

O'Dail Lawson o'dail.lawson@ky.gov
KYTC
Address: 200 Mero Street
Frankfort KY
Phone: 502-782-5020 Fax: 502-564-5655
PO#:

Client Information KY TRANSPORTATION CABINET
Results Code: KY-224 over WKY Parkway.

N/A = Not Applicable

Samplers (signature):

Project ID ~~Clarkson~~ 043B00003N Grayson

Sample ID	Sample Description	Collected Date	Collected Time	Analysis Requested	Matrix	Color	Cont. Type	Preservative
G1	Guard Rail Mastic	11/2/21	11:30	Asbestos bulk.	mastic	grey		N/A
G2	trowel on sealant.	↓	↓	↓	sealant	brown		
G3	Joint Compound	↓	↓	↓	rubber	black		

Relinquished By:	Date/Time:
Received By: Winterjae Menard	Date/Time: 11/02/21
Relinquished By:	Date/Time:
Received at Lab By:	Date/Time:

CHC Training
Environmental Compliance Certification Experts

Colorado State Approval No. 22651

www.chctraining.com
303.412.6360
855.60.CERTIFY

1775 W. 55th Avenue
Denver, Colorado 80221
United States of America

Certificate of Achievement

This certificate is awarded to:

O'Dail Lawson

In recognition of satisfactory completion of the EPA-approved annual asbestos refresher training in accordance with the Model Accreditation Plan (MAP) (40 CFR Part 763, Subpart E, Appendix C), AHERA of the Toxic Substances Control Act (TSCA), and Colorado Regulation No. 8 entitled:

Building Inspector

Course Completion:	February 11, 2021
Examination Date:	February 11, 2021
Expiration Date:	February 11, 2022
Course Hours:	4.0

Verify this Certificate

Danaya N. Wilson
CEO & Training Program Manager

Credential License ID:
28699399

CHC Training
Est. 2015
Accredited Alumni
Safety Quality Integrity Compliance

Matthew Valdez
Instructor

CHC Training Certificate No.:
R21-0204-AI

Renew this Certificate

KENTUCKY TRANSPORTATION CABINET
Department of Highways
DIVISION OF RIGHT OF WAY & UTILITIES

TC 62-226
Rev. 01/2016
Page 1 of 1

RIGHT OF WAY CERTIFICATION

[X] Original	[ ] Re-Certification	RIGHT OF WAY CERTIFICATION	
ITEM #	**COUNTY**	**PROJECT # (STATE)**	**PROJECT # (FEDERAL)**
4-20001	Grayson	FD52 043 9001 111-115	NHPP 9001 (014)
PROJECT DESCRIPTION			

Asphalt pavement rehab with a bridge replacement on KY-224.

[X] **No Additional Right of Way Required**

Construction will be within the limits of the existing right of way. The right of way was acquired in accordance to FHWA regulations under the Uniform Relocation Assistance and Real Property Acquisitions Policy Act of 1970, as amended. No additional right of way or relocation assistance were required for this project.

[ ] **Condition # 1 (Additional Right of Way Required and Cleared)**

All necessary right of way, including control of access rights when applicable, have been acquired including legal and physical possession. Trial or appeal of cases may be pending in court but legal possession has been obtained. There may be some improvements remaining on the right-of-way, but all occupants have vacated the lands and improvements, and KYTC has physical possession and the rights to remove, salvage, or demolish all improvements and enter on all land. Just Compensation has been paid or deposited with the court. All relocations have been relocated to decent, safe, and sanitary housing or that KYTC has made available to displaced persons adequate replacement housing in accordance with the provisions of the current FHWA directive.

[ ] **Condition # 2 (Additional Right of Way Required with Exception)**

The right of way has not been fully acquired, the right to occupy and to use all rights-of-way required for the proper execution of the project has been acquired. Some parcels may be pending in court and on other parcels full legal possession has not been obtained, but right of entry has been obtained, the occupants of all lands and improvements have vacated, and KYTC has physical possession and right to remove, salvage, or demolish all improvements. Just Compensation has been paid or deposited with the court for most parcels. Just Compensation for all pending parcels will be paid or deposited with the court prior to AWARD of construction contract

[ ] **Condition # 3 (Additional Right of Way Required with Exception)**

The acquisition or right of occupancy and use of a few remaining parcels are not complete and/or some parcels still have occupants. All remaining occupants have had replacement housing made available to them in accordance with 49 CFR 24.204. KYTC is hereby requesting authorization to advertise this project for bids and to proceed with bid letting even though the necessary right of way will not be fully acquired, and/or some occupants will not be relocated, and/or the just compensation will not be paid or deposited with the court for some parcels until after bid letting. KYTC will fully meet all the requirements outlined in 23 CFR 635.309(c)(3) and 49 CFR 24.102(j) and will expedite completion of all acquisitions, relocations, and full payments after bid letting and prior to AWARD of the construction contract or force account construction.

Total Number of Parcels on Project	0	**EXCEPTION (S) Parcel #**	**ANTICIPATED DATE OF POSSESSION WITH EXPLANATION**
Number of Parcels That Have Been Acquired			
Signed Deed			
Condemnation			
Signed ROE			

Notes/ Comments (Use Additional Sheet if necessary)

LPA RW Project Manager		Right of Way Supervisor	
Printed Name		Printed Name	Michael H Price
Signature		Signature	Michael H Price 2022.01.03 11:23:05 -05'00'
Date		Date	
Right of Way Director		**FHWA**	
Printed Name		Printed Name	No Signature Required as per FHWA-KYTC Current Stewardship Agreement
Signature	Kelly R. Divine Digitally signed by Kelly R. Divine Date: 2022.01.03 11:15:21 -06'00'	Signature	
Date		Date	

UTILITIES AND RAIL CERTIFICATION NOTE

Grayson County
NHPP 9001(014)
FD52 043 9001 111-115
Mile point: 111.250 TO 114.800
ADDRESS PAVEMENT CONDITION OF WENDELL H. FORD WESTERN KY PARKWAY BOTH DIRECTION(S) FROM MILEPOINT 111.25 TO MILEPOINT 114.800. (COMBINED W/ 4-20002)
ITEM NUMBER: 04-20001.00

PROJECT NOTES ON UTILITIES

Utility coordination efforts determined that no significant utility relocation work is required to complete the project. Any work pertaining to these utility facilities is defined in the bid package and is to be carried out as instructed by the Kentucky Transportation Cabinet. The contractor will be responsible for any coordination or adjustments that are discussed or quantified in the proposal.

NOTE: DO NOT DISTURB THE FOLLOWING FACILITIES LOCATED WITHIN THE PROJECT DISTURB LIMITS

City of Clarkson - Sewer

Grayson County Water District - Water

Kentucky Utilities - Electric

Windstream Holdings II, LLC - Communication

Comcast Communications - CATV

City of Leitchfield - Natural Gas

Brandenburg Telephone Co. - Telephone

Warren Rural Electric Cooperative Corporation - Electric

The Contractor is fully responsible for protection of all utilities listed above

UTILITIES AND RAIL CERTIFICATION NOTE

Grayson County
NHPP 9001(014)
FD52 043 9001 111-115
Mile point: 111.250 TO 114.800
ADDRESS PAVEMENT CONDITION OF WENDELL H. FORD WESTERN KY PARKWAY BOTH DIRECTION(S) FROM MILEPOINT 111.25 TO MILEPOINT 114.800. (COMBINED W/ 4-20002)
ITEM NUMBER: 04-20001.00

THE FOLLOWING FACILITY OWNERS ARE RELOCATING/ADJUSTING THEIR FACILITIES WITHIN THE PROJECT LIMITS AND WILL BE COMPLETE PRIOR TO CONSTRUCTION

Not Applicable

THE FOLLOWING FACILITY OWNERS HAVE FACILITIES TO BE RELOCATED/ADJUSTED BY THE OWNER OR THEIR SUBCONTRACTOR AND IS TO BE COORDINATED WITH THE ROAD CONTRACT

Not Applicable

THE FOLLOWING FACILITY OWNERS HAVE FACILITIES TO BE RELOCATED/ADJUSTED BY THE ROAD CONTRACTOR AS INCLUDED IN THIS CONTRACT

Not Applicable

RAIL COMPANIES HAVE FACILITIES IN CONJUNCTION WITH THIS PROJECT AS NOTED

UTILITIES AND RAIL CERTIFICATION NOTE

Grayson County
NHPP 9001(014)
FD52 043 9001 111-115
Mile point: 111.250 TO 114.800
ADDRESS PAVEMENT CONDITION OF WENDELL H. FORD WESTERN KY PARKWAY BOTH DIRECTION(S) FROM MILEPOINT 111.25 TO MILEPOINT 114.800. (COMBINED W/ 4-20002)
ITEM NUMBER: 04-20001.00

☒ **No Rail Involvement** ☐ **Rail Involved** ☐ **Rail Adjacent**

UTILITIES AND RAIL CERTIFICATION NOTE

Grayson County
NHPP 9001(014)
FD52 043 9001 111-115
Mile point: 111.250 TO 114.800
ADDRESS PAVEMENT CONDITION OF WENDELL H. FORD WESTERN KY PARKWAY BOTH DIRECTION(S) FROM MILEPOINT 111.25 TO MILEPOINT 114.800. (COMBINED W/ 4-20002)
ITEM NUMBER: 04-20001.00

AREA FACILITY OWNER CONTACT LIST

Facility Owner	Address	Contact Name	Phone	Email
Brandenburg Telephone Co. - Telephone	502 West Dixie Ave Elizabethtown KY 42702	Kyle Dalton	2709824466	kyle.dalton@brandenburgtel.com
City of Clarkson - Sewer	213 Millerstown Street Clarkson KY 42726	Bonnie Henderson	2702422841	clerk@clarksonky.com
City of Leitchfield - Natural Gas	314 W. White Oak St., P.O. Box 398 Leitchfield KY 42755	Dwight Embry	2702594034	dwight.embry@leitchfield.org
Comcast Communications - CATV	2919 Ring Road Elizabethtown KY 42701	Stephen Gaddie	2704011543	Stephen_Gaddie@comcast.com
Grayson County Water District - Water	21 Shull White Road Leitchfield KY 42754	Jeremy Woosley	2702592917	jwoosley@graysonwater.com
Kentucky Utilities - Electric	820 West Broadway Louisville KY 40202	Caroline Justice	5026273708	caroline.justice@lge-ku.com
Warren Rural Electric Cooperative Corporation - Electric	P.O. Box 1118 Bowling Green KY 42102	Jonathan Lindsey	2708426541	jonathanl@wrecc.com

UTILITIES AND RAIL CERTIFICATION NOTE

Grayson County
NHPP 9001(014)
FD52 043 9001 111-115
Mile point: 111.250 TO 114.800
ADDRESS PAVEMENT CONDITION OF WENDELL H. FORD WESTERN KY PARKWAY BOTH DIRECTION(S) FROM MILEPOINT 111.25 TO MILEPOINT 114.800. (COMBINED W/ 4-20002)
ITEM NUMBER: 04-20001.00

Windstream Holdings II, LLC - Communication	130 West New Circle Road Lexington KY 40505	Steve Johnson	8593576209	steve.johnson@windstream.com

Form Revised 6/24/16

GUARDRAIL DELIVERY VERIFICATION SHEET

Contract Id: _____ **Contractor:** _____

Section Engineer: _____ **District & County:** _____

DESCRIPTION	UNIT	QTY LEAVING PROJECT	QTY RECEIVED@BB YARD
GUARDRAIL (Includes End treatments & crash cushions)	LF	_____	_____
STEEL POSTS	EACH	_____	_____
STEEL BLOCKS	EACH	_____	_____
WOOD OFFSET BLOCKS	EACH	_____	_____
BACK UP PLATES	EACH	_____	_____
CRASH CUSHION	EACH	_____	_____
NUTS, BOLTS, WASHERS	BAG/BCKT	_____	_____
DAMAGED RAIL TO MAINT. FACILITY	LF	_____	_____
DAMAGED POSTS TO MAINT. FACILITY	EACH	_____	_____

****Required Signatures before Leaving Project Site***

Printed Section Engineer's Representative_____ & Date_____

Signature Section Engineer's Representative_____& Date_____

Printed Contractor's Representative_____& Date_____

Signature Contractor's Representative_____& Date_____

****Required Signatures after Arrival at Bailey Bridge Yard (All material on truck must be counted & the quantity received column completed before signatures)***

Printed Bailey Bridge Yard Representative_____ & Date_____

Signature Bailey Bridge Yard Representative_____& Date_____

Printed Contractor's Representative_____& Date_____

Signature Contractor's Representative_____& Date_____

**Payment for the bid item remove guardrail will be based upon the quantities shown in the Bailey Bridge Yard received column. Payment will not be made for guardrail removal until the guardrail verification sheets are electronically submitted to the Section Engineer by the Bailey Bridge Yard Representative.

Completed Form Submitted to Section Engineer Date: _____ By: _____

PART II

SPECIFICATIONS AND STANDARD DRAWINGS

SPECIFICATIONS REFERENCE

Any reference in the plans or proposal to previous editions of the *Standard Specifications for Road and Bridge Construction* and *Standard Drawings* are superseded by *Standard Specifications for Road and Bridge Construction, Edition of 2019* and *Standard Drawings, Edition of 2020.*

SUPPLEMENTAL SPECIFICATIONS

The contractor shall use the Supplemental Specifications that are effective at the time of letting. The Supplemental Specifications can be found at the following link:

http://transportation.ky.gov/Construction/Pages/Kentucky-Standard-Specifications.aspx

1I

SPECIAL NOTE FOR PORTABLE CHANGEABLE MESSAGE SIGNS

This Special Note will apply when indicated on the plans or in the proposal.

1.0 DESCRIPTION. Furnish, install, operate, and maintain variable message signs at the locations shown on the plans or designated by the Engineer. Remove and retain possession of variable message signs when they are no longer needed on the project.

2.0 MATERIALS.

2.1 General. Use LED Variable Message Signs Class I, II, or III, as appropriate, from the Department's List of Approved Materials.

Unclassified signs may be submitted for approval by the Engineer. The Engineer may require a daytime and nighttime demonstration. The Engineer will make a final decision within 30 days after all required information is received.

2.2 Sign and Controls. All signs must:

1) Provide 3-line messages with each line being 8 characters long and at least 18 inches tall. Each character comprises 35 pixels.
2) Provide at least 40 preprogrammed messages available for use at any time. Provide for quick and easy change of the displayed message; editing of the message; and additions of new messages.
3) Provide a controller consisting of:
   a) Keyboard or keypad.
   b) Readout that mimics the actual sign display. (When LCD or LCD type readout is used, include backlighting and heating or otherwise arrange for viewing in cold temperatures.)
   c) Non-volatile memory or suitable memory with battery backup for storing pre-programmed messages.
   d) Logic circuitry to control the sequence of messages and flash rate.
4) Provide a serial interface that is capable of supporting complete remote control ability through land line and cellular telephone operation. Include communication software capable of immediately updating the message, providing complete sign status, and allowing message library queries and updates.
5) Allow a single person easily to raise the sign to a satisfactory height above the pavement during use, and lower the sign during travel.
6) Be Highway Orange on all exterior surfaces of the trailer, supports, and controller cabinet.
7) Provide operation in ambient temperatures from -30 to + 120 degrees Fahrenheit during snow, rain and other inclement weather.
8) Provide the driver board as part of a module. All modules are interchangeable, and have plug and socket arrangements for disconnection and reconnection. Printed circuit boards associated with driver boards have a conformable coating to protect against moisture.
9) Provide a sign case sealed against rain, snow, dust, insects, etc. The lens is UV stabilized clear plastic (polycarbonate, acrylic, or other approved material) angled to prevent glare.
10) Provide a flat black UV protected coating on the sign hardware, character PCB, and appropriate lens areas.
11) Provide a photocell control to provide automatic dimming.

12) Allow an on-off flashing sequence at an adjustable rate.
13) Provide a sight to aim the message.
14) Provide a LED display color of approximately 590 nm amber.
15) Provide a controller that is password protected.
16) Provide a security device that prevents unauthorized individuals from accessing the controller.
17) Provide the following 3-line messages preprogrammed and available for use when the sign unit begins operation:

/KEEP/RIGHT/⇒⇒⇒/
/KEEP/LEFT/⇐⇐⇐/
/LOOSE/GRAVEL/AHEAD/
/RD WORK/NEXT/**MILES/
/TWO WAY/TRAFFIC/AHEAD/
/PAINT/CREW/AHEAD/
/REDUCE/SPEED/**MPH/
/BRIDGE/WORK/***0 FT/
/MAX/SPEED/**MPH/
/SURVEY/PARTY/AHEAD/
/MIN/SPEED/**MPH/
/ICY/BRIDGE/AHEAD/ /ONE LANE/BRIDGE/AHEAD/
/ROUGH/ROAD/AHEAD/
/MERGING/TRAFFIC/AHEAD/
/NEXT/***/MILES/
/HEAVY/TRAFFIC/AHEAD/
/SPEED/LIMIT/**MPH/
/BUMP/AHEAD/
/TWO/WAY/TRAFFIC/

*Insert numerals as directed by the Engineer.
Add other messages during the project when required by the Engineer.

2.3 Power.

1) Design solar panels to yield 10 percent or greater additional charge than sign consumption. Provide direct wiring for operation of the sign or arrow board from an external power source to provide energy backup for 21 days without sunlight and an on-board system charger with the ability to recharge completely discharged batteries in 24 hours.

3.0 CONSTRUCTION. Furnish and operate the variable message signs as designated on the plans or by the Engineer. Ensure the bottom of the message panel is a minimum of 7 feet above the roadway in urban areas and 5 feet above in rural areas when operating. Use Class I, II, or III signs on roads with a speed limit less than 55 mph. Use Class I or II signs on roads with speed limits 55 mph or greater.

Maintain the sign in proper working order, including repair of any damage done by others, until completion of the project. When the sign becomes inoperative, immediately repair or replace the sign. Repetitive problems with the same unit will be cause for rejection and replacement.

Use only project related messages and messages directed by the Engineer, unnecessary messages lessen the impact of the sign. Ensure the message is displayed in either one or 2 phases with each phase having no more than 3 lines of text. When no message is needed, but it is necessary to know if the sign is operable, flash only a pixel.

When the sign is not needed, move it outside the clear zone or where the Engineer directs. Variable Message Signs are the property of the Contractor and shall be removed from the project when no longer needed. The Department will not assume ownership of these signs.

4.0 MEASUREMENT. The final quantity of Variable Message Sign will be

1I

the actual number of individual signs acceptably furnished and operated during the project. The Department will not measure signs replaced due to damage or rejection.

5.0 PAYMENT. The Department will pay for the Variable Message Signs at the unit price each. The Department will not pay for signs replaced due to damage or rejection. Payment is full compensation for furnishing all materials, labor, equipment, and service necessary to, operate, move, repair, and maintain or replace the variable message signs. The Department will make payment for the completed and accepted quantities under the following:

Code	Pay Item	Pay Unit
02671	Portable Changeable Message Sign	Each

Effective June 15, 2012

11N

SPECIAL NOTE FOR LONGITUDINAL PAVEMENT JOINT ADHESIVE

1. DESCRIPTION. This specification covers the requirements and practices for applying an asphalt adhesive material to the longitudinal joint of the surface course of an asphalt pavement. Apply the adhesive to the face of longitudinal joint between driving lanes for the first lane paved. Then, place and compact the adjacent lane against the treated face to produce a strong, durable, waterproof longitudinal joint.

2. MATERIALS, EQUIPMENT, AND PERSONNEL.

2.1 Joint Adhesive. Provide material conforming to Subsection 2.1.1.

2.1.1 Provide an adhesive conforming to the following requirements:

Property	Specification	Test Procedure
Viscosity, 400 ° F (Pa·s)	4.0 – 10.0	ASTM D 4402
Cone Penetration, 77 ° F	60 – 100	ASTM D 5329
Flow, 140 ° F (mm)	5.0 max.	ASTM D 5329
Resilience, 77 ° F (%)	30 min.	ASTM D 5329
Ductility, 77 ° F (cm)	30.0 min.	ASTM D 113
Ductility, 39 ° F (cm)	30.0 min.	ASTM D 113
Tensile Adhesion, 77 ° F (%)	500 min.	ASTM D 5329, Type II
Softening Point, ° F	171 min.	AASHTO T 53
Asphalt Compatibility	Pass	ASTM D 5329

Ensure the temperature of the pavement joint adhesive is between 380 and 410 °F when the material is extruded in a 0.125-inch-thick band over the entire face of the longitudinal joint.

2.2. Equipment.

2.2.1 Melter Kettle. Provide an oil-jacketed, double-boiler, melter kettle equipped with any needed agitation and recirculating systems.

2.2.2 Applicator System. Provide a pressure-feed-wand applicator system with an applicator shoe attached.

2.3 Personnel. Ensure a technical representative from the manufacturer of the pavement joint adhesive is present during the initial construction activities and available upon the request of the Engineer.

3. CONSTRUCTION.

3.1 Surface Preparation. Prior to the application of the pavement joint adhesive, ensure the face of the longitudinal joint is thoroughly dry and free from dust or any other debris that would inhibit adhesion. Clean the joint face by the use of compressed air.

Ensure this preparation process occurs shortly before application to prevent the return of debris on the joint face.

3.2 Pavement Joint Adhesive Application. Ensure the ambient temperature is a minimum of 40 ^{o} F during the application of the pavement joint adhesive. Prior to applying the adhesive, demonstrate competence in applying the adhesive according to this note to the satisfaction of the Engineer. Heat the adhesive in the melter kettle to the specified temperature range. Pump the adhesive from the melter kettle through the wand onto the vertical face of the cold joint. Apply the adhesive in a continuous band over the entire face of the longitudinal joint. Do not use excessive material in either thickness or location. Ensure the edge of the extruded adhesive material is flush with the surface of the pavement. Then, place and compact the adjacent lane against the joint face. Remove any excessive material extruded from the joint after compaction (a small line of material may remain).

3.3 Pavement Joint Adhesive Certification. Furnish the joint adhesive's certification to the Engineer stating the material conforms to all requirements herein prior to use.

3.4 Sampling and Testing. The Department will require a random sample of pavement joint adhesive from each manufacturer's lot of material. Extrude two 5 lb. samples of the heated material and forward the sample to the Division of Materials for testing. Reynolds oven bags, turkey size, placed inside small cardboard boxes or cement cylinder molds have been found suitable. Ensure the product temperature is 400°F or below at the time of sampling.

4. MEASUREMENT. The Department will measure the quantity of Pavement Joint Adhesive in linear feet. The Department will not measure for payment any extra materials, labor, methods, equipment, or construction techniques used to satisfy the requirements of this note. The Department will not measure for payment any trial applications of Pavement Joint Adhesive, the cleaning of the joint face, or furnishing and placing the adhesive. The Department will consider all such items incidental to the Pavement Joint Adhesive.

5. PAYMENT. The Department will pay for the Pavement Joint Adhesive at the Contract unit bid price and apply an adjustment for each manufacturer's lot of material based on the degree of compliance as defined in the following schedule. When a sample fails on two or more tests, the Department may add the deductions, but the total deduction will not exceed 100 percent.

11N

Pavement Joint Adhesive Price Adjustment Schedule						
Test	Specification	100% Pay	90% Pay	80% Pay	50% Pay	0% Pay
Joint Adhesive Referenced in Subsection 2.1.1						
Viscosity, 400 º F (Pa•s)			3.0-3.4	2.5-2.9	2.0-2.4	≤1.9
ASTM D 3236	4.0-10.0	3.5-10.5	10.6-11.0	11.1-11.5	11.6-12.0	≥ 12.1
Cone Penetration, 77 º F			54-56	51-53	48-50	≤ 47
ASTM D 5329	60-100	57-103	104-106	107-109	110-112	≥ 113
Flow, 140 º F (mm) ASTM D 5329	≤ 5.0	≤ 5.5	5.6-6.0	6.1-6.5	6.6-7.0	≥ 7.1
Resilience, 77 º F (%) ASTM D 5329	≥ 30	≥ 28	26-27	24-25	22-23	≤ 21
Tensile Adhesion, 77 º F (%) ASTM D 5329	≥ 500	≥ 490	480-489	470-479	460-469	≤ 459
Softening Point, º F AASHTO T 53	≥ 171	≥ 169	166-168	163-165	160-162	≤ 159
Ductility, 77 º F (cm) ASTM D 113	≥ 30.0	≥ 29.0	28.0-28.9	27.0-27.9	26.0-26.9	≤ 25.9
Ductility, 39 º F (cm) ASTM D 113	≥ 30.0	≥ 29.0	28.0-28.9	27.0-27.9	26.0-26.9	≤ 25.9

Code	Pay Item	Pay Unit
20071EC	Joint Adhesive	Linear Foot

May 7, 2014

SPECIAL PROVISION FOR EMBANKMENT AT BRIDGE END BENT STRUCTURES

This Special Provision will apply when indicated on the plans or in the proposal. Section references herein are to the Department's Standard Specifications for Road and Bridge Construction, Current Edition.

1.0 DESCRIPTION. Construct a soil, granular, or rock embankment with soil, granular or cohesive pile core and place structure granular backfill, as the Plans require. Construct the embankment according to the requirements of this Special Provision, the Plans, Standard Drawing RGX 100 and 105, and the Standard Specifications, Current Edition.

2.0 MATERIALS.

2.1 Granular Embankment. Conform to Subsection 805.10. When Granular Embankment materials are erodible or unstable according to Subsection 805.03.04, use the Special Construction Methods found in 3.2 of the Special Provision.

2.2 Rock Embankment. Provide durable rock from roadway excavation that consists principally of Unweathered Limestone, Durable Shale (SDI equal to or greater than 95 according to KM 64-513), or Durable Sandstone.

2.3 Pile Core. Provide a pile core in the area of the embankments where deep foundations are to be installed unless otherwise specified. The Pile Core is the zone indicated on Standard Drawings RGX 100 and 105 designated as Pile Core. Material control of the pile core area during embankment construction is always required. Proper Pile Core construction is required for installation of foundation elements such as drilled or driven piles or drilled shafts. The type of material used to construct the pile core is as directed in the plans or below. Typically, the pile core area will be constructed from the same material used to construct the surrounding embankment. Pile Core can be classified as one of three types:

A) Pile Core - Conform to Section 206 of the Standard Specifications. Provide pile core material consisting of the same material as the adjacent embankment except the material in the pile core area shall be free of boulders or particle sizes larger than 4 inches in any dimension or any other obstructions that may hinder pile driving operations. If the pile core material hinders pile driving operations, take the appropriate means necessary to reach the required pile tip elevation, at no expense to the Department.

B) Granular Pile Core. Granular pile core is required only when specified in the plans. Select a gradation of durable rock to facilitate pile driving that conforms to Subsection 805.11. If granular pile core material hinders pile driving operations, take appropriate means necessary to reach the required pile tip elevation, at no expense to the Department.

C) Cohesive Pile Core. Cohesive Pile Core is required only when specified in the plans. Conform to Section 206 of the Standard Specifications and use soil with at least 50 percent passing a No. 4 sieve having a minimum Plasticity Index (PI) of 10. In addition, keep the cohesive pile core free of boulders, larger than 4 inches in any dimension, or any other obstructions, which would interfere with drilling operations. If cohesive pile core material interferes with drilling operations, take appropriate means necessary to maintain

excavation stability, at no expense to the Department.

2.4 Structure Granular Backfill. Conform to Subsection 805.11

2.5 Geotextile Fabric. Conform to Type I or Type IV in Section 214 and 843.

3.0 CONSTRUCTION.

3.1 General. Construct roadway embankments at end bents according to Section 206 and in accordance with the Special Provision, the Plans, and Standard Drawings for the full embankment section. In some instances, granular or rock embankment will be required for embankment construction for stability purposes, but this special provision does not prevent the use of soil when appropriate. Refer to the plans for specific details regarding material requirements for embankment construction.

Place and compact the pile core and structure granular backfill according to the applicable density requirements for the project. If the embankment and pile core are dissimilar materials (i.e., a granular pile core is used with a soil embankment or a cohesive pile core is used with a granular embankment), a Geotextile Fabric, Type IV, will be required between the pile core and embankment in accordance with Sections 214 and 843 of the Standard Specifications.

When granular or rock embankment is required for embankment construction, conform to the general requirements of Subsection 206.03.02 B. In addition, place the material in no greater than 2-foot loose lifts and compact with a vibrating smooth wheel roller capable of producing a minimum centrifugal force of 15 tons. Apply these requirements to the full width of the embankment for a distance of half the embankment height or 50 feet, whichever is greater, as shown on Standard Drawing RGX-105.

When using granular pile core, install 8-inch perforated underdrain pipe at or near the elevation of the original ground in the approximate locations depicted on the standard drawing, and as the Engineer directs, to ensure positive drainage of the embankment. Wrap the perforated pipe with a fabric of a type recommended by the pipe manufacturer.

After constructing the embankment, excavate for the end bent cap, drive piling, install shafts or other foundation elements, place the mortar bed, construct the end bent, and complete the embankment to finish grade according to the construction sequence shown on the Plans or Standard Drawings and as specified hereinafter.

Certain projects may require widening of existing embankments and the removal of substructures. Construct embankment according to the plans. Substructure removal shall be completed according to the plans and Section 203. Excavation may be required at the existing embankment in order to place the structure granular backfill as shown in the Standard Drawings.

After piles are driven or shafts installed (see design drawings), slope the bottom of the excavation towards the ends of the trench as noted on the plans for drainage. Using a separate pour, place concrete mortar, or any class concrete, to provide a base for forming and placing the cap. Place side forms for the end bent after the mortar has set sufficiently to support workmen and forms without being disturbed.

Install 4-inch perforated pipe in accordance with the plans and Standard Drawings. In the event slope protection extends above the elevation of the perforated pipe, extend the pipe through the slope protection.

After placing the end bent cap and achieving required concrete cylinder strengths, remove adjacent forms and fill the excavation with compacted structure granular backfill material (maximum 1’ loose lifts) to the level of the berm prior to placing beams for the bridge. Place Type IV geotextile fabric between embankment material and structure granular backfill. After completing the end bent backwall, or after completing the span end

wall, place the compacted structure granular backfill (maximum 1' loose lifts) to subgrade elevation. If the original excavation is enlarged, fill the entire volume with compacted structure granular backfill (maximum 1' loose lifts) at no expense to the Department. Do not place backfill before removing adjacent form work. Place structure granular backfill material in trench ditches at the ends of the excavation. Place Geotextile Fabric, Type IV over the surface of the compacted structure granular backfill prior to placing aggregate base course.

Tamp the backfill with hand tampers, pneumatic tampers, or other means approved by the Engineer. Thoroughly compact the backfill under the overhanging portions of the structure to ensure that the backfill is in intimate contact with the sides of the structure.

Do not apply seeding, sodding, or other vegetation to the exposed granular embankment.

3.2 Special Construction Methods. Erodible or unstable materials may erode even when protected by riprap or channel lining; use the special construction method described below when using these materials.

Use fine aggregates or friable sandstone granular embankment at "dry land" structures only. Do not use them at stream crossings or locations subject to flood waters.

For erodible or unstable materials having 50 percent or more passing the No. 4 sieve, protect with geotextile fabric. Extend the fabric from the original ground to the top of slope over the entire area of the embankment slopes on each side of, and in front of, the end bent. Cover the fabric with at least 12 inches of non-erodible material.

For erodible or unstable materials having less than 50 percent passing a No. 4 sieve, cover with at least 12 inches of non-erodible material.

Where erodible or unstable granular embankment will be protected by riprap or channel lining, place Type IV geotextile fabric between the embankment and the specified slope protection.

4.0 MEASUREMENT.

4.1 Granular Embankment. The Department will measure the quantity in cubic yards using the plan quantity, increased or decreased by authorized adjustments as specified in Section 204. The Department will not measure for payment any Granular Embankment that is not called for in the plans.

The Department will not measure for payment any special construction caused by using erodible or unstable materials and will consider it incidental to the Granular Embankment regardless of whether the erodible or unstable material was specified or permitted.

4.2 Rock Embankment. The Department will not measure for payment any rock embankment and will consider it incidental to roadway excavation or embankment in place, as applicable. Rock embankments will be constructed using granular embankment on projects where there is no available rock present within the excavation limits of the project.

4.3 Pile Core. Pile core will be measured and paid under roadway excavation or embankment in place, as applicable. The Department will not measure the pile core for separate payment. The Department will not measure for payment the 8-inch perforated underdrain pipe and will consider it incidental to the Pile Core.

4.4 Structure Granular Backfill. The Department will measure the quantity in cubic yards using the plan quantity, increased or decreased by authorized adjustments as specified in Section 204. The Department will not measure any additional material required for backfill outside the limits shown on the Plans and Standard Drawings for payment and will

consider it incidental to the work.

The Department will not measure for payment the 4-inch perforated underdrain pipe and will consider it incidental to the Structure Granular Backfill.

4.5 Geotextile Fabric. The Department will not measure the quantity of fabric used for separating dissimilar materials when constructing the embankment and pile core and will consider it incidental to embankment construction.

The Department will not measure for payment the Geotextile Fabric used to separate the Structure Granular Backfill from the embankment and aggregate base course and will consider it incidental to Structure Granular Backfill.

The Department will not measure for payment the Geotextile Fabric required for construction with erodible or unstable materials and will consider it incidental to embankment construction.

4.6 End Bent. The Department will measure the quantities according to the Contract. The Department will not measure furnishing and placing the 2-inch mortar or concrete bed for payment and will consider it incidental to the end bent construction.

4.7 Structure Excavation. The Department will not measure structure excavation on new embankments for payment and will consider it incidental to the Structure Granular Backfill or Concrete as applicable.

5.0 PAYMENT. The Department will make payment for the completed and accepted quantities under the following:

Code	Pay Item	Pay Unit
02223	Granular Embankment	Cubic Yards
02231	Structure Granular Backfill	Cubic Yards

The Department will consider payment as full compensation for all work required in this provision.

September 16, 2016

PART III

EMPLOYMENT, WAGE AND RECORD REQUIREMENTS

FHWA-1273 -- Revised May 1, 2012

REQUIRED CONTRACT PROVISIONS
FEDERAL-AID CONSTRUCTION CONTRACTS

I. General
II. Nondiscrimination
III. Nonsegregated Facilities
IV. Davis-Bacon and Related Act Provisions
V. Contract Work Hours and Safety Standards Act Provisions
VI. Subletting or Assigning the Contract
VII. Safety: Accident Prevention
VIII. False Statements Concerning Highway Projects
IX. Implementation of Clean Air Act and Federal Water Pollution Control Act
X. Compliance with Governmentwide Suspension and Debarment Requirements
XI. Certification Regarding Use of Contract Funds for Lobbying

ATTACHMENTS

A. Employment and Materials Preference for Appalachian Development Highway System or Appalachian Local Access Road Contracts (included in Appalachian contracts only)

I. GENERAL

1. Form FHWA-1273 must be physically incorporated in each construction contract funded under Title 23 (excluding emergency contracts solely intended for debris removal). The contractor (or subcontractor) must insert this form in each subcontract and further require its inclusion in all lower tier subcontracts (excluding purchase orders, rental agreements and other agreements for supplies or services).

The applicable requirements of Form FHWA-1273 are incorporated by reference for work done under any purchase order, rental agreement or agreement for other services. The prime contractor shall be responsible for compliance by any subcontractor, lower-tier subcontractor or service provider.

Form FHWA-1273 must be included in all Federal-aid design-build contracts, in all subcontracts and in lower tier subcontracts (excluding subcontracts for design services, purchase orders, rental agreements and other agreements for supplies or services). The design-builder shall be responsible for compliance by any subcontractor, lower-tier subcontractor or service provider.

Contracting agencies may reference Form FHWA-1273 in bid proposal or request for proposal documents, however, the Form FHWA-1273 must be physically incorporated (not referenced) in all contracts, subcontracts and lower-tier subcontracts (excluding purchase orders, rental agreements and other agreements for supplies or services related to a construction contract).

2. Subject to the applicability criteria noted in the following sections, these contract provisions shall apply to all work performed on the contract by the contractor's own organization and with the assistance of workers under the contractor's immediate superintendence and to all work performed on the contract by piecework, station work, or by subcontract.

3. A breach of any of the stipulations contained in these Required Contract Provisions may be sufficient grounds for withholding of progress payments, withholding of final payment, termination of the contract, suspension / debarment or any other action determined to be appropriate by the contracting agency and FHWA.

4. Selection of Labor: During the performance of this contract, the contractor shall not use convict labor for any purpose within the limits of a construction project on a Federal-aid highway unless it is labor performed by convicts who are on parole, supervised release, or probation. The term Federal-aid highway does not include roadways functionally classified as local roads or rural minor collectors.

II. NONDISCRIMINATION

The provisions of this section related to 23 CFR Part 230 are applicable to all Federal-aid construction contracts and to all related construction subcontracts of $10,000 or more. The provisions of 23 CFR Part 230 are not applicable to material supply, engineering, or architectural service contracts.

In addition, the contractor and all subcontractors must comply with the following policies: Executive Order 11246, 41 CFR 60, 29 CFR 1625-1627, Title 23 USC Section 140, the Rehabilitation Act of 1973, as amended (29 USC 794), Title VI of the Civil Rights Act of 1964, as amended, and related regulations including 49 CFR Parts 21, 26 and 27; and 23 CFR Parts 200, 230, and 633.

The contractor and all subcontractors must comply with: the requirements of the Equal Opportunity Clause in 41 CFR 60-1.4(b) and, for all construction contracts exceeding $10,000, the Standard Federal Equal Employment Opportunity Construction Contract Specifications in 41 CFR 60-4.3.

Note: The U.S. Department of Labor has exclusive authority to determine compliance with Executive Order 11246 and the policies of the Secretary of Labor including 41 CFR 60, and 29 CFR 1625-1627. The contracting agency and the FHWA have the authority and the responsibility to ensure compliance with Title 23 USC Section 140, the Rehabilitation Act of 1973, as amended (29 USC 794), and Title VI of the Civil Rights Act of 1964, as amended, and related regulations including 49 CFR Parts 21, 26 and 27; and 23 CFR Parts 200, 230, and 633.

The following provision is adopted from 23 CFR 230, Appendix A, with appropriate revisions to conform to the U.S. Department of Labor (US DOL) and FHWA requirements.

1. Equal Employment Opportunity: Equal employment opportunity (EEO) requirements not to discriminate and to take affirmative action to assure equal opportunity as set forth under laws, executive orders, rules, regulations (28 CFR 35, 29 CFR 1630, 29 CFR 1625-1627, 41 CFR 60 and 49 CFR 27) and orders of the Secretary of Labor as modified by the provisions prescribed herein, and imposed pursuant to 23 U.S.C. 140 shall constitute the EEO and specific affirmative action standards for the contractor's project activities under

this contract. The provisions of the Americans with Disabilities Act of 1990 (42 U.S.C. 12101 et seq.) set forth under 28 CFR 35 and 29 CFR 1630 are incorporated by reference in this contract. In the execution of this contract, the contractor agrees to comply with the following minimum specific requirement activities of EEO:

a. The contractor will work with the contracting agency and the Federal Government to ensure that it has made every good faith effort to provide equal opportunity with respect to all of its terms and conditions of employment and in their review of activities under the contract.

b. The contractor will accept as its operating policy the following statement:

"It is the policy of this Company to assure that applicants are employed, and that employees are treated during employment, without regard to their race, religion, sex, color, national origin, age or disability. Such action shall include: employment, upgrading, demotion, or transfer; recruitment or recruitment advertising; layoff or termination; rates of pay or other forms of compensation; and selection for training, including apprenticeship, pre-apprenticeship, and/or on-the-job training."

2. EEO Officer: The contractor will designate and make known to the contracting officers an EEO Officer who will have the responsibility for and must be capable of effectively administering and promoting an active EEO program and who must be assigned adequate authority and responsibility to do so.

3. Dissemination of Policy: All members of the contractor's staff who are authorized to hire, supervise, promote, and discharge employees, or who recommend such action, or who are substantially involved in such action, will be made fully cognizant of, and will implement, the contractor's EEO policy and contractual responsibilities to provide EEO in each grade and classification of employment. To ensure that the above agreement will be met, the following actions will be taken as a minimum:

a. Periodic meetings of supervisory and personnel office employees will be conducted before the start of work and then not less often than once every six months, at which time the contractor's EEO policy and its implementation will be reviewed and explained. The meetings will be conducted by the EEO Officer.

b. All new supervisory or personnel office employees will be given a thorough indoctrination by the EEO Officer, covering all major aspects of the contractor's EEO obligations within thirty days following their reporting for duty with the contractor.

c. All personnel who are engaged in direct recruitment for the project will be instructed by the EEO Officer in the contractor's procedures for locating and hiring minorities and women.

d. Notices and posters setting forth the contractor's EEO policy will be placed in areas readily accessible to employees, applicants for employment and potential employees.

e. The contractor's EEO policy and the procedures to implement such policy will be brought to the attention of employees by means of meetings, employee handbooks, or other appropriate means.

4. Recruitment: When advertising for employees, the contractor will include in all advertisements for employees the notation: "An Equal Opportunity Employer." All such advertisements will be placed in publications having a large circulation among minorities and women in the area from which the project work force would normally be derived.

a. The contractor will, unless precluded by a valid bargaining agreement, conduct systematic and direct recruitment through public and private employee referral sources likely to yield qualified minorities and women. To meet this requirement, the contractor will identify sources of potential minority group employees, and establish with such identified sources procedures whereby minority and women applicants may be referred to the contractor for employment consideration.

b. In the event the contractor has a valid bargaining agreement providing for exclusive hiring hall referrals, the contractor is expected to observe the provisions of that agreement to the extent that the system meets the contractor's compliance with EEO contract provisions. Where implementation of such an agreement has the effect of discriminating against minorities or women, or obligates the contractor to do the same, such implementation violates Federal nondiscrimination provisions.

c. The contractor will encourage its present employees to refer minorities and women as applicants for employment. Information and procedures with regard to referring such applicants will be discussed with employees.

5. Personnel Actions: Wages, working conditions, and employee benefits shall be established and administered, and personnel actions of every type, including hiring, upgrading, promotion, transfer, demotion, layoff, and termination, shall be taken without regard to race, color, religion, sex, national origin, age or disability. The following procedures shall be followed:

a. The contractor will conduct periodic inspections of project sites to insure that working conditions and employee facilities do not indicate discriminatory treatment of project site personnel.

b. The contractor will periodically evaluate the spread of wages paid within each classification to determine any evidence of discriminatory wage practices.

c. The contractor will periodically review selected personnel actions in depth to determine whether there is evidence of discrimination. Where evidence is found, the contractor will promptly take corrective action. If the review indicates that the discrimination may extend beyond the actions reviewed, such corrective action shall include all affected persons.

d. The contractor will promptly investigate all complaints of alleged discrimination made to the contractor in connection with its obligations under this contract, will attempt to resolve such complaints, and will take appropriate corrective action within a reasonable time. If the investigation indicates that the discrimination may affect persons other than the complainant, such corrective action shall include such other persons. Upon completion of each investigation, the contractor will inform every complainant of all of their avenues of appeal.

6. Training and Promotion:

a. The contractor will assist in locating, qualifying, and increasing the skills of minorities and women who are

applicants for employment or current employees. Such efforts should be aimed at developing full journey level status employees in the type of trade or job classification involved.

b. Consistent with the contractor's work force requirements and as permissible under Federal and State regulations, the contractor shall make full use of training programs, i.e., apprenticeship, and on-the-job training programs for the geographical area of contract performance. In the event a special provision for training is provided under this contract, this subparagraph will be superseded as indicated in the special provision. The contracting agency may reserve training positions for persons who receive welfare assistance in accordance with 23 U.S.C. 140(a).

c. The contractor will advise employees and applicants for employment of available training programs and entrance requirements for each.

d. The contractor will periodically review the training and promotion potential of employees who are minorities and women and will encourage eligible employees to apply for such training and promotion.

7. Unions: If the contractor relies in whole or in part upon unions as a source of employees, the contractor will use good faith efforts to obtain the cooperation of such unions to increase opportunities for minorities and women. Actions by the contractor, either directly or through a contractor's association acting as agent, will include the procedures set forth below:

a. The contractor will use good faith efforts to develop, in cooperation with the unions, joint training programs aimed toward qualifying more minorities and women for membership in the unions and increasing the skills of minorities and women so that they may qualify for higher paying employment.

b. The contractor will use good faith efforts to incorporate an EEO clause into each union agreement to the end that such union will be contractually bound to refer applicants without regard to their race, color, religion, sex, national origin, age or disability.

c. The contractor is to obtain information as to the referral practices and policies of the labor union except that to the extent such information is within the exclusive possession of the labor union and such labor union refuses to furnish such information to the contractor, the contractor shall so certify to the contracting agency and shall set forth what efforts have been made to obtain such information.

d. In the event the union is unable to provide the contractor with a reasonable flow of referrals within the time limit set forth in the collective bargaining agreement, the contractor will, through independent recruitment efforts, fill the employment vacancies without regard to race, color, religion, sex, national origin, age or disability; making full efforts to obtain qualified and/or qualifiable minorities and women. The failure of a union to provide sufficient referrals (even though it is obligated to provide exclusive referrals under the terms of a collective bargaining agreement) does not relieve the contractor from the requirements of this paragraph. In the event the union referral practice prevents the contractor from meeting the obligations pursuant to Executive Order 11246, as amended, and these special provisions, such contractor shall immediately notify the contracting agency.

8. Reasonable Accommodation for Applicants / Employees with Disabilities: The contractor must be familiar with the requirements for and comply with the Americans with Disabilities Act and all rules and regulations established there under. Employers must provide reasonable accommodation in all employment activities unless to do so would cause an undue hardship.

9. Selection of Subcontractors, Procurement of Materials and Leasing of Equipment: The contractor shall not discriminate on the grounds of race, color, religion, sex, national origin, age or disability in the selection and retention of subcontractors, including procurement of materials and leases of equipment. The contractor shall take all necessary and reasonable steps to ensure nondiscrimination in the administration of this contract.

a. The contractor shall notify all potential subcontractors and suppliers and lessors of their EEO obligations under this contract.

b. The contractor will use good faith efforts to ensure subcontractor compliance with their EEO obligations.

10. Assurance Required by 49 CFR 26.13(b):

a. The requirements of 49 CFR Part 26 and the State DOT's U.S. DOT-approved DBE program are incorporated by reference.

b. The contractor or subcontractor shall not discriminate on the basis of race, color, national origin, or sex in the performance of this contract. The contractor shall carry out applicable requirements of 49 CFR Part 26 in the award and administration of DOT-assisted contracts. Failure by the contractor to carry out these requirements is a material breach of this contract, which may result in the termination of this contract or such other remedy as the contracting agency deems appropriate.

11. Records and Reports: The contractor shall keep such records as necessary to document compliance with the EEO requirements. Such records shall be retained for a period of three years following the date of the final payment to the contractor for all contract work and shall be available at reasonable times and places for inspection by authorized representatives of the contracting agency and the FHWA.

a. The records kept by the contractor shall document the following:

(1) The number and work hours of minority and non-minority group members and women employed in each work classification on the project;

(2) The progress and efforts being made in cooperation with unions, when applicable, to increase employment opportunities for minorities and women; and

(3) The progress and efforts being made in locating, hiring, training, qualifying, and upgrading minorities and women;

b. The contractors and subcontractors will submit an annual report to the contracting agency each July for the duration of the project, indicating the number of minority, women, and non-minority group employees currently engaged in each work classification required by the contract work. This information is to be reported on Form FHWA-1391. The staffing data should represent the project work force on board in all or any part of the last payroll period preceding the end of July. If on-the-job training is being required by special provision, the contractor

will be required to collect and report training data. The employment data should reflect the work force on board during all or any part of the last payroll period preceding the end of July.

III. NONSEGREGATED FACILITIES

This provision is applicable to all Federal-aid construction contracts and to all related construction subcontracts of $10,000 or more.

The contractor must ensure that facilities provided for employees are provided in such a manner that segregation on the basis of race, color, religion, sex, or national origin cannot result. The contractor may neither require such segregated use by written or oral policies nor tolerate such use by employee custom. The contractor's obligation extends further to ensure that its employees are not assigned to perform their services at any location, under the contractor's control, where the facilities are segregated. The term "facilities" includes waiting rooms, work areas, restaurants and other eating areas, time clocks, restrooms, washrooms, locker rooms, and other storage or dressing areas, parking lots, drinking fountains, recreation or entertainment areas, transportation, and housing provided for employees. The contractor shall provide separate or single-user restrooms and necessary dressing or sleeping areas to assure privacy between sexes.

IV. DAVIS-BACON AND RELATED ACT PROVISIONS

This section is applicable to all Federal-aid construction projects exceeding $2,000 and to all related subcontracts and lower-tier subcontracts (regardless of subcontract size). The requirements apply to all projects located within the right-of-way of a roadway that is functionally classified as Federal-aid highway. This excludes roadways functionally classified as local roads or rural minor collectors, which are exempt. Contracting agencies may elect to apply these requirements to other projects.

The following provisions are from the U.S. Department of Labor regulations in 29 CFR 5.5 “Contract provisions and related matters” with minor revisions to conform to the FHWA-1273 format and FHWA program requirements.

1. Minimum wages

a. All laborers and mechanics employed or working upon the site of the work, will be paid unconditionally and not less often than once a week, and without subsequent deduction or rebate on any account (except such payroll deductions as are permitted by regulations issued by the Secretary of Labor under the Copeland Act (29 CFR part 3)), the full amount of wages and bona fide fringe benefits (or cash equivalents thereof) due at time of payment computed at rates not less than those contained in the wage determination of the Secretary of Labor which is attached hereto and made a part hereof, regardless of any contractual relationship which may be alleged to exist between the contractor and such laborers and mechanics.

Contributions made or costs reasonably anticipated for bona fide fringe benefits under section 1(b)(2) of the Davis-Bacon Act on behalf of laborers or mechanics are considered wages paid to such laborers or mechanics, subject to the provisions of paragraph 1.d. of this section; also, regular contributions made or costs incurred for more than a weekly period (but not less often than quarterly) under plans, funds, or programs which cover the particular weekly period, are deemed to be constructively made or incurred during such weekly period. Such laborers and mechanics shall be paid the appropriate wage rate and fringe benefits on the wage determination for the classification of work actually performed, without regard to skill, except as provided in 29 CFR 5.5(a)(4). Laborers or mechanics performing work in more than one classification may be compensated at the rate specified for each classification for the time actually worked therein: Provided, That the employer's payroll records accurately set forth the time spent in each classification in which work is performed. The wage determination (including any additional classification and wage rates conformed under paragraph 1.b. of this section) and the Davis-Bacon poster (WH–1321) shall be posted at all times by the contractor and its subcontractors at the site of the work in a prominent and accessible place where it can be easily seen by the workers.

b.(1) The contracting officer shall require that any class of laborers or mechanics, including helpers, which is not listed in the wage determination and which is to be employed under the contract shall be classified in conformance with the wage determination. The contracting officer shall approve an additional classification and wage rate and fringe benefits therefore only when the following criteria have been met:

(i) The work to be performed by the classification requested is not performed by a classification in the wage determination; and

(ii) The classification is utilized in the area by the construction industry; and

(iii) The proposed wage rate, including any bona fide fringe benefits, bears a reasonable relationship to the wage rates contained in the wage determination.

(2) If the contractor and the laborers and mechanics to be employed in the classification (if known), or their representatives, and the contracting officer agree on the classification and wage rate (including the amount designated for fringe benefits where appropriate), a report of the action taken shall be sent by the contracting officer to the Administrator of the Wage and Hour Division, Employment Standards Administration, U.S. Department of Labor, Washington, DC 20210. The Administrator, or an authorized representative, will approve, modify, or disapprove every additional classification action within 30 days of receipt and so advise the contracting officer or will notify the contracting officer within the 30-day period that additional time is necessary.

(3) In the event the contractor, the laborers or mechanics to be employed in the classification or their representatives, and the contracting officer do not agree on the proposed classification and wage rate (including the amount designated for fringe benefits, where appropriate), the contracting officer shall refer the questions, including the views of all interested parties and the recommendation of the contracting officer, to the Wage and Hour Administrator for determination. The Wage and Hour Administrator, or an authorized representative, will issue a determination within 30 days of receipt and so advise the contracting officer or

will notify the contracting officer within the 30-day period that additional time is necessary.

(4) The wage rate (including fringe benefits where appropriate) determined pursuant to paragraphs 1.b.(2) or 1.b.(3) of this section, shall be paid to all workers performing work in the classification under this contract from the first day on which work is performed in the classification.

c. Whenever the minimum wage rate prescribed in the contract for a class of laborers or mechanics includes a fringe benefit which is not expressed as an hourly rate, the contractor shall either pay the benefit as stated in the wage determination or shall pay another bona fide fringe benefit or an hourly cash equivalent thereof.

d. If the contractor does not make payments to a trustee or other third person, the contractor may consider as part of the wages of any laborer or mechanic the amount of any costs reasonably anticipated in providing bona fide fringe benefits under a plan or program, Provided, That the Secretary of Labor has found, upon the written request of the contractor, that the applicable standards of the Davis-Bacon Act have been met. The Secretary of Labor may require the contractor to set aside in a separate account assets for the meeting of obligations under the plan or program.

2. Withholding

The contracting agency shall upon its own action or upon written request of an authorized representative of the Department of Labor, withhold or cause to be withheld from the contractor under this contract, or any other Federal contract with the same prime contractor, or any other federally-assisted contract subject to Davis-Bacon prevailing wage requirements, which is held by the same prime contractor, so much of the accrued payments or advances as may be considered necessary to pay laborers and mechanics, including apprentices, trainees, and helpers, employed by the contractor or any subcontractor the full amount of wages required by the contract. In the event of failure to pay any laborer or mechanic, including any apprentice, trainee, or helper, employed or working on the site of the work, all or part of the wages required by the contract, the contracting agency may, after written notice to the contractor, take such action as may be necessary to cause the suspension of any further payment, advance, or guarantee of funds until such violations have ceased.

3. Payrolls and basic records

a. Payrolls and basic records relating thereto shall be maintained by the contractor during the course of the work and preserved for a period of three years thereafter for all laborers and mechanics working at the site of the work. Such records shall contain the name, address, and social security number of each such worker, his or her correct classification, hourly rates of wages paid (including rates of contributions or costs anticipated for bona fide fringe benefits or cash equivalents thereof of the types described in section 1(b)(2)(B) of the Davis-Bacon Act), daily and weekly number of hours worked, deductions made and actual wages paid. Whenever the Secretary of Labor has found under 29 CFR 5.5(a)(1)(iv) that the wages of any laborer or mechanic include the amount of any costs reasonably anticipated in providing benefits under a plan or program described in section 1(b)(2)(B) of the Davis-Bacon Act, the contractor shall maintain records which show that the commitment to provide such benefits is enforceable, that the plan or program is financially responsible, and that the plan or program has been communicated in writing to the laborers or mechanics affected, and records which show the costs anticipated or the actual cost incurred in providing such benefits. Contractors employing apprentices or trainees under approved programs shall maintain written evidence of the registration of apprenticeship programs and certification of trainee programs, the registration of the apprentices and trainees, and the ratios and wage rates prescribed in the applicable programs.

b.(1) The contractor shall submit weekly for each week in which any contract work is performed a copy of all payrolls to the contracting agency. The payrolls submitted shall set out accurately and completely all of the information required to be maintained under 29 CFR 5.5(a)(3)(i), except that full social security numbers and home addresses shall not be included on weekly transmittals. Instead the payrolls shall only need to include an individually identifying number for each employee (e.g. , the last four digits of the employee's social security number). The required weekly payroll information may be submitted in any form desired. Optional Form WH–347 is available for this purpose from the Wage and Hour Division Web site at http://www.dol.gov/esa/whd/forms/wh347instr.htm or its successor site. The prime contractor is responsible for the submission of copies of payrolls by all subcontractors. Contractors and subcontractors shall maintain the full social security number and current address of each covered worker, and shall provide them upon request to the contracting agency for transmission to the State DOT, the FHWA or the Wage and Hour Division of the Department of Labor for purposes of an investigation or audit of compliance with prevailing wage requirements. It is not a violation of this section for a prime contractor to require a subcontractor to provide addresses and social security numbers to the prime contractor for its own records, without weekly submission to the contracting agency..

(2) Each payroll submitted shall be accompanied by a “Statement of Compliance,” signed by the contractor or subcontractor or his or her agent who pays or supervises the payment of the persons employed under the contract and shall certify the following:

(i) That the payroll for the payroll period contains the information required to be provided under §5.5 (a)(3)(ii) of Regulations, 29 CFR part 5, the appropriate information is being maintained under §5.5 (a)(3)(i) of Regulations, 29 CFR part 5, and that such information is correct and complete;

(ii) That each laborer or mechanic (including each helper, apprentice, and trainee) employed on the contract during the payroll period has been paid the full weekly wages earned, without rebate, either directly or indirectly, and that no deductions have been made either directly or indirectly from the full wages earned, other than permissible deductions as set forth in Regulations, 29 CFR part 3;

(iii) That each laborer or mechanic has been paid not less than the applicable wage rates and fringe benefits or cash equivalents for the classification of work performed, as specified in the applicable wage determination incorporated into the contract.

(3) The weekly submission of a properly executed certification set forth on the reverse side of Optional Form WH–347 shall satisfy the requirement for submission of the "Statement of Compliance" required by paragraph 3.b.(2) of this section.

(4) The falsification of any of the above certifications may subject the contractor or subcontractor to civil or criminal prosecution under section 1001 of title 18 and section 231 of title 31 of the United States Code.

c. The contractor or subcontractor shall make the records required under paragraph 3.a. of this section available for inspection, copying, or transcription by authorized representatives of the contracting agency, the State DOT, the FHWA, or the Department of Labor, and shall permit such representatives to interview employees during working hours on the job. If the contractor or subcontractor fails to submit the required records or to make them available, the FHWA may, after written notice to the contractor, the contracting agency or the State DOT, take such action as may be necessary to cause the suspension of any further payment, advance, or guarantee of funds. Furthermore, failure to submit the required records upon request or to make such records available may be grounds for debarment action pursuant to 29 CFR 5.12.

4. Apprentices and trainees

a. Apprentices (programs of the USDOL).

Apprentices will be permitted to work at less than the predetermined rate for the work they performed when they are employed pursuant to and individually registered in a bona fide apprenticeship program registered with the U.S. Department of Labor, Employment and Training Administration, Office of Apprenticeship Training, Employer and Labor Services, or with a State Apprenticeship Agency recognized by the Office, or if a person is employed in his or her first 90 days of probationary employment as an apprentice in such an apprenticeship program, who is not individually registered in the program, but who has been certified by the Office of Apprenticeship Training, Employer and Labor Services or a State Apprenticeship Agency (where appropriate) to be eligible for probationary employment as an apprentice.

The allowable ratio of apprentices to journeymen on the job site in any craft classification shall not be greater than the ratio permitted to the contractor as to the entire work force under the registered program. Any worker listed on a payroll at an apprentice wage rate, who is not registered or otherwise employed as stated above, shall be paid not less than the applicable wage rate on the wage determination for the classification of work actually performed. In addition, any apprentice performing work on the job site in excess of the ratio permitted under the registered program shall be paid not less than the applicable wage rate on the wage determination for the work actually performed. Where a contractor is performing construction on a project in a locality other than that in which its program is registered, the ratios and wage rates (expressed in percentages of the journeyman's hourly rate) specified in the contractor's or subcontractor's registered program shall be observed.

Every apprentice must be paid at not less than the rate specified in the registered program for the apprentice's level of progress, expressed as a percentage of the journeymen hourly rate specified in the applicable wage determination. Apprentices shall be paid fringe benefits in accordance with the provisions of the apprenticeship program. If the apprenticeship program does not specify fringe benefits, apprentices must be paid the full amount of fringe benefits listed on the wage determination for the applicable classification. If the Administrator determines that a different practice prevails for the applicable apprentice classification, fringes shall be paid in accordance with that determination.

In the event the Office of Apprenticeship Training, Employer and Labor Services, or a State Apprenticeship Agency recognized by the Office, withdraws approval of an apprenticeship program, the contractor will no longer be permitted to utilize apprentices at less than the applicable predetermined rate for the work performed until an acceptable program is approved.

b. Trainees (programs of the USDOL).

Except as provided in 29 CFR 5.16, trainees will not be permitted to work at less than the predetermined rate for the work performed unless they are employed pursuant to and individually registered in a program which has received prior approval, evidenced by formal certification by the U.S. Department of Labor, Employment and Training Administration.

The ratio of trainees to journeymen on the job site shall not be greater than permitted under the plan approved by the Employment and Training Administration.

Every trainee must be paid at not less than the rate specified in the approved program for the trainee's level of progress, expressed as a percentage of the journeyman hourly rate specified in the applicable wage determination. Trainees shall be paid fringe benefits in accordance with the provisions of the trainee program. If the trainee program does not mention fringe benefits, trainees shall be paid the full amount of fringe benefits listed on the wage determination unless the Administrator of the Wage and Hour Division determines that there is an apprenticeship program associated with the corresponding journeyman wage rate on the wage determination which provides for less than full fringe benefits for apprentices. Any employee listed on the payroll at a trainee rate who is not registered and participating in a training plan approved by the Employment and Training Administration shall be paid not less than the applicable wage rate on the wage determination for the classification of work actually performed. In addition, any trainee performing work on the job site in excess of the ratio permitted under the registered program shall be paid not less than the applicable wage rate on the wage determination for the work actually performed.

In the event the Employment and Training Administration withdraws approval of a training program, the contractor will no longer be permitted to utilize trainees at less than the applicable predetermined rate for the work performed until an acceptable program is approved.

c. Equal employment opportunity. The utilization of apprentices, trainees and journeymen under this part shall be in conformity with the equal employment opportunity requirements of Executive Order 11246, as amended, and 29 CFR part 30.

d. Apprentices and Trainees (programs of the U.S. DOT).

Apprentices and trainees working under apprenticeship and skill training programs which have been certified by the Secretary of Transportation as promoting EEO in connection with Federal-aid highway construction programs are not subject to the requirements of paragraph 4 of this Section IV. The straight time hourly wage rates for apprentices and trainees under such programs will be established by the particular programs. The ratio of apprentices and trainees to journeymen shall not be greater than permitted by the terms of the particular program.

5. Compliance with Copeland Act requirements. The contractor shall comply with the requirements of 29 CFR part 3, which are incorporated by reference in this contract.

6. Subcontracts. The contractor or subcontractor shall insert Form FHWA-1273 in any subcontracts and also require the subcontractors to include Form FHWA-1273 in any lower tier subcontracts. The prime contractor shall be responsible for the compliance by any subcontractor or lower tier subcontractor with all the contract clauses in 29 CFR 5.5.

7. Contract termination: debarment. A breach of the contract clauses in 29 CFR 5.5 may be grounds for termination of the contract, and for debarment as a contractor and a subcontractor as provided in 29 CFR 5.12.

8. Compliance with Davis-Bacon and Related Act requirements. All rulings and interpretations of the Davis-Bacon and Related Acts contained in 29 CFR parts 1, 3, and 5 are herein incorporated by reference in this contract.

9. Disputes concerning labor standards. Disputes arising out of the labor standards provisions of this contract shall not be subject to the general disputes clause of this contract. Such disputes shall be resolved in accordance with the procedures of the Department of Labor set forth in 29 CFR parts 5, 6, and 7. Disputes within the meaning of this clause include disputes between the contractor (or any of its subcontractors) and the contracting agency, the U.S. Department of Labor, or the employees or their representatives.

10. Certification of eligibility.

a. By entering into this contract, the contractor certifies that neither it (nor he or she) nor any person or firm who has an interest in the contractor's firm is a person or firm ineligible to be awarded Government contracts by virtue of section 3(a) of the Davis-Bacon Act or 29 CFR 5.12(a)(1).

b. No part of this contract shall be subcontracted to any person or firm ineligible for award of a Government contract by virtue of section 3(a) of the Davis-Bacon Act or 29 CFR 5.12(a)(1).

c. The penalty for making false statements is prescribed in the U.S. Criminal Code, 18 U.S.C. 1001.

V. CONTRACT WORK HOURS AND SAFETY STANDARDS ACT

The following clauses apply to any Federal-aid construction contract in an amount in excess of $100,000 and subject to the overtime provisions of the Contract Work Hours and Safety Standards Act. These clauses shall be inserted in addition to the clauses required by 29 CFR 5.5(a) or 29 CFR 4.6. As used in this paragraph, the terms laborers and mechanics include watchmen and guards.

1. Overtime requirements. No contractor or subcontractor contracting for any part of the contract work which may require or involve the employment of laborers or mechanics shall require or permit any such laborer or mechanic in any workweek in which he or she is employed on such work to work in excess of forty hours in such workweek unless such laborer or mechanic receives compensation at a rate not less than one and one-half times the basic rate of pay for all hours worked in excess of forty hours in such workweek.

2. Violation; liability for unpaid wages; liquidated damages. In the event of any violation of the clause set forth in paragraph (1.) of this section, the contractor and any subcontractor responsible therefor shall be liable for the unpaid wages. In addition, such contractor and subcontractor shall be liable to the United States (in the case of work done under contract for the District of Columbia or a territory, to such District or to such territory), for liquidated damages. Such liquidated damages shall be computed with respect to each individual laborer or mechanic, including watchmen and guards, employed in violation of the clause set forth in paragraph (1.) of this section, in the sum of $10 for each calendar day on which such individual was required or permitted to work in excess of the standard workweek of forty hours without payment of the overtime wages required by the clause set forth in paragraph (1.) of this section.

3. Withholding for unpaid wages and liquidated damages. The FHWA or the contacting agency shall upon its own action or upon written request of an authorized representative of the Department of Labor withhold or cause to be withheld, from any moneys payable on account of work performed by the contractor or subcontractor under any such contract or any other Federal contract with the same prime contractor, or any other federally-assisted contract subject to the Contract Work Hours and Safety Standards Act, which is held by the same prime contractor, such sums as may be determined to be necessary to satisfy any liabilities of such contractor or subcontractor for unpaid wages and liquidated damages as provided in the clause set forth in paragraph (2.) of this section.

4. Subcontracts. The contractor or subcontractor shall insert in any subcontracts the clauses set forth in paragraph (1.) through (4.) of this section and also a clause requiring the subcontractors to include these clauses in any lower tier subcontracts. The prime contractor shall be responsible for compliance by any subcontractor or lower tier subcontractor with the clauses set forth in paragraphs (1.) through (4.) of this section.

VI. SUBLETTING OR ASSIGNING THE CONTRACT

This provision is applicable to all Federal-aid construction contracts on the National Highway System.

1. The contractor shall perform with its own organization contract work amounting to not less than 30 percent (or a greater percentage if specified elsewhere in the contract) of the total original contract price, excluding any specialty items designated by the contracting agency. Specialty items may be performed by subcontract and the amount of any such specialty items performed may be deducted from the total original contract price before computing the amount of work required to be performed by the contractor's own organization (23 CFR 635.116).

a. The term “perform work with its own organization” refers to workers employed or leased by the prime contractor, and equipment owned or rented by the prime contractor, with or without operators. Such term does not include employees or equipment of a subcontractor or lower tier subcontractor, agents of the prime contractor, or any other assignees. The term may include payments for the costs of hiring leased employees from an employee leasing firm meeting all relevant Federal and State regulatory requirements. Leased employees may only be included in this term if the prime contractor meets all of the following conditions:

(1) the prime contractor maintains control over the supervision of the day-to-day activities of the leased employees;
(2) the prime contractor remains responsible for the quality of the work of the leased employees;
(3) the prime contractor retains all power to accept or exclude individual employees from work on the project; and
(4) the prime contractor remains ultimately responsible for the payment of predetermined minimum wages, the submission of payrolls, statements of compliance and all other Federal regulatory requirements.

b. "Specialty Items" shall be construed to be limited to work that requires highly specialized knowledge, abilities, or equipment not ordinarily available in the type of contracting organizations qualified and expected to bid or propose on the contract as a whole and in general are to be limited to minor components of the overall contract.

2. The contract amount upon which the requirements set forth in paragraph (1) of Section VI is computed includes the cost of material and manufactured products which are to be purchased or produced by the contractor under the contract provisions.

3. The contractor shall furnish (a) a competent superintendent or supervisor who is employed by the firm, has full authority to direct performance of the work in accordance with the contract requirements, and is in charge of all construction operations (regardless of who performs the work) and (b) such other of its own organizational resources (supervision, management, and engineering services) as the contracting officer determines is necessary to assure the performance of the contract.

4. No portion of the contract shall be sublet, assigned or otherwise disposed of except with the written consent of the contracting officer, or authorized representative, and such consent when given shall not be construed to relieve the contractor of any responsibility for the fulfillment of the contract. Written consent will be given only after the contracting agency has assured that each subcontract is evidenced in writing and that it contains all pertinent provisions and requirements of the prime contract.

5. The 30% self-performance requirement of paragraph (1) is not applicable to design-build contracts; however, contracting agencies may establish their own self-performance requirements.

VII. SAFETY: ACCIDENT PREVENTION

This provision is applicable to all Federal-aid construction contracts and to all related subcontracts.

1. In the performance of this contract the contractor shall comply with all applicable Federal, State, and local laws governing safety, health, and sanitation (23 CFR 635). The contractor shall provide all safeguards, safety devices and protective equipment and take any other needed actions as it determines, or as the contracting officer may determine, to be reasonably necessary to protect the life and health of employees on the job and the safety of the public and to protect property in connection with the performance of the work covered by the contract.

2. It is a condition of this contract, and shall be made a condition of each subcontract, which the contractor enters into pursuant to this contract, that the contractor and any subcontractor shall not permit any employee, in performance of the contract, to work in surroundings or under conditions which are unsanitary, hazardous or dangerous to his/her health or safety, as determined under construction safety and health standards (29 CFR 1926) promulgated by the Secretary of Labor, in accordance with Section 107 of the Contract Work Hours and Safety Standards Act (40 U.S.C. 3704).

3. Pursuant to 29 CFR 1926.3, it is a condition of this contract that the Secretary of Labor or authorized representative thereof, shall have right of entry to any site of contract performance to inspect or investigate the matter of compliance with the construction safety and health standards and to carry out the duties of the Secretary under Section 107 of the Contract Work Hours and Safety Standards Act (40 U.S.C.3704).

VIII. FALSE STATEMENTS CONCERNING HIGHWAY PROJECTS

This provision is applicable to all Federal-aid construction contracts and to all related subcontracts.

In order to assure high quality and durable construction in conformity with approved plans and specifications and a high degree of reliability on statements and representations made by engineers, contractors, suppliers, and workers on Federal-aid highway projects, it is essential that all persons concerned with the project perform their functions as carefully, thoroughly, and honestly as possible. Willful falsification, distortion, or misrepresentation with respect to any facts related to the project is a violation of Federal law. To prevent any misunderstanding regarding the seriousness of these and similar acts, Form FHWA-1022 shall be posted on each Federal-aid highway project (23 CFR 635) in one or more places where it is readily available to all persons concerned with the project:

18 U.S.C. 1020 reads as follows:

"Whoever, being an officer, agent, or employee of the United States, or of any State or Territory, or whoever, whether a person, association, firm, or corporation, knowingly makes any false statement, false representation, or false report as to the character, quality, quantity, or cost of the material used or to be used, or the quantity or quality of the work performed or to be performed, or the cost thereof in connection with the submission of plans, maps, specifications, contracts, or costs of construction on any highway or related project submitted for approval to the Secretary of Transportation; or

Whoever knowingly makes any false statement, false representation, false report or false claim with respect to the character, quality, quantity, or cost of any work performed or to be performed, or materials furnished or to be furnished, in connection with the construction of any highway or related project approved by the Secretary of Transportation; or

Whoever knowingly makes any false statement or false representation as to material fact in any statement, certificate, or report submitted pursuant to provisions of the Federal-aid Roads Act approved July 1, 1916, (39 Stat. 355), as amended and supplemented;

Shall be fined under this title or imprisoned not more than 5 years or both."

IX. IMPLEMENTATION OF CLEAN AIR ACT AND FEDERAL WATER POLLUTION CONTROL ACT

This provision is applicable to all Federal-aid construction contracts and to all related subcontracts.

By submission of this bid/proposal or the execution of this contract, or subcontract, as appropriate, the bidder, proposer, Federal-aid construction contractor, or subcontractor, as appropriate, will be deemed to have stipulated as follows:

1. That any person who is or will be utilized in the performance of this contract is not prohibited from receiving an award due to a violation of Section 508 of the Clean Water Act or Section 306 of the Clean Air Act.
2. That the contractor agrees to include or cause to be included the requirements of paragraph (1) of this Section X in every subcontract, and further agrees to take such action as the contracting agency may direct as a means of enforcing such requirements.

X. CERTIFICATION REGARDING DEBARMENT, SUSPENSION, INELIGIBILITY AND VOLUNTARY EXCLUSION

This provision is applicable to all Federal-aid construction contracts, design-build contracts, subcontracts, lower-tier subcontracts, purchase orders, lease agreements, consultant contracts or any other covered transaction requiring FHWA approval or that is estimated to cost $25,000 or more – as defined in 2 CFR Parts 180 and 1200.

1**. Instructions for Certification – First Tier Participants:**

a. By signing and submitting this proposal, the prospective first tier participant is providing the certification set out below.

b. The inability of a person to provide the certification set out below will not necessarily result in denial of participation in this covered transaction. The prospective first tier participant shall submit an explanation of why it cannot provide the certification set out below. The certification or explanation will be considered in connection with the department or agency's determination whether to enter into this transaction. However, failure of the prospective first tier participant to furnish a certification or an explanation shall disqualify such a person from participation in this transaction.

c. The certification in this clause is a material representation of fact upon which reliance was placed when the contracting agency determined to enter into this transaction. If it is later determined that the prospective participant knowingly rendered an erroneous certification, in addition to other remedies available to the Federal Government, the contracting agency may terminate this transaction for cause of default.

d. The prospective first tier participant shall provide immediate written notice to the contracting agency to whom this proposal is submitted if any time the prospective first tier participant learns that its certification was erroneous when submitted or has become erroneous by reason of changed circumstances.

e. The terms "covered transaction," "debarred," "suspended," "ineligible," "participant," "person," "principal," and "voluntarily excluded," as used in this clause, are defined in 2 CFR Parts 180 and 1200. “First Tier Covered Transactions” refers to any covered transaction between a grantee or subgrantee of Federal funds and a participant (such as the prime or general contract). “Lower Tier Covered Transactions” refers to any covered transaction under a First Tier Covered Transaction (such as subcontracts). “First Tier Participant” refers to the participant who has entered into a covered transaction with a grantee or subgrantee of Federal funds (such as the prime or general contractor). “Lower Tier Participant” refers any participant who has entered into a covered transaction with a First Tier Participant or other Lower Tier Participants (such as subcontractors and suppliers).

f. The prospective first tier participant agrees by submitting this proposal that, should the proposed covered transaction be entered into, it shall not knowingly enter into any lower tier covered transaction with a person who is debarred, suspended, declared ineligible, or voluntarily excluded from participation in this covered transaction, unless authorized by the department or agency entering into this transaction.

g. The prospective first tier participant further agrees by submitting this proposal that it will include the clause titled "Certification Regarding Debarment, Suspension, Ineligibility and Voluntary Exclusion-Lower Tier Covered Transactions," provided by the department or contracting agency, entering into this covered transaction, without modification, in all lower tier covered transactions and in all solicitations for lower tier covered transactions exceeding the $25,000 threshold.

h. A participant in a covered transaction may rely upon a certification of a prospective participant in a lower tier covered transaction that is not debarred, suspended, ineligible, or voluntarily excluded from the covered transaction, unless it knows that the certification is erroneous. A participant is responsible for ensuring that its principals are not suspended, debarred, or otherwise ineligible to participate in covered transactions. To verify the eligibility of its principals, as well as the eligibility of any lower tier prospective participants, each participant may, but is not required to, check the Excluded Parties List System website (https://www.epls.gov/), which is compiled by the General Services Administration.

i. Nothing contained in the foregoing shall be construed to require the establishment of a system of records in order to render in good faith the certification required by this clause. The knowledge and information of the prospective participant is not required to exceed that which is normally possessed by a prudent person in the ordinary course of business dealings.

j. Except for transactions authorized under paragraph (f) of these instructions, if a participant in a covered transaction knowingly enters into a lower tier covered transaction with a person who is suspended, debarred, ineligible, or voluntarily excluded from participation in this transaction, in addition to other remedies available to the Federal Government, the department or agency may terminate this transaction for cause or default.

* * * * *

2. Certification Regarding Debarment, Suspension, Ineligibility and Voluntary Exclusion – First Tier Participants:

a. The prospective first tier participant certifies to the best of its knowledge and belief, that it and its principals:

(1) Are not presently debarred, suspended, proposed for debarment, declared ineligible, or voluntarily excluded from participating in covered transactions by any Federal department or agency;

(2) Have not within a three-year period preceding this proposal been convicted of or had a civil judgment rendered against them for commission of fraud or a criminal offense in connection with obtaining, attempting to obtain, or performing a public (Federal, State or local) transaction or contract under a public transaction; violation of Federal or State antitrust statutes or commission of embezzlement, theft, forgery, bribery, falsification or destruction of records, making false statements, or receiving stolen property;

(3) Are not presently indicted for or otherwise criminally or civilly charged by a governmental entity (Federal, State or local) with commission of any of the offenses enumerated in paragraph (a)(2) of this certification; and

(4) Have not within a three-year period preceding this application/proposal had one or more public transactions (Federal, State or local) terminated for cause or default.

b. Where the prospective participant is unable to certify to any of the statements in this certification, such prospective participant shall attach an explanation to this proposal.

2. **Instructions for Certification - Lower Tier Participants:**

(Applicable to all subcontracts, purchase orders and other lower tier transactions requiring prior FHWA approval or estimated to cost $25,000 or more - 2 CFR Parts 180 and 1200)

a. By signing and submitting this proposal, the prospective lower tier is providing the certification set out below.

b. The certification in this clause is a material representation of fact upon which reliance was placed when this transaction was entered into. If it is later determined that the prospective lower tier participant knowingly rendered an erroneous certification, in addition to other remedies available to the Federal Government, the department, or agency with which this transaction originated may pursue available remedies, including suspension and/or debarment.

c. The prospective lower tier participant shall provide immediate written notice to the person to which this proposal is submitted if at any time the prospective lower tier participant learns that its certification was erroneous by reason of changed circumstances.

d. The terms "covered transaction," "debarred," "suspended," "ineligible," "participant," "person," "principal," and "voluntarily excluded," as used in this clause, are defined in 2 CFR Parts 180 and 1200. You may contact the person to which this proposal is submitted for assistance in obtaining a copy of those regulations. “First Tier Covered Transactions” refers to any covered transaction between a grantee or subgrantee of Federal funds and a participant (such as the prime or general contract). “Lower Tier Covered Transactions” refers to any covered transaction under a First Tier Covered Transaction (such as subcontracts). “First Tier Participant” refers to the participant who has entered into a covered transaction with a grantee or subgrantee of Federal funds (such as the prime or general contractor). “Lower Tier Participant” refers any participant who has entered into a covered transaction with a First Tier Participant or other Lower Tier Participants (such as subcontractors and suppliers).

e. The prospective lower tier participant agrees by submitting this proposal that, should the proposed covered transaction be entered into, it shall not knowingly enter into any lower tier covered transaction with a person who is debarred, suspended, declared ineligible, or voluntarily excluded from participation in this covered transaction, unless authorized by the department or agency with which this transaction originated.

f. The prospective lower tier participant further agrees by submitting this proposal that it will include this clause titled "Certification Regarding Debarment, Suspension, Ineligibility and Voluntary Exclusion-Lower Tier Covered Transaction," without modification, in all lower tier covered transactions and in all solicitations for lower tier covered transactions exceeding the $25,000 threshold.

g. A participant in a covered transaction may rely upon a certification of a prospective participant in a lower tier covered transaction that is not debarred, suspended, ineligible, or voluntarily excluded from the covered transaction, unless it knows that the certification is erroneous. A participant is responsible for ensuring that its principals are not suspended, debarred, or otherwise ineligible to participate in covered transactions. To verify the eligibility of its principals, as well as the eligibility of any lower tier prospective participants, each participant may, but is not required to, check the Excluded Parties List System website (https://www.epls.gov/), which is compiled by the General Services Administration.

h. Nothing contained in the foregoing shall be construed to require establishment of a system of records in order to render in good faith the certification required by this clause. The knowledge and information of participant is not required to exceed that which is normally possessed by a prudent person in the ordinary course of business dealings.

i. Except for transactions authorized under paragraph e of these instructions, if a participant in a covered transaction knowingly enters into a lower tier covered transaction with a person who is suspended, debarred, ineligible, or voluntarily excluded from participation in this transaction, in addition to other remedies available to the Federal Government, the

department or agency with which this transaction originated may pursue available remedies, including suspension and/or debarment.

* * * * *

Certification Regarding Debarment, Suspension, Ineligibility and Voluntary Exclusion--Lower Tier Participants:

1. The prospective lower tier participant certifies, by submission of this proposal, that neither it nor its principals is presently debarred, suspended, proposed for debarment, declared ineligible, or voluntarily excluded from participating in covered transactions by any Federal department or agency.

2. Where the prospective lower tier participant is unable to certify to any of the statements in this certification, such prospective participant shall attach an explanation to this proposal.

* * * * *

XI. CERTIFICATION REGARDING USE OF CONTRACT FUNDS FOR LOBBYING

This provision is applicable to all Federal-aid construction contracts and to all related subcontracts which exceed $100,000 (49 CFR 20).

1. The prospective participant certifies, by signing and submitting this bid or proposal, to the best of his or her knowledge and belief, that:

a. No Federal appropriated funds have been paid or will be paid, by or on behalf of the undersigned, to any person for influencing or attempting to influence an officer or employee of any Federal agency, a Member of Congress, an officer or employee of Congress, or an employee of a Member of Congress in connection with the awarding of any Federal contract, the making of any Federal grant, the making of any Federal loan, the entering into of any cooperative agreement, and the extension, continuation, renewal, amendment, or modification of any Federal contract, grant, loan, or cooperative agreement.

b. If any funds other than Federal appropriated funds have been paid or will be paid to any person for influencing or attempting to influence an officer or employee of any Federal agency, a Member of Congress, an officer or employee of Congress, or an employee of a Member of Congress in connection with this Federal contract, grant, loan, or cooperative agreement, the undersigned shall complete and submit Standard Form-LLL, "Disclosure Form to Report Lobbying," in accordance with its instructions.

2. This certification is a material representation of fact upon which reliance was placed when this transaction was made or entered into. Submission of this certification is a prerequisite for making or entering into this transaction imposed by 31 U.S.C. 1352. Any person who fails to file the required certification shall be subject to a civil penalty of not less than $10,000 and not more than $100,000 for each such failure.

3. The prospective participant also agrees by submitting its bid or proposal that the participant shall require that the language of this certification be included in all lower tier subcontracts, which exceed $100,000 and that all such recipients shall certify and disclose accordingly.

ATTACHMENT A - EMPLOYMENT AND MATERIALS PREFERENCE FOR APPALACHIAN DEVELOPMENT HIGHWAY SYSTEM OR APPALACHIAN LOCAL ACCESS ROAD CONTRACTS

This provision is applicable to all Federal-aid projects funded under the Appalachian Regional Development Act of 1965.

1. During the performance of this contract, the contractor undertaking to do work which is, or reasonably may be, done as on-site work, shall give preference to qualified persons who regularly reside in the labor area as designated by the DOL wherein the contract work is situated, or the subregion, or the Appalachian counties of the State wherein the contract work is situated, except:

a. To the extent that qualified persons regularly residing in the area are not available.

b. For the reasonable needs of the contractor to employ supervisory or specially experienced personnel necessary to assure an efficient execution of the contract work.

c. For the obligation of the contractor to offer employment to present or former employees as the result of a lawful collective bargaining contract, provided that the number of nonresident persons employed under this subparagraph (1c) shall not exceed 20 percent of the total number of employees employed by the contractor on the contract work, except as provided in subparagraph (4) below.

2. The contractor shall place a job order with the State Employment Service indicating (a) the classifications of the laborers, mechanics and other employees required to perform the contract work, (b) the number of employees required in each classification, (c) the date on which the participant estimates such employees will be required, and (d) any other pertinent information required by the State Employment Service to complete the job order form. The job order may be placed with the State Employment Service in writing or by telephone. If during the course of the contract work, the information submitted by the contractor in the original job order is substantially modified, the participant shall promptly notify the State Employment Service.

3. The contractor shall give full consideration to all qualified job applicants referred to him by the State Employment Service. The contractor is not required to grant employment to any job applicants who, in his opinion, are not qualified to perform the classification of work required.

4. If, within one week following the placing of a job order by the contractor with the State Employment Service, the State Employment Service is unable to refer any qualified job applicants to the contractor, or less than the number requested, the State Employment Service will forward a certificate to the contractor indicating the unavailability of applicants. Such certificate shall be made a part of the contractor's permanent project records. Upon receipt of this certificate, the contractor may employ persons who do not normally reside in the labor area to fill positions covered by the certificate, notwithstanding the provisions of subparagraph (1c) above.

5. The provisions of 23 CFR 633.207(e) allow the contracting agency to provide a contractual preference for the use of mineral resource materials native to the Appalachian region.

6. The contractor shall include the provisions of Sections 1 through 4 of this Attachment A in every subcontract for work which is, or reasonably may be, done as on-site work.

KENTUCKY TRANSPORTATION CABINET
DEPARTMENT OF HIGHWAYS

EMPLOYMENT REQUIREMENTS
RELATING TO
NONDISCRIMINATION OF EMPLOYEES
(APPLICABLE TO FEDERAL-AID SYSTEM CONTRACTS)

AN ACT OF THE KENTUCKY GENERAL ASSEMBLY TO PREVENT DISCRIMINATION IN EMPLOYMENT

KRS CHAPTER 344
EFFECTIVE JUNE 16, 1972

The contract on this project, in accordance with KRS Chapter 344, provides that during the performance of this contract, the contractor agrees as follows:

1. The contractor shall not fail or refuse to hire, or shall not discharge any individual, or otherwise discriminate against an individual with respect to his compensation, terms, conditions, or privileges of employment, because of such individual's race, color, religion, national origin, sex, disability or age (forty and above); or limit, segregate, or classify his employees in any way which would deprive or tend to deprive an individual of employment opportunities or otherwise adversely affect his status as an employee, because of such individual's race, color, religion, national origin, sex, disability or age forty (40) and over. The contractor agrees to post in conspicuous places, available to employees and applicants for employment, notices to be provided setting forth the provisions of this nondiscrimination clause.

2. The contractor shall not print or publish or cause to be printed or published a notice or advertisement relating to employment by such an employer or membership in or any classification or referral for employment by the employment agency, indicating any preference, limitation, specification, or discrimination, based on race, color, religion, national origin, sex, or age forty (40) and over, or because the person is a qualified individual with a disability, except that such a notice or advertisement may indicate a preference, limitation, or specification based on religion, national origin, sex, or age forty (40) and over, or because the person is a qualified individual with a disability, when religion, national origin, sex, or age forty (40) and over, or because the person is a qualified individual with a disability, is a bona fide occupational qualification for employment.

3. If the contractor is in control of apprenticeship or other training or retraining, including on-the-job training programs, he shall not discriminate against an individual because of his race, color, religion, national origin, sex, disability or age forty (40) and over, in admission to, or employment in any program established to provide apprenticeship or other training.

4. The contractor will send to each labor union or representative of workers with which he has a collective bargaining agreement or other contract or understanding, a notice to be provided advising the said labor union or workers' representative of the contractor's commitments under this section, and shall post copies of the notice in conspicuous places available to employees and applicants for employment. The contractor will take such action with respect to any subcontract or purchase order as the administrating agency may direct as a means of enforcing such provisions, including sanctions for non-compliance.

Revised: January 25, 2017

Standard Title VI/Non-Discrimination Assurances

During the performance of this contract, the contractor, for itself, its assignees, and successors in interest (hereinafter referred to as the "contractor") agrees as follows:

1. **Compliance with Regulations:** The contractor (hereinafter includes consultants) will comply with the Acts and the Regulations relative to Non-discrimination in Federally-assisted programs of the U.S. Department of Transportation, **Federal Highway Administration**, as they may be amended from time to time, which are herein incorporated by reference and made a part of this contract.

2. **Non-discrimination:** The contractor, with regard to the work performed by it during the contract, will not discriminate on the grounds of race, color, or national origin in the selection and retention of subcontractors, including procurements of materials and leases of equipment. The contractor will not participate directly or indirectly in the discrimination prohibited by the Acts and the Regulations, including employment practices when the contract covers any activity, project, or program set forth in Appendix B of 49 CFR Part 21.

3. **Solicitations for Subcontracts, Including Procurements of Materials and Equipment:** In all solicitations, either by competitive bidding, or negotiation made by the contractor for work to be performed under a subcontract, including procurements of materials, or leases of equipment, each potential subcontractor or supplier will be notified by the contractor of the contractor's obligations under this contract and the Acts and the Regulations relative to Non-discrimination on the grounds of race, color, or national origin.

4. **Information and Reports:** The contractor will provide all information and reports required by the Acts, the Regulations, and directives issued pursuant thereto and will permit access to its books, records, accounts, other sources of information, and its facilities as may be determined by the Recipient or the **Federal Highway Administration** to be pertinent to ascertain compliance with such Acts, Regulations, and instructions. Where any information required of a contractor is in the exclusive possession of another who fails or refuses to furnish the information, the contractor will so certify to the Recipient or the **Federal Highway Administration**, as appropriate, and will set forth what efforts it has made to obtain the information.

5. **Sanctions for Noncompliance:** In the event of a contractor's noncompliance with the Non-discrimination provisions of this contract, the Recipient will impose such contract sanctions as it or the **Federal Highway Administration** may determine to be appropriate, including, but not limited to:

    a. withholding payments to the contractor under the contract until the contractor complies; and/or
    b. cancelling, terminating, or suspending a contract, in whole or in part.

6. **Incorporation of Provisions:** The contractor will include the provisions of paragraphs one through six in every subcontract, including procurements of materials and leases of equipment, unless exempt by the Acts, the Regulations and directives issued pursuant thereto. The contractor will take action with respect to any subcontract or procurement as the Recipient or the **Federal Highway Administration** may direct as a means of enforcing such provisions including sanctions for noncompliance. Provided, that if the contractor becomes involved in, or is threatened with litigation by a subcontractor, or supplier because of such direction, the contractor may request the Recipient to enter into any litigation to protect the interests of the Recipient. In addition, the contractor may request the United States to enter into the litigation to protect the interests of the United States.

Standard Title VI/Non-Discrimination Statutes and Authorities

During the performance of this contract, the contractor, for itself, its assignees, and successors in interest (hereinafter referred to as the "contractor") agrees to comply with the following non-discrimination statutes and authorities; including but not limited to:

- Title VI of the Civil Rights Act of 1964 (42 U.S.C. § 2000d *et seq*., 78 stat. 252), (prohibits discrimination on the basis of race, color, national origin); and 49 CFR Part 21;
- The Uniform Relocation Assistance and Real Property Acquisition Policies Act of 1970, (42 U.S.C. § 4601), (prohibits unfair treatment of persons displaced or whose property has been acquired because of Federal or Federal-aid programs and projects);
- Federal-Aid Highway Act of 1973, (23 U.S.C. § 324 *et seq*.), (prohibits discrimination on the basis of sex);
- Section 504 of the Rehabilitation Act of 1973, (29 U.S.C. § 794 *et seq*.), as amended, (prohibits discrimination on the basis of disability); and 49 CFR Part 27;
- The Age Discrimination Act of 1975, as amended, (42 U.S.C. § 6101 *et seq*.), (prohibits discrimination on the basis of age);
- Airport and Airway Improvement Act of 1982, (49 USC § 471, Section 47123), as amended, (prohibits discrimination based on race, creed, color, national origin, or sex);
- The Civil Rights Restoration Act of 1987, (PL 100-209), (Broadened the scope, coverage and applicability of Title VI of the Civil Rights Act of 1964, The Age Discrimination Act of 1975 and Section 504 of the Rehabilitation Act of 1973, by expanding the definition of the terms "programs or activities" to include all of the programs or activities of the Federal-aid recipients, sub-recipients and contractors, whether such programs or activities are Federally funded or not);
- Titles II and III of the Americans with Disabilities Act, which prohibit discrimination on the basis of disability in the operation of public entities, public and private transportation systems, places of public accommodation, and certain testing entities (42 U.S.C. §§ 12131 -- 12189) as implemented by Department of Transportation regulations at 49 C.F.R. parts 37 and 38;
- The Federal Aviation Administration's Non-discrimination statute (49 U.S.C. § 47123) (prohibits discrimination on the basis of race, color, national origin, and sex);
- Executive Order 12898, Federal Actions to Address Environmental Justice in Minority Populations and Low-Income Populations, which ensures non-discrimination against minority populations by discouraging programs, policies, and activities with disproportionately high and adverse human health or environmental effects on minority and low-income populations;
- Executive Order 13166, Improving Access to Services for Persons with Limited English Proficiency, and resulting agency guidance, national origin discrimination includes discrimination because of limited English proficiency (LEP). To ensure compliance with Title VI, you must take reasonable steps to ensure that LEP persons have meaningful access to your programs (70 Fed. Reg. at 74087 to 74100);
- Title IX of the Education Amendments of 1972, as amended, which prohibits you from discriminating because of sex in education programs or activities (20 U.S.C. 1681 et seq).

EXECUTIVE BRANCH CODE OF ETHICS

In the 1992 regular legislative session, the General Assembly passed and Governor Brereton Jones signed Senate Bill 63 (codified as KRS 11A), the Executive Branch Code of Ethics, which states, in part:

> KRS 11A.040 (7) provides:
>
> No present or former public servant shall, within six (6) months following termination of his office or employment, accept employment, compensation, or other economic benefit from any person or business that contracts or does business with, or is regulated by, the state in matters in which he was directly involved during the last thirty-six (36) months of his tenure. This provision shall not prohibit an individual from returning to the same business, firm, occupation, or profession in which he was involved prior to taking office or beginning his term of employment, or for which he received, prior to his state employment, a professional degree or license, provided that, for a period of six (6) months, he personally refrains from working on any matter in which he was directly involved during the last thirty-six (36) months of his tenure in state government. This subsection shall not prohibit the performance of ministerial functions, including but not limited to filing tax returns, filing applications for permits or licenses, or filing incorporation papers, nor shall it prohibit the former officer or public servant from receiving public funds disbursed through entitlement programs.
>
> KRS 11A.040 (9) states:
>
> A former public servant shall not represent a person or business before a state agency in a matter in which the former public servant was directly involved during the last thirty-six (36) months of his tenure, for a period of one (1) year after the latter of:
>
> a) The date of leaving office or termination of employment; or
> b) The date the term of office expires to which the public servant was elected.

This law is intended to promote public confidence in the integrity of state government and to declare as public policy the idea that state employees should view their work as a public trust and not as a way to obtain private benefits.

If you have worked for the executive branch of state government within the past six months, you may be subject to the law's prohibitions. The law's applicability may be different if you hold elected office or are contemplating representation of another before a state agency.

Also, if you are affiliated with a firm which does business with the state and which employs former state executive-branch employees, you should be aware that the law may apply to them.

In case of doubt, the law permits you to request an advisory opinion from the Executive Branch Ethics Commission, 3 Fountain Place, Frankfort, Kentucky 40601; telephone (502) 564-7954.

Revised: January 27, 2017

General Decision Number: KY20220038 01/07/2022

Superseded General Decision Number: KY20210038

State: Kentucky

Construction Type: Highway

Counties: Anderson, Bath, Bourbon, Boyd, Boyle, Bracken, Breckinridge, Bullitt, Carroll, Carter, Clark, Elliott, Fayette, Fleming, Franklin, Gallatin, Grant, Grayson, Greenup, Hardin, Harrison, Henry, Jefferson, Jessamine, Larue, Lewis, Madison, Marion, Mason, Meade, Mercer, Montgomery, Nelson, Nicholas, Oldham, Owen, Robertson, Rowan, Scott, Shelby, Spencer, Trimble, Washington and Woodford Counties in Kentucky.

HIGHWAY CONSTRUCTION PROJECTS (excluding tunnels, building structures in rest area projects & railroad construction; bascule, suspension & spandrel arch bridges designed for commercial navigation, bridges involving marine construction; and other major bridges).

Note: Contracts subject to the Davis-Bacon Act are generally required to pay at least the applicable minimum wage rate required under Executive Order 14026 or Executive Order 13658. Please note that these Executive Orders apply to covered contracts entered into by the federal government that are subject to the Davis-Bacon Act itself, but do not apply to contracts subject only to the Davis-Bacon Related Acts, including those set forth at 29 CFR 5.1(a)(2)-(60).

If the contract is entered into on or after January 30, 2022, or the contract is renewed or extended (e.g., an option is exercised) on or after January 30, 2022, Executive Order 14026 generally applies to the contract. The contractor must pay all covered workers at least $15.00 per hour (or the applicable wage rate listed on this wage determination, if it is higher) for all hours spent performing on that contract in 2022.

If the contract was awarded on or between January 1, 2015 and January 29, 2022, and the contract is not renewed or extended on or after January 30, 2022, Executive Order 13658 generally applies to the contract. The contractor must pay all covered workers at least $11.25 per hour (or the applicable wage rate listed on this wage determination, if it is higher) for all hours spent performing on that contract in 2022.

The applicable Executive Order minimum wage rate will be adjusted annually. If this contract is covered by one of the Executive Orders and a classification considered necessary for performance of work on the contract does not appear on this wage determination, the contractor must still submit a conformance request.

Additional information on contractor requirements and worker protections under the Executive Orders is available at www.dol.gov/whd/govcontracts.

Modification Number	Publication Date
0	01/07/2022

BRIN0004-003 06/01/2021

BRECKENRIDGE COUNTY

	Rates	Fringes
BRICKLAYER	$ 29.57	15.10

BRKY0001-005 06/01/2021

BULLITT, CARROLL, GRAYSON, HARDIN, HENRY, JEFFERSON, LARUE, MARION, MEADE, NELSON, OLDHAM, SHELBY, SPENCER, & TRIMBLE COUNTIES:

	Rates	Fringes
BRICKLAYER	$ 29.57	15.10

BRKY0002-006 06/01/2021

BRACKEN, GALLATIN, GRANT, MASON & ROBERTSON COUNTIES:

	Rates	Fringes
BRICKLAYER	$ 30.87	15.87

BRKY0007-004 06/01/2021

BOYD, CARTER, ELLIOT, FLEMING, GREENUP, LEWIS & ROWAN COUNTIES:

	Rates	Fringes
BRICKLAYER	$ 32.03	20.05

BRKY0017-004 06/01/2021

ANDERSON, BATH, BOURBON, BOYLE, CLARK, FAYETTE, FRANKLIN, HARRISON, JESSAMINE, MADISON, MERCER, MONTGOMERY, NICHOLAS, OWEN, SCOTT, WASHINGTON & WOODFORD COUNTIES:

	Rates	Fringes
BRICKLAYER	$ 30.87	15.87

CARP0064-001 04/01/2020

	Rates	Fringes
CARPENTER	$ 29.81	19.96
Diver	$ 45.09	19.96
PILEDRIVERMAN	$ 30.06	19.96

ELEC0212-008 06/07/2021

BRACKEN, GALLATIN and GRANT COUNTIES

	Rates	Fringes
ELECTRICIAN.....	$ 32.32	19.85

ELEC0212-014 11/25/2019

BRACKEN, GALLATIN & GRANT COUNTIES:

	Rates	Fringes
Sound & Communication Technician.....	$ 24.35	12.09

ELEC0317-012 06/01/2021

BOYD, CARTER, ELLIOT & ROWAN COUNTIES:

	Rates	Fringes
ELECTRICIAN (Wiremen).....	$ 35.10	27.47

ELEC0369-007 05/31/2021

ANDERSON, BATH, BOURBON, BOYLE, BRECKINRIDGE, BULLITT, CARROLL, CLARK, FAYETTE, FRAONKLIN, GRAYSON, HARDIN, HARRISON, HENRY, JEFFERSON, JESSAMINE, LARUE, MADISON, MARION, MEADE, MERCER, MONTGOMERY, NELSON, NICHOLAS, OLDHAM, OWEN, ROBERTSON, SCOTT, SHELBY, SPENCER, TRIMBLE, WASHINGTON, & WOODFORD COUNTIES:

	Rates	Fringes
ELECTRICIAN.....	$ 33.85	18.72

---

* **ELEC0575-002** 11/29/2021

FLEMING, GREENUP, LEWIS & MASON COUNTIES:

	Rates	Fringes
ELECTRICIAN.....	$ 35.00	19.76

ENGI0181-018 07/01/2021

	Rates	Fringes
POWER EQUIPMENT OPERATOR		
GROUP 1	$ 34.80	17.85
GROUP 2	$ 31.94	17.85
GROUP 3	$ 32.39	17.85
GROUP 4	$ 31.62	17.85

OPERATING ENGINEER CLASSIFICATIONS

GROUP 1 - A-Frame Winch Truck; Auto Patrol; Backfiller; Batcher Plant; Bituminous Paver; Bituminous Transfer Machine; Boom Cat; Bulldozer; Mechanic; Cableway; Carry-All Scoop; Carry Deck Crane; Central Compressor Plant; Cherry Picker; Clamshell; Concrete Mixer (21 cu. ft. or Over); Concrete Paver; Truck-Mounted Concrete Pump; Core Drill; Crane; Crusher Plant; Derrick; Derrick Boat; Ditching & Trenching Machine; Dragline; Dredge Operator; Dredge Engineer; Elevating Grader & Loaders; Grade-All; Gurries; Heavy Equipment Robotics Operator/Mechanic; High Lift; Hoe-Type Machine; Hoist (Two or More Drums); Hoisting Engine (Two or More Drums); Horizontal Directional Drill Operator; Hydrocrane; Hyster; KeCal Loader; LeTourneau; Locomotive; Mechanic; Mechanically Operated Laser Screed; Mechanic Welder; Mucking Machine; Motor Scraper; Orangepeel Bucket; Overhead Crane; Piledriver; Power Blade; Pumpcrete; Push Dozer; Rock Spreader, attached to equipment; Rotary Drill; Roller (Bituminous); Rough Terrain Crane; Scarifier; Scoopmobile; Shovel; Side Boom; Subgrader; Tailboom; Telescoping Type Forklift; Tow or Push Boat; Tower Crane (French, German & other types); Tractor Shovel; Truck Crane; Tunnel Mining Machines, including Moles, Shields or similar types of Tunnel Mining Equipment

GROUP 2 - Air Compressor (Over 900 cu. ft. per min.); Bituminous Mixer; Boom Type Tamping Machine; Bull Float; Concrete Mixer (Under 21 cu. ft.); Dredge Engineer; Electric Vibrator; Compactor/Self-Propelled Compactor; Elevator (One Drum or Buck Hoist); Elevator (When used to Hoist Building Material); Finish Machine; Firemen & Hoist (One Drum); Flexplane; Forklift (Regardless of Lift Height); Form Grader; Joint Sealing Machine; Outboard Motor Boat; Power Sweeper (Riding Type); Roller (Rock); Ross Carrier; Skid Mounted or Trailer Mounted Conrete Pump; Skid Steer Machine with all Attachments; Switchman or Brakeman; Throttle Valve Person; Tractair & Road Widening Trencher; Tractor (50 H.P. or Over); Truck Crane Oiler; Tugger; Welding Machine; Well Points; & Whirley Oiler

GROUP 3 - All Off Road Material Handling Equipment, including Articulating Dump Trucks; Greaser on Grease Facilities servicing Heavy Equipment

GROUP 4 - Bituminous Distributor; Burlap & Curing Machine; Cement Gun; Concrete Saw; Conveyor; Deckhand Oiler; Grout Pump; Hydraulic Post Driver; Hydro Seeder; Mud Jack; Oiler; Paving Joint Machine; Power Form Handling Equipment; Pump; Roller (Earth); Steerman; Tamping Machine; Tractor (Under 50 H.P.); & Vibrator

CRANES - with booms 150 ft. & Over (Including JIB), and where the length of the boom in combination with the length of the piling leads equals or exceeds 150 ft. - $1.00 over Group 1 rate

EMPLOYEES ASSIGNED TO WORK BELOW GROUND LEVEL ARE TO BE PAID 10%
ABOVE BASIC WAGE RATE. THIS DOES NOT APPLY TO OPEN CUT WORK.

IRON0044-009 06/01/2021

BRACKEN, GALLATIN, GRANT, HARRISON, ROBERTSON,
BOURBON (Northern third, including Townships of Jackson, Millersburg, Ruddel Mills & Shawhan);
CARROLL (Eastern third, including the Township of Ghent);
FLEMING (Western part, excluding Townships of Beechburg, Colfax, Elizaville, Flemingsburg, Flemingsburg Junction, Foxport, Grange City, Hillsboro, Hilltop, Mount Carmel, Muses Mills, Nepton, Pecksridge, Plummers Landing, Plummers Mill, Poplar Plains, Ringos Mills, Tilton & Wallingford);
MASON (Western two-thirds, including Townships of Dover, Lewisburg, Mays Lick, Maysville, Minerva, Moranburg, Murphysville, Ripley, Sardis, Shannon, South Ripley & Washington);
NICHOLAS (Townships of Barefoot, Barterville, Carlisle, Ellisville, Headquarters, Henryville, Morningglory, Myers & Oakland Mills);
OWEN (Townships of Beechwood, Bromley, Fairbanks, Holbrook, Jonesville, Long Ridge, Lusby's Mill, New, New Columbus, New Liberty, Owenton, Poplar Grove, Rockdale, Sanders, Teresita & Wheatley);
SCOTT (Northern two-thirds, including Townships of Biddle, Davis, Delaplain, Elmville, Longlick, Muddy Ford, Oxford, Rogers Gap, Sadieville, Skinnersburg & Stonewall)

	Rates	Fringes
IRONWORKER		
Fence Erector	$ 29.75	21.60
Structural	$ 31.32	21.60

IRON0070-006 06/01/2021

ANDERSON, BOYLE, BRECKINRIDGE, BULLITT, FAYETTE, FRANKLIN, GRAYSON, HARDIN, HENRY, JEFFERSON, JESSAMINE, LARUE, MADISON, MARION, MEADE, MERCER, NELSON, OLDHAM, SHELBY, SPENCER, TRIMBLE, WASHINGTON & WOODFORD
BOURBON (Southern two-thirds, including Townships of Austerlity, Centerville, Clintonville, Elizabeth, Hutchison, Littlerock, North Middletown & Paris);
CARROLL (Western two-thirds, including Townships of Carrollton, Easterday, English, Locust, Louis, Prestonville & Worthville);
CLARK (Western two-thirds, including Townships of Becknerville, Flanagan, Ford, Pine Grove, Winchester & Wyandotte);
OWEN (Eastern eighth, including Townships of Glenmary, Gratz, Monterey, Perry Park & Tacketts Mill);
SCOTT (Southern third, including Townships of Georgetown, Great Crossing, Newtown, Stampling Ground & Woodlake);

	Rates	Fringes
IRONWORKER.....	$ 31.09	23.75

IRON0769-007 06/01/2021

BATH, BOYD, CARTER, ELLIOTT, GREENUP, LEWIS, MONTGOMERY & ROWAN
CLARK (Eastern third, including townships of Bloomingdale, Hunt, Indian Fields, Kiddville, Loglick, Rightangele & Thomson);
FLEMING (Townships of Beechburg, Colfax, Elizaville, Flemingsburg, Flemingsburg Junction, Foxport, Grange City, Hillsboro, Hilltop, Mount Carmel, Muses Mills, Nepton, Pecksridge, Plummers Landing, Plummers Mill, Poplar Plains, Ringos Mills, Tilton & Wallingford);
MASON (Eastern third, including Townships of Helena, Marshall, Orangeburg, Plumville & Springdale);
NICHOLAS (Eastern eighth, including the Township of Moorefield Sprout)

	Rates	Fringes
IRONWORKER		
ZONE 1	$ 33.00	27.29
ZONE 2	$ 33.40	27.29
ZONE 3	$ 35.00	27.29

ZONE 1 - (no base rate increase) Up to 10 mile radius of Union Hall, 1643 Greenup Ave, Ashland, KY.

ZONE 2 - (add $0.40 per hour to base rate) 10 to 50 mile radius of Union Hall, 1643 Greenup Ave, Ashland, KY.

ZONE 3 - (add $2.00 per hour to base rate) 50 mile radius & over of Union Hall, 1643 Greenup Ave, Ashland, KY.

LABO0189-003 07/01/2021

BATH, BOURBON, BOYD, BOYLE, BRACKEN, CARTER, CLARK, ELLIOTT, FAYETTE, FLEMING, FRANKLIN, GALLATIN, GRANT, GREENUP, HARRISON, JESSAMINE, LEWIS, MADISON, MASON, MERCER, MONTGOMERY, NICHOLAS, OWEN, ROBERTSON, ROWAN, SCOTT, & WOOLFORD COUNTIES

	Rates	Fringes
Laborers:		
GROUP 1	$ 23.51	16.22
GROUP 2	$ 23.76	16.22
GROUP 3	$ 23.81	16.22
GROUP 4	$ 24.41	16.22

LABORERS CLASSIFICATIONS

GROUP 1 - Aging & Curing of Concrete; Asbestos Abatement Worker; Asphalt Plant; Asphalt; Batch Truck Dump; Carpenter Tender; Cement Mason Tender; Cleaning of Machines; Concrete; Demolition; Dredging; Environmental - Nuclear, Radiation, Toxic & Hazardous Waste - Level D; Flagperson; Grade Checker; Hand Digging & Hand Back Filling; Highway Marker Placer; Landscaping, Mesh Handler & Placer; Puddler; Railroad; Rip-rap & Grouter; Right-of-Way; Sign, Guard Rail & Fence Installer; Signal Person; Sound Barrier Installer; Storm & Sanitary Sewer; Swamper; Truck Spotter & Dumper; Wrecking of Concrete Forms; General Cleanup

GROUP 2 - Batter Board Man (Sanitary & Storm Sewer); Brickmason Tender; Mortar Mixer Operator; Scaffold Builder; Burner & Welder; Bushammer; Chain Saw Operator; Concrete Saw Operator; Deckhand Scow Man; Dry Cement Handler; Environmental - Nuclear, Radiation, Toxic & Hazardous Waste - Level C; Forklift Operator for Masonary; Form Setter; Green Concrete Cutting; Hand Operated Grouter & Grinder Machine Operator; Jackhammer; Pavement Breaker; Paving Joint Machine; Pipelayer; Plastic Pipe Fusion; Power Driven Georgia Buggy & Wheel Barrow; Power Post Hole Digger; Precast Manhole Setter; Walk-Behind Tamper; Walk-Behind Trencher; Sand Blaster; Concrete Chipper; Surface Grinder; Vibrator Operator; Wagon Driller

GROUP 3 - Asphalt Luteman & Raker; Gunnite Nozzleman; Gunnite Operator & Mixer; Grout Pump Operator; Side Rail Setter; Rail Paved Ditches; Screw Operator; Tunnel (Free Air); Water Blaster

GROUP 4 - Caisson Worker (Free Air); Cement Finisher; Environmental - Nuclear, Radiation, Toxic & Hazardous Waste - Levels A & B; Miner & Driller (Free Air); Tunnel Blaster; & Tunnel Mucker (Free Air); Directional & Horizontal Boring; Air Track Drillers (All Types); Powdermen & Blasters; Troxler & Concrete Tester if Laborer is Utilized

LABO0189-008 07/01/2021

ANDERSON, BULLITT, CARROLL, HARDIN, HENRY, JEFFERSON, LARUE, MARION, MEADE, NELSON, OLDHAM, SHELBY, SPENCER, TRIMBLE & WASHINGTON COUNTIES

	Rates	Fringes
Laborers:		
GROUP 1	$ 23.51	16.22
GROUP 2	$ 23.76	16.22
GROUP 3	$ 23.81	16.22
GROUP 4	$ 24.41	16.22

LABORERS CLASSIFICATIONS

GROUP 1 - Aging & Curing of Concrete; Asbestos Abatement Worker; Asphalt Plant; Asphalt; Batch Truck Dump; Carpenter Tender; Cement Mason Tender; Cleaning of Machines; Concrete; Demolition; Dredging; Environmental - Nuclear, Radiation, Toxic & Hazardous Waste - Level D; Flagperson; Grade Checker; Hand Digging & Hand Back Filling; Highway Marker Placer; Landscaping, Mesh Handler & Placer; Puddler; Railroad; Rip-rap & Grouter; Right-of-Way; Sign, Guard Rail & Fence Installer; Signal Person; Sound Barrier Installer; Storm & Sanitary Sewer; Swamper; Truck Spotter & Dumper; Wrecking of Concrete Forms; General Cleanup

GROUP 2 - Batter Board Man (Sanitary & Storm Sewer); Brickmason Tender; Mortar Mixer Operator; Scaffold Builder; Burner & Welder; Bushammer; Chain Saw Operator; Concrete Saw Operator; Deckhand Scow Man; Dry Cement Handler; Environmental - Nuclear, Radiation, Toxic & Hazardous Waste - Level C; Forklift Operator for Masonary; Form Setter; Green Concrete Cutting; Hand Operated Grouter & Grinder Machine Operator; Jackhammer; Pavement Breaker; Paving Joint Machine; Pipelayer; Plastic Pipe Fusion; Power Driven Georgia Buggy & Wheel Barrow; Power Post Hole Digger; Precast Manhole Setter; Walk-Behind Tamper; Walk-Behind Trencher; Sand Blaster; Concrete Chipper; Surface Grinder; Vibrator Operator; Wagon Driller

GROUP 3 - Asphalt Luteman & Raker; Gunnite Nozzleman; Gunnite Operator & Mixer; Grout Pump Operator; Side Rail Setter; Rail Paved Ditches; Screw Operator; Tunnel (Free Air); Water Blaster

GROUP 4 - Caisson Worker (Free Air); Cement Finisher; Environmental - Nuclear, Radiation, Toxic & Hazardous Waste - Levels A & B; Miner & Driller (Free Air); Tunnel Blaster; & Tunnel Mucker (Free Air); Directional & Horizontal Boring; Air Track Drillers (All Types); Powdermen & Blasters; Troxler & Concrete Tester if Laborer is Utilized

---

LABO0189-009 07/01/2021

BRECKINRIDGE & GRAYSON COUNTIES

	Rates	Fringes
Laborers:		
GROUP 1	$ 23.51	16.22
GROUP 2	$ 23.76	16.22
GROUP 3	$ 23.81	16.22
GROUP 4	$ 24.41	16.22

LABORERS CLASSIFICATIONS

GROUP 1 - Aging & Curing of Concrete; Asbestos Abatement Worker; Asphalt Plant; Asphalt; Batch Truck Dump; Carpenter Tender; Cement Mason Tender; Cleaning of Machines; Concrete; Demolition; Dredging; Environmental - Nuclear, Radiation, Toxic & Hazardous Waste - Level D; Flagperson; Grade Checker; Hand Digging & Hand Back Filling; Highway Marker Placer; Landscaping, Mesh Handler & Placer; Puddler; Railroad; Rip-rap & Grouter; Right-of-Way; Sign, Guard Rail & Fence Installer; Signal Person; Sound Barrier Installer; Storm & Sanitary Sewer; Swamper; Truck Spotter & Dumper; Wrecking of Concrete Forms; General Cleanup

GROUP 2 - Batter Board Man (Sanitary & Storm Sewer); Brickmason Tender; Mortar Mixer Operator; Scaffold Builder; Burner & Welder; Bushammer; Chain Saw Operator; Concrete Saw Operator; Deckhand Scow Man; Dry Cement Handler; Environmental - Nuclear, Radiation, Toxic & Hazardous Waste - Level C; Forklift Operator for Masonary; Form Setter; Green Concrete Cutting; Hand Operated Grouter & Grinder Machine Operator; Jackhammer; Pavement Breaker; Paving Joint Machine; Pipelayer; Plastic Pipe Fusion; Power Driven Georgia Buggy & Wheel Barrow; Power Post Hole Digger; Precast Manhole Setter; Walk-Behind Tamper; Walk-Behind Trencher; Sand Blaster; Concrete Chipper; Surface Grinder; Vibrator Operator; Wagon Driller

GROUP 3 - Asphalt Luteman & Raker; Gunnite Nozzleman; Gunnite Operator & Mixer; Grout Pump Operator; Side Rail Setter; Rail Paved Ditches; Screw Operator; Tunnel (Free Air); Water Blaster

GROUP 4 - Caisson Worker (Free Air); Cement Finisher; Environmental - Nuclear, Radiation, Toxic & Hazardous Waste - Levels A & B; Miner & Driller (Free Air); Tunnel Blaster; & Tunnel Mucker (Free Air); Directional & Horizontal Boring; Air Track Drillers (All Types); Powdermen & Blasters; Troxler & Concrete Tester if Laborer is Utilized

---

PAIN0012-005 06/11/2005

BATH, BOURBON, BOYLE, CLARK, FAYETTE, FLEMING, FRANKLIN, HARRISON, JESSAMINE, MADISON, MERCER, MONTGOMERY, NICHOLAS, ROBERTSON, SCOTT & WOODFORD COUNTIES:

	Rates	Fringes
PAINTER		
Bridge/Equipment Tender and/or Containment Builder	$ 18.90	5.90
Brush & Roller	$ 21.30	5.90
Elevated Tanks; Steeplejack Work; Bridge & Lead Abatement	$ 22.30	5.90
Sandblasting & Waterblasting	$ 22.05	5.90
Spray	$ 21.80	5.90

PAIN0012-017 05/01/2015

BRACKEN, GALLATIN, GRANT, MASON & OWEN COUNTIES:

	Rates	Fringes
PAINTER (Heavy & Highway Bridges - Guardrails - Lightpoles - Striping)		
Bridge Equipment Tender and Containment Builder	$ 20.73	9.06
Brush & Roller	$ 23.39	9.06
Elevated Tanks; Steeplejack Work; Bridge & Lead Abatement	$ 24.39	9.06
Sandblasting & Water Blasting	$ 24.14	9.06
Spray	$ 23.89	9.06

PAIN0118-004 06/01/2018

ANDERSON, BRECKINRIDGE, BULLITT, CARROLL, GRAYSON, HARDIN, HENRY, JEFFERSON, LARUE, MARION, MEADE, NELSON, OLDHAM, SHELBY, SPENCER, TRIMBLE & WASHINGTON COUNTIES:

	Rates	Fringes
PAINTER		
Brush & Roller	$ 22.00	12.52
Spray, Sandblast, Power Tools, Waterblast & Steam Cleaning	$ 23.00	12.52

PAIN1072-003 12/01/2018

BOYD, CARTER, ELLIOTT, GREENUP, LEWIS and ROWAN COUNTIES

	Rates	Fringes
Painters:		
Bridges; Locks; Dams; Tension Towers & Energized Substations	$ 33.33	18.50
Power Generating Facilities	$ 30.09	18.50

PLUM0248-003 06/01/2021

BOYD, CARTER, ELLIOTT, GREENUP, LEWIS & ROWAN COUNTIES:

	Rates	Fringes
Plumber and Steamfitter	$ 38.00	21.60

PLUM0392-007 06/01/2018

BRACKEN, CARROLL (Eastern Half), GALLATIN, GRANT, MASON, OWEN & ROBERTSON COUNTIES:

	Rates	Fringes
Plumbers and Pipefitters	$ 32.01	19.67

PLUM0502-003 08/01/2021

BRECKINRIDGE, BULLITT, CARROLL (Western Half), FRANKLIN (Western three-fourths), GRAYSON, HARDIN, HENRY, JEFFERSON, LARUE, MARION, MEADE, NELSON, OLDHAM, SHELBY, SPENCER, TRIMBLE & WASHINGTON COUNTIES

	Rates	Fringes
PLUMBER	$ 38.07	20.78

SUKY2010-160 10/08/2001

	Rates	Fringes
Truck drivers:		
GROUP 1	$ 16.57	7.34
GROUP 2	$ 16.68	7.34
GROUP 3	$ 16.86	7.34
GROUP 4	$ 16.96	7.34

TRUCK DRIVER CLASSIFICATIONS

GROUP 1 - Mobile Batch Truck Tender

GROUP 2 - Greaser; Tire Changer; & Mechanic Tender

GROUP 3 - Single Axle Dump; Flatbed; Semi-trailer or Pole Trailer when used to pull building materials and equipment; Tandem Axle Dump; Distributor; Mixer; & Truck Mechanic

GROUP 4 - Euclid & Other Heavy Earthmoving Equipment & Lowboy; Articulator Cat; 5-Axle Vehicle; Winch & A-Frame when used in transporting materials; Ross Carrier; Forklift when used to transport building materials; & Pavement Breaker

---

WELDERS - Receive rate prescribed for craft performing operation to which welding is incidental.

==========

Note: Executive Order (EO) 13706, Establishing Paid Sick Leave for Federal Contractors applies to all contracts subject to the Davis-Bacon Act for which the contract is awarded (and any solicitation was issued) on or after January 1, 2017. If this contract is covered by the EO, the contractor must provide employees with 1 hour of paid sick leave for every 30 hours they work, up to 56 hours of paid sick leave each year. Employees must be permitted to use paid sick leave for their own illness, injury or other health-related needs, including preventive care; to assist a family member (or person who is like family to the employee) who is ill, injured, or has other health-related needs, including preventive care; or for reasons resulting from, or to assist a family member (or person who is like family to the employee) who is a victim of, domestic violence, sexual assault, or stalking. Additional information on contractor requirements and worker protections under the EO is available at www.dol.gov/whd/govcontracts.

Unlisted classifications needed for work not included within the scope of the classifications listed may be added after award only as provided in the labor standards contract clauses (29CFR 5.5 (a) (1) (ii)).

The body of each wage determination lists the classification and wage rates that have been found to be prevailing for the cited type(s) of construction in the area covered by the wage determination. The classifications are listed in alphabetical order of "identifiers" that indicate whether the particular rate is a union rate (current union negotiated rate for local), a survey rate (weighted average rate) or a union average rate (weighted union average rate).

Union Rate Identifiers

A four letter classification abbreviation identifier enclosed in dotted lines beginning with characters other than "SU" or "UAVG" denotes that the union classification and rate were prevailing for that classification in the survey. Example: PLUM0198-005 07/01/2014. PLUM is an abbreviation identifier of the union, which prevailed in the survey for this classification, which in this example would be Plumbers 0198 indicates the local union number or district council number where applicable, i.e., Plumbers Local 0198. The next number, 005 in the example, is an internal number used in processing the wage determination. 07/01/2014 is the effective date of the most current negotiated rate, which in this example is July 1, 2014.

Union prevailing wage rates are updated to reflect all rate changes in the collective bargaining agreement (CBA) governing this classification and rate.

Survey Rate Identifiers

Classifications listed under the "SU" identifier indicate that no one rate prevailed for this classification in the survey and the published rate is derived by computing a weighted average rate based on all the rates reported in the survey for that classification. As this weighted average rate includes all rates reported in the survey, it may include both union and non-union rates. Example: SULA2012-007 5/13/2014. SU indicates the rates are survey rates based on a weighted average calculation of rates and are not majority rates. LA indicates the State of Louisiana. 2012 is the year of survey on which these classifications and rates are based. The next number, 007 in the example, is an internal number used in producing the wage determination. 5/13/2014 indicates the survey completion date for the classifications and rates under that identifier.

Survey wage rates are not updated and remain in effect until a new survey is conducted.

Union Average Rate Identifiers

Classification(s) listed under the UAVG identifier indicate that no single majority rate prevailed for those classifications; however, 100% of the data reported for the classifications was union data. EXAMPLE: UAVG-OH-0010 08/29/2014. UAVG indicates that the rate is a weighted union average rate. OH indicates the state. The next number, 0010 in the example, is an internal number used in producing the wage determination. 08/29/2014 indicates the survey completion date for the classifications and rates under that identifier.

A UAVG rate will be updated once a year, usually in January of each year, to reflect a weighted average of the current negotiated/CBA rate of the union locals from which the rate is based.

WAGE DETERMINATION APPEALS PROCESS

1.) Has there been an initial decision in the matter? This can be:

* an existing published wage determination
* a survey underlying a wage determination
* a Wage and Hour Division letter setting forth a position on a wage determination matter
* a conformance (additional classification and rate) ruling

On survey related matters, initial contact, including requests for summaries of surveys, should be with the Wage and Hour Division National Office Branch of Wage Surveys. If the response from this initial contact is not satisfactory, then the process described in 2.) and 3.) should be followed.

With regard to any other matter not yet ripe for the formal process described here, initial contact should be with the Branch of Construction Wage Determinations. Write to:

Branch of Construction Wage Determinations
Wage and Hour Division
U.S. Department of Labor
200 Constitution Avenue, N.W.
Washington, DC 20210

2.) If the answer to the question in 1.) is yes, then an interested party (those affected by the action) can request review and reconsideration from the Wage and Hour Administrator (See 29 CFR Part 1.8 and 29 CFR Part 7). Write to:

Wage and Hour Administrator
U.S. Department of Labor
200 Constitution Avenue, N.W.
Washington, DC 20210

The request should be accompanied by a full statement of the interested party's position and by any information (wage payment data, project description, area practice material, etc.) that the requestor considers relevant to the issue.

3.) If the decision of the Administrator is not favorable, an interested party may appeal directly to the Administrative Review Board (formerly the Wage Appeals Board). Write to:

Administrative Review Board
U.S. Department of Labor
200 Constitution Avenue, N.W.
Washington, DC 20210

4.) All decisions by the Administrative Review Board are final.

==========

END OF GENERAL DECISION

Fringe benefit amounts are applicable for all hours worked except when otherwise noted.

No laborer, workman or mechanic shall be paid at a rate less than that of a Journeyman except those classified as bona fide apprentices.

Apprentices or trainees shall be permitted to work as such subject to Administrative Regulations adopted by the Commissioner of Workplace Standards. Copies of these regulations will be furnished upon request from any interested person.

Before using apprentices on the job the contractor shall present to the Contracting Officer written evidence of registration of such employees in a program of a State apprenticeship and training agency approved and recognized by the U. S. Bureau of Apprenticeship and Training. In the absence of such a State agency, the contractor shall submit evidence of approval and registration by the U. S. Bureau of Apprenticeship and Training.

The contractor shall submit to the Contracting Officer, written evidence of the established apprenticeship-journeyman ratios and wage rates in the project area, which will be the basis for establishing such ratios and rates for the project under the applicable contract provisions.

TO: EMPLOYERS/EMPLOYEES

PREVAILING WAGE SCHEDULE:

The wages indicated on this wage schedule are the least permitted to be paid for the occupations indicated. When an employee works in more than one classification, the employer must record the number of hours worked in each classification at the prescribed hourly base rate.

OVERTIME:

Overtime is to be paid to an employee at a rate not less than one and one-half times the basic rate of pay for all hours worked in excess of forty (40) hours in such workweek. Wage violations or questions should be directed to the designated Engineer or the undersigned.

Director
Division of Construction Procurement
Frankfort, Kentucky 40622
502-564-3500

NOTICE OF REQUIREMENT FOR AFFIRMATIVE ACTION TO ENSURE EQUAL EMPLOYMENT OPPORTUNITY (Executive Order 11246)

1. The Offeror's or Bidder's attention is called to the "Equal Opportunity Clause" and the "Standard Federal Equal Employment Specifications" set forth herein.

2. The goals and timetables for minority and female participation, expressed in percentage terms for the Contractor's aggregate work force in each trade on all construction work in the covered area, are as follows:

GOALS FOR MINORITY PARTICIPATION IN EACH TRADE	GOALS FOR FEMALE PARTICIPATION IN EACH TRADE
9.6%	6.9%

These goals are applicable to all the Contractor's construction work (whether or not it is Federal or federally-assisted) performed in the covered area. If the contractor performs construction work in a geographical area located outside of the covered area, it shall apply the goals established for such geographical area where the work is actually performed. With regard to this second area, the contractor also is subject to the goals for both its federally involved and non-federally involved construction.

The Contractor's compliance with the Executive Order and the regulations in CFR Part 60-4 shall be based on its implementation of the Equal Opportunity Clause, specific affirmative action obligations required by the specifications set forth in 41 CFR 60-4, 3(a), and its efforts to meet the goals. The hours of minority and female employment and training must be substantially uniform throughout the length of the contract, and in each trade, and the contractor shall make a good faith effort to employ minorities and women evenly on each of its projects. The transfer of minority or female employees or trainees from Contractor to Contractor or from project to project for the sole purpose of meeting the Contractor's goals shall be a violation of the contract, the Executive Order and the regulations in 41 CFR Part 60-4. Compliance with the goals will be measured against the total work hours performed.

3. The Contractor shall provide written notification to the Director of the Office of Federal Contract Compliance Programs within ten (10) working days of award of any construction subcontract in excess of $10,000.00 at any tier for construction work under the contract resulting from this solicitation. The notification shall list the name, address and telephone number of the subcontractor; employer identification number of the subcontractor; estimated dollar amount of the subcontract; estimated starting and completion dates of the subcontract; and the geographical area in which the subcontract is to be performed. The notification shall be mailed to:

Evelyn Teague, Regional Director
Office of Federal Contract Compliance Programs
61 Forsyth Street, SW, Suite 7B75
Atlanta, Georgia 30303-8609

4. As used in this Notice, and in the contract resulting from this solicitation, the **"covered area"** is Grayson County.

PART IV

INSURANCE

Refer to
Kentucky Standard Specifications for Road and Bridge Construction,
current edition

PART V

BID ITEMS

221306

PROPOSAL BID ITEMS

Report Date 1/27/22

Section: 0001 - PAVING

LINE	BID CODE	ALT	DESCRIPTION	QUANTITY	UNIT	UNIT PRIC	FP	AMOUNT
0010	00001		DGA BASE	8,603.00	TON		$	
0020	00100		ASPHALT SEAL AGGREGATE	412.00	TON		$	
0030	00103		ASPHALT SEAL COAT	49.00	TON		$	
0040	00193		ASPHALT SCRATCH COURSE PG76-22	3,043.00	TON		$	
0050	00194		LEVELING & WEDGING PG76-22	2,956.00	TON		$	
0060	00214		CL3 ASPH BASE 1.00D PG64-22	9,800.00	TON		$	
0070	00219		CL4 ASPH BASE 1.00D PG76-22	5,789.00	TON		$	
0080	00339		CL3 ASPH SURF 0.38D PG64-22	3,714.00	TON		$	
0090	00342		CL4 ASPH SURF 0.38A PG76-22	11,596.00	TON		$	
0100	02101		CEM CONC ENT PAVEMENT-8 IN	93.00	SQYD		$	
0110	02676		MOBILIZATION FOR MILL & TEXT	1.00	LS		$	
0120	02677		ASPHALT PAVE MILLING & TEXTURING	24,164.00	TON		$	
0130	20071EC		JOINT ADHESIVE	87,009.00	LF		$	
0140	20509ED		BLOW UP/RELIEF JOINT	5,350.00	SQYD		$	
0150	24970EC		ASPHALT MATERIAL FOR TACK NON-TRACKING	128.00	TON		$	

Section: 0002 - ROADWAY

LINE	BID CODE	ALT	DESCRIPTION	QUANTITY	UNIT	UNIT PRIC	FP	AMOUNT
0160	00020		TRAFFIC BOUND BASE	50.00	TON		$	
0170	00071		CRUSHED AGGREGATE SIZE NO 57	46.00	TON		$	
0180	00078		CRUSHED AGGREGATE SIZE NO 2	1,199.00	TON		$	
0190	01005		PERFORATED PIPE EDGE DRAIN-4 IN	19,177.00	LF		$	
0200	01010		NON-PERFORATED PIPE-4 IN	630.00	LF		$	
0210	01015		INSPECT & CERTIFY EDGE DRAIN SYSTEM	1.00	LS		$	
0220	01020		PERF PIPE HEADWALL TY 1-4 IN	10.00	EACH		$	
0230	01024		PERF PIPE HEADWALL TY 2-4 IN	10.00	EACH		$	
0240	01028		PERF PIPE HEADWALL TY 3-4 IN	10.00	EACH		$	
0250	01740		CORED HOLE DRAINAGE BOX CON-4 IN	10.00	EACH		$	
0260	01982		DELINEATOR FOR GUARDRAIL MONO DIRECTIONAL WHITE	35.00	EACH		$	
0270	01990		DELINEATOR FOR BARRIER WALL-B/W	96.00	EACH		$	
0280	02003		RELOCATE TEMP CONC BARRIER	2,960.00	LF		$	
0290	02159		TEMP DITCH	11,251.00	LF		$	
0300	02160		CLEAN TEMP DITCH	5,626.00	LF		$	
0310	02230		EMBANKMENT IN PLACE	6,828.00	CUYD		$	
0320	02360		GUARDRAIL TERMINAL SECTION NO 1	1.00	EACH		$	
0330	02369		GUARDRAIL END TREATMENT TYPE 2A	2.00	EACH		$	
0340	02381		REMOVE GUARDRAIL	2,350.00	LF		$	
0350	02391		GUARDRAIL END TREATMENT TYPE 4A	2.00	EACH		$	
0360	02545		CLEARING AND GRUBBING (2 ACRES)	1.00	LS		$	
0370	02562		TEMPORARY SIGNS	1,200.00	SQFT		$	
0380	02575		DITCHING AND SHOULDERING	19,177.00	LF		$	
0390	02603		FABRIC-GEOTEXTILE CLASS 2	3,700.00	SQYD		$	
0400	02650		MAINTAIN & CONTROL TRAFFIC	1.00	LS		$	

221306

PROPOSAL BID ITEMS

Report Date 1/27/22

LINE	BID CODE	ALT	DESCRIPTION	QUANTITY	UNIT	UNIT PRIC	FP	AMOUNT
0410	02671		PORTABLE CHANGEABLE MESSAGE SIGN	4.00	EACH		$	
0420	02696		SHOULDER RUMBLE STRIPS	84,798.00	LF		$	
0430	02703		SILT TRAP TYPE A	4.00	EACH		$	
0440	02704		SILT TRAP TYPE B	4.00	EACH		$	
0450	02705		SILT TRAP TYPE C	4.00	EACH		$	
0460	02706		CLEAN SILT TRAP TYPE A	4.00	EACH		$	
0470	02707		CLEAN SILT TRAP TYPE B	4.00	EACH		$	
0480	02708		CLEAN SILT TRAP TYPE C	4.00	EACH		$	
0490	02726		STAKING	1.00	LS		$	
0500	02775		ARROW PANEL	2.00	EACH		$	
0510	02898		RELOCATE CRASH CUSHION	7.00	EACH		$	
0520	03171		CONCRETE BARRIER WALL TYPE 9T	1,360.00	LF		$	
0530	04934		TEMP SIGNAL MULTI PHASE	1.00	EACH		$	
0540	05950		EROSION CONTROL BLANKET	18,505.00	SQYD		$	
0550	05952		TEMP MULCH	12,337.00	SQYD		$	
0560	05953		TEMP SEEDING AND PROTECTION	9,253.00	SQYD		$	
0570	05963		INITIAL FERTILIZER	1.00	TON		$	
0580	05964		MAINTENANCE FERTILIZER	.60	TON		$	
0590	05989		SPECIAL SEEDING CROWN VETCH	2,221.00	SQYD		$	
0600	05992		AGRICULTURAL LIMESTONE	11.50	TON		$	
0610	06401		FLEXIBLE DELINEATOR POST-M/W	553.00	EACH		$	
0620	06404		FLEXIBLE DELINEATOR POST-M/Y	81.00	EACH		$	
0630	06427		TRENCHING	1,234.00	LF		$	
0640	06510		PAVE STRIPING-TEMP PAINT-4 IN	18,000.00	LF		$	
0650	06511		PAVE STRIPING-TEMP PAINT-6 IN	174,316.00	LF		$	
0660	06542		PAVE STRIPING-THERMO-6 IN W	52,188.00	LF		$	
0670	06543		PAVE STRIPING-THERMO-6 IN Y	42,399.00	LF		$	
0680	06546		PAVE STRIPING-THERMO-12 IN W	2,464.00	LF		$	
0690	06547		PAVE STRIPING-THERMO-12 IN Y	120.00	LF		$	
0700	06549		PAVE STRIPING-TEMP REM TAPE-B	9,000.00	LF		$	
0710	06550		PAVE STRIPING-TEMP REM TAPE-W	3,600.00	LF		$	
0720	06551		PAVE STRIPING-TEMP REM TAPE-Y	3,600.00	LF		$	
0730	06568		PAVE MARKING-THERMO STOP BAR-24IN	163.00	LF		$	
0740	06569		PAVE MARKING-THERMO CROSS-HATCH	152.00	SQFT		$	
0750	06613		INLAID PAVEMENT MARKER-B W/R	536.00	EACH		$	
0760	06614		INLAID PAVEMENT MARKER-B Y/R	51.00	EACH		$	
0770	08100		CONCRETE-CLASS A	12.16	CUYD		$	
0780	08150		STEEL REINFORCEMENT	368.00	LB		$	
0790	08903		CRASH CUSHION TY VI CLASS BT TL3	3.00	EACH		$	
0800	10020NS		FUEL ADJUSTMENT	60,529.00	DOLL	$1.00	$	$60,529.00
0810	10030NS		ASPHALT ADJUSTMENT	144,256.00	DOLL	$1.00	$	$144,256.00
0820	20191ED		OBJECT MARKER TY 3	4.00	EACH		$	
0830	20756ED		RESHAPE MEDIAN	225.00	LF		$	
0840	20758ED		REMOVE AND RESET PERF PIPE HEADWALL	2.00	EACH		$	
0850	21802EN		G/R STEEL W BEAM-S FACE (7 FT POST)	1,950.00	LF		$	
0860	23979EC		CRASH CUSHION TY VI CLASS C TL3	2.00	EACH		$	
0870	24401EC		DURABLE WATERBORNE MARKING-4 IN W	3,200.00	LF		$	
0880	24402EC		DURABLE WATERBORNE MARKING-4 IN Y	3,200.00	LF		$	
0890	24679ED		PAVE MARK THERMO CHEVRON	922.00	SQFT		$	
0900	24891EC		PAVE MOUNT INFRARED TEMP EQUIPMENT	1,367,033.00	SF		$	

221306

PROPOSAL BID ITEMS

Report Date 1/27/22

LINE	BID CODE	ALT	DESCRIPTION	QUANTITY	UNIT	UNIT PRIC	FP	AMOUNT
0910	25078ED		THRIE BEAM GUARDRAIL TRANSITION TL-3	3.00	EACH		$	
0920	26136EC		PORTABLE QUEUE WARNING ALERT SYSTEM	8.00	MONT		$	
0930	26137EC		QUEUE WARNING PCMS	32.00	MONT		$	
0940	26138EC		QUEUE WARNING PORTABLE RADAR SENSORS	32.00	MONT		$	
0950	40030		TEMPORARY SILT FENCE	11,251.00	LF		$	

Section: 0003 - DRAINAGE

LINE	BID CODE	ALT	DESCRIPTION	QUANTITY	UNIT	UNIT PRIC	FP	AMOUNT
0960	00440		ENTRANCE PIPE-15 IN	75.00	LF		$	
0970	02165		REMOVE PAVED DITCH	326.00	SQYD		$	
0980	02484		CHANNEL LINING CLASS III	940.00	TON		$	
0990	22045NN		FLUME INLET TY 2-MOD	2.00	EACH		$	
1000	22660EN		REPLACE GRATE	454.00	LB		$	
1010	22766ED		TRENCH DRAIN	207.00	LF		$	
1020	24585EC		SECURITY PLATE ASSEMBLY	2.00	EACH		$	

Section: 0004 - BRIDGE - #28464

LINE	BID CODE	ALT	DESCRIPTION	QUANTITY	UNIT	UNIT PRIC	FP	AMOUNT
1030	02231		STRUCTURE GRANULAR BACKFILL	331.00	CUYD		$	
1040	02403		REMOVE CONCRETE MASONRY	561.80	CUYD		$	
1050	02998		MASONRY COATING	1,108.00	SQYD		$	
1060	03299		ARMORED EDGE FOR CONCRETE	113.60	LF		$	
1070	08002		STRUCTURE EXCAV-SOLID ROCK	45.00	CUYD		$	
1080	08003		FOUNDATION PREPARATION (#28464)	1.00	LS		$	
1090	08020		CRUSHED AGGREGATE SLOPE PROT	266.00	TON		$	
1100	08033		TEST PILES	44.00	LF		$	
1110	08046		PILES-STEEL HP12X53	235.00	LF		$	
1120	08094		PILE POINTS-12 IN	16.00	EACH		$	
1130	08100		CONCRETE-CLASS A	499.50	CUYD		$	
1140	08104		CONCRETE-CLASS AA	387.90	CUYD		$	
1150	08130		MECHANICAL REINF COUPLER #5	45.00	EACH		$	
1160	08133		MECHANICAL REINF COUPLER #8	42.00	EACH		$	
1170	08150		STEEL REINFORCEMENT	65,065.00	LB		$	
1180	08151		STEEL REINFORCEMENT-EPOXY COATED	101,004.00	LB		$	
1190	08269		ELECTRICAL CONDUIT	1.00	LS		$	
1200	08305		REMOVE REINF CONCRETE	1.00	LS		$	
1210	08670		PRECAST PC BOX BEAM SB27	1,401.00	LF		$	
1220	23378EC		CONCRETE SEALING	19,012.00	SQFT		$	
1230	25028ED		RAIL SYSTEM SINGLE SLOPE - 40 IN	479.00	LF		$	
1240	25078ED		THRIE BEAM GUARDRAIL TRANSITION TL-3	4.00	EACH		$	

Section: 0005 - BRIDGE - #28465

PROPOSAL BID ITEMS

221306

Report Date 1/27/22

Section: 0005 - BRIDGE - #28465

LINE	BID CODE	ALT	DESCRIPTION	QUANTITY	UNIT	UNIT PRIC	FP	AMOUNT
1250	02403		REMOVE CONCRETE MASONRY	17.50	CUYD		$	
1260	08003		FOUNDATION PREPARATION (#28465)	1.00	LS		$	
1270	08100		CONCRETE-CLASS A	45.60	CUYD		$	
1280	08150		STEEL REINFORCEMENT	4,005.00	LB		$	

Section: 0006 - LIGHTING

LINE	BID CODE	ALT	DESCRIPTION	QUANTITY	UNIT	UNIT PRIC	FP	AMOUNT
1290	04798		CONDUIT-3 1/2 IN	90.00	LF		$	
1300	04800		MARKER	1.00	EACH		$	
1310	04820		TRENCHING AND BACKFILLING	515.00	LF		$	
1320	04860		CABLE-NO. 8/3C DUCTED	825.00	LF		$	
1330	04940		REMOVE LIGHTING	1.00	LS		$	
1340	20391NS835		ELECTRICAL JUNCTION BOX TYPE A	3.00	EACH		$	
1350	21543EN		BORE AND JACK CONDUIT	90.00	LF		$	
1360	21579EN		FLEX CONDUIT-1 1/4 IN	50.00	LF		$	

Section: 0007 - DEMOBILIZATION &/OR MOBILIZATION

LINE	BID CODE	ALT	DESCRIPTION	QUANTITY	UNIT	UNIT PRIC	FP	AMOUNT
1370	02568		MOBILIZATION	1.00	LS		$	
1380	02569		DEMOBILIZATION	1.00	LS		$	