LETTING DATE 5-22-09

CONSTRUCTION PROJECT NO. 09264

TRANSPORTATION CABINET
DEPARTMENT OF HIGHWAYS

FRANKLIN COUNTY
BRIDGE REPAIRS
I-64 OVER KY 420 & CEDAR RUN
STA. 2417+01

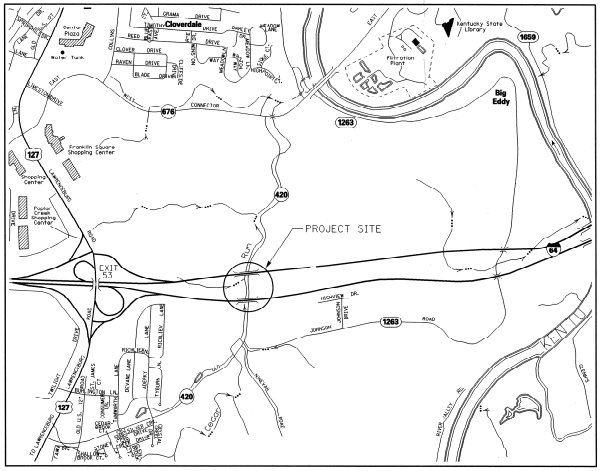

Vicinity Map
(N.T.S.)

ESTIMATE OF QUANTITIES

STRUCTURE QUANTITIES

	BID ITEM	Eliminate Transverse Joint	K-Frame Steel Retrofit	Web Plate Steel Retrofit	Concrete Repair	Concrete Overlay Latex	Removal of Epoxy Bituminous Foreign Overlays	Epoxy Sand Slurry	Blast Cleaning	Concrete Class M Full Depth Patch				
	BID CODE	03300	23207EC	23208EC	21648EN	08534	08510	08504	08549	08526				
	UNIT	L.F.	EA.	EA.	SQ.YD	CU.YD	SQ.YD	SQ.YD	SQ.YD	CU.YD				
Westbound Substructure	Abut #1													
	Pier #1				5									
	Pier #2													
	Pier #3													
	Pier #4				40									
	Abut #2													
	Superstructure	280	8	6		73.1	1753	147	1900	36.5				
	Westbound Totals	280	8	6	45	73.1	1753	147	1900	36.5				
Eastbound Substructure	Abut #1													
	Pier #1													
	Pier #2													
	Abut #2													
	Superstructure	280	7	10		57.0	1367	114	1481	28.5				
	Eastbound Totals	280	7	10		57.0	1367	114	1481	28.5				
	BRIDGE TOTALS	560	15	16	45	130.1	3120	261	3381	65.0				

TRAFFIC QUANTITIES

BID ITEM	Concrete Barrier Wall Type ST	Relocate Temp Concrete Barrier	Pave Striping Dur TY1-6 IN W	Pave Striping Temp Rem Tape-8 8"	Pave Striping Temp Rem Tape-W 6"	Pave Striping Dur TY 1-6 IN Y	Truck Mounted Attenuator	Arrow Panel	Police Officer with Vehicle	Portable Changeable Message Sign	Signs	Lane Closure	Maintain and Control Traffic Eastbound	Maintain and Control Traffic Westbound
BID CODE	03171	02003	06556	06549	06550	06557	02654	02775	21669NN	02671	02562	02653	02650	02651
UNIT	L.F.	L.F.	L.F.	L.F.	L.F.	L.F.	EA.	EA.	HOUR	EA.	SQ.FT	EA.	L.S.	L.S.
PROJECT TOTALS	1510	1510	1120	1600	8400	40	2	4	100	10	2040	4	1	1

ITEM NUMBER
5-800.00

INDEX OF SHEETS

Sheet No.	Description
S1	Title Sheet
T1-T2	Maintenance of Traffic
S2	General Notes
S3	Layout
S4	Transverse Joint Elimination
S5	Transverse Joint Details
S6	K-Frame Retrofit
S7	K-Frame Retrofit Details
S8	Steel Girder Retrofit
S9-S15	Steel Girder Retrofit Details
S16	Westbound Pier Repairs

SPECIAL NOTES

Eliminating Transverse Joints on Bridges

Bridge Bent Concrete Repair

SPECIAL PROVISIONS

STANDARD DRAWINGS

BGX-009-04	Bridge Restor. & Waterproofing w/ Concrete Overlays

SPECIFICATIONS

2008 Standard Specifications for Road and Bridge Construction

2002 AASHTO Standard Specifications for Highway Bridges.

Repairs to Structure - Dwg.No. 14037 & 14038

REVISION	DATE

DATE: December 2008 CHECKED BY

DESIGNED BY: J. Rogers

DETAILED BY: J. Rogers

Commonwealth of Kentucky
DEPARTMENT OF HIGHWAYS

COUNTY: FRANKLIN

ROUTE: I-64 CROSSING: KY 420 & CEDAR RUN

TITLE SHEET

PREPARED BY: Division of Maintenance
Bridge Preservation Branch

SHEET NO. S1

DRAWING NO. 26511

SHEET LOCATION: DATE: $$$$DATE$$$$ USERNAME: $$$$plottedby$$$$ FILE NAME: $$$$designfile$specifications$$$

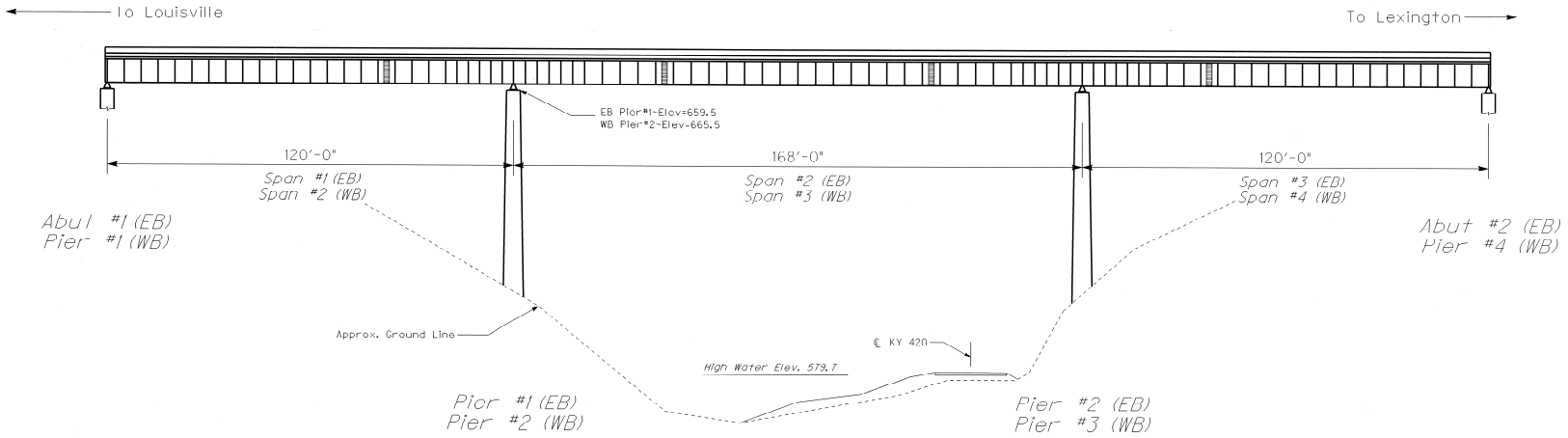

SCOPE: Eliminate transverse joints, perform concrete overlay, concrete repairs, and steel retrofit repairs.

ELEVATION

Eastbound and Westbound
120', 168', 120' Continuous Welded Plate Girder Spans
(Westbound Tail Spans not shown)

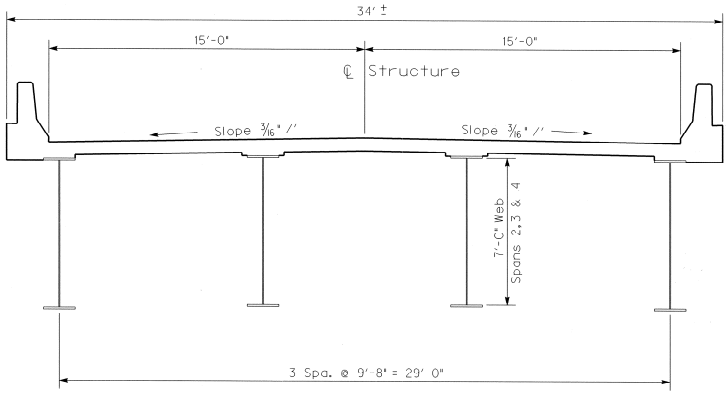

WESTBOUND TYPICAL SECTION

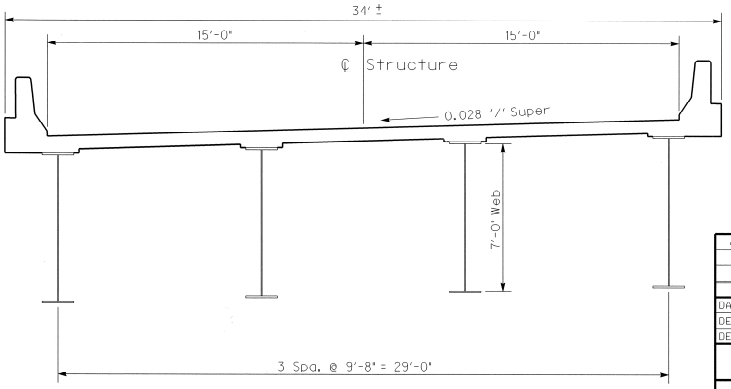

EASTBOUND TYPICAL SECTION

Repairs to Structure Dwg.No. 14037 & 14038	
REVISION	DATE
DATE: December 2008	CHECKED BY
DESIGNED BY: J. Rogers	
DETAILED BY: J. Rogers	

Commonwealth of Kentucky
DEPARTMENT OF HIGHWAYS

COUNTY: FRANKLIN

ROUTE: I-64 | CROSSING: KY 420 & CEDAR RUN

LAYOUT

PREPARED BY: Division of Maintenance, Bridge Preservation Branch

SHEET NO. S3

DRAWING NO. 26511

ITEM NUMBER: 5-800.00

SHEET LOCATION: LAY | DATE: 12-FEB-2009 | USERNAME: Eric.W.Downey | FILE NAME: U:\Bridges\Projects\Josh\26511\26511.dgn

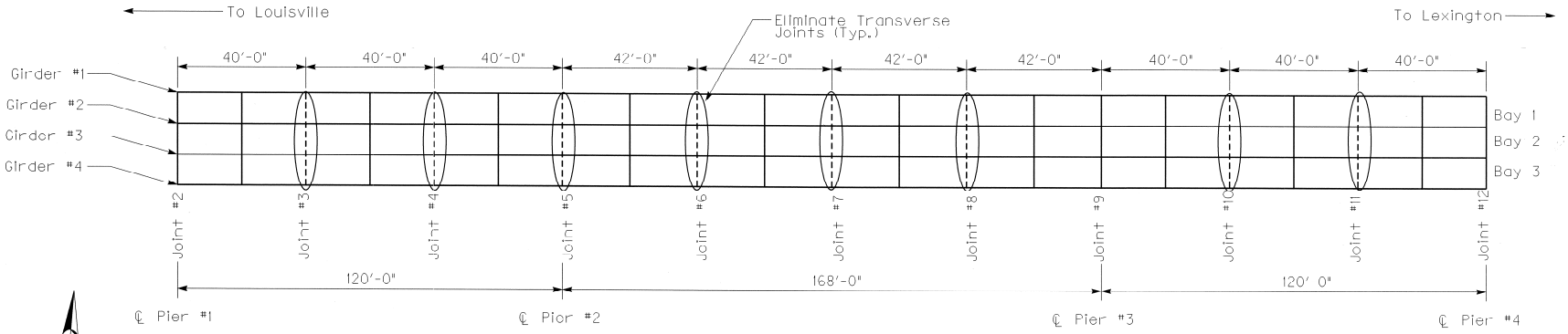

WESTBOUND PLAN

Westbound Joint Locations
Eliminate Transverse Joints @ 3, 4, 5, 6, 7, 8, 10, 11
(Tail Spans not shown)

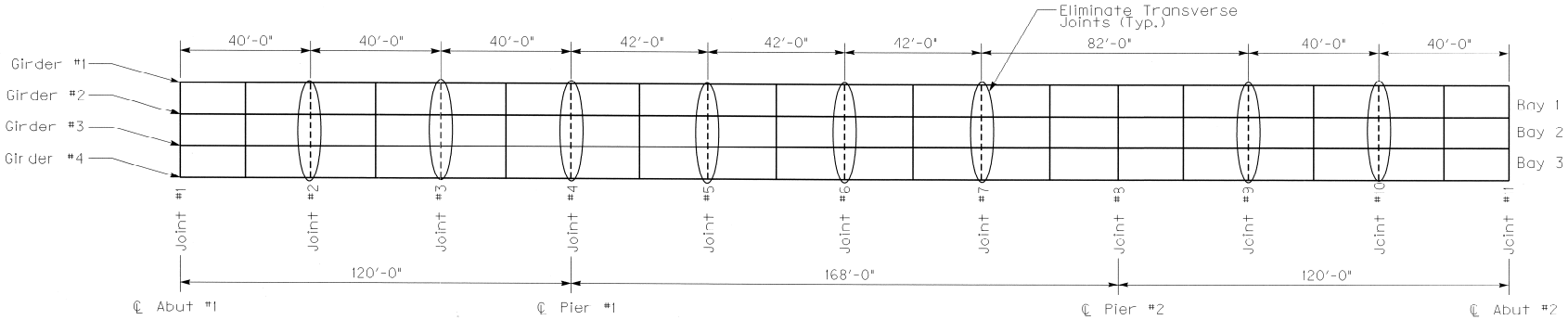

EASTBOUND PLAN

Eastbound Joint Locations
Eliminate Transverse Joints @ 2, 3, 4, 5, 6, 7, 9, 10

Note: See Joint Details, Sheet S5

REVISION	DATE
Repairs to Structure – Dwg. No. 14037 & 14038	

DATE: December 2008	CHECKED BY
DESIGNED BY: J. Rogers	
DETAILED BY: J. Rogers	

Commonwealth of Kentucky
DEPARTMENT OF HIGHWAYS

COUNTY: FRANKLIN

ROUTE: I-64 | CROSSING: KY 420 & CEDAR RUN

TRANSVERSE JOINT ELIMINATION

ITEM NUMBER: 5-800.00

PREPARED BY: Division of Maintenance, Bridge Preservation Branch

SHEET NO. S4

DRAWING NO. 26511

SHEET LOCATION: PCI | DATE: 12-FEB-2009 | USERNAME: Ed.W.Downey | FILE NAME: U:\Bridges\Projects\Josh\26511\26511.dgn

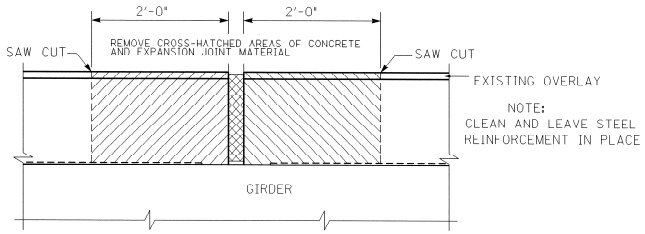

EXISTING SECTION

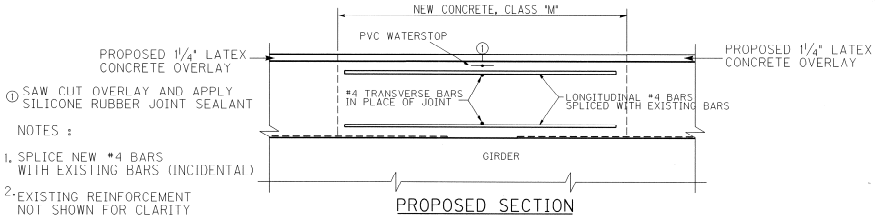

PROPOSED SECTION

ELIMINATE TRANSVERSE JOINT

See Special Note for Eliminating Transverse Joints on Bridges

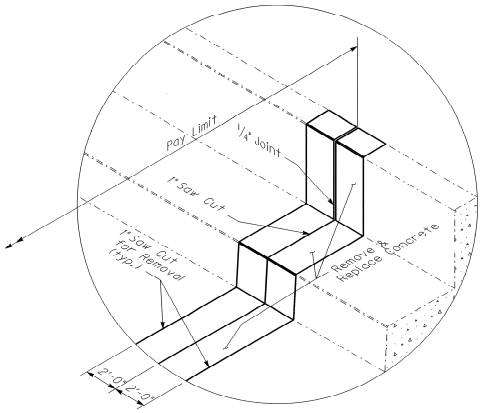

PICTORIAL VIEW

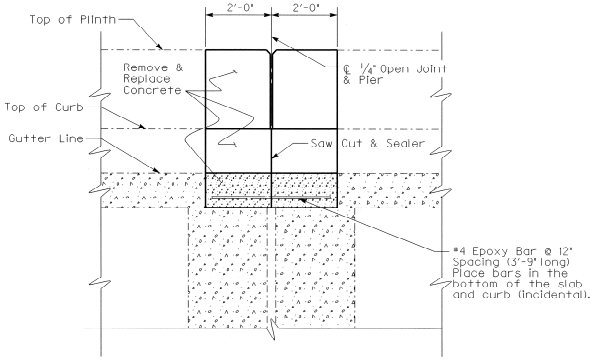

ELEVATION

Repairs to Structure – Dwg. No. 14037 & 14038	
REVISION	DATE
DATE: December 2008	CHECKED BY
DESIGNED BY: J. Rogers	
DETAILED BY: J. Rogers	

Commonwealth of Kentucky
DEPARTMENT OF HIGHWAYS

COUNTY: FRANKLIN

ROUTE: I-64 | CROSSING: KY 420 & CEDAR RUN

JOINT DETAILS

PREPARED BY: Division of Maintenance, Bridge Preservation Branch

SHEET NO. S5

DRAWING NO. 26511

ITEM NUMBER: 5-800.00

SHEET LOCATION: NJ1 DATE: 12-FEB-2009 USERNAME: Earl.W.Downey FILE NAME: U:\Bridges\Projects\Josh\26511\26511.dgn

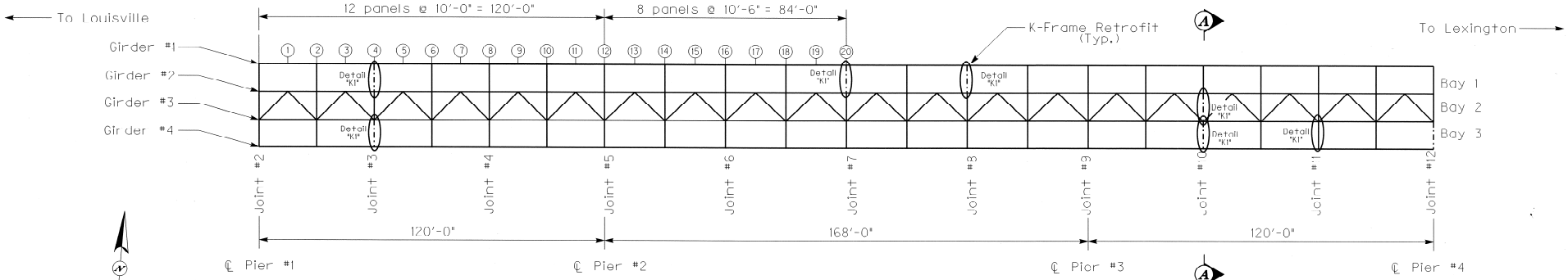

WESTBOUND FRAMING LAYOUT

(Tail Spans not Shown)

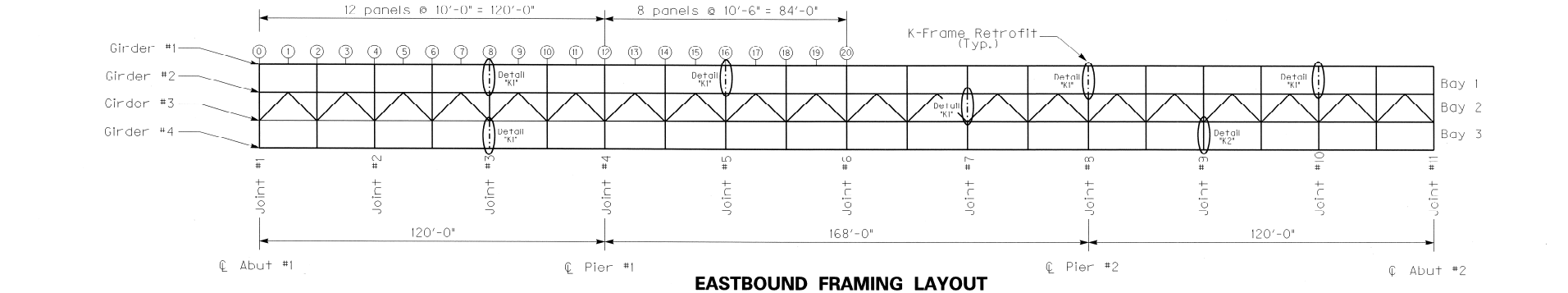

EASTBOUND FRAMING LAYOUT

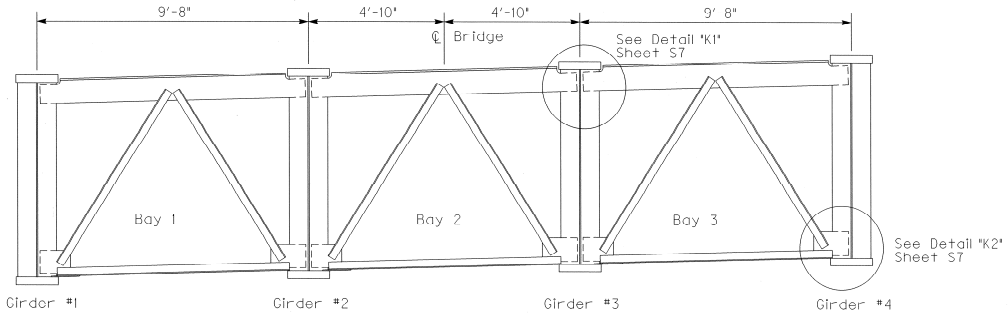

SECTION A–A

K-Frame Bracing

REVISION	DATE
Repairs to Structure – Dwg. No. 14037 & 14038	

DATE: December 2008	CHECKED BY
DESIGNED BY: J. Rogers	
DETAILED BY: J. Rogers	

Commonwealth of Kentucky
DEPARTMENT OF HIGHWAYS

COUNTY: FRANKLIN

ROUTE: I-64 | CROSSING: KY 420 & CEDAR RUN

K-FRAME RETROFIT

PREPARED BY: Division of Maintenance, Bridge Preservation Branch

ITEM NUMBER: 5–800.00

SHEET NO. S6

DRAWING NO. 26511

SHEET LOCATION: A1A | DATE: 19-FEB-2009 | USERNAME: Josh.Rogers | FILE NAME: U:\Bridges\Projects\Josh\26511\26511.dgn

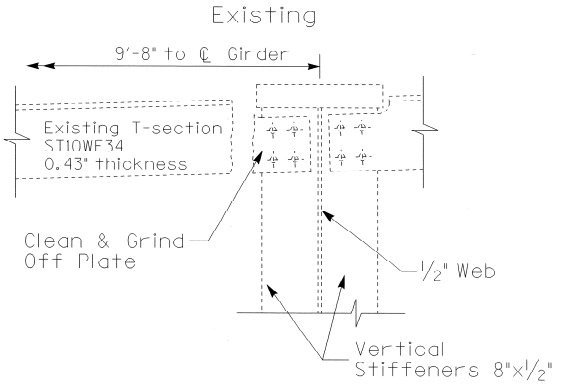

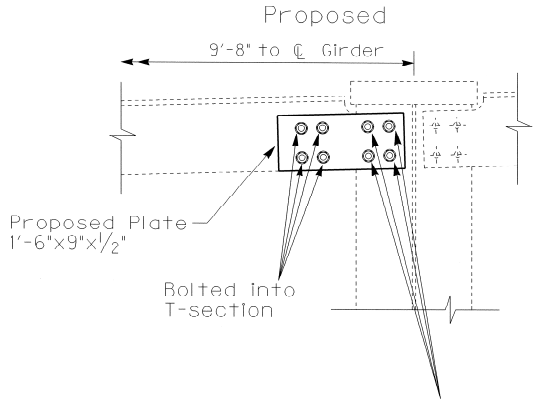

Note: Plate to be retrofitted on "nut side" of connection.

Utilize existing holes in stiffener for proposed plate connection. Discard and do not reuse existing bolts, nuts, and washers.

DETAIL "K1"

Westbound K-Frame Retrofit

	Bay 1	Bay 2	Bay 3
Joint #3	Detail "K1" Girder #1		Detail "K1" Girder #4
Joint #7	Detail "K1" Girder #1		
Joint #8	Detail "K1" Girder #2		
Joint #10		Detail "K1" Girder #3	Detail "K1" Girder #3 & #4
Joint #11			Detail "K1" Girder #4

Eastbound K-Frame Retrofit

	Bay 1	Bay 2	Bay 3
Joint #3	Detail "K1" Girder #1		Detail "K1" Girder #3
Joint #5	Detail "K1" Girder #1		
Joint #7		Detail "K1" Girder #2	
Joint #8	Detail "K1" Girder #1		
Joint #9			Detail "K2" Girder #4
Joint #10	Detail "K1" Girder #1		

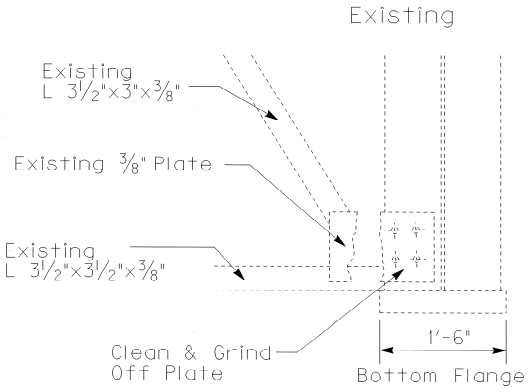

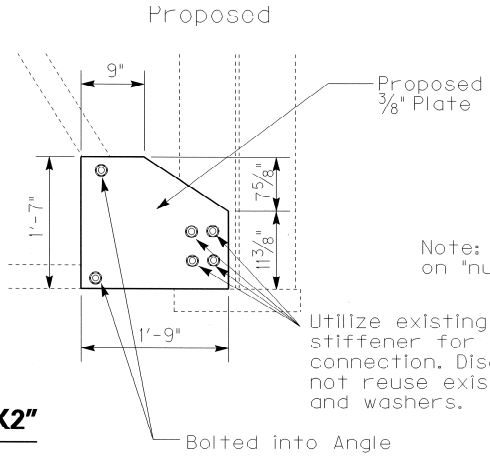

Note: Plate to be retrofitted on "nut side" of connection.

Utilize existing holes in stiffener for proposed plate connection. Discard and do not reuse existing bolts, nuts, and washers.

DETAIL "K2"

REVISION	DATE
Repairs to Structure – Dwg. No. 14037 & 14038	

DATE: December 2008 | CHECKED BY
DESIGNED BY: J. Rogers
DETAILED BY: J. Rogers

Commonwealth of Kentucky
DEPARTMENT OF HIGHWAYS

COUNTY: FRANKLIN

ROUTE: I-64 | CROSSING: KY 420 & CEDAR RUN

K-FRAME RETROFIT DETAILS

ITEM NUMBER: 5-800.00

PREPARED BY: Division of Maintenance, Bridge Preservation Branch

SHEET NO. S7

DRAWING NO. 26511

SHEET LOCATION: CE DATE: 12-FEB-2009 USERNAME: Earl.N.Downey FILE NAME: U:\Bridges\Projects\Josh\26511\26511.dgn

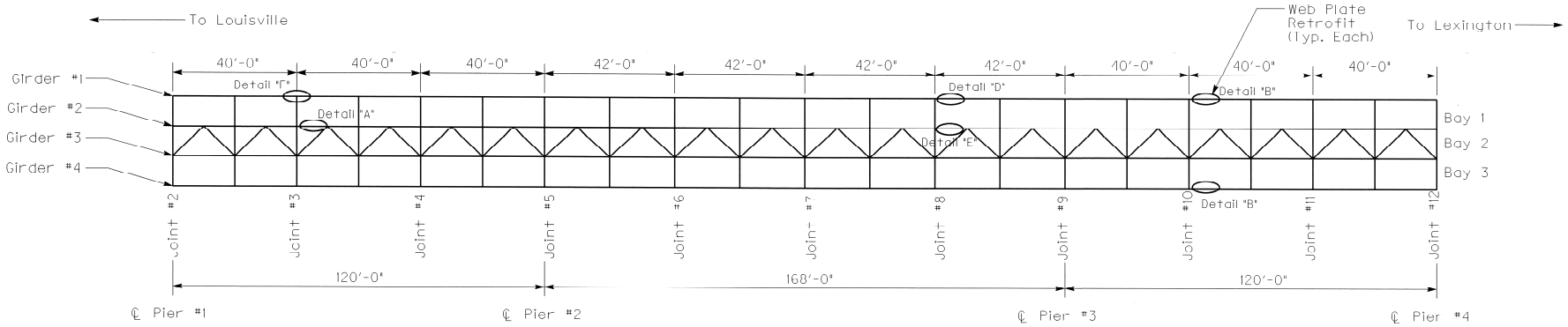

WESTBOUND STEEL GIRDER RETROFIT LAYOUT

(Westbound Tall Spans not shown)

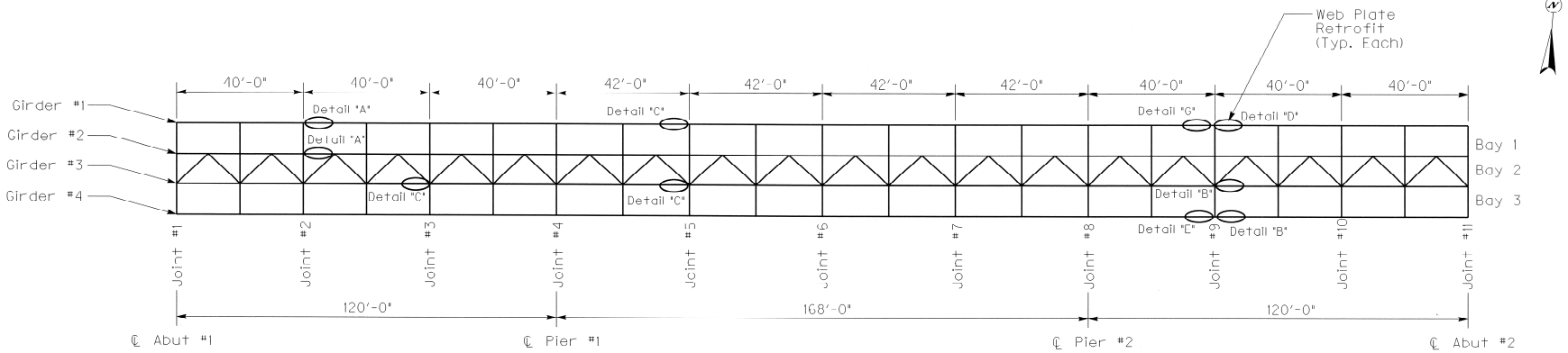

EASTBOUND STEEL GIRDER RETROFIT LAYOUT

Repairs to Structure Dwg. No. 14037 & 14038	
REVISION	DATE
DATE: December 2008	CHECKED BY
DESIGNED BY: J. Rogers	
DETAILED BY: J. Rogers	

Commonwealth of Kentucky
DEPARTMENT OF HIGHWAYS

COUNTY: **FRANKLIN**

ROUTE: **I-64** CROSSING: **KY 420 & CEDAR RUN**

STEEL GIRDER RETROFIT

ITEM NUMBER: **5-800.00**

PREPARED BY: **Division of Maintenance**
Bridge Preservation Branch

SHEET NO.: **S8**
DRAWING NO.: **26511**

SHEET LOCATION: NJ2 DATE: 12-FEB-2009 USERNAME: Earl W. Downey FILE NAME: u:\Bridges\Projects\cash\26511\26511.dgn

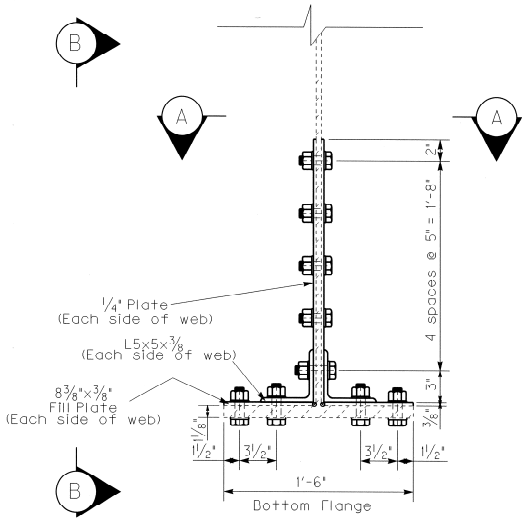

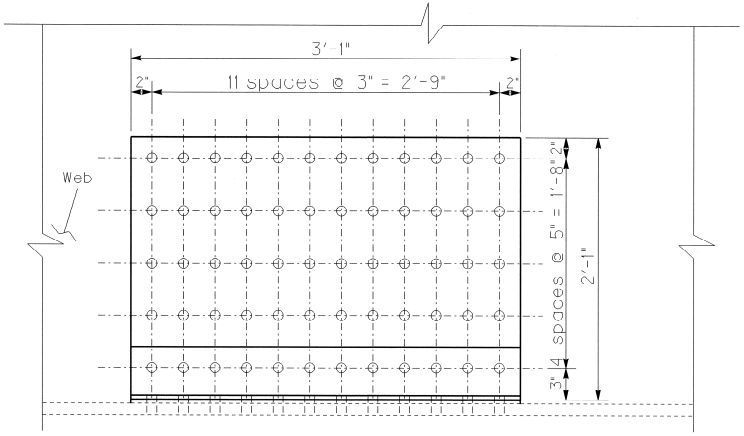

Section B-B

Section A-A

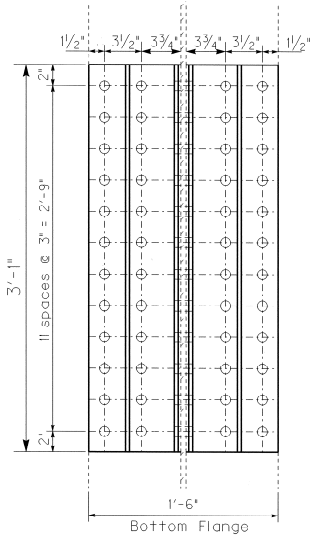

Detail "A"

EB Girder #1 @ Joint#2
East side of K–frame

EB Girder #2 @ Joint#2
East side of K–frame

WB Girder #2 @ Joint#3
East side of K–frame

Repairs to Structure – Dwg.No.14037 & 14038	
REVISION	DATE
DATE: December 2008	CHECKED BY
DESIGNED BY: J. Rogers	
DETAILED BY: J. Rogers	

Commonwealth of Kentucky
DEPARTMENT OF HIGHWAYS

COUNTY: FRANKLIN

ROUTE: I–64 | CROSSING: KY 420 & CEDAR RUN

STEEL GIRDER RETROFIT DETAILS

ITEM NUMBER	PREPARED BY	SHEET NO.
5–800.00	Division of Maintenance Bridge Preservation Branch	S9
		DRAWING NO. 26511

SHEET LOCATION: GN2 DATE: 12-FEB-2009 USERNAME: Earl.W.Downey FILE NAME: U:\Bridges\Projects\Vosr\26511\26511.dgn

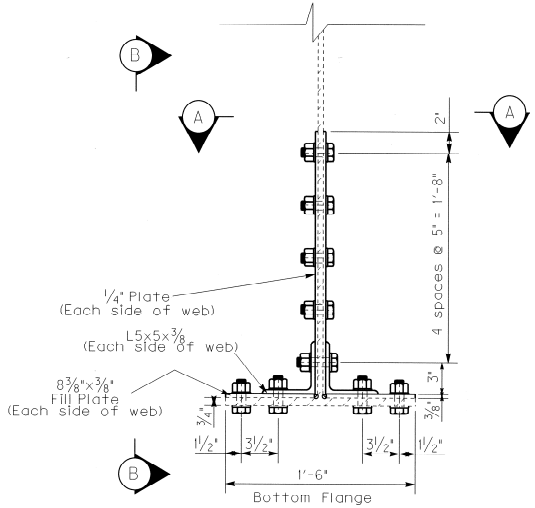

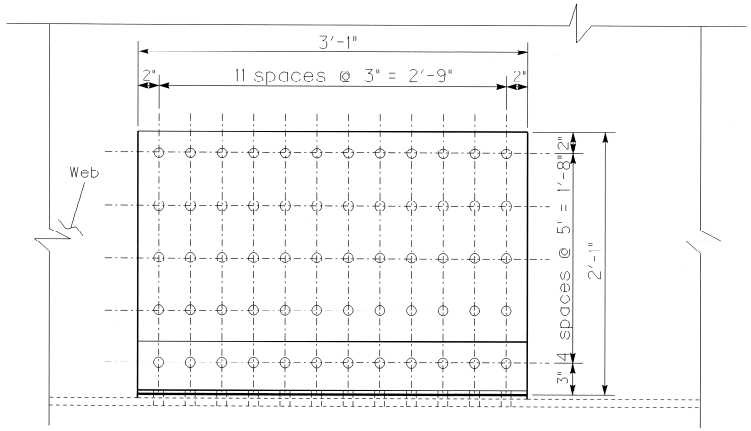

Section B-B

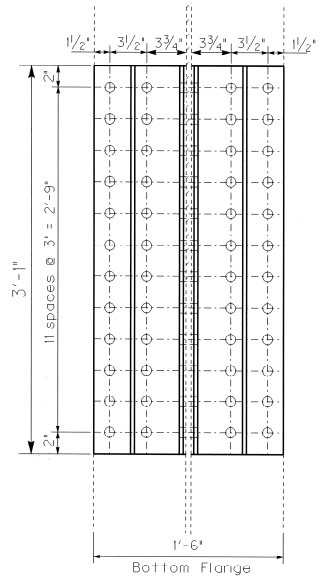

Section A-A

Detail "B"

EB Girder #3 @ Joint#9
East side of K–frame

EB Girder #4 @ Joint#9
West side of K–frame

WB Girder #1 @ Joint#10
East side of K–frame

WB Girder #4 @ Joint#10
East side of K–frame

Repairs to Structure – Dwg. No. 14037 & 14038	
REVISION	DATE
DATE: December 2008	CHECKED BY
DESIGNED BY: J. Rogers	
DETAILED BY: J. Rogers	

Commonwealth of Kentucky
DEPARTMENT OF HIGHWAYS

COUNTY: FRANKLIN

ROUTE: I–64 | CROSSING: KY 420 & CEDAR RUN

STEEL GIRDER RETROFIT DETAILS

ITEM NUMBER: 5–800.00

PREPARED BY: Division of Maintenance, Bridge Preservation Branch

SHEET NO.: S10

DRAWING NO.: 26511

SHEET LOCATION: A1C | DATE: 12-FEB-2009 | USERNAME: Earl.W.Downey | FILE NAME: U:\B-Tidges\Projects\Josh\2651\2651u.dgn

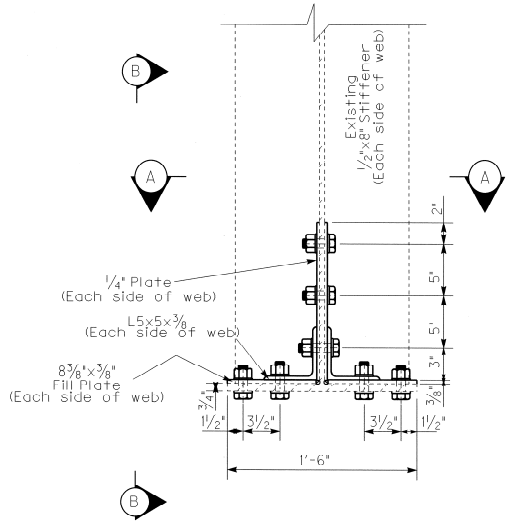

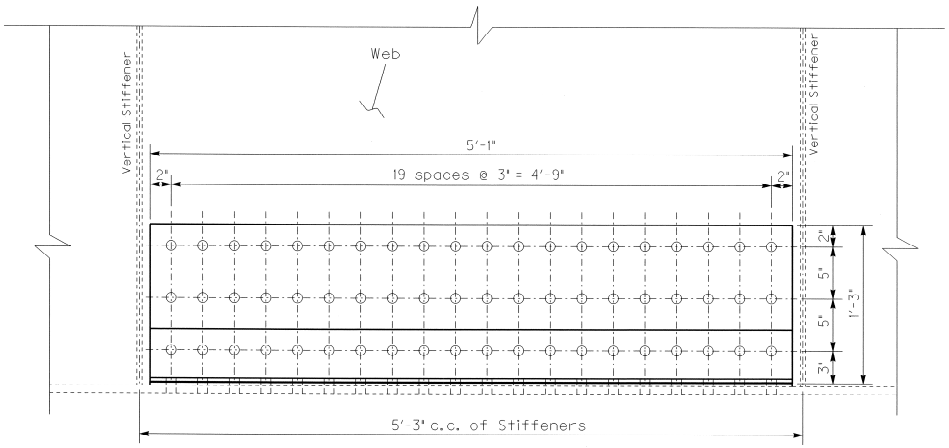

Section B-B

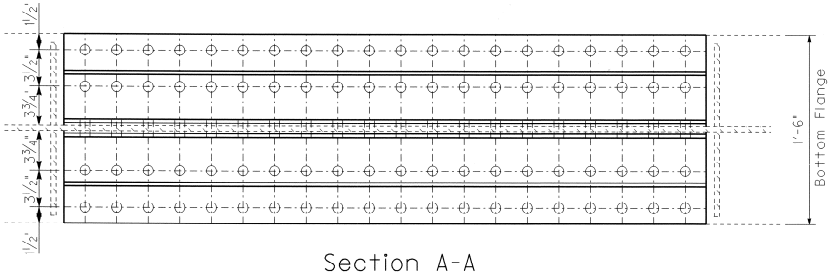

Section A-A

Detail "C"

EB Girder #3 @ Joint#3
West side of K-frame

EB Girder #1 @ Joint #5
West side of K-frame

EB Girder #3 @ Joint#5
West side of K-frame

REVISION	DATE
Repairs to Structure - Dwg.No. 14037 & 14038	

DATE: December 2008	CHECKED BY
DESIGNED BY: J. Rogers	
DETAILED BY: J. Rogers	

Commonwealth of Kentucky
DEPARTMENT OF HIGHWAYS

COUNTY: FRANKLIN

ROUTE: I-64 | CROSSING: KY 420 & CEDAR RUN

STEEL GIRDER RETROFIT DETAILS

PREPARED BY: Division of Maintenance, Bridge Preservation Branch

SHEET NO.: S11
DRAWING NO.: 26511

ITEM NUMBER: 5-800.00

SHEET LOCATION: 2SS | DATE: 12-FEB-2009 | USERNAME: Earl.W.Downey | FILE NAME: U:\Bridges\Projects\cash\26511\26511.dgn

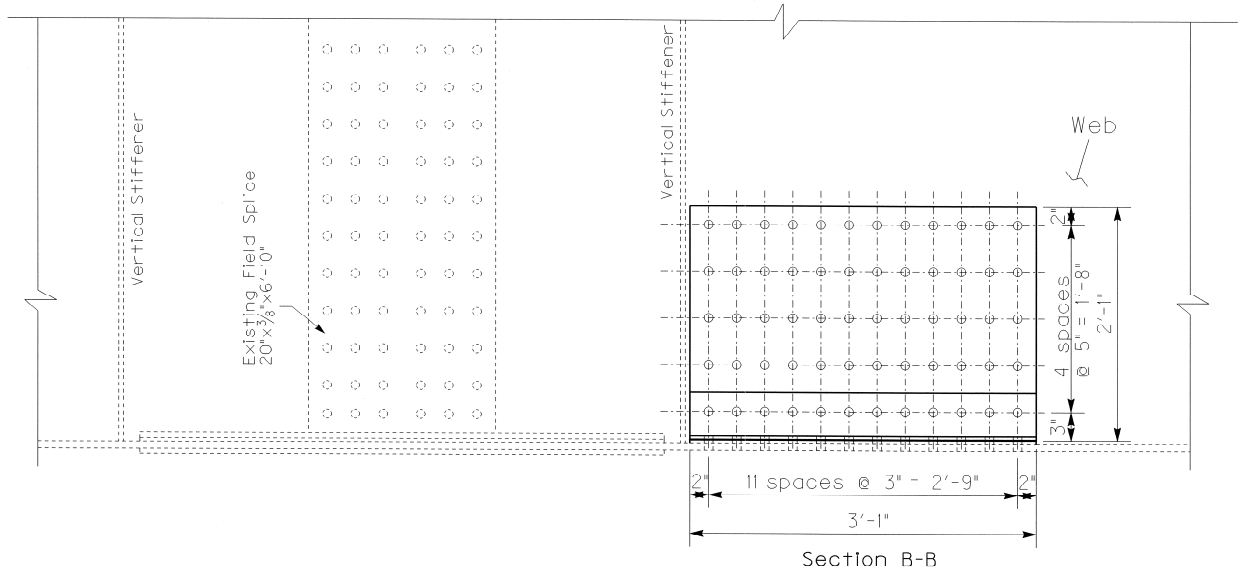

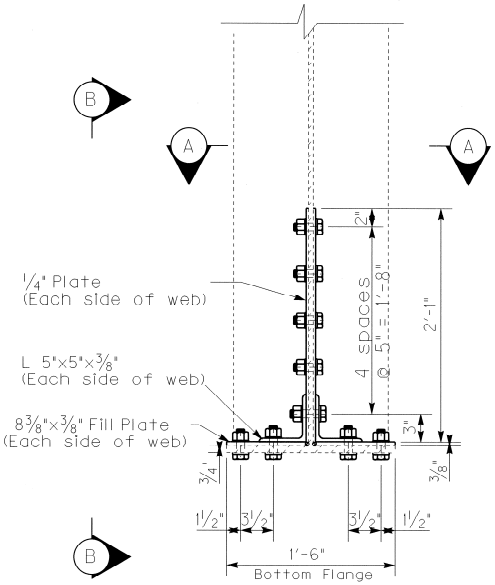

Detail "D"

EB Girder #1 @ Joint #9
East side of K-frame
and Field Splice

WB Girder #1 @ Joint #8
East side of K-frame
and Field Splice

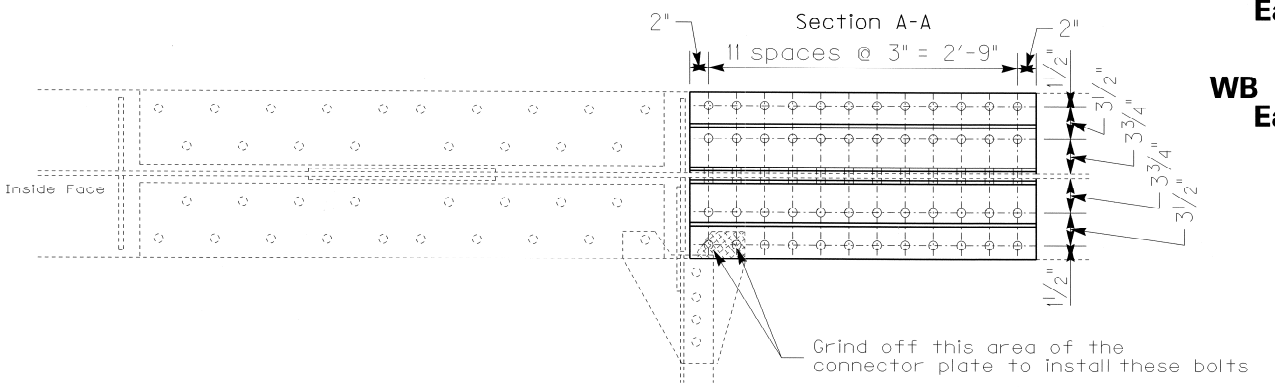

REVISION	DATE
Repairs to Structure - Dwg. No. 14037 & 14038	

DATE: December 2008 — CHECKED BY
DESIGNED BY: J. Rogers
DETAILED BY: J. Rogers

Commonwealth of Kentucky
DEPARTMENT OF HIGHWAYS

COUNTY: FRANKLIN

ROUTE: I-64 — CROSSING: KY 420 & CEDAR RUN

STEEL GIRDER RETROFIT DETAILS

ITEM NUMBER: 5-800.00

PREPARED BY: Division of Maintenance, Bridge Preservation Branch

SHEET NO. S12

DRAWING NO. 26511

SHEET LOCATION: 3SS — DATE: 12-FEB-2009 — USERNAME: Earl W. Downey — FILE NAME: U:\Bridges\Projects\Josh\2651\2651i.dgn

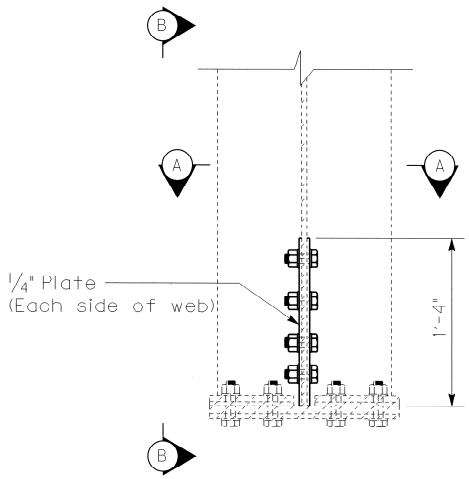

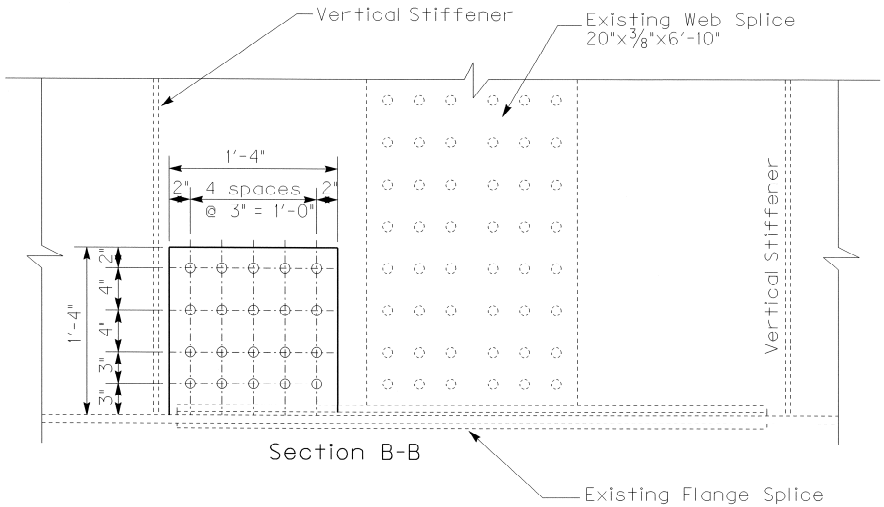

Section B-B

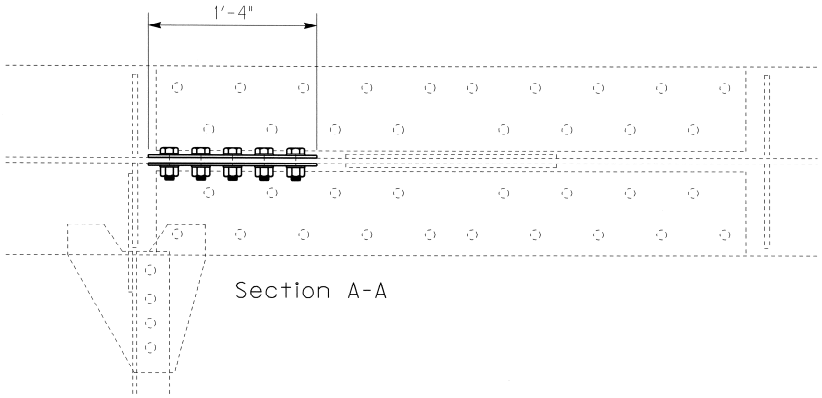

Section A-A

Detail "E"

EB Girder #4 @ Joint #9
East side of K–frame and
West side of Field Splice

WB Girder #2 @ Joint #8
East side of K–frame and
West side of Field Splice

Repairs to Structure – Dwg.No. 14037 & 14038	
REVISION	DATE
DATE: December 2008	CHECKED BY
DESIGNED BY: J. Rogers	
DETAILED BY: J. Rogers	

Commonwealth of Kentucky
DEPARTMENT OF HIGHWAYS

COUNTY: FRANKLIN

ROUTE: I–64 | CROSSING: KY 420 & CEDAR RUN

STEEL GIRDER RETROFIT DETAILS

PREPARED BY: Division of Maintenance, Bridge Preservation Branch

SHEET NO. S13

DRAWING NO. 26511

ITEM NUMBER: 5–800.00

SHEET LOCATION: A2A DATE: 12-FEB-2009 USERNAME: Earl.W.Downey FILE NAME: U:\Bridges\Projects\Josh\26511\26511.dgn

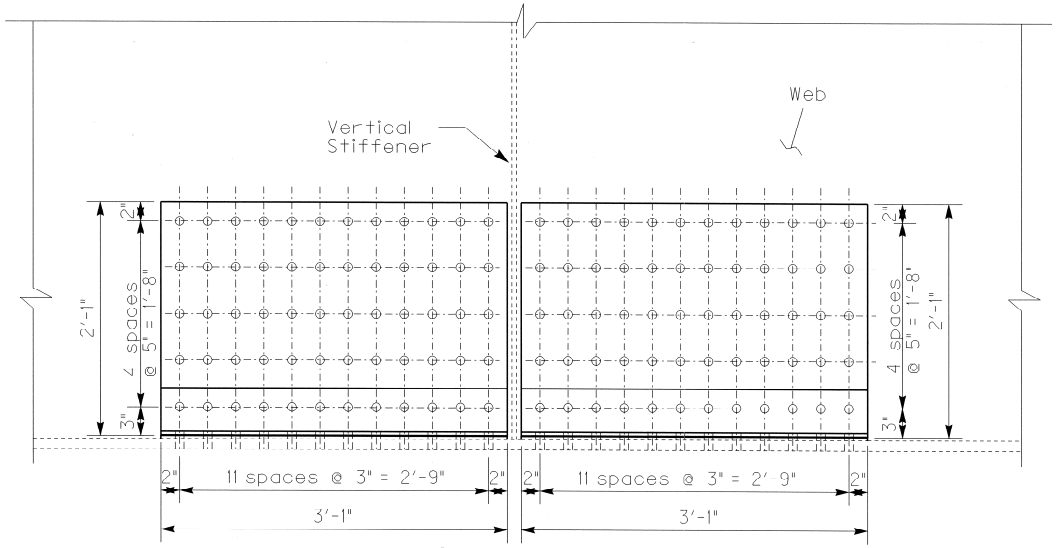

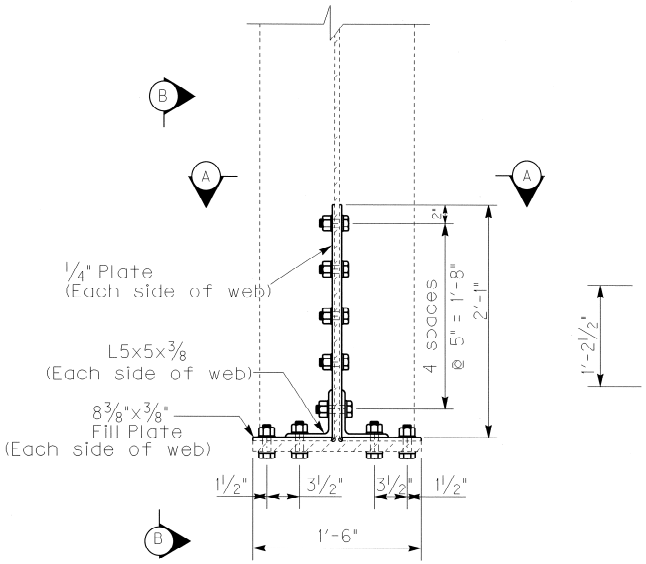

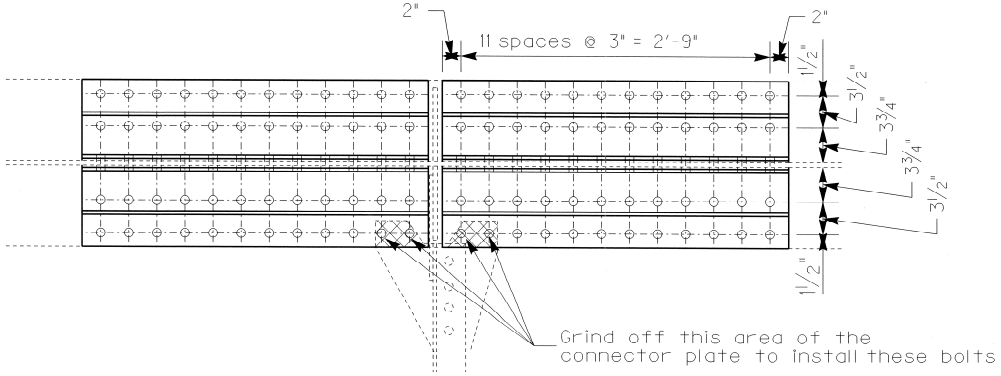

Detail "F"

WB Girder #1 @ Joint #3
Each side of K-frame

REVISION	DATE
Repairs to Structure – Dwg. No. 14037 & 14038	

DATE: December 2008 — CHECKED BY
DESIGNED BY: J. Rogers
DETAILED BY: J. Rogers

Commonwealth of Kentucky
DEPARTMENT OF HIGHWAYS

COUNTY: FRANKLIN
ROUTE: I-64 — CROSSING: KY 420 & CEDAR RUN

STEEL GIRDER RETROFIT DETAILS

PREPARED BY: Division of Maintenance, Bridge Preservation Branch

ITEM NUMBER: 5-800.00

SHEET NO. S14
DRAWING NO. 26511

SHEET LOCATION: GN3 — DATE: 12-FEB-2009 — USERNAME: Earl.W.Downey — FILE NAME: U:\Bridges\Projects\Josh\26511\26511.dgn

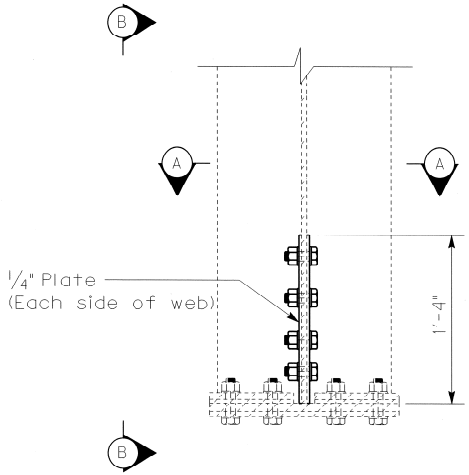

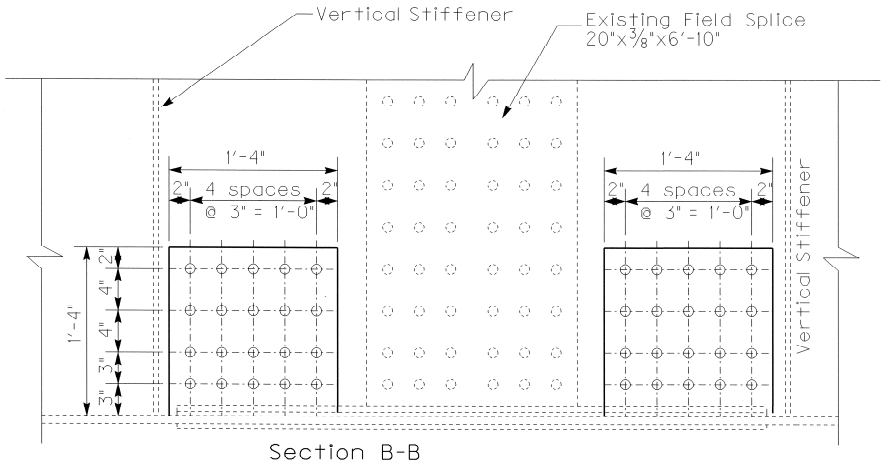

Section B-B

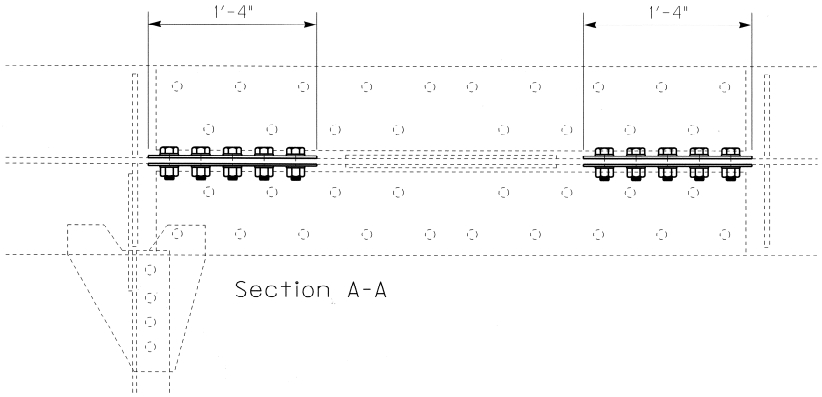

Section A-A

Detail "G"

EB Girder #1 @ Joint #9
Each side of Field Splice

Repairs to Structure – Dwg.No. 14037 & 14038	
REVISION	DATE
DATE: December 2008	CHECKED BY
DESIGNED BY: J. Rogers	
DETAILED BY: J. Rogers	

Commonwealth of Kentucky
DEPARTMENT OF HIGHWAYS

COUNTY: FRANKLIN

ROUTE: I-64 | CROSSING: KY 420 & CEDAR RUN

STEEL GIRDER RETROFIT DETAILS

PREPARED BY: Division of Maintenance, Bridge Preservation Branch

SHEET NO. S15

DRAWING NO. 26511

ITEM NUMBER: 5-800.00

SHEET LOCATION: AS | DATE: 12-FEB-2009 | USERNAME: Earl.W.Downey | FILE NAME: L:\Bridges\Projects\Josh\26511\26511.dgn

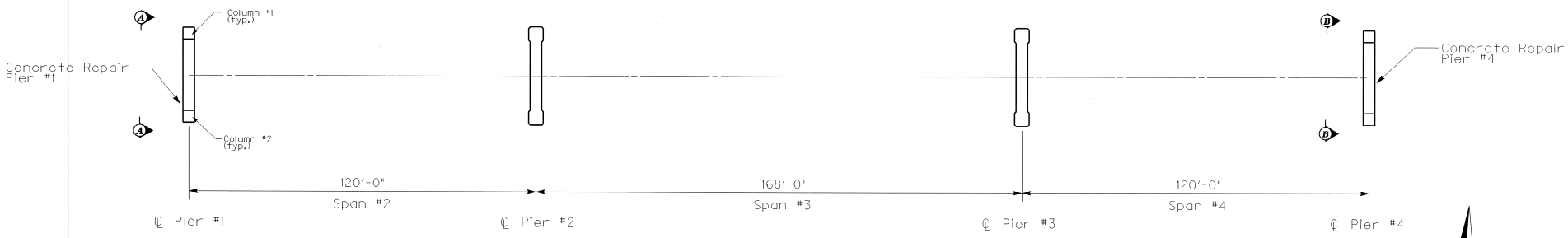

WESTBOUND SUBSTRUCTURE LAYOUT

(SuperStructure & Tail Spans not Shown)

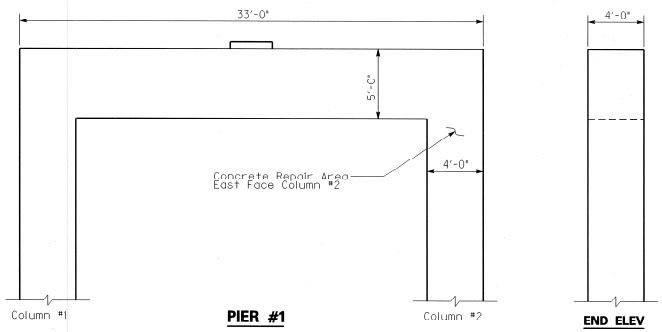

SECTION A–A

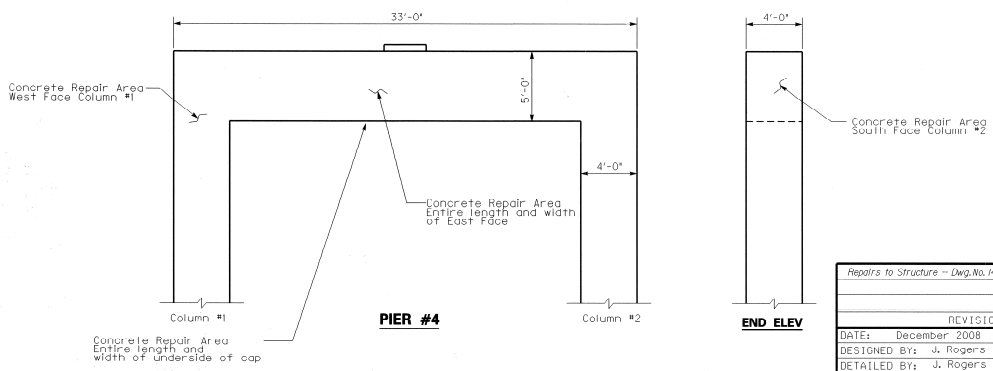

SECTION B–B

See Special Note for Bridge Bent Concrete Repair

Note: Existing steel reinforcement shall remain in place.

REVISION	DATE
Repairs to Structure – Dwg.No. 14037 & 14038	

DATE: December 2008 CHECKED BY
DESIGNED BY: J. Rogers
DETAILED BY: J. Rogers

Commonwealth of Kentucky
DEPARTMENT OF HIGHWAYS

COUNTY: **FRANKLIN**

ROUTE: **I-64** CROSSING: **KY 420 & CEDAR RUN**

PIER REPAIR

PREPARED BY: **Division of Maintenance**
Bridge Preservation Branch

SHEET NO. **S16**
DRAWING NO. **26511**

ITEM NUMBER
5–800.00

SHEET LOCATION: **T1T** DATE: 12-FEB-2009 USERNAME: Earl.N.Downey FILE NAME: U:\Bridges\Projects\Josh\26511\26511.cgn

FRANKFORT
DETOUR SIGNAGE

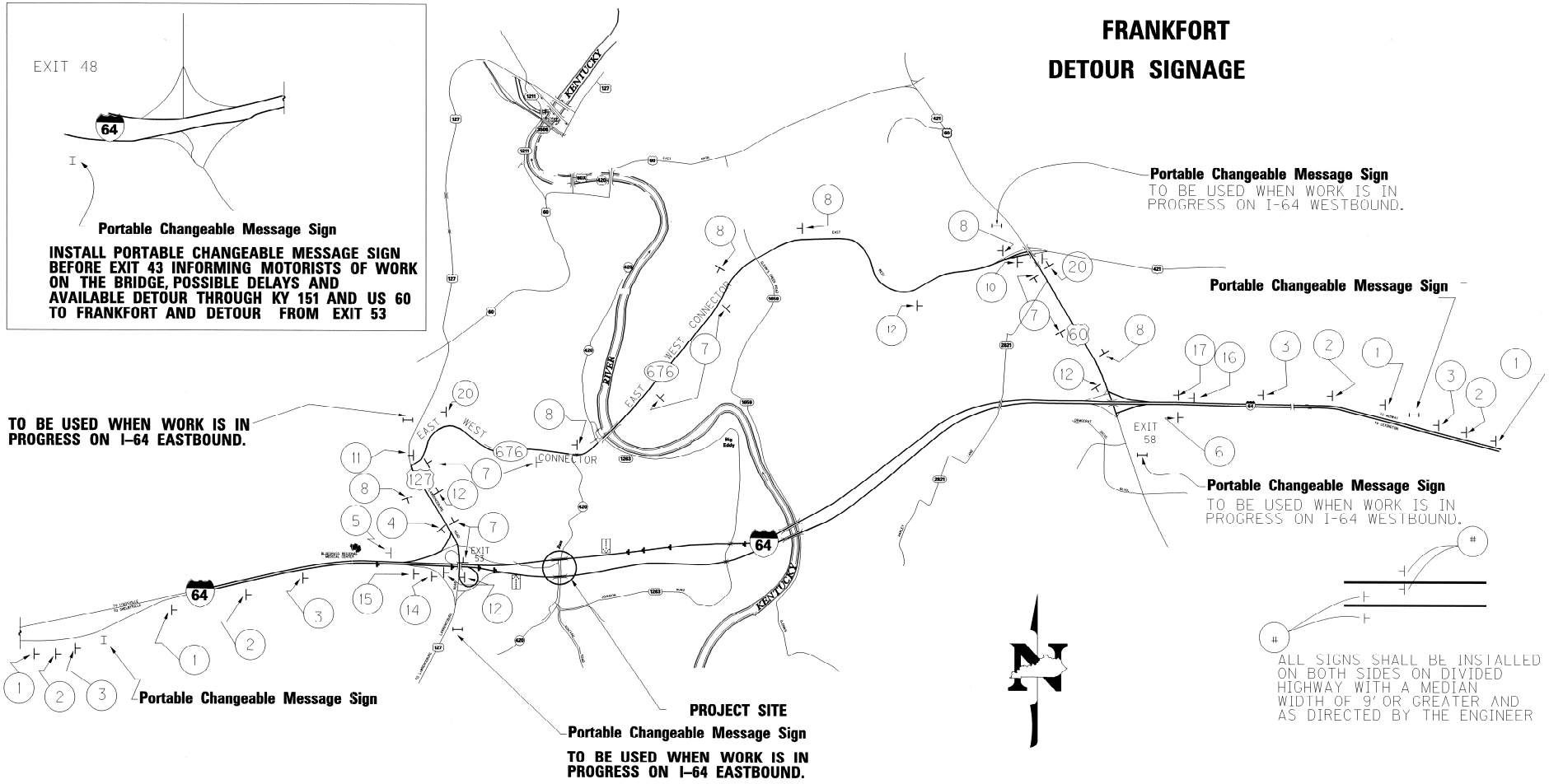

(#) See Sheet T2 for the required Sign

See Sheet T2 for the required Lane Closure Sign

BC1

Commonwealth of Kentucky DEPARTMENT OF HIGHWAYS	
COUNTY Franklin	
ROUTE I-64	CROSSING KY 420 & Cedar Creek
Maintenance Of Traffic	
ITEM NUMBER 5-800.00	PREPARED BY Division of Maintenance Bridge Preservation Branch
SHEET NO. T1	DRAWING NO.

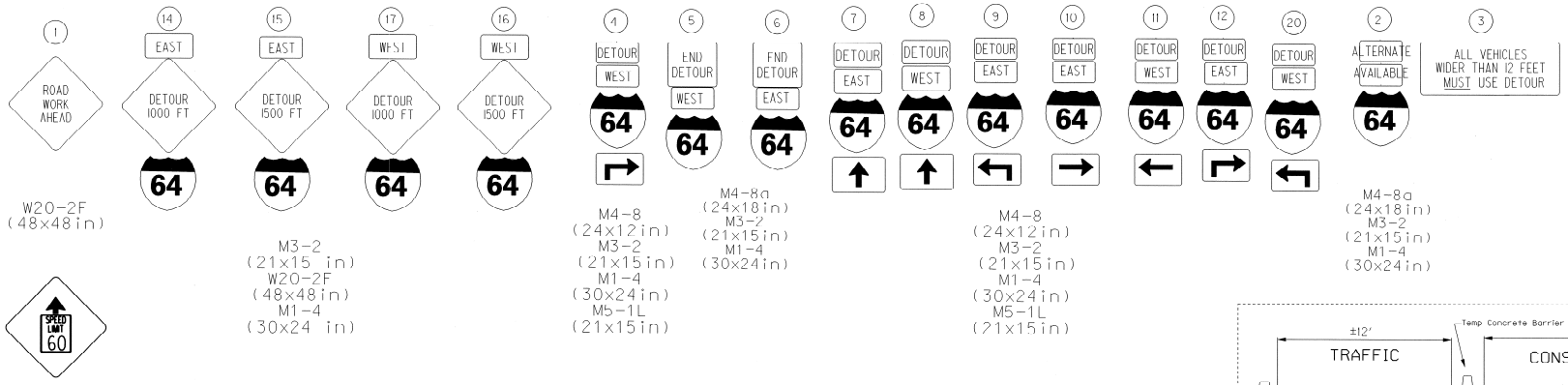

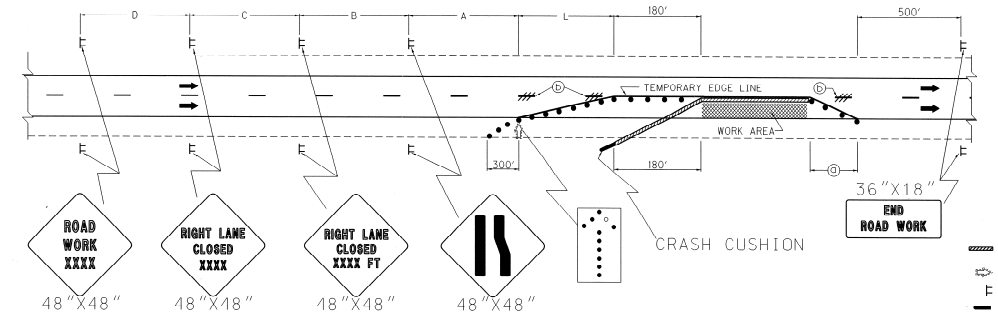

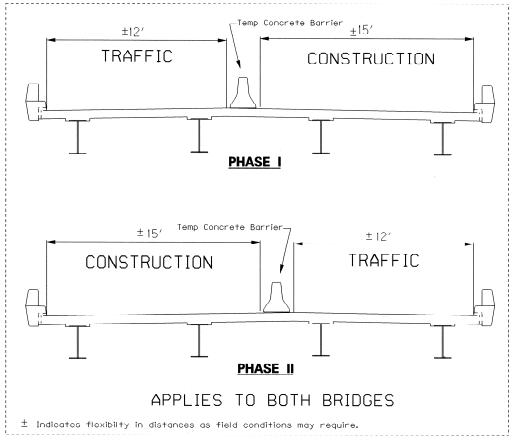

LEGEND
- TEMP CONCRETE BARRIER
- ARROW PANEL
- SIGN
- CRASH CUSHION
- CHANNELIZING DEVICES DRUMS (MAXIMUM SPACING OF 60')

THE TEMPORARY CONCRETE BARRIER SHALL NOT BE PLACED ALONG THE MERGING TAPER. THE LANE SHALL FIRST BE CLOSED USING CHANNELIZING DEVICES AND PAVEMENT MARKINGS.

ⓐ DOWNSTREAM TAPER SHALL HAVE A MAXIMUM LENGTH OF 100'. SPACING OF CHANNELIZING DEVICES THRU THE DOWNSTREAM TAPER SHALL BE 20'.

ⓑ SKIP LINES SHALL BE OBLITERATED BY AN APPROVED METHOD THRU LENGTH OF TAPERS. OTHER CONFLICTING PAVEMENT MARKINGS SHALL BE OBLITERATED.

NOTE

THIS DRAWING APPLIES TO PHASE I- REVERSE FOR PHASE II.
USE APPROPRIATE SIGNS FOR LANE CLOSURES OF LEFT OR RIGHT LANES.

SIGNING AND SPACING TABLE

ROUTE	A	B	C	D	L
I-64	1000'	500'	1100'	2600'	900'

MAXIMUM FLARE RATES FOR TEMPORARY TRAFFIC BARRIER = 15:1

DRAWING NOT TO SCALE

ITEM NUMBER
5-800.00

Commonwealth of Kentucky
DEPARTMENT OF HIGHWAYS

COUNTY: Franklin

ROUTE: I-65 | CROSSING: KY 420 & Cedar Run

Maintenance Of Traffic

PREPARED BY: Division of Maintenance
Bridge Preservation Branch

SHEET NO. T2
DRAWING NO.

4SS