FED. ROAD DIST.	STATE	FED. AID PROJ. NO.	FISCAL YEAR	SHEET NO.	TOTAL SHEETS
7	KY.				

KENTUCKY DEPARTMENT OF HIGHWAYS
FAYETTE COUNTY
LEXINGTON CIRCLE EXPRESSWAY
U.S. 27 OVER LEXINGTON CIRCLE EXPRESSWAY

PLANS PREPARED BY: KROBOTH ENGRS. INC.

BILL OF INCIDENTAL MATERIAL

Item	No.	Size	Location
⊕ Prem. Cork Expan. Jt. Mat'l.	4	1/4" X 1'-6" X 6'-9"	Over Keys @ End Bents
✳ Joint Sealing Compound	4	1"x3" X 35'-2"	Exp. Dam @ End Bents

⊕ See Std. Drwg. G354C ✳ See Std. Drwg. G352

Note:
This Bill of Incidental Material is approximate only and the contractor is responsible for furnishing enough material to complete the work in accordance with the plans and specifications.

① Approximate Weight of Structural Steel = 15,800 Lbs.
② Approximate Length of Electrical Conduit = 250 Ft.
③ Approximate Weight of Structural Steel = 15,800 Lbs.
④ Approximate Length of Electrical Conduit = 250 Ft.

REFERENCE & ESTIMATE OF QUANTITIES – EAST BRIDGE

Item	Sheet No.	Concrete Class "A" (Cu. Yds.)	Concrete Class "AA" (Cu. Yds.)	Steel Reinforcement (Lbs.)	Structural Steel (Lump Sum)	High Strength Handrail (Lin. Ft.)	Linseed Oil Protective Coating (Sq. Yds.)	Slope Prot. Crushed Aggregate (Sq. Yds.)	End Bent Backfill (Cu. Yds.)	Structure Excavation Common (Cu. Yds.)	Structure Excavation Solid Rock (Cu. Yds.)	Piling 12 BP 53 Furnish (Lin. Ft.)	Piling 12 BP 53 Drive (Lin. Ft.)	Electric Conduit (Lump Sum)
Title & Quantities	1													
Notes	2													
Layout	3													
Pile Record	4													
End Bent 1-E	5,6	37.9	14.0	4718			20	215	45	95	—	230	230	
Pier 1-E	7	28.8	—	5511						25	25			
Pier 2-E	7	29.1	—	5536						45	10			
Pier 3-E	7	29.8	—	5600						30	15			
End Bent 2-E	5,6	37.9	14.0	4718			20	215	45	95	—	267	267	
Spans 1-E, 2-E, 3-E & 4-E	8,9,10	—	401.8	121,648			930							
High Strength Handrail	3# H115 D H150 B					423								
Construction Elevations	11													
Soundings	13													
Electrical Conduit	14													
Sub-total-Substructure		163.5	28.0	26,083		—	40	430	90	290	50	497	497	
Sub-total-Superstructure		—	401.8	121,648	①	423	930	—	—	—	—	—	—	②
Total		163.5	429.8	147,731	①	423	970	430	90	290	50	497	497	②

REFERENCE & ESTIMATE OF QUANTITIES – WEST BRIDGE

Item	Sheet No.	Concrete Class "A" (Cu. Yds.)	Concrete Class "AA" (Cu. Yds.)	Steel Reinforcement (Lbs.)	Structural Steel (Lump Sum)	High Strength Handrail (Lin. Ft.)	Linseed Oil Protective Coating (Sq. Yds.)	Slope Prot. Crushed Aggregate (Sq. Yds.)	End Bent Backfill (Cu. Yds.)	Structure Excavation Common (Cu. Yds.)	Structure Excavation Solid Rock (Cu. Yds.)	Piling 12 BP 53 Furnish (Lin. Ft.)	Piling 12 BP 53 Drive (Lin. Ft.)	Electric Conduit (Lump Sum)
Title & Quantities	1													
Notes	2													
Layout	3													
Pile Record	4													
End Bent 1-W	5,6	37.9	14.0	4718			20	215	45	95	—	304	304	
Pier 1-W	7	28.8	—	5511						25	25			
Pier 2-W	7	29.8	—	5600						45	10			
Pier 3-W	7	28.8	—	5511						30	10			
End Bent 2-W	5,6	37.9	14.0	4718			20	215	45	95	—	304	304	
Spans 1-W, 2-W, 3-W & 4-W	8,9,10	—	401.8	121,648			930							
High Strength Handrail	3# H115 D H150 B					423								
Construction Elevations	12													
Soundings	13													
Electrical Conduit	14													
Sub-total-Substructure		163.2	28.0	26,058		—	40	430	90	290	45	608	608	
Sub-total-Superstructure		—	401.8	121,648	③	423	930	—	—	—	—	—	—	④
Total		163.2	429.8	147,706	③	423	970	430	90	290	45	608	608	④

STANDARD DRAWINGS:
AE1A G352B H115D SS2A
ED3A G354C H150B SF2A
P212A

SPECIAL PROVISIONS FOR:
No. 8 for Linseed Oil Protective Coating
No. 9 for High-Strength Aluminum Bridge Railing Post
No. 12 for Joint Sealing Compound
No. 35 for Class "AA" Concrete

U.S. 27 over Lexington Circle Expressway Sheet 1 of 14

COMMONWEALTH OF KENTUCKY
DEPARTMENT OF HIGHWAYS
FRANKFORT
COUNTY OF
FAYETTE
LEXINGTON CIRCLE EXPRESSWAY
ROAD U 538-13
STATION 782+19.49 **PROJECT NO.** SP 34-304-13
BRIDGE NUMBER U538(30)
DRAWING NO. 16883
INDEX

DESIGNED BY JMH DATE 1-67
DETAILED BY DATE
TRACED BY DATE
CHECKED BY DGM DATE
CHECKED BY DATE
CHECKED BY DATE
REVISED DATE
REVISED DATE
REVISED DATE

FED. ROAD DIST.	STATE	FED. AID PROJ. NO.	FISCAL YEAR	SHEET NO.	TOTAL SHEETS
7	KY.				

GENERAL NOTES

SPECIFICATIONS: KENTUCKY DEPARTMENT OF HIGHWAYS STANDARD SPECIFICATIONS, CURRENT EDITION WITH REVISIONS, SHALL APPLY TO THIS PROJECT.

DESIGN LOAD: BRIDGE DESIGNED FOR HS20-44 LOADING AS SPECIFIED IN 1961 AASHO SPECIFICATIONS OR ALTERNATE LOADING OF TWO 24 KIP AXLES SPACED 4 FEET APART, WHICHEVER PRODUCES THE GREATER STRESS.

WIND LOADS: THIS STRUCTURE IS DESIGNED USING WIND LOADS BASED ON A WIND VELOCITY OF 84 m.p.h.

DESIGN STRESSES: FOR CLASS "AA" REINFORCED CONCRETE:

fs -- 20,000 PSI
fc -- 1,600 PSI
u -- 200 PSI FOR EMBEDMENT
u -- 300 PSI FOR SUMMATION OF PERIMETERS.
f'c -- 4,000 PSI
n -- 8

FOR CLASS "A" REINFORCED CONCRETE:

fs -- 20,000 PSI
fc -- 1,200 PSI
u -- 200 PSI FOR EMBEDMENT
u -- 300 PSI FOR SUMMATION OF PERIMETERS
f'c -- 3,000 PSI
n -- 10

FOUNDATION PRESSURE: FOOTINGS ARE DESIGNED FOR A MAXIMUM PRESSURE OF 20,000 PSF., AND PILES ARE DESIGNED FOR A MAXIMUM LOAD OF 70 TONS PER PILE. THESE MAXIMUMS ARE FOR GROUP I LOADS WITH INCREASES ALLOWED FOR OTHER LOADING GROUPS.

CONCRETE: CLASS "A" CONCRETE IS TO BE USED THROUGHOUT EXCEPT IN SUPERSTRUCTURE, PORTION OF END BENTS ABOVE THE CONSTRUCTION JOINT AT BRIDGE SEAT ELEVATION, AND HANDRAILS. CLASS "D" CONCRETE IS TO BE USED IN HIGH STRENGTH CONCRETE HANDRAIL. CLASS "AA" CONCRETE IS TO BE USED IN SUPERSTRUCTURE, CURB, PLINTH AND IN THE END BENTS ABOVE THE CONSTRUCTION JOINT AT THE BRIDGE SEAT ELEVATION.

CONSTRUCTION JOINTS: ALL CONSTRUCTION JOINTS SHALL BE CAREFULLY FORMED. THE CONTRACTOR SHALL FURNISH SUFFICIENT MIXER CAPACITY TO PLACE THE CONCRETE BETWEEN CONSTRUCTION JOINTS AS NOTED ON THE PLANS IN A PERIOD NOT EXCEEDING TEN HOURS CONTINUOUS RUN. AFTER ONE SECTION OF THE CONCRETE HAS BEEN PLACED, THE CONSTRUCTION JOINT SHALL BE THOROUGHLY CLEANED OF ALL LAITANCE, LOOSE AND FOREIGN MATERIAL JUST BEFORE THE CONCRETE TAKES ITS FINAL SET, WHICH IS ABOUT SIX HOURS. THE JOINTS SHALL THEN BE COVERED WITH BURLAP AND LEFT COMPLETELY SATURATED WITH WATER. FLUSH JOINTS WITH 1:2 PORTLAND CEMENT MORTAR JUST BEFORE PLACING THE ADJOINING SECTION.

FALSEWORK: THE FALSEWORK SUPPORTING THE GIRDERS IN ANY SPAN OF A CONTINUOUS REINFORCED CONCRETE UNIT SHALL NOT BE REMOVED UNTIL ALL GIRDERS AND SLABS IN ALL SPANS OF THE CONTINUOUS UNIT HAVE BEEN POURED FOR AT LEAST TWENTY-ONE DAYS.

REINFORCEMENT: DIMENSIONS SHOWN FROM FACE OF CONCRETE TO BARS ARE CLEAR DISTANCES. SPACING OF BARS IS CENTER TO CENTER OF BARS.

BEVELED EDGES: ALL EXPOSED EDGES SHALL BE BEVELED 7/8" UNLESS OTHERWISE SHOWN.

PREMOLDED CORK EXPANSION JOINT MATERIAL: THE COST OF THIS ITEM IS TO BE INCLUDED IN THE UNIT PRICE BID FOR CLASS "AA" CONCRETE.

STRUCTURAL STEEL: "LUMP SUM BID" FOR STRUCTURAL STEEL SHALL BE FULL PAYMENT FOR ALL STRUCTURAL STEEL, RIVETS, BOLTS, WASHERS, STEEL PINS, CAST IRON, LEAD PLATES, MOLTEN LEAD, BRONZE PLATES, WELDING AND WELDING MATERIALS, PAINT AND ALL LABOR NECESSARY TO ERECT THE STEEL IN ACCORDANCE WITH THE PLANS AND SPECIFICATIONS.

PAINT: ALL STRUCTURAL STEEL EXCEPT MACHINE FINISHED SURFACES SHALL BE GIVEN ONE SHOP COAT OF TYPE I RED LEAD PAINT AND TWO FIELD COATS OF ALUMINUM PAINT. EXPOSED SURFACES OF EXPANSION DAMS NOT ACCESSIBLE AFTER ERECTION SHALL BE GIVEN TWO FIELD COATS OF ALUMINUM PAINT BEFORE ERECTION. MACHINE FINISHED SURFACES SHALL BE COATED IN THE SHOP WITH A HOT MIXTURE OF WHITE LEAD AND TALLOW IN ACCORDANCE WITH THE SPECIFICATIONS. SHOP PAINT SHALL NOT BE APPLIED WITHIN 3" OF OPEN HOLES WHERE HIGH STRENGTH BOLTS ARE TO BE USED FOR FIELD CONNECTIONS AND SHALL NOT BE APPLIED TO STEEL SURFACES IN CONTACT WITH CONCRETE.

PLACING FILLS: SEE STANDARD DRAWING SF2A.

PILING: PILING SHALL BE DRIVEN TO REFUSAL OR TO SUSTAIN A MINIMUM LOAD OF 90 TONS PER PILE. TEST PILES SHALL BE DRIVEN WHERE DESIGNATED ON THE PLANS TO DETERMINE THE LENGTH REQUIRED. ALL TEST PILES SHALL BE ACCURATELY LOCATED SO THAT THEY MAY BE USED IN THE FINISHED STRUCTURE.

TYPE OF PILE: THE CONTRACTOR SHALL USE A 12BP53 BEARING PILE THROUGHOUT THE PROJECT. SEE STANDARD DRAWING NO. P212A

PROTECTIVE COATING: THE PROTECTIVE COATING SHALL BE ACCORDING TO "THE SPECIAL PROVISION NO. 8 FOR LINSEED OIL PROTECTIVE COATING"

CRUSHED AGGREGATE SLOPE PROTECTION: CRUSHED AGGREGATE SLOPE PROTECTION SHALL CONSIST OF SIZE NO. 1 OR SIZE NO. 2 CRUSHED LIMESTONE OR SLAG MEETING THE APPLICABLE REQUIREMENTS OF THE SPECIFICATIONS. THE CRUSHED AGGREGATE MAY BE DUMPED IN PLACE. THE PLACING SHALL BE CONDUCTED IN SUCH A MANNER AS WILL PRODUCE A UNIFORM SURFACE VARYING NOT MORE THAN 1-1/2 INCHES IN 4 FEET FROM A TRUE PLANE. HAND PLACING WILL NOT BE REQUIRED OTHER THAN NECESSARY TO CORRECT IRREGULARITIES EXCEEDING THE SPECIFIED TOLERANCES. UNLESS OTHERWISE SHOWN ON THE PLANS, THE CRUSHED AGGREGATE SHALL BE PLACED TO A DEPTH OF 12", MEASURED PERPENDICULAR TO THE SLOPES, FLUSH WITH THE EMBANKMENT SLOPES UNDER THE BRIDGE; SHALL EXTEND FROM THE FACE OF THE ABUTMENTS ACROSS THE BERM AND DOWN THE SLOPE TO 2' BELOW THE TOE OF THE SLOPE; SHALL EXTEND FROM ONE TOE OF MEDIAN BERM TO THE OTHER TOE; AND SHALL EXTEND LATERALLY TO 1-1/2' BEYOND THE OUTER EDGES OF THE SUPERSTRUCTURE.

CONSTRUCTION IDENTIFICATION: THE NAMES OF THE PRIME CONTRACTOR AND THE SUB-CONTRACTOR SHALL BE IMPRINTED IN THE CONCRETE WITH ONE-INCH LETTERS AT A LOCATION DESIGNATED BY THE ENGINEER. THE CONTRACTOR SHALL FURNISH ALL PLANS, EQUIPMENT AND LABOR NECESSARY TO DO THE WORK FOR WHICH NO DIRECT PAYMENT WILL BE MADE.

HIGH STRENGTH HANDRAIL : THE CONTRACTOR SHALL PROVIDE THROUGHOUT THE PROJECT, AT HIS OPTION, EITHER HIGH STRENGTH ALUMINUM HANDRAIL IN ACCORDANCE WITH STANDARD DRAWING H115D OR HIGH STRENGTH CONCRETE HANDRAIL IN ACCORDANCE WITH STANDARD DRAWING H150B.

ELECTRICAL CONDUIT: "LUMP SUM BID" FOR ELECTRICAL CONDUIT AND JUNCTION BOXES SHALL BE FULL PAYMENT FOR FURNISHING AND PLACING THESE MATERIALS IN ACCORDANCE WITH SHEET 14 AND THE SPECIFICATIONS.

GUARDRAIL ATTACHMENT: GUARDRAIL TO BE ATTACHED TO BRIDGE WINGS AS SHOWN ON DETAIL SHEET INCLUDED IN ROADWAY PLANS. ANCHOR BOLTS FOR ATTACHING GUARDRAILS TO WINGS SHALL BE PLACED BEFORE POURING WINGS.

DESIGNED BY DGM	CHECKED BY	DATE	REVISED DATE
DETAILED BY DP	CHECKED BY DGM	DATE 1-67	REVISED DATE
TRACED BY	CHECKED BY	DATE	REVISED DATE

U.S. 27 over Lexington Circle Expressway Sheet 2

COMMONWEALTH OF KENTUCKY
DEPARTMENT OF HIGHWAYS
FRANKFORT
COUNTY OF
FAYETTE
LEXINGTON CIRCLE EXPRESSWAY
ROAD

STATION 782+19.49 **PROJECT NO.**

BRIDGE NUMBER	DRAWING NO.	INDEX
	16883	

FED. ROAD DIST.	STATE	FED. AID PROJ. NO.	FISCAL YEAR	SHEET NO.	TOTAL SHEETS
7	KY.				

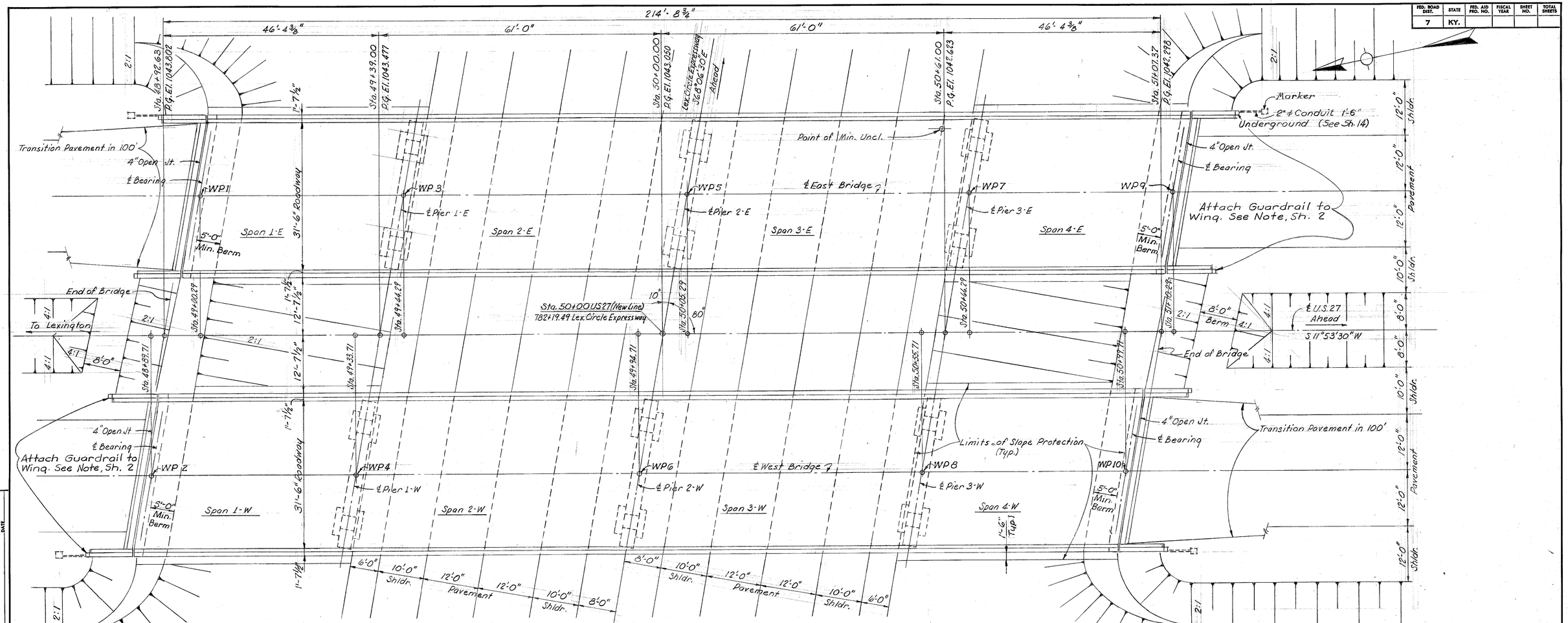

PLAN

44'-6 1/2'-@ 1'-44' Cont. R.C.D.G. 10°00' Skew Rt
Twin 31'-6" Shoulders 2:1 Fill Slopes 9" Safety Curbs
10'-8" Shoulders HS20-44 Loading

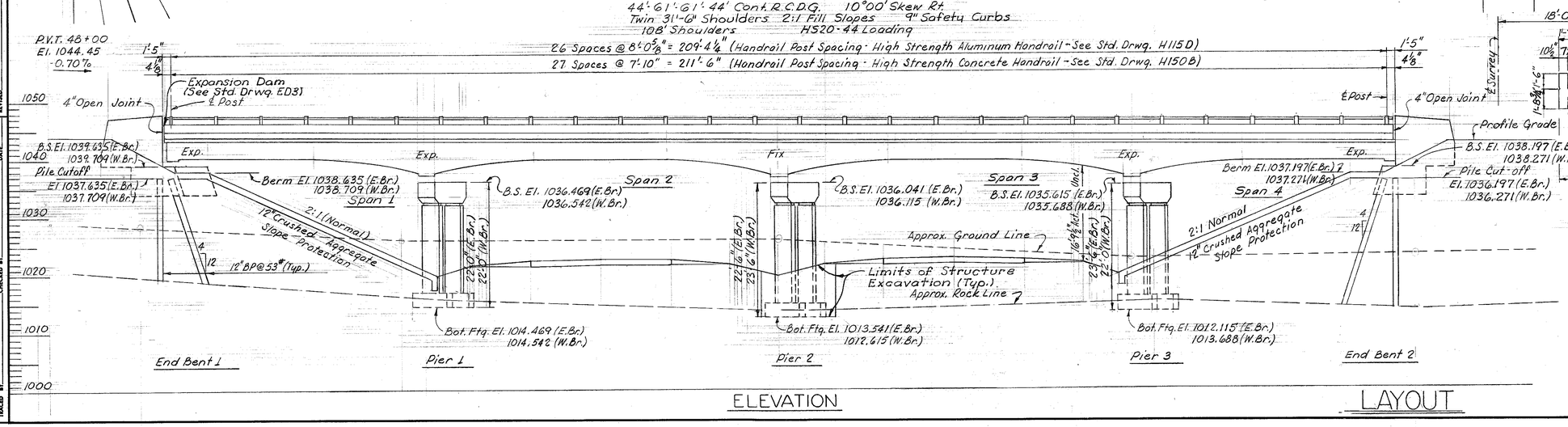

ELEVATION

LAYOUT

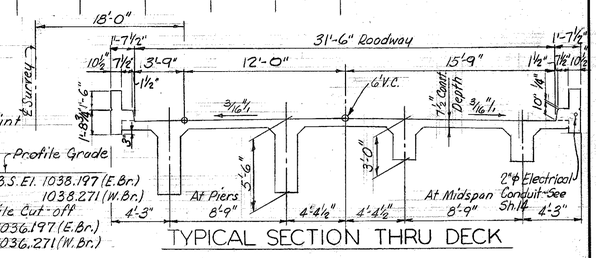

TYPICAL SECTION THRU DECK

U.S. 27 over Lex. Circle Expressway

Sheet 3

DESIGNED BY	CHECKED BY	DATE	REVISED
DETAILED BY	CHECKED BY	DATE	REVISED
TRACED BY	CHECKED BY	DATE	REVISED

DATE 1-67 DGM

DATE 1-67 DGM

1/8 28M

COMMONWEALTH OF KENTUCKY

DEPARTMENT OF HIGHWAYS

FRANKFORT

COUNTY OF

FAYETTE

LEXINGTON CIRCLE EXPRESSWAY

ROAD

STATION 782+19.49 **PROJECT NO.**

BRIDGE NUMBER	DRAWING NO.	INDEX
	16883	

FED. ROAD DIST.	STATE	FED. AID PROJ. NO.	FISCAL YEAR	SHEET NO.	TOTAL SHEETS
7	KY.				

Pile No.	Cut-Off Elev.	Tip of Pile Elev.	Length of Pile in place	Calc. Brg. Capy (Tons)
EB1-E				
1	1037.64			
2	"			
3	"			
4	"			
5	"			
6	"			
7	"			
8	"			
9	"			
EB1-W				
10	1037.71			
11	"			
12	"			
13	"			
14	"			
15	"			
16	"			
17	"			
18				
EB2-E				
19	1036.20			
20	"			
21	"			
22	"			
23	"			
24	"			
25	"			
26	"			
27	"			
EB2-W				
28	1036.27			
29	"			
30	"			
31	"			
32	"			
33	"			
34	"			
35	"			
36	"			

Note:
This Pile record does not replace other records of piles required to be kept and submitted by the Resident Engineer. After all piles have been driven the Resident Engineer shall record the tip of pile elevation as driven, the length of Pile in place, the calculated bearing capacity of each pile, and shall return one blue print copy of this sheet with this data to the Director of Bridges so that the data may be recorded on the original plans. Lengths of piles in place shown hereon are the actual lengths of piles below cut-off elevation and are not necessarily pay items.

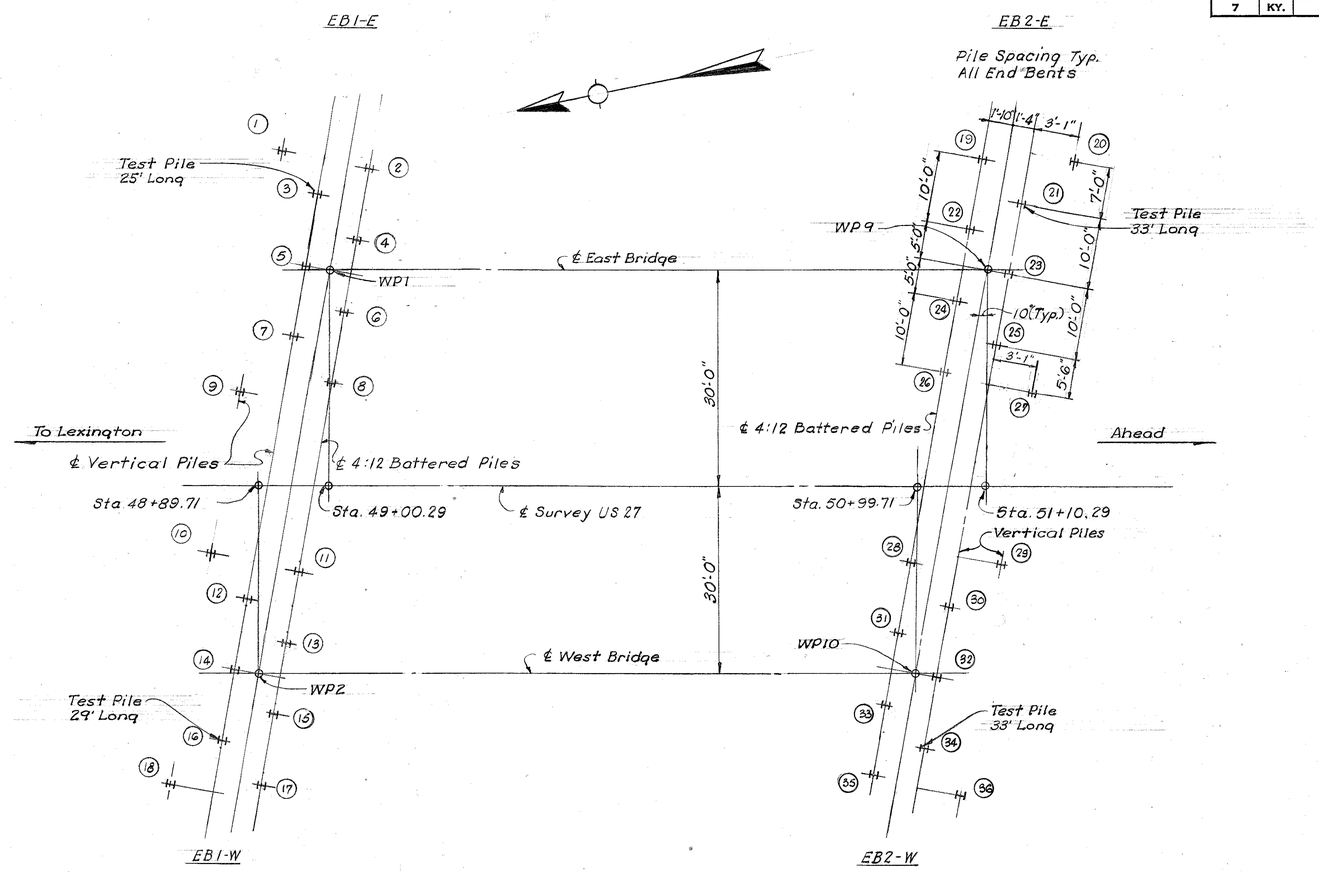

PILE LAYOUT

PILE RECORD

US 27 over Lex. Circle Expressway Sheet 4

COMMONWEALTH OF KENTUCKY
DEPARTMENT OF HIGHWAYS
FRANKFORT
COUNTY OF
FAYETTE
LEXINGTON CIRCLE EXPRESSWAY
ROAD

STATION 782+19.49 **PROJECT NO.**

BRIDGE NUMBER	DRAWING NO.	INDEX
	16883	

DESIGNED BY RBM	CHECKED BY DGM	DATE 1-67	REVISED	DATE	
DETAILED BY H.F.S	CHECKED BY DGM	DATE 1-67	REVISED	DATE	
TRACED BY	CHECKED BY	DATE	REVISED	DATE	

FED. ROAD DIST.	STATE	FED. AID PROJ. NO.	FISCAL YEAR	SHEET NO.	TOTAL SHEETS
7	KY.				

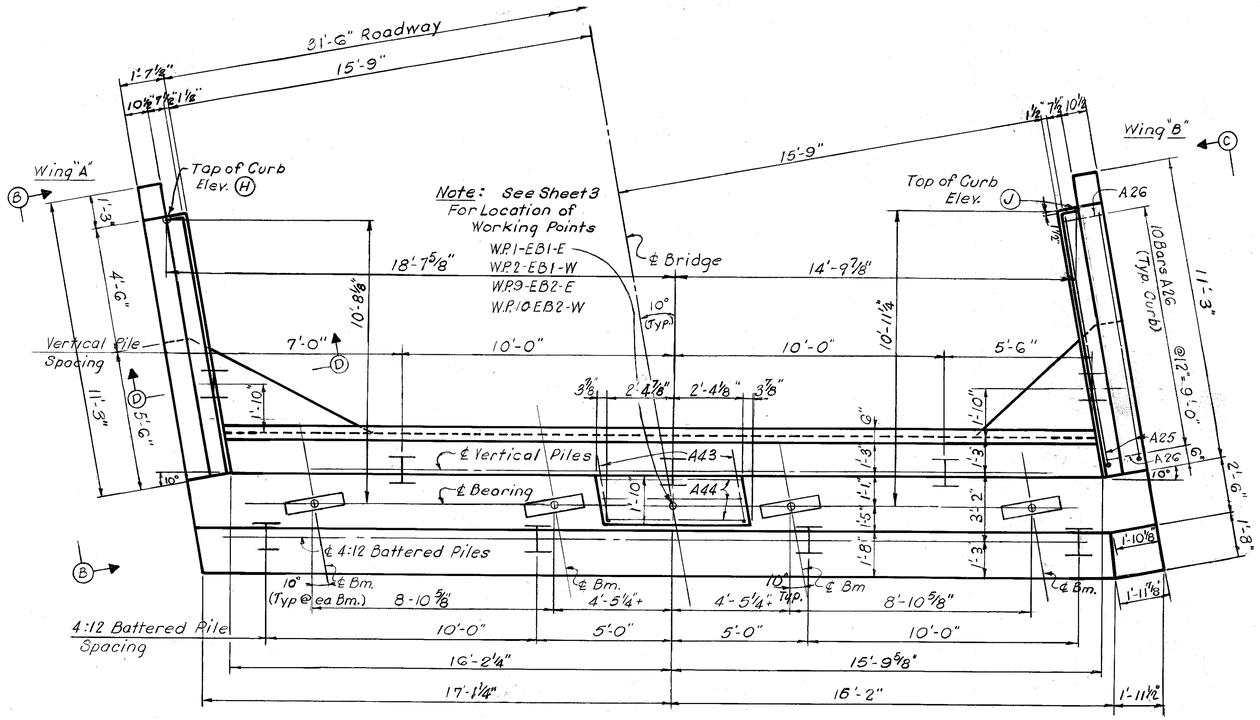

PLAN OF CAP

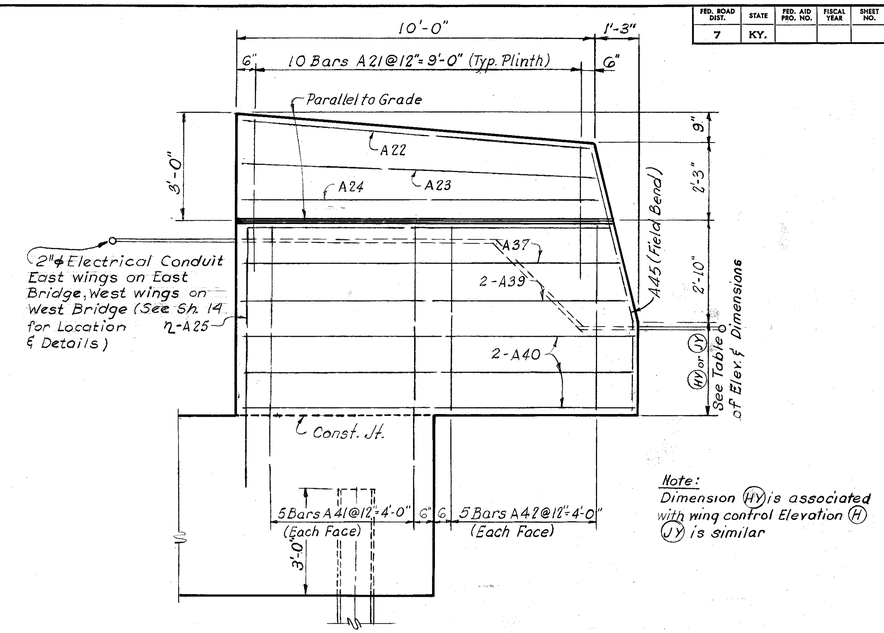

ELEVATION B-B (OPP. HAND)
ELEVATION C-C

FF= Front Face
BF= Back Face

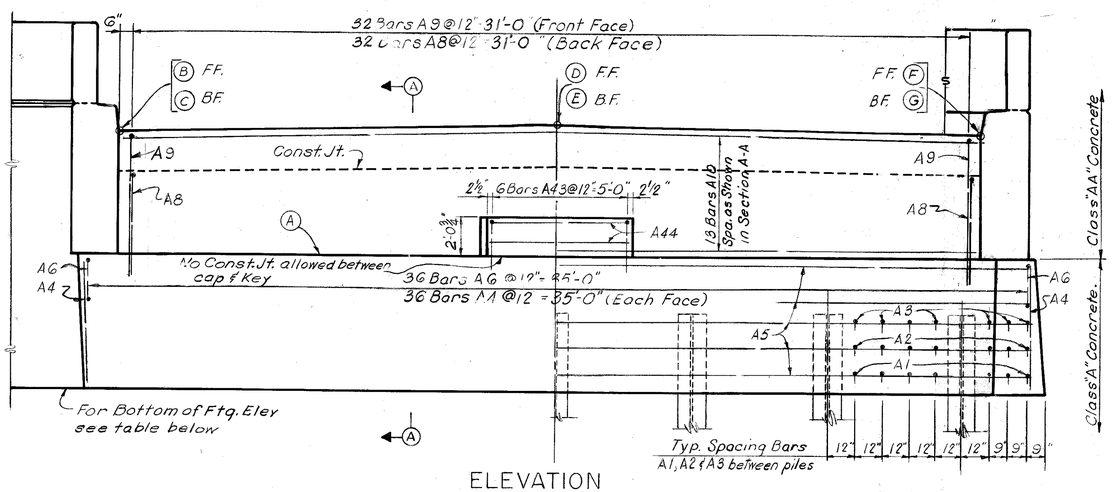

ELEVATION

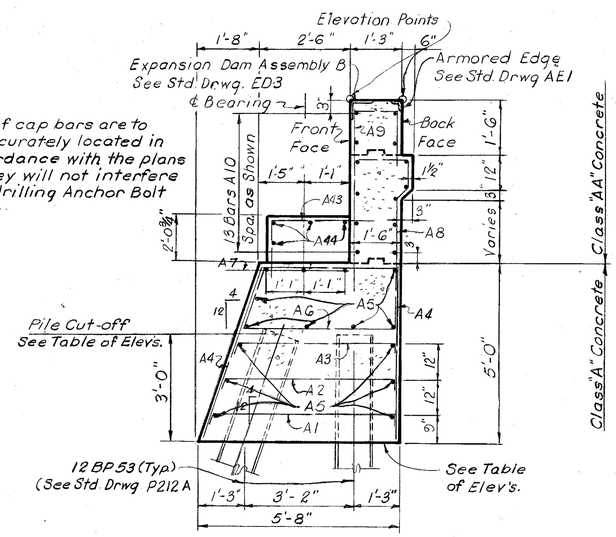

Note:
Top of cap bars are to be accurately located in accordance with the plans so they will not interfere with drilling Anchor Bolt holes.

SECTION A-A

TABLE OF ELEVATIONS & DIMENSIONS

End Bent	A	B	C	D	E	F	G	H	J	Bot. of Ftg.	Pile Cut-off	HY	JY
1-E	1039.635	1043.715	1043.724	1043.920	1043.929	1043.678	1043.687	1043.639	1043.602	1034.635	1037.64	2'-2"	2'-1 5/8
2-E	1038.197	1042.193	1042.184	1042.434	1042.425	1042.230	1042.221	1043.014	1042.977	1033.197	1036.20	1'-11 3/4"	1'-11 3/8"
1-W	1039.709	1043.789	1043.798	1043.991	1044.003	1043.752	1043.761	1044.712	1044.676	1034.709	1037.71	2'-2"	2'-1 5/8"
2-W	1038.271	1042.267	1042.258	1042.508	1042.500	1042.304	1042.295	1043.088	1043.051	1033.271	1036.27	1'-11 3/4"	1'-11 3/8"

END BENT 1E, 1W, 2E & 2W

US 27 over Lex. Circle Expressway — Sheet 5

COMMONWEALTH OF KENTUCKY
DEPARTMENT OF HIGHWAYS
FRANKFORT
COUNTY OF
FAYETTE
LEXINGTON CIRCLE EXPRESSWAY
ROAD
STATION 782+19.49 **PROJECT NO.**

BRIDGE NUMBER	DRAWING NO.	INDEX
	16883	

DESIGNED BY R.B.M.	CHECKED BY D.G.M.	DATE 1/67	REVISED DATE
DETAILED BY M.F.S.	CHECKED BY D.G.M.	DATE 1/67	REVISED DATE
TRACED BY	CHECKED BY	DATE	REVISED DATE

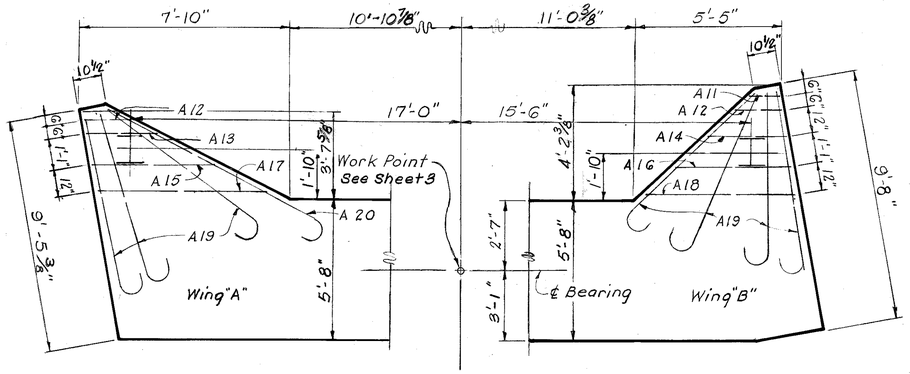

WING CAP PLAN

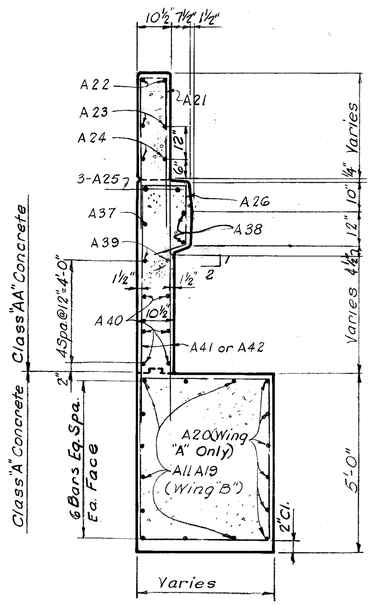

SECTION D-D

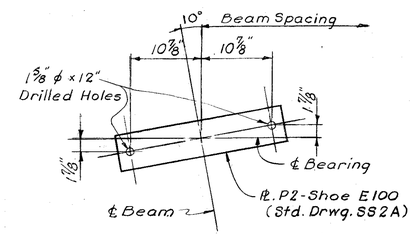

ANCHOR BOLT LAYOUT

ESTIMATE OF QUANTITIES					
ITEM	UNIT	EB 1-E	EB 2-E	EB 1-W	EB 2-W
Concrete, Class "A"	(Cu. Yds.)	37.9	37.9	37.9	37.9
Concrete, Class "AA"	(Cu. Yds.)	14.0	14.0	14.0	14.0
Steel Reinforcement	(Lbs	4718	4718	4718	4718

END BENT 1E, 1W, 2-E & 2W

BILL OF REINFORCEMENT

FED. ROAD DIST.	STATE	FED. AID PROJ. NO.	FISCAL YEAR	SHEET NO.	TOTAL SHEETS
7	KY.				

Mark	Type	Number 1-E	Number 1-W	Number 2-E	Number 2-W	Bar Size	Length ft.	Length in.	Location	a ft.	a in.	b ft.	b in.	c ft.	c in.
A1	(1)	30	30	30	30	#5	5	7	Cap	5	1	0	4	0	4
A2	"	30	30	30	30	#5	5	3	"	4	9	0	4	0	4
A3	"	30	30	30	30	#5	4	11	"	4	5	0	4	0	4
A4	Str.	72	72	72	72	#5	4	9	"						
A5	Str.	12	12	12	12	#5	34	10	Cap & Parapet						
A6	(5)	36	36	36	36	#5	12	8	Cap						
A7	Str.	3	3	3	3	#6	34	9	"						
A8	(3)	32	32	32	32	#6	5	6	Parapet						
A9	(1)	32	32	32	32	#6	8	2	"	1	0	1	9	5	8
A10	Str.	13	13	13	13	#5	34	6	"						
A11	(6)	1	1	1	1	#5	12	3	Wing Cap	1	1	4	8		
A12	"	2	2	2	2	#5	13	5	"	1	8	4	8		
A13	"	1	1	1	1	#5	15	5	"	2	8	4	8		
A14	"	1	1	1	1	#5	15	9	"	2	10	4	8		
A15	"	1	1	1	1	#5	19	3	"	4	7	4	8		
A16	"	1	1	1	1	#5	18	7	"	4	3	4	8		
A17	"	1	1	1	1	#5	22	9	"	6	4	4	8		
A18	"	1	1	1	1	#5	21	1	"	5	6	4	8		
A19	(4)	26	26	26	26	#6	7	5	"	6	6	6	9		
A20	"	6	6	6	6	#6	9	8	"	8	9	9	0		
A21	(1)	20	20	20	20	#5	8	10	Plinth	0	7 1/2	4	2	4	2
A22	Str.	4	4	4	4	#5	9	9	"						
A23	"	4	4	4	4	#5	9	11	"						
A24	"	4	4	4	4	#5	10	1	"						
A25	(7)	4	4	4	4	#8	16	7	Wing	9	8	7	1		
A26	(2)	20	20	20	20	#5	5	5	Wing Curb	1	3	1	1		
A27	"								"						
A28	"								"						
A29	"								Not "						
A30	"								Used "						
A31	"								"						
A32	"								"						
A33	"								"						
A34	"								"						
A35	"								"						
A36	—								Not Used						
A37	Str.	2	2	2	2	#5	10	3	Wing						
A38	"	4	4	4	4	#5	9	8	"						
A39	"	4	4	4	4	#5	10	9	"						
A40	"	12	12	12	12	#5	10	11	"						
A41	"	20	20	20	20	#5	6	2	"						
A42	"	20	20	20	20	#5	4	6	"						
A43	(7)	6	6	6	6	#5	6	2	Key	3	3	3	0		
A44	Str.	4	4	4	4	#5	4	9	"						
A45	"	4	4	4	4	#4	6	8	Wing						

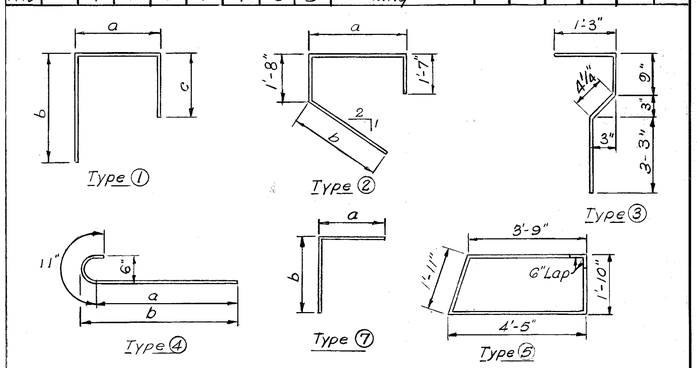

US 27 over Lex. Circle Expressway — Sheet 6

COMMONWEALTH OF KENTUCKY
DEPARTMENT OF HIGHWAYS
FRANKFORT
COUNTY OF
FAYETTE
LEXINGTON CIRCLE EXPRESSWAY
ROAD

STATION 782+19.49 **PROJECT NO.**

BRIDGE NUMBER | DRAWING NO. 16883 | INDEX

DESIGNED BY: FBM CHECKED BY: DGM DATE: 1-67 REVISED: DATE:
DETAILED BY: MFS CHECKED BY: DGM DATE: 1-67 REVISED: DATE:
TRACED BY: CHECKED BY: DATE: REVISED: DATE:

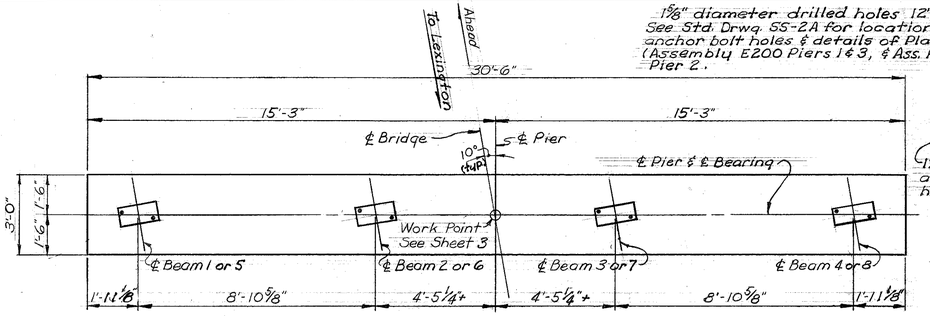

PLAN OF CAP

1 5/8" diameter drilled holes 12" deep. See Std. Drwg. SS-2A for location of anchor bolt holes & details of Plates. (Assembly E200 Piers 1 & 3, & Ass. F200 Pier 2.

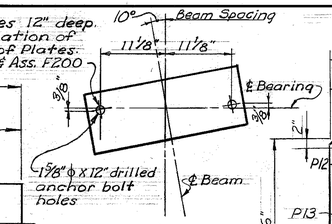

ANCHOR BOLT LAYOUT

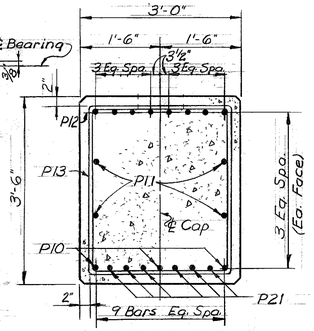

SECTION B-B

Note: Top of cap bars are to be accurately located in accordance with the plans so that they will not interfere with drilling of anchor bolt holes.

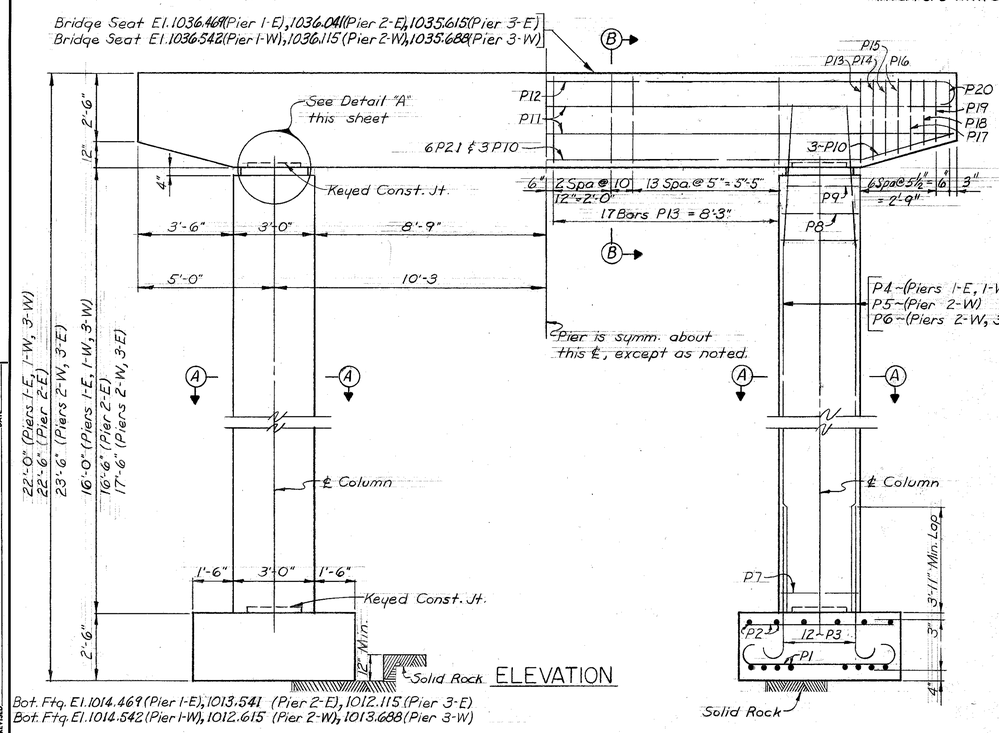

ELEVATION

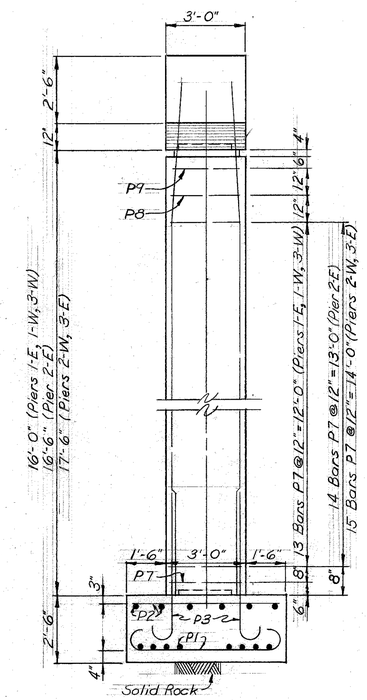

END ELEVATION

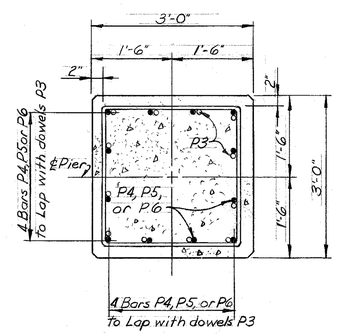

SECTION A-A

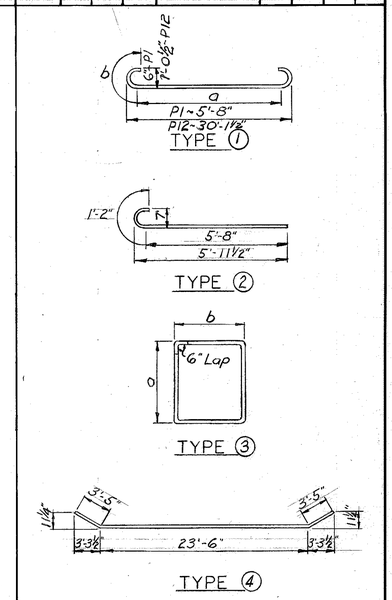

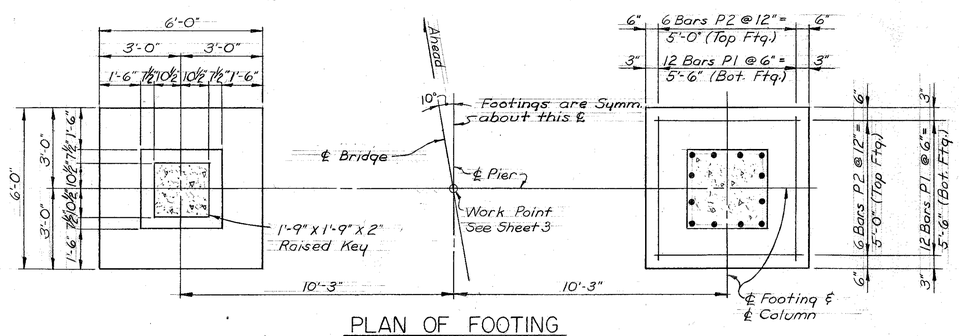

PLAN OF FOOTING

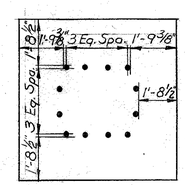

PART PLAN OF FOOTINGS

Showing Location of Dowels

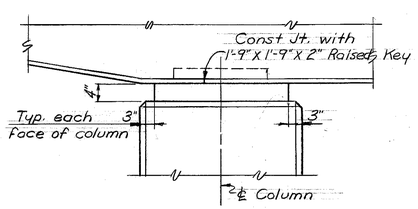

DETAIL "A"

BILL OF REINFORCEMENT

MARK	TYPE	NUMBER Pier 1-E	Pier 1-W	Pier 2-E	Pier 2-W	Pier 3-E	Pier 3-W	BAR SIZE	LENGTH FT.	LENGTH IN.	LOCATION	a FT.	a IN.	b FT.	b IN.
P1	1	48	48	48	48	48	48	#6	7	0	Footing	5	2	0	11
P2	Str.	24	24	24	24	24	24	#5	5	8	"				
P3	2	24	24	24	24	24	24	#7	6	10	Col. Dowels				
P4	Str.	24	24	—	—	—	24	#7	19	0	Columns				
P5	"	—	—	24	—	—	—	#7	19	6	"				
P6	"	—	—	—	24	24	—	#7	20	6	"				
P7	3	28	28	28	30	30	28	#4	11	5	"	2	8	2	8
P8	"	2	2	2	2	2	2	#4	10	9	"	2	6	2	6
P9	"	2	2	2	2	2	2	#4	10	1	"	2	4	2	4
P10	4	3	3	3	3	3	3	#11	30	4	Cap				
P11	Str.	4	4	4	4	4	4	#4	30	2	"				
P12	1	8	8	8	8	8	8	#10	33	1	"	29	1	2	0
P13	3	36	36	36	36	36	36	#6	12	4	"	2	8	3	2
P14	"	2	2	2	2	2	2	#6	12	1	Cantilever	2	8	3	0 1/2
P15	"	2	2	2	2	2	2	#6	11	10	"	2	8	2	11
P16	"	2	2	2	2	2	2	#6	11	6	"	2	8	2	9
P17	"	2	2	2	2	2	2	#6	11	3	"	2	8	2	7 1/2
P18	"	2	2	2	2	2	2	#6	11	0	"	2	8	2	6
P19	"	2	2	2	2	2	2	#6	10	9	"	2	8	2	4 1/2
P20	"	2	2	2	2	2	2	#6	10	6	"	2	8	2	3
P21	Str.	6	6	6	6	6	6	#11	23	6	Cap				

FED. ROAD DIST.	STATE	FED. AID PROJ. NO.	FISCAL YEAR	SHEET NO.	TOTAL SHEETS
7	KY.				

ESTIMATE OF QUANTITIES

Item	Pier 1-E	Pier 1-W	Pier 2-E	Pier 2-W	Pier 3-E	Pier 3-W
Concrete, Class "A" (Cu. Yds.)	28.8	28.8	29.1	29.8	29.8	28.8
Steel Reinforcement (Lbs.)	5511	5511	5536	5600	5600	5511

U.S. 27 over Lexington Circle Expressway — Sheet 7

COMMONWEALTH OF KENTUCKY
DEPARTMENT OF HIGHWAYS
FRANKFORT
COUNTY OF
FAYETTE
LEXINGTON CIRCLE EXPRESSWAY
ROAD

STATION 782+19.49 **PROJECT NO.**

BRIDGE NUMBER — DRAWING NO. 16883 — INDEX

PIERS 1-E, 1-W, 2-E, 2-W, 3-E, 3-W

DESIGNED BY RBM — CHECKED BY DGM — DATE 1-6-7
DETAILED BY JWH — CHECKED BY DGM — DATE 1-6-7
TRACED BY — CHECKED BY — DATE
REVISED — DATE
REVISED — DATE
REVISED — DATE

FED. ROAD DIST.	STATE	FED. AID PRO. NO.	FISCAL YEAR	SHEET NO.	TOTAL SHEETS
7	KY.				

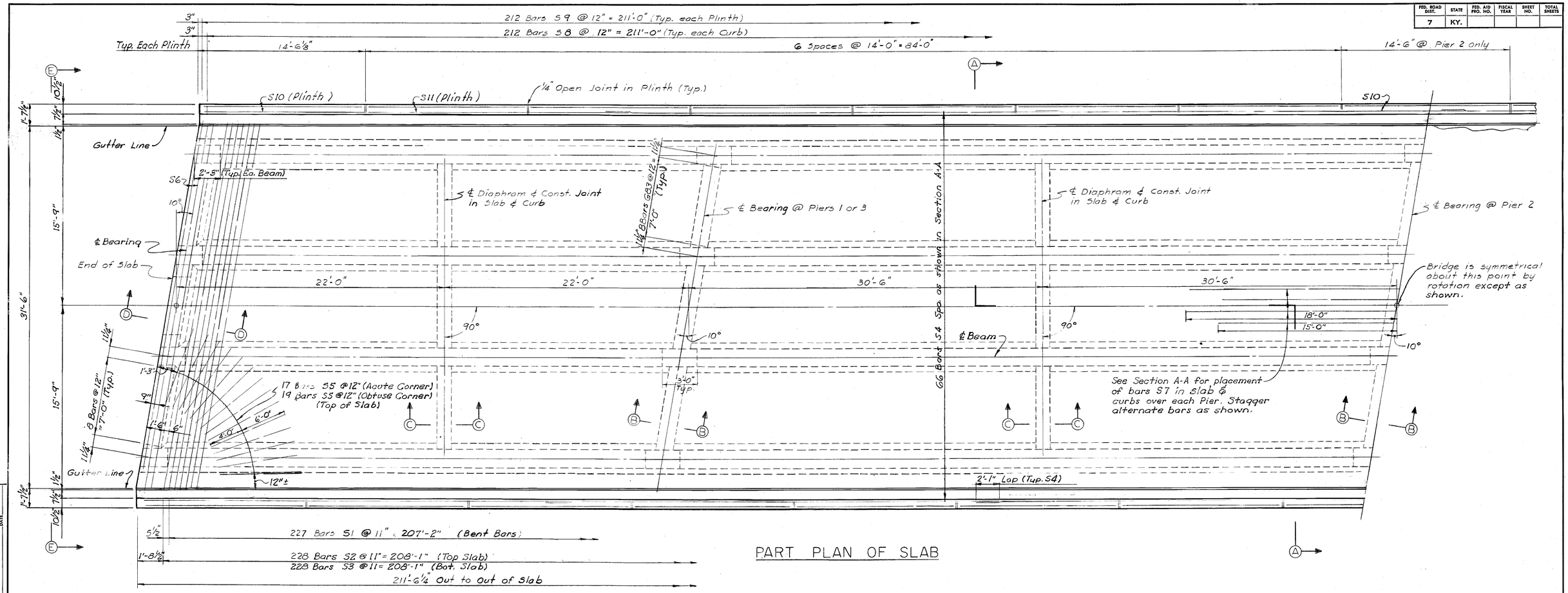

PART PLAN OF SLAB

Note: Place Bars S8 before pouring slab; Place bars S9 before pouring curb.

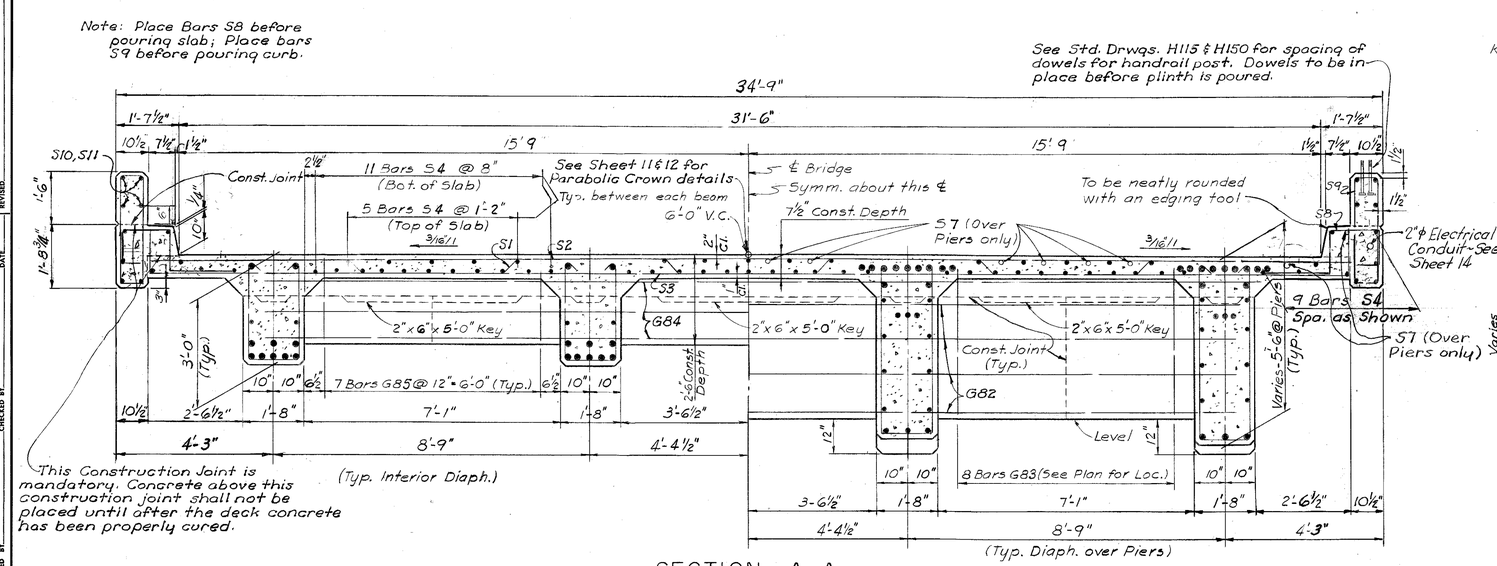

SECTION A-A

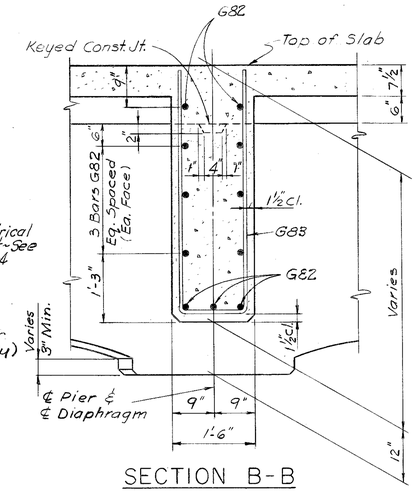

SECTION B-B

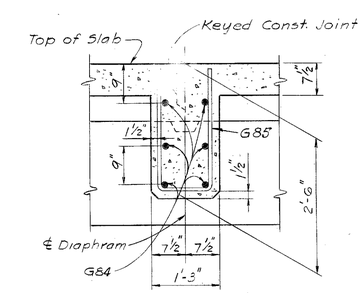

SECTION C-C

SUPERSTRUCTURE

(Work with Sheets 9 & 10

U.S. 27 over Lexington Circle Expressway - Sheet 8

COMMONWEALTH OF KENTUCKY
DEPARTMENT OF HIGHWAYS
FRANKFORT
COUNTY OF
FAYETTE
LEXINGTON CIRCLE EXPRESSWAY
ROAD

STATION 782+19.49 **PROJECT NO.**

BRIDGE NUMBER	DRAWING NO.	INDEX
	16883	

DESIGNED BY DGM	CHECKED BY RBM	DATE 1-67	REVISED DATE
DETAILED BY FT-JMH	CHECKED BY DGM	DATE 1-67	REVISED DATE
TRACED BY	CHECKED BY	DATE	REVISED DATE

FED. ROAD DIST.	STATE	FED. AID PROJ. NO.	FISCAL YEAR	SHEET NO.	TOTAL SHEETS
7	KY.				

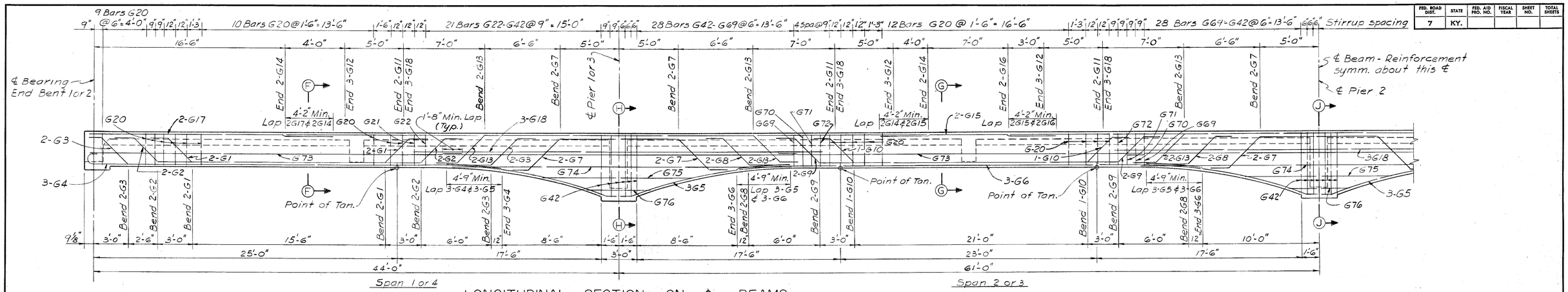

LONGITUDINAL SECTION ON ℄ BEAMS

(Typical Each Beam)

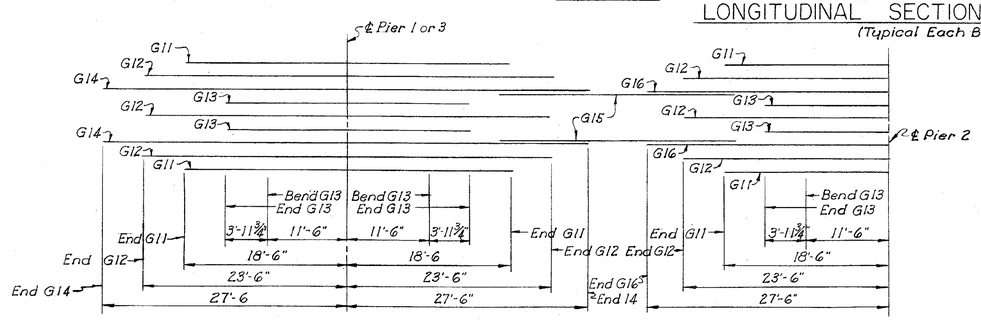

PLAN (Showing Reinforcement in Top Row @ Piers)

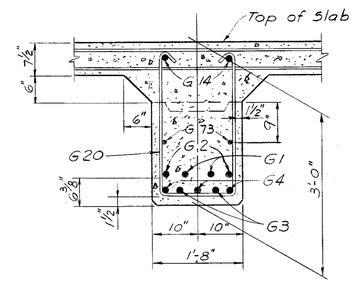

SECTION F-F

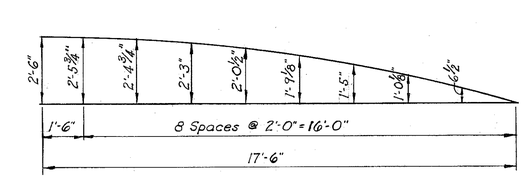

ORDINATES FOR PARABOLIC SOFFIT

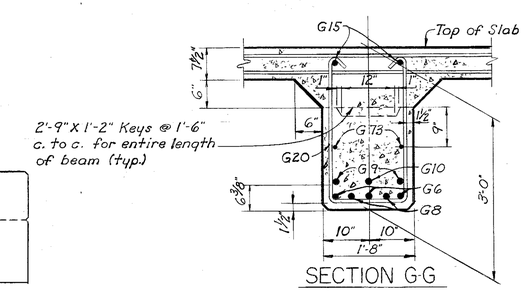

SECTION G-G

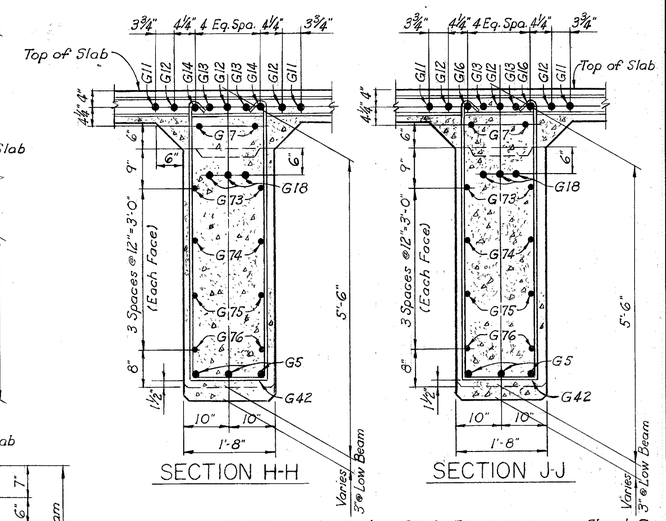

SECTION H-H

SECTION J-J

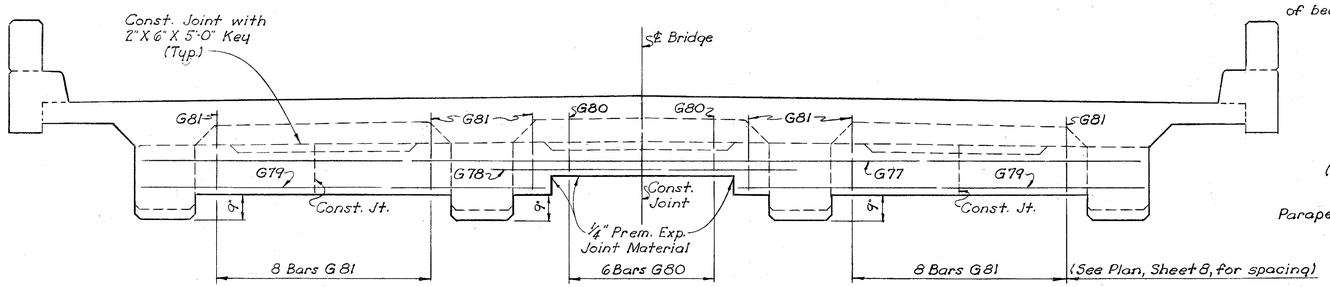

ELEVATION E-E

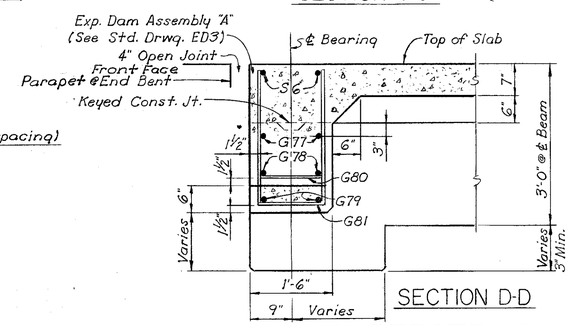

SECTION D-D

SUPERSTRUCTURE (Work with Sheets 8 & 10)

U.S. 27 over Lexington Circle Expressway — Sheet 9

COMMONWEALTH OF KENTUCKY
DEPARTMENT OF HIGHWAYS
FRANKFORT
COUNTY OF
FAYETTE
LEXINGTON CIRCLE EXPRESSWAY
ROAD

STATION 782+19.49 **PROJECT NO.**

BRIDGE NUMBER	DRAWING NO.	INDEX
	16883	

DESIGNED BY DGM	CHECKED BY RBM	DATE 1-67	REVISED DATE
DETAILED BY JWH-FT	CHECKED BY DGM	DATE 1-67	REVISED DATE
TRACED BY	CHECKED BY	DATE	REVISED DATE

BILL OF REINFORCEMENT (ONE BRIDGE)

MARK	TYPE	NO.	BAR SIZE	LENGTH Ft.	LENGTH In.	LOCATION	a Ft.	a In.	b Ft.	b In.	c Ft.	c In.	d Ft.	d In.
G1	1	16	#11	23	9	Beams	15	6	2	7½	1	11½	1	10½
G2	1	16	#11	29	9	"	21	6	2	7½	1	11½	1	10½
G3	2	16	#11	38	10	"	30	0	1	3				
G4	3	24	#11	36	2	"								
G5	4	36	#11	30	0	"								
G6	Str.	24	#11	41	0	"								
G7	1	24	#11	21	0	"	10	0	4	0	2	11½	2	10½
G8	2	16	#11	48	4	"	39	0	1	6				
G9	1	16	#11	35	3	"	27	0	2	7½	1	11½	1	10½
G10	1	8	#11	29	3	"	21	0	2	7½	1	11½	1	10½
G11	Str.	24	#10	37	0	"								
G12	Str.	36	#10	47	0	"								
G13	1	24	#10	33	0	"	23	0	3	6	2	7	2	5¾
G14	Str.	16	#10	55	0	"								
G15	Str.	16	#6	15	4	"								
G16	Str.	8	#10	53	0	"								
G17	Str.	16	#6	21	2	"								
G18	Str.	36	#8	37	0	"								
G19						Not Used								
G20	5	352	#4	7	7	Beams	2	8						
G21	"	8	#4	7	8	"	2	8¼						
G22	"	8	#4	7	9	"	2	8⅝						
G23	"	8	#4	7	9	"	2	9						
G24	"	8	#4	7	10	"	2	9½						
G25	"	8	#4	8	0	"	2	10¼						
G26	"	8	#4	8	1	"	2	11						
G27	"	8	#4	8	3	"	2	11⅞						
G28	"	8	#4	8	5	"	3	0¾						
G29	"	8	#4	8	7	"	3	1⅞						
G30	"	8	#4	8	9	"	3	3						
G31	"	8	#4	9	0	"	3	4⅜						
G32	"	8	#4	9	3	"	3	5¾						
G33	"	8	#4	9	6	"	3	7¼						
G34	"	8	#4	9	9	"	3	9						
G35	"	8	#4	10	1	"	3	10¾						
G36	"	8	#4	10	4	"	4	0½						
G37	"	8	#4	10	8	"	4	2½						
G38	"	8	#4	11	0	"	4	4⅝						
G39	"	8	#4	11	5	"	4	6¾						
G40	"	8	#4	11	9	"	4	9						
G41	"	8	#4	12	2	"	4	11½						
G42	"	76	#4	12	7	"	5	2						
G43	"	16	#4	12	4	"	5	0⅜						
G44	"	16	#4	12	1	"	4	10¾						
G45	"	16	#4	11	9	"	4	9						
G46	"	16	#4	11	6	"	4	7½						
G47	"	16	#4	11	3	"	4	6						
G48	"	16	#4	11	0	"	4	4⅝						
G49	"	16	#4	10	10	"	4	3¼						
G50	"	16	#4	10	7	"	4	1⅞						
G51	"	16	#4	10	4	"	4	0½						
G52	"	16	#4	10	2	"	3	11⅜						
G53	"	16	#4	10	0	"	3	10⅛						
G54	"	16	#4	9	9	"	3	9						
G55	"	16	#4	9	7	"	3	7⅞						
G56	"	16	#4	9	5	"	3	6¾						
G57	"	16	#4	9	3	"	3	5¾						
G58	"	16	#4	9	1	"	3	4⅞						
G59	"	16	#4	8	11	"	3	3⅞						
G60	"	16	#4	8	9	"	3	3						
G61	"	16	#4	8	8	"	3	2¼						
G62	"	16	#4	8	6	"	3	1½						
G63	"	16	#4	8	5	"	3	0¾						
G64	"	16	#4	8	4	"	3	0⅛						
G65	"	16	#4	8	2	"	2	11½						
G66	"	16	#4	8	1	"	2	11						
G67	"	16	#4	8	0	"	2	10½						
G68	"	16	#4	7	11	"	2	10						
G69	"	16	#4	7	10	"	2	9½						
G70	"	16	#4	7	9	"	2	9						
G71	"	16	#4	7	9	"	2	8⅝						
G72	5	16	#4	7	8	"	2	8¼						
G73	Str.	48	#4	36	8	"								
G74	"	24	#4	30	0	"								
G75	"	24	#4	13	0	"								
G76	"	24	#4	5	9	"								
G77	"	4	#5	28	0	End Walls								
G78	"	4	#5	8	2	" "								
G79	"	8	#5	11	4	" "								

MARK	TYPE	NO.	BAR SIZE	LENGTH Ft.	LENGTH In.	LOCATION	a Ft.	a In.	b Ft.	b In.	c Ft.	c In.	d Ft.	d In.
G80	6	12	#4	4	9	End Walls	1	10	1	3				
G81	"	36	#4	5	7	" "	2	3	1	3				
G82	Str.	33	#5	27	10	Diaph. @ Piers								
G83	6	72	#4	10	1	" "	4	6	1	3				
G84	Str.	24	#5	27	7	Int. Diaph.								
G85	6	84	#4	5	4	" "	2	3	1	0				
S1	8	227	#5	33	8	Slab (Bent)								
S2	Str.	228	#5	33	2	Slab (Top)								
S3	6	228	#5	35	4	Slab (Bot.)	1	2	33	2				
S4	"	396	#5	36	10	Slab & Curbs								
S5	"	72	#6	10	0	Top of Slab								
S6	"	4	#5	32	10	End Walls								
S7	"	48	#8	33	0	Slab over Piers								
S8	9	424	#5	4	6	Curb								
S9	7	424	#5	7	6	Plinth								
S10	Str.	24	#4	14	2	"								
S11	Str.	96	#4	13	8	"								

FED. ROAD DIST.	STATE	FED. AID PRO. NO.	FISCAL YEAR	SHEET NO.	TOTAL SHEETS
7	KY.				

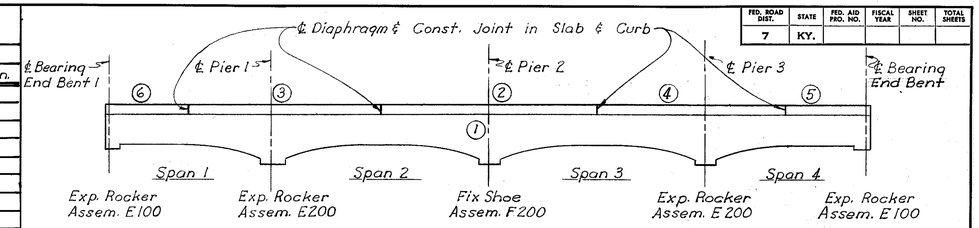

ELEVATION
(Showing Bearing Assem. & Pouring Order)

Note: Pour each beam in one continuous pour in horizontal layers. Pour end walls and diaphragms with beams by providing vertical keyed construction joints midway between beams. Bearing assembly details are on Standard Drawing SS2A and are typical as shown above for each beam. With the written approval of the engineer the contractor may change the pouring order shown on this sheet.

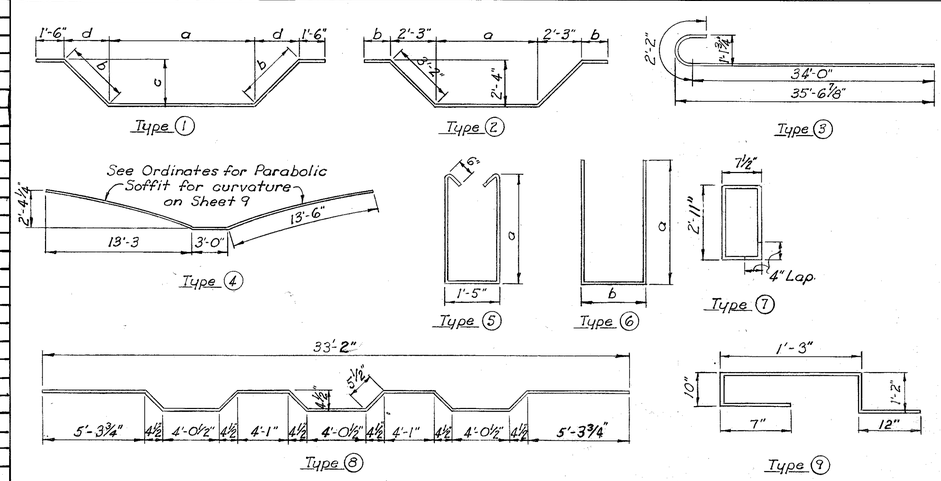

TABLE OF REACTION

Item	End Bents 1 & 2		Piers 1 & 3		Pier 2	
	Int. Bm.	Ext. Bm.	Int. Bm.	Ext. Bm.	Int. Bm.	Ext. Bm.
Dead Load	32.2	28.3	126.5	115.5	125.3	115.8
Live Load	38.4	33.9	51.0	45.0	52.0	44.4
Impact	11.3	10.0	11.1	9.8	10.6	9.1
Total	81.9	72.2	188.6	170.3	187.9	169.3

Note:
Dead Load includes weight of shoes. Reactions are at ℄ of bearing. Live Load and Impact are maxima for one beam and are not substructure loads.

ESTIMATE OF QUANTITIES

Item / Unit	East Bridge	West Bridge
Concrete, Class "AA" (Cu. Yds)	401.8	401.8
Steel Reinforcement (Lbs)	121,648	121,648

U.S. 27 over Lexington Circle Expressway Sheet 10

COMMONWEALTH OF KENTUCKY
DEPARTMENT OF HIGHWAYS
FRANKFORT
COUNTY OF
FAYETTE
LEXINGTON CIRCLE EXPRESSWAY
ROAD
STATION 782+19.49 **PROJECT NO.**

BRIDGE NUMBER | DRAWING NO. 16883 | INDEX

SUPERSTRUCTURE
(Work with Sheets 8 & 9)

DESIGNED BY DGM DATE 1-67 CHECKED BY RBM DATE
DETAILED BY JMH CHECKED BY DGM DATE 1-67
TRACED BY CHECKED BY DATE
REVISED DATE
REVISED DATE
REVISED DATE

FED. ROAD DIST.	STATE	FED. AID PRO. NO.	FISCAL YEAR	SHEET NO.	TOTAL SHEETS
7	KY.				

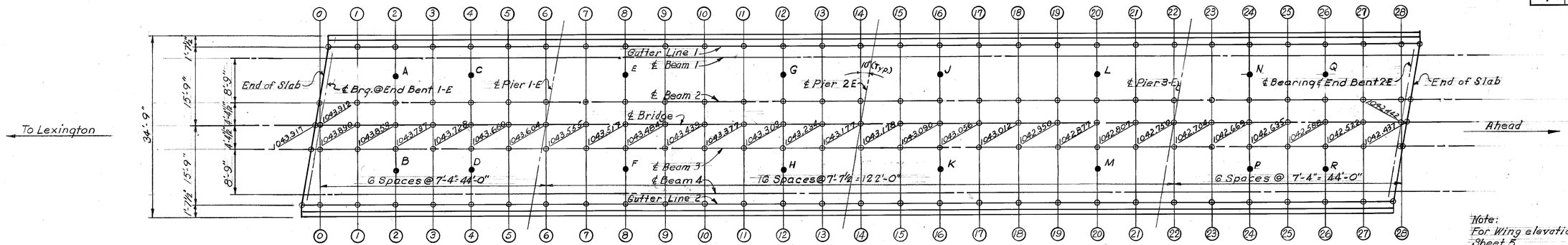

PLAN (EAST BRIDGE)

(Showing elevations on ℄ of Bridge)

Note: For Wing elevations see Sheet 5

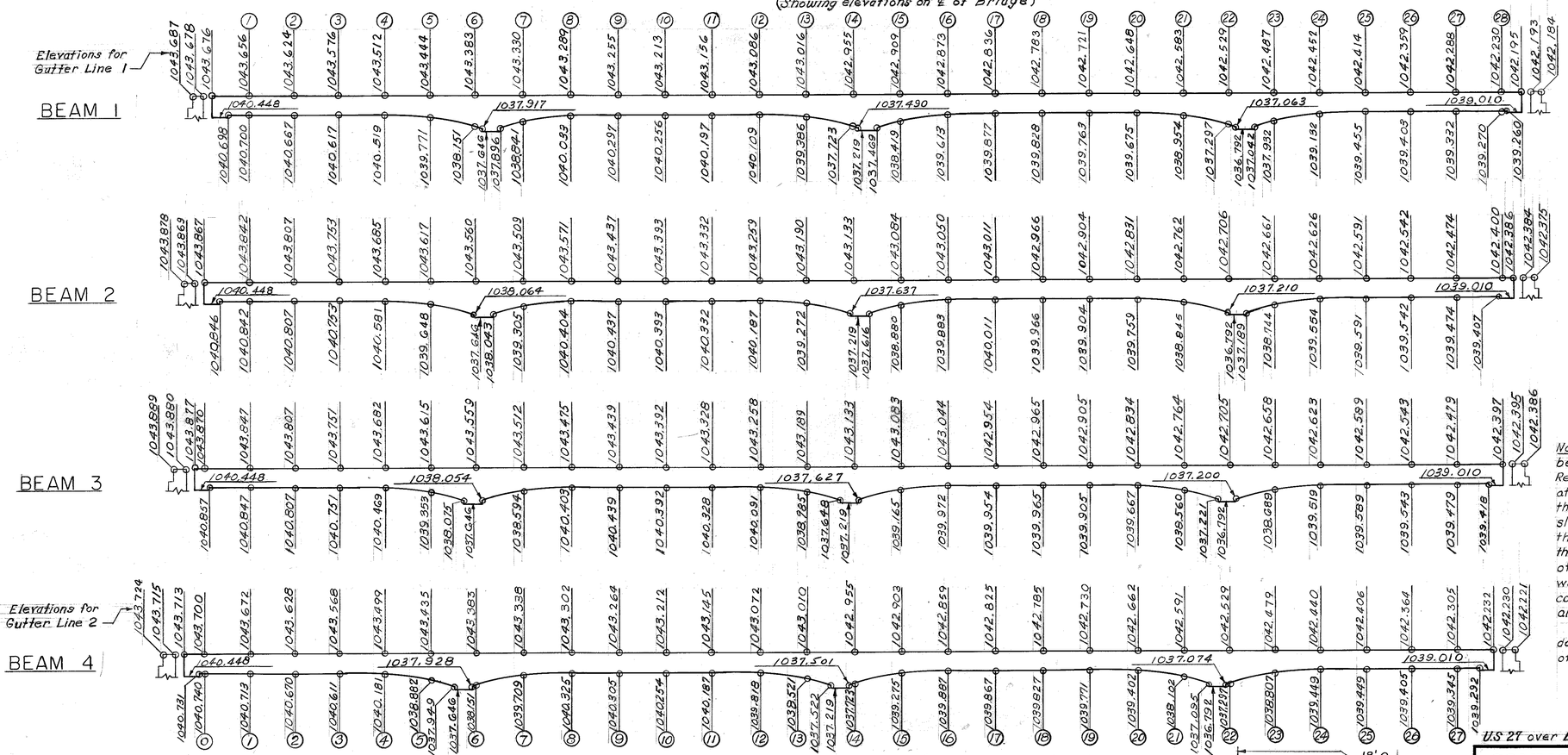

SECTIONS ON ℄ BEAMS

TABLE OF ELEVATIONS FOR CONTROL OF SLAB THICKNESS			
Point	Plan Elev. Top of Slab	Field Elev. Bottom of Slab	Computed Slab Thickness
A	1043.737		
B	1043.739		
C	1043.619		
D	1043.612		
E	1043.452		
F	1043.409		
G	1043.193		
H	1043.188		
J	1042.982		
K	1042.974		
L	1042.762		
M	1042.768		
N	1042.560		
P	1042.553		
Q	1042.473		
R	1042.474		

Note: After the slab forms are erected and before the slab reinforcement is placed, the Resident Engineer shall take field elevations at the slab thickness check points and enter them in the table in the space provided. The slab thickness shall then be computed. If the computed slab thickness varies more than ¼" from the plan thickness, allowing 1/360 of the slab span for deflection of the form work, the form shall be adjusted until the computed slab thickness is within the tolerance allowed.

A copy of this sheet, showing the final datum, shall be sent to the Director, Division of Bridges

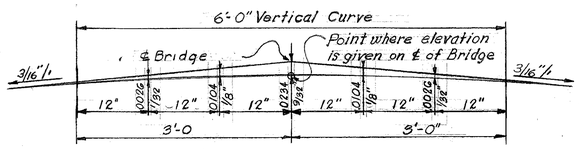

PARABOLIC CROWN

Note: Elevations shown on this sheet include dead load camber and are to be maintained with falsework in place.

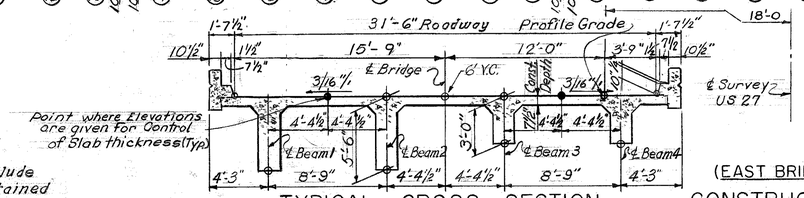

TYPICAL CROSS SECTION

(Showing points where elevations are given)

(EAST BRIDGE)

CONSTRUCTION ELEVATIONS

US 27 over Lexington Circle Expressway Sheet 11

COMMONWEALTH OF KENTUCKY
DEPARTMENT OF HIGHWAYS
FRANKFORT
COUNTY OF
FAYETTE
LEXINGTON CIRCLE EXPRESSWAY
ROAD

STATION 782+19.49 PROJECT NO.

BRIDGE NUMBER | DRAWING NO. 16883 | INDEX

DESIGNED BY PAP & RBM CHECKED BY DGM DATE 1/67 REVISED DATE
DETAILED BY JDC CHECKED BY DGM DATE 1/67 REVISED DATE
TRACED BY CHECKED BY DATE REVISED DATE

FED. ROAD DIST.	STATE	FED. AID PROJ. NO.	FISCAL YEAR	SHEET NO.	TOTAL SHEETS
7	KY.				

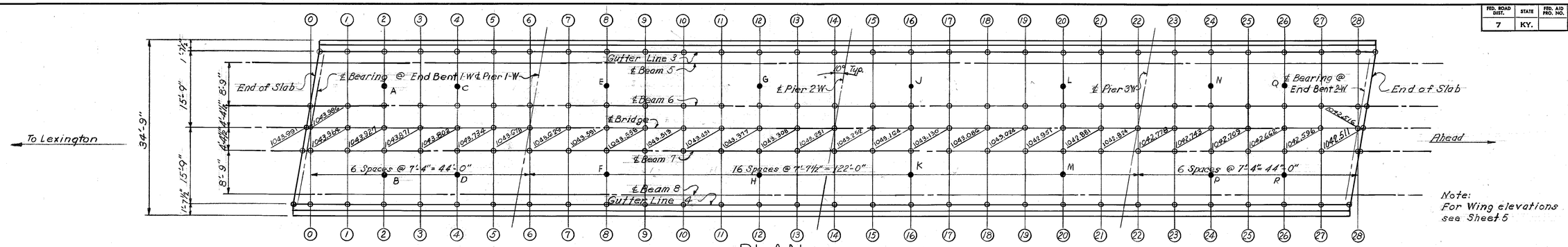

Note:
For Wing elevations
see Sheet 5

PLAN (WEST BRIDGE)

(Showing elevations on ℄ of Bridge)

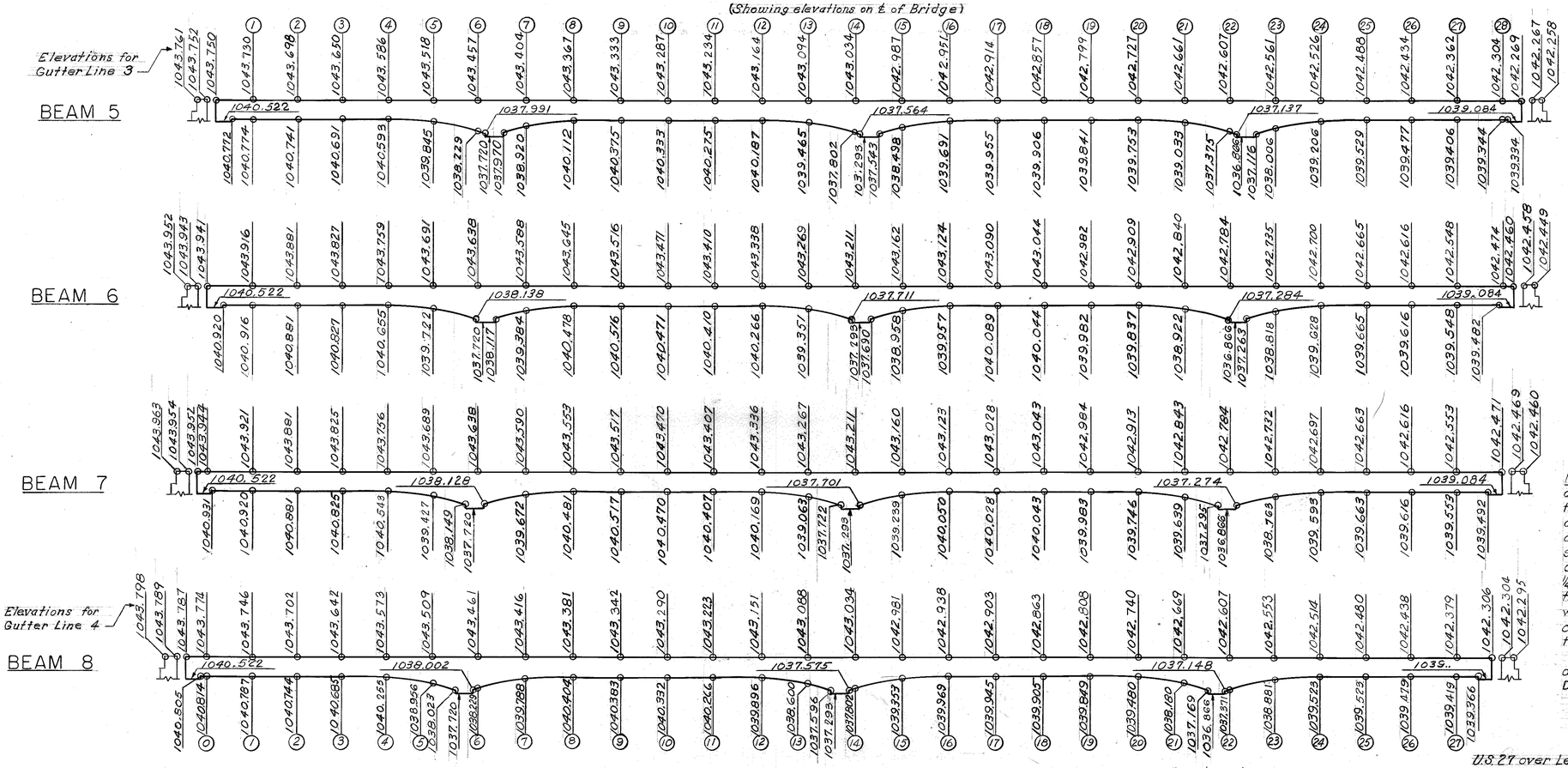

SECTIONS ON ℄ OF BEAMS

TABLE OF ELEVATIONS FOR CONTROL OF SLAB THICKNESS			
Point	Plan Elev. Top of Slab	Field Elev. Bottom of Slab	Computed Slab Thickness
A	1043.811		
B	1043.813		
C	1043.693		
D	1043.686		
E	1043.526		
F	1043.483		
G	1043.267		
H	1043.262		
J	1043.056		
K	1043.048		
L	1042.836		
M	1042.842		
N	1042.634		
P	1042.627		
Q	1042.547		
R	1042.548		

Note: After the slab forms are erected and before the slab reinforcement is placed, the Resident Engineer shall take field elevations of the slab thickness check points and enter them in the space provided. The slab thickness shall then be computed. If the computed slab thickness varies more than ¼" from the plan thickness, allowing 1/360 of the slab span for deflection of the form work, the form shall be adjusted until the computed slab thickness is within the tolerance allowed.

A copy of this sheet, showing the final datum elevations, shall be sent to the Director, Division of Bridges

Note:
Elevations shown on this sheet include dead load camber and are to be maintained with falsework in place.

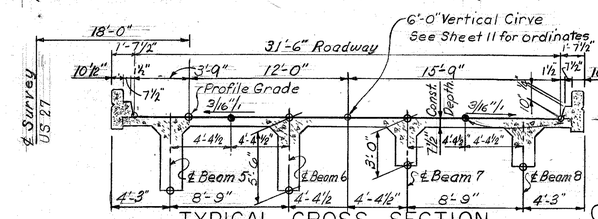

TYPICAL CROSS SECTION

(Showing points where elevations are given)

(WEST BRIDGE)

CONSTRUCTION ELEVATIONS

US 27 over Lexington Circle Expressway Sheet 12

COMMONWEALTH OF KENTUCKY

DEPARTMENT OF HIGHWAYS

FRANKFORT

COUNTY OF

FAYETTE

LEXINGTON CIRCLE EXPRESSWAY

ROAD

STATION 782+19.49 **PROJECT NO.**

BRIDGE NUMBER | DRAWING NO. 16883 | INDEX

DESIGNED BY F.A.P. & R.B.M.	CHECKED BY D.G.M.	DATE 1/63	REVISED DATE
DETAILED BY J.D.C.	CHECKED BY D.G.M.	DATE 1/63	REVISED DATE
TRACED BY	CHECKED BY	DATE	REVISED DATE

SOUNDING LAYOUT

BRIDGE AT US 27

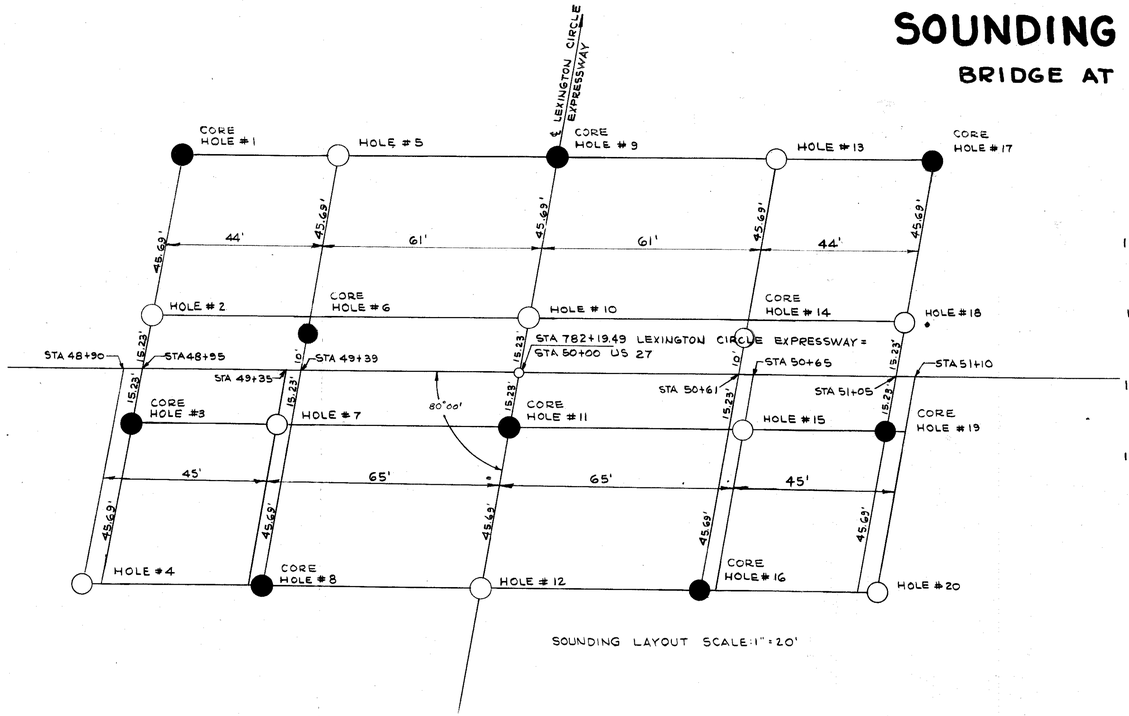

SOUNDING LAYOUT SCALE: 1" = 20'

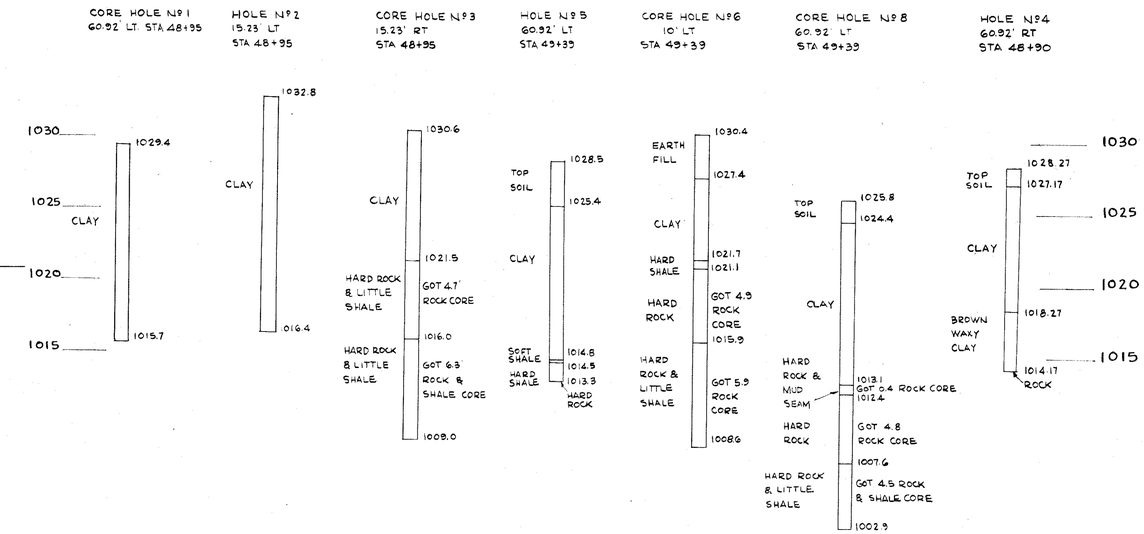

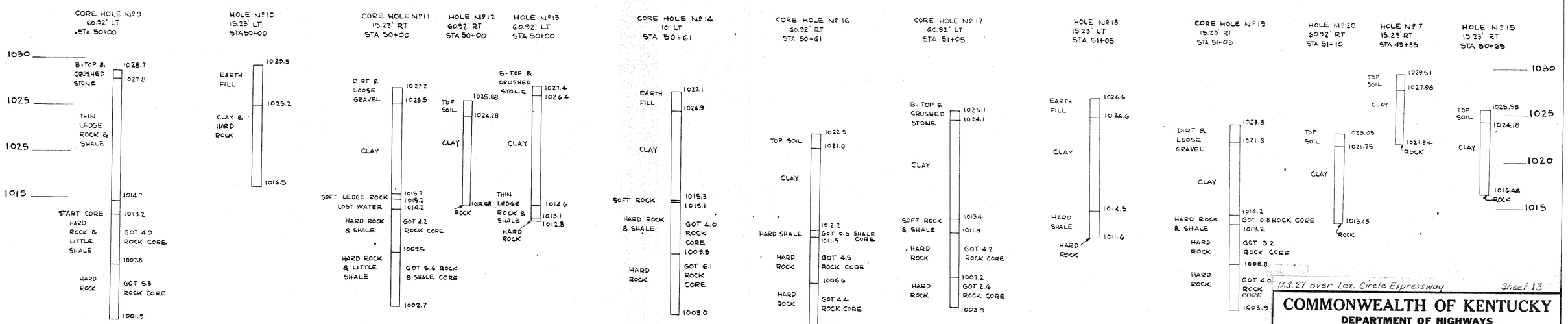

SOUNDINGS

U.S. 27 over Lex. Circle Expressway

Sheet 13

COMMONWEALTH OF KENTUCKY
DEPARTMENT OF HIGHWAYS
FRANKFORT
COUNTY OF
FAYETTE
LEXINGTON CIRCLE EXPRESSWAY
ROAD

STATION 782+19.49 **PROJECT NO.**

BRIDGE NUMBER	DRAWING NO.	INDEX
	16883	

FED. ROAD DIST.	STATE	FED. AID PROJ. NO.	FISCAL YEAR	SHEET NO.	TOTAL SHEETS
7	KY.				

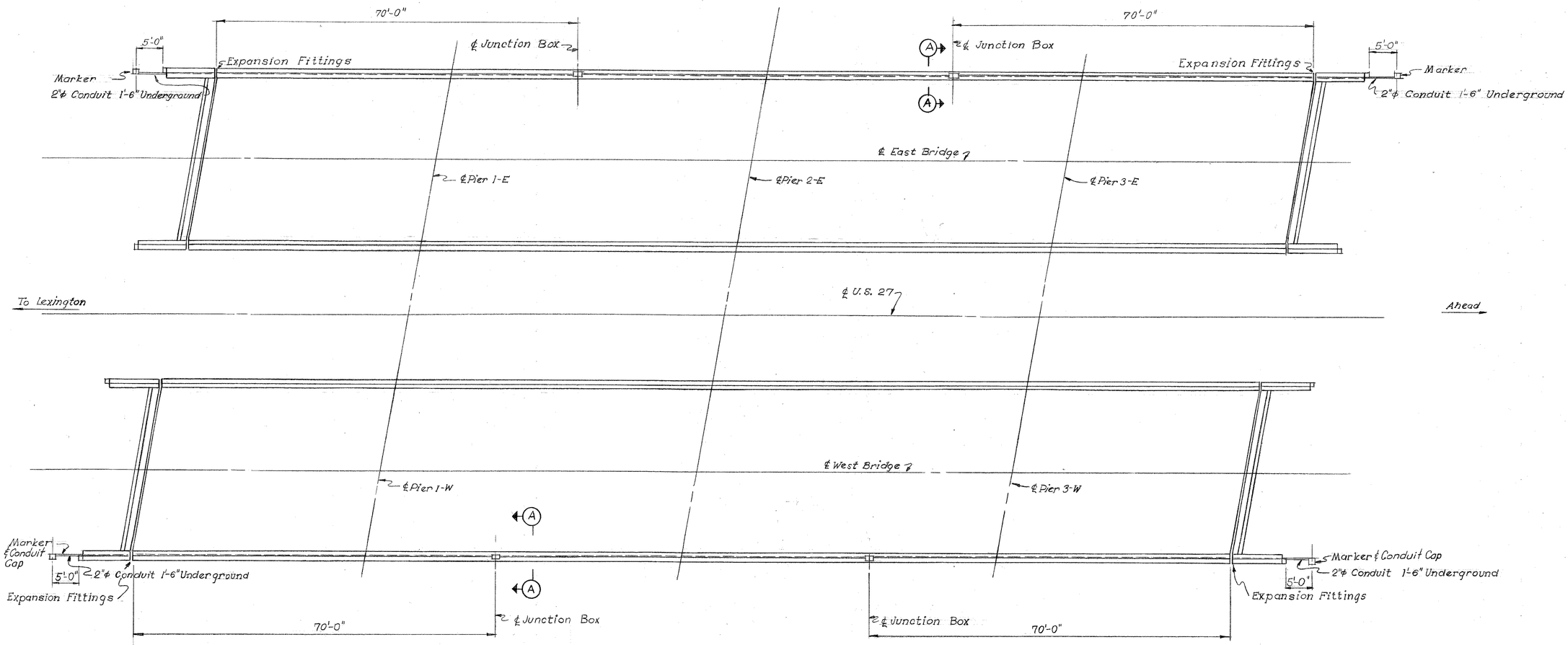

PLAN OF CONDUIT
(Showing Conduit & Junction Box Layout)

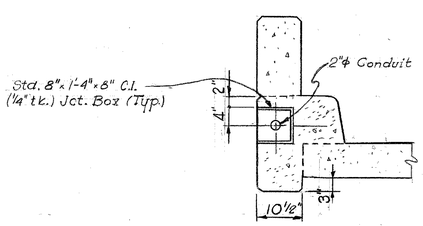

SECTION A-A

BILL OF MATERIAL		Each Bridge
2"ϕ Galv. Conduit	(Lin. ft.)	250'-0"
Std. 8"x1'-4"x8" Junction Box	(ea.)	2
2"ϕ Conduit Connection	(ea.)	4
2"ϕ Galv. Cap	(ea.)	2
Expansion Fittings (Crouse-Hinds XJ 641 with GC 100 Ground Staps or Approved Equal	(ea.)	2

Note: Markers shall consist of 4"x4"x36" reinforced concrete post with 4-1/4"ϕ deformed reinforcing steel per post and a 2"ϕ brass disc cast in the end of the post inscribed "End of duct". Markers to be 2" above grade with disc exposed.

ELECTRICAL CONDUIT

U.S. 27 over Lexington Circle Expressway Sheet 14

COMMONWEALTH OF KENTUCKY
DEPARTMENT OF HIGHWAYS
FRANKFORT
COUNTY OF
FAYETTE
LEXINGTON CIRCLE EXPRESSWAY
ROAD

STATION 782+19.49 **PROJECT NO.**

BRIDGE NUMBER	DRAWING NO.	INDEX
	16883	

DESIGNED BY RBM	CHECKED BY DGM	DATE 1-67	REVISED DATE
DETAILED BY D.E.N.	CHECKED BY DGM	DATE 1-67	REVISED DATE
TRACED BY	CHECKED BY	DATE	REVISED DATE