FED. ROAD DIST. NO.	STATE	FED. AID PROJ. NO.	FISCAL YEAR	SHEET NO.	TOTAL SHEETS
7	Ky.				

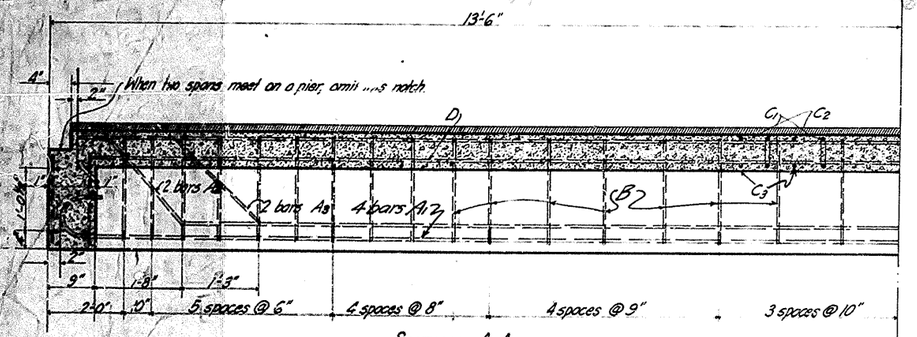

SECTION A-A

Steel same in all beams

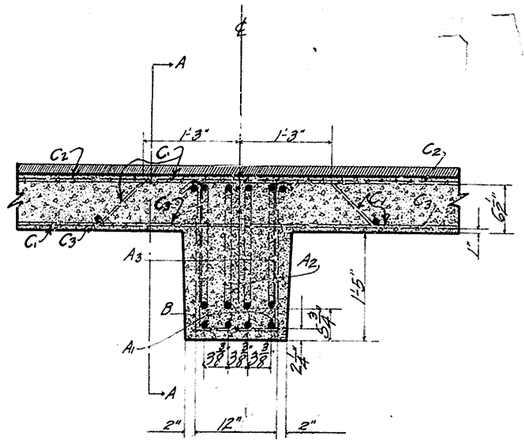

TYPICAL SECTION OF BEAM

Steel same in all beams

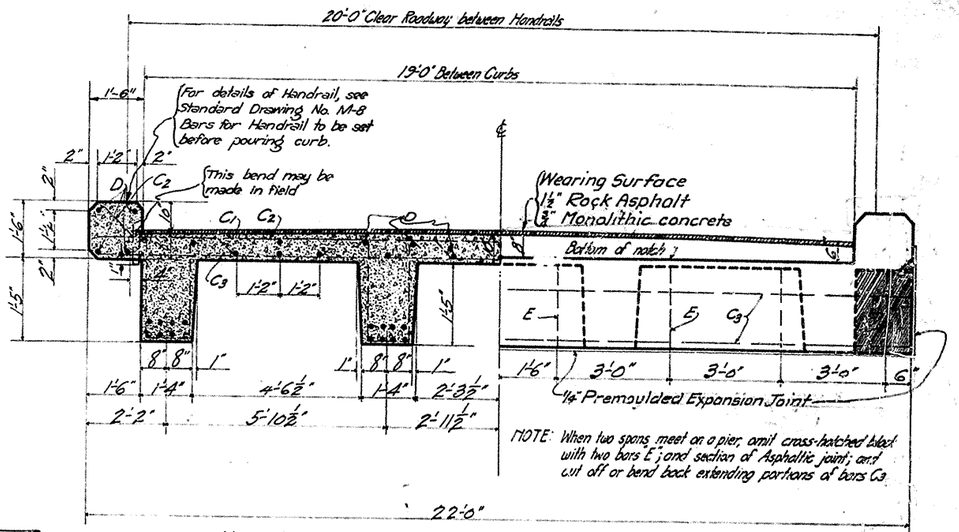

HALF SECTION

HALF END ELEVATION

NOTE: When two spans meet on a pier, omit cross-hatched block with two bars E; and section of Asphaltic joint; and cut off or bend back extending portions of bars C3.

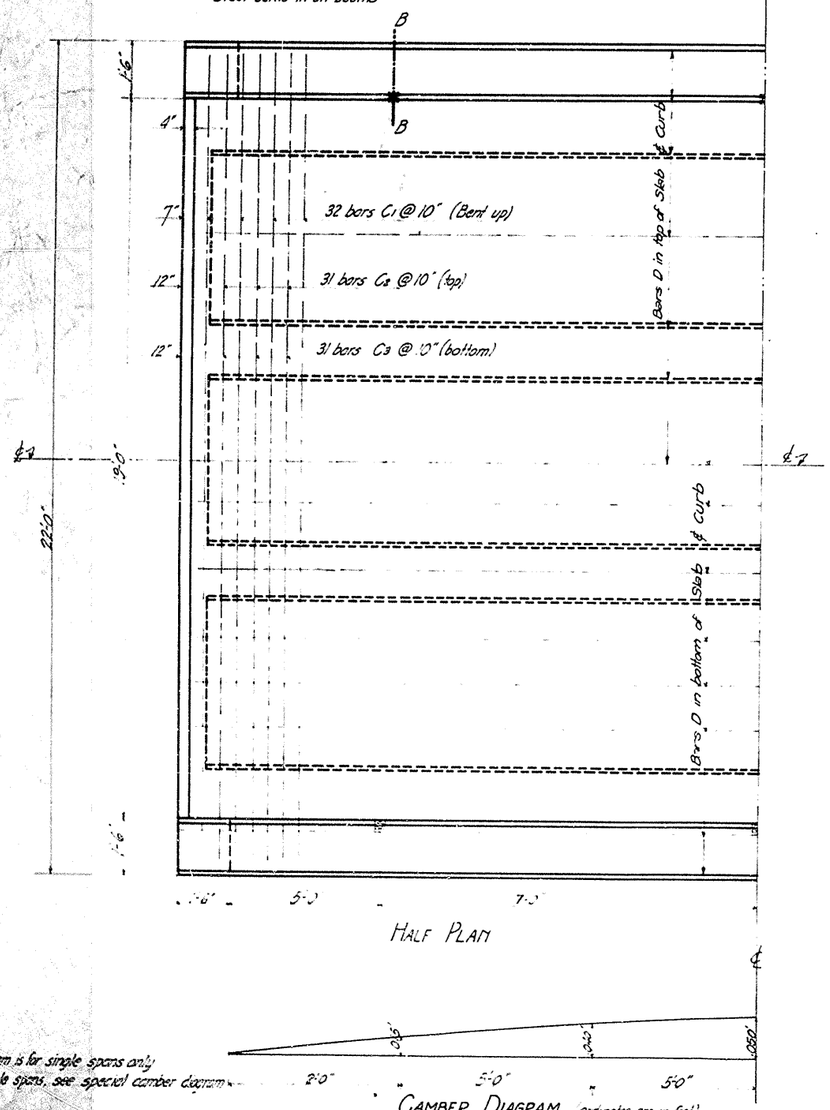

HALF PLAN

This diagram is for single spans only
For multiple spans, see special camber diagram

CAMBER DIAGRAM (ordinates are in feet)

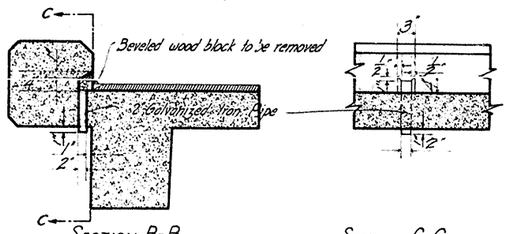

SECTION B-B

Showing details of weep hole with wood block form in place

SECTION C-C

Showing details of weep hole with wood block form removed

DETAILS OF WEEP HOLE

GENERAL NOTE

SPECIFICATIONS: State Highway Department, Kentucky, 1926.

CONCRETE: Class A or F Concrete to be used in slab, girders and curb as called for on general plans. Class D concrete to be used in Handrail.

REINFORCEMENT: To be new billet structural grade deformed bars. Dimensions from the face of concrete to steel are the clear distances. Dimensions for bar spacing are distances center to center of bars. All reinforcement shall be securely held in correct position by means of pre-moulded concrete chairs and spacers, and wired at intersections. Spacers and chairs shall not be spaced farther apart than 30 diameters of the supported bar.

~~CONSTRUCTION JOINTS: The girders, slab, and curb for the whole span shall be poured continuously allowing no time for initial set to take place between the end of placing concrete.~~

CORNERS: All exposed corners to be chamfered ⅞" unless otherwise shown on plans

WEARING SURFACE: To be Type specified on general plans and placed in accordance with specifications.

EXPANSION FILLER: Expansion joint filler and pipe for weep holes shall be included in the price bid per cu. yd. of concrete

BILL OF REINFORCING STEEL

Mark	No.	Size	Length Ft.	Length In.	Location	Bending
A1	16	1⅛" ϕ	28	11	Girder	25'-11"
A2	8	1" ϕ	28	8	Girder	22'-2"
A3	8	1" ϕ	29	2	Girder	19'-6"
B	40	½" ϕ	5	2	Girder	12"
C1	32	½" ϕ	23	0	Slab	3'-3" 5½" 2'-6" 5½" 2'-6" 5½" 1'-9"
C2	31	½" ϕ	22	0	Slab	20'-0"
C3	39	½" ϕ	21	9	Slab and End walls	This bend may be made in field
D	30	½" ϕ	26	0	Slab	Straight
E	32	½" ϕ	7	6	End Walls	Straight

Bar symmetrical about this line.

NOTE: Bar bending dimensions shown are out to out.

ESTIMATED QUANTITIES

Concrete, Class "A" or "F"	27.9 Cu. Yds.
Reinforcing Steel	6510 Lbs.
Bituminous Surface	57.0 Sq. Yds.

When concrete blocks are omitted over pier deduct for each end of bridge on which they are omitted .24 cu. yds. of class "A" or "F" concrete.

When Monolithic concrete is used for Wearing Surface add 1.1 Cu. Yds. of Class "F" concrete.

DRAWING NO.	INDEX
G-24	S-7

DATE: DRAWN: 2-23-28 CHECKED: 2-23-28
DESIGNED BY: E.R.P. DETAIL: E.R.P.
CHECKED BY: E.R.P. E.R.P.
REVISED: 5-7-28 6-7-28

COMMONWEALTH OF KENTUCKY
DEPARTMENT OF STATE ROADS AND HIGHWAYS
FRANKFORT

STANDARD REINF. CONC. DECK GIRDER
24' SPAN 20' RDWY.

SHEET No. OF SHEETS

APPROVED BY
APPROVED BY
APPROVED BY
CHAIRMAN STATE HIGHWAY COMMISSION