DEPARTMENT OF TRANSPORTATION
BUREAU OF HIGHWAYS

BATH COUNTY
BETHEL-REYNOLDSVILLE ROAD
KY 1106 OVER FLAT CREEK

REFERENCE AND ESTIMATE OF QUANTITIES

ITEM	SHEET NO.	CONCRETE, CLASS A C.Y.	STEEL REINFORCEMENT LBS.	STRUCTURE EXCAV, COMMON C.Y.	STRUCTURE EXCAV, SOLID ROCK C.Y.	PRECAST PC BOX BEAM, TYPE II L.F.					
TITLE SHEET	1										
GENERAL NOTE	2										
LAYOUT	3										
SOUNDINGS	4&5										
SUBSTRUCTURE											
ABUTMENT 1	6	24.9	3175	63	14						
PIER 1	7	42.4	7391	61	9						
PIER 2	7	39.2	6647	31	14						
ABUTMENT 2	8	23.0	3053	58	12						
SUBSTRUCTURE TOTALS		129.5	20266	213	49						
SUPERSTRUCTURE											
FRAMING PLAN	9					1701.0					
GUARDRAIL SYSTEM DETAILS	10										
SUPERSTRUCTURE TOTALS						1701.0					
BRIDGE TOTALS		129.5	20,266	213	49	1701.0					

STANDARD DRAWINGS

BGX-006-02 RBR-001-05 RBR-005-05 BBP-001-04
BDP-009-06THRUBDP-027-06

BRIDGE OVER FLAT CREEK SHEET 1 OF 10

COMMONWEALTH OF KENTUCKY
BUREAU OF HIGHWAYS
FRANKFORT
COUNTY OF
BATH
BETHEL-REYNOLDSVILLE ROAD
ROAD
STATION 9+90.00 P.E. PROJECT NO. FSP0061106003004002D

CONSTRUCTION PROJECT NO.	MAINTENANCE PROJECT NO.	DRAWING NO.
BRZ 0903(28)		20348

PLANS PREPARED BY: W.H. HORNBECK DESIGN SECTION

DESIGNED BY Plot DATE
DETAILED BY CHECKED BY W.H. DATE 9-81
TRACED BY CHECKED BY DATE

REVISED
REVISED
REVISED

UPDATE DATE
LETTING DATE 11/13/81

Microfilmed-81

GENERAL NOTE

SPECIFICATIONS

THE KENTUCKY BUREAU OF HIGHWAYS STANDARD SPECIFICATIONS FOR ROAD AND BRIDGE CONSTRUCTION, CURRENT EDITION SHALL APPLY TO THIS PROJECT.

DESIGN LOAD

THIS BRIDGE IS DESIGNED FOR HS20-44 LIVE LOAD, AS SPECIFIED IN 1977 AASHTO SPECIFICATIONS OR ALTERNATE LOADING OF TWO 24-KIP AXLES SPACED FOUR FEET APART, WHICHEVER PRODUCES THE GREATER STRESS. THIS BRIDGE IS DESIGNED FOR A WIND LOAD BASED ON A WIND VELOCITY OF 84 MPH.

DESIGN METHOD

ALL REINFORCED CONCRETE MEMBERS ARE DESIGNED BY THE LOAD FACTOR METHOD AS SPECIFIED IN THE CURRENT AASHTO SPECIFICATIONS

MATERIALS DESIGN SPECIFICATIONS

FOR CLASS "A" REINFORCED CONCRETE
F'C = 3500 PSI
N = 10

FOR STEEL REINFORCEMENT
FY = 60000 PSI

FOUNDATION PRESSURE

FOOTINGS ARE DESIGNED FOR A MAXIMUM PRESSURE OF 6550 PSF.

CONCRETE

CLASS "A" CONCRETE IS TO BE USED IN THE SUBSTRUCTURE. PRESTRESSED GIRDER CONCRETE SHALL BE IN ACCORDANCE WITH THE PLANS AND SPECIFICATIONS.

REINFORCEMENT

DIMENSIONS SHOWN FROM THE FACE OF CONCRETE TO BARS ARE CLEAR DISTANCES UNLESS OTHERWISE SHOWN. SPACING OF BARS IS FROM CENTER TO CENTER OF BARS.

BEVELED EDGES

ALL EXPOSED EDGES SHALL BE BEVELED 7/8" UNLESS OTHERWISE SHOWN.

PLAN ELEVATION FOR FOOTINGS

WHEN SUITABLE ROCK IS ENCOUNTERED AT A DATUM ELEVATION HIGHER THAN THE PLAN ELEVATION, THE HIGHER ELEVATION MAY BE UTILIZED FOR BEARING AS OUTLINED IN THE SPECIFICATIONS.

BLASTING NEAR ABUTMENT SITES

THE BEARING VALUE OF THE ROCK LOCATED UNDER THE PROPOSED BRIDGE ABUTMENTS MUST BE PRESERVED FROM DAMAGE BY BLASTING, BY CONCUSSION FROM BLASTING, OR BY EXCESSIVE BACKBREAKAGE. ANY INCREASES IN STRUCTURE COSTS CAUSED BY BLASTING DAMAGE TO THE BRIDGE FOUNDATIONS SHALL BE AN EXPENSE OF THE CONTRACTOR.

DIMENSIONS

DIMENSIONS ARE FOR A NORMAL TEMPERATURE OF 60 DEGREES FAHRENHEIT. LAYOUT DIMENSIONS ARE HORIZONTAL MEASUREMENTS.

SHOP PLANS

SHOP PLANS SHALL BE IN ACCORDANCE WITH SUB-SECTION 605.05 PART A OF THE SPECIFICATIONS.

PAYMENT FOR PRECAST CONCRETE BEAMS

THE BASIS OF PAYMENT FOR THE PRESTRESSED CONCRETE BEAMS SHALL BE AT THE CONTRACT UNIT PRICE PER LINEAR FOOT OF BEAM, IN ACCORDANCE WITH THE SPECIFICATIONS.

CONSTRUCTION IDENTIFICATION

THE NAMES OF THE PRIME CONTRACTOR AND THE SUB-CONTRACTOR SHALL BE IMPRINTED IN THE CONCRETE WITH ONE INCH LETTERS AT A LOCATION DESIGNATED BY THE ENGINEER. THE CONTRACTOR SHALL FURNISH ALL PLANS, EQUIPMENT AND LABOR NECESSARY TO DO THE WORK FOR WHICH NO DIRECT PAYMENT WILL BE MADE.

GENERAL NOTE

UPDATE DATE
LETTING DATE

DATE
DATE
DATE

DESIGNED BY A.W.F. CHECKED BY W.H.H. DATE 8-81 REVISED
DETAILED BY Plot CHECKED BY W.H.H. DATE 8-81 REVISED
TRACED BY CHECKED BY DATE REVISED

BRIDGE OVER FLAT CREEK SHEET 2

COMMONWEALTH OF KENTUCKY
BUREAU OF HIGHWAYS
FRANKFORT
COUNTY OF
BATH
BETHEL-REYNOLDSVILLE (KY.1106)
ROAD
STATION 9+90.00 P.E. PROJECT NO.

CONSTRUCTION PROJECT NO.	MAINTENANCE PROJECT NO.	DRAWING NO.
		20348

UPDATE DATE
LETTING DATE

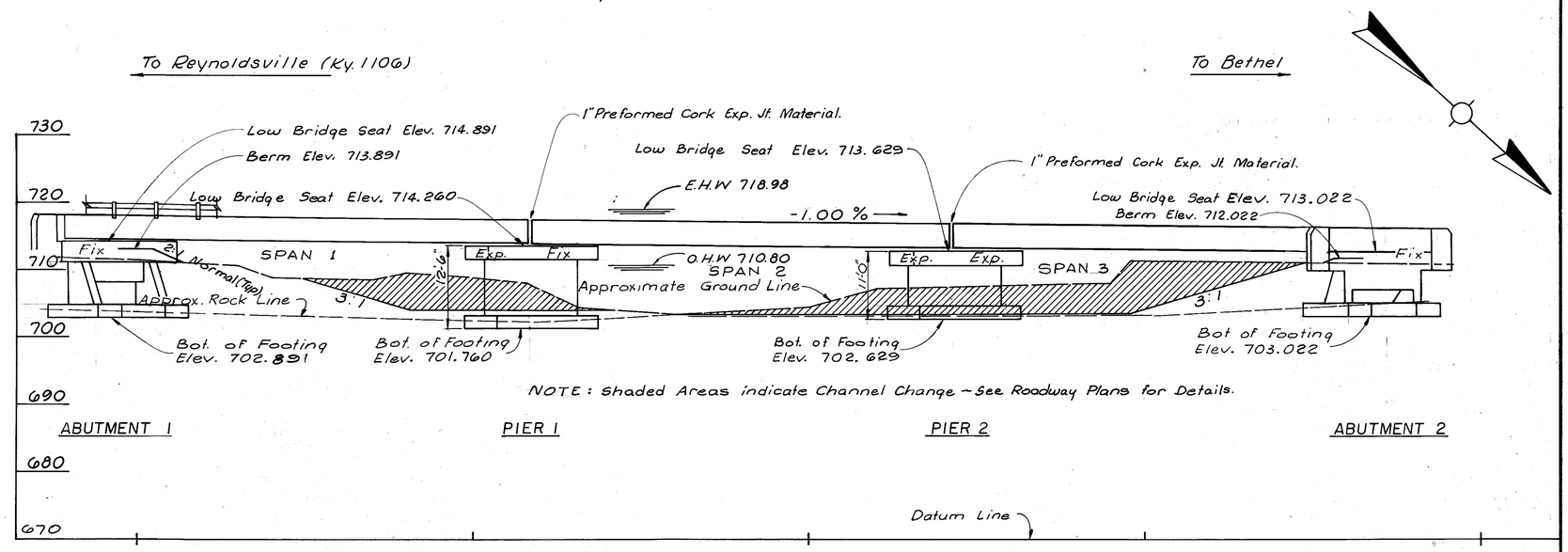

ELEVATION

63'-63'-63', Type II Box Beam Spans
25'-6 Roadway, HS 20-44 Loading, 30° Skew Rt.
32'-0" Shoulders @ Bridge, 2:1 Fill Slopes

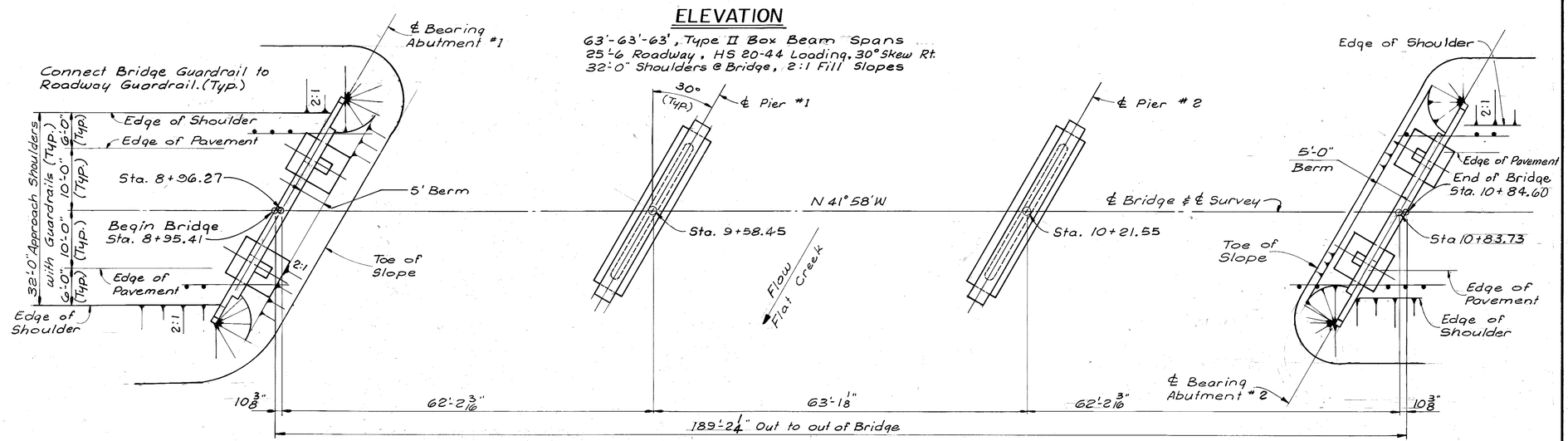

PLAN

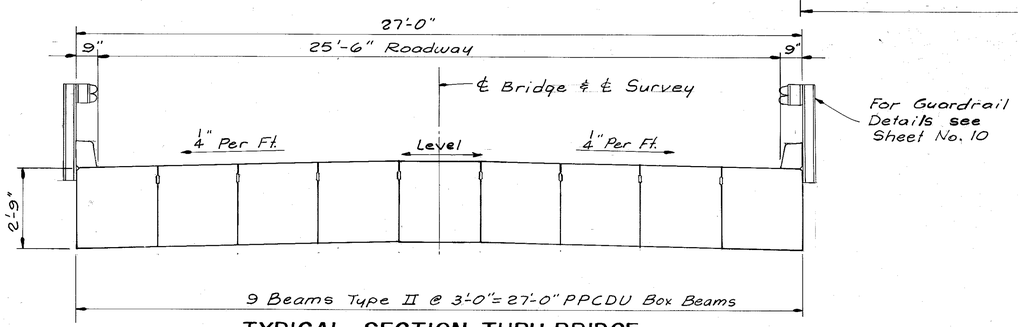

TYPICAL SECTION THRU BRIDGE

LAYOUT

Bridge over Flat Creek — Sheet 3

COMMONWEALTH OF KENTUCKY
BUREAU OF HIGHWAYS
FRANKFORT
COUNTY OF
BATH
BETHEL - REYNOLDSVILLE RD. (KY. 1106)
ROAD
STATION 9+90 **P. E. PROJECT NO.**

CONSTRUCTION PROJECT NO.	MAINTENANCE PROJECT NO.	DRAWING NO.
		20348

DESIGNED BY S. Holman CHECKED BY AVC DATE 8-81
DETAILED BY CHECKED BY DATE
TRACED BY CHECKED BY DATE
REVISED DATE
REVISED DATE
REVISED DATE

N72410

SUBSURFACE DATA

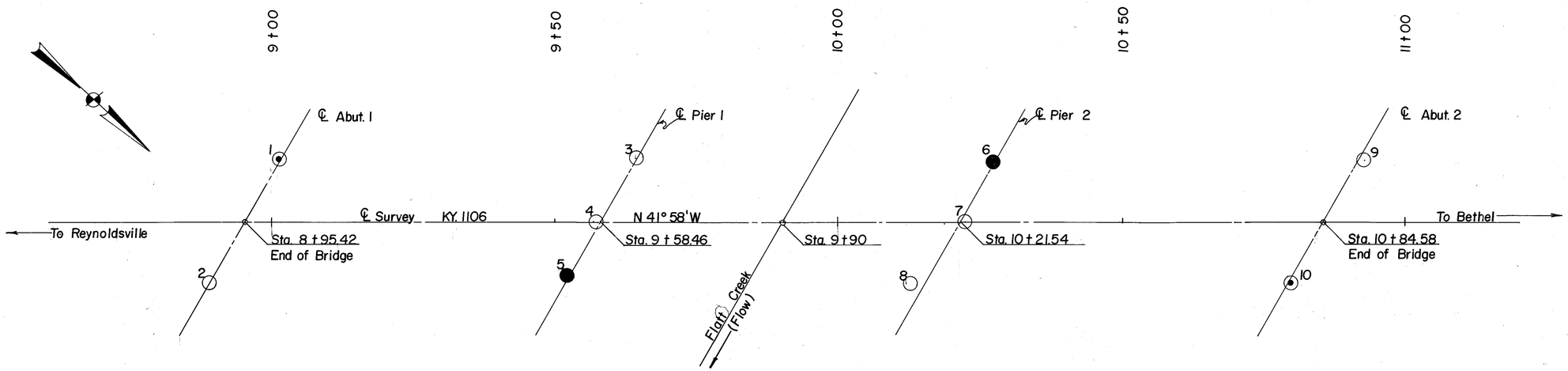

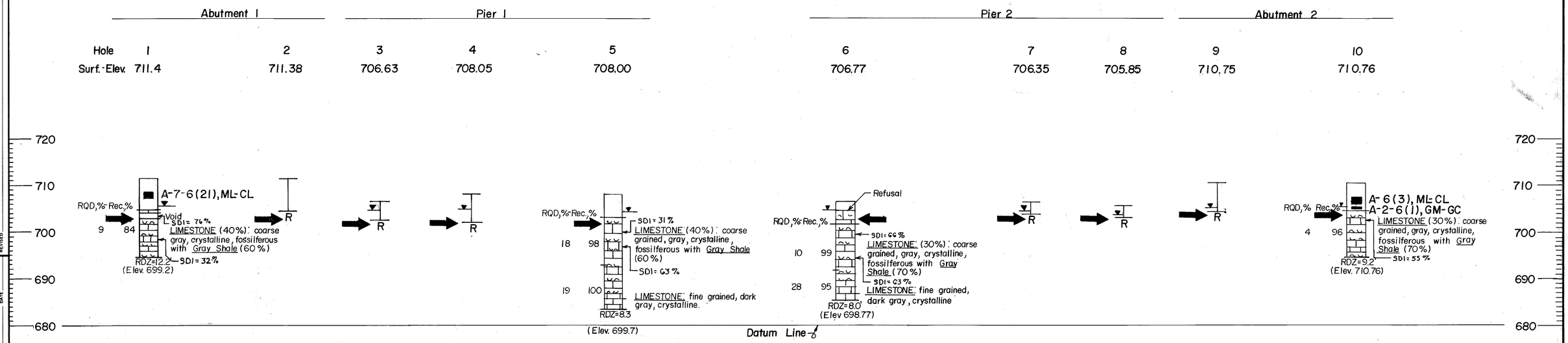

The allowable bearing capacity is estimated to be 15 TSF.

Bridge over Flat Creek Sheet 4

COMMONWEALTH OF KENTUCKY
BUREAU OF HIGHWAYS
FRANKFORT
COUNTY OF
BATH
KY. 1106
ROAD

STATION 9+90 **P. E. PROJECT NO.**

CONSTRUCTION PROJECT NO.	MAINTENANCE PROJECT NO.	DRAWING NO.
		20348

UPDATE DATE
LETTING DATE

Division of Materials
Geotechnical Section
Dist. Geol. Chief K. Dore
Structure Report 8-11-80

DESIGNED BY T.A.T. CHECKED BY WSP DATE 12/12/
DETAILED BY DATE
TRACED BY DATE
REVISED DATE
REVISED DATE
REVISED DATE

N72410

Description of Soil Compactness or Consistency

SOIL TYPE	COMPACTNESS OR CONSISTENCY	RANGE OF PENETRATION RESISTANCE	RANGE OF UNCONFINED COMPRESSIVE STRENGTH
Coarse grained soils. (More than half of material is larger than No. 200 sieve size.)	Very loose Loose Medium compact Compact Very compact	Less than 4 blows per foot. 4 to 10 10 to 30 30 to 50 Greater than 50	Not applicable.
Fine grained soils. (More than half of material is smaller than No. 200 sieve size.)	Very soft Soft Medium stiff Stiff Very stiff Hard	Not applicable.	Less than 0.25 tsf 0.25 to 0.5 0.5 to 1.0 1.0 to 2.0 2.0 to 4.0 Greater than 4.0

Unified Soil Classifications

MAJOR DIVISIONS		SYMBOL	NAME
COARSE-GRAINED SOILS	GRAVEL AND GRAVELLY SOILS	GW	Well-graded gravels or gravel-sand mixtures, little or no fines.
		GP	Poorly graded gravels or gravel-sand mixtures, little or no fines.
		GM	Silty gravels, gravel-sand-silt mixtures.
		GC	Clayey gravels, gravel-sand-clay mixtures
	SAND AND SANDY SOILS	SW	Well-graded sands or gravelly sands, little or no fines
		SP	Poorly graded sands or gravelly sands, little or no fines
		SM	Silty sands, sand-silt mixture.
		SC	Clayey sands, sand-clay mixtures.
FINE-GRAINED SOILS	SILTS AND CLAYS LL IS LESS THAN 50	ML	Inorganic silts and very fine sands, rock flour, silty or clayey fine sands or clayey silts with slight plasticity.
		CL	Inorganic clays of low to medium plasticity, gravelly clays, sandy clays, silty clays, lean clays
	SILTS AND CLAYS LL IS GREATER THAN 50	MH	Inorganic silts, micaceous or diatomaceous fine sandy or silty soils, elastic silts.
		CH	Inorganic clays of high plasticity, fat clays.
UNCLASSIFIED MATERIAL		NONE	Non-classified material (i.e. overburden, pavement, coal mine waste, slag, rubble, talus, etc.) Include visual description.

AI	Activity Index
LI	Liquidity Index
N	Penetration Resistance
S+C(%)	Material finer than No. 200 seive
	Rockline Sounding
	Disturbed Sample Boring
	Undisturbed Sample Boring
	Undisturbed Sample Boring and Rock Core
	Rock Core
	Slope Inclinometer Installation
	typical applications:
	Approximate Footing Elevation
	Water Elevation
	Thin-walled Tube Sample
	Standard Penetration Test Sample
Q_u	Unconfined Compressive Strength
w(%)	Moisture Content
RQD(%)	Rock Quality Designation
SDI(%)	Slake Durability Index
Rec.(%)	Core Recovery
ϕ	Angle of Internal Friction
$\bar{\phi}$	Effective Angle of Internal Friction
c	Cohesion
$\bar{c}$	Effective Cohesion
γ	Total Unit Weight
RDZ	Rock Disintegration Zone
OB	Overburden Bench
IB	Intermediate Bench
R	Refusal
NR	Refusal Not Encountered

Relation of RQD and in situ Rock Quality

RQD(%)	Rock Quality
90-100	Excellent
75-90	Good
50-75	Fair
25-50	Poor
0-25	Very Poor

LIMESTONE

SANDSTONE

COAL

SHALE, SOIL-LIKE (SDI ≤ 50)

SHALE, INTERMEDIATE (50 < SDI < 95)

SHALE, ROCK-LIKE (SDI ≥ 95)

Bridge Over Flat Creek Sheet 5

COMMONWEALTH OF KENTUCKY
BUREAU OF HIGHWAYS
FRANKFORT
COUNTY OF
BATH
KY. 1106

STATION 9 + 90 ROAD P.E. PROJECT NO.

CONSTRUCTION PROJECT NO. | MAINTENANCE PROJECT NO. | DRAWING NO. 20348

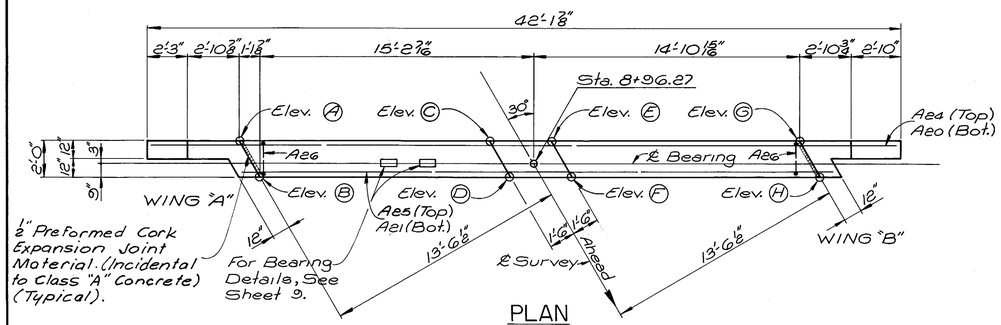

PLAN

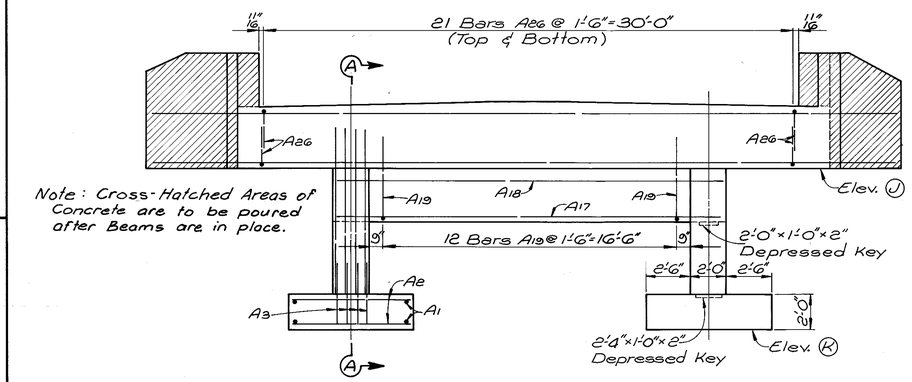

ELEVATION

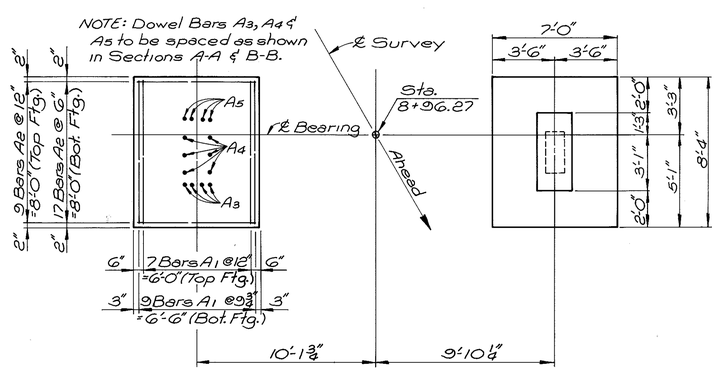

FOOTING PLAN

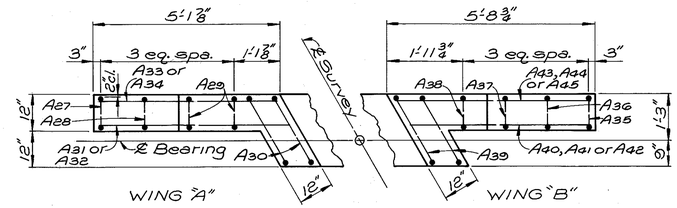

WING PLAN

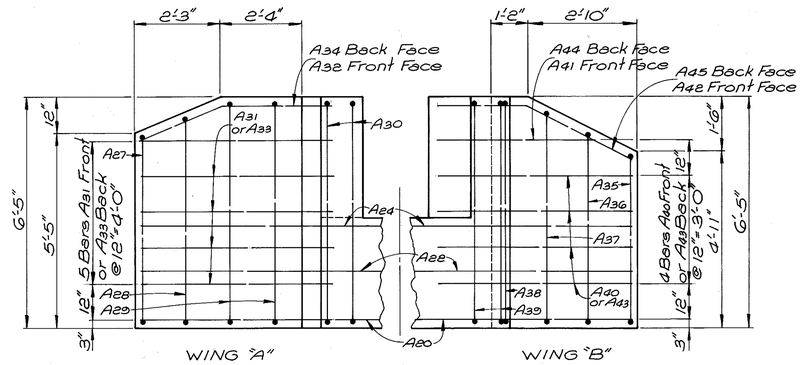

WING ELEVATION

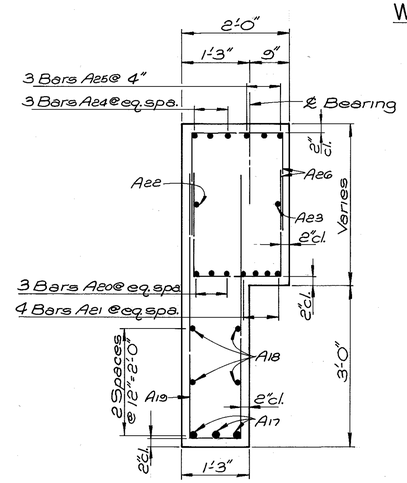

SECTION THRU CAP

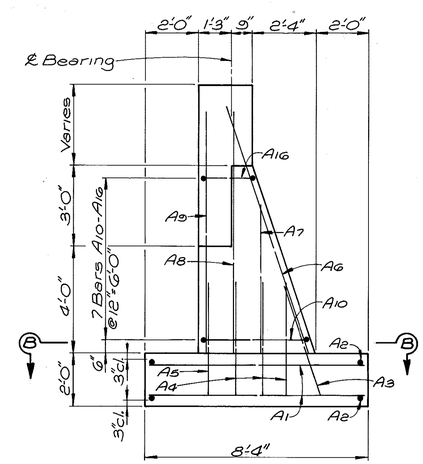

SECTION A-A

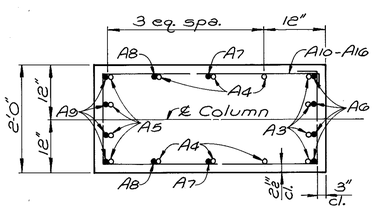

SECTION B-B

BILL OF REINFORCEMENT

MARK	TYPE	NO.	SIZE	LENGTH FT.	LENGTH IN.	LOCATION	a FT.	a IN.	b FT.	b IN.	c FT.	c IN.	d FT.	d IN.
A1	Str.	32	4	8	0	Footing								
A2	Str.	52	4	6	8	Footing								
A3	Str.	8	6	4	6	Footing-Column								
A4	Str.	12	5	4	0	Footing-Column								
A5	Str.	8	6	4	5	Footing-Column								
A6	Str.	8	6	8	11	Column								
A7	Str.	4	5	5	6	"								
A8	Str.	4	5	8	6	"								
A9	Str.	8	6	8	6	"								
A10	(1)	2	4	11	3	"	3	8	1	7				
A11	(1)	2	4	10	7	"	3	4	1	7				
A12	(1)	2	4	9	11	"	3	0	1	7				
A13	(1)	2	4	9	3	"	2	8	1	7				
A14	(1)	2	4	8	7	"	2	4	1	7				
A15	(1)	2	4	7	11	"	2	0	1	7				
A16	(1)	2	4	7	3	Column	1	8	1	7				
A17	Str.	3	9	21	8	Apron								
A18	Str.	4	4	21	8	Apron								
A19	(2)	12	4	9	6	Apron-Cap	0	11	4	4				
Ae20	Str.	3	9	41	9	Cap								
Ae21	Str.	4	9	33	3	"								
Ae22	Str.	1	4	41	9	"								
Ae23	Str.	1	4	33	3	"								
Ae24	Str.	3	8	41	9	"								
Ae25	Str.	3	8	33	3	"								
Ae26	(2)	42	4	6	5	Cap	1	8	2	5				
Ae27	(1)	1	4	12	5	Wing "A"	0	8	5	2				
Ae28	(1)	1	4	13	7	"	0	8	5	9				
Ae29	(1)	2	4	14	3	"	0	8	6	1				
Ae30	(1)	2	4	16	9	"	1	11	6	1				
A31	Str.	5	4	5	3	"								
A32	(3)	1	4	5	5	"	3	1	0	11⅜	2	4	2	1½
A33	Str.	5	4	4	11	"								
A34	(3)	1	4	5	1	Wing "A"	2	9	0	11⅜	2	4	2	1½
A35	(1)	1	4	11	5	Wing "B"	0	8	4	8				
A36	(1)	1	4	12	7	"	0	8	5	3				
A37	(1)	1	4	13	11	"	0	8	5	11				
A38	(1)	1	4	14	3	"	0	8	6	1				
A39	(1)	2	4	16	9	"	1	11	6	1				
A40	Str.	4	4	4	11	"								
A41	Str.	1	4	4	1	"								
A42	(3)	1	4	5	3	"	2	2	1	5¼	3	1	2	8⅝
A43	Str.	4	4	5	3	"								
A44	Str.	1	4	4	5	"								
A45	(3)	1	4	5	7	Wing "B"	2	6	1	5¼	3	1	2	8⅝

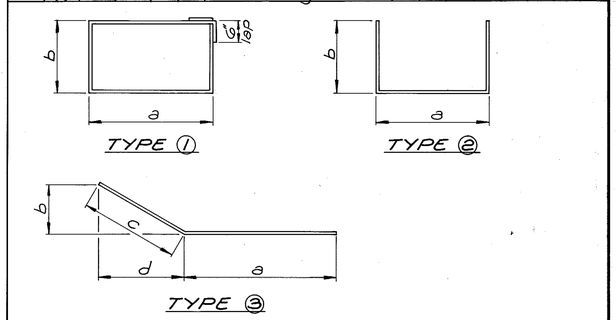

TABLE OF ELEVATIONS

POINT	ELEVATION
A	715.070
B	715.047
C	715.251
D	715.228
E	715.233
F	715.210
G	714.914
H	714.891
J	711.891
K	702.891

ESTIMATE OF QUANTITIES

Class "A" Concrete	84.9	cu. yds.
Reinforcement	3175	lbs.
Structure Exc. Com.	63	cu. yds.
Structure Exc. S.R.	14	cu. yds.

MINIMUM LAP DISTANCES	
#4 Bars	1'-9"
#5 Bars	2'-2"
#6 Bars	2'-7"

ABUTMENT 1

Bridge over Flat Creek — Sheet 6

COMMONWEALTH OF KENTUCKY
BUREAU OF HIGHWAYS
FRANKFORT
COUNTY OF
BATH
BETHEL-REYNOLDSVILLE RD. (KY. 1106)
ROAD
STATION 9+90 — **P. E. PROJECT NO.**

CONSTRUCTION PROJECT NO.	MAINTENANCE PROJECT NO.	DRAWING NO.
		20348

UPDATE DATE
LETTING DATE

DESIGNED BY J. B. W. — CHECKED BY A. W. Frank — DATE 8-81
DETAILED BY D. Smith — CHECKED BY A. W. Frank — DATE 8-81
TRACED BY — CHECKED BY — DATE
REVISED — DATE
REVISED — DATE
REVISED — DATE

N72410

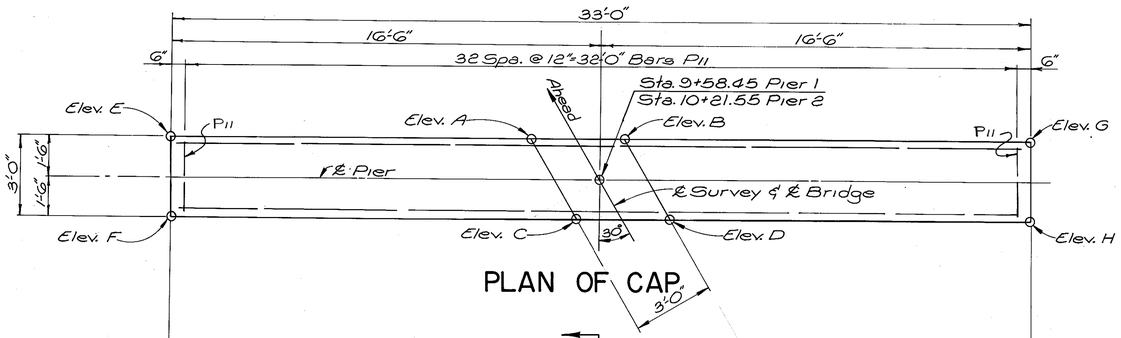

PLAN OF CAP

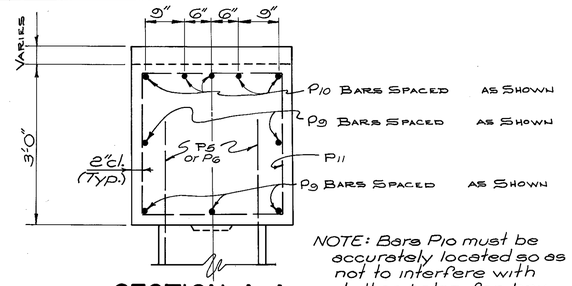

SECTION A-A

NOTE: Bars P10 must be accurately located so as not to interfere with drilling holes for box beam dowels.

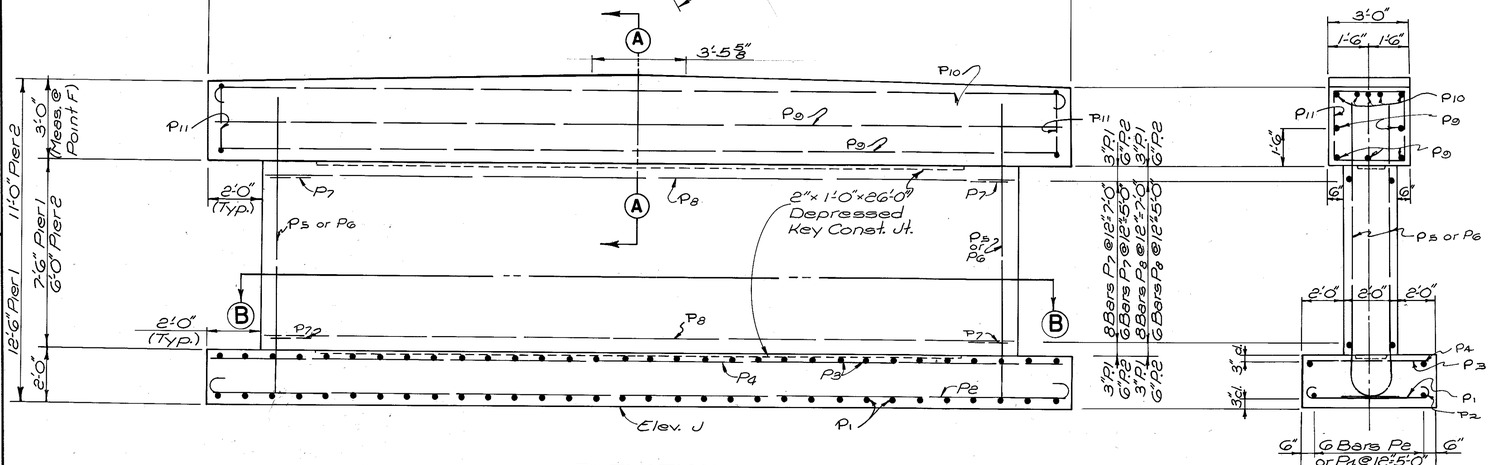

ELEVATION

END ELEVATION

POINT	ELEVATIONS	
	PIER 1	PIER 2
A	714.586	713.955
B	714.603	713.972
C	714.620	713.989
D	714.638	714.007
E	714.265	713.634
F	714.260	713.629
G	714.399	713.768
H	714.457	713.826
J	701.760	702.629

BILL OF REINFORCEMENT

MARK	TYPE	No. P1	No. P2	SIZE	LENGTH FT.	LENGTH IN.	LOCATION	a FT	a IN	b FT	b IN	c FT	c IN	d FT	d IN
P1	1	33	33	5	6	9	Bottom of Footing	5	1	0	10	0	5	5	6
P2	1	6	6	5	33	9	Bottom of Footing	32	1	0	10	0	5	32	6
P3	STR.	33	33	5	5	6	Top of Footing								
P4	STR.	6	6	5	32	6	Top of Footing								
P5	2	152	—	8	12	11	Ftg.-Wall Pier 1	11	9	1	4	0	4		
P6	2	—	152	8	11	5	Ftg.-Wall Pier 2	10	3	1	4	0	4		
P7	3	10	12	5	5	3	Wall								
P8	STR.	10	12	5	27	0	Wall								
P9	STR.	6	6	5	32	8	Cap								
P10	1	6	6	7	34	5	Cap	32	1	1	2	0	7	32	8
P11	4	33	33	4	11	5	Cap	2	8	2	8				

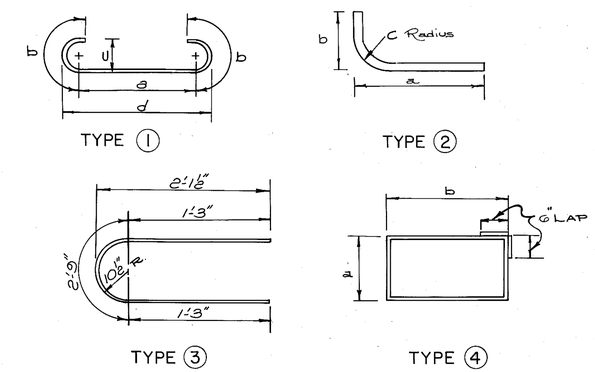

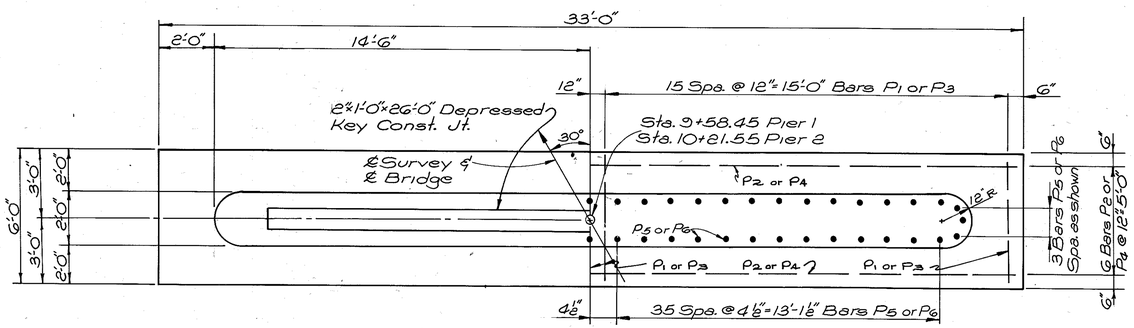

PLAN OF FOOTING

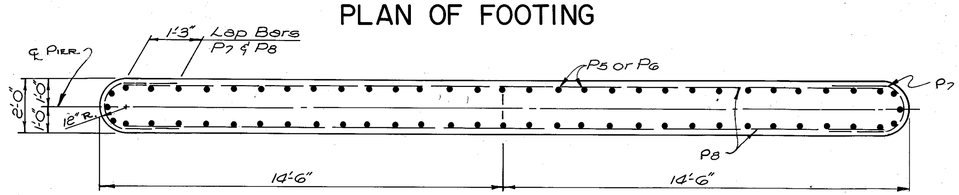

SECTION B-B

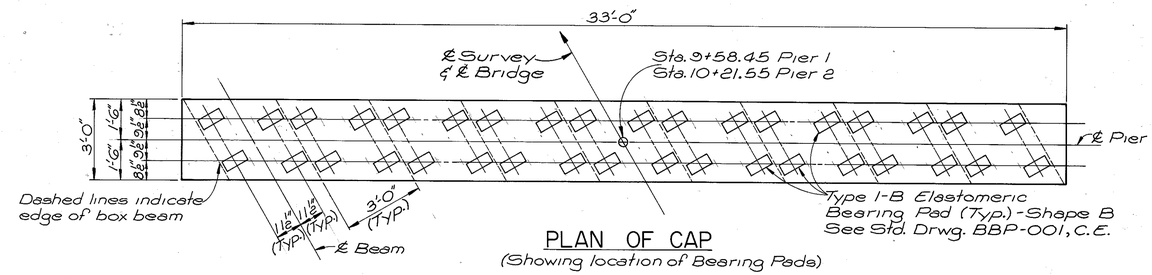

PLAN OF CAP
(Showing location of Bearing Pads)

NOTE: See sheet 9 for additional Pier Bearing Details.

ESTIMATE OF QUANTITIES			
ITEM	PIER 1	PIER 2	UNIT
Class "A" Concrete	42.4	39.2	cu. yds.
Steel Reinforcement	7391	6647	lbs.
Str. Exc. Common	61	31	cu. yds.
Str. Exc. Solid Rock	9	14	cu. yds.

PIERS 1 & 2

Bridge over Flat Creek — Sheet 7

COMMONWEALTH OF KENTUCKY
BUREAU OF HIGHWAYS
FRANKFORT
COUNTY OF
BATH
(KY. 1106) BETHEL-REYNOLDSVILLE RD.
ROAD
STATION 9+90 — **P. E. PROJECT NO.**

CONSTRUCTION PROJECT NO.	MAINTENANCE PROJECT NO.	DRAWING NO.
		20348

UPDATE DATE
LETTING DATE

DESIGNED BY J.B.W. CHECKED BY W.H.H. DATE 8-81 REVISED
DETAILED BY D.R.S. CHECKED BY W.H.H. DATE 8-81 REVISED
TRACED BY CHECKED BY DATE REVISED

N72410

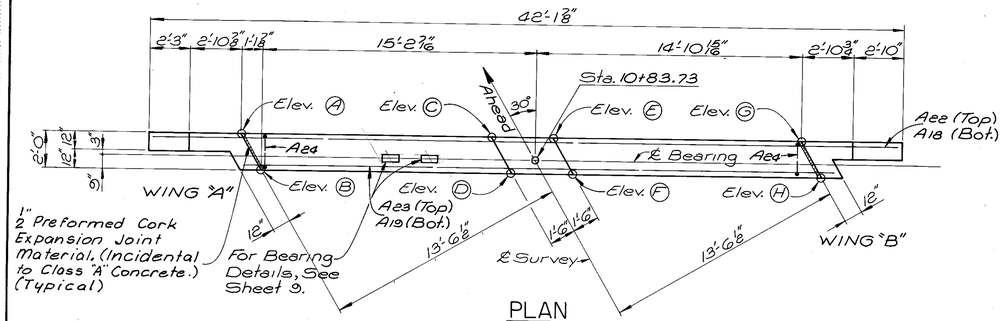

PLAN

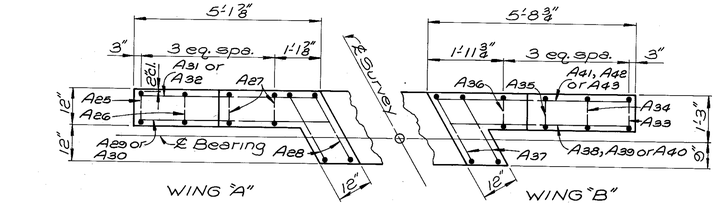

WING PLAN

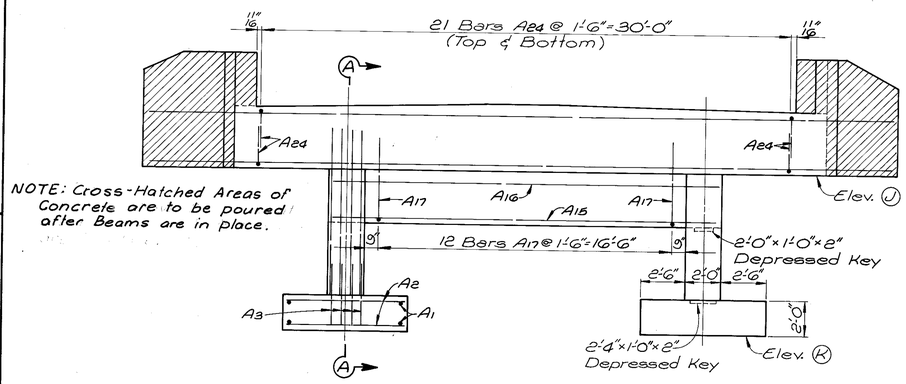

ELEVATION

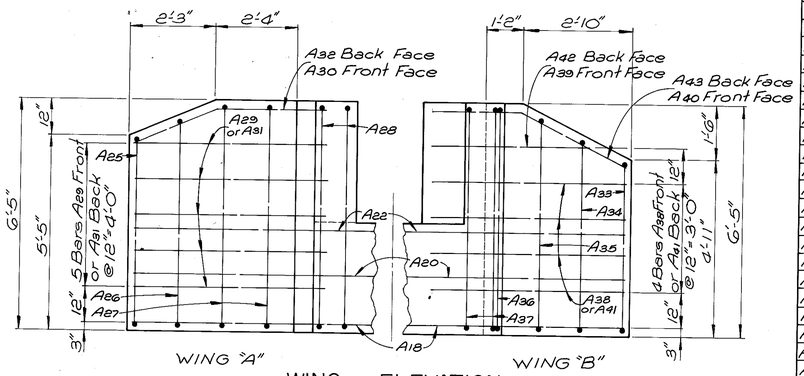

WING ELEVATION

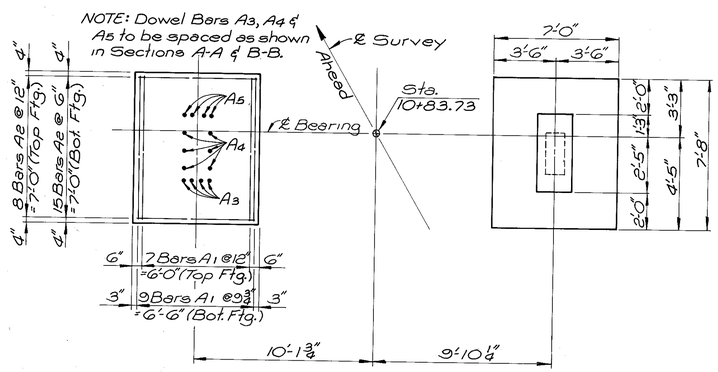

FOOTING PLAN

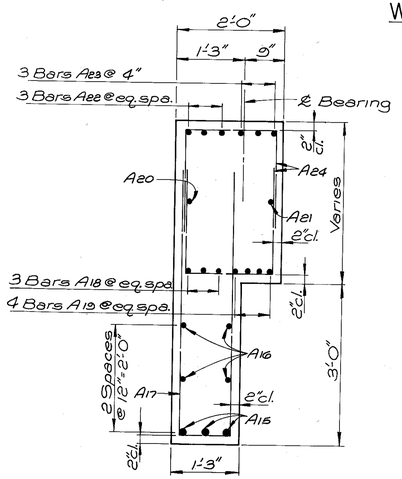

SECTION THRU CAP

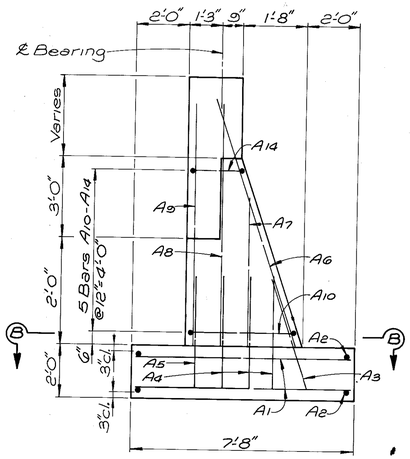

SECTION A-A

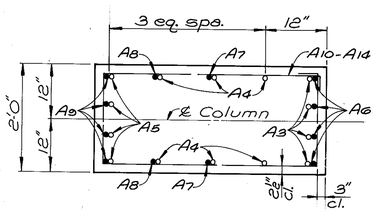

SECTION B-B

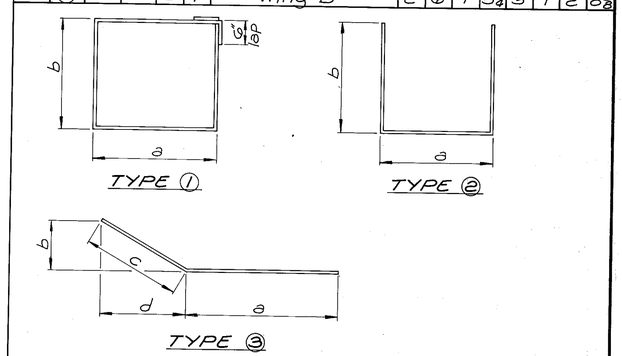

BILL OF REINFORCEMENT

MARK	TYPE	NO.	SIZE	LENGTH FT.	LENGTH IN.	LOCATION	a FT.	a IN.	b FT.	b IN.	c FT.	c IN.	d FT.	d IN.
A1	Str.	32	4	7	4	Footing								
A2	Str.	46	4	6	8	Footing								
A3	Str.	8	6	4	6	Footing - Column								
A4	Str.	12	5	4	0	Footing - Column								
A5	Str.	8	6	4	5	Footing - Column								
A6	Str.	8	6	6	11	Column								
A7	Str.	4	5	4	11	"								
A8	Str.	4	5	6	6	"								
A9	Str.	8	6	6	6	"								
A10	(1)	2	4	9	11	"	3	0	1	7				
A11	(1)	2	4	9	3	"	2	8	1	7				
A12	(1)	2	4	8	7	"	2	4	1	7				
A13	(1)	2	4	7	11	"	2	0	1	7				
A14	(1)	2	4	7	3	Column	1	8	1	7				
A15	Str.	3	9	21	8	Apron								
A16	Str.	4	4	21	8	Apron								
A17	(2)	12	4	9	6	Apron-Cap	0	11	4	4				
A18	Str.	3	9	41	9	Cap								
A19	Str.	4	9	33	9	"								
A20	Str.	1	4	41	9	"								
A21	Str.	1	4	33	3	"								
A22	Str.	3	8	41	9	"								
A23	Str.	3	8	33	3	"								
A24	(2)	42	4	6	5	Cap	1	8	2	5				
A25	(1)	1	4	12	5	Wing "A"	0	8	5	2				
A26	(1)	1	4	13	7	"	0	8	5	9				
A27	(1)	2	4	14	3	"	0	8	6	1				
A28	(1)	2	4	16	9	"	1	11	6	1				
A29	Str.	5	4	5	3	"								
A30	(3)	1	4	5	5	"	3	1	0	11 3/8	2	4	2	1 1/2
A31	Str.	5	4	4	11	"								
A32	(3)	1	4	5	1	Wing "A"	2	10	0	11 3/8	2	4	2	1 1/2
A33	(1)	1	4	11	5	Wing "B"	0	8	4	8				
A34	(1)	1	4	12	7	"	0	8	5	3				
A35	(1)	1	4	3	11	"	0	8	5	11				
A36	(1)	1	4	14	3	"	0	8	6	1				
A37	(1)	2	4	16	9	"	1	11	6	1				
A38	Str.	4	4	4	11	"								
A39	Str.	1	4	4	1	"								
A40	(3)	1	4	5	3	"	2	2	1	5 1/4	3	1	2	8 5/8
A41	Str.	4	4	5	3	"								
A42	Str.	1	4	4	5	"								
A43	(3)	1	4	5	7	Wing "B"	2	6	1	5 1/4	3	1	2	8 5/8

TABLE OF ELEVATIONS

POINT	ELEVATION
A	713.022
B	713.045
C	713.342
D	713.365
E	713.359
F	713.382
G	713.178
H	713.201
J	710.022
K	703.022

ESTIMATE OF QUANTITIES

Class "A" Concrete	23.0	cu. yds.
Reinforcement	3053	lbs.
Structure Exc. Com.	58	cu. yds.
Structure Exc. S.R.	12	cu. yds.

MINIMUM LAP DISTANCES

#4 Bars	1'-9"
#5 Bars	2'-2"
#6 Bars	2'-7"

ABUTMENT 2

Bridge over Flat Creek — Sheet 8

COMMONWEALTH OF KENTUCKY
BUREAU OF HIGHWAYS
FRANKFORT
COUNTY OF
BATH
BETHEL-REYNOLDSVILLE RD. (KY. 1106)
ROAD
STATION 9+90 — **P. E. PROJECT NO.**

CONSTRUCTION PROJECT NO.	MAINTENANCE PROJECT NO.	DRAWING NO.
		20348

UPDATE DATE
LETTING DATE

DESIGNED BY J.B.W. CHECKED BY A.W. Frank DATE 8-81 REVISED
DETAILED BY D. Smith CHECKED BY A.W. Frank DATE 8-81 REVISED
TRACED BY CHECKED BY DATE REVISED

N72410

UPDATE DATE

LETTING DATE

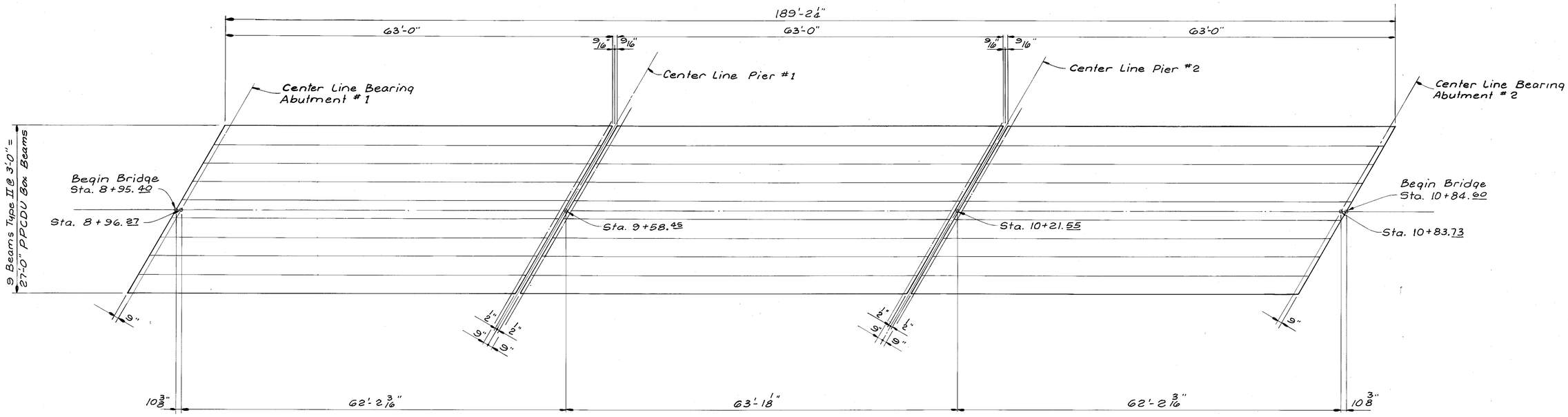

FRAMING PLAN

(All dimensions horizontal and at 60° F.)

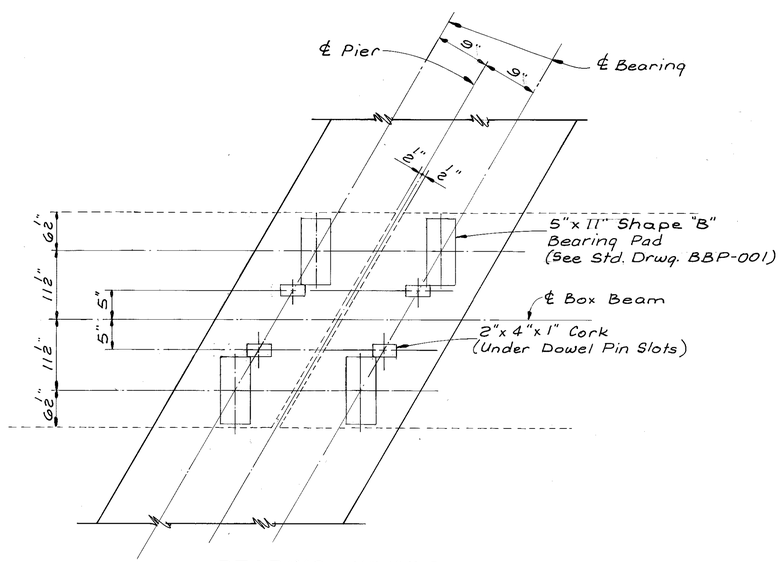

BEARING DETAILS at PIERS

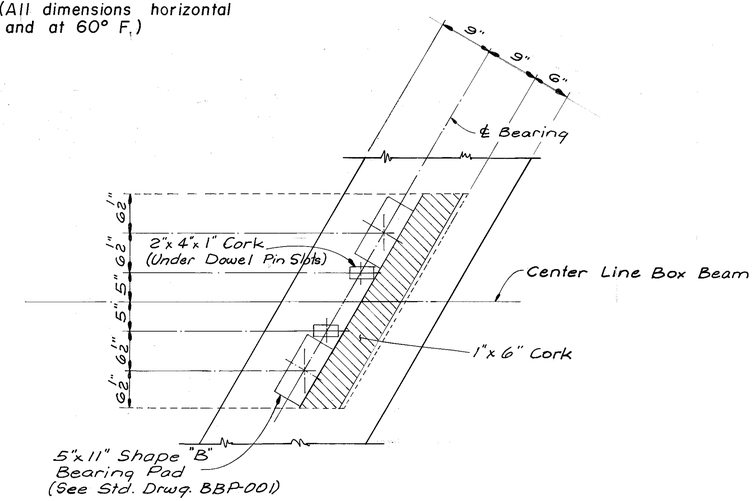

BEARING DETAILS at ABUTMENTS

DESIGNED BY AVF DATE 8-81 CHECKED BY W.H.H.

DETAILED BY S. Holman DATE 8-81 CHECKED BY A.W.F.

TRACED BY DATE CHECKED BY

REVISED DATE

REVISED DATE

REVISED DATE

N72410

Bridge over Flat Creek Sheet 9

COMMONWEALTH OF KENTUCKY
BUREAU OF HIGHWAYS
FRANKFORT
COUNTY OF
BATH
BETHEL-REYNOLDSVILLE RD. KY 1106
ROAD

STATION 9+90	P. E. PROJECT NO.	
CONSTRUCTION PROJECT NO.	MAINTENANCE PROJECT NO.	DRAWING NO. 20348

FRAMING PLAN

BBP-001

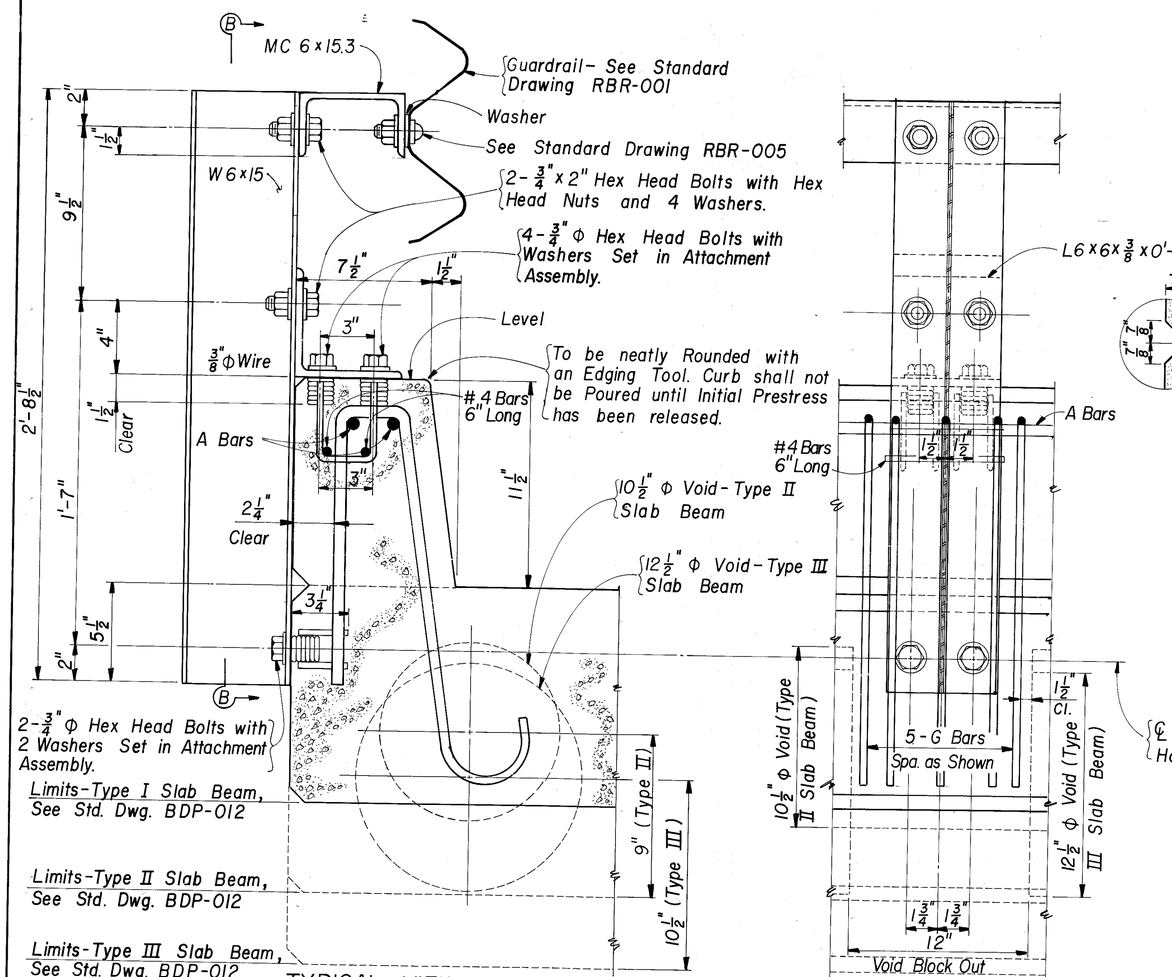

TYPICAL VIEW - SLAB BEAMS
TYPES I, II AND III

SECTION B-B

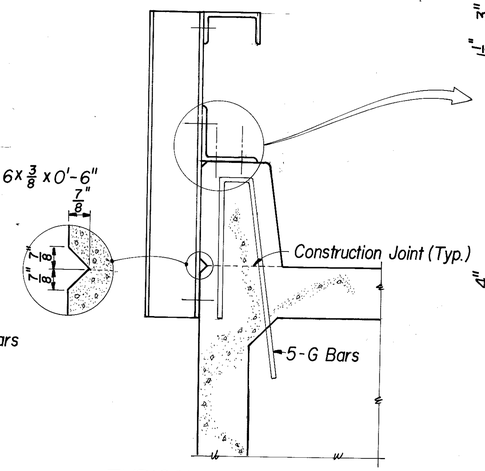

TYPICAL VIEW - BOX BEAMS

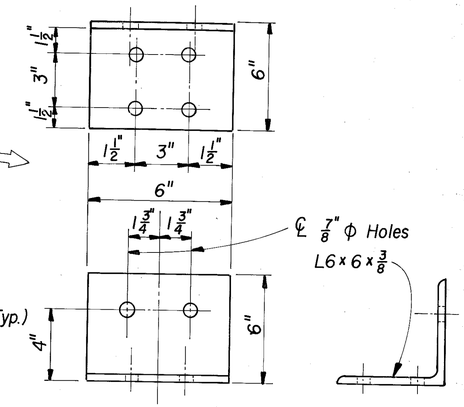

DETAIL - ANGLE CONSTRUCTION

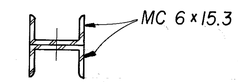

SECTION A-A

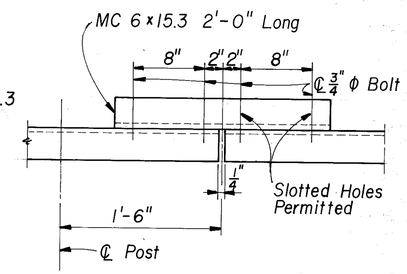

CHANNEL SPLICE DETAIL

NOTE: When Curb Section is Specified, the Curb shall be a Shop Pour using Class "D" Concrete. B Bars and Guardrail Anchorage shall be in place when Casting Prestressed Units. Guardrail System Type II shall be used.

NOTE: Bridge Guardrail is to be Connected to Roadway Guardrail if Roadway Guardrail is Specified. If Roadway Guardrail is not Specified, provide Terminal Section, No. 1. See Std. Dwg. RBR-010

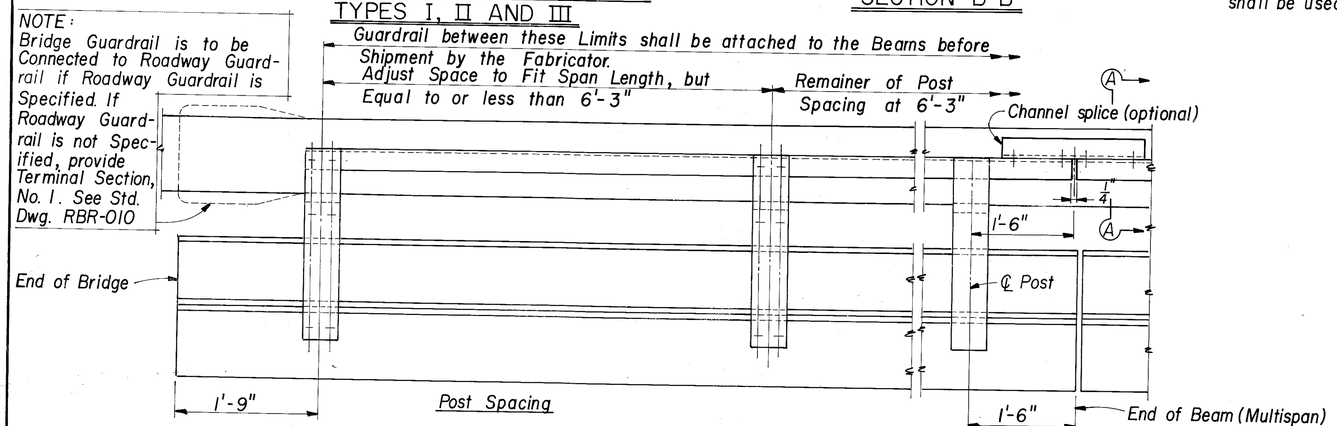

GUARDRAIL - DETAIL "C"

GUARDRAIL SYSTEM TYPE II

Bridge over Flat Creek — Sheet 10

COMMONWEALTH OF KENTUCKY
BUREAU OF HIGHWAYS
FRANKFORT
COUNTY OF
BATH
BETHEL-REYNOLDSVILLE RD. (KY. 1106)
ROAD
STATION 9+90 — **P. E. PROJECT NO.**

CONSTRUCTION PROJECT NO.	MAINTENANCE PROJECT NO.	DRAWING NO.
		20348

UPDATE DATE
LETTING DATE

DESIGNED BY JLP — CHECKED BY BGS — DATE 12-80
DETAILED BY Emeks — CHECKED BY JLP — DATE 12-80
TRACED BY — CHECKED BY — DATE
REVISED Offset block removed & channel relocated BGS 1-81 — DATE
REVISED — DATE
REVISED — DATE

N72410