FED. ROAD DIST.	STATE	PROJ. NO.	FISCAL YEAR	SHEET NO.	TOTAL SHEETS
	KY. & OHIO	I-471-4(7)4		1	

MICROFILMED-71

INDEX OF PLANS

SHEET Nº	TITLE
1	INDEX AND TITLE SHEET
2	GENERAL NOTES
3	GENERAL NOTES AND QUANTITES
4	PLAN AND PROFILE
5	SUPERELEVATION AND CROWN DETAILS
6-8	LOG OF BORINGS
9	HYDROGRAPH
10	GENERAL PLAN - SPANS 1 THRU 7
11	GENERAL PLAN - SPANS 8 THRU 11
12-14	SPANS 6 & 7 - STRUCTURAL STEEL
15	SPANS 6 & 7 - BEARING DETAILS
16	PIER 8 PLATFORM DETAILS
17	MODULAR EXPANSION JOINT AT PIER 6
18	MODULAR EXPANSION JOINT AT PIER 8
19	MODULAR EXPANSION JOINT AT PIER 9
20	PARAPET EXPANSION DETAILS
21	SPANS 6 & 7 - SLAB SECTIONS
22	SPANS 6 & 7 SLAB PLAN
23	SPAN 6 - CONSTRUCTION ELEVATIONS
24	SPAN 7 - CONSTRUCTION ELEVATIONS
25	SPANS 6 & 7 - DRAINAGE DETAILS
26	SPAN 8 - LAYOUT
27	SPAN 8 - TYPICAL CROSS SECTIONS
28	SPAN 8 - MEMBER SECTIONS & GEOMETRY
29	SPAN 8 - STRESS SHEET
30	SPAN 8 - LOAD SHEET
31	SPAN 8 - FRAMING PLAN
32-35	SPAN 8 - ARCH RIB DETAILS
36-39	SPAN 8 - RIB BRACING DETAILS
40-41	SPAN 8 - TIE DETAILS
42	SPAN 8 - HANGER DETAILS
43-44	SPAN 8 - FLOORBEAM DETAILS
45	SPAN 8 - STRINGER DETAILS
46	SPAN 8 - STRINGER & DIAPHRAGM DETAILS
47	SPAN 8 - TELEPHONE CONDUIT DIAPHRAGM DETAILS
48	SPAN 8 - STRINGER EXP. JOINTS & MISC.
49-50	SPAN 8 - INSPECTION WALKS
51	SPAN 8 - PLATFORMS AND LADDERS
52	SPAN 8 - BEARING DETAILS AT PIER 8
53	SPAN 8 - BEARING DETAILS AT PIER 9
54-57	SPAN 8 - SLAB DETAILS
58	SPAN 8 - SLAB REINFORCEMENT & QUANTITIES
59	SPAN 8 - DRAINAGE DETAILS
60-65	SPAN 8 - CONSTRUCTION ELEVATIONS
66	TRIANGULATION NETWORK
67	CONSTRUCTION PERMIT INFORMATION
68	SIGN SUPPORTS
69-72	STANDARD OVERHEAD SIGN SUPPORTS

Revised-Added Sht. 6-8-72 LBB 2357

COMMONWEALTH OF KENTUCKY
STATE OF OHIO
STATE HIGHWAY DEPARTMENTS

PLAN AND PROFILE OF PROPOSED
STATE HIGHWAY
CAMPBELL COUNTY
PROJECT I 471-4 (7) 4
CONTRACT B

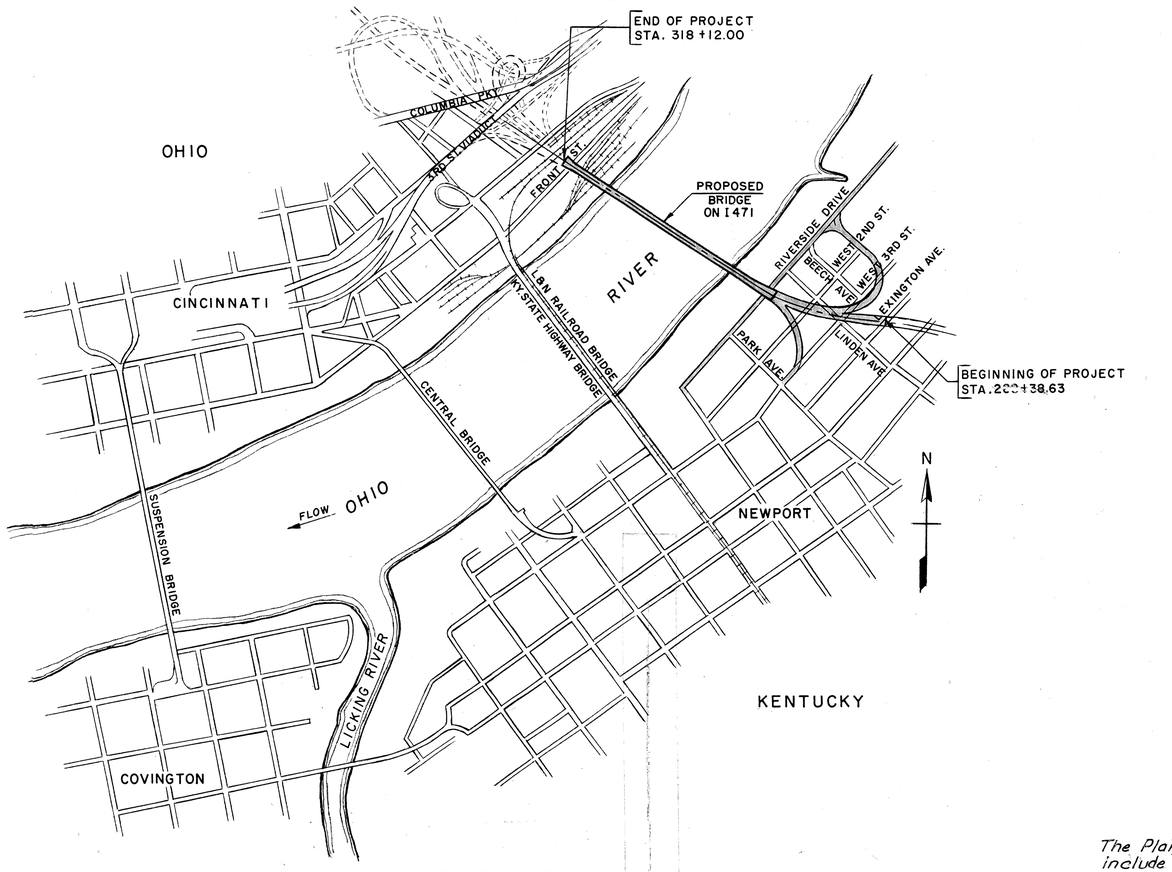

LAYOUT MAP

600 0 600 1200
SCALE IN FEET

GROSS LENGTH _____ LIN FT. _____ MILES
NET LENGTH _____ LIN FT. _____ MILES

RECOMMENDED FOR APPROVAL
HAZELET AND ERDAL
CONSULTING ENGINEERS

BY Lewis G. Hazelet
DATE June 30, 1971

APPROVED BY KENTUCKY DEPARTMENT OF HIGHWAYS

BY C Carter B. Cook
DIRECTOR OF BRIDGES
DATE 7/7/71

BY J. L. Patterson
STATE HIGHWAY ENGINEER
DATE 7/7/71

APPROVED BY OHIO DEPARTMENT OF HIGHWAYS

BY H. L. Kramer
DEPUTY DIRECTOR, DIVISION OF DESIGN AND CONSTRUCTION
DATE 7-9-71

BY J. R. Bradley
DIRECTOR OF HIGHWAYS
DATE 7/13/71

1 OF 72

The Plans for this Project include drawings 18484, 18485 and 18486 and the three sets of drawings shall be worked together.

U.S. DEPARTMENT OF TRANSPORTATION
FEDERAL HIGHWAY ADMINISTRATION

APPROVED
DIVISION ENGINEER DATE

DRAWING NO 18483

FED. ROAD DIST.	STATE	FED. AID PRO. NO.	FISCAL YEAR	SHEET NO.	TOTAL SHEETS
7	KY.	I-471-4(8)4			

DESIGN SPECIFICATIONS: Standard Specifications for Highway Bridges, Tenth Edition, adopted by the American Association of State Highway Officials, 1969, and the Geometric Design Standards for the National System of Interstate and Defense Highways, adopted by the American Association of State Highway Officials July 12, 1956, Revised October 20, 1963, May 15, 1965 and September 15, 1966, as modified by the Design Specifications for this project.

DEAD LOAD: Actual weight plus 20 Lbs per sq. ft. on full width of roadways for future wearing surface. The slab is designed with 1-inch thick monolithic wearing surface. The notation dead load shall include future wearing surface (F.W.S.) unless noted.

LIVE LOAD: Class HS20-44 or alternate loading of two 24,000 lb axles spaced four feet apart, whichever produces the greater stress in the member under consideration.

WIND LOAD: Design wind velocity = 82 m.p.h. (50 lbs per sq. ft.)

PERMISSIBLE UNIT STRESSES: (In lbs. per sq. in.)

Concrete Class AA:
- f'_c = 4,000 psi
- f_c = 1,200 psi
- f_s = 20,000 psi
- u = 200 psi for embedment
- u = 300 psi for Σ_o
- n = 8

A36 Steel:
- Thickness: Up to 8" incl.
- Tension** LL 20,000
  DL 22,000
- Compression: See Design Specifications as modified.
- Bearing** (Milled Parts) LL 29,000
  DL 32,000
- Shear on Fasteners: 13,500 psi for friction type connections (A325 High Strength Bolts.)

A588 Steel:

Thickness:	4" And Under	Over 4" to 5" Incl.	Over 5" to 8" Incl.
Tension: **	LL 27,000	25,000	23,000
	DL 30,000	27,800	25,500
Compression:	See Design Specifications as modified.		
Bearing: **	LL 40,000	37,000	34,000
(Milled Parts)	DL 44,400	41,000	37,800

Shear on Fasteners: 13,500 psi for friction type connections (A325 High Strength Bolts)

A441 Steel:

Thickness:	¾" And Under	Over ¾" to 1½" Incl.	Over 1½" to 4" Incl.
Tension: **	LL 27,000	25,000	23,000
	DL 30,000	27,800	25,500
Compression:	See Design Specifications as modified.		
Bearing: **	LL 40,000	37,000	34,000
(Milled Parts)	DL 44,400	41,000	37,800

Shear on Fasteners: 13,500 psi for friction type connections (A325 High Strength Bolts)

** For members to which the live load is applied directly, the permissible stresses for live load shall be used for dead load also. (See modification to Standard Specifications.)

Class A Bridge Strand: Minimum Breaking Strength:

2¾" Diameter	452 Tons
2⅞" Diameter	494 Tons
3" Diameter	538 Tons

CONSTRUCTION SPECIFICATIONS: Kentucky Department of Highways Standard Specifications for Road and Bridge Construction, current edition, with revisions, Special Notes, and Special Provisions shall apply to this project.

EXISTING CONDITIONS: Piers 6, 7, 8 & 9 for this structure have been or are being constructed under separate contract. The Superstructure Contractor shall arrange his work to match the existing locations (both dimensions and elevations) of the substructure. Any discrepancies between the substructure in place and these Plans shall be called to the attention of the Engineer before proceeding.

ELEVATION DATUM: Mean Sea Level, United States Coast and Geodetic Survey, 1929 General Adjustment.

CONCRETE: Concrete in superstructure, including parapets, shall be Class 'AA'.

SLAB FORMS: Stay-in-Place forms will not be permitted for the concrete bridge floors.

BEVELED EDGES: All exposed edges shall be beveled ⅞" unless otherwise shown.

REINFORCEMENT: Dimensions shown from face of concrete to bars are to center of bars unless noted as clear distance. Spacing of bars is from center to center of bars.

STRUCTURAL STEEL: All shop and field connections shall be high strength (H.S.) bolts (A.S.T.M. A325) unless noted otherwise on the Plans. Holes shall be 1/16" larger than nominal diameter of the bolts unless noted. The size of the bolts shall be as noted on the Plans. All steel shall be the type designated on the Plans. The bolts in the connection shall be placed with the heads on the outside of the member or gusset plate.

PAYMENT FOR STRUCTURAL STEEL: The Lump Sum bid for structural steel shall be full payment for all structural steel, bolts, washers, deck drains, steel pins, cast iron, lead plates, molten lead, Inspection Walk, welding & welding materials, shop detail drawings, paint, and all labor and materials necessary to erect the steel in accordance with the Plans and Specifications. The approximate weight of structural steel shown in the Estimate of Quantities does not include overrun or weld material.

DIMENSIONS: Dimensions shown on the Plans are for a normal temp. of 60°F with dead load without FWS on the structure. Tapes used by the contractor, including the structural steel fabricator and erector, shall have been calibrated correctly with the U.S. Bureau of Standards to insure correct fit of the steelwork.

WELDING NOTES: All groove welds are to be full penetration welds unless otherwise noted. All welds shall be made with an approved automatic process where practicable. The butt and fillet welds of the girders of Spans 6 & 7 shall be inspected in accordance with the AWS Specifications and The Special Notes. See Sheet No 3 for special welding notes for Span 8.

FILLET WELDS: Sizes not shown shall be the minimum fillet weld size as determined by AWS D2.0-69 Article 224 (6) except that the minimum size shall be ¼".

WELD DETAILS: The butt weld symbols indicate only the general type of weld desired. The fabricator shall submit to the Engineer for approval the proposed weld geometry of the welds to be used in fabrication.

PROHIBITED FIELD WELDING: Except as shown on the Plans, no welding of any nature shall be performed on the load carrying members of the bridge without written consent of the Director, Division of Bridges, or his authorized representative, and then only in the manner and at the locations designated in the authorization.

CAMBER: Arch ribs and girders shall be cut to provide camber for full dead load excluding future wearing surface. Floorbeams are to be cambered for full dead load without future wearing surface. Provide for possible warpage of girders due to extra heat in top flange by virtue of shear connectors. Girders which do not conform to plan camber and grade in the erected position shall be considered as requiring, at no additional cost to the State, either an adjustment in depth of the concrete slab haunch over the steel supporting members, or a reworking of the girder camber to meet the plan grade and slab thickness. However, in no case shall the shear connectors be allowed to penetrate the slab less than two inches.

PAINTING STRUCTURAL STEEL: All structural steel shall be cleaned and painted in accordance with Special Provision No. 80 for Blast Cleaning and Painting of Structural Steel, current edition, and as indicated for Span 8.

ERECTION: Erection shall conform with the Standard Specifications and the Special Notes.

MATERIAL: All material shall conform to the ASTM Specifications designated in the Standard Specifications, Special Notes, and/or on the drawings.

GALVANIZING: All galvanizing shall be done in accordance with Article 643.19.3 of the Specifications.

MEMBRANE CURING COMPOUND: White pigmented curing compound shall be applied to the bridge deck in accordance with the Special Provision, except that the membrane compound used shall have a resinous base.

STYRENE-BUTADIENE PROTECTIVE COATING: Styrene-Butadiene Protective Coating shall be applied to the inside face of the parapets, and to the top horizontal surface of the parapets in accordance with the Special Provision.

LINSEED OIL PROTECTIVE COATING: Linseed Oil Protective Coating shall be applied in accordance with the Special Provision, except that it shall only be applied to the bridge deck between the gutter lines and shall not be applied until after the styrene-butadiene protective coating has been applied to the parapets.

CONSTRUCTION IDENTIFICATION: The names of the prime contractor and the sub-contractor shall be imprinted in the concrete with one inch letters at a location designated by the Engineer. The contractor shall furnish all plans, equipment and labor necessary to do the work, for which no direct payment will be made.

PAYMENT FOR SHEAR CONNECTORS: The "Lump Sum Bid" for shear connectors shall be full payment for all shear connectors, welding and welding material, and materials necessary to field weld or shop weld the shear connectors in place according to the plans and specifications.

OPTIONAL TYPES OF SHEAR CONNECTORS:

(a) The contractor shall use one of the following options throughout this structure.
  Option 1 - ¾" x 5" studs
  Option 2 - 5" channel @ 6.7 #

(b) If the contractor wishes to use other than ¾" x 5" stud shear connectors shown on the plans, the proposed arrangement shall be submitted for approval with the shop plans.

STUD WELDING: Studs shall be welded with approved welding equipment.

CONSTRUCTION IDENTIFICATION SIGNS: Two (2) construction identification signs will be required on this project, placed where and as directed by the Engineer.

DRAIN PIPE NOTES: The Drain Pipe shall be 6" ϕ standard weight in accordance with Article 411.3.5 of the Specifications. The pipe, fittings, bracket, and connections shall be included in the unit price per linear foot of 6" ϕ Drain Pipe complete in place. Pipe and brackets shall be painted in accordance with the Special Provision N° 80, current edition.

	DATE	REVISED	DATE
DESIGNED BY	CHECKED BY	REVISED	DATE
DETAILED BY	CHECKED BY	REVISED	DATE
TRACED BY ODY 10/16/70	CHECKED BY WEB	REVISED	DATE 10/70

WEB 6-25-71

SHEET 2

KENTUCKY DEPARTMENT OF HIGHWAYS
OHIO DEPARTMENT OF HIGHWAYS

PROJECT I 471-4 ( )
BRIDGE OVER OHIO RIVER ON I 471
CAMPBELL COUNTY, KENTUCKY
HAMILTON COUNTY, OHIO

HAZELET & ERDAL Consulting Engineers File No. 889	BRIDGE NUMBER	DRAWING NO. 18485	INDEX

GENERAL NOTES

FED. ROAD DIST.	STATE	FED. AID PRO. NO.	FISCAL YEAR	SHEET NO.	TOTAL SHEETS
7	KY.	I471-4(8)4			

SPAN 8 SPECIAL WELDING NOTES: The welding of the arch ribs, ties, floorbeams, bracing, etc. of Span 8 shall be inspected as noted below and/or as noted on the Plans.

All butt welds marked RT are to be radiographically inspected where possible and those that cannot be radiographically inspected are to be ultrasonically inspected subject to the approval of the Engineer.

All butt welds marked RTA are subject to radiographic inspection in accordance with the inspection requirements for Spans 6 & 7.

All butt welds marked MT are to be magnetic particle or ultrasonically inspected.

All fillet welds marked MT are to be magnetic particle inspected. All other fillet welds shall be subject to inspection in accordance with the inspection requirements for Spans 6 & 7.

Butt welds marked PP are partial penetration welds.

SPAN 8 SPECIAL PAINT NOTES: The painting of the structural steel for Span 8 shall be as noted in previous note and as noted below.

The inside of all arch tie box sections sealed by welding shall receive one shop coat primer.

The inside of the entire arch rib, end of tie sections at field connections, and inside areas of tie sections at each floorbeam connection shall be given three shop coats of primer and one field coat of non-leafing aluminum paint. The paint shall not be applied to contact surfaces of the bolted field connections. These connections shall be given three field coats of primer and one field coat of non-leafing aluminum paint.

The following refers to the cleaning and application of shop paint on the insides of the arch rib sections only and all other cleaning and painting shall be performed in accordance with the original specification.

Mechanical brush cleaning may be permitted in lieu of blast cleaning as specified in Special Provision 80, current edition. Mechanical brush cleaning will be accomplished by means of mechanical wire brushes to a quality equal to that depicted in the Pictorial Surface Preparations Standards, B St 2. This treatment shall remove all loose mill scale, rust and foreign matter. Finally, the surface is cleaned with a vacuum cleaner, clean dry compressed air or a clean brush. It should then have a faint metallic sheen.

Care must be exercised to prevent burnishing the metal to a high luster and brush head must be changed as frequently as necessary to prevent worn out, stubby brushes from burnishing the metal. In the event that burnishing does occure in isolated spots, an abrasive disk shall be uitilized to restore normal anchor pattern.

After the initial wire brush cleaning, the fabricator shall inspect and further clean, if necessary, to the quality standards mentioned above. An inspection of the cleaning will be made by a Testing Company Representative, and any corrective work requested by him, will then be performed.

After the cleaning is satisfactorily completed and prior to the formation of any rust bloom, paint shall be applied in the following manner:

1. One coat, brush applied, Red Lead, Type II (Article 661.4.2 of the Kentucky Department of Highways Standard Specifications).
2. Two coats of primer conforming to the requirements of TT-P-615 for Type II. The first coat of 615 primer shall contain 2 ounces of lamp black per gallon. Lamp black shall be omitted from the second coat.
3. Each coat of paint shall have a minimum thickness of 1.5 mills with a total paint thickness of 4.5 mills minimum.

BILLS OF INCIDENTAL MATERIAL: The quantities shown in the Bills of Incidental Material are approximate only, and the Contractor is responsible for furnishing enough material to complete the work in accordance with Plans and Specifications. The cost of these items is to be included in the price bid for the indicated Bid Item.

BILL OF INCIDENTAL MATERIAL

ITEM	PCS.	DESCRIPTION	LOCATION
Preformed Joint Seal.	8	2½" x 2¾" x 54'-3	Steel Strg. Exp. Jts. - Span 8
	16	2½" x 2¾" x 2'-10	Parpet Openings at Strg. Exp. Jts. - Span 8
(Included in the unit price for Concrete, class "AA")			

SPAN 8 BRIDGE STRAND PAINT NOTE:

The individual wires comprising the strand are to receive a zinc coating as detailed in the Special Notes and this zinc coating is intended to serve as the shop coat of primer normally required for structural steel.

No blast cleaning of the zinc coated surfaces will be permitted.

After strands are erected in the ultimate location in the structure, field painting will be required with the zinc coated surfaces prepared for painting as required by Section III A-4 of Special Provision No. 80-A, "Painting of Galvanized Surfaces." Following the sequence of preparation, the strands shall receive one field coat of primer paint, one field coat of non-leafing aluminum paint, and one field coat of leafing aluminum paint which shall complete the painting of the strands. All paint and painting will be in compliance with requirements of Special Provision No. 80-A.

ESTIMATE OF QUANTITIES

ITEM	UNIT	SPANS 6 & 7	SPAN 8 (KENTUCKY)	SPAN 8 (OHIO)	TOTAL
Concrete, Class "AA"	Cu. Yds.	2,090.3	2,470.8	262	4,823.1
Steel Reinforcement	Lbs.	497,590	655,744	69,600	1,222,934
Structural Steel - Spans 6 & 7	Lump Sum	L.S.	——	——	L.S. ①
Structural Steel - Span 8	Lump Sum	——	L.S.	L.S.	L.S. ①
Shear Connectors ⑪	Lump Sum	L.S.	——	——	L.S.
6"ϕ Drain Pipe	Lin.Ft	336	814	86	1,236
Modular Expansion Joint At Pier 6	Lump Sum	L.S.	——	——	L.S.
Modular Expansion Joint At Pier 8	Lump Sum	——	L.S.	——	L.S.
Modular Expansion Joint At Pier 9	Lump Sum	——	——	L.S	L.S.
Protective Coating "A" ②	Gal.	46	60	8	114
Protective Coating "B" ③	Sq. Yds.	6,150	7,824	830	14,804
Telephone Conduit ⑨⑩	—				—
Lighting (Roadway and Navigation) ⑩	④				
Overhead Sign Supports ⑫	Lump Sum				

① The Bid Items "Structural Steel - Spans 6 & 7" and Structural Steel - Span 8" includes the approximate estimated weights (in pounds) shown in the following table.
② Styrene - Butadiene Protective Coating.
③ Linseed Oil Protective Coating.
④ For breakdown of Lighting Bid Items and Quantities, see Drwg 18484, sheet 67
⑪ The Bid Item "Shear Connectors" includes approx. 6112.16 Stud Shear Connectors.
⑨ Non-Participation Item (Indicates non-participation of Federal Funds.)
⑩ These Items for entire bridge shown on Drawing No. 18484

ESTIMATED STRUCTURAL STEEL ⑧

TYPE STEEL	SPANS 6 & 7	SPAN 8 (KENTUCKY)	SPAN 8 (OHIO)	TOTAL
A588	1,660,640	3,725,950	394,540	5,781,130
A441	——	2,697,160	286,280	2,983,440
A36 ⑤	1,851,540	3,163,400	333,540	5,348,480
Bridge Strand ⑥	——	235,560	25,020	260,580
Bridge Shoes ⑦	52,030	143,740	15,260	211,030
Drain Castings	13,280	34,520	3,660	51,460
Bearing Bars & Pin Blocks ⑬		8,750	3,160	11,910
Total	3,577,490	10,009,080	1,061,460	14,648,030

⑤ Includes grating and H.S. bolts.
⑥ Includes sockets and pins.
⑦ Contains various types of steel.
⑧ These weights do not include any allowance for overrun for plates wider than 36 inches.
A588 steel may be used wherever A441 steel is called for in these plans.
A441 steel may be substituted for A588 plates ¾" or less in thickness.

The non-participating weight of structural steel included in Telephone Conduit is shown on sheet 3 of Drawing 18484.

⑫ Sign Support bridges may be of the following optional types:
1. Aluminum, see Sheets 69 & 70
2. Galvanized Steel, see Sheets 71 & 72

⑬ Bearing Bars, greater than 4" thick only, see Note E, sheet 35 for optional type of steel.

GENERAL NOTES AND QUANTITIES

REFERENCES

Note: The Standard Drawings listed below are the Current Edition and are to be used with these Plans.

AE2D Standard Armored Edge for Joints in Concrete.
G353F Preformed Joint Seal Details for Concrete Bridge Floors.
AWS-3 Modifications and Additions to AWS D2.0-69 Specifications.

SPECIAL PROVISIONS

No. 6-B For Staking.
No. 7-A For Construction Identification Signs on Federal-Aid Highway Projects.
No. 8-A For Linseed Oil Protective Coating.
No. 15 Relating to Bid Proposal Guaranty and Contract Bonds.
No. 30-B Membrane Curing of Concrete Structures.
No. 35-B For Class 'AA' Concrete.
No. 37-B For Preformed Compression Joint Seals.
No. 46-C Water Pollution Controls.
No. 77-B For Styrene-Butadiene Protective Coating.
No. 79 Concrete Bridge Deck Finishing Machine.
No. 80-B Blast Cleaning and Painting Structural Steel (Alkyd System).
No. 82-A Roadway Lighting Systems.
No. 36-A For Set-Retarding Admixtures for Concrete.
No. 83 Partial Payment.
No. 90-A Contract Time

Plus: Special Notes for Bridge Construction
Special Notes for Bridge Deck Construction.

PR1273 (Rev. 10-69) Required Contract Provisions.

Chronological Listing of Revisions to the 1965 Edition of the Standard Specifications.

DESIGNED BY ..... DATE .....
DETAILED BY M.K. 10-16-70 CHECKED BY ..... DATE 10-70
TRACED BY ..... CHECKED BY ..... DATE .....
REVISED Added Overhead Sign Supports (Sheet 2) DATE 5-5-71
REVISED Structural Steel Quantity (A36) DATE 5-20-71
REVISED Structural Steel Quantity DATE 6-25-71

SHEET 3

KENTUCKY DEPARTMENT OF HIGHWAYS
OHIO DEPARTMENT OF HIGHWAYS
PROJECT I 471-4 ( )
BRIDGE OVER OHIO RIVER ON I 471
CAMPBELL COUNTY, KENTUCKY
HAMILTON COUNTY, OHIO

HAZELET & ERDAL Consulting Engineers File No. 889	BRIDGE NUMBER	DRAWING NO. 18485	INDEX

FED. ROAD DIST.	STATE	FED. AID PRO. NO.	FISCAL YEAR	SHEET NO.	TOTAL SHEETS
7	KY.	I471-4(8)4			

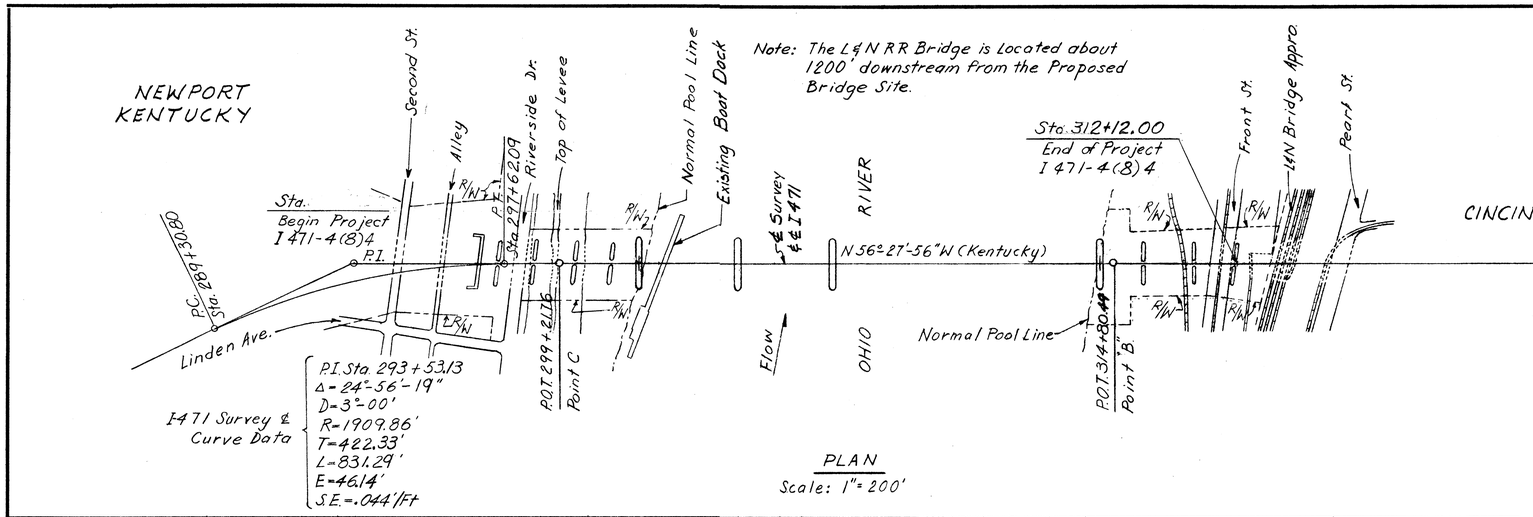

PLAN
Scale: 1" = 200'

Note:
℄ Survey ℄ I 471 bearing N56°-27'-56" W (Kentucky) equals bearing N55°-19'-56" W (Ohio).

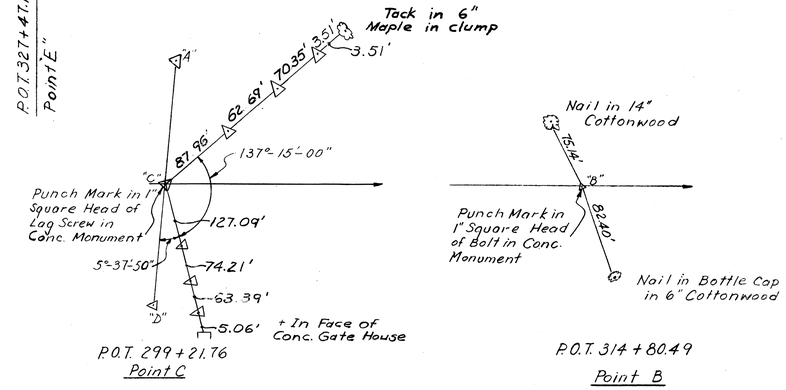

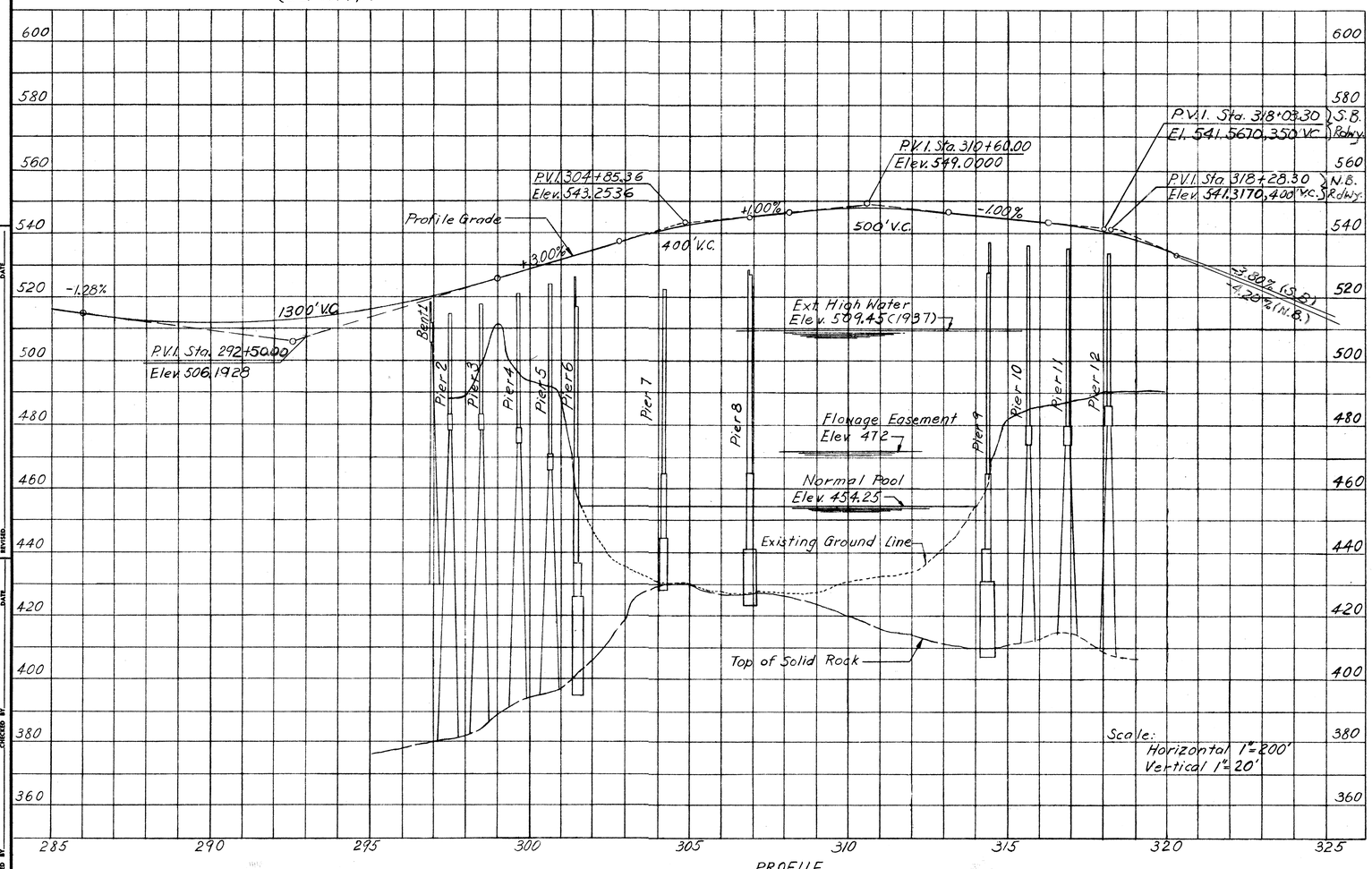

PROFILE

BENCH MARKS

KENTUCKY G142 Elev. 490.800
A Bronze Disk established by U.S.C.&G.S. and stamped G142 1949. Located in Newport at the concrete floodwall, at the foot of Saratoga Street, southwest of the Louisville and Nashville R R Bridge over the Ohio River. Set vertically 1.5 feet above ground and 20 feet below top of wall in southeast face of the concrete floodwall 15 feet southwest of the southwest edge of bridge.

OHIO Z4 Elev. 490.626
A chisel cut on the end of a 3/8 inch brass bolt, leaded horizontally and surrounded by the letters "U S C & G S". Located in Cincinnati, at the northeast corner of Front and Butler Streets, at the west end of a pier of the Louisville and Nashville R R Bridge over the Ohio River. Set in the third course above ground, 10 inches north of south face and 44 feet above the pavement

Note:
Elevations Refer to Mean Sea Level.
U.S.C.&G.S. - 1929 General Adjustment.
See ROW drawings for right of way and for the limits of temporary construction easements.

SHEET 4

KENTUCKY DEPARTMENT OF HIGHWAYS
OHIO DEPARTMENT OF HIGHWAYS
PROJECT I 471-4 ( )
BRIDGE OVER OHIO RIVER ON I 471
CAMPBELL COUNTY, KENTUCKY
HAMILTON COUNTY, OHIO

PLAN & PROFILE

HAZELET & ERDAL Consulting Engineers File No. 889	BRIDGE NUMBER	DRAWING NO. 18485	INDEX

DESIGNED BY MW CHECKED BY WAB DATE 10-70
DETAILED BY MW CHECKED BY WAB DATE
TRACED BY CHECKED BY DATE
REVISED DATE
REVISED DATE
REVISED DATE

WAB 6-25-71

FED. ROAD DIST.	STATE	FED. AID PROJ. NO.	FISCAL YEAR	SHEET NO.	TOTAL SHEETS
7	KY.	I471-4(8)4			

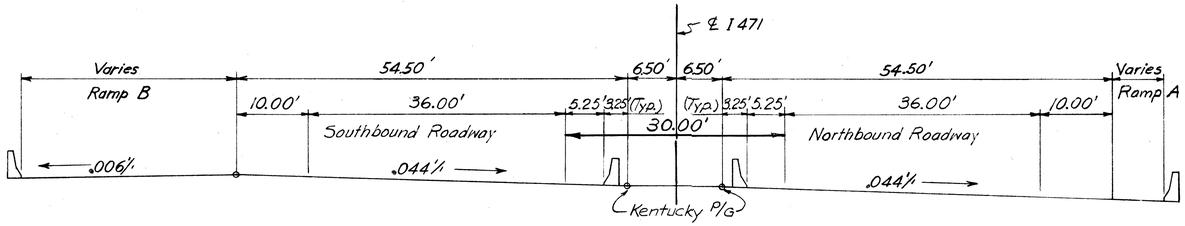

STA. 296 + 75.00 Thru
STA. 297 + 62.09. (P.T.)

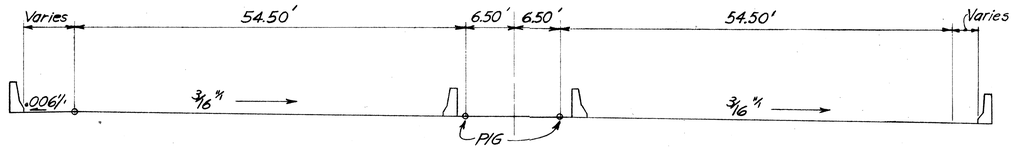

STA. 299 + 66.57

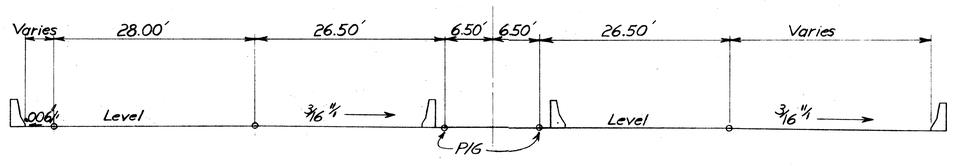

STA. 300 + 78.89

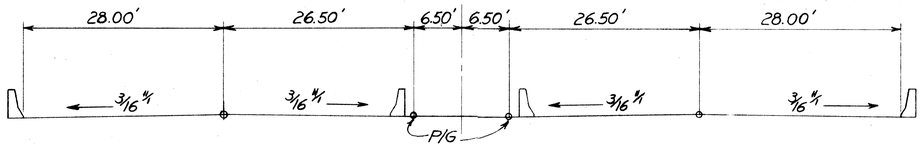

STA. 301+91.21 Thru
STA. 314 + 45.25 (℄ Brg.-Span 9)

Note: Cross slopes vary uniformly between stations shown.

ARCH SPAN ℄ KENTUCKY APPROACH

Looking in direction of increasing stationing

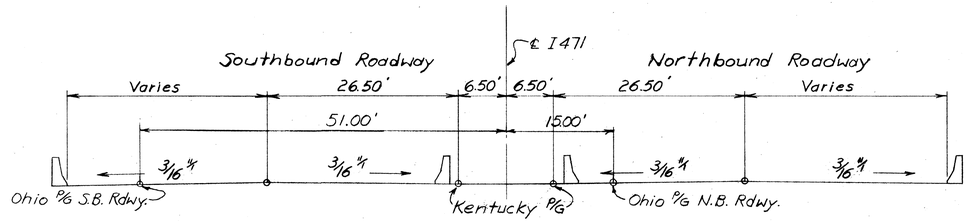

STA. 314 + 45.25 (℄ Brg.-Span 9)
THRU
STA 318 + 12.00 (End of Cantilever - Pier 12)

Note: The Kentucky Profile Grades are used for the project and the elevations are as shown on the Plan and Profile drawing. The elevations of the Ohio Profile Grades are 0.133 feet higher than the Kentucky Profile Grade elevations.

OHIO APPROACH

Looking in direction of increasing stationing

DESIGNED BY ____ DATE ____
DETAILED BY ODV DATE 10-70
CHECKED BY WJB DATE ____
CHECKED BY ____ DATE ____
TRACED BY ____ DATE ____
REVISED ____ DATE ____
REVISED ____ DATE ____

WJB 6-25-71

SHEET 5

SUPERELEVATION AND CROWN DETAILS

KENTUCKY DEPARTMENT OF HIGHWAYS
OHIO DEPARTMENT OF HIGHWAYS
PROJECT 1471-4 ( )
BRIDGE OVER OHIO RIVER ON I 471
CAMPBELL COUNTY, KENTUCKY
HAMILTON COUNTY, OHIO

HAZELET & ERDAL
Consulting Engineers
File No. 889

BRIDGE NUMBER

DRAWING NO. 18485

INDEX

FED. ROAD DIST.	STATE	FED. AID PRO. NO.	FISCAL YEAR	SHEET NO.	TOTAL SHEETS
7	KY.	I471-4(8)4			

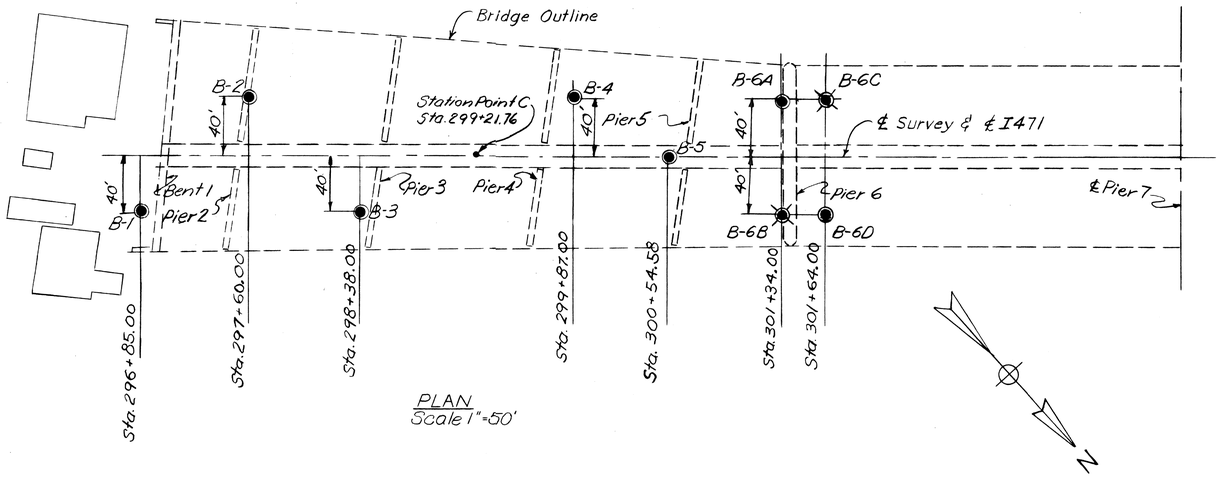

PLAN
Scale 1"=50'

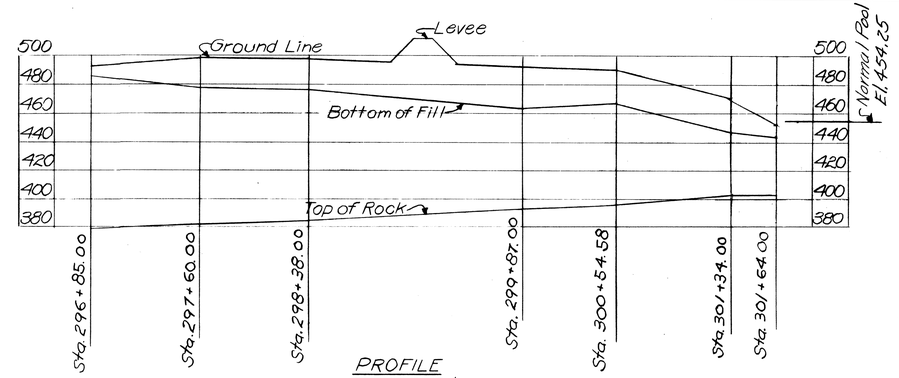

PROFILE
Scale 1"=50'

NOTES:

Number in circle indicates number of blows of 140 Lb. hammer dropped 30 inches required to drive a 2 inch split-spoon sampler 1.0 Ft. (unless otherwise indicated) after first seating the split-spoon sampler by driving it 6 inches.

Per centage numbers indicate % core recovery.

◉ = Borings to rock

◉ = Borings drilled 20' into rock

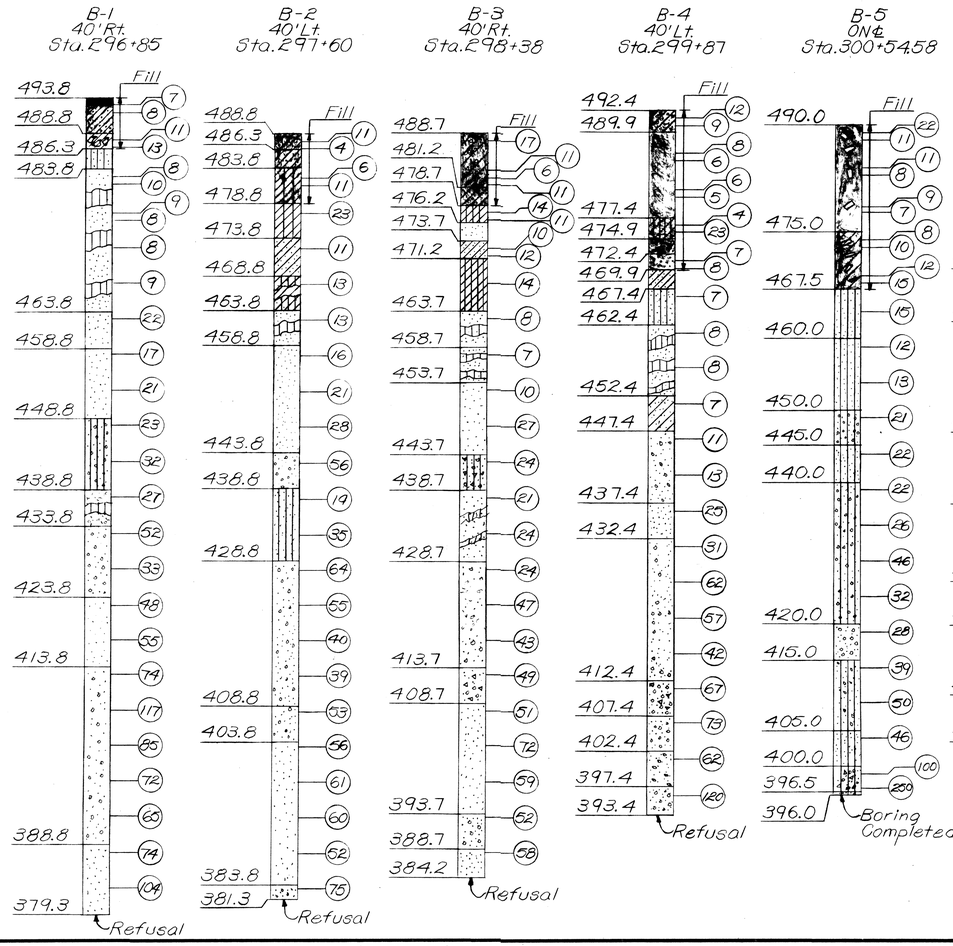

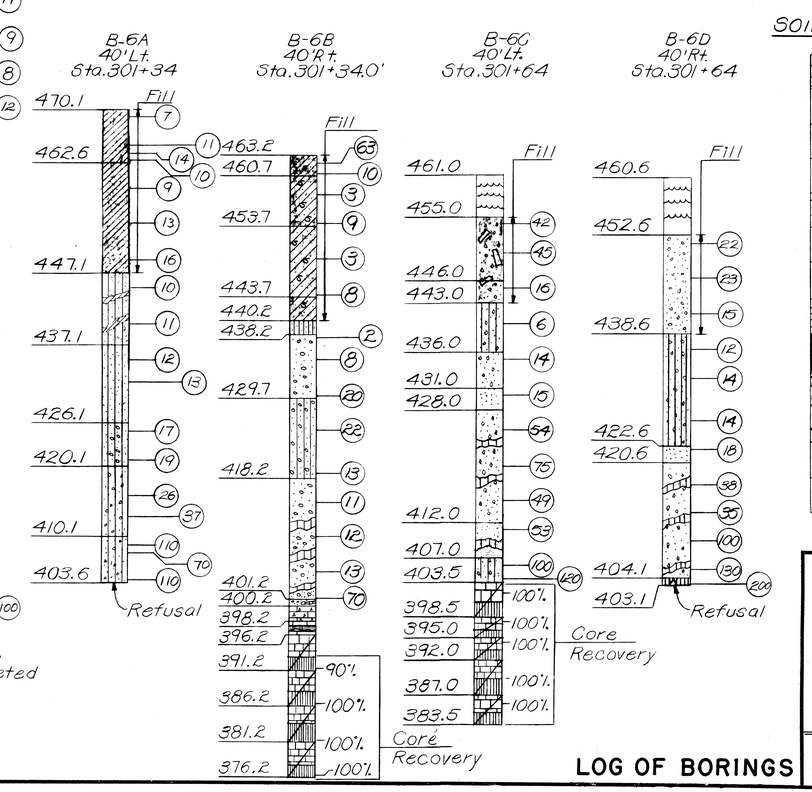

SOIL TYPE LEGEND

- Water – Surface Elev. shown at time drilling was performed.
- Sand
- Gravel
- Limestone Fragments
- Limestone
- Gray Shale
- Silt
- Clay
- Top Soil
- Cinders
- Bricks
- W – Indicates some Weathering or Weathered zones
- S – Slag

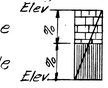

Interbedded Gray Limestone and Gray Shale. Approx. % Limestone and % Shale as Shown to Scale.

SHEET 6

KENTUCKY DEPARTMENT OF HIGHWAYS
OHIO DEPARTMENT OF HIGHWAYS

PROJECT 1471-4 ( )
BRIDGE OVER OHIO RIVER ON I 471

CAMPBELL COUNTY, KENTUCKY
HAMILTON COUNTY, OHIO

HAZELET & ERDAL Consulting Engineers File No. 889 | BRIDGE NUMBER | DRAWING NO. 18485 | INDEX

LOG OF BORINGS

DESIGNED BY ____ CHECKED BY ____ DATE ____ REVISED ____ DATE ____
DETAILED BY M.K. CHECKED BY ____ DATE 4-67 REVISED ____ DATE ____
TRACED BY ____ CHECKED BY ____ DATE 10-70 REVISED ____ DATE ____
W78 6-25-71

FED. ROAD DIST.	STATE	FED. AID PRO. NO.	FISCAL YEAR	SHEET NO.	TOTAL SHEETS
7	KY.	I471-4(8)4			

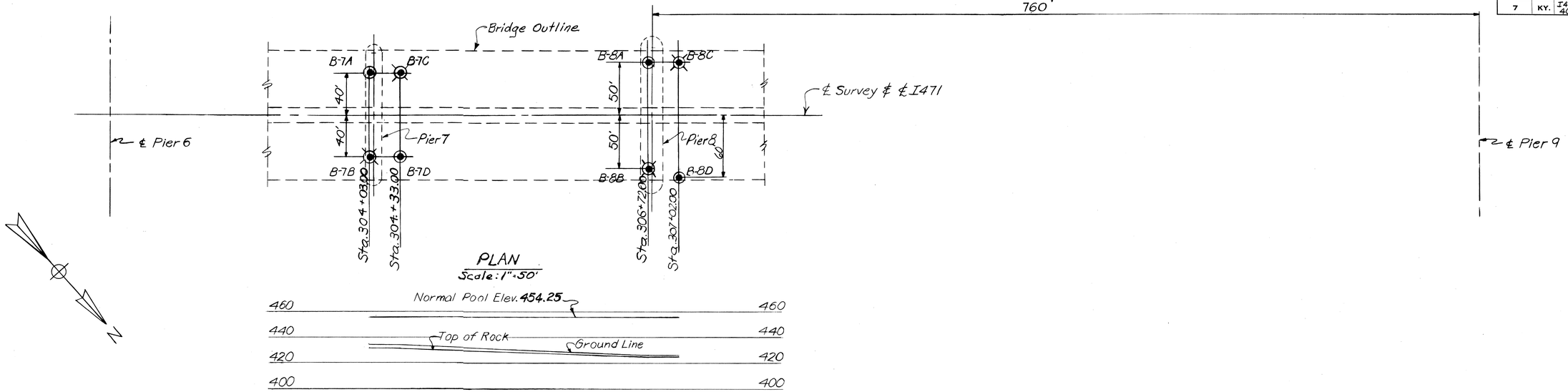

PLAN
Scale: 1" = 50'

NOTES:

Number in circle indicates number of blows of 140 Lb. hammer dropped 30 inches required to drive a 2 inch split-spoon sampler 1.0' ft. (unless otherwise indicated) after first seating the split-spoon sampler by driving it 6 inches.

Percentage number indicates % core recovery.

◉ = Borings to rock

◉ = Borings drilled 20' into rock

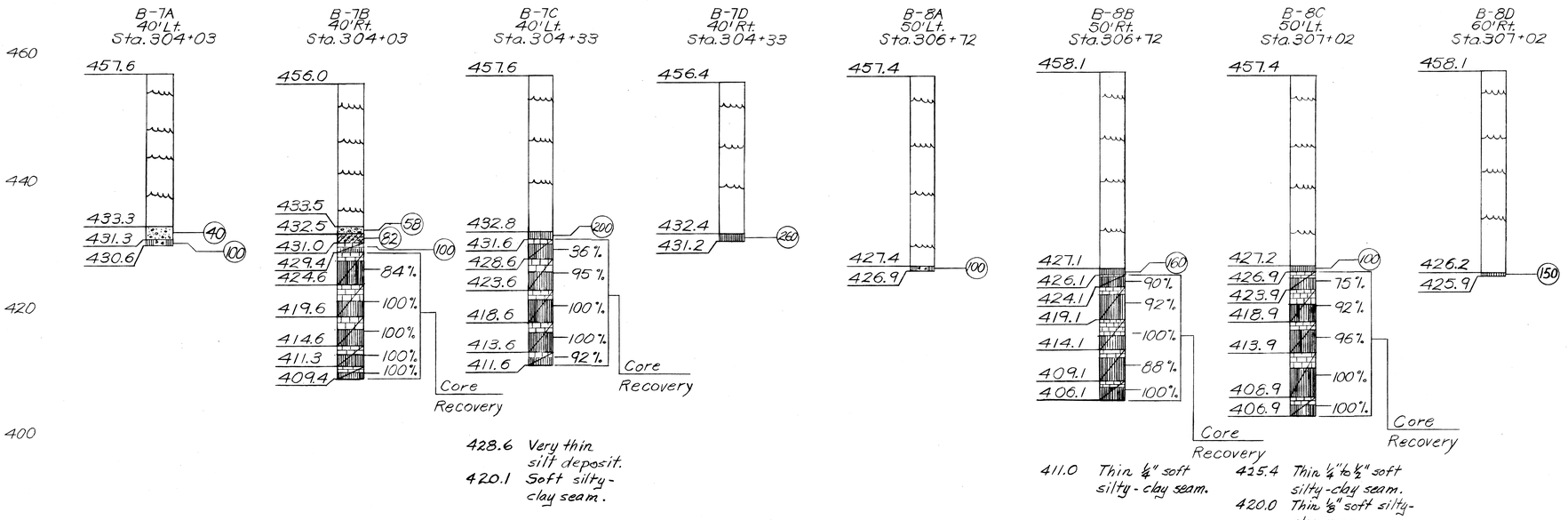

428.6 Very thin silt deposit.
420.1 Soft silty-clay seam.

411.0 Thin ¼" soft silty-clay seam.

425.4 Thin ¼" to ½" soft silty-clay seam.
420.0 Thin ⅛" soft silty-clay seam.

SOIL TYPE LEGEND

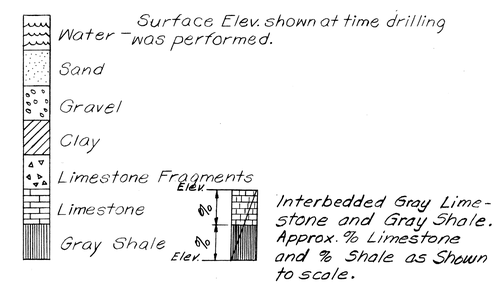

SHEET 7

KENTUCKY DEPARTMENT OF HIGHWAYS
OHIO DEPARTMENT OF HIGHWAYS

PROJECT I471-4 ( )
BRIDGE OVER OHIO RIVER ON I 471

CAMPBELL COUNTY, KENTUCKY
HAMILTON COUNTY, OHIO

HAZELET & ERDAL Consulting Engineers File No. 889	BRIDGE NUMBER	DRAWING NO. 18485	INDEX

LOG OF BORINGS

DESIGNED BY ___ CHECKED BY ___ DATE ___ REVISED ___ DATE ___
DETAILED BY MK CHECKED BY HWT DATE 4/67 REVISED ___ DATE ___
TRACED BY ___ CHECKED BY ___ DATE 10-70 REVISED ___ DATE ___

WAB 6-25-71

FED. ROAD DIST.	STATE	FED. AID PRO. NO.	FISCAL YEAR	SHEET NO.	TOTAL SHEETS
7	KY.	I-471-4(8)4			

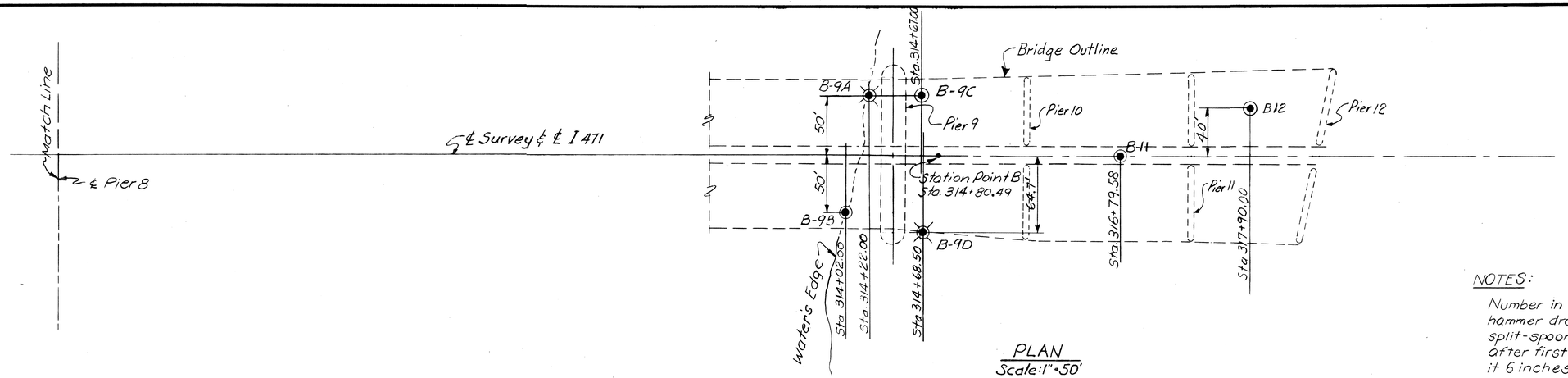

PLAN
Scale: 1" = 50'

NOTES:

Number in circle indicates number of blows of 140 Lb. hammer dropped 30 inches required to drive a 2 inch split-spoon sampler 1.0 ft. (unless otherwise indicated) after first seating the split-spoon sampler by driving it 6 inches.

Percentage number indicates % core recovery.

◉ = Borings to rock

◉ = Borings drilled 20' into rock

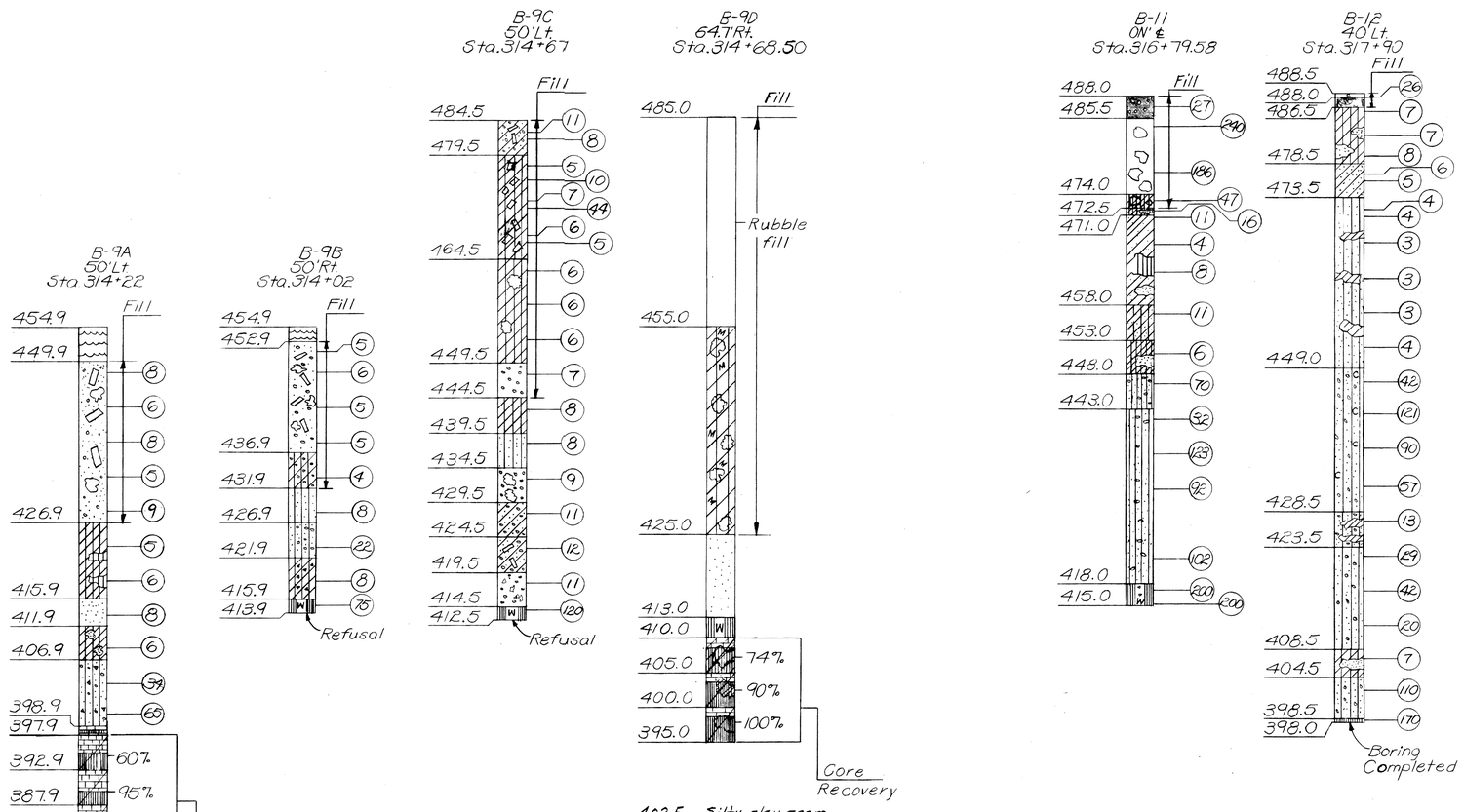

402.5 Silty clay seam.

Elev. 410.0 to ? Elev. 395.0 } Fractures Evidenced in Limestone.

SOIL TYPE LEGEND

- Water — Surface Elev. shown at time drilling was performed.
- Sand
- Gravel
- Limestone Fragments
- Limestone
- Gray Shale
- Silt
- Clay
- Cinders
- Brick
- Wood
- C — Cobblestones
- M — Metal
- Concrete ℄/or Boulders
- Sandstone
- W — Indicates some Weathering or Weathered zones

Elev. 20 / 0 — Interbedded Gray Limestone and Gray Shale. Approx. % Limestone and % Shale as Shown to scale.

SHEET 8

KENTUCKY DEPARTMENT OF HIGHWAYS
OHIO DEPARTMENT OF HIGHWAYS

PROJECT 1471-4 ( )
BRIDGE OVER OHIO RIVER ON I 471
CAMPBELL COUNTY, KENTUCKY
HAMILTON COUNTY, OHIO

HAZELET & ERDAL Consulting Engineers File No. 889	BRIDGE NUMBER	DRAWING NO. 18485	INDEX

LOG OF BORINGS

DESIGNED BY ... DATE ...
DETAILED BY M.K. CHECKED BY ... DATE ...
TRACED BY ... CHECKED BY ... DATE ...
REVISED ... DATE ...
REVISED ... DATE ...
DATE 4-67 DATE 6-70
CHECKED BY H.T. 1 OF 8

W.O. 6-25-71

FED. ROAD DIST.	STATE	FED. AID PRO. NO.	FISCAL YEAR	SHEET NO.	TOTAL SHEETS
7	KY.	I471-4(8)4			

The data for this hydrograph was reduced from gage readings and hydrographs made by the Corps. of Engineers U.S. Army, at the following Locations:

Lock & Dam No. 36
Lock & Dam No. 37
U.S. Weather Bureau (in Cincinnati)
Southern R.R. Bridge (near Mill Creek)
Suspension Bridge (Cincinnati to Covington)

Markland Locks and Dam, with an Upper Pool Elevation of 455.0 (Ohio River Datum) is located very near former Lock and Dam No. 39 and inundates Dams No. 36 and No. 37. Upper Pool Elevation 455.0 at Markland Locks and Dam is Normal Pool Elevation at the proposed bridge site. Therefore, only high water above Normal Pool Elevation 455.0 was plotted. The hydrograph at the proposed bridge site was obtained by interpolation of hydrographs at Dams No. 36 and No. 37 for the years 1923 thru 1939. From 1940, the hydrograph was plotted from the gage readings taken in Cincinnati.

Elevations shown on the hydrograph are on Ohio River Datum. To adjust to U.S.C. & G.S. Datum, 1929 General Adjustment, subtract 0.75 foot.

Lock & Dam Location

Lock & Dam	River Mile
No. 36	460.9
Suspension Bridge	470.5
USWB	471.2
Southern R.R. Bridge	472.3
No. 37	483.2
Markland Dam	531.5
Proposed Bridge Site	469.5

HYDROGRAPH

SHEET 9

KENTUCKY DEPARTMENT OF HIGHWAYS
OHIO DEPARTMENT OF HIGHWAYS

PROJECT 1471-4 ( )
BRIDGE OVER OHIO RIVER ON I 471
CAMPBELL COUNTY, KENTUCKY
HAMILTON COUNTY, OHIO

HAZELET & ERDAL Consulting Engineers File No. 889	BRIDGE NUMBER	DRAWING NO. 18485	INDEX

DESIGNED BY _____ DATE _____ REVISED _____ DATE _____
DETAILED BY MK & HT CHECKED BY RT & WEB DATE 5-67 REVISED _____ DATE _____
TRACED BY _____ CHECKED BY WHB DATE 6-70 REVISED _____ DATE _____
WHB 6-25-71

FED. ROAD DIST.	STATE	FED. AID PRO. NO.	FISCAL YEAR	SHEET NO.	TOTAL SHEETS
7	KY.	I471-4(8)4			

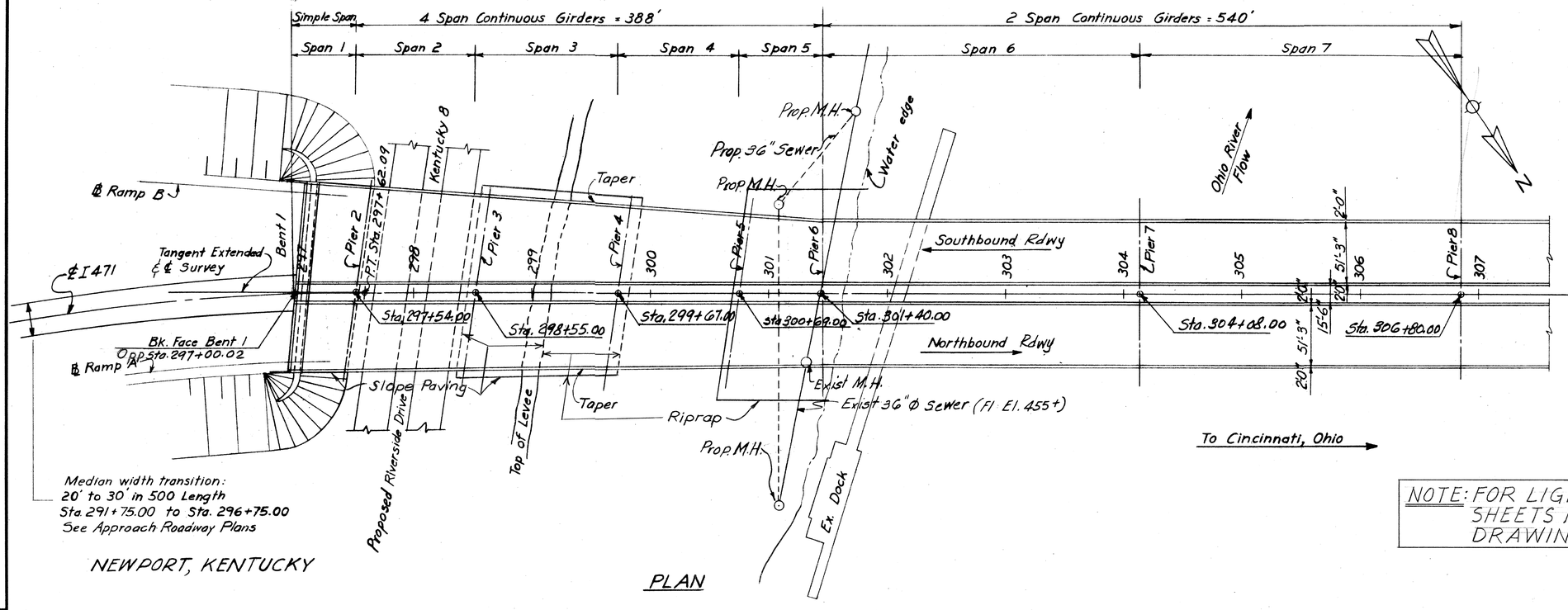

PLAN

NOTE: FOR LIGHTING DETAILS SEE SHEETS NO. 62 THRU 67 OF DRAWING NO. 18484

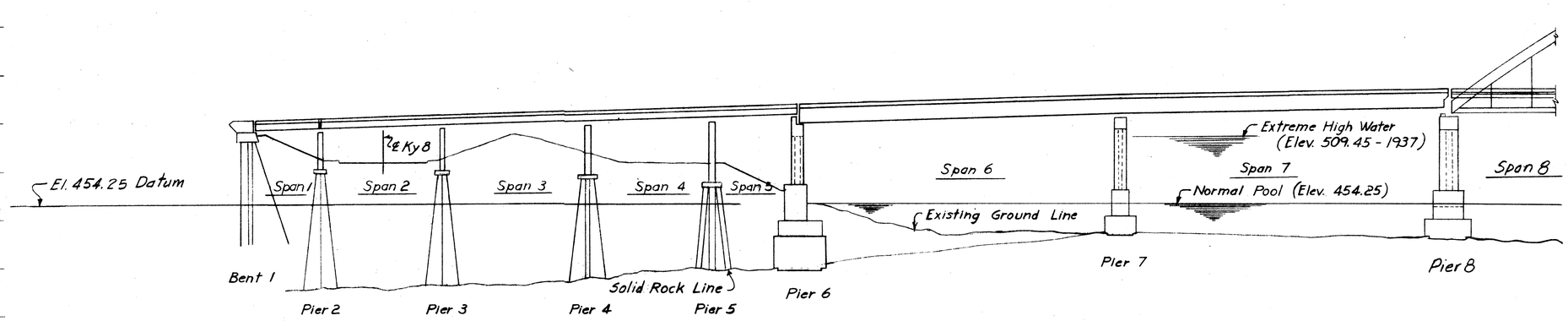

ELEVATION

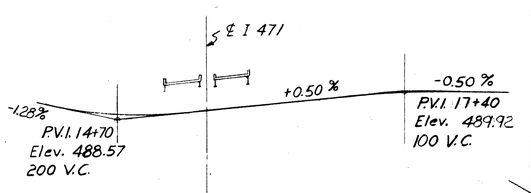

PROFILE RIVERSIDE DRIVE

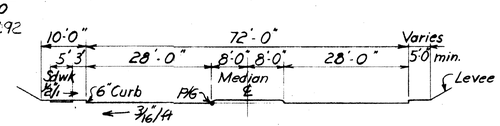

CROSS SECTION

KENTUCKY 8 (RIVERSIDE DRIVE) DATA

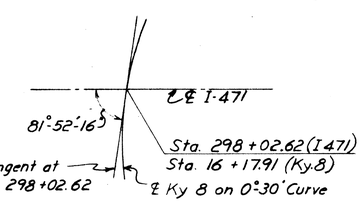

ALIGNMENT DATA

KENTUCKY 8 CURVE DATA

P.I. = 14+51.75
Δ = 3°-43'-40"
D = 0°-30'
R = 11459.16
T = 372.91
L = 745.56
E = 5.07

Work Sheets 10 & 11 Together

SHEET 10

KENTUCKY DEPARTMENT OF HIGHWAYS
OHIO DEPARTMENT OF HIGHWAYS

PROJECT I471-4 ( )
BRIDGE OVER OHIO RIVER ON I 471
CAMPBELL COUNTY, KENTUCKY
HAMILTON COUNTY, OHIO

GENERAL PLAN
SPANS 1 THRU 7

HAZELET & ERDAL Consulting Engineers File No. 889	BRIDGE NUMBER	DRAWING NO. 18485	INDEX

DESIGNED BY: CHECKED BY: DATE
DETAILED BY: CHECKED BY: DATE
TRACED BY: CHECKED BY: DATE
REVISED: P.T. Station CSB DATE 1-13-72
REVISED: DATE
REVISED: DATE
WHB 6-25-71

FED. ROAD DIST.	STATE	FED. AID PRO. NO.	FISCAL YEAR	SHEET NO.	TOTAL SHEETS
7	KY.	I471-4(8)4			

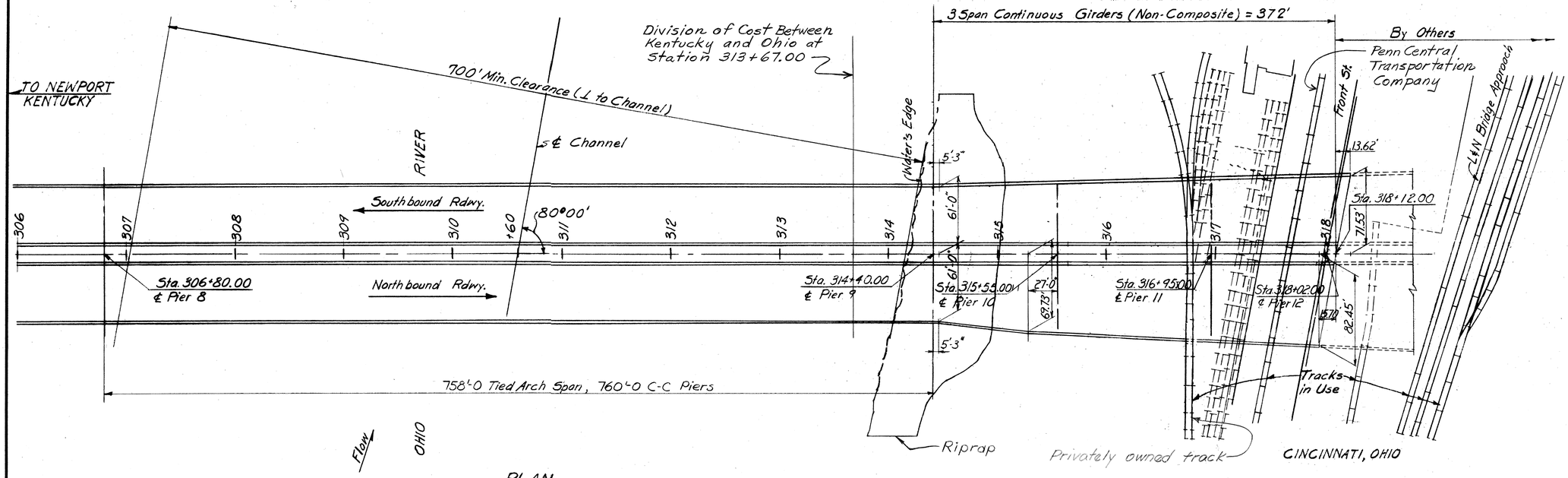

PLAN

Note:
All material stored between the R/W lines and between the Ohio River and Front St. is to be removed by others.
All railroad tracks in the above area, except the two currently in use near Pier 11, are to be removed by others.

Abandoned Tracks (Typ.)
(Most are covered with junk)

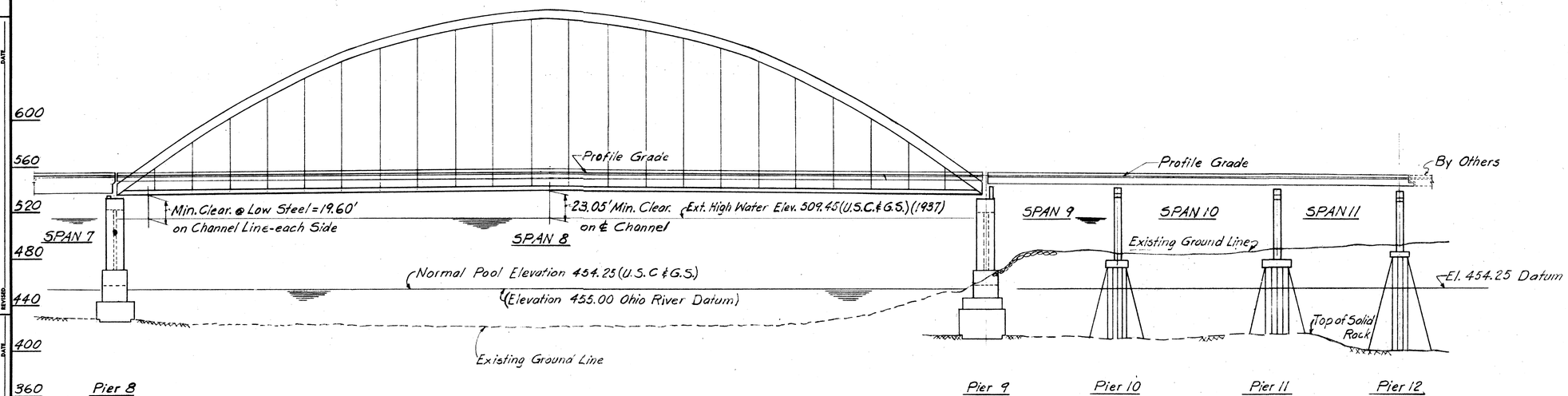

ELEVATION

Work Sheets 10 & 11 Together
SHEET 11

KENTUCKY DEPARTMENT OF HIGHWAYS
OHIO DEPARTMENT OF HIGHWAYS
PROJECT I471-4 ( )
BRIDGE OVER OHIO RIVER ON I 471
CAMPBELL COUNTY, KENTUCKY
HAMILTON COUNTY, OHIO

GENERAL PLAN
SPANS 8 THRU 11

HAZELET & ERDAL Consulting Engineers File No. 889	BRIDGE NUMBER	DRAWING NO. 18485	INDEX

DESIGNED BY JCE CHECKED BY WFB DATE 10-70
DETAILED BY CHECKED BY DATE
TRACED BY CHECKED BY DATE
REVISED DATE
REVISED DATE
REVISED DATE

WFB 6-25-71

FED. ROAD DIST.	STATE	FED. AID PRO. NO.	FISCAL YEAR	SHEET NO.	TOTAL SHEETS
7	KY.	I471-4(8)4			

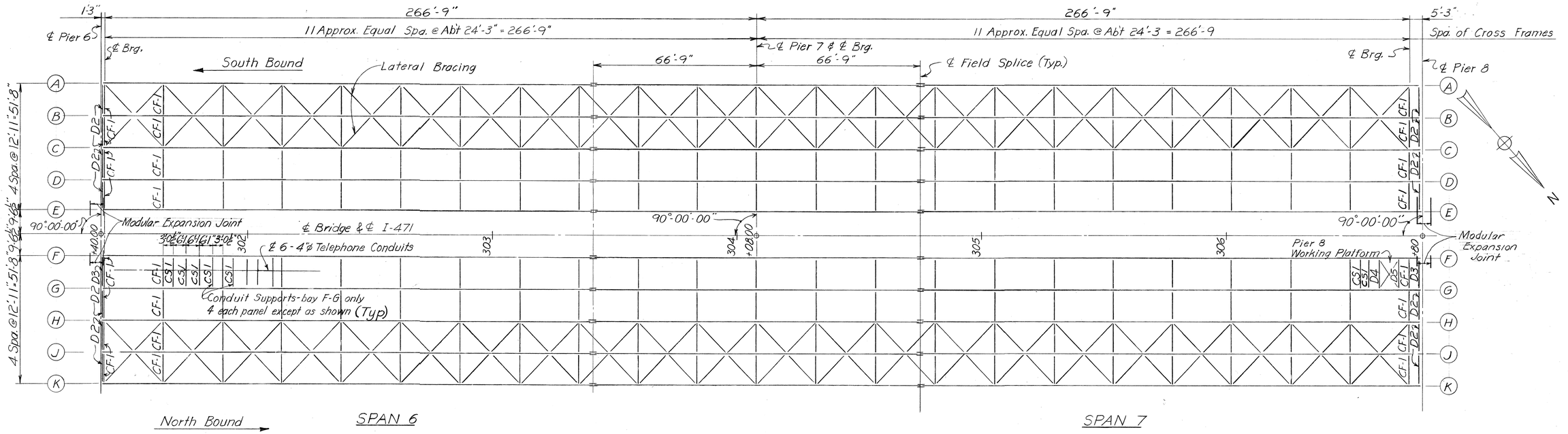
1'-3"
266'-9"
11 Approx. Equal Spa. @ Abt 24'-3" = 266'-9"
℄ Pier 6
℄ Brg.
South Bound
Lateral Bracing
66'-9"
℄ Pier 7 & ℄ Brg.
℄ Field Splice (Typ.)
5'-3"
Spa. of Cross Frames
℄ Brg.
℄ Pier 8
4 Spa. @ 12'-11" = 51'-8"
90°-00'-00"
Modular Expansion Joint
℄ Bridge & ℄ I-471
3@6'-6" = 19'-6"
3@6'-6" = 19'-6"
3@6'-6" = 19'-6"

FED. ROAD DIST.	STATE	FED. AID PRO. NO.	FISCAL YEAR	SHEET NO.	TOTAL SHEETS
7	KY.	I471-4(8)4			

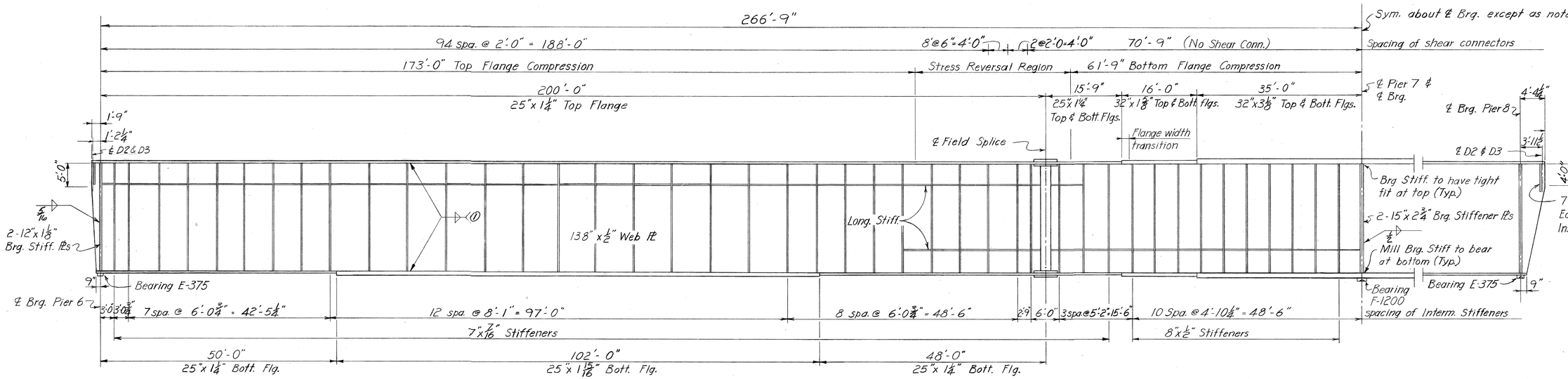

① Min. fillet weld size as determined by AWS D2.0-69 Art. 224(b)

GIRDER ELEVATION

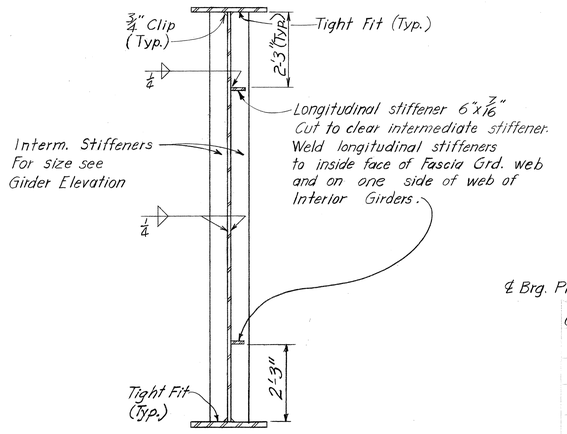

INTERMEDIATE STIFFENERS

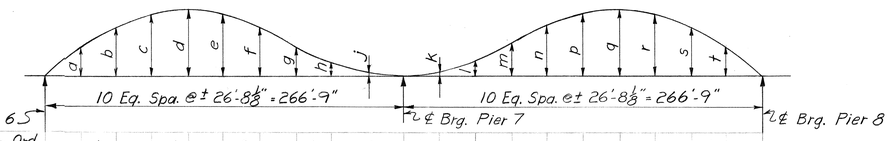

Grd. \ Ord.	a	b	c	d	e	f	g	h	j	k	l	m	n	p	q	r	s	t
A	1 13/16	3 1/8	5	6 1/16	6 7/16	6	4 3/4	3 1/16	1 7/16	2 1/4	4 1/2	6 3/4	8 5/8	9 5/8	10 3/4	8 3/4	6 3/4	3 3/4
B	2 5/16	4 5/16	6 1/16	7 1/8	7 1/4	6 3/4	5 1/4	3 3/8	1 9/16	2 5/16	4 3/8	7 1/2	9 11/16	11	11 3/16	11 1/8	7 13/16	4 3/8
C	2 13/16	5 1/8	6 3/8	7 3/4	7 13/16	7 1/16	5 9/16	3 9/16	1 11/16	2 5/16	4 3/8	7 1/2	9 11/16	11	11 3/16	11 1/8	7 13/16	4 3/8
D	2 7/8	5 1/4	7	7 7/8	7 15/16	7 3/16	5 5/8	3 5/8	1 11/16	2 5/16	4 3/8	7 1/2	9 11/16	11	11 3/16	11 1/8	7 13/16	4 3/8
E	2 3/4	5	6 5/8	7 1/2	7 9/16	6 15/16	5 1/2	3 1/2	1 11/16	2 1/4	4 1/2	6 3/4	8 5/8	9 5/8	10 3/4	8 3/4	6 3/4	3 3/4
F	2 7/8	5 1/4	6 13/16	7 11/16	7 3/4	7 1/16	5 9/16	3 9/16	1 3/4	2 1/4	4 1/2	6 3/4	8 5/8	9 5/8	10 3/4	8 3/4	6 3/4	3 3/4
G	3 7/16	6 5/16	7 15/16	8 11/16	8 9/16	7 3/4	6	3 7/8	1 13/16	2 5/16	4 3/8	7 1/2	9 11/16	11	11 3/16	11 1/8	7 13/16	4 3/8
H	3 13/16	7 1/16	8 9/16	9 3/16	9	8 1/16	6 1/4	4 1/16	1 15/16	2 5/16	4 3/8	7 1/2	9 11/16	11	11 3/16	11 1/8	7 13/16	4 3/8
J	3 13/16	7 1/16	8 9/16	9 3/16	9	8 1/16	6 1/4	4	1 15/16	2 5/16	4 3/8	7 1/2	9 11/16	11	11 3/16	11 1/8	7 13/16	4 3/8
K	3 11/16	6 3/4	8 3/16	8 13/16	8 11/16	7 13/16	6 1/4	4	1 15/16	2 1/4	4 1/2	6 3/4	8 5/8	9 5/8	10 3/4	8 3/4	6 3/4	3 3/4

CAMBER DIAGRAM

Ordinates in inches

Note:- Total camber includes effect of dead load and roadway geometry measured from chords between ℄'s of bearing at bottom edge of web plates.

Structural Steel Spans 6 & 7 Notes :

Flanges and flange splice plates shall be ASTM A588. Steel except in flanges shall be ASTM A36.

Shop connections shall be welded except as noted.

Field connections shall be made with ⅞"ϕ high strength bolts conforming to ASTM A325 except as noted.

Open holes shall be 15/16"ϕ except as noted.

All transverse and bearing stiffeners and splices are to be vertical.

All longitudinal dimensions are horizontal and girder lengths should be adjusted for grade.

Work sheets 12 thru 16 together

SHEET 13

REVISED	DATE
REVISED	DATE
REVISED	DATE

DESIGNED BY ____ CHECKED BY ____ DATE ____
DETAILED BY ____ CHECKED BY ____ DATE ____
TRACED BY ODV 3/20/70 CHECKED BY ____ DATE 1-70

W48 6-25-71

KENTUCKY DEPARTMENT OF HIGHWAYS
OHIO DEPARTMENT OF HIGHWAYS
PROJECT 1471-4 ( )
BRIDGE OVER OHIO RIVER ON I 471
CAMPBELL COUNTY, KENTUCKY
HAMILTON COUNTY, OHIO

SPANS 6 & 7 STRUCTURAL STEEL

HAZELET & ERDAL Consulting Engineers File No. 889	BRIDGE NUMBER	DRAWING NO. 18485	INDEX

FED. ROAD DIST.	STATE	FED. AID PRO. NO.	FISCAL YEAR	SHEET NO.	TOTAL SHEETS
7	KY.	I471-4(8)4			

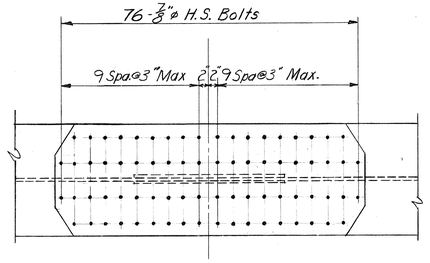

PLAN OF TOP AND BOTTOM FLANGE

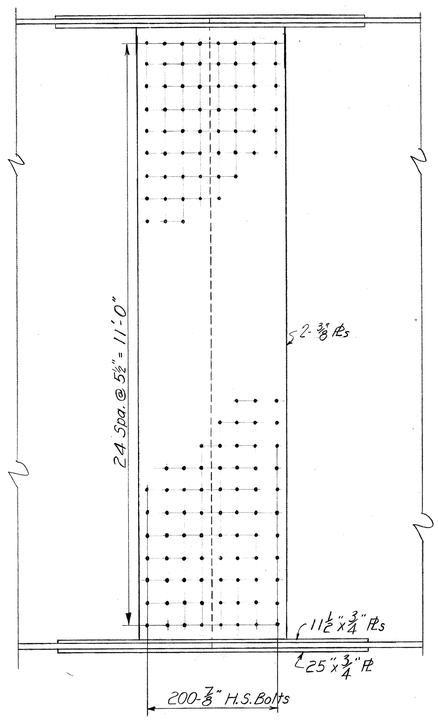

ELEVATION

FIELD SPLICE DETAIL

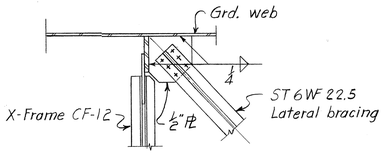

LATERAL BRACING CONNECTION
(At ℄ Brg. Pier 6 & Pier 8)

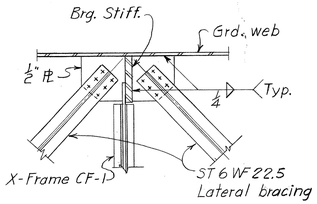

LATERAL BRACING CONNECTION
At ℄ Brg. Pier 7

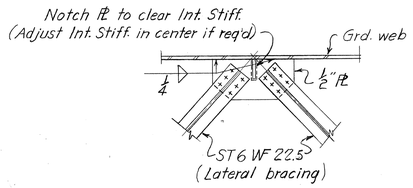

LATERAL BRACING CONNECTION
Between Crossframes @ Int. Stiff.
(Connections on other side of web are sym. about ℄ web where req'd.)

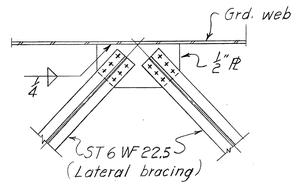

LATERAL BRACING CONNECTION
Between Crossframes
(Connections on other side of web are sym. about ℄ web where req'd.)

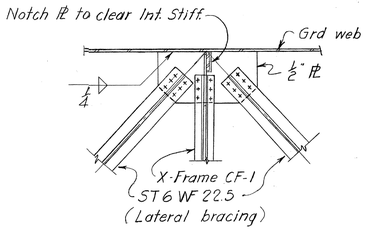

LATERAL BRACING CONNECTION
At Crossframes CF-1 except at bearings

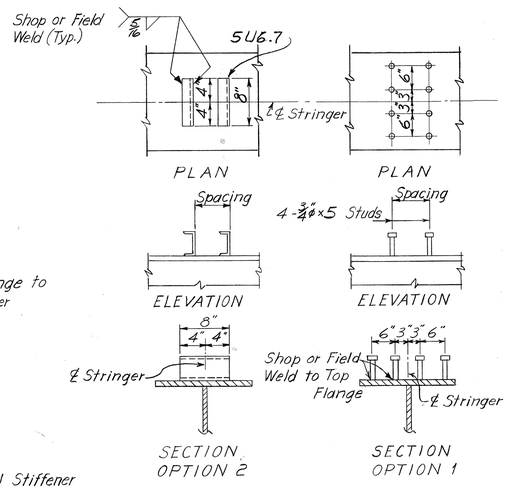

SHEAR CONNECTOR DETAILS

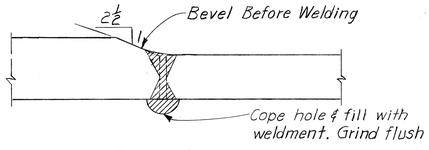

DETAIL A

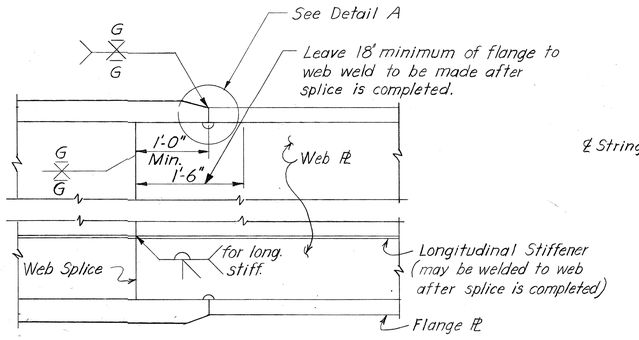

OPTIONAL YARD SPLICE

Work sheets 12 thru 16 together

SHEET 14

KENTUCKY DEPARTMENT OF HIGHWAYS
OHIO DEPARTMENT OF HIGHWAYS

PROJECT I 471-4 ( )
BRIDGE OVER OHIO RIVER ON I 471
CAMPBELL COUNTY, KENTUCKY
HAMILTON COUNTY, OHIO

SPANS 6 & 7
STRUCTURAL STEEL

HAZELET & ERDAL Consulting Engineers File No. 889	BRIDGE NUMBER	DRAWING NO. 18485	INDEX

DESIGNED BY ___ DATE ___ CHECKED BY ___ DATE ___ REVISED ___ DATE ___
DETAILED BY ___ DATE ___ CHECKED BY ___ DATE ___ REVISED ___ DATE ___
TRACED BY ODV 3/10/70 CHECKED BY DAA DATE 10-17-70 REVISED ___ DATE ___

W443 6-25-71

FED. ROAD DIST.	STATE	FED. AID PRO. NO.	FISCAL YEAR	SHEET NO.	TOTAL SHEETS
7	KY.	I-471-4(8)4			

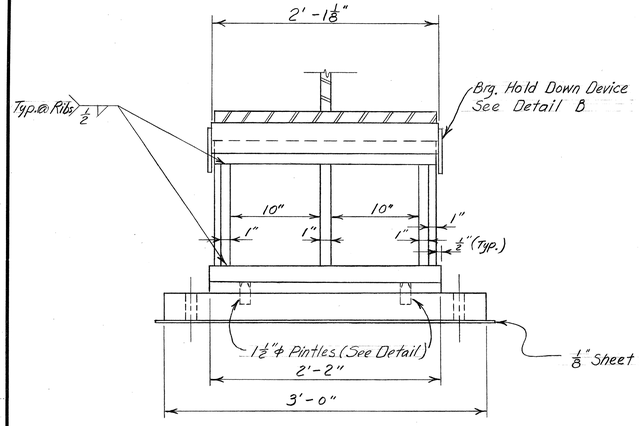

FRONT ELEVATION

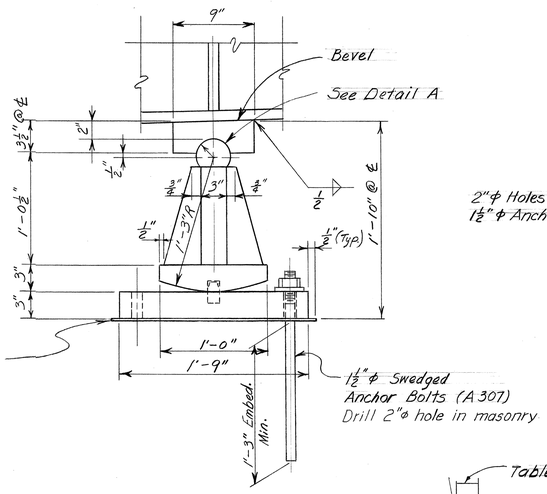

END ELEVATION

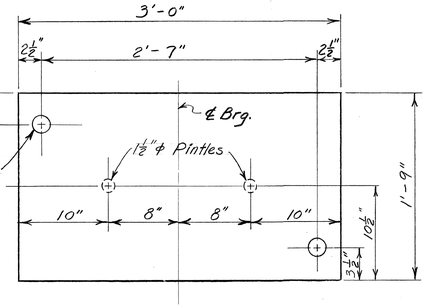

PLAN OF BOTTOM PLATE

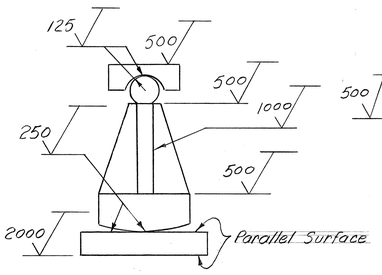

KEY TO FINISHED SURFACES
ALL EXP. BEARINGS
See KDH Specs. Sec. 408.3.1 - H3

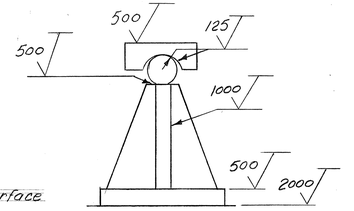

KEY TO FINISHED SURFACES
ALL FIXED BEARINGS
See KDH Specs. Sec. 408.3.1. H3

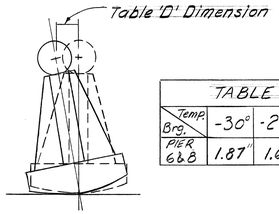

TABLE 'D' FOR SETTING EXPANSION SHOES									
Temp. / Brg.	-30°	-20°	0°	20°	40°	60°	80°	100°	120°
PIER 6 & 8	1.87"	1.66"	1.25"	.83"	.42"	0	.42"	.83"	1.25"

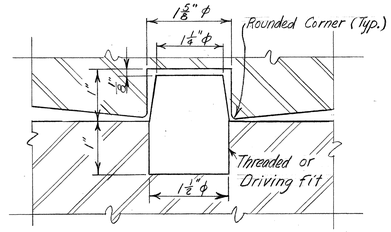

PINTLE DETAIL

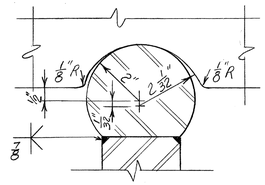

DETAIL A

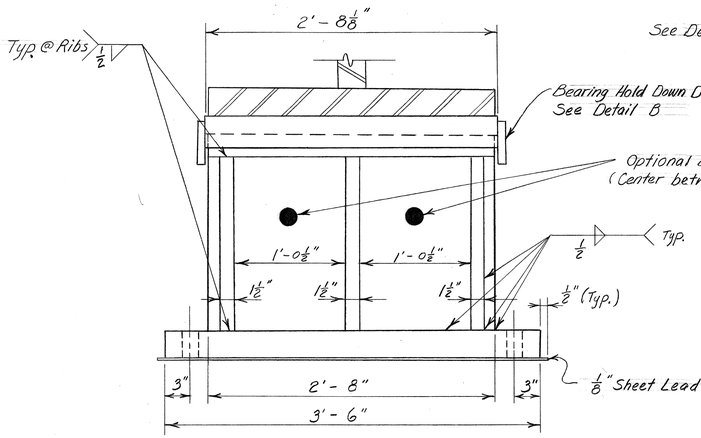

FRONT ELEVATION

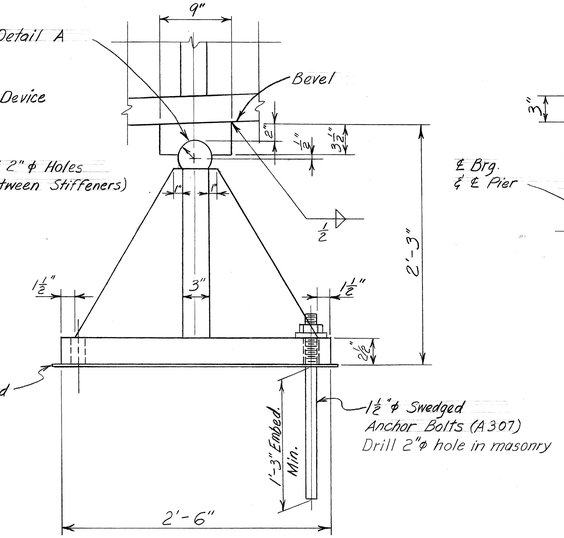

END ELEVATION

BEARING DETAIL
F-1200
(USE @ PIER 7)

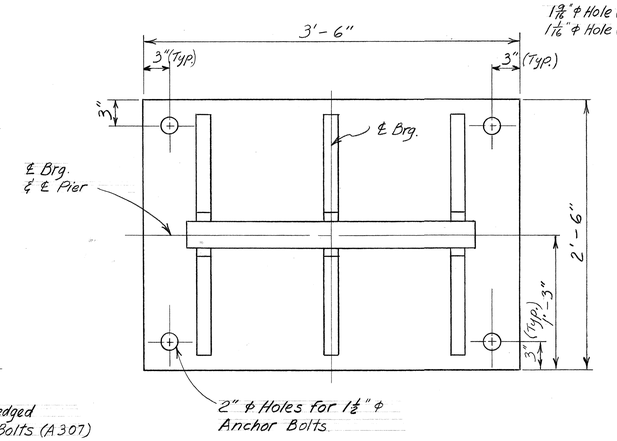

PLAN OF BOTTOM PLATE

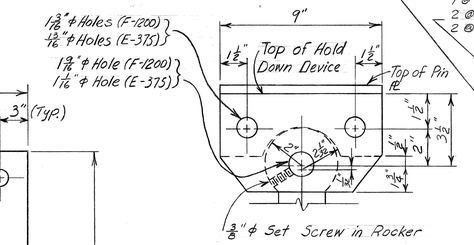

END VIEW

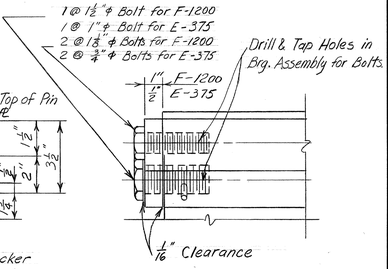

FRONT ELEVATION

DETAIL B
Bearing Hold Down Device

For Bearing Notes see sht 52
Work sheets 12 thru 16 together

SHEET 15

KENTUCKY DEPARTMENT OF HIGHWAYS
OHIO DEPARTMENT OF HIGHWAYS

PROJECT 1471-4 ( )
BRIDGE OVER OHIO RIVER ON I 471
CAMPBELL COUNTY, KENTUCKY
HAMILTON COUNTY, OHIO

SPANS 6 & 7
BEARING DETAILS

HAZELET & ERDAL Consulting Engineers File No. 889	BRIDGE NUMBER	DRAWING NO. 18435	INDEX

	DATE	REVISED	DATE	REVISED	DATE
DESIGNED BY		CHECKED BY		CHECKED BY	
DETAILED BY		CHECKED BY		CHECKED BY	
TRACED BY		CHECKED BY		CHECKED BY	

W78 6-25-71

FED. ROAD DIST.	STATE	FED. AID PRO. NO.	FISCAL YEAR	SHEET NO.	TOTAL SHEETS
7	KY.	I471 -4(8)4			

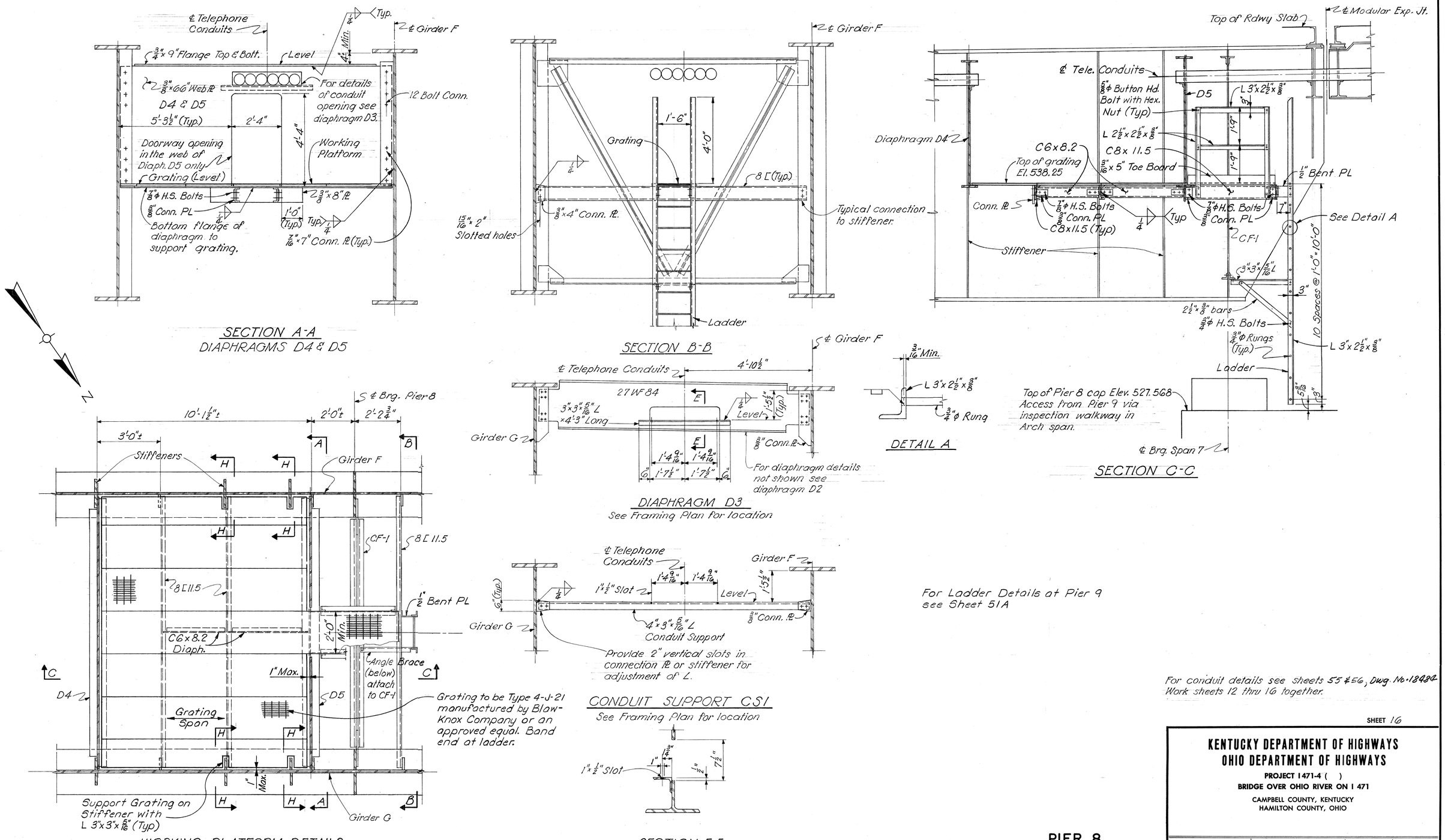

For Ladder Details at Pier 9 see Sheet 51A

For conduit details see sheets 55 & 56, Dwg. No. 18484
Work sheets 12 thru 16 together.

SHEET 16

KENTUCKY DEPARTMENT OF HIGHWAYS
OHIO DEPARTMENT OF HIGHWAYS

PROJECT I471-4 ( )
BRIDGE OVER OHIO RIVER ON I 471
CAMPBELL COUNTY, KENTUCKY
HAMILTON COUNTY, OHIO

HAZELET & ERDAL Consulting Engineers File No. 889 | BRIDGE NUMBER | DRAWING NO. 18485 | INDEX

PIER 8 PLATFORM DETAILS

DESIGNED BY: WAB 6-25-71 | CHECKED BY: | DATE:
DETAILED BY: N.M.P. 9-16-70 | CHECKED BY: | DATE:
TRACED BY: | CHECKED BY: | DATE:
REVISED: Platform and Ladders | W.R.T. 7/6 | DATE: 5-22-72
REVISED: | DATE:
REVISED: | DATE:

FED. ROAD DIST.	STATE	FED. AID PRO. NO.	FISCAL YEAR	SHEET NO.	TOTAL SHEETS
7	KY.	I471-4(8)4			

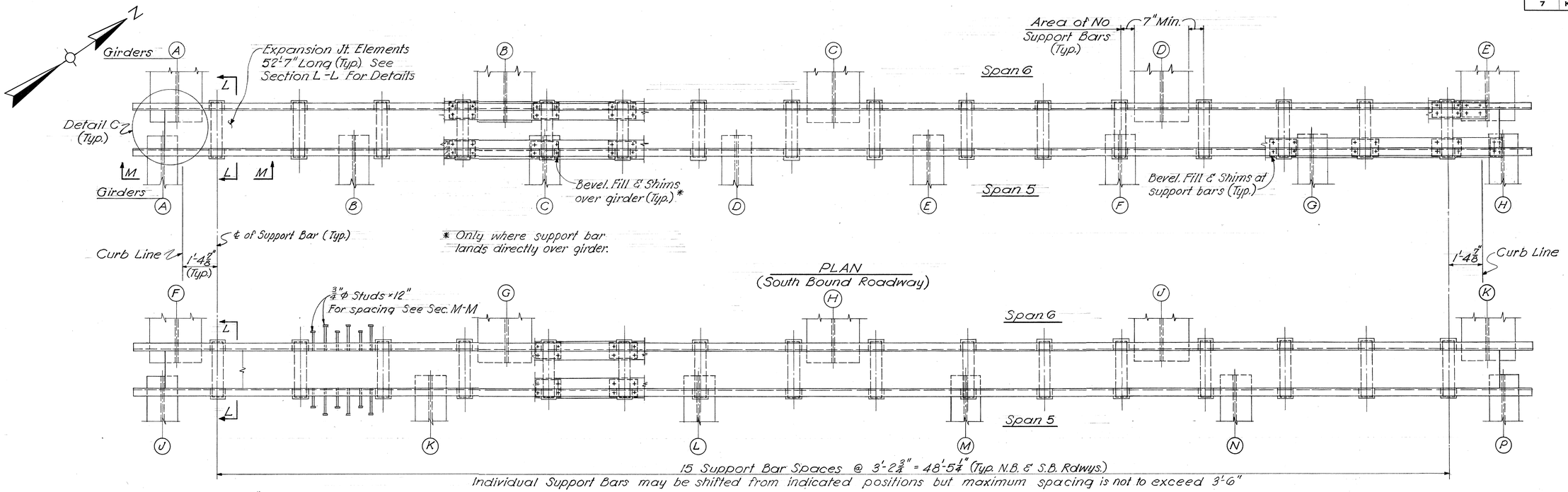

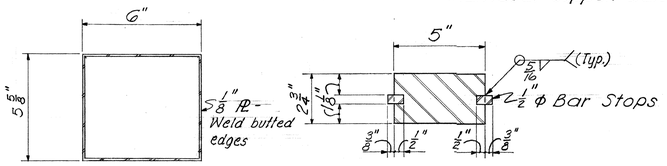

SECTION P-P

SECTION N-N

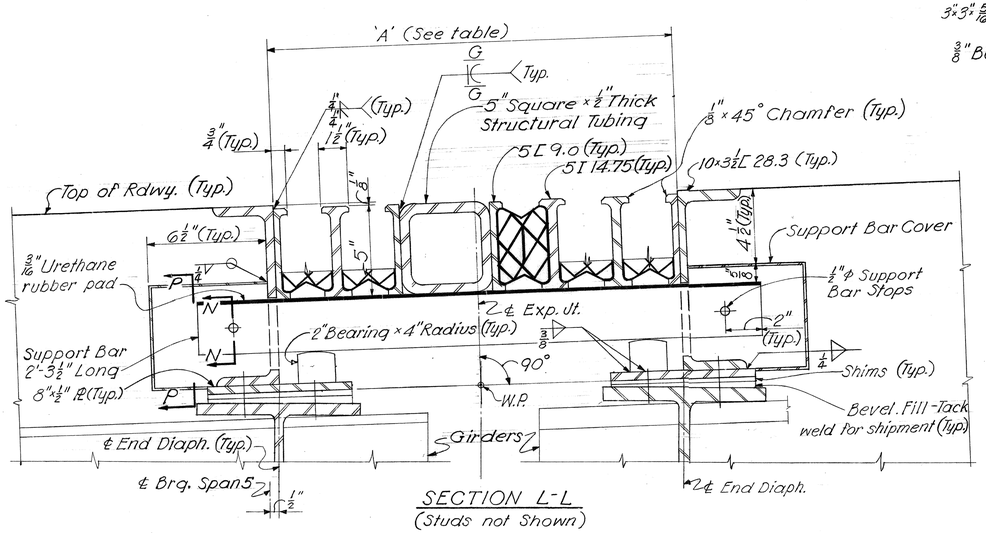

SECTION L-L
(Studs not Shown)

PLAN
(North Bound Roadway)

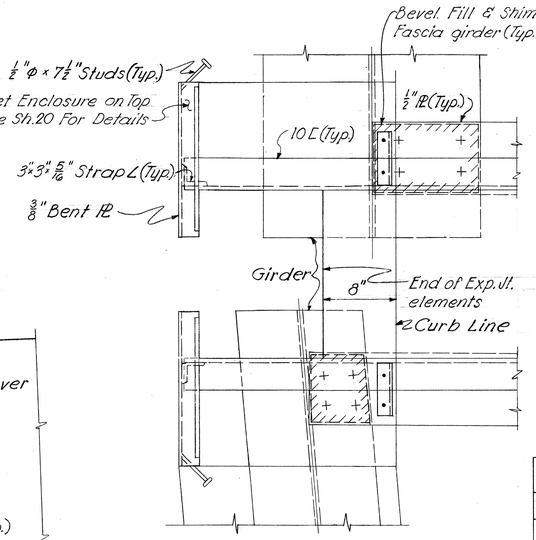

DETAIL C
(Typical for Fascia Girders)

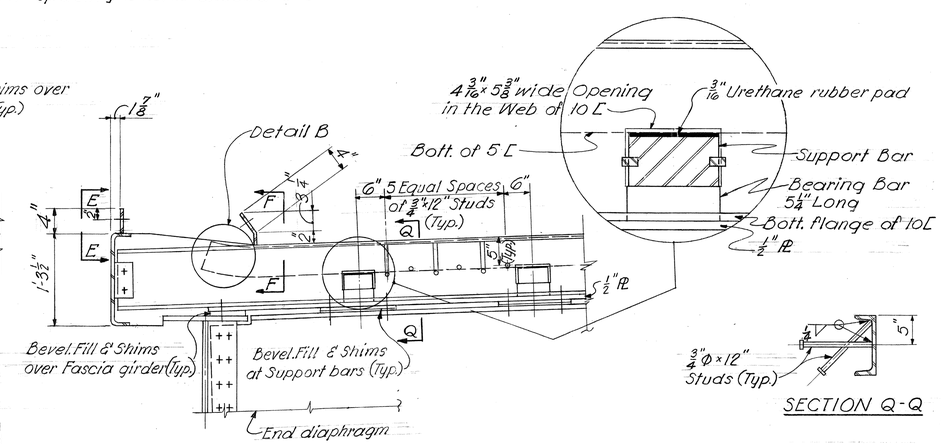

SECTION M-M
(Support Bar Covers not Shown)

SECTION Q-Q

Preset Width 'A' of Expansion Joint in inches						
30°	40°	50°	60°	70°	80°	90°
19 5/16	19	18 5/8	18 1/4	17 7/8	17 1/2	17 3/16

The movement, due to expansion and contraction, is based on a temperature range from -20°F To +120°F.

For Sections E-E, F-F, G-G & Detail B, see Sheet 18.
Work Sheets 17 thru 20 together.

SHEET 17

KENTUCKY DEPARTMENT OF HIGHWAYS
OHIO DEPARTMENT OF HIGHWAYS

PROJECT 1471-4 ( )
BRIDGE OVER OHIO RIVER ON I 471
CAMPBELL COUNTY, KENTUCKY
HAMILTON COUNTY, OHIO

MODULAR EXPANSION JOINT AT PIER 6

HAZELET & ERDAL Consulting Engineers File No. 889	BRIDGE NUMBER	DRAWING NO. 18485	INDEX

DESIGNED BY	CHECKED BY	DATE	REVISED
DETAILED BY MMP 4/10/70	CHECKED BY A.S.R.	DATE 6-23-70	REVISED
TRACED BY MMP 4/24/70	CHECKED BY A.S.R.	DATE 6-23-70	REVISED

12MG 6-25-71

FED. ROAD DIST.	STATE	FED. AID PRO. NO.	FISCAL YEAR	SHEET NO.	TOTAL SHEETS
7	KY.	I471-4(8)4			

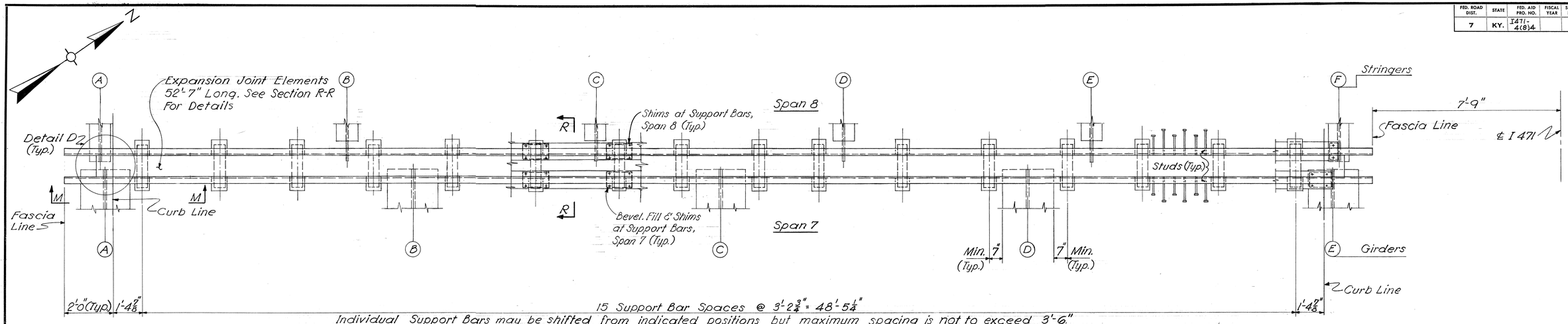

PLAN
(South bound shown; North bound is symmetrical about ℄ I471)

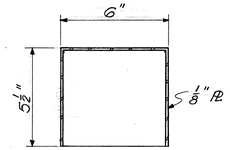

SECTION T-T

SECTION R-R
(Studs not Shown)

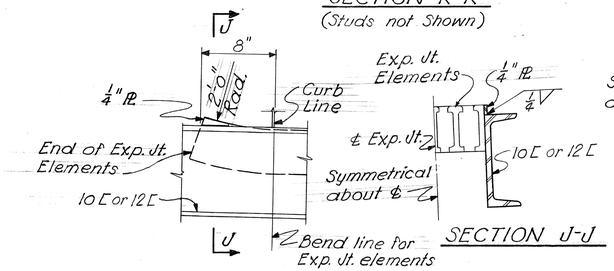

DETAIL B

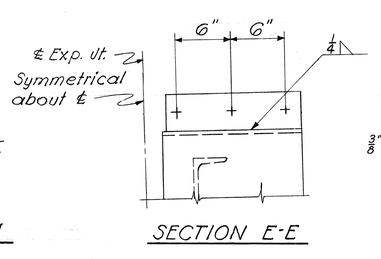

SECTION J-J

SECTION E-E

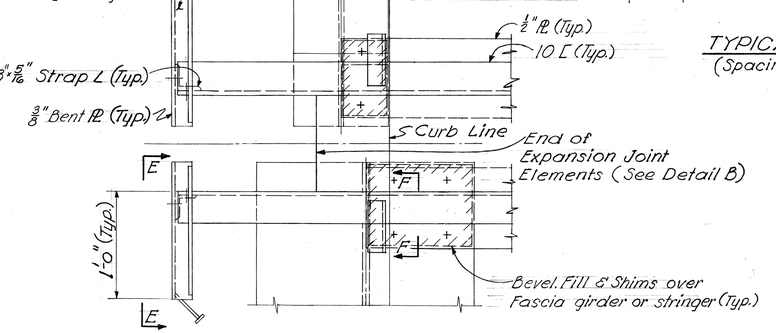

DETAIL D
(Typical for Fascia Girders)

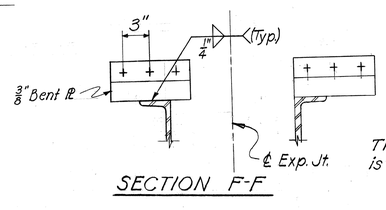

SECTION F-F

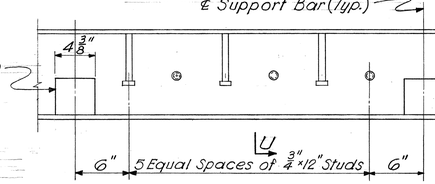

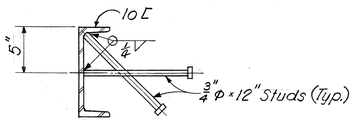

SECTION U-U

TYPICAL DETAIL
(Spacing of Studs)

Preset Width 'A' of Expansion Joint in inches						
30°	40°	50°	60°	70°	80°	90°
11 3/8	11 3/16	10 15/16	10 3/4	10 9/16	10 5/16	10 1/8

The movement, due to expansion and contraction, is based on a temperature range from -20°F. To +120°F.

For Section M-M See Sheet 17.
Work sheets 17 thru 20 together.

SHEET 18

KENTUCKY DEPARTMENT OF HIGHWAYS
OHIO DEPARTMENT OF HIGHWAYS
PROJECT 1471-4 ( )
BRIDGE OVER OHIO RIVER ON I 471
CAMPBELL COUNTY, KENTUCKY
HAMILTON COUNTY, OHIO

MODULAR EXPANSION JOINT AT PIER 8

HAZELET & ERDAL Consulting Engineers File No. 889	BRIDGE NUMBER	DRAWING NO. 18485	INDEX

DESIGNED BY		CHECKED BY	DATE
DETAILED BY M.M.P. 4/14/70		CHECKED BY A.S.R.	DATE 6-23-71
TRACED BY M.M.P. 4/29/70		CHECKED BY A.S.R.	DATE 6-23-71
REVISED		REVISED	DATE
REVISED		REVISED	DATE

2178 6-25-71

FED. ROAD DIST.	STATE	FED. AID PRO. NO.	FISCAL YEAR	SHEET NO.	TOTAL SHEETS
7	KY.	Z471-4(8)4			

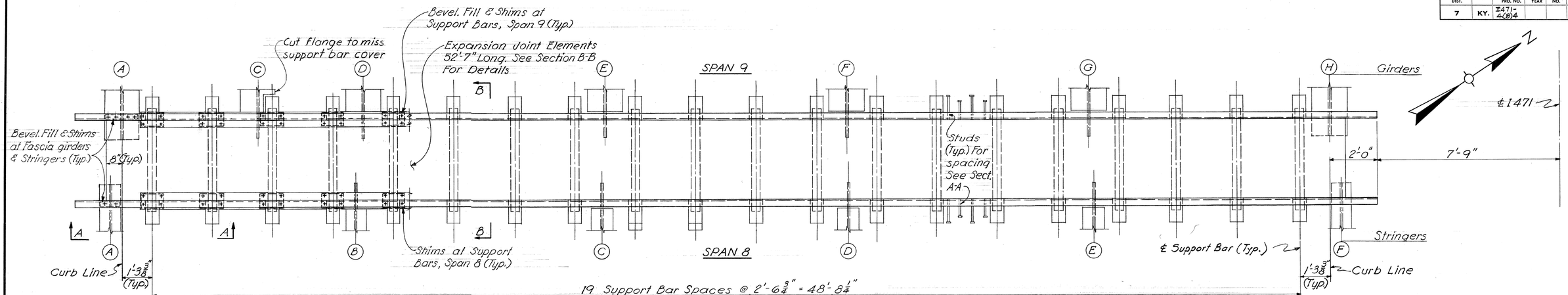

PLAN

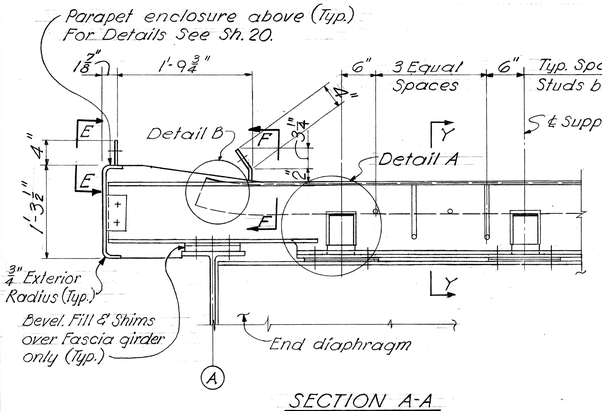

SECTION A-A

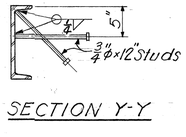

SECTION Y-Y

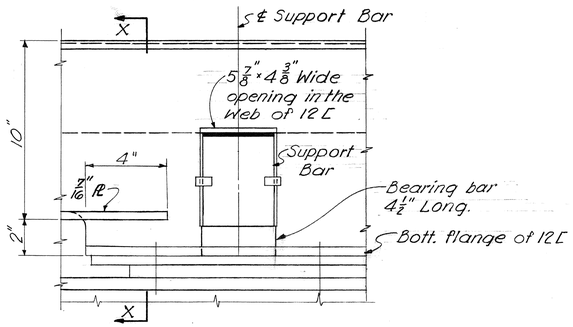

DETAIL A

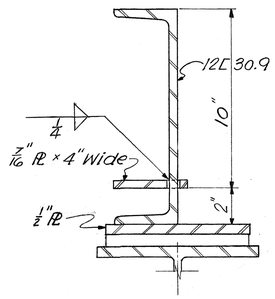

SECTION X-X

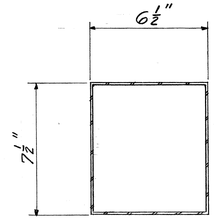

SECTION C-C

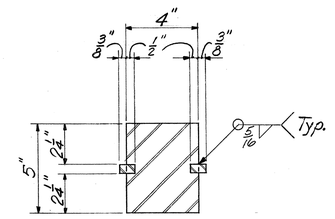

SECTION D-D

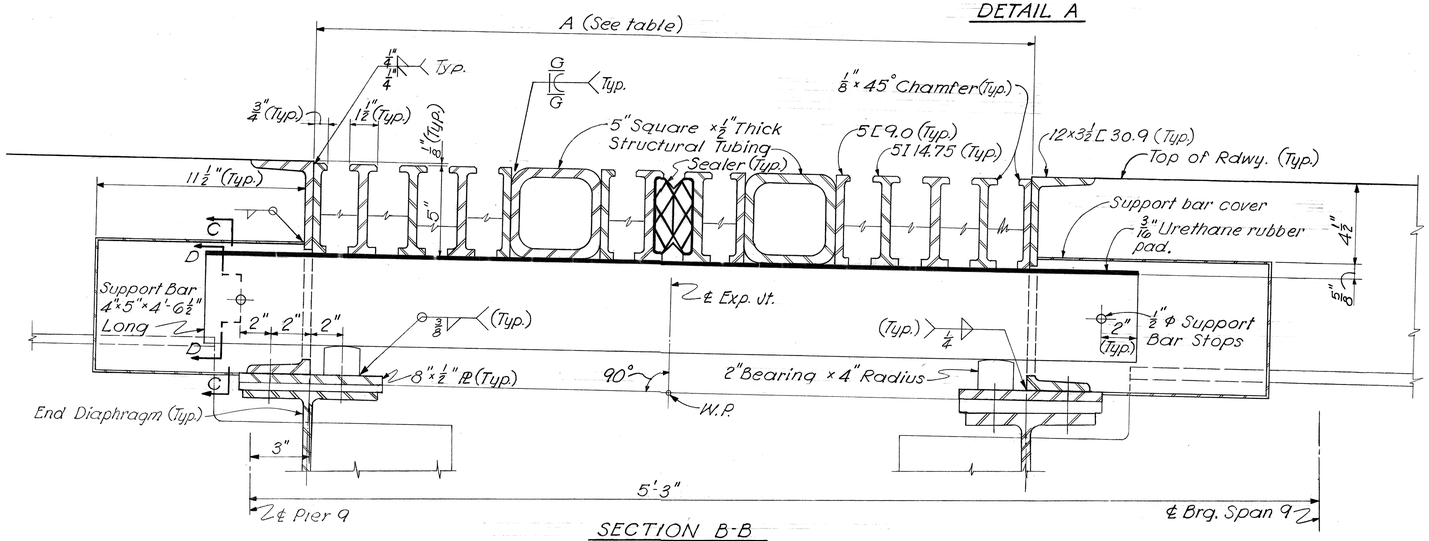

SECTION B-B
(Studs not Shown)

Preset Width 'A' of Expansion Joint in inches						
30°	40°	50°	60°	70°	80°	90°
43 1/2	42 11/16	41 13/16	41	40 3/16	39 5/16	38 1/2

The movement, due to expansion and contraction, is based on a temperature range from -20°F. to +120°F.

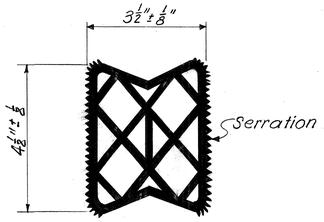

SEALER

For Sections E-E, F-F, G-G, & Detail B, See Sheet 18. Work sheets 17 thru 20 together.

SHEET 19

KENTUCKY DEPARTMENT OF HIGHWAYS
OHIO DEPARTMENT OF HIGHWAYS

PROJECT 1471-4 ( )

BRIDGE OVER OHIO RIVER ON I 471

CAMPBELL COUNTY, KENTUCKY
HAMILTON COUNTY, OHIO

MODULAR EXPANSION JOINT AT PIER 9

HAZELET & ERDAL Consulting Engineers File No. 889	BRIDGE NUMBER	DRAWING NO. 18485	INDEX

DESIGNED BY		CHECKED BY	DATE
DETAILED BY	A.S.R.	CHECKED BY	DATE 6-23-76
TRACED BY		CHECKED BY	DATE
REVISED		REVISED	
REVISED		REVISED	

L-25-6940

FED. ROAD DIST.	STATE	FED. AID PRO. NO.	FISCAL YEAR	SHEET NO.	TOTAL SHEETS
7	KY.	I471-4(8)4			

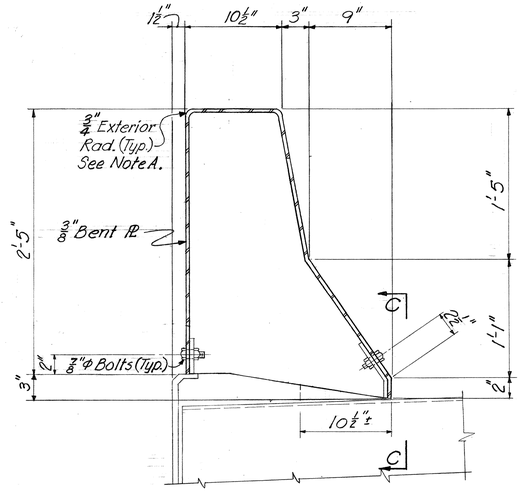

Note A: Top corners may be made by welding separate plates in lieu of the detail shown, at the option of the fabricator.

SECTION A-A

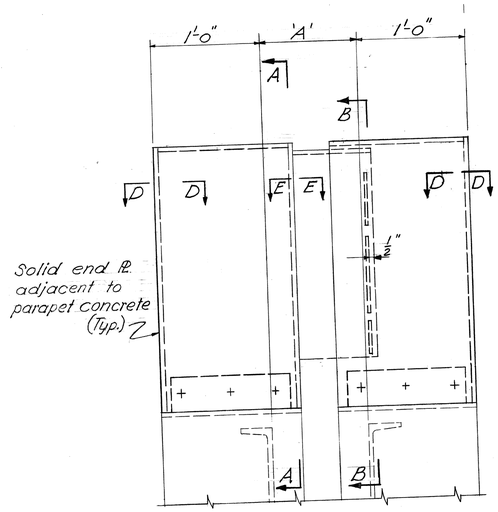

PARAPET ELEVATION
(Fascia Side shown)

Pier	Dimension		
	'a'	'b'	'c'
2	1'-3"	8"	3"
6	1'-6"	11"	4"
8	1'-3"	8"	3"
9	2'-4"	1'-6¼"	3"
Span 12	1'-2¾"	5½"	2"

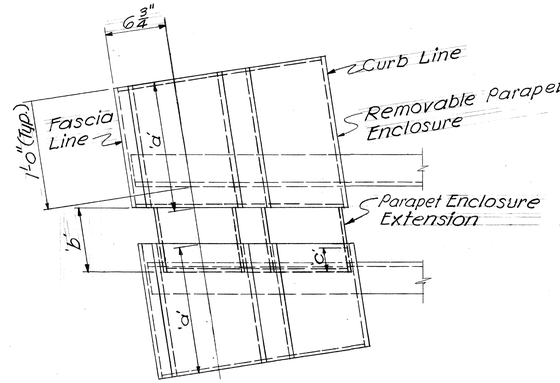

PLAN
(At Skew)

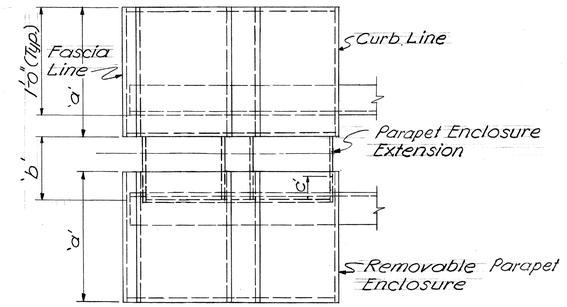

PLAN
(At Right Angle)

Modular Expansion Joint Notes:

Steel in expansion joints, except support bar covers and stops, shall be ASTM A588.
No splices will be permitted in the joint sealer.
The fabricator shall provide prestressing bolts placed through the entire unit after assembling. Assembly is to be prefabricated and shipped to site with width preset for 60°F. Final adjustment for width shall be made at the time of installation. Prestressing bolts shall be removed prior to pouring concrete against the joints.
Holes for prestressing bolts in top flanges of steel channels shall be sealed by plug welding.
The expansion joints shall be fabricated to follow the contour of the top of roadway slab.
Holes for connection of modular joints to diaphragms and girders or stringers shall be subpunched ¾" and reamed after erection in the field. Actual spacing of these holes will be established by the fabricator of the modular joint.
For material specifications for neoprene, urathane and adhesives, see Special Notes.
Neoprene ends shall be cut square and sealed with neoprene sponge cemented to the full perimeter and walls.

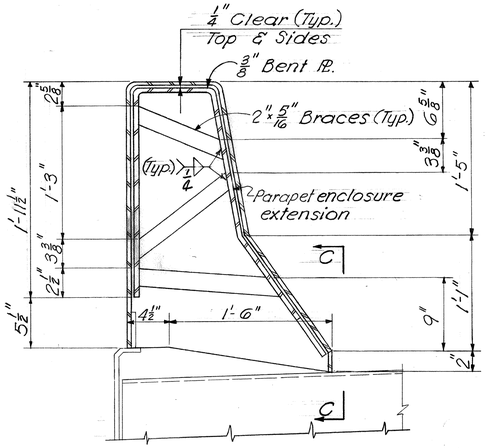

SECTION B-B

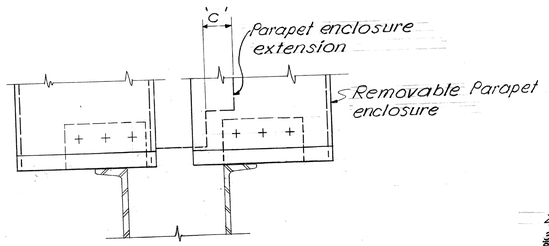

SECTION C-C

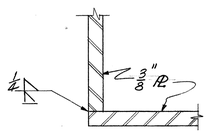

SECTION D-D

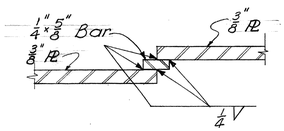

SECTION E-E

Work sheets 17 thru 20 together

SHEET 20

KENTUCKY DEPARTMENT OF HIGHWAYS
OHIO DEPARTMENT OF HIGHWAYS

PROJECT 1471-4 ( )
BRIDGE OVER OHIO RIVER ON I 471

CAMPBELL COUNTY, KENTUCKY
HAMILTON COUNTY, OHIO

PARAPET EXPANSION DETAILS

HAZELET & ERDAL Consulting Engineers File No. 889	BRIDGE NUMBER	DRAWING NO. 18485	INDEX

DESIGNED BY: DATE: REVISED: DATE:
DETAILED BY: MMP 4/15/20 CHECKED BY: A.S.R. DATE: 6-23-20 REVISED: DATE:
TRACED BY: MMP 4/23/20 CHECKED BY: A.S.R. DATE: 6-23-20 REVISED: DATE:

7-7-20

FED. ROAD DIST.	STATE	FED. AID PRO. NO.	FISCAL YEAR	SHEET NO.	TOTAL SHEETS
7	KY.	I471-4(8)4			

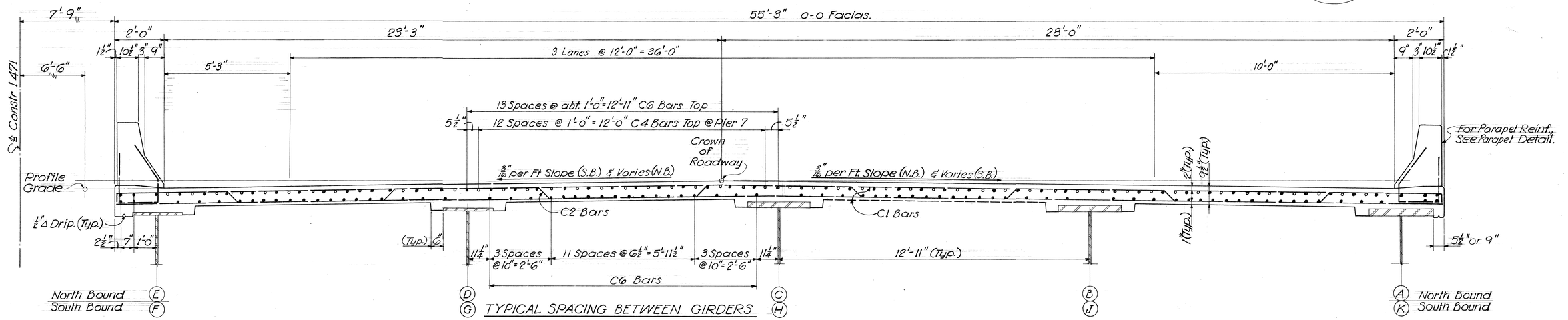

TYPICAL SPACING BETWEEN GIRDERS

TYPICAL SECTION SPANS 6 & 7

Bill of Bar Reinforcement

MARK	TYPE	SIZE	LENGTH feet	LENGTH inch	No. of Bars	LOCATION
C1	Str.	#6	54	11	2148	Transverse
C2	(61)	#6	57	8	1074	Transv. Truss Bar
C4	"	#8	60	0	104	Longt. @ Pier 7
C5	"	#5	55	1	80	Longt.
C6	"	#5	55	8	2820	" & Slab
C7	"	#5	55	5	80	Longt. Parapet
C8	(62)	#6	5	10	2152	Transv. Parapet
C9	(63)	#6	5	4	2152	"
C10	Str.	#6	5	0	128	Deck Drain
LS1	(62)	#7	7	7	12	Light Stand. Bracket
LS2	(67)	#5	9	0	18	"
LS3	(64)	#7	6	1	12	"
LS4	(66)	#5	7	2	6	"
LS5	(65)	#5	9	10	18	"

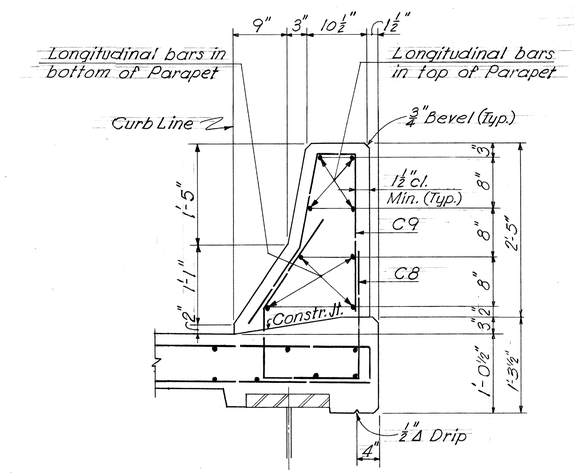

PARAPET DETAIL

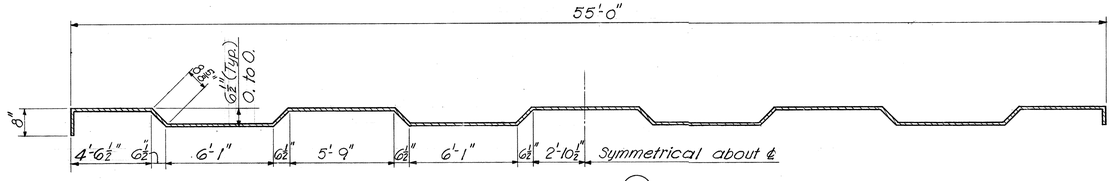

TYPE (61)

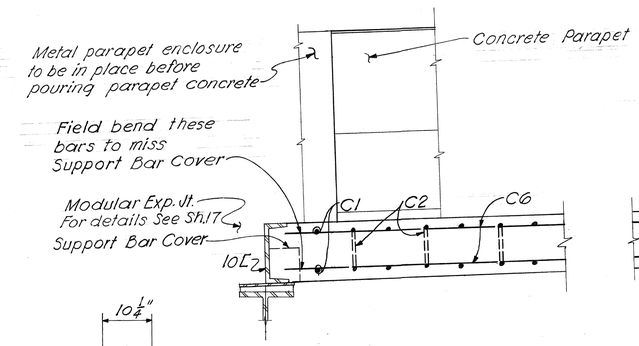

SECTION A-A

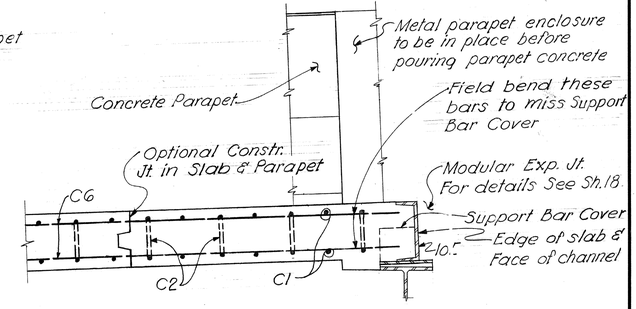

SECTION B-B

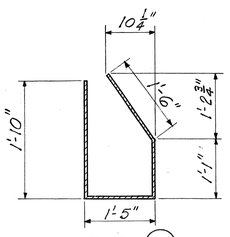

TYPE (62)

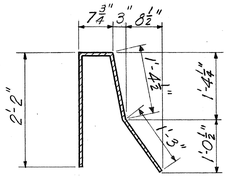

TYPE (63)

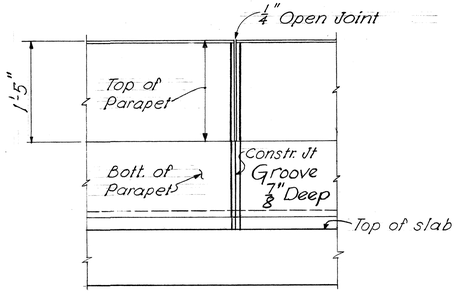

SECTION C-C

SPANS 6 & 7 SLAB SECTIONS

Work Sheets 21 & 22 together

SHEET 21

KENTUCKY DEPARTMENT OF HIGHWAYS
OHIO DEPARTMENT OF HIGHWAYS

PROJECT 1471-4 ( )

BRIDGE OVER OHIO RIVER ON I 471

CAMPBELL COUNTY, KENTUCKY
HAMILTON COUNTY, OHIO

HAZELET & ERDAL Consulting Engineers File No. 889	BRIDGE NUMBER	DRAWING NO. 18485	INDEX

DESIGNED BY
DETAILED BY NMP 9/6
TRACED BY NMP 3/9
CHECKED BY
CHECKED BY
CHECKED BY
DATE
REVISED
DATE
REVISED
DATE
REVISED
DATE

DWB 6-25-71

FED. ROAD DIST.	STATE	FED. AID PRO. NO.	FISCAL YEAR	SHEET NO.	TOTAL SHEETS
7	KY.	I471-4(8)4			

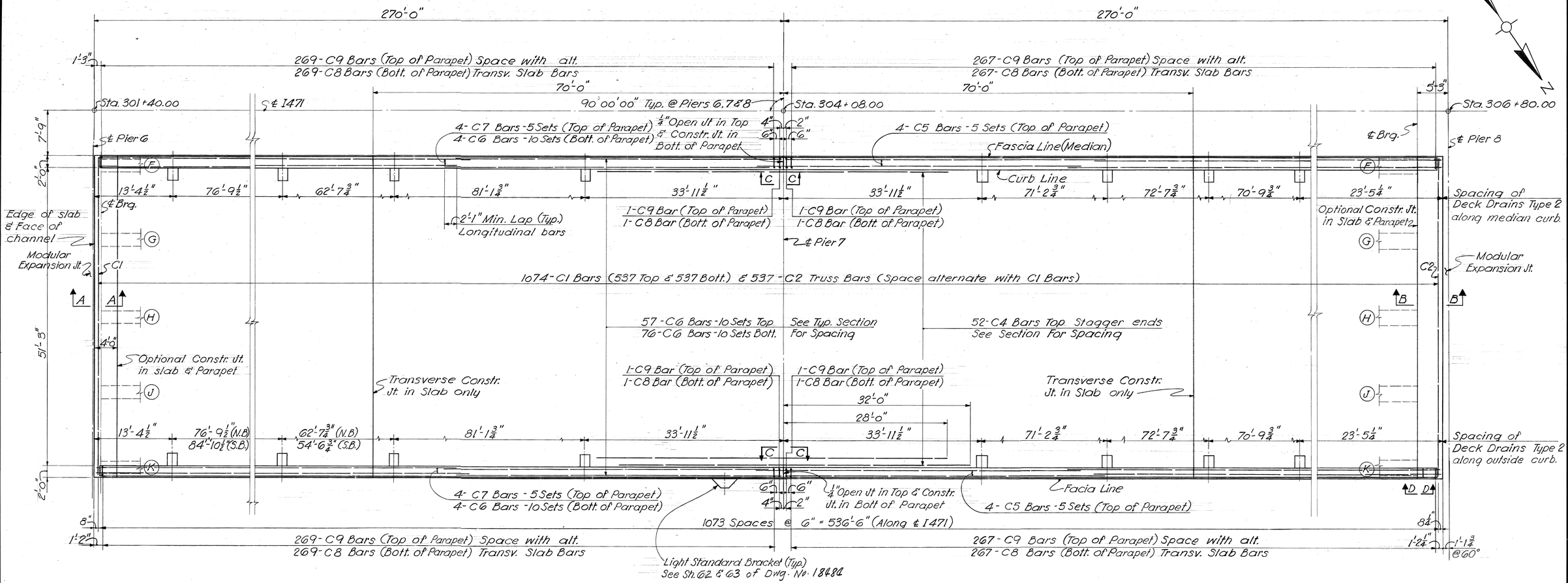

SPAN 6

NORTH BOUND ROADWAY SPANS 6 & 7

(South Bound Roadway Symmetrical about ℄ I471 except as noted)

SPAN 7

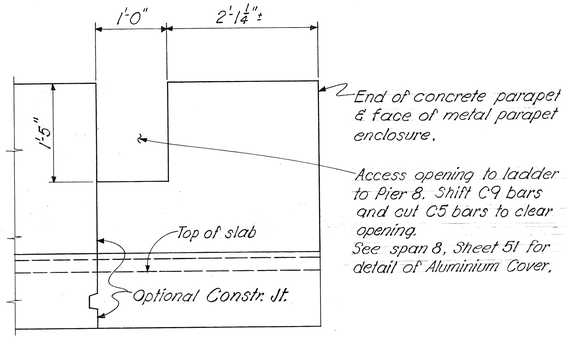

SECTION D-D

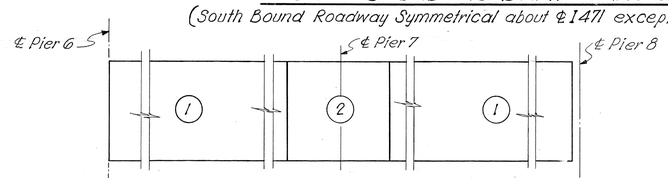

SEQUENCE OF POURING OPERATION

QUANTITIES		
ITEM	UNIT	TOTAL
Concrete - Class AA	C.Y.	2,090.3
Steel Reinforcement	Lbs.	497,590
Protective Coating "A"	Gal.	46
Protective Coating "B"	S.Y.	6,150

Notes:

The construction joint between the roadway slab and the parapet is mandatory. The concrete in the parapet shall not be poured untill the deck has properly cured.

Modular Expansion Joints shall be erected before placing deck concrete.

See Sheet 25 for drain details including special reinforcement.

See Sheets 23 & 24 for construction elevations.

Work Sheets 21 & 22 together.

SHEET 22

KENTUCKY DEPARTMENT OF HIGHWAYS
OHIO DEPARTMENT OF HIGHWAYS

PROJECT I471-4 ( )
BRIDGE OVER OHIO RIVER ON I 471
CAMPBELL COUNTY, KENTUCKY
HAMILTON COUNTY, OHIO

HAZELET & ERDAL Consulting Engineers File No. 889 | BRIDGE NUMBER | DRAWING NO. 18485 | INDEX

SPANS 6 & 7
SLAB PLAN

DESIGNED BY ___ CHECKED BY ___ DATE ___ REVISED ___ DATE ___
DETAILED BY N.M.P. 3/9 CHECKED BY ___ DATE ___ REVISED ___ DATE ___
TRACED BY N.M.P. 3/10 CHECKED BY ___ DATE ___ REVISED ___ DATE ___

WPB 6-25-71

FED. ROAD DIST.	STATE	FED. AID PRO. NO.	FISCAL YEAR	SHEET NO.	TOTAL SHEETS
7	KY.	I471-4(8)4			

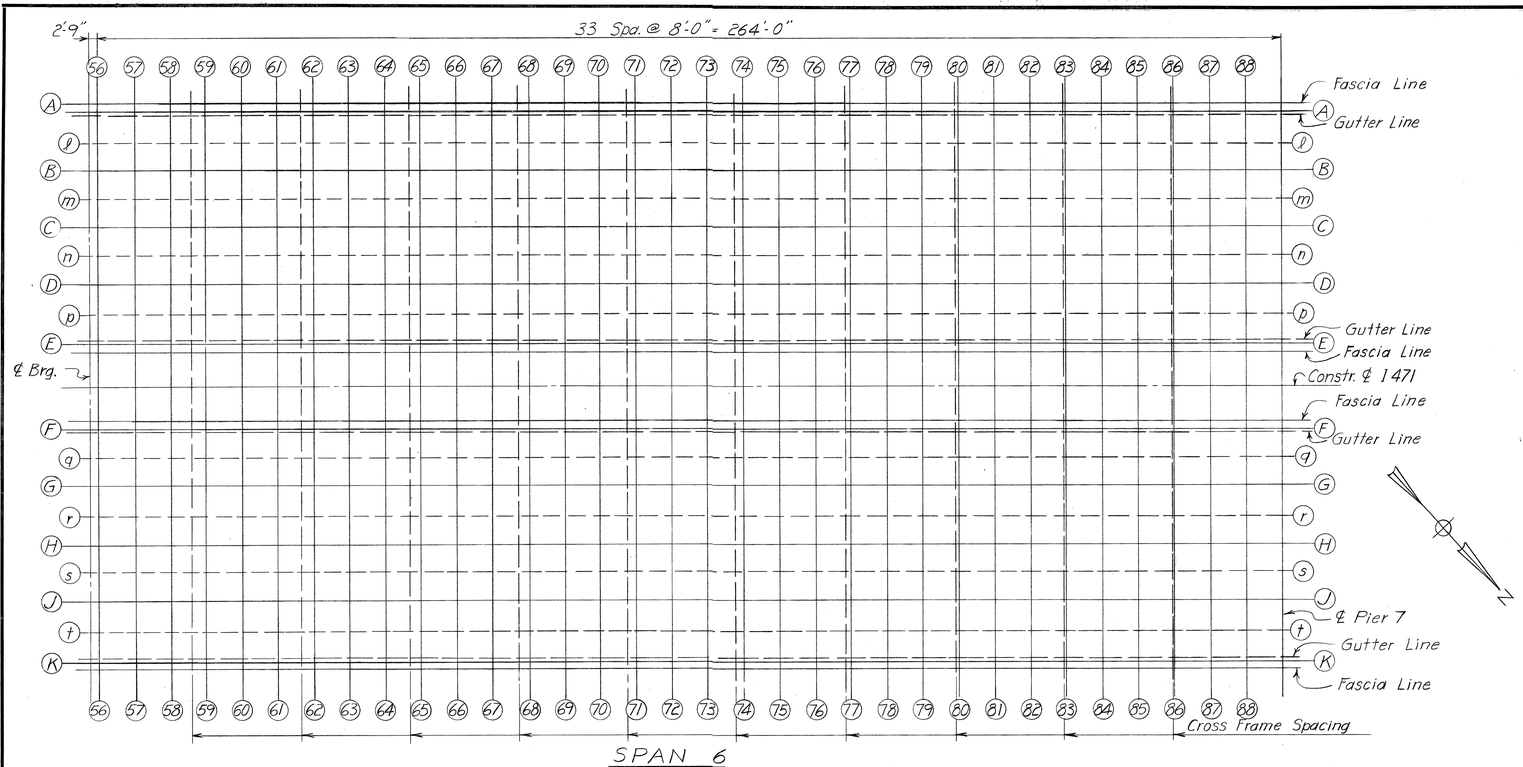

SPAN 6

SECTION	Line ℓ T	B	CST	Line m T	B	CST	Line n T	B	CST	Line p T	B	CST	SECTION
57	533.506			533.634			533.663			533.461			57
60	534.271			534.445			534.501			534.299			60
63	535.047			535.249			535.323			535.121			63
66	.827			536.029			536.104			.902			66
69	536.569			.771			.845			536.643			69
72	537.267			537.469			537.543			537.341			72
75	.934			538.136			538.210			538.008			75
78	538.545			.747			.821			.619			78
82	539.315			539.517			539.591			539.389			82
85	.878			540.080			540.154			.952			85
87	540.259			.456			.531			540.329			87

TABLE OF ELEVATIONS FOR CONTROL OF SLAB THICKNESS

Lines ℓ, m, n, p, q, r, s and t are midway between girder lines

SECTION	Line q T	B	CST	Line r T	B	CST	Line s T	B	CST	Line t T	B	CST	SECTION
57	533.409			533.539			533.444			533.242			57
60	534.279			534.453			534.370			534.168			60
63	535.121			535.323			535.249			535.047			63
66	.902			536.104			536.029			.827			66
69	536.643			.845			.771			536.569			69
72	537.341			537.543			537.469			537.267			72
75	538.008			538.210			538.136			.934			75
78	.619			.821			.747			538.545			78
82	539.389			539.591			539.517			539.315			82
85	.952			540.154			540.080			.878			85
87	540.329			.531			.456			540.259			87

TABLE OF ELEVATIONS SPAN 6

SECTION	W	GIRDER A X@Gutter	Y	Z	GIRDER B X	Y	Z	GIRDER C X	Y	Z	GIRDER D X	Y	Z	GIRDER E X@Gutter	Y	Z	W	W	GIRDER F X@Gutter	Y	Z	GIRDER G X	Y	Z	GIRDER H X	Y	Z	GIRDER J X	Y	Z	GIRDER K X@Gutter	Y	Z	W	SECTION
℄ Brg.	W=2½", Constant	533.102			533.212			533.323			533.179			532.981			W=2½", Constant	W=2½", Constant	532.958			533.068			533.122			532.920			532.722			W=2½", Constant	℄ Brg.
56		.186			.302			.419			.276			533.076					533.054			.171			.229			533.027			.827				56
57		.438			.571			.702			.562			.359					.341			.474			.544			.343			533.139				57
58		.687			.834			.980			.842			.639					.624			.772			.854			.652			.449				58
59		.930			534.102			534.262			534.127			.914					.903			534.075			534.168			.966			.753				59
60		534.179			.358			.532			.400			534.194					534.187			.366			.470			534.269			534.063				60
61		.420			.616			.805			.675			.466					.462			.658			.775			.573			.364				61
62		.661			.875			535.076			.949			.734					.733			.948			535.074			.875			.658				62
63		.926			535.148			.349			535.222			535.001					535.001			535.222			.349			535.148			.926				63
64		535.189			.413			.614			.487			.264					.264			.487			.614			.413			535.189				64
65		.447			.675			.874			.747			.522					.522			.747			.874			.675			.447				65
66		.702			.928			536.130			536.003			.777					.777			536.003			536.130			.928			.702				66
67		.952			536.180			.381			.254			536.027					536.027			.254			.381			536.180			.952				67
68		536.199			.427			.628			.501			.274					.274			.501			.628			.427			536.199				68
69		.441			.670			.871			.744			.516					.516			.744			.871			.670			.441				69
70		.679			.906			537.107			.980			.754					.754			.980			537.107			.906			.679				70
71		.913			537.140			.341			537.214			.988					.988			537.214			.341			537.140			.913				71
72		537.143			.368			.569			.442			537.218					537.118			.442			.569			.368			537.143				72
73		.371			.596			.797			.670			.446					.446			.670			.797			.596			.371				73
74		.595			.817			538.019			.892			.669					.669			.892			538.019			.817			.595				74
75		.814			538.035			.236			538.109			.888					.888			538.109			.236			538.035			.814				75
76		538.027			.244			.445			.318			538.101					538.101			.318			.445			.244			538.027				76
77		.235			.447			.648			.521			.309					.309			.521			.648			.447			.235				77
78		.436			.646			.847			.720			.511					.511			.720			.847			.646			.436				78
79		.634			.842			539.047			.916			.708					.708			.916			539.047			.842			.634				79
80		.827			539.035			.237			539.110			.901					.901			539.110			.237			539.035			.827				80
81		539.018			.226			.427			.300			539.093					539.093			.300			.427			.226			539.018				81
82		.210			.416			.617			.490			.285					.285			.490			.617			.416			.210				82
83		.402			.602			.804			.677			.476					.476			.677			.804			.602			.402				83
84		.591			.792			.993			.866			.665					.665			.866			.993			.792			.591				84
85		.779			.979			540.181			540.053			.853					.853			540.053			540.181			.979			.779				85
86		.968			540.168			.370			.243			540.042					540.042			.243			.370			540.168			.968				86
87		540.156			.355			.557			.430			.230					.230			.430			.557			.355			540.156				87
88		.345			.544			.745			.618			.419					.419			.618			.745			.544			.345				88
℄ Brg.		.533			.732			.933			.806			.608					.608			.807			.933			.732			.533				℄ Brg.

CONSTRUCTION NOTES FOR LINES A thru K

See Notes for lines A thru F for Span 8 on Sheet 61.

CONSTRUCTION NOTES FOR LINES ℓ thru t

See Notes for lines n thru t for Span 8 on Sheet 61.

Work sheets 23 & 24 together

SHEET 23

KENTUCKY DEPARTMENT OF HIGHWAYS
OHIO DEPARTMENT OF HIGHWAYS

PROJECT 1471-4 ( )

BRIDGE OVER OHIO RIVER ON I 471

CAMPBELL COUNTY, KENTUCKY
HAMILTON COUNTY, OHIO

HAZELET & ERDAL Consulting Engineers File No. 889	BRIDGE NUMBER	DRAWING NO. 18485	INDEX

SPAN 6 - CONSTRUCTION ELEVATIONS

DESIGNED BY ____ CHECKED BY ____ DATE ____
DETAILED BY ____ CHECKED BY GBC DATE 6-25-70
TRACED BY DOV 3/19/70 CHECKED BY ____ DATE ____
REVISED ____ DATE ____
REVISED ____ DATE ____
REVISED ____ DATE ____

W4B 6-25-71

FED. ROAD DIST.	STATE	FED. AID PRO. NO.	FISCAL YEAR	SHEET NO.	TOTAL SHEETS
7	KY.	I471-4(8)4			

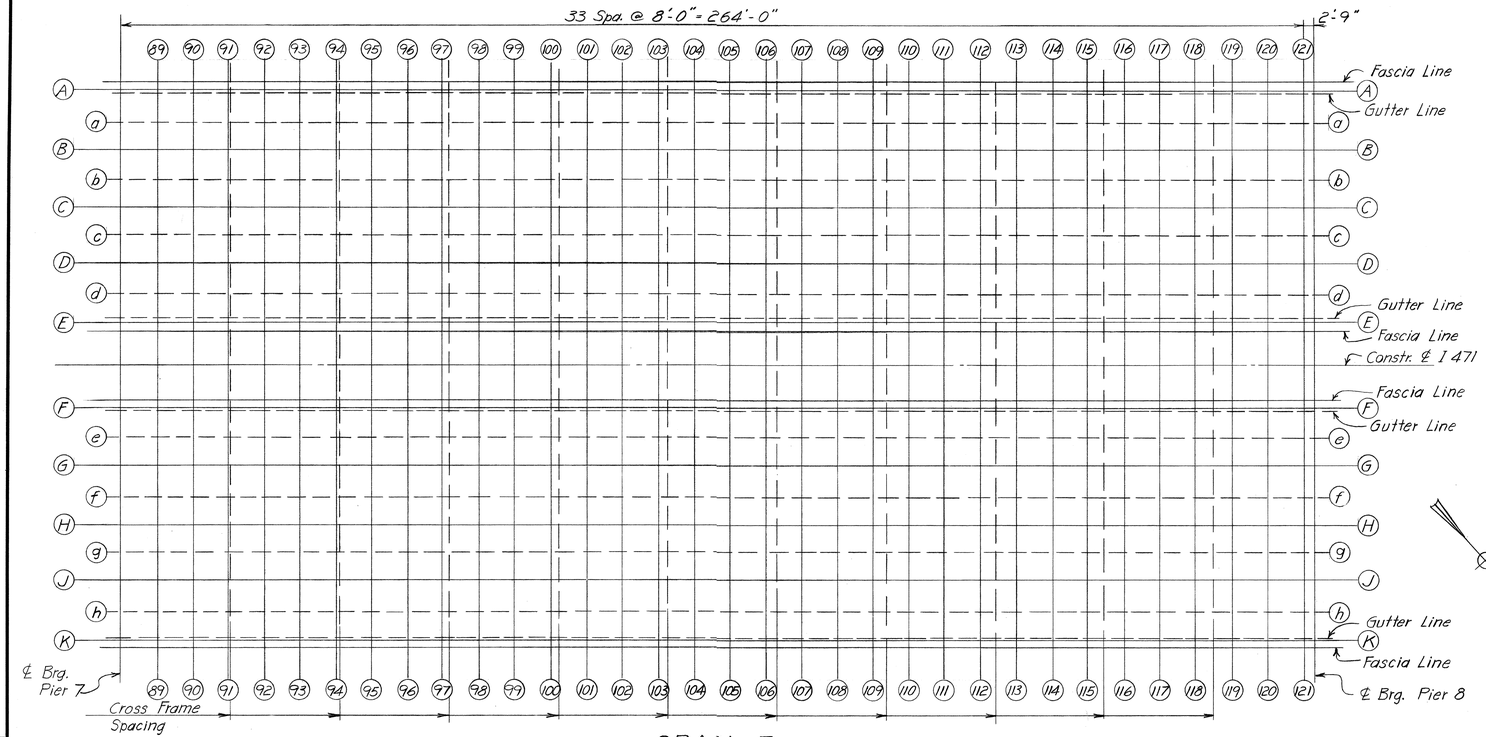

SPAN 7

SECTION	Line ℓ T	B	CST	Line m T	B	CST	Line n T	B	CST	Line p T	B	CST	SECTION
90	541.018			541.220			541.294			541.092			90
93	.597			.799			.874			.672			93
96	542.176			542.378			542.452			542.250			96
99	.741			.943			543.018			.816			99
102	543.275			543.477			.551			543.349			102
105	.754			.956			544.030			.828			105
108	544.171			544.373			.448			544.246			108
111	.516			.718			.792			.590			111
114	.796			.998			545.073			.871			114
117	545.002			545.203			.277			545.075			117
120	.162			.364			.439			.237			120

SECTION	Line q T	B	CST	Line r T	B	CST	Line s T	B	CST	Line t T	B	CST	SECTION
90	541.092			541.294			541.220			541.018			90
93	.672			.874			.799			.597			93
96	542.250			542.452			542.378			542.176			96
99	.816			543.018			.943			.741			99
102	543.349			.551			543.477			543.275			102
105	.828			544.030			.956			.754			105
108	544.246			.448			544.373			544.171			108
111	.590			.792			.718			.516			111
114	.871			545.073			.998			.796			114
117	545.075			.277			545.203			545.002			117
120	.237			.439			.364			.162			120

TABLE OF ELEVATIONS SPAN 7

SECTION	GIRDER A W	X℄Gutter	Y	Z	GIRDER B X	Y	Z	GIRDER C X	Y	Z	GIRDER D X	Y	Z	GIRDER E X℄Gutter	Y	Z	W	W	GIRDER F X℄Gutter	Y	Z	GIRDER G X	Y	Z	GIRDER H X	Y	Z	GIRDER J X	Y	Z	GIRDER K X℄Gutter	Y	Z	W	SECTION
89	W = 2½" Constant	.728			.926			.127			.000			.802			W = 2½" Constant	W = 2½" Constant	.802			.000			.127			.926			.728			W = 2½" Constant	89
90		.919			.119			.321			.193			.993					.993			.193			.321			.119			.919				90
91		.112			.312			.514			.388			541.186					541.186			.388			.514			.312			.112				91
92		.305			.505			.706			.581			.379					.379			.581			.706			.505			.305				92
93		.498			.698			.900			.773			.572					.572			.773			.900			.698			.498				93
94		.691			.892			542.093			.968			.766					.766			.968			542.013			.892			.691				94
95		.883			542.085			.286			542.159			.957					.957			542.159			.286			542.085			.883				95
96		542.074			.277			.478			.351			.148					.148			.351			.478			.277			542.074				96
97		.262			.466			.668			.551			.336					.336			.551			.668			.466			.262				97
98		.450			.656			.858			.730			.524					.524			.730			.858			.656			.450				98
99		.634			.842			843.044			917			.708					.708			917			843.044			.842			.634				99
100		.814			543.024			.226			543.099			.888					.888			543.099			.226			543.024			.814				100
101		.987			.203			.405			.278			543.061					543.061			.278			.405			.203			.987				101
102		543.156			.376			.578			.450			.230					.230			.450			.578			.376			543.156				102
103		.321			.544			.747			.620			.395					.395			.620			.747			.544			.321				103
104		.478			.703			.807			.779			.552					.552			.779			.807			.703			.478				104
105		.629			.855			544.057			929			.703					.703			.929			544.057			.855			.629				105
106		.774			544.000			.204			544.076			.848					.848			544.076			.204			544.000			.774				106
107		.914			.140			.341			.214			.988					.988			.214			.341			.140			.914				107
108		544.045			.272			.474			.347			544.119					544.119			.347			.474			.272			544.045				108
109		.168			.395			.596			.469			.242					.242			.469			.596			.395			.168				109
110		.283			.510			.711			.584			.357					.357			.584			.711			.510			.283				110
111		.393			.617			.818			.691			.467					.467			.691			.818			.617			.393				111
112		.494			.720			.919			.792			.569					.569			.792			.919			.720			.494				112
113		.589			.812			545.012			.884			.663					.663			.884			545.012			.812			.589				113
114		.676			.897			.099			.972			.750					.750			.972			.099			.897			.676				114
115		.758			.971			.172			545.045			.832					.832			545.045			.172			.971			.758				115
116		.830			545.041			.242			.115			.905					.905			.115			.242			545.041			.830				116
117		.899			.103			.303			.176			.973					.973			.176			.303			.103			.899				117
118		.957			.165			.366			.239			545.031					545.031			.239			.366			.165			.957				118
119		545.013			.213			.415			.287			.087					.087			.287			.415			.213			545.013				119
120		.060			.263			.465			.338			.134					.134			.338			.465			.263			.060				120
121		.106			.304			.506			.379			.180					.180			.379			.506			.304			.106				121
℄ Brg.		.121			.319			.521			.394			.190					.190			.394			.521			.319			.121				℄ Brg.

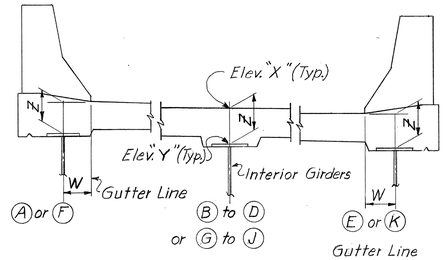

TYPICAL SECTION

SPAN 7 - CONSTRUCTION ELEVATIONS

For construction notes see sheet 61

Work sheets 23 & 24 together

SHEET 24

KENTUCKY DEPARTMENT OF HIGHWAYS
OHIO DEPARTMENT OF HIGHWAYS

PROJECT I 471-4 ( )

BRIDGE OVER OHIO RIVER ON I 471

CAMPBELL COUNTY, KENTUCKY
HAMILTON COUNTY, OHIO

HAZELET & ERDAL Consulting Engineers File No. 889	BRIDGE NUMBER	DRAWING NO. 18485	INDEX

DESIGNED BY		CHECKED BY	DATE
DETAILED BY	GRC	CHECKED BY	DATE 6-22-71
TRACED BY JDV	3/25/70	CHECKED BY	DATE

REVISED	DATE
REVISED	DATE
REVISED	DATE

4BA 6-25-71

FED. ROAD DIST.	STATE	FED. AID PRO. NO.	FISCAL YEAR	SHEET NO.	TOTAL SHEETS
7	KY.	I471-4(8)4			

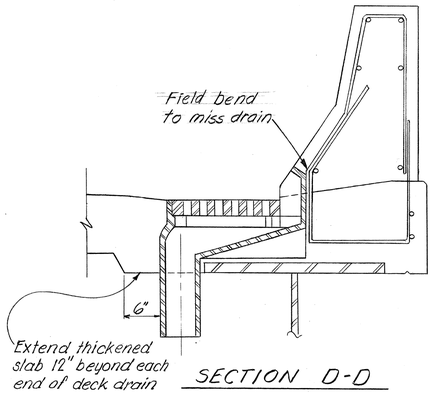

SECTION D-D

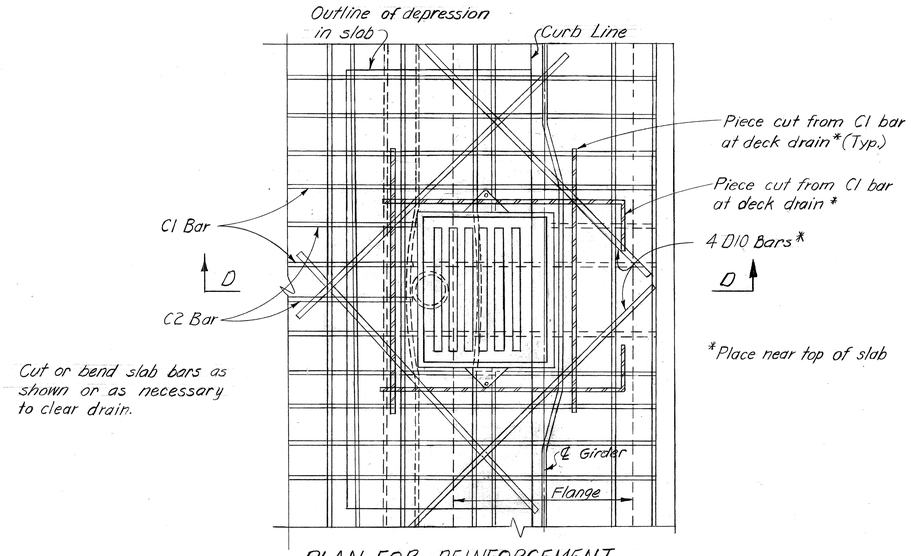

PLAN FOR REINFORCEMENT AT TYPE II DECK DRAIN

BILL OF REINFORCEMENT					
Mark	Type	Size	No. Req'd	Length Ft.	Length In.
C10	Str.	6	4	5	0

Table indicates the number of bars required for each drain installation.
See Bill of Reinforcement for Spans 6 & 7 for total number of bars.

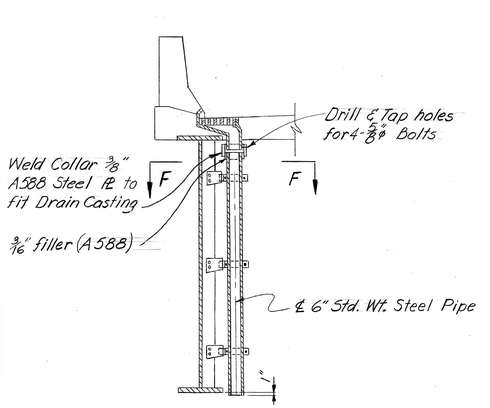

TYPICAL ROADWAY DRAIN DOWNSPOUT IN SPANS 6 & 7

See slab plans for location of deck drains.

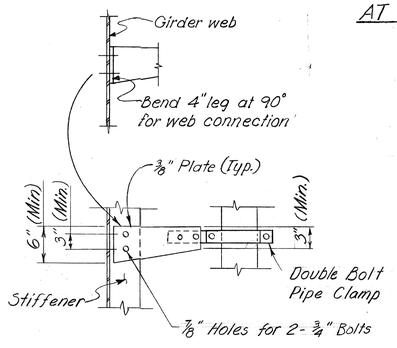

DETAIL OF PIPE HANGER

Attach to stiffener if available, otherwise attach to web.

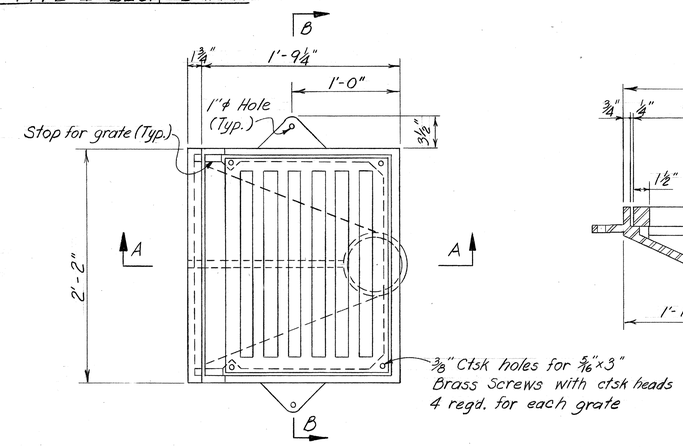

PLAN

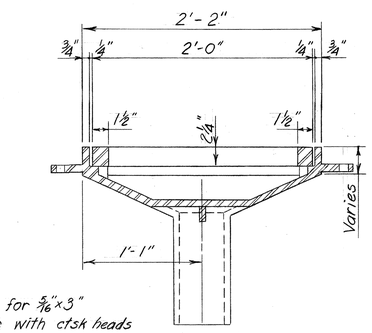

SECTION B-B

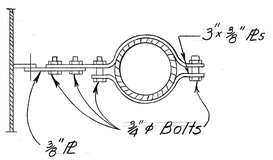

SECTION F-F

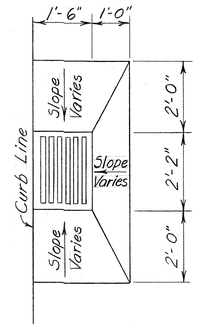

PLAN OF SLAB AT DRAIN

Depress drain 1/2" at Curb Line

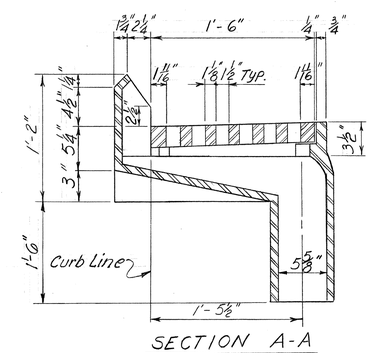

SECTION A-A

QUANTITIES		
ITEM	UNIT	TOTAL
6"ø Drain Pipe	L.F.	336

For foundry notes and drain pipe notes see sheets 2 & 59.

SHEET 25

KENTUCKY DEPARTMENT OF HIGHWAYS
OHIO DEPARTMENT OF HIGHWAYS

PROJECT 1471-4 ( )
BRIDGE OVER OHIO RIVER ON 1 471
CAMPBELL COUNTY, KENTUCKY
HAMILTON COUNTY, OHIO

HAZELET & ERDAL Consulting Engineers File No. 889 | BRIDGE NUMBER | DRAWING NO. 18485 | INDEX

SPANS 6 & 7 DRAINAGE DETAILS

DESIGNED BY ___ CHECKED BY ___ DATE ___ REVISED ___ DATE ___
DETAILED BY J.K.W. CHECKED BY ___ DATE ___ REVISED ___ DATE ___
TRACED BY J.K.W. CHECKED BY ___ DATE 7-15-76 REVISED ___ DATE ___

WTB 6-25-71

FED. ROAD DIST.	STATE	FED. AID PRO. NO.	FISCAL YEAR	SHEET NO.	TOTAL SHEETS
7	KY.	I471-4(8)4			

+3.00% 400' VC P.V.I. Sta. 304+85.36 El. 543.2536 +1.00 % 500' V.C. P.V.I. Sta. 310+60.00 Elev. 549.00 -1.00 % Profile Grade

℄ Pier 8 Sta. 306+80.00 ℄ Brg. Span 8 1'-0" Modular Rubber Expansion Joint

℄ Brg. Span 8 ℄ Pier 9 Sta. 314+40.00 1'-0" Modular Rubber Expansion Joint

To Newport To Cincinnati

℄ Channel on ℄ I471

Profile Grade

El. 527+ El. 527-

Pier Light (Red-180°) Normal to ℄ Channel Typ. Each End of Piers 8 & 9

FIX EXP

196' Min. Clear. on Channel Line

Channel Light Green-360° on ℄ Channel

23.05' Min. Clearance

Extreme High Water Elev. 509.45 (U.S.C. & G.S.) (1937)

196' min.

700' Min. Clear. (⊥ to Channel)

760'-0" C-C Piers 758'-0" Tied Arch Span

El. 465 El. 465

Normal Pool Elev. 454.25 (U.S.C. & G.S.)

(Elev. 455.00 - Ohio River Datum)

Solid Rock Line (No Cover) El. 441 El. 423

Existing Ground Line

El. 432 West Ftg.

Solid Rock Line El. 407

ELEVATION - SPAN 8

Bridge Clearance Gage on End of Pier

Pier Light (Red-180°) Typ.

Outer Fascia

Gutter Line

59'-6" C-C Ribs 5'-7½" 90°

℄ Pier 8 Sta. 306+80.00

Gutter Line

℄ Survey & ℄ I471

Median Fascia

Gutter Line

59'-6" C-C Ribs 5'-7½"

SPAN 7

306 307 308 309 310 311 312 313 314

55'-3 Southbound Rdwy.

1'-6"

126'-0

55'-3 Northbound Rdwy.

Gutter Line

Outer Fascia

℄ Span Channel Light (Green-360°) (Typ.)

℄ Channel

80°-00'

Division of Cost Between Kentucky & Ohio at Station 313+67.00

N 56°-27'-56" W (Kentucky)

Water's Edge at Normal Pool

℄ Pier 9 Sta. 314+40.00 90°

SPAN 9

Bridge Clearance Gage on End of Pier

OHIO RIVER Flow

PLAN OF DECK - SPAN 8

NOTE: For navigation lighting details see Sheets 62, 64, 65 & 66 of Drawing No. 18484

SHEET 26

KENTUCKY DEPARTMENT OF HIGHWAYS
OHIO DEPARTMENT OF HIGHWAYS

PROJECT 1471-4 ( )

BRIDGE OVER OHIO RIVER ON I 471

CAMPBELL COUNTY, KENTUCKY
HAMILTON COUNTY, OHIO

HAZELET & ERDAL Consulting Engineers File No. 889 | BRIDGE NUMBER | DRAWING NO. 18485 | INDEX

SPAN 8 - LAYOUT

DESIGNED BY JCE DATE
DETAILED BY DATE
TRACED BY DATE
CHECKED BY WFB DATE 10-70 REVISED
CHECKED BY DATE REVISED
CHECKED BY DATE REVISED

WFB 6-25-71

FED. ROAD DIST.	STATE	FED. AID PRO. NO.	FISCAL YEAR	SHEET NO.	TOTAL SHEETS
7	KY.	I471-4(8)4			

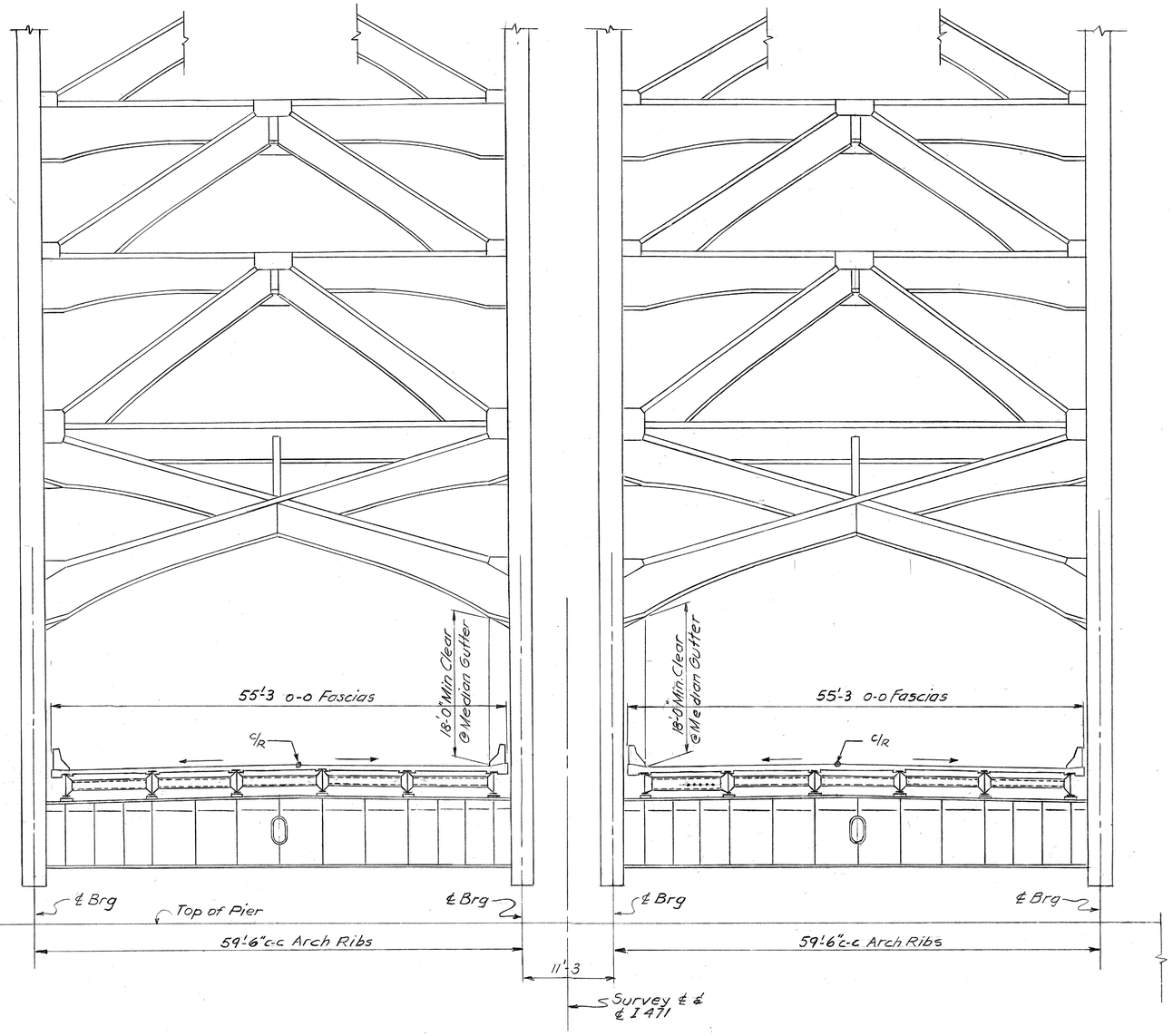

SECTION AT END PORTAL

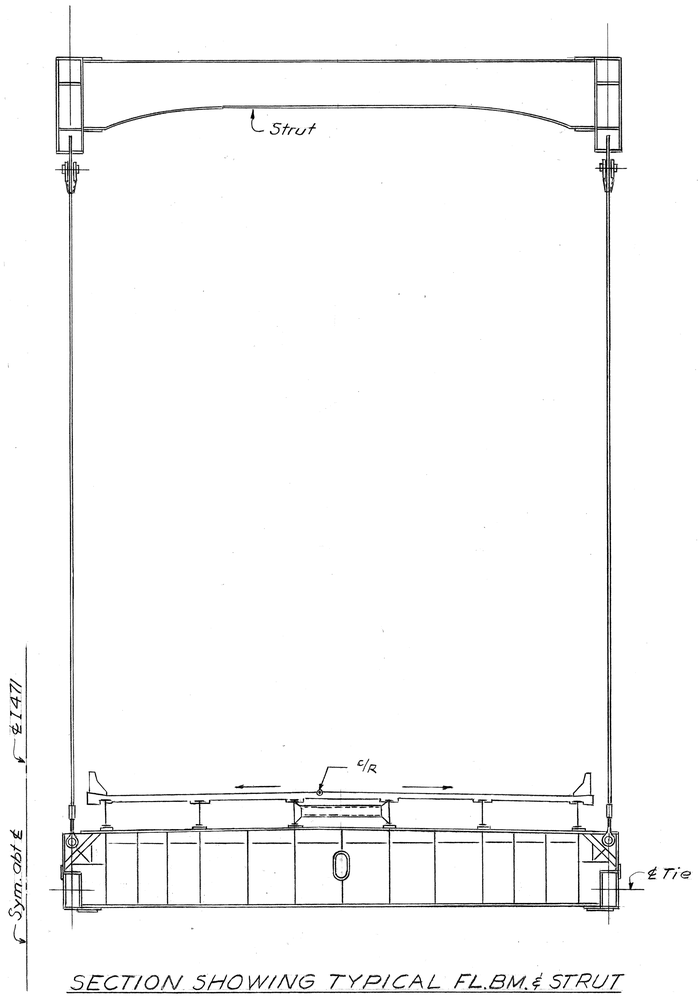

SECTION SHOWING TYPICAL FL.BM.& STRUT

SPAN 8
TYPICAL CROSS SECTIONS

SHEET 27

KENTUCKY DEPARTMENT OF HIGHWAYS
OHIO DEPARTMENT OF HIGHWAYS

PROJECT I 471-4 ( )
BRIDGE OVER OHIO RIVER ON I 471

CAMPBELL COUNTY, KENTUCKY
HAMILTON COUNTY, OHIO

HAZELET & ERDAL Consulting Engineers File No. 889	BRIDGE NUMBER	DRAWING NO. 18485	INDEX

DESIGNED BY		CHECKED BY	WEB
DETAILED BY	EM	CHECKED BY	
TRACED BY		CHECKED BY	

REVISED	DATE	REVISED	DATE	REVISED	DATE

WEB 6-25-71

FED. ROAD DIST.	STATE	FED. AID PRO. NO.	FISCAL YEAR	SHEET NO.	TOTAL SHEETS
7	KY.	I471-4(814)			

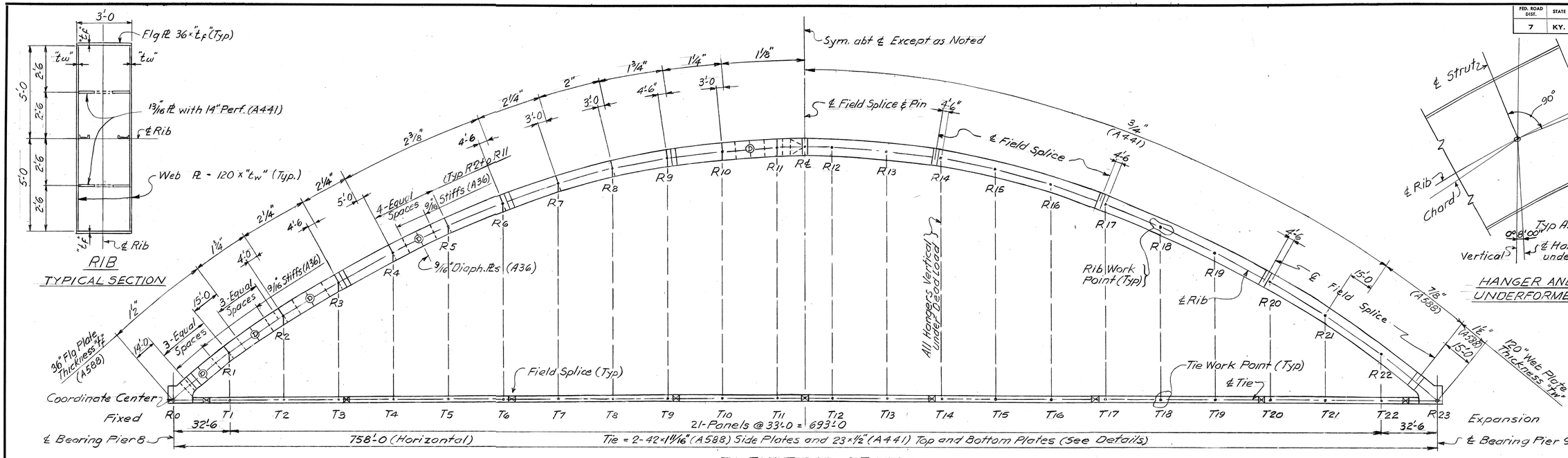

ELEVATION - SPAN 8

UNDEFORMED ARCH (FABRICATED) GEOMETRY

RIB WORK POINT	HORIZ. DIST. FROM COORD. CENTER-(FT.)	ELEVATION OF ARCH AXIS-(FT.)	RIB CHORD LENGTH (FT.)	ANGLE OF RIB CHORD TO HORIZ.	TIE WORK POINT	HORIZ. DIST. FROM COORD CENTER-(FT.)	ELEVATION OF TIE ℄-(FT) (DEFORMED -SEE NOTES)	TIE CHORD LENGTH (FT.)	ANGLE OF TIE CHORD TO HORIZ.
R0	0.000	535.210							
			41.089	37° 53' 14"				32.479	0° 34' 24"
R1	32.428	560.443			T1	32.477	535.535		
			40.350	35° 16' 49"				32.978	0° 34' 24"
R2	65.367	583.748			T2	65.453	535.865		
			39.051	32° 27' 28"				32.979	0° 34' 24"
R3	98.318	604.706			T3	98.430	536.195		
			37.853	29° 26' 48"				32.978	0° 34' 24"
R4	131.281	623.315			T4	131.406	536.525		
			36.763	26° 15' 13"				32.977	0° 31' 48"
R5	164.252	639.577			T5	164.382	536.830		
			35.796	22° 52' 45"				32.978	0° 27' 12"
R6	197.232	653.494			T6	197.359	537.091		
			34.958	19° 19' 58"				32.977	0° 22' 44"
R7	230.219	665.067			T7	230.335	537.309		
			34.260	15° 37' 57"				32.976	0° 18' 08"
R8	263.212	674.299			T8	263.311	537.483		
			33.710	11° 47' 56"				32.977	0° 13' 39"
R9	296.210	681.192			T9	296.288	537.614		
			33.317	7° 51' 35"				32.976	0° 09' 04"
R10	329.214	685.748			T10	329.264	537.701		
			33.082	3° 50' 27"				32.977	0° 04' 35"
R11	362.222	687.964			T11	362.241	537.745		
			16.509	0° 49' 09"				32.976	0° 00' 00"
R℄	378.729	688.200							
			16.509	0° 49' 09"				32.977	0° 04' 35"
R12	395.236	687.964			T12	395.217	537.745		
			33.082	3° 50' 27"				32.976	0° 09' 04"
R13	428.244	685.748			T13	428.194	537.701		
			33.317	7° 51' 35"				32.977	0° 13' 39"
R14	461.248	681.192			T14	461.170	537.614		
			33.710	11° 47' 56"				32.976	0° 18' 08"
R15	494.246	674.299			T15	494.147	537.483		
			34.260	15° 37' 57"				32.977	0° 22' 44"
R16	527.239	665.067			T16	527.123	537.309		
			34.958	19° 19' 58"				32.978	0° 27' 12"
R17	560.226	653.494			T17	560.099	537.091		
			35.796	22° 52' 45"				32.977	0° 31' 48"
R18	593.206	639.577			T18	593.076	536.830		
			36.763	26° 15' 13"				32.978	0° 34' 24"
R19	626.177	623.315			T19	626.052	536.525		
			37.853	29° 26' 48"				32.979	0° 34' 24"
R20	659.140	604.706			T20	659.028	536.195		
			39.051	32° 27' 28"				32.978	0° 34' 24"
R21	692.091	583.748			T21	692.005	535.865		
			40.350	35° 16' 49"				32.479	0° 34' 24"
R22	725.030	560.443			T22	724.981	535.535		
			41.089	37° 53' 14"					
R23	757.458	535.210			R23	757.458	535.210		

DEFORMED ARCH (FINAL) GEOMETRY

RIB WORK POINT	HORIZ. DIST. FROM COORD CENTER-(FT)	ELEVATION OF ARCH AXIS-(FT.)	TIE WORK POINT	HORIZ. DIST. FROM COORD. CENTER-(FT)	ELEVATION OF TIE ℄-(FT)
R0	0.000	535.210	R0	0.000	535.210
R1	32.500	560.324	T1	32.500	535.535
R2	65.500	583.514	T2	65.500	535.865
R3	98.500	604.367	T3	98.500	536.195
R4	131.500	622.881	T4	131.500	536.525
R5	164.500	639.056	T5	164.500	536.830
R6	197.500	652.894	T6	197.500	537.091
R7	230.500	664.393	T7	230.500	537.309
R8	263.500	673.554	T8	263.500	537.483
R9	296.500	680.377	T9	296.500	537.614
R10	329.500	684.862	T10	329.500	537.701
R11	362.500	687.008	T11	362.500	537.745
R℄	379.000	687.210			
R12	395.500	687.008	T12	395.500	537.745
R13	428.500	684.862	T13	428.500	537.701
R14	461.500	680.377	T14	461.500	537.614
R15	494.500	673.554	T15	494.500	537.483
R16	527.500	664.393	T16	527.500	537.309
R17	560.500	652.894	T17	560.500	537.091
R18	593.500	639.056	T18	593.500	536.830
R19	626.500	622.881	T19	626.500	536.525
R20	659.500	604.367	T20	659.500	536.195
R21	692.500	583.514	T21	692.500	535.865
R22	725.500	560.324	T22	725.500	535.535
R23	758.000	535.210	R23	758.500	535.210

GEOMETRY NOTES:

All steel shall be fabricated for a normal temperature of 60° F.

The UNDEFORMED ARCH (FABRICATED) GEOMETRY table is given for use in fabricating the Tie and the Rib. The coordinates and elevations allow for the deformations due to the full dead load excluding Future Wearing Surface unless noted.

The DEFORMED ARCH (FINAL) GEOMETRY table gives the final geometry after the structure is completed with the full dead load excluding FUTURE WEARING SURFACE applied.

See the Arch Rib and Arch Tie Notes for fabrication information relating to the Rib and the Tie.

Work Sheets 28 and 29 Together.

SHEET 28

REVISED	DATE
Rib field spl. locations ASB	1-9-78

DESIGNED BY JAH & CGH DATE 10-70
DETAILED BY KFB CHECKED BY KFB
TRACED BY F.M.E.T.A.M. CHECKED BY KFB
CHECKED BY

USBR 6-25-71

KENTUCKY DEPARTMENT OF HIGHWAYS
OHIO DEPARTMENT OF HIGHWAYS

PROJECT 1471-4 ( )

BRIDGE OVER OHIO RIVER ON I 471

CAMPBELL COUNTY, KENTUCKY
HAMILTON COUNTY, OHIO

SPAN 8
MEMBER SECTIONS & GEOMETRY

HAZELET & ERDAL Consulting Engineers File No. 889	BRIDGE NUMBER	DRAWING NO. 18485	INDEX

FED. ROAD DIST.	STATE	FED. AID PRO. NO.	FISCAL YEAR	SHEET NO.	TOTAL SHEETS
7	KY.	I471-4(8)4			

MEMBER STRESSES

MEMBER	R_0-R_1		R_1-R_2		R_2-R_3		R_3-R_4		R_4-R_5		R_5-R_6		R_6-R_7		R_7-R_8		R_8-R_9		R_9-R_{10}	
JOINT	R_1		R_2		R_3		R_4		R_5		R_6		R_7		R_8		R_9		R_{10}	
GROSS AREA	350.9		339.3		375.3		375.3		384.3		384.3		375.3		357.3		339.3		303.3	
SECTION MODULUS	11,060		11,546		13,673		13,673		14,204		14,204		13,673		12,610		11,546		9,476	
MAX ℓ/r	40.3		26.0		32.5		31.6		30.9		30.1		29.2		28.2		27.4		26.3	
f ALLOWABLE ①	- 19.3		- 18.8		- 18.3		- 18.2		- 18.2		- 18.2		- 18.4		- 18.6		- 18.6		- 18.6	
	THRUST	MOMENT	THRUST	MOMENT	THRUST	MOMENT	THRUST	MOMENT	THRUST	MOMENT	THRUST	MOMENT	THRUST	MOMENT	THRUST	MOMENT	THRUST	MOMENT	THRUST	MOMENT
DL (STEEL)	- 2,234	- 6,710	- 2,162	- 13,355	- 2,088	- 18,325	- 2,018	- 18,475	- 1,958	- 16,815	- 1,905	- 13,975	- 1,858	- 7,585	- 1,823	- 2,625	- 1,796	+ 140	- 1,775	+ 2,505
DL (CONCRETE)	- 2,171	- 2,350	- 2,091	+ 2,945	- 2,030	+ 2,045	- 1,960	+ 7,240	- 1,914	+ 3,800	- 1,859	+ 5,185	- 1,817	+ 4,425	- 1,783	+ 1,525	- 1,751	+ 3,970	- 1,734	- 2,145
DL (F.W.S.)	- 307	- 660	- 295	- 140	- 287	- 425	- 277	+ 190	- 271	- 665	- 263	- 700	- 254	- 945	- 252	- 1,390	- 247	- 1,020	- 245	- 2,120
LL+I (FULLY LOADED)	- 724	- 12,240	- 688	- 18,705	- 670	- 24,095	- 647	- 25,025	- 637	- 27,310	- 618	- 26,510	- 608	- 25,335	- 599	- 24,270	- 586	- 21,425	- 585	- 22,095
LL+I (MAX COMPR. TOP)	- 339	- 59,285	- 273	- 106,125	- 253	- 139,535	- 225	- 156,315	- 255	- 166,120	- 278	- 162,550	- 264	- 150,950	- 301	- 133,160	- 332	- 108,215	- 336	- 89,850
LL+I (MAX COMPR. BOTT)	- 482	+ 47,895	- 477	+ 89,630	- 476	- 119,205	- 437	+ 138,225	- 441	+ 147,770	- 389	+ 144,785	- 396	+ 135,065	- 393	+ 118,940	- 349	+ 96,855	- 304	+ 72,360
TOTALS																				
DL+LL+I (FULLY LOADED)	- 5,436	- 21,960	- 5,236	- 29,255	- 5,075	- 40,800	- 4,902	- 36,070	- 4,780	- 40,990	- 4,645	- 36,000	- 4,540	- 29,440	- 4,457	- 26,760	- 4,380	- 18,355	- 4,339	- 23,855
DL+LL+I (MAX COMPR. TOP)	- 5,051	- 69,005	- 4,821	- 116,675	- 4,658	- 156,240	- 4,480	- 167,360	- 4,398	- 179,800	- 4,305	- 172,040	- 4,196	- 155,055	- 4,159	- 135,650	- 4,126	- 105,125	- 4,090	- 91,610
DL+LL+I (MAX COMPR. BOTT)	- 5,194	+ 38,175	- 5,025	+ 79,080	- 4,881	+ 102,500	- 4,692	+ 127,180	- 4,584	+ 134,090	- 4,416	+ 135,295	- 4,328	+ 130,960	- 4,251	+ 116,450	- 4,143	+ 99,945	- 4,058	+ 70,600
f (MAX AXIAL)	- 15.4		- 15.4		- 13.6		- 13.1		- 12.4		- 12.1		- 12.1		- 12.5		- 12.9		- 14.3	
f MAX (AXIAL+BEND) ②	- 21.0		- 24.6		- 23.9		- 24.2		- 24.1		- 23.8		- 23.8		- 24.1		- 4.2		-	
f MIN (AXIAL+BEND) ③	- 7.4		- 3.4		- 0.5		+ 0.6		+ 1.5		+ 1.8		+ 1.8		+ 1.1		+ 0.2		- 1.6	

MEMBER	R_{10}-R_{11}		R_{11}-R_{ℓ}		R_0-R_{23} (Tie)	
JOINT	R_{11}		R_{ℓ}		R_0	
GROSS AREA	294.3		280.8		167.5	
SECTION MODULUS	8,883		8,878		1,455	
MAX ℓ/r	25.9		25.2		36.0	
f ALLOWABLE ①	- 18.4		- 18.4		+ 27.0	
	THRUST	MOMENT	THRUST	MOMENT	THRUST	MOMENT
DL (STEEL)	- 1,764	- 295	- 1,760	0.0	+ 1,760	- 455
DL (CONCRETE)	- 1,720	- 3,435	- 1,716	0.0	+ 1,716	- 245
DL (F.W.S)	- 243	- 2,395	- 242	- 1,910	+ 242	- 45
LL+I (FULLY LOADED)	- 579	- 21,720	- 575	- 17,495	+ 586	- 95
LL+I (MAX COMPR. TOP)	- 339	- 79,725	- 760	- 73,480	——	- 5,315
LL+I (MAX COMPR. BOTT)	- 324	+ 58,685	- 321	+ 55,960	——	+ 5,510
TOTALS						
DL+LL+I (FULLY LOADED)	- 4,306	- 27,845	- 4,293	- 19,405	+ 4,304	- 830
DL+LL+I (MAX COMPR. TOP)	- 4,066	- 85,850	- 4,478	- 75,390	——	- 6,050
DL+LL+I (MAX COMPR BOTT)	- 4,051	+ 52,560	- 4,039	+ 54,050	——	+ 4,775
f (MAX AXIAL)	- 14.6		@ R_{11} - 16.0		+25.8 (On Gross Area) +29.0 (On Net Area)	
f MAX (AXIAL+BEND) ②	- 24.5		- 11.6		——	
f MIN (AXIAL+BEND) ③	- 2.7		+ 9.2		——	

STRESS SHEET NOTES:

Sign Convention
- Thrust : − = Compression, + = Tension
- Moment : − = Compression Top Flange, + = Compression Bottom Flange

Units of table values
- Area = Square Inches
- Section Modulus = Inches^3
- Thrust = Kips
- Moment = Inch-Kips
- f = Kips per Square Inch

The Structure is symmetrical about R_{ℓ}.

The R_{ℓ} Joint is considered as Hinged for DL (Steel) + DL (Conc.) and as Fixed for DL (FWS) + LL + I.

Member R_0-R_1 design is governed by the portal action due to wind forces and by Joint R_0 design.

Members R_1-R_2, R_9-R_{10}, R_{11}-R_{12}, and R_0-R_{23} (Tie) are designed considering the increased allowable DL stresses.

Member R_{11}-R_{ℓ} design is governed by the R_{ℓ} Joint design.

① - f allowable as determined from Curves based on formula (A), Appendix "C", AASHO 1969, $\alpha = +1$.

② - stress given is the max compression stress in the Top Flange.

③ - stress given is the min compression or max tension in the Bottom Flange.

Work Sheets 28 and 29 Together.

SHEET 29

SPAN 8
STRESS SHEET

KENTUCKY DEPARTMENT OF HIGHWAYS
OHIO DEPARTMENT OF HIGHWAYS

PROJECT 1471-4 ( )

BRIDGE OVER OHIO RIVER ON I 471

CAMPBELL COUNTY, KENTUCKY
HAMILTON COUNTY, OHIO

HAZELET & ERDAL Consulting Engineers File No. 889	BRIDGE NUMBER	DRAWING NO. 18485	INDEX

DESIGNED BY: MFB CHECKED BY: JAN & CGH DATE 10-70
DETAILED BY: F.M.E & J.A.N CHECKED BY: MFB DATE
TRACED BY: CHECKED BY: DATE
REVISED DATE
REVISED DATE
REVISED DATE

11-25-71

FED. ROAD DIST.	STATE	FED. AID PRO. NO.	FISCAL YEAR	SHEET NO.	TOTAL SHEETS
7	KY.	I471-4(8)4			

PANEL POINT LOADS (IN KIPS)

	Panel Point	0	1	2	3	4	5	6	7	8	9	10	11	℄
Rib Joint	Steel ①	47.6	62.5	81.6	77.4	70.4	68.2	71.3	62.7	58.8	57.9	50.7	44.1	32.6
Tie Joint	Steel ②	25.9	57.4	51.5	59.2	58.6	59.2	62.1	58.1	60.1	65.5	60.7	62.2	0
	Concrete	50.2	135.4	110.0	136.7	99.5	133.5	115.9	115.9	134.8	99.7	133.5	115.9	0
	F.W.S ④	6.7	19.4	15.7	19.4	13.4	19.2	16.6	16.6	19.2	13.4	19.2	16.6	0
	Sub Total	82.8	212.2	177.2	215.3	171.5	211.9	194.6	190.6	214.1	178.6	213.4	194.7	0
Rib + Tie	DL Total	130.4	274.7	258.8	292.7	241.9	280.1	265.9	253.3	272.9	236.5	264.1	238.8	32.6
Uniform Live Load		14.4	41.2	33.3	41.2	28.7	40.6	35.2	35.2	40.6	28.9	40.6	35.2	0
	Impact (5.7%)	0.8	2.3	1.9	2.3	1.6	2.3	2.0	2.0	2.3	1.6	2.3	2.0	0
	LL + I ③	15.2	43.5	35.2	43.5	30.3	42.9	37.2	37.2	42.9	30.5	42.9	37.2	0
DL + LL + I Total		145.6	318.2	294.0	336.2	272.2	323.0	303.1	290.5	315.8	267.0	307.0	276.0	32.6

① Includes weight of Rib, Rib Bracing, and incidental details.
② Includes weight of Tie, Bottom Bracing, Floorbeam, Inspection Walks, Stringers, Diaphrams, Expansion Dams, Cable (includes two sockets), and incidental details plus the unbalanced vertical component of the Tie Stress.
③ Uniform LL+I only (does not include concentrated Load).
④ Future Wearing Surface applied after Hinge at the ℄ Joint has been fixed.

FLOORBEAM MOMENTS, REACTIONS, STRESSES AND CAMBER

Floorbeam	⑧ Maximum Moment (Ft.-Kips.) DL	LL	I	Total	Max. Tension Kips/in²	⑨ End Reaction (Kips) DL	LL	I	Total	Max Shear Kips/in²	Dead Load Camber ⑩ (Inches)	Ψ Radians
FB11	1645	1365	370	3380	25.8	106	82	22	210	5.8	1/4	.00140
FB12	2775	1790	485	5050	26.4	185	109	30	324	9.0	3/8	.00210
FB13	2305	1765	475	4545	26.1	151	106	29	286	7.9	3/8	.00210
FB14	2200	1490	400	4090	26.5	142	87	24	253	7.0	3/8	.00210
Allowable				Tension = +27.0 K/in² Compr. = -25.8 K/in²		Allowable Shear = 17.0 K/in²						

⑧ Moment at ℄ Floorbeam.
⑨ Does not include Reaction due to Tie, Cable, socket and "K" Brcg. at Tie.
⑩ Camber for DL (Steel) + DL (Conc.) only.

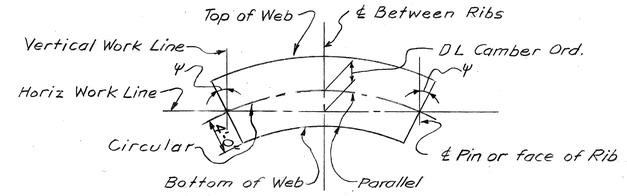

CAMBER DIAGRAM
(Camber and End Rotation)

HANGER ASSEMBLIES (FT.)

Panel	Deformed Length Rib to Tie ⑤	Deformed Length C-C Pins ⑥	Strand Elongation ⑦ ⑬ Steel	Conc.	F.W.S	Total
1	24.789	11.758	.005	.013	.002	.020
2	47.649	34.884	.016	.034	.005	.055
3	68.172	55.640	.027	.061	.009	.097
4	86.356	74.022	.042	.071	.010	.123
5	102.227	90.112	.043	.097	.014	.154
6	115.803	103.870	.056	.106	.015	.177
7	127.084	115.235	.059	.117	.017	.193
8	136.071	124.373	.060	.135	.019	.214
9	142.763	131.180	.082	.125	.017	.224
10	147.161	135.629	.066	.146	.021	.223
11	149.263	137.748	.075	.140	.020	.235

⑤ Vertical Distance from Work Point of Rib to Work Point of Tie.
⑥ Vertical Distance from ℄ Pin at Rib to ℄ Pin at Tie.
⑦ Modulus of Elasticity used for Strand Elongation = 23 000 000 psi For other "E"s, adjust deformation. Steel elongation includes weight of hanger.
⑬ Includes Δ due to unbalanced vertical component of the Tie Stress.

INTERIOR STRINGER MOMENTS, STRESSES AND REACTIONS ⑭

	Max Moment (Ft Kips) Positive	Negative	Max Reactions (Kips) @ End Support	@ 1st Interior Support	@ 2nd Interior Support
DL	125	-173	19	57	45
LL	266	-196	47	61	60
I (30%)	80	-58	14	18	17
Total	471	-427	80	136	122
Max Stress (Kips/in²)	17.3	16.9			
Max Shear (Kips/in²)			4.7	5.2	4.8
Tension ℄ Compr. Allowable = 20.0 K/in²			Shear Allowable = 12.0 K/in²		

⑭ To produce the max. moment and/or max. reactions for Fascia Stringers multiply the table values by 1.03 for Dead Load and by 0.83 for Live Load. Sections are governed by 1/1200 LL+I deflection requirement.

DEAD LOAD VERTICAL DEFLECTION (FT.)

	Panel Point	0	1	2	3	4	5	6	7	8	9	10	11	℄
Rib	Steel ⑬	—	.075	.147	.208	.258	.297	.326	.347	.363	.378	.392	.406	.414
	Concrete	—	.044	.087	.131	.176	.224	.274	.327	.381	.437	.494	.549	.576
	Sub Total	—	.119	.234	.339	.434	.521	.600	.674	.744	.815	.886	.955	.990
	F.W.S.	—	.008	.015	.022	.029	.036	.043	.049	.054	.059	.062	.064	.064
Deck	⑪	—	.020	.055	.097	.123	.154	.177	.193	.214	.224	.233	.235	.235
Total ⑫	Rib + Deck	—	.147	.304	.458	.586	.711	.820	.916	1.012	1.098	1.181	1.254	1.289

⑪ See Strand Elongation of Hanger Assemblies.
⑫ Includes DL (Steel) + DL (Conc.) + DL (FWS) + Hanger Elongation.

DESIGNED BY F.M.S.JAN DETAILED BY WEB CHECKED BY CHECKED BY TRACED BY
DATE 10-72 DATE DATE DATE DATE
REVISED REVISED REVISED REVISED
4-25-71

SHEET 30

KENTUCKY DEPARTMENT OF HIGHWAYS
OHIO DEPARTMENT OF HIGHWAYS
PROJECT 1471-4 ( )
BRIDGE OVER OHIO RIVER ON I 471
CAMPBELL COUNTY, KENTUCKY
HAMILTON COUNTY, OHIO

SPAN 8 LOAD SHEET

HAZELET & ERDAL Consulting Engineers File No. 889	BRIDGE NUMBER	DRAWING NO. 18485	INDEX

FED. ROAD DIST.	STATE	FED. AID PRO. NO.	FISCAL YEAR	SHEET NO.	TOTAL SHEETS
7	KY.	I471-4(8)4			

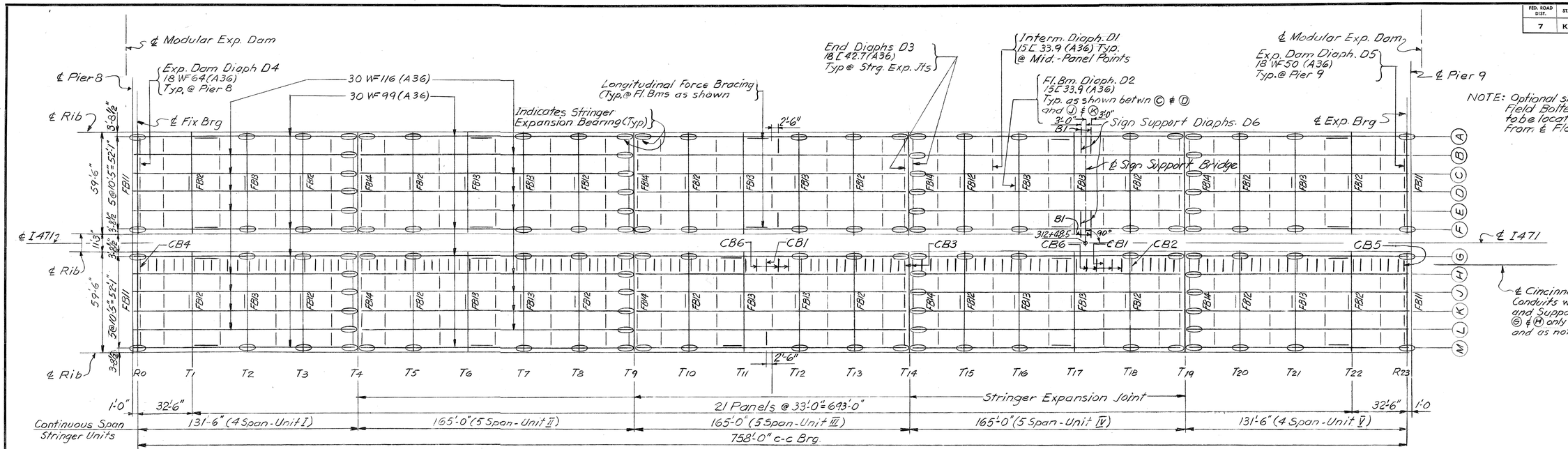

FLOOR SYSTEM FRAMING PLAN

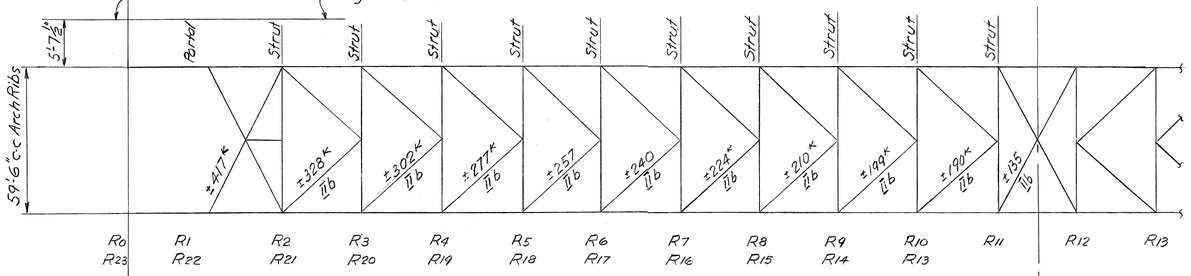

PLAN OF TOP LATERAL BRACING

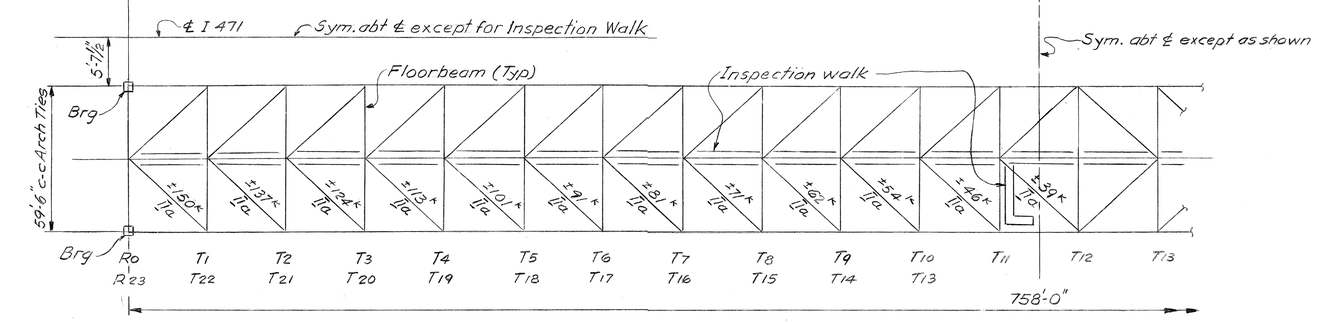

PLAN OF BOTTOM LATERAL BRACING

CINCINNATI BELL DIAPHRAGMS

DIAPH	SECTION	MAT'L	LOCATION
CB1	21 B 44	A36	At midpanel point of stringers
CB2	1-L 4×3×5/16	A36	At each interior stringer support
CB3	24 B 55	A36	At stringer expansion joints
CB4	27 WF 84	A36	At Pier 8 expansion joint
CB5	24 WF 68	A36	At Pier 9 expansion joint
CB6	1-L 4×3×5/16	A36	Space to clear Drains with 7'-0" max. Ctrs.

BRACING MEMBER STRESSES:

Stresses shown are tensile (+) or compressive (-).
Bracing is designed as a double system.
IIa Loading - 50#/sq.ft. wind @ 100% of allowable.
IIb Loading - 50#/sq.ft. wind + transverse shear of 2½% of total axial dead load compressive stress in that panel @ 125% of allowable.

SHEET 31

KENTUCKY DEPARTMENT OF HIGHWAYS
OHIO DEPARTMENT OF HIGHWAYS
PROJECT I 471-4 ( )
BRIDGE OVER OHIO RIVER ON I 471
CAMPBELL COUNTY, KENTUCKY
HAMILTON COUNTY, OHIO

SPAN 8 FRAMING PLAN

HAZELET & ERDAL Consulting Engineers File No. 889	BRIDGE NUMBER	DRAWING NO. 18485	INDEX

DESIGNED BY ____ CHECKED BY ____ DATE ____
DETAILED BY F.M CHECKED BY C.G.H DATE 10-70
TRACED BY ____ CHECKED BY ____ DATE ____
REVISED Added Overhead Sign Support Diaphs. D5 & D6 DATE 6-25-71
REVISED ____ DATE ____
REVISED ____ DATE ____

FED. ROAD DIST.	STATE	FED. AID PRO. NO.	FISCAL YEAR	SHEET NO.	TOTAL SHEETS
7	KY.	I471-4(8)4			

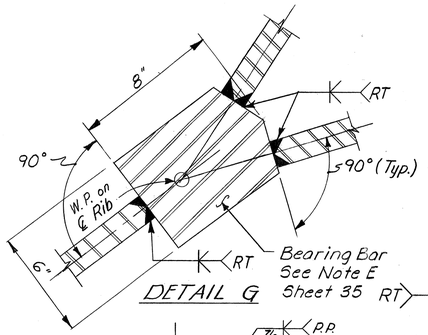

DETAIL G

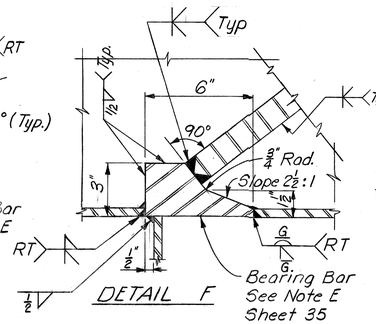

DETAIL F

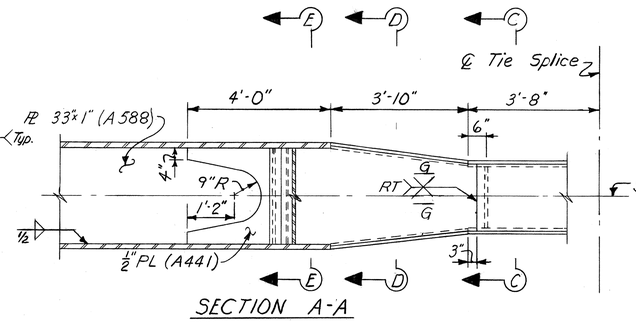

SECTION A-A

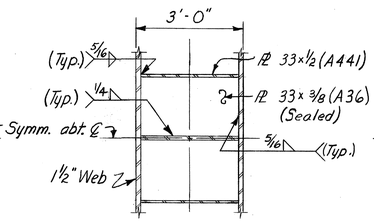

SECTION E-E

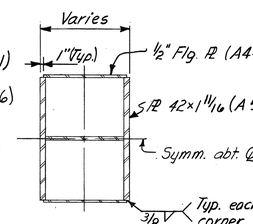

SECTION D-D

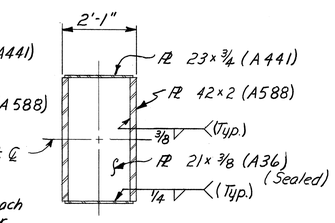

SECTION C-C

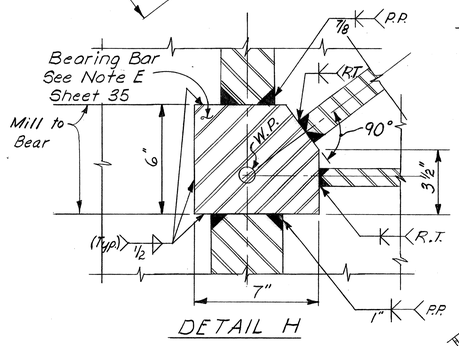

DETAIL H

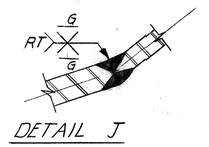

DETAIL J

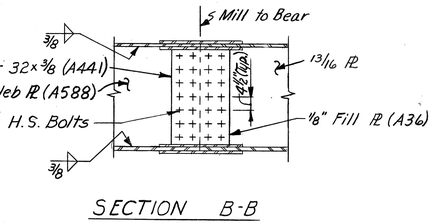

SECTION B-B

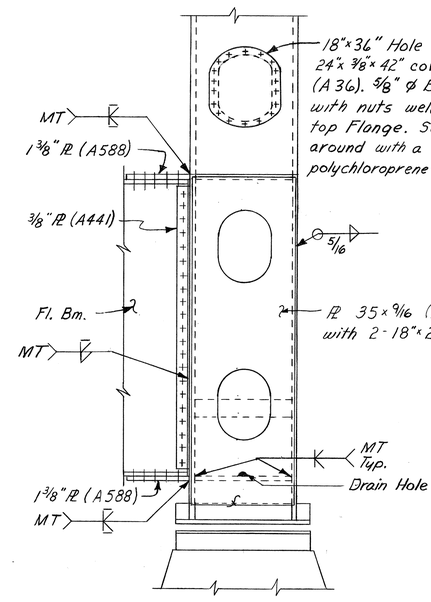

END VIEW

ELEVATION AT RO (SHOWN)
(R23 OPP. HAND)

Note:
for Ladder and Platform connections not shown at R_o, see sheet 51.

ARCH RIB NOTES:

H.S. Bolts - 7/8" ϕ U.N.
Material - A 36 U.N.

The Arch Ribs are to be three hinged during all erection. After the concrete slabs and parapets have been placed, the ℄ Joint splice plates shall be bolted in place converting the Ribs to two hinged arches. See ℄ Joint sketch.

The Arch Ribs are to be fabricated to the coordinates and elevations given in the Undeformed Geometry table on Sheet 28. The Ribs are to be fabricated to a smooth curve. The formula for the curve thru the Rib Work Points for the deformed geometry coordinates and elevations is as follows:

$y = [-0.00012545 + 9.6954(X/1000) - 12.882816(X/1000)^2]\ 1000/12$

where x = horizontal distance from R_o (in feet)
y = vertical distance from R_o (in feet)

The fabricator may use the deformed geometry chord offsets as determined from the above formula for the undeformed geometry chord offsets or may submit an alternate method of obtaining the fabrication curve to the Engineer for approval.

The hanger connection plate fabrication geometry shall be as shown on sheet 28.
See sheet 42 for Hanger Connections.
See sheet 2 for General Notes.

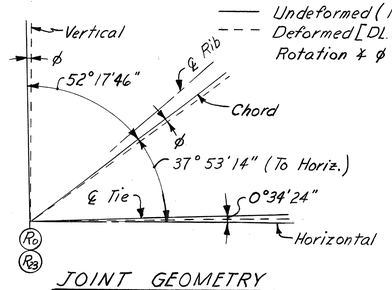

JOINT GEOMETRY

—— Undeformed (No Load) (As Fabricated)
- - - Deformed [DL (Conc.) + DL (Steel)]
Rotation ∡ ϕ = 0°11' ±

Work Sheets 32 thru 35 Together.

SHEET 32

SPAN 8
ARCH RIB DETAILS

KENTUCKY DEPARTMENT OF HIGHWAYS
OHIO DEPARTMENT OF HIGHWAYS

PROJECT 1471-4 ( )
BRIDGE OVER OHIO RIVER ON I 471
CAMPBELL COUNTY, KENTUCKY
HAMILTON COUNTY, OHIO

HAZELET & ERDAL Consulting Engineers File No. 889	BRIDGE NUMBER	DRAWING NO.	INDEX
		18485	

DESIGNED BY JAH & C&H DATE 4-8-72
DETAILED BY JAH 9/16 CHECKED BY C&H DATE 6-20 CHECKED BY DATE
TRACED BY JAH CHECKED BY DATE
REVISED Rib geometry formula & removed slip joint DATE 8-31-72
REVISED Detail F & Bearing Bar Mark DATE 5-5-72
REVISED DATE

W78 6-25-71

FED. ROAD DIST.	STATE	FED. AID PRO. NO.	FISCAL YEAR	SHEET NO.	TOTAL SHEETS
7	KY.	I471-4(8)64			

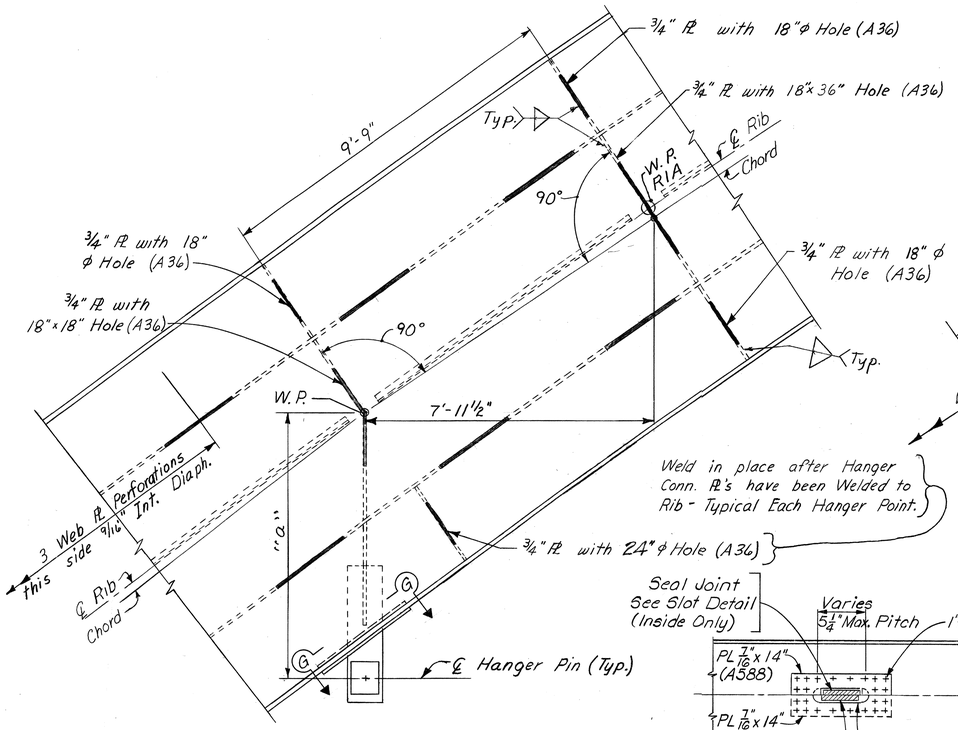

R 1

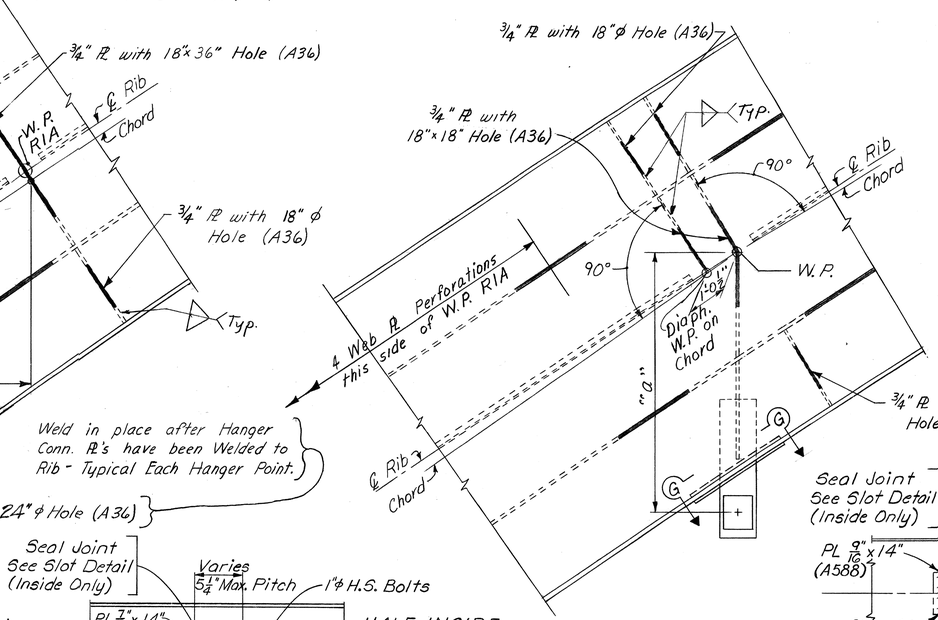

R 2

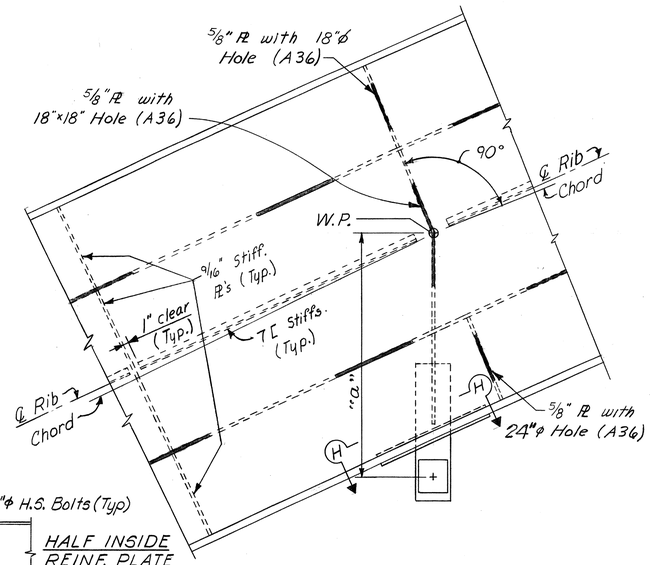

R 3 THRU R5
(R5 SHOWN)

SECTION G-G

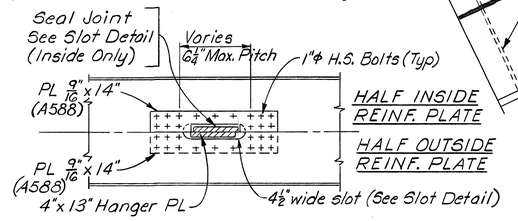

SECTION H-H

Note: Loteral Bracing Gusset & Connection PLs not shown. See Sheets 36, 37 & 39 for locations & details.

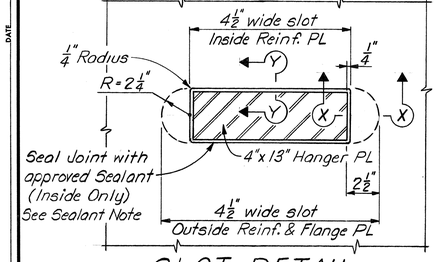

SLOT DETAIL

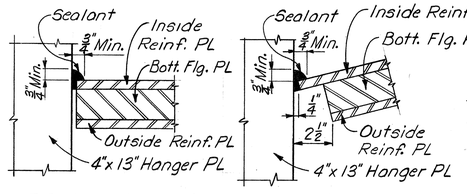

SECTION Y-Y SECTION X-X

Sealant Note: The sealant for the hanger plate joint is to be a silicone rubber or polysulfide base sealant. Complete Specifications and manufacturer's information for the materials to be used and a step by step procedure for application shall be submitted to the Engineer and approved by him before any material is applied. The application shall be to clean bright metal in strict accordance with the manufacturer's recommendations including the use of metal primer and back-up material. The cost of sealing these joints shall be included in the lump sum bid for Structural Steel.

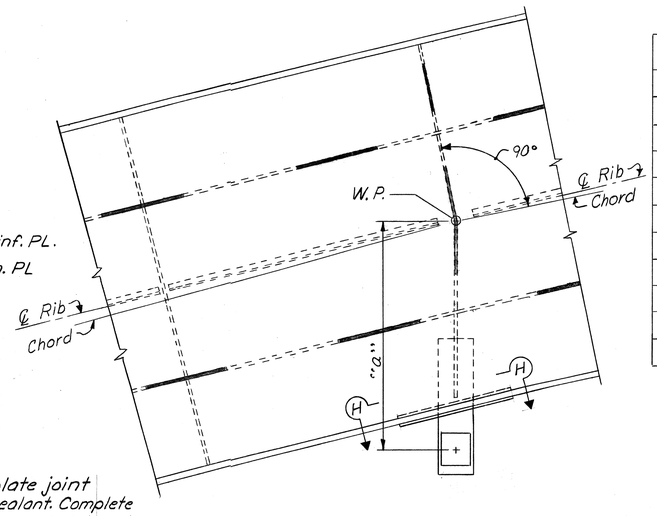

R6 THRU R8
(R8 SHOWN)

JOINT	DIMENSION "a"
R1, R22	7'-8"
R2, R21	7'-5"
R3, R20	7'-2"
R4, R19	7'-0"
R5, R18	6'-9"
R6, R17	6'-7"
R7, R16	6'-6"
R8, R15	6'-4"
R9, R14	6'-3"
R10, R13	6'-2"
R11, R12	6'-2"

DETAILS AT WORK POINTS
(Rib is symmetrical abt. ℄ Span)

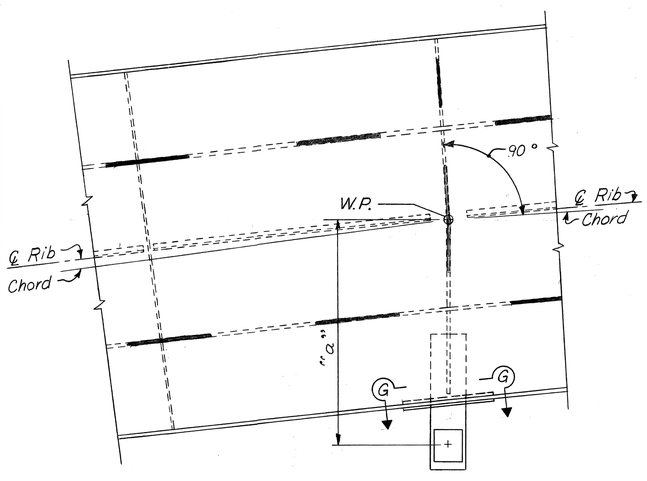

R9 & R10
(R10 SHOWN)

PERFORATION NOTES:
The perforation locations shown are approximate only. The spacing will vary in the various pannels and and are to be spaced to clear the field splices and the diaphragms with 5'-4" min. centers.

Work Sheets 32 thru 35 Together.

SHEET 33

KENTUCKY DEPARTMENT OF HIGHWAYS
OHIO DEPARTMENT OF HIGHWAYS

PROJECT I 471-4 ( )
BRIDGE OVER OHIO RIVER ON I 471

CAMPBELL COUNTY, KENTUCKY
HAMILTON COUNTY, OHIO

SPAN 8
ARCH RIB DETAILS

HAZELET & ERDAL Consulting Engineers File No. 889	BRIDGE NUMBER	DRAWING NO. 18485	INDEX

WRT 176 DATE 5-5-72
REVISED DATE
REVISED DATE
CHECKED BY JAN & CGH DATE
CHECKED BY DATE
CHECKED BY CGH DATE 10-70
DESIGNED BY KFB CHECKED BY
DETAILED BY TAN 8/25
TRACED BY TAN
WRT 6-25-71

FED. ROAD DIST.	STATE	FED. AID PRO. NO.	FISCAL YEAR	SHEET NO.	TOTAL SHEETS
7	KY.	I47(-)-4(8)4			

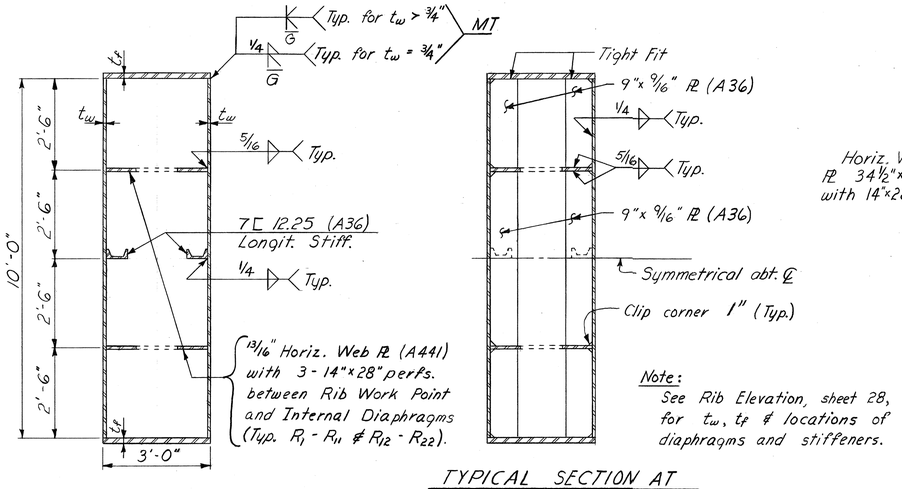

Note:
See Rib Elevation, sheet 28, for t_w, t_f & locations of diaphragms and stiffeners.

TYPICAL RIB SECTION

TYPICAL SECTION AT VERTICAL STIFFENERS

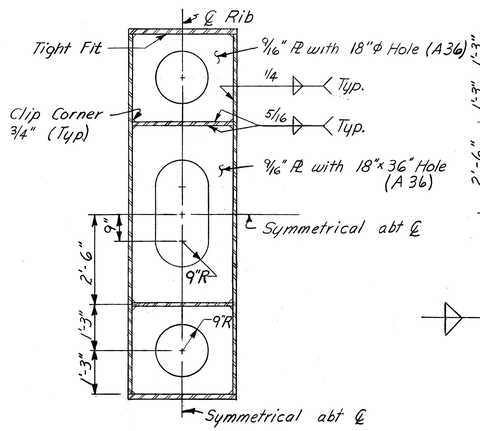

TYPICAL SECTION AT INTERNAL DIAPHRAGMS

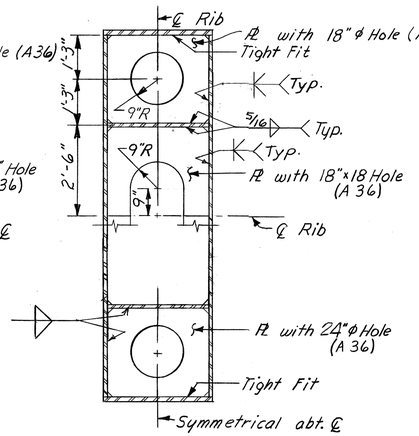

TYPICAL SECTION AT R1 THRU R5

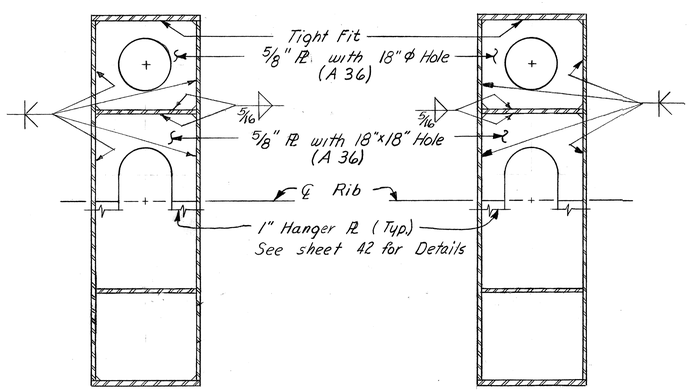

TYPICAL SECTION AT R6 THRU R8

TYPICAL SECTION AT R9 & R10

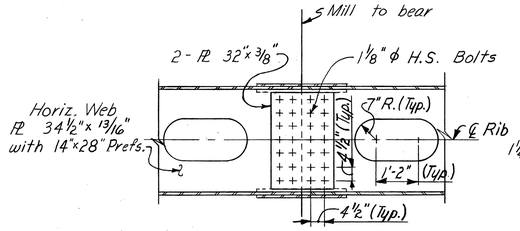

SECTION A-A

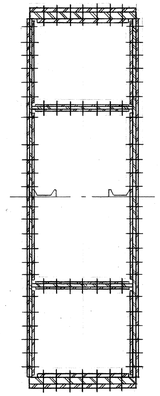

SECTION B-B

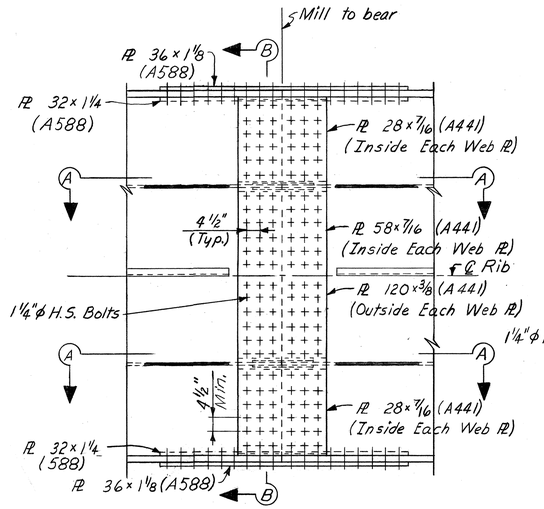

TYPICAL RIB SPLICE ELEVATION (SHOWN @ R3)

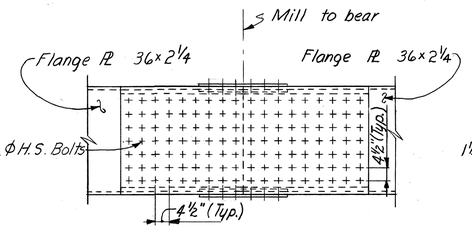

PLAN @ R3

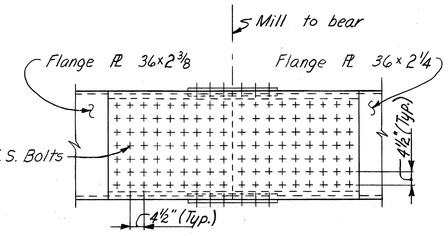

PLAN @ R6

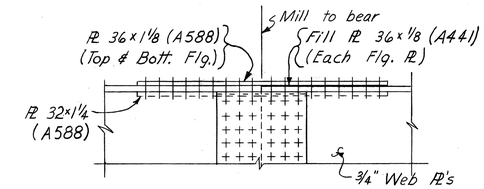

PART ELEVATION @ R6

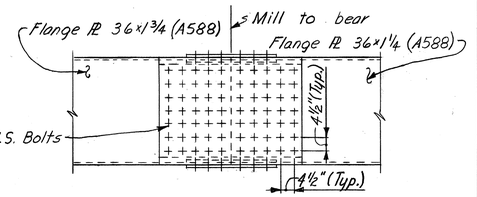

PLAN @ R9

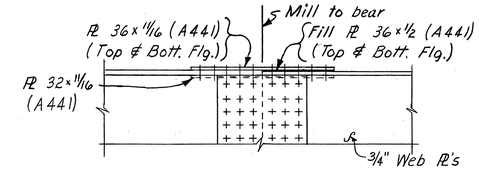

PART ELEVATION @ R9

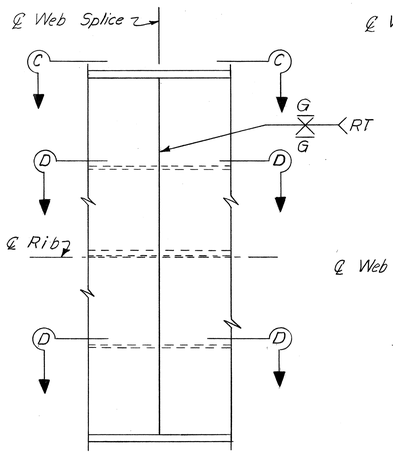

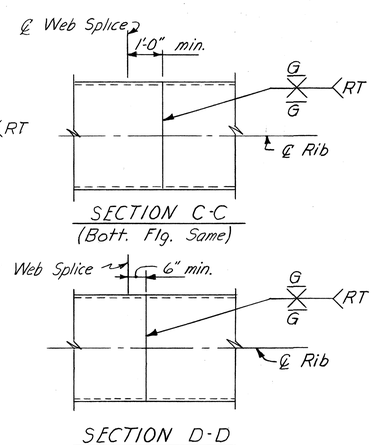

SHOP WELDED SPLICES
(Plates are to be spliced before fabrication of members.)

Work Sheets 32 thru 35 Together.

SHEET 34

SPAN 8
ARCH RIB DETAILS

KENTUCKY DEPARTMENT OF HIGHWAYS
OHIO DEPARTMENT OF HIGHWAYS

PROJECT 1471-4 ( )
BRIDGE OVER OHIO RIVER ON I 471
CAMPBELL COUNTY, KENTUCKY
HAMILTON COUNTY, OHIO

HAZELET & ERDAL Consulting Engineers File No. 889	BRIDGE NUMBER	DRAWING NO. 18485	INDEX

REVISED	DATE	REVISED	DATE	REVISED	DATE
DESIGNED BY WFB	CHECKED BY JAH & CGH				10-70
DETAILED BY	CHECKED BY				
TRACED BY JAN. 8/26	CHECKED BY CGH				

WFB 6-25-71

FED. ROAD DIST.	STATE	FED. AID PRO. NO.	FISCAL YEAR	SHEET NO.	TOTAL SHEETS
7	KY.	I-471-4(8)4			

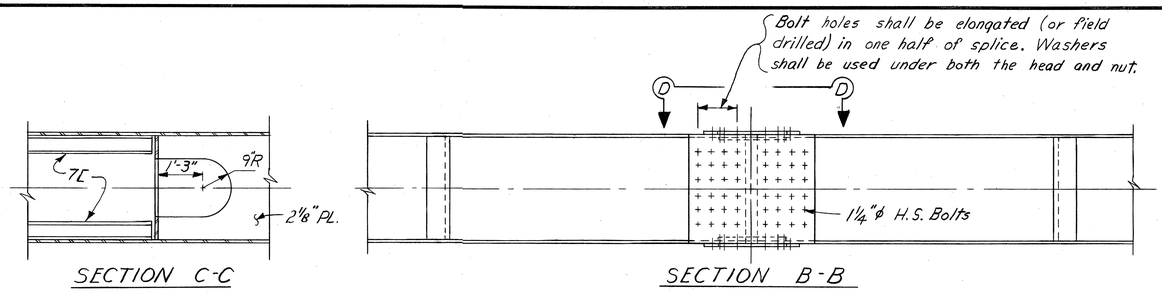

SECTION C-C

SECTION B-B

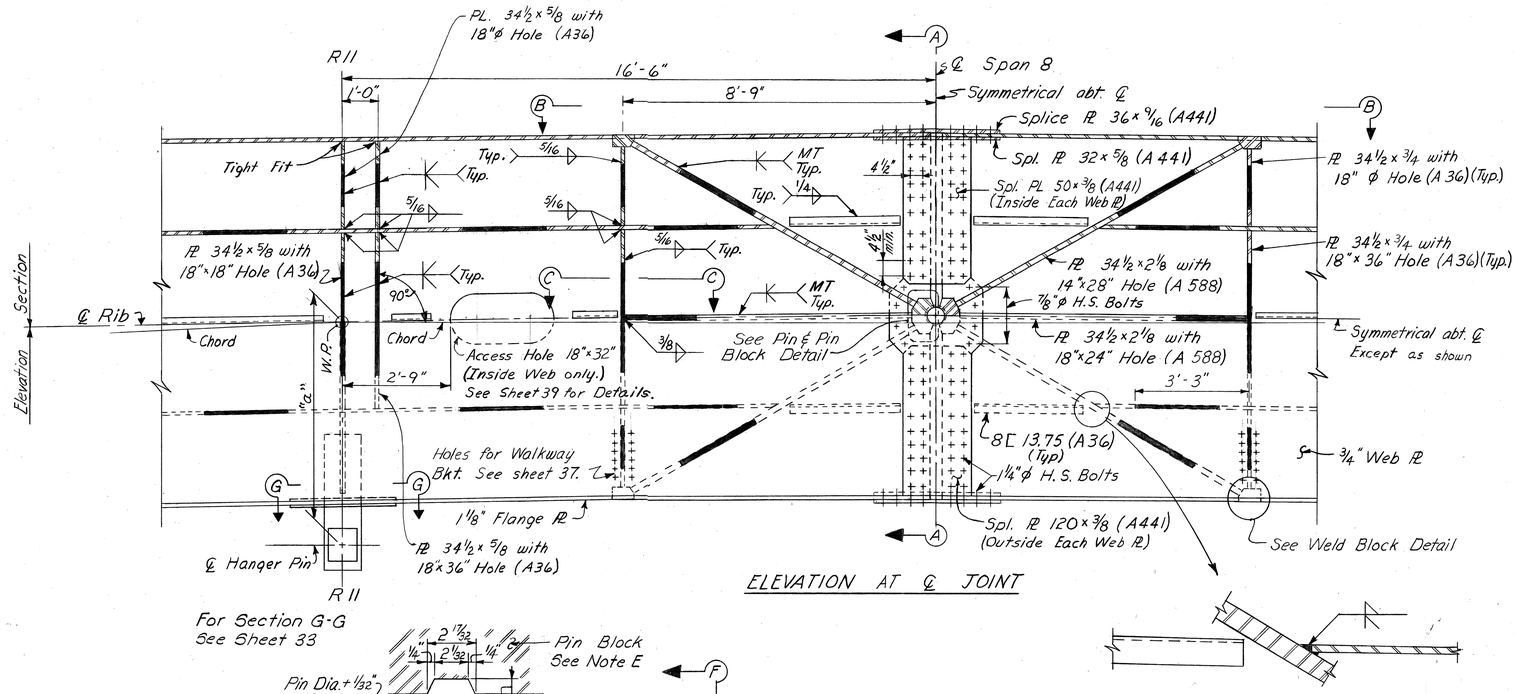

ELEVATION AT ℄ JOINT

For Section G-G See Sheet 33

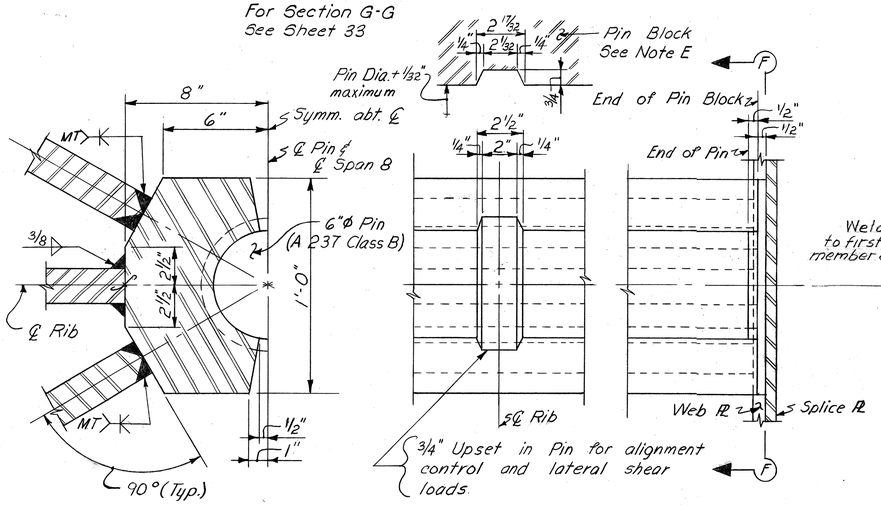

COMPRESSION PIN & PIN BLOCK DETAILS

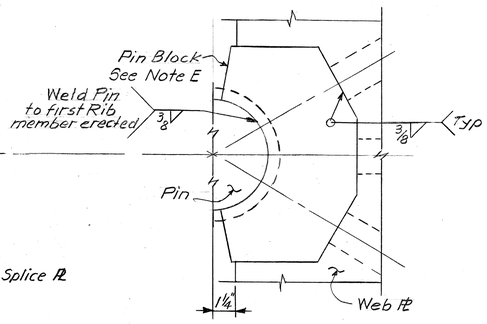

SECTION F-F

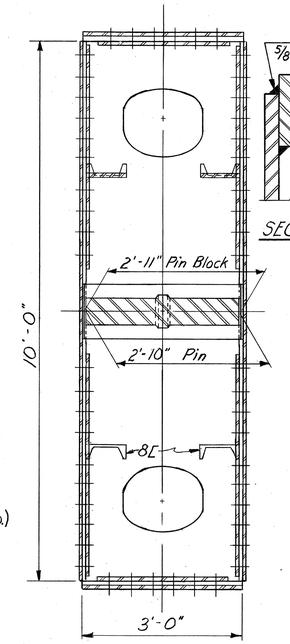

SECTION A-A

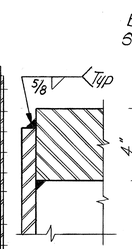

SECTION E-E

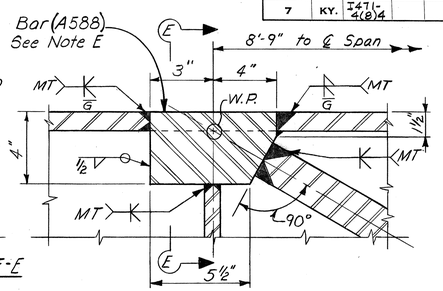

TYPICAL WELD BLOCK DETAIL

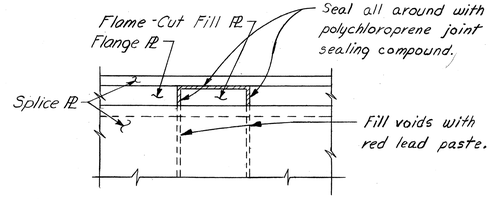

SECTION D-D

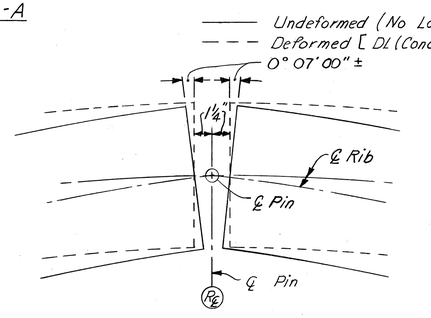

JOINT ROTATIONS

NOTE E:

Bearing blocks 4" and under in thickness shall be A588 steel.

Bearing blocks over 4" thick shall be made of fully weldable steel material with a minimum yield strength of 42,000 p.s.i. in accordance with one of the following:

(a) Forging, ASTM A237, Class A
(b) Forging, ASTM A237 except made of AISI 8620 steel, and double quenched and tempered.
(c) Rolled plate, double quenched and tempered with chemistry equivalent to ASTM A517.

The bearing blocks shall be inspected by ultrasonic methods for soundness and freedom from laminations in planes of both width and thickness.

Welding to the bearing blocks shall be with filler metal and by procedures used for similar welding in A588 steel material.

Work Sheets 32 thru 35 Together.

SHEET 35

SPAN 8 ARCH RIB DETAILS

KENTUCKY DEPARTMENT OF HIGHWAYS
OHIO DEPARTMENT OF HIGHWAYS

PROJECT 1471-4 ( )
BRIDGE OVER OHIO RIVER ON I 471
CAMPBELL COUNTY, KENTUCKY
HAMILTON COUNTY, OHIO

HAZELET & ERDAL Consulting Engineers File No. 889	BRIDGE NUMBER	DRAWING NO.	INDEX
		18485	

DESIGNED BY WFB	CHECKED BY JAN & ASH	DATE 12-70	REVISED Pin Block Mat'l & Hanger Detail 1/73 DATE 5-5-72
DETAILED BY F.A.W. 9/9	CHECKED BY CGH	DATE	REVISED DATE
TRACED BY	CHECKED BY	DATE	REVISED DATE

W.P.T. WFB 6-25-71

FED. ROAD DIST.	STATE	FED. AID PRO. NO.	FISCAL YEAR	SHEET NO.	TOTAL SHEETS
7	KY.	I471-4(8)4			

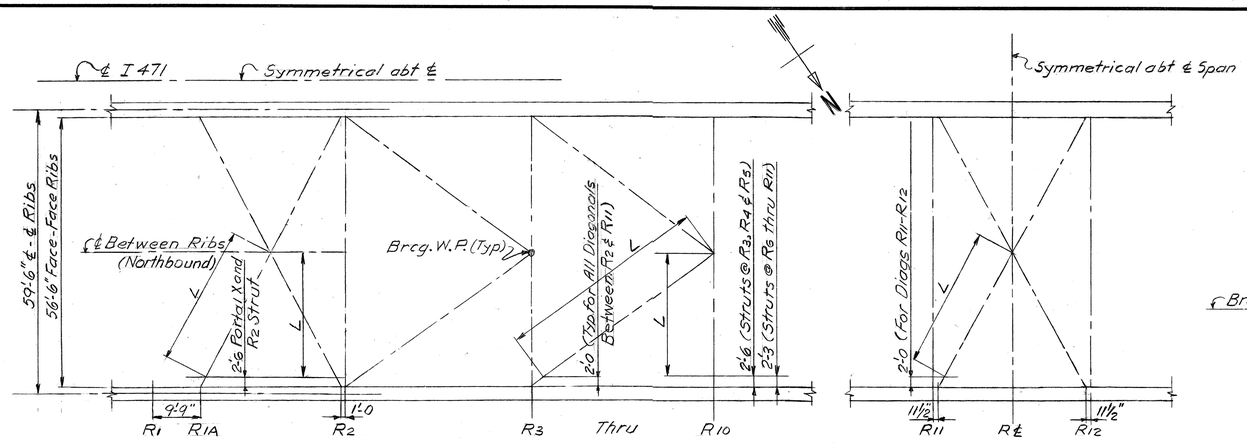

RIB BRACING LAYOUT PLAN
(Dimensions in Plane of Bracing W.L.)

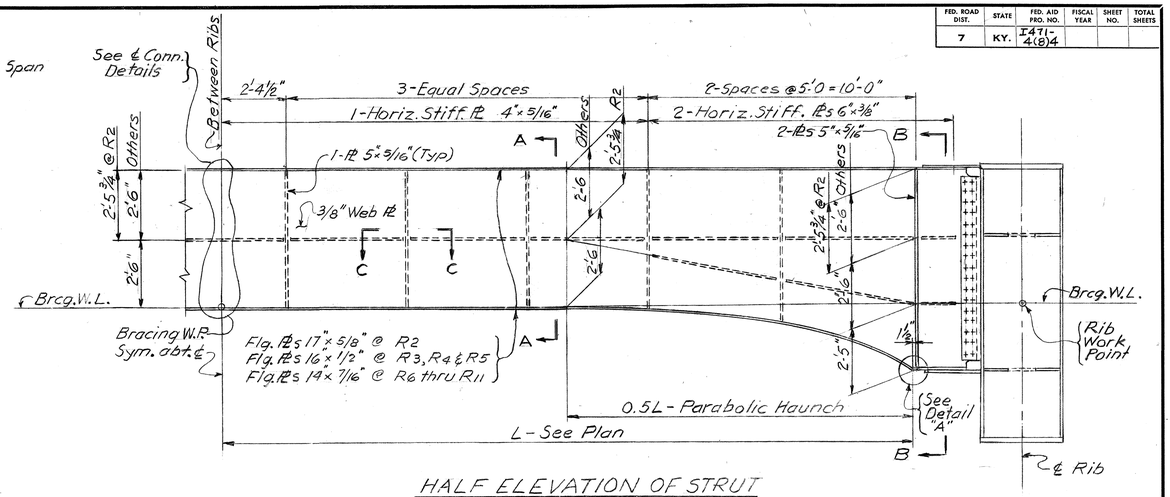

HALF ELEVATION OF STRUT
(Looking toward ℄ Span)

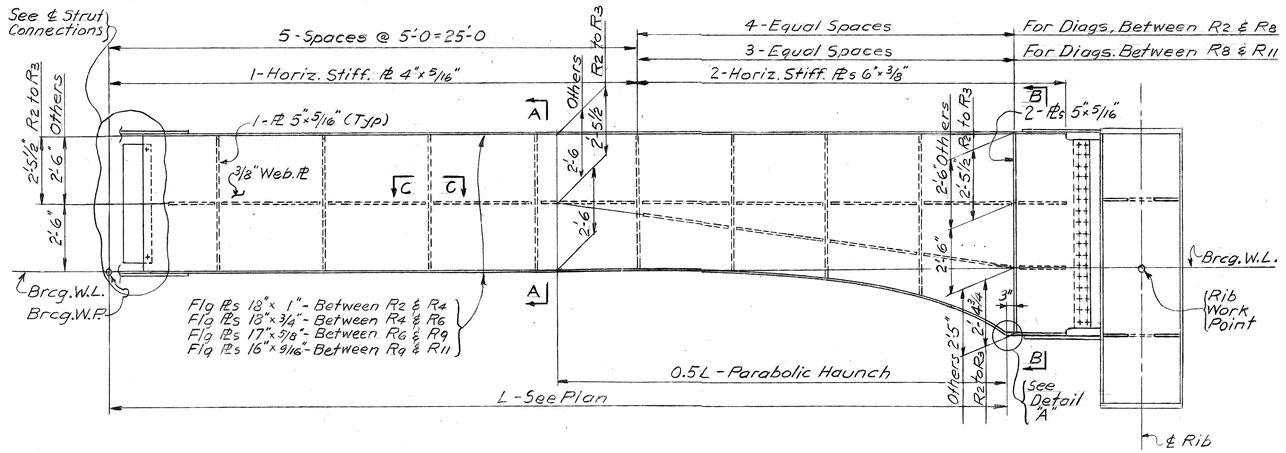

ELEVATION OF K DIAGONALS
(Looking toward ℄ Span)

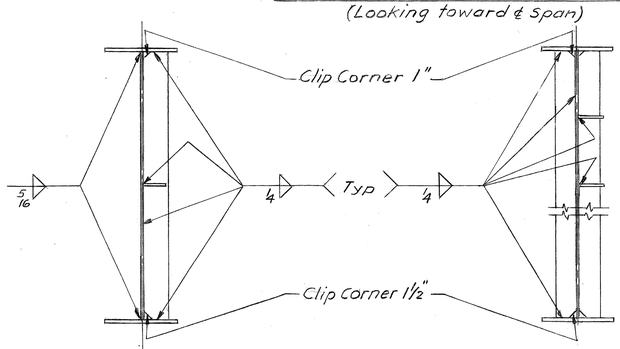

SECTION A-A

SECTION B-B

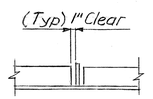

SECTION C-C

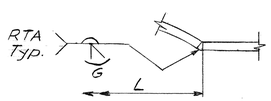

DETAIL "A"

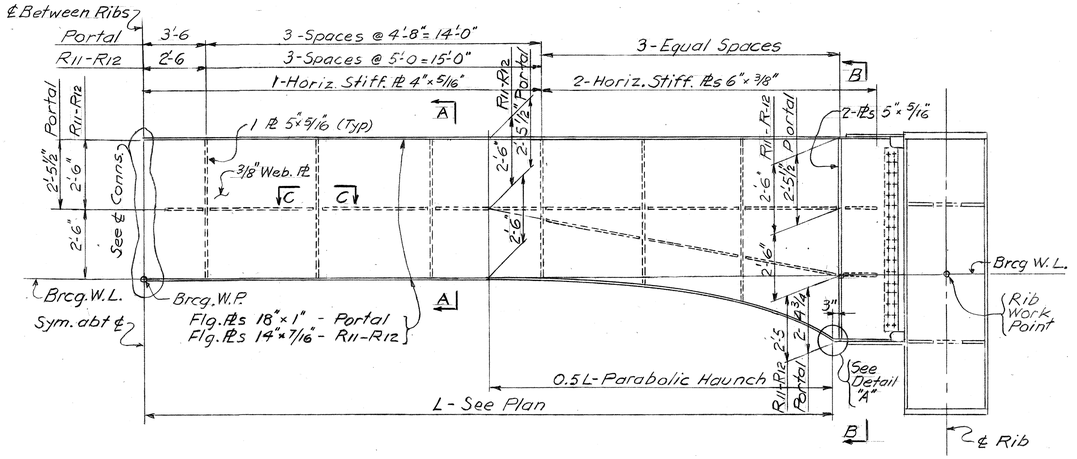

HALF ELEVATION OF X DIAGONALS
(Looking toward ℄ Span)

RIB BRACING NOTES:

H.S. Bolts - 7/8"ø U.N.
Material - A36 steel U.N.
All rib bracing members are to be fabricated to the coordinates and elevations given in the deformed Geometry table on sheet 28.
Members shall not be cambered.
The web plates of the rib are to be ultrasonic inspected wherever the rib bracing connection plates are welded to the rib. See Special Notes.
See sheet 2 for General Notes.

Work Sheets 36 thru 39 together

SHEET 36

KENTUCKY DEPARTMENT OF HIGHWAYS
OHIO DEPARTMENT OF HIGHWAYS

PROJECT 1471-4 ( )
BRIDGE OVER OHIO RIVER ON I 471
CAMPBELL COUNTY, KENTUCKY
HAMILTON COUNTY, OHIO

SPAN 8
RIB BRACING DETAILS

HAZELET & ERDAL Consulting Engineers File No. 889	BRIDGE NUMBER	DRAWING NO. 19485	INDEX

DESIGNED BY CGH	CHECKED BY WEB	DATE 4/72	REVISED Rib Bracing Notes 4/28
DETAILED BY F.M.	CHECKED BY CGH	DATE 10-70	REVISED
TRACED BY	CHECKED BY	DATE	REVISED

WEB 6-25-71

FED. ROAD DIST.	STATE	FED. AID PRO. NO.	FISCAL YEAR	SHEET NO.	TOTAL SHEETS
7	KY.	I-471-4(8)4			

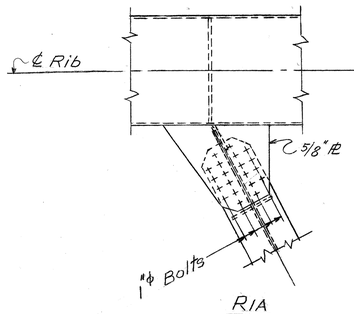

R1A

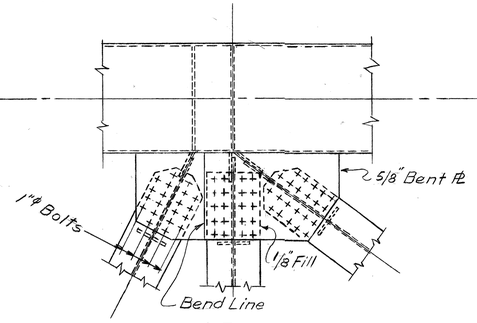

R2

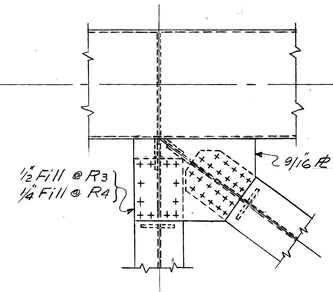

R3 (Shown)
R4 (Similar)

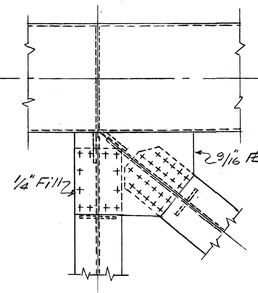

R5

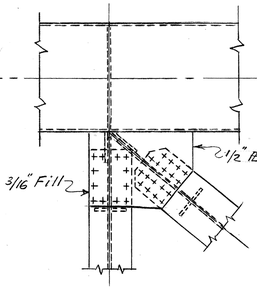

R6 (Shown)
R7 (Similar)

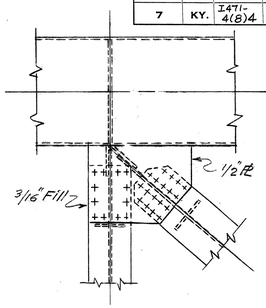

R8

PLAN OF TOP CONNECTIONS AT RIB
(BOTTOM CONNECTIONS ARE SIMILAR)

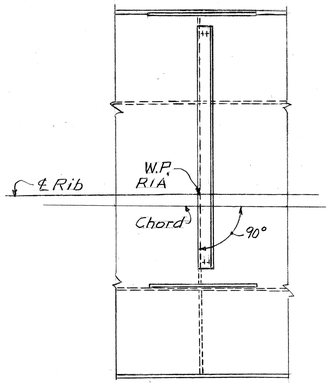

R1A

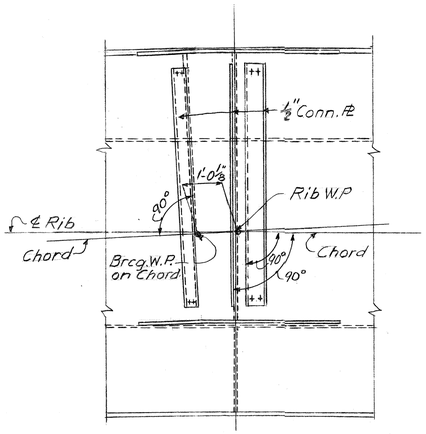

R2
ELEVATIONS

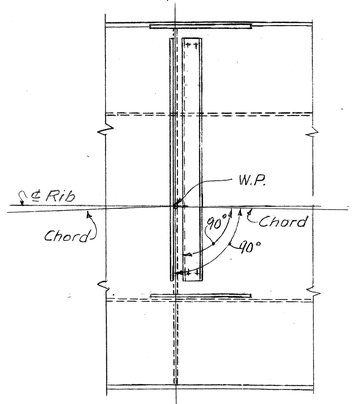

R3 (Shown)
R4 thru R10 (Similar)

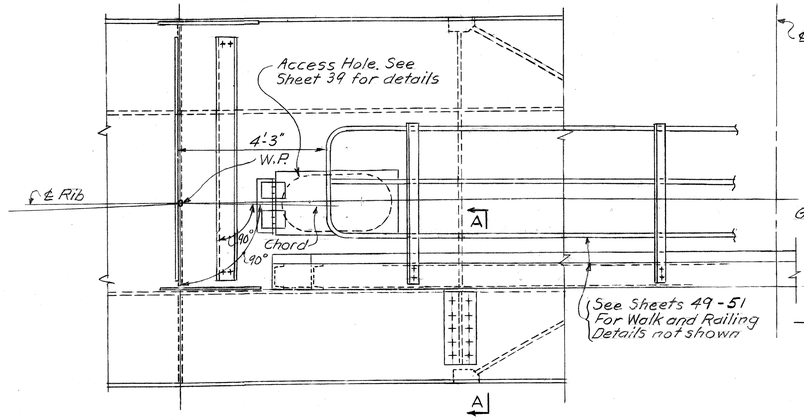

R11
ELEVATION OF WALK

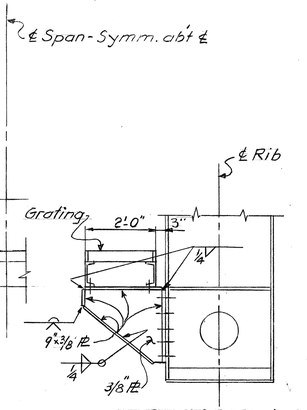

SECTION A-A

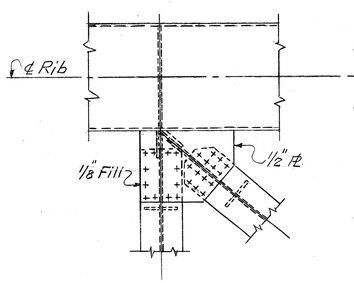

R9

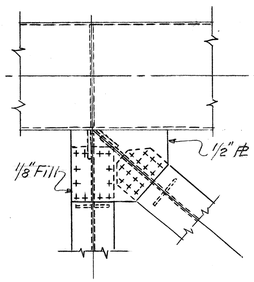

R10

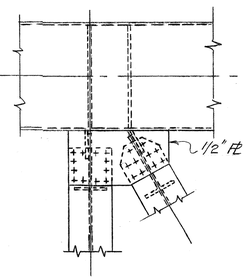

R11

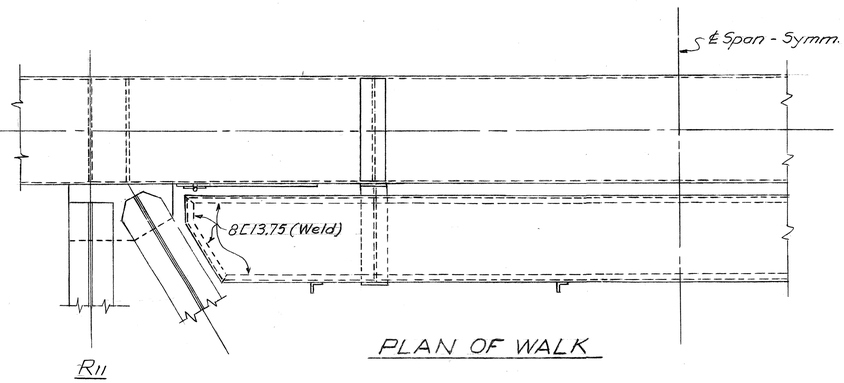

R11
PLAN OF WALK

PLAN OF TOP CONNECTIONS AT RIB
(BOTTOM CONNECTIONS ARE SIMILAR)

Work sheets 36 thru 39 together

SHEET 37

KENTUCKY DEPARTMENT OF HIGHWAYS
OHIO DEPARTMENT OF HIGHWAYS

PROJECT 1471-4 ( )
BRIDGE OVER OHIO RIVER ON I 471

CAMPBELL COUNTY, KENTUCKY
HAMILTON COUNTY, OHIO

SPAN 8
RIB BRACING DETAILS

HAZELET & ERDAL Consulting Engineers File No. 889	BRIDGE NUMBER	DRAWING NO. 18485	INDEX

DESIGNED BY CGH DATE
DETAILED BY EM DATE 12-70 REVISED
TRACED BY DATE REVISED
CHECKED BY KFB DATE
CHECKED BY CGH DATE
CHECKED BY DATE
WAB 6-25-71

FED. ROAD DIST.	STATE	FED. AID PRO. NO.	FISCAL YEAR	SHEET NO.	TOTAL SHEETS.
7	KY.	I-471 4(8)4			

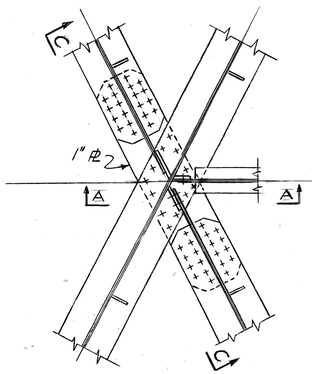

PORTAL

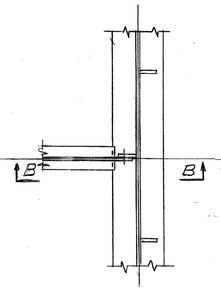

R2

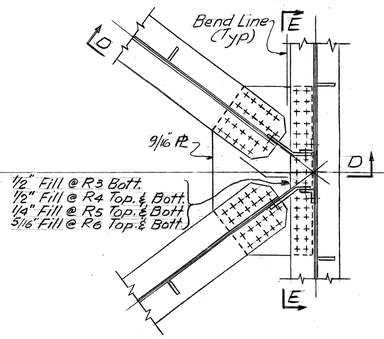

R4
R3, R5 & R6 (Similar)

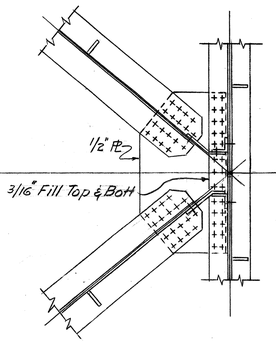

R8
R7 & R9 (Similar)

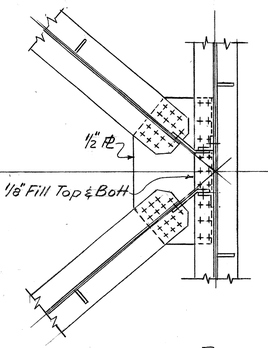

R10
R11 (Similar)

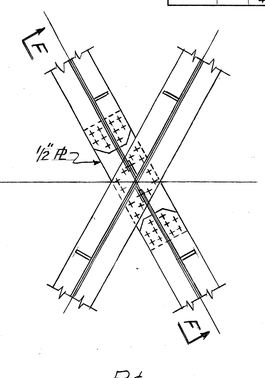

R℄

PLAN OF ℄ CONNECTIONS
(BOTTOM SHOWN - TOP CONNS SIMILAR)

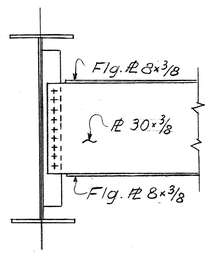

SECTION A-A

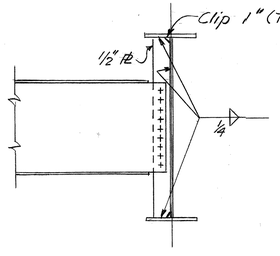

SECTION B-B

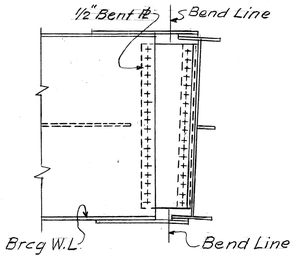

SECTION D-D
(Typ R3 thru R11)

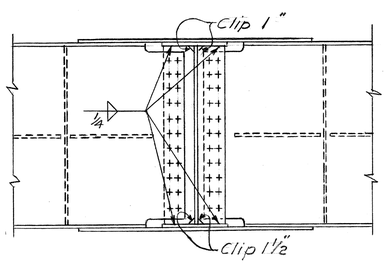

SECTION C-C

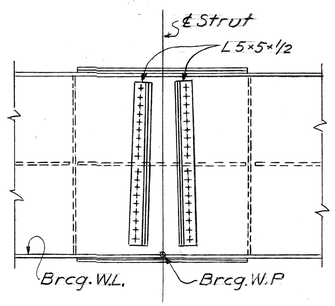

SECTION E-E
(Typ R3 thru R11)

NOTE : The 5×5 Ls will not be parallel due to fact that the diags and strut are not in the same plane

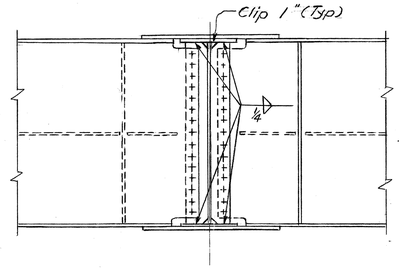

SECTION F-F

Work Sheets 36 thru 39 Together

SHEET 38

SPAN 8
RIB BRACING DETAILS

KENTUCKY DEPARTMENT OF HIGHWAYS
OHIO DEPARTMENT OF HIGHWAYS

PROJECT I 471-4 ( )
BRIDGE OVER OHIO RIVER ON I 471

CAMPBELL COUNTY, KENTUCKY
HAMILTON COUNTY, OHIO

HAZELET & ERDAL Consulting Engineers File No. 889	BRIDGE NUMBER	DRAWING NO. 18485	INDEX

DESIGNED BY KFB DATE
DETAILED BY CGH CHECKED BY CGH DATE 12-70 REVISED
TRACED BY E.M CHECKED BY DATE REVISED
CHECKED BY DATE REVISED

WAB 6-25-71

FED. ROAD DIST.	STATE	FED. AID PRO. NO.	FISCAL YEAR	SHEET NO.	TOTAL SHEETS
7	KY.	I471-4(8)4			

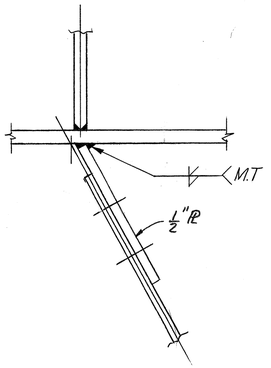

R1A

PORTAL

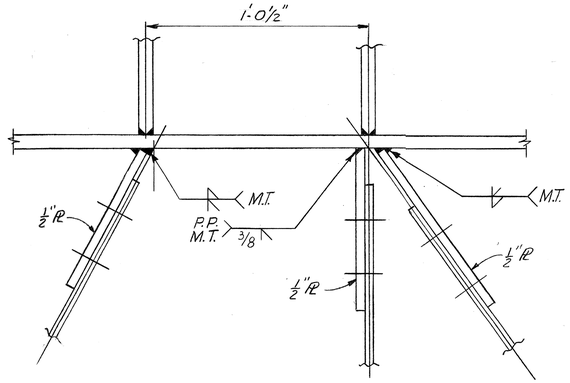

R2

R2 thru R10

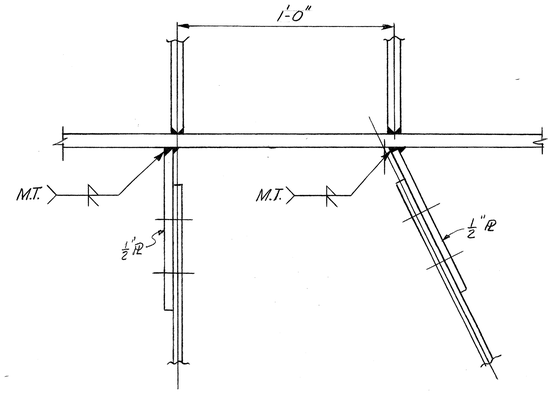

R11

RIB WEB CONNECTION DETAILS

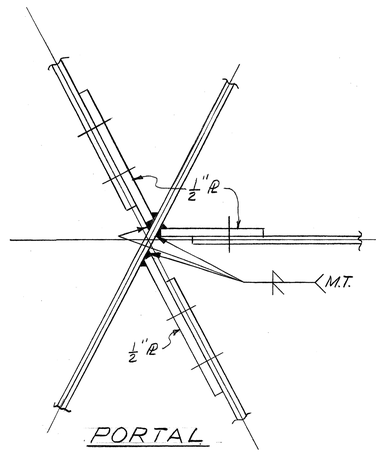

PORTAL

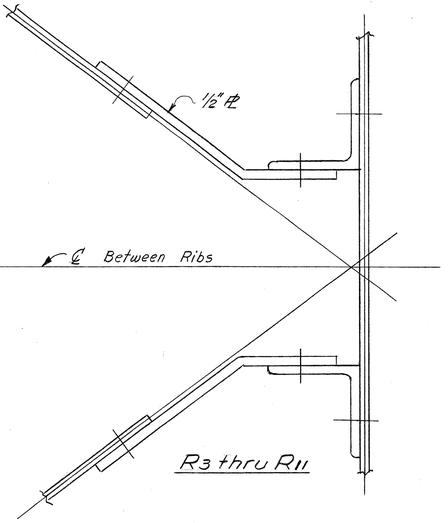

R3 thru R11

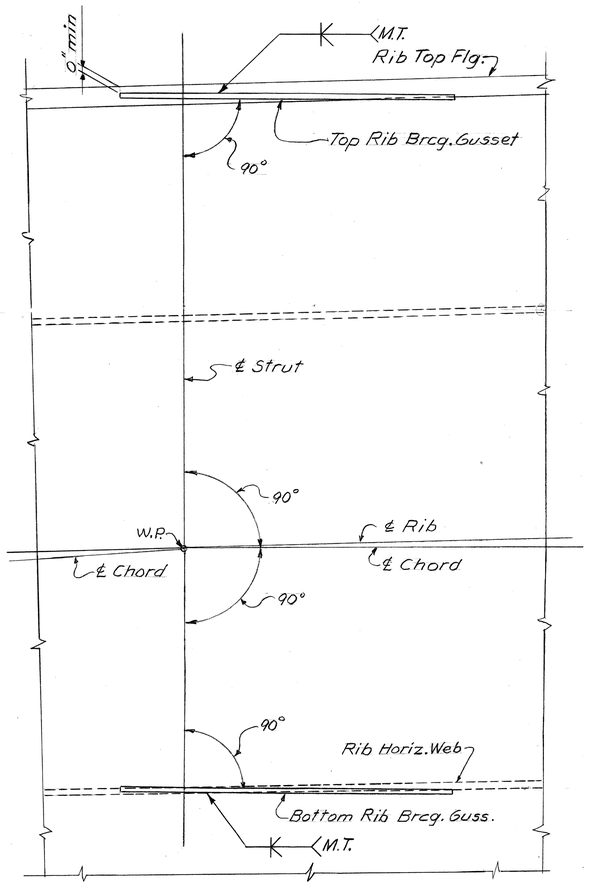

TYPICAL GUSSET LOCATIONS

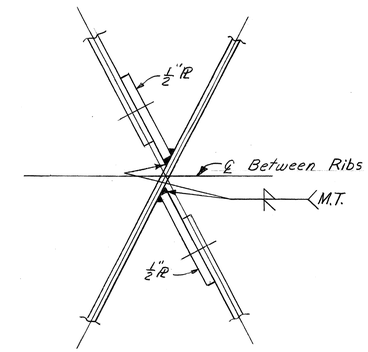

R11-R12

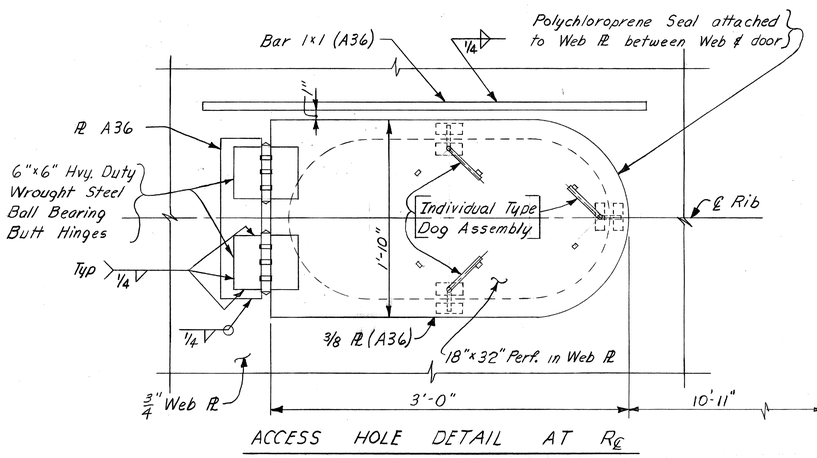

ACCESS HOLE DETAIL AT R℄

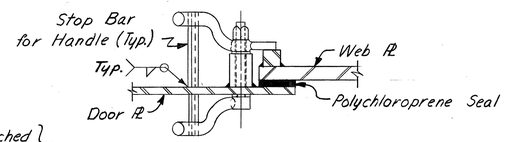

DOG ASSEMBLY DETAIL

NOTE:

Door is to be water tight and air tight and is to be equipped with 3 Individual Type Dog Assemblies that can be operated from either side of door. The entire assembly shall be detailed as to keep a positive pressure on the seal.

SPAN 8
RIB BRACING DETAILS

BRACING & DETAILS

Work Sheets 36 thru 39 Together

SHEET 39

KENTUCKY DEPARTMENT OF HIGHWAYS
OHIO DEPARTMENT OF HIGHWAYS

PROJECT 1471-4 ( )
BRIDGE OVER OHIO RIVER ON I 471

CAMPBELL COUNTY, KENTUCKY
HAMILTON COUNTY, OHIO

HAZELET & ERDAL Consulting Engineers File No. 889	BRIDGE NUMBER	DRAWING NO. 18485	INDEX

DESIGNED BY	WFB	DATE 6-25-71	REVISED
DETAILED BY	CGH	DATE 10-71	REVISED
TRACED BY	FM	DATE	REVISED
CHECKED BY	CGH	DATE	DATE
CHECKED BY		DATE	DATE

FED. ROAD DIST.	STATE	FED. AID PRO. NO.	FISCAL YEAR	SHEET NO.	TOTAL SHEETS
7	KY.	I-471-4(8)4			

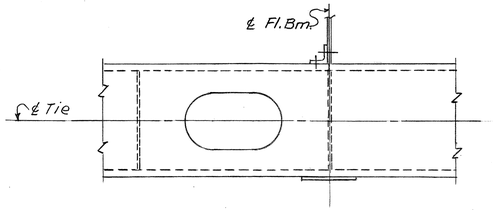

SECTION D-D

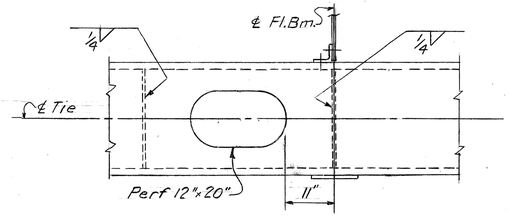

SECTION A-A

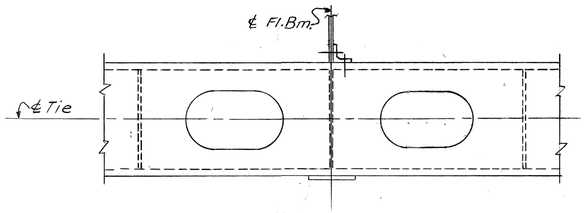

SECTION G-G

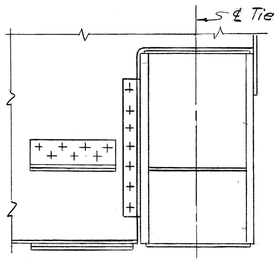

SECTION K-K
SECTION L-L (Opp. Hand)

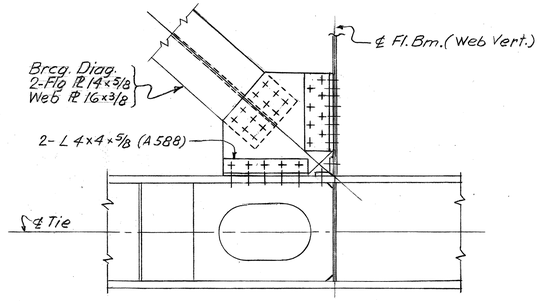

SECTION E-E

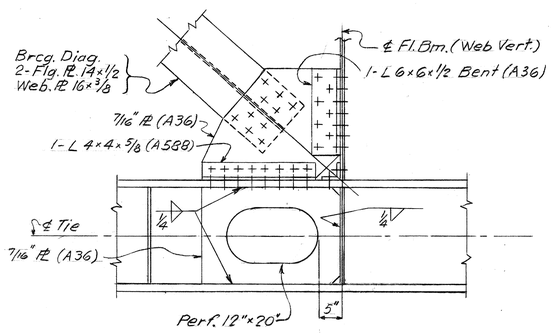

SECTION B-B

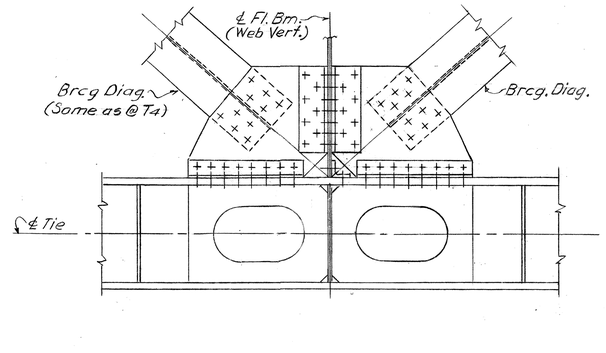

SECTION H-H

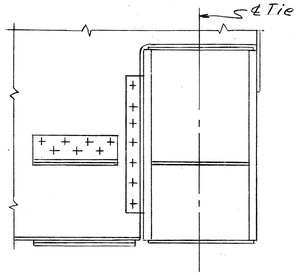

SECTION M-M

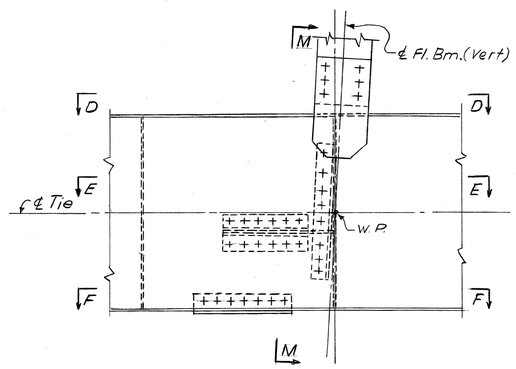

ELEVATION
(At T1, T2, T3, T20, T21 and T22)
(See T4 for Mat'l & Details not shown)

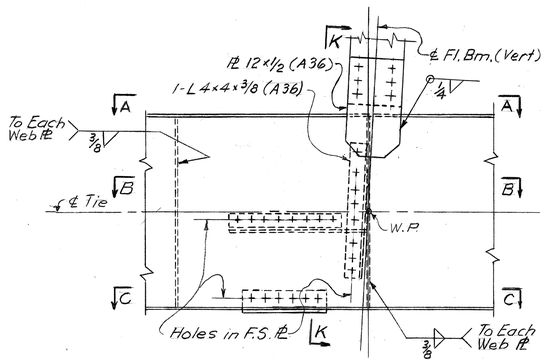

ELEVATION
(At T4 thru T11 and T13 thru T19)

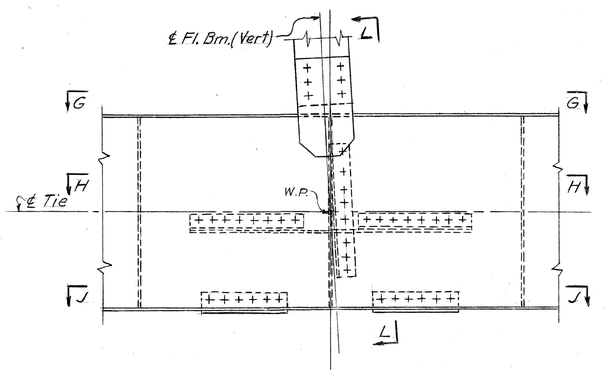

ELEVATION
(At T12)
(See T4 for Mat'l & Details not shown)

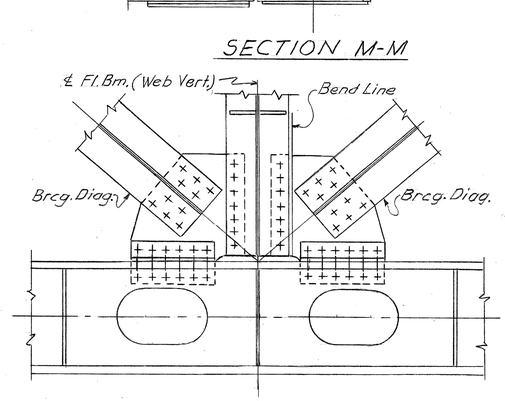

SECTION J-J

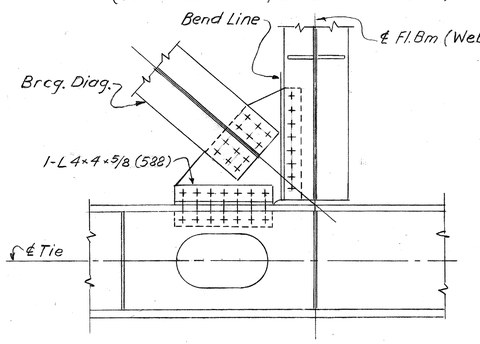

SECTION F-F

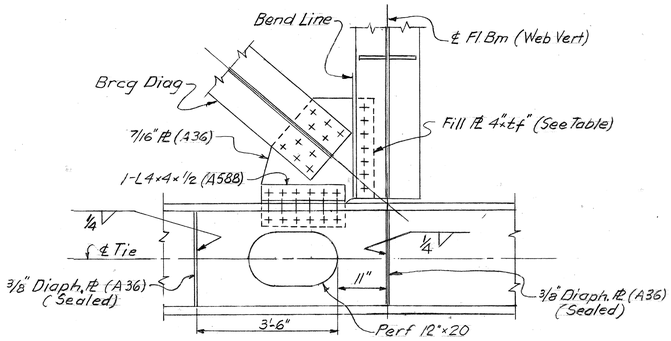

SECTION C-C

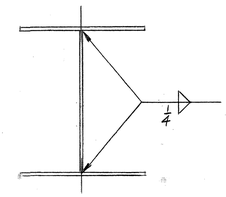

TYPICAL BRACING SECTION

Work Sheets 40 thru 41 together

SHEET 40

SPAN 8
TIE DETAILS

KENTUCKY DEPARTMENT OF HIGHWAYS
OHIO DEPARTMENT OF HIGHWAYS

PROJECT 1471-4 ( )
BRIDGE OVER OHIO RIVER ON I 471

CAMPBELL COUNTY, KENTUCKY
HAMILTON COUNTY, OHIO

HAZELET & ERDAL Consulting Engineers File No. 889	BRIDGE NUMBER	DRAWING NO. 18485	INDEX

DESIGNED BY	MEB	CHECKED BY	CGH
DETAILED BY	F.M	CHECKED BY	CGH
TRACED BY		CHECKED BY	
REVISED	DATE	REVISED	DATE
REVISED	DATE	REVISED	DATE

WFA 6-25-71

FED. ROAD DIST.	STATE	FED. AID PRO. NO.	FISCAL YEAR	SHEET NO.	TOTAL SHEETS
7	KY.	I471-4(8)4			

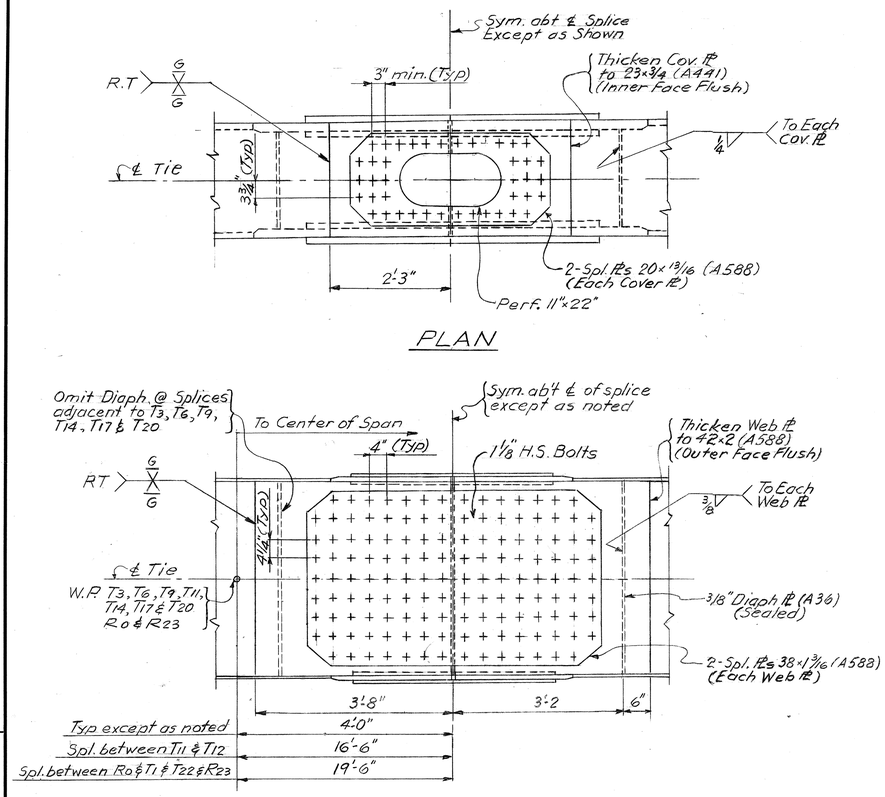

PLAN

ELEVATION

TIE FIELD SPLICE DETAIL

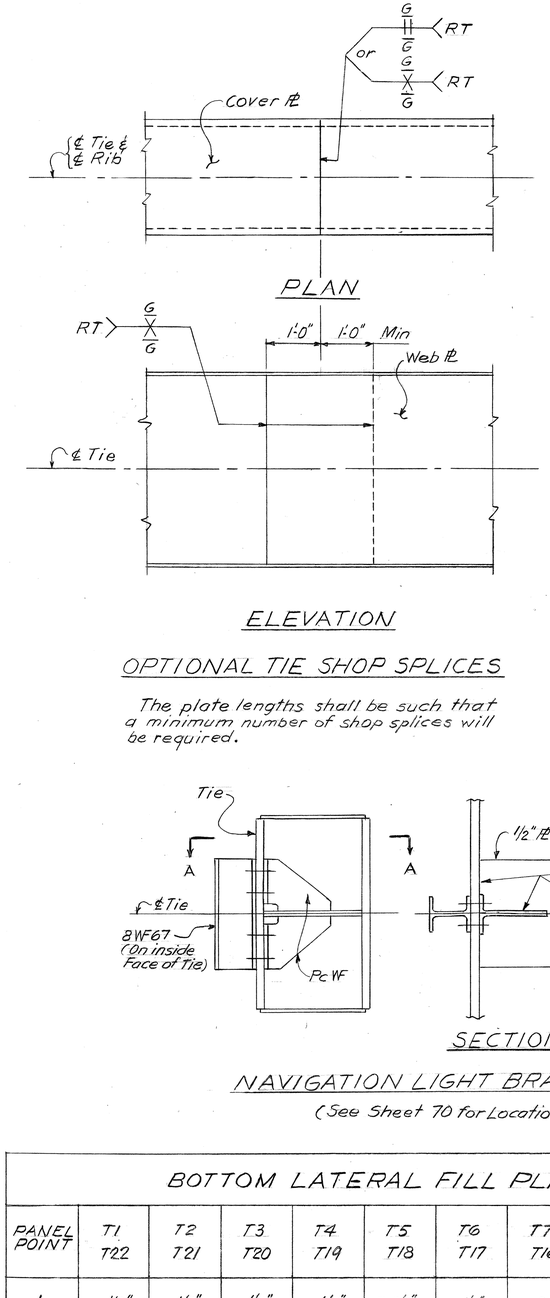

PLAN

ELEVATION

OPTIONAL TIE SHOP SPLICES

The plate lengths shall be such that a minimum number of shop splices will be required.

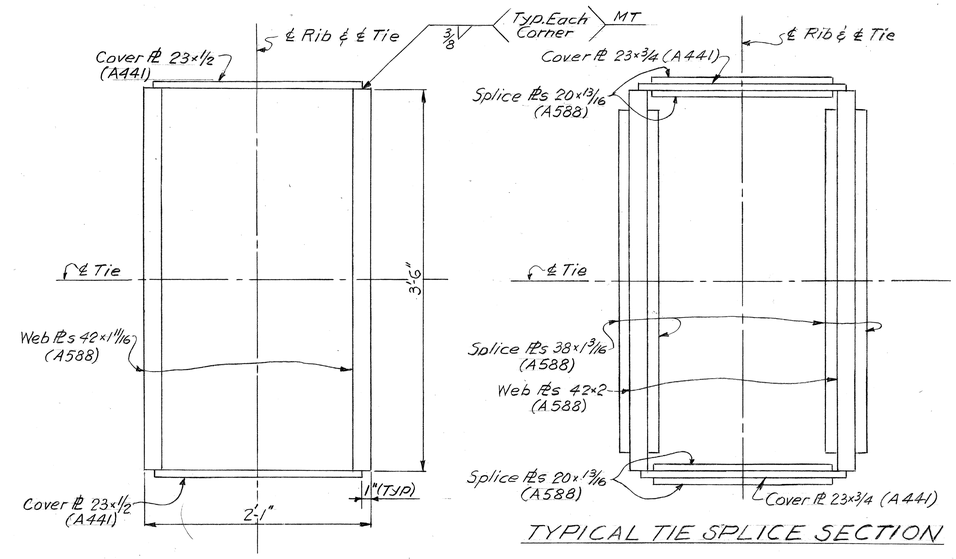

TYPICAL TIE SECTION

TYPICAL TIE SPLICE SECTION

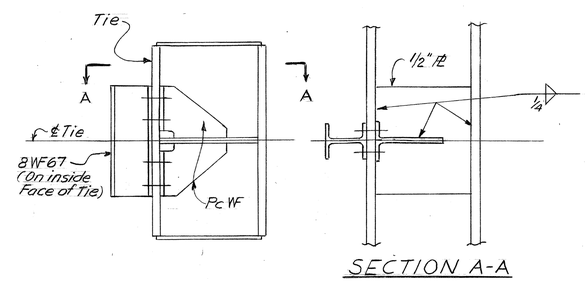

SECTION A-A

NAVIGATION LIGHT BRACKET

(See Sheet 70 for Location)

ARCH TIE NOTES:

H.S. Bolts - 7/8" ϕ U.N.
Material - A36 steel U.N.
The ties are to be fabricated with straight sections between Tie Work Points and are to be fabricated to the coordinates and elevations given in the Undeformed Geometry table on sheet 28 which are the computed undeformed horizontal coordinates and deformed elevations.
See sheet 32 for details at R0 & R23.
See sheet 2 for General Notes.

BOTTOM BRACING NOTES:

H.S. Bolts - 7/8" ϕ
Material - A36 steel.
The bottom bracing members are to be fabricated to the coordinates and elevations given in the deformed Geometry table on sheet 28.
Members shall not be cambered.

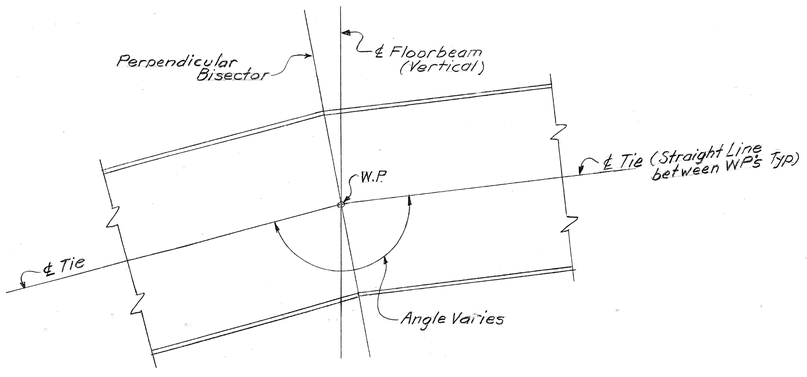

ANGLE DETAIL

The 42" web plates are to be cut as req'd to provide the indicated angle change at each Work Point.

BOTTOM LATERAL FILL PLATE THICKNESS TABLE

PANEL POINT	T1 T22	T2 T21	T3 T20	T4 T19	T5 T18	T6 T17	T7 T16	T8 T15	T9 T14	T10 T13	T11	T12 (Toward T11)	T12 (Toward T12)
t_f (in)	1/8"	1/8"	1/8"	1/8"	1/8"	1/8"	0	0	0	0	0	0	0

Work Sheets 40 and 41 together

SHEET 41

KENTUCKY DEPARTMENT OF HIGHWAYS
OHIO DEPARTMENT OF HIGHWAYS

PROJECT I471-4 ( )
BRIDGE OVER OHIO RIVER ON I 471
CAMPBELL COUNTY, KENTUCKY
HAMILTON COUNTY, OHIO

HAZELET & ERDAL Consulting Engineers File No. 889 | BRIDGE NUMBER | DRAWING NO. 18485 | INDEX

SPAN 8
TIE DETAILS

DESIGNED BY WFB CHECKED BY CGH DATE
DETAILED BY F.M CHECKED BY CGH DATE 10-70
TRACED BY CHECKED BY DATE
REVISED Bottom Bracing Notes ASB DATE 1-12-72
REVISED DATE
REVISED DATE

WFB 6-25-71

FED. ROAD DIST.	STATE	FED. AID PRO. NO.	FISCAL YEAR	SHEET NO.	TOTAL SHEETS
7	KY.	I-471-4(8)4			

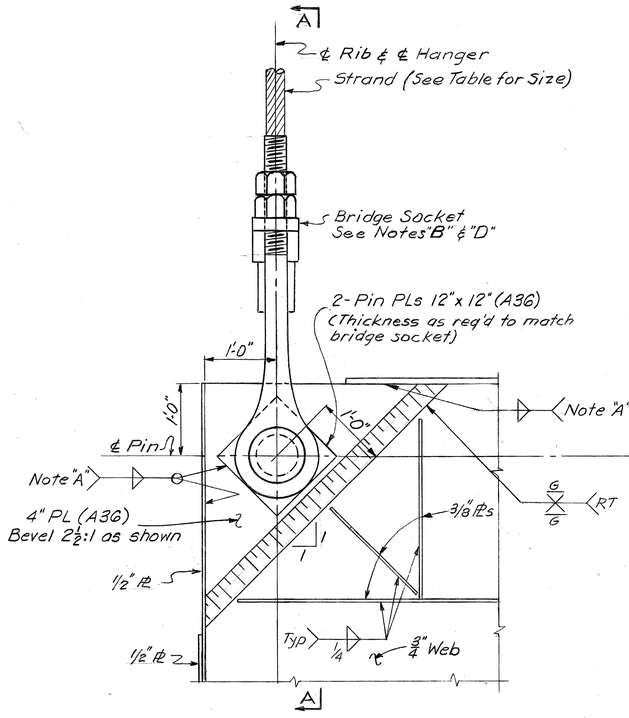

ELEVATION

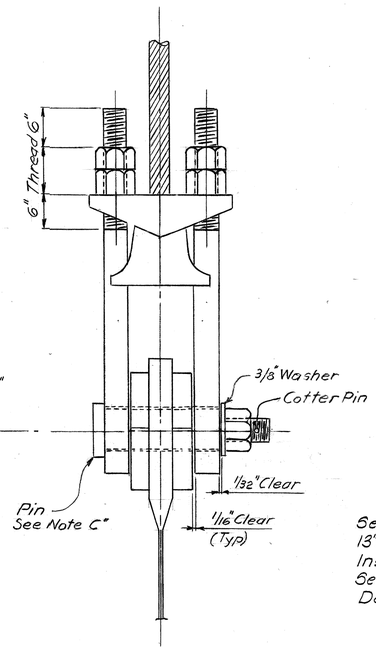

SECT A-A

HANGER CONNECTION AT FLOORBEAM

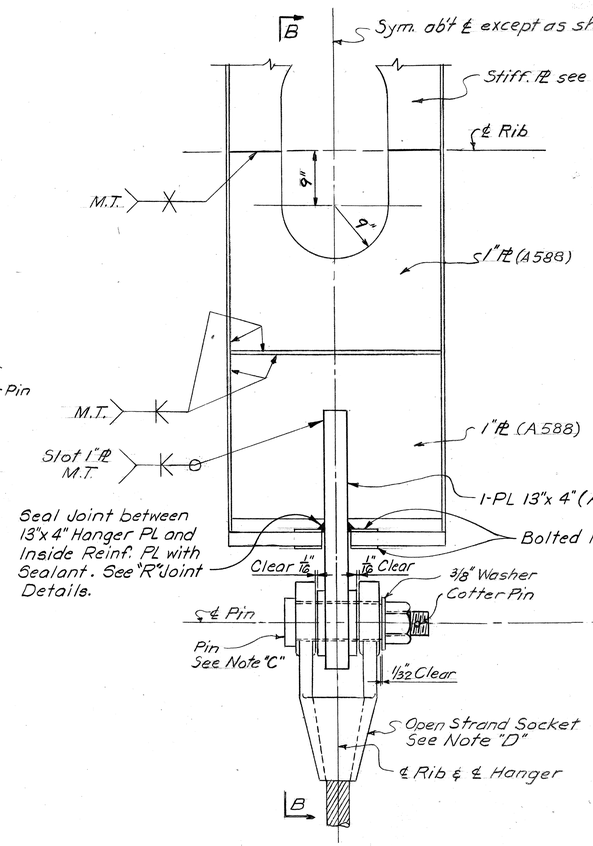

HANGER CONNECTION AT RIB

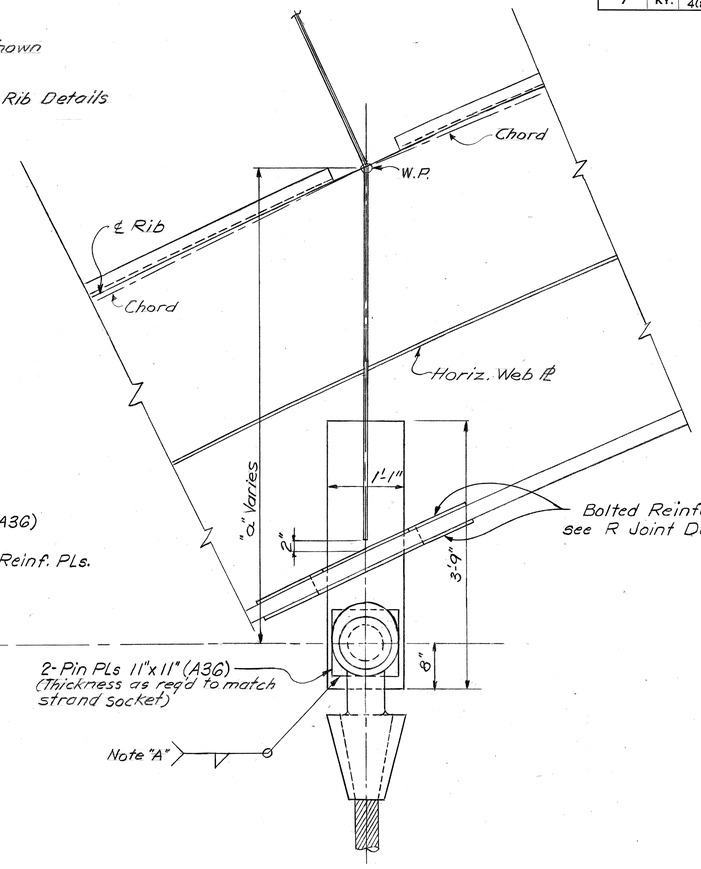

SECT B-B

NOTE "A"- Fillet welds shall be of the size governed by plate thicknesses.

NOTE "B"- The eye-bars shall be forged A237 steel and the Class shall be selected to be compatible with the size and strength of strand and the socket casting or forging furnished.

NOTE "C"- The pins shall be A237 Class B forged steel. The diameter of the pin holes shall be a maximum of 1/32" larger than the pin diameter. The head of the pin shall be 2" thick and 2" greater diameter than the diameter of the pin. The threaded portion of the pin shall be 3" ϕ min. with the threads to be burred after assembly. The diameter of the washer is to be 2" greater than the pin diameter.

NOTE "D"- The material and details used for the Bridge sockets and the open Strand sockets shall be submitted to the Engineer for approval.

BRIDGE STRAND AND PIN SIZE TABLE

PANEL POINTS		1,3,5,8,10,13, 15,18,20 & 22	2,6,7,11,12, 16,17 & 21	4,9, 14 & 19
CLASS A STRAND SIZE		3" ϕ	2 7/8" ϕ	2 3/4" ϕ
FLOORBEAM PIN SIZE		6 3/4" ϕ	6 3/4" ϕ	5 3/4" ϕ
ARCH RIB PIN SIZE	MIN	6" ϕ	5 1/2" ϕ	5 1/2" ϕ
	MAX	6" ϕ	6" ϕ	5 3/4" ϕ
MINIMUM BREAKING STRENGTH-TONS		538	494	452

HANGER NOTES:
Material - steel as noted.
Strand - Class A bridge strand.
See sheets 43 & 44 for Floorbeams.
See sheets 32 thru 35 for Arch Rib.
See sheets 2 for General Notes.

Note: There will be no separation between Pin Pls & Hanger Bars after pin hole is bored.

SHEET 42

KENTUCKY DEPARTMENT OF HIGHWAYS
OHIO DEPARTMENT OF HIGHWAYS
PROJECT 1471-4 ( )
BRIDGE OVER OHIO RIVER ON I 471
CAMPBELL COUNTY, KENTUCKY
HAMILTON COUNTY, OHIO

SPAN 8
HANGER DETAILS

HAZELET & ERDAL Consulting Engineers File No. 889 | BRIDGE NUMBER | DRAWING NO. 18485 | INDEX

Pin Plate Details (Top & Bott.) WRT 7/16 DATE 5-5-72
REVISED DATE
REVISED DATE
REVISED DATE
DESIGNED BY WFB CHECKED BY C.G.H DATE
DETAILED BY F.M. CHECKED BY C.G.H DATE 10-70
TRACED BY CHECKED BY DATE
WFB 6-25-71

FED. ROAD DIST.	STATE	FED. AID PRO. NO.	FISCAL YEAR	SHEET NO.	TOTAL SHEETS
7	KY.	I471-4(8)4			

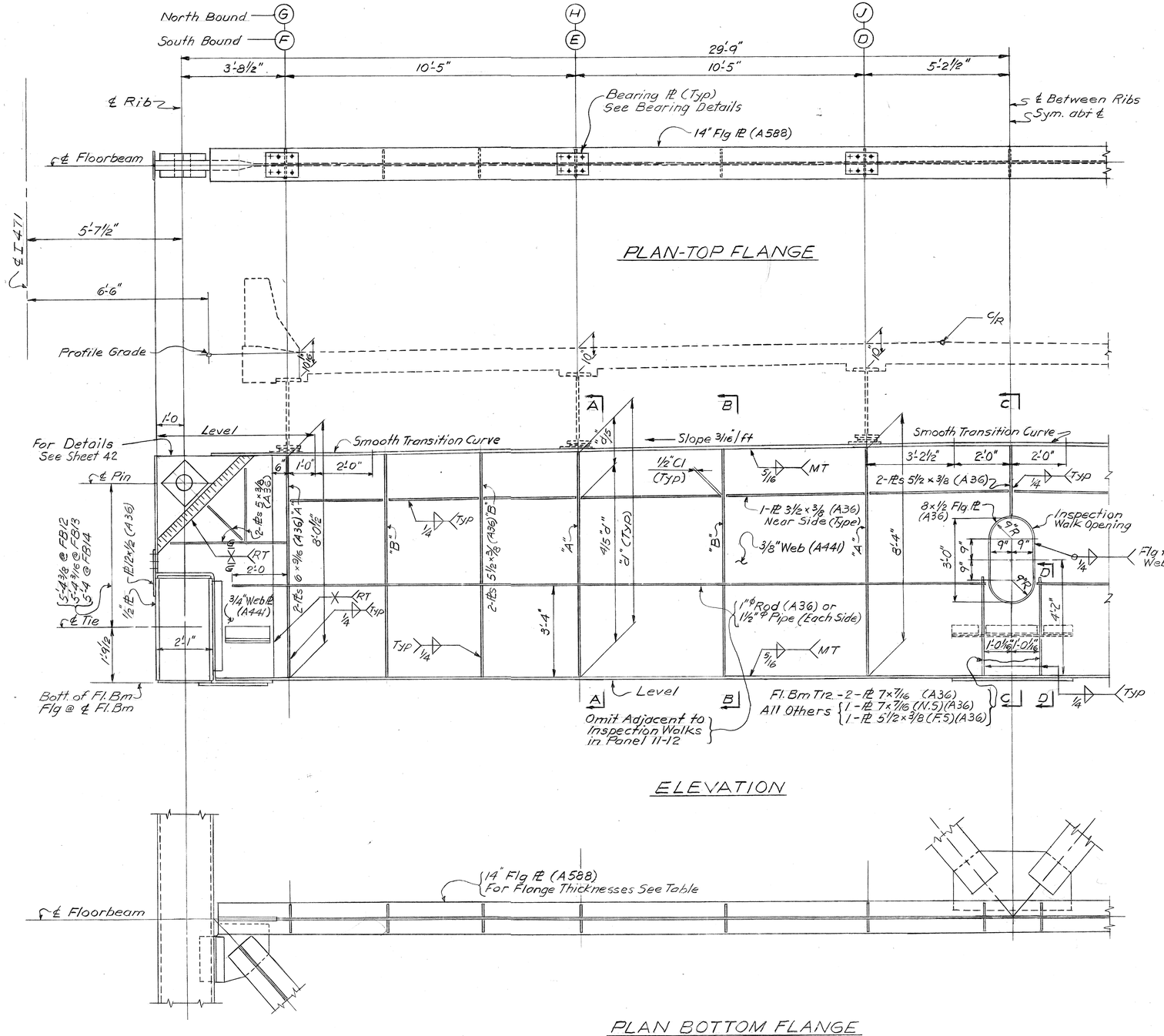

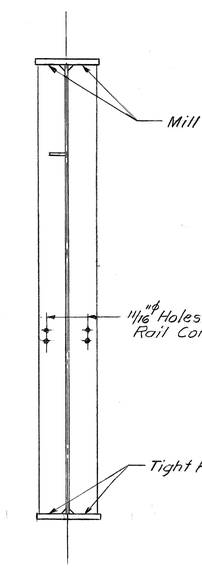

SECT A-A

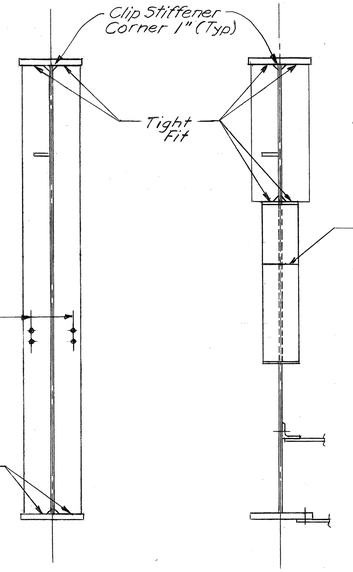

SECT B-B

SECT C-C

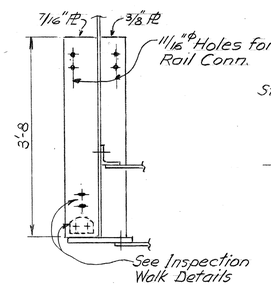

SECT D-D

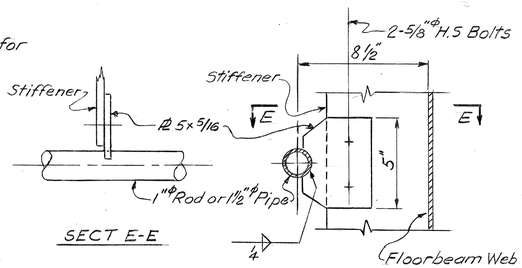

SECT E-E

TYP. RAIL CONNECTION
(Connect to each stiffener)

FLANGE PLATE THICKNESS			
FLOORBEAM	FB12	FB13	FB14
THICKNESS	1⅜"	1 3/16"	1"

Work Sheets 43 and 44 together

SHEET 43

KENTUCKY DEPARTMENT OF HIGHWAYS
OHIO DEPARTMENT OF HIGHWAYS

PROJECT 1471-4 ( )
BRIDGE OVER OHIO RIVER ON I 471

CAMPBELL COUNTY, KENTUCKY
HAMILTON COUNTY, OHIO

SPAN 8
FLOORBEAM DETAILS

HAZELET & ERDAL Consulting Engineers File No. 889	BRIDGE NUMBER	DRAWING NO. 18485	INDEX

DESIGNED BY	KEB	CHECKED BY	CEB
DETAILED BY	F.M	CHECKED BY	CGH
TRACED BY		CHECKED BY	

REVISED	DATE
Hanger Details	5-5-72

W.K. 11-16 DATE
DATE 10-20
DATE
DATE

11-16 6-25-71

FED. ROAD DIST.	STATE	FED. AID PRO. NO.	FISCAL YEAR	SHEET NO.	TOTAL SHEETS
7	KY.	I471-4(8)4			

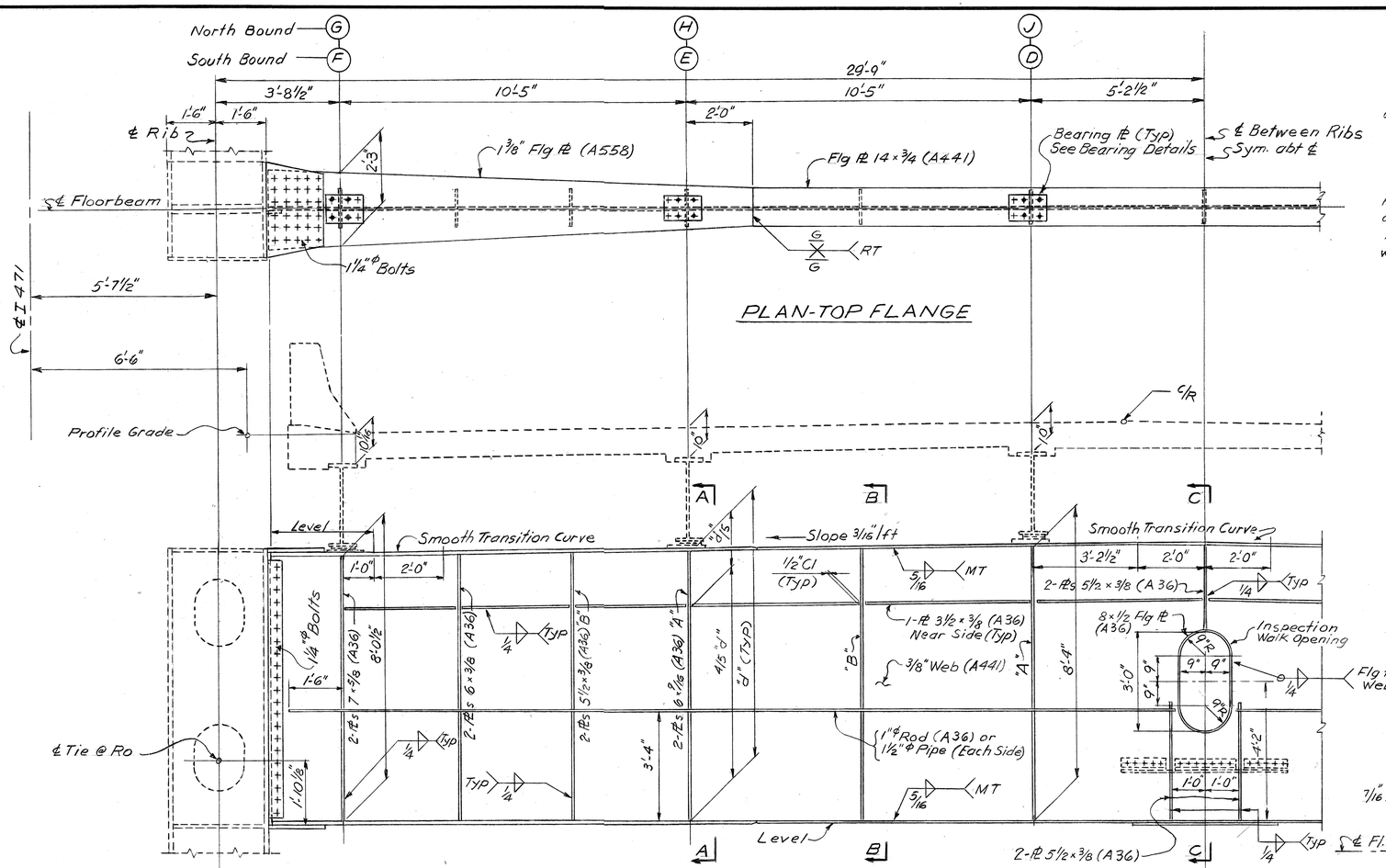

FLOORBEAM NOTES:

H.S. Bolts - ⅞"ϕ U.N.
Material - A36 Steel U.N.
Floorbeams are to cambered for D.L. Steel plus D.L. Concrete.
See Sheet 42 for Hanger Connection.
See Sheet 2 for General Notes.
See Sheet 31 for Framing Plan.
Flange to web welds are to be submerged arc fillet welds. Parts are to assembled with edge of web plate tight against flange plate before welding.

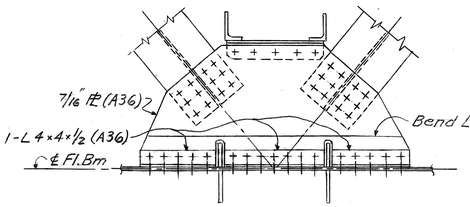

TOP LATERAL PLATE

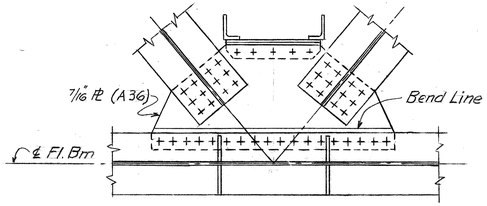

BOTTOM LATERAL PLATE

BOTTOM BRACING CONN.
FOR FLOORBEAMS AT Ro, T1, T2, T21, T22 & R23

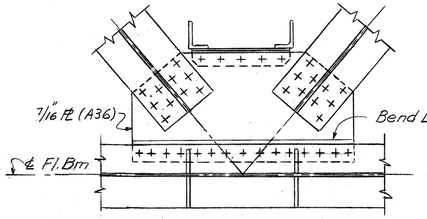

BOTTOM LATERAL PLATE

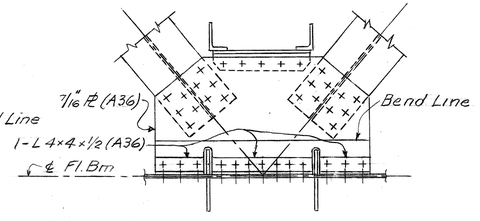

TOP LATERAL PLATE

BOTTOM BRACING CONN.
FOR FLOORBEAMS AT T3 THRU T20

Work Sheets 43 and 44 together

SHEET 44

DESIGNED BY	CEB	DATE	10-71
DETAILED BY	FM	CHECKED BY	CGH
TRACED BY		CHECKED BY	
REVISED		DATE	
REVISED		DATE	
REVISED		DATE	

USB 6-25-71

KENTUCKY DEPARTMENT OF HIGHWAYS
OHIO DEPARTMENT OF HIGHWAYS
PROJECT 1471-4 ( )
BRIDGE OVER OHIO RIVER ON I 471
CAMPBELL COUNTY, KENTUCKY
HAMILTON COUNTY, OHIO

SPAN 8
FLOORBEAM DETAILS

HAZELET & ERDAL Consulting Engineers File No. 889	BRIDGE NUMBER	DRAWING NO. 18485	INDEX

FED. ROAD DIST.	STATE	FED. AID PRO. NO.	FISCAL YEAR	SHEET NO.	TOTAL SHEETS
7	KY.	I471-4(8)4			

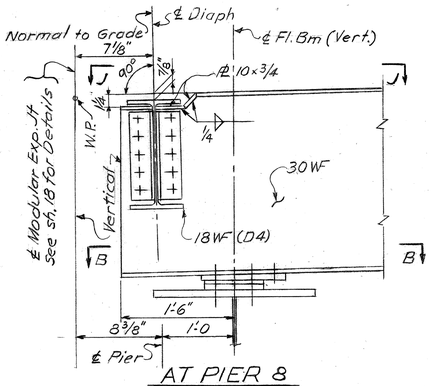

AT PIER 8

(Strgs A, F, G & M)

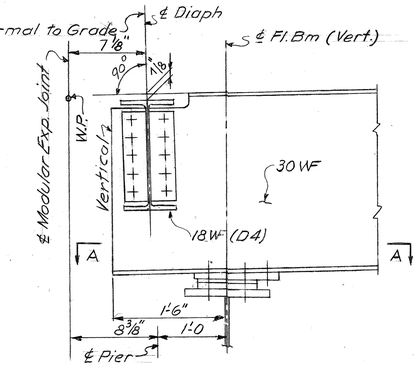

AT PIER 8

(Strgs B, C, D, E, H, J, K & L)

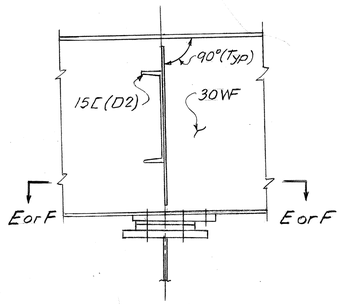

AT TYPICAL INTERIOR SUPPORT

(See Floor System Framing Plan for location of D2 Diaphs & Conn. PLs)

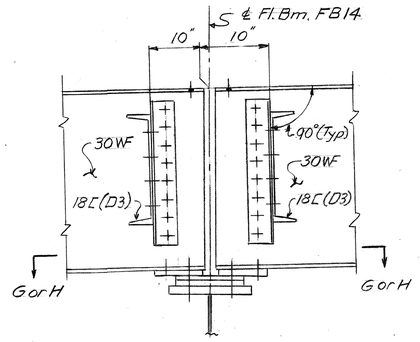

AT STRINGER EXP. JOINT

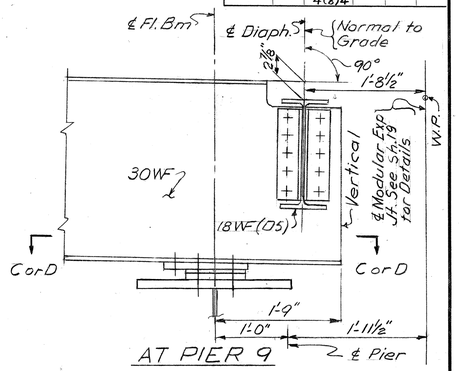

AT PIER 9

(Top Flg of strgs A, F, G & M to be recessed similar to those at Pier B)

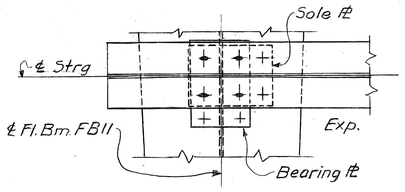

SECT. B-B

SECT. D-D (OPP. HAND)

(Strgs A, F, G & M)

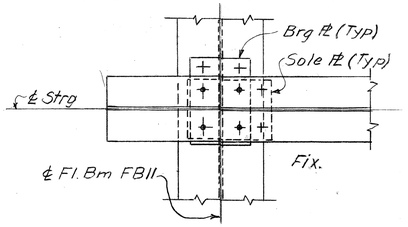

SECT. A-A

SECT. C-C (OPP. HAND)

(Strgs B, C, D, E, H, J, K & L)

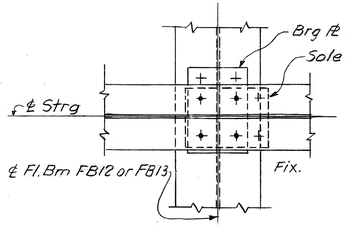

SECT E-E

(Strgs B, C, D, E, H, J, K & L)
(Strgs A, F, G & M @ T1, T6, T11, T17 & T22)

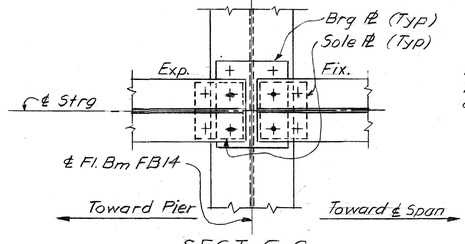

SECT G-G

(Strgs B, C, D, E, H, J, K & L)

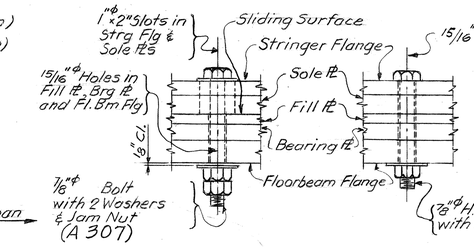

EXPANSION BEARING

FIXED BEARING

BOLT ASSEMBLY DETAILS

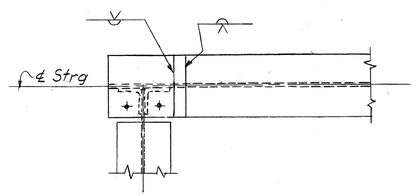

SECT. J-J

SECT F-F

(Strgs A, F, G & M Except as Noted in Sect E-E)

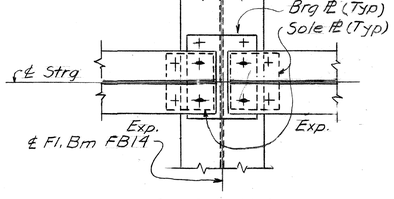

SECT H-H

(Strgs A, F, G & M)

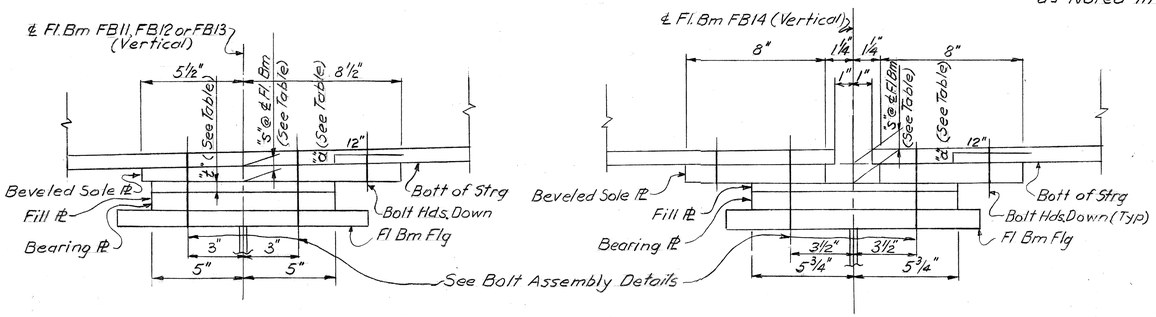

STRINGER TO FLOORBEAM CONNECTION DETAILS

Work Sheets 45 thru 48 together

SHEET 45

KENTUCKY DEPARTMENT OF HIGHWAYS
OHIO DEPARTMENT OF HIGHWAYS

PROJECT 1471-4 ( )

BRIDGE OVER OHIO RIVER ON I 471

CAMPBELL COUNTY, KENTUCKY
HAMILTON COUNTY, OHIO

SPAN 8
STRINGER DETAILS

HAZELET & ERDAL Consulting Engineers File No. 889	BRIDGE NUMBER	DRAWING NO. 18485	INDEX

DESIGNED BY	WEB	CHECKED BY	CEB
DETAILED BY	E.M	CHECKED BY	CGH
TRACED BY		CHECKED BY	
DATE	6-25-71	DATE	10-70
REVISED		REVISED	
REVISED		REVISED	

FED. ROAD DIST.	STATE	FED. AID PRO. NO.	FISCAL YEAR	SHEET NO.	TOTAL SHEETS
7	KY.	I-471-4(8)4			

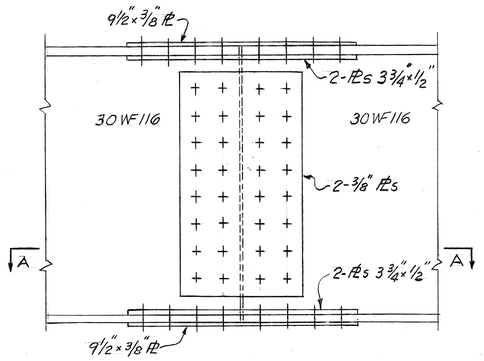

INTERIOR STRINGER SPLICE

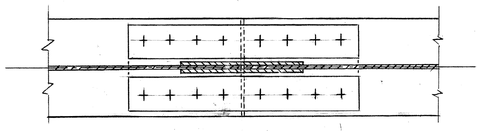

SECT. A-A

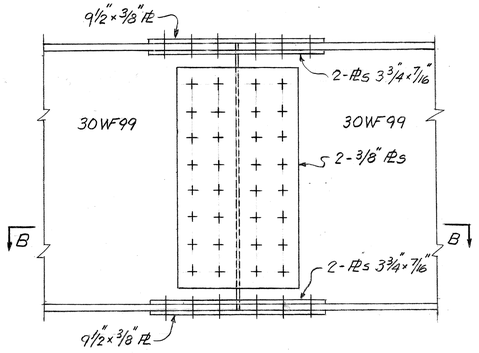

FASCIA STRINGER SPLICE

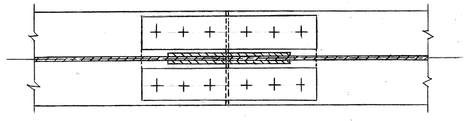

SECT. B-B

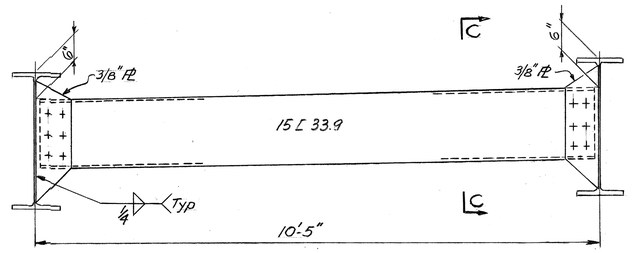

D1

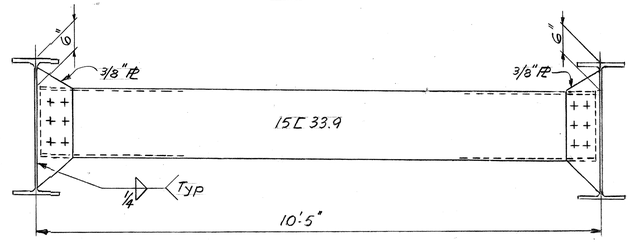

D2

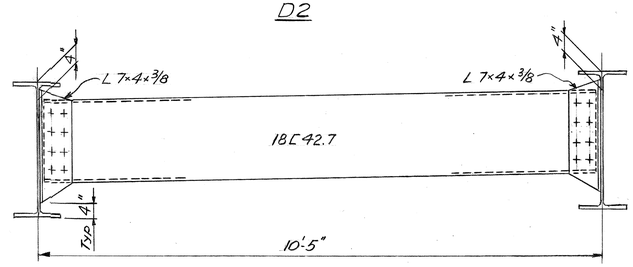

D3

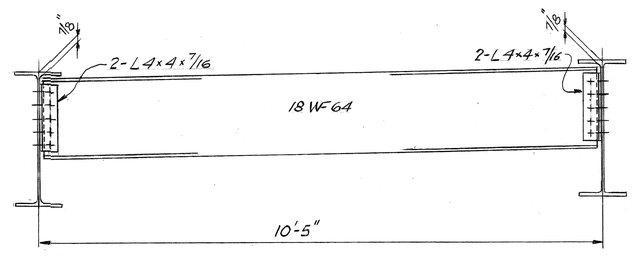

D4

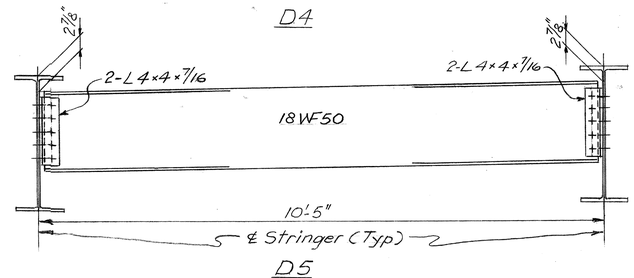

D5

DIAPHRAGM DETAILS

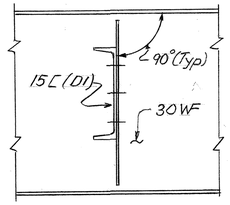

SECT C-C
TYP DETAIL AT DIAPH D1

TABLE OF SOLE PLATE BEVELS "a"	
PANEL POINT	"a"
Ro, T1, T2, T3, T4, T19, T20, T21, T22, R23	1/8"
T5, T6, T7, T8, T15, T16, T17, T18	1/16"
T9, T10, T11, T12, T13, T14,	0

TABLE OF STRINGER BEARING DATA

STRINGERS		A & M				F & G				B, C, K & L				D, E, H & J			
FLOORBEAM		FB11	FB12	FB13	FB14	FB11	FB12	FB13	FB14	FB11	FB12	FB13	FB14	FB11	FB12	FB13	FB14
Sole Pl	"S" (inches)	1	1	1	1	1	1	1	1	1	1	1	1	1	1	1	1
Brg Pl	"b" (inches)	0	0	0	0	0	0	0	0	3/16	3/16	3/16	3/16	3/16	3/16	3/16	3/16
Fill Pl	"t" (inches)	13/16	3/16	9/16	15/16	1 11/16	1 1/16	1 7/16	1 13/16	*	0	3/8	3/4	‡	7/8	1¼	1⅝

* 5/8" Stringers B&L, 1¼ Stringers C&K
‡ 2⅛" Stringers D&J, 1½" Stringers E&H

STRINGER AND DIAPHRAGM NOTES

H.S. Bolts - 7/8" ϕ
Material - A36 Steel
Stringers are not to be cambered.
Steel in contact with concrete shall not be painted or oiled.
See Sheet 2 for General Notes.
See Sheet 31 for Framing Plan.
Sliding surfaces of stringer expansion bearings shall be shop coated with a hot mixture of white lead and tallow or other approved coating.
Diaphragms D4, D5, CB4 and CB5 support the Modular Expansion Joints. See sheets 17 thru 20 for details and connections.

Work Sheets 45 thru 48 together

SHEET 46

KENTUCKY DEPARTMENT OF HIGHWAYS
OHIO DEPARTMENT OF HIGHWAYS
PROJECT 1471-4 ( )
BRIDGE OVER OHIO RIVER ON I 471
CAMPBELL COUNTY, KENTUCKY
HAMILTON COUNTY, OHIO

SPAN 8
STRINGER & DIAPHRAGM DETAILS

HAZELET & ERDAL Consulting Engineers File No. 889	BRIDGE NUMBER	DRAWING NO. 18485	INDEX

DESIGNED BY	CEB	CHECKED BY	WFB
DETAILED BY	FM	CHECKED BY	CGH
TRACED BY		CHECKED BY	

DATE 10-70

REVISED DATE
REVISED DATE
REVISED DATE

WFB 6-25-71

FED. ROAD DIST.	STATE	FED. AID PRO. NO.	FISCAL YEAR	SHEET NO.	TOTAL SHEETS
7	KY.	I471-4(8)4			

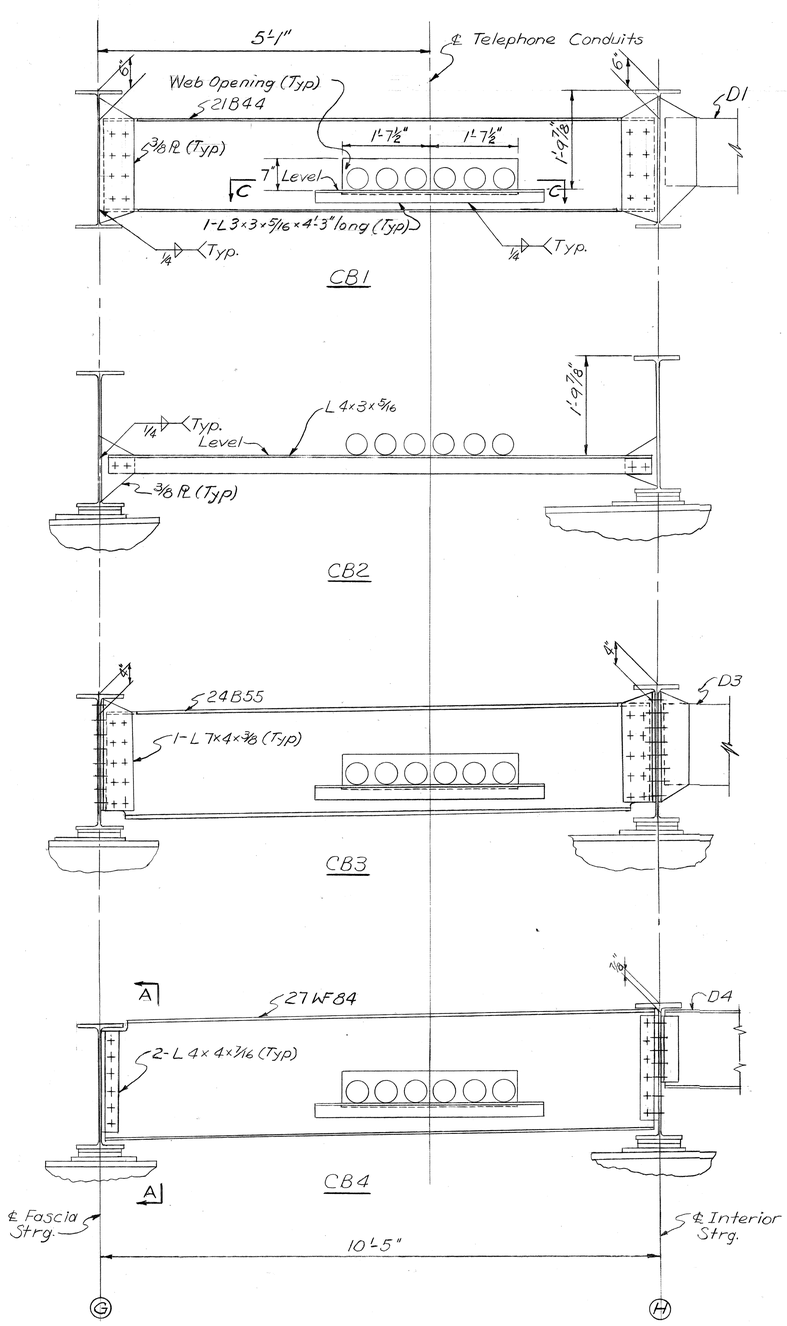

TELEPHONE CONDUIT DIAPHRAGM DETAILS

Typical conduit support location details shown on CB1 & CB2.

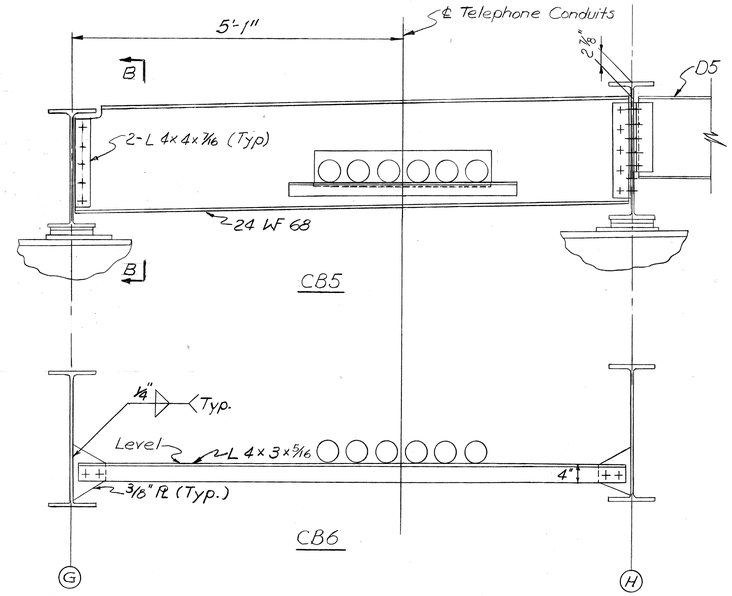

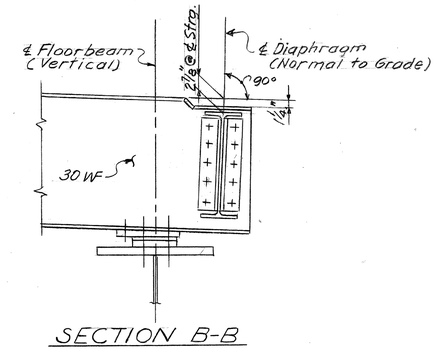

SECTION B-B

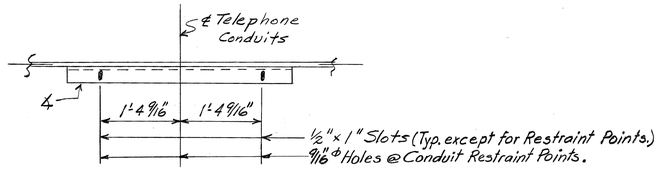

SECTION C-C

(Typ for Each CB1 thru CB 6)

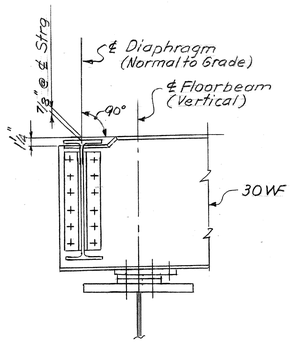

SECTION A-A

TELEPHONE CONDUIT & DIAPHRAGM NOTES

See sheet 46 for diaphragms notes.

See sheets 55 & 56, Drawing No. 18484 for the general details, notes and contract limits for Telephone Conduit.

Work Sheets 45 thru 48 together

SHEET 47

KENTUCKY DEPARTMENT OF HIGHWAYS
OHIO DEPARTMENT OF HIGHWAYS

PROJECT I471-4 ( )
BRIDGE OVER OHIO RIVER ON I 471
CAMPBELL COUNTY, KENTUCKY
HAMILTON COUNTY, OHIO

HAZELET & ERDAL Consulting Engineers File No. 889 | BRIDGE NUMBER | DRAWING NO. 18485 | INDEX

SPAN 8
TELEPHONE CONDUIT DIAPHRAGM DETAILS

DESIGNED BY CEB CHECKED BY MM DATE
DETAILED BY M.K. CHECKED BY CGH DATE 10-70
TRACED BY M.K. CHECKED BY DATE
REVISED DATE
REVISED DATE
REVISED DATE

WFB 6-25-71

FED. ROAD DIST.	STATE	FED. AID PRO. NO.	FISCAL YEAR	SHEET NO.	TOTAL SHEETS
7	KY.	I471-4(8)4			

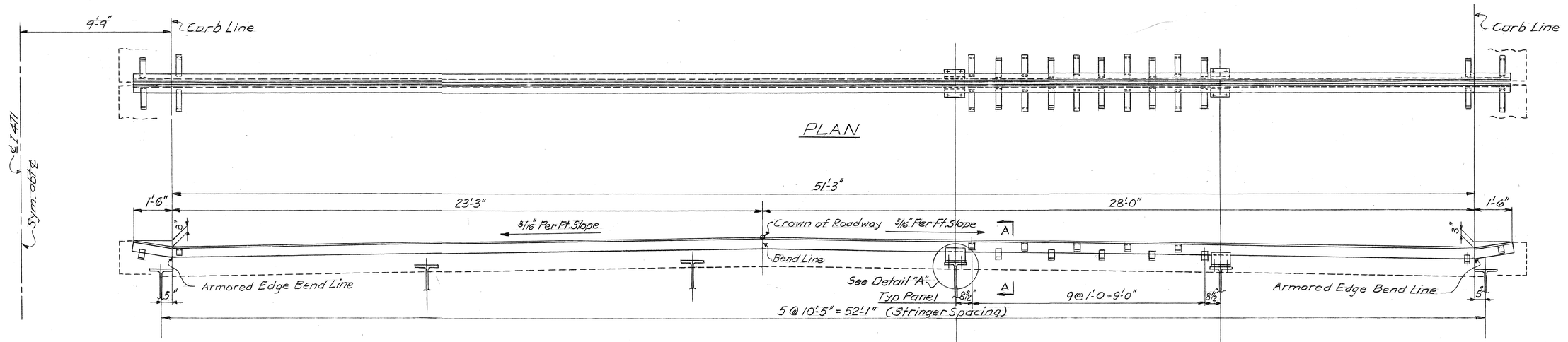

STRINGER EXPANSION JOINT

AT T4, T9, T14 & T19

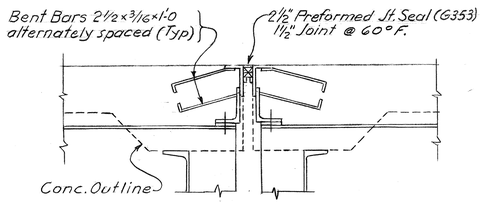

SECTION A-A

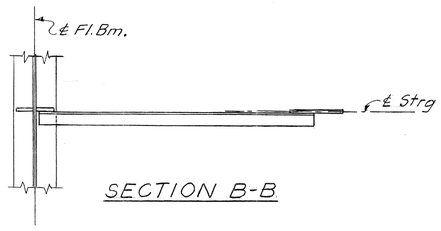

SECTION B-B

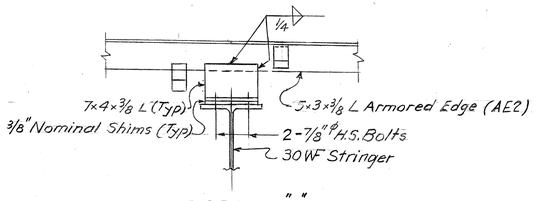

DETAIL "A"

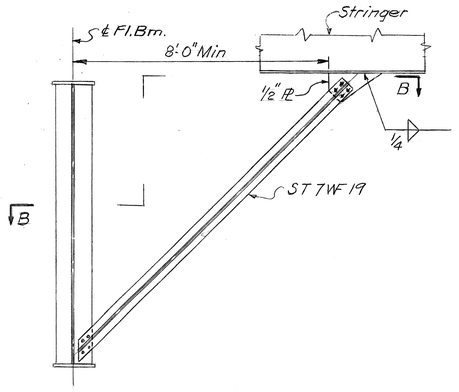

LONGITUDINAL FORCE BRACE

(See Framing Plan for Location)

STRINGER EXP. JOINT NOTES:

H.S. Bolts - 7/8" ø

Material - A36 Steel

The stringer expansion joints are to be erected after all other steel has been erected and after the concrete slabs (between transverse construction joints) of Units I thru V have been placed. The joints shall be set to match the roadway surface and with the indicated opening.

For details of Armored Edge see "Standard Armored Edge for Joints in concrete", Std. AE2, current edition.

For details of 2½" Preformed Joint seal see "Preformed Joint Seal Details for concrete Bridge Floors", Std. G 353, current edition.

Work Sheets 45 thru 48 together

SHEET 48

	REVISED	DATE
	REVISED	DATE
	REVISED	DATE

DESIGNED BY F.M. CHECKED BY CGH DATE 10-70

DETAILED BY CHECKED BY DATE

TRACED BY CHECKED BY DATE

WPA 6-25-71

KENTUCKY DEPARTMENT OF HIGHWAYS
OHIO DEPARTMENT OF HIGHWAYS

PROJECT 1471-4 ( )

BRIDGE OVER OHIO RIVER ON I 471

CAMPBELL COUNTY, KENTUCKY
HAMILTON COUNTY, OHIO

SPAN 8
STRINGER EXP. JOINTS & MISC.

HAZELET & ERDAL Consulting Engineers File No. 889	BRIDGE NUMBER	DRAWING NO. 18485	INDEX

FED. ROAD DIST.	STATE	FED. AID PRO. NO.	FISCAL YEAR	SHEET NO.	TOTAL SHEETS
7	KY.	I471-4(8)4			

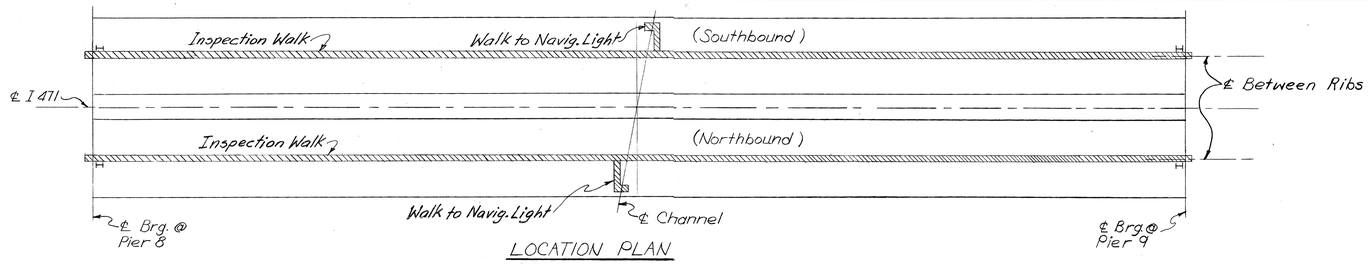

LOCATION PLAN

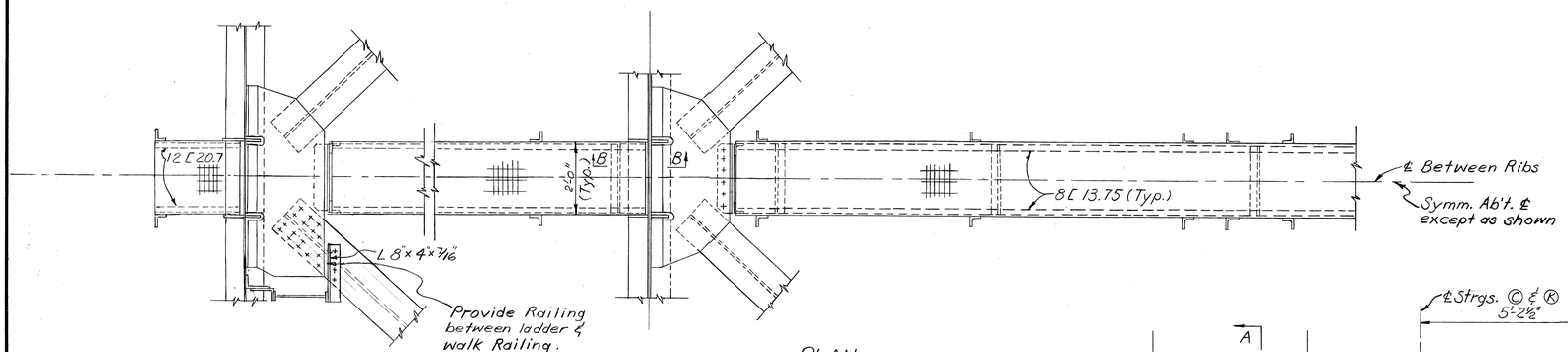

PLAN

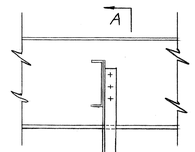

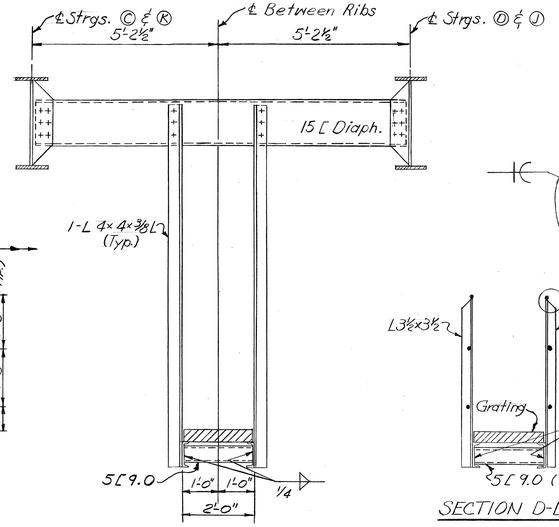

SECTION A-A
(Typ. at Mid-Panel Pts.)

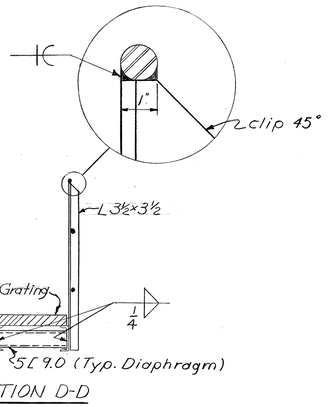

SECTION D-D

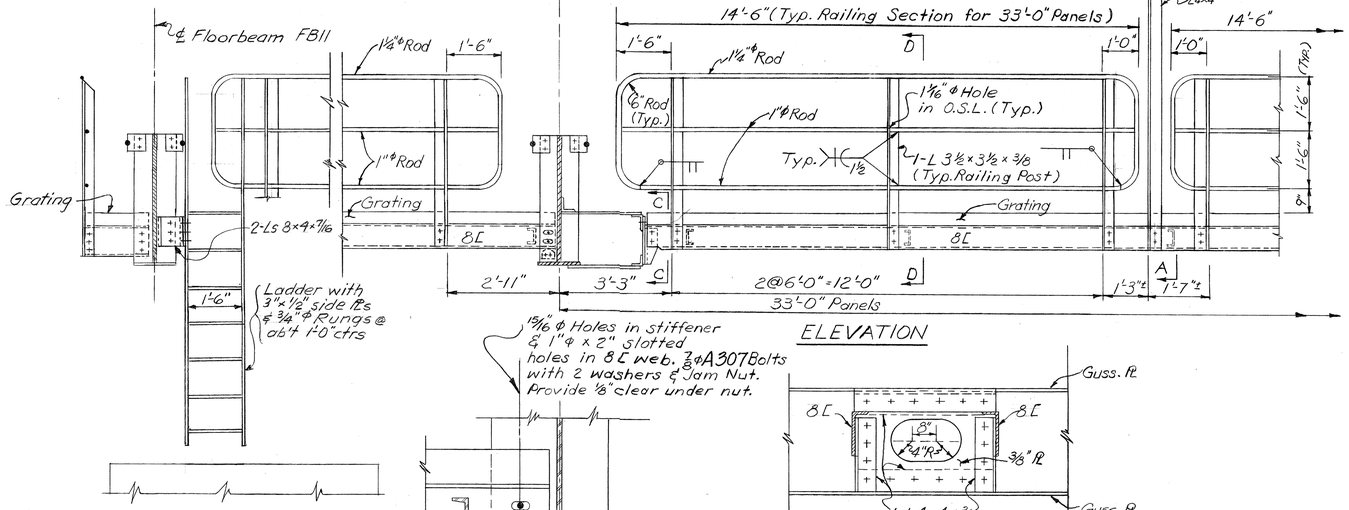

ELEVATION

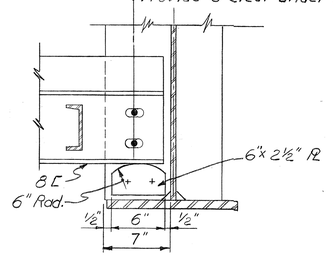

SECTION B-B

SECTION C-C

LONGITUDINAL INSPECTION WALKS
(Northbound Shown)
(Southbound Opp. Hand)

Work sheets 49 thru 51 together

SHEET 49

KENTUCKY DEPARTMENT OF HIGHWAYS
OHIO DEPARTMENT OF HIGHWAYS

PROJECT 1471-4 ( )
BRIDGE OVER OHIO RIVER ON I 471

CAMPBELL COUNTY, KENTUCKY
HAMILTON COUNTY, OHIO

SPAN 8
INSPECTION WALKS

HAZELET & ERDAL Consulting Engineers File No. 889	BRIDGE NUMBER	DRAWING NO. 18485	INDEX

DESIGNED BY		CHECKED BY	DATE
DETAILED BY		CHECKED BY	DATE
TRACED BY MK		CHECKED BY CGH	DATE 12-70
REVISED	DATE	REVISED	DATE

WRB 6-25-71

FED. ROAD DIST.	STATE	FED. AID PRO. NO.	FISCAL YEAR	SHEET NO.	TOTAL SHEETS
7	KY.	I471-4(8)4			

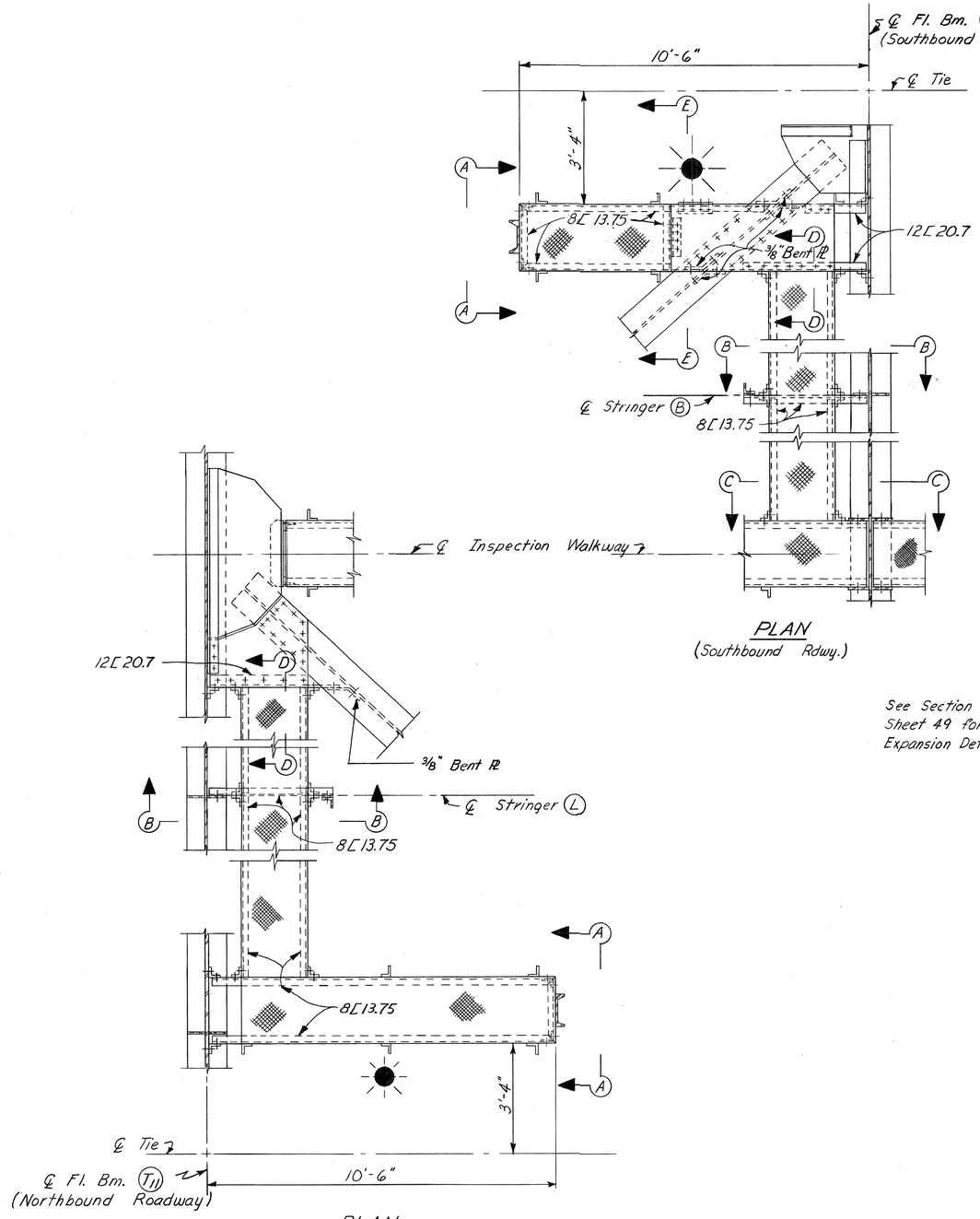

PLAN
(Southbound Rdwy.)

PLAN
(Northbound Rdwy.)

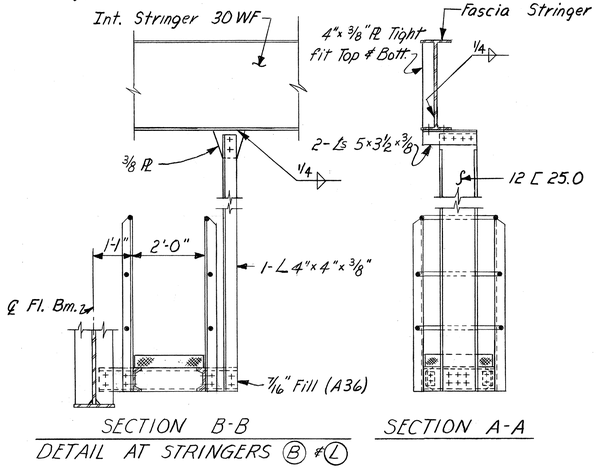

SECTION B-B
DETAIL AT STRINGERS (B) & (L)

SECTION A-A

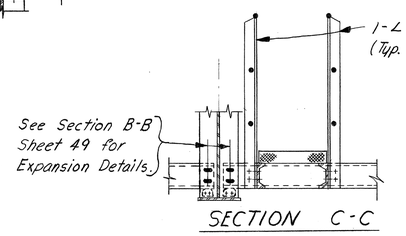

SECTION C-C

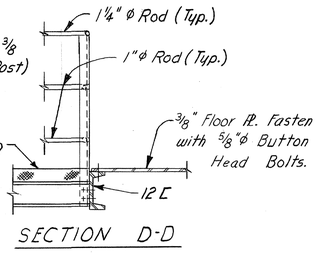

SECTION D-D

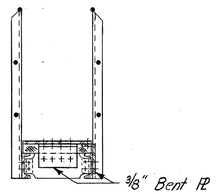

SECTION E-E

* INSPECTION WALK, PLATFORM & LADDER NOTES:

H.S. Bolts - 7/8" ø U.N. except bolts in safety cages for ladders may be 3/4" ø.

Material - A 36 steel U.N.

All welds shall be 1/4" U.N.

Galvanized grating for all Inspection Walks and Platforms shall be 18" wide Type W-3R Bustin Protecto-Way steel grating made from standard lengths as manufactured by the Bustin Steel Products Inc., Dover, New Jersey; or shall be 18 3/4" wide on 3" channels 12-guage galvanized steel made up from standard lengths as manufactured by the Globe Company, Chicago, Illinois under the trade name of "Safety Grip Strut", with serrated grated surface; or shall be 18" wide 4" deep Interlock Grating as manufactured from 14-guage Zinc-grip Steel by Armco Steel Corporation, Middletown, Ohio; or equal.

Connection Ls - 4x4x3/8 U.N.

Railing shall be A 36 steel rods of welded construction and may be shop or field fabricated.

Pipe railing may be used as an alternate. The railing shall be welded construction and may be shop or field fabricated. The rails shall be 1 1/2" ø A 53 Schedule 40 pipe. The posts, 1 1/2" ø A 53 Schedule 80 pipe or A 36 structural steel sections. The proposed details shall be submitted to the Engineer for approval.

All rough edges and sharp corners shall be removed.

The grating may be welded to the supports and shall be painted where the galvanizing is destroyed.

The ladder safety cages shall be made up of 2 1/2" x 3/8 bars.

The painting of all steel, rods, pipe, etc., except the galvanized grating, shall be in accordance with the Special Provision No 80, current edition.

The cost of the galvanized grating, galvanized carriage bolts with nuts, anchor parts, all steel plates and shapes, tools, labor, and all incidentals necessary to complete the installation of the inspection walk and all platforms, are included in the lump sum bid for Structural Steel - Span 8.

*These notes are not intended to apply to the Telephone Company service platforms and ladders.

INSPECTION WALKS
TO NAVIGATION LIGHTS

SPAN 8
INSPECTION WALKS

Work sheets 49 thru 51 together

SHEET 50

KENTUCKY DEPARTMENT OF HIGHWAYS
OHIO DEPARTMENT OF HIGHWAYS
PROJECT 1471-4 ( )
BRIDGE OVER OHIO RIVER ON I 471
CAMPBELL COUNTY, KENTUCKY
HAMILTON COUNTY, OHIO

HAZELET & ERDAL Consulting Engineers File No. 889	BRIDGE NUMBER	DRAWING NO. 18485	INDEX

DESIGNED BY JAN. 9 72 CHECKED BY CGH DATE 12-70
DETAILED BY CHECKED BY DATE
TRACED BY CHECKED BY DATE
REVISED DATE
REVISED DATE
REVISED DATE

WM 6-25-71

FED. ROAD DIST.	STATE	FED. AID PRO. NO.	FISCAL YEAR	SHEET NO.	TOTAL SHEETS
7	KY.	I471-4(83)4			

Step with 9"± x 3'-0" Tread Section centered in field on parapet opening. Top to be 9" above the top of platform grating.

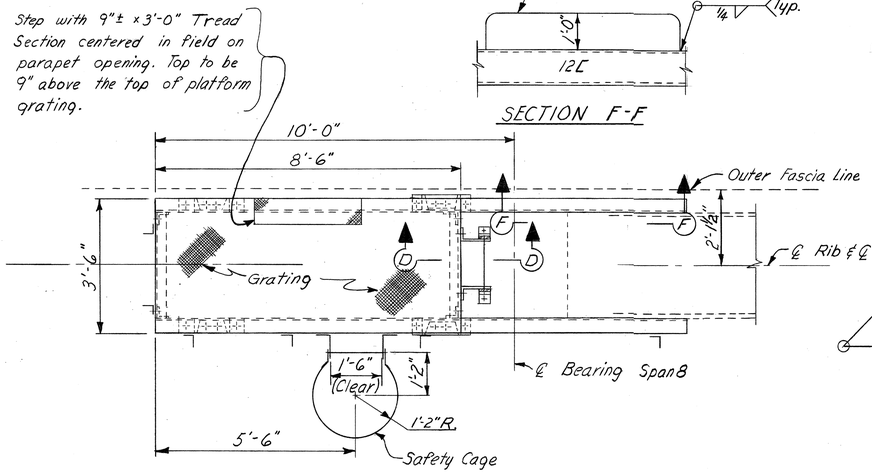

SECTION A-A

SECTION F-F

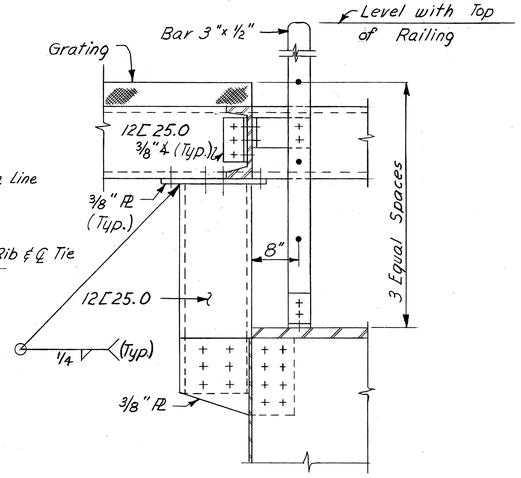

SECTION D-D

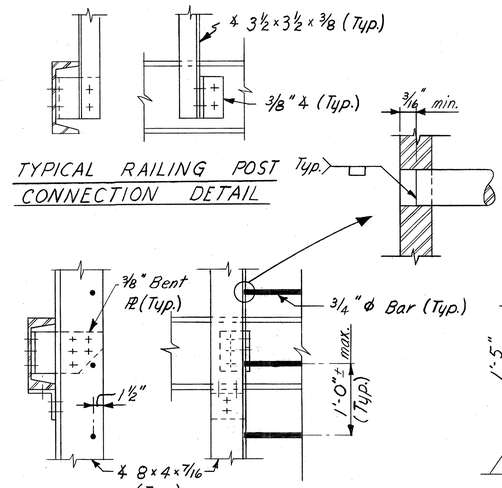

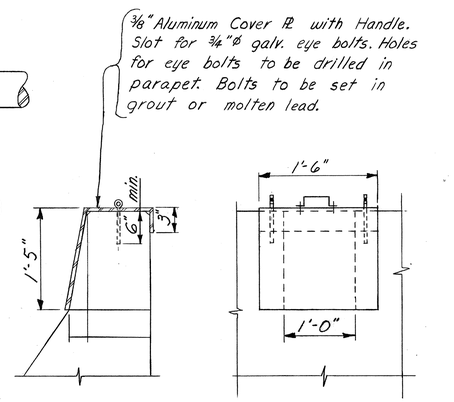

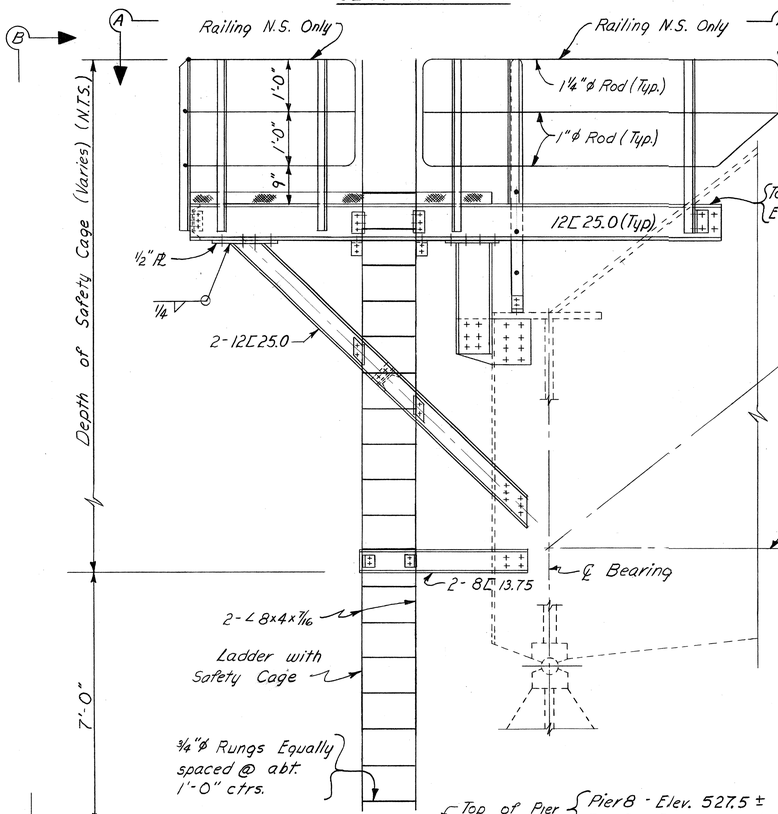

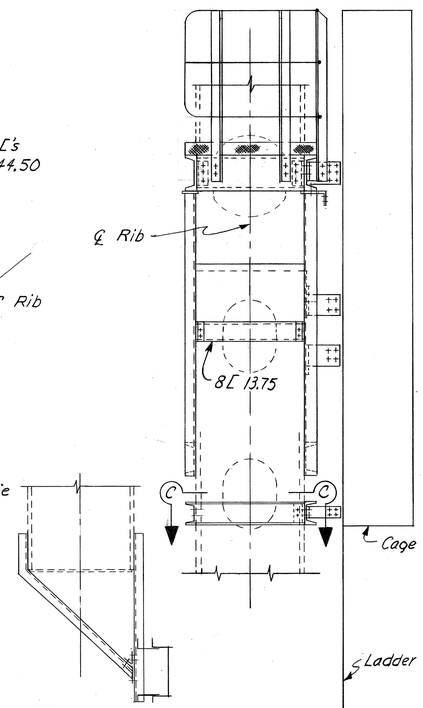

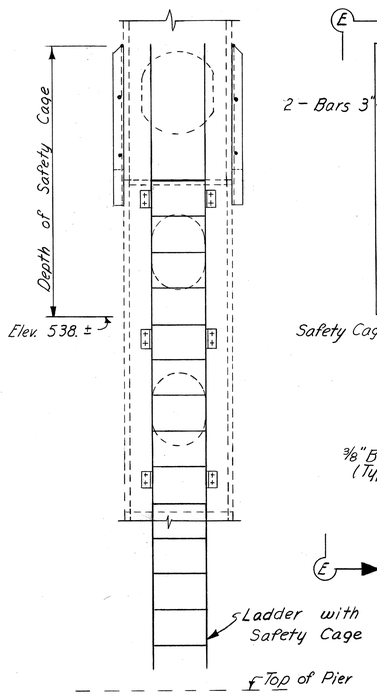

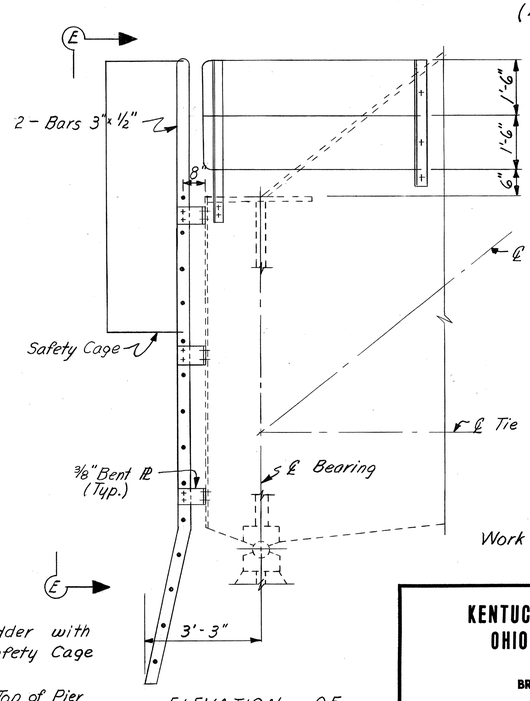

Note:
The furnishing and installation of covers and bolts for the parapet openings in Spans 7 and 9 is incidental to the item "Structural Steel - Span 8".

Work Sheets 49 thru 51 Together

SHEET 51

SPAN 8 PLATFORMS AND LADDERS

KENTUCKY DEPARTMENT OF HIGHWAYS
OHIO DEPARTMENT OF HIGHWAYS

PROJECT 1471-4 ( )
BRIDGE OVER OHIO RIVER ON I 471
CAMPBELL COUNTY, KENTUCKY
HAMILTON COUNTY, OHIO

HAZELET & ERDAL Consulting Engineers File No. 889	BRIDGE NUMBER	DRAWING NO. 18485	INDEX

DESIGNED BY	DATE	REVISED	DATE
DETAILED BY JAN '91	CHECKED BY WEB	DATE 11/20	REVISED DATE
TRACED BY	CHECKED BY		REVISED DATE

WEB 6-25-91

FED. ROAD DIST.	STATE	FED. AID PRO. NO.	FISCAL YEAR	SHEET NO.	TOTAL SHEETS
7	KY.	1471 -4(8)4			

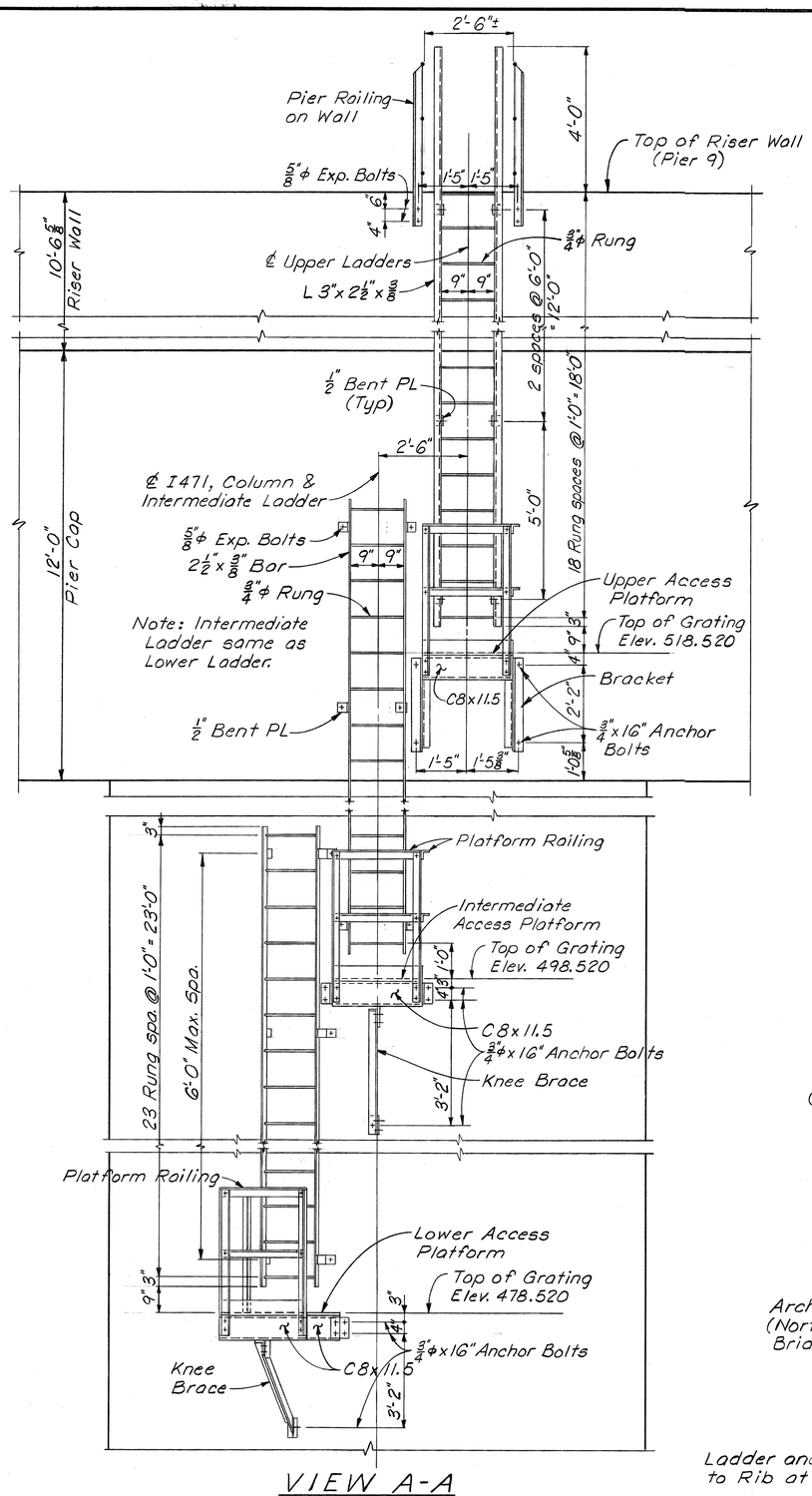

VIEW A-A

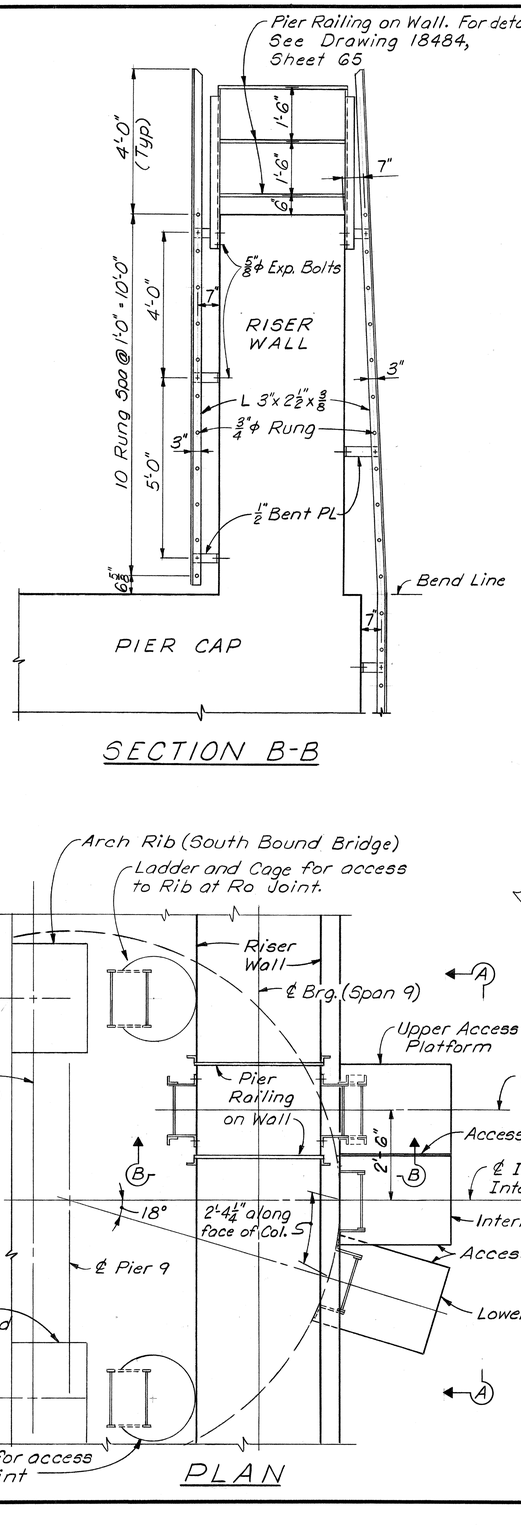

SECTION B-B

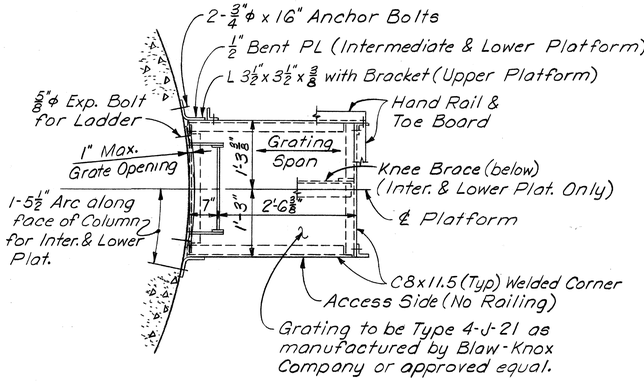

ACCESS PLATFORM DETAILS

Drawn for Intermediate Access Platform. Upper and Lower Access Platforms similar except as shown in the Plan. For Upper Access Platform Details not shown see Section G-G, Drawing 18486, Sheet 28. For Intermediate and Lower Access Platform Details not shown and Platform Railing Details see Section E-E, Drawing 18486, Sheet 28. For Ladder Details see View A-A and Section B-B.

PLAN

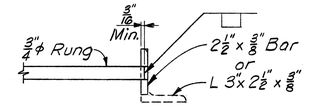

TYPICAL RUNG CONNECTION

Steel for ladder on Pier 9 is included in lump sum bid for Telephone Conduit.

DESIGNED BY	CHECKED BY	DATE
DETAILED BY W.R.T. 5-15-72	CHECKED BY	DATE
TRACED BY	CHECKED BY	DATE

REVISED Sheet Added W.R.T. 5-22-72	DATE
REVISED	DATE
REVISED	DATE

SHEET 51A

KENTUCKY DEPARTMENT OF HIGHWAYS
OHIO DEPARTMENT OF HIGHWAYS

PROJECT 1471-4 ( )
BRIDGE OVER OHIO RIVER ON I 471

CAMPBELL COUNTY, KENTUCKY
HAMILTON COUNTY, OHIO

PIER 9 LADDER DETAILS

HAZELET & ERDAL Consulting Engineers File No. 889	BRIDGE NUMBER	DRAWING NO. 18485	INDEX

FED. ROAD DIST.	STATE	FED. AID PRO. NO.	FISCAL YEAR	SHEET NO.	TOTAL SHEETS
7	KY.	I471-4(8)4			

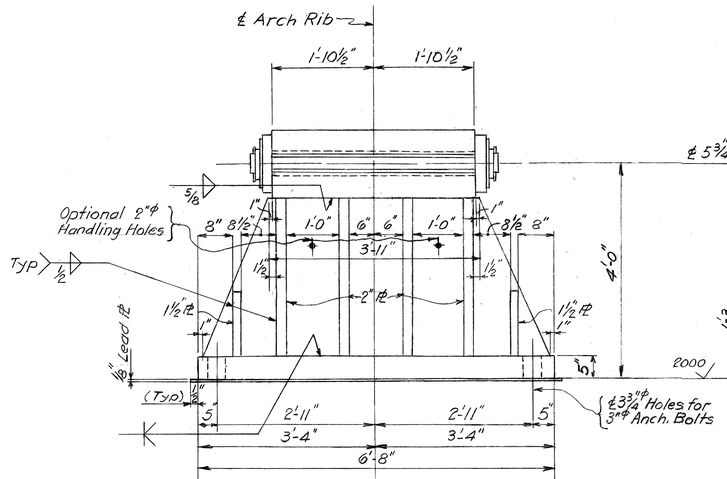

FRONT ELEVATION

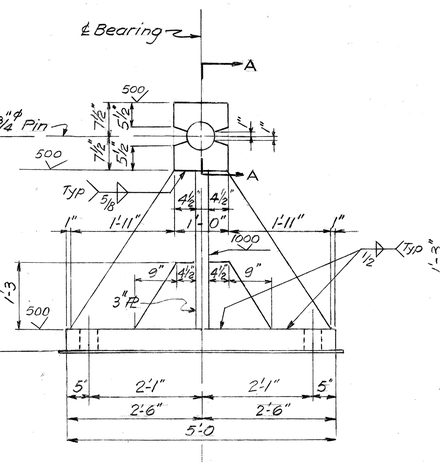

END ELEVATION

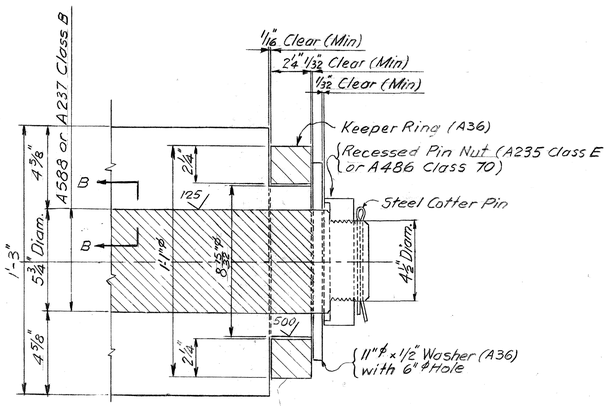

SECTION A-A

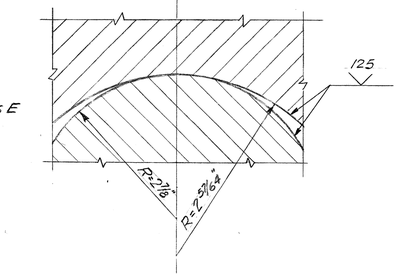

SECTION B-B

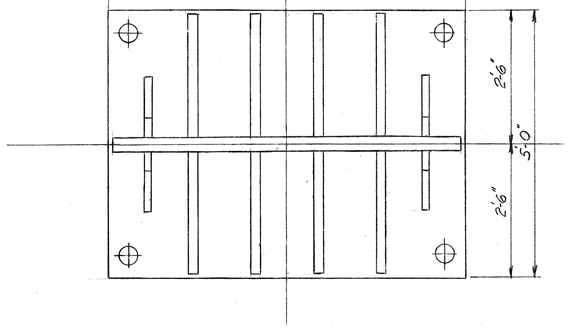

BASE PLATE PLAN

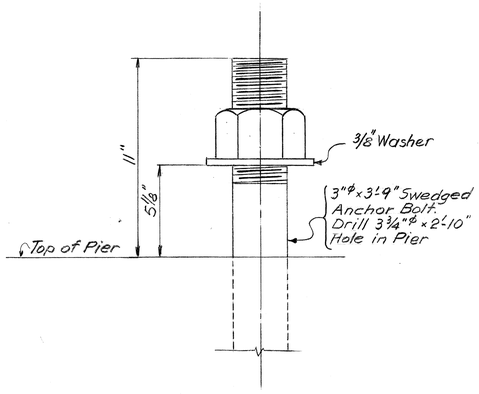

F-3350 ANCHOR BOLT

(16-Req'd)

BEARING NOTES:

WHITE LEAD AND TALLOW: Pins, fin. brg, surfaces, rockers and rocker bearing surfaces shall be coated with white lead and tallow in accordance with current specifications.

WELDING: All plates shall be joined with continuous fillet welds of the size governed by plate thicknesses, except as noted (See Special Notes). All welds are subject to Magnetic Particle Inspection.

ANCHOR BOLTS: Prior to drilling holes for setting anchor bolts, the Contractor shall establish the exact location of centerline of Piers and adjust the location of base plates from the dimensions shown on the details if necessary. Holes of depth and dimensions shown shall be drilled for anchor bolts, after the base plates are properly set, by the Superstructure Contractor who shall be responsible for keeping holes dry in freezing weather. After base plates are properly set, anchor bolt holes drilled, and anchor bolts are placed in drilled holes, molten lead shall be poured in holes and packed until holes are completely filled flush to top of base plates. The cost of drilling anchor bolt holes, furnishing lead and filling holes with molten lead shall be incidental to and included in the the lump sum bid for Structural Steel.

SETTING MASONRY PLATES: The masonry plates shall be set level in exact position and have full and even bearing under the masonry plate.

MATERIAL: All material except Bolts in Bearing Hold Down Device shall be A588 except as noted on plans. Swedged Anchor Bolts are ASTM A588. Bolts in Bearing Hold Down Devices are ASTM A325.

Work sheets 52 and 53 together

FIX BEARING F-3550

(4-Req'd @ Pier 8)

Mat'l.-A588 unless shown or noted

SHEET 52

KENTUCKY DEPARTMENT OF HIGHWAYS
OHIO DEPARTMENT OF HIGHWAYS

PROJECT I471-4 ( )
BRIDGE OVER OHIO RIVER ON I 471

CAMPBELL COUNTY, KENTUCKY
HAMILTON COUNTY, OHIO

HAZELET & ERDAL Consulting Engineers File No. 889	BRIDGE NUMBER	DRAWING NO. 18485	INDEX

SPAN 8
BEARING DETAILS AT PIER 8

DESIGNED BY WFB CHECKED BY CEB DATE
DETAILED BY F.M CHECKED BY CGH DATE 11-70
TRACED BY CHECKED BY DATE
REVISED DATE
REVISED DATE
REVISED DATE

WFB 6-25-71

FED. ROAD DIST.	STATE	FED. AID PRO. NO.	FISCAL YEAR	SHEET NO.	TOTAL SHEETS
7	KY.	I471-4(8)4			

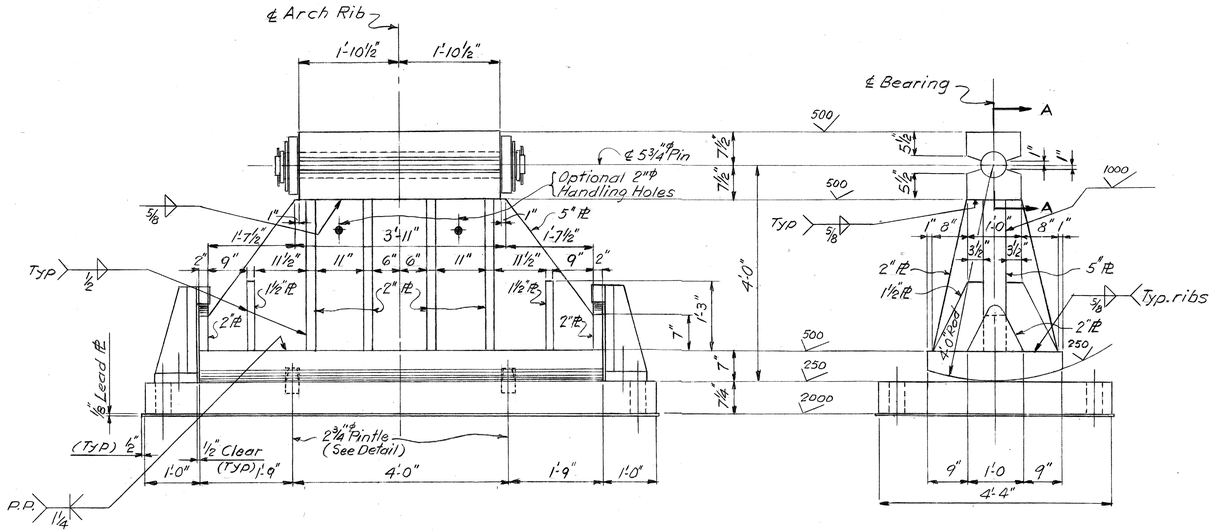

FRONT ELEVATION

END ELEVATION
(Hold-down device not shown)

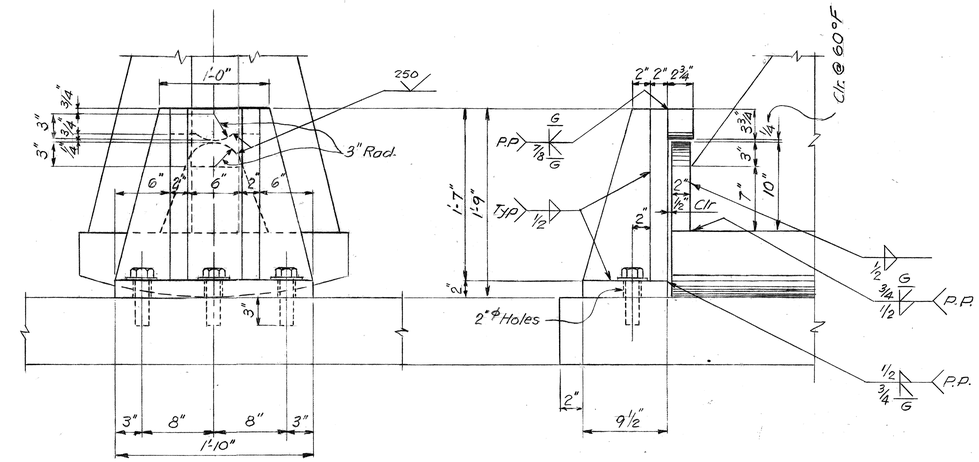

EXPANSION BEARING - HOLD DOWN DEVICE

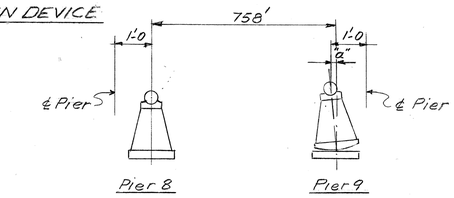

SHOE POSITION DIAGRAM

DIMENSION "a" TABLE									
Temp °F	-30	-20	0	20	40	60	80	100	120
No Load	11 13/16	11¼	10 1/16	8⅞	7 11/16	6½	5 5/16	4⅛	2 15/16
Steel D.L	8 9/16	8	6 13/16	5⅝	4 7/16	3¼	2 1/16	⅞	-5/16
*Steel D.L+Conc.D.L	5 5/16	4¾	3 9/16	2⅜	1 3/16	0	-1 3/16	-2⅜	-3 9/16

* Excluding F.W.S.

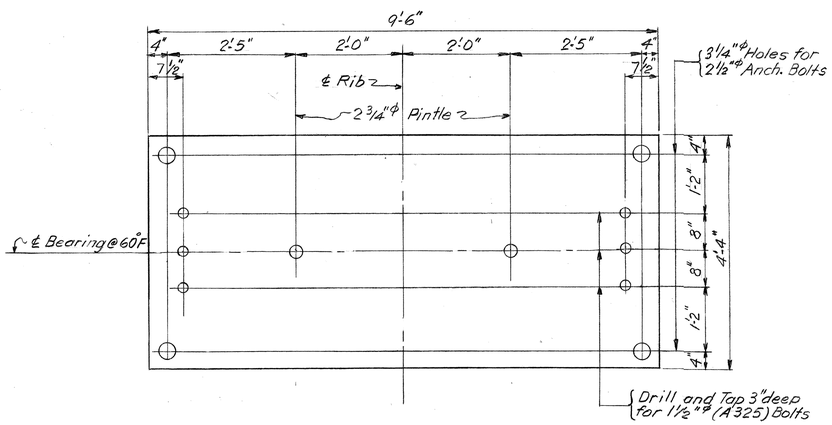

BASE PLATE PLAN

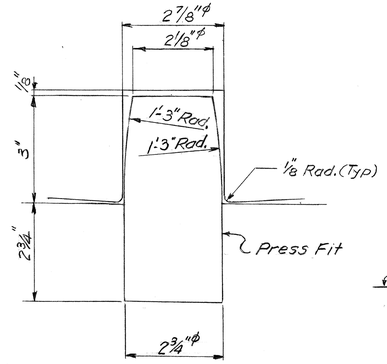

PINTLE DETAIL

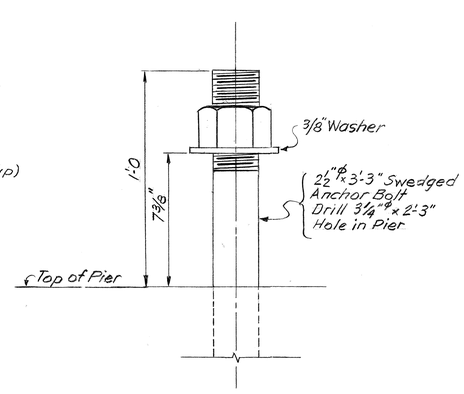

E-3550 ANCHOR BOLT
(16 Req'd)

NOTE:
See sheet 52 for Pin details
See sheet 52 for Bearing Notes

Work sheets 52 and 53 together

EXP. BEARING E-3550
(4-Req'd. @ Pier 9)
Mat'l - A588 unless shown or noted

SHEET 53

KENTUCKY DEPARTMENT OF HIGHWAYS
OHIO DEPARTMENT OF HIGHWAYS
PROJECT I471-4 ( )
BRIDGE OVER OHIO RIVER ON I 471
CAMPBELL COUNTY, KENTUCKY
HAMILTON COUNTY, OHIO

HAZELET & ERDAL Consulting Engineers File No. 889 | BRIDGE NUMBER | DRAWING NO. 18485 | INDEX

SPAN 8
BEARING DETAILS AT PIER 9

DESIGNED BY WFB CHECKED BY CEB DATE
DETAILED BY F.M CHECKED BY CGH DATE 11-70
TRACED BY CHECKED BY DATE
REVISED DATE
REVISED DATE
REVISED DATE

WFB 6-25-71

FED. ROAD DIST.	STATE	FED. AID PRO. NO.	FISCAL YEAR	SHEET NO.	TOTAL SHEETS
7	KY.	I471-4(8)4			

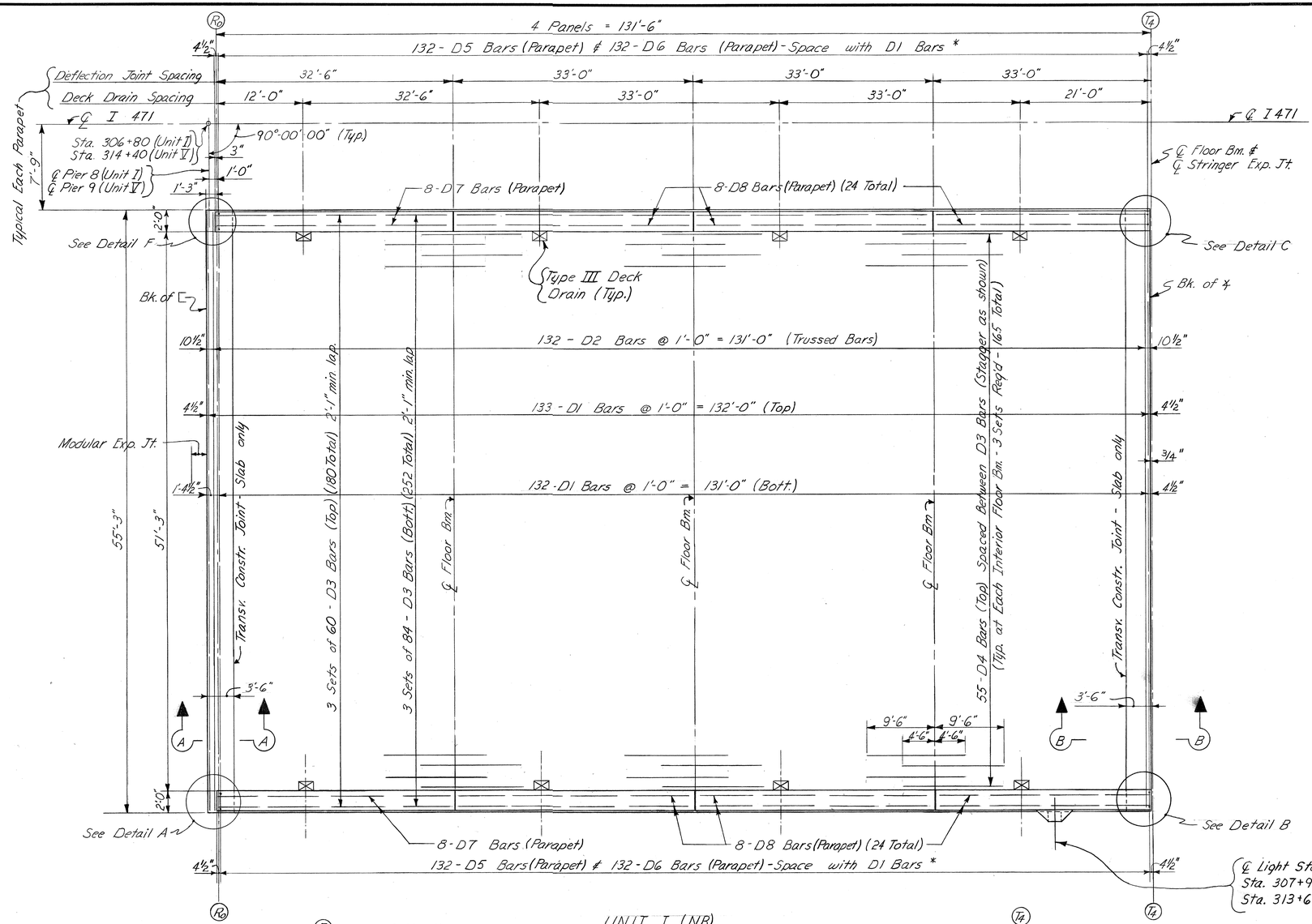

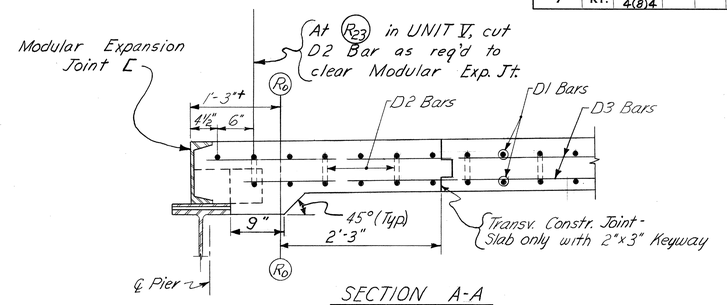

SECTION A-A

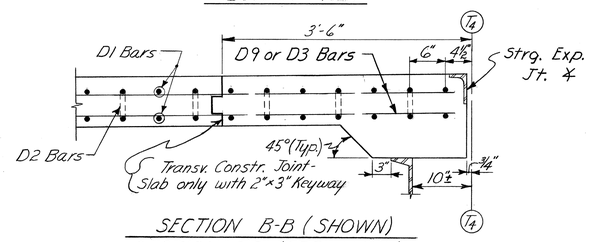

SECTION B-B (SHOWN)
SECTION C-C (OPP. HAND)

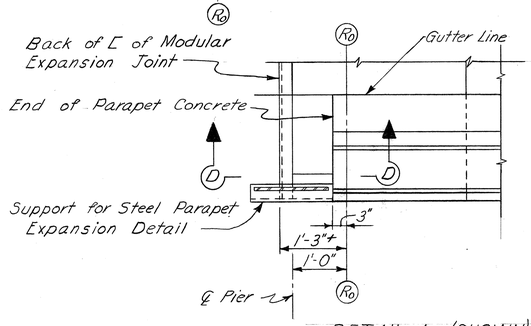

DETAIL A (SHOWN)
DETAIL F (OPP. HAND)

UNIT I (NB)
UNIT V (NB) Opp. Hand
(Southbound Opp. Hand)

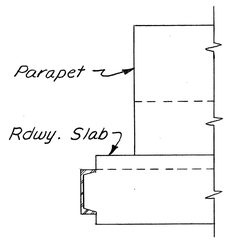

SECTION D-D

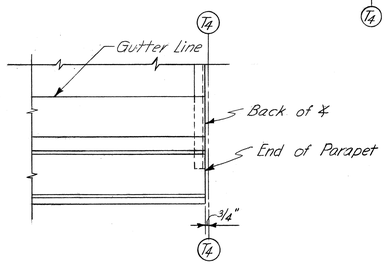

DETAIL B (SHOWN)
DETAIL C (OPP. HAND)

SLAB NOTES :

The slabs shall be broom finished. See Special Notes for Bridge Deck Construction.

See sheet 63, Drawing No. 18484, for Light Standard Bracket that is monolithic with the parapet

See Sheet 59 for Type III Deck Drains and for Reinforcement at Deck Drains.

* Adjust spacing of D-5 and D6 Bars at deflection joints in Parapet to provide a 3" min. and 5" max. end clearance.

Work Sheets 54 thru 59 Together.

SHEET 54

SPAN 8 SLAB DETAILS

KENTUCKY DEPARTMENT OF HIGHWAYS
OHIO DEPARTMENT OF HIGHWAYS

PROJECT 1471-4 ( )
BRIDGE OVER OHIO RIVER ON I 471
CAMPBELL COUNTY, KENTUCKY
HAMILTON COUNTY, OHIO

HAZELET & ERDAL Consulting Engineers File No. 889	BRIDGE NUMBER	DRAWING NO. 18485	INDEX

DESIGNED BY W.E.B.	CHECKED BY C.E.B.	DATE	REVISED DATE
DETAILED BY T.A.N. 6/19	CHECKED BY	DATE	REVISED DATE
TRACED BY T.A.N. 6/23	CHECKED BY W.T.B.	DATE 9-70	REVISED DATE

W.T.B. 6-25-71

FED. ROAD DIST.	STATE	FED. AID PRO. NO.	FISCAL YEAR	SHEET NO.	TOTAL SHEETS
7	KY.	I471-4(8)4			

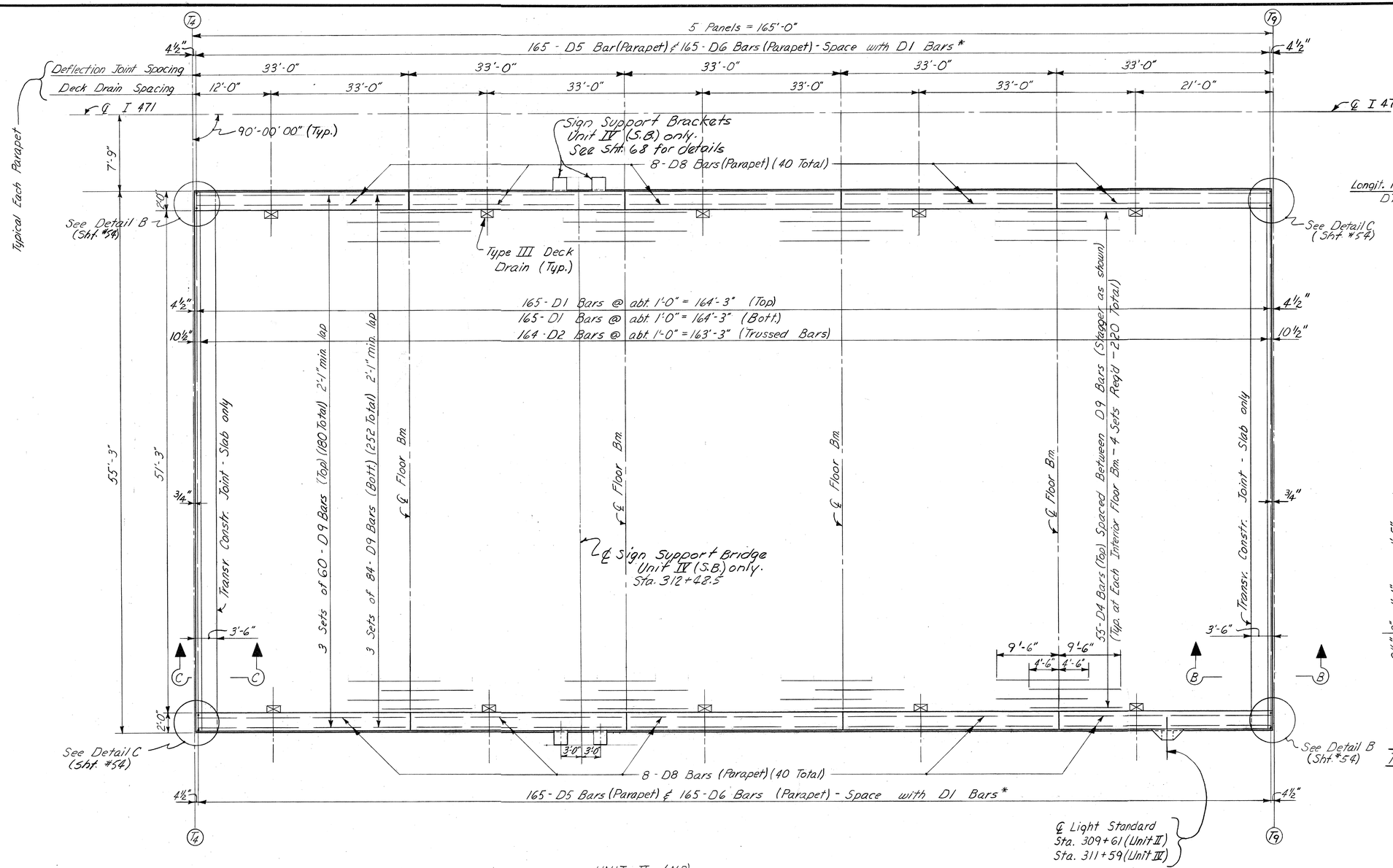

UNIT II (NB)
UNIT IV (NB) OPP. HAND
(Southbound Opp. Hand.)

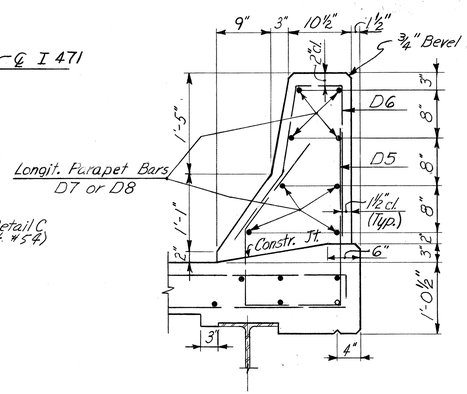

PARAPET DETAIL

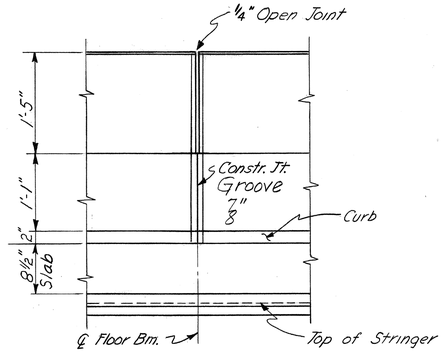

DEFLECTION JOINT DETAIL
TYPICAL AT INTERIOR FLOOR BEAMS

Work Sheets 54 thru 59 Together

SHEET 55

KENTUCKY DEPARTMENT OF HIGHWAYS
OHIO DEPARTMENT OF HIGHWAYS

PROJECT I 471-4 ( )
BRIDGE OVER OHIO RIVER ON I 471
CAMPBELL COUNTY, KENTUCKY
HAMILTON COUNTY, OHIO

HAZELET & ERDAL Consulting Engineers File No. 889 | BRIDGE NUMBER | DRAWING NO. 18485 | INDEX

SPAN 8
SLAB DETAILS

DESIGNED BY W.F.B. CHECKED BY C.E.B. DATE
DETAILED BY I.A.M. 4/26 CHECKED BY DATE
TRACED BY I.A.M. 4/26 CHECKED BY W.F.B. DATE 6-70

REVISED Added Overhead Sign Supports C.S.B. DATE 2-1972
REVISED DATE
REVISED DATE

6-25-71

FED. ROAD DIST.	STATE	FED. AID PRO. NO.	FISCAL YEAR	SHEET NO.	TOTAL SHEETS
7	KY.	I471-4(8)4			

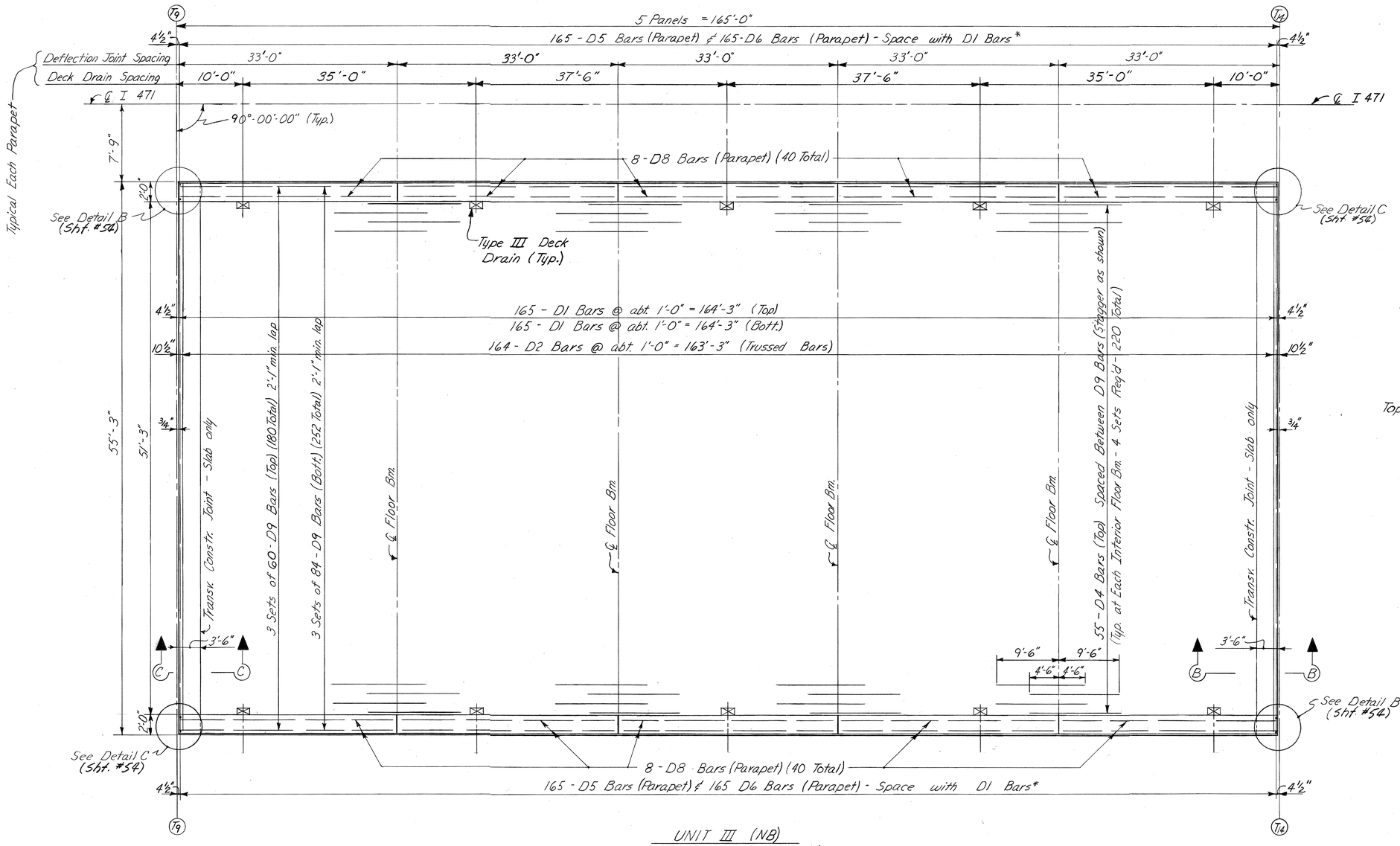

UNIT III (NB)
(Southbound Opp. Hand)

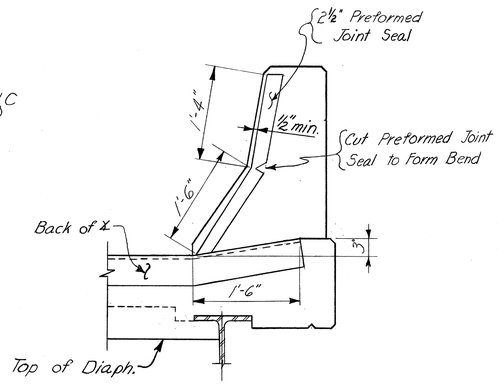

TYPICAL PARAPET DETAIL AT STRINGER EXPANSION JOINT

Work Sheets 54 thru 59 Together

SHEET 56

SPAN 8
SLAB DETAILS

KENTUCKY DEPARTMENT OF HIGHWAYS
OHIO DEPARTMENT OF HIGHWAYS

PROJECT 1471-4 ( )
BRIDGE OVER OHIO RIVER ON I 471

CAMPBELL COUNTY, KENTUCKY
HAMILTON COUNTY, OHIO

HAZELET & ERDAL Consulting Engineers File No. 889	BRIDGE NUMBER	DRAWING NO. 18485	INDEX

DESIGNED BY W.F.B.	CHECKED BY C.E.B.	DATE	REVISED DATE
DETAILED BY T.A.N. 6/26	CHECKED BY W.F.B.	DATE	REVISED DATE
TRACED BY T.A.N. 6/26	CHECKED BY W.F.B.	DATE 10-70	REVISED DATE

W.F.B. 6-25-71

FED. ROAD DIST.	STATE	FED. AID PRO. NO.	FISCAL YEAR	SHEET NO.	TOTAL SHEETS
7	KY.				

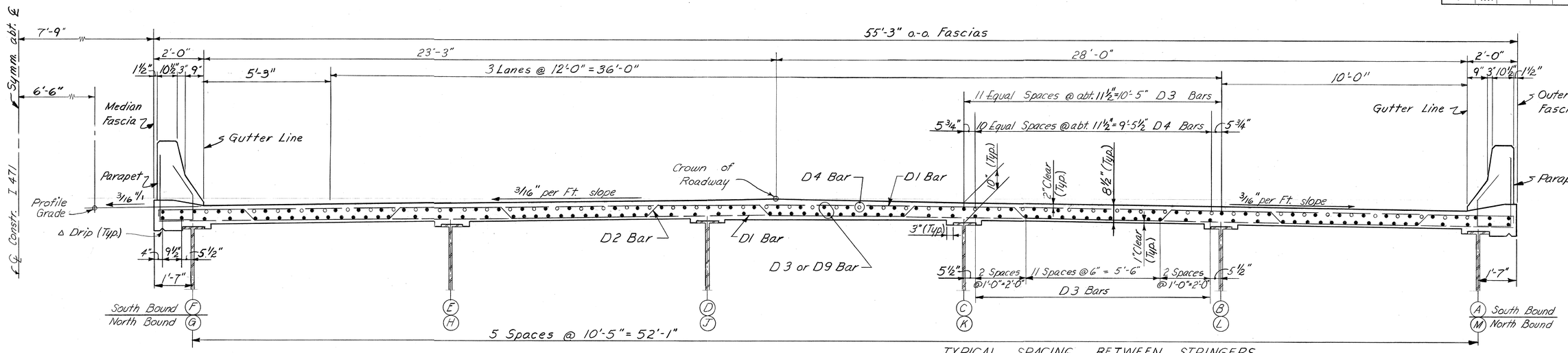

TYPICAL SPACING BETWEEN STRINGERS

TYPICAL SECTION - SPAN 8

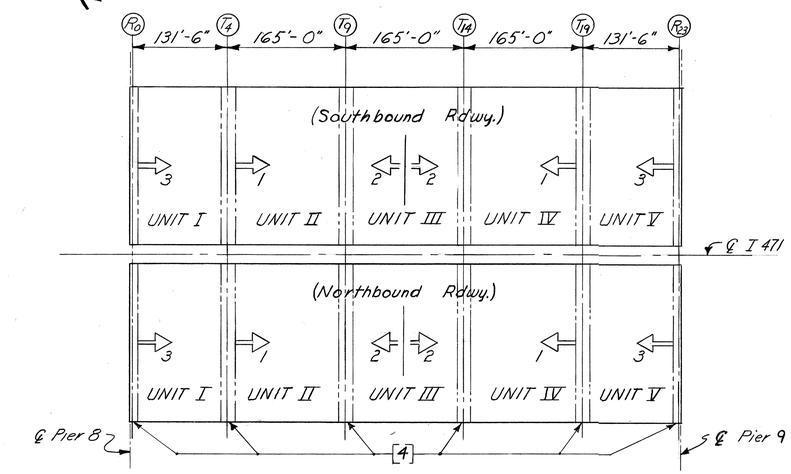

POUR SEQUENCE FOR SLAB SPAN 8

POUR SEQUENCE - SPAN 8
(FOR NORTHBOUND AND SOUTHBOUND ROADWAYS)

1.- Place UNIT II and UNIT IV simultaneously beginning 3'-6" from T4 & T19, pouring towards and to within 3'-6" of T9 and T14.
2.- Place UNIT III starting at center of unit and simultaneously pouring toward and to within 3'-6" of T9 & T14.
3.- Place UNIT I and UNIT V simultaneously begining 2'-3" from Ro & R23 and pouring towards and to within 3'-6" of T4 and T19.
4.- Set and adjust all of the Modular Expansion Joints and Stringer Expansion Joints. Complete the pours adjacent to these Joints.
5.- The concrete in the Parapet shall not be poured until the deck has properly cured.
6.- Parapet pours need not follow the above sequence, but should be kept symmetrical.
7.- The pours for the light standard supports shall be monolithic with the Parapet pours.
8- In all pours the concrete shall be placed in such a manner as to load the span symmetrically about the ℄. A maximum variation of 33' (or one panel length) will be permitted in the simultaneous pours.

Work Sheets 54 thru 59 Together.

SHEET 57

SPAN 8 SLAB DETAILS

KENTUCKY DEPARTMENT OF HIGHWAYS
OHIO DEPARTMENT OF HIGHWAYS
PROJECT 1471-4 ( )
BRIDGE OVER OHIO RIVER ON I 471
CAMPBELL COUNTY, KENTUCKY
HAMILTON COUNTY, OHIO

HAZELET & ERDAL Consulting Engineers File No. 889	BRIDGE NUMBER	DRAWING NO. 18485	INDEX

DESIGNED BY ____ CHECKED BY ____ DATE ____
DETAILED BY T.A.W. CHECKED BY ____ DATE ____
TRACED BY T.A.W. 4/22 CHECKED BY W.F.B. DATE 10-70
REVISED ____ DATE ____
REVISED ____ DATE ____
W.F.B. 6-25-71

FED. ROAD DIST.	STATE	FED. AID PRO. NO.	FISCAL YEAR	SHEET NO.	TOTAL SHEETS
7	KY.	I471-4(8)4			

BILL OF BAR REINFORCEMENT - SPAN 8

MARK	TYPE	SIZE	LENGTH Feet	LENGTH Inches	NUMBER OF BARS: UNIT I (NB) UNIT I (SB) Each	UNIT II (NB) UNIT II (SB) Each	UNIT III (NB) UNIT III (SB) Each	UNIT IV (NB) UNIT IV (SB) Each	UNIT V (NB) UNIT V (SB) Each	TOTAL	LOCATION
D 1	Str.	#6	54	10	265	330	330	330	265	3040	Transv. Slab
D 2	(61)	#6	57	2	132	164	164	164	132	1512	Transv. Truss Slab
D 3	Str.	#5	45	6	432	0	0	0	432	1728	Longit. Slab
D 4	Str.	#5	14	0	165	220	220	220	165	1980	Longit. @ Int. Fl. Bm's.
D 5	(62)	#6	6	5	264	330	330	330	264	3036	Transv. Parapet
D 6	(63)	#6	5	2	264	330	330	330	264	3036	" "
D 7	Str.	#5	32	5	16	0	0	0	16	64	Longit. Parapet
D 8	Str.	#5	32	8	48	80	80	80	48	672	" "
D 9	Str.	#5	56	3	0	432	432	432	0	2592	Longit. Slab
D 10	Str.	#6	5	0	32	40	40	40	32	192	Deck Drain
LS 1	(62)	#7	7	7	2	2	0	2	2	16	Light Std. Bracket
LS 2	(67)	#5	9	0	3	3	0	3	3	24	" " "
LS 3	(64)	#7	6	1	2	2	0	2	2	16	" " "
LS 4	(66)	#5	7	2	1	1	0	1	1	8	" " "
LS 5	(65)	#5	9	10	3	3	0	3	3	24	" " "
SF 1	(65)	#5	11	5				12 *		12	Sign Supports
SF 2	(69)	#6	10	1				12 *		12	"
SF 3	(68)	#6	3	10				16 *		16	"
SF 4	(68)	#6	4	4				8 *		8	"
SF 5	Str.	#5	4	2				8 *		8	"

* Unit IV (SB) only

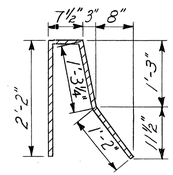

TYPE (63)

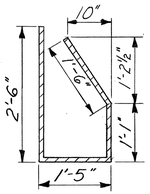

TYPE (62)

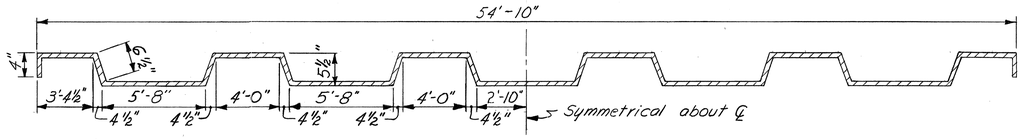

TYPE (61)

ESTIMATE OF QUANTITIES - SPAN 8

ITEM	UNIT	AMOUNT: UNIT I (NB) UNIT I (SB) Each	UNIT II (NB) UNIT II (SB) Each	UNIT III (NB) UNIT III (SB) Each	UNIT IV (NB) UNIT IV (SB) Each	UNIT V (NB) UNIT V (SB) Each
Concrete, Class "AA"	Cu. Yds.	237.9	296.6	296.1	296.6 (NB) 299.2 (SB)	237.9
Steel Reinforcement	Lbs.	63,205	78,711	78,588	78,711 (NB) 79,215 (SB)	63,205
Protective Coating "A"	Gals.	6	7	7	7	6
Protective Coating "B"	Sq. Yds.	755	939	939	939	755
6" Diameter Drain Pipe	Lin. Ft.	78	98	98	98	78

Work Sheets 54 thru 59 Together.

SHEET 58

KENTUCKY DEPARTMENT OF HIGHWAYS
OHIO DEPARTMENT OF HIGHWAYS

PROJECT 1471-4 ( )

BRIDGE OVER OHIO RIVER ON I 471

CAMPBELL COUNTY, KENTUCKY
HAMILTON COUNTY, OHIO

SPAN 8
SLAB REINFORCEMENT & QUANTITIES

HAZELET & ERDAL Consulting Engineers File No. 889

BRIDGE NUMBER

DRAWING NO. 78485

INDEX

LWFA 6-25-71

DESIGNED BY T.A.N. CHECKED BY WFB DATE 6-70
DETAILED BY ____ CHECKED BY ____ DATE ____
TRACED BY ____ CHECKED BY ____ DATE ____

REVISED Added Overhead Sign Support Gantry 235-2-4572 DATE ____
REVISED ____ DATE ____
REVISED ____ DATE ____

FED. ROAD DIST.	STATE	FED. AID PRO. NO.	FISCAL YEAR	SHEET NO.	TOTAL SHEETS
7	KY.	I471-4(8)4			

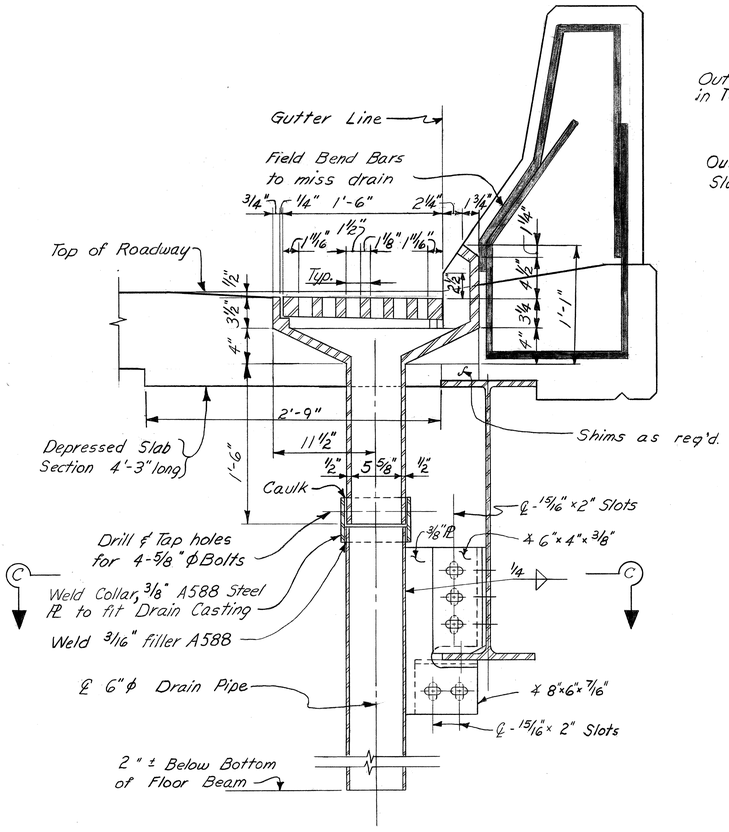

SECTION A-A

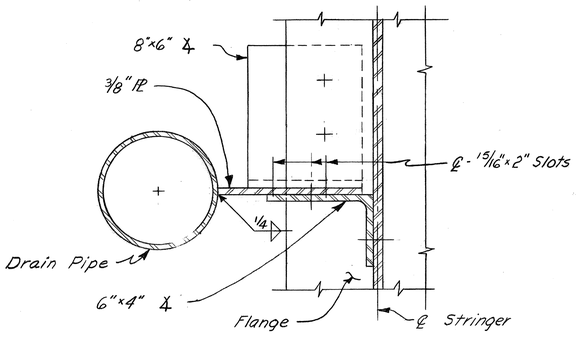

SECTION C-C

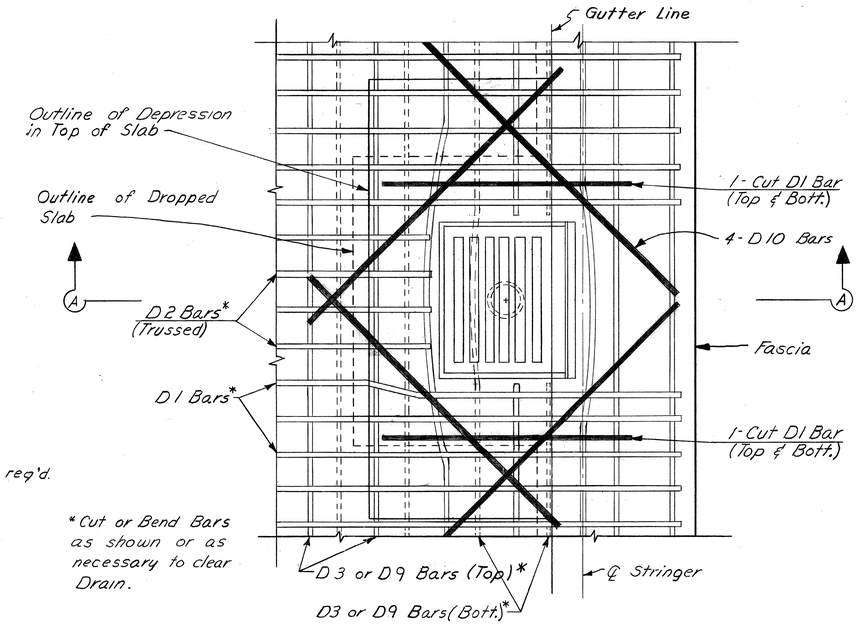

* Cut or Bend Bars as shown or as necessary to clear Drain.

PLAN FOR REINFORCEMENT AT TYPE III DECK DRAIN

BILL OF REINFORCEMENT					
Mark	Type	Size	No. Req'd.	Length Ft.	Length In.
D 10	Str.	#6	4	5	0

NOTE:
"BILL OF REINFORCEMENT" indicates the number of Bars required for each drain installation.
See "BILL OF REINFORCEMENT - SPAN 8" for total number of Bars.

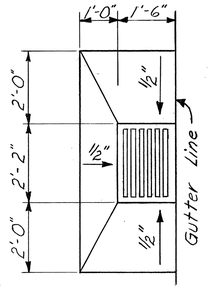

PLAN OF SLAB AT DRAIN
Depress drain 1/2" at Curb Line

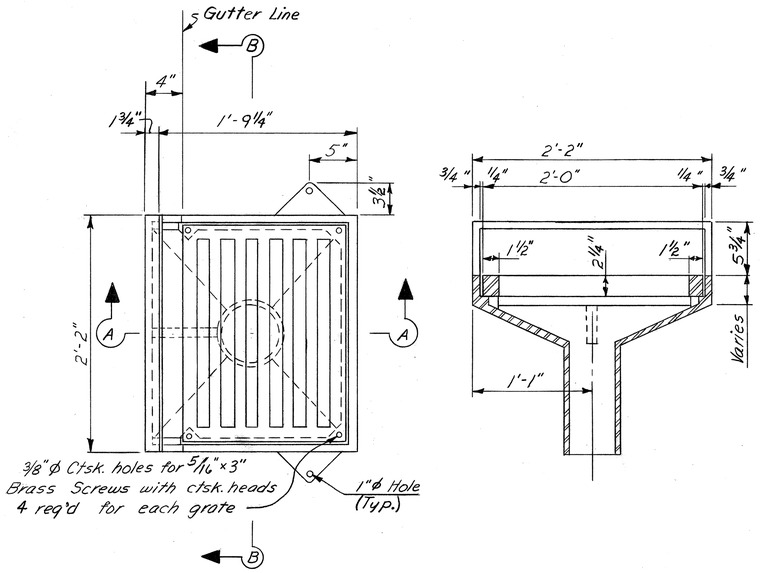

DECK DRAIN DETAIL
TYPE III

FOUNDRY NOTES:

Body of Drain Casting shall be Gray Cast Iron, A.S.T.M - A 48, Class No. 30A.
Drain Grates shall be Cast Steel, A.S.T.M-A27, Grade 70-36.
Fit grate to body and ship in place.
Current form, Report of Field Inspection of Castings is to be submitted to the laboratory of The Division of Materials.
Payment for drain castings will be included in the lump sum price of Structural Steel - Span 8 and Structural Spans 6 & 7 respectively.
Painting shall be in accordance with the Special Provision Nº 80, current edition.

Wall thickness of casting to be 3/4" except down pipe.
Down pipe to have 1/2" thickness.

Work Sheets 54 thru 59 Together.

SHEET 59

KENTUCKY DEPARTMENT OF HIGHWAYS
OHIO DEPARTMENT OF HIGHWAYS
PROJECT 1471-4 ( )
BRIDGE OVER OHIO RIVER ON I 471
CAMPBELL COUNTY, KENTUCKY
HAMILTON COUNTY, OHIO

SPAN 8
DRAINAGE DETAILS

HAZELET & ERDAL Consulting Engineers File No. 889	BRIDGE NUMBER	DRAWING NO.	INDEX 18485

		DATE	REVISED	DATE	REVISED	DATE	REVISED
DESIGNED BY	J.A.N. 7/2	CHECKED BY					
DETAILED BY	J.A.N. 7/2	CHECKED BY					
TRACED BY	J.A.N. 7/7	CHECKED BY					

W49 6-25-71

FED. ROAD DIST.	STATE	FED. AID PRO. NO.	FISCAL YEAR	SHEET NO.	TOTAL SHEETS
7	KY.	I-471-4(8)4			

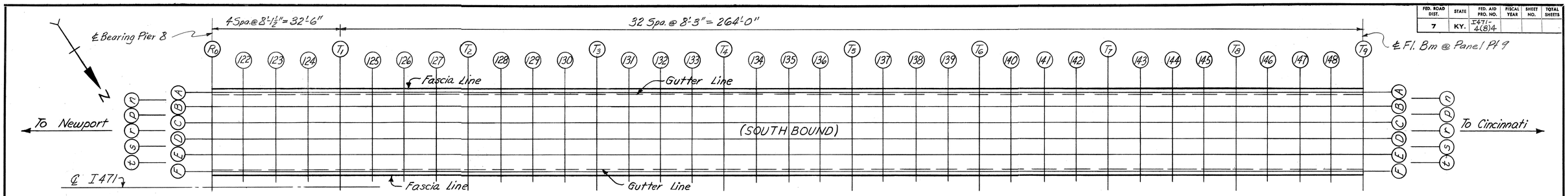

PLAN

SPAN 8 - TABLE OF ELEVATIONS FOR UNIT I & II (SOUTHBOUND)

SECTION	STRINGER A			STRINGER B			STRINGER C			STRINGER D			STRINGER E			STRINGER F			SECTION
	X @ Gutter	Y	Z	X	Y	Z	X	Y	Z	X	Y	Z	X	Y	Z	X @ Gutter	Y	Z	
R_0																			R_0
122																			122
123																			123
124																			124
T_1																			T_1
125																			125
126																			126
127																			127
T_2																			T_2
128																			128
129																			129
130																			130
T_3																			T_3
131																			131
132																			132
133																			133
T_4																			T_4
134																			134
135																			135
136																			136
T_5																			T_5
137																			137
138																			138
139																			139
T_6																			T_6
140																			140
141																			141
142																			142
T_7																			T_7
143																			143
144																			144
145																			145
T_8																			T_8
146																			146
147																			147
148																			148
T_9																			T_9

TABLE OF ELEVATIONS FOR CONTROL OF SLAB THICKNESS - UNIT I & II (SB)

SLAB CHECK POINT	TOP OF SLAB ELEVATION	BOTTOM OF SLAB ELEVATION	COMP. SLAB T'N'SS	SLAB CHECK POINT	TOP OF SLAB ELEVATION	BOTTOM OF SLAB ELEVATION	COMP. SLAB T'N'SS	SLAB CHECK POINT	TOP OF SLAB ELEVATION	BOTTOM OF SLAB ELEVATION	COMP. SLAB T'N'SS
123-n				132-n				141-n			
-p				-p				-p			
-r				-r				-r			
-s				-s				-s			
-t				-t				-t			
126-n				135-n				144-n			
-p				-p				-p			
-r				-r				-r			
-s				-s				-s			
-t				-t				-t			
129-n				138-n				147-n			
-p				-p				-p			
-r				-r				-r			
-s				-s				-s			
-t				-t				-t			

Notes for Tables:
Section 122 denotes Section Line (122) — (Typ).
Slab Check Point 123-n denotes intersection of Section (123) — and Line (n) — (Typ).

Work Sheets 60 thru 65 Together

SHEET 60

KENTUCKY DEPARTMENT OF HIGHWAYS
OHIO DEPARTMENT OF HIGHWAYS

PROJECT 1471-4 ( )
BRIDGE OVER OHIO RIVER ON I 471

CAMPBELL COUNTY, KENTUCKY
HAMILTON COUNTY, OHIO

SPAN 8
CONSTRUCTION ELEVATIONS

HAZELET & ERDAL Consulting Engineers File No. 889	BRIDGE NUMBER	DRAWING NO. 18485	INDEX

DESIGNED BY ____ DATE ____ REVISED ____ DATE ____
DETAILED BY JAN DATE 10-70 REVISED ____ DATE ____
TRACED BY ____ DATE ____ REVISED ____ DATE ____
CHECKED BY ____ DATE ____
CHECKED BY NPB DATE ____
CHECKED BY ____ DATE ____

6-25-71

FED. ROAD DIST.	STATE	FED. AID PRO. NO.	FISCAL YEAR	SHEET NO.	TOTAL SHEETS
7	KY.	I-471-4(8)4			

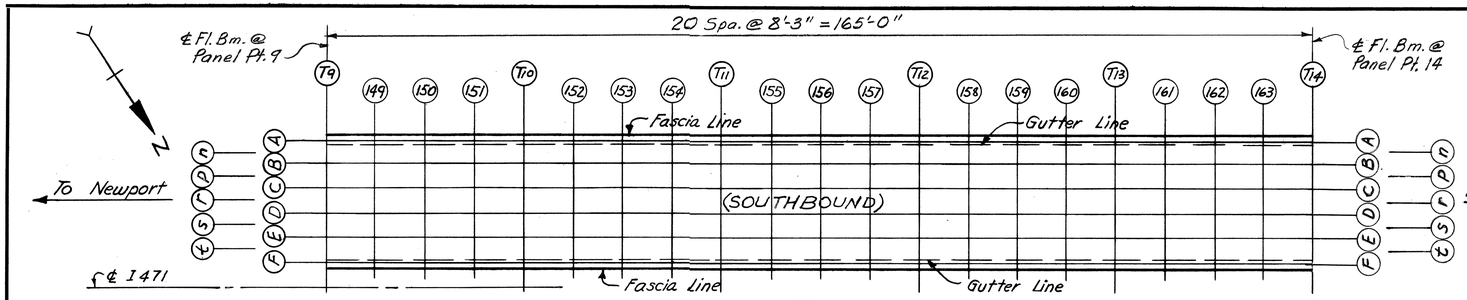

PLAN

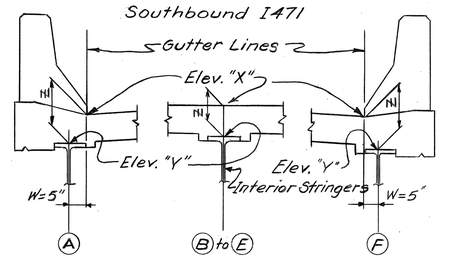

TYPICAL SECTION

SPAN 8 - TABLE OF ELEVATIONS FOR UNIT III (SOUTHBOUND)

SECTION	STRINGER A			STRINGER B			STRINGER C			STRINGER D			STRINGER E			STRINGER F			SECTION
	X @ Gutter	Y	Z	X	Y	Z	X	Y	Z	X	Y	Z	X	Y	Z	X @ Gutter	Y	Z	
T9																			T9
149																			149
150																			150
151																			151
T10																			T10
152																			152
153																			153
154																			154
T11																			T11
155																			155
156																			156
157																			157
T12																			T12
158																			158
159																			159
160																			160
T13																			T13
161																			161
162																			162
163																			163
T14																			T14

CONSTRUCTION NOTES FOR LINES A thru M Span 8 & A thru K Spans 6 & 7.

1. Lay out Sections (150) - (150), (151) - (151), (T10) - (T10), etc. as shown in plan on the various Construction Elevation Sheets. Center punch marks on top of stringers for elevation points.
2. After all steel is in place, and shoring and falsework have been removed, adjust the floorbeams to the proper elevations. Read elevations on top of stringers or girders before forms have been placed and concrete poured. These elevations are to be entered in the table as Elevation "Y."
3. Compute Dimension "Z" (See Typical Sections). Top of concrete Elevation "X" minus Elevation "Y" equals Dimension "Z."
4. Always measure from top of stringer or girders to top of slab (Dimension "Z") for setting templates. DO NOT set templates by Elevations "X".
5. Elevation "X" includes calculated deflections due to weight of roadway slab and parapets only.
6. Gutter line elevations (X @ Gutter) contain the deflections of the adjacent stringer as shown in Typical Sections. Dimension "Z" will indicate the difference in elevation of the top of stringer at the center punch mark and the gutter line at a point measured along the section line Dimension "W" from the ℄ of stringer (center punch mark).
7. Contractor shall adjust elevations of the modular expansion joints and the stringer expansion joints with adjacent elevations of completed slab so as to eliminate deviations in elevations.
8. See Special Span 8 Construction Notes.

CONST. NOTES FOR LINES a-h, l, m, n, p-t SPANS 6 & 7 - n, p, r-y, SPAN 8

1. After the slab forms are erected and before the slab reinforcement is placed, the Resident Engineer shall take field elevations at the slab thickness check points and enter them in the table in the space provided for Bottom of Slab Elevations.
2. The slab thickness shall then be computed. If the computed slab thickness varies more than ¼" from the plan thickness allowing 1/360 of the slab span for deflection of the form work, the form shall be adjusted until the computed slab thickness is within the tolerance allowed.
3. Should the Contractor place any portion of the concrete in a Unit prior to completing step 1 above, he shall devise some other method suitable to the Engineer to assure the correct slab thickness.
4. The Top of Slab Elevation does not include deflection due to slab forms.
5. Lines n, p, r-y (Span 8) are midway between stringers.
   Lines a-h, l, m, n, p-t (Spans 6 & 7) are midway between girders
6. See Special Span 8 Construction Notes.

TABLE OF ELEVATIONS FOR CONTROL OF SLAB THICKNESS - UNIT III (SB)

SLAB CHECK POINT	TOP OF SLAB ELEVATION	BOTTOM OF SLAB ELEVATION	COMP. SLAB T'N'SS	SLAB CHECK POINT	TOP OF SLAB ELEVATION	BOTTOM OF SLAB ELEVATION	COMP. SLAB T'N'SS	SLAB CHECK POINT	TOP OF SLAB ELEVATION	BOTTOM OF SLAB ELEVATION	COMP. SLAB T'N'SS
150 - n				156 - n				162 - n			
- p				- p				- p			
- r				- r				- r			
- s				- s				- s			
- t				- t				- t			
153 - n				159 - n							
- p				- p							
- r				- r							
- s				- s							
- t				- t							

SPECIAL SPAN 8 CONSTRUCTION NOTES:

1. The Span 8 - Construction Elevation sheets are included for the use of the Contractor in placing the forms and screeds for the Span 8 roadway slabs.
2. The Contractor, if he desires, may compute Elevation "X" and use the "Table of Elevations" tables as noted in the "Construction Notes for Lines A, B, C, D, E & F". He may also compute the "Bottom of Slab Elevations" and use the "Table of Elevations for Control of Slab Thickness" tables as noted in the "Construction Notes for Lines n, p, r, s & t."
3. The Contractor may also use the tables in any other manner, subject to the approval of the Engineer, to achieve the desired roadway slab.

Notes for Tables:
Section 149 denotes Section Line (149) — (Typ).
Slab Check Point 150 - n denotes intersection of Section (150) — and Line (n) - (Typ).

Work Sheets 60 thru 65 Together

SHEET 61

KENTUCKY DEPARTMENT OF HIGHWAYS
OHIO DEPARTMENT OF HIGHWAYS
PROJECT 1471-4 ( )
BRIDGE OVER OHIO RIVER ON I 471
CAMPBELL COUNTY, KENTUCKY
HAMILTON COUNTY, OHIO

SPAN 8 CONSTRUCTION ELEVATIONS

HAZELET & ERDAL Consulting Engineers File No. 889	BRIDGE NUMBER	DRAWING NO. 18485	INDEX

DESIGNED BY ____ DATE ____ REVISED ____ DATE ____
DETAILED BY JAN CHECKED BY KFB DATE 6-70 REVISED ____ DATE ____
TRACED BY ____ CHECKED BY ____ DATE ____ REVISED ____ DATE ____
DATE 6-25-71

FED. ROAD DIST.	STATE	FED. AID PRO. NO.	FISCAL YEAR	SHEET NO.	TOTAL SHEETS
7	KY.	I 471-4(8)4			

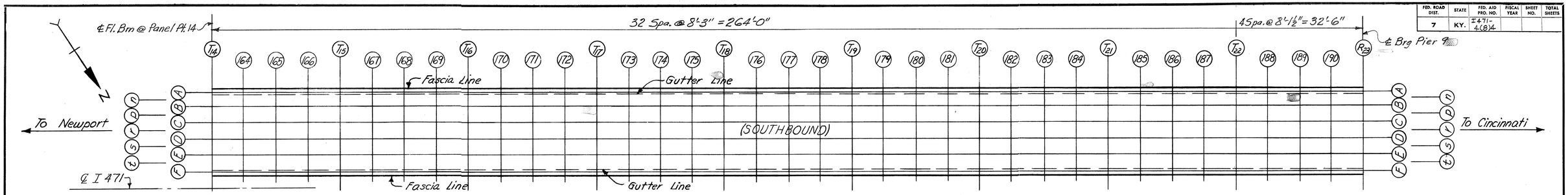

PLAN

SPAN 8 - TABLE OF ELEVATIONS FOR UNIT IV & V (SOUTHBOUND)

SECTION	STRINGER A			STRINGER B			STRINGER C			STRINGER D			STRINGER E			STRINGER F			SECTION
	X @ Gutter	Y	Z	X	Y	Z	X	Y	Z	X	Y	Z	X	Y	Z	X @ Gutter	Y	Z	
T_{14}																			T_{14}
164																			164
165																			165
166																			166
T_{15}																			T_{15}
167																			167
168																			168
169																			169
T_{16}																			T_{16}
170																			170
171																			171
172																			172
T_{17}																			T_{17}
173																			173
174																			174
175																			175
T_{18}																			T_{18}
176																			176
177																			177
178																			178
T_{19}																			T_{19}
179																			179
180																			180
181																			181
T_{20}																			T_{20}
182																			182
183																			183
184																			184
T_{21}																			T_{21}
185																			185
186																			186
187																			187
T_{20}																			T_{22}
188																			188
189																			189
190																			190
R_{23}																			R_{23}

TABLE OF ELEVATIONS FOR CONTROL OF SLAB THICKNESS - UNIT IV & V (SB)

SLAB CHECK POINT	TOP OF SLAB ELEVATION	BOTTOM OF SLAB ELEVATION	COMP. SLAB T'N'SS	SLAB CHECK POINT	TOP OF SLAB ELEVATION	BOTTOM OF SLAB ELEVATION	COMP. SLAB T'N'SS	SLAB CHECK POINT	TOP OF SLAB ELEVATION	BOTTOM OF SLAB ELEVATION	COMP. SLAB T'N'SS
165 - n				174 - n				183 - n			
- p				- p				- p			
- r				- r				- r			
- s				- s				- s			
- t				- t				- t			
168 - n				177 - n				186 - n			
- p				- p				- p			
- r				- r				- r			
- s				- s				- s			
- t				- t				- t			
171 - n				180 - n				189 - n			
- p				- p				- p			
- r				- r				- r			
- s				- s				- s			
- t				- t				- t			

Notes for Tables:
Section 164 denotes Section Line (164) (Typ).
Slab Check Point 165 - n denotes intersection of Section (165) and Line (n) (Typ).

Work Sheets 60 thru 65 Together

SHEET 62

DESIGNED BY		DATE	
DETAILED BY	JAM	CHECKED BY	WFB
TRACED BY		CHECKED BY	
REVISED		DATE	
REVISED		DATE	
REVISED		DATE	10-70
REVISED		DATE	

WFB 6-25-71

KENTUCKY DEPARTMENT OF HIGHWAYS
OHIO DEPARTMENT OF HIGHWAYS

PROJECT I 471-4 ( )
BRIDGE OVER OHIO RIVER ON I 471

CAMPBELL COUNTY, KENTUCKY
HAMILTON COUNTY, OHIO

SPAN 8
CONSTRUCTION ELEVATIONS

HAZELET & ERDAL Consulting Engineers File No. 889	BRIDGE NUMBER	DRAWING NO. 18485	INDEX

FED. ROAD DIST.	STATE	FED. AID PRO. NO.	FISCAL YEAR	SHEET NO.	TOTAL SHEETS
7	KY.	I-471-4(8)4			

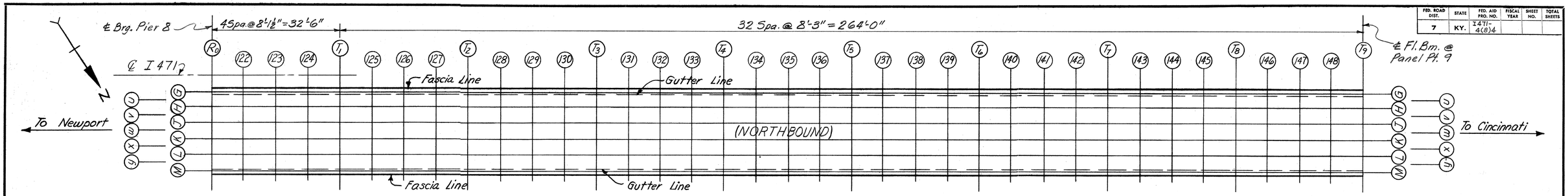

PLAN

SPAN 8 - TABLE OF ELEVATIONS FOR UNIT I & II (NORTHBOUND)

SECTION	STRINGER M			STRINGER L			STRINGER K			STRINGER J			STRINGER H			STRINGER G			SECTION
	X @ Gutter	Y	Z	X	Y	Z	X	Y	Z	X	Y	Z	X	Y	Z	X @ Gutter	Y	Z	
R0																			R0
122																			122
123																			123
124																			124
T1																			T1
125																			125
126																			126
127																			127
T2																			T2
128																			128
129																			129
130																			130
T3																			T3
131																			131
132																			132
133																			133
T4																			T4
134																			134
135																			135
136																			136
T5																			T5
137																			137
138																			138
139																			139
T6																			T6
140																			140
141																			141
142																			142
T7																			T7
143																			143
144																			144
145																			145
T8																			T8
146																			146
147																			147
148																			148
T9																			T9

TABLE OF ELEVATIONS FOR CONTROL OF SLAB THICKNESS - UNIT I & II (NB)

SLAB CHECK POINT	TOP OF SLAB ELEVATION	BOTTOM OF SLAB ELEVATION	COMP. SLAB T'N'SS	SLAB CHECK POINT	TOP OF SLAB ELEVATION	BOTTOM OF SLAB ELEVATION	COMP. SLAB T'N'SS	SLAB CHECK POINT	TOP OF SLAB ELEVATION	BOTTOM OF SLAB ELEVATION	COMP. SLAB T'N'SS
123 - y				132 - y				141 - y			
- x				- x				- x			
- w				- w				- w			
- v				- v				- v			
- u				- u				- u			
126 - y				135 - y				144 - y			
- x				- x				- x			
- w				- w				- w			
- v				- v				- v			
- u				- u				- u			
129 - y				138 - y				147 - y			
- x				- x				- x			
- w				- w				- w			
- v				- v				- v			
- u				- u				- u			

Notes for Tables:
Section 122 denotes Section Line (122) — (Typ).
Slab Check Point 123 - y denotes intersection of Section (123) — and Line (y) — (Typ).

Work Sheets 60 thru 65 Together

SHEET 63

KENTUCKY DEPARTMENT OF HIGHWAYS
OHIO DEPARTMENT OF HIGHWAYS

PROJECT 1471-4 ( )
BRIDGE OVER OHIO RIVER ON I 471
CAMPBELL COUNTY, KENTUCKY
HAMILTON COUNTY, OHIO

SPAN 8
CONSTRUCTION ELEVATIONS

HAZELET & ERDAL
Consulting Engineers
File No. 889

BRIDGE NUMBER

DRAWING NO. 18485

INDEX

DESIGNED BY
DETAILED BY
TRACED BY
CHECKED BY JAN
CHECKED BY WEB
CHECKED BY
DATE
DATE 10-70
DATE
REVISED
REVISED
REVISED

WRB 6-25-71

FED. ROAD DIST.	STATE	FED. AID PRO. NO.	FISCAL YEAR	SHEET NO.	TOTAL SHEETS
7	KY.	I471-4(8)4			

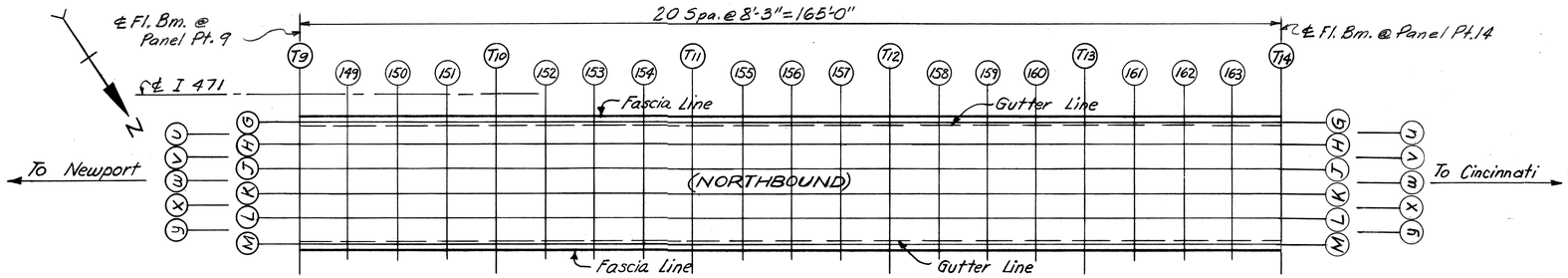

PLAN

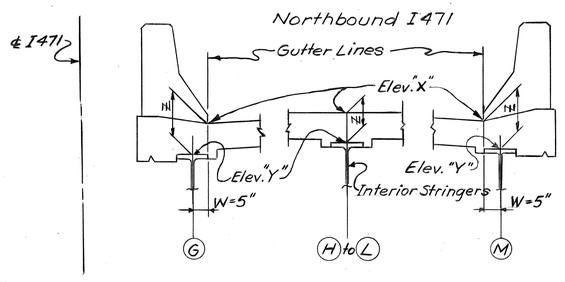

TYPICAL SECTION

SPAN 8 - TABLE OF ELEVATIONS FOR UNIT III (NORTHBOUND)

SECTION	STRINGER M			STRINGER L			STRINGER K			STRINGER J			STRINGER H			STRINGER G			SECTION
	X @ Gutter	Y	Z	X	Y	Z	X	Y	Z	X	Y	Z	X	Y	Z	X @ Gutter	Y	Z	
T9																			T9
149																			149
150																			150
151																			151
T10																			T10
152																			152
153																			153
154																			154
T11																			T11
155																			155
156																			156
157																			157
T12																			T12
158																			158
159																			159
160																			160
T13																			T13
161																			161
162																			162
163																			163
T14																			T14

TABLE OF ELEVATIONS FOR CONTROL OF SLAB THICKNESS - UNIT III (NB)

SLAB CHECK POINT	TOP OF SLAB ELEVATION	BOTTOM OF SLAB ELEVATION	COMP. SLAB T'N'SS	SLAB CHECK POINT	TOP OF SLAB ELEVATION	BOTTOM OF SLAB ELEVATION	COMP. SLAB T'N'SS	SLAB CHECK POINT	TOP OF SLAB ELEVATION	BOTTOM OF SLAB ELEVATION	COMP. SLAB T'N'SS
150 - y				156 - y				162 - y			
- x				- x				- x			
- w				- w				- w			
- v				- v				- v			
- u				- u				- u			
153 - y				159 - y							
- x				- x							
- w				- w							
- v				- v							
- u				- u							

CONSTRUCTION NOTES FOR LINES G, H, J, K, L & M

See Notes for lines A thru F.

CONSTRUCTION NOTES FOR LINES u, v, w, x & y

See Notes for lines n thru t.

See Sheet 61 for "Special Span 8 Construction Notes."

Notes for Tables:
Section 149 denotes Section Line (149) — (Typ).
Slab Check Point 150 - y denotes intersection of Section (150) — and Line (y) — (Typ).

Work Sheets 60 thru 65 Together

SHEET 64

KENTUCKY DEPARTMENT OF HIGHWAYS
OHIO DEPARTMENT OF HIGHWAYS
PROJECT I471-4 ( )
BRIDGE OVER OHIO RIVER ON I 471
CAMPBELL COUNTY, KENTUCKY
HAMILTON COUNTY, OHIO

SPAN 8
CONSTRUCTION ELEVATIONS

HAZELET & ERDAL Consulting Engineers File No. 889 | BRIDGE NUMBER | DRAWING NO. 18485 | INDEX

DESIGNED BY JAN CHECKED BY WEB DATE 10-70
DETAILED BY CHECKED BY DATE
TRACED BY CHECKED BY DATE
REVISED DATE
REVISED DATE
REVISED DATE

WAB 6-25-71

FED. ROAD DIST.	STATE	FED. AID PRO. NO.	FISCAL YEAR	SHEET NO.	TOTAL SHEETS
7	KY.	I-471-4(6)4			

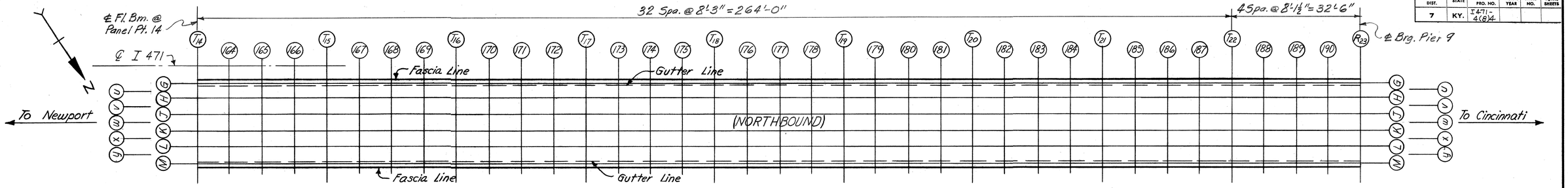

PLAN

SPAN 8 - TABLE OF ELEVATIONS FOR UNIT IV & V (NORTHBOUND)

SECTION	STRINGER M			STRINGER L			STRINGER K			STRINGER J			STRINGER H			STRINGER G			SECTION
	X @ Gutter	Y	Z	X	Y	Z	X	Y	Z	X	Y	Z	X	Y	Z	X @ Gutter	Y	Z	
T14																			T14
164																			164
165																			165
166																			166
T15																			T15
167																			167
168																			168
169																			169
T16																			T16
170																			170
171																			171
172																			172
T17																			T17
173																			173
174																			174
175																			175
T18																			T18
176																			176
177																			177
178																			178
T19																			T19
179																			179
180																			180
181																			181
T20																			T20
182																			182
183																			183
184																			184
T21																			T21
185																			185
186																			186
187																			187
T22																			T22
188																			188
189																			189
190																			190
R23																			R23

TABLE OF ELEVATIONS FOR CONTROL OF SLAB THICKNESS - UNIT IV & V (NB)

SLAB CHECK POINT	TOP OF SLAB ELEVATION	BOTTOM OF SLAB ELEVATION	COMP. SLAB T'N'SS	SLAB CHECK POINT	TOP OF SLAB ELEVATION	BOTTOM OF SLAB ELEVATION	COMP. SLAB T'N'SS	SLAB CHECK POINT	TOP OF SLAB ELEVATION	BOTTOM OF SLAB ELEVATION	COMP. SLAB T'N'SS
165-y				174-y				183-y			
-x				-x				-x			
-w				-w				-w			
-v				-v				-v			
-u				-u				-u			
168-y				177-y				186-y			
-x				-x				-x			
-w				-w				-w			
-v				-v				-v			
-u				-u				-u			
171-y				180-y				189-y			
-x				-x				-x			
-w				-w				-w			
-v				-v				-v			
-u				-u				-u			

Notes for Tables:
Section 164 denotes Section Line (164) — (Typ).
Slab Check Point 165-y denotes intersection of Section (165) — and Line (y) — (Typ).

Work Sheets 60 thru 65 Together

SHEET 65

DESIGNED BY ... DATE ...
DETAILED BY WAN DATE 10-70
TRACED BY ... DATE ...
CHECKED BY WFB
CHECKED BY ... DATE ...
CHECKED BY ... DATE ...
REVISED ... DATE ...
REVISED ... DATE ...
REVISED ... DATE ...

WAN 6-25-71

SPAN 8 CONSTRUCTION ELEVATIONS

KENTUCKY DEPARTMENT OF HIGHWAYS
OHIO DEPARTMENT OF HIGHWAYS
PROJECT I 471-4 ( )
BRIDGE OVER OHIO RIVER ON I 471
CAMPBELL COUNTY, KENTUCKY
HAMILTON COUNTY, OHIO

HAZELET & ERDAL Consulting Engineers File No. 889	BRIDGE NUMBER	DRAWING NO. 18485	INDEX

FED. ROAD DIST.	STATE	FED. AID PRO. NO.	FISCAL YEAR	SHEET NO.	TOTAL SHEETS
7	KY.	I471-4(8)4			

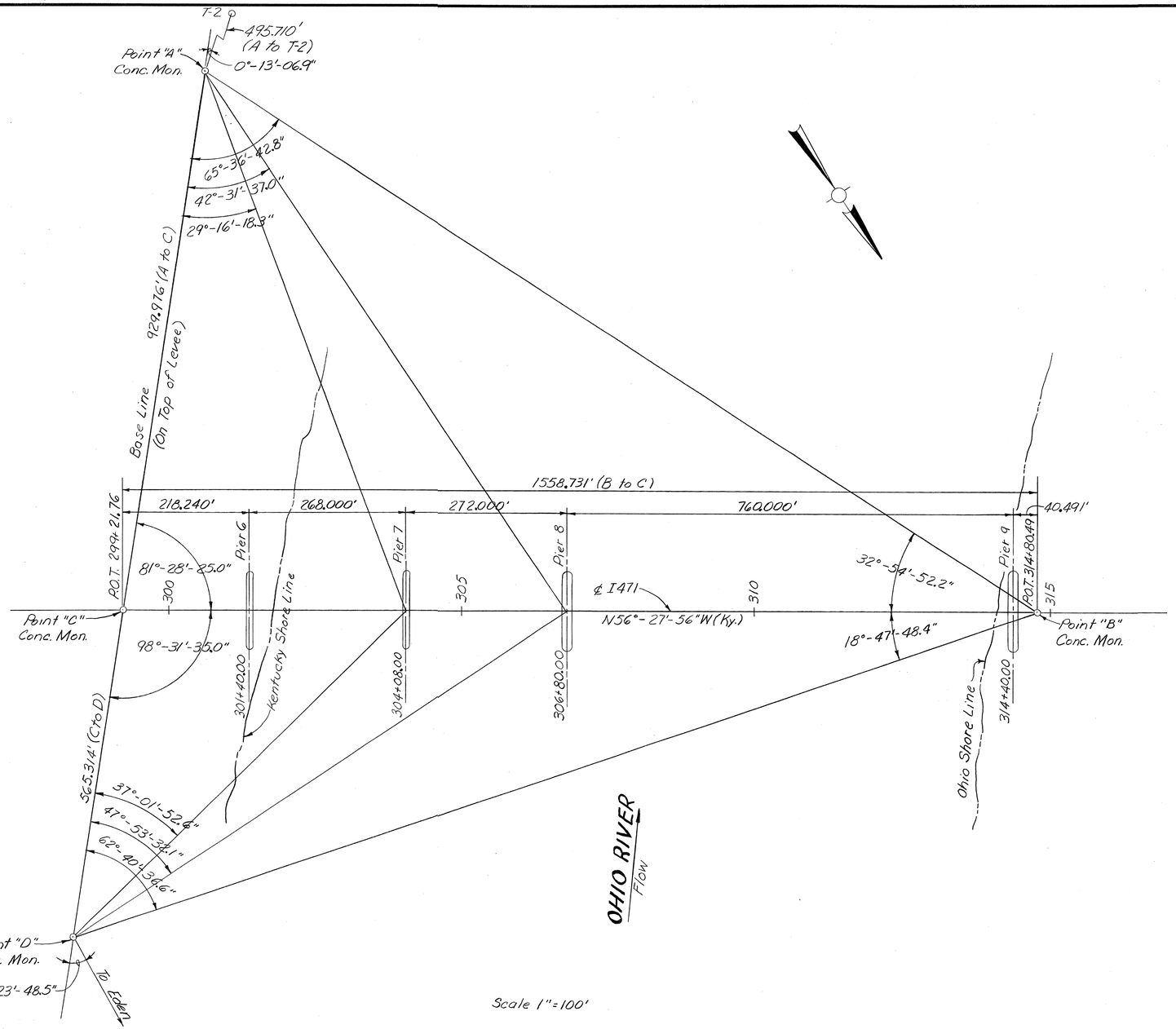

Scale 1" = 100'

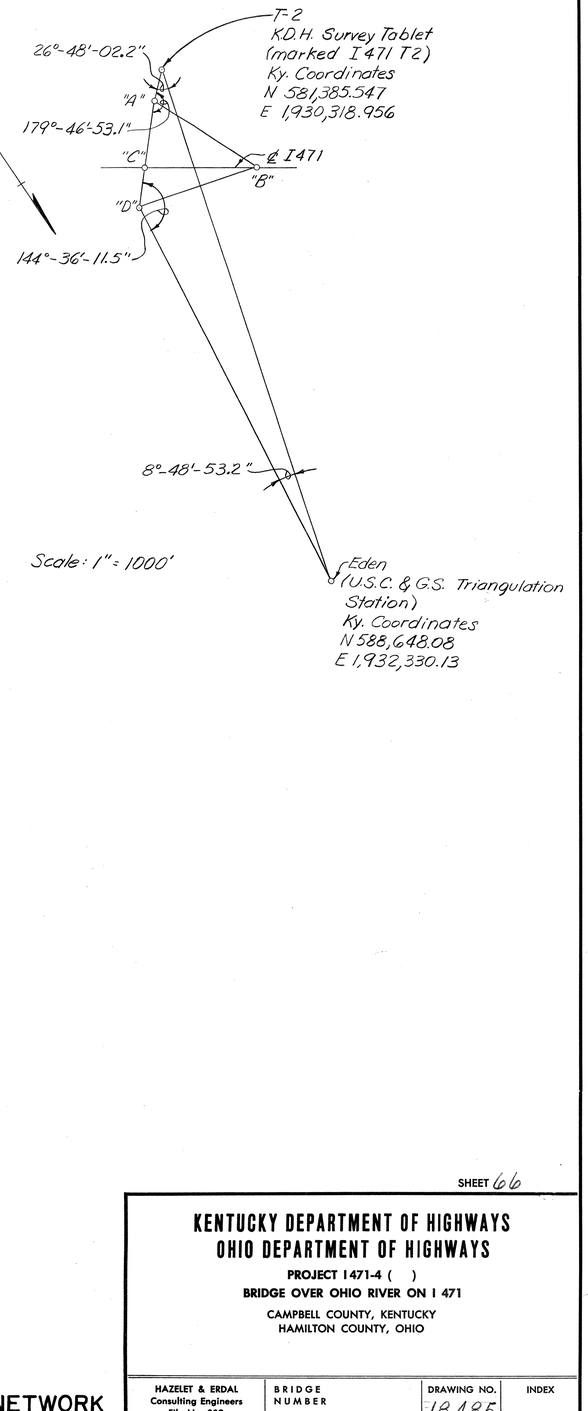

Scale: 1" = 1000'

TRIANGULATION NETWORK

SHEET 66

KENTUCKY DEPARTMENT OF HIGHWAYS
OHIO DEPARTMENT OF HIGHWAYS

PROJECT 1471-4 ( )
BRIDGE OVER OHIO RIVER ON I 471

CAMPBELL COUNTY, KENTUCKY
HAMILTON COUNTY, OHIO

HAZELET & ERDAL Consulting Engineers File No. 889	BRIDGE NUMBER	DRAWING NO. 18485	INDEX

DESIGNED BY: CHECKED BY: DATE: REVISED: DATE:
DETAILED BY: CHECKED BY: DATE: REVISED: DATE:
TRACED BY: MK 9-70 CHECKED BY: WTB DATE 10-70 REVISED: DATE:

WTB 6-25-71

LETTING DATE

DEPARTMENT OF TRANSPORTATION
UNITED STATES COAST GUARD

Address reply to:
COMMANDER (oan)
Second Coast Guard District
Federal Bldg.
1520 Market St.
St. Louis, Mo. 63103

3271
12 AUG 1970

Mr. Charles G. Cook
Director, Division of Bridges
Commonwealth of Kentucky
Department of Highways
Frankfort, Kentucky 40601

Re: Campbell County, Kentucky, Hamilton County, Ohio,
I-471-4(50)0, I-471 over Ohio River at Newport,
Kentucky, Mile 469.5

Dear Mr. Cook:

Your application dated 25 May 1970 requesting an extension of time for commencing and completing the construction of the above-referenced proposed dual bridges across the Ohio River, Mile 469.5, near Newport, Kentucky, has been approved by the Commandant, U. S. Coast Guard, Washington, D. C. The time for commencing construction has been extended to 6 August 1972. The time for completing construction has been extended to 6 August 1974. The instrument of approval, Amendment to Bridge Permit 163-68a dated 27 July 1970, is enclosed.

Your attention is invited to the new Condition No. 3 in the Amendment to Bridge Permit which requires your compliance with the provisions of any law or regulation under the jurisdiction of the Federal Water Quality Administration, Ohio Basin Region. Enclosed for your information is a copy of a letter dated 17 June 1970 from that agency which outlines its requirements for this work.

We note that you plan to let the substructure contract for this project on 28 August 1970. We would be pleased to attend the pre-construction conference for these bridges and answer any questions concerning the Coast Guard jurisdiction or requirements. You may contact Mr. S. W. Thoroughman, Chief, Bridge Section, at telephone number Area Code 314-622-4607, to make arrangements for a Coast Guard representative to attend the conference.

Very truly yours,

R. L. MOORE
Captain, U. S. Coast Guard
Chief, Operations Division
Acting
By direction of the District Commander

Encl: (1) USCG Amendment to Bridge Permit No. 163-68a dtd 27 Jul 70
(2) Copy of ltr dtd 17 Jun 70 from USDI, FWQA, Ohio Basin Region

DESIGNED BY _____ DATE _____ CHECKED BY _____ DATE _____ REVISED _____ DATE _____
DETAILED BY _____ DATE _____ CHECKED BY _____ DATE _____ REVISED _____ DATE _____
TRACED BY _____ DATE _____ CHECKED BY _____ DATE _____

DEPARTMENT OF TRANSPORTATION
UNITED STATES COAST GUARD

AMENDMENT TO BRIDGE PERMIT
(163-68a)

Address reply to:
COMMANDANT
U.S. COAST GUARD
WASHINGTON, D.C. 20591

JUL 27 1970

WHEREAS by a permit issued on 6 August 1968, the Commandant of the Coast Guard approved the map of location and plans of dual bridges to be constructed by the Commonwealth of Kentucky across the Ohio River between Newport, Kentucky and Cincinnati, Ohio, under authority of the General Bridge Act of 1946;

AND WHEREAS condition 6 of said permit fixed the time for commencing construction of said bridges at 6 August 1970, and the - COMMONWEALTH OF KENTUCKY - now requests that the time for commencing the construction of said bridges be extended;

NOW THEREFORE, This is to certify that the times for both commencing and completing the construction of said bridges are hereby extended. In granting this extension of time limits, all conditions to which the original permit was subject remain in force except conditions 3 and 6 are modified as follows:

3. Issuance of this permit does not relieve the permittee of the obligation or responsibility for compliance with the provisions of any other law or regulation as may be under the jurisdiction of the Federal Water Quality Administration, Ohio Basin Region, or any other federal, state or local authority having cognizance of any aspect of the location, construction, or maintenance of said bridges.

6. The approval hereby granted shall cease and be null and void unless the actual construction of the bridges be commenced by 6 August 1972 and completed by 6 August 1974.

H. D. MUTH
Captain, U. S. Coast Guard
Chief, Aids to Navigation Division

UNITED STATES
DEPARTMENT OF THE INTERIOR
FEDERAL WATER POLLUTION CONTROL ADMINISTRATION
Ohio Basin Region, Room 7017, Federal Building
550 Main Street, Cincinnati, Ohio 45202

RECEIVED
JUN 19 1970
BRIDGE SECTION

June 17, 1970

In reply refer to:
OG-9

Commander (o-1)
Second Coast Guard District
Federal Building
1520 Market Street
St. Louis, Missouri 63103

Your reference:
I-471 Dual Bridges
Ohio R., Mi. 469.5
Cincinnati, Ohio

Dear Sir:

We hereby acknowledge receipt of your letter dated 10 June 1970 regarding a request for a time extension to a permit for starting and completing construction of the referenced bridges across the Ohio River by the Kentucky Department of Highways. We have considered the water pollution potential connected with the construction of the bridges and the possible effects on water quality of the watercourse. We recommend that if a time extension is granted, it shall be subject to the following conditions:

1. Permittee will investigate for water supply intakes, or other activities immediately downstream which may be affected by suspended solids and turbidity increases caused by work in the watercourse. He will give notice before beginning work in the watercourse in sufficient time to allow the activities to prepare for any temporary change in water quality.

2. Excavation, dredging or filling in the watercourse will be done so as to minimize increases in suspended solids and turbidity which may degrade water quality and damage aquatic life outside the immediate area of operation.

3. Deposition of dredged or excavated materials on shore, and all earthwork operations on shore will be carried out in such a way that sediment runoff and soil erosion to the watercourse are controlled and minimized. Spoil materials from watercourse or on shore operations, including sludge deposits, will not be dumped into the watercourse.

4. Temporary sanitary facilities, for use during construction only, will be of the portable type rather than dug pit privies.

5. Permittee will employ measures to prevent or control spills from fuels or lubricants to keep them out of the watercourse.

6. Upon completion of earthwork operations, all fills in the watercourse or on shore and other areas on shore disturbed during construction will be seeded, rippapped or given some other type of protection from subsequent soil erosion.

If a time extension is granted on this application, please send a copy of correspondence to this effect to Mr. Burton H. Atwood, Department of the Interior Regional Coordinator, Room 215, 2510 Dempster Street, Des Plaines, Illinois 60016.

Sincerely yours,

E. P. Baker, Jr.

E. P. Baker, Jr., P.E., Chief
Federal Activities Section

cc:
E. N. Kari
B. H. Atwood
M. E. Noecker, FWQA, Evansville
R. C. Pickard, Ky. WPCC
Attn: J. Cramer
C. T. Foust, Ohio DONR

SHEET 67

COMMONWEALTH OF KENTUCKY
DEPARTMENT OF HIGHWAYS
FRANKFORT

PROJECT I 471-4( )
BRIDGE OVER OHIO RIVER ON I 471
CAMPBELL COUNTY, KENTUCKY
HAMILTON COUNTY, OHIO

STATION	P. E. PROJECT NO.	
CONSTRUCTION PROJECT NO.	MAINTENANCE PROJECT NO.	DRAWING NO. 18485

FED. ROAD DIST.	STATE	FED. AID PRO. NO.	FISCAL YEAR	SHEET NO.	TOTAL SHEETS
7	KY.	I471-4(8)4			

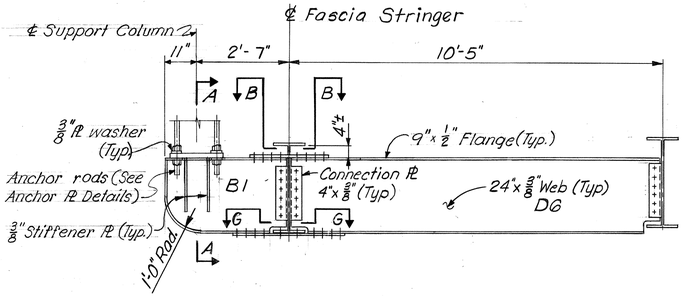

BRACKET AND DIAPHRAGM AT SIGN SUPPORT

(Sign Support Brackets shall be vertical)

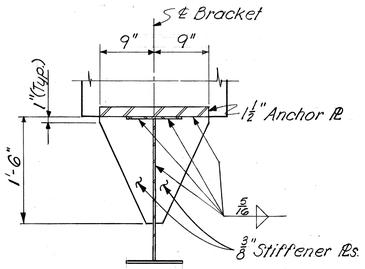

SECTION A-A

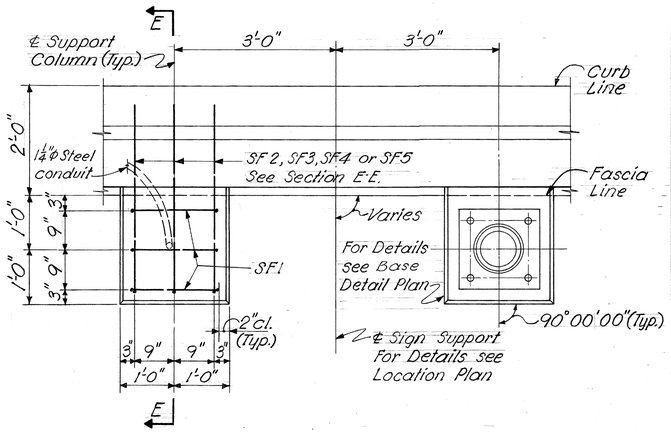

PLAN OF SIGN SUPPORT AT FASCIA

BILL OF BAR REINFORCEMENT *

MARK	TYPE	SIZE	NO.	LENGTH ft.	LENGTH in.	a ft.	a in.	b ft.	b in.
SF1	(65)	5	3	11	5	1	8	3	1½
SF2	(69)	6	3	10	1	4	6	3	0
SF3	(68)	6	4	3	10	1	1	2	10
SF4	(68)	6	2	4	4	1	1	3	4
SF5	Str.	5	2	4	2				

*For one Bracket only

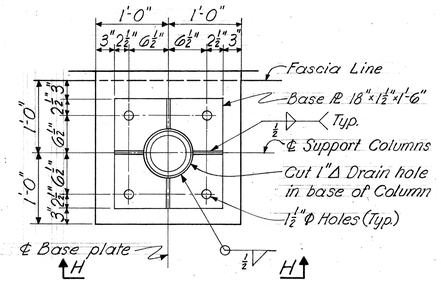

BASE DETAIL PLAN

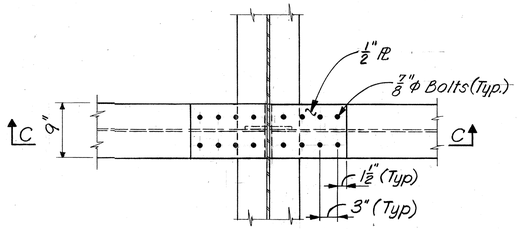

SECTION H-H

ANCHOR PLATE DETAILS

SECTION B-B

SECTION C-C

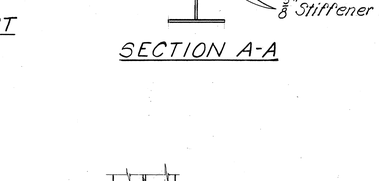

SECTION D-D

SECTION G-G

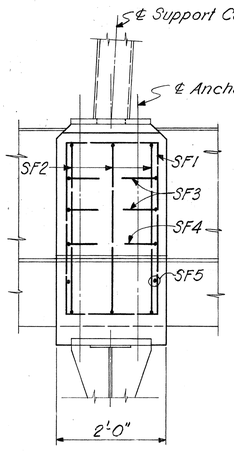

SECTION F-F

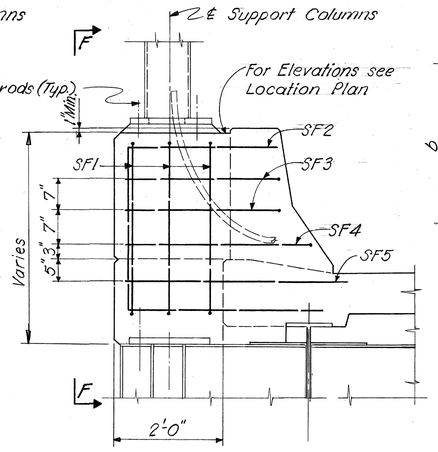

SECTION E-E

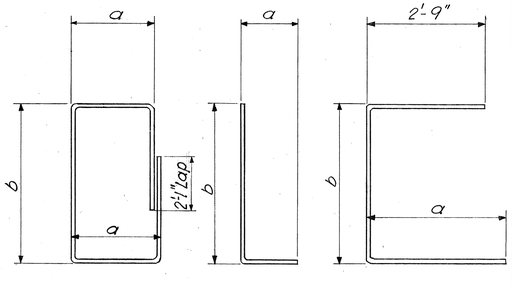

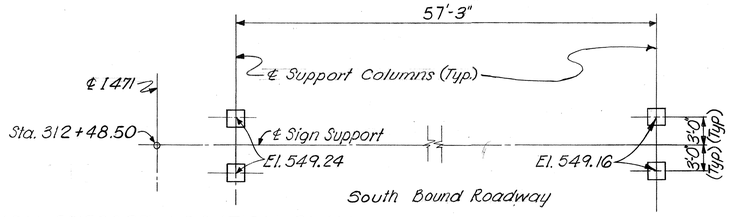

SIGN SUPPORT LOCATION PLAN

Note:
Elevations shown are at top of concrete. See Section E-E

Work sheets 68 thru 72 together.

SHEET 68

KENTUCKY DEPARTMENT OF HIGHWAYS
OHIO DEPARTMENT OF HIGHWAYS

PROJECT 1471-4 ( )

BRIDGE OVER OHIO RIVER ON I 471

CAMPBELL COUNTY, KENTUCKY
HAMILTON COUNTY, OHIO

SIGN SUPPORTS

HAZELET & ERDAL Consulting Engineers File No. 889	BRIDGE NUMBER	DRAWING NO. 18485	INDEX

DESIGNED BY ____ CHECKED BY ____ DATE ____
DETAILED BY M.M.P. 10/5/70 CHECKED BY R.L.K DATE 12/2/70
TRACED BY ____ CHECKED BY ____ DATE ____
REVISED ____ DATE ____
REVISED ____ DATE ____
REVISED Added entire sht. to Dwg. leaves 2-3-72 DATE 2-3-72

FED. ROAD DIST.	STATE	FED. AID PRO. NO.	FISCAL YEAR	SHEET NO.	TOTAL SHEETS
7	KY.	[illegible] 4(8)4			

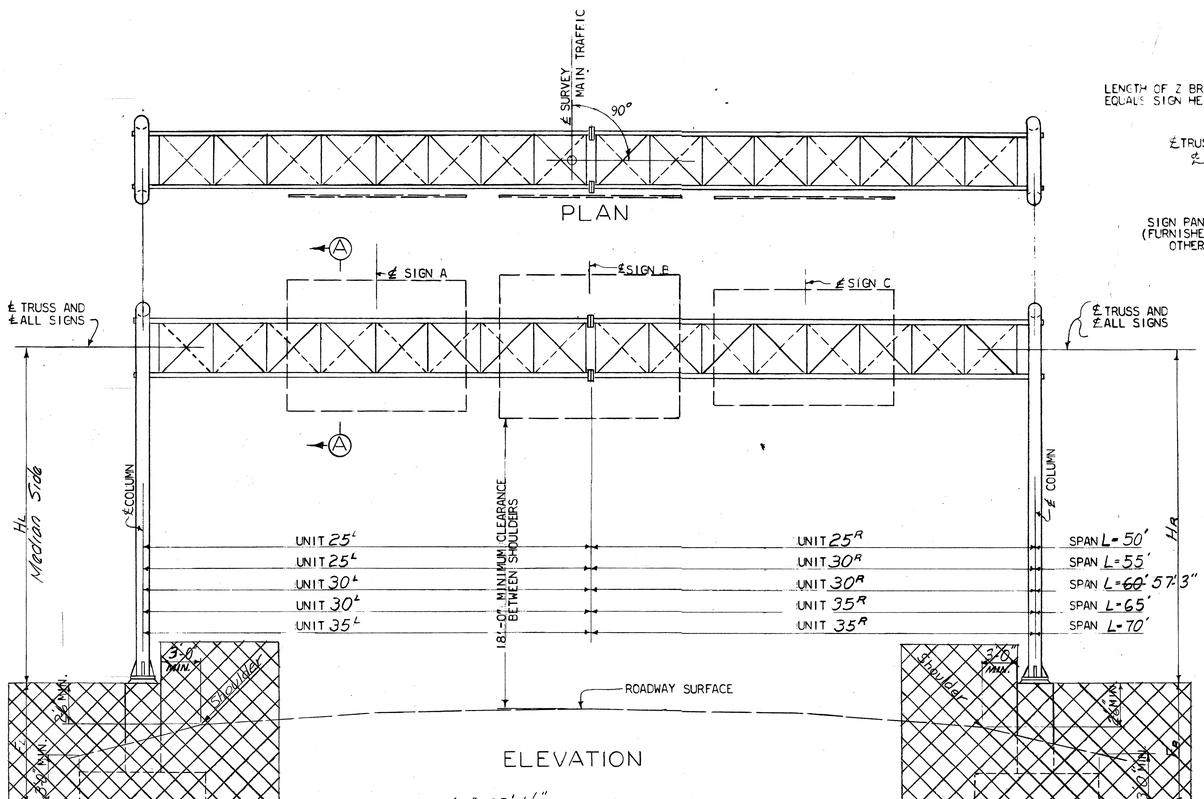

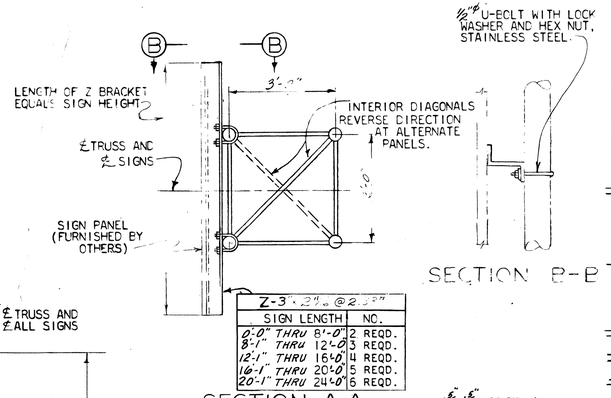

Z-3 [illegible] @2'-3"	
SIGN LENGTH	NO.
0'-0" THRU 8'-0"	2 REQD.
8'-1" THRU 12'-0"	3 REQD.
12'-1" THRU 16'-0"	4 REQD.
16'-1" THRU 20'-0"	5 REQD.
20'-1" THRU 24'-0"	6 REQD.

SECTION A-A

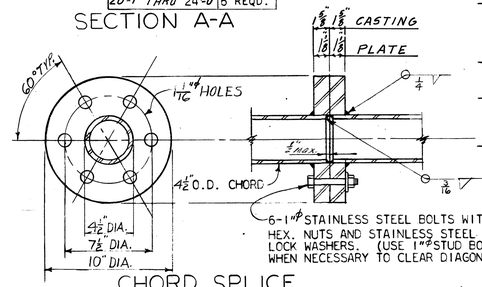

CHORD SPLICE
(PLATE OR CASTING)

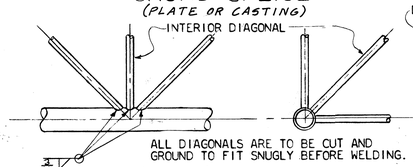

TYPICAL PANEL POINT DETAIL

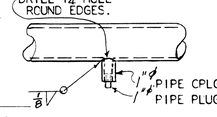

WIRE OUTLET DETAIL

SUPPORT NO.	STATION	SPAN L	SUPPORT HEIGHT H_R	SUPPORT HEIGHT H_L	FOOTING HEIGHT F_R	FOOTING HEIGHT F_L
1	312+48.50	57'-3"	21'-9 1/4"	21'-8 3/8"		

SUPPORT NO.	SIGN A NO.	SIGN A HT.	SIGN A LGTH.	SIGN B NO.	SIGN B HT.	SIGN B LGTH.	SIGN C NO.	SIGN C HT.	SIGN C LGTH.

GENERAL NOTE

SPECIFICATIONS: THE KENTUCKY DEPARTMENT OF HIGHWAYS STANDARD SPECIFICATIONS FOR ROAD AND BRIDGE CONSTRUCTION, CURRENT EDITION WITH REVISIONS, SHALL APPLY TO THIS PROJECT.

DESIGN: DESIGNED FOR 85 M.P.H. WIND ON A SIGN AREA OF 400 SQ. FT. IN ACCORDANCE WITH "SPECIFICATIONS FOR THE DESIGN AND CONSTRUCTION OF STRUCTURAL SUPPORTS FOR HIGHWAY SIGNS" PUBLISHED BY A.A.S.H.O. 1961.

~~LOCATION: ROADWAY STATION OF SIGN SUPPORT INDICATED ON THE PLANS IS APPROXIMATE ONLY. WHERE SHOULDER LINES ARE DIVERGING IN PLAN, IT MAY BE NECESSARY TO SHIFT THE LOCATION OF THE SUPPORT IN ORDER TO MAINTAIN SIDE CLEARANCE WITHOUT CHANGING THE SPAN LENGTH. CHANGES IN STATION OF MORE THAN 30 FEET WILL REQUIRE WRITTEN APPROVAL FROM THE DIRECTOR OF TRAFFIC.~~

SUPERELEVATION OF ROADWAY: THE CONTRACTOR SHALL ALLOW FOR DIFFERENCES IN ELEVATION ACROSS THE FULL SHOULDER WIDTH AS SHOWN ON THE ROADWAY PLANS IN MAINTAINING THE REQUIRED 18 FOOT MINIMUM VERTICAL CLEARANCE TO THE BOTTOM OF THE LOWEST PART OF THE SIGNS OR SUPPORT. SIGNS ARE TO BE CENTERED OVER THE LANE OR LANES TO WHICH THEY APPLY UNLESS SHOWN OTHERWISE.

~~CONCRETE: CLASS "A" CONCRETE IS TO BE USED THROUGHOUT.~~

~~BEVELED EDGES: ALL EXPOSED CONCRETE EDGES ARE TO BE BEVELED 7/8" UNLESS OTHERWISE SHOWN.~~

~~REINFORCEMENT: DIMENSIONS FROM FACE OF CONCRETE TO BARS ARE CLEAR DISTANCES EXCEPT AS OTHERWISE SHOWN. DIMENSIONS FOR BAR SPACINGS ARE DISTANCES CENTER TO CENTER OF BARS.~~

SHOP DRAWINGS: THE CONTRACTOR SHALL SUBMIT DETAILED SHOP DRAWINGS TO THE DIVISION OF CONSTRUCTION FOR APPROVAL PRIOR TO FABRICATION IN ACCORDANCE WITH THE SPECIFICATIONS.

FABRICATION: THE ALUMINUM SIGN SUPPORT SHALL BE FABRICATED IN ACCORDANCE WITH A.A.S.H.O. SPECIFICATIONS AND SECTION I OF PAPER 970 OF THE "JOURNAL OF THE STRUCTURAL DIVISION", PUBLISHED MAY 1956 BY THE AMERICAN SOCIETY OF CIVIL ENGINEERS.

WELDERS AND WELDING PROCEDURE: WELDED FABRICATION SHALL BE LIMITED TO THE INERT-GAS SHIELDED, TUNGSTEN OR CONSUMABLE ELECTRODE METHODS OF ARC WELDING. WELDING PROCEDURE, WELDERS AND WELDING OPERATORS SHALL BE QUALIFIED ACCORDING TO SECTION IX OF THE A.S.M.E. BOILER AND PRESSURE VESSEL CODE, 1962 EDITION, PART B, REQUIREMENTS FOR NON-FERROUS METALS. CERTIFIED COPIES IN TRIPLICATE OF A.S.M.E. BOILER CODE, APPENDIX II, QUALIFICATION TEST FORMS Q-1, Q-1G AND Q-1F SHALL BE SUBMITTED TO THE DEPARTMENT OF HIGHWAYS. THE PERTINENT FORMS SHALL INDICATE ACCEPTABLE QUALIFICATION OF WELDING PROCEDURES AND WELDER PERFORMANCE ON GROOVE AND FILLET WELDS.

MATERIAL SPECIFICATIONS: THE FOLLOWING A.S.T.M. DESIGNATIONS SHALL GOVERN ALL MATERIAL USED.

A.S.T.M.	MATERIAL
B221-65	EXTRUDED TUBE, ALUMINUM ALLOY 6061-T6511
B241-65	PIPE, ALUMINUM ALLOY 6061-T6
B308-65	STRUCTURAL SHAPES, ALUMINUM ALLOY 6061-T6
B221-65	EXTRUDED BAR, ROD, AND SHAPES, ALUMINUM ALLOY 6061-T6511
B209-65	SHEET AND PLATE, ALUMINUM ALLOY 6061-T6.
F28?-61T	WELDING FILLER WIRE, ER 5356
A320-65	STAINLESS STEEL HARDWARE, NUTS, BOLTS AND WASHERS
A165-55	TYPE MS, CADMIUM COATING FOR ASTM A36 ANCHOR BOLTS, NUTS AND WASHERS
B26-65	SAND MOLD CASTINGS, ALUMINUM ALLOY SG70A-T6
B108-65	PERMANENT MOLD CASTINGS, ALUMINUM ALLOY SG70B HEAT TREATED TO A TEMPER T6 INSTEAD OF TEMPER T61 IN ACCORDANCE WITH AASHO M193-60.

~~FOOTINGS: ALL FOOTINGS SHALL BE POURED AGAINST UNDISTURBED EARTH AND ARE DESIGNED TO TRANSFER NO MORE THAN 1½ TONS PER SQUARE FOOT BEARING PRESSURE TO THE SOIL UNDER ANY DESIGN LOADING CONDITION.~~

VERTICAL DIMENSIONS VERTICAL DIMENSIONS HR AND HL SHALL NOT EXCEED 22' AND THE COMBINED DIMENSIONS ($H_R + F_R$) AND ($H_L + F_L$) SHALL NOT EXCEED 31' WITHOUT THE WRITTEN APPROVAL OF THE DIVISION OF BRIDGES.

MILL TEST REPORTS NOTARIZED TEST REPORTS IN TRIPLICATE SHALL BE FURNISHED THE DEPARTMENT OF HIGHWAYS STATING THAT THE MATERIALS USED CONFORM TO THE SPECIFICATIONS.

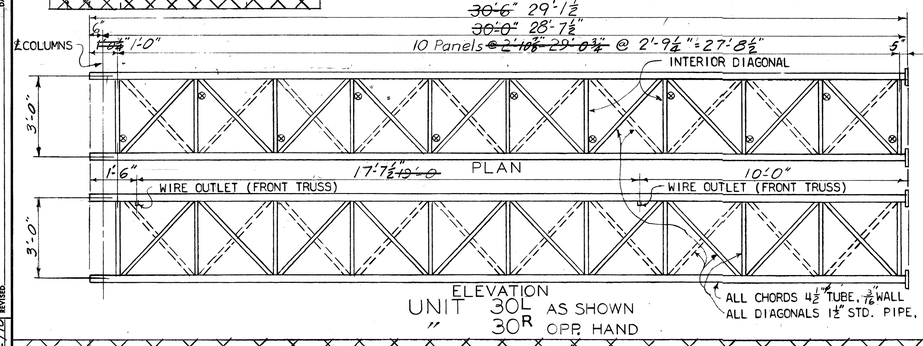

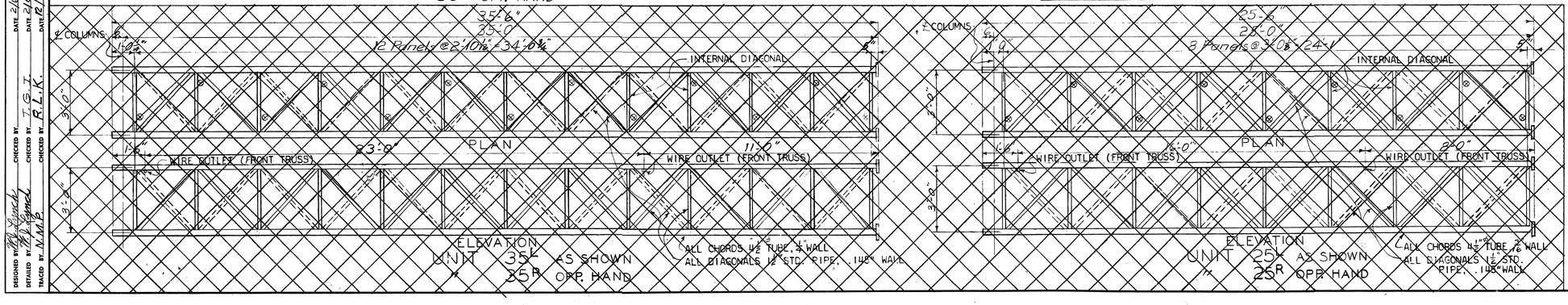

CHORD END DETAIL

NOTE: MEMBERS SHOWN BY DASHED LINES ARE IN THE FAR SIDE OF UNIT.

⊗ DENOTES END OF INTERNAL DIAGONAL THAT IS AT TOP CHORD.

L	X
50'	1"
55'	1 1/4"
60'	1 1/2"
65'	1 3/4"
70'	2

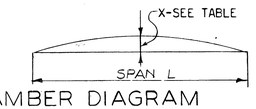

CAMBER DIAGRAM

Sheet 69

Work Sheets 68 thru 72 together.

DESIGNED BY: [illegible] DATE 2-13-62
DETAILED BY: [illegible] DATE 2-13-62
TRACED BY: N.M.B. DATE 2-13-62
CHECKED BY: T.G.T. DATE 2-13-62
CHECKED BY: R.L.K. DATE 2-20-62
REVISED: Entire Sht. Added 15 Deg. Wind DATE 6-5-62
REVISED DATE
REVISED DATE

COMMONWEALTH OF KENTUCKY
DEPARTMENT OF HIGHWAYS
FRANKFORT

STANDARD OVERHEAD SIGN SUPPORTS 50' TO 70' SPANS ALUMINUM

STATION	PROJECT NO.

APPROVED [illegible] STATE HIGHWAY ENGINEER

DRAWING NO. 18485

INDEX

FED. ROAD DIST.	STATE	FED. AID PRO. NO.	FISCAL YEAR	SHEET NO.	TOTAL SHEETS
7	KY.	23212			

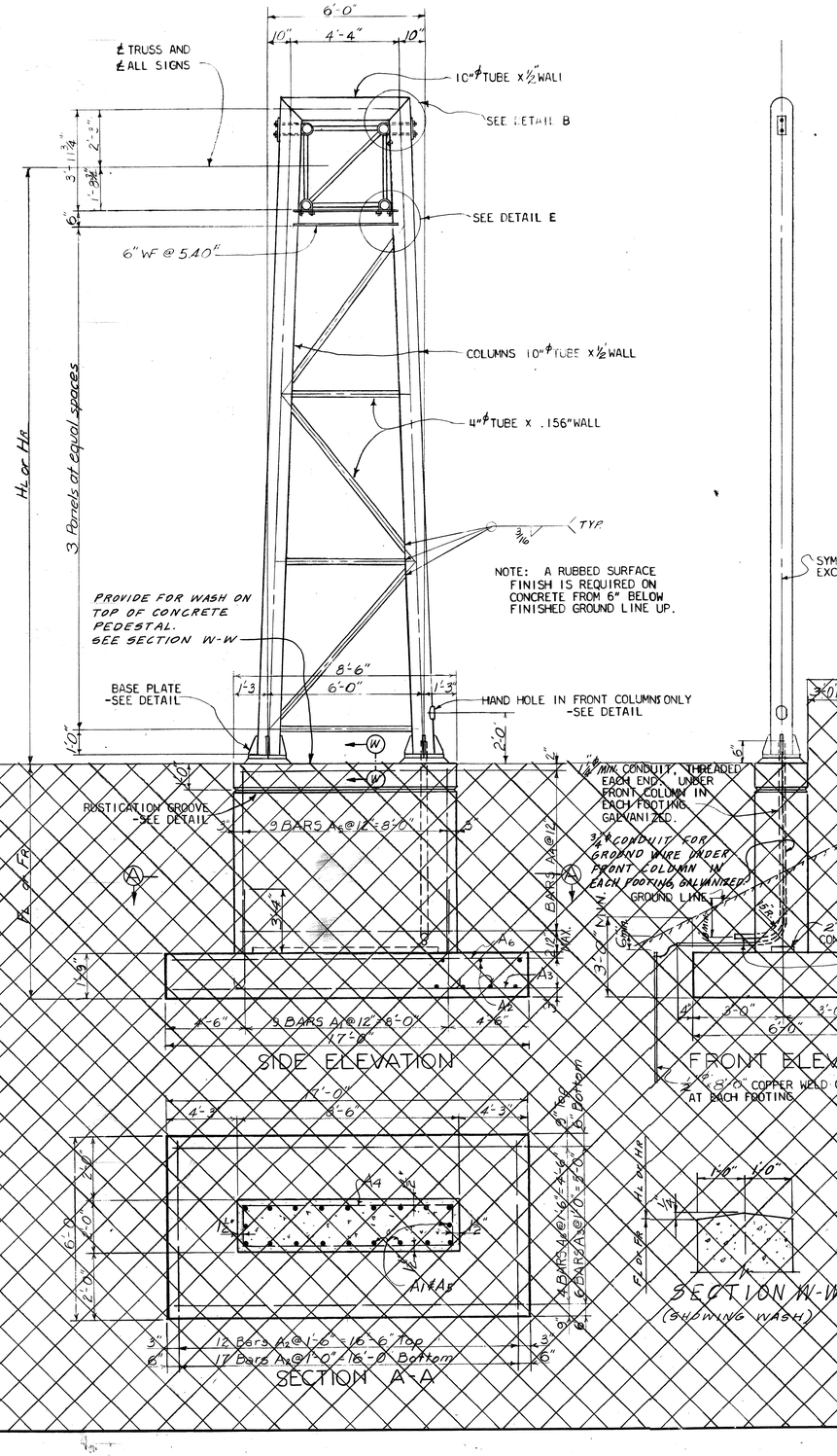

PROVIDE NECESSARY FILLER PLATES FOR FULL BEARING.

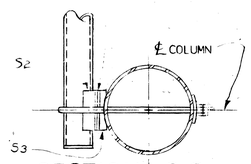

SECTION C-C

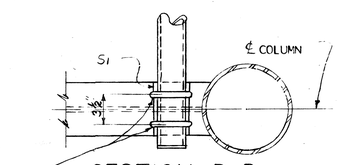

SECTION D-D

¾"ϕ U-BOLT WITH TWO HEX NUTS AND TWO LOCK WASHERS. STAINLESS STEEL. 13/16" HOLES IN COLUMN AND PLATE.

¾"ϕ U-BOLT WITH TWO HEX NUTS AND TWO LOCK WASHERS. STAINLESS STEEL. 13/16" HOLES IN WF.

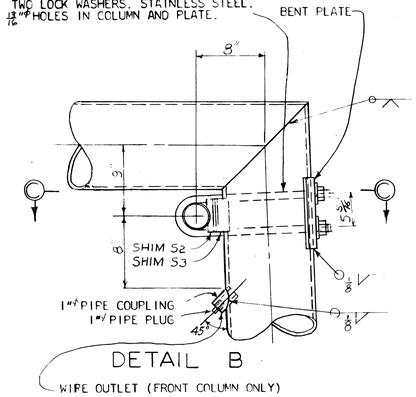

DETAIL B

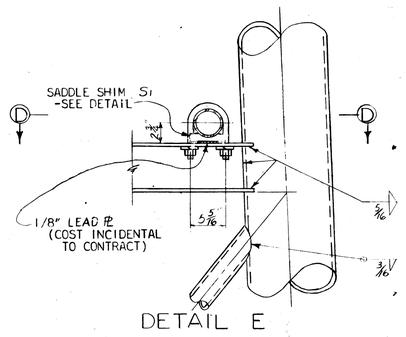

DETAIL E

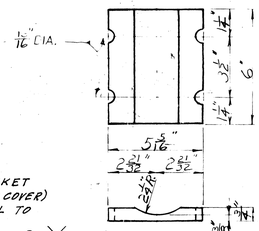

SHIM S1 (PLATE OR CASTING)

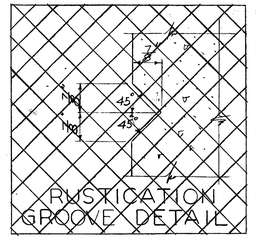

RUSTICATION GROOVE DETAIL

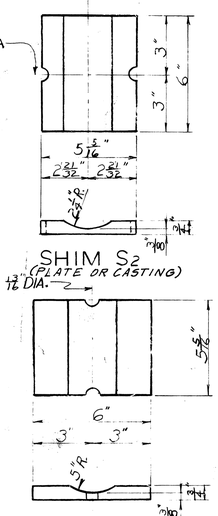

SHIM S2 (PLATE OR CASTING)

SHIM S3 (PLATE OR CASTING)

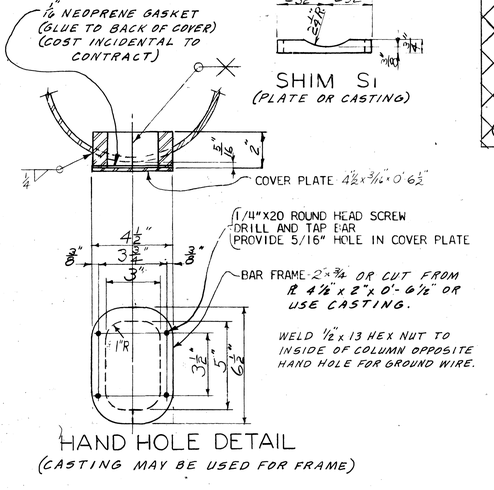

HAND HOLE DETAIL (CASTING MAY BE USED FOR FRAME)

BILL OF REINFORCEMENT FOR ONE FOOTING

Mark	Type	No.	Size	Length Ft.	Length In.	Location
A1	①	20	#6	5	7	Footing and Wall
A2	Str.	29	#5	5	8	"
A3	Str.	6	#7	16	8	"
A4	②	Varies	#4	20	9	Wall
A5	Str.	20	#5	F	1'-1"	"
A6	Str.	4	#5	16	8	Footing

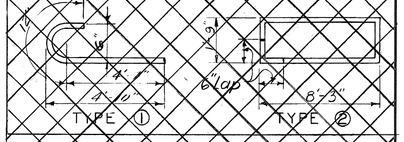

* APPROX. ESTIMATE IS FOR INFORMATION ONLY. F, AND F₂ SHALL BE DETERMINED BY THE ENGINEER IN THE FIELD.

ESTIMATE OF QUANTITIES * FOR ONE FOOTING

	T = 6'-0"	Additional per Ft. of Wall
Concrete, Class "A"	0.3 Cu. Yd.	0.63 Cu. Yd.
Reinforcement	768 Lbs.	35 Lbs.

Work Sheets 68 thru 72 together.

Sheet 70

DESIGNED BY	M. D. Lynch	CHECKED BY	T.G.T.	DATE	2/13
DETAILED BY	M.M.P.	CHECKED BY	R.L.K.	DATE	2/13
TRACED BY	M.M.P.	CHECKED BY		DATE	2/13

REVISED: Added Cast Gratings, Changed conduit 2/0 DATE 1/14
REVISED: Entire Sht. Added to Prop. 18485 25 DATE 2-25-14
REVISED: DATE
REVISED: DATE

COMMONWEALTH OF KENTUCKY
DEPARTMENT OF HIGHWAYS
FRANKFORT

STANDARD OVERHEAD SIGN SUPPORTS 50' TO 70' SPANS, ALUMINUM

STATION | PROJECT NO.

APPROVED _____ STATE HIGHWAY ENGINEER

DRAWING NO. 18485 | INDEX

FED. ROAD DIST.	STATE	FED. AID PRO. NO.	FISCAL YEAR	SHEET NO.	TOTAL SHEETS
7	KY.	INTER-4(8)4			

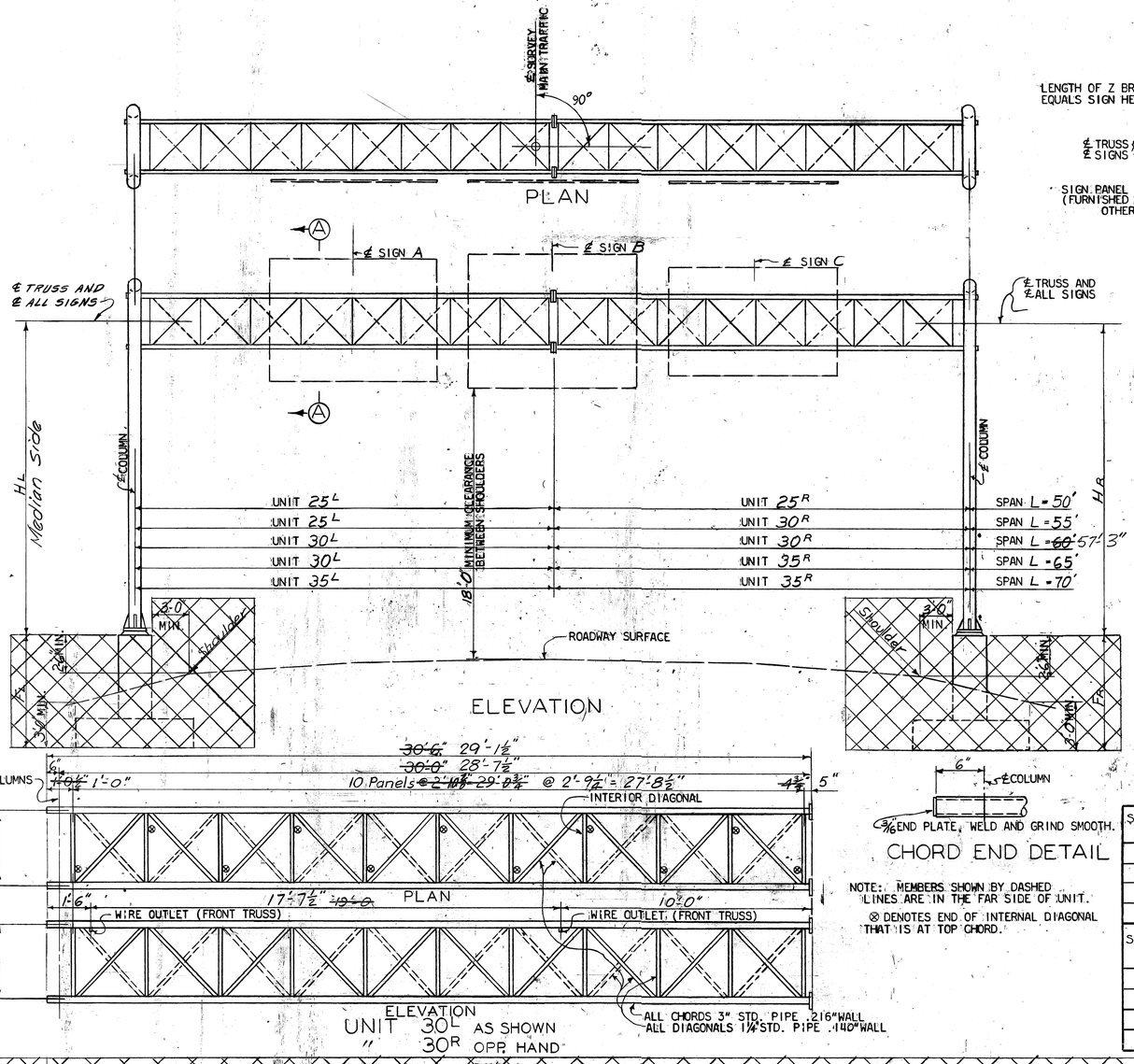

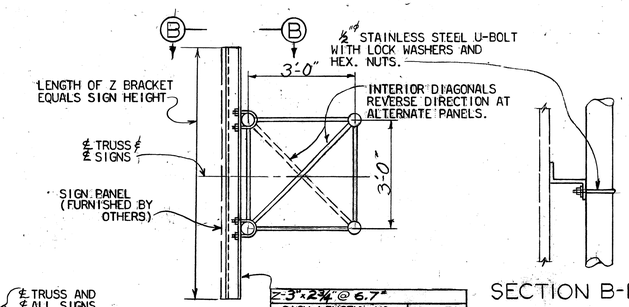

2-3"x2¾"@ 6.7#

SIGN LENGTH	REQD. NO.
0'-0" Thru 8'-0"	2
8'-1" Thru 12'-0"	3
12'-1" Thru 16'-0"	4
16'-1" Thru 20'-0"	5
20'-1" Thru 24'-0"	6

SECTION A-A

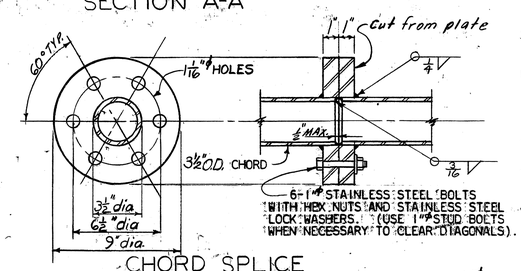

CHORD SPLICE

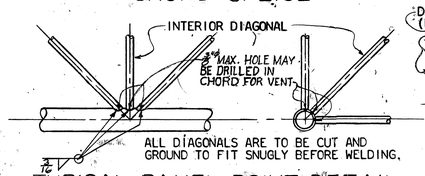

TYPICAL PANEL POINT DETAIL

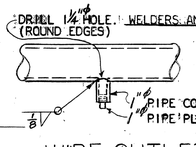

WIRE OUTLET DETAIL

CHORD END DETAIL

NOTE: MEMBERS SHOWN BY DASHED LINES ARE IN THE FAR SIDE OF UNIT.
⊗ DENOTES END OF INTERNAL DIAGONAL THAT IS AT TOP CHORD.

SUPPORT NO.	STATION	SPAN L	SUPPORT HEIGHT H_R	SUPPORT HEIGHT H_L	FOOTING HEIGHT F_R	FOOTING HEIGHT F_L
1	312+48.50	57'-3"	21'-9¼"	21'-8⅜"		

SUPPORT NO.	SIGN A NO.	SIGN A HT.	SIGN A LGTH.	SIGN B NO.	SIGN B HT.	SIGN B LGTH.	SIGN C NO.	SIGN C HT.	SIGN C LGTH.

GENERAL NOTE

SPECIFICATIONS: THE KENTUCKY DEPARTMENT OF HIGHWAYS STANDARD SPECIFICATIONS FOR ROAD AND BRIDGE CONSTRUCTION, CURRENT EDITION WITH REVISIONS SHALL APPLY TO THIS PROJECT.

DESIGN: DESIGNED FOR 85 MPH WIND ON A SIGN AREA OF 400 SQ. FT. IN ACCORDANCE WITH "SPECIFICATIONS FOR THE DESIGN AND CONSTRUCTION OF STRUCTURAL SUPPORTS FOR HIGHWAY SIGNS" PUBLISHED BY AASHO, 1961.

~~LOCATION: ROADWAY STATION OF SIGN SUPPORT INDICATED ON THE PLANS IS APPROXIMATE ONLY. WHERE SHOULDER LINES ARE DIVERGING IN PLAN, IT MAY BE NECESSARY TO SHIFT THE LOCATION OF THE SUPPORT IN ORDER TO MAINTAIN SIDE CLEARANCE WITHOUT CHANGING THE SPAN LENGTH. CHANGES IN STATION OF MORE THAN 30 FEET WILL REQUIRE WRITTEN APPROVAL FROM THE DIRECTOR OF TRAFFIC.~~

SUPERELEVATION OF ROADWAY: THE CONTRACTOR SHALL ALLOW FOR DIFFERENCES IN ELEVATION ACROSS THE FULL SHOULDER WIDTH AS SHOWN ON THE ROADWAY PLANS IN MAINTAINING THE REQUIRED 18 FOOT MINIMUM VERTICAL CLEARANCE TO THE BOTTOM OF THE LOWEST PART OF THE SIGNS OR SUPPORT. SIGNS ARE TO BE CENTERED OVER THE LANE OF LANES TO WHICH THEY APPLY UNLESS SHOWN OTHERWISE.

~~CONCRETE: CLASS "A" CONCRETE IS TO BE USED THROUGHOUT.~~

~~BEVELED EDGES: ALL EXPOSED CONCRETE EDGES ARE TO BE BEVELED 7/8" UNLESS OTHERWISE SHOWN.~~

~~REINFORCEMENT: DIMENSIONS FROM FACE OF CONCRETE TO BARS ARE CLEAR DISTANCES EXCEPT AS OTHERWISE SHOWN. DIMENSIONS FOR BAR SPACINGS ARE DISTANCES CENTER TO CENTER OF BARS.~~

SHOP DRAWINGS: THE CONTRACTOR SHALL SUBMIT DETAILED SHOP DRAWINGS TO THE DIVISION OF CONSTRUCTION FOR APPROVAL PRIOR TO FABRICATION IN ACCORDANCE WITH THE SPECIFICATIONS.

FABRICATION: THE SIGN SUPPORT SHALL BE FABRICATED IN ACCORDANCE WITH THE SPECIFICATIONS. ALL METAL COMPONENTS OF THE SUPPORT EXCEPT THE STAINLESS STEEL HARDWARE SHALL BE HOT-DIP GALVANIZED AFTER ALL FABRICATION HAS BEEN COMPLETED. THE GALVANIZED MATERIAL SHALL BE LOADED, HAULED AND HANDLED IN SUCH A MANNER THAT THE GALVANIZING WILL NOT BE DAMAGED. ALL ABRADED AND DAMAGED SURFACES SHALL BE REGALVANIZED OR REPAIRED BY PAINTING WITH TWO COATS OF ZINC OXIDE, ZINC DUST PAINT CONFORMING TO THE REQUIREMENTS OF FEDERAL SPECIFICATION MIL-P-15145. THE PAINT IS TO BE PROPERLY COMPOUNDED IN A SUITABLE VEHICLE IN THE RATIO OF ONE PART ZINC OXIDE TO FOUR PARTS ZINC DUST, BY WEIGHT. ALL REPAIRS ARE TO BE AS DIRECTED BY THE ENGINEER

MILL TEST REPORTS: NOTARIZED TEST REPORTS IN TRIPLICATE SHALL BE FURNISHED THE DEPARTMENT OF HIGHWAYS STATING THAT THE MATERIALS USED CONFORM TO THE SPECIFICATIONS.

WELDERS AND WELDING PROCEDURE: WELDED FABRICATION SHALL BE LIMITED TO THE INERT-GAS SHIELDED, TUNGSTEN OR CONSUMABLE ELECTRODE METHODS OF ARC WELDING. WELDING PROCEDURE, WELDERS AND WELDING OPERATORS SHALL BE QUALIFIED ACCORDING TO SECTION IX OF THE A.S.M.E. BOILER AND PRESSURE VESSEL CODE, 1962 EDITION, PART A, REQUIREMENTS FOR FERROUS METALS. CERTIFIED COPIES IN TRIPLICATE OF A.S.M.E. BOILER CODE, APPENDIX II, QUALIFICATION TEST FORMS Q-I, Q-IG, AND Q-IF SHALL BE SUBMITTED TO THE DEPARTMENT OF HIGHWAYS. THE PERTINENT FORMS SHALL INDICATE ACCEPTABLE QUALIFICATION OF WELDING PROCEDURES AND WELDER PERFORMANCE ON GROOVE AND FILLET WELDS.

MATERIAL SPECIFICATIONS: THE FOLLOWING A.S.T.M. DESIGNATIONS SHALL GOVERN ALL MATERIALS USED:

A.S.T.M.	MATERIAL
A53-65	GRADE B SEAMLESS STEEL PIPE GALVANIZED IN ACCORDANCE WITH ASTM A-123, FOR PIPE 2" ø AND GREATER
A36-63T	STRUCTURAL SHAPES, PLATES, BARS AND ANCHOR BOLTS, GALVANIZED IN ACCORDANCE WITH ASTM A-123
A320-65	STAINLESS STEEL HARDWARE - NUTS, BOLTS AND WASHERS
A106-64	GRADE B SEAMLESS CARBON STEEL PIPE GALVANIZED IN ACCORDANCE WITH ASTM A-123 FOR PIPE LESS THAN 2" ø
A27-65	CARBON STEEL CASTING- GRADE 70-36

~~FOOTINGS: ALL FOOTINGS SHALL BE POURED AGAINST UNDISTURBED EARTH AND ARE DESIGNED TO TRANSFER NO MORE THAN 1½ TONS PER SQUARE FOOT BEARING PRESSURE TO THE SOIL UNDER ANY DESIGN LOADING CONDITION.~~

VERTICAL DIMENSIONS: VERTICAL DIMENSIONS H_R AND H_L SHALL NOT EXCEED 23' AND THE COMBINED DIMENSIONS ($H_R + F_R$) AND ($H_L + F_L$) SHALL NOT EXCEED 31' WITHOUT THE WRITTEN APPROVAL OF THE DIVISION OF BRIDGES.

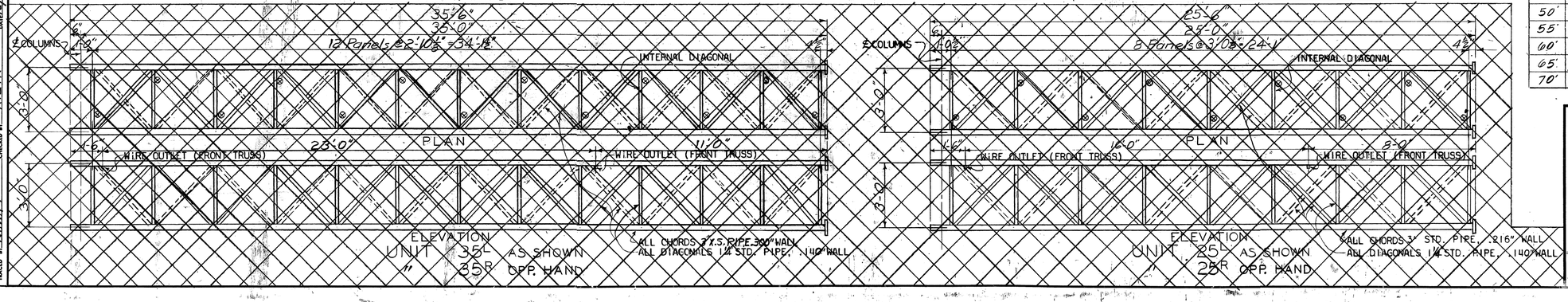

L	X
50'	1"
55'	1¼"
60'	1½"
65'	1¾"
70'	2"

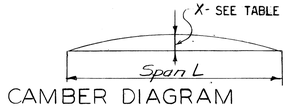

CAMBER DIAGRAM

Sheet 71
Work Sheets 68 thru 72 together.

DESIGNED BY: W.L. Leach — CHECKED BY: T.G.T.
DETAILED BY: W.L. Leach — CHECKED BY: R.L.K.
TRACED BY: N.M.P. — CHECKED BY:

DATE 2-62 REVISED ASTM Nos., added Castings
DATE 2-63 REVISED Entire Set Added to Drwg. 1965
DATE 2-15-74 REVISED
DATE REVISED

COMMONWEALTH OF KENTUCKY
DEPARTMENT OF HIGHWAYS
FRANKFORT

STANDARD OVERHEAD SIGN SUPPORTS 50' TO 70' SPANS GALVANIZED STEEL

STATION — PROJECT NO.

APPROVED — STATE HIGHWAY ENGINEER

DRAWING NO. 18185 — INDEX

FED. ROAD DIST.	STATE	FED. AID PROJ. NO.	FISCAL YEAR	SHEET NO.	TOTAL SHEETS
7	KY.	I-71-4(6)14			

BILL OF REINFORCEMENT FOR ONE FOOTING

Mark	Type	No.	Size	Length Ft.	Length In.	Location
A1	①	20	#6	3	X	Footing and Wall
A2	Str.	29	#5	5	8	"
A3	Str.	6	#7	16	8	"
A4	②	Varies	#4	20	9	Wall
A5	Str.	20	#5	F-1'11"		"
A6	Str.	4	#5	16	8	Footing

TYPE ①

TYPE ②

* APPROX. ESTIMATE IS FOR INFORMATION ONLY. FL AND FR SHALL BE DETERMINED BY THE ENGINEER IN THE FIELD.

ESTIMATE OF QUANTITIES * FOR ONE FOOTING

	F=6'-0"	Additional 1' of Wall
Concrete, Class "A"	9.5 Cu.Yd.	0.63 Cu.Yd.
Reinforcement	768. Lbs.	35. Lbs.

6'-0"
11¼" 4'-1½" 11¼"
8" STD. PIPE, .322" WALL
SEE DETAIL B
℄ TRUSS AND ℄ ALL SIGNS
3'-10½"
2'-2"
1'-8½"
6"
SEE DETAIL E
6" WF @ 15.5#
COLUMNS 8" STD. PIPE, .322" WALL
¾"ø HOLE MAY BE DRILLED IN COLUMN FOR VENT
2½" STD. PIPE, .203" WALL
TYP. 3/16
NOTE: A RUBBED SURFACE FINISH IS REQUIRED ON CONCRETE FROM 6" BELOW FINISHED GROUND LINE UP.
H1 or H2
3 Panels at equal spaces
PROVIDE FOR WASH ON TOP OF CONCRETE PEDESTAL. SEE SECTION W-W
8'-6"
1'-3" 6'-0" 1'-3"
BASE PLATE -SEE DETAIL
HAND HOLE IN FRONT COLUMN ONLY -SEE DETAIL
10"
2'-0"
RUSTICATION GROOVE -SEE DETAIL
9 BARS A3 @ 12" = 8'-0"
3"
6'-0" FR
1'-3"
A4
A3
A2
A1
17'-0"
4'-6" 8 BARS A4 @ 12" = 8'-0" 4'-6"
SIDE ELEVATION

PROVIDE NECESSARY FILLER PLATES FOR FULL BEARING.
℄ COLUMN
SECTION C-C

S1
℄ COLUMN
SECTION D-D

¾"ø U-BOLT WITH TWO HEX NUTS AND TWO LOCK WASHERS. STAINLESS STEEL 13/16"ø HOLES IN COLUMN AND PLATE.
3" x ¼" x 0'-8 5/16" BENT PLATE
6¾"
8"
8"
SHIM S2
SHIM S3
1¼"ø PIPE COUPLING
1¼"ø PIPE PLUG
45°
4⅛"
⅜
⅝
WIRE OUTLET (FRONT COLUMN ONLY)
DETAIL B

¾"ø U-BOLT WITH TWO HEX NUTS AND TWO LOCK WASHERS. STAINLESS STEEL. 13/16"ø HOLES IN WF.

SADDLE SHIM S1 -SEE DETAIL
2¼"
1/8" LEAD fl. (COST INCIDENTAL TO CONTRACT)
4⅝"
3/16
DETAIL E

SYMM. ABOUT THIS ℄ EXCEPT CONDUIT.
3'-0" min.
1'-6"
2'-6"
1'-9"
3" HOLE
℄ 1¼" HOLES
9"
5"
5 ℄ 1½" HOLES
Shoulder Line
#4 CONDUIT, THREADED EACH END, UNDER FRONT COLUMN IN EACH FOOTING. GALVANIZED.
¾" CONDUIT FOR GROUND WIRE UNDER FRONT COLUMN IN EACH FOOTING, GALVANIZED
GROUND LINE
2'-6" x 7'-0 RAISED KEY CONSTRUCTION JOINT
CONDUIT MAY EXTEND FROM ANY FACE OF FOOTING AS REQUIRED IN THE FIELD
3'-0"
3'-0"
6'-0"
FRONT ELEVATION

CUT 1½ DRAIN HOLE AT BASE OF COLUMN
CUT FROM 5" ℄
TYP.
BASE PLATE 18"x12"x1"-6"
LOCK WASHER
GROUT
LEVELING NUT
Thread
PLATE 4"x4"x⅝" WITH 1⅛" HOLE
ANCHOR BOLT 1¼" x 3'-0" WITH 3 HEX NUTS, 1 LOCK WASHER AND 1 PLATE
BASE PLATE DETAIL

8'-0" COPPER WELD GROUND ROD AT EACH FOOTING

1'-0" 1'-0"
SECTION W-W (SHOWING WASH)

4 BARS A4 @ 1'-6" = 4'-6" TOP
4 BARS A4 @ 1'-0" = 4'-0" BOTTOM
12 BARS A2 @ 1'-6" = 16'-6" TOP
17 BARS A2 @ 1'-0" = 16'-0" BOTTOM
3" 6"
SECTION A-A

⅛" NEOPRENE GASKET (GLUE TO BACK OF COVER) (COST INCIDENTAL TO CONTRACT)
COVER PLATE - 4½ x 3/16 x 0'-6½
1/4"x20 ROUND HEAD SCREW DRILL AND TAP BAR PROVIDE 5/16" HOLE IN COVER PLATE
4½"
3"
3¼"
BAR FRAME - 2" x ¾" OR CUT FROM 12 4½" x 2" x 0'-6½" OR USE CASTING
1"R
3½"
6½"
WELD ½"x13 HEX NUT TO INSIDE OF COLUMN OPPOSITE HAND HOLE FOR GROUND WIRE.
HAND HOLE DETAIL (CASTING MAY BE USED FOR FRAME)

13/16" DIA.
4 5/16"
2 5/32" 2 5/32"
SHIM S1 (PLATE OR CASTING)

RUSTICATION GROOVE DETAIL

13/16" DIA.
3"
3"
6"
4 5/16"
2 5/32" 2 5/32"
SHIM S2 (PLATE OR CASTING)

13/16" DIA.
4 5/16"
6"
3" 3"
SHIM S3 (PLATE OR CASTING)

Work Sheets 68 thru 72 together. Sheet 72

REVISED	DATE	CHECKED BY
Added Casting, Changed Conduit	11/64	
Entire Sht. Added & Dwg. Revised	2/67	T.G.T.
	2/67	
	12/70	R.L.K.

DESIGNED BY: M.V. Lynch
DETAILED BY: N.M.D.
TRACED BY:

COMMONWEALTH OF KENTUCKY
DEPARTMENT OF HIGHWAYS
FRANKFORT

STANDARD OVERHEAD SIGN SUPPORTS 50' TO 70' SPANS. GALVANIZED STEEL

STATION PROJECT NO.

APPROVED S.A. Harman
STATE HIGHWAY ENGINEER

DRAWING NO. 18485

INDEX 1