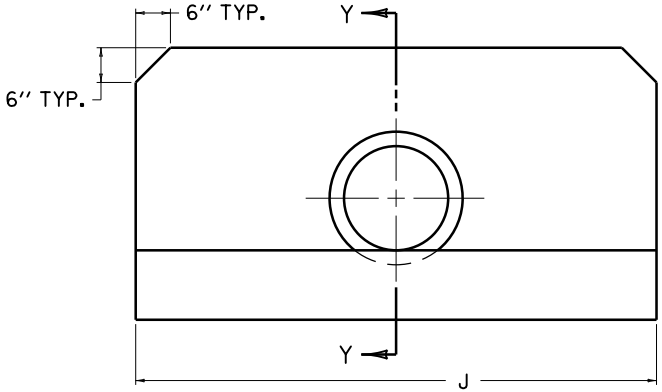

ELEVATION VIEW

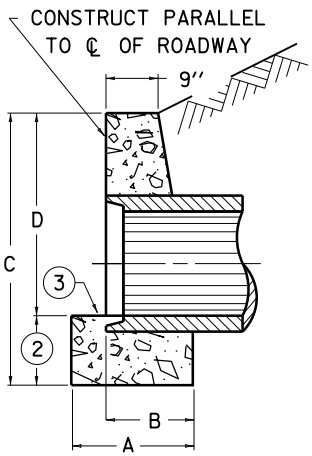

SECTION Y-Y

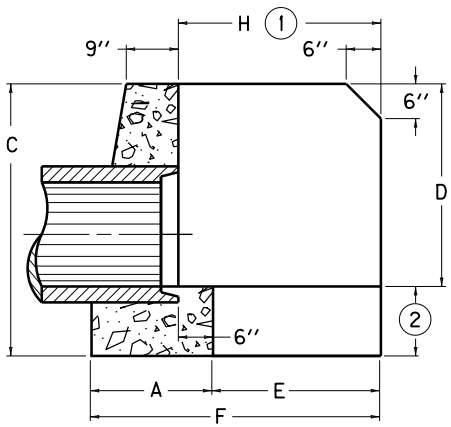

SECTION X-X

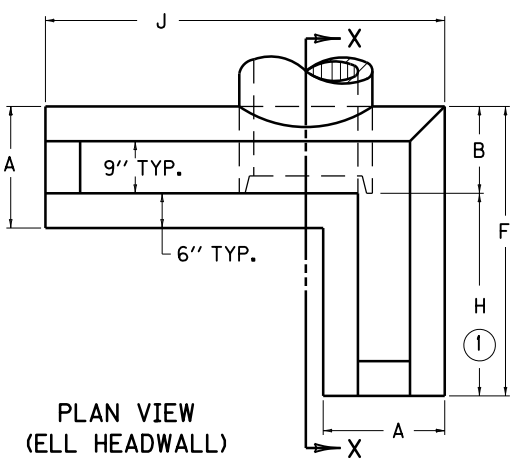

PLAN VIEW
(ELL HEADWALL)

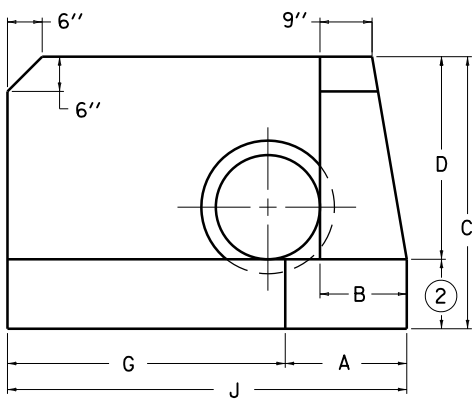

ELEVATION VIEW (ELL HEADWALL)

DIMENSIONS AND QUANTITIES

HEADWALL TYPE	PIPE DIAMETER	HEADWALL DIMENSIONS									CUBIC YARDS CONCRETE FOR ONE HEADWALL	
		A	B	C	D	E	F	G	H (1)	J	(EARTH)	(ROCK)
STANDARD	12"	1'-8"	1'-2"	4'-0"	2'-6"	—	—	—	—	6'-0"	1.05	0.87
	15"	1'-8½"	1'-2½"	4'-3"	2'-9"	—	—	—	—	6'-9"	1.25	1.03
	18"	1'-9"	1'-3"	4'-6"	3'-0"	—	—	—	—	7'-6"	1.48	1.23
	21"	1'-9½"	1'-3½"	4'-9"	3'-3"	—	—	—	—	8'-3"	1.73	1.46
	24"	1'-10"	1'-4"	5'-0"	3'-6"	—	—	—	—	9'-0"	1.99	1.69
	27"	1'-10½"	1'-4½"	5'-3"	3'-9"	—	—	—	—	9'-9"	2.27	1.93
RAISED	12"	1'-8"	1'-2"	4'-6"	3'-0"	—	—	—	—	7'-6"	1.45	1.23
	15"	1'-8½"	1'-2½"	4'-9"	3'-3"	—	—	—	—	8'-3"	1.69	1.43
	18"	1'-9"	1'-3"	5'-0"	3'-6"	—	—	—	—	9'-0"	1.96	1.67
	21"	1'-9½"	1'-3½"	5'-3"	3'-9"	—	—	—	—	9'-9"	2.25	1.93
	24"	1'-10"	1'-4"	5'-6"	4'-0"	—	—	—	—	10'-6"	2.54	2.19
	27"	1'-10½"	1'-4½"	5'-9"	4'-3"	—	—	—	—	11'-3"	2.88	2.49
STANDARD ELL	12"	1'-8"	1'-2"	4'-0"	2'-6"	2'-0"	3'-8"	3'-0"	2'-6"	4'-8"	1.19	0.99
	15"	1'-8½"	1'-2½"	4'-3"	2'-9"	2'-3"	3'-11½"	3'-6"	2'-9"	5'-2½"	1.42	1.19
	18"	1'-9"	1'-3"	4'-6"	3'-0"	2'-6"	4'-3"	4'-0"	3'-0"	5'-9"	1.67	1.41
	21"	1'-9½"	1'-3½"	4'-9"	3'-3"	2'-9"	4'-6½"	4'-6"	3'-3"	6'-3½"	1.93	1.63
	24"	1'-10"	1'-4"	5'-0"	3'-6"	3'-0"	4'-10"	5'-0"	3'-6"	6'-10"	2.22	1.89
	27"	1'-10½"	1'-4½"	5'-3"	3'-9"	3'-3"	5'-1½"	5'-6"	3'-9"	7'-4½"	2.52	2.15
RAISED ELL	12"	1'-8"	1'-2"	4'-6"	3'-0"	2'-9"	4'-5"	3'-9"	3'-3"	5'-5"	1.62	1.37
	15"	1'-8½"	1'-2½"	4'-9"	3'-3"	3'-0"	4'-8½"	4'-3"	3'-6"	5'-11½"	1.88	1.59
	18"	1'-9"	1'-3"	5'-0"	3'-6"	3'-3"	5'-0"	4'-9"	3'-9"	6'-6"	2.16	1.85
	21"	1'-9½"	1'-3½"	5'-3"	3'-9"	3'-6"	5'-3½"	5'-3"	4'-0"	7'-0½"	2.47	2.12
	24"	1'-10"	1'-4"	5'-6"	4'-0"	3'-9"	5'-7"	5'-9"	4'-3"	7'-7"	2.79	2.41
	27"	1'-10½"	1'-4½"	5'-9"	4'-3"	4'-0"	5'-10½"	6'-3"	4'-6"	8'-1½"	3.14	2.72

NOTES

1. THE DIMENSION AND/OR ANGLE OF INTERSECTION BETWEEN THE WALLS MAY BE VARIED ON CONSTRUCTION.
2. VOLUME BASED ON VALUES OF 18" ON EARTH, 12" ON ROCK.
3. FINISH BY FLOATING
4. CIRCULAR PIPE INCLUDES SLIGHTLY ELLIPTICAL CONCRETE PIPE WITH CIRCULAR REINFORCEMENT.

KENTUCKY
DEPARTMENT OF HIGHWAYS

CONCRETE HEADWALLS
FOR
12"-27"
CIRCULAR PIPE CULVERTS

STANDARD DRAWING NO. RDH-005-02

SUBMITTED John B. Lochstede — DIRECTOR DIVISION OF DESIGN — 12-1-99 DATE

APPROVED — STATE HIGHWAY ENGINEER — 12-1-99 DATE