TRANSPORTATION CABINET
Department of Highways
Frankfort, Kentucky 40622

PROPOSAL NO. _____
PROJECT CODE NO. 03-0327

LETTING OF APRIL 25, 2003
Sealed Bids will be received in the Division of Contract Procurement and/or the Auditorium located on the 1st Floor of the State Office Building until 10:00 A.M., EDT, on APRIL 25, 2003. Bids will be publicly opened and read at 10:00 A.M., EASTERN DAYLIGHT TIME.

PROJECT IDENTIFICATION AND DESCRIPTION:

HENDERSON COUNTY, FD39 051 0060 017-018
The Henderson-Owensboro Road (US 60) from 0.032 mile west of Race Creek Bridge (MP 17.265) extending easterly to 0.002 mile west of KY 2243 (MP 17.502), a distance of 0.237 mile.

Turnlane Construction.

(2)

GEOGRAPHIC COORDINATES:
LATITUDE - 37° 45' NORTH
LONGITUDE - 87° 35' WEST

COMPLETION DATE ESTABLISHED FOR PROJECT: AUGUST 5, 2003

LIQUIDATED DAMAGES SEE STANDARD SPECIFICATIONS

REQUIRED BID PROPOSAL GUARANTY: Not less than 5% of the total bid.

(Check guaranty submitted: Cashier's Check |__| Certified Check |__| Bid Bond |__|)

BID BONDS WHEN SUBMITTED WILL BE RETAINED WITH THE PROPOSAL.

INDEX OF CONTENTS

PART	
I	SCOPE OF WORK
II	SPECIAL PROVISIONS APPLICABLE TO PROJECT
III	EMPLOYMENT, WAGE AND RECORD REQUIREMENTS
IV	INSURANCE
V	STATEMENT OF INCOMPLETED WORK AND SUBCONTRACTED WORK
VI	BID ITEMS
VII	CERTIFICATION

BID..... |__| PROPOSAL ISSUED TO: _____

SPECIMEN..... |__| _____
Address City State Zip

PART I

SCOPE OF WORK

1. Project Detail

a. See Plans	
b. Special Notes Applicable to Project	Attached
c. Supplemental Specifications	Attached
d. Special Note for Traffic Control Plan	Attached
e. Special Note for Typical Section Dimensions	Attached
f. Special Note for Asphalt Milling and Texturing	Attached
g. Special Notes for Turn Lane	Attached
h. Delineator at Narrow Shoulder Bridges (12-1-99)	Attached
i. Delineators for Guardrail (12-1-99)	Attached

SPECIAL NOTES APPLICABLE TO PROJECT

2000 SPECIFICATIONS & 2003 STANDARD DRAWINGS
Any reference in the plans or proposal to the ***Standard Specifications for Road and Bridge Construction, Edition of 1998***, and ***Standard Drawings, Edition of 2000*** are superseded by ***Standard Specifications for Road and Bridge Construction, Edition of 2000*** and ***Standard Drawings, Edition of 2003.***

2001 SUPPLEMENTAL SPECIFICATIONS
The ***2001 Supplemental Specifications*** to the 2000 Standard Specifications for Road and Bridge Construction shall apply to this project.

PROPOSAL ADDENDA
All Addenda to this proposal must be incorporated into the proposal when the bid is submitted to the Kentucky Department of Highways. Failure to use the correct and most recent bid sheet(s) may result in the bid being rejected.

BID SUBMITTAL
Bidder must use the Department's Highway Bid Program available on the internet web site of the Department of Highways, division of Contract Procurement. (www.kytc.state.us/contract)

The Bidder must download the bid items created from the web site to prepare a bid proposal for submission to the Department. The bidder must insert the completed bid item sheets printed from the Program into the bidder's proposal and submit with the disk created by said program.

JOINT VENTURE BIDDING
Joint Venture bidding is permissible. However, both companies MUST purchase a bidding proposal. Either proposal may be submitted but must contain the company names and signatures of both parties where required. A joint bid bond of 5% may be submitted for both companies or each company may submit a separate bond of 5%.

UNDERGROUND FACILITY DAMAGE PROTECTION
The contractor is advised that the Underground Facility Damage Protection Act of 1994, became law January 1, 1995. It is the contractor's responsibility to determine the impact of the act regarding this project, and take all steps necessary to be in compliance with the provisions of the act.

ASPHALT BASE PRICE
The Asphalt Base Price shall be **$185.00 (english)** as applicable in **Section 109.07** of the ***2000 Standard Specifications.***

INCIDENTAL SURFACING
The quantities established in the proposal include estimated quantities required for resurfacing or surfacing mailbox turnouts, farm field entrances, residential and commercial entrances, and road and street approaches. These items are to be paved to the limits as shown on **Standard Drawing RPM 110** or to the limits as directed by the Engineer. In the event signal detectors are present in the intersecting streets or roads, the paving of the crossroads shall be to the right of way limit or back of the signal detector, whichever is the farthest back of the mainline. These areas are to be surfaced or resurfaced as directed by the Engineer and no direct payment will be allowed for placing and compacting.

OPTION B
The Contractor is advised that the compaction of asphalt mixtures furnished to this project will be accepted by **OPTION B** in accordance with **Section 402** and **Section 403** of the ***2000 Standard Specification.***

SPECIAL NOTES APPLICABLE TO PROJECT (Continued)

Mainline Surfacing Width 20 Feet.

Total area to be Surfaced 4360 Square Yards.

DGA Base quantities based on 115 lbs./Sq Yd per inch of depth.

Class 3 Asphalt Surface 0.5D PG 70-22 estimate based on depth of 1.5" - 165 lbs/Sq Yd.

Class 3 Asphalt Base 1.0D PG 70-22 estimate based on depth of 6" - 660 lbs/Sq Yd.

The ADT for this project is estimated at 4100.

SPECIAL NOTES APPLICABLE TO PROJECT (CONTINUED)

In order for the Cabinet to the use of its resources more efficiently, the contractor shall, prior to issuance of notice to begin work, submit an anticipated earnings schedule broken down by **month** for the expected life of the contract for any project with a bid over **$5,000,000.** The contractor will be provided a spreadsheet to expedite the preparation of this schedule upon award of the contract. No direct payment will be allowed for the preparation and submittal of this schedule.

In the event the Engineer determines that there are inadequate or insufficient road funds available under the contract for the payment of Engineer's estimates for work on the project as they come due, the Engineer may suspend payment for all or a part of the contract. If payment is suspended, the contractor may have the option, with the written agreement of the Engineer, of continuing performance under the contract. If the contractor suspends performance, he shall not resume performance until he receives a back to work notice from the Engineer. In the event that the Engineer suspends payment for all or part of the project as provided herein, the contractor waives any and all right to bring any claim for damages as a result of the suspension or delayed payment.

In the event the Engineer determines that there are inadequate or insufficient road funds available for the payment of Engineer's estimates for work on the project as they come due, the Engineer may at his discretion, by written notice 10 days in advance, terminate all or part of the contract. The Cabinet will remain obligated to pay, as soon as funds are available, all actual items of work performed prior to the contractor's receipt of the notice termination. The contractor shall be entitled to reasonable close out costs attendant to termination of the contract under this provision, but in no event shall the contractor be entitled to more than 10% of the total contract price.

The contractor agrees to all terms and conditions stated above in the event there are inadequate or insufficient funds available under the contract for payment, and contractor further expressly waives any right to assert a claim or bring any form of action against the Cabinet under the contact or pursuant to Kentucky law or regulation, including but not limited to KRS Chapter 45A or KRS Chapter 13B.

To the fullest extent permitted by law, the Contractor shall indemnify and hold harmless the Transportation Cabinet from and against claims, damages, losses, and expenses, including but not limited to attorney's fees, arising out of or resulting from suspension or termination under this section. Such obligation shall not be construed to negate, abridge, or reduce other rights or obligations of indemnity which would otherwise exist as to a party or person under the contract.

In the event of any inconsistent provisions within this contract with respect to this section and any other section, the provisions of this section shall govern and control.

Supplemental Specifications to The Standard Specifications for Road and Bridge Construction, 2000 Edition (Effective with the April 25, 2003 Letting)

SUBSECTION:	102.07.01 General.
REVISION:	Replace the first sentence with the following: Submit the Bid Proposal on the forms furnished by the Department including the Highway Bid Program bid item sheets and disk created from the Department's internet web site.
SUBSECTION:	102.07.02 Computer Bidding.
REVISION:	Replace the subsection with the following: Subsequent to ordering a Bid Proposal for a specific project, use the Department's Highway Bid Program on the internet web site of the Department of Highways, Division of Contract Procurement. Download the bid item quantities from the Department's web site to prepare a Bid Proposal for submission to the Department. Insert the completed bid item sheets printed from the Highway Bid Program into the Proposal and submit along with the disk created by said program. In case of a dispute, the Bid Proposal and bid item sheets created by the Highway Bid Program take precedence over any bid submittal. Furthermore the Department takes no responsibility for loss, damage of disks or the compatibility with the bidder's computer equipment or software.
SUBSECTION:	102.08 IRREGULAR BID PROPOSALS.
REVISION:	Add the following to the first set of items: 4) Fails to submit a disk created from the Highway Bid Program
SUBSECTION:	102.08 IRREGULAR BID PROPOSALS.
REVISION:	Replace 1) of the second set of items with the following: 1) when the Bid Proposal is on a form other than that furnished by the Department or printed from other than the Highway Bid Program , or when the form is altered or any part is detached.
SUBSECTION:	103.05 REQUIREMENT OF CONTRACT BOND.
REVISION:	Replace the first sentence of the first paragraph with the following: To be acceptable to the Department, the surety must have a minimum A. M. Best rating of an "A-", be listed on the U.S. Treasury Listing of approved sureties for an amount equal to or greater than the amount of the bond and be an admitted carrier in the Commonwealth of Kentucky. Replace the last sentence of the first paragraph with the following: If at any time during the performance of the Contract the surety company falls below the minimum acceptable requirements, the Contractor shall file a new bond in an amount established by the Commissioner, or his designee, within 14 calendar days of such failure to meet the minimum requirements. Add the following to the end of the subsection: The Department reserves the right to copy the surety on all of its communications with the Contractor concerning the Contractor's performance, or performance deficiencies, on the project and further reserves the right to communicate directly with the surety to inform them of the Contractor's performance, or performance deficiencies, on the bonded project.
SUBSECTION:	108.02 PRECONSTRUCTION CONFERENCE.
REVISION:	Add the following to the first paragraph: Include a plan for updating the schedule. As a minimum, the schedule must be updated whenever a situation arises or event occurs that significantly affects the progress of the work or when the Engineer directs.
SUBSECTION:	109.04.02 Cost-Plus Work.
PART:	F) Overhead.
REVISION:	Add the following new part: F) Overhead. The Department will pay for overhead cost associated with administering the work, not to exceed 5 percent, when the work is done by a Subcontractor.

SUBSECTION: 112.02.05 Temporary Pavement Markings.
PART: C) Temporary Striping.
NUMBER: 2) Paint.
REVISION: Replace with the following:

2) Paint. Conform to Section 842

SUBSECTION: 112.02.05 Temporary Pavement Markings.
PART: C) Temporary Striping.
NUMBER: 3) Drop on Beads.
REVISION: Replace with the following:

3) Drop on Beads. Conform to Section 839

SUBSECTION: 112.03.01 General Traffic Control.
PART: G) Signs.
REVISION: Replace the first sentence with the following:

Completely cover all lettering and symbols on existing, permanent, and temporary signs which do not properly apply to the current traffic phasing, and maintain the covering until the signs are applicable or are removed.

SUBSECTION: 112.03.01 General Traffic Control.
PART: I) Temporary Traffic Signals.
REVISION: Replace the MUTCD reference "Section 4B" with "Chapter 4D"

SECTION: 201 STAKING.
Delete the section and replace with the following:

201.01 DESCRIPTION. When listed as a bid item, furnish all personnel, equipment, stakes, and hubs necessary to construct the roadway and appurtenant structures to the grade and alignment specified in the Contract. When no bid item is listed, the Department will perform staking.

201.02 MATERIALS AND EQUIPMENT. Reserved.

201.03 CONSTRUCTION

201.03.01 Contractor Staking. Perform all necessary surveying under the general supervision of a Professional Engineer or licensed Land Surveyor.

The Department's Engineer will perform the following:

1) Provide adequate referencing of control points to allow prompt re-establishment of the survey centerline, right of way, ramps, crossroads, and frontage roads during construction.
2) Set permanent or temporary bench marks as required.
3) Take any cross sections to verify the accuracy of the original ground information.
4) Take "check sections" to verify that construction is to grade and alignment as specified in the Contract.

The Contractor will perform the following:

1) Re-establish the centerline and set such additional points as may be necessary for construction of the project. Verify the accuracy of the horizontal and vertical control as established by the Department's Engineer before beginning construction.
2) Establish clearing lines so that the project may be cleared without violating the limits of the right of way.
3) Set slope stakes right and left of the survey centerline at 50-foot to 100-foot intervals to guide the contractor in constructing the cuts and fills. These stakes are generally set to shoulder grade for fills and ditch grade for cuts. The cut or fill information, slope, and distance from centerline should be on the front face of the stake; the station number should be on the back of the stake. This stake should be guarded with a lath that has the station number written on the side facing the centerline.

revision continued

4) Grade Stakes (Bluetops). Fine grade control will be set to aid the Contractor in establishing the typical sub-grade section. When using conventional transit and chain methods this fine grade control will be established by setting hubs(referred to as blue tops) every 50 feet to the sub-grade section. These blue tops are set to the hundredth of a foot in elevation and are located left and right of pavement centerline, usually at the edge of metal. Bluetops will be set for the top of sub-grade and the top of aggregate base and/or drainage blanket material. Refer to Section 204.03.10 and Section 302.03.06 for construction tolerances of sub-grade and aggregate base or drainage blanket.
5) Stake all structures (bridges, culverts, pipe, and other appurtenances) so that they can be built to the proper line and grade as shown on the plans and to perform the function for which they were designed.

201.03.02 Department Staking. The Department's Engineer will set all stakes necessary for the construction of the roadway and appurtenant structures to the proper grade and alignment in accordance with the contract.

201.03.03 Electronic Surveying. The Department encourages the use of new and advanced technology in the construction of its roads and structures. However, the following restrictions apply:

1) Tolerances are unchanged. Refer to Section 204.03.10 and Section 302.03.06.
2) Sub-grade check sections are to be done every 500 feet in tangent sections and every 100 feet in curves using conventional survey methods to establish bluetops and to verify the correct operation of the electronic equipment.
3) The Contractor will submit his electronic data files to the Department's Engineer at the beginning of the project so that the Engineer can reference the data for verification of the field work.

201.04 MEASUREMENT.

201.04.01 Contractor Staking. When listed as a bid item, the Department will measure staking as lump sum. The Department will not measure surveying required to correct any errors or inaccuracies resulting from construction operations for payment.

201.04.02 Department Staking. The Department will not measure quantities for payment. When any stakes are disturbed due to unwarranted negligence of the Contractor, the Department will measure the work required to reset the stakes and deduct the cost from monies due the Contractor.

201.05 PAYMENT. The Department will make payment for the completed and accepted quantities under the following:

Code	Pay Item	Pay Unit
2726	Staking	Lump Sum

The Department will consider payment as full compensation for all work required under this section.

SUBSECTION: 204.03.08 Disposal of Wasted Materials.
REVISION: Add the following to the end of the second paragraph:

The Department will pay for the geotechnical investigation and analysis of the proposed waste area when one is requested by the Engineer. Ensure all work is performed by a pre-qualified geotechnical consultant and according to the Department's Geotechnical Manual.

SUBSECTION: 206.04.01 Embankment-in-Place.
REVISION: Add the following:

The Department may make adjustments to embankment-in-place projects when there is actually unanticipated waste on the project. Waste generated by the project phasing will not be considered for adjustment. The Department will make an adjustment for the actual costs incurred by the Contractor.

SUBSECTION:	208.03.03 Application of Chemical.
PART:	B) Lime.
NUMBER:	3)
REVISION:	Replace the second sentence with the following: Use only when saturated soil conditions exist and the slurry method would worsen the situation or when weather conditions prohibit the use of slurry.
SUBSECTION:	208.03.06 Curing and Protection.
REVISION:	Replace the first sentence of the fourth paragraph with the following: Do not allow any traffic or equipment on the finished surface until 7 days above 40 °F curing is completed or the roadbed cores achieve a minimum strength requirement of 75 psi.
SUBSECTION:	208.04.02 Lime.
REVISION:	Add the following to the end of the second paragraph: When hydrate or quicklime is furnished for dry application, the Department will measure the actual quantity applied to the roadbed.
SUBSECTION:	212.03.03 Permanent Seeding and Protection.
PART:	A) Seed Mixtures for Permanent Seeding.
REVISION:	Replace with the following: A) Seed Mixture for Permanent Seeding. Use seed Mixture No. I, No. III, or as the Contract specifies. Mixture No. I: 75% Kentucky 31 Fescue (Festuca arundinacea) 10% Red Top (Agrostis alba) 5% White Dutch Clover (Trifolium repens) 10% Rygrass, perennial (Lolium perenne) Mixture No. III: 30% Kentucky 31 Fescue (Festuca arundinacea) 15% Red Top (Agrostis alba) 15% Partridge Pea (Cassia fasciculata) 20% Sericea Lespedeza 10% Sweet Clover – Yellow (Melitotus officinalis) 10% Rygrass, perennial (Lolium perenne)
SUBSECTION:	212.03.03 Permanent Seeding and Protection.
PART:	B) Procedures for Permanent Seeding.
REVISION:	Add the following after the third sentence: Remove all rock and dirt clods over 4 inches in diameter from the surface of the seedbed.
SUBSECTION:	212.03.03 Permanent Seeding and Protection.
PART:	C) Crown Vetch.
REVISION:	Replace the first sentence with the following: Sow crown vetch seed on all areas having a slope 3:1 or steeper and consisting of soil or mixtures of broken rock and soil.
SUBSECTION:	212.03.03 Permanent Seeding and Protection.
PART:	E) Erosion Control Blanket.
REVISION:	Replace the first sentence with the following: Install erosion control blankets in ditches, except those to be paved or rock lined, to a flow depth of 1.5 feet.
SUBSECTION:	213.03.02 Progress Requirements.
REVISION:	Replace the word "may" with "will" in the second sentence of the third paragraph.

SUBSECTION:	213.03.02 Progress Requirements.
REVISION:	Replace the third sentence of the third paragraph with the following: Additionally, the Department will apply a penalty equal to the liquidated damages when all aspects of the work are not coordinated in an acceptable manner within 5 days after written notification.
SUBSECTION:	214.04 MEASUREMENT.
REVISION:	Replace the second sentence with the following: The Department will not measure fabric when the Contract indicates the fabric is incidental to the work or when the specification for another item requires incidental installation of geotextile fabric.
SUBSECTION:	302.02 MATERIALS.
REVISION:	Add the following: 302.02.03 Mixer. Equip the mixer with a water flow system with a positive cut-off control that will stop the flow of water simultaneously with any stoppage in the flow of aggregate and with valves or other devices that can be easily reset when a change in the rate of flow is desired.
SUBSECTION:	401.02.01 All Asphalt Mixing Plants.
PART:	A)
REVISION:	Replace the first sentence of the second paragraph with the following: Provide a laboratory inspected and qualified according to the Department's Quality Assurance Program for Materials Testing and Acceptance and conforming to the following minimum requirements:
SUBSECTION:	401.02.01 All Asphalt Mixing Plants.
PART:	A)
REVISION:	Replace the fourth paragraph with the following: In addition to the equipment required to perform testing according to the AASHTO standards and Kentucky Methods (KM), equip each laboratory with the following minimum furnishings and equipment, conforming to the applicable specifications, as required for the type of construction specified in the Contract: 1) one workbench, at least 2.5 feet wide by 6 feet long; 2) one desk or table and 2 chairs; 3) a fire extinguisher located near the door; and 4) a first aid kit.
SUBSECTION:	401.02.01 All Asphalt Mixing Plants.
PART:	Between Items "H" and "I"
REVISION:	Insert the following new item: Recordation. Provide an automatic graphic or digital record of the production quantities according to AASHTO M156.
SUBSECTION:	401.02.01 All Asphalt Mixing Plants.
PART:	I) Thermometers.
REVISION:	Delete the third paragraph.
SUBSECTION:	401.02.04 Special Requirements for Continuous Plants.
PART:	B) Weight Calibration of Asphalt Binder and Aggregate Feed.
REVISION:	Add the following new paragraph: When equipped with aggregate weighing devices (belt scales), calibrate each cold feeder, along with the aggregate weighing devices, according to Subsection 401.02.05 A) and B).
SUBSECTION:	402.03.01 Responsibilities.
PART:	B) Setup.
REVISION:	Replace (MSG) with (G_{mm})
SUBSECTION:	402.03.01 Responsibilities.
REVISION:	Add the following: C) Process Control. After the setup period, perform the process control operations of KM 64-426.

SUBSECTION:	402.03.02 Acceptance.
PART:	A) General.
REVISION:	Add the following: Document and report all acceptance tests on the Asphalt Mixtures Acceptance Workbook (AMAW). Submit the completed AMAW for each lot to the Department within 5 working days after the completion of the lot.
SUBSECTION:	402.03.02 Acceptance.
PART:	C) Setup.
REVISION:	Add the following after the second sentence: For mixtures with a total-project quantity between 500 and 1,000 tons, perform a minimum of one process control test for AC, AV, and VMA, and report the results to the Engineer. Add the following after the seventh sentence: Ensure the adjusted AC remains above the minimums specified in Subsection 403.03.03 C) 2).
SUBSECTION:	402.03.03 Verification.
REVISION:	Replace the first two sentences with the following: For volumetric properties, the Department will perform a minimum of one verification test for AC, AV, and VMA for each lot according to the corresponding procedures as given in Subsection 402.03.02. For specialty mixtures, the Department will perform one AC and one gradation determination per lot according to the corresponding procedures as given in Subsection 402.03.02. However, Department personnel will not perform AC determinations according to KM 64-405.
SUBSECTION:	402.05.02 Asphalt Mixtures and Mixtures with RAP.
PART:	D) Conventional and RAP Mixtures Placed Monolithically as Asphalt Pavement Wedge.
REVISION:	Replace with the following: The Department will pay as mainline mixture but use a 1.00 pay value for all properties.
SUBSECTION:	402.05.01 Specialty Mixtures.
REVISION:	Add "asphalt mixtures for temporary applications" to the list of defined specialty mixtures.
SUBSECTION:	403.02.05 Release Agent.
REVISION:	Replace with the following: Provide materials conforming to KM 64-422.
SUBSECTION:	403.02.06 Transport Equipment.
REVISION:	Add the following after the first sentence: Do not load trucks that are contaminated with an unapproved release agent. When such contamination is identified after loading, reject the load. In either case, remove the truck and respective driver from the project for the duration of the project.
SUBSECTION:	403.02.09 Small Tools and Portable Equipment.
REVISION:	Add the following at the end of the first paragraph: Do not use an unapproved release agent on any small tools or equipment incidental to the paving operation.
SUBSECTION:	403.03.01 Seasonal and Weather Limitations.
REVISION:	Replace "November 15" with "November 30" throughout the Subsection.
SUBSECTION:	403.03.02 Preparation of Base.
REVISION:	Replace the first sentence of the eighth paragraph with the following: Remove existing Type V markers. Fill the recess and any additional damaged area with compacted asphalt mixture within 24 hours of removal.

SUBSECTION: 403.03.03 Preparation of Mixture.
PART: A) Mixture Composition.
REVISION: Replace Part A) with the following:

A) Mixture Composition. Provide the appropriate mixture composition for the specified asphalt mixture, or substitute a higher aggregate type. When substituting a mixture of a higher ESAL class, provide a mixture of no more than one ESAL class higher than the specified asphalt mixture. Conform to the gradation requirements (control points) of AASHTO MP2 for the Superpave mixture. Unless the Engineer authorizes otherwise in writing, use the same type and source of ingredient aggregates and asphalt binder throughout the entire project for each type of mixture. For asphalt surface courses containing 100 percent polish-resistant coarse aggregate, limit the portion of non-polish-resistant fine aggregate retained on a No. 4 sieve to 5 percent of the total combined aggregates.

When using a porous aggregate, increase the asphalt binder content (AC) as needed for asphalt binder absorption by the aggregate.

The following aggregate requirements are listed in order of the highest, Type A, to the lowest, Type D:

1) Type A. Provide 100 percent of the coarse aggregate Class A sources. Ensure that 20 percent of the total combined aggregate is Class A polish-resistant fine aggregate.
2) Type B. Select either of the 2 following options:

   a) Provide 100 percent of the coarse aggregate from Class B sources.
   b) Provide a combined aggregate, retained on the No. 4 sieve, that is a minimum of 50 percent from any Class A polish-resistant aggregate source except those identified as "Not Permitted as the polish-resistant portion of Class B blends." Submit all Class B blends to the Department for review.

   For Option a) or b) above, ensure one of the following:

   - 20 percent or more of the total combined aggregate is Class A polish resistant fine aggregate.
   - 30 percent or more of the total combined aggregate is Class B polish resistant fine aggregate.
   - 30 percent or more of the total combined aggregate is a combination of Class A and Class B polish resistant fine aggregate.

3) Type C. Ensure that 40 percent or more of the total combined aggregate is polish-resistant; Class A coarse, fine, or combination.
4) Type D. No restriction on aggregate type.

SUBSECTION: 403.03.03 Preparation of Mixture.
PART: B) Moisture Content of Mix
REVISION: Replace the third sentence with the following:

When moisture contents are 0.10 percent or greater, adjust the AC determination made on plant-produced mixture to reflect the actual AC as KM 64-434 directs.

SUBSECTION: 403.03.03 Preparation of Mixture.
PART: C) Mix Design Criteria.
REVISION: Replace the first sentence with the following:

Conform to the gradation requirements (control points) of AASHTO MP2 for the Superpave mixture type the Contract specifies.

SUBSECTION: 403.03.03 Preparation of Mixture.
PART: C) Mix Design Criteria.
NUMBER: 1)
REVISION: Replace the first sentence with the following:

Submit a preliminary mix design, completed using a Superpave gyratory compactor (SGC) conforming to AASHTO PP 35.

Add the following after the second sentence:

The Department will require a dust-to-binder range of 0.8 to 1.6.

SUBSECTION: 403.03.03 Preparation of Mixture.
PART: C) Mix Design Criteria.
NUMBER: 2) Selection of Optimum AC.
REVISION: Add the following:

Ensure the optimum AC is a minimum of 5.0 percent by weight of the total mixture for all 0.5-inch nominal surface mixtures and 5.3 percent by weight of the total mixture for all 0.38-inch nominal surface mixtures.

SUBSECTION: 403.03.06 Thickness Tolerance.
TABLE: Nominal Maximum Size of Mixture vs. Thickness Range
REVISION: Delete

SUBSECTION: 403.03.08 Rumble Strips.
REVISION: Replace with the following:

A) Interstates and Parkways. Construct sawed rumble strips on all mainline and ramp shoulders to the dimensions shown below.

B) Other Roads. When using a surface mixture instead of Asphalt Mixture for Pavement Wedge, or when the Engineer deems it appropriate to pave the driving lanes and the adjacent shoulder monolithically, provide rolled rumble strips. Construct strips on all main line shoulders to the dimensions shown below. When furnishing Asphalt Mixture for Pavement Wedge, binder, or a base mixture for shoulders, the Department will not require rumble strips.

Time the rolling operation so indentations are at the specified size and depth without causing unacceptable displacement of the asphalt mat. Correct unacceptable rolled-in rumble strips by sawing.

On shoulders less than 3 feet, shorten the length and distance of the strips as the Engineer directs.

If preferred, construct the rumble strips by sawing as specified for Interstates and Parkways.

RUMBLE STRIP DIMENSIONS

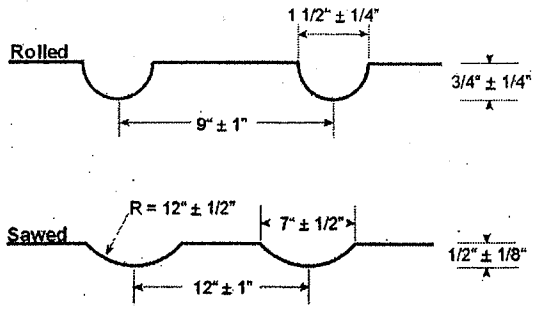

Distance from the edge of the mainline pavement to the end of the strip: 1 foot
Length of strips: Rolled 2 feet, Sawed 16 inches

Supplemental Specifications to The Standard Specifications for Road and Bridge Construction, 2000 Edition (Effective with the April 25, 2003 Letting)

SUBSECTION: 403.03.09 Leveling and Wedging, and Scratch Course.
PART: A) Leveling and Wedging.
REVISION: Replace the first sentence with the following:

Conform to the gradation requirements (control points) for base, binder, or surface as applicable.

SUBSECTION: 403.03.09 Leveling and Wedging, and Scratch Course.
PART: B) Scratch Course.
REVISION: Replace the second sentence with the following:

Conform to the gradation requirements (control points) for base, binder, or surface as the Engineer directs.

SUBSECTION: 403.04.03 Asphalt Mixtures.
REVISION: Add the following:

The Department will not measure rumble strips for payment and will consider them incidental to this bid item.

SECTION: 404 OPEN-GRADED FRICTION COURSE
TABLE: LOT PAY ADJUSTMENT SCHEDULE FOR SPECIALTY MIXTURES
REVISION: Replace the table with the following table:

LOT PAY ADJUSTMENT SCHEDULE FOR SPECIALTY MIXTURES (TEST DEVIATION FROM JMF)

	Pay Value	Deviation From JMF (%)
Asphalt Binder Content	1.00	0.0-0.5
	0.98	0.6
	0.95	---
	0.90	0.7
	0.85	0.8
	0.75	≥ 0.9
1-1/2 inch Sieve	1.00	0-13
	0.98	14
	0.95	15-16
	0.90	17-20
	0.85	21-23
	0.75	≥ 24
1 inch, 3/4 inch, and 1/2 inch Sieves	1.00	0-9
	0.98	10
	0.95	11-12
	0.90	13-14
	0.85	15-16
	0.75	≥ 17
3/8 inch, No. 4, No. 8, No. 16, and No. 30 Sieves	1.00	0-8
	0.98	9
	0.95	10
	0.90	11-12
	0.85	13-14
	0.75	≥ 15
No. 50 Sieve	1.00	0-6
	0.98	7
	0.95	8
	0.90	9
	0.85	10
	0.75	≥ 11
No. 100 Sieve	1.00	0-3
	0.98	---
	0.95	4
	0.90	5
	0.85	---
	0.75	≥ 6
No. 200 Sieve	1.00	0.0-2.0
	0.98	2.5
	0.95	3.0
	0.90	---
	0.85	3.5
	0.75	≥ 4.0
Fineness Modulus	1.00	0.0-0.30
	0.98	0.31-0.34
	0.95	0.35-0.39
	0.90	0.40-0.46
	0.85	0.47-0.55
	0.75	≥ 0.56

Supplemental Specifications to The Standard Specifications for Road and Bridge Construction, 2000 Edition (Effective with the April 25, 2003 Letting)

SUBSECTION: 406.02.01 Tack Coat.
REVISION: Replace with the following:

Furnish any of the following asphalt materials conforming to 806: SS-1, SS-1h, or RS-1.

SUBSECTION: 406.02.03 Curing Seal.
REVISION: Replace with the following:

Furnish any of the following asphalt materials conforming to 806: RS-1, RS-2, SS-1, SS-1h, or Primer L.

SUBSECTION: 406.03.03 Application.
REVISION: Replace the temperature table with the following:

Primer L	60-120 °F
SS-1, SS-1h	70-160 °F
RS-1, RS-2	70-140 °F

SUBSECTION: 406.03.03 Application.
PART: B) Asphalt Tack Coat.
REVISION: Replace the second paragraph with the following:

When furnishing RS-1 for tack, apply it undiluted.

Replace the first sentence of the third paragraph with the following:

When furnishing SS-1 or SS-1h for tack, the Department will allow diluted or undiluted application provided uniform and complete coverage is achieved.

SUBSECTION: 407.02.02 Aggregate.
REVISION: Change Sieve Size No. 30 to read Sieve Size No. 50.

SUBSECTION: 408.04.02 Mobilization for Asphalt Pavement Milling and Texturing.
REVISION: Add the following:

For group contracts, the Department will measure the quantity for each project (subsection) that has a bid item for Mobilization for Asphalt Pavement Milling and Texturing.

SUBSECTION: 409.02 MATERIALS AND EQUIPMENT.
REVISION: Replace "KM 64-427" with the following:

the guidelines in Subsection 409.03.02

SUBSECTION: 409.03.01 Restrictions.
REVISION: Add the following sentence:

When the mixture's bid item specifies PG 76-22, limit RAP content to 20 percent or less.

SUBSECTION: 409.03.02 Preparation of Mixture.
PART: A) Mix Requirements.
REVISION: Void the Revision and replace with the following:

Conform to the Contract requirements for each mixture produced using RAP. If mixtures produced using RAP do not conform to the requirements for that mixture, complete the project using all virgin materials at no additional expense to the Department. Conform to the following table to select the appropriate grade of virgin asphalt binder to blend with the RAP:

Mixture's Bid Item	Appropriate Virgin Asphalt Binder		
	0-20% RAP	21-30% RAP	>30% RAP
PG 76-22	PG 76-22	-	-
PG 70-22	PG 70-22	PG 64-22	*
PG 64-22	PG 64-22	PG 64-22	*

* Select according to KM 64-427

Supplemental Specifications to The Standard Specifications for Road and Bridge Construction, 2000 Edition (Effective with the April 25, 2003 Letting)

SUBSECTION: 410.05 PAYMENT.
REVISION: Replace the RIDE QUALITY ADJUSTMENT SCHEDULE with the following 2 schedules:

RIDE QUALITY ADJUSTMENT SCHEDULE FOR ROADS POSTED GREATER THAN 45 MPH

IRI	Pay Value[1]
36 or Less	+0.15
37 to 46	= 0.015 x (47 – IRI)
47 to 66	0.00
67 to 76	= 0.015 x (67 – IRI)
77 or higher	Corrective work or replacement required

RIDE QUALITY ADJUSTMENT SCHEDULE FOR ROADS POSTED 45 MPH OR LESS

Rideability Index	Pay Value[1]
36 or Less	+0.15
37 to 46	= 0.015 x (47 – IRI)
47 to 85	0.00
86 or lower	Corrective work or replacement required

[1] *The Department will not apply a positive pay value for corrective work other than removal and replacement to achieve the IRI*

SUBSECTION: 501.03.13 Finishing.
PART: H) Texturing.
REVISION: Replace the third paragraph with the following:

Form transverse grooves in the concrete with a width between 0.09 inch and 0.13 inch and a depth between 0.12 inch and 0.19 inch. Space the grooves at random intervals between 0.4 inch to 1.5 inches with no more than 50 percent of the spacing being one inch or greater.

SUBSECTION: 502.03 CONSTRUCTION.
PART: D) Strength Testing and Opening to Traffic.
NUMBER: 1) Cylinders.
REVISION: Replace the first sentence with the following:

The Department will cast, cure, and test 3 sets from each 150 cubic yards of concrete.

SUBSECTION: 503.03.09 Ride Quality.
REVISION: Replace item 4) with the following:

Achieve an IRI of 63 or less for each traffic lane with no individual one-mile section having an IRI of greater than 76.

SUBSECTION: 506.03.01 Header Curb, Valley Gutter, and Curb and Gutter (Combination).
REVISION: In the second sentence of the third paragraph replace the Subsection reference 601.03.12 with 501.02.10.
In the second sentence of the sixth paragraph replace the Subsection reference 601.03.16 with 501.03.17 D).

SUBSECTION: 508.03.03 Precast Construction.
REVISION: Replace "Subsection 605.03" in the first sentence with Section 605.

SUBSECTION: 509.03 CONSTRUCTION.
REVISION: Replace "Subsection 605.03" in the first sentence with Section 605.

SUBSECTION: 601.02.13 Forms.
PART: F) Stay-In-Place Metal Forms.
NUMBER: 1) Forms and Supports.
REVISION: Replace ASTM A 446 with ASTM A 653.
Replace ASTM A 525 with ASTM A 924.

Supplemental Specifications to The Standard Specifications for Road and Bridge Construction, 2000 Edition (Effective with the April 25, 2003 Letting)

SUBSECTION: 601.03.03 Proportioning and Requirements.
PART: A) Concrete.
TABLE: INGREDIENT PROPORTIONS AND REQUIREMENTS FOR VARIOUS CLASSES OF CONCRETE
REVISION: Add the following foot note to AA Slump:

The Department may allow the slump of AA concrete to be increased up to a 6 inch maximum, provided the w/c ratio does not exceed 0.40 and a high range water reducer (Type F or G) is used. Trial Batches will be required if producer has not previously supplied.

SUBSECTION: 601.03.03 Proportioning and Requirements.
PART: A) Concrete.
TABLE: INGREDIENT PROPORTIONS AND REQUIREMENTS FOR VARIOUS CLASSES OF CONCRETE
REVISION: Replace note 11 with the following:

Compressive Strength Testing, Opening to Traffic and Acceptance Requirements for Class M1 and Class M2. Test one set of cylinders at 24 ± 0.5 hours from the time of molding, and allow the resulting average strength to dictate one of the following actions:

(a) *If the average compressive strength is 3,500 psi or above, open to traffic, and test the remaining set of cylinders at an age of 7 days or 28 days.*
(b) *If the average compressive strength is between 3,000 and 3,500 psi, open to traffic, and test the remaining set of cylinders at 48 ± one hour.*
(c) *If the average compressive strength is less than 3,000 psi, protect the item as directed or approved. Test the remaining set of cylinders at 48 ± one hour.*

If the average strength of the cylinders tested at 48 ± one hour is 3,500 psi or above, the Engineer will consider the concrete acceptable. If the average strength is below 3,500 psi, take 2 cores from the concrete and test at an age of 7 days. If the average strength of the cores tested at 7 days is 4,000 psi, the Engineer will consider the concrete acceptable.

When 2 consecutive first sets of cylinders or when 2 first sets out of any 4 first sets of cylinders do not reach 3,500 psi, compressive strength, the Engineer will suspend the work. Resume work when the Engineer approves the adjusted mix design.

Cast 2 sets of cylinders from the concrete used for each placement.

Cast the cylinders after tests verify that the concrete conforms to slump and air content requirements. Make and cure the cylinders according to the procedures outlined in KM 64-305. Department personnel will test the mixture and cast cylinders.

SUBSECTION: 601.03.03 Proportioning and Requirements.
PART: C) Mixtures Using Type IP, IS and I(SM) Cement or Mineral Admixtures.
NUMBER: 2) Mineral Admixtures.
REVISION: Add the following after the first sentence:

Reduction of the total cement content by a combination of any mineral admixtures will be allowed, up to a maximum of 30 percent.

SUBSECTION: 601.03.03 Proportioning and Requirements.
PART: C) Mixtures Using Type IP Cement or Mineral Admixtures.
NUMBER: 2) Mineral Admixtures.
LETTER: b) Ground Granulated Blast Furnace Slag (GGBF Slag).
REVISION: Replace the first sentence with the following:

When added as a separate ingredient, use Grade 120 GGBF or 100 GGBF slag to reduce the quantity of cement, except do not use GGBF slag to reduce the quantity of Type IS or I(SM) cement.

SUBSECTION: 601.03.04 Classes and Primary Uses.
PART: P) Non-Shrink Grout.
REVISION: Replace with the following:

Bonding and sealing for post-tensioning, tie-back rods and bolts, and box beams.

Supplemental Specifications to The Standard Specifications for Road and Bridge Construction, 2000 Edition (Effective with the April 25, 2003 Letting)

SUBSECTION:	601.03.09 Placing Concrete.
PART:	A) General.
REVISION:	Add the following to the fifth paragraph: When pumping, equip the delivery pipe with a nozzle, having a minimum of 2 right angles, at the discharge end.
SUBSECTION:	601.03.09 Placing Concrete.
PART:	D) Weather Limitations.
REVISION:	Replace the first sentence of the second paragraph with the following: Maintain the temperature of the mixture at or below 90 °F during placement. Unless the Engineer determines that safety concerns or other considerations prohibit a shutdown, cease concrete production when the mixture exceeds 90 °F until adequate methods are in place to reduce or maintain the mixture temperature.
SUBSECTION:	601.03.15 Opening to Traffic.
TABLE:	Required Time in Calendar Days Before Applying Significant Loads on Concrete Structures
REVISION:	Change the title of the seventh item to the following: Caps on Concrete Pile Bents, Open Column Abutments, and Piers
SUBSECTION:	606.02 MATERIALS AND EQUIPMENT.
REVISION:	Add the following subsection: 606.02.11 Coarse Aggregate. Conform to Section 805, size 9-M.
SUBSECTION:	607.03.05 Bolted Connections Using High-Strength Steel Bolts.
PART:	B) Direct Tension Indicators.
REVISION:	Replace the first two sentences of the third paragraph with the following: Under normal conditions, install the tension indicator under the non-turned element of the fastening system. Obtain the Engineer's permission before installing tension indicators under the turned element. If the Engineer determines that it is necessary to install the tension indicator under the turned element, install additional hardened washers according to the manufacturer's instructions. Add the following to the end of the fourth paragraph: The fastener assembly may also need to be replaced.
SUBSECTION:	607.03.08 Planing and Finishing.
PART:	B) Flame Cutting.
REVISION:	Replace the first sentence of the second paragraph with the following: Remove roughness exceeding these values and occasional notches or gouges no more than 3/16 inch deep, on otherwise satisfactory surfaces, by machining or grinding.

SUBSECTION: 607.03.23 Cleaning and Painting.
PART: D) Preparation for Field Coatings.
REVISION: Replace the second and third paragraphs with the following:

After erection, including all bolting and remedial work, prepare the shop applied zinc coating for field applied intermediate coating as follows. Remove all grease, oil or other lubricants from all surfaces to be painted including lubricant or residuals from the surfaces of all galvanized nuts, bolts and washers by solvent cleaning according to SSPC SP 1. When dry overspray from the shop applied zinc coating exists, remove by sanding. High pressure water wash all structural steel at 4,500 to 5,000 psi. using clean potable water. As needed, use a non-sudsing, bio-degrable detergent to remove all surface contaminants not removed by high pressure water washing. Rinse all areas where a detergent and/or solvent was applied by pressure washing with clean potable water. Blast clean all surfaces sustaining damage to the shop applied zinc coating to the pictorial standards described in subsection B. Apply a field coat of approved zinc rich coating to all areas not possessing an acceptable shop applied zinc coating. Completely remove all rust, scale and other foreign material before applying the intermediate coating.

When application of the finish coat exceeds the recoat window of the intermediate coat, abrade the surface of the intermediate coat according to the coating manufacturer's recommendations before applying the finish coat.

SUBSECTION: 607.03.23 Cleaning and Painting.
PART: E) Application of Field Coatings.
REVISION: Replace the second paragraph with the following:

Apply paint only to clean and dry surfaces when the ambient air temperature is 40 °F or greater, the surface temperature of the steel members to be painted is at least 5 °F above the dew point, and the relative humidity is less than 90 percent. Do not apply paint to damp or frosted surfaces, nor during any period of rainfall.

Replace the fifth paragraph with the following:

Paint from the top of the structure toward the bottom, and proceed by sections, bays, or parts of the work, unless the Contract or Engineer directs otherwise.

SUBSECTION: 611.02.01 Concrete.
REVISION: Replace the first sentence with the following:

Conform to ASTM C 1433.

SUBSECTION: 611.03.01 Transportation and Handling.
REVISION: Replace the first sentence with the following:

Handle and store the precast units so that flexural stresses are not induced until the concrete age is 7 days or attains a compressive strength of 3,000 psi.

SUBSECTION: 611.03.02 Precast Unit Construction.
REVISION: Add the following:

4) Contrary to ASTM C 1433 Section 10.3, assure the compressive strength of the cores tested are equal to or greater than the design strength.

SUBSECTION: 611.03.07 Joints.
PART: A) Rubber Gaskets.
REVISION: Replace the title with the following:

A) Butyl Rubber Sealant.

SUBSECTION: 611.03.07 Joints.
PART: B) Flexible Plastic Gaskets.
REVISION: Replace the title with the following:

B) Rubber Gaskets.

SUBSECTION:	613.05 PAYMENT.
REVISION:	Replace 8160 Structure Excavation with the following: 2203 Structure Excavation Unclassified
SUBSECTION:	614.02.01 Paint.
REVISION:	Add the following: Furnish a paint system in which all coats are produced by the same manufacturer and use the same system throughout the entire project.
SUBSECTION:	614.03.06 Paint Application.
REVISION:	Replace the first sentence of the fourth paragraph with the following: Paint from the top of the structure toward the bottom, and proceed by sections, bays, or parts of the work, unless the Contract or Engineer directs otherwise.
SUBSECTION:	701.02.03 Joint Materials.
PART:	D) Flexible Plastic Gaskets.
REVISION:	Replace with the following: D) Butyl Rubber Sealants. Conform to Section 807.
SUBSECTION:	701.02.04 Bedding Materials.
REVISION:	Replace the first sentence with the following: Use No. 8 aggregate, No. 9 aggregate, or a fine aggregate conforming to Subsection 804.08 for bedding material.
SUBSECTION:	701.02.04 Bedding Materials.
TABLE:	A1, A2, and A3 Characteristics
REVISION:	Under A3, replace "51 max" with "51 min"
SUBSECTION:	702.03.05 Joints.
PART:	A) Reinforced Concrete Pipe.
NUMBER:	2) Rubber Gaskets.
REVISION:	Replace with the following: In addition to the requirements of Subsection 701.02, use a pipe section conforming to AASHTO M 315. Use the gasket manufacturer's recommended cement and lubricant. Snugly fit the rubber gasket in the beveled surface of the tongue and groove ends of the sections to form a flexible seal under all conditions of service.
SUBSECTION:	701.03.05 Joints.
PART:	B) Corrugated Metal Pipe.
REVISION:	Void the Revision and replace with the following: Construct joints using a band with annular corrugations and a bolt, bar and strap connection. Use a minimum nominal band width of 12 inches for all pipe diameters 54 inches and smaller. Use a two-piece band with a minimum nominal width of 20 inches for all pipe diameters greater than 54 inches. Manufacture the band from the same base materials as the pipe. The pipe bands may be up to two gauges lighter than the pipe it is joining, with a minimum gauge thickness of 16. The Department may allow dimple band connections for field cut pipe. Install the connecting bands according to the manufacturer's written recommendations.
SUBSECTION:	703.02.09 Geotextile Fabric.
REVISION:	Replace Section reference 845 with 843.
SUBSECTION:	703.04.08 Geotextile Fabric.
REVISION:	Add the subsection: 703.04.08 Geotextile Fabric. The Department will measure the quantity according to Subsection 214.04.
SUBSECTION:	710.02 MATERIALS.
REVISION:	Add the following Subsection: 710.02.15 High Density Polyethylene (HDPE) Adjusting Rings. Conform to Section 846.

SUBSECTION:	710.03.01 Newly Constructed Small Drainage Structures.
PART:	A) General.
REVISION:	Replace the last sentence of the sixth paragraph with the following: Use precast concrete, precast concrete pipe sections, cast-in-place, brick, or HDPE adjusting rings for adjustment of existing manholes according to the Standard Specifications.
SUBSECTION:	710.03.01 Newly Constructed Small Drainage Structures.
PART:	B) Precast Structures Except Manholes.
REVISION:	Replace the first two sentences with the following: Only furnish products manufactured by a precast producer listed in the Department's List of Approved Materials. If the producer does not have an approved drawing for the product, submit 5 copies of shop drawings to the Engineer for review and approval.
SUBSECTION:	710.03.03 Adjusted Small Drainage Structures.
REVISION:	Add the following sentence to the end of the first paragraph: For HDPE adjusting rings, install and seal according to the manufacturer's recommendations.
SUBSECTION:	712.03.02 Type V Markers.
REVISION:	Replace the first sentence of the first paragraph with the following: Install Type V Markers in slots cut into the pavement according to the manufacturer's recommendations. Delete the last paragraph.
SUBSECTION:	713.02.02 Drop on Glass Beads.
REVISION:	Replace with the following: Use beads that will ensure the pavement marking material will meet retroreflectivity requirements. The Department will evaluate the beads as part of the marking system through retroreflectivity readings.
SECTION:	713 PERMANENT PAVEMENT STRIPING.
REVISION:	Add the following subsection: 713.03.06 Acceptance of Non-Specification Markings. If weather conditions allow, perform corrective work to bring striping retroreflectivity into conformance. If corrective work has been performed and the work meets all requirements except for minimum retroreflectivity, the Department may accept the work according to Subsection 105.04. When the Engineer determines that the markings may be left in place, the Department will accept them at a reduction in the Contract unit bid price according to the Acceptance Pay Schedule. Additionally, the Engineer may remove the striping crew for the remainder of the project according to Subsection 108.06 Part A). The Engineer may also apply this section when corrective work cannot be performed due to weather. Acceptance Pay Schedule – White 156 to 174 mcd/lux/square meter – 50% pay 138 to 155 mcd/lux/square meter – 25% pay 120 to 137 mcd/lux/square meter – 0% pay < 120 mcd/lux/square meter – unacceptable Acceptance Pay Schedule – Yellow 126 to 149 mcd/lux/square meter – 50% pay 103 to 125 mcd/lux/square meter – 25% pay 80 to 102 mcd/lux/square meter – 0% pay < 80 mcd/lux/square meter – unacceptable

SUBSECTION:	713.03 CONSTRUCTION.
REVISION:	Replace the MUTCD references to "Part III" with "Part 3"
SUBSECTION:	714.02.03 Binder.
REVISION:	Replace the last sentence with the following: Submit the material and method of application to the Engineer and obtain written approval from the Engineer and the manufacturer of the pavement marking material before applying.
SUBSECTION:	714.02.04 Drop on Glass Beads.
REVISION:	Replace with the following: Use beads that will ensure the pavement marking material will meet retroreflectivity requirements. The Department will evaluate the beads as part of the marking system through retroreflectivity readings.
SUBSECTION:	714.03 CONSTRUCTION.
REVISION:	Replace the MUTCD references to "Part III" with "Part 3" and figure references to "3-11 and 3-12" with "3B-8 and 3B-9"
SUBSECTION:	714.03.01 Layout.
REVISION:	Replace the MUTCD reference to "Part III" with "Part 3"
SUBSECTION:	714.03.03 Application.
PART:	A) Type I Tape.
REVISION:	Add the following: When applied to concrete, cut the tape at all joints.
SUBSECTION:	714.03.04 Restrictions.
REVISION:	Replace the first paragraph with the following: Do not apply the pavement marking material when air and pavement temperatures are below 50 °F. Delete the third paragraph.
SUBSECTION:	714.03.06 Proving Period for Durable Markings.
PART:	A) Requirements.
NUMBER:	1) Type I Tape.
REVISION:	Add the following: Type I Tape is manufactured off site and warranted by the manufacturer to meet certain retroreflective requirements. As long as the material is adequately bonded to the surface and shows no sign of failure due to the other items listed in Subsection 714.03.06 A) 1), retroreflectivity readings will not be required. In the absence of readings, the Department will accept tape based on a nighttime visual observation.
SUBSECTION:	714.03.06 Proving Period for Durable Markings.
PART:	A) Requirements.
NUMBER:	2) Thermoplastic.
REVISION:	Replace the first sentence of the second paragraph with the following: The minimum retroreflectivity requirements at the end of the proving period, as measured with a LTL 2000, LTL 2000Y, or Department approved 30M geometry mobile instrument are as follows: Replace the first sentence of the third paragraph with the following: The Department will take these measurements between 150 and 210 days after the start of the proving period, basing acceptance on KM 202 for LTL 2000 readings and KM 203 for mobile readings.
SUBSECTION:	714.05 PAYMENT.
REVISION:	Replace with the following: The Department will make payment upon completion of the work. If after the proving period the markings do not meet minimum retroreflectivity requirements, the Department will adjust the payment or require corrective work according to the following:

SUBSECTION:	717.02.04 Drop on Glass Beads.
REVISION:	Replace with the following: Use beads that will ensure the pavement marking material will meet retroreflectivity requirements. The Department will evaluate the beads as part of the marking system through retroreflectivity readings.
SECTION:	804.03 Concrete.
REVISION:	Replace the last sentence with the following: The Department will waive the requirements for gradation, sand equivalent, and uncompacted voids for concrete pipe.
SUBSECTION:	804.04.04 Requirements for Combined Aggregates.
PART:	B) Sand Equivalent.
REVISION:	Replace the third paragraph with the following: The Department may waive the sand equivalent requirement provided the portion of the combined aggregate passing the No. 40 sieve is non-plastic according to AASHTO T 90.
SUBSECTION:	804.04.04 Requirements for Combined Aggregates KM.
TABLE:	Superpave Fine Aggregate Consensus Property Requirements.
REVISION:	For ESAL Class 1, Replace both dashes with 40.
SUBSECTION:	805.03.01 Soundness and Shale.
PART:	AGGREGATE USE/Portland Cement Concrete Mixtures.
REVISION:	Replace the title use "Class AA, Class S and Bridge Deck Overlays" with "Aggregate for Bridge Decks, Bridge Deck Overlays, and Bridge Barrier Walls"
SECTION:	805 COARSE AGGREGATES.
TABLE:	Sizes of Coarse Aggregates.
REVISION:	Replace KM 64-420 in footnote (1) with KM 64-620.
SECTION:	805 COARSE AGGREGATES.
TABLE:	Aggregates Size Use.
REVISION:	For Cement Concrete Structures and Incidental Construction add 9-M for Overlays to the sizes to be used column.
SUBSECTION:	805.03.03 Gradation.
REVISION:	Replace the last sentence with the following: The Department will allow blending of same source/same type aggregate to achieve designated sizes when precise procedures are used such as cold feeds, belts, weigh hoppers, or equivalent.
SUBSECTION:	805.03.04 Erodible or Unstable Material.
REVISION:	Add the subsection: 805.03.04 Erodible or Unstable Material. Treat as applicable. The Department considers Size No. 57 or larger aggregate, except crushed or uncrushed gravel, non-erodible. The Department considers the following materials to be erodible or unstable: 1) Friable sandstone. The Engineer determines when sandstone is friable or non-friable. 2) Crushed or uncrushed gravel, any size. 3) Crushed coarse aggregate smaller than Size No. 57. 4) Any material with 50 percent or more passing the No. 4 sieve.
SUBSECTION:	805.04 CONCRETE.
REVISION:	Replace the second paragraph with the following: The Department will waive the requirements for gradation and finer than No. 200 for concrete pipe.
SUBSECTION:	805.10 GRANULAR EMBANKMENT.
REVISION:	Replace "2 ½-inch" with "12-inch".
SUBSECTION:	805.10 GRANULAR EMBANKMENT.
PART:	1)
REVISION:	Replace with the following: 1) Engineer approved shot limestone or sandstone from roadway excavation, borrow excavation, or another approved source.

SUBSECTION: 805.11 STRUCTURE GRANULAR BACKFILL.
REVISION: Replace with the following:

Provide crushed or uncrushed aggregate meeting the quality requirements of this section. When the material includes a significant amount of individual fragments greater than 1 ½ inches, the Engineer may visually accept the minus No. 200 portion. Conform to the following gradation:

Sieve Size	Percent Passing
4 inch	100
No. 4	0-10
No. 200	0-5

SUBSECTION: 805.13.03 Channel Lining, Class IA.
REVISION: Replace the first sentence with the following:

Provide crushed stone meeting the general requirements of this section.

SUBSECTION: 805.13.04 Channel Lining, Class II.
REVISION: Replace the first sentence with the following:

Provide crushed stone meeting the general requirements of this section.

SUBSECTION: 805.15 GRADATION ACCEPTANCE OF NON-SPECIFICATION COARSE AGGREGATE.
TABLE: GRADATION – COARSE AGGREGATES FOR UNDERDRAINS
REVISION: Replace "No. 200" sieve with "No. 100".

SUBSECTION: 810.03.04 Extra Protection
REVISION: Replace "mm" in the second sentence of the second paragraph with "inches".

SECTION: 810.03 REINFORCED CONCRETE PIPE.
REVISION: Add new subsection:

810.03.07 Concrete. Submit Concrete Mix Design to the Central Office Materials.

SECTION: 812.01.01 Structural Steel, All Types.
REVISION: Replace second sentence with the following:

When the supplementary requirement of this specification are specified, they exceed the requirements of ASTM A 36, A 514, A 572, A 588, and ASTM A 852.

SUBSECTION: 812.01.01 Structural Steel, All Types.
PART: A) Structural Steel.
REVISION: Delete AASHTO M 183.

SUBSECTION: 812.01.01 Structural Steel, All Types.
PART: B) High-Strength Low-Alloy Columbium-Vandium Steels of Structural Quality.
REVISION: Delete AASHTO M 223.

SUBSECTION: 812.01.01 Structural Steel, All Types.
PART: C) High-Strength Low-Alloy Structural Steel with 345 Mpa Minimum Yield Point to 4 Inches Thick.
REVISION: Delete AASHTO M 222.

SUBSECTION: 812.01.01 Structural Steel, All Types.
PART: E) High-Yield-Strength, Quenched and Tempered Alloy Steel Plate, Suitable for Welding.
REVISION: Delete AASHTO M 244.

SECTION: 813.08.05 Aluminum Alloy Rolled or Extruded Shapes.
REVISION: Replace "T-4 AND T6" with "T6".

SUBSECTION: 813.09.02 High-Strength Steel Bolts, Nuts, and Washers.
PART: A) Bolts.
REVISION:

HARDNESS NUMBER				
Bolt Size	Brinell		Rockwell C	
(in)	Min	Max	Min	Max
½ - 1	253	319	25	34

SUBSECTION: 813.13 MATTRESSES AND GABIONS.
REVISION: Replace the first sentence of the first paragraph with the following:

Conform to ASTM A 975, Style 1 or ASTM A 974, Style 1 or 2.

Supplemental Specifications to The Standard Specifications for Road and Bridge Construction, 2000 Edition (Effective with the April 25, 2003 Letting)

SUBSECTION: 814.04.01 Steel Guardrail Posts.
REVISION: Replace AASHTO M 183 in the first sentence with ASTM A 36.

SUBSECTION: 814.05.02 Composite Plastic.
REVISION: Add the following sentence to the first paragraph:

Rubber is an acceptable alternate to plastic in their composition.

SUBSECTION: 814.06 MATERIALS FOR END TREATMENTS.
PART: D) Steel Sheet (for rail plates and mounting brackets).
REVISION: Replace 570, Grade D with the 1011, Type SS, Grade 36.

SUBSECTION: 816.02 GENERAL.
REVISION: Replace ASTM D 2521 with ASTM A 239.

SUBSECTION: 816.02.02 Aluminum-Coated Steel.
REVISION: Replace 0.01 with 0.099.

SUBSECTION: 819.01.01 Steel Plates.
REVISION: Replace "Paragraph 14" in the second sentence of the second paragraph with "Table 6".

SUBSECTION: 821.03 SAMPLING AND TESTING.
REVISION: In the third sentence of the first paragraph, replace calendar days with working days.

SUBSECTION: 827.04 PERMANENT SEED.
REVISION: Replace with the following:

Conform to the requirements outlined in the "Kentucky Seed Law and Provisions for Seed Certification in Kentucky" and the "Regulations under the Kentucky Seed Law", with following exceptions:

1. Obtain seed only through registered dealers that are permitted for labeling of seed.
2. Ensure all deliveries/shipments of premixed seed are accompanied with a master blend sheet.
3. The Department may sample the seed at the job site at any time.
4. Ensure all bags and containers have an acceptable seed tag attached.

Do not use seed (grasses, native grasses and legumes) if the weed seed is over 2%, total germination (including hard seed) is less than 60%, if the seed test date is over 9 months old exclusive of the month tested, or if the limits of noxious weed seed is exceeded.

Ensure that noxious weed seeds contained in any seed or seed mixture does not exceed the maximum permitted rate of occurrence per pound.

Name of Kind	Max. No. Seeds (per pound)*
Balloon Vine (Cardiospermum Halicacabum)	0
Purple Moonflower (Ipomoea turbinata)	0
Canada Thistle (Cirsium Arvense)	0
Johnsongrass (Sorghum Halepense and Sorghum Almum and perennial rhizomatous derivatives of these species)	0
Quackgrass (Elytrigia Repens)	0
Annual Bluegrass (Poa Annua)	256
Buckhorn Plantain (Plantago Ianceolata)	304
Corncockle (Agrostemma Githago)	192
Dodder (Cuscuta spp.)	192
Giant Foxtail (Setaria Faberii)	192
Oxeye Daisy (Chrysanthemum Ieucanthemum)	256
Sorrel (Rumex Acetosella)	256
Wild Onion and Wild Garlic (Allium spp.)	96

* Seed or seed mixtures that contain in excess of 480 total noxious seeds per pound is prohibited

Wildflower seed shall not be planted until approved by the MCL.

SUBSECTION: 832.02 TYPE I POSTS.
REVISION: Replace ASTM A 570 with ASTM A 1011.

SECTION: 840 RAISED PAVEMENT MARKERS
REVISION: Replace the section with the following:

840.01 TYPE IV MARKERS. Provide markers from the Department's List of Approved Materials. Type IV markers are replacement lenses for use in Type V marker castings.

840.02 TYPE V MARKERS. Provide markers from the Department's List of Approved Materials. Type V markers consist of an iron casting with a Type IV marker (mono or bi-directional) attached.

840.03 TYPE IVA MARKERS. Provide markers from the Department's List of Approved Materials. Type IVA markers are surface mounted lenses for temporary use in work zones.

840.04 SAMPLING. Obtain a manufacturer's certification for each shipment. Include with each shipment of adhesive a written statement from the manufacturer certifying that it conforms to the recommendations of the marker manufacturer, and stating the minimum temperature the adhesive can be satisfactorily mixed and applied.

840.05 PACKAGING. Suitably and substantially package all materials with the name and address of the manufacturer and vendor, contract or purchase number, kind of material, trade name, and net contents plainly marked on each package.

SUBSECTION: 843.01.01 Geotextile Fabric.
REVISION: Add the following sentence to the first paragraph:

Use circular-knit geotextile conforming to ASTM D 6707 for perforated pipe socks.

Add the following sentence to the third paragraph:

The manufacturer must participate in the National Transportation Product Evaluation Program (NTEP) for Geotextiles and Geosynthetics.

SUBSECTION: 843.01.01 Geotextile Fabric.
PART: C) Acceptance.
REVISION: Delete the burst strength requirement from each table.

SUBSECTION: 845.02.03 Wrapping.
REVISION: Replace Section 845 with Section 843, Type II.

SECTION: 846 HIGH DENSITY POLYETHYLENE (HDPE) ADJUSTING RINGS
REVISION: Add New Section:

846.01 RESIN. Use a recycled polyethylene plastic or virgin resin producing a molded part meeting the following requirements:

Melt Flow Index (ASTM D 1238)	4.0-10.0 g/10min
Density (ASTM D 792)	0.941-0.965 g/cm^3
Tensile (ASTM D 638)	2000-5000 lb/in^2
ESCR (ASTM D 1693)	Condition C

846.02 LOADING. Ensure the adjustment rings meet or exceed the loading requirements of AASHTO'S Standard Specification for HS-25 wheel loading for Highway Bridges.

TRAFFIC CONTROL PLAN
FD39 051-0060-017-018

TRAFFIC CONTROL GENERAL

Except as provided herein, traffic shall be maintained in accordance with the 2000 Standard Specifications and the Standard Drawings, current editions. Except for the roadway and traffic control bid items listed, all items of work necessary to maintain and control traffic will be paid at the lump sum bid price to "Maintain and Control Traffic".

Contrary to Section 106.01, traffic control devices used on this project may be new, or used in like new condition, at the beginning of the work and maintained in like new condition until completion of the work.

PROJECT PHASING & CONSTRUCTION PROCEDURES

No lane closures will be allowed between the hours of 7:00 a.m. and 5:00 p.m. on days that Henderson County Schools are in regular session. At the discretion of the Engineer, additional days and hours may be specified when lane closures will not be allowed.

At locations with three or more lanes, one lane of traffic in each direction shall be maintained at all times during construction. At locations with two lanes, The Contractor may maintain alternating one way traffic during construction. The clear lane width shall be 10 feet. If traffic should be stopped due to construction operations, and a school bus on an official run arrives on the scene, the Contractor shall make provisions for the passage of the bus as quickly as possible.

LANE CLOSURES

Lane closures will be allowed during non-working hours only in areas where one lane of traffic in each direction can be maintained.

SIGNS

Contrary to Section 112.04.02 and 112.04.03, Low Shoulder signs will not be measured for payment, but will be incidental to Maintain and Control Traffic. Contrary to section 112.04.02, only long term signs (signs intended to be continuously in place for more than 3 days) will be measured for payment; short term signs (signs intended to be left in place for 3 days or less) will not be measured for payment but will be incidental to Maintain and Control Traffic. Individual signs will be measured only once for payment, regardless of how many times they are set, reset, removed, and relocated during the duration of the project.

BARRICADES

Barricades used in lieu of barrels and cones for channelization or delineation will be incidental to Maintain and Control Traffic according to Section 112.04.01. Barricades used to protect pavement removal areas will be bid as each according to Section 112.04.05. Individual barricades will be measured only once for payment, regardless of how many times they are set, reset, removed, and relocated during the duration of the project.

VARIABLE MESSAGE SIGNS

If deemed necessary by the Engineer, Variable Message Signs will be installed, operated, and maintained by the Department.

PAVEMENT MARKINGS

Permanent and Temporary Striping shall be in accordance with Section 112, except that:

(1) If the contractor's operations or phasing requires temporary markings which must be subsequently removed from the ultimate pavement, an approved "Removable Lane Tape" shall be used. However, removable lane tape, if used will be measured and paid as temporary Striping; and

(2) Permanent striping will vary from existing. The Engineer will provide a striping plan prior to placement of the final surface course.

TRAFFIC COORDINATOR

The Contractor shall designate an employee to be traffic coordinator. The Traffic Coordinator shall inspect the project maintenance of traffic once every two hours during the Contractor's operations and at any time a lane closure is in place. The Traffic Coordinator shall report all incidents throughout the work zone to the Engineer on the project. The Contractor shall furnish the name and telephone number where the Traffic Coordinator can be contacted at all times.

During any period when a lane closure is in place, the Traffic Coordinator shall arrange for personnel to be present on the project at all times to inspect the traffic control and to maintain the signing and devices. The personnel shall have access on the project to a radio or telephone to be used in case of emergencies or accidents.

PAVEMENT EDGE DROP-OFFS

A pavement edge between opposing directions of traffic or lanes that traffic is expected to cross in a lane change situation shall not have an elevation difference greater than 1½". Warning signs (MUTCD W8-11 or W8-9A) shall be placed in advance of and at 1500' intervals throughout the drop-off area. Dual posting on both sides of the traveled way shall be required. All transverse transitions between resurfaced and unresurfaced areas which traffic may cross shall be wedged with asphalt mixture for leveling and wedging. The wedges shall be removed prior to placement of the final surface course.

Pavement edges that traffic is not expected to cross, except accidentally, shall be treated as follows:

Less than 2" - No protection required.

2" to 4" - Place plastic drums, vertical panels, or barricades every 50 feet. Cones may be used in place of plastic drums, panels, and barricades during daylight working hours. Wedge with asphalt mixture for leveling and wedging with a 1:1 or flatter slope in daylight hours, or 3:1 or flatter slope during nighttime hours, when work is not active in the drop-off area.

Greater than 4" - Place plastic drums, vertical panels, or barricades every 25 feet. Cones may be used in place of plastic drums, panels, and barricades during daylight working hours. Place Type III barricades in front of open trench facing oncoming traffic. Wedge with cuttings from trenching with a 1:1 or flatter slope in daylight hours, or 3:1 or flatter slope during nighttime hours, when work is not active in the drop-off area.

SPECIAL NOTE FOR TYPICAL SECTION DIMENSIONS

FD39 051-0060-017-018

The dimensions shown on the typical sections for pavement and shoulder widths and thicknesses are nominal or typical dimensions. The actual dimensions to be constructed may be varied to fit existing conditions as directed or approved by the Engineer. It is not intended that existing pavement or shoulders be widened unless specified elsewhere in the Proposal.

Typical Section
7/11/2002

SPECIAL NOTE FOR
ASPHALT MILLING AND TEXTURING
FD39 051-0060-017-018

Begin paving operations no later than 2 weeks after the commencement of the asphalt milling operation. Continue paving operations continuously until completed. If paving operations are not begun within this time period, liquidated damages will be assessed at the rate prescribed by Section 108.09 of the 2000 Standard Specifications until such time as paving operations are begun.

Contrary to Section 408 of the 2000 Standard Specifications, the material obtained from the milling operations shall become the property of the Department. Deliver this material to the State Maintenance facility in HENDERSON County.

SPECIAL NOTES FOR TURN LANE
AT SPOTTSVILLE SCHOOL
FD39 051-0060-017-018

I. DESCRIPTION

Except as specified in these notes, the Contractor shall perform all work according to the Department's 2000 Standard Specifications, applicable Special Provisions and Special Notes, Standard Drawings, and the drawings elsewhere in this proposal. Article references are to the Standard Specifications.

The Contractor shall furnish all materials, labor, and equipment for the following work: (1) Constructing turn lanes at Spottsville School; (2) Maintain and control traffic; and (3) all other work required by the plans, these notes and the Engineer.

II. MATERIALS

The Department will sample and test all materials according to Department's Sampling Manual and the Contractor shall have the materials available for sampling a sufficient time in advance of the use of the materials to allow for the necessary time for testing, unless otherwise specified in these notes.

A. Maintain and Control Traffic. See Traffic Control Plan.

B. Seeding and Protection. Use Seed Mixture No. 2.

C. Silt Checks. Use Silt Check Type I - Straw Bales

D. Culvert Pipe – 24 inch. Use Class III 24" RCP, no substitute.

III. CONSTRUCTION METHODS

A. Maintain and Control Traffic. See Traffic Control Plan.

B. Site Preparation. The Contractor will be responsible for all site preparation. This item shall include, but is not limited to, all clearing and grubbing, roadway excavation and embankments, tree and stump removal, removal of obstructions or any other items, disposal of materials, temporary erosion control, cleanup, and seeding and protection. Silt Checks and Temporary Silt Fence shall be constructed at locations as directed by the Engineer. After all work is completed, debris from the construction site shall be completely removed from the job site. All excavated areas shall be backfilled and compacted as directed by the Engineer. All disturbed earthen areas shall receive Final Dressing, Class A and be sown with Seed Mixture No. II.

C. Roadway Excavation. The Contractor shall be responsible for all excavation, excavation, embankment, and borrow necessary to construct the intersection, embankments, shoulders, ditches to insure positive drainage, and for any other required excavation and embankment on the project. If additional embankment is required, it may be obtained from the Right of Way at sites designated by the Engineer.

Construction limits, elevations, and other information shown on the plans are approximate only. The Engineer will determine actual construction limits at the time of construction. Positive drainage of slopes and ditches is required upon completion of the project and is the responsibility of the Contractor. Waste excess excavation at sites off the Right of Way obtained by the Contractor at no additional cost to the Department.

D. Final Dressing. Final dressing shall be Class A.

E. Restoration. Any features disturbed by the work or the Contractor's operations shall be restored in like kind materials and design as directed by the Engineer.

F. Clean Up and Seeding. After all work is completed, debris from construction shall be completely removed from the job site and disposed of at sites outside the Park obtained by the Contractor at no additional cost to the Department. All disturbed earthen areas shall be satisfactorily graded and sown with seed mixture No. II. No direct payment shall be allowed for final cleanup and seeding, but will be incidental to other items of work.

G. On-Site Inspection. Each Contractor submitting a bid for this work shall make a thorough inspection of the site prior to submitting his bid and shall thoroughly familiarize himself with existing conditions so that the work can be expeditiously performed after a contract is awarded. Submission of a bid will be considered evidence of this inspection having been made. The Department will not honor any claims resulting from site conditions.

H. Caution. Information shown on the drawings and in this proposal and the types and quantities of work listed are approximate only, and are not be taken as an accurate or complete evaluation of the material and conditions to be encountered during construction. The bidder must draw his own conclusion as to the conditions encountered. The department does not give any guarantee as to the accuracy of the data and no claim will be considered for additional compensation if the conditions encountered are not in accordance with the information shown.

I. Right-of-Way The exact limits of Right-of-Way have not been established by the Department. The Contractor shall limit his activities to obvious Right-of-Way, permanent or temporary easements, and work areas secured by the Department through consent and release of the adjacent property owners. The Contractor shall be responsible for all encroachments onto private lands.

J. Waste. All trees, stumps, debris, and excavation not reused in the work shall be disposed of off the right of way at sites obtained by the Contractor at no additional cost to the Department.

K. Utility Clearance. Use caution and do not disturb existing utilities within the construction limits. It is not anticipated that utility facilities will need to be relocated and/or adjusted; however, in the event that it is discovered that the work does require that utilities be relocated and/or adjusted, the utility companies will work concurrently with the Contractor while relocating their facilities. The Department will not extend the completion date due to delays caused by utility conflicts.

L. Delineator for Guardrail. Install Delineators for Guardrail as directed by the project Engineer. Guardrails are not to be removed, replaced or adjusted.

IV. METHOD OF MEASUREMENT

A. Maintain and Control Traffic. See Traffic Control Plan.

B. Roadway Excavation. Roadway excavation will be field measured according to Section 204.04.08.

C. Site Preparation. Other than the bid items listed, site preparation will not be measured for payment, but shall be incidental to the other items of work.

D. 24" Culvert Pipe. Payment at the contract unit price shall be full compensation for all labor, materials, equipment, and incidentals for site preparation, clearing and grubbing, excavation, removal of existing pipe, installing pipe, pipe bands and anchors, flowable fill backfill, restoring slopes, embankment in place, final dressing and cleanup, and disposal of all waste, erosion control, and water pollution control.

V. BASIS OF PAYMENT.

No direct payment will be made other than the bid items listed. All other items required to complete the work shall be incidental to the bid items listed. The Department will consider payment at the contract unit prices as full compensation for all work required in these notes.

A. Maintain and Control Traffic. See Traffic Control Plan.

COUNTY OF	FISCAL YEAR	SHEET NO.	TOTAL SHEETS

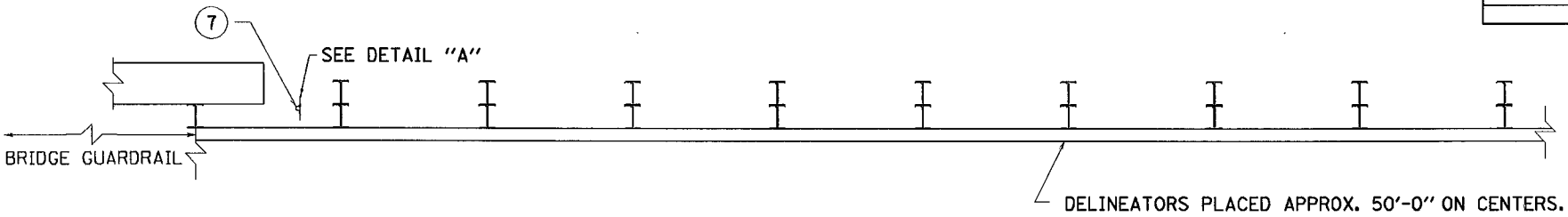

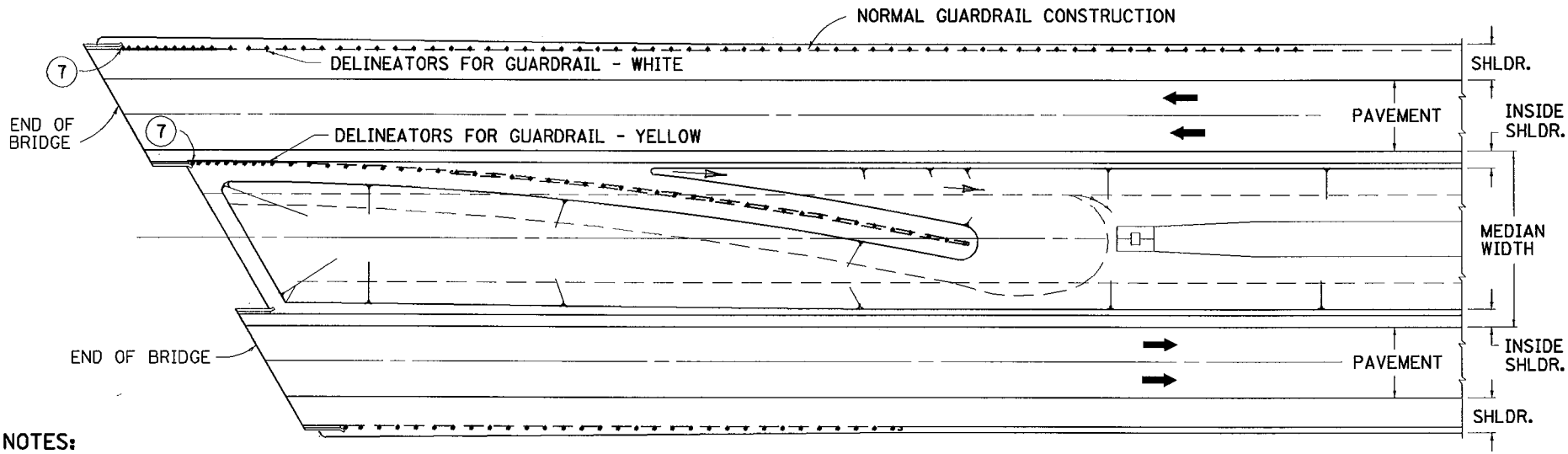

NOTES:

1. DELINEATOR SHALL BE MEASURED AND PAID FOR AT THE CONTRACT UNIT PRICE EACH, AND SHALL INCLUDE ALL MATERIALS AND LABOR NECESSARY FOR ONE COMPLETE INSTALLATION.
2. DELINEATORS ON CONCRETE BARRIERS

CODE	PAY ITEM	PAY UNIT
1984	DELINEATOR FOR BARRIER - WHITE	EACH
1985	DELINEATOR FOR BARRIER - YELLOW	EACH
	DELINEATORS ON GUARDRAIL	
1982	DELINEATOR FOR GUARDRAIL - WHITE	EACH
1983	DELINEATOR FOR GUARDRL - YELLOW	EACH

3. THE DELINEATORS SHALL BE YELLOW IN COLOR WHEN THE BARRIER IS PLACED IN THE MEDIAN AND/OR ON THE LEFT SIDE OF THE DRIVING LANE. THE DELINEATORS SHALL BE WHITE IN COLOR WHEN THE BARRIER IS PLACED ON THE RIGHT SIDE OF THE DRIVING LANE.
4. DELINEATORS SHALL BE APPLIED 300 FEET IN ADVANCE OF AND THROUGHOUT THE LENGTH OF ALL BRIDGES THAT DO NOT HAVE FULL WIDTH SHOULDERS. SPACING ON BRIDGES AND 300 FEET IN ADVANCE OF BRIDGES SHALL BE 50 FEET ON CENTERS. THE FIRST DELINEATOR ON THE GUARDRAIL SHALL BE PLACED 50 FEET FROM THE DELINEATOR AT THE END OF THE BRIDGE. DELINEATORS SHALL BE INSTALLED IN ACCORDANCE WITH THE MANUFACTURER'S RECOMMENDATIONS.
5. WHEN CONCRETE BARRIERS EXTEND ACROSS NARROW SHOULDER WIDTH STRUCTURES IN LIEU OF STEEL BEAM GUARDRAIL, DELINEATORS SHALL BE INSTALLED AT SAME VERTICAL ALIGNMENT AS ON THE GUARDRAIL AND DELINEATORS SHALL COMPLY WITH CURRENT STD. DWG. RBM-020.
6. GUARDRAIL DELINEATORS MAY BE AKT CORPORATIONS MODEL NO. 567 MONO-DIRECTIONAL OR APPROVED EQUAL.

(7) SEE PROPOSAL FOR CURRENT "SPECIAL NOTE FOR BRIDGE END OBJECT MARKERS".

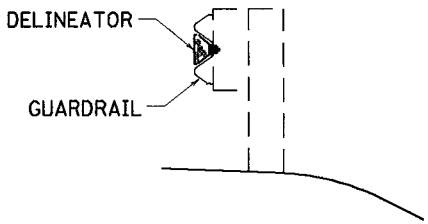

ELEV. VIEW

PRIMARY USE:
(PAVEMENT REHABILITATION PROJECTS)

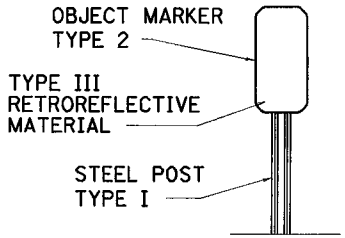

OBJECT MARKER TYPE 2
AND
STEEL POST TYPE I

DETAIL "A" (7)

KENTUCKY
DEPARTMENT OF HIGHWAYS

DELINEATORS AT NARROW SHOULDER BRIDGES

SUBMITTED William S. Galbert 12-1-99
TEBM DIVISION OF DESIGN DATE

COUNTY OF	FISCAL YEAR	SHEET NO.	TOTAL SHEETS

NOTES

1. DELINEATOR SHALL BE MEASURED AND PAID FOR AT THE CONTRACT UNIT PRICE EACH, AND SHALL INCLUDE ALL MATERIALS AND LABOR NECESSARY FOR ONE COMPLETE INSTALLATION.
2.

CODE	PAY ITEM	PAY UNIT
1982	DELINEATOR FOR GUARDRAIL - WHITE	EACH
1983	DELINEATOR FOR GUARDRL - YELLOW	EACH

3. GUARDRAIL DELINEATORS SHALL BE REQUIRED ON ALL ROADWAYS WITH SHOULDERS 6'-0" IN WIDTH OR LESS AND AT OTHER LOCATIONS WHERE THE GUARDRAIL LEADS INTO HORIZONTAL CURVES OF LESS THAN 950 FEET RADIUS.
4. DELINEATORS SHALL BE MANUFACTURED FROM 12 GA. GALVANIZED STEEL.
5. DIMENSIONS SHOWN ARE APPROXIMATE AND ARE SUBJECT TO MANUFACTURES TOLERANCES.
6. WHEN CONCRETE BARRIERS EXTEND ACROSS BRIDGE STRUCTURES IN LIEU OF STEEL BEAM GUARDRAIL, DELINEATORS SHALL BE INSTALLED AT SAME VERTICAL ALIGNMENT AS ON THE GUARDRAIL AND DELINEATORS SHALL COMPLY WITH CURRENT STD. DWG. RBM-020.

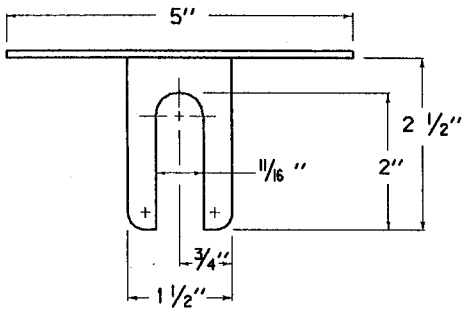

PLAN VIEW

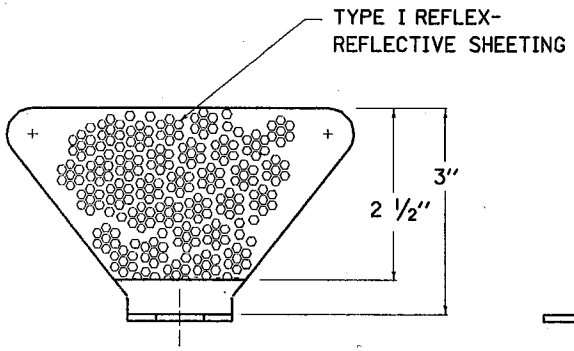

FRONT VIEW

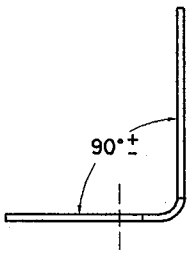

SIDE VIEW

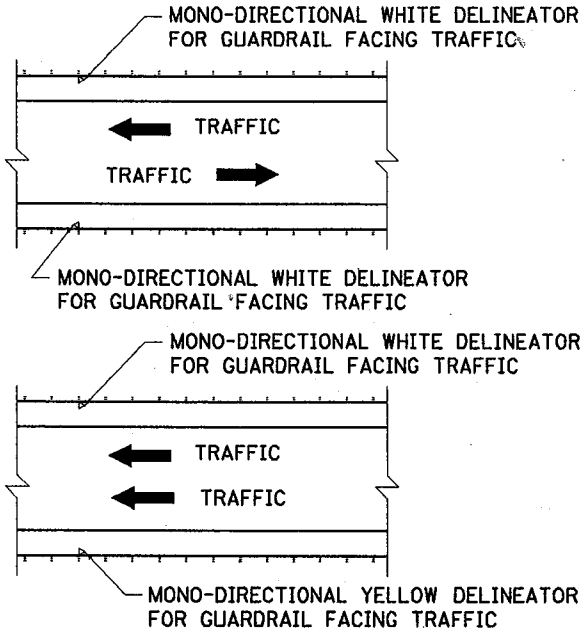

PLACEMENT OF DELINEATORS
FOR GUARDRAIL

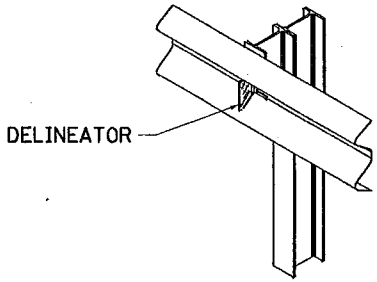

ISOMETRIC VIEW

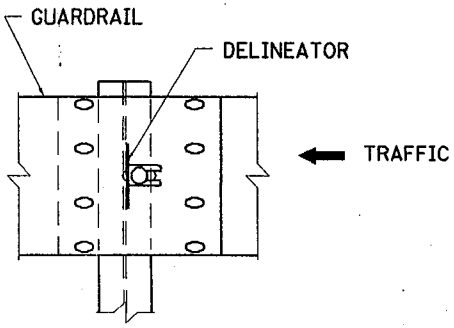

FRONT VIEW

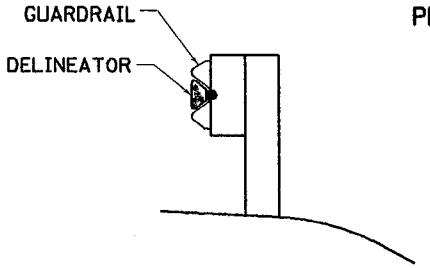

SIDE VIEW

DELINEATOR SPACINGS ON HORIZONTAL CURVES	
DEGREE OF CURVE	SPACING ON CURVES
≤ 2°	100'
> 2° ≤ 4°	75'
> 4°	50'

SPACING ON TANGENTS = 100' INTERVALS

KENTUCKY
DEPARTMENT OF HIGHWAYS

DELINEATORS
FOR GUARDRAIL

SUBMITTED William S. Gulick 12-1-99
ASS'T. DIRECTOR DIVISION OF DESIGN DATE

PART II

SPECIAL PROVISIONS APPLICABLE TO PROJECT

SPECIAL PROVISION NO.	TITLE

NO SPECIAL PROVISIONS APPLY TO THIS PROJECT

PART III

EMPLOYMENT, WAGE AND RECORD REQUIREMENTS
(Copies of each Attached)

1. Schedule of Minimum Wages Established for the Project.

2. Labor and Wage Requirements, applicable to other than Federal-Aid System Contracts. (Rev. 2-16-95)

3. Executive Branch Code of Ethics.

TRANSPORTATION CABINET
DIVISION OF CONTRACT PROCUREMENT
COMPLIANCE SECTION

PROJECT WAGE RATES **LETTING: 04-25-2003**

HENDERSON COUNTY, FD39 051 0060 017-018
The Henderson-Owensboro Road (US 60)
Turnlane Construction

CONSTRUCTION WORKERS . . . . . MINIMUM HOURLY RATE . . . $5.15

Note: Parts III and IV of **"Labor and Wage Requirements Applicable To Other Than Federal-Aid System Projects"** do not apply to this project.

TRANSPORTATION CABINET
DEPARTMENT OF HIGHWAYS

LABOR AND WAGE REQUIREMENTS APPLICABLE TO OTHER THAN FEDERAL-AID SYSTEM PROJECTS

I. Application
II. Nondiscrimination of Employees (KRS 344)
III. Payment of Predetermined Minimum Wages
IV. Statements and Payrolls

I. APPLICATION

1. These contract provisions shall apply to all work performed on the contract by the contractor with his own organization and with the assistance of workmen under his immediate superintendence and to all work performed on the contract by piecework, station work or by subcontract. The contractor's organization shall be construed to include only workmen employed and paid directly by the contractor and equipment owned or rented by him, with or without operators.

2. The contractor shall insert in each of his subcontracts all of the stipulations contained in these Required Provisions and such other stipulations as may be required.

3. A breach of any of the stipulations contained in these Required Provisions may be grounds for termination of the contract.

II. NONDISCRIMINATION OF EMPLOYEES

AN ACT OF THE KENTUCKY
GENERAL ASSEMBLY TO PREVENT
DISCRIMINATION IN EMPLOYMENT
KRS CHAPTER 344
EFFECTIVE JUNE 16, 1972

The contract on this project, in accordance with KRS Chapter 344, provides that during the performance of this contract, the contractor agrees as follows:

1. The contractor shall not fail or refuse to hire, or shall not discharge any individual, or otherwise discriminate against an individual with respect to his compensation, terms, conditions, or privileges of employment, because of such individual's race, color, religion, national origin, sex, disability or age (between forty and seventy); or limit, segregate, or classify his employees in any way which would deprive or tend to deprive an individual of employment opportunities or otherwise adversely affect his status as an employee, because of such individual's race, color, religion, national origin, sex, disability or age (between forty and seventy). The contractor agrees to post in conspicuous places, available to employees and applicants for employment, notices to be provided setting forth the provisions of this nondiscrimination clause.

2. The contractor shall not print or publish or cause to be printed or published a notice or advertisement relating to employment by such an employer or membership in or any classification or referral for employment by the employment agency, indicating any preference, limitation, specification, or discrimination, based on race, color, religion, national origin, sex, disability or age (between forty and seventy), except that such notice or advertisement may indicate a preference, limitation, or specification based on religion, or national origin when religion, or national origin is a bona fide occupational qualification for employment.

3. If the contractor is in control of apprenticeship or other training or retraining, including on-the-job training programs, he shall not discriminate against an individual because of his race, color, religion, national origin, sex, disability or age (between forty and seventy), in admission to, or employment in any program established to provide apprenticeship or other training.

4. The contractor will send to each labor union or representative of workers with which he has a collective bargaining agreement or other contract or understanding, a notice to be provided advising the said labor union or workers' representative of the contractor's commitments under this section, and shall post copies of the notice in conspicuous places available to employees and applicants for employment. The contractor will take such action with respect to any subcontract or purchase order as the administrating agency may direct as a means of enforcing such provisions, including sanctions for non-compliance.

III. PAYMENT OF PREDETERMINED MINIMUM WAGES

1. These special provisions are supplemented elsewhere in the contract by special provisions which set forth certain predetermined minimum wage rates. The contractor shall pay not less than those rates.

2. The minimum wage determination schedule shall be posted by the contractor, in a manner prescribed by the Department of Highways, at the site of the work in prominent places where it can be easily seen by the workers.

IV. STATEMENTS AND PAYROLLS

1. All contractors and subcontractors affected by the terms of KRS 337.505 to 337.550 shall keep full and accurate payroll records covering all disbursements of wages to their employees to whom they are required to pay not less than the prevailing rate of wages. Payrolls and basic records relating thereto will be maintained during the course of the work and preserved for a period of one (1) year from the date of completion of this contract.

2. The payroll records shall contain the name, address and social security number of each employee, his correct classification, rate of pay, daily and weekly number of hours worked, itemized deductions made and actual wages paid.

3. The contractor shall make his daily records available at the project site for inspection by the State Department of Highways contracting office or his authorized representative.

Periodic investigations shall be conducted as required to assure compliance with the labor provisions of the contract. Interrogation of employees and officials of the contractor shall be permitted during working hours.

Aggrieved workers, Highway Managers, Assistant District Engineers, Resident Engineers and Project Engineers shall report all complaints and violations to the Division of Contract Procurement.

The contractor shall be notified in writing of apparent violations. The contractor may correct the reported violations and notify the Department of Highways of the action taken or may request an informal hearing. The request for hearing shall be in writing within ten (10) days after receipt of the notice of the reported violation. The contractor may submit records and information which will aid in determining the true facts relating to the reported violations.

Any person or organization aggrieved by the action taken or the findings established as a result of an informal hearing by the Division of Contract Procurement may request a formal hearing.

4. The wages of labor shall be paid in legal tender of the United States, except that this condition will be considered satisfied if payment is made by a negotiable check, on a solvent bank, which may be cashed readily by the employee in the local community for the full amount, without discount or collection charges of any kind. Where checks are used for payments, the contractor shall make all necessary arrangements for them to be cashed and shall give information regarding such arrangements.

5. No fee of any kind shall be asked or accepted by the contractor or any of his agents from any person as a condition of employment on the project.

6. No laborers shall be charged for any tools used in performing their respective duties except for reasonably avoidable loss or damage thereto.

7. Every employee on the work covered by this contract shall be permitted to lodge, board, and trade where and with whom he elects and neither the contractor nor his agents, nor his employees shall directly or indirectly require as a condition of employment that an employee shall lodge, board or trade at a particular place or with a particular person.

8. Every employee on the project covered by this contract shall be an employee of either the prime contractor or an approved subcontractor.

9. No charge shall be made for any transportation furnished by the contractor or his agents to any person employed on the work.

10. No individual shall be employed as a laborer or mechanic on this contract except on a wage basis, but this shall not be construed to prohibit the rental of teams, trucks or other equipment from individuals.

No Covered employee may be employed on the work except in accordance with the classification set forth in the schedule mentioned above; provided, however, that in the event additional classifications are required, application shall be made by the contractor to the Department of Highways and (1) the Department shall request appropriate classifications and rates from the proper agency, or (2) if there is urgent need for additional classification to avoid undue delay in the work, the contractor may employ such workmen at rates deemed comparable to rates established for similar classifications provided he has made written application through the Department of Highways, addressed to the proper agency, for the supplemental rates. The contractor shall retroactively adjust, upon receipt of the supplemental rates schedule, the wages of any employee paid less than the established rate and may adjust the wages of any employee overpaid.

11. No contractor or subcontractor contracting for any part of the contract work which may require or involve the employment of laborers or mechanics shall require or permit any laborer or mechanic in any work-week in which he is employed on such work, to work in excess of eight hours in any calendar day or in excess of forty hours in such work-week unless such laborer or mechanic receives compensation at a rate not less than one and one half times his basic rate of pay for all hours worked in excess of eight hours in any calendar day or in excess of forty hours in such work-week. A laborer, workman or mechanic and an employer may enter into a written agreement or a collective bargaining agreement to work more than eight (8) hours a calendar day but not more than ten (10) hours a calendar day for the straight time hourly rate. This agreement shall be in writing and shall be executed prior to the employee working in excess of eight (8) hours, but not more than ten (10) hours, in any one (1) calendar day.

12. Payments to the contractor may be suspended or withheld due to failure of the contractor to pay any laborer or mechanic employed or working on the site of the work, all or part of the wages required under the terms of the contract. The Department may suspend or withhold payments only after the contractor has been given written notice of the alleged violation and the contractor has failed to comply with the wage determination of the Department of Highways.

13. Contractors and subcontractors shall comply with the sections of Kentucky Revised Statutes, Chapter 337 relating to contracts for Public Works.

Revised 2-16-95

EXECUTIVE BRANCH CODE OF ETHICS

In the 1992 regular legislative session, the General Assembly passed and Governor Brereton Jones signed Senate Bill 63 (codified as KRS 11A), the Executive Branch Code of Ethics, which states, in part:

KRS 11A.040 (6) provides:

No present or former public servant shall, within six (6) months of following termination of his office or employment, accept employment, compensation or other economic benefit from any person or business that contracts or does business with the state in matters in which he was directly involved during his tenure. This provision shall not prohibit an individual from returning to the same business, firm, occupation, or profession in which he was involved prior to taking office or beginning his term of employment, provided that, for a period of six (6) months, he personally refrains from working on any matter in which he was directly involved in state government. This subsection shall not prohibit the performance of ministerial functions, including, but not limited to, filing tax returns, filing applications for permits or licenses, or filing incorporation papers.

KRS 11A.040 (8) states:

A former public servant shall not represent a person in a matter before a state agency in which the former public servant was directly involved, for a period of one (1) year after the latter of:
a) The date of leaving office or termination of employment; or
b) The date the term of office expires to which the public servant was elected.

This law is intended to promote public confidence in the integrity of state government and to declare as public policy the idea that state employees should view their work as a public trust and not as a way to obtain private benefits.

If you have worked for the executive branch of state government within the past six months, you may be subject to the law's prohibitions. The law's applicability may be different if you hold elected office or are contemplating representation of another before a state agency.

Also, if you are affiliated with a firm which does business with the state and which employs former state executive-branch employees, you should be aware that the law may apply to them.

In case of doubt, the law permits you to request an advisory opinion from the Executive Branch Ethics Commission, Room 136, Capitol Building, 700 Capitol Avenue, Frankfort, Kentucky 40601; telephone (502) 564-7954.

PART IV

INSURANCE

The Contractor shall carry the following insurance in addition to the insurance required by law:

(1) Contractor's Public Liability Insurance not less than **$100,000.00** for damages arising out of bodily injuries to or death to one person. Not less than **$300,000.00** for damages arising out of bodily injuries to or death to two or more persons.

(2) Contractor's Property Damages Liability Insurance. Not less than **$100,000.00** for all damages arising out of injury or destruction of property in any one accident. Not less than **$300,000.00** for all damages during the policy period.

(3) Contractor's Protective Public Liability and Property Damage Insurance. The contractor shall furnish evidence with respect to operations performed for him by subcontractors that he carries in his own behalf for the above stipulated amounts.

(4) The insurance required above must be evidenced by a Certificate of Insurance and this Certificate of Insurance must contain one of the following statements:

a. "policy contains no deductible clauses."

b. "policy contains a _____ deductible property
(amount)
damage clause but company will pay claim and collect the deductible from the insured."

(5) WORKMEN'S COMPENSATION INSURANCE. The contractor shall furnish evidence of coverage of all his employees or give evidence of self-insurance by submitting a copy of a certificate issued by the Workmen's Compensation Board.

PART V

STATEMENT OF INCOMPLETED WORK

1. Status of Active Prime Contracts. Attached

1. STATUS OF ALL INCOMPLETED PRIME CONTRACTS

All active prime contracts must be reported. This includes prime contracts with public and private owners and joint-ventured contracts. The names of the joint venturers must be shown when reporting these projects. A machine or typed listing reporting the status of each contract is acceptable when attached to this report; however, the total amounts on the itemized listing must be reported in the space provided below:

CONTRACT WITH	PROJECT IDENTIFICATION	PRIME CONTRACT AMOUNT	EARNINGS THROUGH LAST APPROVED ESTIMATE	TOTAL AMOUNT OF WORK REMAINING
TOTAL (Attach Summary if not itemized above)		$	$	$

PART VI

BID ITEMS

TRANSPORTATION CABINET
Department of Highways
FRANKFORT, KY 40622

Sheet No: 1

HENDERSON COUNTY
FD39 051 0060 017-018

PCN: 03-0327
Letting: 4/25/2003

THE BIDDER MUST MAKE THE EXTENSIONS AND ADDITIONS
SHOWING TOTAL AMOUNT BID USING FIGURES ONLY

Item No.	Code No.	Item	Approximate Quantity	Unit	Unit Price Dollars	Amount Dollars
1	2677	ASPH PAVE MILLING & TEXTURING	**30.00**	TON	.	.
2	0001	D G A BASE	**1,640.00**	TON	.	.
3	0215	CL3 ASPH BASE 1.00D PG70-22	**680.00**	TON	.	.
4	0313	CL3 ASPH SURF 0.50D PG70-22	**360.00**	TON	.	.
5	0464	CULVERT PIPE-24 INCH	**8.00**	LIN FT	.	.
6	2200	ROADWAY EXCAVATION	**820.00**	CU YD	.	.
7	2705	SILT CHECK	**4.00**	EACH	.	.
8	2708	CLEAN SILT CHECK	**4.00**	EACH	.	.
9	6589	PAVEMENT MARKER TYPE V - M W	**7.00**	EACH	.	.
10	6591	PAVEMENT MARKER TYPE V - B Y	**63.00**	EACH	.	.
11	1982	DELINEATOR FOR GUARDRAIL-WHITE	**10.00**	EACH	.	.
12	6514	PAVE STRIPING-PERM PAINT-4 IN	**6,300.00**	LIN FT	.	.
13	6510	PAVE STRIPING-TEMP PAINT-4 IN	**3,150.00**	LIN FT	.	.
14	6600	REMOVE PAVEMENT MARKER TYPE V	**27.00**	EACH	.	.
15	2014	BARRICADE-TYPE III	**4.00**	EACH	.	.
16	2562	SIGNS	**270.00**	SQ FT	.	.
17	2775	FLASHING ARROW	**2.00**	EACH	.	.
18	2650	MAINTAIN AND CONTROL TRAFFIC	**1.00**	LP SUM	.	.
19	2676	MOBILIZATION FOR MILL & TEXT	**1.00**	LP SUM	.	.
20	2569	DEMOBILIZATION	**1.00**	LP SUM	.	.
21		**TOTAL BID**				$.

PART VII

CERTIFICATIONS

1.	Provisions Relative to Senate Bill 258 (1994)	Attached
2.	Non-Collusion Certification	Attached
3.	Certification of Bid Proposal	Attached

PROVISIONS RELATIVE TO SENATE BILL 258 (1994)

During the performance of the contract, the contractor agrees to comply with applicable provisions of:

1.	KRS 136	Corporation and Utility Taxes
2.	KRS 139	Sale and Use Taxes
3.	KRS 141	Income Taxes
4.	KRS 337	Wages and Hours
5.	KRS 338	Occupational Safety and Health of Employees
6.	KRS 341	Unemployment Compensation
7.	KRS 342	Workers Compensation

Any final determinations of a violation by the contractor within the previous five (5) years pursuant to the applicable statutes above are revealed as follows:

_____

_____

_____

_____

_____

_____

_____

_____

NON-COLLUSION CERTIFICATION

COMMONWEALTH OF KENTUCKY
COUNTY _____
PROJECT NO. _____

I, _____, _____, under
(Name of officer signing certification) (Title)

penalty of perjury under the laws of the United States, do hereby certify that

_____,
(Insert name of Individual, Joint Venture, Co-partnership, or Corporation submitting bid)

its agent, officers or employees have not directly or indirectly entered into any agreement, participated in any collusion, or otherwise taken action in restraint of free competitive bidding in connection with this proposal.

_____
(Signature)

_____
(Title)

REVISED: 8-23-89

NON-COLLUSION CERTIFICATION

COMMONWEALTH OF KENTUCKY
COUNTY _____
PROJECT NO. _____

I, _____, _____, under
(Name of officer signing certification) (Title)

penalty or perjury under the laws of the United States, do hereby certify that

_____,
(Insert name of Individual, Joint Venture, Co-partnership, or Corporation submitting bid)

its agent, officers or employees have not directly or indirectly entered into any agreement, participated in any collusion, or otherwise taken action in restraint of free competitive bidding in connection with this proposal.

_____
(Signature)

_____
(Title)

REVISED: 8-23-89

CERTIFICATION OF BID PROPOSAL

We (I) propose to furnish all labor, equipment and materials necessary to construct and/or improve the subject project in accordance with the plans, the Transportation Cabinet's Standard Specifications for Road and Bridge Construction, current edition, special provisions, notes applicable to the project as indicated herein and all addenda issued on this project subsequent to purchase of proposal.

We (I) attach a bid proposal guaranty as provided in the special provisions in an amount not less than 5% of the total bid. We agree to execute a contract in accordance with this bid proposal within 15 calendar days after the receipt of the notice of award for the project.

We (I) have examined the site of proposed work, project plans, specifications, special provisions, and notes applicable to the project referred to herein. We understand that the quantities shown herein are estimated quantities subject to increase or decrease as provided in the specifications.

_____
Name of Contracting Firm

BY: _____
Authorized Agent Title

_____
Address City State Zip Code

_____
Telephone Number

When two or more organizations bid as a joint venture, enter names of each organization and an authorized agent for each organization must sign above.

SPECIAL NOTES APPLICABLE TO PROJECT

2000 SPECIFICATIONS & 2003 STANDARD DRAWINGS
Any reference in the plans or proposal to the ***Standard Specifications for Road and Bridge Construction, Edition of 1998***, and ***Standard Drawings, Edition of 2000*** are superseded by ***Standard Specifications for Road and Bridge Construction, Edition of 2000*** and ***Standard Drawings, Edition of 2003.***

2001 SUPPLEMENTAL SPECIFICATIONS
The ***2001 Supplemental Specifications*** to the 2000 Standard Specifications for Road and Bridge Construction shall apply to this project.

PROPOSAL ADDENDA
All Addenda to this proposal must be incorporated into the proposal when the bid is submitted to the Kentucky Department of Highways. Failure to use the correct and most recent bid sheet(s) may result in the bid being rejected.

BID SUBMITTAL
Bidder must use the Department's Highway Bid Program available on the internet web site of the Department of Highways, division of Contract Procurement. (www.kytc.state.us/contract)

The Bidder must download the bid items created from the web site to prepare a bid proposal for submission to the Department. The bidder must insert the completed bid item sheets printed from the Program into the bidder's proposal and submit with the disk created by said program.

JOINT VENTURE BIDDING
Joint Venture bidding is permissible. However, both companies MUST purchase a bidding proposal. Either proposal may be submitted but must contain the company names and signatures of both parties where required. A joint bid bond of 5% may be submitted for both companies or each company may submit a separate bond of 5%.

UNDERGROUND FACILITY DAMAGE PROTECTION
The contractor is advised that the Underground Facility Damage Protection Act of 1994, became law January 1, 1995. It is the contractor's responsibility to determine the impact of the act regarding this project, and take all steps necessary to be in compliance with the provisions of the act.

ASPHALT BASE PRICE
The Asphalt Base Price shall be **$185.00 (english)** as applicable in **Section 109.07** of the ***2000 Standard Specifications.***

INCIDENTAL SURFACING
The quantities established in the proposal include estimated quantities required for resurfacing or surfacing mailbox turnouts, farm field entrances, residential and commercial entrances, and road and street approaches. These items are to be paved to the limits as shown on **Standard Drawing RPM 110** or to the limits as directed by the Engineer. In the event signal detectors are present in the intersecting streets or roads, the paving of the crossroads shall be to the right of way limit or back of the signal detector, whichever is the farthest back of the mainline. These areas are to be surfaced or resurfaced as directed by the Engineer and no direct payment will be allowed for placing and compacting.

OPTION B
The Contractor is advised that the compaction of asphalt mixtures furnished to this project will be accepted by **OPTION B** in accordance with **Section 402** and **Section 403** of the ***2000 Standard Specification.***

Mainline Surfacing Width 20 Feet.

Total area to be Surfaced 4360 Square Yards.

Class 3 Asphalt Surface 0.5D PG 70-22 estimate based on depth of 1.5" - 165 lbs/Sq Yd.

Class 3 Asphalt Base 1.0D PG 70-22 estimate based on depth of 6" - 660 lbs/Sq Yd.

The ADT for this project is estimated at 4100.