TRANSPORTATION CABINET
Department of Highways
Frankfort, Kentucky 40622

PROPOSAL NO. _____
PROJECT CODE NO. 03-0253

LETTING OF APRIL 25, 2003
Sealed Bids will be received in the Division of Contract Procurement and/or the Auditorium located on the 1st Floor of the State Office Building until 10:00 A.M., EDT, on APRIL 25, 2003 Bids will be publicly opened and read at 10:00 A.M., EASTERN DAYLIGHT TIME.

PROJECT IDENTIFICATION AND DESCRIPTION:

FD GR 03 0000111, HARDIN-NELSON COUNTIES

Status Report Item No. 4-2023.00.

Asphalt Pavement Rehabilitation and Guardrail.

(4)

GEOGRAPHIC COORDINATES:
LATITUDE - 37° 42' NORTH
LONGITUDE - 86° 00' WEST

COMPLETION DATE ESTABLISHED FOR PROJECT: SEE SPECIAL NOTES

LIQUIDATED DAMAGES SEE SPECIAL NOTES

REQUIRED BID PROPOSAL GUARANTY: Not less than 5% of the total bid.

(Check guaranty submitted: Cashier's Check |__| Certified Check |__| Bid Bond |__|)

BID BONDS WHEN SUBMITTED WILL BE RETAINED WITH THE PROPOSAL.

INDEX OF CONTENTS

PART	
I	SCOPE OF WORK
II	SPECIAL PROVISIONS APPLICABLE TO PROJECT
III	EMPLOYMENT, WAGE AND RECORD REQUIREMENTS
IV	INSURANCE
V	STATEMENT OF INCOMPLETED WORK AND SUBCONTRACTED WORK
VI	BID ITEMS
VII	CERTIFICATION

BID..... |__| PROPOSAL ISSUED TO: _____

SPECIMEN..... |__| _____
Address City State Zip

PART I

SCOPE OF WORK

1. Project Detail

a. See Sketches (2 Sheets), Description Summary, Material Summary, Guardrail Summary and Typical Sections (2 Sheets)	Attached
b. Special Notes Applicable to Project	Attached
c. Supplemental Specifications	Attached
d. Special Note for Acceptance of Density of Longitudinal Joints in Asphalt Surface Pavements (6-4-02)	Attached
e. Special Note for Traffic Control Plan	Attached
f. Special Note for Typical Section Dimensions	Attached
g. Special Note for Asphalt Milling and Texturing	Attached
h. Special Note for Removing Type V Pavement Markings	Attached
i. Special Note for Milled Rumble Strips	Attached
j. Special Note for Installation of Metal Snowplowable Pavement Markers	Attached
k. Traffic Control for Raised Pavement Marker Installation	Attached
l. Traffic Control for Thermoplastic Pavement Markers	Attached
m. Special Note for Guardrail	Attached
n. Special Note for Edge key	Attached
o. Special Note for Reflective-Crack-Relief-Interlayer	Attached
p. Special Notes for Completion Date & Liquidated Damages	Attached
q. Special Notes for Pavement Rehabilitation	Attached
r. Special Note for Longitudinal Pavement Joint Adhesive	Attached
s. Policy for the Use and Placement of Changeable Message signs	Attached
t. Special Note for Variable Message Signs (4-18-2001)	Attached
u. Special Note for Material Transfer Vehicle (1-1-2000) **[9Y]**	*

* These Special Notes are included in the Supplemental Specifications.

FD04 047-9002-004-009

DEPARTMENT OF HIGHWAYS
MAP OF
HARDIN COUNTY
SHOWING
STATE MAINTAINED SYSTEM

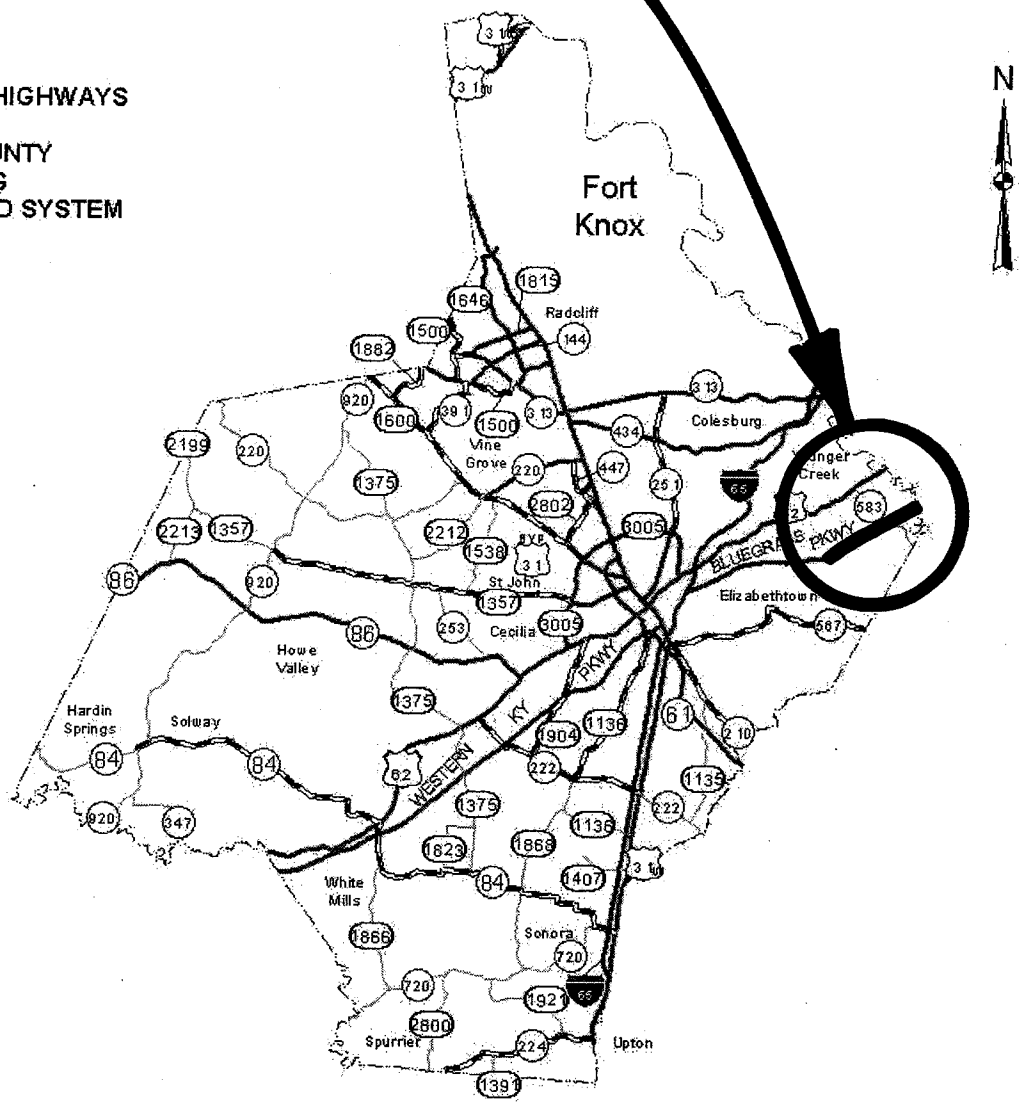

(1)

FD04 090-9002-008-011

DEPARTMENT OF HIGHWAYS
MAP OF
NELSON COUNTY
SHOWING
STATE MAINTAINED SYSTEM

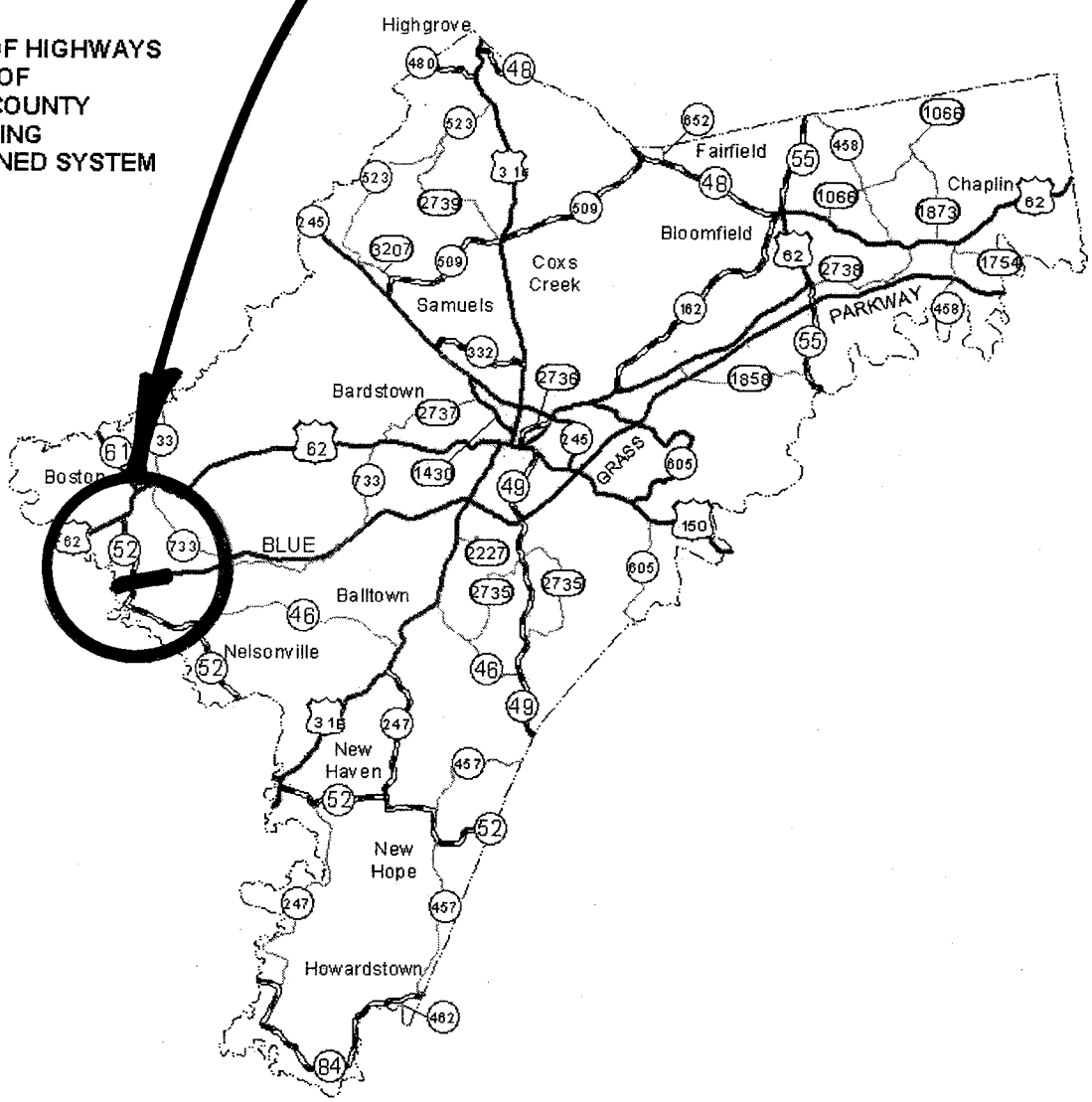

(2)

FD GR 03 0000111, HARDIN-NELSON COUNTIES DESCRIPTION SUMMARY

COUNTY	PROJECT NUMBER	DESCRIPTION	LENGTH MILES	WIDTH FEET	AREA SQ YD	ADT
Hardin	FD04 047 9002 004-009	1. The Bluegrass Parkway (PW 9002) from 4.880 miles east of I-65 (MP 4.880) extending easterly to the Nelson County Line (MP 8.837).	3.957	54	110785	9420
Nelson	FD04 090 9002 008-011	2. The Bluegrass Parkway (PW 9002) from the Hardin County Line (MP 8.837) extending easterly to Railroad Bridge (MP 10.172).	1.335	54	42295	9500
		TOTALS:	5.292	0	153080	0

CODE	DESCRIPTION	UNIT	HARDIN	NELSON	TOTAL
2230	EMBANKMENT IN PLACE	CY	1238	1450	2688
8100	CONCRETE-CLASS A	CY	51.58		51.58
8150	STEEL REINFORCEMENT (HEADWALL)	LB	12		12
8100	CONCRETE-CLASS A (HEADWALL)	CY	1.5		1.5
8104	CONCRETE-CLASS AA	CY		25	25
2351	G/R-STEEL W BEAM--S F	LF	7957.5	12005	19962.5
2352	G/R-STEEL W BEAM--D F	LF		687.5	687.5
2360	G/R TERM SECT # 1	EA		5	5
2369	G/R END TREAT TY 2A	EA	11	13	24
2373	G/R END TREAT TY 3	EA	3	2	5
2391	G/R END TREAT TY 4A	EA	7		7
2378	G/R CON TO BR END TY D	EA		10	10
2381	REMOVE G/R	LF	9395	13705	23100
2929	CRASH CUSHION TY IX	EA	1		1
2365	CRASH CUSHION TY IX-A	EA		5	5
9679	CRASH CUSHION TY VII (D S)	EA		2	2
6511	PAVE STRPG-TEMP PAINT-6"	LIN FT	100000	46000	146000
6542	PAVE STRPG THERMO 6"-W	LIN FT	50400	23100	73500
6543	PAVE STRPG THERMO 6"-Y	LIN FT	41100	18500	59600
6546	PAVE STRPG THERMO 12"-W	LIN FT	2300	2300	4600
6550	PAVE STRPG TEMP REM TAPE-W (6")	LIN FT	1000	1000	2000
6551	PAVE STRPG TEMP REM TAPE-Y (6")	LIN FT	1000	1000	2000
6549	PAVE STRPG TEMP REM TAPE-B (8")	LIN FT	500	500	1000
6592	PAVE MARK TY-V B W/R	EA	500	100	600
2775	FLASHING ARROW	EA	2	2	4
2671	VAR MESS SIGN-PORT 3 LINE	EA	2	2	4
2562	SIGNS	SF	300	500	800
2653	LANE CLOSURES	EA	4	4	8
2014	BARRICADE TY 3	EA	2	5	7
6600	REM PAVE MARK TY V	EA	500	275	775
473	CULVERT PIPE--66"	LF	40		40
9852	RUBBELIZE PAVED DITCH	LF	175		175
5985	SEEDING & PROTECTION	SY	45000	15500	60500

CODE	DESCRIPTION	UNIT	HARDIN	NELSON	TOTAL
2705	SILT CHECK	EA	3		3
2708	CLEAN SILT CHECK	EA	6		6
9342	JOINT ADHESIVE	LF	41786	14098	55884
2677	ASPH PAVE MILL & TEXT	TON	1400	100	1500
1	DGA BASE	TON	2150	720	2870
190	ASPH MIX FOR LEV & WEG	TON	500	210	710
103	ASPH SEAL COAT	TON	85	28	113
100	ASPH SEAL AGG	TON	700	235	935
9850	REFLECT CRACK RELIEF INTERLAYER	TON	6100	2325	8425
9072	MILLED RUMBLE STRIPS	LF	73800	14098	87898
338	ASPH PLACEMENT W/MTV	TON	16755	6410	23165
276	CL3 ASPH BINDER 0.5D PG76-22	TON	9140	3500	12640
272	CL2 ASPH BINDER 0.5D PG64-22	TON	3385	1295	4680
9851	CL3 ASPH SURF 0.38A PG76-22	TON	7615	2910	10525
301	CL2 ASPH SURF 0.38D PG64-22	TON	3300	1585	4885
2726	STAKING	LS	1		1
2726	STAKING	LS		1	1
2650	MAINTAIN & CONTROL TRAFFIC	LS	1		1
2650	MAINTAIN & CONTROL TRAFFIC	LS		1	1
2676	MOB FOR ASPH MILL & TEXT	LS	1		1
2676	MOB FOR ASPH MILL & TEXT	LS		1	1
2568	MOBILIZATION	LS	1	1	1
2569	DEMOBILIZATION	LS	1	1	1
	T O T A L		$	$	0

GUARDRAIL SUMMARY
BlueGrass Parkway -- EastBound

FD04 047-9002-004-009
FD04 090-9002-008-011

STATION	GUARDRAIL TO REMOVE LF	GUARDRAIL TO INSTALL LF	END TREAT TYPE 3 EA	END TREAT TYPE 4A EA	END TREAT TYPE 2A EA	Crash Cushion TYPE IX/IX-A EA	BR CONN TYPE D NOTE 1 EA	Crash Cushion Ty VII, D, S NOTE 2 EA	Comments	Embankment Needed Cubic Yds
5.838 to 5.885	250	250		1	1					40
6.09 to 6.132	250	250		1	1					40
6.925 to 6.973	250								Add 24' of 66" RCP & Intermediate Pipe Anchor Need 15 CY CL A Concrete Note 3 Site Grade and Eliminate Rail	420
7.378 to 7.431	300	300		1	1					40
7.506 to 7.562	300	400	1		1					100
8.318 to 8.465	825	775		1	1				Remove existing 15" Headwall Construct 15" S&P Headwall	40
8.53 to 8.982	2387.5	2387.5		1			1		Modify Wingwall for Ty D Need 1.4 CY CL AA Concrete	40
8.897 to 8.982	450	100				Ty IX-A 1	1		Modify Wingwall for Ty D Need 1.4 CY CL AA Concrete Removing DBL Faced GR Incindental to Removing GR	197
9.043 to 9.523	2475	2475			1		1		Modified Wingwall for Ty D Need 1.4 CY CL AA Concrete	
9.438 to 9.523	450	100				Ty IX-A 1	1		Modify Wingwall for Ty D Need 1.4 CY CL AA Concrete Removing DBL Faced GR Incindental to Removing GR	197
9.547 to 9.712	875	850			2				Cautiom: conduit hanging on back or GR	
9.718 to 9.974	1350	1350			3			1	Need 5.49 CY CL AA for Ty VII	75
10.115 to 10.172	225	300	1				1		Modify Wingwall for Ty D Need 1.4 CY CL AA Concrete	100
10.115 to 10.172	450	100				Ty IX-A 1	1		Modify Wingwall for Ty D Need 1.4 CY CL AA Concrete Removing DBL Faced GR Incindental to Removing GR	197

NOTES:

1. Construct new face on bridge wing wall to accommodate Bridge Connector Type D; use hook bolts to attach to existing headwall; 1.4 CY Class AA Concrete; Steel Reinforcement incidental to concrete.
2. Wide Quadguard Elite (10' width); designed by manufacturer; use Class AA Concrete to construct backup wall and pad; Steel Reinforcement incidental to concrete.
3. Construct a 66" modified (reinforced concrete) Itermediate Pipe Anchor; use hook bolts to attach to existing headwall; Use Class A Concrete to construct anchor; Steel Reinforcement incidental to concrete

GUARDRAIL SUMMARY
BlueGrass Parkway -- WestBound

STATION	REMOVE GUARDRAIL LF	GUARDRAIL LF	END TREAT TYPE 3 EA	END TREAT TYPE 4A EA	END TREAT TYPE 2A EA	Crash Cushion TYPE IX/IX-A EA	BR CONN TYPE D NOTE 1 EA	Crash Cushion Ty VII, D, S NOTE 2 EA	Comments	Embankment Needed Cubic Yds
6.123 to 6.161	250	187.5		1	1					40
6.378 to 6.678	1575	1375		1	1				Set up replacement rail	40
6.96 to 7	250								Add 16' of 66" RCP & Intermediate Pipe Anchor Need 15 CY CL A Concrete Note 3 Site Grade and Eliminate Rail	258
7.324 to 7.378	287.5	125			1				Tie into existing rail	
7.853 to 7.9	250	387.5	1		1				Rubbelize paved ditch - 175'	100
7.9 to 7.973	800					Ty IX 2			Median @ KY 583 bridge Need 21.58 CY CL A Concrete Steel Reinforcement incidental to concrete	
8.397 to 8.451	450	550	1		1					100
8.546 to 8.982	2500	2500			2					
9.043 to 9.128	450	100				Ty IX-A 1	1		Modify Wingwall for Ty D Need 1.4 CY CL AA Concrete Removing DBL Faced GR Incindental to Removing GR	197
9.043 to 9.523	2475	2475			1		1		Modify Wingwall for Ty D Need 1.4 CY CL AA Concrete	
9.547 to 9.632	450	100				Ty IX-A 1	1		Modify Wingwall for Ty D Need 1.4 CY CL AA Concrete Removing DBL Faced GR Incindental to Removing GR	197
9.547 to 9.7	837.5	887.5			2		1	1	Modify Wingwall for Ty D Need 1.4 CY CL AA Concrete Need 5.49 CY CL AA for Ty VII	170
9.734 to 10.02	1512.5	1462.5	1		1					100
10.139 to 10.172	175	175			2				coming off bridge over RR	

NOTES:

1. Construct new face on bridge wing wall to accommodate Bridge Connector Type D; use hook bolts to attach to existing headwall; 1.4 CY Class AA Concrete; Steel Reinforcement incidental to concrete.
2. Wide Quadguard Elite (10' width); designed by manufacturer; use Class AA Concrete to construct backup wall and pad; Steel Reinforcement incidental to concrete.
3. Construct a 66" modified (reinforced concrete) Itermediate Pipe Anchor; use hook bolts to attach to existing headwall; Use Class A Concrete to construct anchor; Steel Reinforcement incidental to concrete

HARDIN & NELSON COUNTIES
BLUEGRASS PARKWAY
FD04-047-9002-004-009
FD04-090-9002-008-011
EASTBOUND 5.800-8.837
WESTBOUND 4.880-8.837

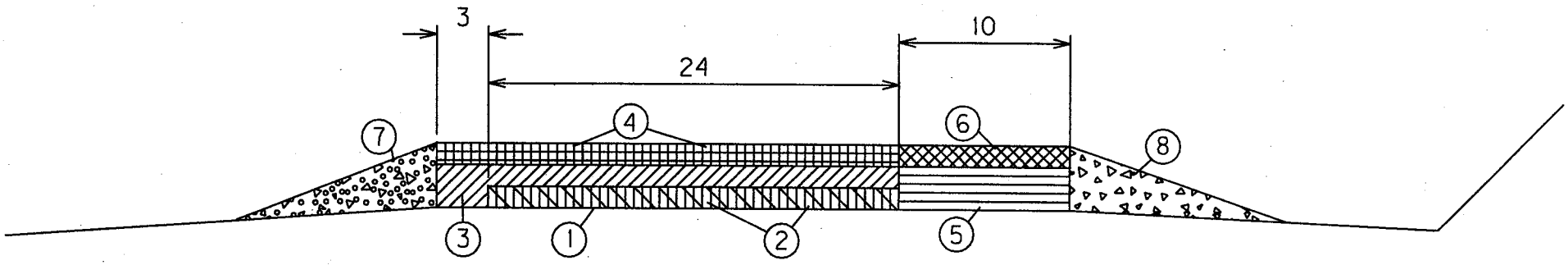

1. LEVELING & WEDGING AS DIRECTED BY ENGINEER
2. 1"-REFLECTIVE CRACK RELIEF INTERLAYER
3. 1.5"-CL3 ASPH BINDER 0.5D PG76-22
4. 1.25"-CL3 ASPH SURFACE 0.38A PG76-22
5. 1.5"-CL2 ASPH BINDER 0.5D PG64-22
6. 1.25"-CL2 ASPH SURFACE 0.38D PG64-22
7. SHOULDERING, EARTH 4:1 SLOPE
8. DGA WEDGE W/ DOUBLE ASPHALT SEAL COAT, 4:1 SLOPE

HARDIN & NELSON COUNTIES
BLUEGRASS PARKWAY
TYPICAL RAMP SECTION
FD04-047-9002-004-009
FD04-090-9002-008-011

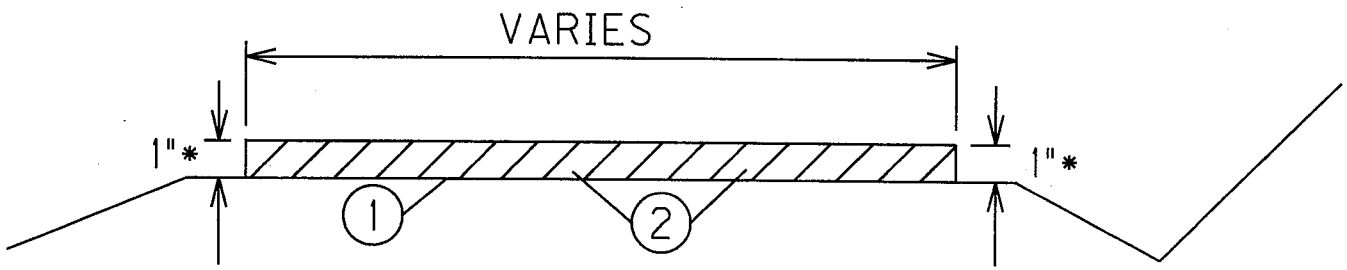

1. LEVELING AND WEDGING AS SIRECTED BY ENGINEER
2. 1.25"-CL2 ASPH SURF PG64-22
*-WHERE SITE CONDITIONS PERMIT

(2)

SPECIAL NOTES APPLICABLE TO PROJECT

The following Standard Drawings apply to this Project and may be obtained by contacting the Department of Highways, Division of Design, at a cost of $0.50 per copy.

GUARDRAIL AND BRIDGE END DRAINAGE FOR TWIN STRUCTURES RBB-002-08
LAYOUT OF GUARDRAIL AT TWIN STRUCTURES-DEPRESSED MEDIAN RBB-003-02
GUARDRAIL CONNECTOR TO BRIDGE END TYPE D RBC-004-05
CONCRETE MEDIAN BARRIER END FOR CRASH CUSHION TYPE IX RBE-070-03
CRASH CUSHION TYPE IX RBE-200-03
CRASH CUSHION TYPE IX-A RBE-205-03
TYPICAL GUARDRAIL INSTALLATIONS RBI-001-09
TYPICAL GUARDRAIL INSTALLATIONS RBI-002-06
TYPICAL INSTALLATION FOR GUARDRAIL END TREATMENT TYPE 2A RBI-003-06
INSTALLATION OF GUARDRAIL END TREATMENT TYPE 1 ..... RBI-004-02
GUARDRAIL INSTALLATION AT BRIDGE COLUMNS RBI-005-06
CRASH CUSHION TYPE IX INSTALLATION AT MEDIAN PIERS (DEPRESSED MEDIAN) RBI-007-08
STEEL BEAM GUARDRAIL (W-BEAM) RBR-001-11
GUARDRAIL COMPONENTS RBR-005-10
GUARDRAIL TERMINAL SECTIONS RBR-010-05
GUARDRAIL POSTS RBR-015-04
GUARDRAIL POSTS RBR-016-04
GUARDRAIL END TREATMENT TYPE 2A RBR-025-03
GUARDRAIL END TREATMENT TYPE 3 ..... RBR-030-04
GUARDRAIL END TREATMENT TYPE 4A RBR-035-07
CULVERT & STORM SEWER PIPE TYPES & COVER HEIGHTS RDI-004-02
PIPE BEDDING FOR CULVERTS, ENTRANCE AND STORM SEWER PIPE RDI-020-08
PIPE BEDDING, TRENCH CONDITION RDI-025-04
COATINGS, LININGS AND PAVINGS FOR NON-STRUCTURAL PLATE PIPE RDI-035-01
SILT CHECK TYPE I – STRAW BALES RDX-200-02
SILT CHECK TYPE II & III – CRUSHED STONE RDX-205
TEMPORARY SILT FENCE RDX-210-02
SUPERELEVATION FOR MULTILANE PAVEMENTS RGS-002-04
MISCELLANEOUS STANDARDS PART 1 ..... RGX-001-04
ONE POINT PROCTER FAMILY OF CURVES RGX-200
PAVEMENT MARKER ARRANGEMENTS MULTI-LANE ROADWAYS TPM-100
PAVEMENT MARKER ARRANGEMENTS MULTI-LANE ROADWAYS TPM-105
PAVEMENT MARKER ARRANGEMENTS MULTI-LANE ROADWAYS TPM-110
PAVEMENT MARKER ARRANGEMENTS TWO-LANE TWO-WAY ROADWAYS TPM-115
PAVEMENT MARKER ARRANGEMENT TWO-LANE TO FOUR-LANE TRANSITIONS TPM-120
PAVEMENT MARKER ARRANGEMENT EXIT-GORE AND OFF-RAMP TPM-125
PAVEMENT MARKER ARRANGEMENTS ON-RAMP WITH TAPERED ACCELERATION LANE TPM-130
PAVEMENT MARKER ARRANGEMENT ON-RAMP WITH PARALLEL ACCELERATION LANE TPM-135
PAVEMENT MARKER ARRANGEMENTS TWO-WAY LEFT TURN LANE TPM-140
PAVEMENT MARKER ARRANGEMENT CHANNELIZED INTERSECTION TPM-145
LANE CLOSURE TWO-LANE HIGHWAY CASE I TTC-100
LANE CLOSURE TWO-LANE HIGHWAY CASE II TTC-105
LANE CLOSURE MULTI-LANE HIGHWAY CASE I TTC-115
LANE CLOSURE MULTI-LANE HIGHWAY CASE II TTC-120
SHOULDER CLOSURE TTC-135
MISCELLANEOUS TRAFFIC CONTROL DEVICES TTD-100
MISCELLANEOUS TRAFFIC CONTROL DEVICES TTD-105
POST SPLICING DETAIL TTD-110
ARROW PANEL TTD-115
MOBILE OPERATION FOR PAINT STRIPING CASE I TTS-100
MOBILE OPERATION FOR PAINT STRIPING CASE II TTS-105
MOBILE OPERATION FOR PAINT STRIPING CASE III TTS-110
MOBILE OPERATION FOR PAINT STRIPING CASE IV TTS-115
SLOPED AND PARALLEL HEADWALLS, 12" TO 21" PIPE RDH-030-03

SPECIAL NOTES APPLICABLE TO PROJECT (Continued)

2000 SPECIFICATIONS
Any reference in the plans or proposal to the ***Standard Specifications for Road and Bridge Construction, Edition of 1998***, and ***Standard Drawings, Edition of 2000*** are superseded by ***Standard Specifications for Road and Bridge Construction, Edition of 2000*** and ***Standard Drawings, Edition of 2003.***

2001 SUPPLEMENTAL SPECIFICATIONS
The ***2001 Supplemental Specifications*** to the 2000 Standard Specifications for Road and Bridge Construction shall apply to this project.

PROPOSAL ADDENDA
All Addenda to this proposal must be incorporated into the proposal when the bid is submitted to the Kentucky Department of Highways. Failure to use the correct and most recent bid sheet(s) may result in the bid being rejected.

BID SUBMITTAL
Bidder must use the Department's Highway Bid Program available on the internet web site of the Department of Highways, Division of Contract Procurement. (www.kytc.state.ky.us/contract)

The Bidder must download the bid items created from the web site to prepare a bid proposal for submission to the Department. The bidder must insert the completed bid item sheets printed from the Program into the bidder's proposal and submit with the disk created by said program.

JOINT VENTURE BIDDING
Joint Venture bidding is permissible. However, both companies MUST purchase a bidding proposal. Either proposal may be submitted but must contain the company names and signatures of both parties where required. A joint bid bond of 5% may be submitted for both companies or each company may submit a separate bond of 5%.

UNDERGROUND FACILITY DAMAGE PROTECTION
The contractor is advised that the Underground Facility Damage Protection Act of 1994, became law January 1, 1995. It is the contractor's responsibility to determine the impact of the act regarding this project, and take all steps necessary to be in compliance with the provisions of the act.

ASPHALT BASE PRICE
The Asphalt Base Price shall be **$185.00 (english)** as applicable in **Section 109.07** of the ***2000 Standard Specifications.***

INCIDENTAL SURFACING
The quantities established in the proposal include estimated quantities required for resurfacing or surfacing mailbox turnouts, farm field entrances, residential and commercial entrances, and road and street approaches. These items are to be paved to the limits as shown on **Standard Drawing RPM 110** or to the limits as directed by the Engineer. In the event signal detectors are present in the intersecting streets or roads, the paving of the crossroads shall be to the right of way limit or back of the signal detector, whichever is the farthest back of the mainline. These areas are to be surfaced or resurfaced as directed by the Engineer and no direct payment will be allowed for placing and compacting.

SPECIAL NOTES APPLICABLE TO PROJECT (Continued)

NHS PROJECTS
This project is on the ***NATIONAL HIGHWAY SYSTEM.***

WORK ZONE CATEGORY I AND II DEVICES
The Contractor is required to provide certification that all *Work Zone Category I and II Devices* are compliant with **NCHRP 350** before these devices are used on the project. *Category II Devices* include, but are not limited to: portable sign stands (with signs), type I, II & III barricades, vertical panels, intrusion alarms, cones with lights, and other work zone devices under 45kg (100 lb).

OPTION A
The Contractor is advised that the compaction of asphalt mixtures furnished for driving lanes and ramps, at 25mm (1 inch) or greater, on this project will be accepted according to **OPTION A** in accordance with **Section 402** and **Section 403** of the *2000 Standard Specification.* The compaction of all other asphalt mixtures will be accepted by **OPTION B.**

ASPHALT PAVEMENT RIDE QUALITY
Pavement Rideability Requirements shall apply on this project in accordance with **Section 410** of the ***2000 Standard Specifications.***

Class 3 Asphalt Binder 0.5D PG 76-22 estimate based on depth of 1 ½" - 165 lbs/s.y.

Class 3 Asphalt Surface 0.38A PG 76-22 estimate based on depth of 1 ¼" - 137.5 lbs/s.y.

Class 2 Asphalt Binder 0.5D PG 64-22 For Shoulder estimate based on depth of 1 ½" - 165 lbs/s.y.

Class 2 Asphalt Surface 0.38D PG 64-22 For Shoulder estimate based on depth of 1 ¼" - 137.5 lbs/s.y.

SHOULDERS (56696 Sq. Yds.) 10' wide on each side.

SPECIAL NOTES APPLICABLE TO PROJECT (Continued)

In order for the Cabinet to the use of its resources more efficiently, the contractor shall, prior to issuance of notice to begin work, submit an anticipated earnings schedule broken down by **month** for the expected life of the contract for any project with a bid over **$5,000,000.** The contractor will be provided a spreadsheet to expedite the preparation of this schedule upon award of the contract. No direct payment will be allowed for the preparation and submittal of this schedule.

In the event the Engineer determines that there are inadequate or insufficient road funds available under the contract for the payment of Engineer's estimates for work on the project as they come due, the Engineer may suspend payment for all or a part of the contract. If payment is suspended, the contractor may have the option, with the written agreement of the Engineer, of continuing performance under the contract. If the contractor suspends performance, he shall not resume performance until he receives a back to work notice from the Engineer. In the event that the Engineer suspends payment for all or part of the project as provided herein, the contractor waives any and all right to bring any claim for damages as a result of the suspension or delayed payment.

In the event the Engineer determines that there are inadequate or insufficient road funds available for the payment of Engineer's estimates for work on the project as they come due, the Engineer may at his discretion, by written notice 10 days in advance, terminate all or part of the contract. The Cabinet will remain obligated to pay, as soon as funds are available, all actual items of work performed prior to the contractor's receipt of the notice termination. The contractor shall be entitled to reasonable close out costs attendant to termination of the contract under this provision, but in no event shall the contractor be entitled to more than 10% of the total contract price.

The contractor agrees to all terms and conditions stated above in the event there are inadequate or insufficient funds available under the contract for payment, and contractor further expressly waives any right to assert a claim or bring any form of action against the Cabinet under the contact or pursuant to Kentucky law or regulation, including but not limited to KRS Chapter 45A or KRS Chapter 13B.

To the fullest extent permitted by law, the Contractor shall indemnify and hold harmless the Transportation Cabinet from and against claims, damages, losses, and expenses, including but not limited to attorney's fees, arising out of or resulting from suspension or termination under this section. Such obligation shall not be construed to negate, abridge, or reduce other rights or obligations of indemnity which would otherwise exist as to a party or person under the contract.

In the event of any inconsistent provisions within this contract with respect to this section and any other section, the provisions of this section shall govern and control.

Supplemental Specifications to The Standard Specifications for Road and Bridge Construction, 2000 Edition (Effective with the April 25, 2003 Letting)

SUBSECTION: 102.07.01 General.
REVISION: Replace the first sentence with the following:

Submit the Bid Proposal on the forms furnished by the Department including the Highway Bid Program bid item sheets and disk created from the Department's internet web site.

SUBSECTION: 102.07.02 Computer Bidding.
REVISION: Replace the subsection with the following:

Subsequent to ordering a Bid Proposal for a specific project, use the Department's Highway Bid Program on the internet web site of the Department of Highways, Division of Contract Procurement. Download the bid item quantities from the Department's web site to prepare a Bid Proposal for submission to the Department. Insert the completed bid item sheets printed from the Highway Bid Program into the Proposal and submit along with the disk created by said program.

In case of a dispute, the Bid Proposal and bid item sheets created by the Highway Bid Program take precedence over any bid submittal.

Furthermore the Department takes no responsibility for loss, damage of disks or the compatibility with the bidder's computer equipment or software.

SUBSECTION: 102.08 IRREGULAR BID PROPOSALS.
REVISION: Add the following to the first set of items:

4) Fails to submit a disk created from the Highway Bid Program

SUBSECTION: 102.08 IRREGULAR BID PROPOSALS.
REVISION: Replace 1) of the second set of items with the following:

1) when the Bid Proposal is on a form other than that furnished by the Department or printed from other than the Highway Bid Program , or when the form is altered or any part is detached.

SUBSECTION: 103.05 REQUIREMENT OF CONTRACT BOND.
REVISION: Replace the first sentence of the first paragraph with the following:

To be acceptable to the Department, the surety must have a minimum A. M. Best rating of an "A-", be listed on the U.S. Treasury Listing of approved sureties for an amount equal to or greater than the amount of the bond and be an admitted carrier in the Commonwealth of Kentucky.

Replace the last sentence of the first paragraph with the following:

If at any time during the performance of the Contract the surety company falls below the minimum acceptable requirements, the Contractor shall file a new bond in an amount established by the Commissioner, or his designee, within 14 calendar days of such failure to meet the minimum requirements.

Add the following to the end of the subsection:

The Department reserves the right to copy the surety on all of its communications with the Contractor concerning the Contractor's performance, or performance deficiencies, on the project and further reserves the right to communicate directly with the surety to inform them of the Contractor's performance, or performance deficiencies, on the bonded project.

SUBSECTION: 108.02 PRECONSTRUCTION CONFERENCE.
REVISION: Add the following to the first paragraph:

Include a plan for updating the schedule. As a minimum, the schedule must be updated whenever a situation arises or event occurs that significantly affects the progress of the work or when the Engineer directs.

SUBSECTION: 109.04.02 Cost-Plus Work.
PART: F) Overhead.
REVISION: Add the following new part:

F) Overhead. The Department will pay for overhead cost associated with administering the work, not to exceed 5 percent, when the work is done by a Subcontractor.

SUBSECTION: 112.02.05 Temporary Pavement Markings.
PART: C) Temporary Striping.
NUMBER: 2) Paint.
REVISION: Replace with the following:

2) Paint. Conform to Section 842

SUBSECTION: 112.02.05 Temporary Pavement Markings.
PART: C) Temporary Striping.
NUMBER: 3) Drop on Beads.
REVISION: Replace with the following:

3) Drop on Beads. Conform to Section 839

SUBSECTION: 112.03.01 General Traffic Control.
PART: G) Signs.
REVISION: Replace the first sentence with the following:

Completely cover all lettering and symbols on existing, permanent, and temporary signs which do not properly apply to the current traffic phasing, and maintain the covering until the signs are applicable or are removed.

SUBSECTION: 112.03.01 General Traffic Control.
PART: I) Temporary Traffic Signals.
REVISION: Replace the MUTCD reference "Section 4B" with "Chapter 4D"

SECTION: 201 STAKING.
Delete the section and replace with the following:

201.01 DESCRIPTION. When listed as a bid item, furnish all personnel, equipment, stakes, and hubs necessary to construct the roadway and appurtenant structures to the grade and alignment specified in the Contract. When no bid item is listed, the Department will perform staking.

201.02 MATERIALS AND EQUIPMENT. Reserved.

201.03 CONSTRUCTION

201.03.01 Contractor Staking. Perform all necessary surveying under the general supervision of a Professional Engineer or licensed Land Surveyor.

The Department's Engineer will perform the following:

1) Provide adequate referencing of control points to allow prompt re-establishment of the survey centerline, right of way, ramps, crossroads, and frontage roads during construction.
2) Set permanent or temporary bench marks as required.
3) Take any cross sections to verify the accuracy of the original ground information.
4) Take "check sections" to verify that construction is to grade and alignment as specified in the Contract.

The Contractor will perform the following:

1) Re-establish the centerline and set such additional points as may be necessary for construction of the project. Verify the accuracy of the horizontal and vertical control as established by the Department's Engineer before beginning construction.
2) Establish clearing lines so that the project may be cleared without violating the limits of the right of way.
3) Set slope stakes right and left of the survey centerline at 50-foot to 100-foot intervals to guide the contractor in constructing the cuts and fills. These stakes are generally set to shoulder grade for fills and ditch grade for cuts. The cut or fill information, slope, and distance from centerline should be on the front face of the stake; the station number should be on the back of the stake. This stake should be guarded with a lath that has the station number written on the side facing the centerline.

revision continued

4) Grade Stakes (Bluetops). Fine grade control will be set to aid the Contractor in establishing the typical sub-grade section. When using conventional transit and chain methods this fine grade control will be established by setting hubs(referred to as blue tops) every 50 feet to the sub-grade section. These blue tops are set to the hundredth of a foot in elevation and are located left and right of pavement centerline, usually at the edge of metal. Bluetops will be set for the top of sub-grade and the top of aggregate base and/or drainage blanket material. Refer to Section 204.03.10 and Section 302.03.06 for construction tolerances of sub-grade and aggregate base or drainage blanket.
5) Stake all structures (bridges, culverts, pipe, and other appurtenances) so that they can be built to the proper line and grade as shown on the plans and to perform the function for which they were designed.

201.03.02 Department Staking. The Department's Engineer will set all stakes necessary for the construction of the roadway and appurtenant structures to the proper grade and alignment in accordance with the contract.

201.03.03 Electronic Surveying. The Department encourages the use of new and advanced technology in the construction of its roads and structures. However, the following restrictions apply:

1) Tolerances are unchanged. Refer to Section 204.03.10 and Section 302.03.06.
2) Sub-grade check sections are to be done every 500 feet in tangent sections and every 100 feet in curves using conventional survey methods to establish bluetops and to verify the correct operation of the electronic equipment.
3) The Contractor will submit his electronic data files to the Department's Engineer at the beginning of the project so that the Engineer can reference the data for verification of the field work.

201.04 MEASUREMENT.

201.04.01 Contractor Staking. When listed as a bid item, the Department will measure staking as lump sum. The Department will not measure surveying required to correct any errors or inaccuracies resulting from construction operations for payment.

201.04.02 Department Staking. The Department will not measure quantities for payment. When any stakes are disturbed due to unwarranted negligence of the Contractor, the Department will measure the work required to reset the stakes and deduct the cost from monies due the Contractor.

201.05 PAYMENT. The Department will make payment for the completed and accepted quantities under the following:

Code	Pay Item	Pay Unit
2726	Staking	Lump Sum

The Department will consider payment as full compensation for all work required under this section.

SUBSECTION: 204.03.08 Disposal of Wasted Materials.
REVISION: Add the following to the end of the second paragraph:

The Department will pay for the geotechnical investigation and analysis of the proposed waste area when one is requested by the Engineer. Ensure all work is performed by a pre-qualified geotechnical consultant and according to the Department's Geotechnical Manual.

SUBSECTION: 206.04.01 Embankment-in-Place.
REVISION: Add the following:

The Department may make adjustments to embankment-in-place projects when there is actually unanticipated waste on the project. Waste generated by the project phasing will not be considered for adjustment. The Department will make an adjustment for the actual costs incurred by the Contractor.

SUBSECTION:	208.03.03 Application of Chemical.
PART:	B) Lime.
NUMBER:	3)
REVISION:	Replace the second sentence with the following: Use only when saturated soil conditions exist and the slurry method would worsen the situation or when weather conditions prohibit the use of slurry.
SUBSECTION:	208.03.06 Curing and Protection.
REVISION:	Replace the first sentence of the fourth paragraph with the following: Do not allow any traffic or equipment on the finished surface until 7 days above 40 °F curing is completed or the roadbed cores achieve a minimum strength requirement of 75 psi.
SUBSECTION:	208.04.02 Lime.
REVISION:	Add the following to the end of the second paragraph: When hydrate or quicklime is furnished for dry application, the Department will measure the actual quantity applied to the roadbed.
SUBSECTION:	212.03.03 Permanent Seeding and Protection.
PART:	A) Seed Mixtures for Permanent Seeding.
REVISION:	Replace with the following: A) Seed Mixture for Permanent Seeding. Use seed Mixture No. I, No. III, or as the Contract specifies. Mixture No. I: 75% Kentucky 31 Fescue (Festuca arundinacea) 10% Red Top (Agrostis alba) 5% White Dutch Clover (Trifolium repens) 10% Rygrass, perennial (Lolium perenne) Mixture No. III: 30% Kentucky 31 Fescue (Festuca arundinacea) 15% Red Top (Agrostis alba) 15% Partridge Pea (Cassia fasciculata) 20% Sericea Lespedeza 10% Sweet Clover – Yellow (Melitotus officinalis) 10% Rygrass, perennial (Lolium perenne)
SUBSECTION:	212.03.03 Permanent Seeding and Protection.
PART:	B) Procedures for Permanent Seeding.
REVISION:	Add the following after the third sentence: Remove all rock and dirt clods over 4 inches in diameter from the surface of the seedbed.
SUBSECTION:	212.03.03 Permanent Seeding and Protection.
PART:	C) Crown Vetch.
REVISION:	Replace the first sentence with the following: Sow crown vetch seed on all areas having a slope 3:1 or steeper and consisting of soil or mixtures of broken rock and soil.
SUBSECTION:	212.03.03 Permanent Seeding and Protection.
PART:	E) Erosion Control Blanket.
REVISION:	Replace the first sentence with the following: Install erosion control blankets in ditches, except those to be paved or rock lined, to a flow depth of 1.5 feet.
SUBSECTION:	213.03.02 Progress Requirements.
REVISION:	Replace the word "may" with "will" in the second sentence of the third paragraph.

SUBSECTION:	213.03.02 Progress Requirements.
REVISION:	Replace the third sentence of the third paragraph with the following: Additionally, the Department will apply a penalty equal to the liquidated damages when all aspects of the work are not coordinated in an acceptable manner within 5 days after written notification.
SUBSECTION:	214.04 MEASUREMENT.
REVISION:	Replace the second sentence with the following: The Department will not measure fabric when the Contract indicates the fabric is incidental to the work or when the specification for another item requires incidental installation of geotextile fabric.
SUBSECTION:	302.02 MATERIALS.
REVISION:	Add the following: 302.02.03 Mixer. Equip the mixer with a water flow system with a positive cut-off control that will stop the flow of water simultaneously with any stoppage in the flow of aggregate and with valves or other devices that can be easily reset when a change in the rate of flow is desired.
SUBSECTION:	401.02.01 All Asphalt Mixing Plants.
PART:	A)
REVISION:	Replace the first sentence of the second paragraph with the following: Provide a laboratory inspected and qualified according to the Department's Quality Assurance Program for Materials Testing and Acceptance and conforming to the following minimum requirements:
SUBSECTION:	401.02.01 All Asphalt Mixing Plants.
PART:	A)
REVISION:	Replace the fourth paragraph with the following: In addition to the equipment required to perform testing according to the AASHTO standards and Kentucky Methods (KM), equip each laboratory with the following minimum furnishings and equipment, conforming to the applicable specifications, as required for the type of construction specified in the Contract: 1) one workbench, at least 2.5 feet wide by 6 feet long; 2) one desk or table and 2 chairs; 3) a fire extinguisher located near the door; and 4) a first aid kit.
SUBSECTION:	401.02.01 All Asphalt Mixing Plants.
PART:	Between Items "H" and "I"
REVISION:	Insert the following new item: Recordation. Provide an automatic graphic or digital record of the production quantities according to AASHTO M156.
SUBSECTION:	401.02.01 All Asphalt Mixing Plants.
PART:	I) Thermometers.
REVISION:	Delete the third paragraph.
SUBSECTION:	401.02.04 Special Requirements for Continuous Plants.
PART:	B) Weight Calibration of Asphalt Binder and Aggregate Feed.
REVISION:	Add the following new paragraph: When equipped with aggregate weighing devices (belt scales), calibrate each cold feeder, along with the aggregate weighing devices, according to Subsection 401.02.05 A) and B).
SUBSECTION:	402.03.01 Responsibilities.
PART:	B) Setup.
REVISION:	Replace (MSG) with (G_{mm})
SUBSECTION:	402.03.01 Responsibilities.
REVISION:	Add the following: C) Process Control. After the setup period, perform the process control operations of KM 64-426.

SUBSECTION:	402.03.02 Acceptance.
PART:	A) General.
REVISION:	Add the following: Document and report all acceptance tests on the Asphalt Mixtures Acceptance Workbook (AMAW). Submit the completed AMAW for each lot to the Department within 5 working days after the completion of the lot.
SUBSECTION:	402.03.02 Acceptance.
PART:	C) Setup.
REVISION:	Add the following after the second sentence: For mixtures with a total-project quantity between 500 and 1,000 tons, perform a minimum of one process control test for AC, AV, and VMA, and report the results to the Engineer. Add the following after the seventh sentence: Ensure the adjusted AC remains above the minimums specified in Subsection 403.03.03 C) 2).
SUBSECTION:	402.03.03 Verification.
REVISION:	Replace the first two sentences with the following: For volumetric properties, the Department will perform a minimum of one verification test for AC, AV, and VMA for each lot according to the corresponding procedures as given in Subsection 402.03.02. For specialty mixtures, the Department will perform one AC and one gradation determination per lot according to the corresponding procedures as given in Subsection 402.03.02. However, Department personnel will not perform AC determinations according to KM 64-405.
SUBSECTION:	402.05.02 Asphalt Mixtures and Mixtures with RAP.
PART:	D) Conventional and RAP Mixtures Placed Monolithically as Asphalt Pavement Wedge.
REVISION:	Replace with the following: The Department will pay as mainline mixture but use a 1.00 pay value for all properties.
SUBSECTION:	402.05.01 Specialty Mixtures.
REVISION:	Add "asphalt mixtures for temporary applications" to the list of defined specialty mixtures.
SUBSECTION:	403.02.05 Release Agent.
REVISION:	Replace with the following: Provide materials conforming to KM 64-422.
SUBSECTION:	403.02.06 Transport Equipment.
REVISION:	Add the following after the first sentence: Do not load trucks that are contaminated with an unapproved release agent. When such contamination is identified after loading, reject the load. In either case, remove the truck and respective driver from the project for the duration of the project.
SUBSECTION:	403.02.09 Small Tools and Portable Equipment.
REVISION:	Add the following at the end of the first paragraph: Do not use an unapproved release agent on any small tools or equipment incidental to the paving operation.
SUBSECTION:	403.03.01 Seasonal and Weather Limitations.
REVISION:	Replace "November 15" with "November 30" throughout the Subsection.
SUBSECTION:	403.03.02 Preparation of Base.
REVISION:	Replace the first sentence of the eighth paragraph with the following: Remove existing Type V markers. Fill the recess and any additional damaged area with compacted asphalt mixture within 24 hours of removal.

SUBSECTION: 403.03.03 Preparation of Mixture.
PART: A) Mixture Composition.
REVISION: Replace Part A) with the following:

A) Mixture Composition. Provide the appropriate mixture composition for the specified asphalt mixture, or substitute a higher aggregate type. When substituting a mixture of a higher ESAL class, provide a mixture of no more than one ESAL class higher than the specified asphalt mixture. Conform to the gradation requirements (control points) of AASHTO MP2 for the Superpave mixture. Unless the Engineer authorizes otherwise in writing, use the same type and source of ingredient aggregates and asphalt binder throughout the entire project for each type of mixture. For asphalt surface courses containing 100 percent polish-resistant coarse aggregate, limit the portion of non-polish-resistant fine aggregate retained on a No. 4 sieve to 5 percent of the total combined aggregates.

When using a porous aggregate, increase the asphalt binder content (AC) as needed for asphalt binder absorption by the aggregate.

The following aggregate requirements are listed in order of the highest, Type A, to the lowest, Type D:

1) Type A. Provide 100 percent of the coarse aggregate Class A sources. Ensure that 20 percent of the total combined aggregate is Class A polish-resistant fine aggregate.
2) Type B. Select either of the 2 following options:

   a) Provide 100 percent of the coarse aggregate from Class B sources.
   b) Provide a combined aggregate, retained on the No. 4 sieve, that is a minimum of 50 percent from any Class A polish-resistant aggregate source except those identified as "Not Permitted as the polish-resistant portion of Class B blends." Submit all Class B blends to the Department for review.

   For Option a) or b) above, ensure one of the following:

   - 20 percent or more of the total combined aggregate is Class A polish resistant fine aggregate.
   - 30 percent or more of the total combined aggregate is Class B polish resistant fine aggregate.
   - 30 percent or more of the total combined aggregate is a combination of Class A and Class B polish resistant fine aggregate.

3) Type C. Ensure that 40 percent or more of the total combined aggregate is polish-resistant; Class A coarse, fine, or combination.
4) Type D. No restriction on aggregate type.

SUBSECTION: 403.03.03 Preparation of Mixture.
PART: B) Moisture Content of Mix
REVISION: Replace the third sentence with the following:

When moisture contents are 0.10 percent or greater, adjust the AC determination made on plant-produced mixture to reflect the actual AC as KM 64-434 directs.

SUBSECTION: 403.03.03 Preparation of Mixture.
PART: C) Mix Design Criteria.
REVISION: Replace the first sentence with the following:

Conform to the gradation requirements (control points) of AASHTO MP2 for the Superpave mixture type the Contract specifies.

Supplemental Specifications to The Standard Specifications for Road and Bridge Construction, 2000 Edition (Effective with the April 25, 2003 Letting)

SUBSECTION: 403.03.03 Preparation of Mixture.
PART: C) Mix Design Criteria.
NUMBER: 1)
REVISION: Replace the first sentence with the following:

Submit a preliminary mix design, completed using a Superpave gyratory compactor (SGC) conforming to AASHTO PP 35.

Add the following after the second sentence:

The Department will require a dust-to-binder range of 0.8 to 1.6.

SUBSECTION: 403.03.03 Preparation of Mixture.
PART: C) Mix Design Criteria.
NUMBER: 2) Selection of Optimum AC.
REVISION: Add the following:

Ensure the optimum AC is a minimum of 5.0 percent by weight of the total mixture for all 0.5-inch nominal surface mixtures and 5.3 percent by weight of the total mixture for all 0.38-inch nominal surface mixtures.

SUBSECTION: 403.03.06 Thickness Tolerance.
TABLE: Nominal Maximum Size of Mixture vs. Thickness Range
REVISION: Delete

SUBSECTION: 403.03.08 Rumble Strips.
REVISION: Replace with the following:

A) Interstates and Parkways. Construct sawed rumble strips on all mainline and ramp shoulders to the dimensions shown below.

B) Other Roads. When using a surface mixture instead of Asphalt Mixture for Pavement Wedge, or when the Engineer deems it appropriate to pave the driving lanes and the adjacent shoulder monolithically, provide rolled rumble strips. Construct strips on all main line shoulders to the dimensions shown below. When furnishing Asphalt Mixture for Pavement Wedge, binder, or a base mixture for shoulders, the Department will not require rumble strips.

Time the rolling operation so indentations are at the specified size and depth without causing unacceptable displacement of the asphalt mat. Correct unacceptable rolled-in rumble strips by sawing.

On shoulders less than 3 feet, shorten the length and distance of the strips as the Engineer directs.

If preferred, construct the rumble strips by sawing as specified for Interstates and Parkways.

RUMBLE STRIP DIMENSIONS

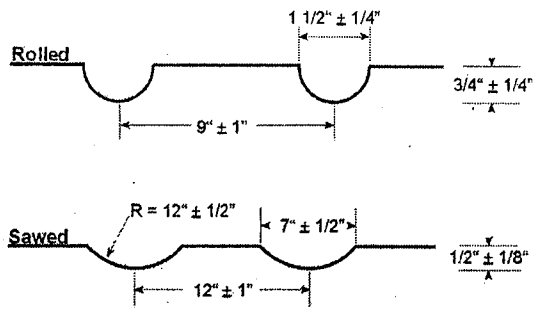

Distance from the edge of the mainline pavement to the end of the strip: 1 foot
Length of strips: Rolled 2 feet, Sawed 16 inches

Supplemental Specifications to The Standard Specifications for Road and Bridge Construction, 2000 Edition (Effective with the April 25, 2003 Letting)

SUBSECTION: 403.03.09 Leveling and Wedging, and Scratch Course.
PART: A) Leveling and Wedging.
REVISION: Replace the first sentence with the following:

Conform to the gradation requirements (control points) for base, binder, or surface as applicable.

SUBSECTION: 403.03.09 Leveling and Wedging, and Scratch Course.
PART: B) Scratch Course.
REVISION: Replace the second sentence with the following:

Conform to the gradation requirements (control points) for base, binder, or surface as the Engineer directs.

SUBSECTION: 403.04.03 Asphalt Mixtures.
REVISION: Add the following:

The Department will not measure rumble strips for payment and will consider them incidental to this bid item.

SECTION: 404 OPEN-GRADED FRICTION COURSE
TABLE: LOT PAY ADJUSTMENT SCHEDULE FOR SPECIALTY MIXTURES
REVISION: Replace the table with the following table:

LOT PAY ADJUSTMENT SCHEDULE FOR SPECIALTY MIXTURES (TEST DEVIATION FROM JMF)

	Pay Value	Deviation From JMF (%)
Asphalt Binder Content	1.00	0.0-0.5
	0.98	0.6
	0.95	---
	0.90	0.7
	0.85	0.8
	0.75	≥ 0.9
1 1/2 inch Sieve	1.00	0-13
	0.98	14
	0.95	15-16
	0.90	17-20
	0.85	21-23
	0.75	≥ 24
1 inch, 3/4 inch, and 1/2 inch Sieves	1.00	0-9
	0.98	10
	0.95	11-12
	0.90	13-14
	0.85	15-16
	0.75	≥ 17
3/8 inch, No. 4, No. 8, No. 16, and No. 30 Sieves	1.00	0-8
	0.98	9
	0.95	10
	0.90	11-12
	0.85	13-14
	0.75	≥ 15
No. 50 Sieve	1.00	0-6
	0.98	7
	0.95	8
	0.90	9
	0.85	10
	0.75	≥ 11
No. 100 Sieve	1.00	0-3
	0.98	---
	0.95	4
	0.90	5
	0.85	---
	0.75	≥ 6
No. 200 Sieve	1.00	0.0-2.0
	0.98	2.5
	0.95	3.0
	0.90	---
	0.85	3.5
	0.75	≥ 4.0
Fineness Modulus	1.00	0.0-0.30
	0.98	0.31-0.34
	0.95	0.35-0.39
	0.90	0.40-0.46
	0.85	0.47-0.55
	0.75	≥ 0.56

SUBSECTION: 406.02.01 Tack Coat.
REVISION: Replace with the following:

Furnish any of the following asphalt materials conforming to 806: SS-1, SS-1h, or RS-1.

SUBSECTION: 406.02.03 Curing Seal.
REVISION: Replace with the following:

Furnish any of the following asphalt materials conforming to 806: RS-1, RS-2, SS-1, SS-1h, or Primer L.

SUBSECTION: 406.03.03 Application.
REVISION: Replace the temperature table with the following:

Primer L	60-120 °F
SS-1, SS-1h	70-160 °F
RS-1, RS-2	70-140 °F

SUBSECTION: 406.03.03 Application.
PART: B) Asphalt Tack Coat.
REVISION: Replace the second paragraph with the following:

When furnishing RS-1 for tack, apply it undiluted.

Replace the first sentence of the third paragraph with the following:

When furnishing SS-1 or SS-1h for tack, the Department will allow diluted or undiluted application provided uniform and complete coverage is achieved.

SUBSECTION: 407.02.02 Aggregate.
REVISION: Change Sieve Size No. 30 to read Sieve Size No. 50.

SUBSECTION: 408.04.02 Mobilization for Asphalt Pavement Milling and Texturing.
REVISION: Add the following:

For group contracts, the Department will measure the quantity for each project (subsection) that has a bid item for Mobilization for Asphalt Pavement Milling and Texturing.

SUBSECTION: 409.02 MATERIALS AND EQUIPMENT.
REVISION: Replace "KM 64-427" with the following:

the guidelines in Subsection 409.03.02

SUBSECTION: 409.03.01 Restrictions.
REVISION: Add the following sentence:

When the mixture's bid item specifies PG 76-22, limit RAP content to 20 percent or less.

SUBSECTION: 409.03.02 Preparation of Mixture.
PART: A) Mix Requirements.
REVISION: Void the Revision and replace with the following:

Conform to the Contract requirements for each mixture produced using RAP. If mixtures produced using RAP do not conform to the requirements for that mixture, complete the project using all virgin materials at no additional expense to the Department. Conform to the following table to select the appropriate grade of virgin asphalt binder to blend with the RAP:

Mixture's	Appropriate Virgin Asphalt Binder		
Bid Item	0-20% RAP	21-30% RAP	>30% RAP
PG 76-22	PG 76-22	-	-
PG 70-22	PG 70-22	PG 64-22	*
PG 64-22	PG 64-22	PG 64-22	*

* Select according to KM 64-427

Supplemental Specifications to The Standard Specifications for Road and Bridge Construction, 2000 Edition (Effective with the April 25, 2003 Letting)

SUBSECTION: 410.05 PAYMENT.
REVISION: Replace the RIDE QUALITY ADJUSTMENT SCHEDULE with the following 2 schedules:

RIDE QUALITY ADJUSTMENT SCHEDULE FOR ROADS POSTED GREATER THAN 45 MPH

IRI	Pay Value[1]
36 or Less	+0.15
37 to 46	= 0.015 x (47 – IRI)
47 to 66	0.00
67 to 76	= 0.015 x (67 – IRI)
77 or higher	Corrective work or replacement required

RIDE QUALITY ADJUSTMENT SCHEDULE FOR ROADS POSTED 45 MPH OR LESS

Rideability Index	Pay Value[1]
36 or Less	+0.15
37 to 46	= 0.015 x (47 – IRI)
47 to 85	0.00
86 or lower	Corrective work or replacement required

[1] *The Department will not apply a positive pay value for corrective work other than removal and replacement to achieve the IRI*

SUBSECTION: 501.03.13 Finishing.
PART: H) Texturing.
REVISION: Replace the third paragraph with the following:

Form transverse grooves in the concrete with a width between 0.09 inch and 0.13 inch and a depth between 0.12 inch and 0.19 inch. Space the grooves at random intervals between 0.4 inch to 1.5 inches with no more than 50 percent of the spacing being one inch or greater.

SUBSECTION: 502.03 CONSTRUCTION.
PART: D) Strength Testing and Opening to Traffic.
NUMBER: 1) Cylinders.
REVISION: Replace the first sentence with the following:

The Department will cast, cure, and test 3 sets from each 150 cubic yards of concrete.

SUBSECTION: 503.03.09 Ride Quality.
REVISION: Replace item 4) with the following:

Achieve an IRI of 63 or less for each traffic lane with no individual one-mile section having an IRI of greater than 76.

SUBSECTION: 506.03.01 Header Curb, Valley Gutter, and Curb and Gutter (Combination).
REVISION: In the second sentence of the third paragraph replace the Subsection reference 601.03.12 with 501.02.10.
In the second sentence of the sixth paragraph replace the Subsection reference 601.03.16 with 501.03.17 D).

SUBSECTION: 508.03.03 Precast Construction.
REVISION: Replace "Subsection 605.03" in the first sentence with Section 605.

SUBSECTION: 509.03 CONSTRUCTION.
REVISION: Replace "Subsection 605.03" in the first sentence with Section 605.

SUBSECTION: 601.02.13 Forms.
PART: F) Stay-In-Place Metal Forms.
NUMBER: 1) Forms and Supports.
REVISION: Replace ASTM A 446 with ASTM A 653.
Replace ASTM A 525 with ASTM A 924.

SUBSECTION: 601.03.03 Proportioning and Requirements.
PART: A) Concrete.
TABLE: INGREDIENT PROPORTIONS AND REQUIREMENTS FOR VARIOUS CLASSES OF CONCRETE
REVISION: Add the following foot note to AA Slump:

The Department may allow the slump of AA concrete to be increased up to a 6 inch maximum, provided the w/c ratio does not exceed 0.40 and a high range water reducer (Type F or G) is used. Trial Batches will be required if producer has not previously supplied.

SUBSECTION: 601.03.03 Proportioning and Requirements.
PART: A) Concrete.
TABLE: INGREDIENT PROPORTIONS AND REQUIREMENTS FOR VARIOUS CLASSES OF CONCRETE
REVISION: Replace note 11 with the following:

Compressive Strength Testing, Opening to Traffic and Acceptance Requirements for Class M1 and Class M2. Test one set of cylinders at 24 ± 0.5 hours from the time of molding, and allow the resulting average strength to dictate one of the following actions:

(a) *If the average compressive strength is 3,500 psi or above, open to traffic, and test the remaining set of cylinders at an age of 7 days or 28 days.*
(b) *If the average compressive strength is between 3,000 and 3,500 psi, open to traffic, and test the remaining set of cylinders at 48 ± one hour.*
(c) *If the average compressive strength is less than 3,000 psi, protect the item as directed or approved. Test the remaining set of cylinders at 48 ± one hour.*

If the average strength of the cylinders tested at 48 ± one hour is 3,500 psi or above, the Engineer will consider the concrete acceptable. If the average strength is below 3,500 psi, take 2 cores from the concrete and test at an age of 7 days. If the average strength of the cores tested at 7 days is 4,000 psi, the Engineer will consider the concrete acceptable.

When 2 consecutive first sets of cylinders or when 2 first sets out of any 4 first sets of cylinders do not reach 3,500 psi, compressive strength, the Engineer will suspend the work. Resume work when the Engineer approves the adjusted mix design.

Cast 2 sets of cylinders from the concrete used for each placement.

Cast the cylinders after tests verify that the concrete conforms to slump and air content requirements. Make and cure the cylinders according to the procedures outlined in KM 64-305. Department personnel will test the mixture and cast cylinders.

SUBSECTION: 601.03.03 Proportioning and Requirements.
PART: C) Mixtures Using Type IP, IS and I(SM) Cement or Mineral Admixtures.
NUMBER: 2) Mineral Admixtures.
REVISION: Add the following after the first sentence:

Reduction of the total cement content by a combination of any mineral admixtures will be allowed, up to a maximum of 30 percent.

SUBSECTION: 601.03.03 Proportioning and Requirements.
PART: C) Mixtures Using Type IP Cement or Mineral Admixtures.
NUMBER: 2) Mineral Admixtures.
LETTER: b) Ground Granulated Blast Furnace Slag (GGBF Slag).
REVISION: Replace the first sentence with the following:

When added as a separate ingredient, use Grade 120 GGBF or 100 GGBF slag to reduce the quantity of cement, except do not use GGBF slag to reduce the quantity of Type IS or I(SM) cement.

SUBSECTION: 601.03.04 Classes and Primary Uses.
PART: P) Non-Shrink Grout.
REVISION: Replace with the following:

Bonding and sealing for post-tensioning, tie-back rods and bolts, and box beams.

SUBSECTION:	601.03.09 Placing Concrete.
PART:	A) General.
REVISION:	Add the following to the fifth paragraph: When pumping, equip the delivery pipe with a nozzle, having a minimum of 2 right angles, at the discharge end.
SUBSECTION:	601.03.09 Placing Concrete.
PART:	D) Weather Limitations.
REVISION:	Replace the first sentence of the second paragraph with the following: Maintain the temperature of the mixture at or below 90 °F during placement. Unless the Engineer determines that safety concerns or other considerations prohibit a shutdown, cease concrete production when the mixture exceeds 90 °F until adequate methods are in place to reduce or maintain the mixture temperature.
SUBSECTION:	601.03.15 Opening to Traffic.
TABLE:	Required Time in Calendar Days Before Applying Significant Loads on Concrete Structures
REVISION:	Change the title of the seventh item to the following: Caps on Concrete Pile Bents, Open Column Abutments, and Piers
SUBSECTION:	606.02 MATERIALS AND EQUIPMENT.
REVISION:	Add the following subsection: 606.02.11 Coarse Aggregate. Conform to Section 805, size 9-M.
SUBSECTION:	607.03.05 Bolted Connections Using High-Strength Steel Bolts.
PART:	B) Direct Tension Indicators.
REVISION:	Replace the first two sentences of the third paragraph with the following: Under normal conditions, install the tension indicator under the non-turned element of the fastening system. Obtain the Engineer's permission before installing tension indicators under the turned element. If the Engineer determines that it is necessary to install the tension indicator under the turned element, install additional hardened washers according to the manufacturer's instructions. Add the following to the end of the fourth paragraph: The fastener assembly may also need to be replaced.
SUBSECTION:	607.03.08 Planing and Finishing.
PART:	B) Flame Cutting.
REVISION:	Replace the first sentence of the second paragraph with the following: Remove roughness exceeding these values and occasional notches or gouges no more than 3/16 inch deep, on otherwise satisfactory surfaces, by machining or grinding.

SUBSECTION:	607.03.23 Cleaning and Painting.
PART:	D) Preparation for Field Coatings.
REVISION:	Replace the second and third paragraphs with the following: After erection, including all bolting and remedial work, prepare the shop applied zinc coating for field applied intermediate coating as follows. Remove all grease, oil or other lubricants from all surfaces to be painted including lubricant or residuals from the surfaces of all galvanized nuts, bolts and washers by solvent cleaning according to SSPC SP 1. When dry overspray from the shop applied zinc coating exists, remove by sanding. High pressure water wash all structural steel at 4,500 to 5,000 psi. using clean potable water. As needed, use a non-sudsing, bio-degrable detergent to remove all surface contaminants not removed by high pressure water washing. Rinse all areas where a detergent and/or solvent was applied by pressure washing with clean potable water. Blast clean all surfaces sustaining damage to the shop applied zinc coating to the pictorial standards described in subsection B. Apply a field coat of approved zinc rich coating to all areas not possessing an acceptable shop applied zinc coating. Completely remove all rust, scale and other foreign material before applying the intermediate coating. When application of the finish coat exceeds the recoat window of the intermediate coat, abrade the surface of the intermediate coat according to the coating manufacturer's recommendations before applying the finish coat.
SUBSECTION:	607.03.23 Cleaning and Painting.
PART:	E) Application of Field Coatings.
REVISION:	Replace the second paragraph with the following: Apply paint only to clean and dry surfaces when the ambient air temperature is 40 °F or greater, the surface temperature of the steel members to be painted is at least 5 °F above the dew point, and the relative humidity is less than 90 percent. Do not apply paint to damp or frosted surfaces, nor during any period of rainfall. Replace the fifth paragraph with the following: Paint from the top of the structure toward the bottom, and proceed by sections, bays, or parts of the work, unless the Contract or Engineer directs otherwise.
SUBSECTION:	611.02.01 Concrete.
REVISION:	Replace the first sentence with the following: Conform to ASTM C 1433.
SUBSECTION:	611.03.01 Transportation and Handling.
REVISION:	Replace the first sentence with the following: Handle and store the precast units so that flexural stresses are not induced until the concrete age is 7 days or attains a compressive strength of 3,000 psi.
SUBSECTION:	611.03.02 Precast Unit Construction.
REVISION:	Add the following: 4) Contrary to ASTM C 1433 Section 10.3, assure the compressive strength of the cores tested are equal to or greater than the design strength.
SUBSECTION:	611.03.07 Joints.
PART:	A) Rubber Gaskets.
REVISION:	Replace the title with the following: A) Butyl Rubber Sealant.
SUBSECTION:	611.03.07 Joints.
PART:	B) Flexible Plastic Gaskets.
REVISION:	Replace the title with the following: B) Rubber Gaskets.

SUBSECTION:	613.05 PAYMENT.
REVISION:	Replace 8160 Structure Excavation with the following: 2203 Structure Excavation Unclassified
SUBSECTION:	614.02.01 Paint.
REVISION:	Add the following: Furnish a paint system in which all coats are produced by the same manufacturer and use the same system throughout the entire project.
SUBSECTION:	614.03.06 Paint Application.
REVISION:	Replace the first sentence of the fourth paragraph with the following: Paint from the top of the structure toward the bottom, and proceed by sections, bays, or parts of the work, unless the Contract or Engineer directs otherwise.
SUBSECTION:	701.02.03 Joint Materials.
PART:	D) Flexible Plastic Gaskets.
REVISION:	Replace with the following: D) Butyl Rubber Sealants. Conform to Section 807.
SUBSECTION:	701.02.04 Bedding Materials.
REVISION:	Replace the first sentence with the following: Use No. 8 aggregate, No. 9 aggregate, or a fine aggregate conforming to Subsection 804.08 for bedding material.
SUBSECTION:	701.02.04 Bedding Materials.
TABLE:	A1, A2, and A3 Characteristics
REVISION:	Under A3, replace "51 max" with "51 min"
SUBSECTION:	702.03.05 Joints.
PART:	A) Reinforced Concrete Pipe.
NUMBER:	2) Rubber Gaskets.
REVISION:	Replace with the following: In addition to the requirements of Subsection 701.02, use a pipe section conforming to AASHTO M 315. Use the gasket manufacturer's recommended cement and lubricant. Snugly fit the rubber gasket in the beveled surface of the tongue and groove ends of the sections to form a flexible seal under all conditions of service.
SUBSECTION:	701.03.05 Joints.
PART:	B) Corrugated Metal Pipe.
REVISION:	Void the Revision and replace with the following: Construct joints using a band with annular corrugations and a bolt, bar and strap connection. Use a minimum nominal band width of 12 inches for all pipe diameters 54 inches and smaller. Use a two-piece band with a minimum nominal width of 20 inches for all pipe diameters greater than 54 inches. Manufacture the band from the same base materials as the pipe. The pipe bands may be up to two gauges lighter than the pipe it is joining, with a minimum gauge thickness of 16. The Department may allow dimple band connections for field cut pipe. Install the connecting bands according to the manufacturer's written recommendations.
SUBSECTION:	703.02.09 Geotextile Fabric.
REVISION:	Replace Section reference 845 with 843.
SUBSECTION:	703.04.08 Geotextile Fabric.
REVISION:	Add the subsection: 703.04.08 Geotextile Fabric. The Department will measure the quantity according to Subsection 214.04.
SUBSECTION:	710.02 MATERIALS.
REVISION:	Add the following Subsection: 710.02.15 High Density Polyethylene (HDPE) Adjusting Rings. Conform to Section 846.

SUBSECTION:	710.03.01 Newly Constructed Small Drainage Structures.
PART:	A) General.
REVISION:	Replace the last sentence of the sixth paragraph with the following: Use precast concrete, precast concrete pipe sections, cast-in-place, brick, or HDPE adjusting rings for adjustment of existing manholes according to the Standard Specifications.
SUBSECTION:	710.03.01 Newly Constructed Small Drainage Structures.
PART:	B) Precast Structures Except Manholes.
REVISION:	Replace the first two sentences with the following: Only furnish products manufactured by a precast producer listed in the Department's List of Approved Materials. If the producer does not have an approved drawing for the product, submit 5 copies of shop drawings to the Engineer for review and approval.
SUBSECTION:	710.03.03 Adjusted Small Drainage Structures.
REVISION:	Add the following sentence to the end of the first paragraph: For HDPE adjusting rings, install and seal according to the manufacturer's recommendations.
SUBSECTION:	712.03.02 Type V Markers.
REVISION:	Replace the first sentence of the first paragraph with the following: Install Type V Markers in slots cut into the pavement according to the manufacturer's recommendations. Delete the last paragraph.
SUBSECTION:	713.02.02 Drop on Glass Beads.
REVISION:	Replace with the following: Use beads that will ensure the pavement marking material will meet retroreflectivity requirements. The Department will evaluate the beads as part of the marking system through retroreflectivity readings.
SECTION:	713 PERMANENT PAVEMENT STRIPING.
REVISION:	Add the following subsection: 713.03.06 Acceptance of Non-Specification Markings. If weather conditions allow, perform corrective work to bring striping retroreflectivity into conformance. If corrective work has been performed and the work meets all requirements except for minimum retroreflectivity, the Department may accept the work according to Subsection 105.04. When the Engineer determines that the markings may be left in place, the Department will accept them at a reduction in the Contract unit bid price according to the Acceptance Pay Schedule. Additionally, the Engineer may remove the striping crew for the remainder of the project according to Subsection 108.06 Part A). The Engineer may also apply this section when corrective work cannot be performed due to weather. Acceptance Pay Schedule – White 156 to 174 mcd/lux/square meter – 50% pay 138 to 155 mcd/lux/square meter – 25% pay 120 to 137 mcd/lux/square meter – 0% pay < 120 mcd/lux/square meter – unacceptable Acceptance Pay Schedule – Yellow 126 to 149 mcd/lux/square meter – 50% pay 103 to 125 mcd/lux/square meter – 25% pay 80 to 102 mcd/lux/square meter – 0% pay < 80 mcd/lux/square meter – unacceptable

SUBSECTION:	713.03 CONSTRUCTION.
REVISION:	Replace the MUTCD references to "Part III" with "Part 3"
SUBSECTION:	714.02.03 Binder.
REVISION:	Replace the last sentence with the following: Submit the material and method of application to the Engineer and obtain written approval from the Engineer and the manufacturer of the pavement marking material before applying.
SUBSECTION:	714.02.04 Drop on Glass Beads.
REVISION:	Replace with the following: Use beads that will ensure the pavement marking material will meet retroreflectivity requirements. The Department will evaluate the beads as part of the marking system through retroreflectivity readings.
SUBSECTION:	714.03 CONSTRUCTION.
REVISION:	Replace the MUTCD references to "Part III" with "Part 3" and figure references to "3-11 and 3-12" with "3B-8 and 3B-9"
SUBSECTION:	714.03.01 Layout.
REVISION:	Replace the MUTCD reference to "Part III" with "Part 3"
SUBSECTION:	714.03.03 Application.
PART:	A) Type I Tape.
REVISION:	Add the following: When applied to concrete, cut the tape at all joints.
SUBSECTION:	714.03.04 Restrictions.
REVISION:	Replace the first paragraph with the following: Do not apply the pavement marking material when air and pavement temperatures are below 50 °F. Delete the third paragraph.
SUBSECTION:	714.03.06 Proving Period for Durable Markings.
PART:	A) Requirements.
NUMBER:	1) Type I Tape.
REVISION:	Add the following: Type I Tape is manufactured off site and warranted by the manufacturer to meet certain retroreflective requirements. As long as the material is adequately bonded to the surface and shows no sign of failure due to the other items listed in Subsection 714.03.06 A) 1), retroreflectivity readings will not be required. In the absence of readings, the Department will accept tape based on a nighttime visual observation.
SUBSECTION:	714.03.06 Proving Period for Durable Markings.
PART:	A) Requirements.
NUMBER:	2) Thermoplastic.
REVISION:	Replace the first sentence of the second paragraph with the following: The minimum retroreflectivity requirements at the end of the proving period, as measured with a LTL 2000, LTL 2000Y, or Department approved 30M geometry mobile instrument are as follows: Replace the first sentence of the third paragraph with the following: The Department will take these measurements between 150 and 210 days after the start of the proving period, basing acceptance on KM 202 for LTL 2000 readings and KM 203 for mobile readings.
SUBSECTION:	714.05 PAYMENT.
REVISION:	Replace with the following: The Department will make payment upon completion of the work. If after the proving period the markings do not meet minimum retroreflectivity requirements, the Department will adjust the payment or require corrective work according to the following:

SUBSECTION:	717.02.04 Drop on Glass Beads.
REVISION:	Replace with the following: Use beads that will ensure the pavement marking material will meet retroreflectivity requirements. The Department will evaluate the beads as part of the marking system through retroreflectivity readings.
SECTION:	804.03 Concrete.
REVISION:	Replace the last sentence with the following: The Department will waive the requirements for gradation, sand equivalent, and uncompacted voids for concrete pipe.
SUBSECTION:	804.04.04 Requirements for Combined Aggregates.
PART:	B) Sand Equivalent.
REVISION:	Replace the third paragraph with the following: The Department may waive the sand equivalent requirement provided the portion of the combined aggregate passing the No. 40 sieve is non-plastic according to AASHTO T 90.
SUBSECTION:	804.04.04 Requirements for Combined Aggregates KM.
TABLE:	Superpave Fine Aggregate Consensus Property Requirements.
REVISION:	For ESAL Class 1, Replace both dashes with 40.
SUBSECTION:	805.03.01 Soundness and Shale.
PART:	AGGREGATE USE/Portland Cement Concrete Mixtures.
REVISION:	Replace the title use "Class AA, Class S and Bridge Deck Overlays" with "Aggregate for Bridge Decks, Bridge Deck Overlays, and Bridge Barrier Walls"
SECTION:	805 COARSE AGGREGATES.
TABLE:	Sizes of Coarse Aggregates.
REVISION:	Replace KM 64-420 in footnote (1) with KM 64-620.
SECTION:	805 COARSE AGGREGATES.
TABLE:	Aggregates Size Use.
REVISION:	For Cement Concrete Structures and Incidental Construction add 9-M for Overlays to the sizes to be used column.
SUBSECTION:	805.03.03 Gradation.
REVISION:	Replace the last sentence with the following: The Department will allow blending of same source/same type aggregate to achieve designated sizes when precise procedures are used such as cold feeds, belts, weigh hoppers, or equivalent.
SUBSECTION:	805.03.04 Erodible or Unstable Material.
REVISION:	Add the subsection: 805.03.04 Erodible or Unstable Material. Treat as applicable. The Department considers Size No. 57 or larger aggregate, except crushed or uncrushed gravel, non-erodible. The Department considers the following materials to be erodible or unstable: 1) Friable sandstone. The Engineer determines when sandstone is friable or non-friable. 2) Crushed or uncrushed gravel, any size. 3) Crushed coarse aggregate smaller than Size No. 57. 4) Any material with 50 percent or more passing the No. 4 sieve.
SUBSECTION:	805.04 CONCRETE.
REVISION:	Replace the second paragraph with the following: The Department will waive the requirements for gradation and finer than No. 200 for concrete pipe.
SUBSECTION:	805.10 GRANULAR EMBANKMENT.
REVISION:	Replace "2 ½-inch" with "12-inch".
SUBSECTION:	805.10 GRANULAR EMBANKMENT.
PART:	1)
REVISION:	Replace with the following: 1) Engineer approved shot limestone or sandstone from roadway excavation, borrow excavation, or another approved source.

SUBSECTION: 805.11 STRUCTURE GRANULAR BACKFILL.
REVISION: Replace with the following:

Provide crushed or uncrushed aggregate meeting the quality requirements of this section. When the material includes a significant amount of individual fragments greater than 1 ½ inches, the Engineer may visually accept the minus No. 200 portion. Conform to the following gradation:

Sieve Size	Percent Passing
4 inch	100
No. 4	0-10
No. 200	0-5

SUBSECTION: 805.13.03 Channel Lining, Class IA.
REVISION: Replace the first sentence with the following:

Provide crushed stone meeting the general requirements of this section.

SUBSECTION: 805.13.04 Channel Lining, Class II.
REVISION: Replace the first sentence with the following:

Provide crushed stone meeting the general requirements of this section.

SUBSECTION: 805.15 GRADATION ACCEPTANCE OF NON-SPECIFICATION COARSE AGGREGATE.
TABLE: GRADATION – COARSE AGGREGATES FOR UNDERDRAINS
REVISION: Replace "No. 200" sieve with "No. 100".

SUBSECTION: 810.03.04 Extra Protection
REVISION: Replace "mm" in the second sentence of the second paragraph with "inches".

SECTION: 810.03 REINFORCED CONCRETE PIPE.
REVISION: Add new subsection:

810.03.07 Concrete. Submit Concrete Mix Design to the Central Office Materials.

SECTION: 812.01.01 Structural Steel, All Types.
REVISION: Replace second sentence with the following:

When the supplementary requirement of this specification are specified, they exceed the requirements of ASTM A 36, A 514, A 572, A 588, and ASTM A 852.

SUBSECTION: 812.01.01 Structural Steel, All Types.
PART: A) Structural Steel.
REVISION: Delete AASHTO M 183.

SUBSECTION: 812.01.01 Structural Steel, All Types.
PART: B) High-Strength Low-Alloy Columbium-Vandium Steels of Structural Quality.
REVISION: Delete AASHTO M 223.

SUBSECTION: 812.01.01 Structural Steel, All Types.
PART: C) High-Strength Low-Alloy Structural Steel with 345 Mpa Minimum Yield Point to 4 Inches Thick.
REVISION: Delete AASHTO M 222.

SUBSECTION: 812.01.01 Structural Steel, All Types.
PART: E) High-Yield-Strength, Quenched and Tempered Alloy Steel Plate, Suitable for Welding.
REVISION: Delete AASHTO M 244.

SECTION: 813.08.05 Aluminum Alloy Rolled or Extruded Shapes.
REVISION: Replace "T-4 AND T6" with "T6".

SUBSECTION: 813.09.02 High-Strength Steel Bolts, Nuts, and Washers.
PART: A) Bolts.
REVISION:

	HARDNESS NUMBER			
Bolt Size	Brinell		Rockwell C	
(in)	Min	Max	Min	Max
½ - 1	253	319	25	34

SUBSECTION: 813.13 MATTRESSES AND GABIONS.
REVISION: Replace the first sentence of the first paragraph with the following:

Conform to ASTM A 975, Style 1 or ASTM A 974, Style 1 or 2.

Supplemental Specifications to The Standard Specifications for Road and Bridge Construction, 2000 Edition (Effective with the April 25, 2003 Letting)

SUBSECTION: 814.04.01 Steel Guardrail Posts.
REVISION: Replace AASHTO M 183 in the first sentence with ASTM A 36.

SUBSECTION: 814.05.02 Composite Plastic.
REVISION: Add the following sentence to the first paragraph:

Rubber is an acceptable alternate to plastic in their composition.

SUBSECTION: 814.06 MATERIALS FOR END TREATMENTS.
PART: D) Steel Sheet (for rail plates and mounting brackets).
REVISION: Replace 570, Grade D with the 1011, Type SS, Grade 36.

SUBSECTION: 816.02 GENERAL.
REVISION: Replace ASTM D 2521 with ASTM A 239.

SUBSECTION: 816.02.02 Aluminum-Coated Steel.
REVISION: Replace 0.01 with 0.099.

SUBSECTION: 819.01.01 Steel Plates.
REVISION: Replace "Paragraph 14" in the second sentence of the second paragraph with "Table 6".

SUBSECTION: 821.03 SAMPLING AND TESTING.
REVISION: In the third sentence of the first paragraph, replace calendar days with working days.

SUBSECTION: 827.04 PERMANENT SEED.
REVISION: Replace with the following:

Conform to the requirements outlined in the "Kentucky Seed Law and Provisions for Seed Certification in Kentucky" and the "Regulations under the Kentucky Seed Law", with following exceptions:

1. Obtain seed only through registered dealers that are permitted for labeling of seed.
2. Ensure all deliveries/shipments of premixed seed are accompanied with a master blend sheet.
3. The Department may sample the seed at the job site at any time.
4. Ensure all bags and containers have an acceptable seed tag attached.

Do not use seed (grasses, native grasses and legumes) if the weed seed is over 2%, total germination (including hard seed) is less than 60%, if the seed test date is over 9 months old exclusive of the month tested, or if the limits of noxious weed seed is exceeded.

Ensure that noxious weed seeds contained in any seed or seed mixture does not exceed the maximum permitted rate of occurrence per pound.

Name of Kind	Max. No. Seeds (per pound)*
Balloon Vine (Cardiospermum Halicacabum)	0
Purple Moonflower (Ipomoea turbinata)	0
Canada Thistle (Cirsium Arvense)	0
Johnsongrass (Sorghum Halepense and Sorghum Almum and perennial rhizomatous derivatives of these species)	0
Quackgrass (Elytrigia Repens)	0
Annual Bluegrass (Poa Annua)	256
Buckhorn Plantain (Plantago Ianceolata)	304
Corncockle (Agrostemma Githago)	192
Dodder (Cuscuta spp.)	192
Giant Foxtail (Setaria Faberii)	192
Oxeye Daisy (Chrysanthemum Ieucanthemum)	256
Sorrel (Rumex Acetosella)	256
Wild Onion and Wild Garlic (Allium spp.)	96

* Seed or seed mixtures that contain in excess of 480 total noxious seeds per pound is prohibited Wildflower seed shall not be planted until approved by the MCL.

SUBSECTION: 832.02 TYPE I POSTS.
REVISION: Replace ASTM A 570 with ASTM A 1011.

SECTION: 840 RAISED PAVEMENT MARKERS
REVISION: Replace the section with the following:

840.01 TYPE IV MARKERS. Provide markers from the Department's List of Approved Materials. Type IV markers are replacement lenses for use in Type V marker castings.

840.02 TYPE V MARKERS. Provide markers from the Department's List of Approved Materials. Type V markers consist of an iron casting with a Type IV marker (mono or bi-directional) attached.

840.03 TYPE IVA MARKERS. Provide markers from the Department's List of Approved Materials. Type IVA markers are surface mounted lenses for temporary use in work zones.

840.04 SAMPLING. Obtain a manufacturer's certification for each shipment. Include with each shipment of adhesive a written statement from the manufacturer certifying that it conforms to the recommendations of the marker manufacturer, and stating the minimum temperature the adhesive can be satisfactorily mixed and applied.

840.05 PACKAGING. Suitably and substantially package all materials with the name and address of the manufacturer and vendor, contract or purchase number, kind of material, trade name, and net contents plainly marked on each package.

SUBSECTION: 843.01.01 Geotextile Fabric.
REVISION: Add the following sentence to the first paragraph:

Use circular-knit geotextile conforming to ASTM D 6707 for perforated pipe socks.

Add the following sentence to the third paragraph:

The manufacturer must participate in the National Transportation Product Evaluation Program (NTEP) for Geotextiles and Geosynthetics.

SUBSECTION: 843.01.01 Geotextile Fabric.
PART: C) Acceptance.
REVISION: Delete the burst strength requirement from each table.

SUBSECTION: 845.02.03 Wrapping.
REVISION: Replace Section 845 with Section 843, Type II.

SECTION: 846 HIGH DENSITY POLYETHYLENE (HDPE) ADJUSTING RINGS
REVISION: Add New Section:

846.01 RESIN. Use a recycled polyethylene plastic or virgin resin producing a molded part meeting the following requirements:

Melt Flow Index (ASTM D 1238)	4.0-10.0 g/10min
Density (ASTM D 792)	0.941-0.965 g/cm^3
Tensile (ASTM D 638)	2000-5000 lb/in^2
ESCR (ASTM D 1693)	Condition C

846.02 LOADING. Ensure the adjustment rings meet or exceed the loading requirements of AASHTO'S Standard Specification for HS-25 wheel loading for Highway Bridges.

SPECIAL NOTE FOR ACCEPTANCE OF DENSITY OF LONGITUDINAL JOINTS IN ASPHALT SURFACE PAVEMENTS

This Special Note will apply when indicated on the plans or in the proposal. Section references herein are to the Department's 2000 Standard Specifications for Road and Bridge Construction.

1.0 DESCRIPTION. This note specifies additional density acceptance testing required for the longitudinal joint of asphalt surface mixtures compacted under Option A requirements. Due to the inherent difficulty of compacting longitudinal joints, conventional methods of compaction may not be adequate to achieve the desired level of density.

2.0 MATERIALS AND EQUIPMENT. Reserved.

3.0 CONSTRUCTION.

3.1 Acceptance. In addition to the responsibilities of Subsection 402.03.02 D), furnish 2 cores per sublot at a location randomly selected in the longitudinal direction by the Engineer according to KM 64-113. Select the transverse direction such that some part of the core circumference is within 3.0 ± 0.5 inches of the longitudinal joint.

By the end of the following workday, obtain the core(s) from the longitudinal joint as each lane of material is placed. Do not wait for the adjoining lane to be placed before obtaining the core(s) from the longitudinal joint.

4.0 MEASUREMENT. The Department will not measure the additional coring required by this note for payment and will consider it incidental to the asphalt mixture.

5.0 PAYMENT.

5.1 Lot Pay Adjustment. Contrary to Subsection 402.05.02, the Department will use the following Lot Pay Adjustment Schedule to assign pay values for AC, AV, VMA, Lane Density, and Joint Density within each sublot.

5.2 Joint Density Deductions. Due to a lack of experience with longitudinal joint density requirements, the Department will not enforce net project deductions resulting from Joint Density values as given in the Lot Pay Adjustment Schedule. However, when bonuses exceed deductions for asphalt mixture for the total project, the Department will apply the Joint Density values and pay the net difference.

LOT PAY ADJUSTMENT SCHEDULE

Lot Pay Adjustment = (Unit Price) (Quantity) [{0.05(AC Pay Value) + 0.25(AV Pay Value) + 0.25(VMA Pay Value) + 0.30(Lane Density Pay Value) + 0.15(Joint Density Pay Value)} - 1.00]

WEIGHTED VALUES					
	AC	AV	VMA	Lane Density	Joint Density
Weight (%)	5	25	25	30	15

AC	
Pay Value	Deviation From JMF (%)
1.00	≤ ± 0.5
0.95	± 0.6
0.90	± 0.7
(1)	≥ ± 0.8

VMA	
Pay Value	Deviation From Minimum
1.00	≥ min. VMA
0.95	0.1-0.5 below min.
0.90	0.6-1.0 below min.
(1)	> 1.0 below min.

AV	
Pay Value	Test Result (%)
1.05	3.5-4.5
1.00	3.0-5.0
0.95	2.5-5.5
0.90	2.0-6.0
(1)	< 2.0 or > 6.0

LANE DENSITY	
Pay Value	Test Result (%)
1.05	94.0-96.0
1.00	92.0-93.9
0.95	91.0-91.9 or 96.1-96.5
0.90	90.0-90.9 or 96.6-97.0
(1)	< 90.0 or > 97.0

JOINT DENSITY	
Pay Value	Test Result (%)
1.05	91.0-96.0
1.00	89.0-90.9
0.95	88.0-88.9 or 96.1-96.5
0.90	87.0-87.9 or 96.6-97.0
0.75	< 87.0 or > 97.0

(1) *The Department will evaluate the acceptability of the work. When the Department allows the Contractor to leave the work in place, the Department will determine its value and may pay up to, but no case more than, 85 percent. In addition to the reduction in pay, the Department may require the Contractor to perform corrective action to the work.*

June 4, 2002

TRAFFIC CONTROL PLAN
FD04 047-9002-004-009
FD04 090-9002-008-011

THIS PROJECT IS A FULLY CONTROLLED ACCESS HIGHWAY

TRAFFIC CONTROL GENERAL

Except as provided herein, Maintain traffic shall in accordance with the 2000 Standard Specifications and the Standard Drawings, current editions. Except for the roadway and traffic control bid items listed, all items of work necessary to maintain and control traffic will be paid at the lump sum bid price to "Maintain and Control Traffic".

Contrary to Section 106.01, traffic control devices used on this project may be new, or used in like new condition, at the beginning of the work and maintained in like new condition until completion of the work.

PROJECT PHASING & CONSTRUCTION PROCEDURES

Lane closures will not be allowed on the following days and hours:

May 23 – 26, 2003	Memorial Day Weekend
July 3 - July 7, 2003	Independence Day week
Aug 29 - Sep 2, 2003	Labor Day Weekend
Nov 26 -30, 2003	Thanksgiving
Dec 24 - 25, 2003	Christmas

At the discretion of the Engineer, prohibited periods for lane closures may be altered and additional days and hours when lane closures will not be allowed may be specified.

Use a lane closure at all times when work is performed in the lane, adjacent shoulder, or in the median within 10 feet of traffic. All Lane closures used on this project shall comply with the appropriate Standard drawings; however, cones will not be allowed for lane closures left in place during non-working or night time hours. Only one lane closure in each direction of travel on the Bluegrass Parkway will be allowed at the same time; maintain one lane of traffic in each direction at all times. Maintain alternating one way traffic on KY 52 during working hours; maintain one lane of traffic in each direction at all times. Maintain one lane of traffic on interchange ramps at all times. The clear lane width shall be 11 feet; however make provisions for passage of vehicles of 16' in with..

Shoulders used as temporary roadway will be inspected by the Engineer; if deemed necessary by the Engineer, repair shoulders with Asphalt Mixture for Level & Wedging or DGA as directed prior to opening to traffic. Perform any maintenance of the shoulder as deemed necessary by the Engineer.

If traffic should be stopped due to construction operations, and an Emergency Vehicle or a school bus on an official run arrives on the scene, the Contractor shall make provisions for the passage of the vehicle as quickly as possible. The Contractor shall provide additional traffic control or flaggers as directed by the Engineer.

PHASE I

Close the outside lanes using long term lane closures; maintain one lane of traffic in each direction on the inside lanes. Mill edge keys in outside lanes Level and wedge and construct Reflective Crack Relief Interlayer and asphalt binder and surface courses. Extend culverts and construct slope and flared headwalls. Remove existing guardrail and construct DGA shoulders and Guardrail systems on the outside shoulders. Do not construct milled rumble strips in the outside shoulders during this phase.

PHASE II

Close the inside lanes using long term lane closures; maintain one lane of traffic in each direction on the outside lanes. Mill edge keys in inside lanes, level and wedge, construct Reflective Crack Relief Interlayer, asphalt binder course, and Asphalt Surface Course. With joint adhesive. Construct guardrail systems located in median. Perform shouldering in Median.

PHASE III

Resurface Interchange Ramps. Lane closures will be allowed only during working hours.

PHASE IV

Place permanent striping and construct milled rumble strips in shoulders. Lane closures will be allowed only during working hours.

LANE CLOSURES

Do not leave lane closures in place during prohibited periods.. Only one closure in each direction of travel will be allowed. Only one long term lane closure. in each lane in each direction of travel will be measured for payment regardless of how many times it is established, removed, and reestablished.

SIGNS

Additional traffic control signs in addition to normal lane closure signing detailed on the Standard Drawings may be required by the Engineer. Additional signs needed may include, but not limited to, dual mounted LEFT/RIGHT LANE CLOSED 1 MILE, LEFT/ RIGHT LANE CLOSED 2 MILES, LEFT/ RIGHT LANE CLOSED 3 MILES, SLOW/STOPPED TRAFFIS AHEAD. Signage for restricted width, reduced speed limit, and double fine work zone shall be furnished, relocated and maintained by the Contractor.

Contrary to section 112, only long term signs (signs intended to be continuously in place for more than 3 days) will be measured only once for payment; setting resetting, removing, covering, relocating of long term signs, and short term signs (signs intended to be left in place for 3 days or less) will not be measured for payment but will be incidental to Maintain and Control Traffic. Individual signs will be measured only once for payment, regardless of how many times they are set, reset, and relocated during this project Replacements for damaged signs or signs directed by the Engineer to be replaced due to poor reflectivity will not be measured for payment.

BARRICADES

Barricades used in lieu of barrels and cones for channelization or delineation will be incidental to Maintain and Control Traffic according to Section 112.04.01. Barricades used to protect pavement removal areas at edge keys will be bid as each according to Section 112.04.05. Individual barricades will be measured only once for payment, regardless of how many times they are set, reset, and relocated during this project Replacements for damaged barricades or barricades directed to be replaced by the Engineer due to poor reflectivity will not be measured for payment.

VARIABLE MESSAGE SIGNS

Provide Variable Message Signs in advance of and within the project at locations to be determined by the Engineer. If work is in progress concurrently in both directions, provide additional VMS as directed by the Engineer. The locations designated may vary as the work progresses. Relocation of VMS, regardless of how many times, will be incidental to the bid item. In the event of damage or mechanical failure, the contractor shall replace, or repair the VMS within 24 hours. Variable Message Signs will become the Contractor's property.

TRAFFIC COORDINATOR

Designate an employee to be traffic coordinator. In addition to the requirements of Section 112.03.12, during any period when a lane closure is in place, the Traffic Coordinator shall arrange for personnel to be present on the project at all times to inspect the traffic control and to maintain the signing and devices. The project personnel shall have access on the project to a radio or telephone to be used in case of emergencies or accidents.

CONTRACTOR'S AND CONTRACTOR'S EMPLOYEES' VEHICLES

Median crossover shall not be used at any time. All vehicles shall change directions only at interchanges. In general, all vehicles must move in the direction of mainline traffic flow. No vehicles will be allowed to run against traffic at any time.

PAVEMENT MARKINGS

Remove or cover the lenses of raised pavement markers that do not conform to traffic control scheme in use, or as directed by the Engineer. Lenses shall be replaced or uncovered before a closed lane is reopened to traffic. No direct payment will be made for removing and replacing or covering and uncovering the lenses, but shall be incidental to Maintain and Control Traffic.

Place temporary and permanent striping according to Section 112 and 748, except:

- Temporary striping shall be 6";
- Edge lines will be required for temporary striping; and
- Either temporary or permanent striping shall be placed before opening a lane to traffic.
- Permanent striping shall be 6" Thermoplastic

PAVEMENT EDGE DROP-OFFS

A pavement edge between opposing directions of traffic or lanes that traffic is expected to cross in a lane change situation shall not have an elevation difference greater than 1½". Warning signs (MUTCDW8-11 or W8-9A) shall be placed in advance of and at 1500' intervals throughout the drop-off area. Dual posting on both sides of the traveled way shall be required. All transverse transitions between resurfaced and unresurfaced areas which traffic may cross shall be wedged with an asphalt mixture for leveling & wedging. The wedges shall be removed prior to placement of the final surface course.

Pavement edges that traffic is not expected to cross, excepted accidentally, shall be treated as follows:

1" to 2" – Protect with shoulder closure. No protection required.

2" to 4" – Place plastic drums, vertical panels, or barricades every 50 feet. Cones may be used in place of plastic drums, panels, and barricades during daylight working hours. Wedge with DGA or cuttings from milling with a 1:1 or flatter slope in daylight hours, or 3:1 or flatter slope during night time hours, when work is not active in the drop-off area.

Edge Keys – Place Type III Barricades facing oncoming traffic at milled edge keys. Place plastic drums, vertical panels, or barricades every 25 feet. Wedge with cuttings from milling with a 1:1 or flatter slope in daylight hours, or 3:1 or flatter slope during night time hours, when work is not active in the drop-off area.

Guardrail Installation – Either existing or new guardrail shall be in place during periods when lane closures are prohibited by the traffic Control Plan. At other times, protect active guardrail operations with a lane closure. Protect partially completed guardrail installations with a shoulder closure during non working hours.

SPECIAL NOTE FOR TYPICAL SECTION DIMENSIONS
FD04 047-9002-004-009
FD04 090-9002-008-011

The dimensions shown on the typical sections for pavement and shoulder widths and thicknesses are nominal or typical dimensions. The actual dimensions to be constructed may be varied to fit existing conditions as directed or approved by the Engineer. It is not intended that existing pavement or shoulders be widened unless specified elsewhere in the Proposal.

Typical Section
7/11/2002

SPECIAL NOTE FOR
ASPHALT MILLING AND TEXTURING
FD04 047-9002-004-009
FD04 090-9002-008-011

Mill edge keys according to the Special Note for Edge Keys and the Phasing specified in the Traffic Control Plan. Do not allow traffic to drive on milled surfaces. Begin paving operations within 24 hours after the commencement of the asphalt milling operation. Continue paving operations continuously until completed. If paving operations are not begun within this time period, liquidated damages will be assessed at the rate prescribed by Section 108.09 of the 2000 Standard Specifications until such time as paving operations are begun.

Contrary to Section 408 of the 2000 Standard Specifications, the material obtained from the milling operations shall become the property of the Department. Deliver this material to the State Maintenance facility in Nelson County.

SPECIAL NOTE FOR REMOVING TYPE V PAVEMENT MARKERS
FD04 047-9002-004-009
FD04 090-9002-008-011

Contrary to Section 403.03.02, deliver the removed pavement markers to the Department's Bailey Bridge Yard in Frankfort, Kentucky

DeliverTypeV.Frankfort
8/16/2002

SPECIAL NOTE FOR MILLED RUMBLE STRIPS
FD04 047-9002-004-009
FD04 090-9002-008-011

Contrary to Section 403.03.08 of the 2000 Standard Specifications, construct milled rumble strips as shown on the drawing on all mainline and ramp shoulders. Do not mill rumble strips across public road intersections. Milled rumble strips will be measured as linear feet of shoulder in each direction of travel.

Coordinate this work with the Resident Engineer in locations near bridge ends, traffic loops, and piezoelectric sensors. Any damage caused to structures, sensor lead-ins, or loops, shall be the responsibility of the contractor to repair or replace at no additional cost to the Department.

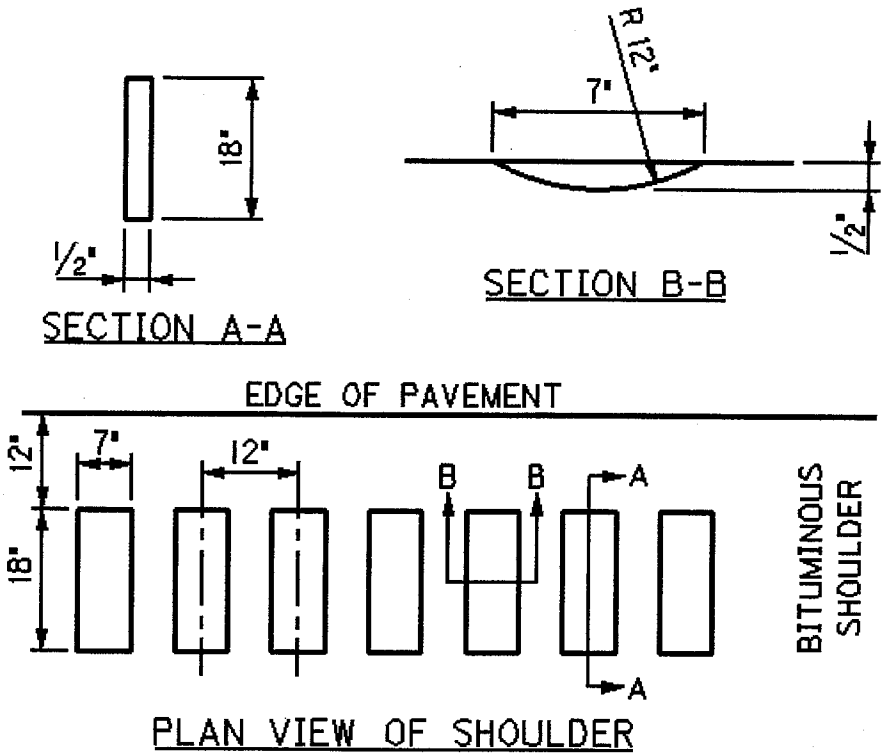

SPECIAL NOTES FOR INSTALLATION OF
METAL SNOWPLOWABLE PAVEMENT MARKERS
FURNISHED BY CONTRACTOR
FD04 047-9002-004-009
FD04 090-9002-008-011

Pavement markers shall comply with Section 840 of the 2000 Standard Specifications and Standard Drawing No. TSC-400. Installation, location and spacing shall be in accordance with Section 712 and Standard Drawing Nos. TSC-300, TSC-301, TSC-302, TSC-305, TSC-310, TSC-315, TSC 316, TSC 317, TSC 320, and TSC 325. Contrary to Section 840, the red portion of the lens in the bi-directional (white/red) marker may utilize a plastic shield in lieu of untempered glass.

Flush-mounted Type IV-A markers shall be used to delineate the lane lines, centerlines and edgelines when pavement markers are to be installed on bridge decks. Type V markers are not to be installed on bridge decks.

CERTIFICATION

The Contractor shall provide the following certification from the manufacturer of the castings. This certification must be submitted along with the bid:

> The purchase of the snowplowable castings conveys to the Department of Highways, or its designated agent, the right to remove, reclaim, clean, and reuse these castings in any manner designated by the Department. The manufacturer shall hold no claim for any type of claims of patent infringement.

_____
Manufacturer or
Designated Agent of Manufacturer

TRAFFIC CONTROL FOR RAISED PAVEMENT MARKER INSTALLATIONS
FD04 047-9002-004-009
FD04 090-9002-008-011

TWO-LANE, TWO-WAY ROADWAYS:

On two-lane, two-way roadway sections, lane closures shall be considered short-duration operations. All work shall be accomplished in only one lane and shall affect the adjacent lane as little as possible. Egress and ingress shall be provided to all ramps, side roads, and entrances at all times.

Approaches to the immediate work area shall be signed in accordance with Lane Closure Case I-A. All signs may be installed on temporary mountings.

All work vehicles used in the roadway shall be equipped, as a minimum, with strobe lights or rotating beacons. If equipped with a flashing arrow board, the board shall be used in caution mode, but shall not indicate a flashing arrow. The use of a truck mounted attenuator will not be required on two-lane, two-way roadway sections.

When the pavement markers have been placed on the roadway, traffic cones shall be used to protect the markers from traffic until the adhesive epoxy has hardened.

MULTI-LANE ROADWAYS:

On multi-lane roadway sections, all operations shall be performed behind stationary lane closures. All lane closures shall be approved by the Engineer and shall be signed in accordance with Lane Closure Cases II and IV. Egress and ingress shall be provided to all ramps, side roads, and entrances at all times.

A truck mounted attenuator shall be required on multi-lane roadways. The location of the TMA within the lane closure shall be as specified by the Engineer.

No more than one lane of traffic plus 24 inches maximum of only one adjacent lane shall be closed per direction of travel. A minimum lane width of 10 feet should be maintained. The length of a lane closure shall not exceed 1 mile in urban areas nor 3 miles in rural areas. Consecutive lane closures shall be permitted only if separated by a minimum of 2 miles and must be affecting the same lane.

The Contractor shall provide for the installation of all necessary traffic control devices before beginning work and their immediate removal as soon as work is suspended or completed, and the pavement markers are completely bonded to the pavement.

TRAFFIC CONTROL FOR THERMOPLASTIC PAVEMENT MARKINGS
FD04 047-9002-004-009
FD04 090-9002-008-011

The installation of thermoplastic pavement striping shall be accomplished as follows:

TWO-LANE, TWO-WAY ROADWAYS:

On two-lane, two-way roadway sections, lane closures shall be considered short-duration operations. All work shall be accomplished in only one lane and shall affect the adjacent lane as little as possible. Egress and ingress shall be provided to all ramps, side roads, and entrances at all times.

Approaches to the immediate work area shall be signed in accordance with Lane Closure Case I-A. All signs may be installed on temporary mountings.

All work vehicles used in the roadway shall be equipped, as a minimum, with strobe lights or rotating beacons. If equipped with a flashing arrow board, the board shall be used in caution mode, but shall not indicate a flashing arrow. The use of a truck mounted attenuator will not be required on two-lane, two-way roadway sections.

MULTI-LANE ROADWAYS:

On multi-lane roadway sections, the thermoplastic striping operation may be performed behind stationary lane closures or as a mobile operation. Egress and ingress shall be provided to all ramps, side roads, and entrances at all times.

Stationary lane closures shall be approved by the Engineer and shall be signed in accordance with Lane Closure Cases II and IV. A truck mounted attenuator shall be required on multi-lane roadways. The location of the TMA within the lane closure shall be as specified by the Engineer.

No more than one lane of traffic plus 24 inches maximum of only one adjacent lane shall be closed per direction of travel. A minimum lane width of 10 feet should be maintained. The length of a lane closure shall not exceed 1 mile in urban areas nor 3 mile in rural areas. Consecutive lane closures shall be permitted only if separated by a minimum of 2 miles and must be affecting the same lane.

If a mobile operation is utilized, it shall conform to the attached traffic control drawings for "Thermoplastic Operations Cases I, II, III, and IV".

SPECIAL NOTES FOR GUARDRAIL
HARDIN & NELSON COUNTIES
FD04 047-9002-004-009
FD04 090-9002-008-011

I. DESCRIPTION

Perform all work shall in accordance with the Department's 2000 Standard Specifications and applicable Special Provisions and Standard Drawings except as specified in these notes, or elsewhere in the drawings or the proposal. Article references are to the Standard Specifications.

This work shall consist of the following; (1) Removing existing guardrail and end treatments; (2) Installation of guardrail, terminal sections, and end treatments; (3) Maintaining and controlling traffic; and (4) all other work specified as part of this contract.

II. MATERIALS

All materials shall be sampled and tested in accordance with the Department's Sampling Manual and the materials shall be available for sampling a sufficient time in advance of the use of the materials to allow for the necessary time for testing unless otherwise specified in these Notes.

A. Maintain and Control Traffic. See Traffic Control Plan.

B. Crash Cushion Type VII, D, S. Furnish Quadguard Elite, approximate 10' width, designed by the manufacturer. Furnish the Engineer the Designer's NCHRP-350 Certification before installing. Use reinforced concrete Class AA to construct wide backup. Use non-reinforced concrete Class AA to construct pad.

C. Bridge Wingwall. Use reinforced concrete, Class AA.

III. CONSTRUCTION METHODS

A. Maintain and Control Traffic. See Traffic Control Plan.

B. Remove Guardrail. Remove all existing guardrail systems; milepoints listed on the guardrail summary are approximate only. Deliver all components other than removed concrete to the Department's Bailey Bridge Yard in Franklin County.

C. Site Preparation. The Contractor will be responsible for all site preparation to provide proper template of shoulders and medians for new guardrail systems. This item shall include, but is not limited to, incidental excavation and embankment and backfilling, removal of obstructions or any other items, disposal of materials, temporary erosion control, and seeding and protection. Silt Checks and Temporary Silt Fence shall be constructed at locations as directed by the Engineer. All site preparation shall be only as approved or directed by the Engineer. Other than bid items listed in the contract, no direct payment will be allowed for site preparation, but shall be incidental to the other items of the work.

D. Crash Cushion Type VII, D, S. Construct Crash Cushion Type VII, D, S with reinforced concrete wide back up and non-reinforced concrete pad at the listed locations according to the manufacturer's specifications and Standard Drawing RBE-040 as directed by the Engineer.

E. Bridge Wingwall. Construct new face on bridge wingwalls to accommodate Guardrail Bridge End Connectors Type D. Provide proposed design for the Engineer's approval before beginning construction.

F. Guardrail Installation. The guardrail and end treatments shall be erected to the lines and grades shown on Standard Drawings or as directed by the Engineer. The shoulder width shall be as directed by the Engineer. Radii at entrances and road intersections are to be constructed as directed by the Engineer. Milepoints listed on the guardrail summary are approximate only. Exact termini for individual guardrail installations will be determined by the Engineer at the time of erection.

When installing guardrail, do not leave the blunt end left exposed where it would be hazardous to the public. When it is not practical to complete the construction of the rail and the permanent end treatments concurrently, the Contractor shall provide a temporary end by connecting at least 4 pieces of rail to the last post, and by slightly flaring, and burying the end of the rail completely into the existing shoulder. If left overnight, a barrel with bridge panel as detailed on current Standard Drawing TSC-261 shall be placed in advance of the guardrail end and maintained during use. The cost of the temporary end, including the barrier and panel, shall be included in the unit price for Guardrail, Single Face.

G. On-Site Inspection. Each Contractor submitting a bid for this work shall make a thorough inspection of the site prior to submitting his bid and shall thoroughly familiarize him-self with existing conditions so that the work can be expeditiously performed after a contract is awarded. Submission of a bid will be considered evidence of this inspection having been made. Any claims resulting from site conditions will not be honored by the Department.

H. Property Damage. The Contractor will be responsible for all damage to public and/or private property resulting from his work.

I. Final Dressing, Clean Up, and Seeding. After all work is completed, debris from the construction site shall be completely removed from the job site. Perform Final dressing Class A on all disturbed areas. Sow all disturbed Earthen areas with Seed mixture No. I.

J. Utility Clearance. The Department will remove the conduit attached to the existing guardrail at eastbound milepoints 9.547-9.712. Work around and do not disturb existing underground or overhead utilities. It is not anticipated that any utility facilities will need to be relocated and/or adjusted; however, in the event that it is discovered that the work does require that utilities be relocated and/or adjusted, the utility companies will work concurrently with the Contractor while relocating their facilities. Working days will not be charged for those days on which work on the controlling item is delayed, as provided in the Specifications. If the total delay exceeds ten working days, an extension of the specified completion date will be negotiated with the Contractor for delay to the Contractor's work.

IV. METHOD OF MEASUREMENT

A. Maintain and Control Traffic. See Traffic Control Plan.

B. Site Preparation. Other than bid items listed in the contract, site preparation, will not be measured for payment but shall be but shall be incidental to the other items of the work.

C. Steel Reinforcement. Steel Reinforcement will not be measured for payment but shall be incidental to Class A and Class AA Concrete as applicable.

D. Remove Double Faced Guardrail. Removing Double Faced guardrail will be measured as Removing Guardrail in linear feet along one face.; no additional measurement will be made for removing the second face.

V. BASIS OF PAYMENT

No direct payment will be made other than for the bid items listed. All other items required to complete the construction shall be incidental to the bid items listed.

A. Maintain and Control Traffic. See Traffic Control Plan.

SPECIAL NOTE FOR EDGE KEY

FD04 047-9002-004-009
FD04 090-9002-008-011

Construct Edge Keys at the beginning of project, end of project, at ramp gores, and bridge ends, as applicable. Cut out the existing asphalt surface to the required depth and width shown on the drawing. Heel new surface into the existing surface. The Department will pay for this work at the contract unit price per ton for "Asphalt Pavement Milling and Texturing", which shall be full compensation for all labor, materials, equipment, and incidentals for removal and disposal of the existing asphalt surface required to construct the edge key.

EDGE KEY

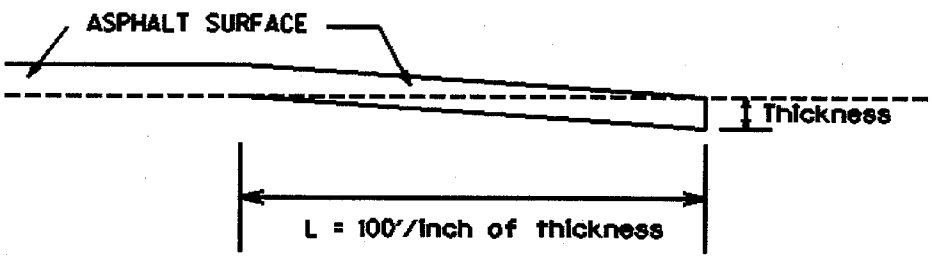

Thickness = 3¾ "

L = 375'

EdgeKey.Ton

SPECIAL NOTE FOR REFLECTIVE-CRACK-RELIEF INTERLAYER

1. DESCRIPTION. The Reflective-Crack-Relief (RCR) interlayer is a highly elastic, impermeable, asphalt mixture interlayer that is designed to reduce reflective cracking from Portland Cement Concrete (PCC) pavements or asphalt concrete pavements. The RCR asphalt mixture is a fine-graded, highly elastomeric, polymer-modified hot-mix asphalt (HMA). Place the RCR interlayer directly on the PCC or asphalt pavement in one lift using a conventional paver and roller(s). This material should be applied according to the lines, grades, and typical cross-sections in the plans or as established by the Engineer. Cover the RCR interlayer with an asphalt mixture overlay prior to permitting traffic on the RCR interlayer.

Unless otherwise noted, Section references herein are to the Department's *Standard Specifications for Road and Bridge Construction.* All applicable portions of the Department's *Standard Specifications* apply unless specifically modified herein.

2. MATERIALS AND PERSONNEL.

2.1 Fine Aggregate. Provide natural sand, crushed fines, or screenings conforming to Section 804 with the exceptions that the minimum sand equivalent requirement is 40 percent and the fine aggregate angularity requirement is waived.

2.2 RCR Interlayer Binder. Provide a binder conforming to AASHTO M320 with a high temperature of 70 °C or higher and a low temperature of -28 °C or lower as required to meet the Hveem Stability and Flexural Beam Fatigue mix requirements of section 3.2. In addition, ensure the RCR interlayer binder conforms to the following criteria:

Test	Criteria
RTFO Elastic Recovery (AASHTO T301)	75 % minimum at 77 °F and 10 cm elongation
Separation Test (ASTM D5976)	6 °F maximum difference after 48 hours

At the asphalt mixing plant, maintain the temperature of the asphalt binder between 285 and 350 °F

2.3 RCR Interlayer Representative. Ensure a technical representative from the producer of the asphalt binder utilized in the RCR interlayer is present during the initial construction activities and available upon the request of the Engineer.

3. CONSTRUCTION.

3.1 Preparation of Mixture. Ensure the mixture contains no reclaimed materials. Contrary to Subsection 402.03, formulate and submit a job-mix formula (JMF) conforming to the following asphalt binder content (AC) and gradation limits.

Sieve Size	Percent Passing	Production Tolerance (%)
3/8 in.	100	---
No. 4	80-100	---
No. 8	60-85	± 4
No. 16	40-70	---
No. 30	25-55	---
No. 50	15-35	---
No. 100	8-20	---
No. 200	6.0-14.0	± 1.0
% AC	7.0 (minimum)	± 0.3

3.2 Mix Design Criteria. Contrary to Subsection 403.03, using a compaction effort of N_{des} = 50 gyrations, perform and submit a laboratory mix design conforming to the following mixture specifications. Additionally, provide results for Hveem Stability according to AASHTO T246 (4-in. molds, 140 °F) and Flexural Beam Fatigue according to AASHTO TP8 [2000 microstrains, 10 Hz, 3.0 ± 1.0 % air voids (AV), 60 °F]. For the Hveem Stability test, condition the mixture at the compaction temperature for two hours according to AASHTO R30. For the Flexural Beam Fatigue test, condition the mixture at 275 °F for three hours and at the compaction temperature for one hour according to AASHTO R30.

Test	Criteria
% AV	0.5-2.5
% Voids-in-Mineral Aggregate (VMA)	16.0 (minimum)
Hveem Stability	18.0 (minimum)
Flexural Beam Fatigue	100,000 cycles (minimum for average of two samples)

3.3 Surface Preparation. Immediately prior to applying the RCR interlayer, thoroughly clean the surface of all vegetation, loose materials, dirt, mud, visible moisture, and other objectionable materials. As directed by the Engineer, fill joints larger than 0.5 in. wide with a non-expansive crack filler or silicone joint material that will not be affected by the heat of the RCR interlayer during placement.

Prior to the placement of the RCR interlayer over PCC pavement and as directed by the Engineer, repair any moderately or highly "D-cracked" areas, high-severity "punch-outs," "blow-ups," and other severe distresses with a doweled, full-depth patch. Ensure the patching material satisfies the applicable requirements of Section 502.

Prior to the placement of the RCR interlayer over asphalt pavement and as directed by the Engineer, fill large surface deformities, greater than nominally 3 in. deep and 4 ft. in diameter, with an approved asphalt mixture. During placement of the RCR interlayer, fill smaller pavement deformities in the underlying pavement with the RCR interlayer mixture.

3.4 Production and Application of RCR Interlayer. Do not place the RCR interlayer on wet pavement. Ensure the pavement surface or ambient air temperature is a minimum of 50 °F and rising at the time of placement. Apply a tack coat both between the existing pavement and RCR interlayer and between the RCR interlayer and asphalt mixture overlay according to Subsection 406.03.

Contrary to Subsection 401.03, produce and place the RCR interlayer at the following temperatures:

	Temperature
Mixing	320 – 350 °F
Laydown at Paver	300 – 330 °F
Compaction	290 – 320 °F

Place the RCR interlayer at a thickness of 1.0 ± 0.25 in. The interlayer shall overlap the existing longitudinal joints by at least 6 in. to eliminate construction joints over the underlying longitudinal joints.

3.5 Compaction and Appearance of RCR Interlayer.

A) General. Begin compacting the RCR interlayer immediately after placement. Contrary to Subsection 403.03, compact the RCR interlayer only with steel-wheel rollers in the static mode.

B) Test Strip. During the setup period, construct test strips of the RCR interlayer for each approved mix design. Ensure the test strip consists of approximately 250 tons or one hour's production, whichever is less, in a single lane within the project limits.

Use the paver and rollers to be used on the project to place the test strip. By obtaining and testing roadway cores according to KM 64-442, ensure all test strips meet the density requirements of this note and other applicable specification requirements. Construct additional test strips until establishing a rolling pattern that provides the specified density.

Construct a new test strip whenever unacceptable density results occur or whenever a change in the mix design, compaction method, or compaction equipment occurs. When directed by the Engineer, remove and replace test strips with unacceptable density results. Do not place additional RCR interlayer before

establishing a rolling pattern acceptable to the Engineer on a test strip conforming to the requirements of this note.

C) Appearance. After final rolling, the RCR interlayer surface texture should be "tight." Occasional small flushed areas approximately two feet wide are acceptable. Excessive flushing could be an indication of non-specification material and should be investigated by further testing (e.g., %AC, gradation, or density). If blisters larger than one foot in diameter occur in the RCR interlayer and have not disappeared by the time of the overlay, perforate the blisters and roll with one pass.

D) Unacceptable Appearance. Remove and replace areas determined unacceptable by the Engineer, according to this specification, at no additional cost to the Department.

3.6 Application of Asphalt Mixture Overlay. The RCR interlayer may be covered with the successive wearing course after the surface temperature cools to less than 150 °F. Apply the asphalt mixture overlay within five days after completing the RCR interlayer and prior to permitting traffic on the RCR interlayer.

3.7 Acceptance Sampling and Testing. Contrary to Subsection 402.03.02, the Department will accept the RCR interlayer as follows.

A) AC and Gradation. Perform one evaluation per sublot according to Subsection 402.03.02. By the end of the setup period, establish a JMF conforming to the AC and gradation limits from Section 3.1 of this note. The Department will allow the established JMF to vary within the production tolerances from Section 3.1 of this note provided the percent passing each sieve remains within the gradation limits and the AC remains at or above the minimum.

B) AV and VMA. Prepare and analyze one set of two specimens per sublot according to Subsection 402.03.02. By the end of the setup period, test the RCR interlayer to document that the average AV value of each set of specimens conforms to the limits from Section 3.2 of this note. Likewise, by the end of the setup period, test the RCR interlayer to document that the average VMA value of each set of specimens is at or above the minimum from Section 3.2 of this note.

C) Density. For each sublot of production after the setup period, furnish four cores to the Engineer according to Subsection 402.03.02. The Department will test the cores to ensure that the density of each core is a minimum of 96 percent of the G_{mm} value for that sublot.

D) Unsatisfactory Work Based on Laboratory Data. When the AC, gradation, AV, or VMA value from any test after the setup period fails to satisfy the applicable requirements of this note, cease all shipments to the project. Adjust procedures or mixture composition until all properties satisfy the applicable

requirements of this note. Document acceptable materials and work before restarting operations.

3.8 **Verification Sampling and Testing.** Contrary to Subsection 402.03.03, the Department will verify the RCR interlayer as follows. The Department will perform a minimum of one verification test for AC, gradation, AV, and VMA for each lot according to Subsection 402.03.03. Provided the differences between the contractor's acceptance test and the Department's verification test are within the tolerances given in Subsection 402.03.03, the Department will accept the RCR interlayer for that lot.

When the differences between the contractor's acceptance test and the Department's verification test are not within the tolerances given in Subsection 402.03.03, cease all shipments to the project. Adjust procedures or mixture composition until the differences are within the tolerances given in Subsection 402.03.03. Document compliance with these tolerances before restarting operations.

4. MEASUREMENT. The Department will measure the RCR interlayer in tons. The Department will not measure the surface preparation or tack for payment and will consider them incidental to the RCR interlayer.

5. PAYMENT. Contrary to Subsection 402.05, the Department will consider the unit bid price per ton to include all labor, materials, and equipment necessary to complete the work. The Department will make payment for the completed and accepted quantities according to the following bid item.

Code	Pay Item	Pay Unit
	Reflective Crack Relief Interlayer	Ton

March 20, 2003

SPECIAL NOTE FOR COMPLETION DATE & LIQUIDATED DAMAGES
HARDIN & NELSON COUNTIES
FD04 044-9002-004-009
FD04 090-9002-008-011

All asphalt surface courses containing asphalt binder PG76-22 shall be completed by October 15, 2003. In addition to the Liquidated Damages specified in Section 108, Liquidated Damages in the amount specified in Section 108 will be assessed for each calendar day after October 15, 2003, that any asphalt base or surface coarse containing asphalt binder PG76-22 remains uncompleted.

The remainder of the work shall be completed by November 15, 2003. Contrary to Section 108, liquidated damages will be assessed for the months of December through March.

All liquidated damages will be applied accumulatively.

All other applicable portions of Section 108 apply.

SPECIAL NOTES FOR PAVEMENT REHABILITATION
HARDIN & NELSON COUNTIES
FD04 047-9002-004-009
FD04 090-9002-008-011

THIS PROJECT IS A FULLY CONTROLLED ACCESS HIGHWAY

GENERAL

Perform all work shall in accordance with the Department's 2000 Standard Specifications and applicable Special Provisions and Standard Drawings except as specified in these notes, or elsewhere in the drawings or the proposal. Article references are to the Standard Specifications.

SITE PREPARATION

Be responsible for all site preparation. This item shall include, but is not limited to, clearing and grubbing, excavation and backfilling, embankments, removal of obstructions or any other items, disposal of materials, temporary and permanent erosion control, final dressing, restoration, and seeding and protection. Stockpile topsoil for use in Final Dressing and restoration. Construct Silt Checks and Temporary Silt Fence at locations designated by the Engineer. All site preparation shall be only as approved or directed by the Engineer. Except for the bid items listed, site preparation will not be measured for payment but shall be incidental to the other items of work.

SHOULDERS

The Engineer will inspect existing paved shoulders to be used as temporary roadways; if deemed necessary by the Engineer, repair shoulders as directed prior to opening to traffic. during construction, perform any maintenance of the shoulders as deemed necessary by the Engineer. Asphalt mixtures and DGA will be measured for payment; all other work necessary to prepare and maintain shoulders shall be incidental to Maintain and Control traffic.

Construct earth shoulders in the median adjacent to the inside lanes as shown on the typical section. Use good earthen materials, free from rock and debris, suitable for sustaining vegetation. Sow with seed mixture No. I. Earth shoulders in the median will be measured as Shouldering; however, contrary to section 209.04.05, the measurement will include the shoulder construction on both sides of the median only. Seeding and Protection will be measured only for the earth shoulders constructed in the median

Construct DGA shoulders with double asphalt seal coat on the outside edge of the paved shoulder as shown on the drawing. Shape to the approximate width of the existing shoulders. The rate of application for the first seal coat course is 3.2 lbs/sy of asphalt seal coat and 30 lbs/sy of size #78 seal aggregate. The rate of application for the second course is 2.8 lbs/sy for asphalt seal coat and 20 lbs/sy of size #9M seal coat aggregate. The Engineer may adjust the rate of application as conditions warrant. Use RS-2 or RS-2C asphalt material that is compatible with the seal aggregate.

Use caution in applying liquid asphalt material to avoid over spray getting on curbs, gutter, barrier walls, bridges, guardrail, and other roadway appurtenances.

Any surface preparation required prior to applying seal shall be incidental to "Asphalt Material for Asphalt Seal Coat".

ASPHALT PAVEMENT REHABILITATION

Mill and texture edge keys and bridge ends and place asphalt leveling and wedging prior to placing the Reflective Crack Relief Interlayer. Do not allow traffic on milled surfaces or the Reflective Crack Relief Interlayer. Work one lane in a direction through the asphalt binder course before beginning work in the adjacent lane. Contrary to Special Note 9Y, do not use a Material Transfer Vehicle when placing the Reflective Crack Relief Interlayer. Place asphalt base and surface as shown on the typical sections.

66" CULVERT PIPE

Furnish Class III RCP culvert pipe, no alternate. Construct a modified (reinforced concrete) pipe anchor to attach pipe extensions to existing headwalls; provide proposed design for each location for the Engineer's approval before construction. Construct embankment with a 4:1 slope or flatter. Positive drainage is required upon completion of construction and is the responsibility of the Contractor. Class A concrete used to construct the anchor will be measured in cubic yards; however, hook bolts and steel reinforcement will not be measured for payment but shall be incidental to Class A Concrete. Excavation will not be measured for payment but shall be incidental to culvert pipe.

Upon completion of the culvert and embankment, the Department will construct Channel lining as needed to reinforce the slope around the culvert end. The Engineer will coordinate the Contractor's work with the Department's operations.

SLOPE AND PARALLEL HEADWALL

Remove existing headwall and construct 15" Slope and Parallel Headwall as directed by the Engineer at the location listed. Slope and Parallel Headwall will be measured as an individual unit, each. Removing the existing headwall and excavation will not be measured for payment but shall be incidental to the Slope and Parallel Headwall.

PAVEMENT STRIPING

See Traffic Control Plan.

GUARDRAIL

See Special Notes for Guardrail.

RUBBELIZE PAVED DITCH

Rubbelize the existing paved ditch at the location listed to accommodate the new guardrail construction.

DELINEATOR POSTS

Replace all delineator posts removed or damaged during Contractor's operations at no additional cost to the Department. No additional delineators are required.

WASTING

Dispose of waste at locations off the right of way at sites obtained by the Contractor at no additional cost to the Department.

CLEAN UP AND SEEDING

After all other work is completed, debris from construction shall be completely removed from the job site. Perform Final Dressing Class A on all disturbed areas. Sow all disturbed earthen areas with Seed Mixture No. I. Place erosion control blanket on entire disturbed median. Seeding and protection in the median will be measured for payment according to Section 212.04.06. Seeding and protection of all other disturbed earthen areas will not be measured for payment but shall be incidental to the applicable items of work..

ON-SITE INSPECTION

Each Contractor submitting a bid for this work shall make a thorough inspection of the site prior to submitting his bid and shall thoroughly familiarize himself with existing conditions so that the work can be expeditiously performed after a contract is awarded. Submission of a bid will be considered evidence of this inspection having been made. Any claims resulting from site conditions will not be honored by the Department.

CAUTION

Information shown on the drawings and in this proposal and the types and quantities of work listed are not to be taken as an accurate or complete evaluation of the material and conditions to be encountered during construction. The bidder must draw his own conclusion as to the conditions encountered. The department does not give any guarantee as to the accuracy of the data and no claim will be considered for additional compensation if the conditions encountered are not in accordance with the information shown.

RESTORATION

The Contractor shall be responsible for all damage to public and/or private property resulting from his work. All disturbed features shall be restored in like kind materials and design to the existing or proposed grades, as applicable, at no additional cost to the Department.

UTILITY CLEARANCE

Work around and do not disturb existing overhead or underground utilities. It is not anticipated that any utility facilities will need to be relocated and/or adjusted; however, in the event that it is discovered that the work does require that utilities be relocated and/or adjusted, the utility companies will work concurrently with the Contractor while relocating their facilities. Working days will not be charged for those days on which work on the controlling item is delayed, as provided in the Specifications. If the total delay exceeds ten working days, an extension of the specified completion date will be negotiated with the Contractor for delay to the Contractor's work.

COORDINATION OF WORK WITH OTHER CONTRACTS

The Contractor is advised there may be other active projects adjacent or within this project. See Section 105.06

SPECIAL NOTE FOR LONGITUDINAL PAVEMENT JOINT ADHESIVE
FD04 047-9002-004-009
FD04 090-9002-008-011

1. DESCRIPTION. This specification covers the requirements and practices for applying an asphalt adhesive material to the longitudinal joint of the surface course of an asphalt pavement. Apply the adhesive to the face of longitudinal joints between driving lanes for the first lane paved. Then, place and compact the adjacent lane against the treated face to produce a strong, durable, waterproof longitudinal joint.

2. MATERIALS, EQUIPMENT, AND PERSONNEL.

2.1 Joint Adhesive. Provide material conforming to Subsection 2.1.1 or 2.1.2.

2.1.1 Provide an adhesive conforming to the following requirements:

Property	Specification	Test Procedure
Viscosity, 400 ° F (Pa·s)	4 – 10	ASTM D 3236
Cone Penetration, 77 ° F	60 – 100	ASTM D 5329
Flow, 140 ° F (mm)	5 max.	ASTM D 5329
Resilience, 77 ° F (%)	30 min.	ASTM D 5329
Ductility, 77 ° F (cm)	30 min.	ASTM D 113
Ductility, 39 ° F (cm)	30 min.	ASTM D 113
Tensile Adhesion, 77 ° F (%)	500 min.	ASTM D 5329
Softening Point, ° F	171 min.	ASTM T 53
Asphalt Compatibility	Pass	ASTM D 5329

Ensure the temperature of the pavement joint adhesive is between 380 and 410 °F when the material is extruded in a 0.125-inch-thick band over the entire face of the longitudinal joint.

2.1.2 Provide an adhesive conforming to the following requirements:

Property	Specification	Test Procedure
Softening Point[1],° F	176 min.	AASHTO T 53
Ash[2] (%)	15 max.	AASHTO T 111
Polymer (%)	4.5 min.	Certificate of Analysis
Failure Strain[1], -4 ° F (%)	10.0 min.	AASHTO T 314
Slump Test, 212 ° F (mm)	2.0 max.	ASTM D 2202

[1]Cold sample forced into molds at 325 ° F.
[2]Test two grams of material.

Ensure the temperature of the pavement joint adhesive is between 300 and 350 °F when the material is extruded in a 0.20 to 0.40-inch-thick band over the entire face of the longitudinal joint.

2.2. Equipment.

2.2.1 Melter Kettle. Provide an oil-jacketed, double-boiler, melter kettle equipped with any needed agitation and recirculating systems.

2.2.2 Applicator System. Provide a pressure-feed-wand applicator system with an applicator shoe attached.

2.3 Personnel. Ensure a technical representative from the manufacturer of the pavement joint adhesive is present during the initial construction activities and available upon the request of the Engineer.

3. CONSTRUCTION.

3.1 Surface Preparation. Prior to the application of the pavement joint adhesive, ensure the face of the longitudinal joint is thoroughly dry and free from dust or any other debris that would inhibit adhesion. Clean the joint face by the use of compressed air. Ensure this preparation process occurs shortly before application to prevent the return of debris on the joint face.

3.2 Pavement Joint Adhesive Application. Ensure the ambient temperature is a minimum of 40 $^{\circ}$ F during the application of the pavement joint adhesive. Prior to applying the adhesive, demonstrate competence in applying the adhesive according to this note to the satisfaction of the Engineer. Heat the adhesive in the melter kettle to the specified temperature range. Pump the adhesive from the melter kettle through the wand onto the vertical face of the cold joint. Apply the adhesive in a continuous band over the entire face of the longitudinal joint. Do not use excessive material in either thickness or location. Ensure the edge of the extruded adhesive material is flush with the surface of the pavement. Then, place and compact the adjacent lane against the joint face. Remove any excessive material extruded from the joint after compaction (a small line of material may remain).

3.3 Pavement Joint Adhesive Certification. Furnish the joint adhesive's certification to the Engineer stating the material conforms to all requirements herein prior to use.

3.4 Sampling and Testing. The Department will require a random sample of pavement joint adhesive from each manufacturer's lot of material. Extrude the heated material into a suitable container, and forward the sample to the Division of Materials for testing. At a minimum, obtain a one-quart sample.

4. MEASUREMENT. The Department will measure the quantity in linear feet. The Department will not measure for payment any extra materials, labor, methods, equipment, or construction techniques used to satisfy the requirements of this note. The Department will not measure for payment any trial applications of pavement joint adhesive, the cleaning of the joint face, or furnishing and placing the adhesive. The Department will consider all such items incidental to the pavement joint adhesive.

5. PAYMENT. The Department will pay for the Pavement Joint Adhesive at the Contract unit bid price and apply an adjustment for each manufacturer's lot of material based on the degree of compliance as defined in the following schedule. When a sample fails on two or more tests, the Department may add the deductions, but the total deduction will not exceed 100%

Longitudinal Joint Adhesive Price Adjustment Schedule						
Test	Specification	100% Pay	90% Pay	80% Pay	70% Pay	50% Pay[1]
Joint Adhesive Referenced in 2.1.1						
Viscosity, 400 ° F (Pa•s)		10.1-10.5	10.6-11.0	11.1-11.5	11.6-12.0	≥ 12.1
ASTM D 3236	4.0-10.0	3.5-3.9	3.0-3.4	2.5-2.9	2.0-2.4	≤ 1.9
Cone Penetration, 77 ° F			54-56	51-53	48-50	≤ 47
ASTM D 5329	60-100	57-103	104-106	107-110	111-113	≥ 114
Flow, 140 ° F (mm) ASTM D 5329	≤ 5.0	≤ 5.5	5.6-6.0	6.1-6.5	6.6-7.0	≥ 7.1
Resilience, 77 ° F (%) ASTM D 5329	≥ 30	≥ 28	26-27	24-25	22-23	≤ 21
Tensile Adhesion, 77 ° F (%) ASTM D 5329	≥ 500	≥ 490	480-489	470-479	460-469	≤ 459
Softening Point, ° F AASHTO T 53	≥ 171	≥ 169	166-168	163-165	160-162	≤ 159
Ductility, 77 ° F (cm) ASTM D 113	≥ 30.0	≥ 29.5	29.0-29.4	28.5-28.9	28.0-28.4	≤ 27.9
Ductility, 39 ° F (cm) ASTM D 113	≥ 30.0	≥ 29.5	29.0-29.4	28.5-28.9	28.0-28.4	≤ 27.9
Joint Adhesive Referenced in 2.1.2						
Softening Point, ° F AASHTO T 53	≥ 176	≥ 174	171-173	168-170	165-167	≤ 164
Ash (%) AASHTO T 111	≤ 15	≤ 16	17	18	19	≥ 20
Failure Strain, -4 ° F (%) AASHTO T 314	≥ 10.0	≥ 9.5	9.2-9.4	8.9-9.1	8.6-8.8	≤ 8.5
Slump Test, 212 ° F (mm) ASTM D 2202	≤ 2.0	≤ 2.5	2.6-3.0	3.1-3.5	3.6-4.0	≥ 4.1

[1] *If allowed to remain in place, the Department will review materials performing in this range on a project-by-project basis to determine if removal of the material is warranted.*

Code	Pay Item	Pay Unit
	Pavement Joint Adhesive	Linear Foot

April 4, 2003

POLICY FOR THE USE AND PLACEMENT OF CHANGEABLE MESSAGE SIGNS

The following policy is based upon current Changeable Message Signs (CMS) standards and practice from many sources, including the Federal Highway Administration (FHWA), other state Departments of Transportation, and Traffic Safety Associations. It is understood that each CMS installation or use requires individual consideration due to the specific location or purpose. However, there will be elements that are constant in nearly all applications. Accordingly these recommended guidelines bring a level of uniformity, while still being open to regional experience and engineering judgement.

Application

The primary purpose of CMS is to advise the driver of unexpected traffic and routing situations. Examples of applications where CMS can be effective include:

- Closures (road, lane, bridge, ramp, shoulder, interstate)
- Changes in alignment or surface conditions
- Significant delays, congestion
- Construction / maintenance activities (delays, future activities)
- Detours / alternate routes
- Special events with traffic and safety implications
- Crash / incidents
- Vehicle restrictions (width, height, weight, flammable)
- Advance notice of new traffic control device
- Real-time traffic conditions (must be kept up-to-date)
- Weather/driving conditions, environmental conditions, Roadway Weather Information Systems
- *Public Service Announcements that improve highway safety
- Emergency situations
- Referral to Highway Advisory Radio (if available)
- Messages as approved by the State Highway Engineer's Office

* Use the CMS for special campaigns that will have a specified beginning and ending date. The CMS should not be used for more than three weeks with any special campaign.

CMS should not be used for:

- Replacement of static signs (e.g. road work ahead), regulatory signs (e.g. speed limits), pavement markings, standard traffic control devices, conventional warning or guide signs
- Replacement of lighted arrow board
- Advertising* (*Don't advertise the event unless clarifying "action" to be taken by driver - e.g. Speedway traffic next exit)
- Generic messages
- Test messages (portable signs only)
- Describe recurrent congestion (e.g. rush hour)
- Public service announcements (not traffic related)

Messages

Basic principles that are important to providing proper messages and insuring the proper operation of a CMS are:

- Visible for at least ½ mile under ideal daytime and nighttime conditions
- Legible from all lanes a minimum of 650 feet
- Entire message readable twice while traveling at the posted speed
- No more than two message panels should be used (Three panels may be used on roadways where vehicles are traveling less than 45 mph). A panel is the message that fits on the face of the sign without flipping or scrolling.
- Each panel should convey a single thought; short and concise
- Do not use two unrelated panels on a sign
- Do not use the sign for two unrelated messages
- Should not scroll text horizontally or vertically
- Should not contain both the words *left* and *right*
- Use standardized abbreviations and messages
- Should be accurate and timely
- Avoid filler/unnecessary words and periods (hazardous, a, an, the)
- Avoid using local names or landmarks
- Avoid use of speed limits
- Use words (not numbers) for dates

Placement

Placement of the CMS is important to insure that the sign is visible to the driver and provides ample time to take any necessary action. Some of the following principles may only be applicable to controlled access roadways. The basic principles of placement for a CMS are:

- When 2 signs are needed, place on same side of roadway and at least 1,000 feet apart
- Place behind semi-rigid/rigid protection (guardrail, barrier) or outside of the clear zone
- Place 1,000 feet in advance of work zone; at least one mile ahead of decision point
- Normally place on right side of roadway, but should be place closest to affected lane so either side is acceptable
- Signs should not be dual mounted (one on each side of roadway facing same direction)
- Point trailer hitch downstream
- Secure to immovable object to prevent thief (if necessary)
- Do not place in sags or just beyond crests
- Check for reflection of sun to prevent the blinding of motorists
- Should be turned ~3° outward from perpendicular to the edge of pavement
- Bottom of sign should be 7 feet above the elevation of edge of roadway
- Should be removed when not in use

STANDARD ABBREVIATIONS

The following is a list of standard abbreviations to be used on CMS.

Word	Abbrev.	Example
Access	ACCS	ACCIDENT AHEAD/USE ACCS RD NEXT RIGHT
Alternate	ALT	ACCIDENT AHEAD/USE ALT RTE NEXT RIGHT
Avenue	AVE	FIFTH AVE CLOSED/DETOUR NEXT LEFT
Blocked	BLKD	FIFTH AVE BLKD/MERGE LEFT
Boulevard	BLVD	MAIN BLVD CLOSED/USE ALT RTE
Bridge	BRDG	SMITH BRDG CLOSED/USE ALT RTE
Cardinal Directions	N, E, S, W	N I75 CLOSED/ DETOUR EXIT 30
Center	CNTR	CNTR LANE CLOSED/MERGE LEFT
Commercial	COMM	OVRSZ COMM VEH/USE I275
Condition	COND	ICY COND POSSIBLE
Congested	CONG	HVY CONG NEXT 3MI
Construction	CONST	CONST WORK AHEAD/EXPECT DELAYS
Downtown	DWNTN	DWNTN TRAF USE EX 40
Eastbound	E-BND	E-BND I64 CLOSED/DETOUR EXIT 20
Emergency	EMER	EMER VEH AHEAD/PREPARE TO STOP
Entrance, Enter	ENT	TRUCK ENT NEXT RIGHT
Exit	EX, EXT	DWNTN TRAF USE EX 40
Expressway	EXPWY	WTRSN EXPWY CLOSED/DETOUR EXIT 10
Freeway	FRWY, FWY	GN SNYDR FWY CLOSED/DETOUR EXIT 15
Hazardous Materials	HAZMAT	HAZMAT IN ROADWAY/ALL TRAF EXIT 25
Highway	HWY	ACCIDENT ON AA HWY/EXPECT DELAYS
Hour	HR	ACCIDENT ON AA HWY/2 HR DELAY
Information	INFO	TRAF INFO TUNE TO 1240AM
Interstate	I	E-BND I64 CLOSED/DETOUR EXIT 20
Lane	LN	LN CLOSED /MERGE LEFT
Left	LFT	LANE CLOSED /MERGE LFT
Local	LOC	LOC TRAF USE ALT RTE
Maintenance	MAINT	MAINT WRK ON BRDG/SLOW
Major	MAJ	MAJ DELAYS I75/USE ALT RTE
Mile	MI	ACCIDENT 3 MI AHEAD/USE ALT RTE
Minor	MNR	ACCIDENT 3 MI MNR DELAY
Minutes(s)	MIN	ACCIDENT 3 MI /30 MIN DELAY
Northbound	N-BND	N-BND I75 CLOSED/DETOUR EXIT 50
Oversized	OVRSZ	OVRSZ COMM VEH/USE I275 NEXT RIGHT
Parking	PKING	EVENT PKING NEXT RGT
Parkway	PKWY	CUM PKWAY TRAF/DETOUR EXIT 60
Prepare	PREP	ACCIDENT 3 MI/PREP TO STOP
Right	RGT	EVENT PKING NEXT RGT
Road	RD	HAZMAT IN RD/ALL TRAF EXIT 25
Roadwork	RDWK	RDWK NEXT 4 MI/POSSIBLE DELAYS

Route	RTE	MAJ DELAYS I75/USE ALT RTE
Shoulder	SHLDR	SHLDR CLOSED NEXT 5 MI
Slippery	SLIP	SLIP COND POSSIBLE/SLOW SPD
Southbound	S-BND	S-BND I75 CLOSED/DETOUR EXIT 50
Speed	SPD	SLIP COND POSSIBLE/SLOW SPD
Street	ST	MAIN ST CLOSED/USE ALT RTE
Traffic	TRAF	CUM PKWAY TRAF/DETOUR EXIT 60
Vehicle	VEH	OVRSZ COMM VEH/USE I275 NEXT RIGHT
Westbound	W-BND	W-BND I64 CLOSED/DETOUR EXIT 50
Work	WRK	CONST WORK 2 MI/POSSIBLE DELAYS

Certain abbreviations are prone to inviting confusion because another word is abbreviated or could be abbreviated in the same way. DO NOT USE THESE ABBREVIATIONS.

Abbrev.	**Intended Word**	**Word Erroneously Given**
ACC	Accident	Access (Road)
CLRS	Clears	Colors
DLY	Delay	Daily
FDR	Feeder	Federal
L	Left	Lane (Merge)
LOC	Local	Location
LT	Light (Traffic)	Left
PARK	Parking	Park
POLL	Pollution (Index)	Poll
RED	Reduce	Red
STAD	Stadium	Standard
TEMP	Temporary	Temperature
WRNG	Warning	Wrong

TYPICAL MESSAGES

The following is a list of typical messages used on CMS. The list consists of the **reason or problem** that you want the driver to be aware of and the **action** that you want the driver to take.

Reason / Problem

ACCIDENT
ACCIDENT/xx MILES
xx ROAD CLOSED
xx EXIT CLOSED
BRIDGE CLOSED
BRIDGE/(SLIPPERY, ICE, etc.)
CENTER/LANE/CLOSED
DELAY(S), MAJOR/DELAYS
DEBRIS AHEAD
DENSE FOG
DISABLED/VEHICLE
EMER/VEHICLES/ONLY
EVENT PARKING
EXIT xx/CLOSED
FLAGGER/xx MILES
FOG/xx MILES
FREEWAY CLOSED
FRESH/OIL
HAZMAT/SPILL
ICE
INCIDENT AHEAD
LANES/(NARROW, SHIFT, MERGE, etc.)
LEFT LANE CLOSED
LEFT LANE NARROWS
LEFT/2 LANES/CLOSED
LEFT/SHOULDER/CLOSED
LOOSE/GRAVEL
MEDIAN/WORK/xx MILES
MOVING/WORK/ZONE, WORKERS/IN/ROADWAY
NEXT EXIT CLOSED
NO/OVERSIZE/LOADS
NO/PASSING
NO/SHOULDER
ONE/LANE/BRIDGE
PEOPLE/CROSSING
RAMP CLOSED
RAMP/(SLIPPERY, ICE, etc.)
RIGHT/LANE/CLOSED
RIGHT/2 LANES/CLOSED

RIGHT/LANE/NARROWS
RIGHT/SHOULDER/CLOSED
ROAD CLOSED
ROAD/CLOSED/xx MILES
ROAD/(SLIPPERY, ICE, etc.)
ROAD/WORK
ROAD/WORK (or CONSTRUCTION)/(TONIGHT, TODAY TOMORROW, DATE, etc.)
ROAD/WORK/xx MILES
SHOULDER/(SLIPPERY, ICE, SOFT, BLOCKED, etc.)
NEW SIGNAL/xx MILES
SINGLE LANE
SLOW/1 (or 2) –WAY/TRAFFIC
SOFT/SHOULDER
STALLED VEHICLES AHEAD
TRAFFIC/BACKUP
TRAFFIC/SLOWS
TRUCK/CROSSING
TRUCKS/ENTERING
TOW TRUCK AHEAD
UNEVEN/LANES
WATER/ON/ROAD
WET PAINT
WORK/ZONE/xx MILES
WORKERS AHEAD

Action

ALL/TRAFFIC/ EXIT RT
AVOID/DELAYS/USE xx
CONSIDER/ALT/ROUTE
DETOUR
DETOUR/xx MILES
DO NOT/PASS
EXPECT/DELAYS
FOLLOW/ALT/ROUTE
KEEP LEFT
KEEP RIGHT
MERGE/xx MILES
MERGE/LEFT
MERGE/RIGHT
ONE-WAY/TRAFFIC
PASS/TO/LEFT
PASS TO/RIGHT
PREPARE/TO/STOP
REDUCE/SPEED

SLOW
SLOW/DOWN
STAY IN/LANE
STAY ON/xx
STOP/AHEAD
STOP/xx MILES
TUNE/RADIO/1610 AM
USE/nn/ROAD
USE/CENTER/LANE
USE/DETOUR/ROUTE
USE/LEFT/LANE
USE/NEXT/EXIT
USE/RIGHT/LANE
WATCH/FOR/FLAGGER

SPECIAL NOTE FOR VARIABLE MESSAGE SIGNS

This Special Note will apply when indicated on the plans or in the proposal. Section references herein are to the Department's 2000 Standard Specifications for Road and Bridge Construction.

1.0 DESCRIPTION. Furnish, install, operate, and maintain variable message signs at the locations shown on the plans or designated by the Engineer. When specified in the Contract, the signs and associated equipment become the property of the Department at the completion of the work.

2.0 MATERIALS.

2.1 General. Use LED or flip disk/LED Variable Message Signs Class I, II, or III from the Department's List of Approved Materials.

When signs do not become the property of the Department, unclassified signs may be submitted for approval by the Engineer. When unclassified signs are to become the property of the Department, submit signs to the Division of Materials for approval. Provide shop drawings, specifications, or other data to allow a thorough evaluation when requested. The Engineer may require a daytime and nighttime demonstration. The Engineer will make a final decision within 30 days after all required information is received.

2.2 Trailer and Sign Support. Mount the sign, controls, and all operating and auxiliary equipment on a 2-wheeled steel trailer with the following features:

1) 6,000 lbs GVWR capacity trailer hitch.
2) 3,500 lbs GVWR axle with lubricated wheel bearings for all LED signs.
3) 5,200 lbs GVWR axle with lubricated wheel bearings for all Flip Disk or Hybrid signs.
4) 15-inch trailer wheels equipped with radial tires equal to ST 225/75R15, load range C or better.
5) Locking lug nuts, one per wheel with a master key.
6) Fender for each tire.
7) Metal step pads on all areas of the fenders or frame that personnel must step or stand to operate or maintain the unit.
8) Surge-activated brakes of adequate capacity.
9) All required running lights, brake lights, and turn signals (12 v), with a plug for connecting to a towing vehicle.
10) 2-inch hitch and safety chains.
11) Tongue jack with a wheel, capable of being raised during towing.
12) Outriggers for stability when the unit is in use.
13) Lockable, but easily accessible, protective covers for the batteries, electronic controls, and all other attached equipment susceptible to tampering and weather.
14) 8-foot total unit maximum width when rigged for towing.

The Engineer may allow lesser standards for the trailer and sign support when it will not become the property of the Department.

2.3 Sign and Controls. All signs must:

1) Provide 3-line messages with each line being 8 characters long and at least 18 inches tall. Each character comprises 35 pixels.
2) Provide at least 40 preprogrammed messages available for use at any time. Provide for quick and easy change of the displayed message; editing of the message; and additions of new messages.
3) Provide a controller consisting of:
   a) Keyboard or keypad.
   b) Readout that mimics the actual sign display. (When LCD or LCD type readout is used, include backlighting and heating or otherwise arrange for viewing in cold temperatures.)
   c) Non-volatile memory or suitable memory with battery backup for storing pre-programmed messages.
   d) Logic circuitry to control the sequence of messages and flash rate.
4) Provide a serial interface that is capable of supporting complete remote control ability through land line and cellular telephone operation. Include communication software capable of immediately updating the message, providing complete sign status, and allowing message library queries and updates.
5) Allow a single person easily to raise the sign to a satisfactory height above the pavement during use, and lower the sign during travel.
6) Allow direct wiring for operation of the sign or arrow board from an external power source when desired.
7) Be Highway Orange on all exterior surfaces of the trailer, supports, and controller cabinet.
8) Provide operation in ambient temperatures from -30 to + 120 degrees Fahrenheit during snow, rain and other inclement weather.
9) Provide the driver board as part of a module. All modules are interchangeable, and have plug and socket arrangements for disconnection and reconnection. Printed circuit boards associated with driver boards have a conformable coating to protect against moisture.
10) Provide a sign case sealed against rain, snow, dust, insects, etc. The lens is UV stabilized clear plastic (polycarbonate, acrylic, or other approved material) angled to prevent glare.
11) Provide a flat black UV protected coating on the sign hardware, character PCB, and appropriate lens areas.
12) Provide a photocell control to provide automatic dimming.
13) Allow an on-off flashing sequence at an adjustable rate.
14) Provide a sight to aim the message.
15) Provide a LED display color of approximately 590 nm amber.
16) Provide the following 3-line messages preprogrammed and available for

use when the sign unit begins operation:

/KEEP/RIGHT/⇒⇒⇒/
/KEEP/LEFT/⇐⇐⇐/
/LOOSE/GRAVEL/AHEAD/
/RD WORK/NEXT/**MILES/
/TWO WAY/TRAFFIC/AHEAD/
/PAINT/CREW/AHEAD/
/REDUCE/SPEED/**MPH/
/BRIDGE/WORK/***0 FT/
/MAX/SPEED/**MPH/
/SURVEY/PARTY/AHEAD/
/MIN/SPEED/**MPH/
/ICY/BRIDGE/AHEAD/ /ONE LANE/BRIDGE/AHEAD/
/ROUGH/ROAD/AHEAD/
/MERGING/TRAFFIC/AHEAD/
/NEXT/***/MILES/
/HEAVY/TRAFFIC/AHEAD/
/SPEED/LIMIT/**MPH/
/BUMP/AHEAD/
/TWO/WAY/TRAFFIC/

*Insert numerals as directed by the Engineer.
Add other messages during the project when required by the Engineer.

2.4 Requirements for Flip-Disc Type Signs. Flip-disc type signs will have the following additional requirements:

1) Disc faces are fluorescent yellow on one side, and flat black on the reverse.
2) Discs are at least 3.5 square inches with a minimum character size of 5 discs horizontally by 7 discs vertically.
3) Discs are designed to operate without lubrication for at least 200 million operations.
4) Line change speed of 600 milliseconds or less.
5) When power is lost, the sign automatically becomes blank or displays a preprogrammed default message.

2.5 Power.

1) Design solar panels to yield 10 percent or greater additional charge than sign consumption. Provide energy backup for 21 days without sunlight and an on-board system charger with the ability to recharge completely discharged batteries in 24 hours.
2) Diesel Power Source. The Department will allow diesel power when the sign does not become the property of the Department. When used, follow all applicable specifications listed for solar signs and provide the following:
   a) At least 24 spare bulbs available on the project for quick replacement of burned out bulbs.
   b) Black light at both top and bottom of each line to illuminate discs for visibility at night or under adverse weather conditions, for flip disk signs.
   c) Diesel generator and electric start assembly, including batteries and a fuel capacity adequate to provide at least 72 hours continuous operation without refueling.

d) Fuel gage.
e) Provide all other specific features, such as bulb size, protection from sun glare, and shock protection for electronics and bulbs, to the satisfaction of the Engineer.

2.6 Signs To Be Retained By The Department. Use only new Class I signs with remote ability on the project. Class II signs may be used when flip disk signs are specified in the Contract. Upon project completion, deliver the sign to the Department's nearest maintenance lot in good repair and in serviceable condition. Include with each delivered sign the following items:

1) One operations manual.
2) Two parts books listing standard electronic part's numbers and manufacturer's stock number, if used.
3) Two service manuals including schematic wiring diagrams.
4) Warranty. Ensure that all unexpired warranties or guarantees on the sign, trailer, or appurtenant equipment remain in force after the sign units are transferred to the Department, until their normal expiration date. Batteries will be heavy-duty 18 month batteries or better, with at least 6 months of their warranty remaining.
5) Keys to the wheel lug nuts.

3.0 CONSTRUCTION. Furnish and operate the variable message signs as designated on the plans or by the Engineer. Use Class I, II, or III signs on roads with a speed limit less than 55 mph. Use Class I or II signs on roads with speed limits 55 mph or greater. Unless the Contract specifies flip-disk signs, use Class I signs on interstates and parkways.

Maintain the sign in proper working order, including repair of any damage done by others, until completion of the project. When the sign becomes inoperative, immediately repair or replace the sign. Repetitive problems with the same unit will be cause for rejection and replacement.

Use only project related messages and messages directed by the Engineer, unnecessary messages lessen the impact of the sign. When no message is needed, but it is necessary to know if the sign is operable, flash only a pixel or disk.

When the sign is not needed, move it where the Engineer specifies.

4.0 MEASUREMENT. The final quantity of Variable Message Sign will be the actual number of individual signs acceptably furnished and operated during the project. The Department will not measure signs replaced due to damage or rejection.

When the Contract states the Department will take ownership of the sign, the Department will consider all equipment specified in this note to be a part of the sign. The Department will not measure delivery for payment and will consider it incidental to the sign.

5.0 PAYMENT. The Department will pay for the Variable Message Signs at the unit price each. The Department will not pay for signs replaced due to damage or rejection. Payment is full compensation for furnishing all materials, labor, equipment, and service necessary to, operate, move, repair, and maintain or replace the variable message signs.

April 18, 2001

PART II

SPECIAL PROVISIONS APPLICABLE TO PROJECT

SPECIAL PROVISION NO.	TITLE	
13	Crash Cushions (4-5-2000)	*

* These Special Provisions are included in the Supplemental Specifications.

PART III

EMPLOYMENT, WAGE AND RECORD REQUIREMENTS
(Copies of each Attached)

1. Schedule of Minimum Wages Established for the Project.

2. Labor and Wage Requirements, applicable to other than Federal-Aid System Contracts. (Rev. 2-16-95)

3. Executive Branch Code of Ethics.

TRANSPORTATION CABINET
DIVISION OF CONTRACT PROCUREMENT
COMPLIANCE SECTION

SHEET ONE
LETTING: 04-25-2003

PROJECT WAGE RATES
HARDIN-NELSON COUNTY, FDGR 03 0000111
The Bluegrass Parkway (PW 9002)
Asphalt Pavement Rehabilitation and Guardrail

	HIGHWAY BASIC HOURLY RATES	FRINGE BENEFIT PAYMENTS COMBINED
CRAFTS		
Bullitt, Carroll, Grayson, Hardin, Henry, Jefferson, Larue, Marion, Meade, Nelson, Oldham, Shelby, Spencer and Trimble Counties:		
Bricklayers	20.00	5.43
Bracken, Gallatin, Grant, Mason and Robertson Counties:		
Bricklayers	22.96	7.39
Boyd, Carter, Elliott, Fleming, Greenup, Lewis and Rowan Counties:		
Bricklayers	23.04	8.32
Anderson, Bath, Bourbon, Boyle, Clark, Fayette, Franklin, Harrison, Jessamine, Madison, Mercer, Montgomery, Nicholas, Owen, Scott, Washington and Woodford Counties:		
Bricklayers	18.75	5.55
Layout Men	19.00	5.55
Refractory/Acid Brick/Glass	19.25	5.55
Breckinridge County:		
Bricklayers	24.15	6.55
All Counties		
Carpenters:	21.45	6.13
Piledrivermen	21.70	6.13
Divers	32.55	6.13
Bracken and Grant Counties:		
Millwrights	21.90	7.92
Anderson, Bath, Bourbon, Boyle, Clark, Fayette, Franklin, Harrison, Jessamine, Madison, Mercer, Montgomery, Nicholas, Owen, Scott and Woodford Counties:		
Millwrights	19.50	9.53
Boyd, Carter, Elliott, Fleming, Greenup, Lewis, Mason, Robertson, and Rowan Counties:		
Millwrights	20.79	14.04
Breckinridge, Bullitt, Carroll, Gallatin, Grayson, Hardin, Henry, Jefferson, Larue, Marion, Meade, Nelson, Oldham, Shelby, Spencer, Trimble and Washington Counties:		
Millwrights	22.25	10.30
Bracken, Gallatin and Grant Counties:		
Electricians	23.95	7.38
Sound Communications:		
Installer	18.00	3.475
CablePuller	9.00	2.64

TRANSPORTATION CABINET
DIVISION OF CONTRACT PROCUREMENT
COMPLIANCE SECTION

PROJECT WAGE RATES **SHEET TWO 04-25-2003**

HARDIN-NELSON COUNTY, FDGR 03 0000111

	HIGHWAY BASIC HOURLY RATES	FRINGE BENEFIT PAYMENTS COMBINED
CRAFTS (continued)		
Boyd, Carter, Elliott and Rowan Counties:		
Electricians:		
Electricians	23.11	11.04
Cable Splicers	24.27	11.08
Anderson, Bath, Bourbon, Boyle, Breckinridge, Bullitt, Carroll, Clark, Fayette, Franklin, Grayson, Hardin, Harrison, Henry, Jefferson, Jessamine, Larue, Madison, Marion, Meade, Mercer, Montgomery, Nelson, Nicholas, Oldham, Owen, Robertson, Scott, Shelby, Spencer, Trimble, Washington and Woodford Counties:		
Electricians	24.25	8.24
Fleming, Greenup, Lewis and Mason Counties:		
Electricians	26.30	7.92
Bourbon (Northern third, including Townships of Jackson, Millersburg, Ruddel Mills & Shawhan); Carroll (Eastern third, including the Township of Ghent); Fleming (Western part, excluding Townships of Beechburg, Colfax, Elizaville, Flemingsburg, Flemingsburg Junction, Foxport, Grange City, Hillsboro, Hilltop, Mount Carmel, Muses Mills, Nepton, Pecksridge, Plummers Landing, Plummers Mill, Poplar Plains, Ringos Mills, Tilton & Wallingford); Mason (Western two-thirds, including Townships of Dover, Lewisburg, Mays Lick, Maysville, Minerva, Moranburg, Murphysville, Ripley, Sardis, Shannon, South Ripley & Washington); Nicholas (Townships of Barefoot, Barterville, Carlisle, Ellisville, Headquarters, Henryville, Morningglory, Myers & Oakland Mills); Owen (Townships of Beechwood, Bromley, Fairbanks, Holbrook, Jonesville, Long Ridge, Lusby's Mill, New, New Columbus, New Liberty, Owenton, Poplar Grove, Rockdale, Sanders, Teresita & Wheatley); Scott (Northern two-thirds, including Townships of Biddle, Davis, Delaplain, Elmville, Longlick, Muddy Ford, Oxford, Rogers Gap, Sadieville, Skinnersburg & Stonewall) & Bracken, Gallatin, Grant, Harrison & Robertson Counties:		
Ironworkers:		
Structural	23.45	10.88
Fence Erector	21.11	10.88
Bourbon (Southern two-thirds, including Townships of Austerlity, Centerville, Clintonville, Elizabeth, Hutchison, Littlerock, North Middletown & Paris); Carroll (Western two-thirds, including Townships of Carrollton, Easterday, English, Locust, Louis, Prestonville & Worthville); Clark (Western two-thirds, including Townships of Becknerville, Flanagan, Ford, Pine Grove, Winchester & Wyandotte); Owen (Eastern eighth, including Townships of Glenmary, Gratz, Monterey, Perry Park & Tacketts Mill); Scott (Southern third, including Townships of Georgetown, Great Crossing, Newtown, Stamping Ground & Woodlake); Anderson, Boyle, Breckinridge, Bullitt, Fayette, Franklin, Grayson, Hardin, Henry, Jefferson, Jessamine, Larue, Madison, Marion, Meade, Mercer, Nelson, Oldham, Shelby, Spencer, Trimble, Washington & Woodford Counties:		
Ironworkers	23.25	10.87

PROJECT WAGE RATES **SHEET THREE** **04-25-2003**

HARDIN-NELSON COUNTY, FDGR 03 0000111

	HIGHWAY BASIC HOURLY RATES	FRINGE BENEFIT PAYMENTS COMBINED

CRAFTS (continued)

Bourbon (Northern third, including Townships of Jackson, Millersburg, Ruddel Mills & Shawhan); Carroll (Eastern third, including the Townships of Ghent); Fleming (Western part, excluding Townships of Beechburg, Colfax, Elizaville, Flemingsburg, Flemingsburg Junction, Foxport, Grange City, Hillsboro, Hilltop, Mount Carmel, Muses Mills, Nepton, Pecksridge, Plummers Landing, Plummers Mill, Poplar Plains, Ringos Mills, Tilton & Wallingford); Mason (Western two-thirds, including Townships of Dover, Lewisburg, Mays Lick, Maysville, Minerva, Moranburg, Murphysville, Ripley, Sardis, Shannon, South Ripley & Washington); Nicholas (Townships of Barefoot, Barterville, Carlisle, Ellisville, Headquarters, Henryville, Morningglory, Myers & Oakland Mills); Owen (Townships of Beechwood, Bromley, Fairbanks, Holbrook, Jonesville, Long Ridge, Lusby's Mill, New, New Columbus, New Liberty, Owenton, Poplar Grove, Rockdale, Sanders, Teresita & Wheatley); Scott (Northern two-thirds, including Townships of Biddle, Davis, Delaplain, Elmville, Longlick, Muddy Ford, Oxford, Rogers Gap, Sadieville, Skinnersburg & Stonewall);
Bracken, Gallatin, Grant, Harrison & Robertson Counties:
Ironworkers Reinforcing:
Up to and including 30- mile radius of Hamilton County, Ohio Courthouse..... 22.71.....10.47
Beyond 30- mile radius of Hamilton County, Ohio Courthouse ..... 22.96.....10.47
Clark (Eastern third, including Townships of Bloomingdale, Hunt, Indian Fields, Kiddville, Loglick, Rightangele & Thomson); Fleming (Townships of Beechburg, Colfax, Elizaville, Flemingsburg, Flemingsburg Junction, Foxport, Grange City, Hillsboro, Hilltop, Mount Carmel, Muses Mills, Nepton, Pecksridge, Plummers Landing, Plummers Mill, Poplar Plains, Ringos Mills, Tilton & Wallingford); Mason (Eastern third, including Townships of Helena, Marshall, Orangeburg, Plumville & Springdale); Nicholas (Eastern eighth, including the Township of Moorefield Sprout); Bath, Boyd, Carter, Elliott, Greenup, Lewis, Montgomery & Rowan Counties:
Ironworkers:
Zone 1 ..... 24.92 ..... 11.14
Zone 2 ..... 25.32 ..... 11.14
Zone 3 ..... 27.32 ..... 11.14

Zone 1 - Up to 10 mi. radius of union hall, Ashland, KY, 1643 Greenup Avenue;
Zone 2 - 10 to 50 mi. radius of union hall;
Zone 3 - 50 mi. radius and beyond.

TRANSPORTATION CABINET
DIVISION OF CONTRACT PROCUREMENT
COMPLIANCE SECTION

PROJECT WAGE RATES **SHEET FOUR** **04-25-2003**

HARDIN-NELSON COUNTY, FDGR 03 0000111

	HIGHWAY BASIC HOURLY RATES	FRINGE BENEFIT PAYMENTS COMBINED
CRAFTS (continued)		
Anderson, Breckinridge, Bullitt, Carroll, Grayson, Hardin, Henry, Jefferson, Larue, Marion, Meade, Nelson, Oldham, Shelby, Spencer, Trimble and Washington Counties:		
Painters:		
Brush	17.02	5.92
Abrasive Blaster, Fireproofing, Lead Abatement, Spray, & Waterblasting 4000 PSI and Above	17.52	5.92
Bracken, Gallatin, Grant, Mason, and Owen Counties:		
Painters:		
Elevated Tanks	22.30	5.10
(Heavy and Highway Bridges-Guardrails–Lightpoles-Striping):		
Bridge/Equipment Tender and/or Containment Builder	18.95	5.10
Brush and Roller	21.30	5.10
Spray	21.80	5.10
Sand Blasting and Hopper Tender; Water Blasting	22.05	5.10
Bridges when highest point of Clearance is 60 feet or more; & Lead Abatement Projects	22.30	5.10
Sandblasting, Hopper Tender, Waterblasting Bridges when highest point of Clearance is 60 feet or more;	23.05	5.10
Bath, Bourbon, Boyle, Clark, Fayette, Fleming, Franklin, Harrison, Jessamine, Madison, Mercer, Montgomery, Nicholas, Robertson, Scott and Woodford Counties		
Painters:		
Brush; Roll; Spray; Sandblasting; Steam Cleaning; Steeplejack Work; Lead Abatement; & Coal Tar	16.81	2.60
Bridge/Equipment Tender and/or Containment Builder	17.96	2.60
Swing & Scaffold Bridges; Structural Steel; Open Acid Tanks; High Tension Electrical Equipment; & Hot Pipes	21.00	2.60
Boyd, Carter, Elliott, Greenup, Lewis and Rowan Counties		
Painters:		
Bridges	23.28	9.07
All Other Work	19.42	9.07

TRANSPORTATION CABINET
DIVISION OF CONTRACT PROCUREMENT
COMPLIANCE SECTION

PROJECT WAGE RATES **SHEET FIVE 04-25-2003**

HARDIN-NELSON COUNTY, FDGR 03 0000111

	HIGHWAY BASIC HOURLY RATES	FRINGE BENEFIT PAYMENTS COMBINED
CRAFTS (continued)		
Breckinridge, Bullitt, Carroll (Western Half), Franklin (Western three-fourths), Grayson, Hardin, Henry, Jefferson, Larue, Marion, Meade, Nelson, Oldham, Shelby, Spencer, Trimble and Washington Counties:		
Plumbers; Gas Fitters:		
Plumbing contracts less than $150,000.00	19.92	6.42
All other plumbing contracts:	24.90	6.42
Boyd, Carter, Elliott, Greenup, Lewis and Rowan Counties:		
Plumbers and Steamfitters	22.97	12.40
Bracken, Carroll (Eastern Half), Gallatin, Grant, Mason, Owen and Robertson Counties:		
Pipefitters and Plumbers	26.00	8.09
Anderson, Bath, Bourbon, Boyle, Clark, Fayette, Fleming, Franklin (Eastern one-fourth), Harrison, Jessamine, Madison, Mercer, Montgomery, Nicholas, Scott and Woodford Counties:		
Pipefitters and Plumbers:		
Projects over 1 ½ million dollars in piping contracts:		
ZONE 1	22.30	7.72
ZONE 2	23.30	7.72
Projects under 1 ½ million dollars in piping contracts:		
ZONE 1	18.92	7.72
ZONE 2	19.92	7.72
ZONE 1 - Within 25 mile radius of Fayette County Courthouse		
ZONE 2 - Beyond 25 mile radius of Fayette County Courthouse		
Breckinridge, Bullitt, Carroll (Western Half), Franklin (Western three fourths), Grayson, Hardin, Henry, Jefferson, Larue, Marion, Meade, Nelson, Oldham, Shelby, Spencer, Trimble and Washington Counties:		
Pipefitters and Steamfitters	25.90	8.98

LABORERS:

Aging and curing of concrete, asbestos abatement worker, asphalt plant, asphalt, batch truck dump, carpenter tender, cement mason tender, cleaning of machines, concrete, demolition, dredging, environmental - nuclear, radiation, toxic and hazardous waste - level D, flagperson, grade checker, hand digging and hand back filling, highway marker placer, landscaping mesh handler and placer, puddler, railroad, rip-rap and grouter, right-of-way sign, guard rail and fence installer, signal person, sound barrier installer, storm and sanitary sewer, swamper, truck spotter and dumper, and wrecking of concrete form.

BASE RATE	16.34
FRINGE BENEFITS	7.38

PROJECT WAGE RATES **SHEET SIX 04-25-2003**

HARDIN-NELSON COUNTY, FDGR 03 0000111

LABORERS: (continued)

Batter board man (sanitary and storm sewer), brickmason tender, mortar mixer operator, burner and welder, bushammer, chain saw operator, concrete saw operator, deckhand scow man, dry cement handler, environmental - nuclear, radiation, toxic and hazardous waste - level C, forklift operator for masonary, form setter, green concrete cutting, hand operated grouter and grinder machine operator, jackhammer, pavement breaker, paving joint machine, pipelayer, plastic pipe fusion, power driven Georgia buggy and wheel barrow, power post hole digger, precast manhole setter, walk-behind tamper, walk-behind trencher, sand blaster, concrete chipper, surface grinder, vibrator operator and wagon driller.

BASE RATE 16.59
FRINGE BENEFITS 7.38

Air track driller, asphalt luteman and raker, gunnite nozzleman, gunnite operator and mixer, grout pump operator, powderman and blaster, side rail setter, rail paved ditch, screw operator, tunnel (free air) and water blaster.

BASE RATE 16.64
FRINGE BENEFITS 7.38

Caisson worker (free air), cement finisher, environmental - nuclear, radiation, toxic and hazardous waste - levels A and B, miner and driller (free air), tunnel blaster and tunnel mucker (free air).

BASE RATE 17.24
FRINGE BENEFITS 7.38

TEAMSTERS **BASE RATE**

Mobile Batch Truck Tender 16.57

Greaser, Tire Changer and Mechanic Tender 16.68

Single Axle Dump, Flatbed, Semi-trailer or Pole Trailer when used to pull building materials and equipment, Tandem Axle Dump, Distributor, Mixer and Truck Mechanic 16.86

PROJECT WAGE RATES **SHEET SEVEN 04-25-2003**

HARDIN-NELSON COUNTY, FDGR 03 0000111

TEAMSTERS(continued)

Euclid & Other Heavy Earthmoving Equipment & Lowboy, Articulator Cat, 5-Axle Vehicle, Winch & A-Frame when used in transporting materials, Ross Carrier, Forklift when used to transport building materials and Pavement Breaker..... 16.96

FRINGE BENEFITS..... 7.34

OPERATING ENGINEERS:

A-Frame winch truck, auto patrol, backfiller, batcher plant, bituminous paver, bituminous transfer machine, boom cat, bulldozer, mechanic, cableway, carry-all scoop, carry deck crane, central compressor plant, clamshell, concrete mixer (21 cu. ft. or over), concrete paver, truck-mounted concrete pump, core drill, crane, crusher plant, derrick, derrick boat, ditching and trenching machine, dragline, dredge operator, dredge engineer, elevating grader and loaders, grade-all, gurries, heavy equiptment robotics operator/mechanic, high lift, hoe-type machine, hoist (two or more drums), hoisting engine (two or more drums), horizontal directional drill operator, hydrocrane, hyster, KeCal loader, Letourneau, locomotive, mechanically operated laser screed, mechanic welder, mucking machine, motor scraper, orangepeel bucket, piledriver, power blade, pumpcrete, push dozer, rock spreader attached to equipment, rotary drill, roller (bituminous), scarifier, scoopmobile, shovel, side boom, subgrader, tailboom, telescoping type forklift, tow or push boat, tower crane (French, German and other types), tractor shovel and truck crane, tunnel mining machines, including moles, shields or similar types of tunnel mining equipment.

BASE RATE 21.10
FRINGE BENEFITS 9.15

Air compressor (over 900 cu. ft. per min.), bituminous mixer, boom type tamping machine, bull float, concrete mixer (under 21 cu. ft.), dredge engineer, electric vibrator compactor/self-propelled compactor, elevator (one drum or buck hoist), elevator (when used to hoist building material), finish machine, fireman & hoist (one drum), flexplane, forklift (reguardless of lift height), form grader, joint sealing machine, outboard motor boat, power sweeper (riding type), roller (rock), ross carrier, skid mounted or trailer mounted concrete pump, switchman or brakeman, throttle valve person, tractair and road widening trencher, tractor (50 H.P. or over), truck crane oiler, tugger, welding machine, well points and whirley oiler.

BASE RATE 18.68
FRINGE BENEFITS 9.15

PROJECT WAGE RATES **SHEET EIGHT 04-25-2003**

HARDIN-NELSON COUNTY, FDGR 03 0000111

OPERATING ENGINEERS: (continued)

Bituminous distributor, burlap and curing machine, cement gun, concrete saw, conveyor, deckhand oiler, grout pump, hydraulic post driver, hydro seeder, mud jack, oiler, paving joint machine, power form handling equipment, pump, roller (earth), steerman, tamping machine, tractor (under 50 H.P.) and vibrator.

BASE RATE 18.42
FRINGE BENEFITS 9.15

Greaser on grease facilities servicing heavy equipment.

BASE RATE 19.06
FRINGE BENEFITS 9.15

Operators on cranes with booms one hundred fifty feet (150') and over (including jib) shall receive fifty ($.50) cents above Base Rate.

Employees assigned to work below ground level are to be paid 10% above basic wage rate. This does not apply to open cut work.

WELDERS - Receive rate for craft in which welding is incidental.

Fringe benefit amounts are applicable for all hours worked except when otherwise noted.

These rates are listed pursuant to Kentucky Determination No. CR-01-III HWY dated October 8, 2001 and/or Federal Decision Number KY 020027 dated March 1, 2002, modification #1 dated April 5, 2002, modification #2 dated May 3, 2002, modification #3 dated June 21, 2002, modification #4 dated July 5, 2002, modification #5 dated August 16, 2002, modification #6 dated September 13, 2002, modification #7 dated October 4, 2002, modification #8 dated November 8, 2002, modification #9 dated January 10, 2003, modification #10 dated January 17, 2003, modification #11 dated February 14, 2003 and modification #12 dated April 4, 2003.

No laborer, workman or mechanic shall be paid at a rate less than that of a Journeyman except those classified as bona fide apprentices.

TRANSPORTATION CABINET
DIVISION OF CONTRACT PROCUREMENT
COMPLIANCE SECTION

PROJECT WAGE RATES **SHEET NINE 04-25-2003**

HARDIN-NELSON COUNTY, FDGR 03 0000111

Apprentices or trainees shall be permitted to work as such subject to Administrative Regulations adopted by the Commissioner of Workplace Standards. Copies of these regulations will be furnished upon request from any interested person.

Before using apprentices on the job the contractor shall present to the Contracting Officer written evidence of registration of such employees in a program of a State apprenticeship and training agency approved and recognized by the U. S. Bureau of Apprenticeship and Training. In the absence of such a State agency, the contractor shall submit evidence of approval and registration by the U. S. Bureau of Apprenticeship and Training.

The contractor shall submit to the Contracting Officer, written evidence of the established apprenticeship-journeyman ratios and wage rates in the project area, which will be the basis for establishing such ratios and rates for the project under the applicable contract provisions.

TO: EMPLOYERS/EMPLOYEES

PREVAILING WAGE SCHEDULE:

The wages indicated on this wage schedule are the least permitted to be paid for the occupations indicated. When an employee works in more than one classification, the employer must record the number of hours worked in each classification at the prescribed hourly base rate.

OVERTIME:

Overtime is to be paid after an employee works eight (8) hours a day or forty (40) hours a week, whichever gives the employee the greater wages. At least time and one-half the base rate is required for all overtime. A laborer, workman or mechanic and an employer may enter into a written agreement or a collective bargaining agreement to work more than eight (8) hours a calendar day but not more than ten (10) hours a calendar day for the straight time hourly rate. Wage violations or questions should be directed to the designated Engineer or the undersigned.

Rick Stansel, Director
Division of Contract Procurement
Frankfort, Kentucky 40622

TRANSPORTATION CABINET
DEPARTMENT OF HIGHWAYS

LABOR AND WAGE REQUIREMENTS APPLICABLE TO OTHER THAN FEDERAL-AID SYSTEM PROJECTS

I. Application
II. Nondiscrimination of Employees (KRS 344)
III. Payment of Predetermined Minimum Wages
IV. Statements and Payrolls

I. APPLICATION

1. These contract provisions shall apply to all work performed on the contract by the contractor with his own organization and with the assistance of workmen under his immediate superintendence and to all work performed on the contract by piecework, station work or by subcontract. The contractor's organization shall be construed to include only workmen employed and paid directly by the contractor and equipment owned or rented by him, with or without operators.

2. The contractor shall insert in each of his subcontracts all of the stipulations contained in these Required Provisions and such other stipulations as may be required.

3. A breach of any of the stipulations contained in these Required Provisions may be grounds for termination of the contract.

II. NONDISCRIMINATION OF EMPLOYEES

AN ACT OF THE KENTUCKY
GENERAL ASSEMBLY TO PREVENT
DISCRIMINATION IN EMPLOYMENT
KRS CHAPTER 344
EFFECTIVE JUNE 16, 1972

The contract on this project, in accordance with KRS Chapter 344, provides that during the performance of this contract, the contractor agrees as follows:

1. The contractor shall not fail or refuse to hire, or shall not discharge any individual, or otherwise discriminate against an individual with respect to his compensation, terms, conditions, or privileges of employment, because of such individual's race, color, religion, national origin, sex, disability or age (between forty and seventy); or limit, segregate, or classify his employees in any way which would deprive or tend to deprive an individual of employment opportunities or otherwise adversely affect his status as an employee, because of such individual's race, color, religion, national origin, sex, disability or age (between forty and seventy). The contractor agrees to post in conspicuous places, available to employees and applicants for employment, notices to be provided setting forth the provisions of this nondiscrimination clause.

2. The contractor shall not print or publish or cause to be printed or published a notice or advertisement relating to employment by such an employer or membership in or any classification or referral for employment by the employment agency, indicating any preference, limitation, specification, or discrimination, based on race, color, religion, national origin, sex, disability or age (between forty and seventy), except that such notice or advertisement may indicate a preference, limitation, or specification based on religion, or national origin when religion, or national origin is a bona fide occupational qualification for employment.

3. If the contractor is in control of apprenticeship or other training or retraining, including on-the-job training programs, he shall not discriminate against an individual because of his race, color, religion, national origin, sex, disability or age (between forty and seventy), in admission to, or employment in any program established to provide apprenticeship or other training.

4. The contractor will send to each labor union or representative of workers with which he has a collective bargaining agreement or other contract or understanding, a notice to be provided advising the said labor union or workers' representative of the contractor's commitments under this section, and shall post copies of the notice in conspicuous places available to employees and applicants for employment. The contractor will take such action with respect to any subcontract or purchase order as the administrating agency may direct as a means of enforcing such provisions, including sanctions for non-compliance.

III. PAYMENT OF PREDETERMINED MINIMUM WAGES

1. These special provisions are supplemented elsewhere in the contract by special provisions which set forth certain predetermined minimum wage rates. The contractor shall pay not less than those rates.

2. The minimum wage determination schedule shall be posted by the contractor, in a manner prescribed by the Department of Highways, at the site of the work in prominent places where it can be easily seen by the workers.

IV. STATEMENTS AND PAYROLLS

1. All contractors and subcontractors affected by the terms of KRS 337.505 to 337.550 shall keep full and accurate payroll records covering all disbursements of wages to their employees to whom they are required to pay not less than the prevailing rate of wages. Payrolls and basic records relating thereto will be maintained during the course of the work and preserved for a period of one (1) year from the date of completion of this contract.

2. The payroll records shall contain the name, address and social security number of each employee, his correct classification, rate of pay, daily and weekly number of hours worked, itemized deductions made and actual wages paid.

3. The contractor shall make his daily records available at the project site for inspection by the State Department of Highways contracting office or his authorized representative.

Periodic investigations shall be conducted as required to assure compliance with the labor provisions of the contract. Interrogation of employees and officials of the contractor shall be permitted during working hours.

Aggrieved workers, Highway Managers, Assistant District Engineers, Resident Engineers and Project Engineers shall report all complaints and violations to the Division of Contract Procurement.

The contractor shall be notified in writing of apparent violations. The contractor may correct the reported violations and notify the Department of Highways of the action taken or may request an informal hearing. The request for hearing shall be in writing within ten (10) days after receipt of the notice of the reported violation. The contractor may submit records and information which will aid in determining the true facts relating to the reported violations.

Any person or organization aggrieved by the action taken or the findings established as a result of an informal hearing by the Division of Contract Procurement may request a formal hearing.

4. The wages of labor shall be paid in legal tender of the United States, except that this condition will be considered satisfied if payment is made by a negotiable check, on a solvent bank, which may be cashed readily by the employee in the local community for the full amount, without discount or collection charges of any kind. Where checks are used for payments, the contractor shall make all necessary arrangements for them to be cashed and shall give information regarding such arrangements.

5. No fee of any kind shall be asked or accepted by the contractor or any of his agents from any person as a condition of employment on the project.

6. No laborers shall be charged for any tools used in performing their respective duties except for reasonably avoidable loss or damage thereto.

7. Every employee on the work covered by this contract shall be permitted to lodge, board, and trade where and with whom he elects and neither the contractor nor his agents, nor his employees shall directly or indirectly require as a condition of employment that an employee shall lodge, board or trade at a particular place or with a particular person.

8. Every employee on the project covered by this contract shall be an employee of either the prime contractor or an approved subcontractor.

9. No charge shall be made for any transportation furnished by the contractor or his agents to any person employed on the work.

10. No individual shall be employed as a laborer or mechanic on this contract except on a wage basis, but this shall not be construed to prohibit the rental of teams, trucks or other equipment from individuals.

No Covered employee may be employed on the work except in accordance with the classification set forth in the schedule mentioned above; provided, however, that in the event additional classifications are required, application shall be made by the contractor to the Department of Highways and (1) the Department shall request appropriate classifications and rates from the proper agency, or (2) if there is urgent need for additional classification to avoid undue delay in the work, the contractor may employ such workmen at rates deemed comparable to rates established for similar classifications provided he has made written application through the Department of Highways, addressed to the proper agency, for the supplemental rates. The contractor shall retroactively adjust, upon receipt of the supplemental rates schedule, the wages of any employee paid less than the established rate and may adjust the wages of any employee overpaid.

11. No contractor or subcontractor contracting for any part of the contract work which may require or involve the employment of laborers or mechanics shall require or permit any laborer or mechanic in any work-week in which he is employed on such work, to work in excess of eight hours in any calendar day or in excess of forty hours in such work-week unless such laborer or mechanic receives compensation at a rate not less than one and one half times his basic rate of pay for all hours worked in excess of eight hours in any calendar day or in excess of forty hours in such work-week. A laborer, workman or mechanic and an employer may enter into a written agreement or a collective bargaining agreement to work more than eight (8) hours a calendar day but not more than ten (10) hours a calendar day for the straight time hourly rate. This agreement shall be in writing and shall be executed prior to the employee working in excess of eight (8) hours, but not more than ten (10) hours, in any one (1) calendar day.

12. Payments to the contractor may be suspended or withheld due to failure of the contractor to pay any laborer or mechanic employed or working on the site of the work, all or part of the wages required under the terms of the contract. The Department may suspend or withhold payments only after the contractor has been given written notice of the alleged violation and the contractor has failed to comply with the wage determination of the Department of Highways.

13. Contractors and subcontractors shall comply with the sections of Kentucky Revised Statutes, Chapter 337 relating to contracts for Public Works.

Revised 2-16-95

EXECUTIVE BRANCH CODE OF ETHICS

In the 1992 regular legislative session, the General Assembly passed and Governor Brereton Jones signed Senate Bill 63 (codified as KRS 11A), the Executive Branch Code of Ethics, which states, in part:

KRS 11A.040 (6) provides:

No present or former public servant shall, within six (6) months of following termination of his office or employment, accept employment, compensation or other economic benefit from any person or business that contracts or does business with the state in matters in which he was directly involved during his tenure. This provision shall not prohibit an individual from returning to the same business, firm, occupation, or profession in which he was involved prior to taking office or beginning his term of employment, provided that, for a period of six (6) months, he personally refrains from working on any matter in which he was directly involved in state government. This subsection shall not prohibit the performance of ministerial functions, including, but not limited to, filing tax returns, filing applications for permits or licenses, or filing incorporation papers.

KRS 11A.040 (8) states:

A former public servant shall not represent a person in a matter before a state agency in which the former public servant was directly involved, for a period of one (1) year after the latter of:
a) The date of leaving office or termination of employment; or
b) The date the term of office expires to which the public servant was elected.

This law is intended to promote public confidence in the integrity of state government and to declare as public policy the idea that state employees should view their work as a public trust and not as a way to obtain private benefits.

If you have worked for the executive branch of state government within the past six months, you may be subject to the law's prohibitions. The law's applicability may be different if you hold elected office or are contemplating representation of another before a state agency.

Also, if you are affiliated with a firm which does business with the state and which employs former state executive-branch employees, you should be aware that the law may apply to them.

In case of doubt, the law permits you to request an advisory opinion from the Executive Branch Ethics Commission, Room 136, Capitol Building, 700 Capitol Avenue, Frankfort, Kentucky 40601; telephone (502) 564-7954.

PART IV

INSURANCE

The Contractor shall carry the following insurance in addition to the insurance required by law:

(1) Contractor's Public Liability Insurance not less than **$100,000.00** for damages arising out of bodily injuries to or death to one person. Not less than **$300,000.00** for damages arising out of bodily injuries to or death to two or more persons.

(2) Contractor's Property Damages Liability Insurance. Not less than **$100,000.00** for all damages arising out of injury or destruction of property in any one accident. Not less than **$300,000.00** for all damages during the policy period.

(3) Contractor's Protective Public Liability and Property Damage Insurance. The contractor shall furnish evidence with respect to operations performed for him by subcontractors that he carries in his own behalf for the above stipulated amounts.

(4) The insurance required above must be evidenced by a Certificate of Insurance and this Certificate of Insurance must contain one of the following statements:

a. "policy contains no deductible clauses."

b. "policy contains a _____ deductible property
(amount)
damage clause but company will pay claim and collect the deductible from the insured."

(5) WORKMEN'S COMPENSATION INSURANCE. The contractor shall furnish evidence of coverage of all his employees or give evidence of self-insurance by submitting a copy of a certificate issued by the Workmen's Compensation Board.

PART V

STATEMENT OF INCOMPLETED WORK

1. Status of Active Prime Contracts. Attached

1. STATUS OF ALL INCOMPLETED PRIME CONTRACTS

All active prime contracts must be reported. This includes prime contracts with public and private owners and joint-ventured contracts. The names of the joint venturers must be shown when reporting these projects. A machine or typed listing reporting the status of each contract is acceptable when attached to this report; however, the total amounts on the itemized listing must be reported in the space provided below:

CONTRACT WITH	PROJECT IDENTIFICATION	PRIME CONTRACT AMOUNT	EARNINGS THROUGH LAST APPROVED ESTIMATE	TOTAL AMOUNT OF WORK REMAINING
TOTAL (Attach Summary if not itemized above)		$	$	$

PART VI

BID ITEMS

TRANSPORTATION CABINET
Department of Highways
FRANKFORT, KY 40622

Sheet No: 1

HARDIN-NELSON COUNTIES
FD GR 03 0000111

PCN: 03-0253
Letting: 4/25/2003

THE BIDDER MUST MAKE THE EXTENSIONS AND ADDITIONS
SHOWING TOTAL AMOUNT BID USING FIGURES ONLY

Item No.	Code No.	Item	Approximate Quantity	Unit	Unit Price Dollars	Amount Dollars
1	2230	EMBANKMENT IN PLACE	**2,688.00**	CU YD	.	.
2	8100	CONCRETE-CLASS A	**51.58**	CU YD	.	.
3	8150	STEEL REINFORCEMENT (HEADWALL)	**12.00**	LB	.	.
4	8100	CONCRETE-CLASS A (HEADWALL)	**1.50**	CU YD	.	.
5	8104	CONCRETE-CLASS AA	**25.00**	CU YD	.	.
6	2351	GUARDRAIL-STEEL W BEAM-S FACE	**19,962.50**	LIN FT	.	.
7	2352	GUARDRAIL-STEEL W BEAM-D FACE	**687.50**	LIN FT	.	.
8	2360	GUARDRAIL TERMINAL SECT NO 1	**5.00**	EACH	.	.
9	2369	GUARDRAIL END TREATMENT TY 2A	**24.00**	EACH	.	.
10	2373	GUARDRAIL END TREATMENT TYPE 3	**5.00**	EACH	.	.
11	2391	GUARDRAIL END TREATMENT TY 4A	**7.00**	EACH	.	.
12	2378	GUARDRAIL CON TO BR END TYPE D	**10.00**	EACH	.	.
13	2381	REMOVE GUARDRAIL	**23,100.00**	LIN FT	.	.
14	2929	CRASH CUSHION TYPE IX	**1.00**	EACH	.	.
15	2365	CRASH CUSHION TYPE IX-A	**5.00**	EACH	.	.
16	9679	CRASH CUSHION TY VII (D, S)	**2.00**	EACH	.	.
17	6511	PAVE STRIPING-TEMP PAINT-6 IN	**146,000.00**	LIN FT	.	.
18	6542	PAVE STRIPING-THERMO-6 INCH W	**73,500.00**	LIN FT	.	.
19	6543	PAVE STRIPING-THERMO-6 INCH Y	**59,600.00**	LIN FT	.	.
20	6546	PAVE STRIPING-THERMO-12 INCH W	**4,600.00**	LIN FT	.	.
21	6550	PAVE STRIPING-TEMP REM TAPE-W (6")	**2,000.00**	LIN FT	.	.
22	6551	PAVE STRIPING-TEMP REM TAPE-Y (6")	**2,000.00**	LIN FT	.	.
23	6549	PAVE STRIPING-TEMP REM TAPE-B (8")	**1,000.00**	LIN FT	.	.

THE BIDDER MUST MAKE THE EXTENSIONS AND ADDITIONS
SHOWING TOTAL AMOUNT BID USING FIGURES ONLY

Item No.	Code No.	Item	Approximate Quantity	Unit	Unit Price Dollars	Amount Dollars
24	6592	PAVEMENT MARKER TYPE V - B W/R	**600.00**	EACH	.	.
25	2775	FLASHING ARROW	**4.00**	EACH	.	.
26	2671	VAR MESSAGE SIGN-PORT 3 LINE	**4.00**	EACH	.	.
27	2562	SIGNS	**800.00**	SQ FT	.	.
28	2653	LANE CLOSURE	**8.00**	EA	.	.
29	2014	BARRICADE-TYPE III	**7.00**	EACH	.	.
30	6600	REMOVE PAVEMENT MARKER TYPE V	**775.00**	EACH	.	.
31	0473	CULVERT PIPE-66 INCH	**40.00**	LIN FT	.	.
32	9852	RUBBLEIZED PAVED DITCH	**175.00**	LIN FT	.	.
33	5985	SEEDING AND PROTECTION	**60,500.00**	SQ YD	.	.
34	2705	SILT CHECK	**3.00**	EACH	.	.
35	2708	CLEAN SILT CHECK	**6.00**	EACH	.	.
36	9342	JOINT ADHESIVE	**55,884.00**	LIN FT	.	.
37	2677	ASPH PAVE MILLING & TEXTURING	**1,500.00**	TON	.	.
38	0001	D G A BASE	**2,870.00**	TON	.	.
39	0190	LEVELING AND WEDGING PG64-22	**710.00**	TON	.	.
40	0103	ASPHALT SEAL COAT	**113.00**	TON	.	.
41	0100	ASPHALT SEAL AGGREGATE	**935.00**	TON	.	.
42	9850	REFLECT CRACK RELIEF INTERLAY	**8,425.00**	TON	.	.
43	9072	MILLED RUMBLE STRIPS	**87,898.00**	LIN FT	.	.
44	0338	ASPH PLACEMENT WITH MTV	**23,165.00**	TON	.	.
45	0276	CL3 ASPH BIND 0.50D PG76-22	**12,640.00**	TON	.	.
46	0272	CL2 ASPH BIND 0.50D PG64-22	**4,680.00**	TON	.	.
47	9851	CL3 ASPH SURF 0.38A PG76-22	**10,525.00**	TON	.	.
48	0301	CL2 ASPH SURF 0.38D PG64-22	**4,885.00**	TON	.	.
49	2726	STAKING (HARDIN COUTNY)	**1.00**	LP SUM	.	.

TRANSPORTATION CABINET
Department of Highways
FRANKFORT, KY 40622

HARDIN-NELSON COUNTIES
FD GR 03 0000111

PCN: 03-0253
Letting: 4/25/2003

THE BIDDER MUST MAKE THE EXTENSIONS AND ADDITIONS
SHOWING TOTAL AMOUNT BID USING FIGURES ONLY

Item No.	Code No.	Item	Approximate Quantity	Unit	Unit Price Dollars	Amount Dollars
50	2726	STAKING (NELSON COUNTY)	**1.00**	LP SUM	.	.
51	2650	MAINTAIN AND CONTROL TRAFFIC (HARDIN COUNTY)	**1.00**	LP SUM	.	.
52	2650	MAINTAIN AND CONTROL TRAFFIC (NELSON COUNTY)	**1.00**	LP SUM	.	.
53	2676	MOBILIZATION FOR MILL & TEXT (HARDIN COUNTY)	**1.00**	LP SUM	.	.
54	2676	MOBILIZATION FOR MILL & TEXT (NELSON COUNTY)	**1.00**	LP SUM	.	.
55	2568	MOBILIZATION	**1.00**	LP SUM	.	.
56		**TOTAL BID**				$.

PART VII

CERTIFICATIONS

1.	Provisions Relative to Senate Bill 258 (1994)	Attached
2.	Non-Collusion Certification	Attached
3.	Certification of Bid Proposal	Attached

PROVISIONS RELATIVE TO SENATE BILL 258 (1994)

During the performance of the contract, the contractor agrees to comply with applicable provisions of:

1.	KRS 136	Corporation and Utility Taxes
2.	KRS 139	Sale and Use Taxes
3.	KRS 141	Income Taxes
4.	KRS 337	Wages and Hours
5.	KRS 338	Occupational Safety and Health of Employees
6.	KRS 341	Unemployment Compensation
7.	KRS 342	Workers Compensation

Any final determinations of a violation by the contractor within the previous five (5) years pursuant to the applicable statutes above are revealed as follows:

_____

_____

_____

_____

_____

_____

_____

_____

NON-COLLUSION CERTIFICATION

COMMONWEALTH OF KENTUCKY
COUNTY _____
PROJECT NO. _____

I, _____, _____, under
(Name of officer signing certification) (Title)

penalty of perjury under the laws of the United States, do hereby certify that

_____,
(Insert name of Individual, Joint Venture, Co-partnership, or Corporation submitting bid)

its agent, officers or employees have not directly or indirectly entered into any agreement, participated in any collusion, or otherwise taken action in restraint of free competitive bidding in connection with this proposal.

_____
(Signature)

_____
(Title)

REVISED: 8-23-89

NON-COLLUSION CERTIFICATION

COMMONWEALTH OF KENTUCKY
COUNTY _____
PROJECT NO. _____

I, _____, _____, under
(Name of officer signing certification) (Title)

penalty or perjury under the laws of the United States, do hereby certify that

_____,
(Insert name of Individual, Joint Venture, Co-partnership, or Corporation submitting bid)

its agent, officers or employees have not directly or indirectly entered into any agreement, participated in any collusion, or otherwise taken action in restraint of free competitive bidding in connection with this proposal.

_____
(Signature)

_____
(Title)

REVISED: 8-23-89

CERTIFICATION OF BID PROPOSAL

We (I) propose to furnish all labor, equipment and materials necessary to construct and/or improve the subject project in accordance with the plans, the Transportation Cabinet's Standard Specifications for Road and Bridge Construction, current edition, special provisions, notes applicable to the project as indicated herein and all addenda issued on this project subsequent to purchase of proposal.

We (I) attach a bid proposal guaranty as provided in the special provisions in an amount not less than 5% of the total bid. We agree to execute a contract in accordance with this bid proposal within 15 calendar days after the receipt of the notice of award for the project.

We (I) have examined the site of proposed work, project plans, specifications, special provisions, and notes applicable to the project referred to herein. We understand that the quantities shown herein are estimated quantities subject to increase or decrease as provided in the specifications.

_____
Name of Contracting Firm

BY: _____
Authorized Agent Title

_____
Address City State Zip Code

_____
Telephone Number

When two or more organizations bid as a joint venture, enter names of each organization and an authorized agent for each organization must sign above.