NON-BIDDING

PROPOSAL

TRANSPORTATION CABINET
Department of Highways
Frankfort, Kentucky 40622

PROPOSAL NO. _____
PROJECT CODE NO. 03-0046

LETTING OF JANUARY 17, 2003
Sealed Bids will be received in the Division of Contract Procurement and/or the Auditorium located on the 1st Floor of the State Office Building until 10:00 A.M., EST, on JANUARY 17, 2003. Bids will be publicly opened and read at 10:00 A.M., EASTERN STANDARD TIME.

PROJECT IDENTIFICATION AND DESCRIPTION:

ROCKCASTLE COUNTY, FD05 102 0025 011-016
The Livingston-London Road (US 25) from 170 feet south of KY 1004 (MP 11.635) extending northerly to KY 461 (MP 15.018), a distance of 3.383 miles.

Asphalt Surface.

(8)

THE SUCCESSFUL BIDDER ON THIS PROJECT MAY REQUEST A WORK ORDER WITH AN EFFECTIVE DATE PRIOR TO JUNE 15, 2003. THE REQUEST MUST BE IN WRITING TO THE DEPARTMENT. A WORK ORDER ISSUED AT THE REQUEST OF THE CONTRACTOR WILL BE WITH THE DISTINCT UNDERSTANDING THAT PAYMENT FOR ANY WORK PERFORMED ESTIMATES MAY BE DELAYED UNTIL JULY 15, 2003. A WORK ORDER WILL BE ISSUED JUNE 15, 2003, FOR THIS PROJECT UNLESS THE BIDDER REQUESTS AN EARLIER WORK DATE.

GEOGRAPHIC COORDINATES:
LATITUDE - 37° 20' NORTH
LONGITUDE - 84° 18' WEST

COMPLETION DATE ESTABLISHED FOR PROJECT: AUGUST 15, 2003

LIQUIDATED DAMAGES SEE STANDARD SPECIFICATIONS

REQUIRED BID PROPOSAL GUARANTY: Not less than 5% of the total bid.

(Check guaranty submitted: Cashier's Check |__| Certified Check |__| Bid Bond |__|)

BID BONDS WHEN SUBMITTED WILL BE RETAINED WITH THE PROPOSAL.

INDEX OF CONTENTS

PART	
I	SCOPE OF WORK
II	SPECIAL PROVISIONS APPLICABLE TO PROJECT
III	EMPLOYMENT, WAGE AND RECORD REQUIREMENTS
IV	INSURANCE
V	STATEMENT OF INCOMPLETED WORK AND SUBCONTRACTED WORK
VI	BID ITEMS
VII	CERTIFICATION

BID..... |__| PROPOSAL ISSUED TO: _____

SPECIMEN..... |__| _____
Address City State Zip

PART I

SCOPE OF WORK

1. Project Detail

a. See Sketch, Paving Summary and Typical Sections (4 Sheets)	Attached
b. Special Notes Applicable to Project	Attached
c. Supplemental Specifications	Attached
d. Special Note for Acceptance of Density of Longitudinal Joints in Asphalt Surface Pavements (6-4-02)	Attached
e. Special Note for Traffic Control Plan	Attached
f. Special Note for Typical Section Dimensions	Attached
g. Special Note for Asphalt Milling and Texturing	Attached
h. Special Note for Rolled in Rumble Strips	Attached
i. Special Note for Traffic Loops	Attached
j. Special Note for Edge Key	Attached
k. Special Note for Award of Contract	Attached
l. Special Note for Protection of Railroad Interests	Attached
m. Special Note for Removing Type V Pavement Marking	Attached

DEPARTMENT OF HIGHWAYS
MAP OF
ROCKCASTLE COUNTY

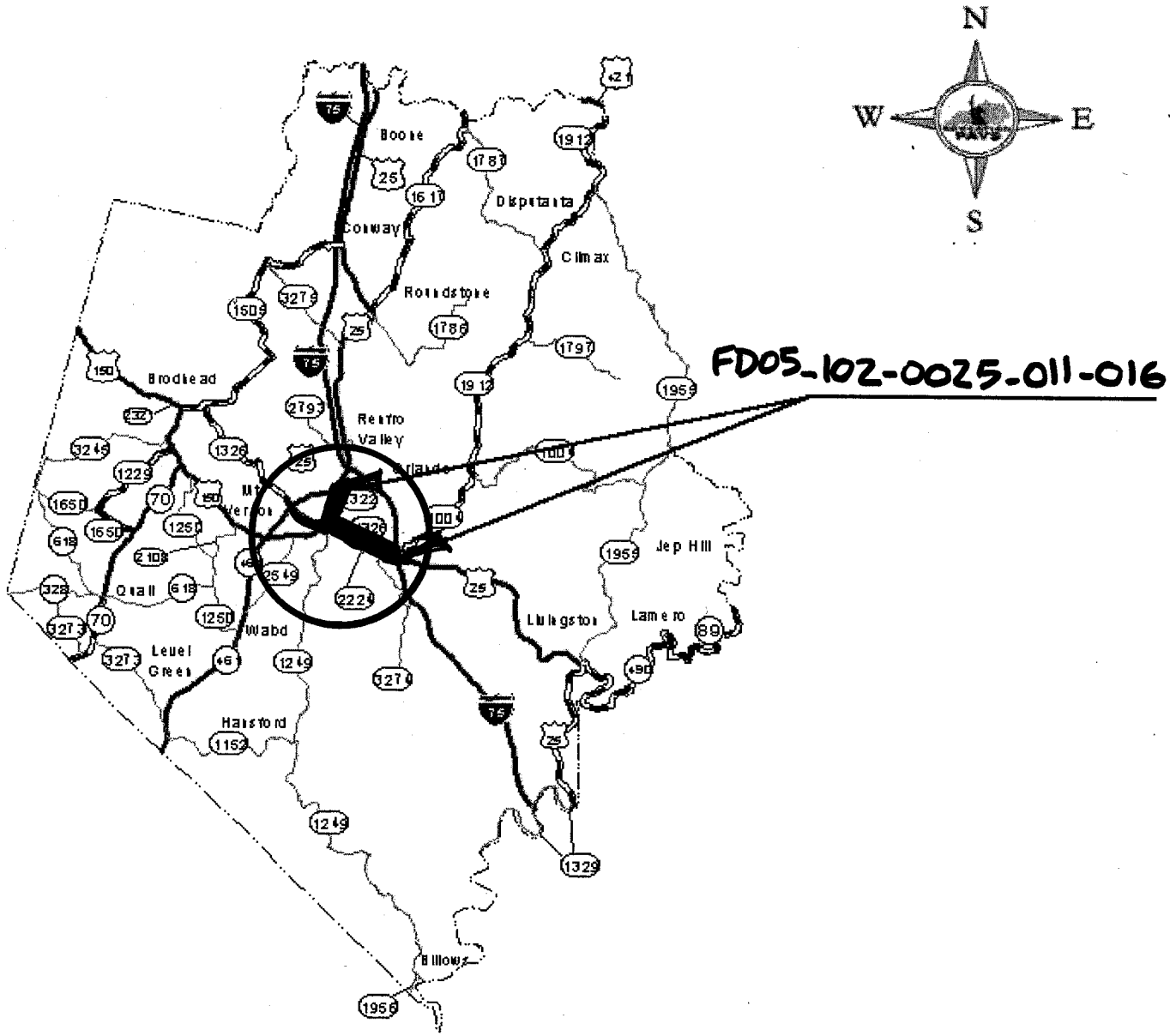

PAVING SUMMARY
FD05 102 0025 011-016

BEGINNING M.P.	ENDING M.P.	SURFACE WIDTH (FT)	SHOULDER WIDTH (FT)	DESCRIPTION
11.635	11.838	28.0	2.0	2 LANE DIVIDED HIGHWAY WITH A RAISED MEDIAN. SURFACE AND SHOULDER TO BE MILLED 1.25" AND RESURFACED
11.838	12.000	36.0	2.0	TWO LANE DIVIDED HIGHWAY WITH RAISED MEDIAN AND A NORTH-BOUND PASSING LANE, SURFACE AND SHOULDER TO BE MILLED 1.25" AND RESURFACED.
12.000	12.744	36.0	2.0	TWO LANE HIGHWAY WITH NORTHBOUD PASSING LANE: SURFACE AND SHOULDER TO BE MILLED 1.25" AND RESURFACED.
12.744	12.900	48.0	2.0	TWO LANE HIGHWAY WITH NORTHBOUD AND SOUTHBOUND PASSING LANES: SURFACE AND SHOULDER TO BE MILLED 1.25" AND RESURFACED.
12.900	13.685	36.0	2.0	TWO LANE HIGHWAY WITH SOUTHBOUD PASSING LANE: SURFACE AND SHOULDER TO BE MILLED 1.25" AND RESURFACED.
13.685	13.940	34.0	0.0	TWO LANE CURB AND GUTTER SECTION, SURFACE TO BE MILLED 1.25" AND RESURFACED.
13.940	14.535	33.0	0.0	TWO LANE CURB AND GUTTER SECTION, SURFACE TO BE MILLED 1.25" AND RESURFACED.
14.535	14.913	24.0	2.0	TWO LANE HIGHWAY, SURFACE AND SHOULDER TO BE MILLED 1.25" AND RESURFACED.
14.913	15.018	24.0	6.0	TWO LANE HIGHWAY WITH WIDE SHOULDERS, SURFACE AND SHOULDERS TO BE MILLED 1.25" AND RESURFACED.

TYPICAL SECTION

ROCKCASTLE

FD05-102-0025-011-016

MP 11.635 - 12.000

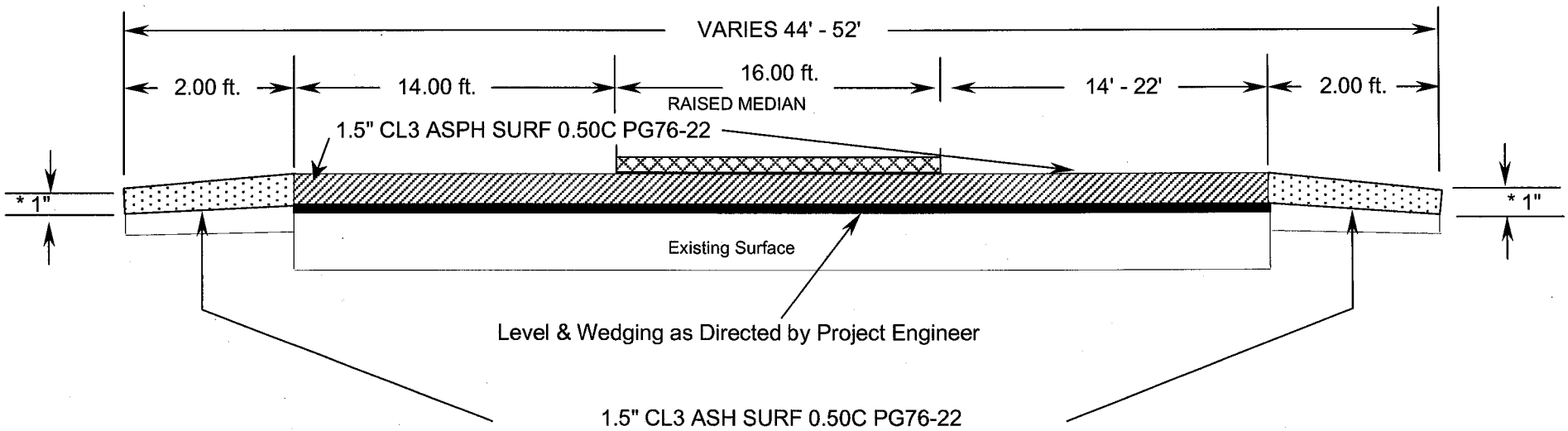

1.5" MILLING & TEXTURING OVER THE ENTIRE AREA INCLUDING SHOULDERS AND TURNING LANES.
* MAXIMUM 1" WHERE EXISTING SITE CONDITIONS PERMIT.

TYPICAL SECTION

ROCKCASTLE

FD05-102-0025-011-016
MP 12.000 - 13.685

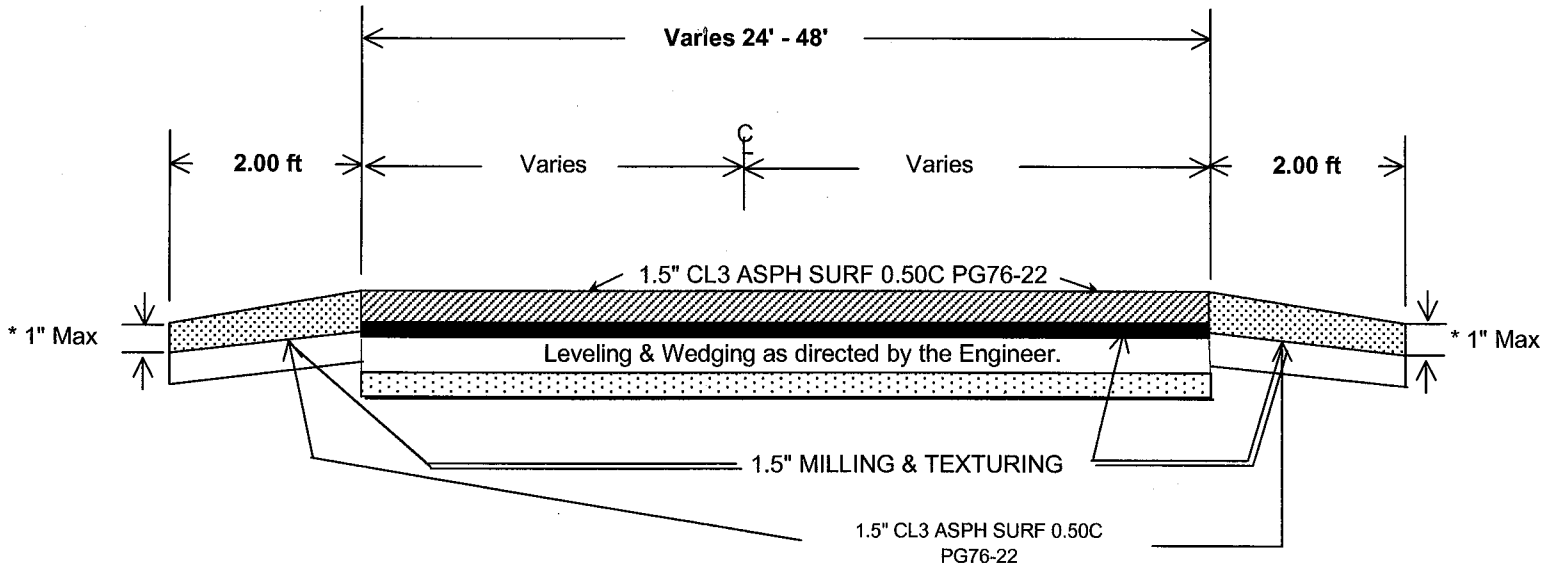

* 1" Maximum where site conditions permit.

Comments:

MILL THE ENTIRE AREA INCLUDING SHOULDERS AND TURNING LANES.

Typical Section

FD05-102-0025-011-016

ROCKCASTLE

MP 13.685 - 14.535

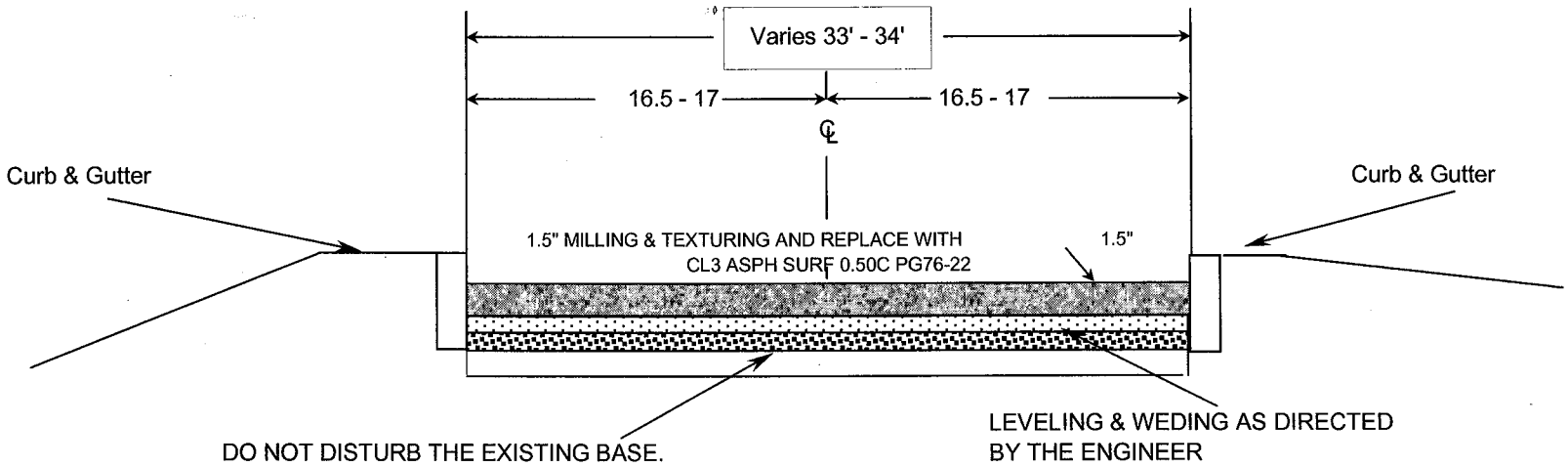

TYPICAL SECTION

ROCKCASTLE

FD05-102-0025-011-016

MP 14.535 - 15.018

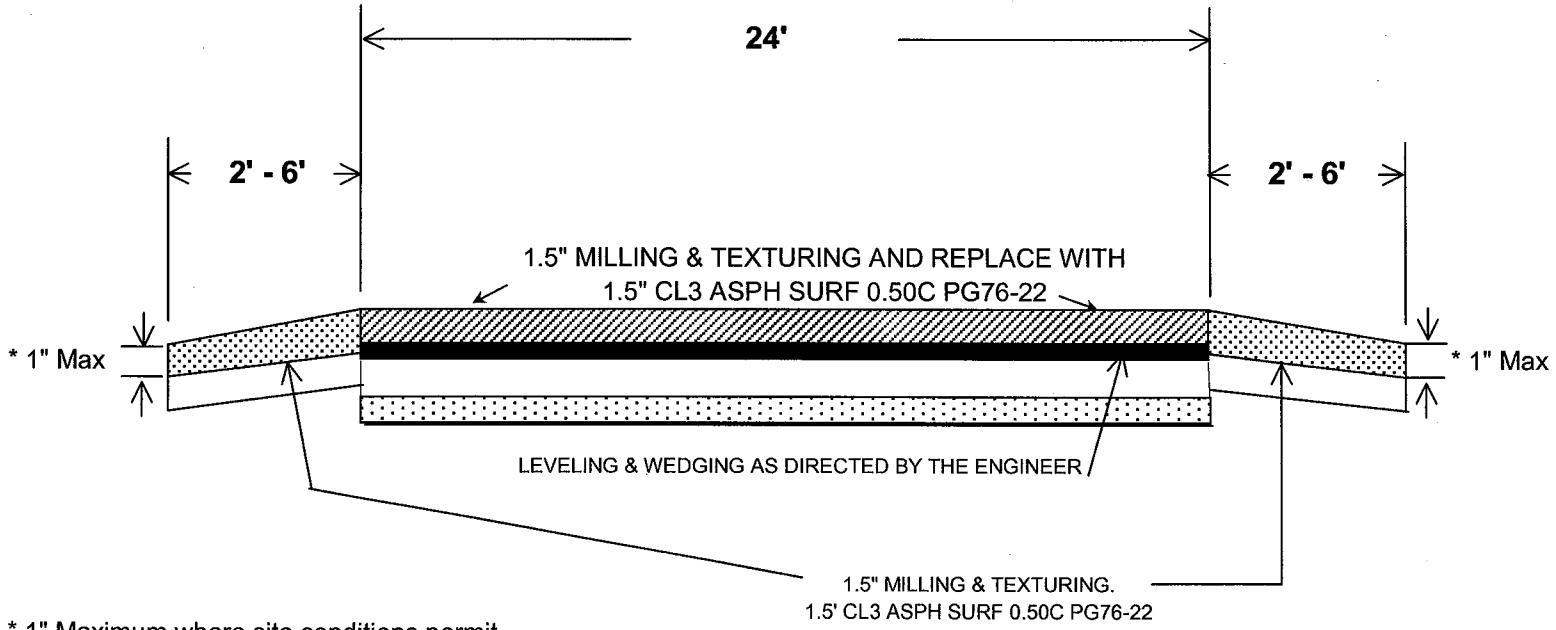

* 1" Maximum where site conditions permit.

SPECIAL NOTES APPLICABLE TO PROJECT

THE FOLLOWING STANDARD DRAWINGS APPLY TO THIS PROJECT AND MAY BE OBTAINED BY CONTACTING THE DEPARTMENT OF HIGHWAYS, DIVISION OF DESIGN, AT A COST OF $0.50 PER COPY:

Miscellaneous Standards Part 1 (RGX-001-04)
Approaches, Entrances, and Mail Box Turnout (RPM-110-04)
Lane Closure Two-Lane Highway Case I (TTC-100)
Lane Closure Multi-Lane Highway Case I (TTC-115)
Lane Closure Multi-Lane Highway Case II (TTC-120)
Shoulder Closure (TTC-135)
Miscellaneous Traffic Control Devices (TTD-100)
Miscellaneous Traffic Control Devices (TTD-105)
Post Splicing Detail (TTD-110)
Arrow Panel (TTD-115)

2000 SPECIFICATIONS
Any reference in the plans or proposal to the ***Standard Specifications for Road and Bridge Construction, Edition of 1998***, and ***Standard Drawings, Edition of 2000*** are superseded by ***Standard Specifications for Road and Bridge Construction, Edition of 2000*** and ***Standard Drawings, Edition of 2003.***

2001 SUPPLEMENTAL SPECIFICATIONS
The ***2001 Supplemental Specifications*** to the 2000 Standard Specifications for Road and Bridge Construction shall apply to this project.

PROPOSAL ADDENDA
All Addenda to this proposal must be incorporated into the proposal when the bid is submitted to the Kentucky Department of Highways. Failure to use the correct and most recent bid sheet(s) may result in the bid being rejected.

BID SUBMITTAL
Bidder must use the Department's Highway Bid Program available on the internet web site of the Department of Highways, Division of Contract Procurement. (www.kytc.state.ky.us/contract)

The Bidder must download the bid items created from the web site to prepare a bid proposal for submission to the Department. The bidder must insert the completed bid item sheets printed from the Program into the bidder's proposal and submit with the disk created by said program.

JOINT VENTURE BIDDING
Joint Venture bidding is permissible. However, both companies MUST purchase a bidding proposal. Either proposal may be submitted but must contain the company names and signatures of both parties where required. A joint bid bond of 5% may be submitted for both companies or each company may submit a separate bond of 5%.

UNDERGROUND FACILITY DAMAGE PROTECTION
The contractor is advised that the Underground Facility Damage Protection Act of 1994, became law January 1, 1995. It is the contractor's responsibility to determine the impact of the act regarding this project, and take all steps necessary to be in compliance with the provisions of the act.

ASPHALT BASE PRICE
The Asphalt Base Price shall be **$170.00 (english)** as applicable in **Section 109.07** of the ***2000 Standard Specifications.***

INCIDENTAL SURFACING
The quantities established in the proposal include estimated quantities required for resurfacing or surfacing mailbox turnouts, farm field entrances, residential and commercial entrances, and road and street approaches. These items are to be paved to the limits as shown on **Standard Drawing RPM 110** or to the limits as directed by the Engineer. In the event signal detectors are present in the intersecting streets or roads, the paving of the crossroads shall be to the right of way limit or back of the signal detector, whichever is the farthest back of the mainline. These areas are to be surfaced or resurfaced as directed by the Engineer and no direct payment will be allowed for placing and compacting.

SPECIAL NOTES APPLICABLE TO PROJECT (Continued)

OPTION A
The Contractor is advised that the compaction of asphalt mixtures furnished for driving lanes and ramps, at 25mm (1 inch) or greater, on this project will be accepted according to **OPTION A** in accordance with **Section 402** and **Section 403** of the *2000 Standard Specification*. The compaction of all other asphalt mixtures will be accepted by **OPTION B.**

ASPHALT PAVEMENT RIDE QUALITY
Pavement Rideability Requirements shall apply on this project in accordance with **Section 410** of the ***2000 Standard Specifications.***

Mainline Surfacing Width 24 - 48 Feet.

Total area to be Surfaced 70168 Square Yards.

Class 3 Asphalt Surface 0.5C PG 76-22 estimate based on depth of 1 ½" - 165 lbs/s.y.

Class 3 Asphalt Surface 0.5C PG 76-22 For Shoulder estimate based on depth of 1 ½" - 165 lbs/s.y.

The ADT for this project is estimated at 8000.

SHOULDERS (6437 Sq. Yds.) 1-6' wide on each side.

Supplemental Specifications to The Standard Specifications for Road and Bridge Construction, 2000 Edition

(Effective with the October 25, 2002 Letting)

Unless stated otherwise, all revisions are to the Standard Specifications for Road and Bridge Construction.

PUBLICATION:	2001 Supplemental Specifications to The Standard Specifications for Road and Bridge Construction.
SUBSECTION:	104.02.02 Overrun and Underrun Formulas.
REVISION:	Void the revision.
SUBSECTION:	104.02.02 Overrun and Underrun Formulas.
REVISION:	Replace the fifth paragraph with the following: For the excessive underrun and overrun quantities, the Department will adjust the payment according to the appropriate following formula:
SUBSECTION:	104.02.02 Overrun and Underrun Formulas.
NUMBER:	3)
REVISION:	Replace the threshold value of 20 percent with 30 percent.
SUBSECTION:	102.07.01 General.
REVISION:	Replace the first sentence with the following: Submit the Bid Proposal on the forms furnished by the Department including the Highway Bid Program bid item sheets and disk created from the Department's internet web site.
SUBSECTION:	102.07.02 Computer Bidding.
REVISION:	Replace the subsection with the following: Subsequent to ordering a Bid Proposal for a specific project, use the Department's Highway Bid Program on the internet web site of the Department of Highways, Division of Contract Procurement. Download the bid item quantities from the Department's web site to prepare a Bid Proposal for submission to the Department. Insert the completed bid item sheets printed from the Highway Bid Program into the Proposal and submit along with the disk created by said program. In case of a dispute, the Bid Proposal and bid item sheets created by the Highway Bid Program take precedence over any bid submittal. Furthermore the Department takes no responsibility for loss, damage of disks or the compatibility with the bidder's computer equipment or software.
SUBSECTION:	102.08 IRREGULAR BID PROPOSALS.
REVISION:	Add the following to the first set of items: 4) Fails to submit a disk created from the Highway Bid Program
SUBSECTION:	102.08 IRREGULAR BID PROPOSALS.
REVISION:	Replace 1) of the second set of items with the following: 1) when the Bid Proposal is on a form other than that furnished by the Department or printed from other than the Highway Bid Program , or when the form is altered or any part is detached.
SUBSECTION:	112.03.01 General Traffic Control.
PART:	I) Temporary Traffic Signals.
REVISION:	Replace the MUTCD reference "Section 4B" with "Chapter 4D"
SUBSECTION:	212.03.03 Permanent Seeding and Protection.
PART:	A) Seed Mixtures for Permanent Seeding.
REVISION:	Replace with the following: A) Seed Mixture for Permanent Seeding. Use seed Mixture No. I or as the Contract specifies. Mixture No. I: 75% Kentucky 31 Fescue (Festuca arundinacea) 10% Red Top (Agrostis alba) 5% White Dutch Clover (Trifolium repens) 10% Rygrass, perennial (Lolium perenne)

Supplemental Specifications to The Standard Specifications for Road and Bridge Construction, 2000 Edition
(Effective with the October 25, 2002 Letting)

SUBSECTION:	212.03.03 Permanent Seeding and Protection.
PART:	C) Crown Vetch.
REVISION:	Replace the first sentence with the following: Sow crown vetch seed on all areas having a slope 3:1 or steeper and consisting of soil or mixtures of broken rock and soil.
SUBSECTION:	212.03.03 Permanent Seeding and Protection.
PART:	E) Erosion Control Blanket.
REVISION:	Replace the first sentence with the following: Install erosion control blankets in ditches, except those to be paved or rock lined, to a flow depth of 1.5 feet.
SUBSECTION:	402.03.02 Acceptance.
PART:	C) Setup.
REVISION:	Add the following after the second sentence: For mixtures with a total-project quantity between 500 and 1,000 tons, perform a minimum of one process control test for AC, AV, and VMA, and report the results to the Engineer.
SUBSECTION:	402.03.03 Verification.
REVISION:	Replace the first two sentences with the following: For volumetric properties, the Department will perform a minimum of one verification test for AC, AV, and VMA for each lot according to the corresponding procedures as given in Subsection 402.03.02. For specialty mixtures, the Department will perform one AC and one gradation determination per lot according to the corresponding procedures as given in Subsection 402.03.02. However, Department personnel will not perform AC determinations according to KM 64-405.
SUBSECTION:	403.02.06 Transport Equipment.
REVISION:	Add the following after the first sentence: Do not load trucks that are contaminated with an unapproved release agent. When such contamination is identified after loading, reject the load. In either case, remove the truck and respective driver from the project for the duration of the project.
SUBSECTION:	403.03.03 Preparation of Mixture.
PART:	A) Mixture Composition.
REVISION:	Replace the second sentence with the following: Conform to the gradation requirements (control points) of AASHTO MP2 for the Superpave mixture type the Contract specifies.
SUBSECTION:	403.03.03 Preparation of Mixture.
PART:	C) Mix Design Criteria.
REVISION:	Replace the first sentence with the following: Conform to the gradation requirements (control points) of AASHTO MP2 for the Superpave mixture.
SUBSECTION:	403.03.03 Preparation of Mixture.
PART:	C) Mix Design Criteria.
NUMBER:	2) Selection of Optimum AC.
REVISION:	Add the following: Ensure the optimum AC is a minimum of 5.0 percent by weight of the total mixture for all 0.5-inch nominal surface mixtures and 5.3 percent by weight of the total mixture for all 0.38-inch nominal surface mixtures.
SECTION:	403.03.06 Thickness Tolerance.
TABLE:	Nominal Maximum Size of Mixture vs. Thickness Range
REVISION:	Delete

Supplemental Specifications to The Standard Specifications for Road and Bridge Construction, 2000 Edition

(Effective with the October 25, 2002 Letting)

SUBSECTION: 403.03.09 Leveling and Wedging, and Scratch Course.
PART: A) Leveling and Wedging.
REVISION: Replace the first sentence with the following:

Conform to the gradation requirements (control points) for base, binder, or surface as applicable.

SUBSECTION: 403.03.09 Leveling and Wedging, and Scratch Course.
PART: B) Scratch Course.
REVISION: Replace the second sentence with the following:

Conform to the gradation requirements (control points) for base, binder, or surface as the Engineer directs.

SECTION: 404 OPEN-GRADED FRICTION COURSE
TABLE: LOT PAY ADJUSTMENT SCHEDULE FOR SPECIALTY MIXTURES
REVISION: Replace the table with the table on the last page of this supplement.

SUBSECTION: 409.02 MATERIALS AND EQUIPMENT.
REVISION: Replace "KM 64-427" with the following:

the guidelines in Subsection 409.03.02

SUBSECTION: 409.03.01 Restrictions.
REVISION: Add the following sentence:

When the mixture's bid item specifies PG 76-22, limit RAP content to 20 percent or less.

PUBLICATION: 2001 Supplemental Specifications to The Standard Specifications for Road and Bridge Construction.
SUBSECTION: 409.03.02 Preparation of Mixture.
PART: A) Mix Requirements.
REVISION: Void the Revision and replace with the following:

Conform to the Contract requirements for each mixture produced using RAP. If mixtures produced using RAP do not conform to the requirements for that mixture, complete the project using all virgin materials at no additional expense to the Department. Conform to the following table to select the appropriate grade of virgin asphalt binder to blend with the RAP:

Mixture's Bid Item	Appropriate Virgin Asphalt Binder		
	0-20% RAP	21-30% RAP	>30% RAP
PG 76-22	PG 76-22	-	-
PG 70-22	PG 70-22	PG 64-22	*
PG 64-22	PG 64-22	PG 64-22	*

* Select according to KM 64-427

SUBSECTION: 611.03.02 Precast Unit Construction.
REVISION: Replace the first sentence with the following:

Construct units according to ASTM C 1433 with the following exceptions and additions:

PUBLICATION: 2001 Supplemental Specifications to The Standard Specifications for Road and Bridge Construction.
SUBSECTION: 701.03.05 Joints.
PART: B) Corrugated Metal Pipe.
REVISION: Void the Revision and replace with the following:

Construct joints using a band with annular corrugations and a bolt, bar and strap connection. Use a minimum nominal band width of 12 inches for all pipe diameters 54 inches and smaller. Use a two-piece band with a minimum nominal width of 20 inches for all pipe diameters greater than 54 inches. Manufacture the band from the same base materials as the pipe. The pipe bands may be up to two gauges lighter than the pipe it is joining, with a minimum gauge thickness of 16. The Department may allow dimple band connections for field cut pipe. Install the connecting bands according to the manufacturer's written recommendations.

Supplemental Specifications to The Standard Specifications for Road and Bridge Construction, 2000 Edition
(Effective with the October 25, 2002 Letting)

SUBSECTION:	710.02 MATERIALS.
REVISION:	Add the following Subsection: 710.02.15 High Density Polyethylene (HDPE) Adjusting Rings. Conform to Section 846.
SUBSECTION:	710.03.01 Newly Constructed Small Drainage Structures.
PART:	A) General.
REVISION:	Replace the last sentence of the sixth paragraph with the following: Use precast concrete, precast concrete pipe sections, cast-in-place, brick, or HDPE adjusting rings for adjustment of existing manholes according to the Standard Specifications.
SUBSECTION:	710.03.03 Adjusted Small Drainage Structures.
REVISION:	Add the following sentence to the end of the first paragraph: For HDPE adjusting rings, install and seal according to the manufacturer's recommendations.
SUBSECTION:	713.03 CONSTRUCTION.
REVISION:	Replace the MUTCD references to "Part III" with "Part 3"
SUBSECTION:	714.03 CONSTRUCTION.
REVISION:	Replace the MUTCD references to "Part III" with "Part 3" and figure references to "3-11 and 3-12" with "3B-8 and 3B-9"
SUBSECTION:	714.03.01 Layout.
REVISION:	Replace the MUTCD reference to "Part III" with "Part 3"
PUBLICATION:	2001 Supplemental Specifications to The Standard Specifications for Road and Bridge Construction.
SUBSECTION:	714.05 PAYMENT.
REVISION:	Replace with the following: The Department will make payment upon completion of the work. If after the proving period the markings do not meet minimum retroreflectivity requirements, the Department will adjust the payment or require corrective work according to the following:
SUBSECTION:	718.01 DESCRIPTION.
REVISION:	Replace the second sentence with the following: See Section 3C.01 of the MUTCD for a general description.
SUBSECTION:	807.02.03 Joint Sealer for Ridged Pipe.
PART:	B) Rubber Gaskets.
REVISION:	Replace with the following: B) Butyl Rubber Sealants. Furnish butyl rubber sealants conforming to the materials, manufacture, and physical requirements for sealants in AASHTO M 198, Section 6.2. Use only products from the Department's List of Approved Materials.
SUBSECTION:	807.02.03 Joint Sealer for Ridged Pipe.
PART:	C) Flexible Plastic Gaskets.
REVISION:	Replace with the following: C) Rubber Gaskets. Furnish rubber gaskets conforming to the materials, manufacture, and physical requirements for gaskets in AASHTO M 315. Use only products from the Department's List of Approved Materials.

Supplemental Specifications to The Standard Specifications for Road and Bridge Construction, 2000 Edition

(Effective with the October 25, 2002 Letting)

SECTION: 846 HIGH DENSITY POLYETHYLENE (HDPE) ADJUSTING RINGS
REVISION: Add the following New Section:

SECTION 846 HIGH DENSITY POLYETHYLENE (HDPE) ADJUSTING RINGS

846.01 RESIN. Use a recycled polyethylene plastic or virgin resin producing a molded part meeting the following requirements:

Melt Flow Index (ASTM D 1238)	4.0-10.0 g/10min
Density (ASTM D 792)	0.941-0.965 g/cm^3
Tensile (ASTM D 638)	2000-5000 lb/in^2
ESCR (ASTM D 1693)	Condition C

846.02 LOADING. Ensure the adjustment rings meet or exceed the loading requirements of AASHTO'S Standard Specification for HS-25 wheel loading for Highway Bridges.

SECTION: 827.04 PERMANENT SEED.
REVISION: Replace with the following:

827.04 PERMANENT SEED. Conform to the requirements outlined in the "Kentucky Seed Law and Provisions for Seed Certification in Kentucky" and the "Regulations under the Kentucky Seed Law", with following exceptions:

1. Obtain seed only through registered dealers that are permitted for labeling of seed.
2. Ensure all deliveries/shipments of premixed seed are accompanied with a master blend sheet.
3. The Department may sample the seed at the job site at any time.
4. Ensure all bags and containers have an acceptable seed tag attached.

Do not use seed (grasses, native grasses and legumes) if the weed seed is over 2%, total germination (including hard seed) is less than 60%, if the seed test date is over 9 months old exclusive of the month tested, or if the limits of noxious weed seed is exceeded.

Ensure that noxious weed seeds contained in any seed or seed mixture does not exceed the maximum permitted rate of occurrence per pound.

Name of Kind	Max. No. Seeds (per pound)*
Balloon Vine (Cardiospermum Halicacabum)	0
Purple Moonflower (Ipomoea turbinata)	0
Canada Thistle (Cirsium Arvense)	0
Johnsongrass (Sorghum Halepense and Sorghum Almum and perennial rhizomatous derivatives of these species)	0
Quackgrass (Elytrigia Repens)	0
Annual Bluegrass (Poa Annua)	256
Buckhorn Plantain (Plantago lanceolata)	304
Corncockle (Agrostemma Githago)	192
Dodder (Cuscuta spp.)	192
Giant Foxtail (Setaria Faberii)	192
Oxeye Daisy (Chrysanthemum leucanthemum)	256
Sorrel (Rumex Acetosella)	256
Wild Onion and Wild Garlic (Allium spp.)	96

* Seed or seed mixtures that contain in excess of 480 total noxious seeds per pound is prohibited

Wildflower seed shall not be planted until approved by the MCL.

Supplemental Specifications to The Standard Specifications for Road and Bridge Construction, 2000 Edition
(Effective with the October 25, 2002 Letting)

LOT PAY ADJUSTMENT SCHEDULE FOR SPECIALTY MIXTURES (TEST DEVIATION FROM JMF)		
	Pay Value	Deviation From JMF (%)
Asphalt Binder Content	1.00	0.0-0.5
	0.98	0.6
	0.95	---
	0.90	0.7
	0.85	0.8
	0.75	≥ 0.9
1 1/2 inch Sieve	1.00	0-13
	0.98	14
	0.95	15-16
	0.90	17-20
	0.85	21-23
	0.75	≥ 24
1 inch, 3/4 inch, and 1/2 inch Sieves	1.00	0-9
	0.98	10
	0.95	11-12
	0.90	13-14
	0.85	15-16
	0.75	≥ 17
3/8 inch, No. 4, No. 8, No. 16, and No. 30 Sieves	1.00	0-8
	0.98	9
	0.95	10
	0.90	11-12
	0.85	13-14
	0.75	≥ 15
No. 50 Sieve	1.00	0-6
	0.98	7
	0.95	8
	0.90	9
	0.85	10
	0.75	≥ 11
No. 100 Sieve	1.00	0-3
	0.98	---
	0.95	4
	0.90	5
	0.85	---
	0.75	≥ 6
No. 200 Sieve	1.00	0.0-2.0
	0.98	2.5
	0.95	3.0
	0.90	---
	0.85	3.5
	0.75	≥ 4.0
Fineness Modulus	1.00	0.0-0.30
	0.98	0.31-0.34
	0.95	0.35-0.39
	0.90	0.40-0.46
	0.85	0.47-0.55
	0.75	≥ 0.56

10N

SPECIAL NOTE FOR ACCEPTANCE OF DENSITY OF LONGITUDINAL JOINTS IN ASPHALT SURFACE PAVEMENTS

This Special Note will apply when indicated on the plans or in the proposal. Section references herein are to the Department's 2000 Standard Specifications for Road and Bridge Construction.

1.0 DESCRIPTION. This note specifies additional density acceptance testing required for the longitudinal joint of asphalt surface mixtures compacted under Option A requirements. Due to the inherent difficulty of compacting longitudinal joints, conventional methods of compaction may not be adequate to achieve the desired level of density.

2.0 MATERIALS AND EQUIPMENT. Reserved.

3.0 CONSTRUCTION.

3.1 Acceptance. In addition to the responsibilities of Subsection 402.03.02 D), furnish 2 cores per sublot at a location randomly selected in the longitudinal direction by the Engineer according to KM 64-113. Select the transverse direction such that some part of the core circumference is within 3.0 ± 0.5 inches of the longitudinal joint.

By the end of the following workday, obtain the core(s) from the longitudinal joint as each lane of material is placed. Do not wait for the adjoining lane to be placed before obtaining the core(s) from the longitudinal joint.

4.0 MEASUREMENT. The Department will not measure the additional coring required by this note for payment and will consider it incidental to the asphalt mixture.

5.0 PAYMENT.

5.1 Lot Pay Adjustment. Contrary to Subsection 402.05.02, the Department will use the following Lot Pay Adjustment Schedule to assign pay values for AC, AV, VMA, Lane Density, and Joint Density within each sublot.

5.2 Joint Density Deductions. Due to a lack of experience with longitudinal joint density requirements, the Department will not enforce net project deductions resulting from Joint Density values as given in the Lot Pay Adjustment Schedule. However, when bonuses exceed deductions for asphalt mixture for the total project, the Department will apply the Joint Density values and pay the net difference.

LOT PAY ADJUSTMENT SCHEDULE

Lot Pay Adjustment = (Unit Price) (Quantity) [{0.05(AC Pay Value) + 0.25(AV Pay Value) + 0.25(VMA Pay Value) + 0.30(Lane Density Pay Value) + 0.15(Joint Density Pay Value)} - 1.00]

WEIGHTED VALUES					
	AC	AV	VMA	Lane Density	Joint Density
Weight (%)	5	25	25	30	15

AC	
Pay Value	Deviation From JMF (%)
1.00	≤ ± 0.5
0.95	± 0.6
0.90	± 0.7
(1)	≥ ± 0.8

VMA	
Pay Value	Deviation From Minimum
1.00	≥ min. VMA
0.95	0.1-0.5 below min.
0.90	0.6-1.0 below min.
(1)	> 1.0 below min.

AV	
Pay Value	Test Result (%)
1.05	3.5-4.5
1.00	3.0-5.0
0.95	2.5-5.5
0.90	2.0-6.0
(1)	< 2.0 or > 6.0

LANE DENSITY	
Pay Value	Test Result (%)
1.05	94.0-96.0
1.00	92.0-93.9
0.95	91.0-91.9 or 96.1-96.5
0.90	90.0-90.9 or 96.6-97.0
(1)	< 90.0 or > 97.0

JOINT DENSITY	
Pay Value	Test Result (%)
1.05	91.0-96.0
1.00	89.0-90.9
0.95	88.0-88.9 or 96.1-96.5
0.90	87.0-87.9 or 96.6-97.0
0.75	< 87.0 or > 97.0

(1) *The Department will evaluate the acceptability of the work. When the Department allows the Contractor to leave the work in place, the Department will determine its value and may pay up to, but no case more than, 85 percent. In addition to the reduction in pay, the Department may require the Contractor to perform corrective action to the work.*

June 4, 2002

TRAFFIC CONTROL PLAN
FD05-106-0025-011-016
2

TRAFFIC CONTROL GENERAL

Except as provided herein, traffic shall be maintained in accordance with the 2000 Standard Specifications and the Standard Drawings, current editions. Except for the roadway and traffic control bid items listed, all items of work necessary to maintain and control traffic will be paid at the lump sum bid price to "Maintain and Control Traffic".

Contrary to Section 106.01, traffic control devices used on this project may be new, or used in like new condition, at the beginning of the work and maintained in like new condition until completion of the work.

PROJECT PHASING & CONSTRUCTION PROCEDURES

At the discretion of the Engineer, days and hours may be specified when lane closures will not be allowed.

At locations with three or more lanes, one lane of traffic in each direction shall be maintained at all times during construction. At locations with two lanes, The Contractor may maintain alternating one way traffic during construction. The clear lane width shall be 11 feet. If traffic should be stopped due to construction operations, and a school bus on an official run arrives on the scene, the Contractor shall make provisions for the passage of the bus as quickly as possible.

LANE CLOSURES

Lane closures shall not be left in place during non-working hours.

SIGNS

Contrary to Section 112.04.02 and 112.04.03, Low Shoulder signs will not be measured for payment, but will be incidental to Maintain and Control Traffic. Contrary to section 112.04.02, only long term signs (signs intended to be continuously in place for more than 3 days) will be measured for payment; short term signs (signs intended to be left in place for 3 days or less) will not be measured for payment but will be incidental to Maintain and Control Traffic.

BARRICADES

Barricades used in lieu of barrels and cones for channelization or delineation will be incidental to Maintain and Control Traffic according to Section 112.04.01. Barricades used to protect pavement removal areas will be bid as each according to Section 112.04.05.

VARIABLE MESSAGE SIGNS

If deemed necessary by the Engineer, Variable Message Signs will be installed, operated, and maintained by the Department.

PAVEMENT EDGE DROP-OFFS

A pavement edge between opposing directions of traffic or lanes that traffic is expected to cross in a lane change situation shall not have an elevation difference greater than 1½". Warning signs (MUTCD W8-11 or W8-9A) shall be placed in advance of and at 1500' intervals throughout the drop-off area. Dual posting on both sides of the traveled way shall be required. All transverse transitions between resurfaced and unresurfaced areas which traffic may cross shall be wedged with asphalt mixture for leveling and wedging. The wedges shall be removed prior to placement of the final surface course.

Pavement edges that traffic is not expected to cross, except accidentally, shall be treated as follows:

Less than 2" - No protection required.

2" to 4" - Place plastic drums, vertical panels, or barricades every 50 feet. Cones may be used in place of plastic drums, panels, and barricades during daylight working hours. Wedge with asphalt mixture for leveling and wedging with a 1:1 or flatter slope in daylight hours, or 3:1 or flatter slope during nighttime hours, when work is not active in the drop-off area.

SPECIAL NOTE FOR TYPICAL SECTION DIMENSIONS

FD05-102-0025-011-016

The dimensions shown on the typical sections for pavement and shoulder widths and thicknesses are nominal or typical dimensions. The actual dimensions to be constructed may be varied to fit existing conditions as directed or approved by the Engineer. It is not intended that existing pavement or shoulders be widened unless specified elsewhere in the Proposal.

Typical Section
7/11/2002

SPECIAL NOTE FOR
ASPHALT MILLING AND TEXTURING

FD05-102-0025-011-016

Cuttings shall become the property of the Contractor. Begin Paving operations within two weeks of commencement of the milling operation. Continue paving operations continuously until completed. If paving operations are not begun within this time period, liquidated damages will be assessed at the rate prescribed by Section 108.09 of the 2000 Standard Specifications until such time as paving operations are begun.

FD05-102-0025-011-016

SPECIAL NOTE FOR ROLLED IN RUMBLE STRIPS

Contrary to Section 403.03.08 of the 2000 Standard Specifications, construct rumble strips on all mainline and ramp shoulders.

SN Rumble Strip

SPECIAL NOTES FOR TRAFFIC SIGNAL LOOP DETECTORS
FD5 102-0025-011-016

The Contractor is advised there is one existing traffic signal loop detector within the construction limits of the subject project at milepoint 13.882. Notify the Engineer in writing, (2) weeks prior to beginning any work on the project.

The Engineer will contact and maintain liaison with the District Traffic Engineer to coordinate any necessary work.

Traffic Signal Loops
7/11/2002

SPECIAL NOTE FOR EDGE KEY

FD05-102-0025-011-016

Construct Edge Keys at the beginning of project, end of project, and at ramps, as applicable. Cut out the existing asphalt surface to the required depth and width shown on the drawing. Heel new surface into the existing surface. The Department will pay for this work at the contract unit price per ton for "Asphalt Pavement Milling and Texturing", which shall be full compensation for all labor, materials, equipment, and incidentals for removal and disposal of the existing asphalt surface required to construct the edge key.

EDGE KEY

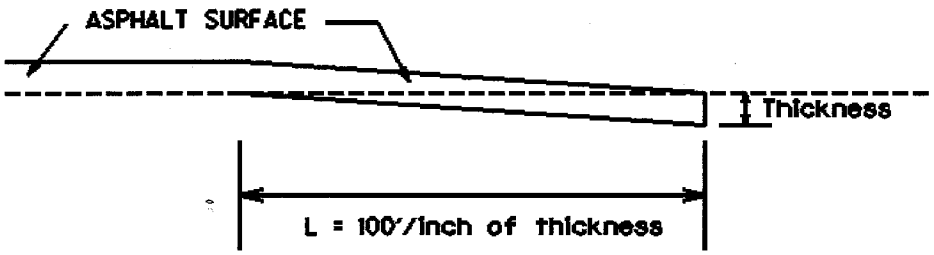

Thickness = 1.5"

L = 150'

EdgeKey.Ton
8/13/2001

SPECIAL NOTE FOR AWARD OF CONTRACT

Contrary to Section 103.02, the Department may hold the Bid Proposals of any or all bidders for a period not to exceed 90 calendar days for final disposition of award. The Department may hold the Bid Proposal of the lowest bidder longer than 90 calendar days if the bidder concurs.

Contrary to Section 103.04, The Department will hold the Proposal Guaranty of the lowest bidder and the Proposal Guaranty of the second lowest bidder, as determined by the Commissioner, until the Department awards the Contract and executes and approves the Contract and bond of the successful bidder, or until the Department rejects all Bid Proposals. If the Department does not make an award within 90 calendar days, the Department will return all Proposal Guaranties.

Except as provided in this note or elsewhere in the proposal, all other applicable portions of Section 103 apply.

SPECIAL NOTES FOR PROTECTION OF RAILROAD INTEREST

These Special Notes are supplemental and amendatory to the Kentucky Transportation Cabinet's, Department of Highways' Standard Specifications for Road and Bridge Construction, Edition of 2000, and amendments thereof, and where in conflict therewith these Special Notes shall govern.

The authorized representative of the Railroad Company (hereinafter sometimes called Railroad Engineer) shall have final authority in all questions affecting the safety and maintenance of rail traffic. Contractor shall notify the Railroad Engineer at least two weeks in advance (not including Saturdays, Sundays and Holidays), when he will start work on the right of way of the Railroad. No work shall begin on Railroad right of way until the Railroad Engineer has confirmed that protective services are secured, the insurance submitted by the Contractor has been approved and all necessary approvals are documented.

The Contractor must assume all responsibility for any and all damages to his work, employees, servants, equipment and materials, caused by the operation of the Railroad.

No charge or claim of the Contractor will be allowed for hindrance or delay because of rail traffic, or any work by others, incident to or necessary for the safe maintenance of rail traffic or completion of the project. Delays from such cause may entitle the Contractor to an extension of time allowed for doing the work, sufficient in the opinion of the Department of Highway's Project Engineer (hereinafter called Engineer) to compensate for the delay, provided immediate notice of the cause of delay is given to the Engineer in writing.

Materials and equipment shall not be stored where they will interfere with rail traffic nor on the right of way of the Railroad without first having obtained permission of the Railroad Engineer, and any such permission will be with the understanding that the Railroad will not be liable for damage to materials and equipment from any cause. The Railroad Engineer may move, or have the Contractor move, at his expense, materials from such storage locations.

The Contractor shall so arrange his work that there will be no interference with, or delay to, the train service of the Railroad. The method of doing such work shall be submitted to the Railroad Engineer for approval. In the event that work by the contractor cannot be performed as approved by the Railroad Engineer, and continuous delays to train service occur, the Department reserves the right to take the work from the Contractor, and to complete it at his expense, after written notice is given to him by the Engineer.

The Railroad shall have the right to assign workers to the site of the project to perform inspection services for protection of Railroad operations whenever, in the opinion of the Railroad Engineer, such services may be necessary. Contractor shall reimburse the costs incurred by the Railroad for inspection services, and for flagging services as hereinafter provided. When flagging services begin, the flagman is assigned by the Railroad to work at the project site on a continual basis until no longer needed. The Contractor shall give the flagman five (5) days notice before work on Railroad property is completed. Any flagging protection or inspection services required by the Railroad for the safety of Railroad operations because of work being performed by the Contractor or in connection therewith, will be

provided or cause to be provided by the Railroad, and the cost thereof shall be reimbursed to the Railroad by the Contractor on the basis of Railroad's bills to be rendered monthly.

The services of watchman or flagman will be required during excavation, placing and removing of cofferdams or sheeting, driving of foundation piles and placing of the construction and removal of any falsework, bracing or forms over and adjacent to the tracks. A flagman will also be furnished whenever, in the opinion of the Railroad Engineer or his authorized representative such protection is needed.

The rate of pay per hour for each Railroad worker will be the prevailing hourly rate in effect for an 8-hour day for the class of worker used at the time the service is performed, with time and one-half rate for all time worked before or after assigned work hours; time and one-half rate also shall apply on Saturdays, Sundays and Holidays. If the rate of pay of any inspector or flagman is changed before the work is started or during the progress of the work, either by law or by agreement between the Railroad and its employees, or if the tax rates on labor are changed, the Contractor shall pay on the basis of the new rates.

Since the number of days flagging to be required will vary according to the number of workmen and amount of equipment used by Contractor, neither the Railroad nor Department assumes the responsibility or liability for an estimate of this cost. Contractor shall reimburse Railroad for actual cost plus charges as noted above. The Contractor will be required to reimburse the Railroad for such costs, and furnish the Department satisfactory evidence that the Railroad has acknowledged receipt thereof before final settlement.

All work herein provided to be done by the Contractor on the Railroad's right of way shall be done in a manner satisfactory to the Railroad Engineer or his authorized representative, and shall be performed at such times and in such manner as not to interfere unnecessarily with the business of the Railroad. The Contractor will be required to use all reasonable care and precaution in order to avoid accident, damage or unnecessary delay or interference with the Railroad's trains or other property.

The Contractor shall not store or pile any materials or equipment closer than 13 feet 0 inches from the centerline of the nearest track, measured at right angles thereto.

The Contractor's plans for falsework, erecting the spans over the tracks, cofferdam, sheeting and bracing details, bents or piers, and the method of installation for the protection of the Railroad Company's tracks shall be submitted to the Department and Railroad Engineer for approval before commencing work on same.

The Contractor will be required upon completion of the work, to remove from within the limits of the Railroad's right of way, all machinery, equipment, surplus materials, falsework, rubbish or temporary buildings of said Contractor, and to leave the right of way in a neat condition, satisfactory to the Railroad Engineer or his authorized representative.
If the Contractor desires access across the Railroad's right of way and tracks at other than an existing and open public road crossing in or incident to construction of the project, the Railroad may permit such Contractor access across said right of way and tracks provided Contractor first executes a license agreement satisfactory to the Railroad, and agrees to reimburse Railroad for the cost of providing and removing any temporary grade crossing, watchmen expense, or other costs which the Railroad deems

necessary for protection of its property and operations. Contractor shall at no time cross the Railroad's right of way and tracks with vehicles or equipment of any kind or character, except at such crossing or crossings as may be established pursuant to this subsection.

Should any damage occur to Railroad's property, as a result of the Contractor's unauthorized or negligent operations, and the Railroad for the protection of its property, the required materials, labor and equipment shall be furnished by the Railroad and the Contractor shall reimburse Railroad for costs incurred.

Explosives shall not be used adjacent to any track or other Railroad's property without the advance approval of the Engineer and the Railroad Engineer, but such approval will not relieve the Contractor from any liability. If use of explosives is permitted, an authorized representative of the Railroad must be present. The blasting shall be done under experienced supervision and every necessary precaution shall be taken to avoid damage to property, injury to person and interruption of Railroad operations. Blasting shall be discontinued immediately on notice from either the Engineer or Railroad Engineer, that it is too hazardous.

In addition to any other forms of insurance or bonds required under the terms of the contract and specifications, the Contractor will be required to carry insurance of the following kinds and amounts:

Commercial General Liability Insurance having a combined single limit of not less than $2,000,000 per occurrence for all loss, damage, cost and expense, including attorneys' fees, arising out of bodily injury liability and property damage liability during the policy period.

Railroad Protective Liability Insurance having a combined single limit of not less than $2,000,000 each occurrence and $6,000,000 in the aggregate applying separately to each annual period. If the project involves track over which passenger trains operate, the insurance limits required are not less than a combined single limit of $5,000,000 each occurrence and $10,000,000 in the aggregate applying separately to each annual period. Said policy shall provide coverage for all loss, damage or expense arising from bodily injury and property damage liability, and physical damage to property attributed to acts or omissions at the job site.

SPEACIAL NOTE FOR REMOVING TYPE V PAVEMENT MARKING

Contrary to Section 403.03.02, deliver the removed pavement markers to the Department's Bailey Bridge Yard in Frankfort, Kentucky.

PART II

SPECIAL PROVISIONS APPLICABLE TO PROJECT

SPECIAL PROVISION NO.	TITLE

NO SPECIAL PROVISIONS APPLY TO THIS PROJECT

PART III

EMPLOYMENT, WAGE AND RECORD REQUIREMENTS
(Copies of each Attached)

1. Schedule of Minimum Wages Established for the Project.

2. Labor and Wage Requirements, applicable to other than Federal-Aid System Contracts. (Rev. 2-16-95)

3. Executive Branch Code of Ethics.

TRANSPORTATION CABINET
DIVISION OF CONTRACT PROCUREMENT
COMPLIANCE SECTION

SHEET ONE
PROJECT WAGE RATES **LETTING: 01-17-2003**

ROCKCASTLE COUNTY, FD05 102 0025 011-016
The Livingston-London Road (US 25)
Asphalt Surface

CRAFTS	BASIC HOURLY RATES	FRINGE BENEFIT PAYMENTS COMBINED
Boilermakers	24.65	12.94
Bricklayers	20.35	6.30
Stone Mason	18.95	6.30
Carpenters	18.85	6.30
Cement Masons	18.70	6.30
Electricians	*22.60	6.97

*When workmen are required to work from bosum chairs, trusses, stacks, tanks, scaffolds, catwalks, radio and T.V. towers, structural steel (open, unprotected, unfloored raw steel), and bridges or similar hazardous locations where workmen are subject to a direct fall, except where using JLG's and bucket trucks up to 75 feet: Add 25% to workman's base rate for 50 to 75 feet, and add 50% to workman's base rate for over 75 feet.

Ironworkers: Structural	18.95	6.30
Ironworkers: Reinforcing	18.75	6.30
Painters	20.55	6.30
Piledrivers	18.50	6.30
Plumbers	22.52	6.30
Surveyors:		
Survey Party Chief (Engineer)	12.34	
Survey Party Operatives (Instrumentmen, Rodmen, etc.)	7.21	

Welders - Receive rate for craft in which welding is incidental.

LABORERS:

General laborer, flagman, steam jenny.

BASE RATE 16.90
FRINGE BENEFITS 6.30

Batch truck dumper, deck hand or scow man.

BASE RATE 17.15
FRINGE BENEFITS 6.30

Power driven tool operator of the following: wagon drill, chain saw, sand blaster, concrete chipper, pavement breaker, vibrator, power wheelbarrow, power buggy, sewer pipe layer, bottom men, dry cement handler, concrete rubber, mason tender.

BASE RATE 17.25
FRINGE BENEFITS 6.30

Two/State

ROCKCASTLE COUNTY, FD05 102 0025 011-016

LABORERS: (continued)

Asphalt lute and rakerman, side rail setter.	**BASE RATE**	17.30
	FRINGE BENEFITS	6.30
Gunnite nozzle man, gunnite operator.	**BASE RATE**	17.40
	FRINGE BENEFITS	6.30
Tunnel laborer (free air).	**BASE RATE**	17.45
	FRINGE BENEFITS	6.30
Tunnel mucker (free air)	**BASE RATE**	17.50
	FRINGE BENEFITS	6.30
Hand blade operator	**BASE RATE**	17.65
	FRINGE BENEFITS	6.30
Tunnel miner, blaster and driller (free air).	**BASE RATE**	17.85
	FRINGE BENEFITS	6.30
Caisson worker	**BASE RATE**	18.40
	FRINGE BENEFITS	6.30
Powderman	**BASE RATE**	18.50
	FRINGE BENEFITS	6.30
Drill operator of percussion type drills which are both powered and propelled by an independent air supply.		
	BASE RATE	19.70
	FRINGE BENEFITS	6.30

TRUCK DRIVERS AND RELATED CLASSIFICATIONS:

Truck helper and warehouseman.	**BASE RATE**	17.15
	FRINGE BENEFITS	6.30
Driver, winch truck and A-Frame when used in transporting materials.	**BASE RATE**	17.25
	FRINGE BENEFITS	6.30
Driver (semi-trailer or pole trailer), driver (dump truck, tandem axle), driver of distributor.	**BASE RATE**	17.35
	FRINGE BENEFITS	6.30

TRANSPORTATION CABINET
DIVISION OF CONTRACT PROCUREMENT
COMPLIANCE SECTION

PROJECT WAGE RATES **SHEET THREE** **01-17-2003**

ROCKCASTLE COUNTY, FD05 102 0025 011-016

TRUCK DRIVERS AND RELATED CLASSIFICATIONS: (continued)

Driver on mixer trucks (all types).	**BASE RATE** ..... 17.40 **FRINGE BENEFITS** 6.30
Truck mechanic	**BASE RATE** ..... 17.45 **FRINGE BENEFITS** 6.30
Driver (3 tons and under), tire changer and truck mechanic helper.	**BASE RATE** ..... 17.48 **FRINGE BENEFITS** 6.30
Driver on pavement breakers.	**BASE RATE** ..... 17.50 **FRINGE BENEFITS** 6.30
Driver (over 3 tons), driver (truck mounted rotary drill).	**BASE RATE** ..... 17.69 **FRINGE BENEFITS** 6.30
Driver, Euclid and other heavy earth moving equipment and Low Boy.	**BASE RATE** ..... 18.26 **FRINGE BENEFITS** 6.30
Greaser on greasing facilities.	**BASE RATE** ..... 18.35 **FRINGE BENEFITS** 6.30

OPERATING ENGINEERS:

Auto patrol, batcher plant, bituminous paver, cable-way, clamshell, concrete mixer (21 cu. ft. or over), concrete pump, crane, crusher plant, derrick, derrick boat, ditching and trenching machine, dragline, dredge engineer, elevator (regardless of ownership when used for hoisting any building material), elevating grader and all types of loaders, hoe-type machine, hoisting engine, locomotive, LeTourneau or carry-all scoop, bulldozer, mechanic, orangepeel bucket, piledriver, power blade, roller (bituminous), roller (earch), roller (rock), scarifier, shovel, tractor shovel, truck crane, well points, winch truck, push dozer, grout pump, high lift, fork lift (regardless of lift height), all types of boom cats, multiple operator, core drill, tow or push boat, A-Frame winch truck, concrete paver, gradeall, hoist, hyster, material pump, pumpcrete, ross carrier, sheep foot, sideboom, throttle-valve man, rotary drill, power generator, mucking machine, rock spreader attached to equipment, scoopmobile, KeCal loader, tower cranes (French, German and other types), hydrocrane, tugger, backfiller gurries, self-propelled compactor, self-contained hydraulic percussion drill.

BASE RATE 20.25
FRINGE BENEFITS 6.30

PROJECT WAGE RATES **SHEET FOUR** **01-17-2003**

ROCKCASTLE COUNTY, FD05 102 0025 011-016

OPERATING ENGINEERS: (continued)
All air compressors (200 cu. ft. per min. or greater capacity), bituminous mixer, concrete mixer (under 21 cu. ft.), welding machine, form grader, tractor (50 H.P. and over), bull float, finish machine, outboard motor boat, brakeman, mechanic helper, whirley oiler, tractair and road widening trencher, articulating trucks.

BASE RATE 18.50
FRINGE BENEFITS 6.30

Greaser on grease facilities servicing heavy equipment.

BASE RATE 18.35
FRINGE BENEFITS 6.30

Bituminous distributor, cement gun, conveyor, mud jack, paving joint machine, pump, tamping machine, tractors (under 50 H.P.), vibrator, oiler, air compressors (under 200 cu. ft. per min. capacity), concrete saw, burlap and curing machine, hydro seeder, power form handling equipment, deckhand oiler, hydraulic post driver.

BASE RATE 17.76
FRINGE BENEFITS 6.30

Fringe benefit amounts are applicable for all hours worked except when otherwise noted.

No laborer, workman or mechanic shall be paid at a rate less than that of the General Laborer except those classified as bona fide apprentices registered with the Kentucky State Apprenticeship Supervisor unless otherwise specified in this schedule of wage rates.

These rates are listed pursuant to the Kentucky Determination No. CR-01-II HWY dated August 6, 2002. Apprentices or trainees shall be permitted to work as such subject to Administrative Regulations adopted by the Commissioner of Workplace Standards. Copies of these regulations will be furnished upon request from any interested person.

Before using apprentices on the job the contractor shall present to the Contracting Officer written evidence of registration of such employees in a program of a State apprenticeship and training agency approved and recognized by the U. S. Bureau of Apprenticeship and Training. In the absence of such a State agency, the contractor shall submit evidence of approval and registration by the U. S. Bureau of Apprenticeship and Training.

TRANSPORTATION CABINET
DIVISION OF CONTRACT PROCUREMENT
COMPLIANCE SECTION

PROJECT WAGE RATES **SHEET FIVE 01-17-2003**

ROCKCASTLE COUNTY, FD05 102 0025 011-016

The contractor shall submit to the Contracting Officer, written evidence of the established apprenticeship-journeyman ratios and wage rates in the project area, which will be the basis for establishing such ratios and rates for the project under the applicable contract provisions.

TO: EMPLOYERS/EMPLOYEES

PREVAILING WAGE SCHEDULE:

The wages indicated on this wage schedule are the least permitted to be paid for the occupations indicated. When an employee works in more than one classification, the employer must record the number of hours worked in each classification at the prescribed hourly base rate.

OVERTIME:

Overtime is to be paid after an employee works eight (8) hours a day or forty (40) hours a week, whichever gives the employee the greater wages. At least time and one-half the base rate is required for all overtime. A laborer, workman or mechanic and an employer may enter into a written agreement or a collective bargaining agreement to work more than eight (8) hours a calendar day but not more than ten (10) hours a calendar day for the straight time hourly rate. Wage violations or questions should be directed to the designated Engineer or to the undersigned.

Rick Stansel, Director
Division of Contract Procurement
Frankfort, Kentucky 40622

TRANSPORTATION CABINET
DEPARTMENT OF HIGHWAYS

LABOR AND WAGE REQUIREMENTS APPLICABLE TO OTHER THAN FEDERAL-AID SYSTEM PROJECTS

I. Application
II. Nondiscrimination of Employees (KRS 344)
III. Payment of Predetermined Minimum Wages
IV. Statements and Payrolls

I. APPLICATION

1. These contract provisions shall apply to all work performed on the contract by the contractor with his own organization and with the assistance of workmen under his immediate superintendence and to all work performed on the contract by piecework, station work or by subcontract. The contractor's organization shall be construed to include only workmen employed and paid directly by the contractor and equipment owned or rented by him, with or without operators.

2. The contractor shall insert in each of his subcontracts all of the stipulations contained in these Required Provisions and such other stipulations as may be required.

3. A breach of any of the stipulations contained in these Required Provisions may be grounds for termination of the contract.

II. NONDISCRIMINATION OF EMPLOYEES

AN ACT OF THE KENTUCKY
GENERAL ASSEMBLY TO PREVENT
DISCRIMINATION IN EMPLOYMENT
KRS CHAPTER 344
EFFECTIVE JUNE 16, 1972

The contract on this project, in accordance with KRS Chapter 344, provides that during the performance of this contract, the contractor agrees as follows:

1. The contractor shall not fail or refuse to hire, or shall not discharge any individual, or otherwise discriminate against an individual with respect to his compensation, terms, conditions, or privileges of employment, because of such individual's race, color, religion, national origin, sex, disability or age (between forty and seventy); or limit, segregate, or classify his employees in any way which would deprive or tend to deprive an individual of employment opportunities or otherwise adversely affect his status as an employee, because of such individual's race, color, religion, national origin, sex, disability or age (between forty and seventy). The contractor agrees to post in conspicuous places, available to employees and applicants for employment, notices to be provided setting forth the provisions of this nondiscrimination clause.

2. The contractor shall not print or publish or cause to be printed or published a notice or advertisement relating to employment by such an employer or membership in or any classification or referral for employment by the employment agency, indicating any preference, limitation, specification, or discrimination, based on race, color, religion, national origin, sex, disability or age (between forty and seventy), except that such notice or advertisement may indicate a preference, limitation, or specification based on religion, or national origin when religion, or national origin is a bona fide occupational qualification for employment.

3. If the contractor is in control of apprenticeship or other training or retraining, including on-the-job training programs, he shall not discriminate against an individual because of his race, color, religion, national origin, sex, disability or age (between forty and seventy), in admission to, or employment in any program established to provide apprenticeship or other training.

4. The contractor will send to each labor union or representative of workers with which he has a collective bargaining agreement or other contract or understanding, a notice to be provided advising the said labor union or workers' representative of the contractor's commitments under this section, and shall post copies of the notice in conspicuous places available to employees and applicants for employment. The contractor will take such action with respect to any subcontract or purchase order as the administrating agency may direct as a means of enforcing such provisions, including sanctions for non-compliance.

III. PAYMENT OF PREDETERMINED MINIMUM WAGES

1. These special provisions are supplemented elsewhere in the contract by special provisions which set forth certain predetermined minimum wage rates. The contractor shall pay not less than those rates.

2. The minimum wage determination schedule shall be posted by the contractor, in a manner prescribed by the Department of Highways, at the site of the work in prominent places where it can be easily seen by the workers.

IV. STATEMENTS AND PAYROLLS

1. All contractors and subcontractors affected by the terms of KRS 337.505 to 337.550 shall keep full and accurate payroll records covering all disbursements of wages to their employees to whom they are required to pay not less than the prevailing rate of wages. Payrolls and basic records relating thereto will be maintained during the course of the work and preserved for a period of one (1) year from the date of completion of this contract.

2. The payroll records shall contain the name, address and social security number of each employee, his correct classification, rate of pay, daily and weekly number of hours worked, itemized deductions made and actual wages paid.

3. The contractor shall make his daily records available at the project site for inspection by the State Department of Highways contracting office or his authorized representative.

Periodic investigations shall be conducted as required to assure compliance with the labor provisions of the contract. Interrogation of employees and officials of the contractor shall be permitted during working hours.

Aggrieved workers, Highway Managers, Assistant District Engineers, Resident Engineers and Project Engineers shall report all complaints and violations to the Division of Contract Procurement.

The contractor shall be notified in writing of apparent violations. The contractor may correct the reported violations and notify the Department of Highways of the action taken or may request an informal hearing. The request for hearing shall be in writing within ten (10) days after receipt of the notice of the reported violation. The contractor may submit records and information which will aid in determining the true facts relating to the reported violations.

Any person or organization aggrieved by the action taken or the findings established as a result of an informal hearing by the Division of Contract Procurement may request a formal hearing.

4. The wages of labor shall be paid in legal tender of the United States, except that this condition will be considered satisfied if payment is made by a negotiable check, on a solvent bank, which may be cashed readily by the employee in the local community for the full amount, without discount or collection charges of any kind. Where checks are used for payments, the contractor shall make all necessary arrangements for them to be cashed and shall give information regarding such arrangements.

5. No fee of any kind shall be asked or accepted by the contractor or any of his agents from any person as a condition of employment on the project.

6. No laborers shall be charged for any tools used in performing their respective duties except for reasonably avoidable loss or damage thereto.

7. Every employee on the work covered by this contract shall be permitted to lodge, board, and trade where and with whom he elects and neither the contractor nor his agents, nor his employees shall directly or indirectly require as a condition of employment that an employee shall lodge, board or trade at a particular place or with a particular person.

8. Every employee on the project covered by this contract shall be an employee of either the prime contractor or an approved subcontractor.

9. No charge shall be made for any transportation furnished by the contractor or his agents to any person employed on the work.

10. No individual shall be employed as a laborer or mechanic on this contract except on a wage basis, but this shall not be construed to prohibit the rental of teams, trucks or other equipment from individuals.

No Covered employee may be employed on the work except in accordance with the classification set forth in the schedule mentioned above; provided, however, that in the event additional classifications are required, application shall be made by the contractor to the Department of Highways and (1) the Department shall request appropriate classifications and rates from the proper agency, or (2) if there is urgent need for additional classification to avoid undue delay in the work, the contractor may employ such workmen at rates deemed comparable to rates established for similar classifications provided he has made written application through the Department of Highways, addressed to the proper agency, for the supplemental rates. The contractor shall retroactively adjust, upon receipt of the supplemental rates schedule, the wages of any employee paid less than the established rate and may adjust the wages of any employee overpaid.

11. No contractor or subcontractor contracting for any part of the contract work which may require or involve the employment of laborers or mechanics shall require or permit any laborer or mechanic in any work-week in which he is employed on such work, to work in excess of eight hours in any calendar day or in excess of forty hours in such work-week unless such laborer or mechanic receives compensation at a rate not less than one and one half times his basic rate of pay for all hours worked in excess of eight hours in any calendar day or in excess of forty hours in such work-week. A laborer, workman or mechanic and an employer may enter into a written agreement or a collective bargaining agreement to work more than eight (8) hours a calendar day but not more than ten (10) hours a calendar day for the straight time hourly rate. This agreement shall be in writing and shall be executed prior to the employee working in excess of eight (8) hours, but not more than ten (10) hours, in any one (1) calendar day.

12. Payments to the contractor may be suspended or withheld due to failure of the contractor to pay any laborer or mechanic employed or working on the site of the work, all or part of the wages required under the terms of the contract. The Department may suspend or withhold payments only after the contractor has been given written notice of the alleged violation and the contractor has failed to comply with the wage determination of the Department of Highways.

13. Contractors and subcontractors shall comply with the sections of Kentucky Revised Statutes, Chapter 337 relating to contracts for Public Works.

Revised 2-16-95

EXECUTIVE BRANCH CODE OF ETHICS

In the 1992 regular legislative session, the General Assembly passed and Governor Brereton Jones signed Senate Bill 63 (codified as KRS 11A), the Executive Branch Code of Ethics, which states, in part:

KRS 11A.040 (6) provides:

No present or former public servant shall, within six (6) months of following termination of his office or employment, accept employment, compensation or other economic benefit from any person or business that contracts or does business with the state in matters in which he was directly involved during his tenure. This provision shall not prohibit an individual from returning to the same business, firm, occupation, or profession in which he was involved prior to taking office or beginning his term of employment, provided that, for a period of six (6) months, he personally refrains from working on any matter in which he was directly involved in state government. This subsection shall not prohibit the performance of ministerial functions, including, but not limited to, filing tax returns, filing applications for permits or licenses, or filing incorporation papers.

KRS 11A.040 (8) states:

A former public servant shall not represent a person in a matter before a state agency in which the former public servant was directly involved, for a period of one (1) year after the latter of:
a) The date of leaving office or termination of employment; or
b) The date the term of office expires to which the public servant was elected.

This law is intended to promote public confidence in the integrity of state government and to declare as public policy the idea that state employees should view their work as a public trust and not as a way to obtain private benefits.

If you have worked for the executive branch of state government within the past six months, you may be subject to the law's prohibitions. The law's applicability may be different if you hold elected office or are contemplating representation of another before a state agency.

Also, if you are affiliated with a firm which does business with the state and which employs former state executive-branch employees, you should be aware that the law may apply to them.

In case of doubt, the law permits you to request an advisory opinion from the Executive Branch Ethics Commission, Room 136, Capitol Building, 700 Capitol Avenue, Frankfort, Kentucky 40601; telephone (502) 564-7954.

PART IV

INSURANCE

The Contractor shall carry the following insurance in addition to the insurance required by law:

(1) Contractor's Public Liability Insurance not less than **$100,000.00** for damages arising out of bodily injuries to or death to one person. Not less than **$300,000.00** for damages arising out of bodily injuries to or death to two or more persons.

(2) Contractor's Property Damages Liability Insurance. Not less than **$100,000.00** for all damages arising out of injury or destruction of property in any one accident. Not less than **$300,000.00** for all damages during the policy period.

(3) Contractor's Protective Public Liability and Property Damage Insurance. The contractor shall furnish evidence with respect to operations performed for him by subcontractors that he carries in his own behalf for the above stipulated amounts.

(4) The insurance required above must be evidenced by a Certificate of Insurance and this Certificate of Insurance must contain one of the following statements:

a. "policy contains no deductible clauses."

b. "policy contains a _____ deductible property
(amount)
damage clause but company will pay claim and collect the deductible from the insured."

(5) WORKMEN'S COMPENSATION INSURANCE. The contractor shall furnish evidence of coverage of all his employees or give evidence of self-insurance by submitting a copy of a certificate issued by the Workmen's Compensation Board.

PART V

STATEMENT OF INCOMPLETED WORK

1. Status of Active Prime Contracts. Attached

1. STATUS OF ALL INCOMPLETED PRIME CONTRACTS

All active prime contracts must be reported. This includes prime contracts with public and private owners and joint-ventured contracts. The names of the joint venturers must be shown when reporting these projects. A machine or typed listing reporting the status of each contract is acceptable when attached to this report; however, the total amounts on the itemized listing must be reported in the space provided below:

CONTRACT WITH	PROJECT IDENTIFICATION	PRIME CONTRACT AMOUNT	EARNINGS THROUGH LAST APPROVED ESTIMATE	TOTAL AMOUNT OF WORK REMAINING
TOTAL (Attach Summary if not itemized above)		$	$	$

PART VI

BID ITEMS