NON-BIDDING

PROPOSAL

TRANSPORTATION CABINET
Department of Highways
Frankfort, Kentucky 40622

PROPOSAL NO. _____
PROJECT CODE NO. 02-0723

LETTING OF DECEMBER 20, 2002
Sealed Bids will be received in the Division of Contract Procurement and/or the Auditorium located on the 1st Floor of the State Office Building until 10:00 A.M., EST, on DECEMBER 20, 2002 Bids will be publicly opened and read at 10:00 A.M., EASTERN STANDARD TIME.

PROJECT IDENTIFICATION AND DESCRIPTION:

JEFFERSON COUNTY, IM 264-1 (146) 0, FD52 056 0264 000-008, FD04 056 031W 014-015
The Watterson Expressway (I-264).

Pavement Rehabilitation from 0.152 mile southeast of KY 3082 (MP 0.460) extending southeasterly to 0.173 mile west of KY 1931 (MP 8.040), and US 31W from beginning of PCC pavement (MP 14.590) extending northerly to end of PCC Pavement (MP 14.960), a distance of 7.615 miles.

Trimarc, Signing, Lighting, Guardrail, Diamond Grinding, Bridge Repair & PCC Pavement.

Status Report Item Nos. 5-2000.00, 5-2001.00 and 5-2026.00.

(5)

GEOGRAPHIC COORDINATES:
LATITUDE - 38° 12' NORTH
LONGITUDE - 85° 40' WEST

COMPLETION DATE ESTABLISHED FOR PROJECT: SEE SPECIAL NOTES

LIQUIDATED DAMAGES SEE SPECIAL NOTES

REQUIRED BID PROPOSAL GUARANTY: Not less than 5% of the total bid.

(Check guaranty submitted: Cashier's Check |__| Certified Check |__| Bid Bond |__|)

BID BONDS WHEN SUBMITTED WILL BE RETAINED WITH THE PROPOSAL.
INDEX OF CONTENTS

PART

I SCOPE OF WORK **(DBE GENERAL PLAN INCLUDED)** ☐

II SPECIAL PROVISIONS APPLICABLE TO PROJECT

III EMPLOYMENT, WAGE AND RECORD REQUIREMENTS

IV INSURANCE

V STATEMENT OF INCOMPLETED WORK AND SUBCONTRACTED WORK

VI BID ITEMS

VII CERTIFICATION AND DBE CERTIFICATION **(SEE BACK PAGE)**

BID..... |__| PROPOSAL ISSUED TO: _____

SPECIMEN..... |__| _____
Address City State Zip

PART I

SCOPE OF WORK

1. Project Detail.

a.	See Road and/or Bridge Plans	
b.	Special Notes Applicable to Project	Attached
c.	Supplemental Specifications	Attached
d.	Special Note for Utility Clearance	Attached
e.	Special Provisions for Protection of Railroad Interest - P&L	Attached
f.	Special Provisions for Protection of Railroad Interest - NS	Attached
g.	Special Note for Variable Message Signs (4-18-2001)	Attached
h.	Special Note for Non-Epoxy Adhesives (1-1-2000) **[6J]**	*
i.	Special Note for Structural Adhesives with Extended Contact Time (1-1-2000) **[7S]**	*
j.	Special Note for Type 3 Rumble Strips (2-24-2000) **[10A]**	*
k.	Special Note for Detectable Warnings for Sidewalk Ramps (5-29-02)	Attached
l.	Special Note for Furnishing and Erecting Precast Segments	Attached
m.	Special Note for Post Tensioning	Attached
n.	Special Note for Traffic Control Coordinator & Wrecker Service	Attached
o.	Special Note for Rumble Strips	Attached
p.	Special Note for Value Engineering Proposals	Attached
q.	Special Note for Concrete Joint Seals	Attached
r.	Special Note for Temporary Concrete Barrier Wall	Attached
s.	Special Note for Acceptance of PCC Pavement Thickness	Attached
t.	Special Note for General Progress Schedule	Attached
u.	Special Note for Ride Quality	Attached
v.	Special Note for Installation of Metal Snowplowable Pavement Markers	Attached

PART I

SCOPE OF WORK (CONTINUED)

w.	Special Note for Traffic Control for Raised Pavement Marker Installation	Attached
x.	Special Note for QC/QA Specifications for Class P Concrete	Attached
y.	Special Notes & Drawings for Installation of Traffic Counting Inductance Loops	Attached
z.	Special Note for Intelligent Transportation Systems	Attached
aa.	Special Note for Fixed Completion Date, Incentive Pay & Liquidated Damages	Attached

* These Special Notes are included in the Supplemental Specifications.

SPECIAL NOTES APPLICABLE TO PROJECT

2000 SPECIFICATIONS

Any reference in the plans or in the proposal to the ***Standard Specifications for Road and Bridge Construction, Edition of 1998***, and ***Standard Drawings, Edition of 1998*** are superseded by ***Standard Specifications for Road and Bridge Construction, Edition of 2000*** and ***Standard Drawings, Edition of 2000.***

2001 SUPPLEMENTAL SPECIFICATIONS

The ***2001 Supplemental Specifications*** to the 200 Standard Specifications for Road and Bridge Construction shall apply to this project.

The Kentucky Department of Highways, in accordance with the Regulations of the United States Department of Transportation 23 CFR 635.112 (h), hereby notifies all bidders that failure by a bidder to comply with all applicable sections of the 1998 Kentucky Standard Specifications, including, but not limited to the following, may result in a bid not being considered responsive and thus not eligible to be considered for award:

102.02 Current Capacity Rating
102.08 Irregular Proposals
102.09 Proposal Guaranty
102.10 Delivery of Proposals
102.14 Disqualification of Bidders

PROPOSAL ADDENDA

All addenda to this proposal must be incorporated into the proposal when the bid is submitted to the Kentucky Department of Highways. Failure to use the correct and most recent bid sheet(s) may result in the bid being rejected.

BID SUBMITTAL

Bidder must use the Department's Highway Bid Program available on the internet web site of the Department of Highways, Division of Contract Procurement. (www.kytc.state.ky.us/contract)

The Bidder must download the bid items created from the web site to prepare a bid proposal for submission to the Department. The bidder must insert the completed bid item sheets printed from the Program into the bidder's proposal and submit with the disk created by said program.

JOINT VENTURE BIDDING

Joint Venture bidding is permissible. However, both companies MUST purchase a bidding proposal. Either proposal may be submitted but must contain the company names and signatures of both parties where required. A joint bid bond of 5% may be submitted for both companies or each company may submit a separate bond of 5%.

CIVIL RIGHTS ACT OF 1964

The Kentucky Department of Highways, in accordance with the provisions of Title VI of the Civil Rights Act of 1964 (78 Stat. 252) and the Regulations of the Federal Department of Transportation (49 C.F.R., Part 21), issued pursuant to such Act, hereby notifies all bidders that it will affirmatively insure that the contract entered into pursuant to this advertisement will be awarded to the lowest responsible bidder without discrimination on the ground of race, color, or national origin.

NOTICE TO ALL BIDDERS

To report bid rigging activities call: **1-800-424-9071**

The U.S. Department of Transportation (DOT) operates the above toll-free **"hotline"** Monday through Friday, 8:00 a.m. to 5:00 p.m. eastern time. Anyone with knowledge of possible bid rigging, bidder collusion, or other fraudulent activities should use the **"hotline"** to report such activities.

The **"hotline"** is part of the DOT's continuing effort to identify and investigate highway construction contract fraud and abuse and is operated under the direction of the DOT Inspector General. All information will be treated confidentially and caller anonymity will be respected.

SPECIAL NOTES APPLICABLE TO PROJECT (CONTINUED)

TRAINEES
In Compliance with the **"TRAINING SPECIAL PROVISION"** included in Part III of the Proposal, the Contractor will be required to employ 7 trainees (2 Class A or B Operators, 2 Carpenters, 2 Ironworkers and 1 Cement Mason) for this contract.

FHWA 1273
The requirements of Paragraph VI of FHWA 1273 does not apply to projects with a total cost of less than $1,000,000.00.

SECOND TIER SUBCONTRACTS
Second Tier subcontracts on federally assisted projects shall be permitted. However, in the case of DBE's, second tier subcontracts will only be permitted where the other subcontractor is also a DBE. All second tier subcontracts shall have the consent of both the Contractor and the Engineer.

SPECIALTY ITEMS
The following bid items are hereby designated **"Specialty Items"** within the meaning of the term as used in current edition FHWA 1273 Required Contract Provisions; PR 1316, Required Contract Provisions Appalachian Development Highway System and Local Access Roads Construction Contracts:

Item 199 through Item 319.

ITS SUMMARY, LIGHTING QUANTITIES, SIGNING QUANTITIES, TRAFFIC LOOP QUANTITIES

ASPHALT BASE PRICE
The Asphalt Base Price shall be **$165.00 (english)** as applicable in Section 109.07 of the *1998 Standard Specifications*.

NHS PROJECTS
This project is on the ***NATIIONAL HIGHWAY SYSTEM***.

WORK ZONE CATEGORY I AND II DEVICES
The Contractor is required to provide certification that all *Work Zone Category I and II Devices* are compliant with **NCHRP 350** before these devices are used on the project. *Category II Devices* include, but are not limited to: portable sign stands (with signs), type I, II & III barricades, vertical panels, intrusion alarms, cones with lights, and other work zone devices under 45kg (100 lb).

UNDERGROUND FACILITY DAMAGE PROTECTION
The contractor is advised that the Underground Facility Damage Protection Act of 1994, became law January 1, 1995. It is the contractor's responsibility to determine the impact of the act regarding this project, and take all steps necessary to be in compliance with the provision of the act.

OPTION A
The Contractor is advised that the compaction of asphalt mixtures furnished for driving lanes and ramps, at 25mm (1 inch) or greater, on this project will be accepted according to **OPTION A** in accordance with **Section 402** and **Section 403** of the *2000 Standard Specification*. The compaction of all other asphalt mixtures will be accepted by **OPTION B.**

SPECIAL NOTES APPLICABLE TO PROJECT (CONTINUED)

SPECIAL NOTE
DISADVANTAGED BUSINESS ENTERPRISE PROGRAM

It is the policy of the Kentucky Transportation Cabinet ("the Cabinet") that Disadvantaged Business Enterprises ("DBE") shall have the opportunity to participate in the performance of highway construction projects financed in whole or in part by Federal Funds in order to create a level playing field for all businesses who wish to contract with the Cabinet. To that end, the Cabinet will comply with the regulations found in 49 CFR Part 26, and the definitions and requirements contained therein shall be adopted as if set out verbatim herein.

The Cabinet, contractors, subcontractors, and sub-recipients shall not discriminate on the basis of race, color, national origin, or sex in the performance of work performed pursuant to Cabinet contracts. The contractor shall carry out applicable requirements of 49 CFR 26 in the award and administration of federally assisted highway construction projects. The contractor will include this provision in all its subcontracts and supply agreements pertaining to contracts with the Cabinet.

Failure by the contractor to carry out these requirements is a material breach of its contract with the Cabinet, which may result in the termination of the contract or such other remedy as the Cabinet deems necessary.

OBLIGATION OF CONTRACTORS

Each contractor prequalified to perform work on Cabinet projects shall designate and make known to the Cabinet a liaison officer who is assigned the responsibility of effectively administering and promoting an active program for utilization of DBEs.

If a formal goal has not been designated for the contract, all contractors are encouraged to consider DBEs for subcontract work as well as for the supply of material and services needed to perform this work.

Contractors are encouraged to use the services of banks owned and controlled by minorities and women.

CONTRACT GOAL

CONTRACT GOAL

The Disadvantaged Business Enterprise (DBE) goal established for this contract is 6 % of the total value of the contract.

The contractor shall exercise all necessary and reasonable steps to ensure that Disadvantaged Business Enterprises participate in at least the percent of the contract as set forth above as goals for this contract.

SPECIAL NOTES APPLICABLE TO PROJECT (CONTINUED)

CERTIFICATION OF CONTRACT GOAL

Contractors shall include the following certification in bids for projects for which a DBE goal has been established. **BIDS SUBMITTED WHICH DO NOT INCLUDE CERTIFICATION OF DBE PARTICIPATION WILL NOT BE READ PUBLICLY. These bids will not be considered for award by the Cabinet and they will be returned to the bidder.**

"The bidder certifies that it has secured participation by Disadvantaged Business Enterprises ("DBE") in the amount of ____ percent of the total value of this contract and that the DBE participation is in compliance with the requirements of 49 CFR 26 and the policies of the Kentucky Transportation Cabinet pertaining to the DBE Program."

The certification statement is located on the last page of this proposal. All contractors **must** certify their DBE participation on that page. **DBEs utilized in achieving the DBE goal must be certified and prequalified for the work items at the time the bid is submitted.**

DBE PARTICIPATION PLAN

All bidders are **encouraged** to submit their General DBE Participation Plan with their bid on the official form. Lowest responsive bidders whose bid packages include DBE Participation Plans may be awarded the contract at the next Awards Committee meeting provided that the DBE goal is met. The DBE Participation Plan shall include the following:

1) Name and address of DBE Subcontractor(s) and/or supplier(s) intended to be used in the proposed project;

2) Description of the work each is to perform including the work item , unit, quantity, unit price and total amount of the work to be performed by the individual DBE;

3) The dollar value of each proposed DBE subcontract and the percentage of total project contract value this represents. DBE participation may be counted as follows;

   a). If DBE suppliers and manufactures assume actual and contractual responsibility, the dollar value of materials to be furnished will be counted toward the goal as follows:

   - The entire expenditure paid to a DBE manufacturer;
   - 60 percent of expenditures to DBE suppliers that are not manufacturers provided the supplier is a regular dealer in the product involved. A regular dealer must be engaged in, as its principal business and in its own name, the sale of products to the public, maintain an inventory and own and operate distribution equipment; and
   - the amount of fees or commissions charged by the DBE firms for a bona fide service, such as professional, technical, consultant, or managerial services and assistance in the procurement of essential personnel, facilities, equipment, materials, supplies, delivery of materials and supplies or for furnishing bonds, or insurance, providing such fees or commissions are determined to be reasonable and customary.

   b). The dollar value of services provided by DBEs such as quality control testing, equipment repair and maintenance, engineering, staking, etc.;

   c). The dollar value of joint ventures. DBE credit for joint ventures will be limited to the dollar amount of the work actually performed by the DBE in the joint venture;

4) Written and signed documentation of the bidder's commitment to use a DBE contractor whose participation is being utilized to meet the DBE goal; and

5) Written and signed confirmation from the DBE that it is participating in the contract as provided in the prime contractor's commitment.

SPECIAL NOTES APPLICABLE TO PROJECT (CONTINUED)

The apparent low bidder who does not submit a General DBE Participation Plan with the bid shall submit it within 10 calendar days after receipt of notification that they are the apparent low bidder. The project will not be considered for award prior to submission and approval of the apparent low bidder's DBE Participation Plan.

Detailed DBE Participation Plan forms will be included in the Contractor Package presented to successful bidders following the awarding of the project. The Detailed DBE Participation Plan must be completed and returned to Contract Procurement in accordance with Cabinet policy. A copy of the blank estimate will be included with the Detailed DBE Participation Plan to list sequence items by PCN (Project Control Number).

Changes to DBE Participation Plans must be approved by the Cabinet. The Cabinet may consider extenuating circumstances including, but not limited to, changes in the nature or scope of the project, the inability or unwillingness of a DBE to perform the work in accordance with the bid, and/or other circumstances beyond the control of the prime contractor.

CONSIDERATION OF GOOD FAITH EFFORTS REQUESTS

If the DBE participation submitted in the bid by the apparent lowest responsive bidder does not meet or exceed the DBE contract goal, the apparent lowest responsive bidder must submit a Good Faith Effort Package to satisfy the Cabinet that sufficient good faith efforts were made to meet the contract goals prior to submission of the bid. **Efforts to increase the goal after bid submission will not be considered in justifying the good faith effort, unless the contractor can show that the proposed DBE was solicited prior to the letting date. DBEs utilized in achieving the DBE goal must be certified and prequalified for the work items at the time the bid is submitted.** One complete set and nine (9) copies of this information must be received in the office of the Division of Contract Procurement no later than 12:00 noon of the tenth calendar day after receipt of notification that they are the apparent low bidder.

Where the information submitted includes repetitious solicitation letters it will be acceptable to submit a sample representative letter along with a distribution list of the firms solicited. Documentation of DBE quotations shall be a part of the good faith effort submittal as necessary to demonstrate compliance with the factors listed below which the Cabinet considers in judging good faith efforts. This documentation may include written subcontractors' quotations, telephone log notations of verbal quotations, or other types of quotation documentation.

The Good Faith Effort Package shall include, but may not be limited to information showing evidence of the following:

1. Whether the bidder attended any pre-bid meetings that were scheduled by the Cabinet to inform DBEs of subcontracting opportunities;

2. Whether the bidder provided solicitations through all reasonable and available means;

3. Whether the bidder provided written notice to all DBEs listed in the DBE directory at the time of the letting who are prequalified in the areas of work that the bidder will be subcontracting;

4. Whether the bidder followed up initial solicitations of interest by contacting DBEs to determine with certainly whether they were interested. If a reasonable amount of DBEs within the targeted districts do not provide an intent to quote or no DBEs are prequalified in the subcontracted areas, the bidder must notify the DBE Liaison in the Office of Minority Affairs to give notification of the bidder's inability to get DBE quotes;

5. Whether the bidder selected portions of the work to be performed by DBEs in order to increase the likelihood of meeting the contract goals. This includes, where appropriate, breaking out contract work items into economically feasible units to facilitate DBE participation, even when the prime contractor might otherwise perform these work items with its own forces;

6. Whether the bidder provided interested DBEs with adequate and timely information about the plans, specifications, and requirements of the contract;

SPECIAL NOTES APPLICABLE TO PROJECT (CONTINUED)

7. Whether the bidder negotiated in good faith with interested DBEs not rejecting them as unqualified without sound reasons based on a thorough investigation of their capabilities. Any rejection should be so noted in writing with a description as to why an agreement could not be reached;

8. Whether quotations were received from interested DBE firms but were rejected as unacceptable without sound reasons why the quotations were considered unacceptable. The fact that the DBE firm's quotation for the work is not the lowest quotation received will not in itself be considered as a sound reason for rejecting the quotation as unacceptable. The fact that the bidder has the ability and/or desire to perform the contract work with its own forces will not be considered a sound reason for rejecting a DBE quote. Nothing in this provision shall be construed to require the bidder to accept unreasonable quotes in order to satisfy DBE goals;

9. Whether the bidder specifically negotiated with subcontractors to assume part of the responsibility to meet the contract DBE goal when the work to be subcontracted includes potential DBE participation;

10. Whether the bidder made any efforts and/or offered assistance to interested DBEs in obtaining the necessary equipment, supplies, materials, insurance and/or bonding to satisfy the work requirements of the bid proposal; and

11. Any other evidence that the bidder submits which may show that the bidder has made reasonable good faith efforts to include DBE participation.

FAILURE TO MEET GOOD FAITH REQUIREMENT

Where the apparent lowest responsive bidder fails to submit sufficient participation by DBE firms to meet the contract goal and upon a determination by the Good Faith Committee based upon the information submitted that the apparent lowest responsive bidder failed to make sufficient reasonable efforts to meet the contract goal, the bidder will be offered the opportunity to meet in person for administrative reconsideration. The bidder will be notified of the Committee's decision within 24 hours of its decision. The bidder will have 24 hours to request reconsideration of the Committee's decision. The reconsideration meeting will be held within two days of the receipt of a request by the bidder for reconsideration.

The request for reconsideration will be heard by the Office of the Secretary. The bidder will have the opportunity to present written documentation or argument concerning the issue of whether it met the goal or made an adequate good faith effort. The bidder will receive a written decision on the reconsideration explaining the basis for the finding that the bidder did or did not meet the goal or made adequate Good Faith efforts to do so.

The result of the reconsideration process is not administratively appealable to the Cabinet or to the United States Department of Transportation.

The Cabinet reserves the right to award the contract to the next lowest responsive bidder or to rebid the contract in the event that the contract is not awarded to the low bidder as the result of a failure to meet the good faith requirement.

SANCTIONS FOR FAILURE TO MEET DBE REQUIREMENTS OF THE PROJECT

Failure by the prime contractor to fulfill the DBE requirements of a project under contract or to demonstrate good faith efforts to meet the goal constitutes a breach of contract. When this occurs, the Cabinet will hold the prime contractor accountable as would be the case with all other contract provisions. Therefore, the contractor's failure to carry our the DBE contract requirements shall constitute a breach of contract and as such the Cabinet reserves the right to exercise all administrative remedies at its disposal including, but not limited to the following:

- Disallow credit toward the DBE goal;
- Withholding progress payments;

SPECIAL NOTES APPLICABLE TO PROJECT (CONTINUED)

- Withholding payment to the prime in an amount equal to the unmet portion of the contract goal; and/or
- Termination of the contract.

CONTRACTOR REPORTING

All contractors must keep detailed records and provide reports to the Cabinet on their progress in meeting the DBE requirement on any highway contract. These records may include, but shall not be limited to payroll, lease agreements, cancelled payroll checks, executed subcontracting agreements, etc. Prime contractors will be required to submit certified reports on monies paid to each DBE subcontractor or supplier utilized to meet a DBE goal.

Prime contractors will incorporate a requirement into DBE subcontracts, including supply contracts, that DBEs must provide to the Division of Construction, a copy of all checks received from the prime contractor within seven days of receipt of payment for work performed on Cabinet projects. Checks to DBE subcontractors must include the PCN number, estimate number, and the sequence and quantity.

DEFAULT OR DECERTIFICATION OF THE DBE

If the DBE subcontractor or supplier is decertified or defaults in the performance of its work, and the overall goal cannot be credited for the uncompleted work, the prime contractor may utilize a substitute DBE or elect to fulfill the DBE goal with another DBE on a different work item. If after exerting good faith effort in accordance with the Cabinet's Good Faith Effort policies and procedures, the prime contractor is unable to replace the DBE, then the unmet portion of the goal may be waived at the discretion of the Cabinet.

Kentucky Transportation Cabinet
General DBE Participation Plan*

03/25/2002

Letting Date: _____ Project Code Number (PCN) _____ Project Number: _____

Designated DBE Goal % _____

Prime Contractor _____ DBE Company Name _____

Address _____

City, State, Zip _____

Federal Tax ID _____

Type of DBE Work (all applicable)

_____ Supplier _____ Subcontractor _____ Manufacturer _____ Engineering _____ Other _____

Itemized worked to be performed by DBE Company:

Supplier 60% Y/N	Item Number	Description of Participation	Unit of Measure	Quantity to be Performed by DBE	DBE Unit Price **	Dollar Amount (based on DBE

**Note: 60 percent of expenditures to DBE suppliers that are not manufacturers provided the supplier is a regular dealer in the product involved. A regular dealer must be engaged in, as its principal business and in its own name, the sale of products to the public, maintain an inventory and own and operate distribution equipment

Total This DBE _____

Total Bid _____

% Credited toward Goal, this DBE _____

Prime Contractor's Signature: _____ Title: _____ Date: _____

DBE Participant Signature: _____ Title: _____ Date: _____

***This form must be completed for each DBE participant**

Supplemental Specifications to The Standard Specifications for Road and Bridge Construction, 2000 Edition

(Effective with the October 25, 2002 Letting)

Unless stated otherwise, all revisions are to the Standard Specifications for Road and Bridge Construction.

PUBLICATION:	2001 Supplemental Specifications to The Standard Specifications for Road and Bridge Construction.
SUBSECTION:	104.02.02 Overrun and Underrun Formulas.
REVISION:	Void the revision.
SUBSECTION:	104.02.02 Overrun and Underrun Formulas.
REVISION:	Replace the fifth paragraph with the following: For the excessive underrun and overrun quantities, the Department will adjust the payment according to the appropriate following formula:
SUBSECTION:	104.02.02 Overrun and Underrun Formulas.
NUMBER:	3)
REVISION:	Replace the threshold value of 20 percent with 30 percent.
SUBSECTION:	102.07.01 General.
REVISION:	Replace the first sentence with the following: Submit the Bid Proposal on the forms furnished by the Department including the Highway Bid Program bid item sheets and disk created from the Department's internet web site.
SUBSECTION:	102.07.02 Computer Bidding.
REVISION:	Replace the subsection with the following: Subsequent to ordering a Bid Proposal for a specific project, use the Department's Highway Bid Program on the internet web site of the Department of Highways, Division of Contract Procurement. Download the bid item quantities from the Department's web site to prepare a Bid Proposal for submission to the Department. Insert the completed bid item sheets printed from the Highway Bid Program into the Proposal and submit along with the disk created by said program. In case of a dispute, the Bid Proposal and bid item sheets created by the Highway Bid Program take precedence over any bid submittal. Furthermore the Department takes no responsibility for loss, damage of disks or the compatibility with the bidder's computer equipment or software.
SUBSECTION:	102.08 IRREGULAR BID PROPOSALS.
REVISION:	Add the following to the first set of items: 4) Fails to submit a disk created from the Highway Bid Program
SUBSECTION:	102.08 IRREGULAR BID PROPOSALS.
REVISION:	Replace 1) of the second set of items with the following: 1) when the Bid Proposal is on a form other than that furnished by the Department or printed from other than the Highway Bid Program , or when the form is altered or any part is detached.
SUBSECTION:	112.03.01 General Traffic Control.
PART:	I) Temporary Traffic Signals.
REVISION:	Replace the MUTCD reference "Section 4B" with "Chapter 4D"
SUBSECTION:	212.03.03 Permanent Seeding and Protection.
PART:	A) Seed Mixtures for Permanent Seeding.
REVISION:	Replace with the following: A) Seed Mixture for Permanent Seeding. Use seed Mixture No. I or as the Contract specifies. Mixture No. I: 75% Kentucky 31 Fescue (Festuca arundinacea) 10% Red Top (Agrostis alba) 5% White Dutch Clover (Trifolium repens) 10% Rygrass, perennial (Lolium perenne)

Supplemental Specifications to The Standard Specifications for Road and Bridge Construction, 2000 Edition
(Effective with the October 25, 2002 Letting)

SUBSECTION:	212.03.03 Permanent Seeding and Protection.
PART:	C) Crown Vetch.
REVISION:	Replace the first sentence with the following: Sow crown vetch seed on all areas having a slope 3:1 or steeper and consisting of soil or mixtures of broken rock and soil.
SUBSECTION:	212.03.03 Permanent Seeding and Protection.
PART:	E) Erosion Control Blanket.
REVISION:	Replace the first sentence with the following: Install erosion control blankets in ditches, except those to be paved or rock lined, to a flow depth of 1.5 feet.
SUBSECTION:	402.03.02 Acceptance.
PART:	C) Setup.
REVISION:	Add the following after the second sentence: For mixtures with a total-project quantity between 500 and 1,000 tons, perform a minimum of one process control test for AC, AV, and VMA, and report the results to the Engineer.
SUBSECTION:	402.03.03 Verification.
REVISION:	Replace the first two sentences with the following: For volumetric properties, the Department will perform a minimum of one verification test for AC, AV, and VMA for each lot according to the corresponding procedures as given in Subsection 402.03.02. For specialty mixtures, the Department will perform one AC and one gradation determination per lot according to the corresponding procedures as given in Subsection 402.03.02. However, Department personnel will not perform AC determinations according to KM 64-405.
SUBSECTION:	403.02.06 Transport Equipment.
REVISION:	Add the following after the first sentence: Do not load trucks that are contaminated with an unapproved release agent. When such contamination is identified after loading, reject the load. In either case, remove the truck and respective driver from the project for the duration of the project.
SUBSECTION:	403.03.03 Preparation of Mixture.
PART:	A) Mixture Composition.
REVISION:	Replace the second sentence with the following: Conform to the gradation requirements (control points) of AASHTO MP2 for the Superpave mixture type the Contract specifies.
SUBSECTION:	403.03.03 Preparation of Mixture.
PART:	C) Mix Design Criteria.
REVISION:	Replace the first sentence with the following: Conform to the gradation requirements (control points) of AASHTO MP2 for the Superpave mixture.
SUBSECTION:	403.03.03 Preparation of Mixture.
PART:	C) Mix Design Criteria.
NUMBER:	2) Selection of Optimum AC.
REVISION:	Add the following: Ensure the optimum AC is a minimum of 5.0 percent by weight of the total mixture for all 0.5-inch nominal surface mixtures and 5.3 percent by weight of the total mixture for all 0.38-inch nominal surface mixtures.
SECTION:	403.03.06 Thickness Tolerance.
TABLE:	Nominal Maximum Size of Mixture vs. Thickness Range
REVISION:	Delete

Supplemental Specifications to The Standard Specifications for Road and Bridge Construction, 2000 Edition

(Effective with the October 25, 2002 Letting)

SUBSECTION: 403.03.09 Leveling and Wedging, and Scratch Course.
PART: A) Leveling and Wedging.
REVISION: Replace the first sentence with the following:

Conform to the gradation requirements (control points) for base, binder, or surface as applicable.

SUBSECTION: 403.03.09 Leveling and Wedging, and Scratch Course.
PART: B) Scratch Course.
REVISION: Replace the second sentence with the following:

Conform to the gradation requirements (control points) for base, binder, or surface as the Engineer directs.

SECTION: 404 OPEN-GRADED FRICTION COURSE
TABLE: LOT PAY ADJUSTMENT SCHEDULE FOR SPECIALTY MIXTURES
REVISION: Replace the table with the table on the last page of this supplement.

SUBSECTION: 409.02 MATERIALS AND EQUIPMENT.
REVISION: Replace "KM 64-427" with the following:

the guidelines in Subsection 409.03.02

SUBSECTION: 409.03.01 Restrictions.
REVISION: Add the following sentence:

When the mixture's bid item specifies PG 76-22, limit RAP content to 20 percent or less.

PUBLICATION: 2001 Supplemental Specifications to The Standard Specifications for Road and Bridge Construction.
SUBSECTION: 409.03.02 Preparation of Mixture.
PART: A) Mix Requirements.
REVISION: Void the Revision and replace with the following:

Conform to the Contract requirements for each mixture produced using RAP. If mixtures produced using RAP do not conform to the requirements for that mixture, complete the project using all virgin materials at no additional expense to the Department. Conform to the following table to select the appropriate grade of virgin asphalt binder to blend with the RAP:

Mixture's Bid Item	Appropriate Virgin Asphalt Binder		
	0-20% RAP	21-30% RAP	>30% RAP
PG 76-22	PG 76-22	-	-
PG 70-22	PG 70-22	PG 64-22	*
PG 64-22	PG 64-22	PG 64-22	*

* Select according to KM 64-427

SUBSECTION: 611.03.02 Precast Unit Construction.
REVISION: Replace the first sentence with the following:

Construct units according to ASTM C 1433 with the following exceptions and additions:

PUBLICATION: 2001 Supplemental Specifications to The Standard Specifications for Road and Bridge Construction.
SUBSECTION: 701.03.05 Joints.
PART: B) Corrugated Metal Pipe.
REVISION: Void the Revision and replace with the following:

Construct joints using a band with annular corrugations and a bolt, bar and strap connection. Use a minimum nominal band width of 12 inches for all pipe diameters 54 inches and smaller. Use a two-piece band with a minimum nominal width of 20 inches for all pipe diameters greater than 54 inches. Manufacture the band from the same base materials as the pipe. The pipe bands may be up to two gauges lighter than the pipe it is joining, with a minimum gauge thickness of 16. The Department may allow dimple band connections for field cut pipe. Install the connecting bands according to the manufacturer's written recommendations.

Supplemental Specifications to The Standard Specifications for Road and Bridge Construction, 2000 Edition
(Effective with the October 25, 2002 Letting)

SUBSECTION: **REVISION:**	710.02 MATERIALS. Add the following Subsection: 710.02.15 High Density Polyethylene (HDPE) Adjusting Rings. Conform to Section 846.
SUBSECTION: **PART:** **REVISION:**	710.03.01 Newly Constructed Small Drainage Structures. A) General. Replace the last sentence of the sixth paragraph with the following: Use precast concrete, precast concrete pipe sections, cast-in-place, brick, or HDPE adjusting rings for adjustment of existing manholes according to the Standard Specifications.
SUBSECTION: **REVISION:**	710.03.03 Adjusted Small Drainage Structures. Add the following sentence to the end of the first paragraph: For HDPE adjusting rings, install and seal according to the manufacturer's recommendations.
SUBSECTION: **REVISION:**	713.03 CONSTRUCTION. Replace the MUTCD references to "Part III" with "Part 3"
SUBSECTION: **REVISION:**	714.03 CONSTRUCTION. Replace the MUTCD references to "Part III" with "Part 3" and figure references to "3-11 and 3-12" with "3B-8 and 3B-9"
SUBSECTION: **REVISION:**	714.03.01 Layout. Replace the MUTCD reference to "Part III" with "Part 3"
PUBLICATION: **SUBSECTION:** **REVISION:**	2001 Supplemental Specifications to The Standard Specifications for Road and Bridge Construction. 714.05 PAYMENT. Replace with the following: The Department will make payment upon completion of the work. If after the proving period the markings do not meet minimum retroreflectivity requirements, the Department will adjust the payment or require corrective work according to the following:
SUBSECTION: **REVISION:**	718.01 DESCRIPTION. Replace the second sentence with the following: See Section 3C.01 of the MUTCD for a general description.
SUBSECTION: **PART:** **REVISION:**	807.02.03 Joint Sealer for Ridged Pipe. B) Rubber Gaskets. Replace with the following: B) Butyl Rubber Sealants. Furnish butyl rubber sealants conforming to the materials, manufacture, and physical requirements for sealants in AASHTO M 198, Section 6.2. Use only products from the Department's List of Approved Materials.
SUBSECTION: **PART:** **REVISION:**	807.02.03 Joint Sealer for Ridged Pipe. C) Flexible Plastic Gaskets. Replace with the following: C) Rubber Gaskets. Furnish rubber gaskets conforming to the materials, manufacture, and physical requirements for gaskets in AASHTO M 315. Use only products from the Department's List of Approved Materials.

Supplemental Specifications to The Standard Specifications for Road and Bridge Construction, 2000 Edition

(Effective with the October 25, 2002 Letting)

SECTION: 846 HIGH DENSITY POLYETHYLENE (HDPE) ADJUSTING RINGS
REVISION: Add the following New Section:

SECTION 846 HIGH DENSITY POLYETHYLENE (HDPE) ADJUSTING RINGS

846.01 RESIN. Use a recycled polyethylene plastic or virgin resin producing a molded part meeting the following requirements:

Melt Flow Index (ASTM D 1238)	4.0-10.0 g/10min
Density (ASTM D 792)	0.941-0.965 g/cm^3
Tensile (ASTM D 638)	2000-5000 lb/in^2
ESCR (ASTM D 1693)	Condition C

846.02 LOADING. Ensure the adjustment rings meet or exceed the loading requirements of AASHTO'S Standard Specification for HS-25 wheel loading for Highway Bridges.

SECTION: 827.04 PERMANENT SEED.
REVISION: Replace with the following:

827.04 PERMANENT SEED. Conform to the requirements outlined in the "Kentucky Seed Law and Provisions for Seed Certification in Kentucky" and the "Regulations under the Kentucky Seed Law", with following exceptions:

1. Obtain seed only through registered dealers that are permitted for labeling of seed.
2. Ensure all deliveries/shipments of premixed seed are accompanied with a master blend sheet.
3. The Department may sample the seed at the job site at any time.
4. Ensure all bags and containers have an acceptable seed tag attached.

Do not use seed (grasses, native grasses and legumes) if the weed seed is over 2%, total germination (including hard seed) is less than 60%, if the seed test date is over 9 months old exclusive of the month tested, or if the limits of noxious weed seed is exceeded.

Ensure that noxious weed seeds contained in any seed or seed mixture does not exceed the maximum permitted rate of occurrence per pound.

Name of Kind	Max. No. Seeds (per pound)*
Balloon Vine (Cardiospermum Halicacabum)	0
Purple Moonflower (Ipomoea turbinata)	0
Canada Thistle (Cirsium Arvense)	0
Johnsongrass (Sorghum Halepense and Sorghum Almum and perennial rhizomatous derivatives of these species)	0
Quackgrass (Elytrigia Repens)	0
Annual Bluegrass (Poa Annua)	256
Buckhorn Plantain (Plantago Ianceolata)	304
Corncockle (Agrostemma Githago)	192
Dodder (Cuscuta spp.)	192
Giant Foxtail (Setaria Faberii)	192
Oxeye Daisy (Chrysanthemum Ieucanthemum)	256
Sorrel (Rumex Acetosella)	256
Wild Onion and Wild Garlic (Allium spp.)	96

* Seed or seed mixtures that contain in excess of 480 total noxious seeds per pound is prohibited

Wildflower seed shall not be planted until approved by the MCL.

Supplemental Specifications to The Standard Specifications for Road and Bridge Construction, 2000 Edition
(Effective with the October 25, 2002 Letting)

LOT PAY ADJUSTMENT SCHEDULE FOR SPECIALTY MIXTURES (TEST DEVIATION FROM JMF)		
	Pay Value	Deviation From JMF (%)
Asphalt Binder Content	1.00	0.0-0.5
	0.98	0.6
	0.95	---
	0.90	0.7
	0.85	0.8
	0.75	≥ 0.9
1 1/2 inch Sieve	1.00	0-13
	0.98	14
	0.95	15-16
	0.90	17-20
	0.85	21-23
	0.75	≥ 24
1 inch, 3/4 inch, and 1/2 inch Sieves	1.00	0-9
	0.98	10
	0.95	11-12
	0.90	13-14
	0.85	15-16
	0.75	≥ 17
3/8 inch, No. 4, No. 8, No. 16, and No. 30 Sieves	1.00	0-8
	0.98	9
	0.95	10
	0.90	11-12
	0.85	13-14
	0.75	≥ 15
No. 50 Sieve	1.00	0-6
	0.98	7
	0.95	8
	0.90	9
	0.85	10
	0.75	≥ 11
No. 100 Sieve	1.00	0-3
	0.98	---
	0.95	4
	0.90	5
	0.85	---
	0.75	≥ 6
No. 200 Sieve	1.00	0.0-2.0
	0.98	2.5
	0.95	3.0
	0.90	---
	0.85	3.5
	0.75	≥ 4.0
Fineness Modulus	1.00	0.0-0.30
	0.98	0.31-0.34
	0.95	0.35-0.39
	0.90	0.40-0.46
	0.85	0.47-0.55
	0.75	≥ 0.56

UTILITY NOTES TO BE INCLUDED IN THE PROPOSAL
SPECIAL NOTES FOR UTILITY CLEARANCE
IMPACT ON CONSTRUCTION

JEFFERSON COUNTY, IM 264-1(145)0
FD52 056 68575
and
JEFFERSON COUNTY, IM 264-1(135)
FD52 056 53040
Watterson Expressway (I – 264)
ITEM No.'s 5-2000.00, 5-2001.00, & 5-2026.00
Pavement Rehabilation On Interstate 264

There are no utilities directly involved on subject project. There may be existing overhead electric, telephone and communication facilities that cross the existing centerline and roadways of Interstate 264. The Contractor should use caution when working under these facilities to insure there is no damage to these facilities. The minimum vertical clearance of existing overhead utilities should be 24 feet.

There are no known railroads involved on the subject project.

PROTECTION OF UTILITIES

The location of utilities provided in the contract documents has been furnished by the facility owners and/or by reviewing record drawings and may not be accurate. It will be the roadway contractor's responsibility to locate utilities before excavating by calling the various utility owners and by examining any supplemental information supplied by the cabinet. If necessary, the roadway contractor shall determine the exact location and elevation of utilities by hand digging to expose utilities before excavating in the area of a utility. The cost for repair and any other associated costs for any damage to utilities caused by the roadway contractor's operations shall be borne by the roadway contractor.

The Contractor is advised to contact the BUD one-call system; however, the Contractor should be aware that owners of underground facilities are not required to be members of the BUD one-call system. It may be necessary for the Contractor to contact the County Court Clerk to determine what utility companies have facilities in the project area.

SPECIAL PROVISIONS FOR PROTECTION OF RAILROAD INTEREST – P & L

1. AUTHORITY OF RAILROAD ENGINEER AND STATE ENGINEER:

The authorized representative of the Railroad Company, hereinafter referred to as Railroad Engineer, shall have final authority in all matters affecting the safe maintenance of Railroad traffic of his Company including the adequacy of the foundations and structures supporting the Railroad tracks.

The authorized representative of the State, hereinafter referred to as the Engineer, shall have authority over all other matters as prescribed herein and in the Project Specifications.

2. NOTICE OF STARTING WORK:

A. The Contractor shall not commence any work on Railroad rights of way until he has complied with the following conditions:

1. Given the Railroad written notice, with copy to the Engineer who has been designated to be in charge of the work, at least ten days in advance of the date he proposes to begin work on Railroad rights of way.

R. A. Buchanan, Chief Engineer
Paducah and Louisville Railway, Inc.
1500 Kentucky Avenue
Paducah, Kentucky 42003

2. Obtain written authorization from the Railroad to begin work on Railroad rights of way, such authorization to include an outline of specific conditions with which he must comply.

3. Obtain written approval from the Railroad of Railroad Protective Insurance Liability coverage as required by paragraph 14 herein.

4. Furnish a schedule for all work within the Railroad right of way as required by paragraph 7, B, 1.

B. The Railroad's written authorization to proceed with the work shall include the names, addresses, and telephone numbers of the Railroad's representatives who are to be notified as hereinafter required. Where more than one representative is designated, the area of responsibility of each representative shall be specified.

3. INTERFERENCE WITH RAILROAD OPERATIONS:

A. The Contractor shall so arrange and conduct his work that there will be no interference with Railroad operations, including train, signal, telephone and telegraphic services, or damage to the property of the Railroad Company or to poles, wires, and other facilities of tenants on the rights of way of the Railroad Company. Whenever work is liable to affect the operations or safety of trains, the method of doing such work shall first be submitted to the Railroad Engineer for approval, but such approval shall not relieve the Contractor from liability. Any work to be performed by the Contractor which requires flagging service or inspection service (watchman) shall be deferred by the Contractor until the flagging protection required by the Railroad is available at the job site.

B. Whenever work within Railroad rights of way is of such a nature that impediment to Railroad operations such as use of runaround tracks or necessity for reduced speed is unavoidable, the Contractor shall schedule and conduct his operations so that such impediment is reduced to the absolute minimum.

C. Should conditions arising from, or in connection with the work, require that immediate and unusual provisions be made to protect operations and property of the Railroad, the Contractor shall make such provisions. If in the judgement of the Railroad Engineer, or in his absence, the Engineer, such provisions are insufficient, either may require or provide such provisions as he deems necessary. In any event, such unusual provisions shall be at the Contractor's expense and without cost to the Railroad or the State.

4. TRACK CLEARANCES

A. The minimum track clearances to be maintained by the Contractor during construction are shown on the Project Plans. However, before undertaking any work within Railroad right of way, or before placing any obstruction over any track, the Contractor shall:

1. Notify the Railroad's representative at least 72 hours in advance of the work.

2. Receive assurance from the Railroad's representative that arrangements have been made for flagging service as may be necessary.

3. Receive permission from the Railroad's representative to proceed with the work.

4. Ascertain that the Engineer has received copies of notice to the Railroad and of the Railroad's response thereto.

5. CONSTRUCTION PROCEDURES

A. General:

Construction work on Railroad property shall be:

1. Subject to the inspection and approval of the Railroad.

2. In accord with the Railroad's written outline of specific conditions.

3. In accord with the Railroad's general rules, regulations and requirements including those relating to safety, fall protection and personal protective equipment.

4. In accord with these Special Provisions.

B. Excavation:

The sub-grade of an operated track shall be maintained with edge of berm at least 10'0" from centerline of track and not more than 24 inches below top of rail. Contractor will not be required to make existing section meet this specification if substandard, in which case existing section will be maintained.

C. Excavation of Structures:

The Contractor will be required to take special precaution and care in connection with excavating and shoring pits, and in driving piles, or sheeting for footings adjacent to tracks to provide adequate lateral support for the tracks and the loads which they carry, without disturbance of track alignment and surface, and to avoid obstructing track clearances with working equipment, tools or other material. The procedure for doing such work, including need of and plans for shoring, shall first be approved by the Engineer and the Railroad Engineer, but such approval shall not relieve the Contractor from liability.

D. Blasting:

1. The Contractor shall obtain advance approval of the Railroad Engineer and the Engineer for use of explosive on or adjacent to Railroad property. The request for permission to use explosives shall include a detailed blasting plan. If permission

for use of explosives is granted, the Contractor will be required to comply with the following:

(a) Blasting shall be done with light charges under the direct supervision of a responsible officer or employee of the Contractor and a licensed blaster.

(b) Electric detonating fuses shall not be used because of the possibility of premature explosions resulting from operation of two-way train radios.

(c) No blasting shall be done without the presence of an authorized representative of the Railroad. At least 72 hours advance notice to the person designated in the Railroad's notice of authorization to proceed (see paragraph 2B above) will be required to arrange for the presence of an authorized Railroad representative and such flagging as the Railroad may require.

(d) Have at the job site adequate equipment, labor and materials and allow sufficient time to clean up debris resulting from the blasting without delay to trains, as well as correcting at his expense any track misalignment or other damage to Railroad property resulting from the blasting as directed by the Railway's authorized representative. If his actions result in delay of trains, the Contractor shall bear the entire cost thereof.

2. The Railroad representative will:

(a) Determine the approximate location of trains and advise the Contractor the approximate amount of time available for the blasting operation and clean-up.

(b) Have the authority to order discontinuance of blasting if, in his opinion, blasting is too hazardous or is not in accord with these special provisions.

E. Maintenance of Railroad Facilities:

1. The Contractor will be required to maintain all ditches and drainage structures free of silt or other obstructions which may result from his operations and provide and maintain any erosion control measures as required. The Contractor will promptly repair eroded areas with Railroad rights of way and to repair any other damage to the property of the Railroad or its tenants.

2. All such maintenance and repair of damages due to the Contractor's operations shall be done at the Contractor's expense.

F. Storage of Materials and Equipment:

Materials and equipment shall not be stored where they will interfere with Railroad operations, nor on the rights of way of the Railroad Company without first having obtained permission from the Railroad Engineer, and such permission will be with the understanding that the Railroad Company will not be liable for damage to such material and equipment from any cause and that the Railroad Engineer may move or require the Contractor to move, at the Contractor's expense, such material and equipment.

All grading or construction machinery that is left parked near the track unattended by a watchman shall be effectively immobilized so that it cannot be moved by unauthorized persons. The Contractor shall protect, defend, indemnify and save Railroad, and any associated, controlled or affiliated corporation, harmless from and against all losses, costs, expenses, claim or liability for loss or damage to property or the loss of life or personal injury, arising out of or incident to the Contractor's failure to immobilize grading or construction machinery.

G. Cleanup:

Upon completion of the work, the Contractor shall remove from within the limits of the Railroad rights of way, all machinery, equipment, surplus materials, falsework, rubbish or temporary buildings of the Contractor, and leave said rights of way in a neat condition satisfactory to the Chief Engineer of the Railroad or his authorized representative.

6. DAMAGES:

A. The Contractor shall assume all liability for any and all damages to his work, employees, equipment and materials caused by Railroad traffic.

B. Any cost incurred by the Railroad for repairing damages to its property or to property of its tenants, caused by or resulting from the operations of the Contractor, shall be paid directly to the Railroad by the Contractor.

7. FLAGGING SERVICES:

A. When Required:

Under the terms of the agreement between the Department and the Railroad, the Railroad has sole authority to determine the need for flagging required to protect its operations. In general, the requirements of such services will be whenever the Contractor's personnel or equipment are likely to be, working on the Railroad's right of way, or across, over, adjacent to, or under a track, or when such work has disturbed or is likely to disturb a railroad structure or the railroad roadbed or surface and alignment of any track to such extent that the movement of trains must be controlled by flagging.

Normally, the Railroad will assign one flagman to a project; but in some cases, more than one may be necessary, such as yard limits where three (3) flagmen may be required. However, if the Contractor works within distances that violate instructions given by the Railroad's authorized representative or performs work that has not been scheduled with the Railroad's authorized representative, a flagman or flagmen may be required until the project has been completed.

B. Scheduling and Notification:

1. Not later than the time that approval is initially requested to begin work on Railroad right of way, Contractor shall furnish to the Railroad and the Department a schedule for all work required to complete the portion of the project within Railroad right of way and arrange for a job site meeting between the Contractor, the Department, and the Railroad's authorized representative. Flagman or Flagmen may not be provided until the job site meeting has been conducted and the Contractor's work scheduled.

2. The Contractor will be required to give the Railroad representative at least 10 working days of advance written notice of intent to begin work within Railroad right of way. Once begun, when such work is then suspended at any time, or for any reason, the Contractor will be required to give the Railroad representative at least 3 working days of advance notice before resuming work on Railroad right of way. Such notices shall include sufficient details of the proposed work to enable the Railroad representative to determine if flagging will be required. If such notice is in writing, the Contractor shall furnish the Highway Engineer a copy; if notice is given verbally it shall be confirmed in writing with copy to the Highway Engineer. If flagging is required, no work shall be undertaken until the flagman, or flagmen is present at the job site. It may take up to 30 days to obtain flagging initially from the Railroad. When flagging begins the flagman is usually

assigned by the Railroad to work at the project site on a continual basis until no longer needed and cannot be called for on a spot basis. If flagging becomes unnecessary and is suspended, it may take up to 10 days to again obtain flagging services from the Railroad. Due to labor agreements, it is necessary to give 5 working days notice before flagging service may be discontinued and responsibility for payment stopped.

3. If, after the flagman is assigned to the project site, emergencies arise which require the flagman's presence elsewhere, then the Contractor shall delay work on Railroad right of way until such time as the flagman is again available. Any additional costs resulting from such delay shall be borne by the Contractor and not the Department or Railroad.

C. Payment:

1. The Contractor will be responsible for paying the Railroad directly for any and all costs of flagging, which may be required to accomplish the construction.

2. The estimated cost of flagging may be as high as $609.52 for each eight hour day or portion of any day that a flagman is assigned to the project and $108.62 for each additional hour over the eight hour day.

3. If work is performed on a holiday, the flagging rate is 2 ½ times the normal rate.

4. Railroad work involved in preparing and handling bills will also be charged to the Contractor. The Railroad shall issue an invoice for such cost and expense every thirty (30) days, which shall be due and payable fifteen (15) days upon issue of same. Charges to the Department by the Railroad shall be in accordance with applicable provisions of Subchapter B, Part 140, Subpart I and Subchapter G, Part 646, Subpart B of the Federal-Aid Policy Guide issued by the Federal Highway Administration on December 9, 1991, including all current amendments. Flagging costs are subject to change. The above estimates of flagging cost are provided for information only and are not binding in any way.

D. Verification:

1. The Contractor and Department will review and sign the Railroad flagman's time sheet, attesting that the flagman was present during the time recorded. Flagman may be removed by Railroad if form is not signed. If flagman is removed, the

Contractor will not be allowed to re-enter the Railroad right of way until the issue is resolved. Any complaints concerning flagman or flagmen must be resolved in a timely manner. If need for flagman or flagmen is questioned, please contact Railroad's Projects Engineer (270) 444-4386. All verbal complaints must be confirmed in writing by the Contractor within 5 working days with copy to the Highway Engineer. All written correspondence should be addressed to:

R. A. Buchanan, Chief Engineer
Paducah and Louisville Railway, Inc.
1500 Kentucky Avenue
Paducah, Kentucky 42003

2. The Railroad flagman assigned to the project will be responsible for notifying the Project Engineer upon arrival at the job site on the first day (or as soon thereafter as possible) that flagging services begin and on the last day that he performs such services for each separate period that services are provided. The Project Engineer will document such notification in the project records. When requested, the Project Engineer will also sign the flagman's diary showing daily time spent and activity at the project site.

8. HAUL ACROSS RAILROAD:

A. Where the plans show or imply that materials of any nature must be hauled across a Railroad, unless the plans clearly show that the State has included arrangements for such haul in its agreement with the Railroad, the Contractor will be required to make all necessary arrangements with the Railroad regarding means of transporting such materials across the Railroad. The Contractor will be required to bear all costs incidental, including flagging, to such crossings whether services are performed by his own forces or by Railroad personnel.

B. No crossing may be established for use of the Contractor for transporting materials or equipment across the tracks of the Railroad Company unless specific authority for is installation, maintenance, necessary watching and flagging thereof and removal, all at the expense of the Contractor, is first obtained from the Railroad Engineer.

9. WORK FOR THE BENEFIT OF THE CONTRACTOR:

A. All temporary or permanent changes in wire lines or other facilities which are considered necessary to the project are shown on the plans; included in the force account agreement between the State

and the Railroad or will be covered by appropriate revisions to same which will be initiated and approved by the State and/or the Railroad.

B. Should the Contractor desire any changes in addition to the above, then he shall make separate arrangements with the Railroad for same to be accomplished at the Contractor's expense.

10. COOPERATION AND DELAYS:

A. It shall be the Contractor's responsibility to arrange a schedule with the Railroad for accomplishing stage construction involving work by the Railroad or tenants of the Railroad. In arranging his schedule he shall ascertain, from the Railroad, the lead time required for assembling crews and materials and shall make due allowance therefor.

B. No charge or claims of the Contractor against either the Department or the Railroad Company will be allowed for hindrance or delay on account of railway traffic; any work done by the Railway Company or other delay incident to or necessary for safe maintenance of railway traffic or for any delays due to compliance with these special provisions.

11. TRAINMAN'S WALKWAYS:

Along the outer side of each exterior track of multiple operated track, and on each side of single operated track, an unobstructed continuous space suitable for trainman's use in walking along trains, extending to a line not less than 10 feet from centerline of track, shall be maintained. Any temporary impediments to walkways and track drainage encroachments or obstructions allowed during work hours while Railway's protective service is provided shall be removed before the close of each day. if there is any excavation near the walkway, a handrail, with 10'-0" minimum clearance from centerline of track, shall be placed.

12. GUIDELINES FOR PERSONNEL ON RAILROAD RIGHT OF WAY:

A. All persons shall wear hard hats. Appropriate eye and hearing protection must be used. Working in shorts is prohibited. Shirts must cover shoulders, back and abdomen. Working in tennis or jogging shoes, sandals, boots with high heels, cowboy and other slip on type boots is prohibited. Hard-sole, lace-up footwear, zippered boots cinched with straps which fit snugly about the ankle are adequate. Safety boots are strongly recommended.

B. No one is allowed within 25' of the centerline of the track without specific authorization from the flagman.

C. All persons working near track when train is passing are to look out for dragging bands, chains and protruding or shifting cargo.

D. No one is allowed to cross tracks without specific authorization from the flagman.

E. All welders and cutting torches working within 25' of track must stop when train is passing.

F. No steel tape or chain will be allowed to cross or touch rails without permission.

13. GUIDELINES FOR EQUIPMENT ON RAILROAD RIGHT OF WAY:

A. No crane or boom equipment will be allowed to set up to work or park within boom distance plus 15' of centerline of track without specific permission from railroad official and flagman.

B. No crane or boom equipment will be allowed to foul track or lift a load over the track without flag protection and track time.

C. All employees will stay with their machines when crane or boom equipment is pointed toward track.

D. All cranes and boom equipment under load will stop work while a train is passing (including pile driving).

E. Swinging loads must be secured to prevent movement while train is passing.

F. No loads will be suspended above a moving train.

G. No equipment will be allowed within 25' of centerline of track without specific authorization of the flagman.

H. Trucks, tractors or any equipment will not touch ballast line without specific permission from railroad official and flagman.

I. No equipment or load movement within 25' or above a standing train or railroad equipment without specific authorization of the flagman.

J. All operating equipment within 25' of track must halt operations when a train is passing. All other operating equipment may be halted by the flagman if the flagman views the operation to be dangerous to the passing train.

K. All equipment, loads and cables are prohibited from touching rails.

L. While clearing and grubbing, no vegetation will be removed from railroad embankment with heavy equipment without specific permission from the Railroad Engineer and flagman.

M. No equipment or materials will be parked or stored on Railroad's property unless specific permission is granted from the Railroad Engineer.

N. All unattended equipment that is left parked on Railroad property shall be effectively immobilized so that it can not be moved by unauthorized persons.

O. All cranes and boom equipment will be turned away from track after each work day or whenever unattended by an operator.

14. INSURANCE:

A. In addition to any other forms of insurance or bonds required under the terms of the contract and specifications, the Contractor will be required to carry insurance of the following kinds:

1. Commercial General Liability and Property Damage Liability Insurance. Insurance shall include "XCU" coverage.

The Contractor shall furnish to the Department, for transmittal to the Railroad Company, certificate of insurance in triplicate as evidence that with respect to the operations he performs he carries regular Contractor's Public Liability Insurance and Contractor's Property Damage Liability Insurance both providing for limits of liability as follows:

COVERAGE	MINIMUM COMBINED LIMITS OF LIABILITY
Bodily Injury Liability) Property Damage Liability) Physical Damage to Property)	$3,000,000 Per Occurrence $3,000,000 Aggregate

2. Contractor's Protective Liability and Property Damage Liability Insurance.

The Contractor shall furnish the Department, for transmittal to the Railroad Company, certificate of insurance in triplicate as evidence that with respect to the operations performed for him by any subcontractor, he carries in his own behalf regular Contractor's Public Liability Insurance and regular Contractor's Protective Property Damage Liability Insurance both providing for limits of liability as follows:

COVERAGE	MINIMUM COMBINED LIMITS OF LIABILITY
Bodily Injury Liability) Property Damage Liability) Physical Damage to Property)	$3,000,000 Per Occurrence $3,000,000 Aggregate

3. Railroad Protective Liability Insurance.

The Contractor shall furnish to the Department, for transmittal to the Railroad Company, original and two (2) copies of Railroad Protective Insurance Policy with limits of liability as follows:

COVERAGE	MINIMUM COMBINED LIMITS OF LIABILITY
Bodily Injury Liability) Property Damage Liability) Physical Damage to Property)	$3,000,000 Per Occurrence $6,000,000 Aggregate

The Standard for this protective insurance shall follow the requirements of Subchapter G, Part 646, Subpart A of the Federal-Aid Policy Guide issued by the Federal Highway Administration on December 9, 1991, including all current amendments.

Evidence of insurance as required above shall be furnished to the address shown below for review by the Department and transmittal to the Railroad:

Department:	Railroad:
Mr. Rick Stansel, Director Div. of Contract Procurement KY Transportation Cabinet 9th Floor, Room 904 State Office Building Frankfort, Kentucky 40622 Phone (502) 564-3500	Mr. R. A. Buchanan Chief Engineer Paducah & Louisville Railway 1500 Kentucky Avenue Paducah, Kentucky 42003 Phone (502) 444-4300

The named insured, description of the work and designation of the job site to be shown on the Policy are as follows:

(a) Named Insured:

Paducah and Louisville Railway, Inc.

(b) Description and Designation:

Jefferson County I-264 Pavement Rehabilitation and Bridge Deck Repairs over the P & L track located between Campground Road and Ralph Avenue, and the approaches thereto.

As Shown in the Advertisement

B. If any part of the work is sublet, similar insurance and evidence thereof in the same amounts as required of the Prime Contractor, shall be provided by or in behalf of the subcontractor to cover his operations. Endorsements to the Prime Contractor's policies specifically naming subcontractors and describing their operations will be acceptable for this purpose.

All insurance herein before specified shall be carried until all work required to be performed under the terms of the contract has been satisfactorily completed within the limits of the rights of way of the Railroad as evidenced by the formal acceptance by the Department. Insuring Companies may cancel insurance by permission of the Department and Railroad or on thirty (30) days written notice to the Department and Railroad as follows:

Department:

Mr. Rick Stansel, Director
Div. of Contract Procurement
KY Transportation Cabinet
9th Floor, Room 904
State Office Building
Frankfort, Kentucky 40622
Phone (502) 564-3500

Railroad:

Mr. R. A. Buchanan
Chief Engineer
Paducah & Louisville Railway
1500 Kentucky Avenue
Paducah, Kentucky 42003
Phone (502) 444-4300

15. FAILURE TO COMPLY:

These Special Provisions are supplemental and amendatory to the Kentucky Department of Highways' Standard Specifications for Road and Bridge Construction, Edition of 2000, and amendments thereof, and where in conflict therewith, these Special Provisions shall govern.

In the event the Contractor violates or fails to comply with any of the requirements of these Special Provisions:

A. The Railroad Engineer may require that the Contractor vacate Railroad property.

B. **The Engineer may withhold all monies due the Contractor on monthly statements.**

Any such orders shall remain in effect until the Contractor has remedied the situation to the satisfaction of the Railroad Engineer and the Engineer.

16. <u>PAYMENT FOR COST OF COMPLIANCE</u>:

No separate payment will be made for any extra cost incurred on account of compliance with these special provisions. All such cost shall be included in prices bid for other items of the work as specified in the payment items.

17. <u>TRAINS PER DAY</u>:

It has been noted by the Railroad Engineer that the current Railroad Inventory indicates there are no more than four (4) trains per day operating at this location at a maximum speed of ten (10) miles per hour.

SPECIAL PROVISIONS FOR PROTECTION OF RAILWAY INTEREST - NS

1. **AUTHORITY OF RAILROAD ENGINEER AND DEPARTMENT ENGINEER:**

The authorized representative of the Railroad Company, hereinafter referred to as Railroad Engineer, shall have final authority in all matters affecting the safe maintenance of Railroad traffic of his Company including the adequacy of the foundations and structures supporting the Railroad tracks.

The authorized representative of the Department, hereinafter referred to as the Engineer, shall have authority over all other matters as prescribed herein and in the Project Specifications.

2. **NOTICE OF STARTING WORK:**

A. The contractor shall not commence any work on railroad rights-of-way until he has complied with the following conditions:

a. Given the Railroad written notice, with copy to the Engineer who has been designated to be in charge of the work, at least ten days in advance of the date he proposes to begin work on Railroad rights-of-way.

Office of Chief Engineer
Bridges & Structures
Norfolk Southern Corporation
99 Spring Street, SW
Atlanta, Georgia 30303

b. Obtained written authorization from the Railroad to begin work on Railroad rights-of-way, such authorization to include an outline of specific conditions with which he must comply.

c. Obtained written approval from the Railroad of Railroad Protective Insurance Liability coverage as required by paragraph 14 herein.

d. Furnished a schedule for all work within the Railroad rights-of-way as required by paragraph 7, B, 1.

B. The Railroad's written authorization to proceed with the work shall include the names, addresses, and telephone numbers of the Railroad's representatives who are to be notified as hereinafter

required. Where more than one representative is designated, the area of responsibility of each representative shall be specified.

3. INTERFERENCE WITH RAILROAD OPERATIONS:

A. The Contractor shall so arrange and conduct his work that there will be no interference with Railroad operations, including train, signal, telephone and telegraphic services, or damage to the property of the Railroad Company or to poles, wires, and other facilities of tenants on the rights-of-way of the Railroad Company. Whenever work is liable to affect the operations or safety of trains, the method of doing such work shall first be submitted to the Railroad Engineer for approval, but such approval shall not relieve the Contractor from liability. Any work to be performed by the Contractor which requires flagging service or inspection service shall be deferred by the Contractor until the flagging service or inspection service required by the Railroad is available at the job site.

B. Whenever work within Railroad rights-of-way is of such a nature that impediment to Railroad operations such as use of runaround tracks or necessity for reduced speed is unavoidable, the Contractor shall schedule and conduct his operations so that such impediment is reduced to the absolute minimum.

C. Should conditions arising from, or in connection with the work, requiring that immediate and unusual provisions be made to protect operations and property of the Railroad, the Contractor shall make such provisions. If in the judgment of the Railroad Engineer, or in his absence, the Engineer, such provisions is insufficient, either may require or provide such provisions as he deems necessary. In any event, such unusual provisions shall be at the Contractor's expense and without cost to the Railroad or the Department.

4. TRACK CLEARANCES:

A. The minimum track clearances to be maintained by the Contractor during construction are shown on the Project Plans. However, before undertaking any work within Railroad right-of-way, or before placing any obstruction over any track, the Contractor shall:

1. Notify the Railroad's representative at least 72 hours in advance of the work.

2. Receive assurance from the Railroad's representative that arrangements have been made for flagging service as may be necessary.

3. Receive permission from the Railroad's representative to proceed with the work.

4. Ascertain that the Engineer has received copies of notice to the Railroad and of the Railroad's response thereto.

5. CONSTRUCTION PROCEDURES:

A. General:

Construction work and operations by the Contractor on Railroad property shall be:

1. Subject to the inspection and approval of the Railroad.

2. In accord with the Railroad's written outline of specific conditions.

3. In accord with the Railroad's general rules, regulations and requirements including those relating to safety, fall protection and personal protective equipment.

4. In accord with these Special Provisions.

B. Excavation:

The subgrade of an operated track shall be maintained with edge of beam at least 10'-0" from centerline of track and not more than 24-inches below top of rail. Contractor will not be required to make existing section meet this specification if substandard, in which case existing section will be maintained.

C. Excavation for Structures:

The Contractor will be required to take special precaution and care in connection with excavating and shoring pits, and in driving piles or sheeting for footings adjacent to tracks to provide adequate lateral support for the tracks and the loads which they carry, without disturbance of track alignment and surface, and to avoid obstructing track clearances with working equipment, tools or other material. The procedure for doing such work, including need of and plans for shoring, shall first be approved by the Engineer and the Railroad Engineer, but such approval shall not relieve the Contractor from liability.

D. Blasting:

1. The Contractor shall obtain advance approval of the Railroad Engineer and the Engineer for use of explosives on or adjacent to Railroad property. The request for permission to use explosives shall include a detailed blasting plan. If permission for use of explosives is granted, the Contractor will be required to comply with the following:

   (a) Blasting shall be done with light charges under the direct supervision of a responsible officer or employee of the Contractor and a licensed blaster.

   (b) Electric detonating fuses shall not be used because of the possibility of premature explosions resulting from operation of two-way radios.

   (c) No blasting shall be done without the presence of an authorized representative of the Railroad. At least 72 hours advance notice to the person designated in the Railroad's notice of authorization to proceed (see paragraph 2B) will be required to arrange for the presence of an authorized Railroad representative and such flagging as the Railroad may require.

   (d) Have at the job site adequate equipment, labor and materials and allow sufficient time to clean up debris resulting from the blasting without delay to trains, as well as correcting at his expense any track misalignment or other damage to Railroad property resulting from the blasting as directed by the Railway's authorized representative. If his actions result in delay of trains, the Contractor shall bear the entire cost thereof.

2. The Railroad representative will:

   (a) Determine approximate location of trains and advise the Contractor the appropriate amount of time available for the blasting operation and clean up.

   (b) Have the authority to order discontinuance of blasting if, in his opinion, blasting is too hazardous or is not in accord with these special provisions.

E. Maintenance of Railroad Facilities:

1. The Contractor will be required to maintain all ditches and drainage structures free of silt or other obstructions which may result from his operations and provide and maintain any erosion control measures as required. The Contractor will promptly repair eroded areas within Railroad rights-of-way and repair any other damage to the property of the Railroad or its tenants.

2. All such maintenance and repair of damages due to the Contractor's operations shall be done at the Contractor's expense.

F. Storage of Materials and Equipment:

Materials and equipment shall not be stored where they will interfere with Railroad operations, nor on the rights-of-way of the Railroad Company without first having obtained permission from the Railroad Engineer, and such permission will be with the understanding that the Railroad Company will not be liable for damage to such material and equipment from any cause and that the Railroad Engineer may move or require the Contractor to move, at the Contractor's expense, such material and equipment.

All grading or construction machinery that is left parked near the track unattended by a watchman shall be effectively immobilized so that it cannot be moved by unauthorized persons. The Contractor shall protect, defend, indemnify and save Railroad, and any associated, controlled or affiliated corporation, harmless from and against all losses, costs, expenses, claim or liability for loss or damage to property or the loss of life or personal injury, arising out of or incident to the Contractor's failure to immobilize grading or construction machinery.

G. Cleanup:

Upon completion of the work, the Contractor shall remove from within the limits of the Railroad rights-of-way, all machinery, equipment, surplus materials, falsework, rubbish or temporary buildings of the Contractor, and leave said rights-of-way in a neat condition satisfactory to the Chief Engineer of the Railroad or his authorized representative.

6. DAMAGES:

A. The Contractor shall assume all liability for any and all damages to his work, employees, servants, equipment and materials caused by Railroad traffic.

B. Any cost incurred by the Railroad for repairing damages to its property or to property of its tenants, caused by or resulting from the operations of the Contractor, shall be paid directly to the Railroad by the Contractor.

7. FLAGGING SERVICES:

A. When Required:

Under the terms of the agreement between the Department and the Railroad, the Railroad has sole authority to determine the need for flagging required to protect its operations. In general, the requirements of such services will be whenever the Contractor's personnel or equipment are or are likely to be, working on the Railroad's right-of-way, or across, over, adjacent to, or under a track, or when such work has disturbed or is likely to disturb a railroad structure or the railroad roadbed or surface and alignment of any track to such extent that the movement of trains must be controlled by flagging.

Normally, the Railroad will assign one flagman to a project; but in some cases, more than one may be necessary, such as yard limits where three (3) flagmen may be required. However, if the Contractor works within distances that violate instructions given by the Railroad's authorized representative or performs work that has not been scheduled with the Railroad's authorized representative, a flagman or flagmen may be required full time until the project has been completed.

B. Scheduling and Notification:

1. Not later than the time that approval is initially requested to begin work on Railroad right-of-way, Contractor shall furnish to the Railroad and the Department a schedule for all work required to complete the portion of the project within Railroad right-of-way and arrange for a job site meeting between the Contractor, the Department, and the Railroad's authorized representative. Flagman or Flagmen may not be provided until the job site meeting has been conducted and the Contractor's work scheduled.

2. The Contractor will be required to give the Railroad representative at least 10 working days of advance written notice of intent to begin work within Railroad right-of-way in accordance with this special provision. Once begun, when such work is then suspended at any time, or for any reason, the Contractor will be required to give the Railroad representative at least 3 working days of advance notice before resuming work on Railroad right-of-way. Such notices shall include sufficient details of the proposed work to enable the Railroad representative to determine if flagging will be required. If such notice is in writing, the Contractor shall furnish the Engineer a copy; if notice is given verbally, it shall be confirmed in writing with copy to the Engineer. If flagging is required, no work shall be undertaken until the flagman, or flagmen is present at the job site. It may take up to 30 days to obtain flagging initially from the Railroad. When flagging begins, the flagman is usually assigned by the Railroad to work at the project site on a continual basis until no longer needed and cannot be called for on a spot basis. If flagging becomes unnecessary and is suspended, it may take up to 30 days to again obtain from the Railroad. Due to Railroad labor agreements, it is necessary to give 5 working days notice before flagging service may be discontinued and responsibility for payment stopped.

3. If, after the flagman is assigned to the project site, an emergency arises that requires the flagman's presence elsewhere, then the Contractor shall delay work on Railroad right-of-way until such time as the flagman is again available. Any additional costs resulting from such delay shall be borne by the Contractor and not the Department or Railroad.

C. Payment:

1. The Department will be responsible for paying the Railroad directly for any and all costs of flagging which may be required to accomplish the construction.

2. The estimated cost of flagging is $500 per day based on a 12-hour work day. This cost includes the base pay for the flagman, overhead, and includes an estimated $30 per diem charge for travel expenses, meals and lodging. The charge to the Department by the Railroad will be the actual cost based on the rate of pay for the Railroad's employees who are available for flagging service at the time the service is required.

3. Work by a flagman in excess of 8 hours per day or 40 hours per week, but not more than 12 hours a day will result in overtime pay at 1 and 1/2 times the appropriate rate. Work by a flagman in excess of 12 hours per day will result in overtime at 2 times the appropriate rate. If work is performed on a holiday, the flagging rate is 2 and 1/2 times the normal rate.

4. Railroad work involved in preparing and handling bills will also be charged to the Department. Charges to the Department by the Railroad shall be in accordance with applicable provisions of Subchapter B, Part 140, Subpart I and Subchapter G, Part 646, Subpart B of the Federal-Aid Policy Guide issued by the Federal Highway Administration on December 9, 1991, including all current amendments. Flagging costs are subject to change. The above estimates of flagging costs are provided for information only and are not binding in any way.

D. Verification:

1. The Contractor and Department will review and sign the Railroad flagman's time sheet (Form 11123), attesting that the flagman was present during the time recorded. Flagmen may be removed by the Railroad if form is not signed. If flagman is removed, the Contractor will not be allowed to re-enter the Railroad right-of-way until the issue is resolved. Any complaints concerning flagman or flagmen must be resolved in a timely manner. If need for flagman or flagmen is questioned, please contact Railroad's Engineer Grade Separation Structures (404) 529-1641. All verbal complaints will be confirmed in writing by the Contractor within 5 working days with a copy to the Highway Engineer. Address all written correspondence to:

Office of Chief Engineer Bridges & Structures Norfolk Southern Corporation 99 Spring Street, SW Atlanta, Georgia 30303	Attn: T. D. Wyatt Engineer Grade Separations

2. The Railroad flagman assigned to the project will be responsible for notifying the Project Engineer upon arrival at the job site on the first day (or as soon thereafter as possible) that flagging services begin and on the last day that he performs such services for each separate period that services are provided. The Project Engineer will document such notification in the project records. When requested, the

Project Engineer will also sign the flagman's diary showing daily time spent and activity at the project site.

8. HAUL ACROSS RAILROAD:

A. Where the plans show or imply that materials of any nature must be hauled across a Railroad, unless the plans clearly show that the Department has included arrangements for such haul in its agreement with the Railroad, the Contractor will be required to make all necessary arrangements with the Railroad regarding means of transporting such materials across the Railroad. The Contractor will be required to bear all costs incidental to such crossings whether services are performed by his own forces or by Railroad personnel.

B. No crossing may be established for use of the Contractor for transporting materials or equipment across the tracks of the Railroad Company unless specific authority for its installation, maintenance, necessary watching and flagging thereof and removal, until a private crossing agreement has been executed between the Contractor and Railroad.

9. WORK FOR THE BENEFIT OF THE CONTRACTOR:

A. All temporary or permanent changes in wire lines or other facilities which are considered necessary to the project are shown on the plans; included in the force account agreement between the Department and the Railroad or will be covered by appropriate revisions to same which will be initiated and approved by the Department and/or the Railroad.

B. Should the Contractor desire any changes in addition to the above, then he shall make separate arrangements with the Railroad for same to be accomplished at the Contractor's expense.

10. COOPERATION AND DELAYS:

A. It shall be the Contractor's responsibility to arrange a schedule with the Railroad for accomplishing stage construction involving work by the Railroad or tenants of the Railroad. In arranging his schedule he shall ascertain, from the Railroad, the lead time required for assembling crews and materials and shall make due allowance therefore.

B. No charge or claim of the Contractor against either the Department or the Railroad Company will be allowed for hindrance or delay on account of railway traffic; any work done by the Railway Company

or other delay incident to or necessary for safe maintenance of railway traffic or for any delays due to compliance with these special provisions.

11. TRAINMAN'S WALKWAYS:

Along the outer side of each exterior track of multiple operated track, and on each side of single operated track, an unobstructed continuous space suitable for trainman's use in walking along trains, extending to a line not less than 10 feet from centerline of track, shall be maintained. Any temporary impediments to walkways and track drainage encroachments or obstructions allowed during work hours while Railway's protective service is provided shall be removed before the close of each work day. If there is any excavation near the walkway, a handrail, with 10'-0" minimum clearance from centerline of track, shall be placed.

12. GUIDELINES FOR PERSONNEL ON RAILROAD RIGHT-OF-WAY:

A. All persons shall wear hard hats. Appropriate eye and hearing protection must be used. Working in shorts is prohibited. Shirts must cover shoulders, back and abdomen. Working in tennis or jogging shoes, sandals, boots with high heels, cowboy and other slip-on type boots is prohibited. Hard-sole, lace-up footwear, zippered boots or boots cinched up with straps which fit snugly about the ankle are adequate. Safety boots are strongly recommended.

B. No one is allowed within 25' of the centerline of track without specific authorization from the flagman.

C. All persons working near track while train is passing are to lookout for dragging bands, chains and protruding or shifted cargo.

D. No one is allowed to cross tracks without specific authorization from the flagman.

E. All welders and cutting torches working within 25' of track must stop when train is passing.

F. No steel tape or chain will be allowed to cross or touch rails without permission.

13. GUIDELINES EQUIPMENT ON RAILROAD RIGHT-OF-WAY:

A. No crane or boom equipment will be allowed to set up to work or park within boom distance plus 15' of centerline of track without specific permission from railroad official and flagman.

B. No crane or boom equipment will be allowed to foul track or lift a load over the track without flag protection and track time.

C. All employees will stay with their machines when crane or boom equipment is pointed toward track.

C. All cranes and boom equipment under load will stop work while train is passing (including pile driving).

E. Swinging loads must be secured to prevent movement while train is passing.

F. No loads will be suspended above a moving train.

G. No equipment will be allowed within 25' of centerline of track without specific authorization of the flagman.

H. Trucks, tractors or any equipment will not touch ballast line without specific permission from railroad official and flagman.

I. No equipment or load movement within 25' or above a standing train or railroad equipment without specific authorization of the flagman.

J. All operating equipment within 25' of track must halt operations when a train is passing. All other operating equipment may be halted by the flagman if the flagman views the operation to be dangerous to the passing train.

K. All equipment, loads and cables are prohibited from touching rails.

L. While clearing and grubbing, no vegetation will be removed from railroad embankment with heavy equipment without specific permission from the Railroad Engineer and flagman.

M. No equipment or materials will be parked or stored on Railroad's property unless specific authorization is granted from the Railroad Engineer.

N. All unattended equipment that is left parked on Railroad property shall be effectively immobilized so that it cannot be moved by unauthorized persons.

O. All cranes and boom equipment will be turned away from track after each work day or whenever unattended by an operator.

14. INSURANCE:

A. In addition to any other forms of insurance or bonds required under the terms of the contract and specifications, the Prime Contractor will be required to carry insurance of the following kinds and amounts:

1. Commercial General Liability Insurance having a combined single limit of not less than $2,000,000 per occurrence for all loss, damage, cost and expense, including attorneys' fees, arising out of bodily injury liability and property damage liability during the policy period. Said policy shall include "explosion, collapse, and underground hazard" ("XCU") coverage, shall be endorsed to name Railroad specified in item A.2.c. below as an additional insured, and shall include a severability of interests provision.

2. Railroad Protective Liability Insurance having a combined single limit of not less than $2,000,000 each occurrence and $6,000,000 in the aggregate applying separately to each annual period. If the project involves track over which passenger trains operate, the insurance limits required are not less than a combined single limit of $5,000,000 each occurrence and $10,000,000 in the aggregate applying separately to each annual period. Said policy shall provide coverage for all loss, damage or expense arising from bodily injury and property damage liability, and physical damage to property attributed to acts or omissions at the job site.

The standards for the Railroad Protective Liability Insurance are as follows:

The insurer must be rated A- or better by A.M. Best Company, Inc. The policy must be written using one of the following combinations of Insurance Services Office ("ISO") Railroad Protective Liability Insurance Form Numbers:

CG 00 35 01 96 and CG 28 31 10 93; or
CG 00 35 07 98 and CG 28 31 07 98.

The named insured shall read:

Norfolk Southern Railway Company
Three Commercial Place
Norfolk, Virginia 23510-2191
Attn: D. W. Fries, Director Risk Management

The description of operations must appear on the Declarations, must match the project description in this agreement,

and must include the appropriate Department project and contract identification numbers.

The job location must appear on the Declarations and must include the city, state, and appropriate highway name/number.

The name and address of the prime contractor must appear on the Declarations.

The name and address of the Department must be identified on the Declarations as the "Involved Governmental Authority or Other Contracting Party."

Other endorsements/forms that will be accepted are:

Broad Form Nuclear Exclusion – Form IL 00 21
30-day Advance Notice of Non-renewal or cancellation
Required State Cancellation Endorsement
Quick Reference or Index Form CL/IL 240
Endorsements/forms that are NOT acceptable are:
Any Pollution Exclusion Endorsement except CG 28 31
Any Punitive or Exemplary Damages Exclusion
Known injury or Damage Exclusion form CG 00 59
Any Common Policy Conditions form
Any other endorsement/form not specifically authorized in item no. 2.h above.

B. If any part of the work is sublet, similar insurance, and evidence thereof as specified in A.1 above, shall be provided by or on behalf of the subcontractor to cover its operations on Railroad's right of way.

C. Prior to entry on Railroad right-of-way, the original Railroad Protective Liability Insurance Policy shall be submitted by the Prime Contractor to the Department at the address below for its review and transmittal to the Railroad. In addition, certificates of insurance evidencing the Prime Contractor's and any subcontractors' Commercial General Liability Insurance shall be issued to the Railroad and the Department at the addresses below, and forwarded to the Department for its review and transmittal to the Railroad. The certificates of insurance shall state that the insurance coverage will not be suspended, voided, canceled, or reduced in coverage or limits without (30) days advance written notice to Railroad and the Department. No work will be permitted by Railroad on its right-of-way until it has reviewed and approved the evidence of insurance required herein.

DEPARTMENT:	RAILROAD:
Rick Stansel, Director Div. of Contract Procurement KY Transportation Cabinet Room 904 State Office Building Frankfort, Kentucky 40622	Mr. D. W. Fries, ARM Risk Manager Norfolk Southern Corporation Three Commercial Place Norfolk, VA 23510-2191

15. FAILURE TO COMPLY:

In the event the Contractor violates or fails to comply with any of the requirements of these Special Provisions:

A. The Railroad Engineer may require that the Contractor vacate Railroad property.

B. The Engineer may withhold all monies due the Contractor on monthly statements.

Any such orders shall remain in effect until the Contractor has remedied the situation to the satisfaction of the Railroad Engineer and the Engineer.

16. PAYMENT FOR COST OF COMPLIANCE:

No separate payment will be made for any extra cost incurred on account of compliance with these special provisions. All such costs shall be included in prices bid for other items of the work as specified in the payment items.

17. TRAINS PER DAY:

It has been noted by the Railroad Engineer that the current Railroad Inventory indicates there are up to four (4) trains per day operating at a maximum speed of ten (10) miles per hour at each of the three (3) subject K. & I. T. locations. These are (1) the "North-South" track, adjacent to Gibson Lane, leading to the "K" yard; (2) the "New Belt" track, between Gibson Lane and Algonquin Parkway, coming from the "K" yard; and (3) the "Mother's Cookie" track, between Bells Lane and Campground Road.

Office of Chief Engineer
Bridges & Structures
Norfolk Southern Corporation
Atlanta, GA 30303
Date: 10/07/2002
File: 117-28938 PND
Milepost: Various (K. & I. T.)

SPECIAL NOTE FOR VARIABLE MESSAGE SIGNS

This Special Note will apply when indicated on the plans or in the proposal. Section references herein are to the Department's 2000 Standard Specifications for Road and Bridge Construction.

1.0 DESCRIPTION. Furnish, install, operate, and maintain variable message signs at the locations shown on the plans or designated by the Engineer. When specified in the Contract, the signs and associated equipment become the property of the Department at the completion of the work.

2.0 MATERIALS.

2.1 General. Use LED or flip disk/LED Variable Message Signs Class I, II, or III from the Department's List of Approved Materials.

When signs do not become the property of the Department, unclassified signs may be submitted for approval by the Engineer. When unclassified signs are to become the property of the Department, submit signs to the Division of Materials for approval. Provide shop drawings, specifications, or other data to allow a thorough evaluation when requested. The Engineer may require a daytime and nighttime demonstration. The Engineer will make a final decision within 30 days after all required information is received.

2.2 Trailer and Sign Support. Mount the sign, controls, and all operating and auxiliary equipment on a 2-wheeled steel trailer with the following features:

1) 6,000 lbs GVWR capacity trailer hitch.
2) 3,500 lbs GVWR axle with lubricated wheel bearings for all LED signs.
3) 5,200 lbs GVWR axle with lubricated wheel bearings for all Flip Disk or Hybrid signs.
4) 15-inch trailer wheels equipped with radial tires equal to ST 225/75R15, load range C or better.
5) Locking lug nuts, one per wheel with a master key.
6) Fender for each tire.
7) Metal step pads on all areas of the fenders or frame that personnel must step or stand to operate or maintain the unit.
8) Surge-activated brakes of adequate capacity.
9) All required running lights, brake lights, and turn signals (12 v), with a plug for connecting to a towing vehicle.
10) 2-inch hitch and safety chains.
11) Tongue jack with a wheel, capable of being raised during towing.
12) Outriggers for stability when the unit is in use.
13) Lockable, but easily accessible, protective covers for the batteries, electronic controls, and all other attached equipment susceptible to tampering and weather.
14) 8-foot total unit maximum width when rigged for towing.

The Engineer may allow lesser standards for the trailer and sign support when it will not become the property of the Department.

2.3 Sign and Controls. All signs must:

1) Provide 3-line messages with each line being 8 characters long and at least 18 inches tall. Each character comprises 35 pixels.
2) Provide at least 40 preprogrammed messages available for use at any time. Provide for quick and easy change of the displayed message; editing of the message; and additions of new messages.
3) Provide a controller consisting of:
   a) Keyboard or keypad.
   b) Readout that mimics the actual sign display. (When LCD or LCD type readout is used, include backlighting and heating or otherwise arrange for viewing in cold temperatures.)
   c) Non-volatile memory or suitable memory with battery backup for storing pre-programmed messages.
   d) Logic circuitry to control the sequence of messages and flash rate.
4) Provide a serial interface that is capable of supporting complete remote control ability through land line and cellular telephone operation. Include communication software capable of immediately updating the message, providing complete sign status, and allowing message library queries and updates.
5) Allow a single person easily to raise the sign to a satisfactory height above the pavement during use, and lower the sign during travel.
6) Allow direct wiring for operation of the sign or arrow board from an external power source when desired.
7) Be Highway Orange on all exterior surfaces of the trailer, supports, and controller cabinet.
8) Provide operation in ambient temperatures from -30 to + 120 degrees Fahrenheit during snow, rain and other inclement weather.
9) Provide the driver board as part of a module. All modules are interchangeable, and have plug and socket arrangements for disconnection and reconnection. Printed circuit boards associated with driver boards have a conformable coating to protect against moisture.
10) Provide a sign case sealed against rain, snow, dust, insects, etc. The lens is UV stabilized clear plastic (polycarbonate, acrylic, or other approved material) angled to prevent glare.
11) Provide a flat black UV protected coating on the sign hardware, character PCB, and appropriate lens areas.
12) Provide a photocell control to provide automatic dimming.
13) Allow an on-off flashing sequence at an adjustable rate.
14) Provide a sight to aim the message.
15) Provide a LED display color of approximately 590 nm amber.
16) Provide the following 3-line messages preprogrammed and available for

use when the sign unit begins operation:

/KEEP/RIGHT/⇒⇒⇒/
/KEEP/LEFT/⇐⇐⇐/
/LOOSE/GRAVEL/AHEAD/
/RD WORK/NEXT/**MILES/
/TWO WAY/TRAFFIC/AHEAD/
/PAINT/CREW/AHEAD/
/REDUCE/SPEED/**MPH/
/BRIDGE/WORK/***0 FT/
/MAX/SPEED/**MPH/
/SURVEY/PARTY/AHEAD/
/MIN/SPEED/**MPH/
/ICY/BRIDGE/AHEAD/ /ONE LANE/BRIDGE/AHEAD/
/ROUGH/ROAD/AHEAD/
/MERGING/TRAFFIC/AHEAD/
/NEXT/***/MILES/
/HEAVY/TRAFFIC/AHEAD/
/SPEED/LIMIT/**MPH/
/BUMP/AHEAD/
/TWO/WAY/TRAFFIC/

*Insert numerals as directed by the Engineer.
Add other messages during the project when required by the Engineer.

2.4 Requirements for Flip-Disc Type Signs. Flip-disc type signs will have the following additional requirements:

1) Disc faces are fluorescent yellow on one side, and flat black on the reverse.
2) Discs are at least 3.5 square inches with a minimum character size of 5 discs horizontally by 7 discs vertically.
3) Discs are designed to operate without lubrication for at least 200 million operations.
4) Line change speed of 600 milliseconds or less.
5) When power is lost, the sign automatically becomes blank or displays a preprogrammed default message.

2.5 Power.

1) Design solar panels to yield 10 percent or greater additional charge than sign consumption. Provide energy backup for 21 days without sunlight and an on-board system charger with the ability to recharge completely discharged batteries in 24 hours.
2) Diesel Power Source. The Department will allow diesel power when the sign does not become the property of the Department. When used, follow all applicable specifications listed for solar signs and provide the following:
   a) At least 24 spare bulbs available on the project for quick replacement of burned out bulbs.
   b) Black light at both top and bottom of each line to illuminate discs for visibility at night or under adverse weather conditions, for flip disk signs.
   c) Diesel generator and electric start assembly, including batteries and a fuel capacity adequate to provide at least 72 hours continuous operation without refueling.

d) Fuel gage.
e) Provide all other specific features, such as bulb size, protection from sun glare, and shock protection for electronics and bulbs, to the satisfaction of the Engineer.

2.6 Signs To Be Retained By The Department. Use only new Class I signs with remote ability on the project. Class II signs may be used when flip disk signs are specified in the Contract. Upon project completion, deliver the sign to the Department's nearest maintenance lot in good repair and in serviceable condition. Include with each delivered sign the following items:

1) One operations manual.
2) Two parts books listing standard electronic part's numbers and manufacturer's stock number, if used.
3) Two service manuals including schematic wiring diagrams.
4) Warranty. Ensure that all unexpired warranties or guarantees on the sign, trailer, or appurtenant equipment remain in force after the sign units are transferred to the Department, until their normal expiration date. Batteries will be heavy-duty 18 month batteries or better, with at least 6 months of their warranty remaining.
5) Keys to the wheel lug nuts.

3.0 CONSTRUCTION. Furnish and operate the variable message signs as designated on the plans or by the Engineer. Use Class I, II, or III signs on roads with a speed limit less than 55 mph. Use Class I or II signs on roads with speed limits 55 mph or greater. Unless the Contract specifies flip-disk signs, use Class I signs on interstates and parkways.

Maintain the sign in proper working order, including repair of any damage done by others, until completion of the project. When the sign becomes inoperative, immediately repair or replace the sign. Repetitive problems with the same unit will be cause for rejection and replacement.

Use only project related messages and messages directed by the Engineer, unnecessary messages lessen the impact of the sign. When no message is needed, but it is necessary to know if the sign is operable, flash only a pixel or disk.

When the sign is not needed, move it where the Engineer specifies.

4.0 MEASUREMENT. The final quantity of Variable Message Sign will be the actual number of individual signs acceptably furnished and operated during the project. The Department will not measure signs replaced due to damage or rejection.

When the Contract states the Department will take ownership of the sign, the Department will consider all equipment specified in this note to be a part of the sign. The Department will not measure delivery for payment and will consider it incidental to the sign.

5.0 PAYMENT. The Department will pay for the Variable Message Signs at the unit price each. The Department will not pay for signs replaced due to damage or rejection. Payment is full compensation for furnishing all materials, labor, equipment, and service necessary to, operate, move, repair, and maintain or replace the variable message signs.

April 18, 2001

SPECIAL NOTE FOR DETECTABLE WARNINGS FOR SIDEWALK RAMPS

This Special Note will apply when indicated on the plans or in the proposal.

1.0 DESCRIPTION. Install detectable warnings at all sidewalk ramps.

2.0 MATERIALS. Use precast concrete pavers having a minimum thickness of 2 inches and truncated domes at the nominal dimensions shown below. Ensure their color is homogeneous throughout the paver and contrasts visually with adjoining surfaces, either light-on-dark or dark-on-light. The Department will allow either bright yellow or bright red as colors. The Department will consider Hanover Detectable Warning Pavers of Hanover Pennsylvania, Interlock Tactile Stone of Carlsbad California, and other equivalent pavers as acceptable. Obtain the Engineer's written approval before providing equivalent pavers.

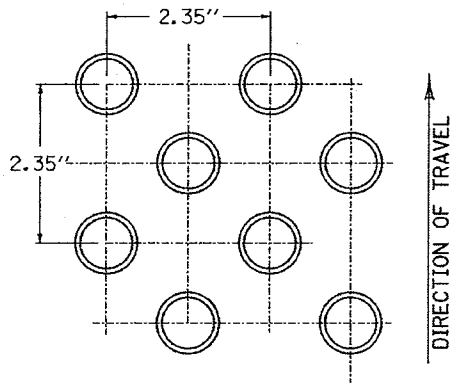

SQUARE PATTERN (DIAGONAL ALIGNMENT)

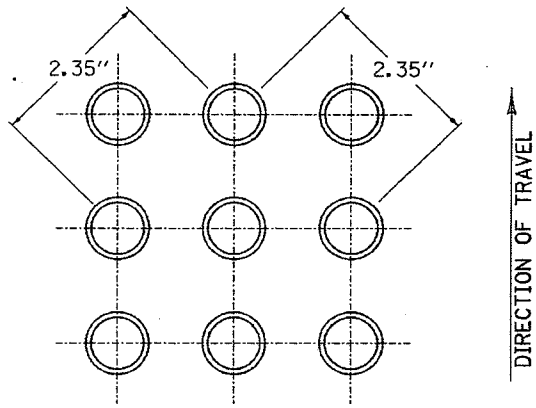

SQUARE PATTERN (PARALLEL ALIGNMENT)

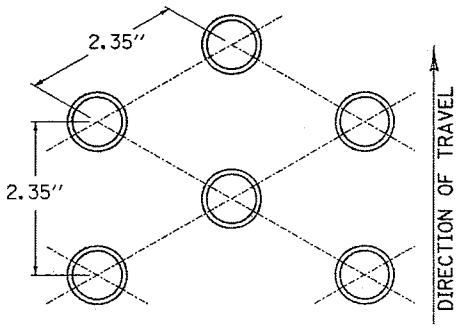

TRIANGULAR PATTERN

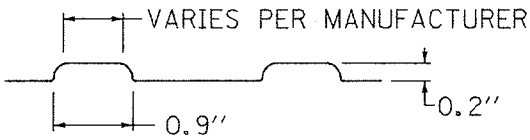

TRUNCATED DOME PROFILE

3.0 CONSTRUCTION. Install detectable warnings that extend the full surface width and length of the ramp. If a walkway crosses or adjoins a vehicular way, and the walking surfaces are not separated by curbs, railings, or other elements between the pedestrian areas and vehicular

areas, define the boundary between the areas with a continuous warning with a minimum width of 36 inches. Install the detectable warning pavers as shown below and according to the manufacture's recommendations.

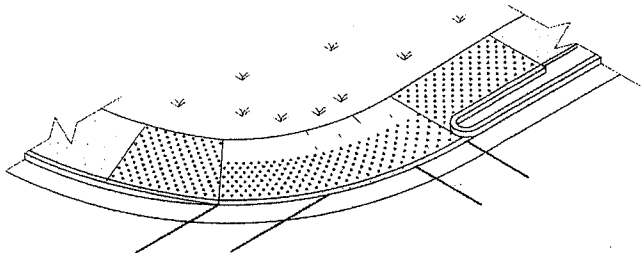

TYPICAL DETECTABLE WARNING PLACEMENT

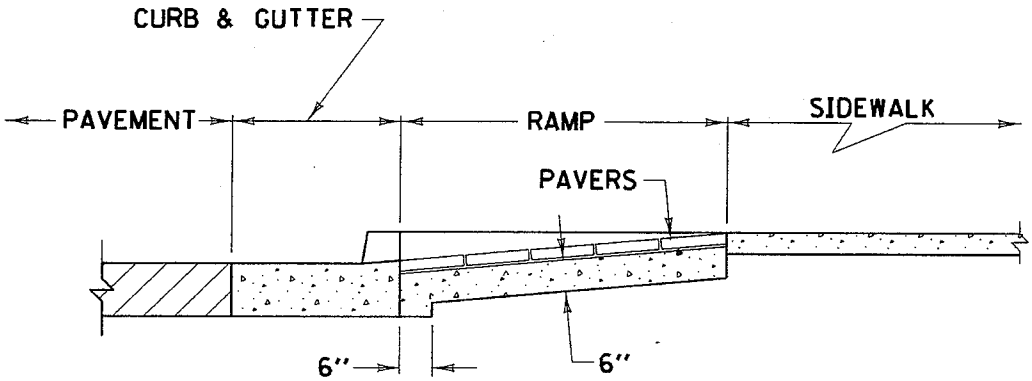

TYPICAL DETECTABLE WARNING INSTALLATION

4.0 Measurement and Payment. The Department will not measure Detectable Warnings or their application for payment and will consider them incidental to Concrete Sidewalk.

May 29, 2002

SPECIAL NOTES FOR FURNISHING AND ERECTING PRECAST SEGMENTS

Description

This work shall consist of the manufacture of structural precast concrete segments and the storage, transport and the erection of these segments into the completed structure. The final structure shall conform to the lines, levels and grades shown on the contract plans and with the provisions of these specifications.

This item shall be in accordance with the applicable provisions of Section 605 of the Standard Specifications.

Materials

A. Concrete. In accordance with the Standard Specifications for CONCRETE CLASS "AAA".

B. Reinforcement Bars. In accordance with Section 602 of the Standard Specifications.

C. Post-Tensioning Steel, Ducts, Anchorages and Grout. In accordance with the special provision for POST-TENSIONING.

Shop Drawings

The Contractor shall submit detailed shop drawings for approval in accordance with the Standard Specifications. The shop drawings shall include but not necessarily be limited to the following information:

1. Fully and accurately dimensioned views showing the geometry of the segments including all projections, recesses, notches, openings, blockouts and other pertinent details.

2. Details of nonprestressed steel reinforcing shall be clearly shown as to size, spacing and location including any special reinforcing required but not shown on the plans.

3. Size and type of ducts for all post-tensioning tendons and their horizontal and vertical profiles shall be clearly detailed. Duct supports, grout tubes, vents, and drains shall be shown including size, type and locations.

4. Details and locations of all other items to be embedded in the segments such as scuppers, inserts, lifting devices, and post-tensioning hardware shall be shown.

5. Prestressing details shall include sizes and properties of tendons, anchorages, plates, assemblies, details and locations of all couplers, and additional reinforcement necessary to resist anchor block stresses.

6. The contractor is responsible to coordinate the reinforcement location between segments (at transverse and longitudinal closures) and between segments and prestressing girders (at shear connector locations) to avoid reinforcement conflicts. These considerations need to be addressed in the shop drawings.

Handling and Erection of Segments

The Contractor (Fabricator) shall be responsible for proper handling, lifting, storing, transporting and erection of all segments so that they may be placed in the structure without damage.

Segments shall be maintained in an upright position at all times and shall be stored, lifted and/or moved in a manner to prevent torsion and other undue stress. Members shall be lifted, hoisted or stored with lifting devices approved on the shop plans or by other methods approved by the Engineer in writing.

Segments shall not be moved from the casting yard until all curing and strength requirements have been attained, and shall be supported in a manner that will minimize warping.

The Contractor shall inspect each segment visually for evidence of damage or defect before, during and after critical operations and as often as necessary to ensure adequate quality control. The Contractor shall immediately bring all such evidence of damage or defect to the attention of the Engineer. Segments may be inspected at any time during construction as deemed necessary by the Engineer to monitor compliance with this specification.

Prior to shipment, each segment shall be inspected for damage. The faces of all joints shall be thoroughly cleaned of laitance, bond breaking compound and any other foreign material by abrasive blasting. Blasting may be supplemented by detergent washing as necessary. During transport, firm support at the bearing locations noted above for support during storage shall be provided and the segments shall be fully secured against shifting. The support devices shall allow free rotation of the segment at each support point and free torsional rotation (twist) of the segment at all but one of the support points. Upon arrival at the erection site, each segment shall again be inspected.

If any damage has occurred during shipment, the Contractor shall immediately notify the Engineer. Erection of such damaged segments into the structure shall not proceed without authorization from the Engineer.

Construction Requirements

A. Forms.

In addition to the requirements of Article 601.2.13 of the Standard Specifications, the forms used to cast the concrete segments shall be capable of:

1. Producing the segments within the tolerances permitted.

2. Accommodating blockouts, openings and protrusions.

3. Adjusting to changes in segment geometry as shown in the plans, or for correcting previous minor casting errors to prevent accumulation.

4. Stripping without damage to the concrete.

Forms shall not be removed until the concrete has attained the release strength specified on the contract plans and in the specification for CONCRETE CLASS "AAA" as evidenced by test cylinders made and cured in the same manner as the segment. Alternatively, maturity meters or instrumented control cylinders may be used to evaluate the strength of the concrete in the segment. Care shall be exercised in removing the forms to prevent spalling and chipping of the concrete.

Forms shall be of sufficient thickness, with adequate external bracing and stiffeners, and shall be sufficiently anchored to withstand the forces due to placement and vibration of concrete. Internal bracing and holding devices in forms shall be limited to stay bolts in webs which can be removed from the concrete surface to permit patching following form removal. Joints shall be designed and maintained for mortar tightness.

The grade and alignment of forms shall be checked each time they are set and shall be maintained during the casting of concrete. Slab finish grade will be checked after the concrete is in place.

Metal forms shall be reasonably free from rust, grease or other foreign materials. All forms shall be cleaned thoroughly prior to each casting operation. End headers shall be maintained to provide a smooth casting surface.

All form surfaces for casting members shall be constructed and maintained to provide segment tolerances in accordance with Section M contained herein.

The faces of all forms, except otherwise noted, shall be properly cleaned and treated with form oil or other bond breaking coating prior to placing concrete. The oil or other materials used for this purpose shall be of a consistency and composition to facilitate form removal. Materials, which appreciably stain or react with the concrete shall not be used to facilitate segment removal.

B. Casting Concrete. Casting bed and forms shall be structurally adequate to support the segments without settlement or distortion. The casting bed shall be designed for a method and the hardware needed to adjust and maintain grade and alignment. Details for hardware and adjustment procedure shall be included in the above plans and specifications for the casting bed.

Grading of the soffit form and the top portion of each segment shall take into consideration the relative position of the member in the structure.

The anchorage system shall permit tendons to be inserted in the member after erection of segments.

C. Fabrication. Reinforcing steel shall be fabricated and placed according to the plans and Standard Specifications. Any conflict or interference with the proper location of ducts and/or reinforcing or blockouts shall be promptly resolved and corrections made as directed by the Engineer. No reinforcing steel shall be cut and removed to permit proper alignment of stressing ducts. Any bar that cannot be fabricated to clear the post-tensioning ducts shall be replaced by additional bars with adequate lap lengths and shall be submitted to the Engineer for approval.

All segments shall be marked on the underside with a unique identification, approved by the Engineer, at the time of form removal. This identification shall be used to identify each segment on shop plans, post-tensioning details and calculations and any other document pertaining to the fabrication and erection of precast concrete segments.

A positive means of holding the ducts in their correct position shall be provided in all cases and shall be indicated on the working drawings submitted for approval. The duct shall be supported at intervals specified in the special provision for POST-TENSIONING or as shown on the plans, and shall be securely fastened to prevent movement during placement of concrete.

During concrete placement, mandrels shall be used as stiffeners in each duct and shall extend throughout the length of the segment being cast and at least 2 feet (600 mm) into the corresponding duct of the previously cast segment. The mandrels shall also extend through or be positively attached to the fixed bulkhead. Taping or gluing the ends of the ducts in place shall not be permitted.

Embedded ducts and anchorage devices for tendons shall be placed in accordance with the specification for POST-TENSIONING. The Contractor shall submit to the Engineer, for approval, the method he proposes to use to align ducts passing from cast-in-place concrete into precast units.

After installation in the forms, the end of the ducts shall at all times be sealed to prevent entry of water and debris. Following each pour of concrete, the Contractor will be required to demonstrate that all empty ducts are free of water and are unobstructed and undamaged. Immediately prior to installation of the prestressing steel, the Contractor shall again demonstrate, to the satisfaction of the Engineer, that all ducts are unobstructed and that they are free of water and debris.

Post-tensioning anchors shall be placed into the form before the concrete is cast.
Temporary blockouts for anchors will not be allowed.

D. Placing Concrete. Concrete shall not be deposited into forms until the entire set up of the forms, reinforcements, ducts, and anchorages has been thoroughly inspected and checked.

The placing of concrete will not be permitted until the Engineer is satisfied that the rate of producing and placing concrete will be sufficient to complete the proposed pour and finishing operations within the scheduled time, that experienced concrete finishers are available where required for finished work and all necessary finishing tools and equipment are on hand at the site of the work and are in satisfactory condition for use.

During conveying, placement, and initial set, the concrete shall be protected against undue drying or rise in temperature and inclement weather. The placing of concrete will also not be permitted until the Engineer is satisfied that adequate measures, and protection, are available to prevent weather damage during conveying and placement.

Special care shall be taken to plan the sequence of placing concrete so as to assure that voids do not occur within the concrete in areas where air is likely to be entrapped within the forms or in areas where flow of the plastic concrete is constrained by embedded items.

Concrete shall not be dropped more than 5 feet (1.5 meters), unless confined by closed chutes or pipes. Formwork shall not be considered as chutes. Care shall be taken to fill each part of the form by depositing the concrete as near final position as possible.

Concrete shall be placed in horizontal layers not more than 1.5 feet (450 mm) thick except as hereinafter provided. When less than a complete layer is placed in one operation, it shall be terminated in a vertical bulkhead. Each layer shall be placed and compacted before the preceding layer has taken initial set. Each layer shall be so consolidated as to avoid the formation of a construction joint with a preceding layer which has not taken initial set. Bridge deck concrete on superelevation and/or grade that exceeds 2 percent, shall be placed from the low point upward.

Immediately after the work of placing concrete is halted, all accumulations of mortar splashed upon the remaining exposed reinforcement, adjacent segment and surfaces of forms shall be removed before the concrete takes its initial set. Care shall be taken when cleaning reinforcing steel to prevent damage to or breakage of the concrete-steel bond.

Placing equipment shall be cleaned as necessary at the end of each operation or work day and, just prior to reuse, shall again be checked and cleaned of hardened concrete and foreign materials.

Belt conveyors shall be horizontal or at a slope which will not cause excessive segregation or loss of ingredients. Concrete shall be protected against undue drying or rise in temperature. An approved device shall be used at the discharge end of a belt conveyor to prevent aggregate segregation. Mortar shall not be allowed to adhere to the return length of the belt. Concrete shall be discharged into a hopper or through a baffle.

No construction joints will be permitted within a segment except as detailed on the plans.

E. Vibration. All concrete shall be consolidated by means of approved vibrators together with any other equipment necessary to perform the work as specified. Internal vibrators shall

have a minimum frequency of 8,000 vibrations per minute and sufficient amplitude to consolidate the concrete effectively. At least two stand-by vibrators in working condition shall be provided for emergency use in case of malfunction.

The use of external vibrators for consolidating concrete will be permitted and may be required when the concrete is inaccessible for adequate consolidation. When external vibration is used, the forms shall be constructed sufficiently rigid to resist displacement or damage. Vibrating of concrete shall be done with care and in such a manner as to avoid displacement of reinforcing, ducts, and other embedded items.

F. Removal of Forms. Weight supporting forms shall remain in-place until the concrete has reached the compressive strength specified on the plans for form removal.

Care shall be exercised in removing the forms to prevent spalling and chipping of the concrete.

Prior to moving a segment from its as-cast position, erection marks identifying its location in the structure and order in the erection sequence shall be affixed to the underside of the segment.

G. Test Samples. Concrete testing shall be in accordance with the specification for CONCRETE CLASS "AAA". The concrete shall be tested for compressive strength for the following conditions:

1. Prior to form release and/or moving the components to storage.

2. Prior to post-tensioning if the component is less than 28 days old.

3. At 28 days.

H. Curing Concrete. Curing shall be in accordance with the Standard Specifications.

I. Finishing Concrete. All surfaces of segments and precast components, except the roadway surface of superstructure segments, shall receive a "Ordinary Finish" at the precast site in accordance with Article 601.03.18 of the Standard Specifications.

Minor breakage, spalling, or honeycomb [not over ½ inch (15 mm) deep] shall be repaired in accordance with Section 601 of the Standard Specifications. Major breakage or honeycomb will be subject to review by the Engineer. These areas may be repaired by a method approved by the Engineer if he determines that the structural or other functions of the segment will not be impaired. For cast-in-place construction, breakage, spalling, or honeycomb on any mating surface of an in-place segment otherwise found acceptable, shall be repaired prior to casting of the closure joint.

J. Finish for Top Surface of Segments. Final finish shall follow the requirements in Section 609 of the Standard Specifications.

The longitudinal screed shall be moved back and forth across the concrete while resting on the upper surface of the bulkheads. The surface of the concrete shall be screeded a sufficient number of times, and at such intervals to produce a uniform surface, true to grade and free of voids.

K. This section is intentionally left blank

L. Segment Surface Preparation at Cast-in-Place Joints. The segment surfaces in contact with secondary cast-in-place concrete pours shall be prepared as the surface for bonded construction joint, in accordance with Article 601.03.10 of the Standard Specifications.

M. Fabrication Tolerances shall not exceed the following:

1. Segment length, not cumulative (Longitudinal direction of the bridge): ± 1/8 in per 10 ft or 3/4", which ever is greater.

2. Segment width, not cumulative (Transverse direction of the bridge): ± 1/4 in.

3. Depth (overall): ± 1/4 in.

4. Tendon hole location: ± 1/8 in.

5. Position of shear keys: ± 1/4 in.

Review and Repair of Damaged or Defective Segments

A. Defects. Isolated defects are defects or damage which occur randomly and infrequently, as determined by the Engineer.

Recurring defects are defects or damages of the same general type and nature, which continue to be found in the same general location of the segments at an unacceptable frequency, as determined by the Engineer.

As a minimum, the first five segments cast will be jointly inspected by the Engineer, the Contractor, and the Contractor's Engineer after casting, after moving to storage from the casting machine, and before and after erection. All segment defects shall be identified and categorized during this inspection. The Contractor and the Contractor's Engineer shall examine the defects and propose to the Engineer, in writing:

1. The measures that the Contractor shall take to prevent recurring defects in future segments.

2. The method of repair of all defects discovered as a result of the inspection as required herein.

If recurring defects continue following implementation of the Contractor's preventive measures, or as detected at any time during the construction, the Engineer will instruct the Contractor, in writing, to cease operations producing such defective segments. The Contractor and the Contractor's Engineer shall examine the defects and propose to the Engineer, in writing: (1) the measures the Contractor shall take to prevent recurring defects in future segments; and (2) the method of repair of all defects discovered as a result of the inspection as required herein.

The Engineer will determine what constitutes damage or defect, whether the damage or defect is isolated or recurring, and will categorize the damage or defects. Three categories of defects are recognized by the Engineer for this purpose:

a. Cosmetic. Cosmetic defects or damages are those which do not affect the ability of the segment to resist construction or service loads or reduce the life expectancy of the structure. This category of defect includes a superficial discontinuities such as cracks, small spalls or honeycombed areas, or any defect that does not extend beyond the centerline of any reinforcing steel, or to any elements of the post-tensioning system.

   Cosmetic defects of other types and causes may also be designated by the Engineer.

   Repair of cosmetic defects shall be made in such a manner that the aesthetics and the integrity of the segments is restored.

b. Structural. This category of defect shall include any defect which will impair the ability of the segment to adequately resist construction or service loads or reduce the life expectancy of the structure. Any defect or damage which extends beyond the centerline of any reinforcing steel or into any element of the post-tensioning system or occurs in the deck portion of the segment is considered a structural defect.

   Examples of such defects include cracks, large spalls and honeycombed areas, major segregation or breakage of concrete; however, structural defects of other types and causes may be designated by the Engineer.

   The Contractor's Engineer shall be responsible for construction load analysis, service load analysis, and life expectancy determinations.

   Repair of structural defects shall be such that the structural integrity of the segment shall be completely restored to a condition to be expected had the defect or damage not occurred.

c. Rejectable. A rejectable defect is any defect or damage, as determined by the Engineer, which will impair the ability of the segment to adequately resist service loads or construction loads, or will reduce the life expectancy of the structure and which cannot be successfully repaired such that the structural integrity is completely restored. Any

segment with a rejectable defect will be deemed unacceptable and shall be removed from the work and replaced at no additional cost.

Damaged or defective segments may also be rejected by the Engineer for the following reasons:

i. Failure of the Contractor's Engineer to approve proposed repair procedures.

ii. Failure of the Contractor to execute the repair according to the Contractor's Engineer's approved procedure.

iii. Rejection of the proposed repair procedure or repair by the Engineer.

iv. Failure of the Contractor to provide the required certification or demonstration that the repair was successful and that the defect no longer exists, as required below.

v. Failure of the Contractor to eliminate recurring defects.

d. Determination by the Engineer that the work or materials used in the work does not meet other requirements of the Contract Documents and is not acceptable.

Segments with cosmetic defects will be paid for according to the contract unit price per cubic yard (cubic meter). However, such payment is subject to review by the Engineer, and failure of the Contractor to prosecute the required repairs properly and in a timely manner shall be cause for withholding of payments sufficient to protect the Owner's interests.

Segments with structural defects will not be paid for until the repair procedure is complete and the segment is certified or demonstrated to be free of structural defect as required.

B. Repairs. Cosmetic repairs shall only be made following procedures prepared by the Contractor, submitted in writing to and approved by the Engineer. The Contractor's repair procedure shall identify those areas required to be repaired prior to post-tensioning, and those that must be repaired after post-tensioning.

Structural repairs shall be made following procedures prepared by the Contractor. The repair procedure shall be signed and sealed by the Contractor's Engineer, shall be submitted in writing to the Engineer, and shall include the following minimum information:

1. A detailed description and sketch of the defect.

2. The magnitude and type of the most critical construction loading and service life condition to which the defective area will be subjected.

3. Detailed reinforcement requirements, material types, surface treatments, curing methods and general repair procedures proposed. The procedure shall clearly indicate

those areas required to be repaired before erection, and those areas to be repaired after erection.

4. The specific nondestructive testing method and procedure by which the Contractor shall demonstrate to the Engineer that the defect no longer exists and the segment has been restored to a condition to be expected had the defect or damage not occurred.

In lieu of physical demonstration, on a case-by-case basis, the Engineer may allow the Contractor to substitute a written certification by the Contractor's Engineer that the repair has been performed satisfactorily and that the defect no longer exits.

This work shall not be the basis for any request for extension of time or additional compensation.

A. Shear Key Repairs. When 20 percent or more of the shear keys have been damaged such that they cannot effectively transfer the shear across the joint, as determined by the Engineer, then the damaged shear keys shall be repaired after the segments have been erected and initially stressed together with no more than 10 percent of the final prestressing force applied across the joint. After the repair has been completed and obtained a minimum compressive strength of 2500 PSI (17.5 MPa), the final prestressing force may be applied across the joint.

Erection

A. General. An erection scheme for handling and erecting segments is shown in the plans. The erection scheme and lifting points are provided for information only. It is presented to aid the Contractor in developing his method of construction. The Contractor shall be solely responsible for design, fabrication, assembly and operation of all equipment to be used for handling and erecting segments. The Contractor shall be solely responsible for verifying the segment lifting points, handling stress to avoid cracking and damage to the segment during storage and erection.

Erection of segments shall not begin until the required shop drawings and calculations have been reviewed and approved by the Engineer. No extra payment will be made to the Contractor for any cost incurred in modifying the permanent structure due to temporary loading induced by the Contractor's handling and erection equipment or his erection scheme.

B. Age of Precast Segments at Time of Erection. Precast segments shall not be erected until they have reached the age of 14 days and have obtained the minimum specified strength in the plans.

C. Tolerances. The following tolerances shall apply to erection of superstructure segments:

a. The maximum differential between the outside face of adjacent segments in the erected position shall not exceed 3/16 inch (5 mm).

b. The horizontal and vertical position of a pier segment (superstructure segment which rests on a column or wall) shall be within 3/8 inch (6 mm) of the longitudinal alignment, grade and cross-slope required by the approved erection plans. The longitudinal slope shall not vary more than 0.05 percent from that required by the approved erection plans. These tolerances are for relative location of control points not absolute location.

As directed by the Engineer, the Contractor may need to perform grinding at segment closure and vicinity to achieve a smooth riding surface. The cost of grinding shall be incidental to the FURNISHING AND ERECTING PRECAST SEGMENTS.

Basis of Payment

The accepted quantities for FURNISHING AND ERECTING PRECAST SEGMENTS shall not be measured and paid for separately but shall be included in the LUMP SUM price for the work. Such payment shall be full compensation for all the equipment, tools, labor and incidental items required to complete the work.

No additional payment will be made for extra concrete, reinforcing steel and prestressing necessitated by approved modifications to the segments, joints, or structure for the purposes of the Contractor's construction methods. Nor will payment be made for temporary tendons which are approved to be left in the structure, either stressed or unstressed, for the convenience of the Contractor's operations.

SPECIAL NOTES FOR POST-TENSIONING

Description

A. General. This work shall consist of furnishing, installing, stressing and grouting prestressing steel in accordance with the details shown on the plans and the requirements of these Specifications.

It shall also include the furnishing and installing of any appurtenant items necessary for the particular prestressing system used, including but not limited to, anchorage assemblies, additional reinforcing bars required to resist stresses caused by anchorage assemblies, ducts, vents, inlets, outlets, and grout used for pressure grouting of the ducts.

B. Contractor Proposed Options. The Contractor may propose for consideration certain variations from the prestressing systems shown in the plans.

C. Restrictions to Contractor Proposed Option. Any prestressing system proposed by the Contractor shall comply with the following:

1. Materials and devices used in the prestress system shall conform to the requirements of the following Materials Section of this Specification.

2. The net compressive stress in the concrete after all losses is at least as large as that provided by the system shown on the Plans.

3. The distribution of individual tendons at each section generally conforms to the distribution shown on the Plans.

4. The ultimate strength of the structure with the proposed post-tensioning systems shall meet the requirements of Section 9 of the AASHTO Standard Specifications for Highway Bridges, 16th Edition, 1996 and all applicable interims; and shall be equivalent to the ultimate strength provided by the original design.

5. Stresses in the concrete and prestressing steel at all sections and at all stages of construction meet the requirements of the Design Criteria noted on the Plans.

6. Compliance with all the provisions of the Design Criteria, as noted on the plans.

7. The Contractor fully redesigns and details, as required, all the elements where the alternate prestressing system is proposed to be used.

8. The Contractor submits complete shop drawings including the prestressing scheme and system, reinforcing steel, concrete cover, and design calculations (including short and long term prestress losses) for the Engineer's review.

9. AASHTO M203 (ASTM A416) Grade 270, low-relaxation 0.6 inch (15 mm) diameter strand and 0.5 inch (13 mm) diameter strand may be substituted for each other on an equal force basis within any tendon size shown by the designer.

Shop Drawings

The Contractor shall submit detailed shop drawings in accordance with the Standard Specifications that include, but are not limited to:

A. A complete description of, and details covering, each of the prestressing systems to be used. This shall include:

1. Designation of the specific prestressing steel, anchorage devices, bar couplers, duct material and accessory items.

2. Properties of each of the components of the prestressing system.

3. Details covering assembly of each type of prestressing tendon.

4. Equipment to be used in the prestressing sequence.

5. Procedure and sequence of operations for prestressing and securing tendons.

6. Procedure for releasing the prestressing steel elements.

7. Parameters to be used to calculate the typical tendon force such as; expected friction coefficients, anchor set and prestress steel relaxation curves.

A. A table detailing the prestressing jacking sequence, jacking forces and initial elongations of each tendon at each stage of erection for all prestressing.

B. Complete details of the anchorage system for prestressing including certified copies of the reports covering tests performed on prestress anchorage devices as required in the following Materials Section D, and details for any reinforcing steel needed due to stresses imposed in the concrete by anchorage plates.

C. For the operation of grouting prestressing tendons, the materials and proportions for grout, details of equipment for mixing and placing grout and methods of mixing and placing grout.

D. Calculations to substantiate the prestressing system and procedures to be use including stress-strain curves typical of the prestressing steel to be furnished, required jacking forces, elongations of tendons during tensioning, and seating losses. These calculations shall show a typical tendon force after applying the expected friction coefficient, and anticipated losses including anchor set losses. Elongation calculations shall be revised when necessary to properly reflect the modulus of elasticity and nominal area as furnished by the Manufacturer for the lot of steel being tensioned. Elongation calculations shall also be adjusted, as

necessary, based upon the actual coefficient of friction measured and calculated by an in-place friction test.

E. Complete details of the apparatus and method to be used by the Contractor for the test required by the following Materials Sections H.2 and H.3, including the proposed tendons to be tested.

Materials

A. General. The materials to be incorporated into work covered by this Section shall conform to the requirements set out herein.

B. Prestressing Steel.

1. Strand. Unless otherwise noted on the plans, strand shall be uncoated, Grade 270 (1860), low-relaxation seven-wire strand conforming to the requirements of AASHTO M203 (ASTM A416).

2. Thread-Bar. Unless otherwise noted on the plans, prestress bars shall be uncoated, Grade 150 (1035), high strength deformed thread bars conforming to the requirements of AASHTO M275 (ASTM A722), Type II. All nuts shall be spherical hex nuts conforming to the requirements of ASTM A536.

C. Thread-Bar Couplers. Thread-bar couplers shall meet the requirements of AASHTO M275 (ASTM A722). Bar couplers shall be used only at locations specifically shown on the plans or approved by the Engineer. A bar coupler shall develop at least 96 percent of the required strength of the bar with a minimum elongation of two percent when tested in the unbonded condition in 10 foot (3 meter) gauge lengths, without failure either of the coupler or the thread-bar.

Testing of couplers shall be performed using samples of the prestressing bar to be used on the project. The test specimen shall be assembled in an unbonded state and, in testing, the anticipated set shall not be exceeded.

Only threaded type couplers shall be used with post-tensioning thread bars. Post tensioning thread-bars shall be threaded into the coupler to 1/2 the length of the coupler ± ¼ inch (6 mm) so that when two bars are coupled in a coupler, the length of each bar positively engaged in the coupler shall be half the coupler's length within the acceptable tolerances.

D. Prestress Anchorages. All prestressing steel shall be secured at the ends by means of permanent type anchoring devices. Prestress anchorages shall develop at least 95 percent of the minimum specified ultimate tensile strength of the prestressing steel.

Testing of anchorage devices shall be performed in accordance with Article 10.3.2.3 of the *AASHTO LRFD Bridge Construction Specifications, First Edition, 1998 with 1999 and 2000 interims* using samples representing the type of prestressing steel, bursting steel grade

and configuration, and concrete strength to be used on the project. The test specimen shall be assembled in an unbonded state and, in testing, the anticipated anchor set shall not be exceeded. Certified copies of test results for the anchorage system shall be supplied to the Engineer. The anchorage system shall be so arranged that the prestressing force in the tendon may be verified prior to the removal of the stressing equipment.

For tendon anchorages, the design and furnishing of any local zone reinforcement which is needed to resist bursting and splitting stresses imposed on the concrete by the proposed anchorage system shall be the responsibility of the Contractor at his expense. It shall be the responsibility of the manufacturer to review and approve any local zone reinforcement detailed on the Plans for suitability with the proposed anchorages and concrete strength to be used on the project.

Prestress anchorage devices shall effectively distribute prestressing loads to the concrete and shall conform to the requirements of Section 9.21 of the AASHTO Standard Specifications for Highway Bridges, 16th Edition, 1996 and all subsequent interims.

E. DUCTS.

1. General. All duct material shall be sufficiently rigid to withstand loads imposed during placing of concrete and internal pressure during grouting while maintaining its shape, remaining in proper alignment and remaining watertight.

   The duct system, including splices and joints, shall effectively sealed and bonded to prevent entrance of cement paste or water into the system and shall effectively contain pressurized grout during grouting of the tendon. The duct system shall also be capable of withstanding water pressure during flushing of a duct in the event the grouting operation is aborted.

   Coupling and transition fittings for ducts shall be polyethylene or polypropylene and shall have sufficient strength to prevent distortion or displacement of the ducts during concrete placement.

   The interior diameter of ducts for single strand, bar or wire tendons shall be at least ¼ inch (6 mm) greater than the nominal diameter of the tendon. The interior diameter of ducts shall be large enough to cause the duct to have an interior area not less than 2.5 times the net area of the prestress steel when tendons consisting of more than one strand, bar or wire are placed by the pull-through method.

2. Material Properties. Except as otherwise noted on the Plans, the type of duct material used shall be corrugated plastic polyethylene or polypropylene duct.

   a. Corrugated Polyethylene Plastic. Plastic duct shall be made of high-density polyethylene material and shall conform to the requirements of ASTM D3350-98a, cell classification range 424432C to 335534C.

b. Corrugated Polypropylene Plastic. Plastic duct shall be made of high-density polypropylene conforming to ASTM D4101, cell classification range PP210B43542 to PP210B65542.

c. The plastic material shall not react with concrete or enhance corrosion of prestress steel and shall be free of water-soluble chloride. Corrugated plastic duct shall be corrugated with a spiral having a pitch not less than 1/10 of the radius of the duct. The minimum wall thickness shall be 0.06 inches (1.5 mm) ± 0.01 inches (0.25 mm).

Corrugated plastic duct shall be designed so that a force equal to 40 percent of the ultimate tensile strength of the tendon will be transferred through the duct into the surrounding concrete in a length of 2'-6" (0.76 meters). Twelve static pull out tests shall be conducted to determine compliance of a duct with the force transfer requirement. If ten of these tests exceed the specified force transfer, the duct is acceptable. The Contractor shall provide to the Engineer certified test reports verifying that the duct meets specification requirements in regard to force transfer.

2. Minimum Radius of Curvature. Tendon ducts shall preferably be installed with a radius of curvature of 20 feet (6.1 meters) or more. Ducts with sharper curvature down to a minimum of 10 feet (3 meters) shall have confinement reinforcement detailed to tie the duct into the concrete. Duct curvature with radii less than 10 feet (3 meters) may be approved by the Engineer based on review of test data. The minimum radius for corrugated polyethylene or polypropylene duct shall be 30 feet (9.1 meters). The confinement reinforcement shall be proportioned in accordance with Section D16.3 of the *AASHTO Guide Specifications for Design and Construction of Segmental Concrete Bridges, 2nd Edition.*

F. Sampling and Testing. All testing shall be done in accordance with ASTM Specifications.

The following samples of materials and devices selected at locations designated by the Engineer shall be furnished by the Contractor at his expense.

1. Three samples of 7 foot (2.1-meter)-long prestressing wire or bar for each size from each heat number or production Lot.

2. Three samples of 5 foot (1.5-meter)-long prestressing strand for each size from each heat number or production Lot.

3. If bar couplers are to be used, three samples with two specimens each consisting of 4 foot (1.2-meter) lengths of the specific prestressing bar coupled with a bar coupler from the materials to be used on the project.

4. One unit of each prestress anchorage to be used on the project.

Samples shall be furnished at least one month in advance of the time they are to be incorporated into the work.

The Engineer reserves the right to reject for use any material or device which is obviously defective or was damaged subsequent to testing.

F. Manufacturer's Lots. The manufacturer of prestressing steel, prestress anchorages and bar couplers shall assign an individual number to each Lot of strand, wire, bar or devices at the time of manufacture. Each reel, coil, bundle or package shipped to the project shall be identified by tag or other acceptable means as to Manufacturer's Lot number. The Contractor shall be responsible for establishing and maintaining a procedure by which all prestressing materials and devices can be continuously identified with the Manufacturer's Lot number. Items which at any time cannot be positively identified as to Lot number shall not be incorporated into the work.

Low-relaxation strand shall be clearly identified as required by AASHTO M203 (ASTM A416). Any strand not so identified will not be acceptable.

The Contractor shall furnish manufacturer's certified reports covering the tests required by this Specification. A certified test report stating the guaranteed minimum ultimate tensile, yield strength, elongation and composition shall be furnished for each lot of prestressing steel. When requested, typical stress-strain curves for prestressing steel shall be furnished. A certified test report stating strength when tested using the type prestressing steel to be used in the work shall be furnished for each Lot of prestress anchorage devices.

H. Testing of Prestressing Tendons by the Contractor.

1. General. The Contractor shall perform certain testing of prestressing tendons as specified herein.

2. In-place Friction Test of Tendons. For the purpose of accurately determining the friction loss in stressing draped tendons, prior to stressing any draped tendons, the Contractor shall test, in place, a representative draped tendon of each size and type as selected by the Engineer. If deemed necessary by the Engineer to accurately establish friction loss, the Contractor shall perform tests on additional tendons selected by the Engineer.

   The test procedure shall consist of stressing the tendon at an anchor assembly with load cells at the dead end and jacking end. The test specimen shall be tensioned to 80 percent of ultimate in 10 increments. For each increment, the gauge pressure, elongation and load cell forces shall be recorded. The data shall be furnished to the Engineer. The theoretical elongations and post-tensioning forces shown on the post-tensioning shop drawings shall be re-evaluated by the Contractor using the results of the tests and corrected as necessary. Revisions to the theoretical elongations shall be submitted to the Engineer for evaluation and approval. The apparatus and methods used to perform the tests shall be proposed by the Contractor and is subject to the approval of the Engineer.

I. Grout for Tendons.

1. General. The grout to be used to fill the voids in tendons shall consist of portland cement, water and admixtures which impart low water content, flowability, minimum bleeding, water retention, and set retarding properties (if needed) to the grout. A pre-packaged commercial cement-based grout mixture meeting the requirements of this Specification is recommended. A non-commercial grout may be used subject to approval by the Engineer.

   The following pre-packaged, commercial grouts are acceptable:
   - Master Builders "Masterflow 816 Cable Grout"
   - Approved equal

2. Grout Components. Portland cement shall conform to the requirements of AASHTO M85 (ASTM C150) Type I or Type II. The cement shall be fresh and not contain lumps or other indication of hydration or "pack set". The Contractor shall furnish, for each shipment of cement, a manufacturer's report stating the results of tests made on samples of the material taken during production or transfer and certifying that the applicable requirements of AASHTO M85 (ASTM C150) have been met.

   Mineral admixtures may be allowed if improved properties can be demonstrated in testing.

   Fly Ash shall conform to ASTM 618 and have a maximum dosage of 20 percent of the cementitous content.

   Ground granulated blast furnace slag shall conform to ASTM C989 and have a maximum dosage of 50 percent of the cementitous content.

   Silica Fume shall conform to ASTM C1240 and have a maximum dosage of 8 percent of the cementitous.

   The water used in the grout shall be in accordance with Section 1002 of the Standard Specifications.

   Unless specifically noted otherwise on the plans, use of admixtures shall be at the discretion of the Contractor. Admixtures shall conform with ASTM C494, Types D, E, F or G. Air entraining admixtures (if used) shall conform to ASTM C260. Admixtures when incorporated into the grout mixture, shall impart the properties of low water content, good flowability, water retention, and, when necessary, increase in setting time. Admixtures containing chlorides (as CL in excess of 0.5 percent by weight of admixture per sack of cement), sulphites, fluorides, nitrates or nitrites shall not be used.

Anti-bleeding admixtures or pumping aids (admixtures) may be permitted if it is demonstrated by testing that improved properties are achieved. Expansion causing admixtures, such as aluminum or coke breeze, shall not be used.

When a grout-expanding admixture is required, or is used at the Contractor's option, it shall be well dispersed through the other admixtures. The amount of admixture to obtain a desired amount of expansion shall be determined by tests. If the source of manufacture or brand of either admixture or cement changes after testing, new tests shall be conducted to determine proper proportions.

All admixtures shall be used in accordance with the instructions of the Manufacturer. The date of manufacture shall be clearly stamped on each container. No admixture shall be used for which the shelf life recommended by the manufacturer has expired.

Aggregates (if used) shall conform to ASTM C33 and non-reactive per Appendix ASTM C33. The aggregate shall be fine enough to not restrict movement of the grout through the duct.

3. Grout Properties. The Contractor shall determine the exact kinds of admixtures and proportions of materials to be used to meet the requirements set out in Section I.4 and which, from prior documented experience with similar materials, equipment and placing conditions, will result in a grout which does not bleed and can be effectively placed. The quantity of water in the grout shall be as low as possible, consistent with the fluidity needed for placing.

   Prior to beginning grouting operations, the Contractor shall furnish to the Engineer, the results of tests performed by a laboratory approved by the Engineer demonstrating that the grout mixture he proposes to use meets the requirements of this Specification. This information shall include a graph relating compressive strength of the grout to age, covering ages from 24 hours to 28 days.

   Pre-packaged grouts shall be mixed and used in complete units only.

   A majority of the water shall be added to the mixer followed by cement and the admixture. The grout shall be mixed in mechanical mixing equipment capable of continuous mixing which will produce a grout free of lumps and undispersed cement. Pre-bagged grout shall be mixed in complete units. Retempering the grout will not be permitted. Grout shall be continuously agitated until it is pumped.

   The grout shall be placed within 30 minutes following the introduction of the cement to the grout.

4. Required Properties. Grout shall have the following physical properties:

Property	Test Value	Test Method
Water-Cementitous Ratio	Max. 0.45	--
Compressive Strength	Min. 3000 psi (21 MPa) @ 7days and 5000 psi (34.5 Mpa) @ 28 Days (average of 3 Cubes)	ASTM C109*
Initial Set of Grout	Min. 90 minutes	ASTM C266*
Bleeding	0 after 3 hours	ASTM C940
Wick Induced Bleed Test	0% after 4 hours	ASTM C940**
Volume Change	0 @ 24 hours and 0.3% maximum @ 28 days	ASTM C1090
Efflux Time from Flow Cone	Min. 11 seconds ***	ASTM C939

* The test specimen shall be prepared using the materials and in the proportions which are to be used in production of grout.

** Modified ASTM C940 (a) Condition dry ingredients, mixing water, prestressing strand and test apparatus overnight at 40 to 50°F (5 to 10°C). (b) Insert 800-ml of mixed condition grout with conditioned water into the 1,000-ml graduate cylinder. Mark the level of the top of the grout. (c) Insert completely a 20 in. (0.5 m) length of conditioned, cleaned, ASTM A416 7-wire strand [0.5 in.(12.7 mm) diameter] into the 1,000-ml graduate. Center and fasten the strand so it remains essentially parallel to the vertical axis of the cylinder. Mark the level of the top of the grout. (d) Measure the level of the bleed water every 15 min. for the first 1 hr and then hourly afterward for 4 hrs. (e) Calculate the bleed water, if any, and the resulting expansion per the procedures outlined in ASTM C940, with the quantity of bleed water expressed as a % of the initial grout volume.

*** The flow cone test shall not apply to grout which contains an admixture imparting a thixotropic consistency to the grout.

Construction Requirements

A. Post-Tensioning Technician. The post-tensioning supplier shall furnish a qualified technician to the job site as an advisor in the appropriate use of the post-tensioning systems. The technician is to be employed by the post-tensioning supplier and included in the cost of the post-tensioning. The technician shall be on site to inspect the installed post-tensioning components prior to each pour. The technician shall be on site to observe and advise during all stressing and grouting activities.

B. Protection of Prestressing Steel. All prestressing steel shall be protected against physical damage at all times from manufacture to grouting or encasing in concrete. Prestressing steel that has sustained physical damage at any time shall be rejected. Any reel that is found to contain broken wires shall be rejected and the reel replaced.

Prestressing steel shall be packaged in containers or shipping forms for protection of the steel against physical damage and corrosion during shipping and storage. A corrosion inhibitor, which prevents rust or other results of corrosion, shall be placed in the package or form, or shall be incorporated in a corrosion inhibitor carrier type packaging material. Only after submittal to and approval by the Engineer, may a corrosion inhibitor be applied directly to the steel. The corrosion inhibitor shall have no deleterious effect on the steel or concrete or bond strength of steel to concrete. The inhibitor shall be water-soluble. The corrosion inhibitor, the amount and time of initial application and the frequency of reapplication shall be subject to the approval of the Engineer. Packaging or forms damaged from any cause shall be immediately replaced or restored to original condition.

The prestressing steel shall be stored in a manner which will at all times prevent the packing material from becoming saturated with water and allow a free flow of air around the packages. If the useful life of the corrosion inhibitor in the package expires, it shall immediately be rejuvenated or replaced.

At the time the prestressing steel is installed in the work, it shall be free from loose rust, loose mill scale, dirt, paint, oil, grease or other deleterious material. Removal of tightly adhering rust or mill scale will not be required. Prestressing steel which has experienced rusting to the extent that it exhibits pits visible to the naked eye shall not be used in the work.

The shipping package or form shall be clearly marked with the heat number and with statement that the package contains high-strength prestressing steel, and care is to be used in handling. The type and amount of corrosion inhibitor used, the date when placed, safety orders and instructions for use shall also be marked on the package or form.

When the plans provide for prestressing steel to be installed in one unit with a length of prestressing steel left projecting to be threaded into another unit during erection, all of the prestressing shall be protected from corrosion from immediately after it is installed in the first unit until the tendon is grouted in the second unit as provided below.

All anchorages, end fittings, couplers, and exposed tendons that will not be encased in concrete or grout in the completed work shall be permanently protected against corrosion.

When corrosion protection of in-place prestressing steel is required, a corrosion inhibitor that prevents rust or other results of corrosion shall be applied directly to the prestressing steel. The corrosion inhibitor shall have no deleterious effect on the prestressing steel or grout or bonding of the prestressing steel to the grout. The inhibitor shall be water soluble. The corrosion inhibitor, the amount and time of initial application, and the frequency of reapplication shall be subject to the Engineer's approval.

The corrosion inhibitor shall consist of a vapor phase inhibitor (VPI) powder conforming to the provisions of Federal Specification MIL-P-3420F-87 or as otherwise approved by the Engineer.

C. Placement of Ducts. The ducts shall be rigidly supported at the proper locations in the forms by ties to reinforcing steel that are adequate to prevent displacement during concrete placement. Supplementary support bars shall be used where needed to maintain proper alignment of the duct. Hold-down ties to the forms shall be used when the buoyancy of the ducts in the fluid concrete would lift the reinforcing steel.

Internal ducts shall be rigidly supported by ties to reinforcing steel at a maximum spacing of 2 feet (600 mm).

External ducts shall have a maximum unsupported length of 25 feet (7.6 meters), unless a vibration analysis is made. Any additional mild reinforcing required to support post-tensioning ducts shall be supplied by the Contractor at no expense to the Engineer. The tolerance on the location of the tendons shall be plus or minus ¼ inch (6 mm) at any point.

Joints between sections of duct shall be coupled with positive connections that do not result in angle changes at the joints. The connections shall be sealed with heat-shrink wrapping to prevent the intrusion of cement paste.

After placing of ducts and reinforcement and forming is complete, an inspection shall be made to locate possible duct damage. All unintentional holes or openings in the duct shall be repaired prior to concrete placing.

Grout openings and vents shall be securely anchored to the duct and either to the forms or to reinforcing steel to prevent displacement during concrete-placing operations.

After installation in the forms, the ends of ducts shall at all times be sealed to prevent entry of water and debris.

During concrete placement for precast segments, mandrels shall be used as stiffeners in each duct and shall extend throughout the length of the segment being cast and at least 2 feet (600 mm) into the corresponding duct of the previously cast segment. The mandrels shall be of

sufficient rigidity to maintain the duct geometry within a 1/4 inch (6 mm) tolerance and within a 1/8 inch (3 mm) tolerance at the segment joints.

All ducts or anchorage assemblies for permanent post-tensioning shall be provided with vent pipes or other suitable connections at each end and at each side of couplers for the injection of grout after post-tensioning. Ducts shall be vented at the high points of the post-tensioning steel profile when there is more than a 6 inches (150-mm) variation in the vertical position of the duct and the tendon length exceeds 400 feet (122 meters). Where freezing conditions can be anticipated prior to grouting, drains shall be installed at the low points of all tendons to prevent the accumulation of water.

Vents shall be ½ inch (13-mm) minimum diameter plastic pipe. All connections to ducts shall be made with metallic or plastic structural fasteners. Waterproof tape shall be used at all connections including vent and grouting pipes. Plastic components, if selected and approved, shall not react with the concrete or enhance corrosion of the post-tensioning steel, and shall be free of water soluble chlorides.

The vents shall be mortar tight, taped as necessary, and shall provide means for injection of grout through the vents and for sealing the vents. Ends of plastic vents shall be removed to the surface of the concrete after the grout has set.

All grout injection and vent pipes shall be fitted with positive mechanical shut-off valves. Vents and injection pipes shall be fitted with valves, caps or other devices capable of withstanding the pumping pressures.

D. Placement of Prestressing Steel. Prior to installation of ducts, the Contractor shall determine the most suitable method of feeding prestressing steel into the ducts. Long, draped tendons may necessitate preassembly of the prestressing steel in the ducts prior to duct placement or feeding of prestressing steel into the in-place ducts prior to draping of the tendon and casting of the concrete.

All prestressing steel preassembled in ducts and installed prior to the placement of concrete shall be accurately placed and held in position during concrete placement.

When the prestressing steel is installed after the concrete has been placed, the Contractor shall demonstrate to the satisfaction of the Engineer that the ducts are free of water and debris immediately prior to installation of the steel. The total number of strands in an individual tendon may be pulled into the duct as a unit, or the individual strand may be pulled or pushed through the duct. Anchorage devices or block-out templates for anchorages shall be set and held so that their axis coincides with the axis of the tendon and anchor plates are normal in all directions to the tendon.

Protection of Steel After Installation. Prestressing steel installed in members prior to placing and curing of the concrete, or installed in the duct but not grouted within the time limit specified below, shall be continuously protected against rust or other corrosion by means of a corrosion inhibitor placed in the ducts or directly applied to the steel. The

prestressing steel shall be so protected until grouted or encased in concrete. Prestressing steel installed and tensioned in members after placing and curing of the concrete and grouted within the time limit specified below will not require the use of a corrosion inhibitor described herein, and rust that may form during the interval between tendon installation and grouting will not be cause for rejection of the steel.

The permissible interval between tendon installation and grouting without the use of a corrosion inhibitor for various exposure conditions shall be taken as follows:

Very Damp Atmosphere or over saltwater (Humidity > 70 percent)	7 days
Moderate Atmosphere (Humidity from 40 percent to 70 percent)	15 days
Very Dry Atmosphere (Humidity < 40 percent)	20 days

After tendons are placed in ducts, the openings at the ends of the ducts shall be sealed to prevent entry of moisture.

When steam curing is used, unless anchorage systems mandate its installation, steel for post-tensioning shall not be installed until the steam curing is completed.

Such tendons shall be protected against corrosion by means of a corrosion inhibitor placed in the ducts or on the steel, or shall be stressed and grouted within seven days after steam curing.

Whenever electric welding is performed on or near members containing prestressing steel, the welding ground shall be attached directly to the steel being welded. All prestressing steel and hardware shall be protected from weld spatter or other damage.

E. Placement of Anchorage Hardware. The Contractor is responsible for the proper placement of all materials according to the design documents of the engineer of record and the requirements stipulated by the anchorage device supplier. The Contractor shall exercise all due care and attention in the placement of anchorage hardware, reinforcement, concrete, and consolidation of concrete in anchorage zones. Modifications to the local zone details verified under provisions of Article 9.21.7.3, AASHTO Standard Specifications for Highway Bridges, 16th Edition and by testing as specified herein shall be approved by both the engineer of record and the anchorage device supplier.

F. Post-tensioning Operations.

1. Stress in Tendons. The design of the structure is based on the assumed friction and wobble coefficient shown in the plans.

The post-tensioning forces shown are theoretical and do not include losses in the system or thermal affects.

All post-tensioning shall be tensioned by means of hydraulic jacks so that the force of the prestressing steel shall not be less than the value shown on the approved shop drawings. The maximum temporary tensile stress (jacking stress) in prestressing steel shall not exceed 80 percent of the specific minimum ultimate tensile strength of the prestressing steel. The prestressing steel shall be anchored at initial stresses in a way that will result in the ultimate retention of permanent forces of not less than those shown on the approved shop drawings, but in no case shall the initial stress at the anchorage, after anchor set, exceed 70 percent of the specified minimum ultimate tensile strength of the prestressing steel.

Permanent force and permanent stress will be considered as the force and stress remaining in the prestressing steel after all losses, including creep and shrinkage of concrete, elastic shortening of concrete, relaxation of steel, thermal affect, losses in post-tensioned prestressing steel due to sequence of stressing friction and take-up of anchorages, and all other losses peculiar to the method or system of prestressing have taken place or have been provided for in an approve stressing plan.

When friction must be reduced, water soluble oil or graphite with no corrosive agents may be used as a lubricant subject to the approval of the Engineer. Lubricants shall be flushed from the duct as soon as possible after stressing is completed by use of water pressure. These ducts shall be flushed again just prior to the grouting operations. Each time the ducts are flushed, they shall be immediately blown dry with oil-free air.

2. Stressing Jacks. Each jack used to stress tendons shall be equipped with a pressure gauge having an accurate reading dial at least 6 inch (150 mm) in diameter for determining the jack pressure. The pressure gauge must be installed at or near the stressing ram. Prior to use for stressing on the project, each jack and its gauge shall be calibrated as a unit by a testing laboratory approved by the Engineer.

   Calibration shall be done with the cylinder extension approximately in the position that it will be when applying the final jacking force and with the jacking assembly in an identical configuration to that which will be used at the job site (i.e., same length hydraulic lines). Certified calibration calculations and a calibration chart, both in English (metric) units of measure, shall be furnished to the Inspector for each jack.

   Recalibration of each jack shall be done at six month intervals and at other times when requested by the Engineer. At the option of the Contractor, calibrations subsequent to the initial laboratory calibration may be accomplished by the use of a master gauge.

   The master gauge shall be calibrated at the same time as the initial calibration of the jacks, and shall be part of the unit for each jack. The data recorded during the initial calibrations shall be furnished to the Engineer for use in the field. The master gauge shall be supplied by the Contractor in a protective waterproof container capable of protecting

the calibration of the master gauge during shipment. The Contractor shall provide a quick-attach coupler next to the permanent gauge in the hydraulic lines which enables the quick and easy installation of the master gauge to verify the permanent gauge readings. The master gauge shall remain in the possession of the Engineer for the duration of the project.

If a jack is repaired or modified, the jack shall be recalibrated by the approved testing laboratory. No extra compensation will be allowed for the initial or subsequent jack calibrations or for the use and required calibration of a master gauge.

3. Stressing of Tendons. Post-tensioning forces shall not be applied until the concrete has attained the specified compressive strength as evidenced by tests on representative samples of the concrete. These samples shall be stored under the same conditions as the concrete in order to accurately represent the curing condition of the concrete in place.

   A record of gauge pressures and tendon elongations for each tendon shall be provided by the Contractor for review and approval by the Engineer. Elongations shall be measured to an accuracy of 1/16 inch (1.5 mm). Stressing tails of post-tensioned tendons shall not be cut off until the stressing records have been approved.

The stress in tendons during tensioning shall be determined by the gauge or load cell ratings and shall be verified with the measured elongations. Calculations of anticipated elongations shall utilize the modulus of elasticity, based on nominal area, as furnished by the Manufacturer for the lot of steel being tensioned, or as determined by a bench test of strands used in the work.

All tendons shall be tensioned to a preliminary force to eliminate any take-up in the tensioning system before elongation readings are started. This preliminary force shall be 20 percent of the final jacking force. The initial force shall be measured by a dynamometer, or by other approved method, so that its amount can be used as a check against elongation as computed and as measured. Each strand shall be marked prior to final stressing to permit measurement of elongation and to ensure that all anchor wedges set properly. The elongation in the tendon shall be measured before and after release of the jack in order to determine the actual anchor set.

It is anticipated that there may be discrepancy in the indicated stress between jack gauge pressure and elongation. In such event, the load used as indicated by the gauge pressure shall produce a slight overstress rather than understress. When a discrepancy between gauge pressure and elongation of more than 5 percent in tendons over 50 feet (15 meters) long or 7 percent in tendons of 50 feet (15 meters) or less in length occurs, the entire operation shall be carefully checked and the source of error determined and corrected before proceeding further. When provisional ducts are provided for addition of prestressing force in the event of an apparent force deficiency in tendons over 50 feet (15 meters) long, the discrepancy between the force indicated by gauge pressure and elongation may be increased to 7 percent before investigation into the source of the error.

In the event that more than two percent of the individual strand wires in a tendon break during the tensioning operation, the tendon shall be removed and replaced. Previously tensioned strands shall not be allowed unless approved by the Engineer.

Post-tensioning bars used to apply temporary post-tensioning may be reused if they are undamaged.

Prestressing steel shall be cut using an abrasive saw within ¾ inch (20 mm) away from the anchoring device. Flame cutting of prestressing steel is not allowed, except for pretensioned prestressing steel.

G. Grouting of Tendons.

1. General. After post-tensioning and anchoring of a tendon has been completed and accepted, the annular space between the prestressing steel and the duct shall be grouted in accordance with this Specification. In the interval between the post-tensioning and grouting operations, the prestressing steel shall be protected as previously specified. Immediately after post-tensioning, all grout vents of each tendon shall be temporarily sealed with plugs to prevent entrance of air or water and left in place until just prior to tendon grouting.

   All grouting operations shall be performed by workers trained and experienced in the tasks required. Grouting shall be performed under the immediate control of a grouting foreperson that has experience and skill in grouting. The Contractor shall name (as a minimum) a primary and backup grouting supervisor and shall furnish proof of experience for each for approval by the Engineer. The named grouting supervisors shall be present whenever grouting occurs.

2. Equipment. The grouting equipment shall include a mixer capable of continuous mechanical mixing that will produce a grout free of lumps and undispersed cement, a grout pump, and standby flushing equipment with water supply. The equipment shall be able to pump the mixed grout in a manner that will comply with all requirements.

   Accessory equipment that will provide for accurate solid and liquid measures shall be provided to batch all materials.

   The pump shall be a positive displacement type and be able to produce an outlet pressure of at least 150 PSI (1.0 MPa). The pump should have seals adequate to prevent introduction of oil, air, or other foreign substance into the grout, and to prevent loss of grout or water.

   A pressure gauge having a full-scale reading of no greater than 300 PSI (2.0 MPa) shall be placed at some point in the grout line between the pump outlet and the duct inlet.

   The grouting equipment shall contain a screen having clear openings of 0.132 inches (3.35 mm) maximum size to screen the grout prior to its introduction into the grout pump.

If a grout with aggregate or a thixotropic additive is used, a screen opening of 0.187 inches (4.75 mm) is satisfactory. This screen shall be easily accessible for inspection and cleaning.

The grouting equipment shall utilize gravity feed to the pump inlet from a hopper attached to and directly over it. The hopper must be kept at least partially full of grout at all times during the pumping operations to prevent air from being drawn into the post-tensioning duct.

Under normal conditions, the grouting equipment shall be capable of continuously grouting the largest tendon on the project in no more than 20 minutes.

Pipes or other suitable devices shall be provided for injection of grout and to serve as vent holes during grouting. The material for these pipes shall be at least ½ inch (13-mm) inside diameter and shall be made of a suitable plastic which will not react with the concrete or enhance corrosion of the prestressing steel and is free of water soluble chlorides. These pipes shall be fitted with positive mechanical shut off valves capable of withstanding grouting pressures. All connections between a grout pipe and a duct shall be made with plastic structural fasteners and taped with a waterproof tape as necessary so as to assure a water tight connection.

For all vertical tendons which have strands as the prestressing steel, a standpipe shall be provided at the upper end of the tendon to store bleed water and allow it to be reabsorbed by the grout. This device shall be designed so that the level of grout can be brought to an elevation which will assure that bleeding will at no time cause the level of the grout to drop below the highest point of the upper anchorage device. Provision shall be made to assure that bleed water rises into the standpipe, not into the uppermost part of the tendon and anchorage device.

3. Mixing Grout. The sequence for charging the mixer shall be: add water, start mixer, and add cement. When cement and water are reasonably well mixed, admixtures shall be introduced in accordance with written instructions of the manufacturer of each admixture. The mixing procedures shall prevent admixture from getting caught on blades or sides of drum and from forming gel globules. The mixing procedure may be varied in accordance with the written recommendations of the manufacturer of the admixtures.

   The grout shall be mixed until a uniformly blended mixture is obtained and shall be continuously agitated until it is introduced into the group pump. Batches of grout shall be placed within 30 minutes of mixing. No water shall be added to the grout to modify its consistency after the initial mixing operation is completed.

4. Preparation of Ducts. All ducts shall be clean and free of deleterious materials that would impair bonding or interfere with grouting procedures.

Flushing of the ducts with water shall not be allowed unless approved by the Engineer. If flushing is required, the duct shall be dry a minimum of 6 hours prior to the start of grout placement. The ducts shall be dry prior to grouting. If inadvertent water is suspected in the ducts, the ducts shall be blown out with oil-free compressed air until all moisture is removed from the prestressing steel and the inside surfaces of the duct.

5. Placing Grout. All grout and high-point vent openings shall be open when grouting starts. Grout shall be allowed to flow from the first vent after the inlet pipe until any entrapped air has been removed and a minimum of one quart (one liter) of grout has exited the vent, at which time the vent should be capped or otherwise closed. Remaining vents shall be closed in sequence in the same manner.

   The pumping pressure at the tendon inlet shall not exceed 250 PSI (1.7 MPa).

   If the actual grouting pressure exceeds the maximum recommended pumping pressure, grout may be injected at any vent that has been or is ready to be capped, as long as a one-way flow of grout is maintained. If this procedure is used, the vent that is to be used for injection shall be fitted with a positive shutoff.

   When one-way flow of grout cannot be maintained, the grout shall be immediately flushed out of the duct with water.

   Grout shall be pumped through the duct and continuously wasted at the outlet pipe until no visible slugs of water or air are ejected and the efflux time of the ejected grout, as measured by a flow cone test, if used, is not less than that of the injected grout. To ensure that the tendon remains filled with grout, the outlet shall then be closed and the pumping pressure allowed to build a minimum of 75 PSI (0.50 MPa) before the inlet vent is closed. Plugs, caps, or valves thus required shall not be removed or opened until the grout has set.

   After the grout has set, pipes used as injection or vent ports shall be cut off. Plastic pipes shall be cut off flush with the surface of the concrete.

6. Temperature Considerations. Grouting shall not occur when air temperatures are below 32°F (0°C) or concrete temperatures are below 40°F (4°C). Ducts shall be kept free of water to avoid damage due to freezing. The temperature of the concrete or air surrounding the tendon shall be maintained at 35°F (2°C) or above from the time of grouting until the compressive strength of the grout, as determined from tests on 2 inch (50-mm) cubes cured under the same conditions as the in-place grout, exceeds 800 PSI (5.5 MPa).

   Under hot weather conditions, grouting shall take place early in the morning when daily temperatures are lowest. The grout temperature shall not be above 85°F (30°C) during mixing or pumping. If necessary, the mixing water and grout shall be cooled.

7. Field Mock-Up Tests. The Contractor shall perform field mock-up tests of grout procedures. Field trial tests shall be conducted at the same time as the field mock-up tests.

   Field mock-up tests shall be scheduled in advance of production grouting. At least four weeks before scheduled start of field mock-up tests, the Contractor shall submit to the Engineer for approval a detailed written field mock-up test plan covering test setup, materials, ducts, inlets, outlets, anchorages, prestressing element and grouting and dissection procedures. Supervisory personnel and equipment used for the mock-up tests shall be the same as those to be used in production grouting. Changes in supervisory personnel, materials, equipment, and procedures shall be allowed only after a written approval by the Engineer is received. The prestressing element(s) shall be used in field mock-up tests and shall be stressed.

   Not less than three days after grouting, the Contractor shall dissect the test specimen for a thorough examination of grout, prestressing steel and the duct. A report describing the trial test (including any variations from the test plan) and its findings shall be submitted to the Engineer for approval a maximum of two weeks after dissection. The report shall document all voids in the grout with respect to size, location, and any presence of free moisture or corrosion.

   The Contractor shall notify the Engineer of the time and location of the mock-up tests and dissection and ensure that the test and dissection are witnessed.

   The Engineer shall determine whether the results of the mock-up test satisfy the acceptance requirements in the contract. The acceptance requirements shall, as a minimum, include provisions for bleeding, settlement, shrinkage, or expansion, flowability, compatibility, completeness of filling, lack of corrosion, and the absence of bleed pockets. If test results do not meet the acceptance requirements, the Engineer may require additional tests at the Contractor's expense.

8. Quality Control Testing of Grouts. A minimum of 45 days prior to grouting, a 5-lb. (2.2 kg) sample of pre-approved grout must be submitted for quality control testing according to the tests listed in the table below. If there is fine aggregate in the grout, it shall conform to ASTM C33, and be non-reactive per ASTM C295, C289, and C1260. Additional testing will be performed at the frequencies listed in the following table. Control charts shall be maintained for each test. When one result is outside the requirement, each batch of grout shall be tested until four batches comply. Additionally, a field mock-up test will be required 4 weeks prior to grouting, as described above.

Quality Control Testing of Grout

Test	Method	Frequency (min.)	Requirement
Flow	ASTM C 939	5 yd^3 or 1/day	Min. of 11 sec.
Bleeding	ASTM C 940	5 yd^3 or 1/day	0% after 3 hours

Wick-induced bleeding	ASTM C 940 mod.	5 yd^3 or 1/day	0% after 4 hours
Set time	ASTM C 953	5 yd^3 or 1/day	3 hrs. minimum; 12 hrs. maximum
Volume change	ASTM C 1090	10 yd^3 or 1/week	0% reduction at 24 hours; 0.3 % vol. change at 28 days
Compressive strength	ASTM C 942	5 yd^3 or 1/day	3000 psi at 7 days; 5000 psi at 28 days

*Testing frequency shall be increased until the mix is within the requirement range. If corrections cannot be readily made in the opinion of the Engineer, the grout material shall be rejected.

H. Protection of Prestress Anchorages. As soon as possible, but not to exceed 14 days after tensioning and grouting is completed, exposed end anchorages, strands, and other metal accessories shall be cleaned of rust, misplaced mortar, grout, and other such materials by abrasive blasting. Immediately following the cleaning operation, the entire surface of the anchorage recess (all metal, and metal to concrete interfaces) shall be uniformly coated with an epoxy meeting the requirements of AASHTO M235 (ASTM C881) Type II or V. The epoxy shall be applied in a manner and thickness as recommended by the manufacturer. While the epoxy is still tacky, the entire anchorage recess shall be filled with a High Performance Mortar or concrete meeting the requirements of the HPC portions of this specification. The mortar or concrete shall fill the recess to a clean, neat surface that is flush with the surrounding concrete.

The Contractor shall submit the proposed mix design for High Performance Mortar a minimum of 45 calendar days prior to use for review and approval by the Engineer. The mortar components shall meet all raw material requirements of CONCRETE CLASS "AAA". The mortar shall contain cementitious materials and ratios consistent with the HPC Mix 1 or Mix 2 and have a minimum water-to-cement ratio of 0.38 and 28 day compressive strength of 6,000 PSI (40 MPa).

Basis of Payment

The accepted quantities for POST-TENSIONING shall not be measured and paid for separately, but shall be included in the LUMP SUM price for the work, which shall include full compensation for furnishing all labor, materials, tools, equipment, and incidentals, and for doing all work involved in furnishing, placing and tensioning the prestressing steel in concrete structures, complete in place, as specified in the contract documents and in these specifications and as directed by the Engineer.

Full compensation for furnishing and placing additional concrete and deformed bar reinforcing steel required by the particular system used; ducts, anchoring devices, distribution plates, or assemblies and incidental parts; for furnishing samples for testing, working drawings, and for

pressure-grouting ducts shall be considered as included in the contract and no additional compensation will be allowed therefor.

I 264 Jefferson County
IM 264-1 (146) 0
Item Numbers: 5-2000.00, 5-2001.00 & 5-2026.00
FD52 056 0264 000-006
FD52 056 0264 006-008
FD04 056 031W 014-015

Special Note for Traffic Control Coordinator And Wrecker Service

The Contractor shall supply a Traffic Control Coordinator to monitor traffic control devices 24 hours a day throughout the duration of the project. The Traffic Control Coordinator must be equipped with a cellular phone and have the authority to immediately maintain and make changes in the traffic control as traffic conditions merit. The Contractor will be penalized three thousand dollars ($3000) liquidated damages per day for any incidence that the Traffic Control Coordinator is not on the project.

The Contractor shall have continuously on call a 24-hour wrecker service that the Contractor shall promptly contact to remove any disabled vehicle within the project limits. The wrecker service should have, but not be limited to, the following items/capabilities: cell phone, gasoline, jumper cables, vehicle pushing, and tire changing. The Contractor will be charged three thousand dollars ($3000) liquidated damages for any incidence when the wrecker service fails to respond to the project within 25 minutes.

Payment for all items contained in this note will be considered incidental to the bid item Maintain and Control Traffic.

October 22, 2002

I 264 Jefferson County
IM 264-1 (146) 0
Item Numbers 5-2000.00, 5-2001.00
& 5026.00
FD52 056 0264 000-008
FD04 056 031W 014-015

SPECIAL NOTE FOR RUMBLE STRIPS

Form or saw all rumble strips in both asphalt and concrete shoulders in accordance with the Standard Drawings and the Standard Specifications for Road and Bridge Construction, 2000 edition.

When the shoulder is used to maintain traffic during construction, do not form or saw rumble strips until the mainline is restored to its final traffic scheme and the shoulders are no longer used for maintenance of traffic. When the PCC shoulders are no longer used for the maintenance of traffic saw cut Type 3 rumble strips according to the Standard Drawings and seal saw cut grooves with epoxy sealer according to Section 510 of the standard specifications. When the asphalt shoulders are no longer used for maintenance of traffic saw cut rumble strips in accordance with section 403 of the standard specifications.

October 21, 2002

I 264 Jefferson County
IM 264-1 (146) 0
Item Numbers 5-2000.00, 5-2001.00
& 5026.00
FD52 056 0264 000-008
FD04 056 031W 014-015

SPECIAL NOTE FOR VALUE ENGINEERING PROPOSALS

In accordance with Section 111 of the Standard Specification for Road and Bridge Construction 2000 edition the department will not consider value engineering proposals which are related to service life. Therefore, there will be no consideration for any pavement type changes on this project.

October 21, 2002

I 264 Jefferson County
IM 264-1 (146) 0
Item Numbers 5-2000.00, 5-2001.00
& 5026.00
FD52 056 0264 000-008
FD04 056 031W 014-015

SPECIAL NOTE FOR CONCRETE JOINT SEALS

Contrary to Section 501 of the Standard Specification for Road and Bridge Construction 2000 Edition, temporary seals will not be permitted on this project. Permanent joint seals must be installed prior to placing traffic on the new concrete pavement.

October 21, 2002

I 264 Jefferson County
IM 264-1 (146) 0
Item Numbers 5-2000.00, 5-2001.00
& 5026.00
FD52 056 0264 000-008
FD04 056 031W 014-015

SPECIAL NOTE FOR TEMPORARY CONCRETE BARRIER WALL

The contractor will have the option of providing Type 9T wall or obtaining the department owned Type 9M wall from any of the following three sources. If the contractor should decide to use both 9M and 9T wall, the specifications will not allow the sections to be intermingled. Please note that the approximate length of wall shown at each site is for informational purposes based on an "exterior site" examination and prior to a damage inspection and therefore may be an overestimated value.

1. Outer Loop Landfill in Jefferson County (Approximately 22,000 Linear Ft)
2. The I-75 Storage Yard in Fayette County (Approximately 36,400 Linear Ft)
3. The I-275 and KY 237 Interchange Storage Yard in Boone County (Approximately 28,000 Linear Ft)

Some of the barrier wall at the storage yards is damaged and cannot be used on the project. The department will provide an inspector in order to determine which sections of wall are acceptable. The contractor will be required to sort through the wall in order to obtain the acceptable sections of wall. If there is insufficient wall at the department's sites, the contractor will have to furnish Type 9T wall to make up the difference.

Upon completion of the project all Temporary Concrete Barrier Wall used on the project shall become the property of the contractor. The contractor should be aware that the Type 9M wall can not be used on projects let after October 1st, 2004.

There are three bid items associated with the Temporary Concrete Barrier Wall.

1. The bid item "Temporary Concrete Barrier Wall" shall be full compensation for the pick- up, delivery and installation of required linear feet of temporary concrete barrier wall whether it is department provided 9M or contractor furnished 9T.
2. The bid item "Relocate Temporary Concrete Barrier Wall" shall be full compensation for the relocation of the barrier wall to a subsequent location on the project.
3. The bid item "Remove Temporary Concrete Barrier Wall" shall be full compensation for the removal and disposal of the barrier wall.

October 11, 2002

Special Note for Acceptance of Portland Cement Concrete Pavement Thickness

This Special Note will apply where indicated on the plans or in the proposal. Section references herein are to the Department's 2000 Standard Specifications for Road and Bridge Construction.

1.0 DESCRIPTION. This Special Note covers the requirements for thickness of PCC pavement. Contrary to Subsection 501.03.21 and 501.05.01, the Department will accept PCC pavement thickness from cores based on a percent within limits (PWL) per lot. The PWL will not apply for projects involving less than 2,500 square yards of pavement per bid item. For quantities less than 2,500 square yards of pavement per bid item, acceptance will be in accordance with 3.1.2 of this note.

2.0 MATERIALS. Reserved

3.0 CONSTRUCTION.

3.1 Pavement Thickness. The Engineer will determine random sampling locations according to KM 64-113. Obtain 8 cores per lot at the randomly selected locations under the observance of the Engineer. Cut cores with a nominal diameter of not less than 4 inches. Take all cores after any corrective grinding. Provide the cores to the Engineer immediately. The Department will measure cores according to KM 64-308, except taking 5 measurements for all cores. Furnish all tools, labor, and materials for cutting samples and filling the cored hole. Fill core holes with a non-shrink grout approved by the Engineer within one day after sampling.

When a core thickness is deficient by one inch or more, the Department will not accept the pavement. Remove and replace the deficient pavement. Take another random core from the sublot as the Engineer directs to determine the PWL.

3.1.1 Lot Size. The Department will divide each pavement bid item into lots of 6,000 linear feet of paved width. The lot will be divided into 8 sublots of equal length (750 feet). Take a core from each sublot for determination of pavement thickness.

For bid items with over 2,500 square yards and less than 6,000 linear feet of paved width, project area will be divided into 4 equal sublots for determination of PWL.

For a remainder lot of less than 3,000 feet, the Department will add the quantity of pavement to the previous lot and the 8 sublots will be equally divided over the increased length. For a remainder lot of 3,000 feet or greater, the Department will divide the remainder lot into 8 equal sublots for acceptance.

3.1.2 Small Quantities and Miscellaneous Areas. For quantities less than 2,500 square yards per bid item and for miscellaneous areas, the acceptance may be based on either of the following:

1) Engineer's inspection of the base grade elevation in relation to the forms, or

2) Engineer's monitoring of the yield rate and visual inspection of the placement,

Miscellaneous areas are entrances and tapers less than 10 feet wide. Furnish cores for areas where there are indications of deficient thickness as the Engineer directs. Replace areas found deficient by one inch or more at no cost. The Engineer will evaluate areas found deficient by 0.50 to 0.99 inches according to Subsection 105.04 for acceptance.

3.1.3 Statistical Evaluation. The Department will use the Variability-Unknown/Standard Deviation Method to determine the estimate percentage of the lot that is within the specification limits (PWL). The Engineer will calculate the lower quality index (Q_L)

$$Q_L = \frac{\text{Average} - \text{LSL}}{s}$$

Where: Average = the arithmetic mean of the test values. The average will be determined to the nearest tenth of an inch.

LSL = the specified thickness minus 0.20 inch.

s = Standard Deviation = [Sum (Individual Measurement - Average)^2 / (n-1)]$^{1/2}$, determined to two decimal places.

n = Number of measurements.

Q_L will be determined to 2 decimal places.

For calculation of PWL, core thickness greater than 0.75 inches more than the specified thickness will be rounded down to the specified thickness plus 0.75 inch.

Percent Within Limits (PWL) will be determined by the attached tables with Q_L, for n = the number of tests for the Lot. PWL will be determined to 2 decimal places.

For all calculations round down when the last significant digit is followed by a number less than 5 and round up when the last significant digit is followed by a number equal to or greater than 5.

4.0 MEASUREMENT. The Department will not measure for payment any work or materials required to supply the cores or grout the holes and will consider it incidental to PCC Pavement.

5.0 PAYMENT. The Department will base acceptance of each lot of material on the percentage of material within specification limits (PWL). The following equation will determine the pay factor for thickness: PF % = 52.5 + 0.5 PWL. The Department will round the Pay Factor to 2 decimal places as noted above.

October 15, 2002

PERCENT WITHIN LIMITS
ESTIMATION TABLE
Variability - Unknown Procedure
Standard Deviation
Method
Sample Size 4

Q	0	0.01	0.02	0.03	0.04	0.05	0.06	0.07	0.08	0.09
0.0	50.00	50.33	50.67	51.00	51.33	51.67	52.00	52.33	52.67	53.00
0.1	53.33	53.67	54.00	54.33	54.67	55.00	55.33	55.67	56.00	56.33
0.2	56.67	57.00	57.33	57.67	58.00	58.33	58.67	59.00	59.33	59.67
0.3	60.00	60.33	60.67	61.00	61.33	61.67	62.00	62.33	62.67	63.00
0.4	63.33	63.67	64.00	64.33	64.67	65.00	65.33	65.67	66.00	66.33
0.5	66.67	67.00	67.33	67.67	68.00	68.33	68.67	69.00	69.33	69.67
0.6	70.00	70.33	70.67	71.00	71.33	71.67	72.00	72.33	72.67	73.00
0.7	73.33	73.67	74.00	74.33	74.67	75.00	75.33	75.67	76.00	76.33
0.8	76.67	77.00	77.33	77.67	78.00	78.33	78.67	79.00	79.33	79.67
0.9	80.00	80.33	80.67	81.00	81.33	81.67	82.00	82.33	82.67	83.00
1.0	83.33	83.67	84.00	84.33	84.67	85.00	85.33	85.67	86.00	86.33
1.1	86.67	87.00	87.33	87.67	88.00	88.33	88.67	89.00	89.33	89.67
1.2	90.00	90.33	91.67	91.00	91.33	91.67	92.00	92.33	92.67	93.00
1.3	93.33	93.67	94.00	94.33	94.67	95.00	95.33	95.67	96.00	96.33
1.4	96.67	97.00	97.33	97.67	98.00	98.33	98.67	99.00	99.33	99.67
1.5	100.00	100.00	100.00	100.00	100.00	100.00	100.00	100.00	100.00	100.00

PERCENT WITHIN LIMITS
ESTIMATION TABLE
Variability - Unknown Procedure
Standard Deviation
Method
Sample Size 8

Q	0	0.01	0.02	0.03	0.04	0.05	0.06	0.07	0.08	0.09
0.0	50.00	50.38	50.76	51.14	51.51	51.89	52.27	52.65	53.03	53.41
0.1	53.78	54.16	54.54	54.92	55.29	55.67	56.04	56.42	56.79	57.17
0.2	57.54	57.92	58.29	58.66	59.03	59.41	59.78	60.15	60.52	60.89
0.3	61.25	61.62	61.99	62.35	62.72	63.08	63.45	63.81	64.17	64.53
0.4	64.89	65.25	65.61	65.96	66.32	66.67	67.03	67.38	67.73	68.08
0.5	68.43	68.78	69.13	69.47	69.82	70.16	70.50	70.84	71.18	71.52
0.6	71.85	72.19	72.52	72.85	73.18	73.51	73.84	74.17	74.49	74.81
0.7	75.14	75.46	75.77	76.09	76.41	76.72	77.03	77.34	77.65	77.96
0.8	78.26	78.56	78.86	79.16	79.46	79.76	80.05	80.34	80.63	80.92
0.9	81.21	81.49	81.77	82.05	82.33	82.61	82.88	83.15	83.43	83.69
1.0	83.96	84.22	84.49	84.75	85.00	85.26	85.51	85.76	86.01	86.26
1.1	86.51	86.75	86.99	87.23	87.46	87.70	87.93	88.16	88.39	88.61
1.2	88.83	89.06	89.27	89.49	89.70	89.91	90.12	90.33	90.53	90.74
1.3	90.94	91.13	91.33	91.52	91.71	91.9	92.09	82.27	92.45	92.63
1.4	92.81	92.98	93.15	93.32	93.49	93.65	93.81	93.97	94.13	94.29
1.5	94.44	94.59	94.74	94.88	95.03	95.17	95.31	95.44	95.58	95.71
1.6	95.84	95.97	96.09	96.21	96.33	96.45	96.57	96.68	96.79	96.90
1.7	97.01	97.11	97.21	97.31	97.41	97.51	97.60	97.69	97.78	97.87
1.8	97.96	98.04	98.12	98.20	98.28	98.35	98.42	98.49	98.56	98.63
1.9	98.69	98.76	98.82	98.88	98.93	98.99	99.04	99.09	99.14	99.19
2.0	99.24	99.28	99.33	99.37	99.41	99.45	99.48	99.52	99.55	99.58
2.1	99.61	99.64	99.67	99.7	99.72	99.74	99.77	99.79	99.81	99.83
2.2	99.84	99.86	99.87	99.89	99.90	99.91	99.92	99.93	99.94	99.95
2.3	99.96	99.96	99.97	99.98	99.98	99.98	99.99	99.99	99.99	100.00

I 264 Jefferson County
IM 264-1 (146) 0
Item Numbers: 5-2000.00, 5-2001.00 & 5-2026.00
FD52 056 0264 000-008
FD04 056 031W 014-015

SPECIAL NOTE FOR GENERAL PROGRESS SCHEDULE

Section references herein are to the Department's 2000 Standard Specifications for Road and Bridge Construction.

1.0 DESCRIPTION. Prepare and maintain a progress schedule for the project using the critical path technique.

2.0 MATERIALS. Reserved.

3.0 CONSTRUCTION. Submit a progress schedule consisting of an activity network analysis as described herein, unless the Engineer approves an alternate system.

3.1 Network Analysis System. Include diagrams that show all major work elements of the project and the entire project in summary.

Provide diagrams showing the order and interdependence of activities and the sequence in which the work is to be accomplished. Follow the basic concept of a network analysis to show how the start of a given activity is dependent on the completion of preceding activities. Include any restrictions.

Include in the network activities, the submittal and approval of samples of materials and shop drawings; the procurement of critical materials and equipment, and fabrication of special material or equipment and their installation and testing. Show contract required dates for completion of all or parts of the work.

Show on the network diagram the minimum number of activities necessary to accurately reflect the flow of work. Group related activities on the network. Determine the critical path and identify where float or slack exists.

Include in the network diagram analysis a tabulation of each activity. Furnish the following information as a minimum for each activity:

1) preceding and following event or work item numbers
2) activity description
3) estimated duration of activities (in days)
4) earliest start date
5) earliest finish date
6) latest start date
7) latest finish date
8) slack or float (in days)

3.2 Submission and Review Procedures. Submit the complete proposed project schedule, consisting of the network analysis and network diagrams at the

preconstruction conference.

Participate with the Engineer in a review of the proposed project schedule. Resubmit all necessary revisions within 10 days after the initial review. When a change in the method of operation or scheduling is desired, notify the Engineer in writing of the proposed change.

Provide 4 copies of the initial project schedule submittal and subsequent revisions for review. Ensure all submitted diagrams are legible.

3.3 Monthly Updates. Submit a report of the actual construction progress by updating the project schedule each month. Reflect the work as-built as of the date of the report, as well as the work remaining to be done as planned. Provide 4 copies.

Establish the dates of submittal with the Engineer at the preconstruction conference. If an updated project schedule is not provided by the established date, the Engineer will not process pay estimates until it is.

3.4 Significant Changes. Update and resubmit the project schedule revisions whenever a situation arises or an event occurs that significantly affects the progress of the work. If an updated project schedule is not provided after significant changes occur, the Engineer will not process pay estimates until it is.

3.5 Float or Slack. Float or slack is the amount of time between the early start date and the late start date, or the early finish date and the late finish date, of any of the activities on the project schedule.

4.0 MEASUREMENT. The Department will measure the CPM Schedule as Lump Sum.

5.0 PAYMENT. The Department will make payment for the completed and accepted quantities under the following:

Code	Pay Item	Pay Unit
----	Project CPM Schedule	Lump Sum

The Department will consider payment as full compensation for all work required in this provision.

October 21, 2002

I 264 Jefferson County
IM 2641-1 (146) 0
Item Numbers: 5-2000.00, 5-2001.00 & 5-2026.00
FD52 056 0264 000-008
FD04 056 031W 014-015

SPECIAL NOTE FOR RIDE QUALITY

1.0 DESCRIPTION. Contrary to the Standard Specifications for Road and Bridge Construction, 2000 edition, ride quality of all new or ground mainline and ramp pavements will be measured according to this note.

2.0 EQUIPMENT. The Department will use a California Profilograph with a 0.2-inch blanking band according to ASTM E 1274 to determine Profile Index (PI). The Department will measure the longitudinal profile of the surface with an ASTM E 950, Class 1 device to determine International Roughness Index (IRI).

3.0 CONSTRUCTION. The Department will determine the ride quality of the pavement as in terms of a PI and IRI.

1) PI. The Engineer will test pavement surface with the profilograph as soon as practical, preferably before the Contractor saws the final joint. The Department will be using the profilograph to test other projects. Cooperate in the scheduling of testing as necessary in order that the testing can be performed efficiently on all projects.

   When the pavement is 12 feet wide or less, the Department will take pavement profiles 3 feet from each edge and parallel thereto. When the pavement is placed wider than 12 feet, the Department will take profiles 3 feet from and parallel to each edge and at the approximate location of each planned longitudinal joint. The Engineer will exclude from testing all pavement within 20 feet of any discontinuity in the pavement such as bridges. However, the Engineer will require these excluded areas to meet the 1/8-inch longitudinal tolerance with a 10-foot straightedge.

   The Engineer will determine an average PI for each section. The Department will consider a PI section to be 1,000 linear feet of full lane width pavement. When a test section at the end of a lane is less than 1,000 feet, the Department will include it in the preceding 1,000-foot test section. When an average PI of 10 inches per mile is exceeded in any section the Engineer will suspend the paving operation and will not allow paving to resume until the corrective action is taken. Regardless of the PI, remove all areas represented by high points having deviations in excess of 0.3 inch in 25 feet or less using methods the Engineer approves. The Engineer will determine deviations in excess of 0.3 inch from the profilograph.

   When the section's average PI is between 6 and 10 inches per mile, correct pavement deviations to achieve a ride quality of a maximum PI of 6 inches or accept an adjustment to the contract unit price. For sections with an average PI of 10 inches or greater per mile, the Department will require corrective work.

2) IRI. The Department will test the ride quality of the pavement for incentive payments when the PI is 6 or less and the Contractor either makes a request at least 2 weeks in advance or completes all main line paving.

   The Department will determine the IRI by applying a linear transform, determined by correlation, to the values (average of 2 wheel paths) determined by ASTM E 1926. Thoroughly clean the surface of all dirt and other foreign matter immediately before the Department performs the testing.

   The Department will divide and test each traffic lane using one-mile test sections starting at the beginning of the lane and proceeding in the direction of traffic. The Department will exclude discontinuities, such as a bridge, from the measurement. When a test section adjacent to a discontinuity or at the end of a lane is less than one mile long, the Department will include that section with the adjacent section. When requested, the Department will retest the pavement after any corrective work is completed. The Department will create a strip chart showing the elevation and distance traveled upon request.

4.0 MEASUREMENT. The Department will not measure the PI or IRI as a separate pay unit, but will use the PI or IRI to calculate a ride quality adjustment for PCC Pavement. When the Contract specifies that the Department will measure the ride quality, the Department will use the IRI for incentive payments and, if none, will use the PI for acceptance and disincentive payments.

5.0 PAYMENT. The Department will apply a Ride Quality Adjustment for each section tested. The Department will calculate the Ride Quality Adjustments by multiplying PCC Pavement payment for each test section by its appropriate ride quality Pay Value found in the Ride Quality Adjustment Schedule..

Ride Quality Adjustment Schedule for New Pavements

IRI	Pay Value[1]
53 or less	+0.06
54 to 56	+0.04
57 to 60	+0.02
Average for PI (inches per mile)[2]	Pay Value
6 or less	0.00
over 6, up to 7	-0.02
over 7, up to 8	-0.05
over 8, up to 10	-0.08
over 10	Corrective work required

[1] *Contractor may correct areas to achieve a positive adjustment. The Department will perform additional requested testing and retesting for corrective work at a cost of $150.00 per lane mile. The Department will deduct charges for requested additional testing and retesting for corrective work from monies due on the Contract.*

[2] *The Department will apply the unit bid price adjustment to the total area of the 1,000-foot section of the traffic lane represented by the Profile Index. The Department will not make payment in excess of 50 percent for any main line pavement that has an average Profile Index in excess of 10 inches per mile until the Contractor completes the corrective work and the Department reprofiles and verifies that the average Profile Index has been reduced to 10 inches per mile or less.*

There will be no ride quality adjustment for the pavement that is set up for diamond grinding. The acceptable average PI for the ground pavement will be 8 inches per mile or less. Corrective work will be required until the acceptable average PI is obtained.

The Department will consider payment as full compensation for all work required under this note.

October 21, 2002

SPECIAL NOTE FOR INSTALLATION OF METAL SNOWPLOWABLE PAVEMENT MARKERS BLANKS FURNISHED BY THE DEPARTMENT

I. DÉSCRIPTION

Except as hereafter specified, perform all work in accordance with the Department's 2000 Standard Specifications, Standard Drawings, and applicable Special Provisions. Article references are to the Standard Specifications. This work shall consist of: (1) Furnishing and installing lenses in blank Type V Pavement Markers furnished by the department; (2) Installing the Type V Pavement Markers; and (3) Maintain and control traffic.

II. MATERIALS

A. Pavement Markers Type V. The Department will furnish blank Type V Pavement Markers, without lenses. Except as specified in these notes, or elsewhere in the drawings or this proposal, furnish all other materials as per Section 840 and the Standard Drawings. The Department will sample and test all materials in accordance with the Department's Sampling Manual. Make all materials available for sampling a sufficient time in advance of the use of the materials to allow for the necessary time for testing unless otherwise specified in these notes.

III. CONSTRUCTION METHODS

A. Installation of Pavement Markers Type V. Except as specified in these notes, or elsewhere in the drawings or this proposal, perform all construction methods in accordance with the Standard Specifications and Standard Drawings. Type V pavement markers will be available at the Department's Bailey Bridge Yard in Frankfort, Kentucky. Pick up between 8:00 AM and 3:00 PM, Monday thru Friday. Locate and install the markers in accordance with Section 712 and Standard Drawing Nos. TSC-300, TSC-301, TSC-302, TSC-305, TSC-310 and TSC-315, and TSC 400.

IV. METHOD OF MEASUREMENT

A. Pavement Markers Type V, Install. The Department will measure the quantity of each type installed on the project by individual units, each.

V. BASIS OF PAYMENT

A. Pavement Markers Type V, Install. Payment at the contract unit price for each type shall be full compensation for all materials (other than blank pavement markers furnished by the Department), equipment, labor and incidentals necessary to complete the installation of the Type V pavement markers.

TRAFFIC CONTROL FOR RAISED PAVEMENT MARKER INSTALLATIONS

TWO-LANE, TWO-WAY ROADWAYS:

On two-lane, two-way roadway sections, lane closures shall be considered short-duration operations. All work shall be accomplished in only one lane and shall affect the adjacent lane as little as possible. Egress and ingress shall be provided to all ramps, side roads, and entrances at all times.

Approaches to the immediate work area shall be signed in accordance with Lane Closure Case I-A. All signs may be installed on temporary mountings.

All work vehicles used in the roadway shall be equipped, as a minimum, with strobe lights or rotating beacons. If equipped with a flashing arrow board, the board shall be used in caution mode, but shall not indicate a flashing arrow. The use of a truck mounted attenuator will not be required on two-lane, two-way roadway sections.

When the pavement markers have been placed on the roadway, traffic cones shall be used to protect the markers from traffic until the adhesive epoxy has hardened.

MULTI-LANE ROADWAYS:

On multi-lane roadway sections, all operations shall be performed behind stationary lane closures. All lane closures shall be approved by the Engineer and shall be signed in accordance with Lane Closure Cases II and IV. Egress and ingress shall be provided to all ramps, side roads, and entrances at all times.

A truck mounted attenuator shall be required on multi-lane roadways. The location of the TMA within the lane closure shall be as specified by the Engineer.

No more than one lane of traffic plus 24 inches maximum of only one adjacent lane shall be closed per direction of travel. A minimum lane width of 10 feet should be maintained. The length of a lane closure shall not exceed 1 mile in urban areas nor 3 miles in rural areas. Consecutive lane closures shall be permitted only if separated by a minimum of 2 miles and must be affecting the same lane.

The Contractor shall provide for the installation of all necessary traffic control devices before beginning work and their immediate removal as soon as work is suspended or completed, and the pavement markers are completely bonded to the pavement.

SPECIAL NOTE FOR
QC/QA SPECIFICATIONS FOR CLASS P CONCRETE

This Special Note will apply where indicated on the plans or in the proposal. Section references herein are to the Department's current Standard Specifications for Road and Bridge Construction.

1.0 DESCRIPTION. This Special Note specifies the process control and acceptance testing for Class P Concrete (pcc pavement, shoulders, base). PCCP 24/48/72 will not be included under this note. Perform work and furnish materials according to the Department's Standard Specifications with the following exceptions and additions. Perform both process control and acceptance testing. Minimum test frequencies are provided. The Department will only perform verification testing.

2.0 MATERIALS. Conform to Subsection 501.02 or 601.02.

3.0 PROCESS.

A) Quality Control Plan (QCP). Submit a QCP to the Engineer for review and approval (see Appendix A) at least 15 calendar days prior to commencing concrete operations. The QCP is the responsibility of the Contractor and should be a joint effort between the Contractor and any subcontractors. Submit a revised QCP for review and approval if any changes are necessary.

B) Contractor Requirements.

1) Select a concrete production facility that conforms to the production requirements found in Subsection 601. If the facility fails to meet these requirements during production and is no longer qualified to supply concrete the Contractor is solely responsible for obtaining the services of another concrete production facility to continue placement of concrete on the project.

2) Provide concrete technicians that are certified as ACI Level I Concrete Field Testing Technicians.

3) Provide an AASHTO accredited or Kentucky Transportation Cabinet qualified laboratory facility.

4) Job Site Acceptance Requirements:

   a) Trip Tickets. Collect trip tickets for each load of concrete. Check each truck mixer for a current performance test sticker and the metal plate stating manufacturers recommended capacities and revolution speeds. Verify and/or record the following for each load of concrete delivered to the project:

- Age of Mix
- Mixing revolutions recorded on the trip ticket
- Discharge Time
- Addition of Water
- Additional Mixing Revolutions if Water is added
- Job Site Test Data

The Technician shall reject concrete failing to meet the requirements for any item.

b) Technician Responsibilities. ACI Level I Concrete Technicians shall be on site to inspect all quantities of concrete delivered to the project. Inspection responsibilities include field tests for slump, air content, temperature, and casting of cylinders of the plastic concrete. All testing shall be performed according to the applicable Kentucky Methods. The Technician shall reject concrete failing to meet the requirements of any of these tests.

5) Testing Of Class P Concrete:

a) Start Up Test Frequencies. Perform start-up slump, air content, and temperature tests each day of placement for Class P concrete at the following minimum frequencies:

Class of Concrete	Minimum Start-up Testing Frequency
Class P	First Unit & any 1 of the next 4 Units

The First Unit is the first load delivered producing acceptable start up test results. For example; if the first load of the day produces failing test results, it is rejected. Repeat Start Up Tests for the second load delivered. If the second load produces passing test results it is accepted and considered the First Unit.

b) Acceptance Testing. Provide test equipment conforming to requirements of the appropriate test method. The Engineer may inspect and reject any equipment found defective.

- Sample and test the plastic concrete for air content, slump, and temperature. Once the First Unit has been established, the Department will include all randomly selected samples for payment in the pay factor calculations even if the unit is out of specification. If any randomly selected production unit is outside the specification limits for slump, temperature, or air content, return to the start-up testing Frequency.
- Mold a minimum of one set of 2 cylinders at the point of placement for each sublot (see Subsection 3.0-D of this Special Note) for compressive strength testing. Randomly sample and test when the Engineer directs. (See the following note)
- Obtain samples anytime visual inspection of the delivered concrete indicates questionable specification compliance.
- Perform compressive strength testing on certified or Department approved machines.
- Notify the Engineer at least 24 hours prior to the time of compressive strength testing so that the test may be witnessed.
- Core any concrete meeting the criteria for investigation of in-place concrete based on low cylinder strengths (see 3.0-B-6). When coring is required, furnish equipment and personnel necessary to obtain and test cores. Core diameter will be as required by the Department.

Note: Number cylinders for strength testing according to the following format unless otherwise approved by the Engineer:
Lot # - Sublot # - Class of Concrete
If a set of cylinders are made for early breaks, follow the class of concrete with an "X". The verification cylinders made by the department will use a "V" after the class of concrete.

c) Documentation. Record all job site test results when obtained. Provide a summary of test results and trip tickets at least weekly to the Engineer. In the summary, include a record of all concrete rejected. As 28-day breaks are obtained, submit air and strength results along with corresponding random numbers and sublot/lot identification at the completion of each and every lot. Report all failing compressive strength tests to the Engineer as soon as possible, but no later than the end of the testing day.

d) In addition to acceptance testing, perform all sampling, testing (slump, air, temperature and strength) for the purpose of either load applications, or opening to traffic. These results are to be kept separate from random QC results and are not to be used for pay calculations.

e) Additional acceptance sampling testing by Contractor is permitted but must be included in the QCP by reducing size of sublots within the lots (3.0-D) to be included in pay calculations.

6) Investigation of In-Place Concrete Based on Low Cylinder Strengths for Class P:

a) The Department will require a core evaluation of the in-place concrete when any of the following occur:

- An individual test result falls more than 500 psi below minimum required compressive strength
- Strength PWL for a lot is less than 75

The investigation will take place at the direction of the Engineer. Obtain cores within 7 calendar days of written notification.

b) Air content PWL below 60 will require special evaluation by the Engineer to determine acceptance/rejection, and any corrective work needed.

C) Concrete Producer Requirements. Requirements include mix design, testing, documentation, plant approval, and truck approval in accordance with Section 601.

Mix Designs. Submit mix designs to the Engineer using either Option A or Option B below.

Option A. Kentucky Mix Design. Submit mix designs according to Subsection 601.03.02 G at least 15 calendar days prior to commencing concrete operations. Design and proportion the concrete mixtures according to Subsection 601.03.03. Resubmit the mix designs when changes are made.
Option B. ACI-318 Mix Design. Comply with ingredient material

specifications and mineral admixture limitations according to the Department's Standard Specifications. Conform to the following if requirements are not modified elsewhere by plan note.

REQUIREMENTS FOR CLASS P CONCRETE WHEN ACI-318 IS APPLIED			
Concrete Class	Max. Free Water By w/c Ratio (lbs/lbs)	Min. 28-Day Comp. Strength (psi)	Air Content (%)
P	0.49	3,850	6± 2% *

* The air content shall be 7 ± 2% when coarse aggregate sizes #8, #78, or #9-M are used.

D) Lot Size for Class P Concrete. Lots and sublots will be based on delivered quantities in lieu of design quantity. Lots are defined as follows:

Concrete Class	Lot Size	Sub-lot Size (4 sub-lots/lot)
P	4000 Square Yards	1000 Square Yards

Use the following table in determining concrete quantities and their corresponding lots and sub-lots.

Class P (SY)	Total Sublots – Equally Divided
< 2,000	Accept based upon plastic concrete test results plus one set of cylinders if more than 15 yd^3 per calendar day*
2,000 ≤ 4,000	4
4,000 ≤ 5,000	5
5,000 ≤ 6,000	6
6,000 < 8,000	One standard lot, plus a second smaller lot with four sublots.

*PWL and incentive/disincentives are not applied but accepted at 100% pay based on achieving acceptable results.

NOTE: All early strength modified mixes will be combined, if quantities are available, to make a lot (lots).

E) Department Responsibilities.

1) Concrete Mixture Verification Testing. The Engineer will conduct verification testing to verify acceptance procedures. Only ACI Level I qualified personnel will perform the verification testing. The Engineer will determine according to KM 64-113 when the Contractor is to perform random sampling and testing. The

Engineer will notify the Contractor immediately prior to required random sampling and testing.

The Engineer will test at a frequency of one per every four acceptance tests made by the contractor. The Engineer reserves the right to increase the frequency of testing when deemed necessary. The Engineer will perform verification testing on independent samples from the same batch and location as the Contractor's tested sublot and promptly compare results. Additionally, the Engineer may select any portion of any sublot at any time to verify specifications limits.

The Engineer may witness all acceptance tests of the lot for the Department's acceptance of the test results for payment.

When the verification test results differ from the Contractor's test results by more than tolerances shown below, the discrepancy must be resolved and documented along with the verification results. The dispute resolution outlined in Section 113 will be utilized to verify the acceptability of the concrete.

Acceptance/Verification Tolerance*

Test	Tolerance
Air Content	±0.75%
Compressive Strength	±15%
Temperature	±3 °F
Slump	±25% of maximum limit

*These tolerances only apply to verification samples

2) Core Strength Evaluation for Class P Concrete. When investigation is required according to 3.0-B-6 of this note, the Engineer will direct the Contractor in obtaining cores and take possession of the cores for testing. The Engineer will evaluate cores as follows:

   a) If core strengths are equal to or greater than 90% of minimum required compressive strength, the core strengths will be substituted for the low cylinder(s) to determine PWL. Lots affected will not be eligible for incentive adjustments but may achieve 100% maximum pay.

   b) If core strengths are below 90% of minimum required compressive strength, a design analysis will be required to determine if strength is adequate.
      1) If strength is determined to be adequate, the core strengths will be substituted for the low cylinder(s) to determine PWL.
      2) If strength is determined not to be adequate, the lot or sublot containing the failing concrete shall be removed and replaced at the Contractor's expense. The Contractor may be given the option of obtaining additional cores to more accurately identify the extent of removal required.

4.0 MEASUREMENT.

A) Class P (PCC Pavement, PCC Base, and PCC Shoulders). The Department will measure PCC Pavement, PCC Base, and PCC Shoulder according to Subsections 501.04.01, 501.04.02, and 501.04.03 respectively.

The Department will not measure the strength and air content of the pavement concrete as a separate pay unit, but will analyze the strength and air content data as provided by Contractor to calculate pay factors for each separate lot of PCC Pavement, PCC Base, and PCC Shoulders.

B) Measurement of Dispute Items. Disputed items may require third party resolution by a mutually agreeable laboratory. The cost for the laboratory testing and investigation of disputed items by an independent laboratory will be shared equally between the Contractor and the Department. –

C) Measurement of Quality Control (QC). The Department will measure the quantity by the lump sum. The Department will not measure the QCP, any actions and personnel required to carry out the QCP, any testing, any testing equipment, or any other work necessary to perform the specified QC/QA procedures and will consider them incidental to this item of work.

5.0 PAYMENT.

The Department will calculate pay factors for Class P Concrete only, and will apply them on a lot basis (See Appendix B). The Department will apply Concrete QC/QA incentive/disincentive adjustment as a one time Concrete Adjustment prior to final payment. When net bonuses exceed net penalties for concrete for the total project, the Department will pay the net difference. When net penalties, derived from Percent Within Limits (PWL) and incentive/disincentive calculations, exceed net bonuses for concrete for the total project, the Department will deduct the net difference. For concrete not requiring PWL and incentive/disincentive calculations, the Department will apply penalties according to the appropriate subsection or application. Additional pay adjustments may be applicable for concrete pavement thickness and ride quality in accordance with the Special Notes or Standard Specifications.

Code	Pay Item	Pay Unit
----	PCC Pavement Non-Reinforced, Thickness	See Subsection 501.05
----	PCC Pavement Shoulder Non-Reinforced, Thickness	See Subsection 501.05
----	PCC Base Non-Reinforced, Thickness	See Subsection 501.05
----	Dispute Resolution	See Appropriate Subsection
----	QC	Lump Sum
----	Concrete Adjustment[1]	Each

[1] The Department will determine pay factors and adjust the price based on the strength and air content of the concrete.

October 28, 2002

Contractor's Quality Control Plan/Checklist

Kentucky Transportation Cabinet

I. Project Information

County _____ Route _____

Project No. _____ PCN _____

II. Field Office

Location _____ Telephone No. _____

Contact Person: _____

III. Field Quality Control Personnel

Quality Control Manager's Name and Certification (if applicable):

_____

Company Name: _____

Telephone No.: _____

The ACI Level I Technician(s), who will be responsible for Jobsite mixture control and adjustments is:

_____

IV. Field Sampling and Testing

A. Curing and Testing of Compressive Strength Specimens:

Indicate how compressive strength specimens will be cured initially at the jobsite.

_____

_____

Indicate the location for final standard curing and testing of the compressive strength specimens and indicate the method of curing.

_____

_____

Indicate party responsible for performing compressive strength tests. _____

Indicate calibration date of the compressive strength testing device. _____

B. Concrete Mixture Tests (List responsible parties and testing frequencies as applicable.

1. Slump _____
2. Air Content _____
3. Temperature _____
4. Molding Cylinders _____

C. Other Tests (Specify the type and frequency of any other tests to be performed.)

_____
_____
_____
_____

NOTE: In the event of field equipment failure, provide back-up equipment.

D. Ready Mix Concrete Producer

1. Name and Location _____
2. Producer Number _____
3. Plant Type _____
4. Scale Check Date _____

V. Failing Tests and Defective Work

Indicate the actions to be taken and the communication procedures between the Concrete Producer, the Contractor, the Consultant, and Department Personnel in the event of failing tests or observation of defective work.

_____
_____
_____

VI. Field Documentation

Provide examples of the forms that will be used to maintain documentation at the jobsite.

_____
_____
_____

VII. Pre-Pour Meeting

Indicate when a concrete pre-pour meeting will be scheduled. The engineer may require other pre-pour meetings as necessary.

_____
_____

This is to certify that adequate facilities and personnel will be available and utilized to comply with the applicable Concrete QC/QA Special Notes and The Kentucky Standard Specifications.

Quality Control Manager _____ Date _____
Signature

Appendix B – Procedures for Percent Within Limits (PWL) and Pay Factor Calculations

The contractor's QC testing data must be validated by the Department's verification tests. A percent within limit (PWL) analysis is used to determine how various specified limits are met by the Contractor. The procedure calls for determining the mean and standard deviation of acceptance data. Determine the following quality indices based upon the mean, standard deviation and upper/lower specification limits. The upper/lower limits for air content PWL calculations will be ± 2.0% of the target air content for Class-P Concrete. If there is no upper specification limit (e.g. compressive strength), the upper quality index will be considered 100% within limits.

Q_u = (Upper Specification Limit - Average) / Standard Deviation

Q_L = (Average - Lower Specification Limit) / Standard Deviation

Where:

Standard Deviation = [Sum(Individual Measurement - Average)^2 / (n-1)]$^{1/2}$, and

n = Number of Measurements.

There will be two sets of Qu's and Ql's calculated for the air content. The first will be calculated based on the range of ±2% of the target air percentage, (((Target Air% + 2)-Avg Air %)/Standard deviation of the air content). The second will be calculated on a target of ±1% of the target air percentage, (((Target Air% + 1)-Avg Air %)/Standard deviation of the air content). These values will be used to derive separate PWL's and then these PWL's will be used to obtain the combined air pay factor.

Use the values for the Q_u, and Q_L and enter in the PWL tables and determine PWL_u, and PWL_L, respectively. If the values for Q_u or Q_L are determined to be negative, follow the directions given on the PWL tables. Round-off the calculated numbers to two decimal places.

Determine the total PWL for each specified requirement using the following relationship.

$PWL = (PWL_u + PWL_L) - 100$

The PWL for each specified requirement per lot is then used to determine the lot's acceptance/rejection status and its appropriate pay factor.

The Combined Air Content Pay Factor will be calculated as: $((25+(PWL_{@\pm2}*0.25))+(0.0125*PWL_{@\pm1}))/100$, and the Strength Pay Factor will be calculated as $((26.25+(0.25*PWL))/100$

Lot Pay Factor will be calculated as: (Air Pay Factor+Strength Pay Factor)

The lowest Lot Pay Factor for a lot will be limited to 0.85 for Class-P Concrete.

NOTE: All calculations are rounded to 2 decimal places except the Lot Pay Factor and the Project Pay Factor which are carried to 6 decimal places.

Table B-1. Percent Within Limits (PWL) for Selected Sample Sizes (N). (Courtesy of FHWA-SA-96-026, 1996)

PERCENT WITHIN LIMITS ESTIMATION TABLE
VARIABILITY-UNKNOWN PROCEDURE
STANDARD DEVIATION METHOD
SAMPLE SIZE 3

	Second Decimal Places For Q									
Q	***0.00***	***0.01***	***0.02***	***0.03***	***0.04***	***0.05***	***0.06***	***0.07***	***0.08***	***0.09***
0.00	50.00	50.28	50.55	50.83	51.10	51.38	51.65	51.93	52.21	52.48
0.10	52.76	53.04	53.31	53.59	53.87	54.15	54.42	54.70	54.98	55.26
0.20	55.54	55.82	56.10	56.38	56.66	56.95	57.23	57.51	57.80	58.08
0.30	58.37	58.65	58.94	59.23	59.51	59.80	60.09	60.38	60.67	60.97
0.40	61.26	61.55	61.85	62.15	62.44	62.74	63.04	63.34	63.65	63.95
0.50	64.25	64.56	64.87	65.18	65.49	65.80	66.12	66.43	66.75	67.07
0.60	67.39	67.72	68.04	68.37	68.70	69.03	69.37	69.70	70.04	70.39
0.70	70.73	71.08	71.43	71.78	72.14	72.50	72.87	73.24	73.61	73.98
0.80	74.36	74.75	75.14	75.53	75.93	76.33	76.74	77.16	77.58	78.01
0.90	78.45	78.89	79.34	79.81	80.27	80.75	81.25	81.75	82.26	82.79
1.00	83.33	83.89	84.47	85.07	85.69	86.34	87.02	87.73	88.49	89.29
1.10	90.16	91.11	92.18	93.40	94.92	97.13	100.00	100.00	100.00	100.00

Numbers in the body of this table are estimates of percent within limits (PWL) corresponding to specific values of Q, the QUALITY INDEX. For Q values less than zero, subtract the table value from 100.

Table B-2. Percent Within Limits (PWL) for Selected Sample Sizes (N)
(Courtesy of FHWA-SA-96-026, 1996)

PERCENT WITHIN LIMITS ESTIMATION TABLE
VARIABILITY-UNKNOWN PROCEDURE
STANDARD DEVIATION METHOD
SAMPLE SIZE 4

	Second Decimal Places For Q									
Q	***0.00***	***0.01***	***0.02***	***0.03***	***0.04***	***0.05***	***0.06***	***0.07***	***0.08***	***0.09***
0.00	50.00	50.33	50.67	51.00	51.33	51.67	52.00	52.33	52.67	53.00
0.10	53.33	53.67	54.00	54.33	54.67	55.00	55.33	55.67	56.00	56.33
0.20	56.67	57.00	57.33	57.67	58.00	58.33	58.67	59.00	59.33	59.67
0.30	60.00	60.33	60.67	61.00	61.33	61.67	62.00	62.33	62.67	63.00
0.40	63.33	63.67	64.00	64.33	64.67	65.00	65.33	65.67	66.00	66.33
0.50	66.67	67.00	67.33	67.67	68.00	68.33	68.67	69.00	69.33	69.67
0.60	70.00	70.33	70.67	71.00	71.33	71.67	72.00	72.33	72.67	73.00
0.70	73.33	73.67	74.00	74.33	74.67	75.00	75.33	75.67	76.00	76.33
0.80	76.67	77.00	77.33	77.67	78.00	78.33	78.67	79.00	79.33	79.67
0.90	80.00	80.33	80.67	81.00	81.33	81.67	82.00	82.33	82.67	83.00
1.00	83.33	83.67	84.00	84.33	84.67	85.00	85.33	85.67	86.00	86.33
1.10	86.67	87.00	87.33	87.67	88.00	88.33	88.67	89.00	89.33	89.67
1.20	90.00	90.33	90.67	91.00	91.33	91.67	92.00	92.33	92.67	93.00
1.30	93.33	93.67	94.00	94.33	94.67	95.00	95.33	95.67	96.00	96.33
1.40	96.67	97.00	97.33	97.67	98.00	98.33	98.67	99.00	99.33	99.67
1.50	100.00	100.00	100.00	100.00	100.00	100.00	100.00	100.00	100.00	100.00

Numbers in the body of this table are estimates of percent within limits (PWL) corresponding to specific values of Q, the QUALITY INDEX. For Q values less than zero, subtract the table value from 100.

Table B-3. Percent Within Limits (PWL) for Selected Sample Sizes (N). (Courtesy of FHWA-SA-96-026, 1996)

PERCENT WITHIN LIMITS ESTIMATION TABLE
VARIABILITY-UNKNOWN PROCEDURE
STANDARD DEVIATION METHOD
SAMPLE SIZE 5

	Second Decimal Places For Q									
Q	***0.00***	***0.01***	***0.02***	***0.03***	***0.04***	***0.05***	***0.06***	***0.07***	***0.08***	***0.09***
0.00	50.00	50.36	50.71	51.07	51.42	51.78	52.13	52.49	52.85	53.20
0.10	53.56	53.91	54.27	54.62	54.98	55.33	55.69	56.04	56.39	56.75
0.20	57.10	57.46	57.81	58.16	58.52	58.87	59.22	59.57	59.92	60.28
0.30	60.63	60.98	61.33	61.68	62.03	62.38	62.72	63.07	63.42	63.77
0.40	64.12	64.46	64.81	65.15	65.50	65.84	66.19	66.53	66.87	67.22
0.50	67.56	67.90	68.24	68.58	68.92	69.26	69.60	69.94	70.27	70.61
0.60	70.95	71.28	71.61	71.95	72.28	72.61	72.94	73.27	73.60	73.93
0.70	74.26	74.59	74.91	75.24	75.56	75.89	76.21	76.53	76.85	77.17
0.80	77.49	77.81	78.13	78.44	78.76	79.07	79.38	79.69	80.00	80.31
0.90	80.62	80.93	81.23	81.54	81.84	82.14	82.45	82.74	83.04	83.34
1.00	83.64	83.93	84.22	84.52	84.81	85.09	85.38	85.67	85.95	86.24
1.10	86.52	86.80	87.07	87.35	87.63	87.90	88.17	88.44	88.71	88.98
1.20	89.24	89.50	89.77	90.03	90.28	90.54	90.79	91.04	91.29	91.54
1.30	91.79	92.03	92.27	92.51	92.75	92.98	93.21	93.44	93.67	93.90
1.40	94.12	94.34	94.56	94.77	94.98	95.19	95.40	95.61	95.81	96.01
1.50	96.20	96.39	96.58	96.77	96.95	97.13	97.31	97.48	97.65	97.81
1.60	97.97	98.13	98.28	98.43	98.58	98.72	98.85	98.98	99.11	99.23
1.70	99.34	99.45	99.55	99.64	99.73	99.81	99.88	99.94	99.98	100.00

Numbers in the body of this table are estimates of percent within limits (PWL) corresponding to specific values of Q, the QUALITY INDEX. For Q values less than zero, subtract the table value from 100.

Table B-4. Percent Within Limits (PWL) for Selected Sample Sizes (N)
(Courtesy of FHWA-SA-96-026, 1996)

PERCENT WITHIN LIMITS ESTIMATION TABLE
VARIABILITY-UNKNOWN PROCEDURE
STANDARD DEVIATION METHOD
SAMPLE SIZE 6

	Second Decimal Places For Q									
Q	***0.00***	***0.01***	***0.02***	***0.03***	***0.04***	***0.05***	***0.06***	***0.07***	***0.08***	***0.09***
0.00	50.00	50.37	50.73	51.10	51.47	51.84	52.20	52.57	52.94	53.30
0.10	53.67	54.04	54.40	54.77	55.14	55.50	55.87	56.23	56.60	56.96
0.20	57.32	57.69	58.05	58.41	58.78	59.14	59.50	59.86	60.22	60.58
0.30	60.94	61.30	61.66	62.02	62.38	62.73	63.09	63.45	63.80	64.16
0.40	64.51	64.86	65.21	65.57	65.92	66.27	66.62	66.96	67.31	67.66
0.50	68.00	68.35	68.69	69.04	69.38	69.72	70.06	70.40	70.74	71.07
0.60	71.41	71.75	72.08	72.41	72.74	73.08	73.40	73.73	74.06	74.39
0.70	74.71	75.04	75.36	75.68	76.00	76.32	76.63	76.95	77.26	77.58
0.80	77.89	78.20	78.51	78.82	79.12	79.43	79.73	80.03	80.33	80.63
0.90	80.93	81.22	81.51	81.81	82.10	82.39	82.67	82.96	83.24	83.52
1.00	83.90	84.08	84.36	84.63	84.91	85.18	85.45	85.71	85.98	86.24
1.10	86.50	86.76	87.02	87.28	87.53	87.78	88.03	88.28	88.53	88.77
1.20	89.01	89.25	89.49	89.72	89.96	90.19	90.42	90.64	90.87	91.09
1.30	91.31	91.52	91.74	91.95	92.16	92.37	92.58	92.78	92.98	93.18
1.40	93.37	93.57	93.76	93.95	94.13	94.32	94.50	94.67	94.85	95.02
1.50	95.19	95.36	95.53	95.69	95.85	96.00	96.16	96.31	96.46	96.60
1.60	96.75	96.89	97.03	97.16	97.29	97.42	97.55	97.67	97.79	97.91
1.70	98.02	98.13	98.24	98.34	98.45	98.55	98.64	98.73	98.82	98.91
1.80	98.99	99.07	99.15	99.22	99.29	99.36	99.43	99.49	99.54	99.60
1.90	99.65	99.70	99.74	99.78	99.82	99.85	99.88	99.91	99.93	99.95
2.00	99.97	99.98	99.99	100.00	100.00	100.00	100.00	100.00	100.00	100.00

Numbers in the body of this table are estimates of percent within limits (PWL) corresponding to specific values of Q, the QUALITY INDEX. For Q values less than zero, subtract the table value from 100.

Table B-5. Percent Within Limits (PWL) for Selected Sample Sizes (N)
(Courtesy of FHWA-SA-96-026, 1996)

PERCENT WITHIN LIMITS ESTIMATION TABLE
VARIABILITY-UNKNOWN PROCEDURE
STANDARD DEVIATION METHOD
SAMPLE SIZE 7

	Second Decimal Places For Q									
Q	***0.00***	***0.01***	***0.02***	***0.03***	***0.04***	***0.05***	***0.06***	***0.07***	***0.08***	***0.09***
0.00	50.00	50.37	50.75	51.12	51.50	51.87	52.24	52.62	52.99	53.37
0.10	53.74	54.11	54.49	54.86	55.23	55.60	55.97	56.35	56.72	57.09
0.20	57.46	57.83	58.20	58.56	58.93	59.30	59.67	60.03	60.40	60.77
0.30	61.13	61.50	61.86	62.22	62.58	62.94	63.31	63.67	64.02	64.38
0.40	64.74	65.10	65.45	65.81	66.16	66.51	66.87	67.22	67.57	67.92
0.50	68.26	68.61	68.96	69.30	69.64	69.99	70.33	70.67	71.01	71.34
0.60	71.68	72.02	72.35	72.68	73.01	73.34	73.67	74.00	74.32	74.65
0.70	74.97	75.29	75.61	75.93	76.25	76.56	76.88	77.19	77.50	77.81
0.80	78.12	78.42	78.73	79.03	79.33	79.63	79.93	80.22	80.52	80.81
0.90	81.10	81.39	81.67	81.96	82.24	82.52	82.80	83.08	83.35	83.63
1.00	83.90	84.17	84.44	84.70	84.97	85.23	85.49	85.74	86.00	86.25
1.10	86.51	86.75	87.00	87.25	87.49	87.73	87.97	88.21	88.44	88.67
1.20	88.90	89.13	89.35	89.58	89.80	90.02	90.23	90.45	90.66	90.87
1.30	91.07	91.28	91.48	91.68	91.88	92.08	92.27	92.46	92.65	92.83
1.40	93.02	93.20	93.38	93.55	93.73	93.90	94.07	94.23	94.40	94.56
1.50	94.72	94.87	95.03	95.18	95.33	95.48	95.62	95.76	95.90	96.04
1.60	96.17	96.31	96.43	96.56	96.69	96.81	96.93	97.05	97.16	97.27
1.70	97.38	97.49	97.59	97.70	97.80	97.89	97.99	98.08	98.17	98.26
1.80	98.35	98.43	98.51	98.59	98.66	98.74	98.81	98.88	98.94	99.01
1.90	99.07	99.13	99.19	99.24	99.30	99.35	99.40	99.44	99.49	99.53
2.00	99.57	99.61	99.64	99.68	99.71	99.74	99.77	99.79	99.82	99.84
2.10	99.86	99.88	99.90	99.92	99.93	99.94	99.95	99.96	99.97	99.98
2.20	99.99	99.99	99.99	100.00	100.00	100.00	100.00	100.00	100.00	100.00

Numbers in the body of this table are estimates of percent within limits (PWL) corresponding to specific values of Q, the QUALITY INDEX. For Q values less than zero, subtract the table value from 100.

Table B-6. Percent Within Limits (PWL) for Selected Sample Sizes (N)
(Courtesy of FHWA-SA-96-026, 1996)

PERCENT WITHIN LIMITS ESTIMATION TABLE
VARIABILITY-UNKNOWN PROCEDURE
STANDARD DEVIATION METHOD
SAMPLE SIZE 8

	Second Decimal Places For Q									
Q	***0.00***	***0.01***	***0.02***	***0.03***	***0.04***	***0.05***	***0.06***	***0.07***	***0.08***	***0.09***
0.00	50.00	50.38	50.76	51.14	51.51	51.89	52.27	52.65	53.03	53.41
0.10	53.78	54.16	54.54	54.92	55.29	55.67	56.04	56.42	56.79	57.17
0.20	57.54	57.92	58.29	58.66	59.03	59.41	59.78	60.15	60.52	60.89
0.30	61.25	61.62	61.99	62.35	62.72	63.08	63.45	63.81	64.17	64.53
0.40	64.89	65.25	65.61	65.96	66.32	66.67	67.03	67.38	67.73	68.08
0.50	68.43	68.78	69.13	69.47	69.82	70.16	70.50	70.84	71.18	71.52
0.60	71.85	72.19	72.52	72.85	73.18	73.51	73.84	74.17	74.49	74.81
0.70	75.14	75.46	75.77	76.09	76.41	76.72	77.03	77.34	77.65	77.96
0.80	78.26	78.56	78.86	79.16	79.46	79.76	80.05	80.34	80.63	80.92
0.90	81.21	81.49	81.77	82.05	82.33	82.61	82.88	83.15	83.43	83.69
1.00	83.96	84.22	84.49	84.75	85.00	85.26	85.51	85.76	86.01	86.26
1.10	86.51	86.75	86.99	87.23	87.46	87.70	87.93	88.16	88.39	88.61
1.20	88.83	89.06	89.27	89.49	89.70	89.91	90.12	90.33	90.53	90.74
1.30	90.94	91.13	91.33	91.52	91.71	91.90	92.09	92.27	92.45	92.63
1.40	92.81	92.98	93.15	93.32	93.49	93.65	93.81	93.97	94.13	94.29
1.50	94.44	94.59	94.74	94.88	95.03	95.17	95.31	95.44	95.58	95.71
1.60	95.84	95.97	96.09	96.21	96.33	96.45	96.57	96.68	96.79	96.90
1.70	97.01	97.11	97.21	97.31	97.41	97.51	97.60	97.69	97.78	97.87
1.80	97.96	98.04	98.12	98.20	98.28	98.35	98.42	98.49	98.56	98.63
1.90	98.69	98.76	98.82	98.88	98.93	98.99	99.04	99.09	99.14	99.19
2.00	99.24	99.28	99.33	99.37	99.41	99.45	99.48	99.52	99.55	99.58
2.10	99.61	99.64	99.67	99.70	99.72	99.74	99.77	99.79	99.81	99.83
2.20	99.84	99.86	99.87	99.89	99.90	99.91	99.92	99.93	99.94	99.95
2.30	99.96	99.96	99.97	99.98	99.98	99.98	99.99	99.99	99.99	100.00

Numbers in the body of this table are estimates of percent within limits (PWL) corresponding to specific values of Q, the QUALITY INDEX. For Q values less than zero, subtract the table value from 100.

Special Notes & Drawings

for

Installation
of
Traffic Counting Inductance Loops

General Note	Sheet 1 of 1
Location Table/Estimate of Material Quantities	Sheets 1 thru 2
Special Notes for Installaiton of Traffic Counting Inductance Loops	Sheets 1 thru 11
Drawings	Sheets 1 thru 6
General Note - Item # 5-2026.00	Sheet 1 of 1
Location Table and Estimate of Quantities	Sheet 1 of 1
Multiple-Lane Volume Site Drawing	Sheet 1 of 1
Special Notes for Traffic Counting Inductance Loops & Axle Sensors	Sheets 1 thru 12
References	Sheet 1 of 1
Drawings	Sheets 1 thru 8

GENERAL NOTE
JEFFERSON COUNTY – I-264
TRAFFIC STATIONS (CONSECUTIVE MP):

N17 – MP 0.60
I80 – MP 2.20
N13 – MP 3.40
N15 – MP 4.50
N30 – MP 5.30
I81 – MP 8.30

The Division of Planning needs to re-establish twelve (12) traffic data collection stations within the section of the Pavement Rehabilitation Construction project in Jefferson County on I-264. Planning is requesting to have service replaced at these sites at the approximate Project Station References listed within the Location Table. These traffic induction loop sensor installations should occur once the new surface is completed. The traffic stations will have two (2) loops per lane at four (4) locations and one (1) loop per lane at the remaining 8 (eight) locations.

Therefore, the contractor will install a total of forty-eight (48) loop sensors. Installations shall be coordinated with and approved by appropriate Division of Planning staff. Reference "Special Notes for Installation of Traffic Loops and Axle Sensors" for materials, construction and installation detail. Also see the attachments labeled Location Table/ Estimate of Quantities, Special Notes for Installation of Traffic Loops with Figures 1-6. The last two figures 5 and 6 depict replacement traffic station Induction Loop Installation Arrays.

NOTE:

The Special Notes for Traffic Counting Inductance Loops and Axle Sensors are generic.
Only the sections that pertain to the specified location and the bid items listed in this summary are applicable.

LOCATION TABLE / ESTIMATE OF MATERIAL QUANTITIES

JEFFERSON COUNTY – I-264

TRAFFIC STATIONS (CONSECUTIVE MP):

N17 – MP 0.60
I80 – MP 2.20
N13 – MP 3.40
N15 – MP 4.50
N30 – MP 5.30
I81 – MP 8.30

TRAFFIC STATION	MP INTRVL BEGIN	LOCATION (Existing MP)	MP INTRVL END	EXISTING STATION NOMENCLATURE	LANES	PIEZOS	LOOPS	ITEM PROJECT/ MP LIMITS
N17W&E	0.00	0.600	1.50	ONE (1) LOOP / LANE	6		6	1998 5 -2000.01/ 0.460 – 5.960
I80W&E	1.500	2.200	2.697	TWO (2) LOOPS / LANE	6		12	1998 5 -2000.01/ 0.460 – 5.960
N13W&E	2.697	3.400	3.894	ONE (1) LOOP / LANE	6		6	1998 5 -2000.01/ 0.460 – 5.960
N15W&E	3.894	4.500	5.219	ONE (1) LOOP / LANE	6		6	1998 5 -2000.01/ 0.460 – 5.960
N30W&E	5.219	5.300	7.480	ONE (1) LOOP / LANE	6		6	1998 5 -2000.01/ 0.460 – 5.960
I81W&E	7.480	8.300	9.233	TWO (2) LOOPS / LANE	6		12	1998 5 -2001.00/ 5.960 – 8.040

TRAFFIC STATION	CONSTRUCTION PLAN STATION REFERENCES	REPLACEMENT CONSTRUCTION NOMENCLATURE	LANES	PIEZOS	LOOPS	ITEM PROJECT/ MP LIMITS
N17W&E	472+00	ONE (1) LOOP / LANE	6		6	1998 5 -2000.01/ 0.460 – 5.960
I80W&E	383+00	TWO (2) LOOPS / LANE	6		12	1998 5 -2000.01/ 0.460 – 5.960
N13W&E	317+50	ONE (1) LOOP / LANE	6		6	1998 5 -2000.01/ 0.460 – 5.960
N15W&E	270+00	ONE (1) LOOP / LANE	6		6	1998 5 -2000.01/ 0.460 – 5.960
N30W&E	196+00	ONE (1) LOOP / LANE	6		6	1998 5 -2000.01/ 0.460 – 5.960
I81W	88+40	TWO (2) LOOPS / LANE	3		6	1998 5 -2001.00/ 5.960 – 8.040
I81E	83+00	TWO (2) LOOPS / LANE	3		6	1998 5 -2001.00/ 5.960 – 8.040

The demolished **Traffic Stations,** as listed above, shall be positioned at the approximate "**Construction Plan Station References,**" which approximate the former traffic station "**Location** (Existing MP)." The final locations should be checked through appropriate Division of Planning staff.

These Traffic Station replacements will all have six (6) lanes of traffic, three (3) lanes in each east and west direction with an east-west parallel median barrier. The three (3) eastbound lanes are in the US 31W direction with the westbound lanes towards the Ohio River Bridge apron Item Project Limits as above.

There shall be two (2) loop sensors installed in each of the index station lanes as depicted in FIGURE 5. All remaining four (4) stations require one (1) loop sensor installed in each lane as depicted in FIGURE 6.

ESTIMATE OF MATERIAL QUANTITIES

TRAFFIC STATION	CODE	DESCRIPTION	UNIT	QUANTITY
CUMULATIVE	**4793**	Rigid Steel Conduit 1.25 In.	LINEAR FEET	**80**
CUMULATIVE	**4830**	Loop Wire	LINEAR FEET	**7552**
CUMULATIVE	**4820**	Trenching and Back-filling	LINEAR FEET	**80**
CUMULATIVE	**4895**	Loop Saw-Slot and Fill	LINEAR FEET	**1984**
CUMULATIVE	*	*SPCL NOTES Pg1/11, II. MATERIALS, B. Jnctn Box Type 6"x6"x4"	JUNCTION BOX	**12**
N17 W&E	**4793**	Rigid Steel Conduit 1.25 In.	LINEAR FEET	10
	4830	Loop Wire	LINEAR FEET	944
	4820	Trenching and Back-filling	LINEAR FEET	10
	4895	Loop Saw-Slot and Fill	LINEAR FEET	248
	*	*SPCL NOTES Pg1/11, II. MATERIALS, B. Jnctn Box Type 6"x6"x4"	JUNCTION BOX	2
I80 W&E	**4793**	Rigid Steel Conduit 1.25 In.	LINEAR FEET	20
	4830	Loop Wire	LINEAR FEET	1888
	4820	Trenching and Back-filling	LINEAR FEET	20
	4895	Loop Saw-Slot and Fill	LINEAR FEET	496
	*	*SPCL NOTES Pg1/11, II. MATERIALS, B. Jnctn Box Type 6"x6"x4"	JUNCTION BOX	2
N13 W&E	**4793**	Rigid Steel Conduit 1.25 In.	LINEAR FEET	10
	4830	Loop Wire	LINEAR FEET	944
	4820	Trenching and Back-filling	LINEAR FEET	10
	4895	Loop Saw-Slot and Fill	LINEAR FEET	248
	*	*SPCL NOTES Pg1/11, II. MATERIALS, B. Jnctn Box Type 6"x6"x4"	JUNCTION BOX	2
N15 W&E	**4793**	Rigid Steel Conduit 1.25 In.	LINEAR FEET	10
	4830	Loop Wire	LINEAR FEET	944
	4820	Trenching and Back-filling	LINEAR FEET	10
	4895	Loop Saw-Slot and Fill	LINEAR FEET	248
	*	*SPCL NOTES Pg1/11, II. MATERIALS, B. Jnctn Box Type 6"x6"x4"	JUNCTION BOX	2
N30 W&E	**4793**	Rigid Steel Conduit 1.25 In.	LINEAR FEET	10
	4830	Loop Wire	LINEAR FEET	944
	4820	Trenching and Back-filling	LINEAR FEET	10
	4895	Loop Saw-Slot and Fill	LINEAR FEET	248
	*	*SPCL NOTES Pg1/11, II. MATERIALS, B. Jnctn Box Type 6"x6"x4"	JUNCTION BOX	2
I81 W	**4793**	Rigid Steel Conduit 1.25 In.	LINEAR FEET	10
	4830	Loop Wire	LINEAR FEET	944
	4820	Trenching and Back-filling	LINEAR FEET	10
	4895	Loop Saw-Slot and Fill	LINEAR FEET	248
	*	*SPCL NOTES Pg1/11, II. MATERIALS, B. Jnctn Box Type 6"x6"x4"	JUNCTION BOX	1
I81 E	**4793**	Rigid Steel Conduit 1.25 In.	LINEAR FEET	10
	4830	Loop Wire	LINEAR FEET	944
	4820	Trenching and Back-filling	LINEAR FEET	10
	4895	Loop Saw-Slot and Fill	LINEAR FEET	248
	*	*SPCL NOTES Pg1/11, II. MATERIALS, B. Jnctn Box Type 6"x6"x4"	JUNCTION BOX	1

SPECIAL NOTES FOR INSTALLATION OF TRAFFIC COUNTING INDUCTANCE LOOPS

I. DESCRIPTION

Except as specified in theses notes, perform all work according to the Department's 2002 Standard Specifications, applicable Special Provisions and Special Notes, Sepia and Standard Drawings, and the drawings elsewhere in this proposal. Article references are to the Standard Specifications.

Furnish all materials, labor, equipment, and incidentals for the following work: (1) Maintain and Control traffic; (2) Install inductive loops; and (3) All other work required by the Specifications, Standard Drawings, Special Notes and the drawings in the proposal. The details of the project will be supplied in addition to these Special Notes.

II. MATERIALS

The Department will sample and test all materials according to Department's Sampling Manual. Have all materials available for sampling a sufficient time in advance of the use of the materials to allow for the necessary time for testing, unless otherwise specified in these notes. All materials shall be approved prior to being utilized. The Contractor shall submit for approval five (5) copies of descriptive literature, drawings and any requested design data for the materials he proposes to use. No substitutions for approved materials will be made without the written approval of the Engineer.

A. Maintain and Control Traffic. See Traffic Control Plan.

B. Junction Box Type 6" x 6" x 4". The junction box shall have minimum inside dimensions of at least six inches high by six inches wide by four inches deep, made of a UV stabilized nonmetallic material (plastic) or non-rusting metal, and be weatherproof (NEMA 4X enclosure). It shall have a removable replaceable door with a continuous durable weatherproof gasket between the body and overhanging door to insure a watertight seal. The door shall be hinged with stainless steel screws, hinge(s) and pin(s). The door shall also have a stainless steel padlockable latch on the side opposite the hinge(s).

C. Junction Box Type B. The junction box Type B shall be constructed of a fiberglass reinforced polymer concrete, Quazite PC Style, or approved specification. It shall have nominal inside dimensions of: 11 inches wide by 18 inches long by 12 inches deep with an open bottom. The removable cover shall be attached with a minimum of two 3/8-inch stainless steel hex bolts and washers.

D. Cabinet Type G. A controller cabinet Type G shall be constructed of type 5052-H32 sheet aluminum with a minimum thickness of 0.125 inches. The cabinet shall meet or exceed the industry standards set forth by the UL 50 and the National electrical

Manufacturer's Association (NEMA) 3R. The cabinet shall have a nominal dimension of: 41 inches high by 25 inches wide by 16 inches deep. The cabinet shall include kits for a back panel and two shelves. The cabinet shall be designed with a sloped top to prevent the accumulation of water on its top surface. The single door opening shall be double flanged on all four sides, hinged on the right side, equipped with a three-point latching mechanism, and include a door restraint. The door shall be equipped with a Corbin tumbler #2 lock. The cabinet shall be equipped with two adjustable "C" mounting channels on both side and back walls to allow for versatile positioning of shelves. Manufacturer's shop drawings shall be submitted demonstrating details of equipment housing and installation. A 120-volt GFCI AC duplex receptacle shall be provided in the cabinet for electrical service, if electrical service is specified.

An approved source is provided below. Other approved equal cabinets may be furnished if approved by a representative of the Cabinet. To be considered approved equal, the cabinet shall meet the above requirements and match the specified detailed dimensions.

Econolite Control Products.
P.O. Box 6150
3360 E. La Palma
Anaheim, California 92806-2856

E. Galvanized Steel Cabinet. The cabinet shall be a hinged cover NEMA Type 3R medium enclosure, constructed of: 16 or 14 gauge galvanized steel, and have inside dimensions of 20"W x 20"H x 8"D. This shall be the standard size that contractors shall place their bids on. The cabinet shall meet the industry standards set forth by the Underwriters'Laboratories (UL) 50 and the National Electrical Manufactures' Association (NEMA). The finish shall consist of an American National Standards Institute (ANSI) 61 gray polyester powder finish inside and out over the galvanized steel. The cabinet shall have the following features:

- Drip shield top and seam-free sides, front, and back, to provide protection in outdoor installations against rain, sleet, and snow.
- 16 gauge galvanized steel continuous stainless steel pin.
- Cover fastened securely with captive plated steel screws.
- Hasp and staple provided for padlocking.
- No gaskets or knockouts.
- Back plate mounted inside the cabinet for terminal strip installation.

An approved source is provided below. Other approved equal cabinets may be furnished if approved by a representative of the Cabinet. To be considered approved equal, the cabinet shall meet the above requirements and match the specified detailed dimensions.

Hoffman Engineering Co.
World Headquarters
900 Ehlen Drive
Anoka, Minnesota 55303-7504

F. Conduit. Conduit shall be rigid steel waterproofed conduit unless otherwise specified. All conduit shall be galvanized inside and out and shall conform to the Underwriters' Laboratories (UL) requirements for rigid metallic conduit. Furnish all conduit fittings, bodies, boxes, joints, couplings and mounting hardware.

G. Loop Wire. All loop wire shall be plainly marked in accordance with the provisions of the current editions of the National Electric Code (NEC). The wire shall be 14-gauge single conductor, insulated in polyethylene (PE) with a 0.004-inch thick nylon coating, and enclosed in a 0.030-inch thick PE tube jacket. The wire shall meet the requirements of the International Municipal Signal Association (IMSA) Specification No. 51-5-1984.

H. Traffic Loop Encapsulant. The traffic loop encapsulant shall consist of a one-part polyurethane as described in Section 835.06 of the Kentucky Transportation Cabinet, Department of Highways Standard Specifications for Road and Bridge Construction.

I. Wood Post. The wood post shall be four inches by four inches by eight feet long, and is pretreated to conform to the American Wood Preservers' Association (AWPA) C-14. All wood posts shall be sawed on all four sides, having both ends square, and conform to the dimensions specified. The wood post is described in detail in section 820.01 of the Kentucky "Standard Specifications for Road and Bridge Construction", 2000 edition.

J. Seeding and Protection. (Use seed mixture No. I per Section 212-Erosion Control of the Department's 2000 Standard Specifications for Road and Bridge Construction book.)

K. Electrical Service. The contractor shall initiate a work order for the installation of electrical service to the power site. A representative from the Division of Planning and the local utility company shall be consulted prior to choosing an exact location for the pole. The Contractor shall be responsible for clearing the right-of-way for the electrical service drop. The electrical service shall be a minimum 60-ampere, which is capable of supplying 120 volts or 240 volts to the electronics. The installation and materials specified in the construction notes below, shall be made incidental to the bid item established for electrical service.

III. CONSTRUCTION METHODS

The plans indicate the extent and general arrangement of the installation and are for general guidance. When any modifications of the plans or specifications are deemed necessary by the Contractor, details of such changes and the reasons shall be submitted in writing to the Resident Engineer for written approval prior to beginning the modified work.

Once the project has been let and awarded, the Division of Construction shall notify the Division of Planning of the scheduled date for a Pre-Construction meeting so that prior arrangements can be made to attend. This will allow Planning an opportunity to address their concerns and answer any questions that the Contractor may have before beginning the work. Planning shall also be

notified once the work has been completed so that their representative can perform a final inspection. The Division of Construction will then review Planning's final inspection report and determine whether the work is in compliance with the specifications before awarding payment to the Contractor.

A. Maintain and Control Traffic. See Traffic Control Plan.

B. Junction Box Type 6" x 6" x 4". The Contractor shall stub the rigid steel conduit to the junction box. The junction box shall be located at or beyond the shoulder and mounted on the side of a post approximately 2 feet beyond the guard-rail post using banding material or other appropriate mounting hardware. (See Figure 1). Permanent identification numbers shall be affixed to all wires in each junction box and cabinet in order to distinguish between the loops and/or sensors. See Location Drawing for sensor numbers to be placed on all lead-ins.

C. Junction Box Type B. Install the Junction Box Type B adjacent to the edge of pavement and flush with the ground level (see Figure 2). Place roughly 18 inches of No. 57 aggregate underneath the junction box Type B to allow drainage. Extend the loop lead-in wires splice-free to the cabinet. Run the wire from the junction box Type B through the conduit at a minimum depth of six inches. Stub the conduit up into the junction box Type B from its base to accommodate the lead-in wires. Leave at least 2 feet of slack lead-in wire coiled inside the junction box Type B. The conduit fittings, backfilling, and aggregate shall be incidental to the junction box Type B. Permanent identification numbers shall be affixed to all wires in each junction box and cabinet in order to distinguish between the loops and/or sensors. See Location Drawing for sensor numbers to be placed on all lead-ins.

D. Cabinet Type G. Locate the cabinet sufficiently beyond the roadside by determining the minimum clear zones in accordance with the "Roadside Design Guide". Place a concrete foundation of appropriate size for mounting the cabinet. The cabinet shall be mounted on the concrete base such that the bottom of the cabinet is 27" above the ground. The door of the cabinet shall open away from traffic. Fasten the cabinet to the foundation using anchor rods and caulk the gap between the cabinet and the base. Stub rigid conduit up into the cabinet from its base. Install an extra 1 ¼" conduit to be stubbed out in the bottom of the cabinet and run out 2 feet from the concrete base and plugged with duct seal or taped shut with electrical tape toward the roadway for future use. An 8' copper clad ground rod shall be driven into the soil and bonded to the rigid conduit via #4 solid copper wire and ran through the concrete and up into the cabinet. A ¾" rigid steel conduit shall be stubbed up into the cabinet and ran 2 feet up the electrical service pole and terminated to a ¾" weatherhead. This conduit shall be run in the same ditch as the electrical service. If electrical service is not provided as an item in the contract, the ¾" rigid steel conduit shall be run out 2 feet from the concrete base and plugged with plumbers putty or taped shut with electrical tape. The location of the plugged end shall be marked with a wooden stake and labeled "¾" conduit end". (See Figure 8)

Leave at least four feet of slack lead-in wire in the cabinet. Include the following major

items as incidental to the cost of the cabinet: concrete foundation, anchor rods, ground rod, #4 solid copper wire, bonding clamps, and caulking. The Division of Planning will supply additional harnesses and do final connections inside the cabinet. Permanent identification numbers shall be affixed to all wires in each junction box and cabinet in order to distinguish between the loops and/or sensors. See Location Drawing for sensor numbers to be placed on all lead-ins.

E. Galvanized Steel Cabinet And Wood Post. The Contractor shall determine the amount of clearance required from the road to the cabinet for each specific station location. The "Roadside Design Guide". Developed by the American Association of State Highway Officials (AASHTO), shall be used as a tool to determine roadside safety` based on design and speed limit. The Contractor and Planning shall discuss and resolve any conflicts in the Pre-Construction meeting that might arise from following the station descriptions of the Location Table.

Set the treated-wood post three feet below the ground and place the backfill material in the hole, compacting until flush with the existing earth. Mount the cabinet to the post using ¼" x 2 ½" galvanized lag bolts at the top and bottom of the cabinet. The base of the cabinet shall be four feet above ground level. Stub the rigid steel conduit up into the base of the cabinet. Affix the conduit to the post using two conduits straps, a maximum of 18" on-center, and ¼" x 2 ½" galvanized lag bolts. Cabinet door shall open facing away from traffic. (see Figure 7).

Use terminal strips on the back plate with a minimum of eight terminals each and 7/16-inch spacing (center to center) to mount inside the cabinet in order to connect the lead-in wires to the cable assemblies. Use screw type terminal strips to accommodate wire with spade-tongue ends. Allow for at least 20 inches of slack lead-in wire in the cabinet before connecting them to the terminal strip. Wires connected to the terminal strips shall have insulated, solderless, spade tongue terminals of correct wire and stud size. Wires shall be labeled correctly. See Location Drawing and Wiring Table.

Permanent identification numbers shall be affixed to all wires in each junction box and cabinet in order to distinguish between the loops and/or sensors. See Location Drawing for sensor numbers to be placed on all lead-ins.

F. Conduit. Rigid steel waterproofed conduit encasement shall be provided for all conductors where conductors run to a junction box or cabinet. All conduit installations shall conform to the provisions of the NEC, except where directed otherwise. Bonded slip joints will be permitted for joining rigid conduit to the junction box or cabinet. Where a standard coupling cannot be used, an approved threaded union coupling shall be used.

All conduit ends shall be reamed to remove burrs and sharp edges. Damaged portions of the galvanized surfaces and untreated threads resulting from field cuts shall be

painted with a rust inhibitive paint. Conduit bends shall have a radius of no less than 12 times the nominal diameter of the conduit, unless otherwise shown on the plans.

Conduit that will be subject to regular pressure from traffic shall be laid to a minimum depth of 24 inches below grade. Conduit that will not be subject to regular pressure from traffic shall be laid to a minimum depth of six inches below grade. All conduit openings shall be waterproofed with a flexible, removable sealant, including those ending in junction boxes and cabinets. This shall be accomplished using duct seal, or plumber's putty, by working it around the wires and then extending it one inch into the end of the conduit. After the conduit has been installed and before the backfilling is started, the conduit installation shall be inspected and approved by the Engineer. In backfilling trenches, the backfill material shall be placed and compacted in lifts of nine inches or less. Any area disturbed as a result of the Contractor's operations shall be restored to the satisfaction of the Engineer.

G. Wiring. All wiring shall conform to the provisions of the NEC unless otherwise shown on the plans. Permanent identification numbers shall be affixed to all wires in each junction box and cabinet in order to distinguish between the loops and/or sensors. See Location Drawing for sensor numbers to be placed on all lead-ins. All wiring shall be taken to the Cabinet or Junction Box Type 6" x 6" x 4". Leave at least 2 feet of "slack" lead-in wire inside Type B junction boxes and steel cabinets and a minimum of 4 feet of wire inside the Type G cabinet.

H. Splicing. All splices shall conform to the provisions of the NEC unless otherwise shown on the plans. Splices shall be made with mechanical connectors of a type approved by the Engineer or shall be twisted and soldered. Splices for coax-cable must be protected by use of heat shrink tubing while splices for loop wire shall be protected by either heat shrink tubing or a double spiral wrapping of vinyl electrical tape. All splices are to be made in junction boxes unless approved by a representative of the Division of Planning.

I. Loops. A location table and a map of the area are furnished in the Supplemental Notes, along with the estimate quantities, to display the approximate location for loop installation in the existing pavement. The Contractor and a representative of Planning will verify the precise location on site. The Contractor shall be careful to avoid, when possible, pavement sections where potholes, cracks, or any other roadway flaws exists. This will not only facilitate installation of the equipment, but will also increase the accuracy and service life span of the sensors.

All loop dimensions shall be six feet by six feet unless otherwise indicated by the Location Drawing. Center and mark each loop in the lane such that its sides are parallel and perpendicular to the direction of traffic. Make the saw-cut for the loop 1/4-inch wide and at a depth such that the top loop wire is a minimum of one inch below the surface of rigid (PCC Concrete) pavement or three inches below the surface of asphalt pavement. Drill a 1.5" hole at all four corners of the loop to prevent sharp bends in the wire (see Figure 3). Clean the debris, water, and loose particles from the slot with clean (oil free)

compressed air.

Make the saw-cut for the home run slot, which will contain several lead-in wires, 1/4 inch wide, and at a depth such that the top lead-in wire is a minimum of one inch below the surface of rigid (concrete) pavement or three inches below the surface of bituminous (asphalt) pavement. Depending on the number of road sensors at a particular site, the home run slot may need to be cut slightly deeper as you approach the shoulder in order to maintain the minimum depth for the top lead-in wire. (See Figure 4).

Insert the loop wire into the loop slot for four rotations (see Figure 3). Push the wire in with a wooden stick, such as a paint stir stick or other blunt wooden object. If the wire insulation is broken, apply heat shrink tubing or a double wrapping of vinyl electrical tape to protect from corrosion. Extend the loop lead-in wire splice-free to the junction box or cabinet. Exceptions to this shall be considered on a case-by-case basis and must be approved by the Engineer. If splices cannot be avoided, every effort shall be made to locate them in a junction box.

There shall be a minimum of six feet between loops in adjacent lanes for 12-foot wide lanes. Loops in the same lane shall be spaced 16 feet from leading edge to leading edge (see Figure 6). Twist each pair of loop lead-in wires, exclusive of shielded coax-cable, with three to five turns per foot before placement into the conduit, junction box, and cabinet. Do not twist different pairs of loop wire together. Once the loop wire is installed in the roadway, apply loop encapsulant by allowing the material to flow slowly into the saw-cut and settle until level with the road surface. The loop encapsulant shall be incidental to the bid item "Loop-Saw Slot and Fill".

J. Electrical Service. A wood-treated service pole with a 20-foot minimum length and a six-inch diameter, or approved equal, is to be furnished by the Contractor. Install the electrical service pole adjacent to the cabinet at a depth of at least four feet while maintaining a 12-foot minimum clearance for the electrical service drop. Compact the backfill material to support the electrical service drop without leaning. Install rigid conduit up the length of the pole with three separate conductors (No. 4 copper wire) in the conduit and a weatherhead at the top.

Space the conduit straps 30 inches apart and leave 24 inches of cable for the drip loop. Install a meter-base and a disconnect panel with a 15-ampere circuit breaker inside. A manufactured weatherproof hub connector is required to connect the meter-base to the disconnect panel. Do not use service entrance cable inside the conduit. The conduit from the disconnect panel is required to be at a depth of six inches below grade. Install a 5/8-inch by eight-foot ground rod below the finished grade. Extend the ground wire through a separate hole in the disconnect panel and clamp to the ground rod. Install a ¾" rigid conduit to 2 feet above ground level and install a weatherhead at the top opening. This conduit shall be ran to and stubbed up in to Cabinet Type G. The conduit shall be attached to the pole at 2" from ground level and 2" from the weatherhead.

K. Cleanup and Restoration. The Contractor will be responsible for all damage to public

and/or private property resulting from his work. Upon completion of the work, restore all disturbed highway features in like kind design and materials. Clean the site and dispose of all waste and debris off the right-of-way at sites obtained by the Contractor at no additional cost to the Department. Sow all disturbed earthen areas with Seed Mixture No.1. (see seeding and protection).

L. On-Site Inspection. Each Contractor submitting a bid for this work shall make a thorough inspection of the site prior to submitting his bid. He shall be thoroughly familiar with existing conditions so that the work can be expeditiously performed after a Contract is awarded. Submission of a bid shall be evidence of this inspection having been made. The Department will not honor any claims resulting from site conditions.

M. Property Damage. The Contractor will be responsible for all damage to public and/or private property resulting from his work.

N. Caution. Information shown on the plans and in this proposal and the types and quantities of work listed are not to be taken as an accurate or complete evaluation of the material and conditions to be encountered during construction. The bidder must draw his own conclusion as to the conditions encountered. The Department does not give any guarantee as to the accuracy of the data and no claim will be considered for additional compensation if the conditions encountered are not in accordance with the information shown.

O. Utility Clearance. It is not anticipated that utility facilities will need to be relocated and/or adjusted; however, in the event that it is discovered that the work does require that utilities be relocated and/or adjusted, the utility companies will work concurrently with the Contractor while relocating their facilities.

IV. BID NOTES AND METHOD OF MEASUREMENT FOR PAYMENT

Only the bid items listed will be measured for payment. All other items required to complete the vehicle detection installation shall be incidental to the other items of work. Payment at the contract unit price shall be full compensation for all materials, labor, equipment and incidentals to furnish and install these items.

A. **Maintain and Control Traffic.** See Traffic Control Plan.

B. **Junction Box Type 6"x 6"x 4".** Junction box (each) shall include furnishing and installing specified junction box in accordance with the specifications. This item includes connectors, splice sleeves, conduit fittings, mounting materials and anything other items required to complete this part of the installation.

C. **Junction Box Type B.** Junction box (each) shall include furnishing and installing specified junction box in accordance with the specifications. This item includes concrete (if required), #57 aggregate, conduit fittings and backfilling around the unit.

D. **Cabinet Type G (NEMA-3R).** Cabinet (each) shall include furnishing and installing a Type G cabinet as specified. This item shall include constructing the concrete base or mounting cabinet to pole, installation of duplex receptacle and connection of all detectors (where applicable). Incidental to this item shall be furnishing, installing electrical service conductors, conduits, fused cutout, ground rods, all internal shelving, brackets, any necessary pole mounting hardware and electrical inspection fees.

E. **Galvanized Steel Cabinet and Post.** Cabinet (each) shall include furnishing and installing a galvanized steel cabinet and post as specified. This item shall include mounting the cabinet to post and the connection of all detectors. Incidental to this item shall be furnishing and installing conductors, conduit, ground rods, any necessary pole mounting hardware and electrical inspection fees.

F. **Conduit.** Conduit shall include furnishing and installing specified conduit in accordance with specifications. This item includes conduit fittings, bodies, boxes, expansion joints, couplings, duct seal, bonding straps and any other necessary hardware. Conduit will be measured in linear feet.

G. **Loop Wire.** Wire or cable shall include furnishing and installing specified wire or cable within conduit, saw slot, or overhead as indicated on the detail sheets. Incidental to this item shall be the labeling of all wires and cables in each junction box, cabinet and splice box; furnishing and installing of splice boots, cable rings and all other hardware required for installing cable. Loop wire will be measured in linear feet.

H. **Trenching and Backfilling.** Trenching and backfilling shall include excavation, backfilling, boring, temporary erosion control, seeding, protection and restoration of disturbed areas to original condition. Trenching and Backfilling will be measured in linear feet.

I. **Loop-Saw Slot and Fill.** Loop saw slot and fill shall include sawing, cleaning and filling induction loop saw slot with loop sealant material. Sawing and filling slot for loop wire is measured in linear feet.

J. **Electrical Services.** Electrical services shall include all related work towards furnishing and installing electrical service. This will be measured in individual units each.

REFERENCES

1. Kentucky Transportation Cabinet, Department of Highways Standard Specifications for Road and Bridge Construction, 2000 edition, and Supplemental Specifications.

2. National Electrical Code (NEC), latest edition.

3. International Municipal Signal Association (IMSA) Specification No. 51-5-1984.

4. FHWA Manual of Uniform Traffic Control Devices, latest edition.

5. "Roadside Design Guide", developed in 1996 by the American Association of State Highway and Transportation Officials (AASHTO).

6. Kentucky Department of Highways Standard Drawings, current editions, as applicable:

TSC-205	Lane Closure Case II
TSC-221	Shoulder Closure
TSC-260	Miscellaneous Traffic Control Devices (sheet 1)
TSC-261	Miscellaneous Traffic Control Devices (sheet 2)
TSC-265	Post Splicing Detail
TSC-270	Flashing Arrow

7. Kentucky Department of Highways Sepia Drawings:

Silt Checks Type I - Straw Bales

Updated: October 14, 2002

Junction Box Type 6"x 6"x 4" Detail

Figure 1

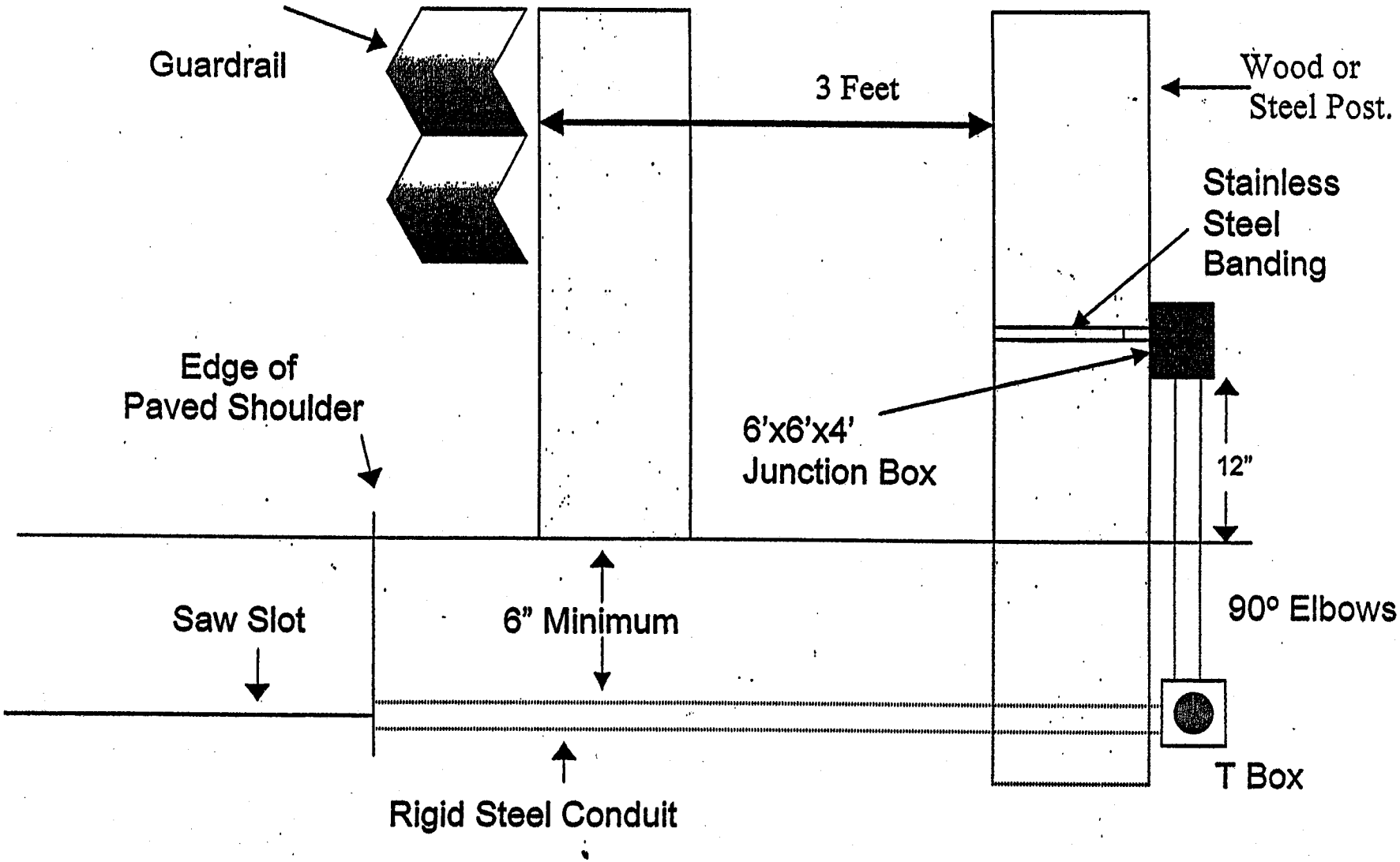

Junction Box Type B Installation
Figure 2

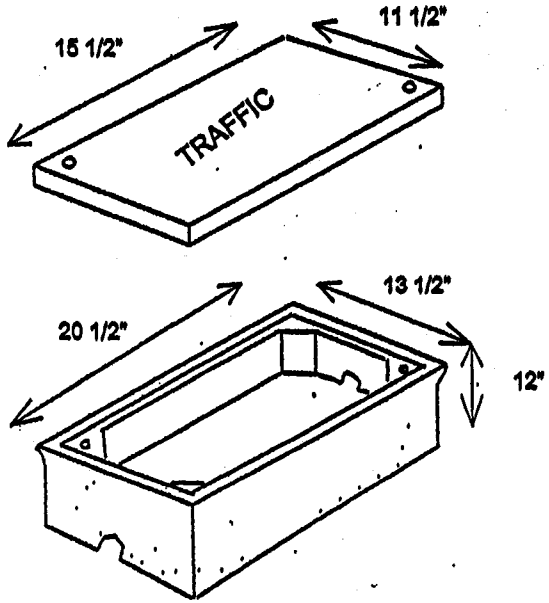

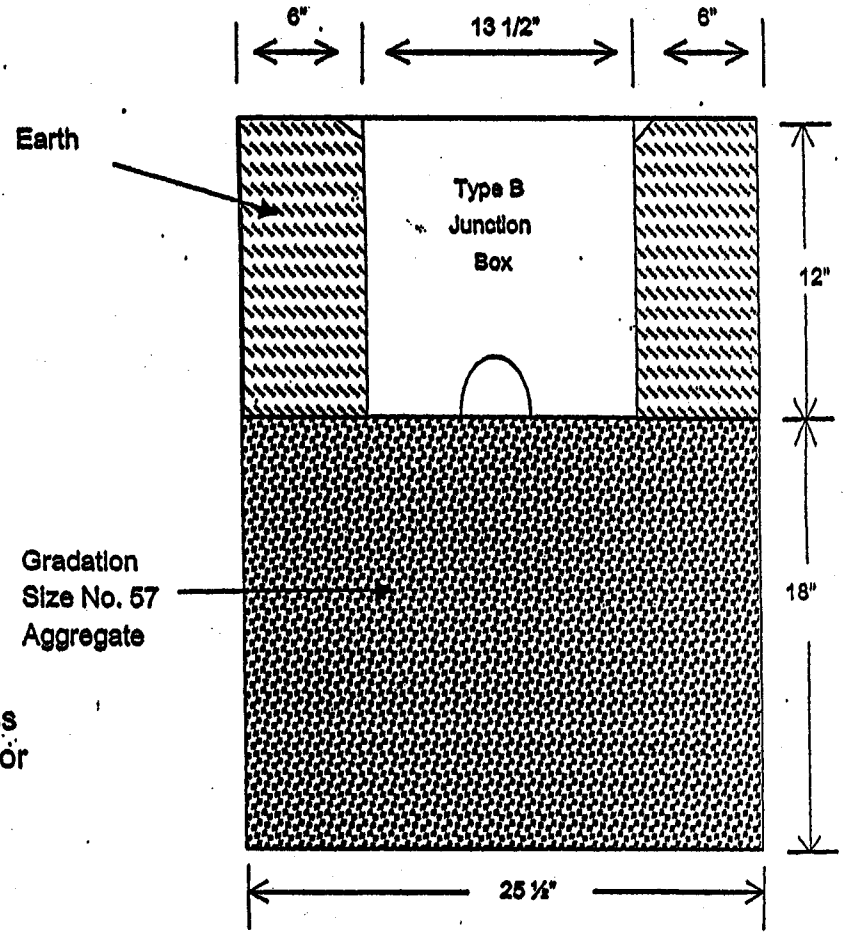

Junction box shall be constructed of a fiberglass reinforced polymer concrete, Quazite PC style or approved equal. Covers shall be marked "TRAFFIC" and be attached with 3/8" stainless hex bolts. Junction box shall be installed flush with ground line.

Loop Installation Instructions

Loop Installation in Existing Roadways

Figure 3

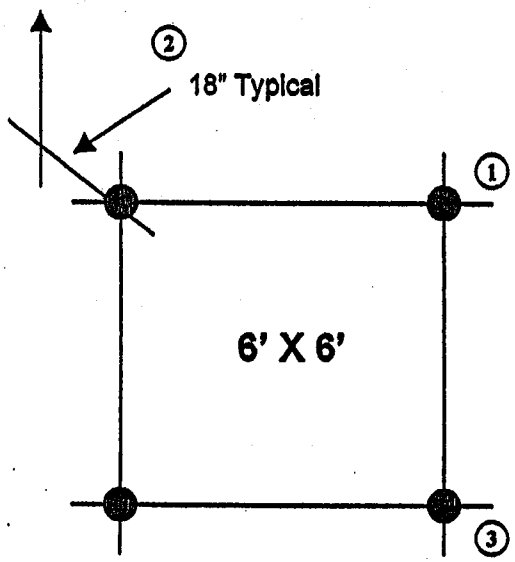

Saw Slot Plan

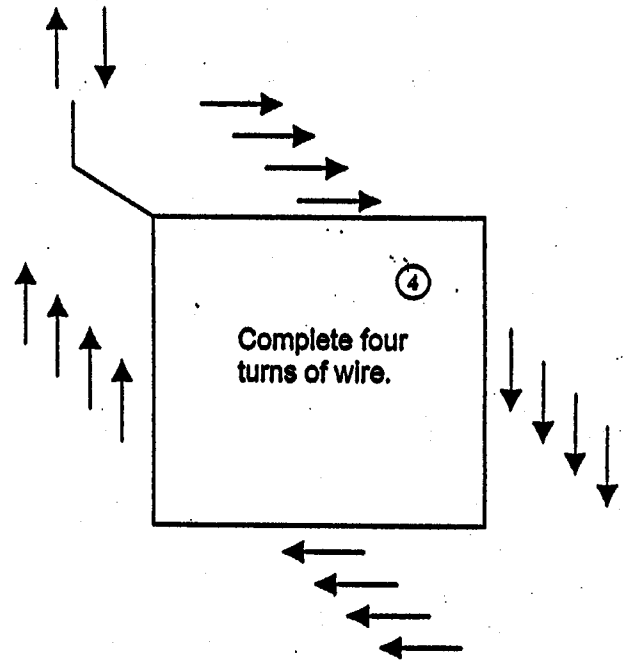

Loop Wiring Plan

Notes:

1. Overlap cuts so that slots are full depth at corners.
2. Lead-in 45 degree angle for 18" length
3. Drill 1.5" hole in each corner to prevent sharp bends in the wire.
4. All loops are 6' x 6', positioned in center of lane with with 4 turns of 14 AWG loop wire.
5. The distance between adjacent loops is 6' for typical 12' lanes, 5' for 11' lanes, etc.

Loop Installation in Existing Roadway

Figure 4

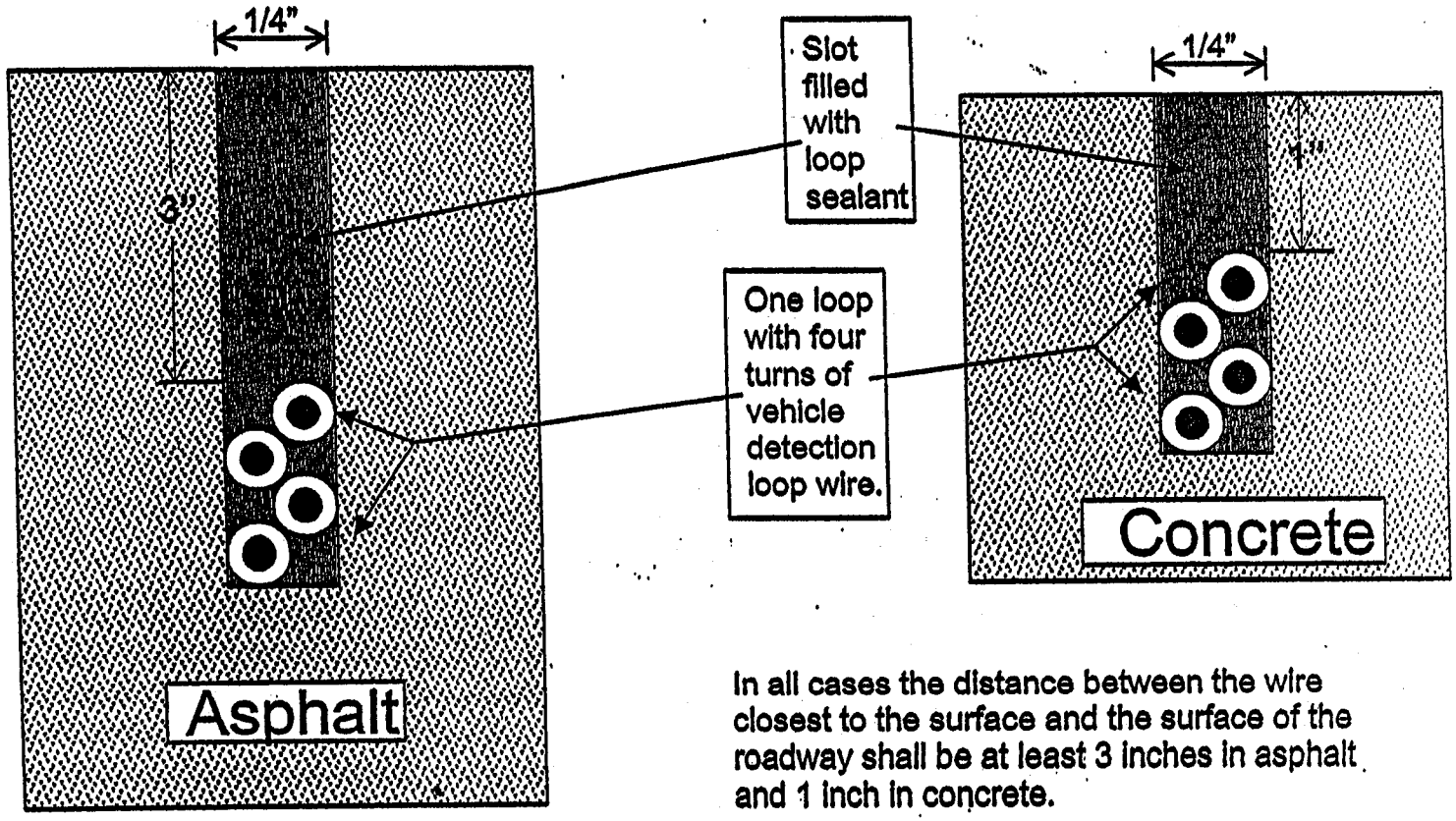

In all cases the distance between the wire closest to the surface and the surface of the roadway shall be at least 3 inches in asphalt and 1 inch in concrete.

Jefferson Co. I-264 Impacted Induction Loop Sites - December 2002:
Traffic Data Index Stations I80 W&E, I81 W&E at
I-264 West - Pavement Rehabilitation Project Item Nos.: Jefferson 1998 5 - 2000.01, 2001.00
Project Construction Plan Station References: 383+00 (I80 W&E); 88+40 (I81W), 83+00 (I81E)

Induction Loop Installation Array (FIGURE 5)

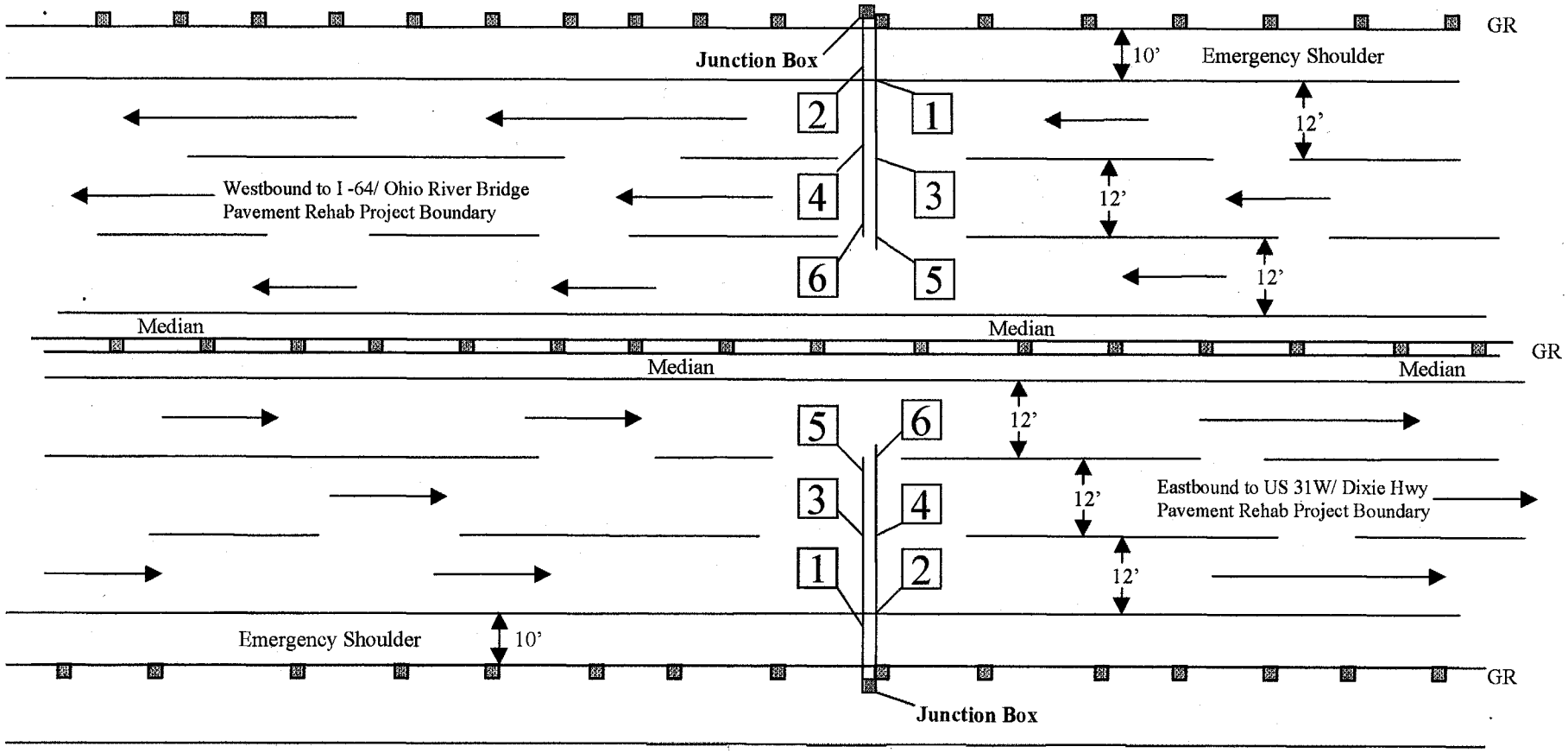

* All loops are 6'x6'

NORTH

Not To Scale

Jefferson Co. I-264 Impacted Induction Loop Sites - December 2002:
Traffic Data Stations N17W&E, N13W&E, N15W&E, N30W&E at
I-264 West - Pavement Rehabilitation Project Item Nos.: Jefferson 1998 5 - 2000.01, 2001.00
Project Construction Plan Station References: 472+00 (N17W&E); 317+50 (N13W&E), 270+00 (N15W&E), 196+00 (N15W&E)

Induction Loop Installation Array (FIGURE 6)

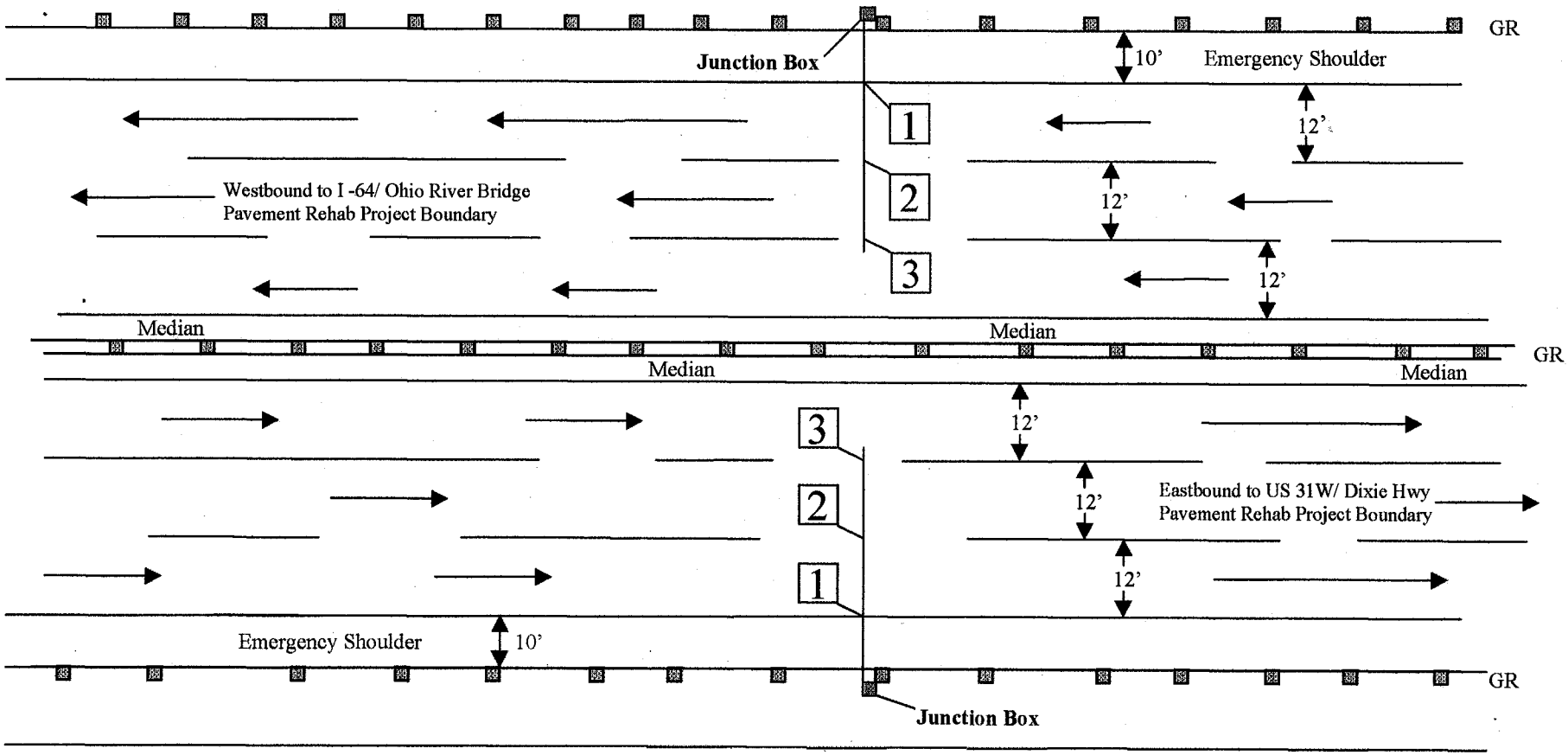

NORTH

Not To Scale

* All loops are 6'x6'

(6)

GENERAL NOTE

Jefferson Country
Item # 5-2026.00

The Division of Planning needs to re-establish a data collection station within a section of the project in Jefferson County on US 31W. Planning is requesting to have service replaced at a site with approximate mile-point of 14.90, with the installation of traffic loops once the new surface is completed. Installation shall be coordinated with, and approved by the Division of Planning. Reference "Special Notes for Installation of Traffic Loops and Axle Sensors" for materials, construction and installation details. Also, see supplementary attachments, Location Drawing, Location Table and Estimate of Quantities, and a Location Map, in regard to this specific project.

LOCATION TABLE

Jefferson County US 31W
Item # 5-2026.00

Station Number	Station Description	MP Begin	Station Location	MP End	No. Lanes	No. Piezos	No. Loops	Project Limits
660	Watterson Expressway	14.59	14.90	14.96	6	0	6	14.59-14.96

Station 660 shall be located at approximately the14.90 mile-point, with the final location being determined by the Division of Planning. This station will have six lanes of traffic-three in each direction. There shall be two loops installed in each lane.

ESTIMATE OF QUANTITIES

CODE	DESCRIPTION	UNIT	QUANTITY
479~~43~~	Rigid Steel Conduit	Lin. Ft.	60
4830	Loop Wire	Lin. Ft.	1500
4820	Trenching and Backfilling	Lin. Ft.	60
4895	Loop Saw-Slot and Fill	Lin. Ft.	500

Multiple-Lane Volume Site

One Loop Per Lane

Supplement to Item # 5-2026.00

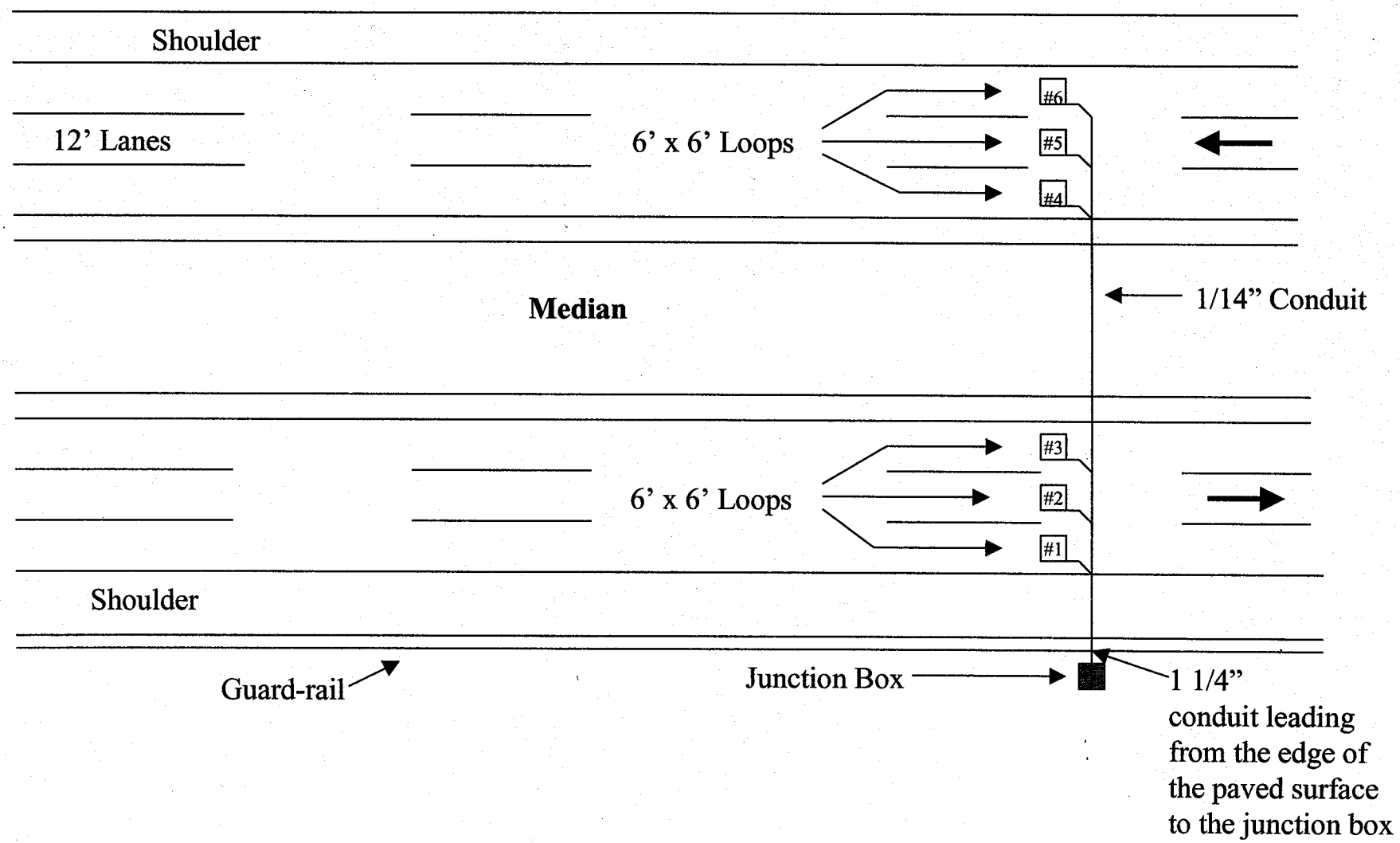

SPECIAL NOTES FOR TRAFFIC COUNTING INDUCTANCE LOOPS & AXLE SENSORS

I. DESCRIPTION

Except as specified in theses notes, perform all work according to the Department's 2000 Standard Specifications, applicable Special Provisions and Special Notes, Sepia and Standard Drawings, and the drawings elsewhere in this proposal. Article references are to the Standard Specifications.

Furnish all materials, labor, equipment, and incidentals for the following work: (1) Maintain and Control traffic; (2) Install inductive loops and/or axle sensors at designated locations; and (3) All other work required by the Specifications, Standard Drawings, Special Notes and the drawings in the proposal. The details of the project will be supplied in addition to these Special Notes.

II. MATERIALS

The Department will sample and test all materials according to Department's Sampling Manual. Have all materials available for sampling a sufficient time in advance of the use of the materials to allow for the necessary time for testing, unless otherwise specified in these notes. All materials shall be approved prior to being utilized. The Contractor shall submit for approval five (5) copies of descriptive literature, drawings and any requested design data for the materials he proposes to use. No substitutions for approved materials will be made without the written approval of the Engineer.

A. Maintain and Control traffic. See Traffic Control Plan.

B. Junction Box Type 6 x 6 x 4 . The junction box shall be at least six inches by six inches by four inches, made of plastic or metal, and weatherproof. It shall have screw-down overhanging covers with rubber seals and threaded metal inserts for the screws.

C. Junction Box Type B. The junction box Type B shall be 20.5 inches by 13.5 inches by 12 inches in dimension. It shall be constructed of a fiberglass reinforced polymer concrete, Quazite PC Style, or approved equal. The removable panel shall be attached with 3/8-inch stainless steel hex-bolts.

D. Conduit. Conduit shall be rigid steel waterproofed conduit unless otherwise specified. All conduit shall be galvanized inside and out and shall conform to the Underwriters' Laboratories (UL) requirements for rigid metallic conduit. Furnish all fittings, joints, and couplings.

E. Loop Wire. All loop wire shall be plainly marked in accordance with the provisions of the current editions of the National Electric Code (NEC). The wire shall be 14-gage single conductor, insulated in polyvinyl chloride (PVC) with a 0.004-inch thick nylon

coating, and enclosed in a 0.030-inch thick PVC tube jacket. The wire shall meet the requirements of the International Municipal Signal Association (IMSA) Specification No. 51-5-1984.

F. Traffic Loop Encapsulant. The traffic loop encapsulant shall consist of a one-part polyurethane as described in Section 835.06 of the Kentucky Transportation Cabinet, Department of Highways Standard Specifications for Road and Bridge Construction.

G. Piezoelectric Sensors.

1. **AMP Roadtrax BL Class I Piezoelectric Sensor or Approved Equal.** Furnish Class I Piezoelectric Sensor to be used to collect truck weigh-in-motion data. The sensor shall consist of a metal strip 0.260" wide x 0.063" thick; Ý0.005" and be furnished in 12-foot lengths. The sensor shall include a 100-foot electrical coax-cable connected to one end, one unit of epoxy grout mixture, ECM P5G or approved equal for the sensor installation and one installation bracket for every 6 inches of sensor length. The coax-cable shall be RG 58 type with an underground/direct burial rated outer jacket. The OD of the cable is 0.187". The nominal capacitance of the cable is 27 pF/ft.

2. **AMP Class II Piezoelectric Sensor or Approved Equal** Furnish Class II Piezoelectric Sensor to be used to collect vehicle classification data. Sensors shall consist of a metal strip with the same measurements, as Class I Piezoelectric Sensors or approved equal above except the length furnished shall be 6-foot.

The vendors listed below are known distributors of the AMP Roadtrax BL Class I and II sensors. Other approved equal sensors may be furnished if approved by a representative of the Cabinet. To be considered approved equal, the sensors shall meet the above requirements and match the specified detailed dimensions. If ECM P5G epoxy or approved equal is not available through the distributor of choice, the sensor manufacturer shall recommend an approved source.

DIA-L Associates
P. 3302 Aquia Drive
Stafford, VA 22554

Measurement Specialties
80 Little Falls Road
Fairfield, NJ 07004

PAT Traffic Control Corporation
1665 Orchard Drive
Chambersburg, PA 17201

International Road Dynamics, Inc.
702 43rd Street East
Saskatoon, Saskatchewan
Canada, S7K3T9

H. Cabinet Type G. A controller cabinet Type G shall be constructed of 5052-H32 sheet aluminum alloy with a thickness of 10.125 inches. The cabinet shall meet or exceed the industry standards set forth by the UL 50 and the National electrical

Manufacturer s Association (NEMA) 3R. The cabinet shall have a dimension of 41 inches by 25 inches by 16 inches. The cabinet shall include kits for a back panel and two shelves. The cabinet shall be designed with a sloped top to prevent the accumulation of water on its top surface. The single door opening shall be double flanged on all four sides, hinged on the right side, and include a door restraint. The cabinet shall be equipped with two adjustable C mounting channels on both side and back walls to allow for versatile positioning of shelves. Manufacturer s shop drawings shall be submitted demonstrating details of equipment housing and installation. A 120-volt AC duplex receptacle shall be provided for the electrical service.

I. Galvanized Steel Cabinet. The cabinet shall be a hinged cover Type 3R medium enclosure, constructed of 16 or 14 gage galvanized steel, and have inside dimensions of 20 W x 20 H x 8 D. This shall be the standard size that contractors shall place their bids on. The cabinet shall meet the industry standards set forth by the Underwriters Laboratories (UL) 50 and the National Electrical Manufactures Association (NEMA). The finish shall consist of an American National Standards Institute (ANSI) 61 gray polyester powder finish inside and out over the galvanized steel. The cabinet shall have the following features:

- Drip shield top and seam-free sides, front, and back, to provide protection in outdoor installations against rain, sleet, and snow.
- 16 gage galvanized steel continuous stainless steel pin.
- Cover fastened securely with captive plated steel screws.
- Hasp and staple provided for padlocking.
- No gaskets or knockouts.
- Back plate mounted inside the cabinet for terminal strip installation.

An approved source is provided below. Other approved equal cabinets may be furnished if approved by a representative of the Cabinet. To be considered approved equal, the cabinet shall meet the above requirements and match the specified detailed dimensions.

Hoffman Engineering Co.
World Headquarters
900 Ehlen Drive
Anoka, Minnesota 55303-7504

J. Wood Post. The wood post shall be four inches by four inches by eight feet long, and is pretreated to conform to the American Wood Preservers' Association (AWPA) C-14. All wood posts shall be sawed on all four sides, having both ends square, and conform to the dimensions specified. The wood post is described in detail in section 820.01 of the Kentucky "Standard Specifications for Road and Bridge Construction", 2000 edition.

K. Seeding and Protection. (Use seed mixture No. 1.)

L. Electrical Service. The contractor shall initiate a work order for the installation of

electrical service to the power site. A representative from the Division of Planning and the local utility company shall be consulted prior to choosing an exact location for the pole. The Contractor shall be responsible for clearing the right-of-way for the service drop. The service shall be a minimum 60-ampere, which is capable of supplying 120 volts or 240 volts to the electronics. The installation and materials specified in the construction notes below, shall be made incidental to the bid item established for electrical service.

III. CONSTRUCTION

The plans indicate the extent and general arrangement of the installation and are for general guidance. When any modifications of the plans or specifications are deemed necessary by the Contractor, details of such changes and the reasons shall be submitted in writing to the Resident Engineer for written approval prior to beginning the modified work.

Once the project has been let and awarded, the Division of Construction shall notify the Division of Planning of the scheduled date for a Pre-Construction meeting so that prior arrangements can be made to attend. This will allow Planning an opportunity to address their concerns and answer any questions that the Contractor may have before beginning the work. Planning shall also be notified once the work has been completed so that their representative can perform a final inspection. The Division of Construction will then review Planning's final inspection report and determine whether the work is in compliance with the specifications before awarding payment to the Contractor.

A. Maintain and Control Traffic. See Traffic Control Plan.

B. Junction Box Type 6" x 6" x 4". The Contractor shall stub the rigid steel conduit to the junction box. The junction box shall be located at or beyond the shoulder and mounted on the side of a post approximately 2 feet beyond the guard-rail post using banding material or other appropriate mounting hardware. (see Figure 1).

Loop lead-in wires shall be connected to the nine-pin connectors with crimp style splice sleeves connectors of the correct size via 18-gage stranded conductors, 300V UL rating, an outer diameter of 0.079-inches, and an insulation thickness of 0.016 inches. The wires shall be a minimum of 10 inches long and twisted in pairs to match the loop lead-in wires.

Each junction box shall include at least one nine-pin connector. A 5/8-inch hole shall be drilled in the cover of the junction box for mounting each nine-pin connector. Four 1/8-inch screw holes shall be drilled for fastening each connector to the box. The nine-pin connectors shall be "AMP" brand circular plastic nine-pin male connectors, #206486-1 or approved equivalent, equipped with "AMP #20 DF Pin", #66506-9 or approved equivalent. The connectors must have "AMP" brand plastic caps, #206903-1

or approved equivalent, attached to them. Include the following major items as incidental to the cost of the junction box: splice sleeves, nine-pin connectors with covers, 18-gage wire, and banding material or other approved mounting devices (see Figure 2 and additional Location Drawing for Connector Wiring).

C. Junction Box Type B. Install the Junction Box Type B adjacent to the edge of pavement and flush with the ground level (see Figure 3). Place roughly 18 inches of No. 57 aggregate underneath the junction box Type B to allow drainage. Extend the loop lead-in wires splice-free to the cabinet. Run the wire from the junction box Type B through the conduit at a minimum depth of six inches. Stub the conduit up into the junction box Type B from its base to accommodate the lead-in wires. Leave at least 2 feet of slack lead-in wire coiled inside the junction box Type B. The conduit fittings, backfilling, and aggregate shall be incidental to the junction box Type B.

D. Conduit. Rigid steel waterproofed conduit encasement shall be provided for all conductors where conductors run to the junction box or existing cabinet. All conduit installations shall conform to the provisions of the NEC, except where directed otherwise. Bonded slip joints will be permitted for joining rigid conduit to the junction box or cabinet. Where a standard coupling cannot be used, an approved threaded union coupling shall be used.

All conduit ends shall be reamed to remove burrs and sharp edges. Damaged portions of the galvanized surfaces and untreated threads resulting from field cuts shall be painted with a rust inhibitive paint. Conduit bends shall have a radius of no less than 12 times the nominal diameter of the conduit, unless otherwise shown on the plans.

Conduit that will not be subject to regular pressure from traffic shall be laid to a minimum depth of six inches below grade. All conduit openings shall be waterproofed with a flexible, removable sealant, except those ending in a junction box or cabinet. This shall be accomplished using vinyl mastic, putty, or flexible loop sealant. After the conduit has been installed and before the backfilling is started, the conduit installation shall be inspected and approved by the Engineer. In backfilling trenches, the backfill material shall be placed and compacted in lifts of nine inches or less. Any area disturbed as a result of the Contractor's operations shall be restored to the satisfaction of the Engineer.

E. Wiring. All wiring shall conform to the provisions of the NEC unless otherwise shown on the plans. Permanent identification numbers shall be affixed to all wires in the junction box or cabinet in order to distinguish between the loops and/or sensors. All wiring shall be taken to the Cabinet or Junction Box Type 6" x 6" x 4". Leave at least 2 feet of "slack" lead-in wire inside cabinet. See Location Drawing for sensor numbers to be placed on lead-ins.

F. Splicing. All splices shall conform to the provisions of the NEC unless otherwise shown on the plans. Splices shall be made with mechanical connectors of a type

approved by the Engineer or shall be twisted and soldered. Splices for coax-cable must be protected by use of heat shrink tubing while splices for loop wire shall be protected by either heat shrink tubing or a double spiral wrapping of vinyl electrical tape. All splices are to be made in junction boxes unless approved by a representative of the Division of Planning.

G. Loops. A location table and a map of the area are furnished in the Supplemental Notes, along with the estimate quantities, to display the approximate location for loop installation in the existing pavement. The Contractor and a representative of Planning will verify the precise location on site. The Contractor shall be careful to avoid, when possible, pavement sections where potholes, cracks, or any other roadway flaws exists. This will not only facilitate installation of the equipment, but will also increase the accuracy and service life span of the sensors.

All loop dimensions shall be six feet by six feet unless otherwise indicated by the Location Drawing. Center and mark each loop in the lane such that its sides are parallel and perpendicular to the direction of traffic. Make the saw-cut for the loop 1/4-inch wide and at a depth such that the top loop wire is a minimum of one inch below the surface of rigid (PCC Concrete) pavement or three inches below the surface of asphalt pavement. Make a diagonal saw-cut, measuring 12 inches from the corner along the sides, at all four corners of the loop to prevent sharp bends in the wire (see Figure 4). Clean the debris, water, and loose particles from the slot with compressed air.

Make the saw-cut for the home run slot, which will contain several lead-in wires, 1/4 inch wide, and at a depth such that the top lead-in wire is a minimum of one inch below the surface of rigid (concrete) pavement or three inches below the surface of bituminous (asphalt) pavement. Depending on the number of road sensors at a particular site, the home run slot may need to be cut slightly deeper as you approach the shoulder in order to maintain the minimum depth for the top lead-in wire.

Insert the loop wire into the loop slot for four rotations (see Figure 5). Push the wire in with a wooden stick, such as a paint stir stick or other blunt wooden object. If the wire insulation is broken, apply heat shrink tubing or a double wrapping of vinyl electrical tape to protect from corrosion. Extend the loop lead-in wire splice-free to the junction box or cabinet. Exceptions to this shall be considered on a case-by-case basis and must be approved by the Engineer. If splices cannot be avoided, every effort shall be made to locate them in a junction box.
There shall be a minimum of six feet between loops in adjacent lanes for 12-foot wide lanes. Loops in the same lane shall be spaced 16 feet from leading edge to leading edge (see Figure 6). Twist each pair of loop lead-in wires, exclusive of shielded coax-cable, with three to five turns per foot before placement into the conduit, junction box, and cabinet. Do not twist different pairs of loop wire together. Once the loop wire is installed in the roadway, apply loop encapsulant by allowing the material to flow slowly into the saw-cut and settle until level with the road surface. The loop encapsulant shall be incidental to the bid item "Loop-Saw Slot and Fill".

H. AMP Roadtrax BL Class I/II Piezoelectric Sensor or Approved Equal. Determine where on the roadway the piezoelectric sensor will be installed. Roadway ruts shall not be in excess of 1/2 inch under a two-foot straight edge. Install the piezoelectric sensor perpendicular to traffic. Locate the sensor in the lane such that the end with the electrical coax-cable is on the edge of the lane nearest the cabinet. The following is a typical step by step procedure for the installation of a piezoelectric sensor. Refer specifically to the manufacturer's current instructions provided with the sensor prior to installation.

1. Carefully mark the slot to be cut, perpendicular to the flow of traffic. Ensure that the sensors are properly positioned in the lane.
2. Cut a slot ¾ inch wide (±1/16") and ¾" deep (±¼"). The slot should be 6" longer than the sensor. The lead out should be centered on the slot.
3. It is strongly recommended that a ¾" wide diamond blade be used for cutting the slot, or that blades be ganged together to get a single ¾ inch wide cut. The slot shall be wet cut to minimize damage to the road.
4. Cut the home-run slot for the coax-cable ¼-inch wide and at a depth so that the cable is a minimum of one inch below the road surface in rigid pavement (concrete) or three inches below the road surface in bituminous (asphalt) pavement.
5. Sweep and wash out the debris left in the slot and ensure it is clean and dry.
6. Use high pressure water, or water and compressed air to clean ALL foreign matter out of the slot and 6" on all sides of the slot. Remove excess water and debris with a vacuum cleaner and/or sweeping.
7. Carefully dry the slot using torches; torpedo heaters, electric heaters, or natural evaporation, depending on weather conditions. Be very careful not to burn the asphalt if heat is used.
8. Place a strip of duct tape along the pavement next to the slot. Cover out to about 3-4" on either side of the slot for the full length of the slot.
9. Lay the sensor on the tape next to the slot. Ensure that the sensor is straight and flat. Place the installation bracket clips on the sensor, about every 6". DO NOT place the sensor in the slot at this point, as the clips are one way and it will be difficult to remove the sensor prior to putting in the grout.
10. Block off the ends of the slot using plumbers putty. Ensure that there are adequate 'dams' at both ends so that the encapsulation material does not flow out. On the passive cable end, the dam should be about 3-5" past the end of the lead attachment area.
11. Test the sensor for Capacitance, Dissipation Factor and Resistance, according to the directions enclosed with the sensor. Record the test results and the sensor serial number. This information should be stored in the counter cabinet or returned to KYTC Planning personnel.
12. Mix the grout or acrylic according to the manufacturers instructions. Be sure to pre-mix the resin before combining the two parts since the filled materials have a tendency to settle. Fill the slot three-fourths full of the encapsulation material.
13. Ensure that you are wearing protective plastic or rubber gloves. Place the sensor in the slot, with the brass element ¼" below the road surface along the entire length. The top of the plastic installation bracket clips should be 1/16"

below the surface of the road. Ensure the ends of the sensors are pushed down sufficiently.

14. Finish filling up the slot to the top of the road surface. Smooth out the grout over top of the sensor using a trowel or putty knife, ensuring there is not a trough on top.

15. Remove the tape on the sides of the sensor as soon as the adhesive starts to cure.

16. Carefully remove All the plumbers putty from ends of the sensor.

17. Route the lead in cable through the slot cut for it, and cover with approved loop sealant.

18. After encapsulant has hardened, grind the top of the installation using an angle grinder. The profile should be flush with the road surface or with a slight, 1/16" mound. There should be no concave portion to the mound.

19. Clean up the site. When the encapsulation material is fully cured, it may be opened to traffic. Failure to wait for the encapsulation material to fully cure may ruin the installation and cause it to fail prematurely. Curing time varies with temperature and humidity. Use good judgement before opening to traffic.

I. Galvanized Steel Cabinet And Wood Post. The Contractor shall determine the amount of clearance required from the road to the cabinet for each specific station location. The "Roadside Design Guide". Developed by the American Association of State Highway Officials (AASHTO), shall be used as a tool to determine roadside safety` based on design and speed limit. The Contractor and Planning shall discuss and resolve any conflicts in the Pre-Construction meeting that might arise from following the station descriptions of the Location Table.

Set the treated-wood post two feet below the ground and place the backfill material in the hole, compacting until flush with the existing earth. Mount the cabinet to the post using ¼" x 2 ½" galvanized lag bolts at the top and bottom of the cabinet. The base of the cabinet shall be four feet above ground level. Stub the rigid steel conduit up into the base of the cabinet. Affix the conduit to the post using two conduits straps, a maximum of 18" on-center, and ¼" x 2 ½" galvanized lag bolts. Cabinet door shall open facing away from traffic. (see Figure 7).

Use terminal strips on the back plate with a minimum of eight terminals each and 7/16-inch spacing (center to center) to mount inside the cabinet in order to connect the lead-in wires to the cable assemblies. Use screw type terminal strips to accommodate wire with spade-tongue ends. Allow for at least 20 inches of slack lead-in wire in the cabinet before connecting them to the terminal strip. Wires connected to the terminal strips shall have insulated, solderless, spade tongue terminals of correct wire and stud size. Wires shall be labeled correctly. See Location Drawing and Wiring Table.

J. Cabinet Type G. Locate the cabinet sufficiently beyond the roadside by determining the minimum clear zones in accordance with the "Roadside Design Guide". Place a concrete foundation of appropriate size for mounting the cabinet. The cabinet shall be mounted on the concrete base such that the bottom of the cabinet is 27" above the

ground. The door of the cabinet shall open away from traffic. Fasten the cabinet to the foundation using anchor rods and caulking. Stub rigid conduit up into the cabinet from its base. An 8' copper clad ground rod shall be driven into the soil and bonded to the rigid conduit via #4 solid copper wire and ran through the concrete and up into the cabinet. A ¾" rigid steel conduit shall be stubbed up into the cabinet and ran 2 feet up the electrical service pole and terminated to a ¾" weatherhead. This conduit shall be run in the same ditch as the electrical service. If electrical service is not provided as an item in the contract, the ¾" rigid steel conduit shall be ran out 2 feet from the concrete base and plugged with plumbers putty or taped shut with electrical tape. The location of the plugged end shall be marked with a wooden stake and labeled "¾" conduit end". (See Figure 8)

Leave at least three feet of slack lead-in wire in the cabinet. Include the following major items as incidental to the cost of the cabinet: concrete foundation, anchor rods, ground rod, #4 solid copper wire, bonding clamps, and caulking. The Division of Planning will supply additional harnesses and do final connections inside the cabinet.

K. Electrical Service. A wood-treated service pole with a 20-foot minimum length and a six-inch diameter, or approved equal, is to be furnished by the Contractor. Install the service pole adjacent to the cabinet at a depth of at least four feet while maintaining a 12-foot minimum clearance for the service drop. Compact the backfill material to support the service drop without leaning. Install rigid conduit up the length of the pole with three separate conductors (No. 4 copper wire) in the conduit and a weatherhead at the top.

Space the conduit straps 30 inches apart and leave 24 inches of cable for the drip loop. Install a meter-base and a disconnect panel with a 15-ampere circuit breaker inside. A manufactured weatherproof hub connector is required to connect the meter-base to the disconnect panel. Do not use service entrance cable inside the conduit. The conduit from the disconnect panel is required to be at a depth of six inches below grade. Install a 5/8-inch by eight-foot ground rod below the finished grade. Extend the ground wire through a separate hole in the disconnect panel and clamp to the ground rod. Install a ¾" rigid conduit to 2 feet above ground level and install a weatherhead at the top opening. This conduit shall be ran to and stubbed up in to Cabinet Type G. The conduit shall be attached to the pole at 2" from ground level and 2" from the weatherhead.

L. Cleanup and Restoration. The Contractor will be responsible for all damage to public and/or private property resulting from his work. Upon completion of the work, restore all disturbed highway features in like kind design and materials. Clean the site and dispose of all waste and debris off the right-of-way at sites obtained by the Contractor at no additional cost to the Department. Sow all disturbed earthen areas with Seed Mixture No.1. (see seeding and protection).

M. On-Site Inspection. Each Contractor submitting a bid for this work shall make a thorough inspection of the site prior to submitting his bid and shall thoroughly familiarize him with existing conditions so that the work can be expeditiously performed after a

Contract is awarded. Submission of a bid will be considered evidence of this inspection having been made. The Department will not honor any claims resulting from site conditions.

N. Property Damage. The Contractor will be responsible for all damage to public and/or private property resulting from his work.

O. Caution. Information shown on the plans and in this proposal and the types and quantities of work listed are not to be taken as an accurate or complete evaluation of the material and conditions to be encountered during construction. The bidder must draw his own conclusion as to the conditions encountered. The Department does not give any guarantee as to the accuracy of the data and no claim will be considered for additional compensation if the conditions encountered are not in accordance with the information shown.

P. Utility Clearance. It is not anticipated that utility facilities will need to be relocated and/or adjusted; however, in the event that it is discovered that the work does require that utilities be relocated and/or adjusted, the utility companies will work concurrently with the Contractor while relocating their facilities.

IV. METHOD OF MEASUREMENT

Only the bid items listed will be measured for payment. All other items required to complete the vehicle detection installation shall be incidental to the other items of work.

A. Maintain and Control Traffic. See Traffic Control Plan.

B. Junction Box Type 6"x 6"x 4". Junction Box will be measured in individual units, each. Connectors , splice sleeves, wire, mounting material and etc shall be incidental tot he Junction Box Type 6" x 6" x 4"

C. Junction Box Type B. Junction Box Type B will be measured in individual units, each. Fittings, coarse aggregate size No. 57, and backfilling the mounting hole will not be measured for payment but shall be incidental to Junction Box Type B.

D. Conduit. Conduit will be measured in linear feet. Fittings, joints, couplings, and accessories will not be measured for payment but shall be incidental to Conduit.

E. Loop Wire. Loop wire will be measured in linear feet.

F. Trenching and Backfilling. Trenching and Backfilling will be measured in linear feet.

G. Loop-Saw Slot and Fill. Sawing and filling slot for loop wire will be measured in linear feet.

H. AMP Roadtrax BL Class I Piezoelectric Sensor or Approved Equal. Piezoelectric sensors will be measured in individual units each. Lead-in wire, grout and accessories shall be incidental to the sensors.

I. AMP Roadtrax Class II Piezoelectric Sensor or Approved Equal. Piezoelectric sensors will be measured in individual units each. Lead-in wire, grout and accessories shall be incidental to the sensors.

J. Galvanized Steel Cabinet and Post. This will be measured in individual units each, and shall include setting the pole and mounting the cabinet.

K. Cabinet Type G (NEMA-3R). Type G Cabinets will be measured in individual units each, and shall include excavation concrete base, and mounting the cabinet.

L. Electrical Services. This will be measured in individual units each, and shall include all related work towards electrical service.

V. BASIS OF PAYMENT

A. Maintain and Control Traffic. See Traffic Control Plan.

B. Junction Box Type 6" x 6" x 4". Payment at the contract unit price each shall be full compensation for all labor, materials, equipment, and incidentals to construct Junction Box.

C. Junction Box Type B. Payment at the contract unit price each shall be full compensation for all labor, materials, equipment, and incidentals to construct Junction Box Type B.

D. Conduit. Payment at the contract unit price per linear foot shall be full compensation for all labor, materials, equipment, and incidentals to install conduit.

E. Loop Wire. Payment at the contract unit price per linear foot shall be full compensation for all labor, materials, equipment, and incidentals to install loop wire.

F. Trenching and Backfilling. Payment at the contract unit price per linear foot shall be full compensation for all labor, materials, equipment, and incidentals to for trenching and backfilling, temporary erosion control, restoration of the area, and seeding and protection.

G. Loop-Saw Slot and Fill. Payment at the contract unit price per linear foot shall be full compensation for all labor, materials, equipment, and incidentals for sawing, cleaning the slot of all foreign debris, and refilling the slot with a suitable sealant.

H. AMP Roadtrax BL Class I Piezoelectric Sensor or Approved Equal. Payment at the contract unit price each shall be full compensation for all labor, materials, equipment, and incidentals to install piezoelectric sensors using a pavement matching epoxy mixture in accordance with specifications.

I. AMP Roadtrax Class II Piezoelectric Sensor or Approved Equal. Payment at the contract unit price each shall be full compensation for all labor, materials, equipment, and incidentals to install piezoelectric sensors using a pavement matching epoxy mixture in accordance with specifications.

J. Galvanized Steel Cabinet and Post. Payment at the contract unit price each shall be full compensation for all labor, materials, equipment, and incidental to install the Galvanized Steel Cabinet and Post.

K. Cabinet Type G (NEMA-3R). Payment at the contract unit price each shall be full compensation for all labor, materials, equipment, and incidentals to install the Type G Cabinet on a concrete foundation.

L. Electrical Service. Payment at the contract unit price each shall be full compensation for all labor, materials, equipment, and incidental in installing all related electrical services.

REFERENCES

1. Kentucky Transportation Cabinet, Department of Highways Standard Specifications for Road and Bridge Construction, 2000 edition, and Supplemental Specifications.

2. National Electrical Code (NEC), latest edition.

3. International Municipal Signal Association (IMSA) Specification No. 51-5-1984.

4. FHWA Manual of Uniform Traffic Control Devices, latest edition.

5. "Roadside Design Guide", developed in 1996 by the American Association of State Highway and Transportation Officials (AASHTO).

6. Kentucky Department of Highways Standard Drawings, current editions, as applicable:

TSC-205	Lane Closure Case II
TSC-221	Shoulder Closure
TSC-260	Miscellaneous Traffic Control Devices (sheet 1)
TSC-261	Miscellaneous Traffic Control Devices (sheet 2)
TSC-265	Post Splicing Detail
TSC-270	Flashing Arrow

7. Kentucky Department of Highways Sepia Drawings:

Silt Checks Type I - Straw Bales

Updated: April 17, 2001

Junction Box Type 6"x 6"x 4" Detail

Figure 1

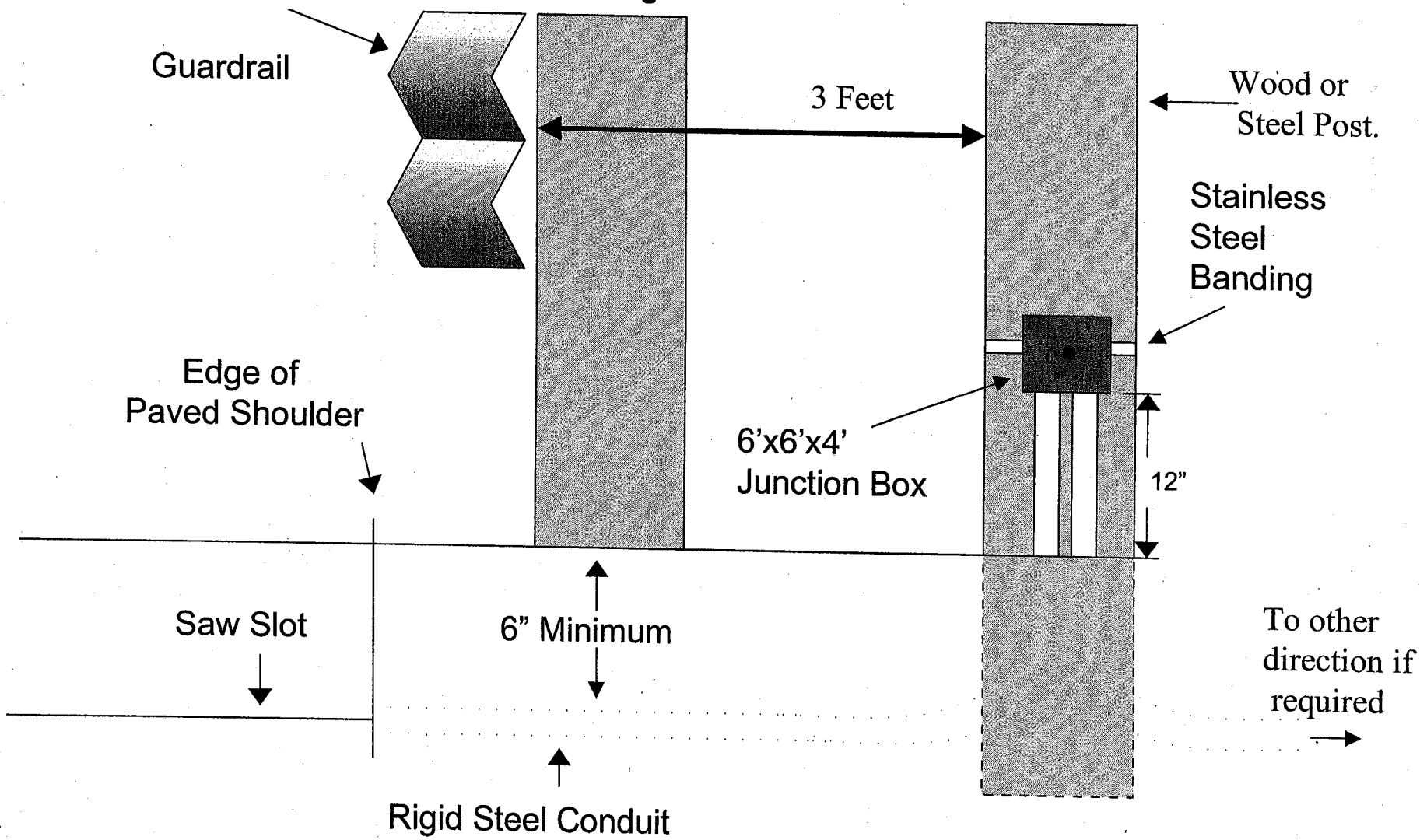

Junction Box Type 6" x 6" x 4" Typical Wiring

Figure 2

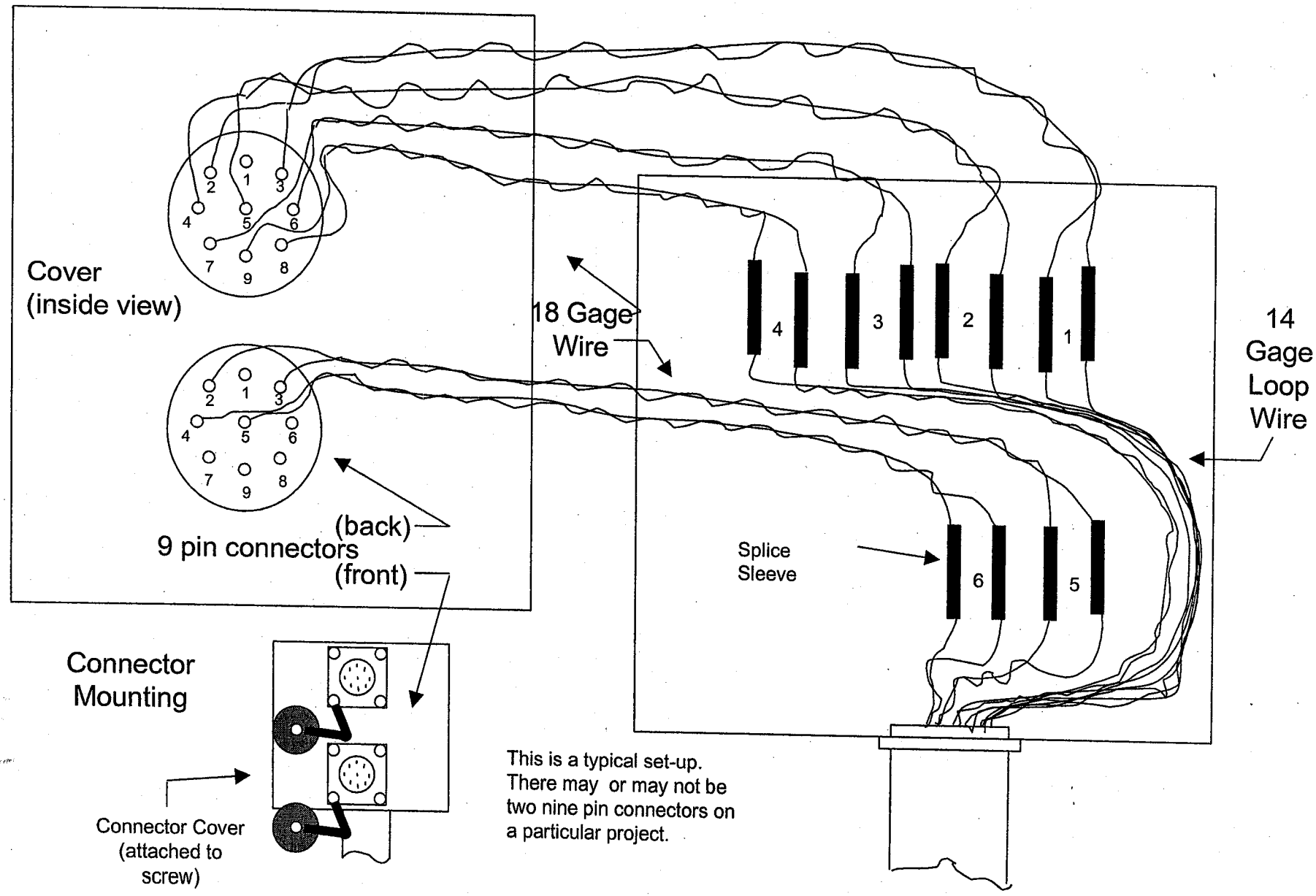

Junction Box Type B Installation
Figure 3

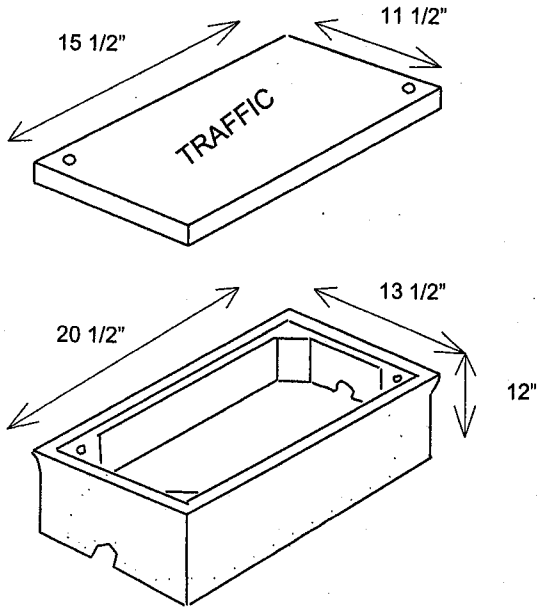

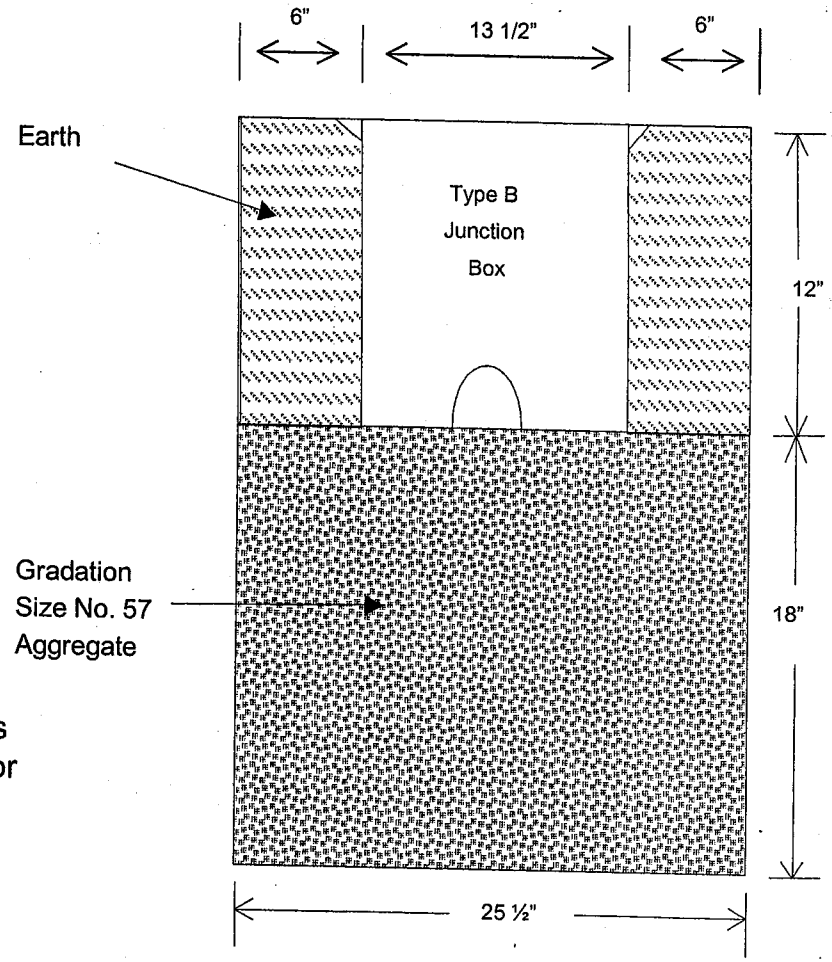

Junction box shall be constructed of a fiberglass reinforced polymer concrete, Quazite PC style or approved equal. Covers shall be marked "TRAFFIC" and be attached with 3/8" stainless hex bolts. Junction box shall be installed flush with ground line.

Loop Installation Instructions

Loop Installation in Existing Roadways

Figure 4

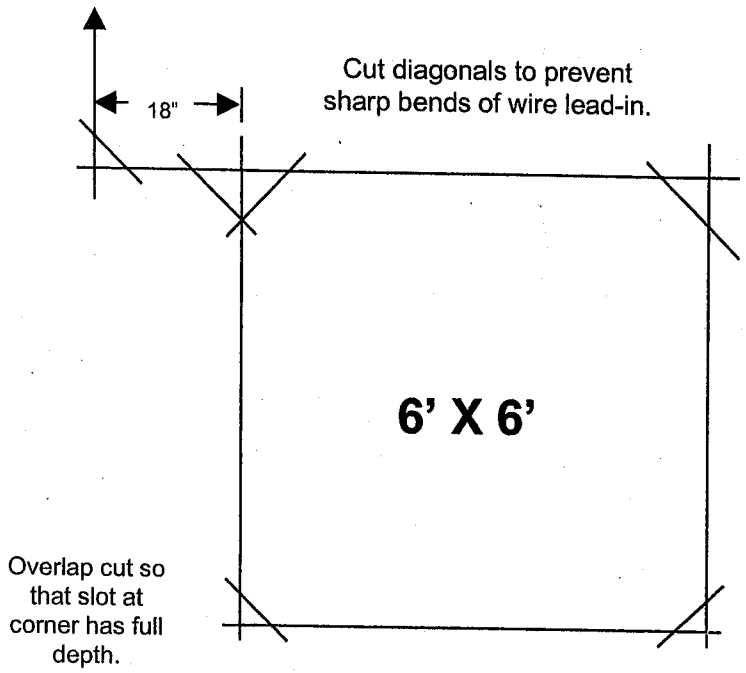

Slot Plan

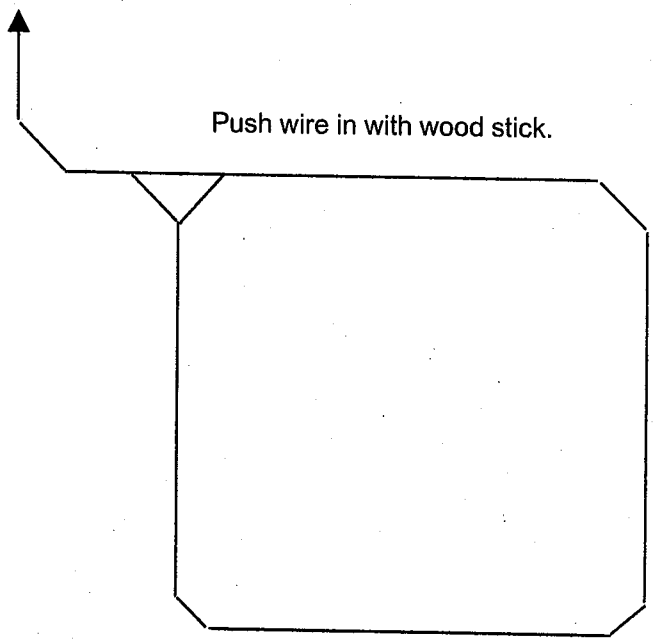

Loop Wiring Plan

Loop Installation in Existing Roadway

Figure 5

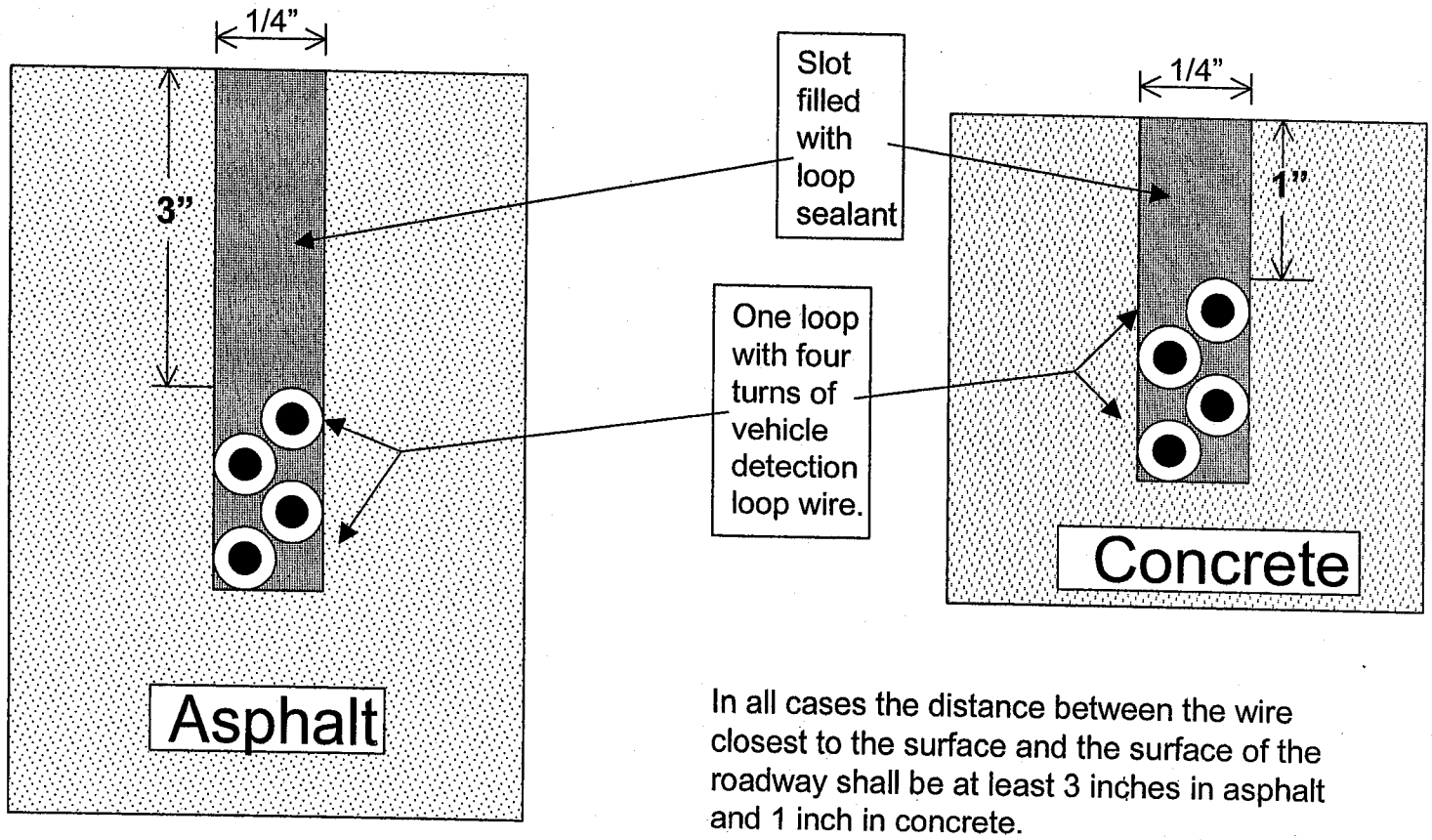

In all cases the distance between the wire closest to the surface and the surface of the roadway shall be at least 3 inches in asphalt and 1 inch in concrete.

Loop Characteristics

Figure 6

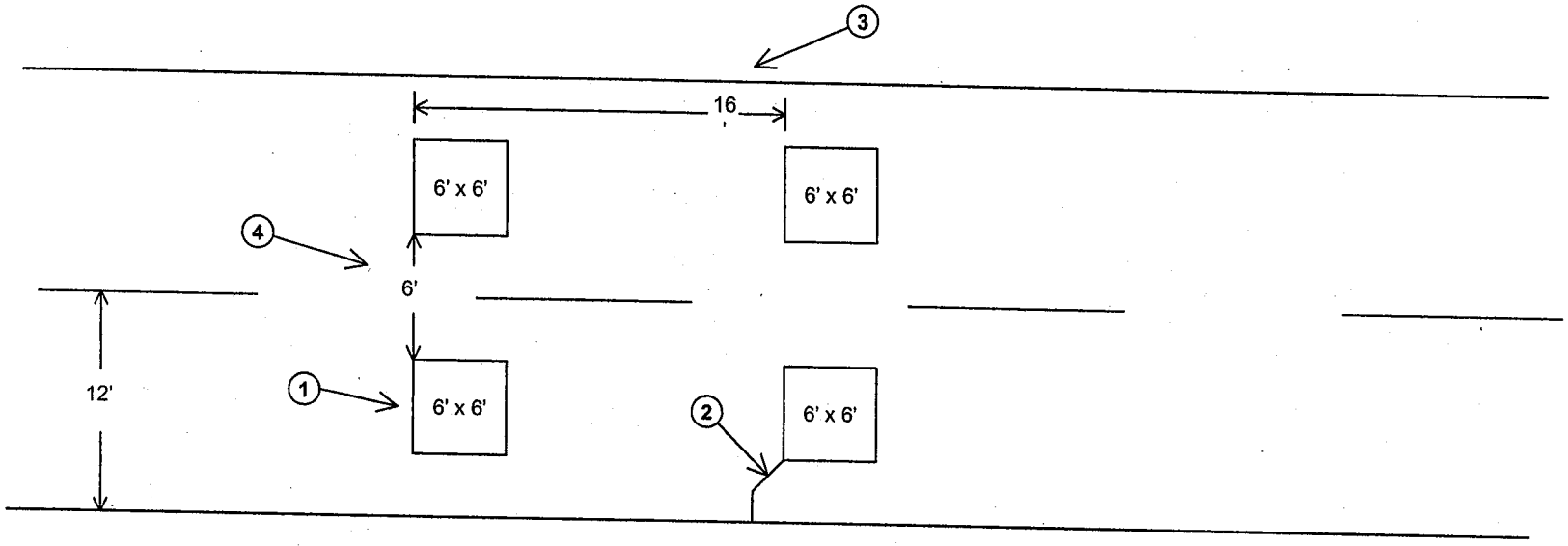

1. All loops are 6' x 6', positioned in center of lane with with 4 turns of 14 AWG loop wire.
2. Lead-in 45 degree angle for 18" length
3. Space loop 16' from leading edge to leading edge if two loops are installed in a lane.
4. This distance is 6' for typical 12' lanes, 5' for 11' lanes, etc.

Galvanized Steel Cabinet and Post Installation

Figure 7

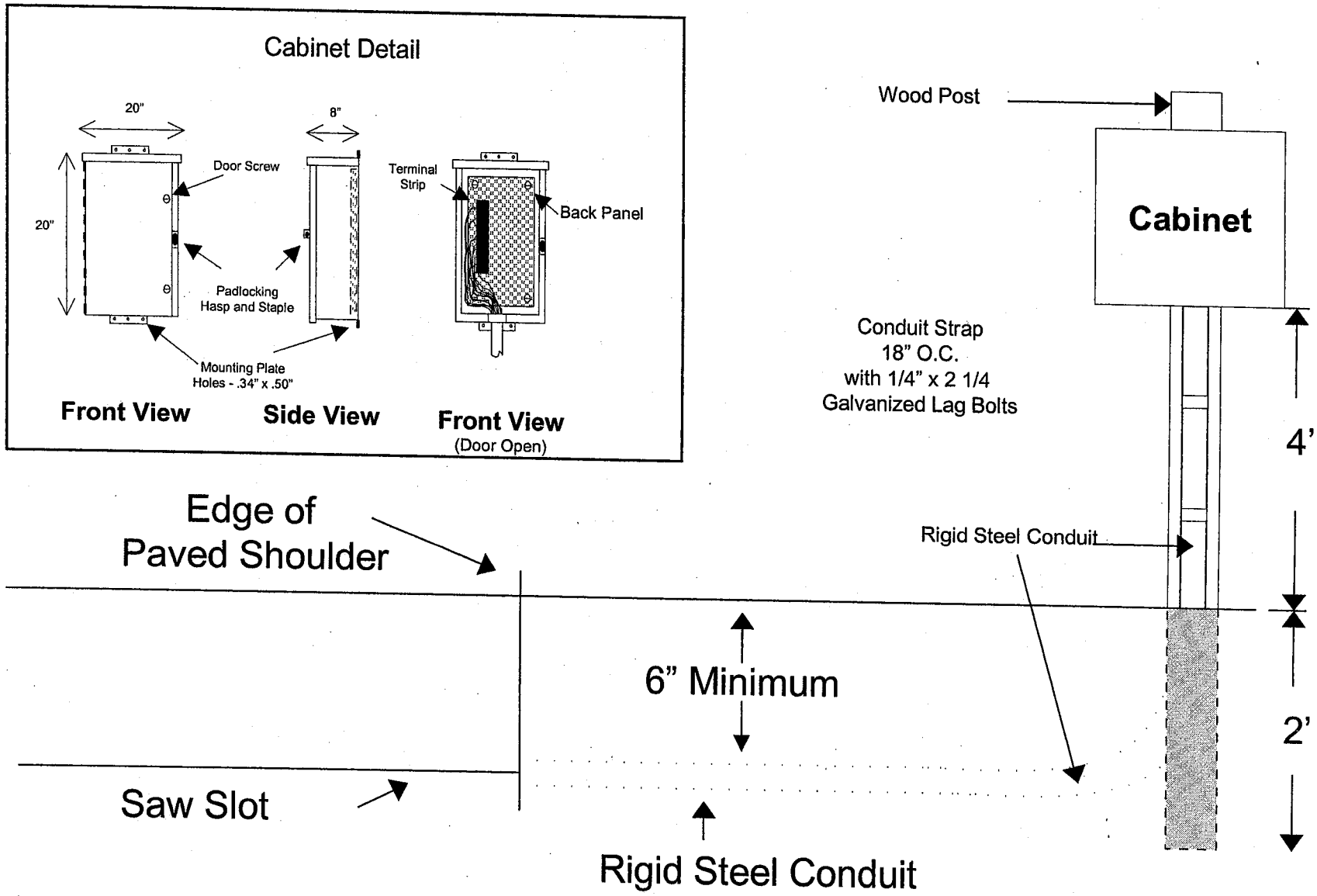

Cabinet Type G
Figure 8

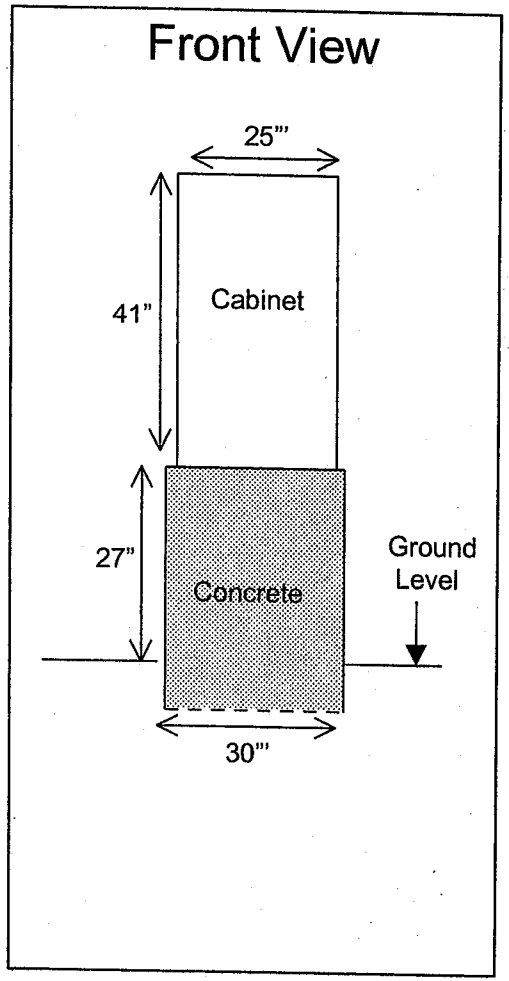

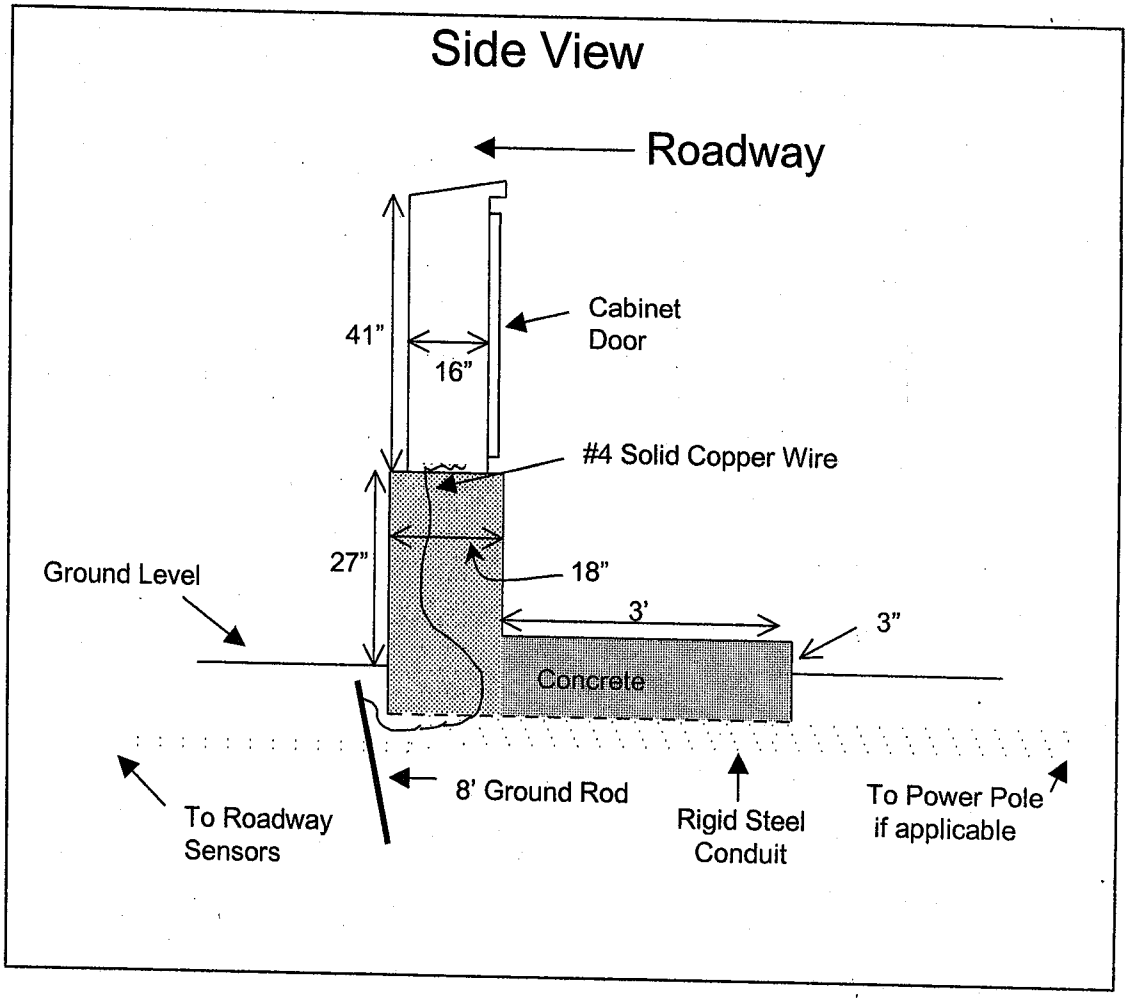

Special Notes

for

Intelligent Transportation Systems

Contractor Pre-qualification Reuqirements and Testing Notes	Sheets 1 thru 2
I-264 ITS Specifications	Sheets 1 thru 71

Contractor Pre-qualification Requirements: Contractors bidding on projects containing ITS components shall be pre-qualified by the Kentucky Department of Transportation as an ITS contractor and have a minimum of 5 years experience in the installation and integration of equipment to management systems similar to TRIMARC and/or ARTIMIS. Contractor shall provide the project Engineer with a list of references to verify experience on past ITS projects. Installation experience shall include but not be limited to:

CCTV with PTZ capabilities
Video compression equipment
WBR detection
Induction loop detection
Radio data transmissions
Truss Mounted Variable Message Signs
RWIS- Roadway weather monitoring equipment.

TESTING

The contractor shall notify the Engineer when each device has been fully installed and is functioning in the TRIMARC system. The contractor shall demonstrate proper functioning of all devices after installation. After passing the functional test, the device shall continue to operate while being used in daily TRIMARC operations for a period of 30 days. The contractor shall be responsible for repairing any malfunctioning device during the 30-day burn-in period. If a device fails during the burn-in period, the burn-in period shall start over and continue for another 30 days. Failure of a device is defined as the replacement of a component necessary to place the device back in operation. POTS communication errors are not considered a failure for the purpose of this test. Detectors shall provide at least 90% accuracy in all lanes when compared to 15 minute manual counts. Consideration will be given for inability to achieve 90% accuracy due to device limitations and location restrictions. A re-verification of the device accuracy will be conducted within 30 days after the burn-in period and prior to acceptance of the device. The project will be accepted after all devices have completed their required test successfully.

Jefferson County
Item No. 5-2000.00

I-264 ITS COMPONENTS - PROJECT DESCRIPTION

GENERAL
This project includes furnishing and installing two overhead variable message signs (VMS), eight video cameras on poles with lowering devices, nine radar vehicle detectors installed on the camera poles, one road weather information system (RWIS) and mainline and ramp reference markers on I-264 from milepost 0.0 to milepost 8.8. This equipment will expand the traffic monitoring and advisory capabilities of the Traffic Response and Incident Management Assisting the River Cities (TRIMARC). The TRIMARC operations center is located at 901 W Main Street, Louisville, KY, 40202.

SYSTEM COMPATIBILITY
The equipment installed shall be fully compatible with existing TRIMARC equipment. For maintenance and compatibility reasons, unless otherwise specified, the Contractor shall furnish and install the same manufacturer and model of equipment currently in use. The Contractor may propose alternate equipment if compatible with the existing system. The Contractor may propose alternate equipment if newer models provide improved performance. All equipment shall be approved by the Engineer with input from the TRIMARC System Integrator before purchase orders are issued. The Contractor is responsible for coordinating with the TRIMARC System Integrator to obtain any additional information not covered in these specifications before obtaining equipment quotes and establishing a bid price. This pre-bid coordination is necessary due to the complexity of the project and need for compatibility with the existing system.

COMMUNICATIONS
Signs, Cameras and Radars shall communicate with the TRIMARC control center over voice grade telephone lines. The Contractor shall be responsible for furnishing and installing all associated video compression and modem equipment required for operation. The Contractor shall be responsible for and coordinating and installing telephone service. The Contractor shall be responsible for coordinating with the TRIMARC operations center to determine communications equipment configuration and settings. Sign controller firmware shall support CDPD communications as currently implemented in the Louisville, KY TRIMARC system.

EQUIPMENT AND MATERIALS
All equipment and materials shall be new. All equipment shall be the latest model and shall contain the latest firmware unless it can be shown that an earlier version is required for compatibility with existing TRIMARC communication protocols.

SPECIFICATIONS AND WORKMANSHIP
Unless otherwise specified, the Contractor shall conform to the Kentucky Standard Specifications for Road and Bridge Construction, 2000 edition. All work shall be performed in a neat and professional manner. The Contractor shall remove debris and trash from work areas during construction. The Contractor shall restore areas to original condition and clean up all debris after construction.

DAMAGE TO EXISTING FACILITIES

The Contractor shall be responsible for locating all underground utilities prior to excavation. The contractor shall repair damage to any public or private facilities at his expense. Utilities include but are not limited to telephone, power, water, gas, fiber optic cable, underground vaults, roadway lighting, traffic signal wiring, and roadway drainage systems.

GROUNDING

Unless otherwise specified, ground wiring shall be solid #4 AWG and securely connected inside enclosures with #4 AWG copper clamp connectors. Nuts and washers securing the wire are not acceptable. Ground wires shall be exothermically welded to the ground rods. The following devices shall be grounded to an array of two, 10' X 1" copper coated steel ground rods:

- Model 336 Enclosures
- Camera Poles
- RWIS equipment
- VMS and truss
- Transformers

All ground rods in arrays shall have a minimum of 6' separation.

SPARES

The Contractor shall purchase spare items designated for this project for TRIMARC. These items shall be delivered to TRIMARC, 901 W Main Street, Louisville, KY, 40202. The Contractor shall notify KYTC, Division of Operations, ITS Branch upon receipt of equipment and delivery to TRIMARC. Spare items consist of the following:

1. One (1) Daktronics DMS Spares Kit includes:
   One (1) Daktronics 15 Volt Switching Power Supply, Part # A-1593
   One (1) Daktronics DMS Field Controller, Part # 0A-1248-0002
   One (1) Daktronics External Temperature Sensor, Part # OP-1100-0014
   Two (2) Daktronics Fans (110 CFM), Part # B-1006
   Two (2) Daktronics Fans (550 CFM), Part # B-1013
   One (1) Daktronics I/O Panel, Part # OP-1194-0001
   Four (4) Daktronics LED Boards, Part # OP-1100-0029
   One (1) Daktronics Light Level Detector, Part # OP-1151-0002
   Four (4) Daktronics Drivers 6x9, OP-1100-0026
2. One (1) CDPD Airlink Modem includes:
   One (1) Airlink CDPD Modem Raven 9700 F7, Part # 9700 F7 or One (1) Airlink CDPD Modem Redwing 9722 A10, Part # 100-720-1007
3. One (1) Ultrak KD6 Camera, Dome, TR-24 Power Supply and Interface Unit includes:
   One (1) Ultrak KD6 Dome, Part # KDSQ00N1
   One (1) Ultrak Dome, Part # KDT0W00A
   One (1) Ultrak PTZ Power TR-24, Part # 754598-0103 or Ultrak Video/PTZ Control Box, Part # 754491-0303
4. One (1) Vision Systems ADPRO Compressor/Decompressor Unit includes:
   One (1) ADPRO Codecs Fast Scan Series III, Part # 754915-B

5. One (1) US Robotics Courier V.Everything Modem includes:
   One (1) US Robotics Courier V.Everything Modem, Part # v.everything
6. One (1) Patton RS232-RS422 Converter includes:
   One (1) Patton Electronics RS232-RS422 Converter, Part # 222NF-9
7. One (1) EIS Wide Beam Radar (WBR) includes:
   One (1) EIS WBR, Part # X23
8. One (1) 220 MHz Radio includes:
   One (1) Adaptive Broadband 220/221 MHz Radio, Part # MDS 2710D
9. One (1) 8-Port Input Card for MaxPro Video Switch includes:
   One (1) MaxPro Systems, Part # MX-832 Latest Rev.
10. One (1) Pre-Wired Lowering System Arm includes:
    One (1) [MG]^2 Camera Lowering Device, Part # CLDMG2
11. One (1) Ultrak Bridge Connector includes:
    One (1) Ultrak Bridge Connector, Part # 754859-A

AS-BUILT DRAWINGS

The Contractor, at the completion of the project shall submit as-built drawings to the Engineer. As-built drawings shall be submitted in electronic format. Electronic format shall be .pdf, .tif, .dgn or other standard image format acceptable to the Engineer. As-built drawings may be scanned from marked up field plans or drawn in MicroStation. As-built drawings shall be scanned at a resolution that will allow them to be clearly legible on a computer display. As-built drawings shall include the exact location of all above ground equipment as well as underground conduit, wire, sensors and other equipment. Drawings shall indicate any changes to the design including change to the number of conductors, wire gage, splices, additional conduit etc. Conduit locations shall be drawn to scale or shall be dimensioned and referenced to permanent roadway features. Turns in conduit shall be referenced so that conduit path may be derived. Existing underground utilities shall be indicated on the drawings. Two copies of the drawings shall be submitted. One copy of the drawings shall be submitted to the Engineer. One copy of the drawings shall be submitted to the KYTC, Division of Operations, ITS branch. The Contractor shall correct any drawings that are unacceptable to the Engineer.

SUMMARY OF QUANTITIES

UNITS	BID ITEM	DESCRIPTION	TOTAL QUANTITIES
EACH	2187	SITE PREPARATION	2
EACH	4742	POLE BASE – HIGH MAST[1]	8
LIN FT		CONDUIT - 3/4 INCH PVC	2,594
LIN FT		CONDUIT - 2 INCH PVC	2,799
LIN FT	4795	CONDUIT – 2 INCH STEEL	650
EACH	4810	JUNCTION BOX	30
LIN FT	4820	TRENCHING AND BACKFILLING	2,799
LIN FT		BORE AND JACK CONDUIT	650
LIN FT		WIRE – NO. 10	1,974
LIN FT	4833	WIRE – NO. 8	1,907
LIN FT	4834	WIRE – NO. 6	5,223
LIN FT		WIRE – NO. 1	1,732
LIN FT		TELEPHONE CABLE	2,514
EACH		240/120 TRANSFORMER	2
EACH	4871	POLE - 35 FT WOODEN	12
EACH	4899	ELECTRICAL SERVICE	11
EACH	4901	TELEPHONE SERVICE	9
CU YD	6490	CLASS A CONCRETE FOR SIGNS	55.1
LBS	6491	STEEL REINFORCEMENT FOR SIGNS	4854.6
EACH		OSS 120' GALVANIZED STEEL (VMS)	2
EACH		POLE 80' WITH LOWERING DEVICE	8
EACH		WINCH LOWERING TOOL	1
EACH		CAMERA INTERFACE BOX	8
EACH		CCTV ASSEMBLY	8
EACH		CCTV KEYBOARD CONTROLLER	1
EACH		VIDEO TRANSMISSION SYSTEM	8
EACH		CCTV CONTROL CABLE 1000 FT	1
EACH		RWIS TOWER	1
EACH		RWIS EQUIPMENT	1
EACH		RADAR VEHICLE DETECTOR	9
EACH		LOCAL 222 MHZ RADIO	8
EACH		VARIABLE MESSAGE SIGN 3 X 24	2
EACH		MODEL 336 ENCLOSURE	8
EACH	4903	MAINLINE REFERENCE MARKER	90
EACH		RAMP REFERENCE MARKER	61
EACH	4904	BARRIER MOUNTING BRACKET	38
LIN FT	6411	STEEL POST TYPE 2	804

1. Includes 6 high mast pole bases at 2:1 maximum side slope and 2 high mast pole bases at 3:1 maximum side slope.

SUMMARY OF SPARES

UNITS	BID ITEM	DESCRIPTION	TOTAL QUANTITIES
EACH		DAKTRONICS DMS SPARES KIT	2
EACH		CDPD AIRLINK MODEM	1
EACH		ULTRAK KD6 CAMERA, DOME, TR-24 POWER SUPPLY AND INTERFACE UNIT	2
EACH		ADPRO COMPRESSOR/DECOMPRESSOR	2
EACH		US ROBOTICS COURIER MODEM	2
EACH		PATTON RS422-RS232 CONVERTER	4
EACH		EIS WBR	2
EACH		220 MHZ RADIO	2
EACH		8-PORT INPUT CARD FOR MAXPRO VIDEO SWITCH	3
EACH		PRE-WIRED LOWERING SYSTEM ARM	1
EACH		ULTRAK BRIDGE CONNECTOR	2

SPECIFICATIONS FOR SITE PREPARATION

DESCRIPTION

Site Preparation shall include all materials and miscellaneous work required to access and protect the work area. This item includes excavation, guardrail removal, guardrail replacement, guardrail extensions, temporary ditch crossings, temporary barriers, traffic control, and clearing of debris and foliage.

MATERIALS

All materials shall conform to the Kentucky Standard Specifications for Road and Bridge Construction, 2000 edition. The Contractor shall submit to any material testing required by the Engineer. Salvaged materials may be used at the discretion of the Engineer.

INSTALLATION

Materials shall be installed in accordance with the Kentucky Standard Specifications for Road and Bridge Construction, 2000 edition and KYTC standard drawings.

METHOD OF MEASUREMENT AND BASIS OF PAYMENT

Site Preparation shall be paid for per unit each. The Contractor shall coordinate with the Engineer before performing site preparation work.

SPECIFICATIONS FOR POLE BASE

DESCRIPTION

The pole base shall be constructed in accordance with the plans and specifications.

MATERIALS

Materials shall be in accordance with the plans and specifications. Materials shall be in accordance with the Kentucky Standard Specifications for Road and Bridge Construction, 2000 edition. The Contractor shall submit to material testing at the discretion of the Engineer.

INSTALLATION

The Contractor shall install the pole base in accordance with the plans and specifications. The Contractor shall stake all proposed pole base locations before excavation. Poles located behind guardrail shall have a minimum 4' spacing from edge of pole to face of guardrail, otherwise poles shall be located a minimum of 30' from all driving lanes. The Contractor shall obtain approval of staked locations before excavation. The KYTC Division of Operations, ITS Branch will approve locations for all field devices. The Contractor shall have utilities marked in the field prior to requesting approval. The Contractor shall allow two weeks to schedule this location approval with the Cabinet. KYTC approval of field device location does not relieve the contractor from his responsibility to avoid utilities and repair any damage to buried infrastructure. All materials shall be installed in a neat and professional manner. The Contractor shall grade and re-seed all disturbed areas and restore the area to the satisfaction of the Engineer.

METHOD OF MEASUREMENT AND BASIS OF PAYMENT

Pole bases will be measured for payment per unit each, complete and in place. This item includes all excavation including any special equipment required to install the base in rock. This item includes concrete, anchor bolts, reinforcing steel, and conduit within base.

SPECIFICATIONS FOR POLE WITH LOWERING DEVICE

DESCRIPTION

Pole with lowering device shall be designed to support and lower a closed circuit television camera, lens, housing, PTZ mechanism, cabling, connectors and other supporting field components without damage or causing degradation of camera operations. The camera lowering system device and the pole are interdependent, and thus, must be considered a single unit or system. The lowering system shall consist of a pole, suspension contact unit, divided support arm, and a pole adapter for attachment to a pole top tenon, pole top junction box, and camera connection box. The pole with lowering device shall withstand wind forces of 100mph with a 30 percent gust factor using a 1.65 safety factor. The lowering device manufacturer shall furnish independent laboratory testing documents certifying adherence to the stated wind force criteria utilizing, as a minimum effective projected area, the actual EPA or an EPA greater than that of the camera system to be attached. The camera-lowering device to be furnished shall be the product of manufacturers with a minimum of 2 years of experience in the successful manufacturing of such systems.

MATERIALS

Camera lowering device shall be [MG]^2 Model CLDMG2, Camera Lowering Systems CDP series or approved equal.

SUSPENSION CONTACT UNIT

The suspension contact unit shall have a load capacity 200 lbs. with a 4 to 1 safety factor. There shall be a locking mechanism between the fixed and movable components of the lowering device. The movable assembly shall have a minimum of 2 latches. This latching mechanism shall securely hold the device and its mounted equipment. The latching mechanism shall operate by alternately raising and lowering the assembly using the winch and lowering cable. When latched, all weight shall be removed from the lowering cable. The fixed unit shall have a heavy duty cast tracking guide and means to allow latching in the same position each time. The contact unit housing shall be weatherproof with a gasket provided to seal the interior from dust and moisture.

The prefabricated components of the lift unit support system shall be designed to preclude the lifting cable from contacting the power or video cabling. The only cable permitted to move within the pole or lowering device during lowering or raising shall be the stainless steel lowering cable. All other cables must remain stable and secure during lowering and raising operations.

The female Socket contact half of connector shall be made of thermosetting synthetic polymer. Each set contains 10 socket contacts permanently molded into the polymer body. There shall be 20 High conductivity brass socket contacts with permanently attached wire leads. The male contact block half shall contain High conductivity brass pin contacts with permanently attached wire leads molded into a polymer body. Ten contacts per set. Two sets (20 contacts) for each complete disconnect unit. Current carrying and signal wires in groups of 5 each for both the pin and socket halves of the connector. Constructed of 18 AWG stranded wire. Pin contact half of connector shall be made of thermosetting synthetic polymer. All pins and wires shall be molded in place. Two identical sets of 10 contacts each required for a complete disconnect unit. Male Pin contact halves shall be mounted to lower portion of disconnect unit.

All pulleys for the camera lowering device and portable lowering tool shall have sealed, self-lubricated bearings, oil tight bronze bearings, or sintered bronze bushings. The lowering cable shall be a minimum 1/8-inch diameter stainless steel aircraft cable with a minimum breaking strength of 1740 pounds with (7) strands of 19 wire each.

All electrical and video connections between the fixed and lowerable portion of the contact block shall be protected from exposure to the weather by a waterproof seal to prevent degradation of the electrical contacts. The electrical connections between the fixed and movable lowering device components shall be designed to conduct high frequency data bits and one (1) volt peak-to-peak video signals as well as the power requirements for operation of dome environmental controls. A direct coax connection is acceptable but not required.

The interface and locking components shall be made of stainless steel and/or aluminum. All external components of the lowering device shall be made of corrosion resistant materials, powder coated, galvanized, or otherwise protected from the environment by industry-accepted coatings to withstand exposure to a corrosive environment.

POLE

Pole shall be in accordance with the 1994 AASHTO "Standard Specifications for Structural Supports for Highway Signs, Luminaires and Traffic Signals." Minimum Loading requirements shall be based on an isotach wind velocity for the area of installation according to 1994 AASHTO isotach wind chart with a 1.3 gust factor. Calculations and detailed drawings shall be submitted demonstrating compliance with the AASHTO specification.

POLE WELDING

All welding shall be in accordance with Sections 1 through 8 of the American Welding Society (AWS) D1.1 Structural Welding Code. Tackers and welders shall be qualified in accordance with the code. Tube longitudinal seam welds shall be free of cracks and excessive undercut, performed with automatic processes, and be visually inspected. Longitudinal welds suspected to contain defects shall be magnetic particle inspected. All circumferential butt-welded pole and arm splices shall be ultrasonically or radiographically inspected.

POLE MATERIALS

All materials and products shall be manufactured in the United States of America, and comply with ASTM or AASHTO specifications. Mill certifications shall be supplied as proof of compliance with the specifications.

POLE DESIGN

The pole top deflection shall not exceed one inch in a 30-mph (non-gust) wind. The calculations shall include a pole, base plate, and anchor bolt analysis. The pole calculations shall be analyzed at the pole base, at 5-ft. pole intervals/segments and at any other critical pole section. Design shall be based on wind loading from a Diamond KD6 dome enclosure.

The pole shaft shall be one piece construction up to 50' in length, and shall conform to ASTM A595 Grade A with a minimum yield strength of 55 ksi or ASTM A572 with a minimum yield strength of 65 ksi. Poles greater than 50' in length shall be of two piece construction. The shaft shall be round or 16 sided with a four

inch corner radius, have a constant linear taper of 0.14 in/ft, and contain only one longitudinal seam weld. Circumferential welded tube butt splices and laminated tubes are not permitted. Longitudinal seam welds within 6 inches of complete penetration pole to base plate welds shall be complete penetration welds. The shaft shall be hot dip galvanized per the requirements of the contract documents.

POLE HAND HOLES
The hand hole opening shall be reinforced with a minimum 2-inch wide hot rolled steel rim. The nominal outside dimension is 6 inches x 27 inches. The handhole shall have a tapped hole for mounting the portable winch thereto as shown on the drawings.

POLE TOP TENON
A tenon shall be welded to the pole top with mounting holes and slot as required for the mounting of the camera-lowering system. The tenon shall be of dimensions necessary to facilitate camera lowering device component installation. Each slot shall be parallel to the pole centerline for mounting the lowering device.

POLE CABLE SUPPORTS
Electrical Cable Guides and Parking Stand (Eyebolts): Top and bottom electrical cable guides shall be located within the pole aligned with each other as referenced in the drawings. One cable guide shall be positioned 2 inches below the handhole and the other shall be positioned 1 inch directly below the top of tenon. A parking stand shall be positioned 2.75 inches below the top of the handhole.

BASE PLATE
Base plates shall conform to ASTM A36 or A572 Grade 42. Plates shall be integrally welded to the tubes with a telescopic welded joint or a full penetration butt weld with backup bar. Plates shall be hot dip galvanized per the requirements of the contract documents.

POLE ANCHOR BOLTS
Anchor bolts shall conform to the requirements of ASTM F1554 Grade 55. The upper 12 inches of the bolts shall be hot dip galvanized per ASTM A153. Each anchor bolt shall be supplied with two hex nuts and two flat washers. The strength of the nuts shall equal or exceed the proof load of the bolts.

INSTALLATION
Pole shall be installed in the correct orientation and plumb. Pole shall be grounded in accordance with the plans and specifications. Damaged galvanizing shall be repaired with a paint approved by the Engineer.

CAMERA BALANCING
The Camera shall be weighted and balanced to assure that the alignment of pins and connectors are proper for the camera support to be raised into position without binding. The lowering unit will have sufficient weight to disengage the camera and its control components in order that it can be lowered properly.

CAMERA CONNECTIONS
The Camera shall be wired to the junction box in the same configuration as existing TRIMARC equipment to provide interchangeability with existing units. The Contractor shall coordinate with the TRIMARC operations center to obtain the connector pinout.

METHOD OF MEASUREMENT AND BASIS OF PAYMENT

Pole with lowering device will be measured for payment per unit each, complete and in place. This item includes all assembly, mounting hardware, wiring, grounding, and mechanical and electrical adjustments. Due to the electrical connections involved, the CCTV Assembly must be installed to properly test the lowering device. The contractor shall demonstrate to the Engineer the proper and repeated operation of the lowering device. Proper camera operation and electrical connections shall be verified after each lowering device cycle.

SPECIFICATIONS FOR WINCH LOWERING TOOL

DESCRIPTION

The camera lowering device shall be operated by use of a portable lowering tool. This tool shall allow the camera to be raised and lowered with an electrically operated winch.

MATERIALS

The tool shall consist of a lightweight metal frame and winch assembly with cable as described herein, a quick release cable connector, an adjustable safety clutch and a variable speed industrial duty electric drill motor. This tool shall be compatible with accessing the support cable through the hand hole of the pole. When attached to the hand hole, the tool will support itself and the load assuring lowering operations and provide a means to prevent freewheeling when loaded. The lowering tool shall have a reduction gear to reduce the manual effort required to operate the lifting handle to raise and lower a capacity load. The lowering tool shall be provided with an adapter for operating the lowering device by a portable drill using a clutch mechanism. The lowering tool shall be equipped with a positive locking mechanism to secure the cable reel during raising and lowering operations. The lowering tool shall be made of durable and corrosion resistant materials, powder coated, galvanized, or otherwise protected from the environment by industry-accepted coatings to withstand exposure to a corrosive environment.

INSTALLATION

No installation is required. Lowering tools shall be delivered to a location determined by the Engineer.

METHOD OF MEASUREMENT AND BASIS OF PAYMENT

Lowering tool will be measured for payment per unit each, in new condition, complete and delivered and passing inspection by the Engineer.

SPECIFICATIONS FOR CAMERA INTERFACE BOX

DESCRIPTION

The Contractor shall provide an interface for each camera system installed. This interface shall provide an assortment of power, data, local camera setup, and communications capability.

MATERIALS

The Camera Interface shall be a Treehaven RoadWay Vision Systems Field Box Model RVSFB120E or approved equivalent.

Contact information:
Treehaven Technologies, Inc.
282 Treehaven Avenue
Powell, OH 43065-8510
614-791-8843

The Contractor must obtain approval from the Engineer prior to installing an equivalent device.
Special Provisions:

- Input voltage 120 VAC 50/60 Hz
- Input current 1.5 A
- Dome power output 24 V, 50/60 Hz, 1.25 A
- Heater power output 24 V, 50/60 Hz 5 A
- Operational temperature range 14°F to +140°F
- Video input connector BNC, 75 Ohms
- Monitor output connector BNC, 75 Ohms
- Joystick RS-422 interface
- Laptop RS-232 interface
- Remote control RS-422 interface

Features:

- Surge suppression on data, video and power supply lines
- Manual switch to select local or remote PTZ control

INSTALLATION

All materials shall be installed in a neat and professional manner. All installation services shall comply with all warranty provisions and warranty contract maintenance services in accordance with these specifications. All installation services must comply with all local, state and federal building, electrical and construction codes, and Motorola R-56 requirements. Coordinate layout and installation of cables with other installations. Revise locations and elevations from those indicated as required to suit field conditions and as approved by the Engineer. The method of panel mounting shall be approved by the Engineer. Camera interface shall be panel mounted and installed in the Model 336 Cabinets.

METHOD OF MEASUREMENT AND BASIS OF PAYMENT

The Camera Interfaces will be measured for payment per unit each, complete and in place, after passing component and subsystem testing. The unit price includes all mounting hardware, shelving, connections, and incidentals necessary to complete the work.

SPECIFICATIONS FOR CCTV ASSEMBLY

DESCRIPTION

The Contractor shall provide a CCTV Assembly at each site shown on the plans.

MATERIALS

The CCTV Assembly shall be an Ultrak UltraDome KD6 WeatherDome or approved equivalent.
Contact information:
Ultrak
4465 Coonpath Road
Carroll, OH 43112
800-443-6680
The Contractor shall obtain approval from the Engineer prior to installing an approved equivalent device. Proposed alternates shall be commercially available. The Contractor shall identify to the Department, an installed site, where the proposed CCTV Assembly has been operating for a period of at least one-year in a similar climate region.
The CCTV Assembly shall include the following:

UPPER WEATHTER DOME
The upper weather dome housing shall have the following features:

- The upper inner dome or can shall be constructed of steel.
- The upper outer dome or shroud shall be constructed of white, reflective ABS plastic. The shroud shall be designed to protect the weather dome from radiant heat from the sun and precipitation.
- The weather dome housing shall be designed for outdoor pendant, wall, and roof (parapet) installation.
- The weather dome housing shall be designed to mount to 1-1/2 in pipe.
- Adapters for pole and corner mounting shall be optionally available.
- The weather dome housing shall provide quick, positive disconnect to the dome drive unit.
- The upper weather dome shall measure 12.38 in. in diameter by 14.38 in. in height excluding the lower dome and the mounting nipple.
- The dome shall be capable of operating in a temperature range of between –22° and +120 ° F.
- The power, data, and video inputs and outputs shall have built in transient surge protection.

DOME DRIVE UNIT
The dome drive unit shall have the following features:

- On power up of the dome drive, the equipment shall clearly display the revision and part number of the unit and telephone number for service and support.
- The drive shall have a continuous angular travel of 360-degrees horizontal, and tilt of 0-degrees horizontal to 90-degrees down.
- The manual mode speed of the dome drive shall be variable from 0.10-degrees to 400-degrees per second in the horizontal axis and be variable from 0.10-degrees to 200-degrees per second in the vertical. The maximum manual mode speed of the dome drive shall be programmable between 400(200), 200(100), and 100(50) degrees per second for pan (tilt).
- Provide a built-in menu system for on-screen setup of camera functions and system control.
- The dome drive address shall be added to the camera video if programmed to do so.

- The dome drive shall have a programmable mode where the maximum manual drive speed can be made dependent on the camera lens zoom angle. If enabled the maximum manual drive speed shall decrease as the zoom angle narrows, and shall increase as the zoom angle widens.
- The dome drive shall be capable of storing 100 pre-programmed positions with a 24-character label associated with each position. Whether the pre-programmed position labels is added to the camera video shall be programmable. The position of the label on the video raster shall be selectable.
- The minimum time for the pan and tilt drives to reach a pre-programmed position shall be 0.6 second (180 degrees travel).
- The pre-programmed position accuracy of the dome drive shall be better than 1/10-degree.
- The dome drive shall be capable of storing up to 10 video tours with each tour being composed of up to 64 programmed positions.
- The dome drive shall incorporate a selectable auto-pivot mode to rotate the camera 180 degrees at the bottom of tilt travel.
- The dome drive shall send the camera to a pre-programmed home position after a programmed inactive time.
- The dome drive shall have 16 programmable sectors with a 24-character label associated with each sector. The border of each sector shall be defined by upper and lower tilt coordinates and right and left pan coordinates. The dome drive shall be considered to be within a sector if the center of the field of view of the camera is within the sector. The sector label shall be displayed whenever the dome drive is within that sector if programmed to do so.
- The dome drive shall have ten programmable privacy zones that shall blank the camera video when the camera field of view includes any part of a privacy zone that has been activated. A 24-character programmable title shall be associated with each privacy zone. The privacy zone's title shall be displayed whenever that privacy zones causes the camera video to be blanked.
- The dome drive shall have a learn mode for programming up to three 2 minute patterns. The patterns shall capture the pan, tilt, zoom focus and iris information for a period of up to 2 minutes and replay this information at the user's request.
- The dome drive shall have the capability to accept 4 alarm inputs, which shall initiate any preprogrammed position, tour or pattern. The alarm input shall be normally open dry contact.
- The dome drive shall upon command display an historical table of events, which can be used for diagnostic purposes.
- The dome drive shall have a rotating black ABS liner to mask the drive unit and camera from public view.
- The internal power supplies of the dome drive shall be isolated from the input 24V ac power.

CAMERA

The system camera shall have the following features:

- The following camera control options shall be available:
    - Digital zoom on/off.
    - Manual zoom speed control.
    - Backlight compensation on/off.
    - Auto focus on, zoom only/on, pan/tilt/zoom off.
    - Auto focus during tours on/off.
    - Video freeze-frame to eliminate the movement of the scene during pre-programmed position changes while running a video tour.

- The color camera (model CA447S4N) shall be as follows:
    - The image pickup device shall be a ¼ inch Super HAD CCD.
    - The NTSC version of the camera shall have 768H x 494V effective pixels (380,000 pixels)
    - The resolution of the camera shall be 470 TVL.
    - The minimum scene illumination requirements shall be 1.7 lux with 1/60 second shutter, and 0.15 lux with ¼ second shutter; at F/1.4, with 100 percent scene reflectance, and a video level of 50 IRE units.
    - The S/N ration shall be greater than 50dB.

LOWER DOME

The lower dome shall have the following characteristics:

- The lower dome construction shall be of vacuum-formed, optically graded acrylic.
- The lower dome shall be attached to the upper housing by means of three quarter turn fasteners. There shall be a gasket between the upper housing and the lower dome.
- All weather domes shall include a lower inner black liner dome.
- Domes shall clear.
- Internal resistive type thermostatically controlled heater and blower.

RECEIVER DRIVER

The receiver driver shall have the following features:

- The receiver/driver shall be digital.
- The receiver/driver shall be contained within the dome.
- Communications shall be via RS-422.
- The receiver/driver shall have BCD (decimal) switch addressability.
- The receiver/driver memory shall be battery-backed.

INSTALLATION

CCTV Assemblies shall be installed on lowering device in accordance with the manufacturers instructions. All materials shall be installed in a neat and professional manner. All installation services will comply with all warranty provisions and warranty contract maintenance services in accordance with these specifications. All installation services shall comply with all local, state and federal building, electrical and construction codes, and Motorola R-56 requirements. All wiring entry to the CCTV Assembly shall use watertight fittings. All wiring entry and exits shall be made at the side or underneath components; no exposed top entry or exits are permitted. This requirement extends to all enclosures, junction boxes, or any other externally exposed devices.

METHOD OF MEASUREMENT AND BASIS OF PAYMENT

The CCTV Assembly will be measured for payment per unit each complete and in place and after passing component and subsystem testing. This price includes the color camera, zoom lenses, environmental enclosure, pan/tilt unit, housing, dome, parapet mount, and all mounting hardware, connections, and incidentals necessary to complete the work.

SPECIFICATIONS FOR CCTV KEYBOARD CONTROLLER

DESCRIPTION

The Contractor shall furnish CCTV Keyboard Controllers and keyboards for the purpose of camera installation and testing.

MATERIALS

The CCTV Keyboard Controller shall be a Ultrak Model JPD-101 or approved equal, and shall meet the following minimum requirements:

FIRMWARE

The CCTV Keyboard Controller shall contain firmware that is compatible with Ultrak's KD-6 camera. All Camera Control Receiver functions controlled by the keyboard described herein shall be supported.

ENCLOSURE

The CCTV Keyboard Controller shall be constructed of high-impact plastic or aluminum.

CONTROL

The CCTV Keyboard Controller shall be capable of addressing and controlling up to 512 Camera Control Receivers.

DISPLAY

The CCTV Keyboard Controller shall provide an LCD for displaying camera ID and video output device designation.

CCTV CONTROL

The CCTV Keyboard Controller shall provide a joystick for controlling the cameras.

CCTV TEST JACK

The CCTV Keyboard Controller shall include an RJ-45 jack, which shall serve as the primary interface between the CCTV Keyboard Controller and the Camera Interface.

CONTROL CABLE

An RJ-45 cable shall be supplied with each controller for connection to the Camera Interface. The mating RJ-45 connector on the controller shall be wired in accordance with the manufacturer's recommendations.

INSTALLATION

No installation is required. Contractor shall use the CCTV Keyboard Controller and associated equipment to configure and test cameras. Upon completion of the Project, CCTV Keyboard Controllers shall be delivered to the Department at a location determined by the Engineer

METHOD OF MEASUREMENT AND BASIS OF PAYMENT

CCTV Keyboard Controllers will be measured for payment per unit each.

SPECIFICATIONS FOR VIDEO TRANSMISSION SYSTEM

DESCRIPTION

Video transmission system shall allow color video transmission and PTZ camera control over voice grade telephone lines.

MATERIALS

Video transmission system shall be compatible with existing TRIMARC video over phone systems. Unless otherwise approved, video transmission system shall be ADPRO Fast Scan Series III.

Video Inputs: 10 video channel inputs. 1V p/p video input, 75-ohm or high impedance

Video Output: 1 video output into a 75-ohm load.

Typical Image Transmission Time: 0.3 to 2.2 seconds - up to 12.5 images per second (PSTN) 0.2 to 0.6 seconds - up to 15 images per second (ISDN)

External bi-directional RS232 data link with Programmable baud rate, data bits, stop bits and flow control.

Image Resolution: Colour or black and white. Intensity - 256 grey levels; spatial resolution selectable between 752 x 480, 752 x 240, 376 x 240, 248 x 240, 88 x 120 (NTSC)

Communications Interface: Asynchronous or synchronous (programmable). RS232 interface (8 data bits, no parity, max baud rate = 192 kbps). Hayes (AT protocol)

Differential balanced input/output RS485 serial port for control of PTZ.

Power Requirements: Transceiver 90-130VAC, 60 Hz, 11VA (max) at 110V Transmitter 10 - 15VDC, 11 watts (max) at 12VDC.

Dimensions: Transceiver. Standard 19" rack-mount, 1U high subrack to DIN4194. Transmitter. Sealed cabinet for interior wall mounting.

Operating temperature range 0°C-50°C (32°F-122°F).

INSTALLATION

The Contractor shall install video transmitter in model 336 enclosure. The Contractor shall install the transceiver unit in the TRIMARC operations center. The Contractor shall not disrupt normal TRIMARC operations during the installation. The Contractor shall be responsible for any damage to existing TRIMARC equipment. The Contractor shall repair or replace any equipment, cabling, or associated hardware damaged during installation at the Contractor's expense.

METHOD OF MEASUREMENT AND BASIS OF PAYMENT

Video transmission system will be measured for payment per unit each complete and in place and fully functional in TRIMARC operations. This item includes cables, connectors, power supplies, and all incidentals required for operation.

SPECIFICATIONS FOR CCTV CONTROL CABLE

DESCRIPTION

CCTV control cable is used to connect the CCTV assembly to the video transmission system.

MATERIALS

Subject to compliance with requirements, manufacturers offering products that may be incorporated in the work include Ultrak. Contractor may submit options, but will be subject to approval by the Engineer.
CCTV control cables shall be a composite cable consisting of one RG59 coax video cable and an appropriate number and size of copper conductors to meet the needs of the camera. Contractor shall coordinate with the camera manufacturer to ensure proper connectivity.
Applicable Specifications: UL/NEC/CEC CATV or CM. Flame Resistance: UL 1581 Vertical Tray.

INSTALLATION

The cable shall be a suitable length to allow installation between equipment without exceeding the minimum bend radius as specified by the manufacturer. Connectors shall be installed as necessary, and shall match the connector interface requirements for the equipment being connected. Adapters are not acceptable.

METHOD OF MEASUREMENT AND BASIS OF PAYMENT

CCTV Control Cabling shall be purchased on spools of approximately 1000ft. At the completion of the project, spools with 50ft or more leftover, shall become the property of the Department. All cables will be measured for payment per 1000ft spool, complete and in place, after passing applicable testes and demonstration of performance. All connectors, terminators, fittings, etc. will be considered incidental to the cost of installing the CCTV control cable and no separate payment will be made. CCTV Control Cabling will be paid for per unit each 1000ft spool.

SPECIFICATIONS FOR RWIS TOWER

DESCRIPTION
Road Weather Information Station (RWIS) tower shall consist of a foundation, cabinet mounting bracket, conduits, and tower.

MATERIALS
Tower shall be Universal Manufacturing Co. Model 9-30 or approved equal.

SECTIONS
Tower shall be comprised of three (3) sections with each section being ten (10) feet in length. Each section shall be an equilateral triangular truss design. Tower sections shall be constructed from aluminum. All necessary hardware for attaching tower sections together shall be supplied. Towers shall be supplied with a 1 1/4" I.D. collar.

BASE HARDWARE
Tower shall be provided with all necessary hardware for a base that will allow for tilting the tower over to the ground. This design shall allow the tower to be walked up to its raised position and walked down for lowering the tower to the ground. This shall include, but not be limited to, the anchor rods that are placed in the concrete foundation, the steel connectors or sleeves for attaching the tower legs to the anchor rods, and all necessary hardware for attaching the sleeves to the anchor rods and to the tower legs. The design of this base shall allow for the tower to drain properly.

WIND LOAD
Tower shall be rated for a minimum of nine (9) square feet wind load for a Wind Loading Zone of 80 MPH.

INSTALLATION
Tower shall be installed in accordance with the manufacturer specifications and the plans. The Contractor shall stake all proposed tower locations before excavation. The Contractor shall obtain approval of staked locations before excavation. The KYTC Division of Operations, ITS Branch will approve locations for all field devices. The Contractor shall have utilities marked in the field prior to requesting approval. The Contractor shall allow two weeks to schedule this location approval with the Cabinet. KYTC approval of field device location does not relieve the contractor from his responsibility to repair any damage to infrastructure. The Contractor is responsible for positioning the tower foundation so that the tower may be tilted to the horizontal position without damage to the sensors, cabinet, conduit or any other obstruction. All materials shall be installed in a neat and professional manner. The Contractor shall grade and re-seed all disturbed areas and restore the area to the satisfaction of the Engineer.

METHOD OF MEASUREMENT AND BASIS OF PAYMENT
Towers will be measured for payment per unit each, complete and in place. This item includes all excavation including any special equipment required to install the base in rock. This item includes concrete, anchor bolts, reinforcing steel, and conduit within base. The Contractor shall verify that there are no obstructions to tower lowering.

SPECIFICATIONS FOR RWIS EQUIPMENT

DESCRIPTION

Road Weather Information Station (RWIS) equipment shall consist of a datalogger and sensors to measure road temperatures and atmospheric conditions.

MATERIALS

DATALOGGER SPECIFICATIONS

GENERAL

Datalogger shall be an enclosed design to prevent debris from contacting the circuitry.

Datalogger shall store system configuration settings in non-volatile memory and resume operation from power interruptions without user intervention.

Datalogger shall support ASCII data transfer formats including comma separated values and fixed width, printer style ASCII. Datalogger shall be compatible with Campbell Scientific Loggernet polling software. Data format shall be compatible with Campbell Scientific RTDM software. Communication protocols and data formats shall be extensively documented and freely available.

Datalogger shall provide averaging, vector averaging, as well as standard arithmetic and statistical manipulation of data.

Datalogger shall provide data processing for logical and arithmetic equations based on multiple sensor inputs.

Datalogger shall have integral surge suppression that does not degrade when subjected to surge events. MOVs shall not be used for surge suppression.

Datalogger shall interface to thermistors, thermocouples, wind monitors, temperature/humidity sensors, solar radiation sensors, and other common environmental sensors.

Datalogger shall be Campbell Scientific CR10X or approved equal.

Datalogger Electrical Specifications

Analog Inputs

Analog Inputs:	6 differential, 12 single ended
Absolute Accuracy:	± 0.1% [-25° to +50° C]
Ratiometric Accuracy:	± 0.02% [+10° to +30°C]
Channel Input Range Selection:	Software controlled
Dynamic Input Range:	± 2.5 mV to ± 2500 mV in 5 ranges
Input Resistance:	> 1G Ohm
Input protection	shorts, overvoltage, transients, ESD

Digital I/O

General purpose I/O	8 ports, Internal pull up
Input Sampling mode:	frequency, count, event counting
Frequency Range	up to 16 KHz

Sensor Excitation

Number of Variable Outputs:	3
Voltage Levels	± 2.5 V
Voltage Regulation	± 2.5 mv
Current Sourcing	at least 25 mA
Selection Method	Software Controlled

Auxiliary Power Outputs

12 VDC Switched Outputs:	600 mA (unregulated)
5 VDC Output	1 output up to 200 mA

Serial Communication

Number of Serial Ports:	1 (minimum)
Interface Standards:	TTL, 9600 baud

Hardware

Memory:	128 K Nonvolatile
System Configuration Storage:	Nonvolatile
Watchdog:	CPU Watchdog Timer
Network Support:	Unit Address
Real Time Clock:	± 60 sec/month accuracy, battery backup
Self Diagnostics:	Internal, sensor, power monitor

Power Requirements

DC power:	10.7 to 16 VDC @ at 100 mA max
Standby Current:	3 mA
Battery Backup:	12 V, 6 AH minimum
Battery Charging:	Automatic charging and battery management

Physical Specifications

Datalogger Dimensions:	10.25" X 6" X 3.75" nominal
Datalogger Weight:	2 lbs nominal
Datalogger Temperature Range:	-25°C to +50°C

Warranty

Datalogger shall be supplied with a 12-month warranty from date of shipment.

Enclosure and supporting equipment

Datalogger and supporting equipment shall be mounted in a non-metallic enclosure. The contractor shall purchase the datalogger and supporting equipment pre-installed in the specified enclosure. The contractor shall be responsible for drilling the enclosure and furnishing and installing conduit hubs

Supporting equipment pre-installed in enclosure shall include:

- Power supply/backup battery and charging system
- 1200/9600 baud, extended temperature (-25° to +50° C), Hayes compatible modem. Modem shall be pre-programmed for remote polling operation.
- Enclosure Relative Humidity Sensor, Campbell Scientific 10162 or approved equal
- AC surge suppressor. Northern Technologies TCS-HWR or approved equal
- Telephone line surge suppressor. Joslyn Model 125 or approved equal
- Duplex receptacle
- Ground buss bar, ILSCO D167-8 or approved equal

Duplex receptacle and buss bar shall be supplied mounted to the backpanel but shall not be wired up or connected to the surge suppressor. The contractor shall be responsible for connecting AC wiring and surge suppression.

One set of documentation including datalogger manual, sensor manuals and supporting equipment manuals shall be supplied with the order.

Enclosure
Enclosure shall be a white, non-metallic, NEMA 4X, fiberglass reinforced polyester unit. Enclosure cover shall be mounted with a continuous, stainless steel piano hinge and shall be secured with a stainless steel lockable latch. Enclosure interior dimensions shall be 18" X 16" X 8.7" nominal. Enclosure shall include mounting flanges or threaded inserts for securing to pole mounting hardware. Enclosure shall be equipped with a pre-punched and painted backpanel. Equipment shall be secured by nylon blind nuts. Sheet metal screws shall not be used to mount equipment. Enclosure shall be supplied with 12 extra backpanel mounting nuts.

Equipment shall be shipped pre-installed in the enclosure. Equipment shall be mounted as to maximize space for installation of additional equipment at the bottom of the enclosure.

Enclosure shall be Vynckier VJ1816 or equivalent.

SENSOR SPECIFICATIONS

Sensor suite shall consist of the following sensors:

One (1) Air Temperature Relative Humidity Sensor
One (1) Wind Monitor
Two (2) Temperature Probes
One (1) Precipitation Sensor
One (1) Solar Radiation Sensor
One (1) Wetness Sensing Grid

General

Sensors shall be rugged units, designed for unattended operation and minimal maintenance.

Sensors shall be supplied with a comprehensive manual detailing the electrical characteristics, datalogger interface connections, datalogger programming examples, calibration constants, polynomial error correction coefficients, maintenance procedures and calibration requirements.

Sensors shall be supplied with the manufacturers standard warranty.

All sensor suites shall be delivered in one shipment.

Air Temperature Relative Humidity Sensor

Air Temperature Relative Humidity (RH) Sensor shall include Temperature/RH probe, solar radiation shield and mounting hardware

Probe Length:	10 inches
Probe Body Diameter:	1 inch
Filter:	0.2 μm Teflon® membrane
Filter Diameter:	0.75 inches
RH Measurement Range:	0.8 to 100% non-condensing
RH Output Signal Range:	0.008 to 1 Vdc
RH Accuracy at 20°C:	±1% RH against factory reference
Temperature Dependence of RH Measurement:	±0.05% RH/°C
RH Typical Long-Term Stability:	Better than 1% RH per year
RH Response Time (at 20°C, 90% response):	15 s with membrane filter
RH Settling Time:	500 ms
RH Supply Voltage:	12 Vdc Nominal
RH Current Consumption:	4 mA (Active)
RH Operating Temperature:	-40° to +60°C
Temperature Sensor:	1000 Ohm PRT
Temperature Measurement Range:	-39.2° to +60°C
Temperature Output signal range:	0.008 to 1.0V
Probe lead length	9'

Air Temperature RH probe shall be supplied with appropriate shield and mounting bracket for attachment to a vertical pipe.

Air Temperature RH probe shall be Vaisala HMP45C or approved equal.

Wind Monitor

Wind monitor shall be a helicoid propeller and vane style device.

Specifications:

Speed Range:	0 to 50 mph
Survival:	220 mph
Threshold:	0.9 mph
Distance Constant:	10 ft
Signal Output:	sine wave: 90 Hz @ 20 MPH
Resolution:	0.1 mph
Accuracy:	0.25 mph
Direction Range:	360° mechanical <355° electrical
Accuracy:	2°
Survival:	220 mph
Threshold:	0.9 mph
Delay Distance:	4.3 ft
Signal Output:	Analog DC voltage
Power:	Regulated reference voltage for 10K potentiometer
Height Overall:	14.6 in
Length Overall:	21.7 inches including vane & prop
Prop Diameter:	7.1 in
Weight:	2.2 lbs
Lead Length	50'

Wind monitor shall be R.M. Young Model 5103 or approved equal

Temperature Probe

Temperature probe shall be a sealed unit designed for sensing air, soil and water temperature. Unit shall be sealed for immersion in water to 50'

Specifications:

Temperature measurement range:	-35° to +50°C
Polynomial linearization accuracy:	Typically <±0.5°C over -38° to +50°C range, <±0.1°C over -24° to +48°C range
Lead Length	Determined by the Contractor

Interchangeability error:	Typically <±0.2°C over 0° to 50°C range increasing to ±0.4°C at -40°C

Precipitation Sensor

Precipitation sensor shall be a heated tipping bucket device for measuring rain and snow

Specifications:

Orifice:	12-inch diameter
Accuracy:	±0.5% @ < 0.5"/hr rate
	±2.0% @ < 3.0"/hr rate
Resolution:	0.01 inch
Heating Element:	115 VAC 60 Hz 300 W w/thermostat
Weight:	11.2 pounds including 50' power and signal cable
Signal Cable:	50' 2-conductor shielded cable
Power Cable:	50' 115 V power cable
Operational Ranges:	-20° to 50°C; 0 to 100% RH

Unit shall be supplied with a mounting/leveling base for mounting to a 1.25 vertical pipe.

Precipitation sensor shall be Met One Model 385 or approved equal.

Solar Radiation Sensor

Solar radiation sensor shall be a silicon photovoltaic detector mounted in a cosine corrected head. Unit shall have a mV output across an integral shunt resistor. Unit shall be designed for direct interface to common datalogger units.

Specifications:

Stability:	< ±2% change over a 1 year period
Response Time:	10 ms
Temperature Dependence:	0.15% per °C maximum
Cosine Correction:	Cosine corrected up to 80° angle of incidence
Operating Temperature:	-40° to +65°C
Relative Humidity:	0 to 100%
Detector:	silicon photovoltaic detector
Sensor Housing:	Weatherproof anodized aluminum case with acrylic diffuser and stainless steel hardware
Size:	0.94" dia x 1.00" H
Lead Length	11' minimum
Weight:	1 oz.
Accuracy:	±5% maximum
Sensitivity:	0.2 kW m -2 mV -1
Linearity:	Maximum deviation of 1% up to 3000 W m -2
Shunt Resistor:	Adjustable, 40.2 to 90.2 Ohms, factory set

Light Spectrum Waveband: 400 to 1100 nm

Unit shall be supplied with a base leveling fixture with built-in bubble level and adjustment screws, crossarm stand and one 90° mount for attaching crossarm stand to crossarm.

Unit shall be LI-COR LI200X or approved equal.

Wetness Sensing Grid

Wetness Sensing Grid shall provide a changing resistance in the presence of condensation or precipitation. Wetness Sensing Grid shall be provided with a lead length of 20 ft.

Wetness Sensing Grid shall be Campbell Scientific 237-L20 or approved equal.

INSTALLATION

Installation shall be in accordance with the Kentucky Standard Specifications for Road and Bridge Construction, 2000 edition, the National Electric Code and National Electric Safety Code. Wiring shall be neat and orderly.

DATALOGGER WIRING AND PROGRAMMING

The KYTC will furnish a wiring diagram for wiring the sensors to the CR10X datalogger. The KYTC will program the CR10X datalogger via phone. The Contractor shall notify the Engineer when programming is required.

SENSOR CABLES

No splices will be allowed in any sensor cable without the approval of the Engineer. No sensor cable may be shortened without the approval of the Engineer. Cables shall be pulled through conduit by hand only.

ROADWAY TEMPERATURE SENSORS

Temperature sensors shall be installed approximately 5' into the lane. The surface temperature sensor shall be installed horizontally in a 4" saw slot. The subsurface temperature sensor shall be installed at the bottom of a 1" diameter hole drilled down 2' into the subgrade. Sensors shall be encased in loop sealant. The saw slot shall be sealed with loop sealant.

METHOD OF MEASUREMENT AND BASIS OF PAYMENT

RWIS Equipment will be measured for payment per unit each, complete and in place, after passing system and sensor testing. This item includes conduit, wiring, sensors, equipment, testing, calibration Master padlock with #2577 key and all other equipment and incidentals to construct a fully operational weather station.

SPECIFICATIONS FOR VARIABLE MESSAGE SIGN

DESCRIPTION

This Specification describes minimum specifications for the LED variable message sign(s) required by the contract. The contractor shall provide all the materials, software, and services necessary to deploy a VMS system that fully complies with the functional requirements specified herein, including incidental items that may have been inadvertently omitted.

Variable Message Signs shall be 3 line by 24 character. Signs shall use amber LED displays to generate 18" characters. Signs enclosure shall be a walk-in type constructed of aluminum. Enclosure size shall be sufficient for a technician to replace the LED panels, power supplies, control computer, fans , heaters, filters and all other equipment from inside the sign.

Sign software shall support NTCIP communications over Airlink CDPD modems as implemented in the Louisville, KY TRIMARC project.

Sign controller shall be located within the sign enclosure. A ground mounted sign enclosure is not required.

Pre-Build Hardware Submittal

A hardware submittal shall be conducted prior to the equipment going into production to verify that the design can operate using the NTCIP protocol used at TRIMARC. This test will be conducted by the TRIMARC system integrator. The sign manufacturer shall supply a sign controller, power supply, three display modules, and any other equipment required for bench operation of the sign system. This equipment will be returned after the testing is complete. The sign manufacturer shall provide documentation and support for all NTCIP objects unique to the design.

Pre-Build Technical Submittal

The VMS manufacturer shall provide a complete technical submittal within 60 days of contract award and shall not proceed with VMS manufacture until the Engineer has approved the submittal.

The submittal shall include:

- All VMS manufacturer qualification information, as specified herein
- VMS Shop Drawing, including an illustration of the recommended installation method
- VMS structural calculations and certification, by a registered Professional Engineer
- VMS Site Riser Diagram
- AC Site Power Requirements, including legs and Amps per leg
- Major VMS schematics, including: AC power distribution inside and outside the VMS, DC power distribution within the VMS, and control signal distribution inside and outside the VMS
- Drawings of major VMS components, including: LED display modules, driver circuitry, control/logic circuits, pulse width modulation diagram, LED (Drive Current versus time) environmental control assemblies, VMS field controller, control equipment cabinet assembly, and control cabinet mounting

footprint

- Catalog cuts for major VMS components, including: front face paint material, polycarbonate face material, LEDs, regulated DC power supplies, circuit board conformal coating material, hookup wire, signal cable, surge suppression devices, load center, circuit breakers, utility outlets, field controller motherboard computer, other purchased control/logic circuit boards, field controller power supply, ventilation/cooling fans, and ventilation filter
- Calculations for: display refresh rate, maximum VMS power consumption, and typical VMS power consumption
- VMS control software operator's manual.

VMS Manufacturer Qualifications

The variable message sign manufacturer for this contract shall:

- Have been in the business of manufacturing large outdoor permanently mounted LED VMS, which are used to manage vehicular roadway traffic, for a minimum period of five (5) years prior to the contract bid date. An "LED" VMS contains display pixels constructed solely of high-intensity discrete LEDs. A "large" VMS has the ability to simultaneously display a minimum of three (3) lines of twelve (12) 7x5 characters per line, with each character having a minimum height of twelve (12) inches (305 mm)
- Have in operation a minimum of one hundred (100) large outdoor permanently mounted LED VMS as defined above. Each of these VMS shall have successfully operated for a minimum period of one (1) year prior to the contract bid date
- Have in operation as of the contract bid date, a minimum of five (5) independently controlled VMS systems that communicate with a remote computer using NTCIP. These VMS systems shall be communicating over dial-up telephone, cellular telephone, spread spectrum radio, or fiber optic backbones. Each of the five systems shall contain a minimum of two (2) permanently mounted VMS. All systems shall be owned and operated by five different agencies. VMS manufacturer compliance with NTCIP standards shall have been tested and certified by an independent company, using the publicly available NTCIP Exerciser software test program, for a minimum of two (2) of the five systems.
- Have been in business under the same corporate name for a period of no less than five (5) years prior to the contract bid date
- Utilize a documented in-house quality management procedure that has been in place for no less than two (2) years prior to the contract bid date
- Utilize a documented certified welding procedure.

Documentation that proves the VMS manufacturer complies with these requirements shall be provided with the VMS manufacturer's pre-build technical submittal. This submittal shall also include references and project information for all of the manufacturer's VMS customers of the last five (5) years, including:

- Equipment owner/operator agency name
- Contact person name, telephone number, fax number, and e-mail address
- VMS system name and location of operations control center (project name/number, roadway name/number, state, county, country)
- VMS commissioning date (first date of successful on-site operation)
- VMS quantity

- VMS display pixel technology
- VMS display matrix size (pixel rows by pixel columns) and type (full matrix, line matrix, discrete character)
- VMS housing access type (walk-in, front access, rear access)
- Communications protocol used (NTCIP or proprietary; if proprietary, provide a name or description)
- Type of communications backbone used (telephone, fiber optic, direct, etc.)
- NTCIP compliance test reports prepared by independent companies
- Contact person name, telephone number, fax number, and e-mail address for each independent company that completed the NTCIP test report(s).

The pre-build submittal shall also include the following background information about the VMS manufacturer:

- Full corporate name
- Corporate address
- Contact person name, telephone number, fax number, and e-mail address
- Number of years in business under the current corporate name
- A copy of the VMS manufacturer's in-house quality management procedure
- Copy of the VMS manufacturer's certified welding procedure
- Copy of welding certifications for all personnel who will perform welding on the VMS housing
- General corporate literature, if available
- VMS product literature, if available.

Experience with manufacturing the following types of electronic sign products will not satisfy the requirements of this VMS specification:

- Indoor signs of any size or type
- Portable or mobile signs of any size or type
- Neon signs
- Back-lit signs
- Rotating drum or plank signs
- Lane control signs
- Blank out signs
- Any type of sign that is not pixelated and can not be programmed to display a nearly infinite quantity of messages
- VMS that have a pixel technology comprised of something other than high-intensity light emitting diodes (LED). Examples of unacceptable technologies are incandescent lamp, liquid crystal, fiber optic, flip disk, flip-fiber combination, and flip-LED combination
- VMS with a display matrix smaller than three lines of twelve 7x5 characters per line and having a character height smaller than 12 inches (305 mm)
- Outdoor electronic signs that are used for purposes other than roadway/motorway traffic management.

Failure to provide complete and accurate submittal information, as specified herein, will be cause for rejecting the VMS manufacturer.

Material, Manufacturing and Design Standards

VMS provided for this contract shall comply with the most recent revision of the following standards, if no revision date is given:

- Aluminum Welding – The VMS housing shall be fabricated, welded and inspected in accordance with ANSI/AWS D1.2-97 Structural Welding Code-Aluminum (1997)
- Electrical Components – High-voltage components and circuits (120 VAC and greater) shall be wired and color-coded per the National Electric Code
- Environmental Resistance – The VMS housing shall comply with type 3R enclosure criteria, as described in NEMA Standards Publication 250-1997, Enclosures for Electrical Equipment (1000 Volts Maximum)
- Maintenance Access – The LED display matrix and other internal VMS components shall be accessible through doorways located on side walls (left and right) of the sign housing (perpendicular to the LED display matrix)
- Optical Performance – The LED display shall be certified to Performance Level 1 of UK Highways Agency standard TR-2136, Issue B2, October 1998, Optical Performance Functional Specification for Discontinuous Variable Message Signs
- Structural Integrity – The VMS housing shall be designed and constructed to withstand a minimum sustained wind load of 100 mph (160 kph), with a 30 percent wind gust factor. The VMS housing shall support a front face ice load of 4 pounds per square foot (19.5 kg per square meter). The VMS housing shall be designed and constructed to comply with all applicable sections of AASHTO Standard Specifications for Structural Supports for Highway Signs, Luminaires and Traffic Signals, Third Draft, March 1999, as well as the fatigue resistance requirements of NCHRP Report 412, Fatigue-Resistant Design of Cantilevered Signal, Sign, and Light Supports.

VMS field controller hardware/firmware and VMS control software communications shall comply with the most recent revision of the following AASHTO-ITE-NEMA Joint Committee standards for NTCIP:

- 1101:1997 – NTCIP Simple Transportation Management Framework (STMF). This document was previously published as NEMA TS-3.2-1996
- 1201:1997 – NTCIP Global Object Definitions. This document was previously published as NEMA TS-3.4-1996
- 1203:1997 – NTCIP Object Definitions for Dynamic Message Signs. This document was previously published as NEMA TS-3.6-1997
- 2001 – NTCIP Class B Profile. This document was previously published as NEMA TS-3.3
- 2101 v01.10 (Recommended) – NTCIP Point-to-Multipoint Protocol/RS-232 Subnetwork Profile. This document was previously published as NEMA TS-3.PMP232
- 2301 – NTCIP STMF Application Profile. This document was previously published as NEMA TS-3.STMF
- 2202 v01.08 (Recommended) – NTCIP Internet Transport Profile. This document was previously published as NEMA TS-3.Internet v99.01.03.

Glossary

The following abbreviations and definitions shall govern this specification:

A – Amperes
AASHTO – American Association of State Highway and Transportation Officials
AC – Alternating current
AlInGaP – Aluminum Indium Gallium Phosphide. A type of LED semiconductor. See InGaAlP
ANSI – American National Standards Institute
AWS – American Welding Society
Baud Rate – The speed of serial communications
bps – Bits per second
C – Celsius
Cd – Candelas
CDPD – Cellular digital packet data
cfm – Cubic feet per minute
Communication Mode – Refers to the type of communications taking place between a control computer and a VMS. This can be dial-up or direct communications
Control Computer – A desktop or laptop computer used in conjunction with VMS control software to communicate with VMS field controllers. The control computer can instruct a VMS field controller to program and control the VMS, monitor VMS status, and run VMS diagnostic tests. A control computer can be used for remote control of one or more VMS, as well as for local control of a single VMS
COM Port – A serial port in the control computer that is used to communicate with the VMS field controller
CWI – Certified welding inspector
Dial-Up – A type of communication between a VMS and its control computer that requires a dialing modem. See also PPP communications
DC – Direct current
Direct – A type of communication between a VMS and its control computer that does not require a switched communications backbone. Direct communication does not require the use of modems, but it may require the use of signal converters (i.e., fiber optic). See also PMPP communication
Display Matrix – The programmable array of LED pixels used to display messages that are viewed by motorists and travelers
DMS – Dynamic message sign. Includes the display, controller, cabinet, and associated field equipment
Engineer – The authorized representative of the owner who is purchasing the VMS system specified herein
Entry Effect – The type of visual characteristic applied to all or part of a VMS display page in order to attract attention to, and create interest in, the message being displayed
F – Fahrenheit
Field Controller – A stand-alone computer that is located at a VMS site and which controls a single VMS. A field controller receives commands from and sends information to a control computer
Font – The style and shape of alphanumeric text and punctuation that is displayed on the VMS matrix and is used to create messages viewed by motorists and travelers. I.e., thin vs. wide, tall vs. short, fixed width vs. variable width, "Arial" vs. "Courier" vs. "Gothic" vs. "Times New Roman", etc. Sometimes referred to as "character font"
Font File – A computer file that contains a group of fonts having the same style and shape
Frame – See page
FSORS – Full, Standardized Object Range Support – Support for, and proper implementation of, all valid

values of a DMS object as defined within the object's OBJECT-TYPE macro in the subject NTCIP standard. This is further defined in two distinct sub-requirements. (1) If the ACCESS of the object is read-write, a Management System shall be able to set the object to any valid value as defined by the SYNTAX and DESCRIPTION fields (except that the value of 'other' need not be supported when such a value is defined) and the indicated functionality shall be provided. (2) The value indicated by the object (e.g., in response to a 'get'), regardless of the ACCESS, shall reflect the current condition per the rules specified in the object's DESCRIPTION

FTP – File transfer protocol

GUI – Graphical user interface

Hold Time – The length of time that a page of information will remain displayed on the VMS once the page entry effects are complete

Hz – Hertz or cycles per second

IBM – International Business Machines Corporation

InGaAlP – Indium Gallium Aluminum Phosphide. A type of LED semiconductor. See AlInGaP

ITS – Intelligent transportation system

kA – Kilo amperes

kbps – Kilobits per second

kph – Kilometers per hour

LED – Light emitting diode

Library – A group of message files or schedule files of similar type. For example, a series of messages related to road construction can be stored under a library name of "CONSTRUCTION"

m – Meters

mA – Milliamps

mm – Millimeters

mph – Miles per hour

Management System – A computer system used to control an NTCIP field device, such as a VMS. This includes any software used for field (local) control and central (remote) control

Message – Information displayed on the VMS for the purpose of visually communicating with motorists. A VMS message can consist of one page or multiple pages that are displayed consecutively

MIB – Management information base

Modem – A communication device that allows data to be sent or received via telephone

MS – Microsoft Corporation

NEMA – National Electrical Manufacturers Association

Network – Multiple VMS, and sometimes other ITS field devices, which are connected to a single control computer. See also VMS system

nm – Nanometers

NCHRP – National Cooperative Highway Research Program

NTCIP – National Transportation Communications for ITS Protocol

NTCIP Component – A DMS or Management System

NTCIP System – A Management System plus the various ASCs and DMSs controlled by the Management System

Operator – Person using a control computer to run variable message sign(s)

Page – The maximum amount of information that can be shown on the VMS display matrix at a given moment in time

P.E. – Professional Engineer

Pixel – The smallest changeable (programmable) portion of a VMS display matrix

PC – Personal computer
PMPP – Point to multipoint communication
PPP – Point to point communication
PROM – Programmable read only memory
PSI – Pounds per square inch
PWM – Pulse width modulation
RAM – Random access memory
Response Time – The time to prepare and begin transmission of a complete response containing the requested Application Layer information. This is measured as the time from receipt of the closing flag of the request to the transmission of the opening flag of the response when the device has immediate access to transmit
RTD – Real time data
ROM – Read only memory
Schedule – A data file that predetermines when a VMS field controller will cause a stored message to be displayed on the VMS. A schedule can be set to the day, hour, and minute
Sign Status – Information that identifies current and historical data for a single VMS. This can include the VMS name, VMS field controller software version number, the calendar date and time indicated by the VMS field controller's internal clock, the last field controller reset time, internal and external sign temperatures, display matrix intensity level, the name of running messages, and other information
SRAM – Static read only memory
Stroke – The vertical and horizontal width of a display pixel. "Single stroke" denotes character segments that are one pixel wide. "Double stroke" denotes character segments that are two pixels wide
UK – United Kingdom
UL – Underwriter's Laboratories
UV – Ultraviolet light
V – Volts
VAC – Volts alternating current
VDC – Volts direct current
VMS – Variable message sign. One type of DMS
VMS Control Software – Applications software that, when residing in a control computer, is used to operate, monitor, and diagnose variable message sign(s) from either a remote location or locally using a direct connection to a single sign
VMS System – A closed-loop system that contains a central (remote) VMS control computer loaded with VMS control software, one or more variable message signs. Each VMS has its own field (local) controller and an interconnecting communications backbone
WYSIWYG – What you see is what you get. More specifically, what you see on the VMS control computer monitor is a scaled representation of how a message will appear when it is being displayed on the VMS. Similarly, after a pixel diagnostic test routine has been run, what you see on the control computer monitor is a scaled representation of the functional status of each pixel in the VMS display matrix.

VMS Display Capability

The VMS shall contain a full display matrix measuring a minimum of twenty seven (27) pixel rows high by one hundred twenty (120) pixel columns wide. The matrix shall display messages that are continuous, uniform, and unbroken in appearance to motorists and travelers.

Each display pixel shall be comprised of multiple monochrome amber LEDs. Other pixel technologies, such as fiber optic, flip disk, combination flip disk-fiber optic, combination flip disk-LED, liquid crystal, and incandescent lamp, will not be accepted. The centers of all adjacent pixels shall be spaced a maximum of 2.6 inches (66 mm) apart, both vertically and horizontally.

The pixel matrix shall be capable of displaying alphanumeric character fonts measuring a minimum of 13 inches (330 mm) tall to a maximum of the display matrix height. Initially, however, only 18-inch (460 mm) and 28.6-inch (726 mm) font files need to be provided.

The VMS shall be able to display messages composed of any combination of alphanumeric text, punctuation symbols, and graphic images.

VMS messages shall be legible within a distance range of 150 feet (45.7 meters) to 1,000 feet (305 meters) from the VMS display face under the following conditions:

- When the VMS is mounted such that its bottom side is positioned between five feet (1.5 meters) and 20 feet (6.1 meters) above the roadway surface
- Whenever the VMS is displaying alphanumeric text that is 18 inches (460 mm) tall
- 24 hours per day and in most normally encountered weather conditions
- During dawn and dusk hours when sunlight is shining directly on the display face or when the sun is directly behind (silhouetting) the VMS
- When viewed by motorists and travelers that have 20-20 corrected vision
- When motorist and travelers eye level is 3 feet (0.9 meters) to 12 feet (3.6 meters) above the roadway surface.

Display of Alphanumeric Text

For message creation, the VMS, VMS field controller, and VMS control software shall support the storage and use of a minimum of three (3) alphanumeric character fonts files. Each font file shall include the following character fonts:

- The letters "A" through "Z", in both upper and lower case
- Decimal digits "0" through "9
- A blank or space
- Eight (8) directional arrows
- Punctuation marks, such as: . , ! ? - ' ' " "
- Other characters, such as: # & * + / ( ) [ ] < >.

During message creation, an individual character font shall be selectable with either a single computer

keystroke, such as [A], or a two-keystroke operation, such as [shift][A]. Font files shall include data that establishes the amount inter-character (horizontal) spacing.

Inter-line (vertical) spacing, which separates adjacent text lines, shall be operator selectable during message creation using the VMS control software.

The VMS shall provide a minimum of three pixel rows of vertical space between adjacent text lines, whenever multiple lines of seven-pixel high (18-inch, 460 mm) text are being displayed.

The following character font files shall be supplied with the VMS for this contract:

- 7x4 Single Stroke – a typical font is seven (7) pixel rows high by four (4) pixel columns wide, has a single-pixel stroke width, and provides one pixel column of inter-character spacing
- 7x6 Double Stroke – a typical font is seven (7) pixel rows high by six (6) pixel columns wide, has a two-pixel stroke width, and provides one pixel column of inter-character spacing
- 11x7 Double Stroke – a typical font is eleven (11) pixel rows high by seven (7) pixel columns wide, has a two-pixel stroke width, and provides two pixel columns of inter-character spacing.

Display of Graphic Images

At the present time, NTCIP does not officially support communication and display of graphic image data files. This fact notwithstanding, the VMS, VMS field controller, and VMS control software provided for this contract shall provide the ability to create and display graphic images by storing the images as font (text) files. The VMS shall be able to display messages containing graphic images of any size that will fit on its display matrix.

Message Entry Effects

The VMS shall be able to display messages using the following types of entry effects:

- Static Message – The selected message is displayed continuously on the sign face until the field controller blanks the sign or causes the display of another message
- Flashing Message – All or part of a message is displayed and blanked alternately at rates from as fast as 3 flashes per second to as slow as 1 flash per 10 seconds. The flash rate is user programmable in increments of 0.1 seconds
- Scrolling Message – The message moves across the display face from one side to the other. The direction of travel is user selectable as either left-to-right or right-to-left
- Multiple-Page Message – A message contains up to five different pages of information, with each page filling the entire pixel matrix. Each page's display time is user programmable in durations of 0.5 seconds or greater, and is adjustable in increments of 0.1 seconds.

A VMS message shall be able to utilize a combination of these effects.

VMS Control and Communications

Each VMS shall be controlled and monitored by its own field controller. The field controller shall be a stand-alone microcomputer, which does not require continuous communication with VMS control software in order to perform most VMS control functions.

The VMS field controller shall be able to receive instructions from and provide information to a computer containing VMS control software using the following communication modes:

- Remotely – Via direct, dial-up, or wireless CDPD communications with a remotely located computer. The system communications backbone, as well as all field modems or signal converters, shall provide the VMS field controller with an RS-232 signal having a baud rate between 2,400 bps and 56.6 kbps
- Locally – Via direct connection with a laptop computer that is connected directly to the field controller using a null modem connection and a baud rate between 2,400 bps and 56.6 kbps.

Diagnostic and Status Information

VMS operational status, as well as the functional status of major VMS components and VMS field controller communications, shall be reportable to VMS control software residing in both remote and local computers. This shall minimally include the following information:

- Field Controller Communications – As "Normal" or "Failed"
- Message Display Status – As {name of message being displayed} or "Blank"
- Maximum Usable Intensity Level – The maximum usable percentage of the maximum possible drive current that can be applied to the LED display matrix for intensity adjustment purposes. This shall be a user-programmable value, and it shall range from 50% to 100% of the maximum possible LED drive current, in increments of 1%
- Actual LED Intensity Level – The percentage of the "Maximum Usable Intensity Level" at which the LED display is currently operating, whether intensity control is in an automatic or manual mode
- Actual LED Intensity Level Control Method – As "Automatic" or "Manual"
- LED Pixel Status (for all pixels) – Displayed upon operator request in a bit-map graphic format as "Normal", "Failed", or "Half-Failed"
- Real-Time VMS Message Verification – Presents the exact content of the displayed message in real-time. Actual displayed message can be viewed using the VMS control software.
- Regulated DC Power Supply Output Status (for all supplies) – As "Normal" or "Failed"
- Internal VMS Temperature – The internal VMS air temperature measured by internally located sensors. This shall be reported in degrees F and C
- Ambient VMS Site Temperature – Outdoor air temperature measured by an external temperature sensor. This shall be reported in degrees F and C.

MATERIALS
General Specifications

The VMS housing shall provide walk-in service access for all LED display modules, electronics, power supplies, photo sensor assemblies, environmental control equipment, air filters, wiring, and other internal VMS components.

Dimensions – VMS housing dimensions shall not exceed ninety-four (94) inches tall by three hundred forty eight (348) inches wide. The front-to-back housing depth shall not exceed forty-eight (48) inches at its widest point, including the rear ventilation hoods.

Weight – VMS weight shall not exceed 4200 pounds.

Power – Maximum AC power shall not exceed 8590 watts, when the following circuits are operational and fully loaded:

- LED display pixel matrix, with 100% of the pixels operating at their maximum possible drive current
- VMS environmental control system
- 20-amp utility outlet circuit
- VMS field controller.

Typical VMS AC operating power shall not exceed 1630 watts, with the following circuit loadings:

LED display pixel matrix, with 25% of the pixels operating at their maximum possible drive current
VMS field controller.

VMS shall operate from 120 VAC, 60 Hz single-phase, including neutral and earth ground.

The VMS housing shall be constructed to have a neat, professional appearance. The housing shall protect internal components from rain, ice, dust, and corrosion in accordance with NEMA enclosure Type 3R standards, as described in NEMA Standards Publication 250-1997, Enclosures for Electrical Equipment (1000 Volts Maximum). The VMS housing bottom side shall contain small weep holes for draining any water that accumulates due to condensation.

Weep holes and ventilation/exhaust hoods shall be screened to prevent the entrance of insects and small animals.

VMS and field controller components shall operate in a minimum temperature range of -40 to +140 °F and a relative humidity range of 0 to 99%. VMS and field controller components shall not be damaged by temporary exposure to temperatures of -50 to +185 °F.

Internal VMS component hardware (nuts, bolts, screws, standoffs, rivets, fasteners, etc.) shall be fabricated from stainless steel, aluminum, nylon, or other durable corrosion-resistant materials suitable for the roadway signage application.

No internal electrical wiring or internal electrical components of any type (fans, power supplies,

transformers, LED display modules, circuit boards, surge suppression devices, fuses, relays, power and signal termination panels, utility outlets, and other electrical components) shall be located within four inches (100 mm) of the VMS housing floor. This will prevent short circuits from occurring, in the event of internal water buildup. The only allowable exception to this requirement shall be the bottom-facing photo sensor assembly, which shall be insulated to prevent water-related short circuits.

Electrical VMS and field controller components shall be 100% solid-state, except for the environmental control fans. All high voltage electrical components (exceeding 24 VDC) used in the VMS and the field controller shall be UL (Underwriter's Laboratory) listed.

The presence of ambient radio signals and magnetic or electromagnetic interference, including those from power lines, transformers, and motors, shall not impair performance of the VMS system. The VMS system shall not radiate electromagnetic signals that adversely affect any other electronic device, including those located in vehicles passing underneath or otherwise near the VMS and its field controller.

VMS Housing Frame and Mounting Brackets

VMS housing right, left, and rear walls shall be vertical. Top and bottom sides shall be horizontal. The front VMS wall shall be built with a permanent forward tilt angle of three (3) degrees, so that the top of the VMS housing is deeper than its bottom. LED display modules shall be mounted parallel to the front wall, so they are tilted three degrees forward toward the viewing motorists and use of the legible LED viewing cone is optimized.

The VMS housing structural frame shall consist of aluminum extrusions made from alloy number 6061-T6. All sides of the VMS housing exterior, except the front, shall be covered with 0.125-inch (3.17 mm) thick aluminum sheets made from alloy number 5052-H34. The interior side of each sheet shall be stitch-welded to the VMS frame members. All exterior sheet seams shall be continuously seam welded to the VMS frame, in order to form a unitized structure.

The VMS housing shall be fabricated, welded, and inspected in accordance with the requirements of ANSI/AWS D1.2-97 Structural Welding Code-Aluminum (1997). Compliance with this standard shall include, but shall not be limited to, the following:

- Welding shall be performed according to documented in-house welding procedures
- Personnel who perform welding on the VMS housing shall be certified to AWS D1.2-97 for all weld types required for housing fabrication
- A Certified Welding Inspector (CWI) shall inspect VMS welding on a daily basis and shall complete written reports that document welding progress, weld integrity, and any corrective action taken. The VMS manufacturer shall archive these reports and make them available for review, upon request of the Engineer.

Multiple mounting brackets in the form of I-beams or Z-extrusions shall be bolted to the VMS housing exterior rear wall, to facilitate attachment of the VMS to its support structure. Mounting brackets shall be:

- Extruded from aluminum alloy number 6061-T6

- Attached to the VMS structural frame members, not just the exterior sheet metal
- Installed at the VMS manufacturer's factory
- Attached to the VMS using galvanized A105 grade high-strength steel bolts
- Attached to the VMS using direct tension indicators to verify that mounting hardware is tightened with the proper amount of force
- Installed such that all bracket-to-VMS attachment points are sealed and water-tight
- Designed and fabricated such that the installing contractor can drill into them without penetrating the VMS housing and compromising the housing's ability to shed water.

For moving and installation purposes, multiple steel lifting eyebolts shall be attached to the top of the VMS housing. Eyebolts shall attach directly to the VMS housing structural frame and shall be installed at the VMS factory. All eyebolt mounting points shall be sealed to prevent water from entering the VMS housing. Lifting eyebolts, as well as the housing frame, shall be designed so that the VMS can be shipped and handled without damage or undue stress being applied to the housing prior to or during VMS installation on its support structure.

All lifting eyebolts shall be removed from the VMS after installation on its support structure. Bolt holes shall be plugged and sealed to prevent water from entering the VMS housing.

VMS structural assembly hardware and mounting brackets hardware (nuts, bolts, washers, and direct tension indicators) shall be stainless steel or galvanized high-strength steel and shall be appropriately sized for the application.

Front Face Construction

The VMS front face shall be constructed with multiple rigid panels, each of which supports and protects a full-height section of the LED display matrix. Panel exteriors shall be fabricated from 0.090-inch (2.28 mm) or thicker aluminum sheeting, and panel interiors shall be 0.125-inch (3.17 mm) or thicker polycarbonate sheeting. Face panels shall be bolted to the VMS housing and to each other using stainless steel hardware. Seams that separate adjacent panels shall be sealed. Panels shall be removable and shall not be welded to the VMS housing. The weight of a single face panel shall not exceed 150 pounds (68.2 kg).

Front face panels shall provide a high-contrast background for the VMS display matrix. The aluminum portion of each panel shall be painted black and shall contain a circular or square opening for each LED pixel. Openings shall be large enough to not block any portion of the LED viewing angle.

Polycarbonate sheets shall be securely attached to the inside of the aluminum panels and shall cover the pixel openings. The polycarbonate shall be sealed to prevent water and other elements from entering the VMS. Polycarbonate shall contain UV light inhibitor, which protects the LED display matrix from the effects of ultraviolet light exposure and prevents premature aging of the polycarbonate itself. Polycarbonate sheets shall have the following characteristics:

- Tensile Strength, Ultimate: 500 PSI
- Tensile Strength, Yield: 8,400 PSI
- Elongation Before Rupture: 100%

- Tensile Modulus: 340,000 PSI
- Flexural Strength: 13,500 PSI
- Flexural Modulus: 340,000 PSI
- Compressive Strength (0.05"/minute): 12,500 PSI
- Impact Strength, Izod (1/8", notched): 16 ft-lbs/inch of notch
- Rockwell Hardness: M70, R118
- Shear Strength: 5,800 PSI
- Heat Deflection Temperature Under Load: 264 PSI at 260F and 66 PSI at 280F
- Coefficient of Thermal Expansion: 3.75X10-5 in/in/F
- Specific Heat: 0.30 BTU/lb/F
- Water Absorption (24 hours at 73° F): 0.15%
- UL94 Flame Rating: 94V2
- Initial Light Transmittance: 85% minimum
- Change in Light Transmittance, 3 years exposure in a Southern latitude: 3%
- Change in Yellowness Index, 3 years exposure in a Southern latitude: less than 5%.

LED display modules shall mount to the inside of the VMS front face panels using either standard hand tools or no tools for removal and replacement.

VMS front face borders (top, bottom, left side, and right side), which surround the front face panels and LED display matrix, shall be painted black to maximize display contrast and legibility.

In the presence of wind, the VMS front face shall not distort in a manner that adversely affects LED message legibility.

Exterior Finish

VMS front face panels and front face border pieces shall be coated with semi-gloss black Kynar 500 resin or an equivalent brand of oven-fired fluoropolymer coating, which has an expected outdoor service life of 20 years.

All other VMS housing surfaces, including the access doors and VMS mounting brackets, shall be natural mill-finish aluminum.

VMS Housing Structural Certification

A Professional Engineer registered in the State of Kentucky shall analyze the VMS structural design and shall certify that the VMS:

- Will withstand the temporary effects of being lifted by the lifting eyebolts provided
- Will withstand a wind velocity of 100 mph (160 kph), with a 30 percent gust factor
- Will support a front face ice load of 4 pounds per square foot (19.5 kg/square meter)
- Complies with the applicable requirements of AASHTO Standard Specifications for Structural Supports

for Highway Signs, Luminaires and Traffic Signals, Third Draft, March 1999

- Complies with the fatigue resistance requirements of NCHRP Report 412, Fatigue-Resistant Design of Cantilevered Signal, Sign, and Light Supports.

The Professional Engineer shall analyze the complete VMS structural design. This includes the housing, mounting brackets, and lifting eyebolts, as well as the bracket-to-housing mounting hardware (nuts, bolts, washers, direct tension indicators, etc.) provided by the VMS manufacturer. Analysis shall include, but shall not be limited to:

- The quantity and type of lifting eyebolts to be provided
- The quantity and type of mounting brackets to be provided
- The quantity and type of hardware (nuts, bolts, washers) used to attach the mounting brackets to the VMS
- Verification that no dissimilar metals problem will exist and/or affect the structural integrity of the VMS-to-bracket attachment points
- A recommendation of the number of attachment points, as well as the attachment locations, that the installing contractor should use when mounting the VMS to its support structure.
- Verification of the catwalk and door to provide proper operation.

The VMS manufacturer shall include a signed and sealed copy of this P.E. certification, including all supporting calculations, with the pre-build technical submittal.

Serviceability

The VMS housing shall provide safe and convenient walk-in service access for all modular assemblies, components, wiring, and other materials located within the VMS housing, excluding front face panels, external mounting brackets, and VMS support structure members. All internal components shall be removable and replaceable by a single technician.

The minimum distance from the interior rear wall to the closest display component shall be 36 inches (920 mm). Minimum headroom of 72 inches (1,828 mm) shall also be provided. This free space shall be maintained across the entire length of the VMS housing, with the exception of structural frame members. However, structural members shall be designed to not obstruct the free movement of maintenance personnel throughout the VMS interior.

A level walkway shall be installed in the bottom of the VMS housing. The walkway shall be a minimum of 24 inches (609 mm) wide, and it shall run the entire length of the housing, from access door to access door. The walkway's top surface shall be non-slip and shall be free of obstructions that would trip service personnel. The walkway shall support a load of 300 pounds (136 kg) per linear foot, and it shall be constructed of multiple, removable panels.

The VMS housing shall contain a 20-Amp utility outlet circuit consisting of a minimum of three (3) NEMA 20-R, 120 VAC duplex outlets, with ground-fault circuit interrupters. One outlet shall be located near each end of VMS housing interior, and the third outlet shall be located near the housing's center.

The VMS housing shall contain a minimum of one (1) 4-foot (1,200 mm), 40-watt fluorescent lamp fixture for every five feet (1,520 mm) of VMS housing length. Lamps shall be evenly spaced across the housing ceiling, so they provide uniform light distribution for maintenance purposes. Lamps shall be protected by wire cages. Lamp ballasts shall be rated for operation at 0 degrees F (-17 C). Lamp circuits shall be controlled by a manual timer switch having an adjustable on time of two (2) hours. One light switch shall be located within easy reach of each access door.

One (1) vertically hinged door shall be located on each end (left and right side) of the VMS housing. Each access door shall be mounted to an integral doorframe, which bolts to the VMS housing using stainless steel hardware. A continuous vertical stainless steel hinge shall support each door, and all doors shall open outward. In the closed position, each door shall latch to its frame with a three-point draw-roller mechanism. The latching mechanism shall include an internal handle and release lever. Door release levers shall be located so that a person with no key and no tools cannot become trapped inside the housing.

Doorframes shall be double flanged on all sides so they shed water. Each door shall close around its flanged frame and compress against a closed-cell foam gasket, which adheres to the door. All doors shall contain a stop that retains the door in a 90-degree open position. When a door is open, the door and its stop shall not be damaged by a 40 mph (64 kph) wind.

Each door shall be furnished with a lock that is keyed to #2 Corbin key to match the existing TRIMARC VMS keys.

The VMS shall be equipped with a removable safety rail assembly, which prevents service personnel from falling out of the VMS when placed across an open access door. The rail assembly shall be designed to fit on either access door. The safety rail shall be a single-piece assembly that extends 48 inches (1,219 mm) above the interior walkway and contains multiple horizontal rails that are no more than 12 inches (305 mm) apart. The rail assembly shall attach to the VMS using stainless steel hardware that requires simple or no tools for removal and replacement.

LED Display Modules

The VMS shall contain seventy two (72) 9-pixel high by 5-pixel wide LED display modules, which are placed side-by-side to form a continuous full LED pixel matrix. Modules shall be mounted to the inside of the VMS front face panels using hardware that requires either basic hand tools or no tools for removal and replacement. Each 9x5 display module shall be constructed as follows:

One or more LED pixel circuit board(s) shall be mounted to the back of an aluminum panel to form the 9-pixel high by 5-pixel wide module. Pixel boards shall be mounted to the aluminum panel with durable, non-corrosive hardware, and their removal from the panel shall not require the use of tools.
The aluminum module panel shall have a minimum thickness of 0.063 inches (1.6 mm) and shall contain a circular opening for each LED pixel. The openings shall be sized so they do not block any portion of the LED viewing cone.
The front side of the aluminum module panel, which faces the viewing motorists, shall be primed and coated with automotive-grade flat black acrylic enamel paint.
One (1) LED driver circuit board shall be mounted to the back of each display module using durable non-

corrosive hardware; the driver board shall require either basic hand tools or no tools for removal and replacement.
LED display module electrical and signal connections shall be the quick-disconnect locking connector type.
Removal of a 9x5 display module from the VMS, or a pixel board or driver circuit board from its display module, shall not require a soldering operation.
It shall not be possible to mount a display module upside-down or in an otherwise incorrect position within the VMS display matrix.
All 9x5 LED display modules, as well as the LED pixel boards and driver circuit boards, shall be identical and interchangeable throughout the VMS.

Removal of a single 9x5 display module from the VMS, or failure of a single module, shall not affect the performance of any other module in the sign. Removal of one or more modules shall not affect VMS structural integrity or the structural integrity of the rest of the LED display matrix.

LED Pixel Boards

Each 9x5 display module shall contain one or more printed circuit boards, to which multiple LED pixels are soldered. Each pixel board shall contain a minimum of five (5) and a maximum of forty-five (45) LED pixels. Each pixel shall contain a circular grouping of six (6) or more discrete LEDs.

LED pixel boards shall conform to the following specifications:

- The distance from the center of one pixel to the center of all adjacent pixels, both horizontally and vertically, shall be 2.6 inches (66 mm)
- Each pixel shall consist of one or more strings of discrete LEDs, and each LED string shall be in series with its own current limiting resistor
- Current limiting resistors shall be rated to prevent LED forward current from exceeding 30 mA whenever a forward voltage is applied. LED drive currents greater than 30 mA will not be allowed, in order to maximize LED service life
- The failure of an LED string shall not cause a change in the forward current of any other LED string in the VMS
- The failure of an LED string shall not cause the failure of any other LED string or pixel in the VMS, and failure of a pixel shall not cause the failure of any other pixel in the VMS
- Each pixel string shall contain an identical quantity of LED's
- Pixels shall contain the quantity of discrete LED's needed to generate a pixel luminous intensity of 40 Cd, minimum, when the pixel is driven with a forward current of 20 mA DC per LED string
- LED pixel forward voltage drop, measured from the DC power supply output to ground, shall not exceed 24 VDC. This includes the drive circuit voltage drop and any internal DC line loss
- LED pixel power shall not exceed 0.75 watts
- Discrete LEDs shall be soldered so that the base of their lenses are flush with and perpendicular to their printed circuit board
- Each pixel shall be protected from handling damage by a polycarbonate plastic ring or similar non-conductive device that clips into the printed circuit board and surrounds the LEDs. The protective device shall contain UV light inhibitor
- Printed circuit board laminate shall be FR-4 fiberglass and shall have a minimum thickness of 0.062

inches (1.6 mm). The printed circuit board shall be plated on both sides with a copper trace thickness of two ounces per square foot of plated area. Printed circuit board through-holes shall be plated with one ounce of copper per square foot of plated area

- The printed circuit board through-hole for each LED cathode lead shall be connected to a large copper trace pad that has a minimum surface area of 0.04 square inches (5 square mm). For each LED in the pixel, one trace pad shall present on both the front and back of the pixel circuit board. Trace pads shall dissipate heat from the LEDs, thereby maximizing LED service life
- All exposed metal on both sides of the LED pixel board, except the power connector, shall be protected from water and humidity exposure by a thorough application of acrylic conformal coating. Bench level repair of individual pixels, including discrete LED replacement and conformal coating repair, shall be possible
- The VMS field controller shall be able to measure the forward current of each LED pixel and determine if the pixel is operating normally. This information shall be reportable to a system control computer upon command from the VMS control software
- All LED pixel boards shall be identical and interchangeable throughout the VMS.

Discrete LEDs

VMS pixels shall be constructed with discrete LEDs manufactured by the Toshiba Corporation or Agilent Technologies (formerly known as Hewlett-Packard). Substitutes will not be accepted. Discrete LEDs shall conform to the following specifications:

- LED's shall be non-tinted, non-diffused, high-intensity, solid-state lamps that utilize InGaAlP or AlInGaP semiconductor technology
- LED lenses shall be fabricated from UV light resistant epoxy
- The LED lens diameter shall be 5 mm (0.2 inches). This is sometimes referred to as a T 1-3/4 style LED package
- LEDs shall emit amber (yellow-orange) light that has a peak wavelength of 590 (4 nm. Color shorting shall be performed by the LED manufacturer
- LEDs shall be obtained from a one-bin luminous intensity sort. A bin is defined such that, when all LEDs from a given bin are driven with an identical forward current, the dimmest LED in the bin emits no less than half the luminous intensity of the brightest LED in the bin. Intensity shorting shall be performed by the LED manufacturer
- LEDs shall have a minimum half-power viewing angle of 15° . Half-power viewing angle is defined such that, at a given distance from the LED, luminous intensity measured at any point at an angle of 7.5° from the LED's center axis is no less than half the luminous intensity measured directly on the LED's center axis
- LED package style shall be through-hole flush-mount; LED's with standoffs and surface mount LED's will not be accepted
- All LED's used in all VMS provided for this contract shall be from the same manufacturer and of the same part number.

Pixel Drive Circuitry

LED pixels shall be directly driven using pulse width modulation of a 30-mA forward current. This drive method varies the current pulse width in order to achieve the proper display intensity level for a given ambient light condition. The drive current pulse shall be modulated from a 10-millisecond period, and pulse amplitude shall not be allowed to exceed 30 mA per LED string. For example, the maximum current draw for a single two-string pixel shall not exceed 60 mA.

One (1) electronic driver circuit board shall be provided for each 9-pixel high by 5-pixel wide (9x5) LED display module and shall individually control all 45 pixels on that module. Driver circuitry and LED pixels shall not be mounted on the same printed circuit board.

Driver circuit boards shall conform to the following:

- Driver printed circuit board laminate shall be FR-4 fiberglass and shall have a thickness of 0.062 inches (1.6 mm). The printed circuit board shall be plated on both sides with a copper trace thickness of two ounces per square foot of plated area. Printed circuit board through-holes shall be plated with one ounce of copper per square foot of plated area
- A diagnostic indicator shall be included on each LED driver circuit board. This diagnostic indicator shall be in the form of a single-digit LED display approximately 0.7 inches or greater in height. This digit shall provide visual indication of the operational status of the LED module. At a minimum, this shall indicate failed pixel, improper supply voltage, and failed communications conditions.
- All exposed metal on both sides of the LED driver circuit board, except power and signal connectors, shall be protected from water and humidity exposure by a thorough application of acrylic conformal coating
- LED drive circuitry shall support a minimum refresh rate of 100 frames per second
- All driver circuit boards shall be identical and interchangeable throughout the VMS
- Removal or failure of a single driver circuit board shall not affect the performance of any LED display module in the VMS, except the 9x5 module that it drives.

Regulated DC Power Supplies

The LED pixel display matrix shall be powered with regulated switching DC power supplies that operate from 120 VAC/60 Hz input power and have an output of no more than 24 VDC. Power supplies shall:

- Protect the LED pixel matrix and driver circuitry in the event of power spikes or surges
- Maintain the appropriate LED display intensity in the event of a brownout (low power) condition.

Power supplies shall be wired in a redundant parallel configuration that uses multiple supplies for each section of the VMS display matrix. Supply outputs shall be tied together, and each group of supplies shall have a "current sharing" ability, which allows them to provide equal amounts of current to their display section. Current sharing shall be independent of the LED pixel quantity that is powered at any given time.

Power supplies shall be rated such that if one supply fails, the remaining supplies in the group shall be able to operate their display section under full load conditions (all pixels on at maximum drive current) and when the internal VMS air temperature is +140° F.

Regulated DC power supplies shall conform to the following specifications:

- Maximum output power rating of 500 watts
- Operating input-voltage range: +90 to +250 VAC
- Operating temperature range: -40 to +140° F (-40 to +60° C)
- Power supply output at an ambient temperature of +140° F: minimum of 65% of the supply's room temperature (+72° F / +22° C) output
- Power supply efficiency: 70%, minimum
- Power factor rating: 0.95, minimum
- Short circuit protection: DC power off, with an automatic reset after 5 seconds of AC power off
- Minimum overload allowance protection: 105%
- UL listed.

Power supplies shall be identical and interchangeable throughout the VMS.

The VMS field controller shall be able to monitor power supply operational status (as "normal" or "failed") by reading a diagnostic signal located on each supply's DC output. The operational status of all power supplies shall be reportable to the VMS control software.

Interior VMS Environment Control

The interior VMS environment shall be regulated by two systems.

Housing Exhaust System – The VMS shall contain a ventilation system that exhausts air out of the housing whenever the internal VMS air temperature exceeds +100° F (+38° C). This system shall be designed to keep the internal VMS air temperature lower than +140° F (+60° C), when the outdoor ambient temperature is +115° F (+46° C) or less.

The exhaust system shall consist of enough 550-cfm fans to exchange the internal VMS air volume at a minimum rate of 5 times per minute. Fans shall be the ball-bearing type and shall be mounted on the top end of the rear VMS wall. Fans shall exhaust air out of the cabinet. No fewer than two (2) fans shall be installed.

One filtered air intake port shall be provided for each exhaust fan. Intake ports shall be located on the bottom end of the rear VMS wall. Each intake port shall be covered with a filter that removes airborne particles measuring 500 microns in diameter and larger.

Fans and air filters shall be removable and replaceable from inside the VMS housing.

Each air intake and exhaust port shall be covered on its top, front, and sides by an aluminum hood that is riveted to the rear VMS wall. Exhausted air shall pass through an opening on the bottom of each hood, and openings shall be screened to prevent the entrance of insects and small animals. Hoods shall be fabricated from 0.090-inch (2.2 mm) or thicker aluminum sheeting. All hood-to-housing contact edges shall be thoroughly sealed to prevent water from entering the VMS.

A thermostat shall be located near the top of the VMS interior, and it shall automatically activate the housing exhaust system whenever the internal VMS air temperature exceeds +100° F (+37° C).

In addition to automatic control by a thermostat, the VMS exhaust system shall also be controllable by a manual timer switch located just inside one of the access doors. The switch shall be adjustable up to four (4) hours.

Front Face Panel Defog/Defrost System – The VMS shall contain a defog/defrost system that warms the VMS front face whenever the internal VMS air temperature falls below +40° F (+4° C). The purpose of this system shall be to keep the front face polycarbonate panels free of frost and condensation, which can hinder VMS legibility.

A thermostat shall automatically activate the front face panel defog/defrost system, which shall not be hot enough to damage the polycarbonate panels.

Ambient Light and Temperature Measurement System

Sensors that measure outdoor ambient light levels at the VMS site, as well as the outdoor ambient temperature, shall be mounted in-line with the VMS housing walls. This system shall consist of three (3) commercially available photoelectric sensors and one (1) temperature sensor.

Two of the photo sensors shall be placed such that they measure the ambient light levels striking the front and rear VMS housing walls. The third photo sensor shall be mounted to the VMS housing bottom and shall face the ground. A change in the amount of light striking a photo sensor shall cause its output frequency to vary. The VMS field controller shall continuously monitor sensor outputs and use the information to automatically adjust LED display matrix intensity to a level that creates a legible VMS message.

An ambient temperature sensor shall be mounted to either the rear wall or bottom side of the VMS housing. The sensor shall be placed such that it is never in direct contact with sunlight or is in any location that will generate a false temperature measurement. Temperature sensor output shall be continuously monitored by the VMS field controller and shall be reportable to the VMS control software.

Internal Temperature Measurement System

The VMS shall contain a minimum of two (2) temperature sensors that are mounted in the top of the VMS interior. Sensors shall be able to measure a minimum temperature range of +40° F (+4° C), and sensor output shall be reportable to the VMS field controller.

Internal Wiring

Wiring for LED display module control, environmental control circuits, and other internal VMS components shall be installed in the VMS housing in a neat and professional manner. Wiring shall not impede the removal of display modules, power supplies, environmental control equipment, and other sign components.

Wires shall not make contact with or be bent around sharp metals edges. LED display module power and signal wiring shall be cut to a length and installed such that it is not possible to connect a module to the wrong set of wires. All wiring shall conform to the National Electric Code.

Power and Signal Entrances

Two threaded conduit hubs shall be located on the rear wall of the VMS housing. One hub shall be for incoming AC power, and the other shall be for incoming VMS signal cabling or a communications line.

Transient Protection

VMS and field controller signal and power inputs shall be protected from electrical spikes and transients, as follows:

VMS Site AC Power – The AC power feed for all equipment shall be protected at the load center by a parallel-connection surge suppresser rated for a minimum surge of 10kA.

AC Power for VMS Control Equipment – A series-connected surge suppresser capable of passing 15 Amps of current shall protect the field controller and modem (or signal converter). This device shall conform to the following requirements:

- Withstand a peak 20,000 ampere surge current for an 8 X 20 microsecond wave form
- 20 minimum peak surge occurrences
- Clamp at 20,000 amperes: 340 V, maximum
- Maximum continuous operating current of 15 amps at 120 VAC, 60 Hz
- Series inductance of 200 microhenrys (nominal)
- Temperature range of –40 to +176° F (-40 to +80° C)
- Approximate dimensions of 3 inches wide by 5 inches long by 2 inches high (76 by 127 by 50 mm)
- The device shall be UL 1149 recognized.

Driver Circuit Communications – RS-485 communication lines between the field controller and the LED driver circuit boards shall be protected by avalanche diodes rated for 11.5 Volts at 10 Amps, and 14 Volts at 70 Amps.

Field Controller Communications – RS-232 and RS-485 communication ports in the VMS field controller shall be protected by avalanche diodes connected between each signal line and ground. This shall include data inputs from the photo sensors and temperature sensor

Telephone Communications – A series/parallel two-stage suppression device that provides a 200-Volt clamp shall protect the incoming telephone communication line.

Earth Grounding

The VMS manufacturer shall provide two earth ground lugs, which are electrically bonded to the VMS housing. Lugs shall be installed near the lower left and lower right corners of the VMS housing's rear wall. The VMS installation contractor shall provide the balance of materials and services needed to properly earth ground the VMS.

Specifications VMS Field Controller

Field Controller Hardware

General Specifications

A field controller shall be provided with each VMS. The controller shall:

- Be a stand-alone microprocessor-based computer that runs on an embedded operating system
- Be housed within its own durable environmentally-resistant enclosure
- Mount to a standard EIA 19-inch (482 mm) equipment rack
- Have a maximum weight of 20 pounds, including its enclosure
- Operate throughout a temperature range of -40 to +176° F (-40 to +80° C) and a humidity range of 0 to 99%, without the assistance of an auxiliary heater
- Require an RS-232 communications signal having a baud rate between 2,400 bps and 56.6 kbps
- Be fully compliant with NTCIP standards specified herein
- Be fully compliant with the NTCIP Class B (PMPP) communications profile specified herein
- Be fully compliant with the draft NTCIP Class D dial-up (PPP) communications profile, as specified herein
- Support all of the control, monitoring, and diagnostic features described in the VMS specification and the VMS control software specification
- Be individually addressable, so that it does not respond to commands intended for other field controllers
- Perform most VMS control and monitoring functions specified herein, without continuous communications with the system central computer.

Field controller hardware and software shall permit communication with the VMS system central computer in either of the following modes:

- Polled Operation – in which the field controller informs the central computer of its current status, in response to a periodic automatic query from the central computer
- Event-Driven Operation – in which the field controller responds to operator-initiated queries from the central computer.

The field controller shall be mounted in the model 336 enclosure shown on the plan sheets.

Controller ID

An 8-bit identification code shall be assignable to each field controller, via switches located inside the controller enclosure.

Memory

The field controller shall have both permanent and changeable memory. Permanent memory shall be in the form of flash-PROM integrated circuits that contain the executable field controller software. If new versions of executable code become available, it shall be possible to upgrade the field controller with the latest version.

Changeable memory shall be in the form of RAM integrated circuits. RAM circuits shall be backed-up by a lithium battery and shall retain their data memory for a minimum of one (1) year following a power failure. RAM memory shall be used for storage of message libraries, the message display schedule and programmable operating parameters.

Data Transmission Requirements

Each field controller shall contain a minimum of two EIA/TIA-232E communication ports:

One shall be for remote communications via dial-up modem (PPP) or direct (PMPP) connection (e.g. fiber optic) with the system control computer
One shall be for local, direct communication with a laptop computer.

Both ports shall be capable of operation at baud rates of 2400, 9600, 14,400, 19,200, 28,800, and 56,600 bits per second. The exact baud rate used shall be user selectable.

Internal Clock

The VMS field controller shall contain a computer-readable time-of-year clock that has a lithium battery backup. The battery shall keep the clock operating properly for at least 10 years without external power, and the clock shall automatically adjust for daylight savings time and leap year using hardware or software, or a combination of both. The clock shall be set by the field controller microprocessor and shall be accurate to within one (1) minute per month.

Year 2000 and Leap Year Compliance

VMS field controller functions shall not be impaired as a result of the transition to, or during, the year 2000 or any leap year.

Field Controller Software

Message Presentation on the VMS Display Matrix

The VMS field controller shall instruct the LED display driver circuitry in a manner that causes the desired message to appear on the VMS display matrix. At a minimum, the field controller shall support the following features, as described in the VMS specification:

- Display of alphanumeric character fonts and graphic pictures
- Message format details such as centering text on a display line, right justification, left justification, and legible spacing of letters and words
- Selection of a particular character font style
- Display of static messages
- Flashing of all or part of a message
- Message scrolling
- Alternating between pages of a multiple-page message.
- Enable the VMS Central Control operator to verify actual message displayed in a WYSIWYG format without disrupting the message displayed on the VMS.

Message and Schedule Functions

The VMS field controller shall support the following message selection functions, which may be initiated by a VMS control software operator:

- Cause the field controller to implement a message or message schedule stored in its memory
- Cause the field controller to implement a new message or schedule entered via the control software
- Edit or completely replace a message or message schedule stored in the field controller memory
- Cause the field controller to report the contents of any message or message schedule stored in its memory
- Override a scheduled message.

The field controller shall be able to implement a message stored in its memory, at a particular time and date, as supported by a message schedule feature.

Field controller software shall incorporate a fail-safe procedure to check the content of messages received and shall not change a message stored in memory, the message currently displayed on the sign, the schedule stored in memory, or the current controller clock time unless the new message is correctly received.

A displayed message shall remain on the sign until the controller receives a command to change the message or blank the sign, or a schedule stored in the field controller memory indicates that it is time to implement a different message. It shall possible to confer a "priority" status onto any message, and a command to display a priority message shall cause any non-priority message to be overwritten.

VMS Intensity Control

The VMS field controller shall be able to automatically adjust the LED display matrix intensity. A system operator shall be able to override the automatic system, in order to manually change the LED intensity.

The intensity control system shall employ photoelectric sensors, as described in the VMS specification. When the system is running in the automatic mode, the field controller shall continuously analyze ambient light levels and shall automatically adjust LED display intensity, in order to provide optimum message legibility for the given ambient light condition. Intensity control shall be achieved using pulse width modulation of the LED forward drive current, as described in the VMS specification.

The VMS intensity control system shall:

- Utilize three (3) photoelectric sensors, which are provided and installed as described in the VMS specification
- Select from a minimum of sixteen LED intensity levels. Threshold point for each intensity level shall be user programmable using the VMS control software. LED intensity levels shall be available in a range of 1% to 100% of the maximum display intensity, and in increments of 1%
- Not cause any flickering of the LED display matrix
- Allow manual and automatic intensity control modes to be user selectable using the VMS control software, although the typical control mode shall be "automatic"
- Allow manual intensity control from both local and remote locations.

LED Diagnostic Test Capability

Upon command from either a remote computer or a locally connected maintenance computer running VMS control software, the VMS field controller shall test the electrical operation of all LED pixels and determine whether their functional status is: "ok.", "failed", or "half-failed" (for two-string pixels). Pixel status shall be determined via A/D conversion of the LED pixel forward current, and the resulting data shall be communicated to the VMS control software.

LED pixel diagnostic data shall be displayable to a system operator as described in the VMS control software specification.

Real-Time VMS Message Verification

The VMS field controller and LED module hardware shall be capable of enabling the VMS Central Control operator to verify the actual message displayed on the VMS on a real-time basis. This message verification shall be presented in a WYSIWYG format without disrupting the message displayed on the VMS.

This shall be accomplished each time the VMS polled for status by the central control software. A graphical user interface (GUI) capable of displaying this type of information must be present in the central VMS control software.

Power Supply Diagnostic Test Capability

The field controller shall be able to determine the functional status of regulated DC power supplies located in the VMS, by monitoring diagnostic outputs located on the supplies. This information shall be reportable as "ok" or "failed" to the VMS control software.

Response to Errors

In the event of a communication error between the VMS field controller and the system control computer, the "communications loss message" will be displayed. This shall be factory set to blank the VMS.

In the event of a power failure, the "power recovery message" will be displayed. This shall be factory set to blank the VMS.

The VMS field controller shall contain a hardware watchdog that automatically resets the controller's microprocessor in the event of a controller lock-up.

INSTALLATION

Sign shall be installed in accordance with the sign and truss manufacturer's specifications. The Contractor shall be responsible for coordinating with the sign and supporting truss manufacturer to resolve mechanical compatibility problems prior to fabrication of either item.

METHOD OF MEASUREMENT AND BASIS OF PAYMENT

Variable Message Sign shall be paid for per unit each. This item includes the CDPD modem and conduit and wiring on supporting structure. This item includes all costs for the manufacturer field engineer to perform on-site testing and setup. This item includes all costs for engineering analysis required in the VMS specifications.

SPECIFICATIONS FOR MODEL 336 ENCLOSURE

DESCRIPTION

Enclosure shall be a double door, pole mounted, Caltrans traffic style enclosure with 19" equipment rack. Enclosure shall be installed on the camera pole.

MATERIALS

Specifications for enclosure shall be "Traffic Signal Control Equipment Specifications." California Department of Transportation, January 1989, or latest edition.

Enclosure shall be model 336 and shall be equipped with 19" rack, power distribution assembly, fan and door activated light. Enclosure shall be constructed of aluminum and shall be unpainted. Cabinets shall be keyed to match the existing model 336 TRIMARC enclosures.

INSTALLATION

Model 336 enclosure shall be installed in accordance with the plans and specifications. The Contractor shall stake all proposed enclosure locations before excavation. Enclosures located behind guardrail shall have a minimum 4' spacing from edge of pole to face of guardrail, otherwise enclosures shall be located a minimum of 30' from all driving lanes. The Contractor shall obtain approval of staked locations before excavation. The KYTC Division of Operations, ITS Branch will approve locations for all field devices. The Contractor shall have utilities marked in the field prior to requesting approval. The Contractor shall allow two weeks to schedule this location approval with the Cabinet. KYTC approval of field device location does not relieve the contractor from his responsibility to repair any damage to infrastructure. All materials shall be installed in a neat and professional manner. The Contractor shall grade and re-seed all disturbed areas and restore the area to the satisfaction of the Engineer.

METHOD OF MEASUREMENT AND BASIS OF PAYMENT

Model 336 enclosure will be measured for payment per unit each, complete and in place. This item includes all excavation including any special equipment required to install the enclosure to the camera pole. This item includes the pole mounting bracket.

SPECIFICATIONS FOR TRANSFORMERS

DESCRIPTION
Transformers shall be installed where indicated on the plans.

MATERIALS
Transformers used at VMS locations shall be 10 KVA, dry type, 240 VAC to 120 VAC step down units. Transformer shall be a weatherproof design for mounting.

INSTALLATION
Transformer shall include furnishing and installing transformer in accordance with the specifications on model 336 cabinet, pole or structure as indicated in the plans. The Contractor shall be responsible for fabricating and installing cabinet reinforcement plates required when mounting on cabinet, pole or structure.

METHOD OF MEASUREMENT AND BASIS OF PAYMENT
The transformer will be measured for payment per unit each, complete and in place. This item includes all related wiring, connectors, conduits, fittings, hardware, special brackets and all other incidentals necessary to provide a functional unit.

SPECIFICATIONS FOR JUNCTION BOX

DESCRIPTION
Junction box shall be a pre-cast fiber reinforced concrete box with open bottom.

MATERIALS
Junction Box Type B shall be Strongwell/Quazite PC1118BA18 with PC1118CA00 cover or approved equal.

INSTALLATION
Junction boxes shall be installed in accordance with the plans and specifications. Junction boxes shall have a minimum of 6" of 57 gravel underneath the box for drainage. Junction boxes used as pull boxes along a conduit run shall be spaced no more than 200' apart. Junction boxes shall not be placed in areas where standing water may accumulate. Junction box covers shall be flush with the finished surface. All materials shall be installed in a neat and professional manner. The Contractor shall grade and re-seed all disturbed areas and restore the area to the satisfaction of the Engineer.

METHOD OF MEASUREMENT AND BASIS OF PAYMENT
The junction box will be measured for payment per unit each, complete and in place.

SPECIFICATIONS FOR TELEPHONE SERVICE

DESCRIPTION
Telephone service shall consist of a voice grade, one line service installed at the location shown on the plans.

MATERIALS
No materials are required.

INSTALLATION
The Contractor shall be responsible for coordinating with the local phone company as to exact placement of the service pole before any excavation begins. The Contractor shall determine the nearest existing phone number as well as compile a detailed description of the pole location. This information shall be provided to the Engineer so that telephone service may be ordered. TRIMARC will order the phone service and pay the monthly phone bills during and after construction. The Contractor shall be responsible for paying for the first phone bill as well as all charges related to the installation and setup of the new phone service. Payment shall be made directly to the phone company with a record of the payment given to the Engineer. These charges include costs to extend a phone line, fees associated with establishment of a new phone service, and long distance charges incurred during the setup and testing of field devices.

METHOD OF MEASUREMENT AND BASIS OF PAYMENT
Telephone service will be measured for payment per unit each. Payment shall made after the service is operational.

SPECIFICATIONS FOR TELEPHONE CABLE

DESCRIPTION

Telephone cable shall originate at the telephone subscriber interface and terminate at the field device.

MATERIALS

Unless otherwise specified, telephone cable shall be 19 AWG REA spec PE-39 6 pair. Cable shall be rubber filled with Belden flexgel or approved equal.

INSTALLATION

Telephone cable shall be installed in conduit as indicated in the plans and specifications. Cable shall be inspected for damage prior to installation. Cable shall be run splice-free from origin to termination. Cable shall be hand pulled through all conduits.

METHOD OF MEASUREMENT AND BASIS OF PAYMENT

Telephone cable will be measured for payment per unit foot, installed and in place, after passing any testing that may be required. Testing consists of continuity and high voltage insulation testing. A cable that reads infinite resistance to ground is considered passing. Cables not passing testing shall be replaced at the Contractor's expense.

SPECIFICATIONS FOR ELECTRICAL SERVICE

DESCRIPTION

Electrical service shall include all materials and labor required to construct an electrical service on pole or other structure.

MATERIALS

Materials shall be new and shall be in accordance with the Kentucky Standard Specifications for Road and Bridge Construction, 2000 edition, the National Electric Code and National Electric Safety Code. The Contractor shall be responsible for coordinating with the local power company to determine the exact specifications for the service.

INSTALLATION

Installation shall be in accordance with the Kentucky Standard Specifications for Road and Bridge Construction, 2000 edition, the National Electric Code and National Electric Safety Code. The Contractor shall be responsible for coordinating with the local utilities as to exact placement of the service.

METHOD OF MEASUREMENT AND BASIS OF PAYMENT

Electrical service will be measured for payment per unit each. This item includes all electrical inspection and other fees required to provide electrical service. This item includes conduit, meter base, fused cutout, ground rod, wire, connectors, fittings and all associated hardware required to construct the service.

SPECIFICATIONS FOR POLE

DESCRIPTION

Pole shall include all materials and labor required to install a wood pole. Unless otherwise specified wood pole shall be 35'.

MATERIALS

Materials shall be new and in accordance with the Kentucky Standard Specifications for Road and Bridge Construction, 2000 edition.

INSTALLATION

Installation shall be in accordance with the plans and specifications, the Kentucky Standard Specifications for Road and Bridge Construction, 2000 edition, National Electric Code and National Electric Safety Code. The Contractor shall stake all proposed pole base locations before excavation. Poles located behind guardrail shall have a minimum 4' spacing from edge of pole to face of guardrail, otherwise poles shall be located a minimum of 30' from all driving lanes. The Contractor shall obtain approval of staked locations before excavation. The KYTC Division of Operations, ITS Branch will approve locations for all field devices. The Contractor shall have utilities marked in the field prior to requesting approval. The Contractor shall allow two weeks to schedule this location approval with the Cabinet. KYTC approval of field device location does not relieve the contractor from his responsibility to avoid utilities and repair any damage to buried infrastructure. All materials shall be installed in a neat and professional manner. The Contractor shall grade and re-seed all disturbed areas and restore the area to the satisfaction of the Engineer. Wood poles shall have a butt ground and #4 AWG solid ground wire installed. Ground wire shall extend 1 foot above pole. All metal conduit on pole shall be bonded to the ground wire with the proper connectors.

METHOD OF MEASUREMENT AND BASIS OF PAYMENT

Pole will be measured for payment per unit each. Payment shall made after the pole is set and the area is restored to the satisfaction of the Engineer. This item includes furnishing and installing pole butt grounding system. This item includes all labor and equipment required to install pole in rock or difficult soil conditions. This item includes furnishing and installing all hardware, messenger, clamps, guy guards and anchors required to back up service wires or other spans. Unless otherwise approved by the Engineer, anchors shall be installed on all spans.

SPECIFICATIONS FOR TRENCHING AND BACKFILLING

DESCRIPTION
Trenching and backfilling shall include excavation, placement of conduit, backfilling and restoration of disturbed areas.

MATERIALS
No materials are required.

INSTALLATION
Installation shall be in accordance with the Kentucky Standard Specifications for Road and Bridge Construction, 2000 edition, the National Electric Code and National Electric Safety Code. The Contractor shall be responsible for locating all underground utilities prior to excavation.

METHOD OF MEASUREMENT AND BASIS OF PAYMENT
Trenching and backfilling will be measured for payment per unit foot. This item includes all electrical inspection and other fees required to provide electrical service. This item includes conduit, meter base, fused cutout, ground rod, wire, connectors, fittings and all associated hardware required to construct the service.

SPECIFICATIONS FOR WIRE

DESCRIPTION

The Contractor shall furnish and install wire in accordance with the plans and specifications.

MATERIALS

Unless otherwise specified wire shall be stranded copper type USE. The Contractor shall submit to material testing at the discretion of the Engineer.

INSTALLATION

Installation shall be in accordance with the Kentucky Standard Specifications for Road and Bridge Construction, 2000 edition, the National Electric Code and National Electric Safety Code. Wiring shall be neat and orderly. No splices shall be made in wire outside of junction boxes or enclosures. The contractor shall not use excessive force when pulling wire through duct. The contractor shall replace all wire damaged during installation. The Engineer may require testing of wiring for damaged insulation. The Contractor, at his cost, shall replace any wire that does not pass an insulation test of 1 million ohms to ground or more.

METHOD OF MEASUREMENT AND BASIS OF PAYMENT

Wire will be measured for payment per unit foot, installed and in place, after passing any testing that may be required. This item includes all connectors, splicing and insulating hardware, ties, tape and incidentals required for electrical connections.

SPECIFICATIONS FOR CONDUIT

DESCRIPTION

The Contractor shall furnish and install conduit in accordance with the plans and specifications.

MATERIALS

Conduit shall be schedule 40 PVC, rigid steel, or flexible non-metallic conduit as specified. The Contractor shall submit to material testing at the discretion of the Engineer.

INSTALLATION

Installation shall be in accordance with the Kentucky Standard Specifications for Road and Bridge Construction, 2000 edition, the National Electric Code and National Electric Safety Code. All above ground conduit shall be rigid steel. All below ground conduit not under pavement shall be PVC. All below ground conduit under pavement shall be rigid steel. All unused conduits shall be capped to prevent debris from entering. Conduit containing wire or cable shall be sealed with duct seal putty to prevent insects and debris entry.

METHOD OF MEASUREMENT AND BASIS OF PAYMENT

Conduit will be measured for payment per unit foot, installed and in place. This item includes fittings, connectors, clamps, caps and other materials necessary for proper installation.

SPECIFICATIONS FOR MAINLINE AND RAMP REFERENCE MARKERS

DESCRIPTION

Mainline Reference Markers shall be placed every 0.2 miles facing both directions of traffic. Ramp reference markers shall be equally spaced. Spacing shall be equal to or greater than 350' and less than or equal to 550'. When possible there should be 500' between the beginning of the ramp and the first ramp marker, and 500' between the end of the ramp and the last ramp marker. Any ramp less than 1050' shall have only one ramp marker placed in the center of the ramp. Adjustments may be made for bridges or other obstructions.

MATERIALS

Reference markers are to be fabricated from 2.03 mm aluminum alloy 5052-H38 Sheet ASTM B209, and shall be properly prepared to receive the retroreflective background material according to the manufacturer's recommendations. Background material shall be standard blue in color and shall be retroflectorized. Copy is to be silver/white reflectorized, 254.00 Series "C" numerals of the cut out, non-removable type. Route marker shall be retroflectorized white cut outs of the distinctive U. S. Shield, omitting the black background of the standard rectangular shapes. Background, copy material, and route markers must meet Type III, Class "I" requirements of Section 830 of the Standard Specifications.

INSTALLATION

This item shall include the installation of reference markers on posts or barrier mounting brackets as specified. Barrier mounting bracket shall include furnishing and installing the specified bracket, square steel tubing, and all associated hardware as shown in the plans.

METHOD OF MEASUREMENT AND BASIS OF PAYMENT

Reference markers will be measured for payment per unit each. This item shall include all labor, traffic control, and materials required for installation.

SPECIFICATIONS FOR BARRIER MOUNTING BRACKET

DESCRIPTION

Barrier mounting bracket shall include all labor and materials required to install the bracket on barrier wall.

MATERIALS

Barrier mounting bracket shall be fabricated in accordance with the plans and specifications.

INSTALLATION

Barrier mounting bracket shall be attached to the barrier wall in accordance with the plans and specifications. The Contractor shall submit a sample bracket and mounting hardware to the Engineer for approval.

METHOD OF MEASUREMENT AND BASIS OF PAYMENT

Barrier mounting bracket will be measured for payment per unit each. This item includes all labor, traffic control, and materials required for installation.

SPECIFICATIONS FOR STEEL POSTS

DESCRIPTION
Reference markers shall be supported by steel posts.

MATERIALS
Posts used for the mounting of reference markers shall be Type II posts conforming to Section 832 of the Standard Specifications.

INSTALLATION
Post shall be attached and sign panel mounted to maintain a 4 foot vertical clearance from elevation of nearest edge of roadway pavement to bottom of sign face. Minimum length of a post shall be 12 feet. All necessary hardware shall be included for attaching reference markers to posts.

METHOD OF MEASUREMENT AND BASIS OF PAYMENT
Steel posts will be measured for payment per unit foot. This item includes all labor, traffic control and materials required for installation.

SPECIFICATIONS FOR RADAR VEHICLE DETECTOR

All equipment and component parts furnished shall be new, be of the latest design and manufacture, and be in an operable condition at the time of delivery and installation. All parts shall be of high quality workmanship, and no part or attachment shall be substituted or applied contrary to the manufacturer's recommendations and standard practices. The design shall be such as to prevent reversed assembly or improper installation of connectors, fasteners, etc. Each item of equipment shall be designed to protect personnel from exposure to high voltage during equipment operation, adjustments, and maintenance. The designed Mean Time Between Failures (MTBF) of the RVD unit, operating continuously in their application, shall be 10 years or longer.

ENVIRONMENTAL CONDITIONS

Except as stated otherwise herein, the equipment shall meet all its specified requirements during and after subjecting to any combination of the following:

- Ambient temperature range of -37 to +74 degrees C
- Relative humidity from 5 to 95 percent, non-condensing
- Power surge of 6 KV - 10,000 amps.

The design shall be inherently temperature compensated to prevent abnormal operation. The circuit design shall include such compensation as is necessary to overcome adverse effects due to temperature in the specified environmental range. Except as may be otherwise stated herein for a particular item, no item, component, or subassembly shall emit a noise level exceeding the peak level of 55 dBa when measured at a distance of one meter away from its surface. The detector shall include surge protection in accordance with IEEE Standard C62.41 - 1980 Category C. The microwave radar detector shall be resistant to vibration in accordance with IEC 68-2-30 (test Fc), NEMA TS-1 (Section 2.1.12), or approved equivalent. The microwave detector shall be resistant to shock in accordance with IEC 68-2-27 (test Ea), NEMA TS-1 (Section 2.1.13), or approved equivalent.

FUNCTIONAL CAPABILITIES

The RVD shall be a true presence detector which can provide presence, volume, lane occupancy and speed information on up to eight discreet detection zones. This information shall be available to existing controllers via contact closure pairs and to other systems via serial communications lines. Each microwave radar detector shall transmit on a frequency band of 10.525 GHz +/-25 Mhz or another approved spectral band. The detector shall comply with the limits for a Class A digital device, pursuant to Part 15 of the FCC rules or the appropriate Spectrum Management Authority. The RVD shall not interfere with any known equipment. Transmitter power shall not exceed 10 milliwatts.

The RVD's field of view shall cover an area defined by an oval shaped beam and its maximum detection range shall be as follows:

- Elevation Beam Width 45 degrees
- Azimuth Beam Width 15 degrees
- Range 10 to 200 feet

The maximum number of detection zones defined shall be no less than six (6). The range limits of each zone shall be user defined in 7 ft. resolution.

The detector shall identify vehicle presence within each detection zone with a 95% accuracy or greater, independent of the vehicle's direction of travel through the detection zone.

The maximum permissible error shall be 5% in the detection of the direction and magnitude of radial speed and 10% in the case of transverse speed.

PHYSICAL CHARACTERISTICS

The microwave radar detector shall be enclosed in a rugged weatherproof box and sealed to protect the unit from wind up to 90 mph, dust and airborne particles, and exposure to moisture (NEMA type 3R enclosure). The overall dimensions of the box, including fittings, shall not exceed 8-inches x 10-inches x 6-inches. The total weight of the microwave radar detector assembly shall not exceed 5 pounds. The mounting assembly shall have all painted steel, stainless steel, or aluminum construction, and shall support a load of 20 pounds. The mounting assembly shall incorporate a ball-joint, or other approved mechanism, that can be tilted in both axes, then locked into place, to provide the optimum area of coverage.

ELECTRICAL CHARACTERISTICS

The RVD unit shall be operable from 95 - 135 VAC @ 60 Hz unless otherwise specified. Power supply shall be obtained from the power distribution assembly within the controller cabinet, or any convenient power source.

The Interface consists of a single MS connector which provides power to the unit, output contact closure wire pairs for each of the required detection zones rated at 200V AC/DC 100 mA, and serial communication lines for programming, testing or modem interface at 9600 Baud rate. Data format of the serial port shall be standard binary NRZ 8 bits data, 1 stop bit, no parity.

A UV-resistant cable of multiple twisted pairs of stranded AWG #20 or #22 wires with a common shield rated at 300V with a temperature rating of 105° C (Belden #9516 or approved equal) shall provide connection between the RVD and the cabinet equipment. The MS connector pins shall be crimped to the cable conductors and assembled and tested prior to installation and pulling of cable on site.

SPECIFICATIONS FOR LOCAL 222 MHZ RADIO

DESCRIPTION

Radios shall be fully compatible with the existing 222 MHz data radio network used at TRIMARC. Radios shall provide data communications between radar detectors and the existing TRIMARC master radio.

MATERIALS

Local radio shall be Microwave Data Systems MDS 2710 or approved equal. The Contractor shall contact the TRIMARC operations center to determine the frequency of operation. Enclosure shall be Microwave Data Systems P60 A D N or approved equal. Local radio antenna shall be a 2dB gain, directional dipole unit designed for outdoor base station use. Antenna shall be SCALA CDV-225 or approved equal. Antenna cable shall be RG-213 or as recommended by the radio manufacturer. Antenna surge suppressor shall be Polyphaser IS-50NX series or approved equal.

INSTALLATION

Radio enclosure shall be mounted to the same pole as the radar vehicle detector. Enclosure shall be positioned to allow proper operation of the lowering device and easy access for maintenance. Enclosure shall be grounded to a ground rod array separate from the pole ground. Enclosure shall be fitted with watertight cable fittings on the bottom of the enclosure for all cabling. Bend radius of coaxial cable shall be greater than the manufacturers recommended bend radius. Weatherheads shall not be used on the antenna conduit. Antenna conduit shall be sealed at the top with duct-seal. Antenna conduit shall have a drain at the lowest point to prevent water from entering radio enclosure.

METHOD OF MEASUREMENT AND BASIS OF PAYMENT

Local 222 MHz Radio will be measured for payment per unit each, installed and in place. This item includes radio, enclosure, antenna, antenna cable, connectors, surge suppression, power supply, grounding system, associated conduits, wiring, antenna aiming, radio setup and calibration and all labor and incidentals required to establish a fully operational data connection to the existing master radio.

TESTING

The contractor shall notify the Engineer when each device has been fully installed and is functioning in the TRIMARC system. The contractor shall demonstrate proper functioning of all devices after installation. After passing the functional test, the device shall continue to operate while being used in daily TRIMARC operations for a period of 30 days. The contractor shall be responsible for repairing any malfunctioning device during the 30 day burn-in period. If a device fails during the burn in period, the burn-in period shall start over and continue for another 30-days. Failure of a device is defined as the replacement of a component necessary to place the device back in operation. POTS communication errors are not considered a failure for the purpose of this test. The Contractor shall demonstrate proper calibration of RWIS sensors after installation and at the end of the 30 day burn-in period.

The project will be accepted after all devices have completed their 30 day test successfully and acceptable as-built drawings have been received.

I 264 Jefferson County
IM 264-1 (146) 0
Item Numbers: 5-2000.00, 5-2001.00 & 5-2026.00
FD52 056 0264 000-006
FD52 056 0264 006-008
FD04 056 031W 014-015

SPECIAL NOTE
FOR
FIXED COMPLETION DATE,
INCENTIVE PAY AND LIQUIDATED DAMAGES
"A+B"

The procedure for evaluation of bids on this project involves an "A+B" concept.

> The "A" component of the bid involves the dollar amount for all work to be performed under the contract.
>
> The "B" component of the bid involves the total number of calendar days required to **complete all work**.

The sum of "A"+"B" as defined above will be the amount used for comparison of bids.

Preparation of Bid Proposal

In addition to the requirements of Section 102 of the 2000 Standard Specifications, the bidder shall establish the number of calendar days necessary to complete the work in accordance with the plans and specifications and show this number in the bid proposal. The product of this number of calendar days multiplied by the average daily road user benefit of $25,000 per day shall be added to the total bid determined for bid items. The product of calendar days times the average daily road user benefit shall not be considered in determining mobilization and demobilization costs.

The maximum number of calendar days permitted for this project will be 500 calendar days. Bids will not be accepted for any proposal wherein the bidder establishes calendar days necessary to complete the work in excess of 500 calendar days.

Proposal Guaranty

As a supplement to Section 102 of the 2000 Standard Specifications, it will not be necessary for the Proposal Guaranty to include an amount necessary to cover the product of calendar days times daily road user benefit.

Consideration of Bids

Each bid submitted shall consist of two parts:

A. The dollar amount for all work to be performed under the contract.

B. The total number of calendar days required to **complete all work**.

The lowest and best bid will be determined by the Department as the lowest combination of (A) and (B) according to the following formula:

(A) + [(B) x ($25,000.00)]

The value $25,000.00 per calendar day is the stipulated adjustment of road user benefit/cost. The above formula ***shall be used only for determination of the lowest and best bidder*** *and* ***shall not be used to determine the final payment*** to the contractor when the project is completed.

Reduction and Extension of Contract Time

Contract time for this project will be on a calendar day basis. Contrary to Section 108.07 of the 2000 Standard Specifications and Special Provision 82, ***no extension for time will be allowed for this project***. In the event that a total contract change involves a decrease equal to or greater than five percent of the original contract cost, the contract time will be shortened in direct proportion to the contract amount/calendar day ratio of the original contract. Also, contrary to Section 108.07 of the 2000 Standard Specifications, contract time will begin on the date when the Contractor initiates any activity that requires a lane closure. Contract time will be counted continually beginning with this date. All contract time reductions shall be made at the end of the contract based on the final contract amount.

Early Completion of Work

The contractor will be paid an incentive payment of $25,000.00 for each calendar day the project is completed before the established completion date based on the "B" value of the bid.

Fixed Completion Date

This project will have a fixed completion date for completion of all work associated with this project that will be set by whichever of the following dates comes first:

1) The date established by the number of calendar days bid by the Contractor (not to exceed 500 calendar days) from the date contract times begins, or

2) **October 1, 2004**

Time extensions for the fixed completion date listed above will not be permitted.

A disincentive fee of $25,000 per calendar day will be charged for each calendar day after the first fixed completion date, listed above, that all work associated with this project is not complete. An *additional* $50,000 per calendar day will be charged for each calendar day after October 1, 2004 if all work associated with this project is not complete. Contrary to Section 108.09 of the Standard Specifications, Contract Liquidated damages based on the original contract amount will not be charged.

Contrary to Section 108.09 of the Standard Specifications, **the Disincentive fee will be charged during the months of December through March for all work that is not complete.** Contrary to Section 108.09 of the Standard Specifications, **the disincentive fee will be charged during those periods when seasonal limitations of the Contract prohibit the Contractor from working on a controlling item or operation.**

Kentucky Derby Events Incentive

The Contractor will be paid an additional Lump Sum incentive for re-opening 3-lanes in each direction for the duration of Derby Festivities. The following criteria will apply:

1) Maintain three adjacent 11-foot lanes in each direction in the existing 6-lane section and two adjacent 11-foot lanes in the 4-lane section
2) A minimum of 2-foot shoulders each direction on the inside and outside shoulder
3) No ramp work that closes ramps or ramp lanes within the Dixie Highway (US 31W) Interchange

The Kentucky Derby Event dates during which these criteria must be met are:

April 12-May 4, 2003
April 10-May 2, 2004

A Lump Sum incentive of **$1,200,000** will be paid for each of these periods if the minimum criteria are met.

Should contract time begin prior to April 12, 2003 and extend across either of the above periods, contract time *will* be charged during these dates regardless of whether the criteria above is met.

Definition of a Calendar Day

A Calendar day is defined as a 24-hour period beginning at the nearest hour for the beginning of work and ending at the nearest hour the lanes are completely open to traffic and all other work completed. The assessment of the per-day penalty or payment of the $25,000.00 per-day incentive will be prorated to the nearest hour.

Disincentives for US 31W Interchange Activities

There are two construction activities that will be subject to specific disincentives in the Dixie Highway (US 31W) Interchange. The following disincentives will apply:

1) Mainline I-264 Eastbound Split-Lane Work in Phase 4A

- A 9-Day Operation will be allowed to complete all work necessary to eliminate the split-lane arrangement on Eastbound I-264
- This activity will not be allowed during either of the Kentucky Derby Event Periods as defined previously in this note.
- Work activities will only be allowed during the Weekend Operation and will proceed with one (1) mainline lane open to traffic
- If at any time between 6:00 AM Monday and 9:00 PM Friday during the 9-Day Operation 2-lanes of traffic are not open Eastbound, **$1,500 per hour** will be charged until 2-lanes are re-established.
- **$14,000 per day** or fraction thereof will be charged for each day after the 9-day allowable period until the work associated with the split-lane arrangement is complete
- An additional **$1,500 per hour** will be charged for each hour while work is underway and only one (1) lane of traffic is open Eastbound after the 9-day allowable period

2) Closure of Ramp 3 and Ramp 8 in Phases 2A and 2B

- A 5-Week Operation will be allowed for the completion of Phases 2A and 2B
- The five (5) week period will begin when either Ramp 3 or Ramp 8 is closed to traffic
- **$12,000 per day** will be charged for each day or fraction thereof after five (5) weeks if either Ramp 3 or Ramp 8 is not re-opened to traffic

3) Closure of Ramp 2

- A Weekend Operation will be allowed for the completion of Ramp 2 work requiring total closure
- **$1,000 per hour** will be charged for every hour after 6:00 AM on Monday morning if Ramp 2 is not re-opened to traffic

4) Closure of Ramp 5

- A Weekend Operation will be allowed for the completion of Ramp 5 work requiring total closure
- **$1,000 per hour** will be charged for every hour after 6:00 AM on Monday morning in Ramp 5 is not re-opened to traffic

Disincentive for Ramp Closures in Section B

Plan Sheet B40 details allowable closure lengths and phasing sequences for all ramp reconstruction in Section B. The definitions of 9-Day and 4-Week Operations below will apply to each of these ramp closures. A **$1,000 per hour** disincentive will be charged for each hour after the allowable closure period until traffic movement is restored to the respective ramp.

Definition of a Weekend Operation

A Weekend Operation is defined as a closure beginning at **9:00 PM on Friday** night and ending at **6:00 AM on Monday** morning **57 hours** later.

Definition of a 9-Day Operation

A 9-day Operation is defined as a closure beginning at **9:00 PM on Friday** night and ending at **6:00 AM on Monday** morning **225 hours** later.

Definition of a 4-Week Operation

A 4-Week Operation is defined as a closure beginning at **9:00 PM on Friday** night and ending at **6:00 AM on Monday** morning **729 hours** later.

Definition of a 5-Week Operation

A 5-Week Operation is defined as a closure beginning at **9:00 PM on Friday** night and ending at **6:00 AM on Monday** morning **897 hours** later.

NOTE: Any of the above closures that the Contractor elects to initiate at a time other than 9:00 PM on Friday night will have the total allowable closure hours reduced by the number of hours from the day and time the closure begins to the previous Friday at 9:00 PM. For example, a 9-day allowable closure that begins at 8:00 AM on a Monday morning must still be re-opened at 6:00 AM the following Monday morning 166 Hours later.

Ride Quality Incentive Adjustment

If the average Profile Index measured for mainline pavement on this project is equal to or greater than 8 inches per mile the total incentive amount calculated above will be reduced by fifty (50) percent. Payment to the Contractor will be based on this adjusted figure.

October 31, 2002

PART II

SPECIAL PROVISIONS APPLICABLE TO PROJECT

SPECIAL PROVISION NO.	TITLE	
13	Crash Cushions (4-5-00)	*
69	Embankment at End Bent Structure (1-1-00)	*attached*
76	Concrete Pavement Replacement and Repair (1-1-00)	*

* These Special Provisions are included in the Supplemental Specifications.

SPECIAL PROVISION FOR EMBANKMENT AT BRIDGE END BENT STRUCTURES

This Special Provision will apply when indicated on the plans or in the proposal. Section references herein are to the Department's 2000 Standard Specifications for Road and Bridge Construction. Apply the metric figures for projects designed in metric and English figures for projects designed in English.

1.0 DESCRIPTION. Construct a pile core and granular embankment at end bent structures. Construct the pile core and granular embankment according to the requirements of this Special Provision and the Plans, Standard Drawings, and the 1998 Standard Specifications. Construct structure granular backfill and granular embankment, as the Plans require.

2.0 MATERIALS.

2.1 Pile Core. Conform to the Standard Specifications for embankment materials and, in addition, ensure the material is free of boulders larger than 75-mm (3-inch) maximum dimension or any other obstructions which would interfere with the driving of piles. The Department will permit Granular Embankment material provided the 75-mm (3-inch) maximum dimension is not exceeded.

When the plans specify core construction with granular embankment material, ensure that no material within the limits of the core exceeds the 75-mm (3-inch) maximum dimension.

2.2 Granular Embankment. Conform to Subsection 805.10. When Granular Embankment materials are erodible or unstable according to Subsection 805.12 Part G), use the Special Construction Methods found in 3.2.

2.3 Structure Granular Backfill. Conform to Subsection 805.11.

2.4 Geotextile Fabric. Conform to Table I in Section 843.

3.0 CONSTRUCTION.

3.1 General. Construct roadway embankments at end bents according to Section 206 and in accordance with the Plans and Standard Drawings for full embankment section. After constructing the embankment, excavate for the end bent cap, drive piling, place the mortar bed, construct the end bent, and complete the embankment to finish grade according to the construction sequence shown on the Plans or Standard Drawings and as specified hereinafter.

After piles are driven (see design drawings), slope the bottom of the excavation towards the ends of the trench as noted on the plans for drainage. Using a separate pour, place concrete mortar, or any class concrete, to provide a base for forming and placing the cap. Place side forms for the end bent after the

mortar has set sufficiently to support workmen and forms without being disturbed.

Install 100-mm (4-inch) perforated pipe according to the plans. In the event slope protection extends above the elevation of the perforated pipe, extend the pipe through the slope protection.

After placing the end bent cap and removing adjacent forms, fill the excavation with structure granular backfill material to the level of the berm prior to placing beams for the bridge. After completing the end bent backwall, or after completing the span end wall, place the structure granular backfill to subgrade elevation. If the original excavation is enlarged, fill the entire volume with compacted structure granular backfill at no expense to the Department. Do not place backfill before removing adjacent form work. Place structure granular backfill material in trench ditches at the ends of the excavation.

Do not allow individual fragments larger than 100 mm (4 inches) in any dimension within 900 mm (36 inches) of the structure.

Tamp the backfill with hand tampers, pneumatic tampers, or other means the Engineer approves. Thoroughly compact the backfill under the overhanging portions of the structure to ensure that the backfill is in intimate contact with the sides of the structure.

Place and compact the pile core, granular embankment, and structure granular backfill according to the applicable density requirements for the project.

Do not apply seeding, sodding, or other vegetation to the exposed granular embankment.

3.2 Special Construction Methods. Erodible or unstable materials may erode even when protected by riprap or channel lining; use the special construction method described below when using these materials.

Use fine aggregates or friable sandstone granular embankment at "dry land" structures only. Do not use them at stream crossings or locations subject to flood waters.

When using material having 50 percent or more passing the 4.75 mm sieve (No. 4) for embankment, install 200 mm (8 inch) perforated underdrain pipe at or near the elevation of the original ground in the approximate locations depicted on the standard drawing and as the Engineer directs, to ensure positive drainage of the embankment. Wrap the perforated pipe with geotextile fabric of a type recommended by the pipe manufacturer. Construct headwalls on the outlet end of each perforated pipe.

For erodible or unstable materials having 50 percent or more passing the 4.75 mm sieve (No. 4), protect with geotextile fabric. Extend the fabric from the original ground to the top of slope over the entire area of the embankment slopes on each side of, and in front of, the end bent. Cover the fabric with at least 300 mm (one foot) of non-erodible material.

For erodible or unstable materials having 50 percent or less passing a 4.75 mm sieve (No. 4), cover with at least 300 mm (one foot) of non-erodible material.

Where erodible or unstable granular embankment will be protected by

-riprap or channel lining, place geotextile fabric between the embankment and the specified slope protection.

4.0 MEASUREMENT.

4.1 Pile Core. The Department will measure the quantity of material for the pile core as Roadway Excavation, Embankment-in-Place, or Borrow Excavation, as applicable. The Department will not measure overhaul of material for the pile core or for any necessary manipulation such as stockpiling or double hauling for payment and will consider it incidental to the pile core construction.

4.2 Granular Embankment. The Department will measure the quantity in cubic meters (cubic yards) using the design quantity, increased or decreased by authorized adjustments as specified in Subsections 204.04.01 and 204.04.02. The Department will deduct the volume of the pile core from the quantity of Granular Embankment.

The Department will not measure furnishing and placing 200-mm perforated pipe and headwalls placed due to the use of erodible material for payment and will consider them incidental to the Granular Embankment.

The Department will not measure for payment any special construction caused by using erodible or unstable materials and will consider it incidental to the Granular Embankment regardless of whether the erodible or unstable material was specified or permitted.

4.3 Structure Granular Backfill. The Department will measure the quantity in cubic meters (cubic yards) using the design quantity, increased or decreased by authorized adjustments as specified in Subsections 204.04.01 and 204.04.02. The Department will not measure any additional material required for backfill outside the limits shown on the Plans and Standard Drawings for payment and will consider it incidental to the work.

When following construction sequence "A", as shown on the Standard Drawings, the Department will not measure structure excavation at the end bent for payment and will consider it incidental to Structure Granular Backfill.

The Department will not measure furnishing and placing the 100-mm (4-inch) perforated underdrain pipe for payment and will consider it incidental to the Structure Granular Backfill.

4.4 Geotextile Fabric. When the plans require geotextile fabric to be placed outside the limits of granular embankment, then measurement and payment for the fabric outside the limits of granular embankment will be in accordance with requirements elsewhere in the Contract.

4.5 End Bent. The Department will measure the quantities according to the Contract. The Department will not measure furnishing and placing the 50-mm (2-inch) mortar or concrete bed for payment and will consider it incidental

to the end bent construction.

4.6 Roadway Excavation. See Subsection 204.04.

4.7 Embankment-in-Place. See Subsection 206.05.

4.8 Borrow Excavation. See Subsection 205.05.

5.0 PAYMENT. The Department will make payment for the completed and accepted quantities under the following:

Code	Pay Item	Pay Unit
2200	Roadway Excavation	See Section 204.05
2230	Embankment-in-Place	See Section 206.05
2210	Borrow Excavation	See Section 205.05
2231	Structure Granular Backfill	Cubic Meter (Cubic Yards)
----	Granular Embankment	Cubic Meter (Cubic Yards)

The Department will consider payment as full compensation for all work required in this provision.

January 1, 2000

PART III

EMPLOYMENT, WAGE AND RECORD REQUIREMENTS
(Copies of Each Attached)

1. Schedule of Minimum Wages Established for the Project.
2. FHWA 1273 (Rev. 3-94) Required Contract Provisions.
3. Employment Requirements Relating to Non-Discrimination of Employees Applicable to Federal Aid System Contracts (12-3-92).
4. Notice of Requirements for Affirmative Action to Ensure Equal Employment Opportunity (Executive Order 11246).
5. Executive Branch Code of Ethics.
6. Training Special Provision (1-1-93).

TRANSPORTATION CABINET
DIVISION OF CONTRACT PROCUREMENT
COMPLIANCE SECTION

SHEET ONE

PROJECT WAGE RATES **LETTING: 12-20-2002**

JEFFERSON COUNTY, IM 264-1 (146) 0, FD52 056 0264 000-008, FD04 056 031W 014-015

The Watterson Expressway (I-264)

Trimarc, Signing, Lighting, Guardrail, Diamond Grinding, Bridge Repair and PCC Pavement

	HIGHWAY BASIC HOURLY RATES	FRINGE BENEFIT PAYMENTS COMBINED
CRAFTS		
Bullitt, Carroll, Grayson, Hardin, Henry, Jefferson, Larue, Marion, Meade, Nelson, Oldham, Shelby, Spencer and Trimble Counties:		
Bricklayers	20.00	5.43
Bracken, Gallatin, Grant, Mason and Robertson Counties:		
Bricklayers	22.96	7.39
Boyd, Carter, Elliott, Fleming, Greenup, Lewis and Rowan Counties:		
Bricklayers	23.04	8.32
Anderson, Bath, Bourbon, Boyle, Clark, Fayette, Franklin, Harrison, Jessamine, Madison, Mercer, Montgomery, Nicholas, Owen, Scott, Washington and Woodford Counties:		
Bricklayers	18.75	5.55
Layout Men	19.00	5.55
Refractory/Acid Brick/Glass	19.25	5.55
Breckinridge County:		
Bricklayers	24.15	6.55
All Counties		
Carpenters:	21.45	6.13
Piledrivermen	21.70	6.13
Divers	32.55	6.13
Bracken and Grant Counties:		
Millwrights	21.90	7.92
Anderson, Bath, Bourbon, Boyle, Clark, Fayette, Franklin, Harrison, Jessamine, Madison, Mercer, Montgomery, Nicholas, Owen, Scott and Woodford Counties:		
Millwrights	19.50	9.53
Boyd, Carter, Elliott, Fleming, Greenup, Lewis, Mason, Robertson, and Rowan Counties:		
Millwrights	20.79	14.04
Breckinridge, Bullitt, Carroll, Gallatin, Grayson, Hardin, Henry, Jefferson, Larue, Marion, Meade, Nelson, Oldham, Shelby, Spencer, Trimble and Washington Counties:		
Millwrights	22.25	10.30
Bracken, Gallatin and Grant Counties:		
Electricians	23.53	7.20
Sound Communications:		
Installer	18.00	3.475
CablePuller	9.00	2.64

Three/Federal-State

TRANSPORTATION CABINET
DIVISION OF CONTRACT PROCUREMENT
COMPLIANCE SECTION

PROJECT WAGE RATES **SHEET TWO 12-20-2002**

JEFFERSON COUNTY, IM 264-1 (146) 0, FD52 056 0264 000-008, FD04 056 031W 014-015

	HIGHWAY BASIC HOURLY RATES	FRINGE BENEFIT PAYMENTS COMBINED
CRAFTS (continued)		
Boyd, Carter, Elliott and Rowan Counties:		
Electricians:		
Electricians	23.11	11.04
Cable Splicers	24.27	11.08
Anderson, Bath, Bourbon, Boyle, Breckinridge, Bullitt, Carroll, Clark, Fayette, Franklin, Grayson, Hardin, Harrison, Henry, Jefferson, Jessamine, Larue, Madison, Marion, Meade, Mercer, Montgomery, Nelson, Nicholas, Oldham, Owen, Robertson, Scott, Shelby, Spencer, Trimble, Washington and Woodford Counties:		
Electricians	23.50	7.73
Fleming, Greenup, Lewis and Mason Counties:		
Electricians	26.50	7.325
Bourbon (Northern third, including Townships of Jackson, Millersburg, Ruddel Mills & Shawhan); Carroll (Eastern third, including the Township of Ghent); Fleming (Western part, excluding Townships of Beechburg, Colfax, Elizaville, Flemingsburg, Flemingsburg Junction, Foxport, Grange City, Hillsboro, Hilltop, Mount Carmel, Muses Mills, Nepton, Pecksridge, Plummers Landing, Plummers Mill, Poplar Plains, Ringos Mills, Tilton & Wallingford); Mason (Western two-thirds, including Townships of Dover, Lewisburg, Mays Lick, Maysville, Minerva, Moranburg, Murphysville, Ripley, Sardis, Shannon, South Ripley & Washington); Nicholas (Townships of Barefoot, Barterville, Carlisle, Ellisville, Headquarters, Henryville, Morningglory, Myers & Oakland Mills); Owen (Townships of Beechwood, Bromley, Fairbanks, Holbrook, Jonesville, Long Ridge, Lusby's Mill, New, New Columbus, New Liberty, Owenton, Poplar Grove, Rockdale, Sanders, Teresita & Wheatley); Scott (Northern two-thirds, including Townships of Biddle, Davis, Delaplain, Elmville, Longlick, Muddy Ford, Oxford, Rogers Gap, Sadieville, Skinnersburg & Stonewall) & Bracken, Gallatin, Grant, Harrison & Robertson Counties:		
Ironworkers:		
Structural	23.45	10.88
Fence Erector	21.11	10.88
Bourbon (Southern two-thirds, including Townships of Austerlity, Centerville, Clintonville, Elizabeth, Hutchison, Littlerock, North Middletown & Paris); Carroll (Western two-thirds, including Townships of Carrollton, Easterday, English, Locust, Louis, Prestonville & Worthville); Clark (Western two-thirds, including Townships of Becknerville, Flanagan, Ford, Pine Grove, Winchester & Wyandotte); Owen (Eastern eighth, including Townships of Glenmary, Gratz, Monterey, Perry Park & Tacketts Mill); Scott (Southern third, including Townships of Georgetown, Great Crossing, Newtown, Stamping Ground & Woodlake); Anderson, Boyle, Breckinridge, Bullitt, Fayette, Franklin, Grayson, Hardin, Henry, Jefferson, Jessamine, Larue, Madison, Marion, Meade, Mercer, Nelson, Oldham, Shelby, Spencer, Trimble, Washington & Woodford Counties:		
Ironworkers	23.25	10.87

PROJECT WAGE RATES **SHEET THREE** **12-20-2002**

JEFFERSON COUNTY, IM 264-1 (146) 0, FD52 056 0264 000-008, FD04 056 031W 014-015

	HIGHWAY BASIC HOURLY RATES	FRINGE BENEFIT PAYMENTS COMBINED

CRAFTS (continued)

Bourbon (Northern third, including Townships of Jackson, Millersburg, Ruddel Mills & Shawhan); Carroll (Eastern third, including the Townships of Ghent); Fleming (Western part, excluding Townships of Beechburg, Colfax, Elizaville, Flemingsburg, Flemingsburg Junction, Foxport, Grange City, Hillsboro, Hilltop, Mount Carmel, Muses Mills, Nepton, Pecksridge, Plummers Landing, Plummers Mill, Poplar Plains, Ringos Mills, Tilton & Wallingford); Mason (Western two-thirds, including Townships of Dover, Lewisburg, Mays Lick, Maysville, Minerva, Moranburg, Murphysville, Ripley, Sardis, Shannon, South Ripley & Washington); Nicholas (Townships of Barefoot, Barterville, Carlisle, Ellisville, Headquarters, Henryville, Morningglory, Myers & Oakland Mills); Owen (Townships of Beechwood, Bromley, Fairbanks, Holbrook, Jonesville, Long Ridge, Lusby's Mill, New, New Columbus, New Liberty, Owenton, Poplar Grove, Rockdale, Sanders, Teresita & Wheatley); Scott (Northern two-thirds, including Townships of Biddle, Davis, Delaplain, Elmville, Longlick, Muddy Ford, Oxford, Rogers Gap, Sadieville, Skinnersburg & Stonewall);
Bracken, Gallatin, Grant, Harrison & Robertson Counties:
Ironworkers Reinforcing:
Up to and including 30- mile radius of Hamilton County, Ohio Courthouse..... 22.71.....10.47
Beyond 30- mile radius of Hamilton County, Ohio Courthouse ..... 22.96.....10.47
Clark (Eastern third, including Townships of Bloomingdale, Hunt, Indian Fields, Kiddville, Loglick, Rightangele & Thomson); Fleming (Townships of Beechburg, Colfax, Elizaville, Flemingsburg, Flemingsburg Junction, Foxport, Grange City, Hillsboro, Hilltop, Mount Carmel, Muses Mills, Nepton, Pecksridge, Plummers Landing, Plummers Mill, Poplar Plains, Ringos Mills, Tilton & Wallingford); Mason (Eastern third, including Townships of Helena, Marshall, Orangeburg, Plumville & Springdale); Nicholas (Eastern eighth, including the Township of Moorefield Sprout); Bath, Boyd, Carter, Elliott, Greenup, Lewis, Montgomery & Rowan Counties:
Ironworkers:
Zone 1 ..... 24.92 ..... 11.14
Zone 2 ..... 25.32 ..... 11.14
Zone 3 ..... 27.32 ..... 11.14

Zone 1 - Up to 10 mi. radius of union hall, Ashland, KY, 1643 Greenup Avenue;
Zone 2 - 10 to 50 mi. radius of union hall;
Zone 3 - 50 mi. radius and beyond.

TRANSPORTATION CABINET
DIVISION OF CONTRACT PROCUREMENT
COMPLIANCE SECTION

PROJECT WAGE RATES **SHEET FOUR** **12-20-2002**

JEFFERSON COUNTY, IM 264-1 (146) 0, FD52 056 0264 000-008, FD04 056 031W 014-015

	HIGHWAY BASIC HOURLY RATES	FRINGE BENEFIT PAYMENTS COMBINED
CRAFTS (continued)		
Anderson, Breckinridge, Bullitt, Carroll, Grayson, Hardin, Henry, Jefferson, Larue, Marion, Meade, Nelson, Oldham, Shelby, Spencer, Trimble and Washington Counties:		
Painters:		
Brush	17.02	5.92
Abrasive Blaster, Fireproofing, Lead Abatement, Spray, & Waterblasting 4000 PSI and Above	17.52	5.92
Bracken, Gallatin, Grant, Mason, and Owen Counties:		
Painters:		
Elevated Tanks	22.05	4.70
(Heavy and Highway Bridges-Guardrails–Lightpoles-Striping):		
Bridge/Equipment Tender and/or Containment Builder	18.74	4.70
Brush and Roller	21.05	4.70
Spray	21.55	4.70
Sand Blasting and Hopper Tender; Water Blasting	21.80	4.70
Bridges when highest point of Clearance is 60 feet or more; & Lead Abatement Projects	22.05	4.70
Sandblasting, Hopper Tender, Waterblasting Bridges when highest point of Clearance is 60 feet or more;	22.80	4.70
Bath, Bourbon, Boyle, Clark, Fayette, Fleming, Franklin, Harrison, Jessamine, Madison, Mercer, Montgomery, Nicholas, Robertson, Scott and Woodford Counties		
Painters:		
Brush; Roll; Spray; Sandblasting; Steam Cleaning; Steeplejack Work; Lead Abatement; & Coal Tar	16.81	2.60
Bridge/Equipment Tender and/or Containment Builder	17.96	2.60
Swing & Scaffold Bridges; Structural Steel; Open Acid Tanks; High Tension Electrical Equipment; & Hot Pipes	21.00	2.60
Boyd, Carter, Elliott, Greenup, Lewis and Rowan Counties		
Painters:		
Bridges	23.28	9.07
All Other Work	19.42	9.07

Three/Federal-State

TRANSPORTATION CABINET
DIVISION OF CONTRACT PROCUREMENT
COMPLIANCE SECTION

PROJECT WAGE RATES **SHEET FIVE 12-20-2002**

JEFFERSON COUNTY, IM 264-1 (146) 0, FD52 056 0264 000-008, FD04 056 031W 014-015

	HIGHWAY BASIC HOURLY RATES	FRINGE BENEFIT PAYMENTS COMBINED
CRAFTS (continued)		
Breckinridge, Bullitt, Carroll (Western Half), Franklin (Western three-fourths), Grayson, Hardin, Henry, Jefferson, Larue, Marion, Meade, Nelson, Oldham, Shelby, Spencer, Trimble and Washington Counties:		
Plumbers; Gas Fitters:		
Plumbing contracts less than $150,000.00	19.17	5.97
All other plumbing contracts:	24.15	5.97
Boyd, Carter, Elliott, Greenup, Lewis and Rowan Counties:		
Plumbers and Steamfitters	22.97	12.40
Bracken, Carroll (Eastern Half), Gallatin, Grant, Mason, Owen and Robertson Counties:		
Pipefitters and Plumbers	25.50	7.53
Anderson, Bath, Bourbon, Boyle, Clark, Fayette, Fleming, Franklin (Eastern one-fourth), Harrison, Jessamine, Madison, Mercer, Montgomery, Nicholas, Scott and Woodford Counties:		
Pipefitters and Plumbers:		
Projects over 1 ½ million dollars in piping contracts:		
ZONE 1	22.15	6.87
ZONE 2	23.15	6.87
Projects under 1 ½ million dollars in piping contracts:		
ZONE 1	18.77	6.87
ZONE 2	19.77	6.87
ZONE 1 - Within 25 mile radius of Fayette County Courthouse		
ZONE 2 - Beyond 25 mile radius of Fayette County Courthouse		
Breckinridge, Bullitt, Carroll (Western Half), Franklin (Western three fourths), Grayson, Hardin, Henry, Jefferson, Larue, Marion, Meade, Nelson, Oldham, Shelby, Spencer, Trimble and Washington Counties:		
Pipefitters and Steamfitters	25.90	8.98

LABORERS:

Aging and curing of concrete, asbestos abatement worker, asphalt plant, asphalt, batch truck dump, carpenter tender, cement mason tender, cleaning of machines, concrete, demolition, dredging, environmental - nuclear, radiation, toxic and hazardous waste - level D, flagperson, grade checker, hand digging and hand back filling, highway marker placer, landscaping mesh handler and placer, puddler, railroad, rip-rap and grouter, right-of-way sign, guard rail and fence installer, signal person, sound barrier installer, storm and sanitary sewer, swamper, truck spotter and dumper, and wrecking of concrete form.

BASE RATE 16.34
FRINGE BENEFITS 7.38

Three/Federal-State

TRANSPORTATION CABINET
DIVISION OF CONTRACT PROCUREMENT
COMPLIANCE SECTION

PROJECT WAGE RATES **SHEET SIX 12-20-2002**

JEFFERSON COUNTY, IM 264-1 (146) 0, FD52 056 0264 000-008, FD04 056 031W 014-015

LABORERS: (continued)

Batter board man (sanitary and storm sewer), brickmason tender, mortar mixer operator, burner and welder, bushammer, chain saw operator, concrete saw operator, deckhand scow man, dry cement handler, environmental - nuclear, radiation, toxic and hazardous waste - level C, forklift operator for masonary, form setter, green concrete cutting, hand operated grouter and grinder machine operator, jackhammer, pavement breaker, paving joint machine, pipelayer, plastic pipe fusion, power driven Georgia buggy and wheel barrow, power post hole digger, precast manhole setter, walk-behind tamper, walk-behind trencher, sand blaster, concrete chipper, surface grinder, vibrator operator and wagon driller.

BASE RATE 16.59
FRINGE BENEFITS 7.38

Air track driller, asphalt luteman and raker, gunnite nozzleman, gunnite operator and mixer, grout pump operator, powderman and blaster, side rail setter, rail paved ditch, screw operator, tunnel (free air) and water blaster.

BASE RATE 16.64
FRINGE BENEFITS 7.38

Caisson worker (free air), cement finisher, environmental - nuclear, radiation, toxic and hazardous waste - levels A and B, miner and driller (free air), tunnel blaster and tunnel mucker (free air).

BASE RATE 17.24
FRINGE BENEFITS 7.38

TEAMSTERS	**BASE RATE**
Mobile Batch Truck Tender	16.57
Greaser, Tire Changer and Mechanic Tender	16.68
Single Axle Dump, Flatbed, Semi-trailer or Pole Trailer when used to pull building materials and equipment, Tandem Axle Dump, Distributor, Mixer and Truck Mechanic	16.86

PROJECT WAGE RATES **SHEET SEVEN 12-20-2002**

JEFFERSON COUNTY, IM 264-1 (146) 0, FD52 056 0264 000-008, FD04 056 031W 014-015

TEAMSTERS(continued)

Euclid & Other Heavy Earthmoving Equipment & Lowboy, Articulator Cat, 5-Axle Vehicle, Winch & A-Frame when used in transporting materials, Ross Carrier, Forklift when used to transport building materials and Pavement Breaker.....16.96

FRINGE BENEFITS.....7.34

OPERATING ENGINEERS:

A-Frame winch truck, auto patrol, backfiller, batcher plant, bituminous paver, bituminous transfer machine, boom cat, bulldozer, mechanic, cableway, carry-all scoop, carry deck crane, central compressor plant, clamshell, concrete mixer (21 cu. ft. or over), concrete paver, truck-mounted concrete pump, core drill, crane, crusher plant, derrick, derrick boat, ditching and trenching machine, dragline, dredge operator, dredge engineer, elevating grader and loaders, grade-all, gurries, heavy equiptment robotics operator/mechanic, high lift, hoe-type machine, hoist (two or more drums), hoisting engine (two or more drums), horizontal directional drill operator, hydrocrane, hyster, KeCal loader, Letourneau, locomotive, mechanically operated laser screed, mechanic welder, mucking machine, motor scraper, orangepeel bucket, piledriver, power blade, pumpcrete, push dozer, rock spreader attached to equipment, rotary drill, roller (bituminous), scarifier, scoopmobile, shovel, side boom, subgrader, tailboom, telescoping type forklift, tow or push boat, tower crane (French, German and other types), tractor shovel and truck crane, tunnel mining machines, including moles, shields or similar types of tunnel mining equipment.

BASE RATE 20.85
FRINGE BENEFITS 8.40

Air compressor (over 900 cu. ft. per min.), bituminous mixer, boom type tamping machine, bull float, concrete mixer (under 21 cu. ft.), dredge engineer, electric vibrator compactor/self-propelled compactor, elevator (one drum or buck hoist), elevator (when used to hoist building material), finish machine, fireman & hoist (one drum), flexplane, forklift (reguardless of lift height), form grader, joint sealing machine, outboard motor boat, power sweeper (riding type), roller (rock), ross carrier, skid mounted or trailer mounted concrete pump, switchman or brakeman, throttle valve person, tractair and road widening trencher, tractor (50 H.P. or over), truck crane oiler, tugger, welding machine, well points and whirley oiler.

BASE RATE 18.43
FRINGE BENEFITS 8.40

PROJECT WAGE RATES **SHEET EIGHT 12-20-2002**

JEFFERSON COUNTY, IM 264-1 (146) 0, FD52 056 0264 000-008, FD04 056 031W 014-015

OPERATING ENGINEERS: (continued)

Bituminous distributor, burlap and curing machine, cement gun, concrete saw, conveyor, deckhand oiler, grout pump, hydraulic post driver, hydro seeder, mud jack, oiler, paving joint machine, power form handling equipment, pump, roller (earth), steerman, tamping machine, tractor (under 50 H.P.) and vibrator.

BASE RATE 18.17
FRINGE BENEFITS 8.40

Greaser on grease facilities servicing heavy equipment.

BASE RATE 18.81
FRINGE BENEFITS 8.40

Operators on cranes with booms one hundred fifty feet (150') and over (including jib) shall receive fifty ($.50) cents above Base Rate.

Employees assigned to work below ground level are to be paid 10% above basic wage rate. This does not apply to open cut work.

WELDERS - Receive rate for craft in which welding is incidental.

Fringe benefit amounts are applicable for all hours worked except when otherwise noted.

These rates are listed pursuant to Kentucky Determination No. CR-01-III HWY dated October 8, 2001 and/or Federal Decision Number KY 020027 dated March 1, 2002, modification #1 dated April 5, 2002, modification #2 dated May 3, 2002, modification #3 dated June 21, 2002, modification #4 dated July 5, 2002, modification #5 dated August 16, 2002, modification #6 dated September 13, 2002 and modification #7 dated October 4, 2002.

No laborer, workman or mechanic shall be paid at a rate less than that of a Journeyman except those classified as bona fide apprentices.

TRANSPORTATION CABINET
DIVISION OF CONTRACT PROCUREMENT
COMPLIANCE SECTION

PROJECT WAGE RATES **SHEET NINE 12-20-2002**

JEFFERSON COUNTY, IM 264-1 (146) 0, FD52 056 0264 000-008, FD04 056 031W 014-015

Apprentices or trainees shall be permitted to work as such subject to Administrative Regulations adopted by the Commissioner of Workplace Standards. Copies of these regulations will be furnished upon request from any interested person.

Before using apprentices on the job the contractor shall present to the Contracting Officer written evidence of registration of such employees in a program of a State apprenticeship and training agency approved and recognized by the U. S. Bureau of Apprenticeship and Training. In the absence of such a State agency, the contractor shall submit evidence of approval and registration by the U. S. Bureau of Apprenticeship and Training.

The contractor shall submit to the Contracting Officer, written evidence of the established apprenticeship-journeyman ratios and wage rates in the project area, which will be the basis for establishing such ratios and rates for the project under the applicable contract provisions.

TO: EMPLOYERS/EMPLOYEES

PREVAILING WAGE SCHEDULE:

The wages indicated on this wage schedule are the least permitted to be paid for the occupations indicated. When an employee works in more than one classification, the employer must record the number of hours worked in each classification at the prescribed hourly base rate.

OVERTIME:

Overtime is to be paid after an employee works eight (8) hours a day or forty (40) hours a week, whichever gives the employee the greater wages. At least time and one-half the base rate is required for all overtime. A laborer, workman or mechanic and an employer may enter into a written agreement or a collective bargaining agreement to work more than eight (8) hours a calendar day but not more than ten (10) hours a calendar day for the straight time hourly rate. Wage violations or questions should be directed to the designated Engineer or the undersigned.

Rick Stansel, Director
Division of Contract Procurement
Frankfort, Kentucky 40622

Three/Federal-State

REQUIRED CONTRACT PROVISIONS
FEDERAL-AID CONSTRUCTION CONTRACTS

		Page
I.	General	1
II.	Nondiscrimination	1
III.	Nonsegregated Facilities	3
IV.	Payment of Predetermined Minimum Wage	3
V.	Statements and Payrolls	6
VI.	Record of Materials, Supplies, and Labor	6
VII.	Subletting or Assigning the Contract	7
VIII.	Safety: Accident Prevention	7
IX.	False Statements Concerning Highway Projects	7
X.	Implementation of Clean Air Act and Federal Water Pollution Control Act	8
XI.	Certification Regarding Debarment, Suspension, Ineligibility, and Voluntary Exclusion	8
XII.	Certification Regarding Use of Contract Funds for Lobbying	9

ATTACHMENTS

A. Employment Preference for Appalachian Contracts (included in Appalachian contracts only)

I. GENERAL

1. These contract provisions shall apply to all work performed on the contract by the contractor's own organization and with the assistance of workers under the contractor's immediate superintendence and to all work performed on the contract by piecework, station work, or by subcontract.

2. Except as otherwise provided for in each section, the contractor shall insert in each subcontract all of the stipulations contained in these Required Contract Provisions, and further require their inclusion in any lower tier subcontract or purchase order that may in turn be made. The Required Contract Provisions shall not be incorporated by reference in any case. The prime contractor shall be responsible for compliance by any subcontractor or lower tier subcontractor with these Required Contract Provisions.

3. A breach of any of the stipulations contained in these Required Contract Provisions shall be sufficient grounds for termination of the contract.

4. A breach of the following clauses of the Required Contract Provisions may also be grounds for debarment as provided in 29 CFR 5.12:

Section I, paragraph 2;
Section IV, paragraphs 1, 2, 3, 4, and 7;
Section V, paragraphs 1 and 2a through 2g.

5. Disputes arising out of the labor standards provisions of Section IV (except paragraph 5) and Section V of these Required Contract Provisions shall not be subject to the general disputes clause of this contract. Such disputes shall be resolved in accordance with the procedures of the U.S. Department of Labor (DOL) as set forth in 29 CFR 5, 6, and 7. Disputes within the meaning of this clause include disputes between the contractor (or any of its subcontractors) and the contracting agency, the DOL, or the contractor's employees or their representatives.

6. **Selection of Labor:** During the performance of this contract, the contractor shall not:

a. discriminate against labor from any other State, possession, or territory of the United States (except for employment preference for Appalachian contracts, when applicable, as specified in Attachment A), or

b. employ convict labor for any purpose within the limits of the project unless it is labor performed by convicts who are on parole, supervised release, or probation.

II. NONDISCRIMINATION

(Applicable to all Federal-aid construction contracts and to all related subcontracts of $10,000 or more.)

1. **Equal Employment Opportunity:** Equal employment opportunity (EEO) requirements not to discriminate and to take affirmative action to assure equal opportunity as set forth under laws, executive orders, rules, regulations (28 CFR 35, 29 CFR 1630 and 41 CFR 60) and orders of the Secretary of Labor as modified by the provisions prescribed herein, and imposed pursuant to 23 U.S.C. 140 shall constitute the EEO and specific affirmative action standards for the contractor's project activities under this contract. The Equal Opportunity Construction Contract Specifications set forth under 41 CFR 60-4.3 and the provisions of the American Disabilities Act of 1990 (42 U.S.C. 12101 et seq.) set forth under 28 CFR 35 and 29 CFR 1630 are incorporated by reference in this contract. In the execution of this contract, the contractor agrees to comply with the following minimum specific requirement activities of EEO:

a. The contractor will work with the State highway agency (SHA) and the Federal Government in carrying out EEO obligations and in their review of his/her activities under the contract.

b. The contractor will accept as his operating policy the following statement:

"It is the policy of this Company to assure that applicants are employed, and that employees are treated during employment, without regard to their race, religion, sex, color, national origin, age or disability. Such action shall include: employment, upgrading, demotion, or transfer; recruitment or recruitment advertising; layoff or termination; rates of pay or other forms of compensation; and selection for training, including apprenticeship, preapprenticeship, and/or on-the-job training."

2. **EEO Officer:** The contractor will designate and make known to the SHA contracting officers an EEO Officer who will have the responsibility for and must be capable of effectively administering and promoting an active contractor program of EEO and who must be assigned adequate authority and responsibility to do so.

3. **Dissemination of Policy:** All members of the contractor's staff who are authorized to hire, supervise, promote, and discharge employees, or who recommend such action, or who are substantially involved in such action, will be made fully cognizant of, and will implement, the contractor's EEO policy and contrac-

tual responsibilities to provide EEO in each grade and classification of employment. To ensure that the above agreement will be met, the following actions will be taken as a minimum:

a. Periodic meetings of supervisory and personnel office employees will be conducted before the start of work and then not less often than once every six months, at which time the contractor's EEO policy and its implementation will be reviewed and explained. The meetings will be conducted by the EEO Officer.

b. All new supervisory or personnel office employees will be given a thorough indoctrination by the EEO Officer, covering all major aspects of the contractor's EEO obligations within thirty days following their reporting for duty with the contractor.

c. All personnel who are engaged in direct recruitment for the project will be instructed by the EEO Officer in the contractor's procedures for locating and hiring minority group employees.

d. Notices and posters setting forth the contractor's EEO policy will be placed in areas readily accessible to employees, applicants for employment and potential employees.

e. The contractor's EEO policy and the procedures to implement such policy will be brought to the attention of employees by means of meetings, employee handbooks, or other appropriate means.

4. **Recruitment:** When advertising for employees, the contractor will include in all advertisements for employees the notation: "An Equal Opportunity Employer." All such advertisements will be placed in publications having a large circulation among minority groups in the area from which the project work force would normally be derived.

a. The contractor will, unless precluded by a valid bargaining agreement, conduct systematic and direct recruitment through public and private employee referral sources likely to yield qualified minority group applicants. To meet this requirement, the contractor will identify sources of potential minority group employees, and establish with such identified sources procedures whereby minority group applicants may be referred to the contractor for employment consideration.

b. In the event the contractor has a valid bargaining agreement providing for exclusive hiring hall referrals, he is expected to observe the provisions of that agreement to the extent that the system permits the contractor's compliance with EEO contract provisions. (The DOL has held that where implementation of such agreements have the effect of discriminating against minorities or women, or obligates the contractor to do the same, such implementation violates Executive Order 11246, as amended.)

c. The contractor will encourage his present employees to refer minority group applicants for employment. Information and procedures with regard to referring minority group applicants will be discussed with employees.

5. **Personnel Actions:** Wages, working conditions, and employee benefits shall be established and administered, and personnel actions of every type, including hiring, upgrading, promotion, transfer, demotion, layoff, and termination, shall be taken without regard to race, color, religion, sex, national origin, age or disability. The following procedures shall be followed:

a. The contractor will conduct periodic inspections of project sites to insure that working conditions and employee facilities do not indicate discriminatory treatment of project site personnel.

b. The contractor will periodically evaluate the spread of wages paid within each classification to determine any evidence of discriminatory wage practices.

c. The contractor will periodically review selected personnel actions in depth to determine whether there is evidence of discrimination. Where evidence is found, the contractor will promptly take corrective action. If the review indicates that the discrimination may extend beyond the actions reviewed, such corrective action shall include all affected persons.

d. The contractor will promptly investigate all complaints of alleged discrimination made to the contractor in connection with his obligations under this contract, will attempt to resolve such complaints, and will take appropriate corrective action within a reasonable time. If the investigation indicates that the discrimination may affect persons other than the complainant, such corrective action shall include such other persons. Upon completion of each investigation, the contractor will inform every complainant of all of his avenues of appeal.

6. **Training and Promotion:**

a. The contractor will assist in locating, qualifying, and increasing the skills of minority group and women employees, and applicants for employment.

b. Consistent with the contractor's work force requirements and as permissible under Federal and State regulations, the contractor shall make full use of training programs, i.e., apprenticeship, and on-the-job training programs for the geographical area of contract performance. Where feasible, 25 percent of apprentices or trainees in each occupation shall be in their first year of apprenticeship or training. In the event a special provision for training is provided under this contract, this subparagraph will be superseded as indicated in the special provision.

c. The contractor will advise employees and applicants for employment of available training programs and entrance requirements for each.

d. The contractor will periodically review the training and promotion potential of minority group and women employees and will encourage eligible employees to apply for such training and promotion.

7. **Unions:** If the contractor relies in whole or in part upon unions as a source of employees, the contractor will use his/her best efforts to obtain the cooperation of such unions to increase opportunities for minority groups and women within the unions, and to effect referrals by such unions of minority and female employees. Actions by the contractor either directly or through a contractor's association acting as agent will include the procedures set forth below:

a. The contractor will use best efforts to develop, in cooperation with the unions, joint training programs aimed toward qualifying more minority group members and women for membership in the unions and increasing the skills of minority group employees and women so that they may qualify for higher paying employment.

b. The contractor will use best efforts to incorporate an EEO clause into each union agreement to the end that such union will be contractually bound to refer applicants without regard to

their race, color, religion, sex, national origin, age or disability.

c. The contractor is to obtain information as to the referral practices and policies of the labor union except that to the extent such information is within the exclusive possession of the labor union and such labor union refuses to furnish such information to the contractor, the contractor shall so certify to the SHA and shall set forth what efforts have been made to obtain such information.

d. In the event the union is unable to provide the contractor with a reasonable flow of minority and women referrals within the time limit set forth in the collective bargaining agreement, the contractor will, through independent recruitment efforts, fill the employment vacancies without regard to race, color, religion, sex, national origin, age or disability; making full efforts to obtain qualified and/or qualifiable minority group persons and women. (The DOL has held that it shall be no excuse that the union with which the contractor has a collective bargaining agreement providing for exclusive referral failed to refer minority employees.) In the event the union referral practice prevents the contractor from meeting the obligations pursuant to Executive Order 11246, as amended, and these special provisions, such contractor shall immediately notify the SHA.

8. **Selection of Subcontractors, Procurement of Materials and Leasing of Equipment:** The contractor shall not discriminate on the grounds of race, color, religion, sex, national origin, age or disability in the selection and retention of subcontractors, including procurement of materials and leases of equipment.

a. The contractor shall notify all potential subcontractors and suppliers of his/her EEO obligations under this contract.

b. Disadvantaged business enterprises (DBE), as defined in 49 CFR 23, shall have equal opportunity to compete for and perform subcontracts which the contractor enters into pursuant to this contract. The contractor will use his best efforts to solicit bids from and to utilize DBE subcontractors or subcontractors with meaningful minority group and female representation among their employees. Contractors shall obtain lists of DBE construction firms from SHA personnel.

c. The contractor will use his best efforts to ensure subcontractor compliance with their EEO obligations.

9. **Records and Reports:** The contractor shall keep such records as necessary to document compliance with the EEO requirements. Such records shall be retained for a period of three years following completion of the contract work and shall be available at reasonable times and places for inspection by authorized representatives of the SHA and the FHWA.

a. The records kept by the contractor shall document the following:

(1) The number of minority and non-minority group members and women employed in each work classification on the project;

(2) The progress and efforts being made in cooperation with unions, when applicable, to increase employment opportunities for minorities and women;

(3) The progress and efforts being made in locating, hiring, training, qualifying, and upgrading minority and female employees; and

(4) The progress and efforts being made in securing the services of DBE subcontractors or subcontractors with meaningful minority and female representation among their employees.

b. The contractors will submit an annual report to the SHA each July for the duration of the project, indicating the number of minority, women, and non-minority group employees currently engaged in each work classification required by the contract work. This information is to be reported on Form FHWA-1391. If on-thejob training is being required by special provision, the contractor will be required to collect and report training data.

III. NONSEGREGATED FACILITIES

(Applicable to all Federal-aid construction contracts and to all related subcontracts of $10,000 or more.)

a. By submission of this bid, the execution of this contract or subcontract, or the consummation of this material supply agreement or purchase order, as appropriate, the bidder, Federal-aid construction contractor, subcontractor, material supplier, or vendor, as appropriate, certifies that the firm does not maintain or provide for its employees any segregated facilities at any of its establishments, and that the firm does not permit its employees to perform their services at any location, under its control, where segregated facilities are maintained. The firm agrees that a breach of this certification is a violation of the EEO provisions of this contract. The firm further certifies that no employee will be denied access to adequate facilities on the basis of sex or disability.

b. As used in this certification, the term "segregated facilities" means any waiting rooms, work areas, restrooms and washrooms, restaurants and other eating areas, timeclocks, locker rooms, and other storage or dressing areas, parking lots, drinking fountains, recreation or entertainment areas, transportation, and housing facilities provided for employees which are segregated by explicit directive, or are, in fact, segregated on the basis of race, color, religion, national origin, age or disability, because of habit, local custom, or otherwise. The only exception will be for the disabled when the demands for accessibility override (e.g. disabled parking).

c. The contractor agrees that it has obtained or will obtain identical certification from proposed subcontractors or material suppliers prior to award of subcontracts or consummation of material supply agreements of $10,000 or more and that it will retain such certifications in its files.

IV. PAYMENT OF PREDETERMINED MINIMUM WAGE

(Applicable to all Federal-aid construction contracts exceeding $2,000 and to all related subcontracts, except for projects located on roadways classified as local roads or rural minor collectors, which are exempt.)

1. **General:**

a. All mechanics and laborers employed or working upon the site of the work will be paid unconditionally and not less often than once a week and without subsequent deduction or rebate on any account [except such payroll deductions as are permitted by regulations (29 CFR 3) issued by the Secretary of Labor under the Copeland Act (40 U.S.C. 276c)] the full amounts of wages and bona fide fringe benefits (or cash equivalents thereof) due at time of payment. The payment shall be computed at wage rates not less than those contained in the wage determination of the Secretary of Labor (hereinafter "the wage determi-

nation") which is attached hereto and made a part hereof, regardless of any contractual relationship which may be alleged to exist between the contractor or its subcontractors and such laborers and mechanics. The wage determination (including any additional classifications and wage rates conformed under paragraph 2 of this Section IV and the DOL poster (WH-1321) or Form FHWA-1495) shall be posted at all times by the contractor and its subcontractors at the site of the work in a prominent and accessible place where it can be easily seen by the workers. For the purpose of this Section, contributions made or costs reasonably anticipated for bona fide fringe benefits under Section 1(b)(2) of the Davis-Bacon Act (40 U.S.C. 276a) on behalf of laborers or mechanics are considered wages paid to such laborers or mechanics, subject to the provisions of Section IV, paragraph 3b, hereof. Also, for the purpose of this Section, regular contributions made or costs incurred for more than a weekly period (but not less often than quarterly) under plans, funds, or programs, which cover the particular weekly period, are deemed to be constructively made or incurred during such weekly period. Such laborers and mechanics shall be paid the appropriate wage rate and fringe benefits on the wage determination for the classification of work actually performed, without regard to skill, except as provided in paragraphs 4 and 5 of this Section IV.

b. Laborers or mechanics performing work in more than one classification may be compensated at the rate specified for each classification for the time actually worked therein, provided, that the employer's payroll records accurately set forth the time spent in each classification in which work is performed.

c. All rulings and interpretations of the Davis-Bacon Act and related acts contained in 29 CFR 1, 3, and 5 are herein incorporated by reference in this contract.

2. **Classification:**

a. The SHA contracting officer shall require that any class of laborers or mechanics employed under the contract, which is not listed in the wage determination, shall be classified in conformance with the wage determination.

b. The contracting officer shall approve an additional classification, wage rate and fringe benefits only when the following criteria have been met:

(1) the work to be performed by the additional classification requested is not performed by a classification in the wage determination;

(2) the additional classification is utilized in the area by the construction industry;

(3) the proposed wage rate, including any bona fide fringe benefits, bears a reasonable relationship to the wage rates contained in the wage determination; and

(4) with respect to helpers, when such a classification prevails in the area in which the work is performed.

c. If the contractor or subcontractors, as appropriate, the laborers and mechanics (if known) to be employed in the additional classification or their representatives, and the contracting officer agree on the classification and wage rate (including the amount designated for fringe benefits where appropriate), a report of the action taken shall be sent by the contracting officer to the DOL, Administrator of the Wage and Hour Division, Employment Standards Administration, Washington, D.C. 20210. The Wage and Hour Administrator, or an authorized representative, will approve, modify, or disapprove every additional classification action within 30 days of receipt and so advise the contracting officer or will notify the contracting officer within the 30-day period that additional time is necessary.

d. In the event the contractor or subcontractors, as appropriate, the laborers or mechanics to be employed in the additional classification or their representatives, and the contracting officer do not agree on the proposed classification and wage rate (including the amount designated for fringe benefits, where appropriate), the contracting officer shall refer the questions, including the views of all interested parties and the recommendation of the contracting officer, to the Wage and Hour Administrator for determination. Said Administrator, or an authorized representative, will issue a determination within 30 days of receipt and so advise the contracting officer or will notify the contracting officer within the 30-day period that additional time is necessary

e. The wage rate (including fringe benefits where appropriate) determined pursuant to paragraph 2c or 2d of this Section IV shall be paid to all workers performing work in the additional classification from the first day on which work is performed in the classification.

3. **Payment of Fringe Benefits:**

a. Whenever the minimum wage rate prescribed in the contract for a class of laborers or mechanics includes a fringe benefit which is not expressed as an hourly rate, the contractor or subcontractors, as appropriate, shall either pay the benefit as stated in the wage determination or shall pay another bona fide fringe benefit or an hourly case equivalent thereof.

b. If the contractor or subcontractor, as appropriate, does not make payments to a trustee or other third person, he/she may consider as a part of the wages of any laborer or mechanic the amount of any costs reasonably anticipated in providing bona fide fringe benefits under a plan or program, provided, that the Secretary of Labor has found, upon the written request of the contractor, that the applicable standards of the Davis-Bacon Act have been met. The Secretary of Labor may require the contractor to set aside in a separate account assets for the meeting of obligations under the plan or program.

4. **Apprentices and Trainees (Programs of the U.S. DOL) and Helpers:**

a. Apprentices:

(1) Apprentices will be permitted to work at less than the predetermined rate for the work they performed when they are employed pursuant to and individually registered in a bona fide apprenticeship program registered with the DOL, Employment and Training Administration, Bureau of Apprenticeship and Training, or with a State apprenticeship agency recognized by the Bureau, or if a person is employed in his/her first 90 days of probationary employment as an apprentice in such an apprenticeship program, who is not individually registered in the program, but who has been certified by the Bureau of Apprenticeship and Training or a State apprenticeship agency (where appropriate) to be eligible for probationary employment as an apprentice.

(2) The allowable ratio of apprentices to journeyman-level employees on the job site in any craft classification shall not be greater than the ratio permitted to the contractor as to the entire work force under the registered program. Any employee listed on a payroll at an apprentice wage rate, who is not regis-

tered or otherwise employed as stated above, shall be paid not less than the applicable wage rate listed in the wage determination for the classification of work actually performed. In addition, any apprentice performing work on the job site in excess of the ratio permitted under the registered program shall be paid not less than the applicable wage rate on the wage determination for the work actually performed. Where a contractor or subcontractor is performing construction on a project in a locality other than that in which its program is registered, the ratios and wage rates (expressed in percentages of the journeyman-level hourly rate) specified in the contractor's or subcontractor's registered program shall be observed.

(3) Every apprentice must be paid at not less than the rate specified in the registered program for the apprentice's level of progress, expressed as a percentage of the journeyman-level hourly rate specified in the applicable wage determination. Apprentices shall be paid fringe benefits in accordance with the provisions of the apprenticeship program. If the apprenticeship program does not specify fringe benefits, apprentices must be paid the full amount of fringe benefits listed on the wage determination for the applicable classification. If the Administrator for the Wage and Hour Division determines that a different practice prevails for the applicable apprentice classification, fringes shall be paid in accordance with that determination.

(4) In the event the Bureau of Apprenticeship and Training, or a State apprenticeship agency recognized by the Bureau, withdraws approval of an apprenticeship program, the contractor or subcontractor will no longer be permitted to utilize apprentices at less than the applicable predetermined rate for the comparable work performed by regular employees until an acceptable program is approved.

b. Trainees:

(1) Except as provided in 29 CFR 5.16, trainees will not be permitted to work at less than the predetermined rate for the work performed unless they are employed pursuant to and individually registered in a program which has received prior approval, evidenced by formal certification by the DOL, Employment and Training Administration.

(2) The ratio of trainees to journeyman-level employees on the job site shall not be greater than permitted under the plan approved by the Employment and Training Administration. Any employee listed on the payroll at a trainee rate who is not registered and participating in a training plan approved by the Employment and Training Administration shall be paid not less than the applicable wage rate on the wage determination for the classification of work actually performed. In addition, any trainee performing work on the job site in excess of the ratio permitted under the registered program shall be paid not less than the applicable wage rate on the wage determination for the work actually performed.

(3) Every trainee must be paid at not less than the rate specified in the approved program for his/her level of progress, expressed as a percentage of the journeyman-level hourly rate specified in the applicable wage determination. Trainees shall be paid fringe benefits in accordance with the provisions of the trainee program. If the trainee program does not mention fringe benefits, trainees shall be paid the full amount of fringe benefits listed on the wage determination unless the Administrator of the Wage and Hour Division determines that there is an apprenticeship program associated with the corresponding journeyman-level wage rate on the wage determination which provides for less than full fringe benefits for apprentices, in which case such trainees shall receive the same fringe benefits as apprentices.

(4) In the event the Employment and Training Administration withdraws approval of a training program, the contractor or subcontractor will no longer be permitted to utilize trainees at less than the applicable predetermined rate for the work performed until an acceptable program is approved.

c. Helpers:

Helpers will be permitted to work on a project if the helper classification is specified and defined on the applicable wage determination or is approved pursuant to the conformance procedure set forth in Section IV.2. Any worker listed on a payroll at a helper wage rate, who is not a helper under a approved definition, shall be paid not less than the applicable wage rate on the wage determination for the classification of work actually performed.

5. **Apprentices and Trainees (Programs of the U.S. DOT):**

Apprentices and trainees working under apprenticeship and skill training programs which have been certified by the Secretary of Transportation as promoting EEO in connection with Federal-aid highway construction programs are not subject to the requirements of paragraph 4 of this Section IV. The straight time hourly wage rates for apprentices and trainees under such programs will be established by the particular programs. The ratio of apprentices and trainees to journeymen shall not be greater than permitted by the terms of the particular program.

6. **Withholding:**

The SHA shall upon its own action or upon written request of an authorized representative of the DOL withhold, or cause to be withheld, from the contractor or subcontractor under this contract or any other Federal contract with the same prime contractor, or any other Federally-assisted contract subject to Davis-Bacon prevailing wage requirements which is held by the same prime contractor, as much of the accrued payments or advances as may be considered necessary to pay laborers and mechanics, including apprentices, trainees, and helpers, employed by the contractor or any subcontractor the full amount of wages required by the contract. In the event of failure to pay any laborer or mechanic, including any apprentice, trainee, or helper, employed or working on the site of the work, all or part of the wages required by the contract, the SHA contracting officer may, after written notice to the contractor, take such action as may be necessary to cause the suspension of any further payment, advance, or guarantee of funds until such violations have ceased.

7. **Overtime Requirements:**

No contractor or subcontractor contracting for any part of the contract work which may require or involve the employment of laborers, mechanics, watchmen, or guards (including apprentices, trainees, and helpers described in paragraphs 4 and 5 above) shall require or permit any laborer, mechanic, watchman, or guard in any workweek in which he/she is employed on such work, to work in excess of 40 hours in such workweek unless such laborer, mechanic, watchman, or guard receives compensation at a rate not less than one-and-one-half times his/her basic rate of pay for all hours worked in excess of 40 hours in such workweek.

8. **Violation:**

Liability for Unpaid Wages; Liquidated Damages: In the event of any violation of the clause set forth in paragraph 7 above, the contractor and any subcontractor responsible thereof shall be liable to the affected employee for his/her unpaid wages. In addition, such contractor and subcontractor shall be liable to the United States (in the case of work done under contract for the District of Columbia or a territory, to such District or to such territory) for liquidated damages. Such liquidated damages shall be computed with respect to each individual laborer, mechanic, watchman, or guard employed in violation of the clause set forth in paragraph 7, in the sum of $10 for each calendar day on which such employee was required or permitted to work in excess of the standard work week of 40 hours without payment of the overtime wages required by the clause set forth in paragraph 7.

9. **Withholding for Unpaid Wages and Liquidated Damages:**

The SHA shall upon its own action or upon written request of any authorized representative of the DOL withhold, or cause to be withheld, from any monies payable on account of work performed by the contractor or subcontractor under any such contract or any other Federal contract with the same prime contractor, or any other Federally-assisted contract subject to the Contract Work Hours and Safety Standards Act, which is held by the same prime contractor, such sums as may be determined to be necessary to satisfy any liabilities of such contractor or subcontractor for unpaid wages and liquidated damages as provided in the clause set forth in paragraph 8 above.

V. STATEMENTS AND PAYROLLS

(Applicable to all Federal-aid construction contracts exceeding $2,000 and to all related subcontracts, except for projects located on roadways classified as local roads or rural collectors, which are exempt.)

1. **Compliance with Copeland Regulations (29 CFR 3):**

The contractor shall comply with the Copeland Regulations of the Secretary of Labor which are herein incorporated by reference.

2. **Payrolls and Payroll Records:**

a. Payrolls and basic records relating thereto shall be maintained by the contractor and each subcontractor during the course of the work and preserved for a period of 3 years from the date of completion of the contract for all laborers, mechanics, apprentices, trainees, watchmen, helpers, and guards working at the site of the work.

b. The payroll records shall contain the name, social security number, and address of each such employee; his or her correct classification; hourly rates of wages paid (including rates of contributions or costs anticipated for bona fide fringe benefits or cash equivalent thereof the types described in Section 1(b)(2)(B) of the Davis Bacon Act); daily and weekly number of hours worked; deductions made; and actual wages paid. In addition, for Appalachian contracts, the payroll records shall contain a notation indicating whether the employee does, or does not, normally reside in the labor area as defined in Attachment A, paragraph 1. Whenever the Secretary of Labor, pursuant to Section IV, paragraph 3b, has found that the wages of any laborer or mechanic include the amount of any costs reasonably anticipated in providing benefits under a plan or program described in Section 1(b)(2)(B) of the Davis Bacon Act, the contractor and each subcontractor shall maintain records which show that the commitment to provide such benefits is enforceable, that the plan or program is financially responsible, that the plan or program has been communicated in writing to the laborers or mechanics affected, and show the cost anticipated or the actual cost incurred in providing benefits. Contractors or subcontractors employing apprentices or trainees under approved programs shall maintain written evidence of the registration of apprentices and trainees, and ratios and wage rates prescribed in the applicable programs.

c. Each contractor and subcontractor shall furnish, each week in which any contract work is performed, to the SHA resident engineer a payroll of wages paid each of its employees (including apprentices, trainees, and helpers, described in Section IV, paragraphs 4 and 5, and watchmen and guards engaged on work during the preceding weekly payroll period). The payroll submitted shall set out accurately and completely all of the information required to be maintained under paragraph 2b of this Section V. This information may be submitted in any form desired. Optional Form WH-347 is available for this purpose and may be purchased from the Superintendent of Documents (Federal stock number 029-005-0014-1), U.S. Government Printing Office, Washington, D.C. 20402. The prime contractor is responsible for the submission of copies of payrolls by all subcontractors.

d. Each payroll submitted shall be accompanied by a "Statement of Compliance," signed by the contractor or subcontractor or his/her agent who pays or supervises the payment of the persons employed under the contract and shall certify the following:

(1) that the payroll for the payroll period contains the information required to be maintained under paragraph 2b of this Section V and that such information is correct and complete;

(2) that such laborer or mechanic (including each helper, apprentice, and trainee) employed on the contract during the payroll period has been paid the full weekly wages earned, without rebate, either directly or indirectly, and that no deductions have been made either directly or indirectly from the full wages earned, other than permissible deductions as set forth in the Regulations, 29 CFR 3;

(3) that each laborer or mechanic has been paid not less that the applicable wage rate and fringe benefits or cash equivalent for the classification of worked performed, as specified in the applicable wage determination incorporated into the contract.

e. The weekly submission of a properly executed certification set forth on the reverse side of Optional Form WH-347 shall satisfy the requirement for submission of the "Statement of Compliance" required by paragraph 2d of this Section V.

f. The falsification of any of the above certifications may subject the contractor to civil or criminal prosecution under 18 U.S.C. 1001 and 31 U.S.C. 231.

g. The contractor or subcontractor shall make the records required under paragraph 2b of this Section V available for inspection, copying, or transcription by authorized representatives of the SHA, the FHWA, or the DOL, and shall permit such representatives to interview employees during working hours on the job. If the contractor or subcontractor fails to submit the required records or to make them available, the SHA, the FHWA, the DOL, or all may, after written notice to the contractor, sponsor, applicant, or owner, take such actions as may be

necessary to cause the suspension of any further payment, advance, or guarantee of funds. Furthermore, failure to submit the required records upon request or to make such records available may be grounds for debarment action pursuant to 29 CFR 5.12.

VI. RECORD OF MATERIALS, SUPPLIES, AND LABOR

1. On all Federal-aid contracts on the National Highway System, except those which provide solely for the installation of protective devices at railroad grade crossings, those which are constructed on a force account or direct labor basis, highway beautification contracts, and contracts for which the total final construction cost for roadway and bridge is less than $1,000,000 (23 CFR 635) the contractor shall:

a. Become familiar with the list of specific materials and supplies contained in Form FHWA-47, "Statement of Materials and Labor Used by Contractor of Highway Construction Involving Federal Funds," prior to the commencement of work under this contract.

b. Maintain a record of the total cost of all materials and supplies purchased for and incorporated in the work, and also of the quantities of those specific materials and supplies listed on Form FHWA-47, and in the units shown on Form FHWA-47.

c. Furnish, upon the completion of the contract, to the SHA resident engineer on Form FHWA-47 together with the data required in paragraph 1b relative to materials and supplies, a final labor summary of all contract work indicating the total hours worked and the total amount earned.

2. At the prime contractor's option, either a single report covering all contract work or separate reports for the contractor and for each subcontract shall be submitted.

VII. SUBLETTING OR ASSIGNING THE CONTRACT

1. The contractor shall perform with its own organization contract work amounting to not less than 30 percent (or a greater percentage if specified elsewhere in the contract) of the total original contract price, excluding any specialty items designated by the State. Specialty items may be performed by subcontract and the amount of any such specialty items performed may be deducted from the total original contract price before computing the amount of work required to be performed by the contractor's own organization (23 CFR 635).

a. "Its own organization" shall be construed to include only workers employed and paid directly by the prime contractor and equipment owned or rented by the prime contractor, with or without operators. Such term does not include employees or equipment of a subcontractor, assignee, or agent of the prime contractor.

b. "Specialty Items" shall be construed to be limited to work that requires highly specialized knowledge, abilities, or equipment not ordinarily available in the type of contracting organizations qualified and expected to bid on the contract as a whole and in general are to be limited to minor components of the overall contract.

2. The contract amount upon which the requirements set forth in paragraph 1 of Section VII is computed includes the cost of material and manufactured products which are to be purchased or produced by the contractor under the contract provisions.

3. The contractor shall furnish (a) a competent superintendent or supervisor who is employed by the firm, has full authority to direct performance of the work in accordance with the contract requirements, and is in charge of all construction operations (regardless of who performs the work) and (b) such other of its own organizational resources (supervision, management, and engineering services) as the SHA contracting officer determines is necessary to assure the performance of the contract.

4. No portion of the contract shall be sublet, assigned or otherwise disposed of except with the written consent of the SHA contracting officer, or authorized representative, and such consent when given shall not be construed to relieve the contractor of any responsibility for the fulfillment of the contract. Written consent will be given only after the SHA has assured that each subcontract is evidenced in writing and that it contains all pertinent provisions and requirements of the prime contract.

VIII. SAFETY: ACCIDENT PREVENTION

1. In the performance of this contract the contractor shall comply with all applicable Federal, State, and local laws governing safety, health, and sanitation (23 CFR 635). The contractor shall provide all safeguards, safety devices and protective equipment and take any other needed actions as it determines, or as the SHA contracting officer may determine, to be reasonably necessary to protect the life and health of employees on the job and the safety of the public and to protect property in connection with the performance of the work covered by the contract.

2. It is a condition of this contract, and shall be made a condition of each subcontract, which the contractor enters into pursuant to this contract, that the contractor and any subcontractor shall not permit any employee, in performance of the contract, to work in surroundings or under conditions which are unsanitary, hazardous or dangerous to his/her health or safety, as determined under construction safety and health standards (29 CFR 1926) promulgated by the Secretary of Labor, in accordance with Section 107 of the Contract Work Hours and Safety Standards Act (40 U.S.C. 333).

3. Pursuant to 29 CFR 1926.3, it is a condition of this contract that the Secretary of Labor or authorized representative thereof, shall have right of entry to any site of contract performance to inspect or investigate the matter of compliance with the construction safety and health standards and to carry out the duties of the Secretary under Section 107 of the Contract Work Hours and Safety Standards Act (40 U.S.C. 333).

IX. FALSE STATEMENTS CONCERNING HIGHWAY PROJECTS

In order to assure high quality and durable construction in conformity with approved plans and specifications and a high degree of reliability on statements and representations made by engineers, contractors, suppliers, and workers on Federal-aid highway projects, it is essential that all persons concerned with the project perform their functions as carefully, thoroughly, and honestly as possible. Willful falsification, distortion, or misrepresentation with respect to any facts related to the project is a violation of Federal law. To prevent any misunderstanding regarding the seriousness of these and similar acts, the following notice shall be posted on each Federal-aid highway project (23 CFR 635) in one or more places where it is readily available to all persons concerned with the project:

NOTICE TO ALL PERSONNEL ENGAGED ON FEDERAL-AID HIGHWAY PROJECTS

18 U.S.C. 1020 reads as follows:

"Whoever, being an officer, agent, or employee of the United States, or of any State or Territory, or whoever, whether a person, association, firm, or corporation, knowingly makes any false statement, false representation, or false report as to the character, quality, quantity, or cost of the material used or to be used, or the quantity or quality of the work performed or to be performed, or the cost thereof in connection with the submission of plans, maps, specifications, contracts, or costs of construction on any highway or related project submitted for approval to the Secretary of Transportation; or

Whoever knowingly makes any false statement, false representation, false report or false claim with respect to the character, quality, quantity, or cost of any work performed or to be performed, or materials furnished or to be furnished, in connection with the construction of any highway or related project approved by the Secretary of Transportation; or

Whoever knowingly makes any false statement or false representation as to material fact in any statement, certificate, or report submitted pursuant to provisions of the Federal-aid Roads Act approved July 1, 1916, (39 Stat. 355), as amended and supplemented;

Shall be fined not more that $10,000 or imprisoned not more than 5 years or both."

X. IMPLEMENTATION OF CLEAN AIR ACT AND FEDERAL WATER POLLUTION CONTROL ACT

(Applicable to all Federal-aid construction contracts and to all related subcontracts of $100,000 or more.)

By submission of this bid or the execution of this contract, or subcontract, as appropriate, the bidder, Federal-aid construction contractor, or subcontractor, as appropriate, will be deemed to have stipulated as follows:

1. That any facility that is or will be utilized in the performance of this contract, unless such contract is exempt under the Clean Air Act, as amended (42 U.S.C. 1857 et seq., as amended by Pub.L. 91-604), and under the Federal Water Pollution Control Act, as amended (33 U.S.C. 1251 et seq., as amended by Pub.L. 92-500), Executive Order 11738, and regulations in implementation thereof (40 CFR 15) is not listed, on the date of contract award, on the U.S. Environmental Protection Agency (EPA) List of Violating Facilities pursuant to 40 CFR 15.20.

2. That the firm agrees to comply and remain in compliance with all the requirements of Section 114 of the Clean Air Act and Section 308 of the Federal Water Pollution Control Act and all regulations and guidelines listed thereunder.

3. That the firm shall promptly notify the SHA of the receipt of any communication from the Director, Office of Federal Activities, EPA, indicating that a facility that is or will be utilized for the contract is under consideration to be listed on the EPA List of Violating Facilities.

4. That the firm agrees to include or cause to be included the requirements of paragraph 1 through 4 of this Section X in every nonexempt subcontract, and further agrees to take such action as the government may direct as a means of enforcing such requirements.

XI. CERTIFICATION REGARDING DEBARMENT, SUSPENSION, INELIGIBILITY AND VOLUNTARY EXCLUSION

1. Instructions for Certification - Primary Covered Transactions:

(Applicable to all Federal-aid contracts - 49 CFR 29)

a. By signing and submitting this proposal, the prospective primary participant is providing the certification set out below.

b. The inability of a person to provide the certification set out below will not necessarily result in denial of participation in this covered transaction. The prospective participant shall submit an explanation of why it cannot provide the certification set out below. The certification or explanation will be considered in connection with the department or agency's determination whether to enter into this transaction. However, failure of the prospective primary participant to furnish a certification or an explanation shall disqualify such a person from participation in this transaction.

c. The certification in this clause is a material representation of fact upon which reliance was placed when the department or agency determined to enter into this transaction. If it is later determined that the prospective primary participant knowingly rendered an erroneous certification, in addition to other remedies available to the Federal Government, the department or agency may terminate this transaction for cause of default.

d. The prospective primary participant shall provide immediate written notice to the department or agency to whom this proposal is submitted if any time the prospective primary participant learns that its certification was erroneous when submitted or has become erroneous by reason of changed circumstances.

e. The terms "covered transaction," "debarred," "suspended," "ineligible," "lower tier covered transaction," "participant," "person," "primary covered transaction," "principal," "proposal," and "voluntarily excluded," as used in this clause, have the meanings set out in the Definitions and Coverage sections of rules implementing Executive Order 12549. You may contact the department or agency to which this proposal is submitted for assistance in obtaining a copy of those regulations.

f. The prospective primary participant agrees by submitting this proposal that, should the proposed covered transaction be entered into, it shall not knowingly enter into any lower tier covered transaction with a person who is debarred, suspended, declared ineligible, or voluntarily excluded from participation in this covered transaction, unless authorized by the department or agency entering into this transaction.

g. The prospective primary participant further agrees by submitting this proposal that it will include the clause titled "Certification Regarding Debarment, Suspension, Ineligibility and Voluntary Exclusion-Lower Tier Covered Transaction," provided by the department or agency entering into this covered transaction, without modification, in all lower tier covered transactions and in all solicitations for lower tier covered transactions.

h. A participant in a covered transaction may rely upon a certification of a prospective participant in a lower tier covered transaction that is not debarred, suspended, ineligible, or voluntarily excluded from the covered transaction, unless it knows that

the certification is erroneous. A participant may decide the method and frequency by which it determines the eligibility of its principals. Each participant may, but is not required to, check the nonprocurement portion of the "Lists of Parties Excluded From Federal Procurement or Nonprocurement Programs" (Nonprocurement List) which is compiled by the General Services Administration.

i. Nothing contained in the foregoing shall be construed to require establishment of a system of records in order to render in good faith the certification required by this clause. The knowledge and information of participant is not required to exceed that which is normally possessed by a prudent person in the ordinary course of business dealings.

j. Except for transactions authorized under paragraph f of these instructions, if a participant in a covered transaction knowingly enters into a lower tier covered transaction with a person who is suspended, debarred, ineligible, or voluntarily excluded from participation in this transaction, in addition to other remedies available to the Federal Government, the department or agency may terminate this transaction for cause or default.

* * * * *

Certification Regarding Debarment, Suspension, Ineligibility and Voluntary Exclusion--Primary Covered Transactions

1. The prospective primary participant certifies to the best of its knowledge and belief, that it and its principals:

a. Are not presently debarred, suspended, proposed for debarment, declared ineligible, or voluntarily excluded from covered transactions by any Federal department or agency;

b. Have not within a 3-year period preceding this proposal been convicted of or had a civil judgement rendered against them for commission of fraud or a criminal offense in connection with obtaining, attempting to obtain, or performing a public (Federal, State or local) transaction or contract under a public transaction; violation of Federal or State antitrust statutes or commission of embezzlement, theft, forgery, bribery, falsification or destruction of records, making false statements, or receiving stolen property;

c. Are not presently indicted for or otherwise criminally or civilly charged by a governmental entity (Federal, State or local) with commission of any of the offenses enumerated in paragraph 1b of this certification; and

d. Have not within a 3-year period preceding this application/proposal had one or more public transactions (Federal, State or local) terminated for cause or default.

2. Where the prospective primary participant is unable to certify to any of the statements in this certification, such prospective participant shall attach an explanation to this proposal.

* * * * *

2. Instructions for Certification - Lower Tier Covered Transactions:

(Applicable to all subcontracts, purchase orders and other lower tier transactions of $25,000 or more - 49 CFR 29)

a. By signing and submitting this proposal, the prospective lower tier is providing the certification set out below.

b. The certification in this clause is a material representation of fact upon which reliance was placed when this transaction was entered into. If it is later determined that the prospective lower tier participant knowingly rendered an erroneous certification, in addition to other remedies available to the Federal Government, the department, or agency with which this transaction originated may pursue available remedies, including suspension and/or debarment.

c. The prospective lower tier participant shall provide immediate written notice to the person to which this proposal is submitted if at any time the prospective lower tier participant learns that its certification was erroneous by reason of changed circumstances.

d. The terms "covered transaction," "debarred," "suspended," "ineligible," "primary covered transaction," "participant," "person," "principal," "proposal," and "voluntarily excluded," as used in this clause, have the meanings set out in the Definitions and Coverage sections of rules implementing Executive Order 12549. You may contact the person to which this proposal is submitted for assistance in obtaining a copy of those regulations.

e. The prospective lower tier participant agrees by submitting this proposal that, should the proposed covered transaction be entered into, it shall not knowingly enter into any lower tier covered transaction with a person who is debarred, suspended, declared ineligible, or voluntarily excluded from participation in this covered transaction, unless authorized by the department or agency with which this transaction originated.

f. The prospective lower tier participant further agrees by submitting this proposal that it will include this clause titled "Certification Regarding Debarment, Suspension, Ineligibility and Voluntary Exclusion-Lower Tier Covered Transaction," without modification, in all lower tier covered transactions and in all solicitations for lower tier covered transactions.

g. A participant in a covered transaction may rely upon a certification of a prospective participant in a lower tier covered transaction that is not debarred, suspended, ineligible, or voluntarily excluded from the covered transaction, unless it knows that the certification is erroneous. A participant may decide the method and frequency by which it determines the eligibility of its principals. Each participant may, but is not required to, check the Nonprocurement List.

h. Nothing contained in the foregoing shall be construed to require establishment of a system of records in order to render in good faith the certification required by this clause. The knowledge and information of participant is not required to exceed that which is normally possessed by a prudent person in the ordinary course of business dealings.

i. Except for transactions authorized under paragraph e of these instructions, if a participant in a covered transaction knowingly enters into a lower tier covered transaction with a person who is suspended, debarred, ineligible, or voluntarily excluded from participation in this transaction, in addition to other remedies available to the Federal Government, the department or agency with which this transaction originated may pursue available remedies, including suspension and/or debarment.

* * * * *

Certification Regarding Debarment, Suspension, Ineligibility and Voluntary Exclusion--Lower Tier Covered Transactions:

1. The prospective lower tier participant certifies, by submission of this proposal, that neither it nor its principals is presently debarred, suspended, proposed for debarment, declared ineligible, or voluntarily excluded from participation in this transaction by any Federal department or agency.

2. Where the prospective lower tier participant is unable to certify to any of the statements in this certification, such prospective participant shall attach an explanation to this proposal.

* * * * *

XII. CERTIFICATION REGARDING USE OF CONTRACT FUNDS FOR LOBBYING

(Applicable to all Federal-aid construction contracts and to all related subcontracts which exceed $100,000 - 49 CFR 20)

1. The prospective participant certifies, by signing and submitting this bid or proposal, to the best of his or her knowledge and belief, that:

a. No Federal appropriated funds have been paid or will be paid, by or on behalf of the undersigned, to any person for influencing or attempting to influence an officer or employee of any Federal agency, a Member of Congress, an officer or employee of Congress, or an employee of a Member of Congress in connection with the awarding of any Federal contract, the making of any Federal grant, the making of any Federal loan, the entering into of any cooperative agreement, and the extension, continuation, renewal, amendment, or modification of any Federal contract, grant, loan, or cooperative agreement.

b. If any funds other than Federal appropriated funds have been paid or will be paid to any person for influencing or attempting to influence an officer or employee of any Federal agency, a Member of Congress, an officer or employee of Congress, or an employee of a Member of Congress in connection with this Federal contract, grant, loan, or cooperative agreement, the undersigned shall complete and submit Standard Form-LLL, "Disclosure Form to Report Lobbying," in accordance with its instructions.

2. This certification is a material representation of fact upon which reliance was placed when this transaction was made or entered into. Submission of this certification is a prerequisite for making or entering into this transaction imposed by 31 U.S.C. 1352. Any person who fails to file the required certification shall be subject to a civil penalty of not less than $10,000 and not more than $100,000 for each such failure.

3. The prospective participant also agrees by submitting his or her bid or proposal that he or she shall require that the language of this certification be included in all lower tier subcontracts, which exceed $100,000 and that all such recipients shall certify and disclose accordingly.

KENTUCKY TRANSPORTATION CABINET
DEPARTMENT OF HIGHWAYS

EMPLOYMENT REQUIREMENTS RELATING TO NONDISCRIMINATION OF EMPLOYEES (APPLICABLE TO FEDERAL-AID SYSTEM CONTRACTS)

AN ACT OF THE KENTUCKY GENERAL ASSEMBLY TO PREVENT DISCRIMINATION IN EMPLOYMENT
KRS CHAPTER 344
EFFECTIVE JUNE 16, 1972

The contract on this project, in accordance with KRS Chapter 344, provides that during the performance of this contract, the contractor agrees as follows:

1. The contractor shall not fail or refuse to hire, or shall not discharge any individual, or otherwise discriminate against an individual with respect to his compensation, terms, conditions, or privileges of employment, because of such individual's race, color, religion, national origin, sex, disability or age (between forty and seventy); or limit, segregate, or classify his employees in any way which would deprive or tend to deprive an individual of employment opportunities or otherwise adversely affect his status as an employee, because of such individual's race, color, religion, national origin, sex, disability or age (between forty and seventy). The contractor agrees to post in conspicuous places, available to employees and applicants for employment, notices to be provided setting forth the provisions of this nondiscrimination clause.

2. The contractor shall not print or publish or cause to be printed or published a notice or advertisement relating to employment by such an employer or membership in or any classification or referral for employment by the employment agency, indicating any preference, limitation, specification, or discrimination, based on race, color, religion, national origin, sex, disability or age (between forty and seventy), except that such notice or advertisement may indicate a preference, limitation, or specification based on religion, or national origin when religion, or national origin is a bona fide occupational qualification for employment.

3. If the contractor is in control of apprenticeship or other training or retraining, including on-the-job training programs, he shall not discriminate against an individual because of his race, color, religion, national origin, sex, disability or age (between forty and seventy), in admission to, or employment in any program established to provide apprenticeship or other training.

4. The contractor will send to each labor union or representative of workers with which he has a collective bargaining agreement or other contract or understanding, a notice to be provided advising the said labor union or workers' representative of the contractor's commitments under this section, and shall post copies of the notice in conspicuous places available to employees and applicants for employment. The contractor will take such action with respect to any subcontract or purchase order as the administrating agency may direct as a means of enforcing such provisions, including sanctions for non-compliance.

REVISED: 12-3-92

PROJECT: **JEFFERSON COUNTY, IM 264-1 (146) 0, FD52 056 0264 000-008, FD04 056 031W 014-015**
LETTING: **12-20-2002**

NOTICE OF REQUIREMENT FOR AFFIRMATIVE ACTION TO ENSURE EQUAL EMPLOYMENT OPPORTUNITY (Executive Order 11246)

1. The Offeror's or Bidder's attention is called to the "Equal Opportunity Clause" and the "Standard Federal Equal Employment Specifications" set forth herein.

2. The goals and timetables for minority and female participation, expressed in percentage terms for the Contractor's aggregate work force in each trade on all construction work in the covered area, are as follows:

TIMETABLE	GOALS FOR MINORITY PARTICIPATION IN EACH TRADE	GOALS FOR FEMALE PARTICIPATION IN EACH TRADE
	11.2%	6.9

These goals are applicable to all the Contractor's construction work (whether or not it is Federal or federally-assisted) performed in the covered area. If the contractor performs construction work in a geographical area located outside of the covered area, it shall apply the goals established for such geographical area where the work is actually performed. With regard to this second area, the contractor also is subject to the goals for both its federally involved and non-federally involved construction.

The Contractor's compliance with the Executive Order and the regulations in CFR Part 60-4 shall be based on its implementation of the Equal Opportunity Clause, specific affirmative action obligations required by the specifications set forth in 41 CFR 60-4, 3(a), and its efforts to meet the goals. The hours of minority and female employment and training must be substantially uniform throughout the length of the contract, and in each trade, and the contractor shall make a good faith effort to employ minorities and women evenly on each of its projects. The transfer of minority or female employees or trainees from Contractor to Contractor or from project to project for the sole purpose of meeting the Contractor's goals shall be a violation of the contract, the Executive Order and the regulations in 41 CFR Part 60-4. Compliance with the goals will be measured against the total work hours performed.

3. The Contractor shall provide written notification to the Director of the Office of Federal Contract Compliance Programs within ten (10) working days of award of any construction subcontract in excess of $10,000.00 at any tier for construction work under the contract resulting from this solicitation. The notification shall list the name, address and telephone number of the subcontractor; employer identification number of the subcontractor; estimated dollar amount of the subcontract; estimated starting and completion dates of the subcontract; and the geographical area in which the subcontract is to be performed. The notification shall be mailed to:

Carol Gaudin, Regional Director
Office of Federal Contract Compliance Programs
61 Forsyth Street, SW, Suite 7B75
Atlanta, Georgia 30303-8609
(404) 562-2424

4. As used in this Notice, and in the contract resulting from this solicitation, the **"covered area"** is Jefferson County.

EXECUTIVE BRANCH CODE OF ETHICS

In the 1992 regular legislative session, the General Assembly passed and Governor Brereton Jones signed Senate Bill 63 (codified as KRS 11A), the Executive Branch Code of Ethics, which states, in part:

KRS 11A.040 (6) provides:

No present or former public servant shall, within six (6) months of following termination of his office or employment, accept employment, compensation or other economic benefit from any person or business that contracts or does business with the state in matters in which he was directly involved during his tenure. This provision shall not prohibit an individual from returning to the same business, firm, occupation, or profession in which he was involved prior to taking office or beginning his term of employment, provided that, for a period of six (6) months, he personally refrains from working on any matter in which he was directly involved in state government. This subsection shall not prohibit the performance of ministerial functions, including, but not limited to, filing tax returns, filing applications for permits or licenses, or filing incorporation papers.

KRS 11A.040 (8) states:

A former public servant shall not represent a person in a matter before a state agency in which the former public servant was directly involved, for a period of one (1) year after the latter of:
a) The date of leaving office or termination of employment; or
b) The date the term of office expires to which the public servant was elected.

This law is intended to promote public confidence in the integrity of state government and to declare as public policy the idea that state employees should view their work as a public trust and not as a way to obtain private benefits.

If you have worked for the executive branch of state government within the past six months, you may be subject to the law's prohibitions. The law's applicability may be different if you hold elected office or are contemplating representation of another before a state agency.

Also, if you are affiliated with a firm which does business with the state and which employs former state executive-branch employees, you should be aware that the law may apply to them.

In case of doubt, the law permits you to request an advisory opinion from the Executive Branch Ethics Commission, Room 136, Capitol Building, 700 Capitol Avenue, Frankfort, Kentucky 40601; telephone (502) 564-7954.

Training Special Provisions

This Training Special Provision supersedes subparagraph 7b of the Special Provision entitled "Specific Equal Employment Opportunity Responsibilities," and is in implementation of 23 U.S.C. 140 (a).

As part of the contractor's equal employment opportunity affirmative action program, training shall be provided as follows:

> The contractor shall provide on-the-job training aimed at developing full journeymen in the type of trade or job classification involved.

The number of trainees to be trained under these special provisions and this contract is shown in "Special Notes Applicable to Project" in the bid proposal.

In the event that a contractor subcontracts a portion of the contract work, he shall determine how many, if any, of the trainees are to be trained by the subcontractor, provided, however, that the contractor shall retain the primary responsibility for meeting the training requirements imposed by this special provision. The contractor shall also insure that this training special provision is made applicable to such subcontract. Where feasible, 25 percent of apprentices or trainees in each occupation shall be in their first year of apprenticeship or training.

The number of trainees shall be distributed among the work classifications on the basis of the contractor's need and the availability of journeymen in the various classifications within a reasonable area of recruitment. Prior to commencing construction the contractor shall submit to the Kentucky Transportation Cabinet, Department of Highways for its approval, an acceptable training program on forms provided by the Cabinet indicating the number of trainees to be trained in each selected classification. Failure to provide the Cabinet with the proper documentation evidencing an acceptable training program prior to commencing construction shall cause the Cabinet to suspend the operations of the contractor with (if applicable) working days being charged as usual against the contract time or (if applicable), no additional contract time being granted for the suspension period. The Cabinet will not be liable for the payment of any work performed during the suspension period due to the failure of the contractor to provide an acceptable training program. Said suspension period shall be terminated when an acceptable training program is received by the Cabinet. Furthermore, the contractor shall specify the starting time for training in each of the classifications. The contactor will be credited for each trainee employed by him on the contract work who is currently enrolled or becomes enrolled in an approved program and will be reimbursed for such trainees as provided hereinafter.

Training and upgrading of minorities and women toward journeymen status is a primary objective of this Training Special Provision. Accordingly, the contractor shall make every effort to enroll minority trainees and women (e.g., by conducting systematic and direct recruitment through public and private sources likely to yield minority and women trainees) to the extent that such persons are available within a reasonable area of recruitment. The contractor will be responsible for demonstrating the steps that he has taken in pursuance thereof, prior to a determination as to whether the contractor is in compliance with the Training Special Provision. This training commitment is not intended, and shall not be used, to discriminate against any applicant for training, whether a member of minority group or not.

No employee shall be employed as a trainee in any classification in which he has successfully completed a training course leading to journeyman status or in which he has been employed as a journeyman. The contractor should satisfy this requirement by including appropriate questions in the employee application or by other suitable means. Regardless of the method used the contractor's records should document the findings in each case. The minimum length and type of training for each classification will be as established in the training program selected by the contractor and approved by the Kentucky Transportation Cabinet, Department of Highways and the Federal Highway Administration shall approve a program if it is reasonably calculated to meet the equal employment opportunity obligations of the contractor and to qualify the average trainee for journeyman status in the classification concerned by the end of the training period. Furthermore, apprenticeship programs registered with the U.S. Department of Labor, Bureau of Apprenticeship and Training, or with a State apprenticeship agency recognized by the Bureau and training programs approved but not necessarily sponsored by the U.S. Department of Labor, Manpower Administration, Bureau of Apprenticeship and Training shall also be considered acceptable provided it is being administered in manner consistent with the equal employment obligations of Federal-aid highways construction contracts. Approval or acceptance of a training program shall be obtained from the State prior to commencing work on the classification covered by the program. It is the intention of these provisions that training is to be provided in the construction crafts rather than clerk-typists or secretarial-type positions. Training is permissible in lower level management positions such as office engineers, estimators, timekeepers, etc, where the training is oriented toward construction applications. Training in the laborer classification may be permitted provided that significant and meaningful training is provided and approved by the division office. Some offsite training is permissible as long as the training is an integral part of an approved training program and does not comprise a significant part of the overall training.

Except as otherwise noted below, the contractor will be reimbursed for each hour of training given an employee on this contract in accordance with an approved training program. As approved by the engineer, reimbursement will be made for training persons in excess of the number specified herein. This reimbursement will be made even though the contractor receives additional training program funds from other sources, provided such other source does not specifically prohibit the contractor from receiving other reimbursement. Reimbursement for offsite training indicated above may only be made to the contractor where he does one or more of the following and the trainees are concurrently employed on a Federal-aid project; contributes to the cost of the training, provides the instruction to the trainee or pays the trainee's wages during the offsite training period.

No payment shall be made to the contractor if either the failure to provide the required training, or the failure to hire the trainee as a journeyman is caused by the contractor and evidences a lack of good faith on the part of the contractor in meeting the requirements of this Training Special Provision. It is normally expected that a trainee will begin his training on the project as soon as feasible after start of work utilizing the skill involved and remain on the project as long as training opportunities exist in his work classification or until he has completed his training program. It is not required that all trainees be on board for the entire length of the contract. A contractor will have fulfilled his responsibilities under this Training Special Provisions if he has provided acceptable training to the number of trainees specified. The number trained shall be determined on the basis of the total number enrolled on the contract for a significant period.

Trainees will be paid at least 60 percent of the appropriate minimum journeyman's rate specified in the contract for the first half of the training period, 75 percent for the third quarter of the training period, and 90 percent for the last quarter of the training period, unless apprentices or trainees in an approved existing program are enrolled as trainees on this project. In that case, the appropriate rates approved by the Department of Labor or Transportation in connection with the existing program shall apply to all trainees being trained for the same classification who are covered by this Training Special Provision.

The contractor shall furnish the trainee a copy of the program he will follow in providing the training. The contractor shall provide each trainee with a certification showing the type and length of training satisfactorily completed.

The contractor will provide for the maintenance of records and furnish periodic reports documenting his performance under this Training Special Provision.

PROJECT NUMBER: FD52 C056 6857501D

COUNTY: Jefferson

PART IV (a) - INSURANCE FOR P&L RAILWAY

The Contractor shall carry the following insurance in addition to the insurance required by law:

(1) Commercial General Liability and Property Damage Insurance. Not less than $3,000,000 combined single limit for Bodily Injury, and for Property Damage per Occurrence.

(2) Contractor's Protective Public Liability and Property Damage Insurance. The contractor shall furnish evidence with respect to operations performed for him by subcontractors that he carries in his own behalf for the above stipulated amounts.

(3) The insurance required above must be evidenced by a Certificate of Insurance and this Certificate of Insurance must contain one of the following statements:

a. "policy contains no deductible clauses."
b. "policy contains a _____ deductible property
(amount)
damage clause but company will pay claim and collect the deductible from the insured."

(4) WORKMEN'S COMPENSATION INSURANCE. The contractor shall furnish evidence of coverage of all his employees or give evidence of self-insurance by submitting a copy of a certificate issued by the Workmen's Compensation Board.

Railroad Protective Liability Insurance (requirements attached). The policy shall name The Paducah and Louisville Railway, Inc. 1500 Kentucky Avenue, Paducah, Kentucky 42001 as the Named Insured and the limit of liability shall be not less than $3,000,000 combined single limit for Bodily Injury and Property Damage per occurrence, subject to a $6,000,000 aggregate limit per annual policy period. The original of this policy must be submitted for the railroad's approval and filing prior to commencement of work on this project.

Insurance will be required in amounts and types as specified on attached copy of requirements. The Contractor shall furnish copy of requirements along with the following information to its insurance company to be included in certificate of insurance:

PROJECT DESCRIPTION: FD52 C056 6857501D. I-264 Pavement Rehab. and Bridge Deck Repairs over the P & L track located between Campground Road and Ralph Avenue, and the approaches thereto.

PROJECT NUMBER: FD52 C056 6857501D

COUNTY: Jefferson

PART IV (b) - INSURANCE FOR NS CORPORATION

The Contractor shall carry the following insurance in addition to the insurance required by law:

(1) Contractor's Public Liability and Property Damage Insurance. Not less than $2,000,000 combined single limit for Bodily Injury, and for Property Damage per Occurrence.

(2) Contractor's Protective Public Liability and Property Damage Insurance. The contractor shall furnish evidence with respect to operations performed for him by subcontractors that he carries in his own behalf for the above stipulated amounts.

(3) The insurance required above must be evidenced by a Certificate of Insurance and this Certificate of Insurance must contain one of the following statements:

a. "policy contains no deductible clauses."
b. "policy contains a _____ deductible property
(amount)
damage clause but company will pay claim and collect the deductible from the insured."

(4) WORKMEN'S COMPENSATION INSURANCE. The contractor shall furnish evidence of coverage of all his employees or give evidence of self-insurance by submitting a copy of a certificate issued by the Workmen's Compensation Board.

Railroad Protective Public Liability Insurance written on ISO Form CG 00 35 11 96, copy attached. The policy shall name the Cincinnati, New Orleans and Texas Pacific Railway Company, Three Commercial Place, Norfolk, Virginia, 23510-2191 as the Named Insured and the limit of liability shall be not less than $2,000,000 combined single limit for Bodily Injury and Property Damage per occurrence, subject to a $6,000,000 aggregate limit per annual policy period. The original of this policy must be submitted for the railroad's approval and filing prior to commencement of work on this project.

Insurance will be required in amounts and types as specified on attached copy of provisions. The Contractor shall furnish copy of provisions along with the following information to its insurance company to be included in certificate of insurance:

PROJECT DESCRIPTION: FD52 C056 6857501D. Jefferson County, I-264 Pavement Rehabilitation and Bridge Deck Repairs over the K&IT (NS) tracks. (1) the "North-South" track, adjacent to Gibson Lane, leading to the "K" yard; (2) the "New Belt" track, between Gibson Lane and Algonquin Parkway, coming from the "K" yard; and (3) the "Mother's Cookie" track, between Bells Lane and Campground Road.

PART V

STATEMENT OF INCOMPLETED WORK

1. Status of Active Prime Contracts. Attached

1. STATUS OF ALL INCOMPLETED PRIME CONTRACTS

All active prime contracts must be reported. This includes prime contracts with public and private owners and joint-ventured contracts. The names of the joint venturers must be shown when reporting these projects. A machine or typed listing reporting the status of each contract is acceptable when attached to this report; however, the total amounts on the itemized listing must be reported in the space provided below:

CONTRACT WITH	PROJECT IDENTIFICATION	PRIME CONTRACT AMOUNT	EARNINGS THROUGH LAST APPROVED ESTIMATE	TOTAL AMOUNT OF WORK REMAINING
TOTAL (Attach Summary if not itemized above)		$	$	$

PART VI

BID ITEMS

PART VII

CERTIFICATIONS

1.	Provisions Relative to Senate Bill 258 (1994)	Attached
2.	Certification for Federal-Aid Contract	Attached
3.	Certification	Attached
4.	Non-Collusion Certification	Attached
5.	Certification with regard to the Performance of Previous Contracts or Subcontracts	Attached
6.	Certification of Bid Proposal	Attached

THE QUANTITY SHEET(S) REPRESENTS THE ESTIMATED QUANTITIES (ONLY) FOR THE SUBJECT PROJECT. PROPOSAL(S) MAY NOT BE AVAILABLE WHEN THE QUANTITIES ARE POSTED.
YOUR BID **WILL NOT** BE CONSIDERED IF THESE SHEET(S) ARE MADE A PART OF THE BID PROPOSAL WHICH YOU SUBMIT TO THE KENTUCKY DEPARTMENT OF HIGHWAYS.

TRANSPORTATION CABINET
Department of Highways
FRANKFORT, KY 40622

Sheet No: 1
PCN: 02-0723
Letting: 12/20/2002

JEFFERSON COUNTY
IM 264-1 (146) 0

Item No.	Code No.	Item	Approximate Quantity	Unit	Unit Price Dollars	Amount Dollars
		BRIDGE AND CULVERT QUANTITIES				
1	7367	BRIDGE OVER FARNSLEY ROAD	**1.00**	LP SUM		
2	7368	BRIDGE OVER CANE RUN ROAD	**1.00**	LP SUM		
3	7369	BRIDGE OVER RALPH AVENUE	**1.00**	LP SUM		
4	7370	BRIDGE OVER P&L RR STA 261	**1.00**	LP SUM		
5	7371	BRIDGE OVER CAMPGROUND ROAD	**1.00**	LP SUM		
6	7372	BRIDGE OVER P&L RR STA 286	**1.00**	LP SUM		
7	7373	BRIDGE OVER BELLS LANE	**1.00**	LP SUM		
8	7374	BRIDGE OVER ALGONQUIN PKWY	**1.00**	LP SUM		
9	7375	BRIDGE OVER NS RR STA 312	**1.00**	LP SUM		
10	7376	BRIDGE OVER GIBSON LANE	**1.00**	LP SUM		
11	7377	BRIDGE OVER DUMESNIL STREET	**1.00**	LP SUM		
12	7378	BRIDGE OVER VIRGINIA AVE	**1.00**	LP SUM		
13	7379	BRIDGE OVER GREENWOOD AVE	**1.00**	LP SUM		
14	7380	BRIDGE OVER GARLAND AVE	**1.00**	LP SUM		
15	7381	BRIDGE OVER 34TH STREET	**1.00**	LP SUM		
16	7382	BRIDGE OVER BROADWAY	**1.00**	LP SUM		
17	7383	BRIDGE OVER RIVER PARK DR	**1.00**	LP SUM		
18	7384	BRIDGE OVER VERMONT AVE	**1.00**	LP SUM		
19	7385	BRIDGE OVER MUHAMMAD ALI	**1.00**	LP SUM		
20	7386	BRIDGE OVER MARKET STREET	**1.00**	LP SUM		
21	7387	BRIDGE OVER DUNCAN & 34TH	**1.00**	LP SUM		

NON-BIDDING SHEET

THE QUANTITY SHEET(S) REPRESENTS THE ESTIMATED QUANTITIES (ONLY) FOR THE SUBJECT PROJECT. PROPOSAL(S) MAY NOT BE AVAILABLE WHEN THE QUANTITIES ARE POSTED.
YOUR BID **WILL NOT** BE CONSIDERED IF THESE SHEET(S) ARE MADE A PART OF THE BID PROPOSAL WHICH YOU SUBMIT TO THE KENTUCKY DEPARTMENT OF HIGHWAYS.

TRANSPORTATION CABINET
Department of Highways
FRANKFORT, KY 40622

Sheet No: 2
PCN: 02-0723
Letting: 12/20/2002

JEFFERSON COUNTY
IM 264-1 (146) 0

Item No.	Code No.	Item	Approximate Quantity	Unit	Unit Price Dollars	Amount Dollars
22	7388	RAMP 2 BRIDGE OVER ICRR	**1.00**	LP SUM		
23	7389	BRIDGE OVER US 31 WEST	**1.00**	LP SUM		
24	7390	SHIVELY INTRCHG OVER ICRR	**1.00**	LP SUM		
25	7391	SHIVELY INTRCHG OVER 31W	**1.00**	LP SUM		
26	7392	SHIVELY INTRCHG OVER RAMP 7	**1.00**	LP SUM		
27	7393	BRIDGE OVER RAMP 3	**1.00**	LP SUM		
28	7394	SHIVELY INTRCHG OVER RAMP 3	**1.00**	LP SUM		
29	7395	BRIDGE OVER SAVAGE DRIVE	**1.00**	LP SUM		
30	7396	BRIDGE OVER CRUMS LANE	**1.00**	LP SUM		
31	7397	SHIVELY INTRCHG OVER RAMP 8	**1.00**	LP SUM		
32	7398	RAMP 7 OVER US 31W	**1.00**	LP SUM		
33	7399	RAMP 3 OVER US 31W	**1.00**	LP SUM		
34	7400	RAMP 4 OVER ICRR	**1.00**	LP SUM		
35	7401	BRIDGE OVER GARR'S LANE	**1.00**	LP SUM		
		ROADWAY QUANTITIES				
36	0001	D G A BASE	**37,958.00**	TON		
37	2572	QUALITY CONTROL	**1.00**	LP SUM		
38	0022	PCC PAVEMENT DRAINAGE BLANKET	**19,711.00**	TON		
39	0078	CRUSHED AGGREGATE SIZE NO 2	**83,657.00**	TON		
40	0100	ASPHALT SEAL AGGREGATE	**1,158.00**	TON		
41	0190	LEVELING AND WEDGING PG64-22	**247.00**	TON		
42	0212	CL2 ASPH BASE 1.00D PG64-22	**40,309.00**	TON		

NON-BIDDING SHEET

THE QUANTITY SHEET(S) REPRESENTS THE ESTIMATED QUANTITIES (ONLY) FOR THE SUBJECT PROJECT. PROPOSAL(S) MAY NOT BE AVAILABLE WHEN THE QUANTITIES ARE POSTED.
YOUR BID **WILL NOT** BE CONSIDERED IF THESE SHEET(S) ARE MADE A PART OF THE BID PROPOSAL WHICH YOU SUBMIT TO THE KENTUCKY DEPARTMENT OF HIGHWAYS.

TRANSPORTATION CABINET
Department of Highways
FRANKFORT, KY 40622

Sheet No: 3
PCN: 02-0723
Letting: 12/20/2002

JEFFERSON COUNTY
IM 264-1 (146) 0

Item No.	Code No.	Item	Approximate Quantity	Unit	Unit Price Dollars	Amount Dollars
43	0291	EMULSIFIED ASPHALT RS-2	**140.00**	TON		
44	0461	CULVERT PIPE-15 INCH	**175.00**	LIN FT		
45	0464	CULVERT PIPE-24 INCH	**12.00**	LIN FT		
46	0520	STORM SEWER PIPE-12 INCH	**57.00**	LIN FT		
47	0521	STORM SEWER PIPE-15 INCH	**1,202.00**	LIN FT		
48	0522	STORM SEWER PIPE-18 INCH	**148.00**	LIN FT		
49	0524	STORM SEWER PIPE-24 INCH	**38.00**	LIN FT		
50	0980	SLOTTED DRAIN PIPE-12 INCH	**276.00**	LIN FT		
51	1000	PERFORATED PIPE-4 INCH	**54,842.00**	LIN FT		
52	1001	PERFORATED PIPE-6 INCH	**21,387.00**	LIN FT		
53	1010	NON-PERFORATED PIPE-4 INCH	**1,007.00**	LIN FT		
54	1011	NON-PERFORATED PIPE-6 INCH	**88.00**	LIN FT		
55	1015	INSP & CERT EDGE DRAIN SYS	**1.00**	LP SUM		
56	1020	PERF PIPE HEADWALL TY 1-4 INCH	**45.00**	EACH		
57	1024	PERF PIPE HEADWALL TY 2-4 INCH	**39.00**	EACH		
58	1028	PERF PIPE HEADWALL TY 3-4 INCH	**27.00**	EACH		
59	1432	SLOPED BOX OUTLET TYPE 1-15 IN	**2.00**	EACH		
60	1451	S & F BOX INLET-OUTLET-24 INCH	**1.00**	EACH		
61	1480	CURB BOX INLET TYPE B	**5.00**	EACH		
62	1502	DROP BOX INLET TYPE 5A	**2.00**	EACH		
63	1511	DROP BOX INLET TYPE 5D	**1.00**	EACH		
64	1641	JUNCTION BOX-15 INCH	**1.00**	EACH		

NON-BIDDING SHEET

THE QUANTITY SHEET(S) REPRESENTS THE ESTIMATED QUANTITIES (ONLY) FOR THE SUBJECT PROJECT. PROPOSAL(S) MAY NOT BE AVAILABLE WHEN THE QUANTITIES ARE POSTED.
YOUR BID **WILL NOT** BE CONSIDERED IF THESE SHEET(S) ARE MADE A PART OF THE BID PROPOSAL WHICH YOU SUBMIT TO THE KENTUCKY DEPARTMENT OF HIGHWAYS.

TRANSPORTATION CABINET
Department of Highways
FRANKFORT, KY 40622

Sheet No: 4
PCN: 02-0723
Letting: 12/20/2002

JEFFERSON COUNTY
IM 264-1 (146) 0

Item No.	Code No.	Item	Approximate Quantity	Unit	Unit Price Dollars	Amount Dollars
65	1691	FLUME INLET TYPE 2	**10.00**	EACH		
66	1705	REMOVE CURB & GUTTER BOX INLET	**2.00**	EACH		
67	1708	RECONSTRUCTING CATCH BASIN	**1.00**	EACH		
68	1710	FILLING & CAPPING CATCH BASIN	**64.00**	EACH		
69	1718	REMOVING INLET (FLUME)	**2.00**	EACH		
70	1740	CORED HOLE DRAINAGE BOX CON-4"	**84.00**	EACH		
71	1741	CORED HOLE DRAINAGE BOX CON-6"	**102.00**	EACH		
72	1756	MANHOLE TYPE A	**2.00**	EACH		
73	1830	STANDARD INTEGRAL CURB	**1,247.00**	LIN FT		
74	1845	ISLAND INTEGRAL CURB	**975.00**	LIN FT		
75	1875	STANDARD HEADER CURB	**2,470.00**	LIN FT		
76	1895	VALLEY GUTTER	**160.00**	LIN FT		
77	1902	REMOVING INTEGRAL CURB	**2,470.00**	LIN FT		
78	1915	STD BARRIER MEDIAN TYPE 1	**5.70**	SQ YD		
79	1982	DELINEATOR FOR GUARDRAIL-WHITE	**2,292.00**	EACH		
80	1983	DELINEATOR FOR GUARDRL-YELLOW	**71.00**	EACH		
81	1984	DELINEATOR FOR BARRIER-WHITE	**583.00**	EACH		
82	1985	DELINEATOR FOR BARRIER-YELLOW	**4,714.00**	EACH		
83	2014	BARRICADE-TYPE III	**134.00**	EACH		
84	2058	REMOVE PCC PAVEMENT	**76,110.00**	SQYD		
85	2060	PCC PAVEMENT DIAMOND GRINDING	**28,500.00**	SQ YD		

NON-BIDDING SHEET

THE QUANTITY SHEET(S) REPRESENTS THE ESTIMATED QUANTITIES (ONLY) FOR THE SUBJECT PROJECT. PROPOSAL(S) MAY NOT BE AVAILABLE WHEN THE QUANTITIES ARE POSTED.
YOUR BID **WILL NOT** BE CONSIDERED IF THESE SHEET(S) ARE MADE A PART OF THE BID PROPOSAL WHICH YOU SUBMIT TO THE KENTUCKY DEPARTMENT OF HIGHWAYS.

TRANSPORTATION CABINET
Department of Highways
FRANKFORT, KY 40622

Sheet No: 5
PCN: 02-0723
Letting: 12/20/2002

JEFFERSON COUNTY
IM 264-1 (146) 0

Item No.	Code No.	Item	Approximate Quantity	Unit	Unit Price Dollars	Amount Dollars
86	2069	PCC PAVEMENT-10 INCH NON-REINF	**2,000.00**	SQ YD		
87	2071	PCC PAVEMENT-11 INCH NON-REINF	**953.00**	SQ YD		
88	2072	PCC PAVE-11 IN NON-REINF SHLD	**1,353.00**	SQ YD		
89	2073	PCC PAVEMENT-9 INCH NON-REINF	**284,683.00**	SQ YD		
90	2082	PCC PAVE-9 INCH NON-REINF SHLD	**125,696.00**	SQ YD		
91	2086	PCC PAVEMENT-13 INCH NON-REINF	**78,308.00**	SQ YD		
92	2087	PCC PAVE-13 IN NON-REINF SHLD	**28,007.00**	SQ YD		
93	2110	PARTIAL DEPTH PATCHING	**6,412.00**	CU FT		
94	2115	SAW-CLEAN-RESEAL TVERSE JOINT	**17,623.00**	LIN FT		
95	2116	SAW-CLEAN-RESEAL LONGIT JOINT	**9,095.00**	LIN FT		
96	2157	PAVED DITCH TYPE 1	**47.00**	SQ YD		
97	2165	REMOVING PAVED DITCH	**635.00**	SQ YD		
98	2200	ROADWAY EXCAVATION	**50,709.00**	CU YD		
99	2230	EMBANKMENT IN PLACE	**18,747.00**	CU YD		
100	2237	DITCHING	**10,000.00**	LIN FT		
101	2267	REMOVING & RESETTING R/W FENCE	**130.00**	LIN FT		
102	2351	GUARDRAIL-STEEL W BEAM-S FACE	**84,441.75**	LIN FT		
103	2352	GUARDRAIL-STEEL W BEAM-D FACE	**125.00**	LIN FT		
104	2359	GUARDRAIL CON TO CONC MED BAR	**2.00**	EACH		
105	2360	GUARDRAIL TERMINAL SECT NO 1	**1.00**	EACH		
106	2363	GUARDRAIL CON TO BR END TYPE A	**71.00**	EACH		
107	2367	GUARDRAIL END TREATMENT TYPE 1	**41.00**	EACH		

NON-BIDDING SHEET

THE QUANTITY SHEET(S) REPRESENTS THE ESTIMATED QUANTITIES (ONLY) FOR THE SUBJECT PROJECT. PROPOSAL(S) MAY NOT BE AVAILABLE WHEN THE QUANTITIES ARE POSTED.
YOUR BID **WILL NOT** BE CONSIDERED IF THESE SHEET(S) ARE MADE A PART OF THE BID PROPOSAL WHICH YOU SUBMIT TO THE KENTUCKY DEPARTMENT OF HIGHWAYS.

TRANSPORTATION CABINET
Department of Highways
FRANKFORT, KY 40622

Sheet No: 6
PCN: 02-0723
Letting: 12/20/2002

JEFFERSON COUNTY
IM 264-1 (146) 0

Item No.	Code No.	Item	Approximate Quantity	Unit	Unit Price Dollars	Amount Dollars
108	2369	GUARDRAIL END TREATMENT TY 2A	**38.00**	EACH		
109	2381	REMOVING GUARDRAIL	**85,879.00**	LIN FT		
110	2383	REMOVING & RESETTING GUARDRAIL	**7,880.00**	LIN FT		
111	2387	GUARDRAIL CON TO BR END TY A-1	**67.00**	EACH		
112	2391	GUARDRAIL END TREATMENT TY 4A	**2.00**	EACH		
113	2397	TEMPORARY GUARDRAIL	**1,250.00**	LIN FT		
114	2483	CHANNEL LINING CLASS II	**620.00**	TON		
115	2484	CHANNEL LINING CLASS III	**276.00**	TON		
116	2562	SIGNS	**6,296.00**	SQ FT		
117	2567	DELINEATOR POSTS	**576.00**	EACH		
118	2570	PROJECT CPM SCHEDULE	**1.00**	LP SUM		
119	2598	FABRIC-GEOTEXTILE TYPE III	**251,503.00**	SQ YD		
120	2625	REMOVING HEADWALL	**3.00**	EACH		
121	2650	MAINTAIN AND CONTROL TRAFFIC (FD52)	**1.00**	LP SUM		
122	2650	MAINTAIN AND CONTROL TRAFFIC (FD04)	**1.00**	LP SUM		
123	2653	LANE CLOSURE	**18.00**	EA		
124	2671	VAR MESSAGE SIGN-PORT 3 LINE	**15.00**	EACH		
125	2690	SAFELOADING	**92.00**	CU YD		
126	2695	RUMBLE STRIPS TYPE 3	**7,990.00**	LIN FT		
127	2701	TEMPORARY SILT FENCE	**2,405.00**	LIN FT		
128	2705	SILT CHECK	**23.00**	EACH		

NON-BIDDING SHEET

THE QUANTITY SHEET(S) REPRESENTS THE ESTIMATED QUANTITIES (ONLY) FOR THE SUBJECT PROJECT. PROPOSAL(S) MAY NOT BE AVAILABLE WHEN THE QUANTITIES ARE POSTED.
YOUR BID **WILL NOT** BE CONSIDERED IF THESE SHEET(S) ARE MADE A PART OF THE BID PROPOSAL WHICH YOU SUBMIT TO THE KENTUCKY DEPARTMENT OF HIGHWAYS.

TRANSPORTATION CABINET
Department of Highways
FRANKFORT, KY 40622

Sheet No: 7
PCN: 02-0723
Letting: 12/20/2002

JEFFERSON COUNTY
IM 264-1 (146) 0

Item No.	Code No.	Item	Approximate Quantity	Unit	Unit Price Dollars	Amount Dollars
129	2708	CLEAN SILT CHECK	**46.00**	EACH		
130	2709	CLEAN TEMPORARY SILT FENCE	**4,810.00**	LIN FT		
131	2720	SIDEWALK-4 INCH CONCRETE	**51.00**	SQ YD		
132	2726	STAKING (FD52)	**1.00**	LP SUM		
133	2726	STAKING (FD04)	**1.00**	LP SUM		
134	2775	FLASHING ARROW	**10.00**	EACH		
135	2888	CRASH CUSHION TYPE VI D	**2.00**	EACH		
136	2894	CRASH CUSHION TYPE VI-T	**18.00**	EACH		
137	2898	RELOCATE CRASH CUSHION	**24.00**	EACH		
138	3221	REMOVING PAVEMENT MARKER TY V	**965.00**	EACH		
139	3287	SIDEWALK RAMP TYPE 1	**6.00**	EA		
140	3290	SIDEWALK RAMP TYPE 4	**2.00**	EA		
141	5950	EROSION CONTROL BLANKET	**25,898.00**	SQ YD		
142	5953	TEMP SEEDING AND PROTECTION	**7,420.00**	SQ YD		
143	5966	TOPDRESSING FERTILIZER	**2.00**	TON		
144	5985	SEEDING AND PROTECTION	**9,800.00**	SQ YD		
145	6511	PAVE STRIPING-TEMP PAINT-6 IN	**456,352.00**	LIN FT		
146	6513	PAVE STRIPING-TEMP PAINT-12 IN	**7,872.00**	LIN FT		
147	6550	PAVE STRIPING-TEMP REM TAPE-W	**235,584.00**	LIN FT		
148	6551	PAVE STRIPING-TEMP REM TAPE-Y	**352,220.00**	LIN FT		
149	6556	PAVE STRIPING-DUR TY 1-6" W	**157,949.00**	LIN FT		

NON-BIDDING SHEET

THE QUANTITY SHEET(S) REPRESENTS THE ESTIMATED QUANTITIES (ONLY) FOR THE SUBJECT PROJECT. PROPOSAL(S) MAY NOT BE AVAILABLE WHEN THE QUANTITIES ARE POSTED.
YOUR BID **WILL NOT** BE CONSIDERED IF THESE SHEET(S) ARE MADE A PART OF THE BID PROPOSAL WHICH YOU SUBMIT TO THE KENTUCKY DEPARTMENT OF HIGHWAYS.

TRANSPORTATION CABINET
Department of Highways
FRANKFORT, KY 40622

Sheet No: 8
PCN: 02-0723
Letting: 12/20/2002

JEFFERSON COUNTY
IM 264-1 (146) 0

Item No.	Code No.	Item	Approximate Quantity	Unit	Unit Price Dollars	Amount Dollars
150	6557	PAVE STRIPING-DUR TY 1-6" Y	**113,983.00**	LIN FT		
151	6560	PAVE STRIPING-DUR TY 1-12" W	**12,599.00**	LIN FT		
152	6585	PAVEMENT MARKER TY IVA-MW TEMP	**5,846.00**	EACH		
153	6586	PAVEMENT MARKER TY IVA-MY TEMP	**16,321.00**	EACH		
154	7303	ROADWAY CROSS SECTION	**21.00**	EACH		
155	8100	CONCRETE-CLASS A	**23.11**	CU YD		
156	8150	STEEL REINFORCEMENT	**776.00**	LB		
157	8711	CHAIN LINK FENCE-6 FT	**840.00**	LIN FT		
158	9630	CL2 ASPH 0.38A PG64-22	**7,534.00**	TON		
159	9423	MEDIAN CROSSOVER (B1)	**1.00**	EACH		
160	9423	MEDIAN CROSSOVER (B2)	**1.00**	EACH		
161	9423	MEDIAN CROSSOVER (B3)	**1.00**	EACH		
162	9631	CONC MED BAR BOX IN TY14(50)A1	**2.00**	EACH		
163	9632	CONC MED BAR BOX IN TY14(50)B1	**13.00**	EACH		
164	9633	CONC MED BARR TY 14B	**285.00**	LIN FT		
165	9634	CONC MED BARR TY 14B (50)	**30,059.00**	LIN FT		
166	9635	CONC MED BARR TY 14B (50) 1A	**998.00**	LIN FT		
167	9644	TEMP CONC BARR WALL	**56,100.00**	LIN FT		
168	2003	RELOCATE TEMP CONC MED BARRIEF	**81,690.00**	LIN FT		
169	2002	TEMP CONC BARRIER WALL REMOVE	**56,100.00**	LIN FT		

NON-BIDDING SHEET

THE QUANTITY SHEET(S) REPRESENTS THE ESTIMATED QUANTITIES (ONLY) FOR THE SUBJECT PROJECT. PROPOSAL(S) MAY NOT BE AVAILABLE WHEN THE QUANTITIES ARE POSTED.
YOUR BID **WILL NOT** BE CONSIDERED IF THESE SHEET(S) ARE MADE A PART OF THE BID PROPOSAL WHICH YOU SUBMIT TO THE KENTUCKY DEPARTMENT OF HIGHWAYS.

TRANSPORTATION CABINET
Department of Highways
FRANKFORT, KY 40622

Sheet No: 9
PCN: 02-0723
Letting: 12/20/2002

JEFFERSON COUNTY
IM 264-1 (146) 0

Item No.	Code No.	Item	Approximate Quantity	Unit	Unit Price Dollars	Amount Dollars
170	9636	REM CON MED BARR	**27,633.00**	LIN FT		
171	9637	DRAIN LAYER\BOND BREAK PG64-22	**23,623.00**	TON		
172	1720	RECONSTRUCT EXISTING INLET (MED BARRIER BOX)	**71.00**	EACH		
173	1720	RECONSTRUCT EXISTING INLET (CURB BOX)	**58.00**	EACH		
174	9246	BORE & JACK (PIPE)	**70.00**	LIN FT		
175	9638	REMOVE FLUME	**45.00**	EACH		
176	9277	SILT CHECK TY 2 MOD	**84.00**	EACH		
177	9278	CLEAN SILT CHECK TY 2 MOD	**168.00**	EACH		
178	9216	REM RAISED ISLAND	**47.00**	SQ YD		
179	9639	RESURFACE ISLAND	**295.00**	SQ YD		
180	9640	MAINTAIN LIGHTING	**1.00**	LP SUM		
181	6579	PAVEMENT MARKER TYPE V INSTALL (B W/R)	**2,364.00**	EA		
182	6579	PAVEMENT MARKER TYPE V INSTALL (B Y/R)	**2,313.00**	EA		
183	9679	CRASH CUSHION TY VII (D,W)	**1.00**	EACH		
184	2367	GUARDRAIL END TREATMENT TYPE 1 (TEMP)	**1.00**	EACH		
185	2369	GUARDRAIL END TREATMENT TY 2A (TEMP)	**2.00**	EACH		
186	9641	CONC SHLDR BARR WALL	**483.00**	LIN FT		

NON-BIDDING SHEET

THE QUANTITY SHEET(S) REPRESENTS THE ESTIMATED QUANTITIES (ONLY) FOR THE SUBJECT PROJECT. PROPOSAL(S) MAY NOT BE AVAILABLE WHEN THE QUANTITIES ARE POSTED.
YOUR BID **WILL NOT** BE CONSIDERED IF THESE SHEET(S) ARE MADE A PART OF THE BID PROPOSAL WHICH YOU SUBMIT TO THE KENTUCKY DEPARTMENT OF HIGHWAYS.

TRANSPORTATION CABINET
Department of Highways
FRANKFORT, KY 40622

Sheet No: 10
PCN: 02-0723
Letting: 12/20/2002

JEFFERSON COUNTY
IM 264-1 (146) 0

Item No.	Code No.	Item	Approximate Quantity	Unit	Unit Price Dollars	Amount Dollars
187	9642	REM CONC SHLDR BARR WALL	**118.00**	LIN FT		
188	2091	REMOVING PAVEMENT (ASPHALT SHOULDER)	**42,648.00**	SQ YD		
189	9643	TEMPORARY RAMP (#1)	**1.00**	LP SUM		
190	9643	TEMPORARY RAMP (#2)	**1.00**	LP SUM		
191	9643	TEMPORARY RAMP (#3)	**1.00**	LP SUM		
192	9643	TEMPORARY RAMP (#4)	**1.00**	LP SUM		
193	9678	TEMP BARR WALL Y SECTION	**2.00**	EACH		
194	9675	CONC MED BARR WALL TY 14B2(50)	**95.00**	LIN FT		
195	6550	PAVE STRIPING-TEMP REM TAPE-W (12")	**12,799.00**	LIN FT		
196	9246	BORE & JACK (3" SLEEVE)	**1,800.00**	LIN FT		
197	9157	SHOULDER CLOSURE	**12.00**	EACH		
198	9645	CONC MILLING FOR EDGE KEY	**3,924.00**	SQ YD		
		ITS SUMMARY				
199	9646	RAMP REFERENCE MARKER	**61.00**	EACH		
200	6491	STEEL REINFORCEMENT FOR SIGNS	**4,854.60**	LB		
201	6490	CLASS A CONCRETE FOR SIGNS	**55.10**	CU YD		
202	6411	STEEL POST TYPE 2	**804.00**	LIN FT		
203	4904	BARRIER MOUNTING BRACKET	**38.00**	EA		

NON-BIDDING SHEET

THE QUANTITY SHEET(S) REPRESENTS THE ESTIMATED QUANTITIES (ONLY) FOR THE SUBJECT PROJECT. PROPOSAL(S) MAY NOT BE AVAILABLE WHEN THE QUANTITIES ARE POSTED.
YOUR BID **WILL NOT** BE CONSIDERED IF THESE SHEET(S) ARE MADE A PART OF THE BID PROPOSAL WHICH YOU SUBMIT TO THE KENTUCKY DEPARTMENT OF HIGHWAYS.

TRANSPORTATION CABINET
Department of Highways
FRANKFORT, KY 40622

Sheet No: 11
PCN: 02-0723
Letting: 12/20/2002

JEFFERSON COUNTY
IM 264-1 (146) 0

Item No.	Code No.	Item	Approximate Quantity	Unit	Unit Price Dollars	Amount Dollars
204	4903	REFERENCE MARKER	**90.00**	EA		
205	4901	TELEPHONE SERVICE	**9.00**	EA		
206	4899	ELECTRICAL SERVICE	**11.00**	EA		
207	4871	POLE-35 FT WOODEN	**12.00**	EACH		
208	4834	WIRE-NO. 6	**5,223.00**	LIN FT		
209	4833	WIRE-NO. 8	**1,907.00**	LIN FT		
210	4820	TRENCHING AND BACKFILLING	**2,799.00**	LIN FT		
211	4810	JUNCTION BOX	**30.00**	EACH		
212	4795	CONDUIT-2 INCH	**650.00**	LIN FT		
213	4742	POLE BASE-HIGH MAST	**8.00**	EACH		
214	2187	SITE PREPARATION	**2.00**	EACH		
215	4791	CONDUIT-3/4 INCH	**2,594.00**	LIN FT		
216	4795	CONDUIT-2 INCH	**2,799.00**	LIN FT		
217	9246	BORE & JACK (CONDUIT)	**650.00**	LIN FT		
218	9087	WIRE #10	**1,974.00**	LIN FT		
219	9647	WIRE #1	**1,732.00**	LIN FT		
220	9648	TELEPHONE CABLE	**2,514.00**	LIN FT		
221	9649	TRANSFORMER	**2.00**	EACH		
222	9650	OSS 120' GALV STEEL (VMS)	**2.00**	EACH		
223	9651	POLE 80' W/LOWERING DEVICE	**8.00**	EACH		
224	9652	WINCH LOWERING TOOL	**1.00**	EACH		

NON-BIDDING SHEET

THE QUANTITY SHEET(S) REPRESENTS THE ESTIMATED QUANTITIES (ONLY) FOR THE SUBJECT PROJECT. PROPOSAL(S) MAY NOT BE AVAILABLE WHEN THE QUANTITIES ARE POSTED.
YOUR BID **WILL NOT** BE CONSIDERED IF THESE SHEET(S) ARE MADE A PART OF THE BID PROPOSAL WHICH YOU SUBMIT TO THE KENTUCKY DEPARTMENT OF HIGHWAYS.

TRANSPORTATION CABINET
Department of Highways
FRANKFORT, KY 40622

Sheet No: 12
PCN: 02-0723
Letting: 12/20/2002

JEFFERSON COUNTY
IM 264-1 (146) 0

Item No.	Code No.	Item	Approximate Quantity	Unit	Unit Price Dollars	Amount Dollars
225	9653	CAMERA INTERFACE BOX	**8.00**	EACH		
226	9654	CCTV ASSEMBLY	**8.00**	EACH		
227	9655	CCTV KEYBOARD CONTROLLER	**1.00**	EACH		
228	9656	VIDEO TRANSMISSION SYSTEM	**8.00**	EACH		
229	9657	CCTV CONTROL CABLE (1000FT)	**1.00**	EACH		
230	9658	RWIS TOWER	**1.00**	EACH		
231	9659	RWIS EQUIPMENT	**1.00**	EACH		
232	9660	RADAR VEHICLE DETECTOR	**9.00**	EACH		
233	9661	LOCAL RADIO 222 MHZ	**8.00**	EACH		
234	9662	DYNAMIC MESSAGE SIGN 3X24	**2.00**	EACH		
235	9663	ENCLOSURE MODEL 336	**8.00**	EACH		
236	9664	DAKTRONICS DMS SPARES KIT	**2.00**	EACH		
237	9665	CDPD AIRLINK MODEM	**1.00**	EACH		
238	9666	CAMER,DOME,PWR & INTFACE UNIT	**2.00**	EACH		
239	9667	VISIONS SYS ADPRO COMP/DECOMP	**2.00**	EACH		
240	9668	US ROB COUR V.EVERYTHING MODEM	**2.00**	EACH		
241	9669	PATTON RS232-RS422 CONVERTER	**4.00**	EACH		
242	9670	EIS WIDE BAND RADAR	**2.00**	EACH		
243	9671	RADIO 220 MHZ	**2.00**	EACH		
244	9672	8PORT INPUT FOR VIDEO SWITCH	**3.00**	EACH		
245	9673	PRE-WIRED LOWERING SYS ARM	**1.00**	EACH		
246	9674	ULTRAK BRIDGE CONNECTOR	**2.00**	EACH		

NON-BIDDING SHEET

THE QUANTITY SHEET(S) REPRESENTS THE ESTIMATED QUANTITIES (ONLY) FOR THE SUBJECT PROJECT. PROPOSAL(S) MAY NOT BE AVAILABLE WHEN THE QUANTITIES ARE POSTED.
YOUR BID **WILL NOT** BE CONSIDERED IF THESE SHEET(S) ARE MADE A PART OF THE BID PROPOSAL WHICH YOU SUBMIT TO THE KENTUCKY DEPARTMENT OF HIGHWAYS.

TRANSPORTATION CABINET
Department of Highways
FRANKFORT, KY 40622

Sheet No: 13
PCN: 02-0723
Letting: 12/20/2002

JEFFERSON COUNTY
IM 264-1 (146) 0

Item No.	Code No.	Item	Approximate Quantity	Unit	Unit Price Dollars	Amount Dollars
		LIGHTING QUANTITIES				
247	6704	POLE 30' MTG HT 15' BKT ALUM	**32.00**	EACH		
248	6729	POLE 40' M H TWIN 15' BKT ALUM	**33.00**	EACH		
249	6756	LOWERING DEVICE	**21.00**	EACH		
250	6773	HPS LUMINAIRE 1000 W HIGH MAST	**44.00**	EACH		
251	4700	POLE 30' MTG HT	**175.00**	EACH		
252	4701	POLE 40' MTG HT	**119.00**	EACH		
253	4714	POLE 120' MTG HT HIGH MAST	**21.00**	EACH		
254	4721	BRACKET 6'	**238.00**	EACH		
255	4723	BRACKET 10'	**175.00**	EACH		
256	4740	POLE BASE	**207.00**	EACH		
257	4741	POLE BASE IN MEDIAN WALL	**152.00**	EACH		
258	4742	POLE BASE-HIGH MAST	**21.00**	EACH		
259	4750	TRANSFORMER BASE	**207.00**	EACH		
260	4760	POLE W/SECONDARY CONTROL EQUIF	**4.00**	EACH		
261	4761	LIGHTING CONTROL EQUIPMENT	**2.00**	EACH		
262	4770	HPS LUMINAIRE	**413.00**	EACH		
263	4780	FUSED CONNECTOR KIT	**998.00**	EACH		
264	4793	CONDUIT-1 1/4 INCH	**26,910.00**	LIN FT		
265	4794	CONDUIT-1 1/2 INCH	**16,910.00**	LIN FT		
266	4795	CONDUIT-2 INCH	**1,947.00**	LIN FT		
267	4796	CONDUIT-2 1/2 INCH	**220.00**	LIN FT		

NON-BIDDING SHEET

THE QUANTITY SHEET(S) REPRESENTS THE ESTIMATED QUANTITIES (ONLY) FOR THE SUBJECT PROJECT. PROPOSAL(S) MAY NOT BE AVAILABLE WHEN THE QUANTITIES ARE POSTED.
YOUR BID **WILL NOT** BE CONSIDERED IF THESE SHEET(S) ARE MADE A PART OF THE BID PROPOSAL WHICH YOU SUBMIT TO THE KENTUCKY DEPARTMENT OF HIGHWAYS.

TRANSPORTATION CABINET
Department of Highways
FRANKFORT, KY 40622

Sheet No: 14
PCN: 02-0723
Letting: 12/20/2002

JEFFERSON COUNTY
IM 264-1 (146) 0

Item No.	Code No.	Item	Approximate Quantity	Unit	Unit Price Dollars	Amount Dollars
268	4797	CONDUIT-3 INCH	**29,855.00**	LIN FT		
269	4811	JUNCTION BOX TYPE B	**84.00**	EACH		
270	4820	TRENCHING AND BACKFILLING	**42,715.00**	LIN FT		
271	4821	OPEN CUT ROADWAY	**1,020.00**	LIN FT		
272	4830	LOOP WIRE	**468.00**	LIN FT		
273	4832	WIRE-NO. 12	**37,667.00**	LIN FT		
274	4833	WIRE-NO. 8	**87,108.00**	LIN FT		
275	4834	WIRE-NO. 6	**17,000.00**	LIN FT		
276	4835	WIRE-NO. 4	**20,370.00**	LIN FT		
277	4836	WIRE-NO. 2	**124,416.00**	LIN FT		
278	4850	CABLE-NO. 14/1 PAIR	**50.00**	LIN FT		
279	4873	POLE-45 FT WOODEN	**16.00**	EACH		
280	4895	LOOP SAW SLOT AND FILL	**202.00**	LIN FT		
281	4935	TEMPORARY SIGNAL	**1.00**	LP SUM		
282	4940	REMOVE LIGHTING	**1.00**	LP SUM		
283	9677	REM LIGHTING CONTROL CENTER	**3.00**	EACH		
284	4810	JUNCTION BOX (ON MED WALL)	**33.00**	EACH		
285	4942	REMOVE, STORE & REINSTALL POLE	**1.00**	EACH		
286	6777	H P SODIUM LUMINAIRE 400 WATT	**16.00**	EACH		
		SIGNING QUANTITIES				
287	6201	OSS GALV STEEL CANTILEVER MOD	**13.00**	EACH		

NON-BIDDING SHEET

THE QUANTITY SHEET(S) REPRESENTS THE ESTIMATED QUANTITIES (ONLY) FOR THE SUBJECT PROJECT. PROPOSAL(S) MAY NOT BE AVAILABLE WHEN THE QUANTITIES ARE POSTED.
YOUR BID **WILL NOT** BE CONSIDERED IF THESE SHEET(S) ARE MADE A PART OF THE BID PROPOSAL WHICH YOU SUBMIT TO THE KENTUCKY DEPARTMENT OF HIGHWAYS.

TRANSPORTATION CABINET
Department of Highways
FRANKFORT, KY 40622

Sheet No: 15
PCN: 02-0723
Letting: 12/20/2002

JEFFERSON COUNTY
IM 264-1 (146) 0

Item No.	Code No.	Item	Approximate Quantity	Unit	Unit Price Dollars	Amount Dollars
288	6490	CLASS A CONCRETE FOR SIGNS	**880.50**	CU YD		
289	6491	STEEL REINFORCEMENT FOR SIGNS	**63,976.40**	LB		
290	6400	GMSS GALV STEEL TYPE A	**362.00**	LB		
		BEGIN ALTERNATE A				
291	6405	SBM ALUMINUM PANEL SIGNS	**12,086.00**	SQ FT		
292	6406	SBM ALUM SHEET SIGNS .080 INCH	**1,051.00**	SQ FT		
293	6407	SBM ALUM SHEET SIGNS .125 INCH	**1,814.00**	SQ FT		
		END ALTERNATE A				
		BEGIN ALTERNATE B				
294	6408	SBM GALV STEEL PANEL SIGNS	**12,086.00**	SQ FT		
295	6409	SBM GALV STEEL SHT SIGNS 12 GA	**2,865.00**	SQ FT		
		END ALTERNATE B				
		.				
		BEGIN ALTERNATE A				
296	6400	GMSS GALV STEEL TYPE A	**1,188.00**	LB		
297	6440	GMSS GALV STEEL TYPE B	**6,956.00**	LB		
		END ALTERNATE A				
		BEGIN ALTERNATE B				
298	6400	GMSS GALV STEEL TYPE A	**1,865.00**	LB		
299	6440	GMSS GALV STEEL TYPE B	**6,956.00**	LB		
300	6402	GMSS ALUMINUM	**845.00**	LB		
		END ALTERNATE B				

NON-BIDDING SHEET

THE QUANTITY SHEET(S) REPRESENTS THE ESTIMATED QUANTITIES (ONLY) FOR THE SUBJECT PROJECT. PROPOSAL(S) MAY NOT BE AVAILABLE WHEN THE QUANTITIES ARE POSTED.
YOUR BID **WILL NOT** BE CONSIDERED IF THESE SHEET(S) ARE MADE A PART OF THE BID PROPOSAL WHICH YOU SUBMIT TO THE KENTUCKY DEPARTMENT OF HIGHWAYS.

TRANSPORTATION CABINET
Department of Highways
FRANKFORT, KY 40622

Sheet No: 16
PCN: 02-0723
Letting: 12/20/2002

JEFFERSON COUNTY
IM 264-1 (146) 0

NON-BIDDING SHEET

Item No.	Code No.	Item	Approximate Quantity	Unit	Unit Price Dollars	Amount Dollars
		.				
301	6411	STEEL POST TYPE 2	**5,457.00**	LIN FT		
302	6412	STEEL POST MILE MARKERS	**14.00**	EACH		
303	6417	FLEXIBLE DELINEATOR POST-W	**621.00**	EACH		
304	6418	FLEXIBLE DELINEATOR POST-Y	**362.00**	EACH		
305	6422	OSS ALUMINUM 60 FT TRUSS	**1.00**	EACH		
306	6424	OSS ALUMINUM 65 FT TRUSS	**6.00**	EACH		
307	6426	OSS ALUMINUM 70 FT TRUSS	**6.00**	EACH		
308	6436	OSS ALUMINUM 75 FT TRUSS	**4.00**	EACH		
309	6438	OSS ALUMINUM 80 FT TRUSS	**3.00**	EACH		
310	6440	GMSS GALV STEEL TYPE B	**520.00**	LB		
311	6448	SIGN BRIDGE ATTACHMENT BRACKET	**1.00**	EACH		
312	6449	REM OVERHEAD SIGN SUPPORT STR	**32.00**	EACH		
313	6450	REM OVERHEAD STRUC CONC BASE	**50.00**	EACH		
314	6451	REMOVE SIGN SUPPORT BEAM	**22.00**	EACH		
		TRAFFIC LOOP QUANTITIES				
315	4793	CONDUIT-1 1/4 INCH	**140.00**	LIN FT		
316	4810	JUNCTION BOX (6"X6"X4")	**12.00**	EACH		
317	4820	TRENCHING AND BACKFILLING	**140.00**	LIN FT		
318	4830	LOOP WIRE	**9,052.00**	LIN FT		
319	4895	LOOP SAW SLOT AND FILL	**2,484.00**	LIN FT		

THE QUANTITY SHEET(S) REPRESENTS THE ESTIMATED QUANTITIES (ONLY) FOR THE SUBJECT PROJECT. PROPOSAL(S) MAY NOT BE AVAILABLE WHEN THE QUANTITIES ARE POSTED.
YOUR BID **WILL NOT** BE CONSIDERED IF THESE SHEET(S) ARE MADE A PART OF THE BID PROPOSAL WHICH YOU SUBMIT TO THE KENTUCKY DEPARTMENT OF HIGHWAYS.

TRANSPORTATION CABINET
Department of Highways
FRANKFORT, KY 40622

Sheet No: 17
PCN: 02-0723
Letting: 12/20/2002

JEFFERSON COUNTY
IM 264-1 (146) 0

Item No.	Code No.	Item	Approximate Quantity	Unit	Unit Price Dollars	Amount Dollars
320	2742	TRAINEE PAYMENT REIMBURSEMENT	**10,000.00**	HOUR		
321	2568	MOBILIZATION	**1.00**	LP SUM		
322	2569	DEMOBILIZATION	**1.00**	LP SUM		
323		**TOTAL BID**				$.

This project contains an Incentive/Disincentive based on project time. The Contractor must include the number of Calendar Days anticipated to complete the project. The result of the following equation will be the GRAND TOTAL for bid comparisons.

(A) Total Bid + [(B) Calendar Days X $25,000] = GRAND TOTAL

FAILURE TO INCLUDE A NUMBER OF CALENDAR DAYS WILL RESULT IN YOUR BID BEING REJECTED AND NOT READ.

(A) Total Bid $_____

\+ (B) _____ X $25,000 $_____
Calendar Days

= GRAND TOTAL $_____

SHEET

PROVISIONS RELATIVE TO SENATE BILL 258 (1994)

During the performance of the contract, the contractor agrees to comply with applicable provisions of:

1.	KRS 136	Corporation and Utility Taxes
2.	KRS 139	Sale and Use Taxes
3.	KRS 141	Income Taxes
4.	KRS 337	Wages and Hours
5.	KRS 338	Occupational Safety and Health of Employees
6.	KRS 341	Unemployment Compensation
7.	KRS 342	Workers Compensation

Any final determinations of a violation by the contractor within the previous five (5) years pursuant to the applicable statutes above are revealed as follows:

_____

_____

_____

_____

_____

_____

_____

_____

CERTIFICATION FOR FEDERAL-AID CONTRACT

The prospective participant certifies, by signing and submitting this bid or proposal, to the best of his or her knowledge and belief, that:

(1) No Federal appropriated funds have been paid or will be paid, by or on behalf of the undersigned, to any person for influencing or attempting to influence an officer or employee of any Federal agency, a Member of Congress, an officer or employee of Congress, or an employee of a Member of Congress in connection with the awarding of any Federal contract, the making of any Federal grant, the making of any Federal loan, the entering into of any cooperative agreement, and the extension, continuation, renewal, amendment, or modification of any Federal contract, grant, loan, or cooperative agent.

(2) If any funds other than Federal appropriated funds have been paid or will be paid to any person for influencing or attempting to influence an officer or employee of any Federal agency, a Member of Congress, an officer or employee of Congress, or an employee of a Member of Congress in connection with this Federal contract, grant, loan, or cooperative agreement, the undersigned shall complete and submit Standard Form-LLL, "Disclosure Form to Report Lobbying," in accordance with its instructions.

This certification is a material representation of fact which reliance was placed when this transaction was made or entered into. Submission of this certification is a prerequisite for making or entering into this transaction imposed by Section 1352, Title 31, U.S. Code. Any person who fails to file the required certification shall be subject to a civil penalty of not less than $10,000 and not more than $100,000 for each such failure.

The prospective participant also agrees by submitting his or her bid or proposal that he or she shall require that the language of this certification be included in all lower tier subcontracts, which exceed $100,000 and that all such subrecipients shall certify and disclose accordingly.

_____

(Insert name of Individual, Joint Venture, Co-partnership, or Corporation submitting bid).

_____

(Signature)

_____

(Title)

CERTIFICATION

COMMONWEALTH OF KENTUCKY

COUNTY _____
PROJECT NO. _____

I, _____, _____, under penalty
(President or Authorized Official of Bidder) (Title)

perjury under the laws of the United States, do hereby certify that, except as noted below,

_____
(Insert name of individual, Joint Venture, Co-Partnership or Corporation Submitting Bid)

any person associated therewith in the capacity of (owner, partner, director, officer, principal investigator, project director, manager, auditor, or any position involving the Administration of Federal Funds): is not currently under suspension, debarment, voluntary exclusion, or determination of ineligibility by any federal agency; has not been suspended, debarred, voluntarily excluded or determined ineligible by any federal agency within the past 3 years; does not have a proposed debarment pending; and has not been indicted, convicted, or had a civil judgement rendered against (it) by a court of competent jurisdiction in any matter involving fraud or official misconduct within the past 3 years.

Please list below any exceptions to the foregoing, to whom it applies, initiating agency and dates of action.

Exceptions: _____

_____

_____ _____
(Signature) (Title)

REVISED: 8-23-89

NON-COLLUSION CERTIFICATION

COMMONWEALTH OF KENTUCKY
COUNTY _____
PROJECT NO. _____

I, _____, _____, under
(Name of officer signing certification) (Title)

penalty of perjury under the laws of the United States, do hereby certify that

_____,
(Insert name of Individual, Joint Venture, Co-partnership, or Corporation submitting bid)

its agent, officers or employees have not directly or indirectly entered into any agreement, participated in any collusion, or otherwise taken action in restraint of free competitive bidding in connection with this proposal.

_____
(Signature)

_____
(Title)

REVISED: 8-23-89

NON-COLLUSION CERTIFICATION

COMMONWEALTH OF KENTUCKY
COUNTY _____
PROJECT NO. _____

I,_____, _____, under
(Name of officer signing certification) (Title)

penalty or perjury under the laws of the United States, do hereby certify that

_____,(In
sert name of Individual, Joint Venture, Co-partnership, or Corporation submitting bid)

its agent, officers or employees have not directly or indirectly entered into any agreement, participated in any collusion, or otherwise taken action in restraint of free competitive bidding in connection with this proposal.

_____
(Signature)

_____
(Title)

REVISED: 8-23-89

Certification with regard to the Performance of Previous Contracts or Subcontracts subject to the Equal Opportunity Clause and the filing of Required Reports.

The bidder _____, proposed subcontractor _____, hereby certifies that he has ____, has not _____, participated in a previous contract or subcontract subject to the equal opportunity clause, as required by Executive Orders 10925, 11114, or 11246, and that he has _____, has not _____, filed with the Joint Reporting Committee, the Director of the Office of Federal Contract Compliance, a Federal Government contracting or administering agency, or the Former President's Committee on Equal Employment Opportunity, all reports due under the applicable filing requirements.

_____
(Company)

By: _____

_____
(Title)

Date: _____

NOTE: The above certification is required by the Equal Employment Opportunity Regulations of the Secretary of Labor (41 CFR 60-1.7(b) (1)), and must be submitted by bidders and proposed subcontractors only in connection with the contracts and subcontracts which are subject to the equal opportunity clause. Contracts and subcontracts which are exempt from the equal opportunity clause are set forth in 41 CFR 60-1.5. (Generally only contracts or subcontracts of $10,000 or under are exempt.)

Currently, Standard Form 100 (EEO-1) is the only report required by the Executive Orders of their implementing regulation.

Proposed prime contractors and subcontractors who have participated in a previous contract or subcontract subject to the Executive Orders and have not filed reports should note that 41 CFR 60-1.7(b) (1) prevents the award of contracts and subcontracts unless such contractor submits a report covering the delinquent period or such other period specified by the Federal Highway Administration or by the Director, Office of Federal Contract Compliance, U.S. Department of Labor.

CERTIFICATION OF BID PROPOSAL

We (I) propose to furnish all labor, equipment and materials necessary to construct and/or improve the subject project in accordance with the plans, the Transportation Cabinet's Standard Specifications for Road and Bridge Construction, current edition, special provisions, notes applicable to the project as indicated herein and all addenda issued on this project subsequent to purchase of proposal.

We (I) attach a bid proposal guaranty as provided in the special provisions in an amount not less than 5% of the total bid. We agree to execute a contract in accordance with this bid proposal within 15 calendar days after the receipt of the notice of award for the project.

We (I) have examined the site of proposed work, project plans, specifications, special provisions, and notes applicable to the project referred to herein. We understand that the quantities shown herein are estimated quantities subject to increase or decrease as provided in the specifications.

"The bidder certifies that it has secured participation by Disadvantaged Business Enterprises ("DBE") in the amount of ____ percent of the total value of this contract and that the DBE participation is in compliance with the requirements of 49 CFR 26 and the policies of the Kentucky Transportation Cabinet pertaining to the DBE Program."

_____
Name of Contracting Firm

BY: _____
Authorized Agent Title

_____
Address City State Zip Code

_____
Telephone Number

When two or more organizations bid as a joint venture, enter names of each organization and an authorized agent for each organization must sign above.