Appendix A
Examples

KENTUCKY TRANSPORTATION CABINET
DIVISION OF HIGHWAY DESIGN
PAVEMENT BRANCH

TC 61-29E
REV. 6-06

Pavement Design <20,000,000 ESAL's
& off the National Highway System

Sheet 1

County Example 1 Item 1-00 UPN N/A

Road Name Troubled Water Bridge F.P. N/A

Replacement of bridge and approaches.

Traffic 1,200 ,2006 3,700 ,2026 E.S.A.L. 5×10^5

Existing: Type Asphalt on DGA Thickness 8″ on 4″

Length 0.1 Miles. Design Speed 55 M.P.H. Design CBR 3

FOR TYPICAL SECTION SEE ATTACHED SHEET(S)

PAVEMENT

Traffic Lanes

1	DGA BASE	4″ DEPTH
212	CL2 ASPH BASE 1.00D PG64-22	8¾″ DEPTH(4½″+4¼″)
301	CL2 ASPH SURF 0.38D PG64-22	1¼″ DEPTH

Shoulders
(2′ @ 2%)

1	DGA BASE	4″ DEPTH
212	CL2 ASPH BASE 1.00D PG64-22	8¾″ DEPTH(4½″+4¼″)
301	CL2 ASPH SURF 0.38D PG64-22	1¼″ DEPTH

(Remaining 6′ @ 8%)

NOTE:
Shoulders shall be paved full width within the guardrail limits or 200 feet. The remainder of the project shall be constructed with shoulders as otherwise shown or matching existing.

SUBMITTED_____ DATE _____ Designer

APPROVED _____ DATE _____ Project Manager

APPROVED _____ DATE _____ T.E.B.M. for Pavement Design
(As Required)

PAVEMENT (Cont.)

Shoulder Paving Within Guardrail Limits

1	DGA BASE	FULL DEPTH
212	CL2 ASPH BASE 1.00D PG64-22	4¼″ DEPTH
301	CL2 ASPH SURF 0.38D PG64-22	1¼″ DEPTH

Asphalt Seal required from outside edge of paved shoulder to a point two feet down existing ditch or fill slope. Two applications of the following:

291	EMULSIFIED ASPHALT RS-2	2.40 LB/SQ YD
100	ASPHALT SEAL AGGREGATE	20 LB/SQ YD (No. 8 or 9M)

PLAN NOTE NO.: 448

EXAMPLE 1
Ex1.dgn

EXAMPLE 1
ITEM # 1-00

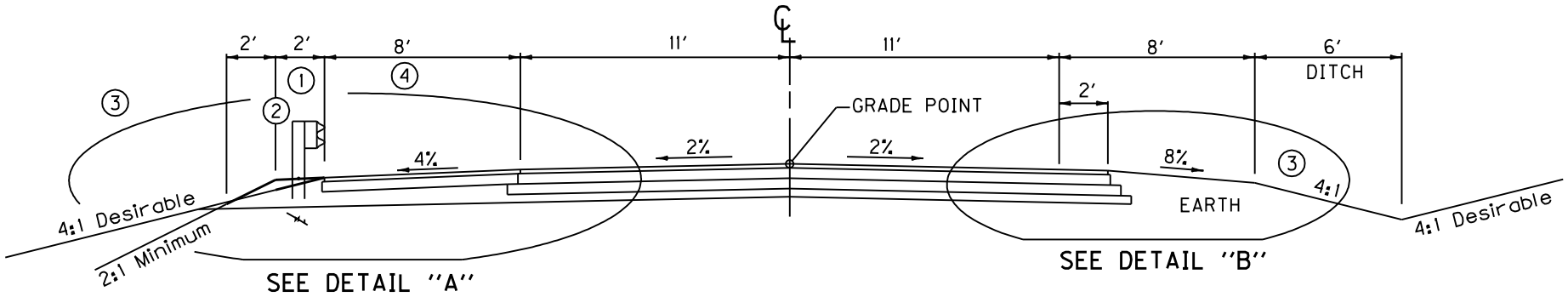

EXAMPLE 1

1. SHOULDER SHALL BE WIDENED 2 FEET WHERE GUARDRAIL IS REQUIRED.
2. ASPHALT SEAL.
3. SEE CROSS SECTIONS FOR SLOPES OUTSIDE THE SHOULDER POINT.
4. SHOULDER PAVING WITHIN GUARDRAIL LIMITS.

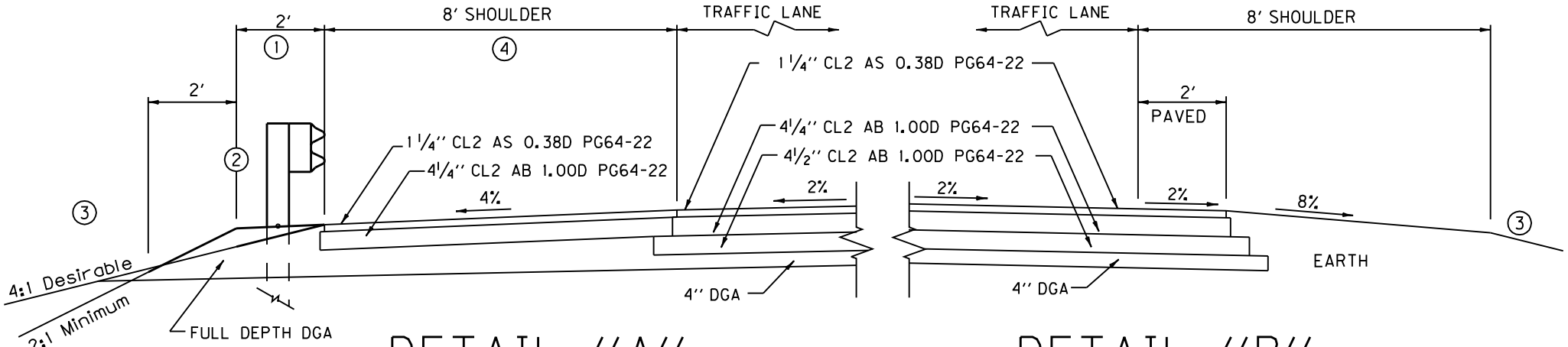

DETAIL "A" DETAIL "B"

TYPICAL TANGENT SECTION

TROUBLED WATER BRIDGE

EXAMPLE 1

KENTUCKY TRANSPORTATION CABINET
DIVISION OF HIGHWAY DESIGN
PAVEMENT BRANCH

TC 61-29E
REV. 6-06

Pavement Design <20,000,000 ESAL's
& off the National Highway System

Sheet 1

County Example 2 Item 2-00 UPN FSP 010 0060 010-012 057D

Road Name U.S. 60 (13th Street in Ashland) F.P. 00STP 02601 015

Widen and reconstruct U.S. 60 (13th Street)from KY. 168 (Blackburn Ave.)

to Oakview Road/Pollard Road

Traffic 14,900 ,2006 22,100 ,2006 E.S.A.L. 13,829,000

Existing: Type Asphalt on PCC on DGA Base Thickness 6″ on 8″ on 2″

Length 0.5 Miles. Design Speed 40 M.P.H. Design CBR 3

FOR TYPICAL SECTION SEE ATTACHED SHEET(S)

PAVEMENT

Traffic Lanes

New Pavement

1	DGA	4″ DEPTH
18	DRAINAGE BLANKET TYPE II-ASPH	4″ DEPTH
214	CL3 ASPH BASE 1.0D PG64-22	8½″ DEPTH(4½″+4″)
216	CL3 ASPH BASE 1.0D PG76-22	4″ DEPTH
	CL3 ASPH SURF 0.38B PG76-22	1¼″ DEPTH

Traffic Lanes

Widening

1	DGA	4″ DEPTH
18	DRAINAGE BLANKET TYPE II-ASPH	4″ DEPTH
214	CL3 ASPH BASE 1.0D PG64-22	8½″ DEPTH(4½″+4″)

Overall

190	LEVELING AND WEDGING PG64-22	TON (Est. from X-Sect.)
216	CL3 ASPH BASE 1.0D PG76-22	4″ DEPTH
	CL3 ASPH SURF 0.38B PG76-22	1¼″ DEPTH

Shoulders

1811	STANDARD CURB AND GUTTER MOD.	LINEAR FOOT

Longitudinal Pavement Edge Drains

78	CRUSHED AGGREGATE SIZE NO 2	TON
1000	PERFORATED PIPE-4IN	FOOT
1010	NON-PERFORATED PIPE-4IN	FOOT
8100	CONCRETE-CLASS A	CU FT

(Cont. on Sheet No. 2)

SUBMITTED_____ DATE _____ Designer

APPROVED _____ DATE _____ Project Manager

APPROVED _____ DATE _____ T.E.B.M. for Pavement Design
(As Required)

PAVEMENT (Cont.)

NOTES:

(1) All longitudinal pipe drainage systems for the pavement drainage blanket shall be outletted to a Headwall, Median Box Inlet, a Ditch Box, or Curb Box Inlet. Outlets shall be in a fill section whenever possible. Outlet spacing shall not exceed 500ft except grades 1% or less, then the spacing of outlets shall not exceed 250ft. All sags shall have an outlet. The Design Engineer shall spot these on the plans or in the proposal.

PLAN NOTE NO.: 448

SPECIAL NOTE

3M WET BOTTOM BOILER SLAG (3-1-04)
( ) PAVEMENT SUBSURFACE DRAINAGE OUTLET (2-2-00) Attached
( ) PERFORATED PIPE – 4in FOR AGGREGATE BACKFILLED TRENCH (11-20-06) Attached

Example 2
Ex2.dgn

EXAMPLE 2
ITEM # 2-00

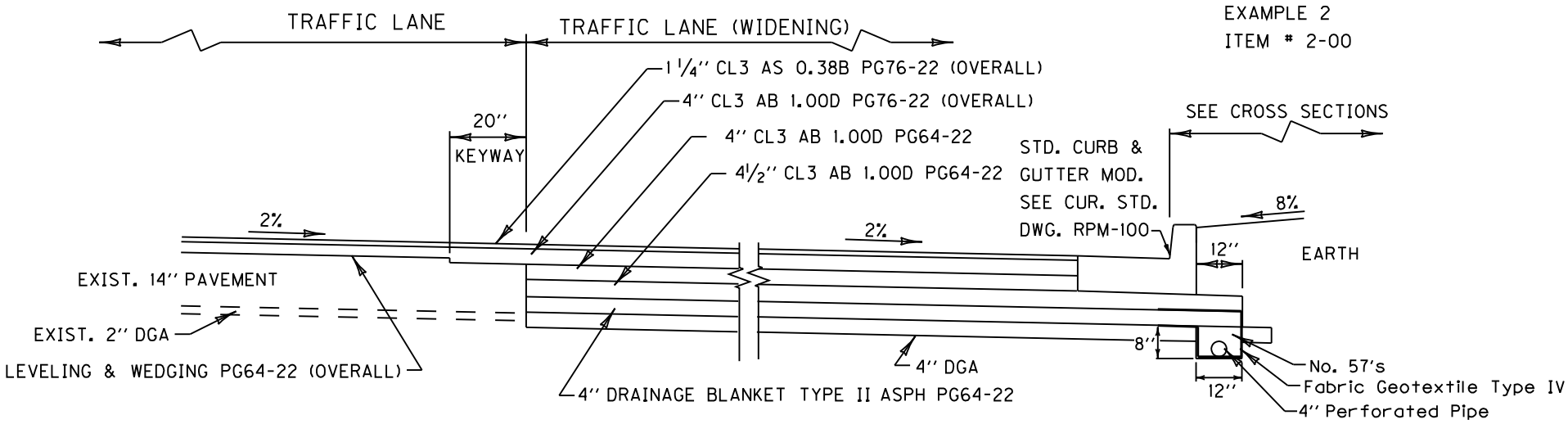

WIDENING

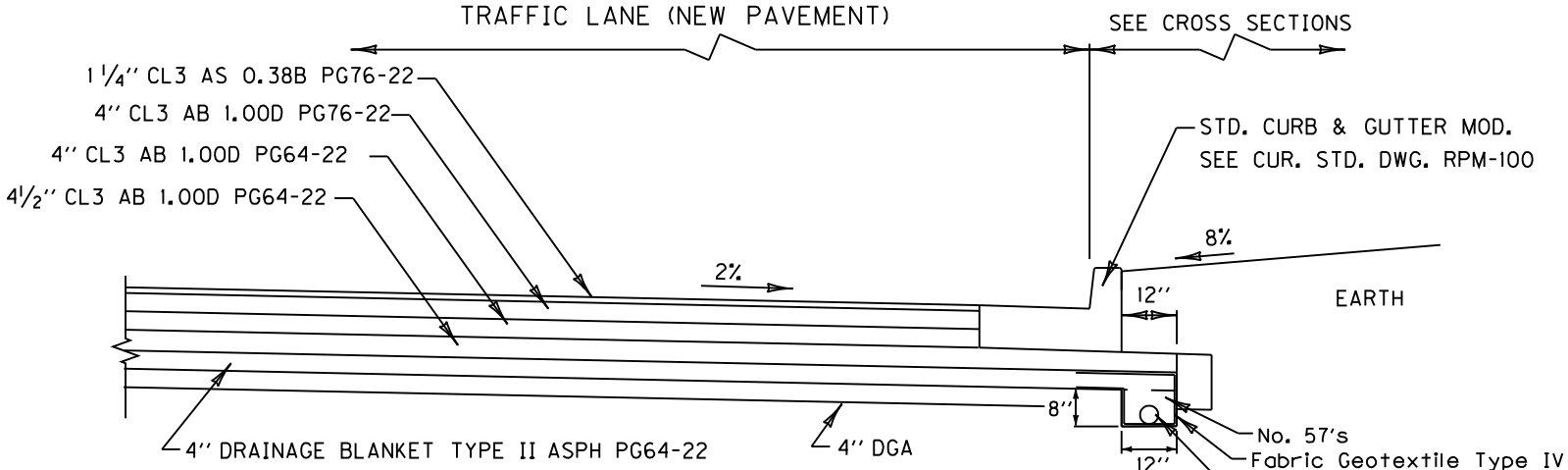

NEW PAVEMENT

TYPICAL PAVEMENT DESIGN

13th STREET IN ASHLAND (U.S. 60)

EXAMPLE 2