CALL NO. 302

CONTRACT ID. 112316

ROWAN COUNTY

FED/STATE PROJECT NUMBER FE06 103 0060 016-018

DESCRIPTION MOREHEAD-OLIVE HILL ROAD

WORK TYPE GUARDRAIL

PRIMARY COMPLETION DATE 6/30/2012

LETTING DATE: October 21, 2011

Sealed Bids will be received electronically through the Bid Express bidding service until 10:00 AM EASTERN DAYLIGHT TIME October 21, 2011. Bids will be publicly announced at 10:00 AM EASTERN DAYLIGHT TIME.

REQUIRED BID PROPOSAL GUARANTY: Not less than 5% of the total bid.

TABLE OF CONTENTS

PART I SCOPE OF WORK

- PROJECT(S), COMPLETION DATE(S), & LIQUIDATED DAMAGES
- CONTRACT NOTES
- STATE CONTRACT NOTES
- GUARDRAIL
- TRAFFIC CONTROL PLAN
- SKETCH MAP(S)
- SUMMARY SHEET(S)

PART II SPECIFICATIONS AND STANDARD DRAWINGS

- SPECIFICATIONS REFERENCE
- SUPPLEMENTAL SPECIFICATIONS
- STANDARD DRAWINGS THAT APPLY
- DELINEATORS FOR GUARDRAIL
- CULVERT, ENTRANCE & STORM SEWER PIPE TYPES & COVER HEIGHTS

PART III EMPLOYMENT, WAGE AND RECORD REQUIREMENTS

- LABOR AND WAGE REQUIREMENTS
- EXECUTIVE BRANCH CODE OF ETHICS
- KENTUCKY EQUAL EMPLOYMENT OPPORTUNITY ACT OF 1978
- PROJECT WAGE RATES

PART IV INSURANCE

PART V BID ITEMS

PART I

SCOPE OF WORK

CONTRACT ID - 112316 ADMINISTRATIVE DISTRICT - 09

PROJECT(S) IDENTIFICATION AND DESCRIPTION:

COUNTY - ROWAN PCN - MP10300601201
FE06 103 0060 016-018
MOREHEAD-OLIVE HILL ROAD FROM GLENWOOD HOLLOW ROAD (MP 16.254) EXTENDING EAST TO CARTER COUNTY LINE (MP 17.112), A DISTANCE OF 0.86 MILES. GUARDRAIL.
GEOGRAPHIC COORDINATES LATITUDE 38^15'56" LONGITUDE 83^19'55"
AVERAGE DAILY TRAFFIC - 3220 AVERAGE MAINLINE WIDTH - 21.0 FEET

COMPLETION DATE(S):
COMPLETION DATE - June 30, 2012
APPLIES TO ENTIRE CONTRACT

CONTRACT NOTES

PROPOSAL ADDENDA

All addenda to this proposal must be applied when calculating bid and certified in the bid packet submitted to the Kentucky Department of Highways. Failure to use the correct and most recent addenda may result in the bid being rejected.

BID SUBMITTAL

Bidder must use the Department's Expedite Bidding Program available on the Internet web site of the Department of Highways, Division of Construction Procurement. (www.transportation.ky.gov/contract)

The Bidder must download the bid file located on the Bid Express website (www.bidx.com) to prepare a bid packet for submission to the Department. The bidder must submit electronically using Bid Express.

JOINT VENTURE BIDDING

Joint venture bidding is permissible. All companies in the joint venture must be prequalified in one of the work types in the Qualifications for Bidders for the project. The bidders must get a vendor ID for the joint venture from the Division of Construction Procurement and register the joint venture as a bidder on the project. Also, the joint venture must obtain a digital ID from Bid Express to submit a bid. A joint bid bond of 5% may be submitted for both companies or each company may submit a separate bond of 5%.

UNDERGROUND FACILITY DAMAGE PROTECTION

The contractor is advised that the Underground Facility Damage Protection Act of 1994, became law January 1, 1995. It is the contractor's responsibility to determine the impact of the act regarding this project, and take all steps necessary to be in compliance with the provision of the act.

REGISTRATION WITH THE SECRETARY OF STATE BY A FOREIGN ENTITY

Pursuant to KRS 176.085(1)(b), an agency, department, office, or political subdivision of the Commonwealth of Kentucky shall not award a state contract to a person that is a foreign entity required by KRS 14A.9-010 to obtain a certificate of authority to transact business in the Commonwealth ("certificate") from the Secretary of State under KRS 14A.9-030 unless the person produces the certificate within fourteen (14) days of the bid or proposal opening. If the foreign entity is not required to obtain a certificate as provided in KRS 14A.9-010, the foreign entity should identify the applicable exception. Foreign entity is defined within KRS 14A.1-070.

For all foreign entities required to obtain a certificate of authority to transact business in the Commonwealth, if a copy of the certificate is not received by the contracting agency within the time frame identified above, the foreign entity's solicitation response shall be deemed non-responsive or the awarded contract shall be cancelled.

Businesses can register with the Secretary of State at https://secure.kentucky.gov/sos/ftbr/welcome.aspx .

ACCESS TO RECORDS

The contractor, as defined in KRS 45A.030 (9) agrees that the contracting agency, the Finance and Administration Cabinet, the Auditor of Public Accounts, and the Legislative Research Commission, or their duly authorized representatives, shall have access to any books, documents, papers, records, or other evidence, which are directly pertinent to this contract for the purpose of financial audit or program review. Records and other prequalification information confidentially disclosed as part of the bid process shall not be deemed as directly pertinent to the contract and shall be exempt from disclosure as provided in KRS 61.878(1)(c). The contractor also recognizes that any books, documents, papers, records, or other evidence, received during a financial audit or program review shall be subject to the Kentucky Open Records Act, KRS 61.870 to 61.884.

In the event of a dispute between the contractor and the contracting agency, Attorney General, or the Auditor of Public Accounts over documents that are eligible for production and review, the Finance and Administration Cabinet shall review the dispute and issue a determination, in accordance with Secretary's Order 11-004. (See attachment)

SPECIAL NOTE FOR PROJECT QUESTIONS DURING ADVERTISEMENT

Questions about projects during the advertisement should be submitted in writing to the Division of Construction Procurement. This may be done by fax (502) 564-7299 or email to kytc.projectquestions@ky.gov. The Department will attempt to answer all submitted questions. The Department reserves the right not to answer if the question is not pertinent or does not aid in clarifying the project intent.

The deadline for posting answers will be 3:00 pm Eastern Daylight Time, the day preceding the Letting. Questions may be submitted until this deadline with the understanding that the later a question is submitted, the less likely an answer will be able to be provided.

The questions and answers will be posted for each Letting under the heading "Questions & Answers" on the Construction Procurement website (www.transportation.ky.gov/contract). The answers provided shall be considered part of

this Special Note and, in case of a discrepancy, will govern over all other bidding documents.

09/30/2011

SPECIAL NOTE FOR RECIPROCAL PREFERENCE

Reciprocal preference to be given by public agencies to resident bidders

By reference, KRS 45A.490 to 45A.494 are incorporated herein and in compliance regarding the bidders residency. Bidders who want to claim resident bidder status should complete the Affidavit for Claiming Resident Bidder Status along with their bid in the Expedite Bidding Program. Submittal of the Affidavit should be done along with the bid in Bid Express.

SPECIAL NOTES FOR GUARDRAIL

I. DESCRIPTION

All work shall be performed in accordance with the Department's current Standard Specifications and applicable Special Provisions except as hereafter specified. Article references are to the Standard Specifications.

This work shall consist furnishing all equipment, labor, materials, and incidentals for the following: (1) Site Preparation; (2) Do temporary erosion control, temporary pollution control, seeding and protection, and clean up; (3) Remove existing guardrail systems; (4) Furnishing and installing guardrail systems; (5) Maintaining and control traffic; and (6) all other work specified in the Contract.

II. MATERIALS

All materials shall be sampled and tested in accordance with the Department's Sampling Manual and the materials shall be available for sampling a sufficient time in advance of the use of the materials to allow for the necessary time for testing unless otherwise specified in these Notes.

A. Maintain and Control Traffic. See Traffic Control Plan.

B. Seeding and Protection. Use Seed Mixture No. 1.

C. Guardrail Posts. Steel Guardrail posts are required. No alternate is allowed.

III. CONSTRUCTION METHODS

A. Maintain and Control Traffic. See Traffic Control Plan.

B. Site Preparation. Prepare the shoulder for the guardrail installation, which includes regrading, reshaping, adding and compacting of suitable materials on the existing shoulders to provide proper template or foundation for the guardrail; filling voids left as the result of removing existing guardrail and guard posts with dry sand; removal of all obstructions or any other items; excavation and embankment; temporary pollution and erosion control; disposal of waste materials; final dressing and cleanup; and seeding and protection. All site preparation shall be as approved or directed by the engineer.

C. Remove existing Guardrail system, including Concrete Posts and Existing Guardrail End Treatments. Remove existing guardrail system including the guardrail end treatments, Bridge End connectors and all other elements of the existing guardrail system as per Section 719, except that the Contractor will take possession of all concrete posts and all concrete associated with existing bridge and/or guardrail end treatments. Locate all disposal areas off the Right of Way.

Dispose of all existing concrete off the right of way at locations approved by the Engineer. Salvage existing material as per Section 719.03.06 except the Contractor shall deliver existing salvaged guardrail system materials to the Bailey Bridge Lot at Wilkinson Blvd in Frankfort, KY. Contact Bailey Bridge Lot Supervisor at (502) 564-2946 to schedule the delivery of material. Deliver the material between the hours of 8:00AM and 4:30PM, Monday through Friday. Remove any existing guardrail with a lane closure in place. Do not leave the area unprotected. After the guardrail is removed, a shoulder closure shall remain in place until the guardrail is replaced in that area.

D. Installation of Guardrail systems. Furnish guardrail systems as per Section 719. Steel guardrail posts are required. No alternate is allowed. The shoulder width shall be a minimum of 2 Ft unless otherwise directed by the Engineer. Grade slopes and shoulders as per applicable guardrail standard drawings. Guardrail locations shown on summary and/or drawing is approximate only. The Engineer will determine the exact termini for guardrail installations at time of construction. Construct radii at entrances and road intersections as per applicable Standard Drawings.

The guardrail shall be erected to the lines and grades shown on current standard drawings or as designated by the Engineer. Unless otherwise directed, the guardrail shall be constructed 2' 3" above true theoretical shoulder elevations, or by any method approved by the Engineer which allows the construction of the guardrail to the true grade and prevents apparent sags.

When installing guardrail the blunt end shall NOT be left exposed where it would be hazardous to the public. When it is not practical to complete the construction of the rail or the permanent end treatments first, the Engineer may require a temporary end by connecting at least 25 feet of rail to the last post, and by slightly flaring, and burying the end of the rail completely into the existing shoulder. If left overnight, a drum with bridge panel as detailed on Standard Drawings for Miscellaneous Traffic Control Devices shall be placed in advance of the guardrail end and maintained during use. The cost of the temporary end, including the barrier and panel, shall be included in the unit price for Guardrail - Single Face.

E. Property Damage. The Contractor will be responsible for all damage to public and/or private property resulting from his work.

F. Coordination with Utility Companies. NOTICE: Utility locations are not shown in the proposal for this project and have not been located by the Department. Locate all underground, above ground and overhead utilities prior to beginning construction. The Contractor shall have the responsibility for contacting and maintaining liaison with all utility companies that have utilities located within the project limits. Do not disturb existing overhead or underground utilities. It is not anticipated that any utility facilities will need to be relocated and/or adjusted; however, in the event that it is discovered that the work does require that utilities be relocated and/or adjusted, the utility companies will work concurrently with the Contractor while relocating their facilities. The Contractor shall be responsible for repairing all utility damage that occurs as a result of his operations.

G. Right of Way Limits. The exact limits of the Right-of-Way have not been established by the

Department. The Contractor shall limit his activities to obvious Right-of-Way, permanent or temporary easements, and work areas secured by the Department through consent and release of the adjacent property owners. The Contractor shall be responsible for all encroachments onto private lands.

H. Disposal of Waste. Dispose of all removed concrete, debris, and other waste as per Section 204.03.08. The Department will incur no cost to obtain the disposal sites. The Department will NOT make direct payment for disposal of waste and debris from the project.

I. Final Dressing, Seeding and Protection, and Clean Up. Apply final dressing, class A to all disturbed areas, both on and off the Right-of-Way. Sow all disturbed earthen areas with Seed Mixture No. 1. The Department will NOT make direct payment for final dressing, seeding and protection, and clean up.

J. On-Site Inspection. Each Contractor submitting a bid for this work shall make a thorough inspection of the site prior to submitting his bid and shall thoroughly familiarize themselves with the existing conditions so that the work can be expeditiously performed after a contract is awarded. Submission of a bid will be considered evidence of this inspection having been made.

IV. METHOD OF MEASUREMENT

A. Maintain and Control Traffic. See Traffic Control Plan.

B. Site preparation. Site preparation will not be measured for payment but shall be incidental to the bid item "Guardrail, Single Face".

C. Remove Guardrail End Treatment. The Department will measure the quantity as each.

D. Seeding and Protection, Temporary Erosion Control, Temporary Pollution Control, Waste Disposal. The Department will NOT MEASURE for payment the operations shown here. These include Seeding and Protection, Temporary Erosion Control, Temporary Pollution Control, and Waste Disposal. These activities shall be incidental to the bid item “Guardrail, Single Face”.

V. BASIS OF PAYMENT

A. Maintain and Control Traffic. See Traffic Control Plan.

B. Site Preparation. Payment for site preparation shall be not paid directly. Site Preparation will be incidental to the bid item "Guardrail, Single Face".

C. Remove Guardrail End Treatment. The Department will make payment for the completed and accepted quantities of Remove Guardrail End Treatment. The Department will

consider payment as full compensation for furnishing all materials, equipment, labor, other expenses and all incidentals necessary to complete this work to remove the Guardrail End Treatment.

D. Seeding and Protection, Temporary Erosion Control, Temporary Pollution Control, Waste Disposal. The Department will NOT pay as per applicable sections for the following operations: Seeding and Protection, Temporary Erosion Control, Temporary Pollution Control, and Waste Disposal. These activities shall be incidental to the bid item "Guardrail, Single Face."

1-3414guardrailcontractorfurnremrepl6ftcontshouldering
01/01/2009

TRAFFIC CONTROL PLAN

TRAFFIC CONTROL GENERAL

Except as provided herein, traffic shall be maintained in accordance with the 2008 Standard Specifications and the Standard Drawings, current editions. Except for the roadway and traffic control bid items listed, all items of work necessary to maintain and control traffic will be paid at the lump sum bid price to "Maintain and Control Traffic".

Contrary to Section 106.01, traffic control devices used on this project may be new, or used in like new condition, at the beginning of the work and maintained in like new condition until completion of the work.

PROJECT PHASING & CONSTRUCTION PROCEDURES

At this time, no restrictions are anticipated. At the discretion of the Engineer, additional days and hours may be added when lane closures will not be allowed.

The Contractor may maintain alternating one way traffic during construction. The clear lane width shall be 10 Feet. If traffic should be stopped due to construction operations, and a school bus on an official run arrives on the scene, the Contractor shall make provisions for the passage of the bus as quickly as possible. The Contractor shall provide additional traffic control or flag persons as directed by the Engineer.

LANE CLOSURES

Lane closures shall not be left in place during non-working hours.

SIGNS

Contrary to Section 112.04.02 and 112.04.03, Low Shoulder signs will not be measured for payment, but will be incidental to Maintain and Control Traffic. Contrary to section 112.04.02, only long term signs (signs intended to be continuously in place for more than 3 days) will be measured for payment; short term signs (signs intended to be left in place for 3 days or less) will not be measured for payment but will be incidental to Maintain and Control Traffic.

BARRICADES

Barricades used in lieu of barrels and cones for channelization or delineation will be incidental to Maintain and Control Traffic according to Section 112.04.01. Barricades used to protect slide areas and/or pavement removal areas will be bid as each according to Section 112.04.04.

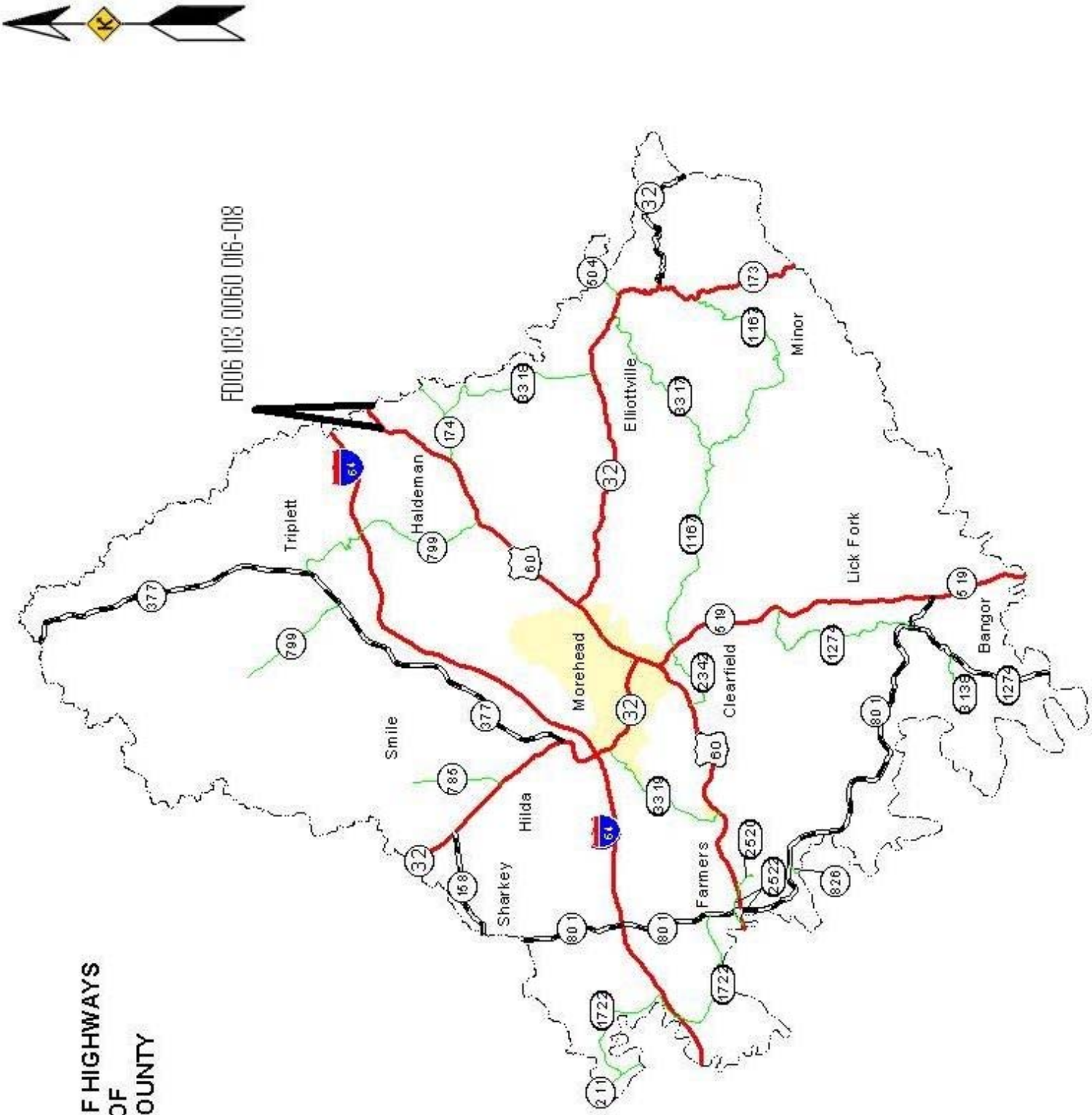

DEPARTMENT OF HIGHWAYS
MAP OF
ROWAN COUNTY

US 60 MP 16.254 - 16.947 FE06

NEW GUARDRAIL							REMOVE GUARDRAIL				
LANE	END TREAT-MENT	BEGIN MILEPOINT	END MILEPOINT	END TREAT-MENT	LIN FEET	REMARKS	LANE	BEGIN MILEPOINT	END MILEPOINT	LIN FEET	REMARKS
RT	TIE IN TO EXISTING	16.254	16.440	TY 1	987.5		RT	16.254	16.254	0.0	REMOVE TERMINAL SECTION NUMBER 1
RT	TY 1	16.440	16.495	RADIUS & TERMINAL SECTION #1	312.5					0.0	
RT	RADIUS & TERMINAL SECTION #1	16.497	16.578	RADIUS & TERMINAL SECTION #1	462.5					0.0	
RT	RADIUS & TERMINAL SECTION #1	16.582	16.632	RADIUS & TERMINAL SECTION #1	300.0					0.0	
LT	RADIUS & TERMINAL SECTION #1	16.834	16.947	TY 1	612.5					0.0	
										0.0	
			SUB	TOTAL	2675.0					0.0	
RT	RADIUS & TERMINAL SECTION #1	16.634	16.855	TY 3	1187.5					0.0	
LT	RADIUS & TERMINAL SECTION #1	16.270	16.307	RADIUS & TERMINAL SECTION #1	225.0					0.0	
										0.0	
			SUB	TOTAL	1412.5					0.0	
										0.0	
					TOTAL	4087.5				0.0	
										0.0	

PART II

SPECIFICATIONS AND STANDARD DRAWINGS

SPECIFICATIONS REFERENCE

Any reference in the plans or proposal to the *Standard Specifications for Road and Bridge Construction, Edition of 2004,* and *Standard Drawings, Edition of 2000* are superseded by *Standard Specifications for Road and Bridge Construction, Edition of 2008* and *Standard Drawings, Edition of 2003 with the 2008 Revision.*

Supplemental Specifications to The Standard Specifications for Road and Bridge Construction, 2008 Edition

(Effective with the July15, 2011 Letting)

SUBSECTION: **REVISION:**	101.02 Abbreviations. Insert the following abbreviation and text into the section: KEPSC Kentucky Erosion Prevention and Sediment Control
SUBSECTION: **REVISION:**	101.03 Definitions. Replace the definition for Specifications – *Special Provisions* with the following: Additions and revisions to the Standard and Supplemental Specifications covering conditions peculiar to an individual project.
SUBSECTION: **REVISION:**	102.03 Contents of the Bid Proposal Form. Replace the first sentence of the first paragraph with the following: The Bid Proposal form will be available on the Department internet website (http://transportation.ky.gov/contract/). Delete the second paragraph. Delete the last paragraph.
SUBSECTION: **REVISION:**	102.04 Issuance of Bid Proposal Form. Replace Heading with the following: 102.04 Bidder Registration. Replace the first sentence of the first paragraph with the following: The Department reserves the right to disqualify or refuse to place a bidder on the eligible bidder's list for a project for any of the following reasons: Replace the last sentence of the subsection with the following: The Department will resume placing the bidder on the eligible bidder's list for projects after the bidder improves his operations to the satisfaction of the State Highway Engineer.
SUBSECTION: **REVISION:**	102.06 Examination of Plans, Specifications, Special Provisions, Special Notes, and Site of Work. Replace the first paragraph with the following: Examine the site of the proposed work, the Bid Proposal, Plans, specifications, contract forms, and bulletins and addendums posted to the Department's website and the Bid Express Bidding Service Website before submitting the Bid Proposal. The Department considers the submission of a Bid Proposal prima facie evidence that the bidder has made such examination and is satisfied as to the conditions to be encountered in performing the work and as to the requirements of the Contract.
SUBSECTION: **REVISION:**	102.07.01 General. Replace the first sentence with the following: Submit the Bid Proposal on forms furnished on the Bid Express Bidding Service website (www.bidx.com). Replace the first sentence of the third paragraph with the following: Bid proposals submitted shall use an eligible Digital ID issued by Bid Express.

Supplemental Specifications to The Standard Specifications for Road and Bridge Construction, 2008 Edition

(Effective with the July15, 2011 Letting)

SUBSECTION: **REVISION:**	102.07.02 Computer Bidding. Replace the first paragraph with the following: Subsequent to registering for a specific project, use the Department's Expedite Bidding Program on the internet website of the Department of Highways, Division of Construction Procurement (http://transportation.ky.gov/contract/). Download the bid file from the Bid Express Bidding Service Website to prepare a Bid Proposal for submission to the Department. Submit Bid Proposal electronically through Bid Express Bidding Service. Delete the second and third paragraph.
SUBSECTION: **REVISION:**	102.08 Irregular Bid Proposals. Delete the following from the first paragraph: 4) fails to submit a disk created from the Highway Bid Program. Replace the second paragraph with the following: The Department will consider Bid Proposals irregular and may reject them for the following reasons: 1) when there are unauthorized additions, conditional or alternate bids, or irregularities of any kind which may tend to make the Bid Proposal incomplete, indefinite, or ambiguous as to its meaning; or 2) when the bidder adds any provisions reserving the right to accept or reject an award, or to enter into a Contract pursuant to an award; or 3) any failure to comply with the provisions of Subsection 102.07; or 4) Bid Proposals in which the Department determines that the prices are unbalanced; or when the sum of the total amount of the Bid Proposal under consideration exceeds the bidder's Current Capacity Rating.
SUBSECTION: **REVISION:**	102.09 Bid Proposal Guaranty. Insert the following after the first sentence: Bid Proposals must have a bid proposal guaranty in the amount indicated in the bid proposal form accompany the submittal. A guaranty in the form of a paper bid bond, cashier's check, or certified check in an amount no less than the amount indicated on the submitted electronic bid is required when the electronic bid bond was not utilized with the Bid Express Bidding Service. Paper bid bonds must be delivered to the Division of Construction Procurement prior to the time of the letting.
SUBSECTION: **REVISION:**	102.10 Delivery of Bid Proposals. Replace paragraph with the following: Submit all Bid Proposals prior to the time specified in the Notice to Contractors. All bids shall be submitted electronically using Bid Express Bidding Services. Electronically submitted bids must be done in accordance with the requirements of the Bid Express Bidding Service.
SUBSECTION: **REVISION:**	102.11 Withdrawal or Revision of Bid Proposals. Replace the paragraph with the following: Bid Proposals can be withdrawn in accordance the requirements of the Bid Express Bidding Service prior to the time of the Letting.

Supplemental Specifications to The Standard Specifications for Road and Bridge Construction, 2008 Edition

(Effective with the July15, 2011 Letting)

SUBSECTION: **REVISION:**	102.13 Public Opening of Bid Proposals. Replace Heading with the following: 102.13 Public Announcement of Bid Proposals. Replace the paragraph with the following: The Department will publicly announce all Bid Proposals at the time indicated in the Notice to Contractors.
SUBSECTION: **REVISION:**	103.02 Award of Contract. Replace the first sentence of the third paragraph with the following: The Department will normally award the Contract within 10 working days after the date of receiving Bid Proposals unless the Department deems it best to hold the Bid Proposals of any or all bidders for a period not to exceed 60 calendar days for final disposition of award.
SUBSECTION: **REVISION:**	105.02 Plans and Working Drawings. Insert the following after the fourth paragraph: Submit electrical shop drawings, design data, and descriptive literature for materials in electronic format to the Division of Traffic Operations for approval. Drawings and literature shall be submitted for lighting and signal components. Notify the Engineer when submitting information to the Division of Traffic Operations. Do not begin work until shop drawings are approved. Submit shop drawings for traffic counting equipment and materials in electronic format to the Engineer or the Division of Planning. Notify the Engineer when submitting information directly to the Division of Planning. Do not begin work until shop drawings are reviewed and approved.
SUBSECTION: **REVISION:**	105.03 Record Plans. Replace the section with the following: Record Plans are those reproductions of the original Plans on which the accepted Bid Proposal was based and, and signed by a duly authorized representative of the Department. The Department will make these plans available for inspection in the Central Office at least 24 hours prior to the time of opening bids and up to the time of letting of a project or projects. The quantities appearing on the Record Plans are the same as those on which Bid Proposals are received. The Department will use these Record Plans as the controlling plans in the prosecution of the Contract. The Department will not make any changes on Record Plans subsequent to their issue unless done so by an approved contract modification. The Department will make 2 sets of Record Plans for each project, and will maintain one on file in the Central Office and one of file in the District Office. The Department will furnish the Contractor with the following: 1 full size, 2 half size and an electronic file copy of the Record Plans at the Pre-Construction conference.

Supplemental Specifications to The Standard Specifications for Road and Bridge Construction, 2008 Edition

(Effective with the July15, 2011 Letting)

SUBSECTION: **REVISION:**	105.12 Final Inspection and Acceptance of Work. Insert the following paragraphs after the first paragraph: Notify the Engineer when all electrical items are complete. A notice of the electrical work completion shall be made in writing to the Contractor. Electrical items will be inspected when the electrical work is complete and are not subject to waiting until the project as a whole has been completed. The Engineer will notify the Division of Traffic Operations within 3 days that all electrical items are complete and ready for a final inspection. A final inspection will be completed within 90 days after the Engineer notifies the Division of Traffic Operations of the electrical work completion. Energize all electrical items prior to notifying the Engineer that all electrical items are complete. Electrical items must remain operational until the Division of Traffic Operations has inspected and accepted the electrical portion of the project. Payment for the electrical service is the responsibility of the Contractor from the time the electrical items are energized until the Division of Traffic Operations has accepted the work. Complete all corrective work within 90 calendar days of receiving the original electrical inspection report. Notify the Engineer when all corrective work is complete. The Engineer will notify the Division of Traffic Operations that the corrective work has been completed and the project is ready for a follow-up inspection. Upon re-inspection, if additional corrective work is required, complete within the same 90 calendar day allowance. The Department will not include time between completion of the corrective work and the follow up electrical inspection(s). The 90 calendar day allowance is cumulative regardless of the number of follow-up electrical inspections required. The Department will assume responsibility for the electrical service on a project once the Division of Traffic Operations gives final acceptance of the electrical items on the project. The Department will also assume routine maintenance of those items. Any damage done to accepted electrical work items by other Contractors shall be the responsibility of the Prime Contractor. The Department will not be responsible for repairing damage done by other contractors during the construction of the remaining project. Failure to complete the electrical corrective work within the 90 calendar day allowance will result in penalties assessed to the project. Penalties will be assessed at ½ the rate of liquidated damages established for the contract. Replace the following in the second sentence of the second paragraph: Replace Section 213 with Section 212. Delete the fifth paragraph from the section.
SUBSECTION: **REVISION:**	105.13 Claim Resolution Process. Replace the last sentence of the 3. Bullet with the following: If the Contractor did not submit an as-bid schedule at the Pre-Construction Meeting or a written narrative in accordance with Subsection 108.02, the Cabinet will not consider the claim for delay. Delete the last paragraph from the section.

Supplemental Specifications to The Standard Specifications for Road and Bridge Construction, 2008 Edition

(Effective with the July15, 2011 Letting)

SUBSECTION: **REVISION:**	106.04 Buy America Requirement. Replace the section with the following: **106.04 Buy America Requirement.** Follow the "Buy America" provisions as required by Title 23 Code of Federal Regulations § 635.410. Except as expressly provided herein all manufacturing processes of steel or iron materials including but not limited to structural steel, guardrail materials, corrugated steel, culvert pipe, structural plate, prestressing strands, and steel reinforcing bars shall occur in the United States of America, including the application of: • Coating, • Galvanizing, • Painting, and • Other coating that protects or enhances the value of steel or iron products. The following are exempt, unless processed or refined to include substantial amounts of steel or iron material, and may be used regardless of source in the domestic manufacturing process for steel or iron material: • Pig iron, • Processed, pelletized, and reduced iron ore material, or • Processed alloys. The Contractor shall submit a certification stating that all manufacturing processes involved with the production of steel or iron materials occurred in the United States. Produce, mill, fabricate, and manufacture in the United States of America all aluminum components of bridges, tunnels, and large sign support systems, for which either shop fabrication, shop inspection, or certified mill test reports are required as the basis of acceptance by the Department. Use foreign materials only under the following conditions: 1) When the materials are not permanently incorporated into the project; or 2) When the delivered cost of such materials used does not exceed 0.1 percent of the total Contract amount or $2,500.00, whichever is greater. The Contractor shall submit to the Engineer the origin and value of any foreign material used.
SUBSECTION: **REVISION:**	106.10 Field Welder Certification Requirements. Insert the following sentence before the first sentence of the first paragraph: All field welding must be performed by a certified welder unless otherwise noted.
SUBSECTION: **REVISION:**	108.02 Progress Schedule. Insert the following prior to the first paragraph: Specification 108.02 applies to all Cabinet projects except the following project types: • Right of Way Mowing and/or Litter Removal • Waterborne Paint Striping • Projects that contain Special Provision 82 • Projects that contain the Special Note for CPM Scheduling Insert the following paragraph after paragraph two: Working without the submittal of a Written Narrative is violation of this specification and additionally voids the Contractor's right to delay claims. Insert the following paragraph after paragraph six: The submittal of bar chart or Critical Path Method schedule does not relieve the Contractor's requirement to submit a Written Narrative schedule.

Supplemental Specifications to The Standard Specifications for Road and Bridge Construction, 2008 Edition

(Effective with the July15, 2011 Letting)

	Insert the following at the beginning of the first paragraph of A) Written Narrative.: Submit the Written Narrative Schedule using form TC 63-50 available at the Division of Construction's website (http://www.transportation.ky.gov/construction/ResCenter/ResCenter.htm). Replace Part A) Written Narrative 1. And 2. with the following: 1. Provide a description that includes how the Contractor will sequence and stage the work, how the Contractor plans to maintain and control traffic being specific and detailed, and what equipment and crew sizes are planned to execute the work. 2. Provide a list of project milestones including, if applicable, winter shut-downs, holidays, or special events. The Contractor shall describe how these milestones and other dates effect the prosecution of the work. Also, include start date and completion date milestones for the contract, each project if the contract entails multiple projects, each phase of work, site of work, or segment of work as divided in the project plans, proposal, or as subdivided by the Contractor.
SUBSECTION: **REVISION:**	109.07.01 Liquid Asphalt. Add the following to the Adjustable Contract Items: • Stone Matrix Asphalt for Base • Stone Matrix Asphalt for Surface
SUBSECTION: **REVISION:**	110.01 Mobilization. Replace paragraph three with the following: Do not bid an amount for Mobilization that exceeds 5 percent of the sum of the total amounts bid for all items in the Bid Proposal, excluding Mobilization, Demobilization, and contingent amounts established for adjustments and incentives. The Department will automatically adjust any Bid Proposals that are in excess of this amount down to 5 percent to compare Bid Proposals and award the Contract. The Department will award a Contract for the actual amount bid when the amount bid for Mobilization is less than 5 percent, or the Department will award the Contract for the adjusted bid amount of 5 percent when the amount bid for Mobilization is greater than 5 percent. If any errors in unit bid prices for other Contract items in a Contractor's Bid Proposal are discovered after bid opening and such errors reduce the total amount bid for all other items, excluding Mobilization, Demobilization, and contingent amounts established for adjustments and incentives, so that the percent bid for Mobilization is larger than 5 percent, the Department will adjust the amount bid for Mobilization to 5 percent of the sum of the corrected total bid amounts.
SUBSECTION: **REVISION:**	110.02 Demobilization. Replace the third paragraph with the following: Bid an amount for Demobilization that is a minimum of $1,000 or 1.5 percent of the sum of the total amounts bid for all other items in the Bid Proposal, excluding Mobilization, Demobilization, and contingent amounts established for adjustments and incentives. The Department will automatically adjust any Bid Proposal that is less than this amount up to $1,000 or 1.5 percent to compare Bid Proposals and award the Contract. The Department will award a Contract for the actual amount bid when the amount bid for demobilization exceeds 1.5 percent, or the Department will award the Contract for the adjusted bid amount when the amount bid for demobilization is less than the minimum of $1,000 or less than 1.5 percent of the sum of the total amounts bid for all other items in the Bid Proposal, excluding Mobilization, Demobilization, and contingent amounts established for adjustments and incentives.
SUBSECTION: **REVISION:**	110.04 Payment. Insert the following paragraph following the demobilization payment schedule (4th paragraph): The Department will withhold an amount equal to $1,000 for demobilization, regardless of the schedule listed above. The $1,000 withheld for demobilization will be paid when the final estimate is paid.

Supplemental Specifications to The Standard Specifications for Road and Bridge Construction, 2008 Edition

(Effective with the July15, 2011 Letting)

SUBSECTION: **REVISION:**	112.03.01 General Traffic Control. Replace paragraph three with the following: All flaggers shall be trained in current MUTCD flagging procedures. Proof of training must be available for review at the Department's request. Flagging credentials must be current within the last 5 years.
SUBSECTION: **PART:** **REVISION:**	112.03.11 Temporary Pavement Markings. B) Placement and Removal of Temporary Striping. Replace the 2nd sentence of the first paragraph with the following: On interstates and parkways, and other roadways approved by the State Highway Engineer, install pavement striping that is 6 inches in width.
SUBSECTION: **REVISION:**	112.03.12 Project Traffic Coordinator (PTC). Add the following at the end of the subsection: After October 1, 2008 the Department will require the PTC to have successfully completed the applicable qualification courses. Personnel that have not successfully completed the applicable courses by that date will not be considered qualified. Prior to October 1, 2008, conform to Subsection 108.06 A) and ensure the designated PTC has sufficient skill and experience to properly perform the task.
SUBSECTION: **REVISION:**	112.03.15 Non-Compliance of Maintain and Control of Traffic. Add the following section: **112.03.15 Non-Compliance of Maintain and Control of Traffic.** It is the Contractor's responsibility to conform to the traffic control requirements in the TCP, Proposal, plan sheets, specifications, and the Manual on Uniform Traffic Control Devices. Unless specified elsewhere in the contract, a penalty will be assessed in the event of non-compliance with Maintain and Control of Traffic requirements. These penalties will be assessed when the Contractor fails to correct a situation or condition of non-compliance with the contract traffic control requirements after being notified by the Engineer. The calculation of accrued penalties for non-compliance will be based upon the date/time of notification by the Engineer. The amount of the penalty assessed for non-compliance will be determined based upon the work zone duration, as defined by the MUTCD, and will be the greatest of the different calculation methods indicated below: A) Long-term stationary work that occupies a location more than 3 days. Correct the non-compliant issue within 24 hours from initial notification by the Engineer. If the issue is not corrected within 24 hours from the initial notification, a penalty for non-compliance will be assessed on a daily basis beginning from the initial notification of non-compliance. The Contractor will be assessed a $1,000 daily penalty or the amount equal to the contract liquidated damages in Section 108.09, whichever of the 2 is greater. The penalty for non-compliance will escalate as follows for continued non-compliance after the initial notification. 3 Days after Notification $1,500 daily penalty or 1.5 times the contract liquidated damages daily charge rate in Section 108.09, whichever is greater. 7 Days after Notification $2,000 daily penalty or double the contract liquidated damages daily charge rate in Section 108.09, whichever is greater.

Supplemental Specifications to The Standard Specifications for Road and Bridge Construction, 2008 Edition
(Effective with the July15, 2011 Letting)

	B) Intermediate-term stationary work that occupies a location more than one daylight period up to 3 days, or nighttime work lasting more than 1 hour. Correct the non-compliant issue within 4 hours from initial notification by the Engineer. If the issue is not corrected within 4 hours from notification, a penalty for non-compliance will be assessed on an hourly basis beginning from the initial notification of non-compliance. The penalty for non-compliance will be assessed at $200 per hour. C) Short-term stationary is work that occupies a location for more than 1 hour within a single 24-hour period. Correct the non-compliant issue within 1 hour from initial notification by the Engineer. If the issue is not corrected within 1 hour from notification, a penalty for non-compliance will be assessed on an hourly basis beginning from the initial notification of non-compliance. The penalty for non-compliance will be assessed at $200 per hour. If the Contractor remains in violation of the Maintain and Control of Traffic requirements, or if the Department determines it to be in the public's interest, work will be suspended in accordance with Section 108.08 until the deficiencies are corrected. The Department reserves the right to correct deficiencies by any means available and charge the Contractor for labor, equipment, and material costs incurred in emergency situations.
SUBSECTION: **REVISION:**	206.03.02 Embankment Replace the last paragraph with the following: When rock roadbed is specified, construct the upper 2 feet of the embankment according to Subsection 204.03.09 A).
SUBSECTION: **REVISION:**	213.03.03 Inspection and Maintenance. Replace the last sentence of the second paragraph with the following: Initiate corrective action within 24 hours of any noted deficiency and complete the work within 7 calendar days of receipt of the report. The Contractor shall make a concentrated effort to complete any corrective action required prior to the next predicted rainfall event. Insert the following paragraph after the second paragraph: When the Contractor is required to obtain the KPDES permit, it is their responsibility to ensure compliance with the inspection and maintenance requirements of the permit. The Engineer will perform verification inspections a minimum of once per month and within 7 days of a ½ inch or greater rainfall event. The Engineer will document these inspections using Form TC 63-61 A. The Engineer will provide copies of the inspection only when improvements to the BMP's are required. Verification inspections performed by the Engineer do not relieve the Contractor of any responsibility for compliance with the KPDES permit. Initiate corrective action within 24 hours of any noted deficiency and complete the work within 7calendar days of receipt of the report. The Contractor shall make a concentrated effort to complete any corrective action required prior to the next predicted rainfall event.

Supplemental Specifications to The Standard Specifications for Road and Bridge Construction, 2008 Edition

(Effective with the July15, 2011 Letting)

SUBSECTION: **PART:** **REVISION:**	213.03.05 Temporary Control Measures. E) Temporary Seeding and Protection. Replace the first paragraph with the following: Apply an Annual Rye seed mix at a rate of 100 pounds per acre during the months of March through August. In addition to the Annual Rye, add 10 pounds of German Foxtail-Millet (Setaria italica), when performing temporary seeding during the months of June through August. During the months of September through February, apply Winter Wheat or Rye Grain at a rate of 100 pounds per acre. Obtain the Engineer's approval prior to the application of the seed mixture.
SUBSECTION: **PART:** **REVISION:**	213.03.05 Temporary Control Measures. F) Temporary Mulch. Replace the last sentence with the following: Place temporary mulch to an approximate 2-inch loose depth (2 tons per acre) and anchor it into the soil by mechanically crimping it into the soil surface or applying tackifier to provide a protective cover. Regardless of the anchoring method used, ensure the protective cover holds until disturbance is required or permanent controls are in installed.
SUBSECTION: **REVISION:**	303.05 Payment. Replace the second paragraph of the section with the following: The Department will make payment for Drainage Blanket-Type II (ATDB) according to the Lot Pay Adjustment Schedule for Specialty Mixtures in Section 402.
SUBSECTION: **PART:** **REVISION:**	401.02.04 Special Requirements for Dryer Drum Plants. F) Production Quality Control. Replace the first sentence with the following: Stop mixing operations immediately if, at any time, a failure of the automatic electronic weighing system of the aggregate feed, asphalt binder feed, or water injection system control occurs.
SUBSECTION: **REVISION:**	401.02.04 Special Requirements for Dryer Drum Plants. Add the following: Part G) **Water Injection System.** Provided each system has prior approval as specified in Subsection 402.01.01, the Department will allow the use of water injection systems for purposes of foaming the asphalt binder and lowering the mixture temperature for production of Warm Mix Asphalt (WMA). Ensure the equipment for water injection meets the following requirements: 1) Injection equipment computer controls are automatically coupled to the plants controls (manual operation is not permitted); 2) Injection equipment has variable controls that introduce water ratios based on production rates of mixtures; 3) Injects water into the flow of asphalt binder prior to contacting the aggregate; 4) Provides alarms on the water injection system that operate when the flow of water is interrupted or deviates from the prescribed water rate.
SUBSECTION: **REVISION:**	401.03.01 Preparation of Mixtures. Replace the last sentence of the second paragraph with the following: Do not use asphalt binder while it is foaming in a storage tank.

Supplemental Specifications to The Standard Specifications for Road and Bridge Construction, 2008 Edition

(Effective with the July15, 2011 Letting)

SUBSECTION: 401.03.01 Preparation of Mixtures.
REVISION: Replace the third paragraph and Mixing and Laying Temperature table with the following:

Maintain the temperature of the component materials and asphalt mixture within the ranges listed in the following table:

MIXING AND LAYING TEMPERATURES (ºF)			
Material		Minimum	Maximum
Aggregates		240	330
Aggregates used with Recycled Asphalt Pavement (RAP)		240	—
Asphalt Binders	PG 64-22	230	330
	PG 76-22	285	350
Asphalt Mixtures at Plant (Measured in Truck)	PG 64-22 HMA	250	330
	PG 76-22 HMA	310	350
	PG 64-22 WMA	230	275
	PG 76-22 WMA	250	300
Asphalt Mixtures at Project (Measured in Truck When Discharging)	PG 64-22 HMA	230	330
	PG 76-22 HMA	300	350
	PG 64-22 WMA	210	275
	PG 76-22 WMA	240	300

SUBSECTION: 402.01 Description.
REVISION: Replace the paragraph with the following:

Provide the process control and acceptance testing of all classes and types of asphalt mixtures which may be furnished either as hot mix asphalt (HMA) or warm mix asphalt (WMA) produced with water injection systems.

SUBSECTION 402.01.01 Warm Mix Asphalt (WMA) Evaluation and Approval.
REVISION: Add the following subsection:

402.01.01 Warm Mix Asphalt (WMA) Evaluation and Approval.
The Department will evaluate trial production of WMA by use of a water injection system provided the system is installed according to the manufacturer's requirements and satisfies the requirements of Section 401. Evaluation will include production and placement of WMA to demonstrate adequate mixture quality including volumetric properties and density by Option A as specified in Subsection 402.03.02 D). Do not place WMA for evaluation on Department projects. Provided production and placement operations satisfy the applicable quality levels, the Department will approve WMA production on Department projects using the water injection system as installed on the specific asphalt mixing plant evaluated.

SUBSECTION: 402.05.02 Asphalt Mixtures and Mixtures With RAP.
REVISION: Replace Subsection Title as below:

402.05.02 Asphalt Mixtures, HMA and WMA, Including Mixtures With RAP.

SUBSECTION: 402.05.02 Asphalt Mixtures, HMA and WMA, Including Mixtures With RAP.
REVISION: Replace the paragraph with the following:

The Department will pay for the mixture at the Contract unit bid price and apply a Lot Pay Adjustment for each lot placed based on the degree of compliance with the specified tolerances. Using the appropriate Lot Pay Adjustment Schedule, the Department will assign a pay value for the applicable properties within each sublot and average the sublot pay values to determine the pay value for a given property for each lot. The Department will apply the Lot Pay Adjustment for each lot to a defined unit price of $50.00 per ton. The Department will calculate the Lot Pay Adjustment using all possible incentives and disincentives but will not allow the overall pay value for a lot to exceed 1.00.

Supplemental Specifications to The Standard Specifications for Road and Bridge Construction, 2008 Edition

(Effective with the July15, 2011 Letting)

SUBSECTION: 402.05.02 Asphalt Mixtures, HMA and WMA, Including Mixtures With RAP.
PART: C) Conventional and RAP Mixtures Placed on Shoulders.
REVISION: Replace Title and Text with the following:

C) HMA, WMA and RAP Mixtures Placed on Shoulders or Placed as Asphalt Pavement Wedge.

1) Placed monolithically with the Mainline – Width of 4 feet or less. The Department will pay as mainline mixture.
2) Placed monolithically with the Mainline – Width of greater than 4 feet. The Department will pay as mainline mixture but use 1.00 for the Lane and Joint Density Pay Value for shoulder or Asphalt Pavement Wedge quantities.
3) Placed Separately. The Department will use 1.00 for the Lane and Joint Density Pay Value.

SUBSECTION: 402.05.02 Asphalt Mixtures, HMA and WMA, Including Mixtures With RAP.
PART: D) Conventional and RAP Mixtures Placed Monolithically as Asphalt Pavement Wedge.
REVISION: Replace the title with the following:
D) HMA, WMA, and RAP Mixtures Placed Monolithically as Asphalt Pavement Wedge.

Delete the following:
D) HMA, WMA, and RAP Mixtures Placed Monolithically as Asphalt Pavement Wedge. The Department will pay as mainline mixture but use a 1.00 pay value for all properties.

SUBSECTION: 402.05.02 Asphalt Mixtures for Temporary Pavement.
PART: E) Asphalt Mixtures for Temporary Pavement.
REVISION: Replace E) Asphalt Mixtures for Temporary Pavement with the following:

D) Asphalt Mixtures for Temporary Pavement.

SUBSECTION: 402.05.02 Asphalt Mixtures, HMA and WMA, Including Mixtures With RAP.
PART: Lot Pay Adjustment Schedule, Compaction Option A, Base and Binder Mixtures
TABLES: VMA
REVISION: Replace the VMA table with the following:

VMA	
Pay Value	Deviation From Minimum
1.00	≥ min. VMA
0.95	0.1-0.5 below min.
0.90	0.6-1 0 below min.
(1)	> 1.0 below min.

SUBSECTION: 402.05.02 Asphalt Mixtures, HMA and WMA, Including Mixtures With RAP.
PART: Lot Pay Adjustment Schedule, Compaction Option A, Surface Mixtures
TABLES: VMA
REVISION: Replace the VMA table with the following:

VMA	
Pay Value	Deviation From Minimum
1.00	≥ min. VMA
0.95	0.1-0.5 below min.
0.90	0.6-1.0 below min.
(1)	> 1.0 below min.

Supplemental Specifications to The Standard Specifications for Road and Bridge Construction, 2008 Edition

(Effective with the July15, 2011 Letting)

SUBSECTION: 402.05.02 Asphalt Mixtures, HMA and WMA, Including Mixtures With RAP.
PART: Lot Pay Adjustment Schedule, Compaction Option B Mixtures
TABLE: VMA
REVISION: Replace the VMA table with the following:

VMA	
Pay Value	Deviation From Minimum
1.00	≥min. VMA
0.95	0 1-0.5 bel w min.
0.9	0.6-1.0 below min.
(2)	> 1.0 below min.

SUBSECTION: 403.03.03 Preparation of Mixture.
PART: C) Mix Design Criteria.
NUMBER: 1) Preliminary Mix Design.
REVISION: Replace the last two sentences of the paragraph and table with the following:

Complete the volumetric mix design at the appropriate number of gyrations as given in the table below for the number of 20-year ESAL's. The Department will define the relationship between ESAL classes, as given in the bid items for Superpave mixtures, and 20-year ESAL ranges as follows:

		Number of Gyrations		
Class	**ESAL's (millions)**	$N_{initial}$	N_{design}	N_{max}
2	< 3.0	6	50	75
3	3.0 to < 30.0	7	75	115
4	≥ 30.0	8	100	160

SUBSECTION: 403.03.09 Leveling and Wedging, and Scratch Course.
PART: A) Leveling and Wedging.
REVISION: Replace the first sentence of the first paragraph with the following:

Conform to the gradation requirements (control points) of AASHTO M 323 for base, binder, or surface as the Engineer directs.

SUBSECTION: 403.03.09 Leveling and Wedging, and Scratch Course.
PART: B) Scratch Course.
REVISION: Replace the second sentence of the first paragraph with the following:

Conform to the gradation requirements (control points) of AASHTO M 323 for base, binder, or surface as the Engineer directs.

SUBSECTION: 407.01 DESCRIPTION.
REVISION: Replace the first sentence of the paragraph with the following:

Construct a pavement wedge composed of a hot-mixed or warm-mixed asphalt mixture.

SUBSECTION: 409.01 DESCRIPTION.
REVISION: Replace the first sentence of the paragraph with the following:

Use reclaimed asphalt pavement (RAP) from Department projects or other approved sources in hot mix asphalt (HMA) or warm mix asphalt (WMA) provided mixture requirements are satisfied.

SUBSECTION: 410.01 DESCRIPTION.
REVISION: Delete the second sentence of the paragraph.

Supplemental Specifications to The Standard Specifications for Road and Bridge Construction, 2008 Edition

(Effective with the July15, 2011 Letting)

SUBSECTION: 410.03.01 Corrective Work.
REVISION: Replace the last sentence of the paragraph with the following:

Provide a final surface comparable to the adjacent pavement that does not require corrective work in respect to texture, appearance, and skid resistance.

SUBSECTION: 410.03.02 Ride Quality.
PART: B) Requirements.
NUMBER: 1) Category A.
REVISION: Replace the last sentence of the first paragraph with the following:

At the Department's discretion, a pay deduction of $1200 per 0.1-lane-mile section may be applied in lieu of corrective work.

SUBSECTION: 410.03.02 Ride Quality.
PART: B) Requirements.
NUMBER: 2) Category B.
REVISION: Replace the second and third sentence of the first paragraph with the following:

When the IRI is greater than 90 for a 0.1-mile section, perform corrective work, or remove and replace the pavement to achieve the specified IRI. At the Department's discretion, a pay deduction of $750 per 0.1-lane-mile section may be applied in lieu of corrective work.

SUBSECTION: 410.05 PAYMENT.
REVISION: Add the following sentence to the end of the first paragraph:

The sum of the pay value adjustments for ride quality shall not exceed $0 for the project as a whole.

SUBSECTION: 413.05.02 CL3 SMA BASE 1.00D PG76-22.
REVISION: Insert the following sentence between the first and second sentence of the first paragraph:

The Department will calculate the Lot Pay Adjustment using all possible incentives and disincentives but will not allow the overall pay value for a lot to exceed 1.00.

SUBSECTION: 413.05.02 CL3 SMA BASE 1.00D PG 76-22.
TABLE: JOINT DENSITY TABLE
REVISION: Replace the joint density table with the following:

LANE DENSITY	
Pay Value	Test Result (%)
1.05	95.0-96.5
1.00	93.0-94.9
0.95	92.0-92.9 or 96.6-97.0
0.90	91.0-91.9 or 97.1-97.5
(1)	< 91.0 or > 97.5

SUBSECTION: 413.05.03 CL3 SMA SURF 0.50A PG76-22 and CL3 SMA SURF 0.38A PG76-22.
REVISION: Insert the following sentence between the first and second sentence of the first paragraph:

The Department will calculate the Lot Pay Adjustment using all possible incentives and disincentives but will not allow the overall pay value for a lot to exceed 1.00.

Supplemental Specifications to The Standard Specifications for Road and Bridge Construction, 2008 Edition

(Effective with the July15, 2011 Letting)

SUBSECTION: 413.05.03 CL3 SMA SURF 0.50A PG76-22 and CL3 SMA SURF 0.38A PG76-22.
TABLE: JOINT DENSITY TABLE
REVISION: Replace the joint density table with the following:

DENSITY		
Pay Value	Lane Density Test Result (%)	Joint Density Test Result (%)
1.05	95.0-96.5	92.0-96.0
1.00	93.0-94.9	90.0-91.9
0.95	92.0-92.9 or 96.6-97.0	89.0-89.9 or 96.1-96.5
0.90	91.0-91.9 or 97.1-97.5	88.0-88.9 or 96.6-97.0
0.75	----	< 88.0 or > 97.0
(1)	< 91.0 or > 97.5	----

SUBSECTION: 501.05.02 Ride Quality.
REVISION: Add the following sentence to the end of the first paragraph:

The sum of the pay value adjustments for the ride quality shall not exceed $0 for the project as a whole.

SUBSECTION: 505.03.04 Detectable Warnings.
REVISION: Replace the first sentence with the following:

Install detectable warning pavers at all sidewalk ramps and on all commercial entrances according to the Standard Drawings.

SUBSECTION: 505.04.04 Detectable Warnings.
REVISION: Replace the paragraph with the following:

The Department will measure the quantity in square feet. All retrofit applications for maintenance projects will require the removal of existing sidewalks to meet the requirements of the standard drawings applicable to the project. The cost associated with the removal of the existing sidewalk will be incidental to the detectable warnings bid item or incidental to the bid item for the construction of the concrete sidewalk unless otherwise noted.

SUBSECTION: 505.05 PAYMENT.
REVISION: Add the following to the bid item table:

Code	Pay Item	Pay Unit
23158ES505	Detectable Warnings	Square Foot

SUBSECTION: 509.01 DESCRIPTION.
REVISION: Replace the second paragraph with the following:

The Department may allow the use of similar units that conform to the National Cooperative Highway Research Program (NCHRP) 350 Test Level 3 (TL-3) requirements and the typical features depicted by the Standard Drawings. Obtain the Engineers approval prior to use. Ensure the barrier wall shape, length, material, drain slot dimensions and locations typical features are met and the reported maximum deflection is 3 feet or less from the NCHRP 350 TL-3 for Test 3 – 11 (pickup truck impacting at 60 mph at a 25-degree angle.)

Supplemental Specifications to The Standard Specifications for Road and Bridge Construction, 2008 Edition

(Effective with the July15, 2011 Letting)

SUBSECTION: **REVISION:**	601.03.02 Concrete Producer Responsibilities. Replace the first sentence with the following: Obtain the concrete from producers that are in compliance with KM 64-323 and on the Department's List of Approved Materials. Add the following to the first paragraph: If a concrete plant becomes unqualified during a project and there are no other qualified plants in the region, the Department will provide qualified personnel to witness and ensure the producer follows the required specifications. The Department will assess the Contractor a $100 per hour charge for this service.
SUBSECTION: **PART:** **REVISION:**	601.03.02 Concrete Producer Responsibilities. B) Certified Personnel. Replace the second sentence with the following: Ensure that the concrete technicians are certified as ACI Level I (Level I) and KRMCA Level II (Level II).
SUBSECTION: **PART:** **REVISION:**	601.03.02 Concrete Producer Responsibilities. C) Quality Control. Replace the second sentence with the following: Ensure that the Level II concrete technician is present when work is in progress and is responsible for inspecting trucks, batch weight calculations, monitoring batching, making mixture adjustments, reviewing the slump, air content, unit weight, temperature, and aggregate tests, all to provide conforming concrete to the project.
SUBSECTION: **PART:** **REVISION:**	601.03.02 Concrete Producer Responsibilities. D) Producer Testing. Replace with the following: When producing for state work, have a Qualified Concrete Aggregate Technician or KYTC Qualified Aggregate Technician perform, at a minimum, weekly gradations and minus 200 wash tests and daily moisture contents of coarse and fine aggregate (Fine aggregates will not require a minus 200 wash test). Using the daily moisture contents, adjust the approved mix design accordingly prior to production. Ensure that the Level II concrete technician is present when work is in progress and is responsible for inspecting trucks, batch weight calculations, monitoring batching, making mixture adjustments, reviewing the slump, air content, unit weight, temperature, and aggregate tests, all to provide conforming concrete to the project.
SUBSECTION: **PART:** **REVISION:**	601.03.02 Concrete Producer Responsibilities. E) Trip Tickets. Replace the second sentence with the following: Include on the trip ticket the Sample ID for the approved mix design and a statement certifying that the data on the ticket is correct and that the mixture conforms to the mix design.
SUBSECTION: **PART:** **NUMBER:** **REVISION:**	601.03.03 Proportioning and Requirements. C) Mixtures Using Type IP, IS, and I(SM) Cement or Mineral Admixtures 2) Mineral Admixtures. Replace the second sentence with the following: Reduction of the total cement content by a combination of mineral admixtures will be allowed, up to a maximum of 40 percent.

Supplemental Specifications to The Standard Specifications for Road and Bridge Construction, 2008 Edition

(Effective with the July15, 2011 Letting)

SUBSECTION: **PART:** **NUMBER:** **LETTER:** **REVISION:**	601.03.03 Proportioning and Requirements. C) Mixtures Using Type IP, IS, and I(SM) Cement or Mineral Admixtures 2) Mineral Admixtures. a) Fly Ash. Delete the last sentence of the third paragraph.
SUBSECTION: **PART:** **NUMBER:** **LETTER:** **REVISION:**	601.03.03 Proportioning and Requirements. C) Mixtures Using Type IP, IS, and I(SM) Cement or Mineral Admixtures 2) Mineral Admixtures. b) Ground Granulated Blast Furnace Slag (GGBF Slag). Delete the second sentence of the third paragraph.
SUBSECTION: **PART:** **REVISION:**	601.03.03 Proportioning and Requirements. E) Measuring. Add the following sentence: Conform to the individual ingredient material batching tolerances in Appendix A.
SUBSECTION: **PART:** **REVISION:**	601.03.09 Placing Concrete. A) General. Replace the last sentence of the fourth paragraph with the following: Do not use aluminum or aluminum alloy troughs, pipes, or chutes that have surface damage or for lengths greater than 20 feet. Replace the second sentence of the fifth paragraph with the following: When pumping, equip the delivery pipe with a nozzle, having a minimum of 2 right angles, at the discharge end. Alternate nozzles or restriction devices may be allowed with prior approval by the Engineer.
SUBSECTION: **REVISION:**	605.02.05 Forms. Delete the last sentence.
SUBSECTION: **REVISION:**	605.03.04 Tack Welding. Replace with the following: The Department does not allow tack welding.
SUBSECTION: **REVISION:**	606.02.11 Coarse Aggregate. Replace with the following: Conform to Section 805, size No. 8 or 9-M.
SUBSECTION: **PART:** **REVISION:**	609.03.04 Expansion and Fixed Joints. D) Preformed Neoprene Joint Seals. Replace the last sentence of paragraph seven with the following: Field splices will not be allowed during partial width construction. It is Contractor's responsibility to determine and install the length of seal required for the joint to barrier wall as per the standard drawing.
SUBSECTION: **REVISION:**	609.03.09 Finish with Burlap Drag. Delete the entire section.
SUBSECTION: **REVISION:**	609.04.06 Joint Sealing. Replace Subsection 601.04 with the following: Subsection 606.04.08.

Supplemental Specifications to The Standard Specifications for Road and Bridge Construction, 2008 Edition

(Effective with the July15, 2011 Letting)

SUBSECTION: **REVISION:**	609.05 Payment. Replace the Pay Unit for Joint Sealing with the following: See Subsection 606.05.
SUBSECTION: **REVISION:**	701.03.06 Initial Backfill. Replace the first sentence of the last paragraph with the following: When the Contract specifies, perform quality control testing to verify compaction according to KM 64-512.
SUBSECTION: **REVISION:**	701.03.08 Testing of Pipe. Replace and rename the subsection with the following: **701.03.08 Inspection of Pipe.** The engineer will visually inspect all pipe. The Department will require camera/video inspection on a minimum of 50 percent of the linear feet of all installed pipe structures. Conduct camera/video inspection according to KM 64-114. The pipe to be installed under pavement will be selected first. If the total linear feet of pipe under pavement is less than 50 percent of the linear feet of all pipe installed, the Engineer will randomly select installations from the remaining pipe structures on the project to provide for the minimum inspection requirement. The pipe will be selected in complete runs (junction-junction or headwall-headwall) until the total linear feet of pipe to be inspected is at least 50 percent of the total linear feet of all installed pipe on the project. Unless the Engineer directs otherwise, schedule the inspections no sooner than 30 days after completing the installation and completion of earthwork to within 1 foot of the finished subgrade. When final surfacing conflicts with the 30-day minimum, conduct the inspections prior to placement of the final surface. The contractor must ensure that all pipe are free and clear of any debris so that a complete inspection is possible. Notify the Engineer immediately if distresses or locations of improper installation are discovered. When camera testing shows distresses or improper installation in the installed pipe, the Engineer may require additional sections to be tested. Provide the video and report to the Engineer when testing is complete in accordance with KM 64-114. Pipes that exhibit distress or signs of improper installation may necessitate repair or removal as the Engineer directs. These signs include, but are not limited to: deflection, cracking, joint separation, sagging or other interior damage. If corrugated metal or thermoplastic pipes exceed the deflection and installation thresholds indicated in the table below, provide the Department with an evaluation of each location conducted by a Professional Engineer addressing the severity of the deflection, structural integrity, environmental conditions, design service life, and an evaluation of the factor of safety using Section 12, "Buried Structures and Tunnel Liners," of the AASHTO LRFD Bridge Design Specifications. Based on the evaluation, the Department may allow the pipe to remain in place at a reduced unit price as shown in the table below. Provide 5 business days for the Department to review the evaluation. When the pipe shows deflection of 10 percent or greater, remove and replace the pipe. When the camera/video or laser inspection results are called into question, the Department may require direct measurements or mandrel testing. The Cabinet may elect to conduct Quality Assurance verifications of any pipe inspections.
SUBSECTION: **REVISION:**	701.04.07 Testing. Replace and rename the subsection with the following: **701.04.07 Pipeline Video Inspection.** The Department will measure the quantity in linear feet along the pipe invert of the structure inspected. When inspection above the specified 50 percent is performed due to a disagreement or suspicion of additional distresses and the Department is found in error, the Department will measure the quantity as Extra Work according to Subsection 104.03. However, if additional distresses or non-conformance is found, the Department will not measure the additional inspection for payment.

Supplemental Specifications to The Standard Specifications for Road and Bridge Construction, 2008 Edition

(Effective with the July15, 2011 Letting)

SUBSECTION: 701.05 PAYMENT.
REVISION: Add the following pay item to the list of pay items:

Code	Pay Item	Pay Unit
23131ER701	Pipeline Video Inspection	Linear Foot

SUBSECTION: 701.05 PAYMENT
TABLE: PIPE DEFLECTION DETERMINED BY CAMERA TESTING
REVISION: Replace this table with the following table and note:

PIPE DEFLECTION	
Amount of Deflection (%)	Payment
0.0 to 5.0	100% of the Unit Bid Price
5.1 to 9.9	50% of the Unit Bid Price (1)
10 or greater	Remove and Replace

(1) Provide Structural Analysis as indicated above. Based on the structural analysis, pipe may be allowed to remain in place at the reduced unit price.

SUBSECTION: 701.05 PAYMENT
TABLE: PIPE DEFLECTION DETERMINED BY MANDREL TESTING
REVISION: Delete this table.

SUBSECTION: 713.02.01 Paint.
REVISION: Replace with the following:

Conform to Section 842 and Section 846.

SUBSECTION: 713.03 CONSTRUCTION.
REVISION: Replace the first sentence of the second paragraph with the following:

On interstates and parkways, and other routes approved by the State Highway Engineer, install pavement striping that is 6 inches in width.

SUBSECTION: 713.03.03 Paint Application.
REVISION: Replace the second paragraph with the following table:

Material	Paint Application Rate	Glass Beads Application Rate
4 inch waterborne paint	Min. of 16.5 gallons/mile	Min. of 6 pounds/gallon
6 inch waterborne paint	Min. of 24.8 gallons/mile	Min. of 6 pounds/gallon
6 inch durable waterborne paint	Min. of 36 gallons/mile	Min. of 6 pounds/gallon

SUBSECTION: 713.03.04 Marking Removal.
REVISION: Replace the last sentence of the paragraph with the following:

Vacuum all marking material and removal debris concurrently with the marking removal operation.

SUBSECTION: 713.05 PAYMENT.
REVISION: Insert the following codes and pay items below the Pavement Striping – Permanent Paint:

Code	Pay Item	Pay Unit
24189ER	Durable Waterborne Marking – 6 IN W	Linear Foot
24190ER	Durable Waterborne Marking – 6 IN Y	Linear Foot
24191ER	Durable Waterborne Marking – 12 IN W	Linear Foot

Supplemental Specifications to The Standard Specifications for Road and Bridge Construction, 2008 Edition

(Effective with the July15, 2011 Letting)

SUBSECTION: **REVISION:**	714.03 CONSTRUCTION. Insert the following paragraph at the end of the third paragraph: Use Type I Tape for markings on bridge decks, JPC pavement and JPC intersections. Thermoplastic should only be used for markings on asphalt pavement.
SUBSECTION: **REVISION:**	714.03.07 Marking Removal. Replace the third sentence of the paragraph with the following: Vacuum all marking material and removal debris concurrently with the marking removal operation.
SUBSECTION: **REVISION:**	716.01 DESCRIPTION. Insert the following after the first sentence: Energize lighting as soon as it is fully functional and ready for inspection. Ensure that lighting remains operational until the Division of Traffic Operations has provided written acceptance of the electrical work.
SUBSECTION: **REVISION:**	716.02.01 Roadway Lighting Materials. Replace the last two sentences of the paragraph with the following: Submit for material approval an electronic file of descriptive literature, drawings, and any requested design data to the Division of Traffic Operations. Do not begin work until shop drawings are approved. Notify the Engineer when submitting any information to the Division of Traffic Operations. Do not make substitutions for approved materials without written permission as described above.
SECTION: **REVISION:**	717 – THERMOPLASTIC INTERSECTION MARKINGS. Replace the section name with the following: INTERSECTION MARKINGS.
SUBSECTION: **REVISION:**	717.01 DESCRIPTION: Replace the paragraph with the following: Furnish and install thermoplastic or Type I tape intersection markings (Stop Bars, Crosswalks, Turn Arrows, etc.) Thermoplastic markings may be installed by either a machine applied, screed extrusion process or by applying preformed thermoplastic intersection marking material.
SUBSECTION: **REVISION:**	717.02 MATERIALS AND EQUIPMENT. Insert the following subsection: 717.02.06 Type I Tape. Conform to Section 836.
SUBSECTION: **REVISION:**	717.03.03 Application. Insert the following part to the subsection: B) Type I Tape Intersection Markings. Apply according to the manufacturer's recommendations. Cut all tape at pavement joints when applied to concrete surfaces.

Supplemental Specifications to The Standard Specifications for Road and Bridge Construction, 2008 Edition

(Effective with the July15, 2011 Letting)

SUBSECTION: 717.03.05 Proving Period.
PART: A) Requirements.
REVISION: Insert the following to this section:

2) Type I Tape. During the proving period, ensure that the pavement marking material shows no signs of failure due to blistering, excessive cracking, bleeding, staining, discoloration, oil content of the pavement materials, drippings, chipping, spalling, poor adhesion to the pavement, loss of retroreflectivity, vehicular damage, and normal wear. Type I Tape is manufactured off site and warranted by the manufacturer to meet certain retroreflective requirements. As long as the material is adequately bonded to the surface and shows no signs of failure due to the other items listed in Subsection 714.03.06 A) 1), retroreflectivity readings will not be required. In the absence of readings, the Department will accept tape based on a nighttime visual observation.

SUBSECTION: 717.03.06 Marking Removal.
REVISION: Replace the third sentence of the paragraph with the following:

Vacuum all marking material and removal debris concurrently with the marking removal operation.

SUBSECTION: 717.05 PAYMENT.
REVISION: Insert the following bid item codes:

Code	Pay Unit	Pay Item
06563	Pave Marking – R/R X Bucks 16 IN	Linear Foot
20782NS714	Pave Marking Thermo – Bike	Each
23251ES717, 23264ES717	Pave Mark TY I Tape X-Walk, Size	Linear Foot
23252ES717, 23265ES717	Pave Mark TY I Tape Stop Bar, Size	Linear Foot
23253ES717	Pave Mark TY I Tape Cross Hatch	Square Foot
23254ES717	Pave Mark TY I Tape Dotted Lane Extension	Linear Foot
23255ES717	Pave Mark TY I Tape Arrow, Type	Each
23268ES717-23270ES717		
23256ES717	Pave Mark TY I Tape- ONLY	Each
23257ES717	Pave Mark TY I Tape- SCHOOL	Each
23266ES717	Pave Mark TY 1 Tape R/R X Bucks-16 IN	Linear Foot
23267ES717	Pave Mark TY 1 Tape-Bike	Each

SUBSECTION: 725.02.02 Type VI Class C & CT.
REVISION: Replace bullet 2) with the following:

2) The SCI100GM System as developed by SCI Products, Inc. of St. Charles, Illinois. For all miscellaneous metal work conform to ASTM A 36 and galvanize according to ASTM A 123. For the SCI100GM fender panels conform to AASHTO 180. Galvanize the SCI100GM fender panels and SCI100GM -beam connectors after fabrication according to ASTM A 123.

SUBSECTION: 725.02.04 Type VII Class C.
REVISION: Replace bullet 2) with the following:

2) The SCI100GM System as developed by SCI Products, Inc. of St. Charles, Illinois. For all miscellaneous metal work conform to ASTM A 36 and galvanize according to ASTM A 123. For the SCI100GM fender panels conform to AASHTO 180. Galvanize the SCI100GM fender panels and SCI100GM-beam connectors after fabrication according to ASTM A 123.

SUBSECTION: 801.01 REQUIREMENTS.
REVISION: Delete the fourth sentence of the first paragraph and add the following to the second paragraph.

When supplying cement with a SO_3 content above the value in table I of ASTM C 150, include supportive ASTM C 1038 14-day expansion test data for the supplied SO_3 content on the certification.

Supplemental Specifications to The Standard Specifications for Road and Bridge Construction, 2008 Edition

(Effective with the July15, 2011 Letting)

SUBSECTION: **REVISION:**	805.01 GENERAL. Replace the second paragraph with the following: The Department's List of Approved Materials includes the Aggregate Source List, the list of Class A and Class B Polish-Resistant Aggregate Sources, and the Concrete Restriction List.
SUBSECTION: **REVISION:**	805.04 CONCRETE. Delete footnote (1) The permissible lightweight particle content of gravel coarse aggregate for reinforced concrete box culvert sections, concrete pipe, pipe arches, or for use only in concrete that will be permanently protected from freezing by 2 feet or more of cover is 10.0 percent.
SUBSECTION: **REVISION:**	805.04 CONCRETE. Replace the "AASHTO T 160" reference in first sentence of the third paragraph with "KM 64-629"
SUBSECTION: **TABLE:** **PART:** **REVISION:**	805.15 GRADATION ACCEPTANCE OF NON-SPECIFICATION COARSE AGGREGATE. AGGREGATE SIZE USE Cement Concrete Structures and Incidental Construction Replace "9-M for Waterproofing Overlays" with "8 or 9-M for Waterproofing Overlays"

Supplemental Specifications to The Standard Specifications for Road and Bridge Construction, 2008 Edition

(Effective with the July15, 2011 Letting)

SUBSECTION: 805.15 GRADATION ACCEPTANCE OF NON-SPECIFICATION COARSE AGGREGATE.
REVISION: Replace the "SIZES OF COARSE AGGREGATES" table in with the following:

SIZES OF COARSE AGGREGATES

	Sieve	AMOUNTS FINER THAN EACH LABORATORY SIEVE (SQUARE OPENINGS) PERCENTAGE BY WEIGHT															
Aggregate Size	Nominal [3] Maximum Aggregate Size	4 inch	3 1/2 inch	3 inch	2 1/2 inch	2 inch	1 1/2 inch	1 inch	3/4 inch	1/2 inch	3/8 inch	No. 4	No. 8	No. 16	No. 30	No. 100	No. 200
1	3 ½ inch	100	90-100		25-60		0-15		0-5								
2	2 ½ inch			100	90-100	35-70	0-15		0-5								
23	2 inch			100		40-90		0-15		0-5							
3	2 inch				100	90-100	35-70	0-15		0-5							
357	2 inch				100	95-100		35-70		10-30		0-5					
4	1 ½ inch					100	90-100	20-55	0-15		0-5						
467	1 ½ inch					100	95-100		35-70		10-30	0-5					
5	1 inch						100	90-100	20-55	0-10	0-5						
57	1 inch						100	95-100		25-60		0-10	0-5				
610	1 inch						100	85-100		40-75		15-40					
67	3/4 inch							100	90-100		20-55	0-10	0-5				
68	3/4 inch							100	90-100		30-65	5-25	0-10	0-5			
710	3/4 inch							100	80-100		30-75	0-30					
78	1/2 inch								100	90-100	40-75	5-25	0-10	0-5			
8	3/8 inch									100	85-100	10-30	0-10	0-5			
9-M	3/8 inch									100	75-100	0-25	0-5				
10[2]	No. 4										100	85-100				10-30	
11[2]	No. 4										100	40-90	10-40			0-5	
DENSE GRADED AGGREGATE [1]	3/4 inch							100	70-100		50-80	30-65			10-40		4-13
CRUSHED STONE BASE [1]	1 ½ inch				100		90-100		60-95		30-70	15-55			5-20		0-8

(1) *Gradation performed by wet sieve KM 64-620 or AASHTO T 11/T 27.*
(2) *Sizes shown for convenience and are not to be considered as coarse aggregates.*
(3) *Nominal Maximum Size is the largest sieve on the gradation table for an aggregate size on which any material may be retained.*

Note: The Department will allow blending of same source/same type aggregate when precise procedures are used such as cold feed, belt, or equivalent and combining of sizes or types of aggregate using the weigh hopper at concrete plants or controlled feed belts at the pugmill to obtain designated sizes.

Supplemental Specifications to The Standard Specifications for Road and Bridge Construction, 2008 Edition

(Effective with the July15, 2011 Letting)

SUBSECTION: **REVISION:**	805.16 SAMPLING AND TESTING. Replace the "AASHTO T 160" method with the "KM 64-629" method for the Concrete Beam Expansion Test. Replace the "ASTM D 3042" method with the "KM 64-625" method for Insoluble Residue.
SUBSECTION: **REVISION:**	810.04.01 Coating Requirements. Replace the "Subsection 806.07" references with "Subsection 806.06"
SUBSECTION: **PART:** **REVISION:**	810.06.01 Polyvinyl Chloride (PVC) Pipe. B) Culvert and Entrance Pipe. Replace the title with the following: B) Culvert Pipe, Storm Sewer, and Entrance Pipe.
SUBSECTION: **REVISION:**	823.02 LIQUID MEMBRANE FORMING COMPOUNDS. Add the following: Effective July 1, 2011, to remain on or be added to the Department's approved list, products must have completed testing or been submitted for testing through the National Transportation Product Evaluation Program (NTPEP) for Concrete Curing Compounds.
SUBSECTION: **REVISION:**	837.03 APPROVAL. Replace the last sentence with the following: The Department will sample and evaluate for approval each lot of thermoplastic material delivered for use per contract prior to installation of the thermoplastic material. Do not allow the installation of thermoplastic material until it has been approved by the Division of Materials. Allow the Department a minimum of 10 working days to evaluate and approve thermoplastic material.
SUBSECTION: **REVISION:**	837.03.01 Composition. COMPOSITION Table: Replace Lead Chromate | 0.0 max. | 4.0 min. with Heavy Metals Content | Comply with 40 CFR 261
SUBSECTION: **TABLE:** **REVISION:**	842.02 APPROVAL. PAINT COMPOSITION Revise the following in the table: Replace the 2.0ΔE* values in the table with 4.0ΔE* for both Yellow and White Paint on both the Daytime and Nighttime Color Spectrophotometer.
SECTION: **REVISION:**	DIVISION 800 MATERIAL DETAILS Add the following section in Division 800 **SECTION 846 – DURABLE WATERBORNE PAINT** **846.01 DESCRIPTION.** This section covers quick-drying durable waterborne pavement striping paint for permanent applications. The paint shall be ready-mixed, one-component, 100% acrylic waterborne striping paint suitable for application on such traffic-bearing surfaces as Portland cement concrete, bituminous cement concrete, asphalt, tar, and previously painted areas of these surfaces. **846.02 Approval.** Select materials that conform to the composition requirements below. Provide independent analysis data and certification for each formulation stating the total concentration of each heavy metal present, the test method used for each determination, and compliance to 40 CFR 261 for leachable heavy metals content. Submit initial samples for approval before beginning striping

Supplemental Specifications to The Standard Specifications for Road and Bridge Construction, 2008 Edition
(Effective with the July15, 2011 Letting)

operations. The initial sample may be sent from the manufacture of the paint. The Department will randomly sample and evaluate the paint each week that the striping operations are in progress.

The non-volatile portion of the vehicle shall be composed of a 100% acrylic polymer as determined by infrared spectral analysis. The acrylic resin used shall be a 100% cross-linking acrylic as evidenced by infrared peaks at wavelengths 1568, 1624, and 1672 cm-1 with intensities equal to those produced by an acrylic resin known to be 100% cross-linking.

PAINT COMPOSITION		
Property and Test Method	Yellow	White
Daytime Color (CIELAB) Spectrophotometer using illuminant D65 at 45º illumination and 0º viewing with a 2º observer	L* 81.76 a* 19.79 b* 89.89 Maximum allowa le variation 4.0ΔE*	L* 93.51 a* -1.01 b* 0.70 Maximum allowable variation 4.0ΔE*
Nighttime Color (CIELAB) Spectrophotometer using illuminant A at 45º illumination and 0º viewing with a 2º observer	L* 86.90 a* 24.80 b* 95.45 Maximum allowable variation 4.0ΔE*	L* 93.45 a* -0.79 b* 0.43 Maximum allowable variation 4.0ΔE*
Heavy Metals Content	Comply with 40 CFR 261	Comply with 40 CFR 261
Titanium Dioxide ASTM D 4764	NA	10% by weight of pigment min.
VOC ASTM D 2369 and D 4017	1.25 lb/gal max.	1.25 l /gal ma .
Contrast Ratio (at 15 mils wft)	0.97	0.99

846.02.01 Manufacturers Certification. Provide a certification of analysis for each lot of traffic paint produced stating conformance to the requirements of this section. Report the formulation identification, traffic paint trade name, color, date of manufacturer, total quantity of lot produced, actual quantity of traffic paint represented, sampling method utilized to obtain the samples, and data for each sample tested to represent each lot produced.

846.03 ACCEPTANCE PROCEDURES FOR NON-SPECIFICATION DURABLE WATERBORNE PAVEMENT STRIPING PAINT. When non-specification paint is inadvertently incorporated into the work the Department will accept the material with a reduction in pay. The percentage deduction is cumulative based on its compositional properties, but will not exceed 60 percent. The Department will calculate the payment reduction on the unit bid price for the routes where the non-specification paint was used.

DURABLE WATERBORNE PAVEMENT STRIPING PAINT REDUCTION SCHEDULE						
Non-conforming Property	Resin	Color	Contrast	TiO_2	VOC	Heavy Metals Content
Reduction Rate	60%	10%	10%	10%	60%	60%

Supplemental Specifications to The Standard Specifications for Road and Bridge Construction, 2008 Edition

(Effective with the July15, 2011 Letting)

APPENDIX A:	TABLUATION OF CONSTRUCTION TOLERANCES.
PART:	601.03.03
REVISION:	Replace with the following:
	Concrete accuracy of individual ingredient material for each batch. ± 2.0% for aggregates ± 1.0% for water ± 1.0% for cement in batches of 4 cubic yards or greater ± 1.0% for total cementitious materials in batches of 4 cubic yards or greater 0.0% to + 4.0% for cement in batches less than 4 cubic yards 0.0% to + 4.0% for total cementitious materials in batches less than 4 cubic yards ± 3.0% for admixtures
APPENDIX A:	TABLUATION OF CONSTRUCTION TOLERANCES.
PART:	601.03.03 C) 2)
REVISION:	Delete

STANDARD DRAWINGS THAT APPLY

TYPICAL GUARDRAIL INSTALLATIONS RBI-001-09
TYPICAL GUARDRAIL INSTALLATIONS RBI-002-06
INSTALLATION OF GUARDRAIL END TREATMENT TYPE 1 ..... RBI-004-03
STEEL BEAM GUARDRAIL (W-BEAM) RBR-001-11
GUARDRAIL COMPONENTS RBR-005-10
GUARDRAIL TERMINAL SECTIONS RBR-010-05
GUARDRAIL POSTS RBR-015-04
GUARDRAIL POSTS RBR-016-04
GUARDRAIL END TREATMENT TYPE 1 ..... RBR-020-03
GUARDRAIL END TREATMENT TYPE 3 ..... RBR-030-04
GUARDRAIL END TREATMENT TYPE 3 PIPE DRAINAGE DETAIL RBR-031
MISCELLANEOUS STANDARDS PART 1 ..... RGX-001-05
NETTING RRE-002-04
LANE CLOSURE TWO-LANE HIGHWAY CASE I TTC-100-01
SHOULDER CLOSURE TTC-135-01
POST SPLICING DETAIL TTD-110-01

COUNTY OF	FISCAL YEAR	SHEET NO.	TOTAL SHEETS

NOTES

1. DELINEATOR SHALL BE MEASURED AND PAID FOR AT THE CONTRACT UNIT PRICE EACH, AND SHALL INCLUDE ALL MATERIALS AND LABOR NECESSARY FOR ONE COMPLETE INSTALLATION.
2.

CODE	PAY ITEM	PAY UNIT
1982	DELINEATOR FOR GUARDRAIL - WHITE	EACH
1983	DELINEATOR FOR GUARDRL - YELLOW	EACH

3. GUARDRAIL DELINEATORS SHALL BE REQUIRED ON ALL ROADWAYS WITH SHOULDERS 6'-0" IN WIDTH OR LESS AND AT OTHER LOCATIONS WHERE THE GUARDRAIL LEADS INTO HORIZONTAL CURVES OF LESS THAN 950 FEET RADIUS.
4. DELINEATORS SHALL BE MANUFACTURED FROM 12 GA. GALVANIZED STEEL.
5. DIMENSIONS SHOWN ARE APPROXIMATE AND ARE SUBJECT TO MANUFACTURES TOLERANCES.
6. WHEN CONCRETE BARRIERS EXTEND ACROSS BRIDGE STRUCTURES IN LIEU OF STEEL BEAM GUARDRAIL, DELINEATORS SHALL BE INSTALLED AT SAME VERTICAL ALIGNMENT AS ON THE GUARDRAIL AND DELINEATORS SHALL COMPLY WITH CURRENT STD. DWG. RBM-020.

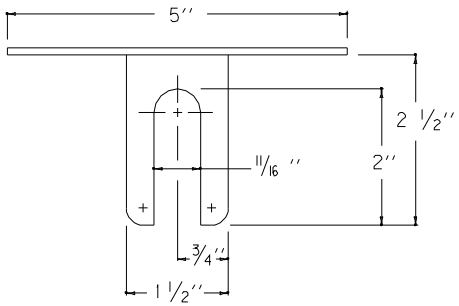

PLAN VIEW

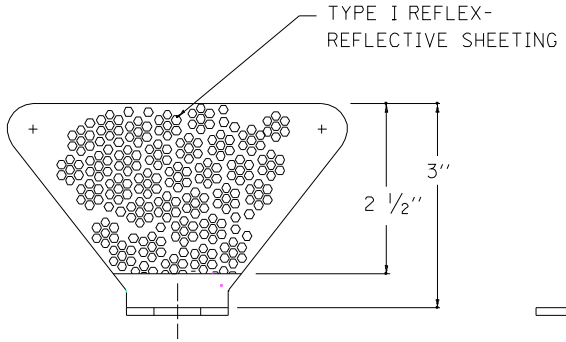

FRONT VIEW

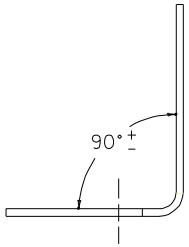

SIDE VIEW

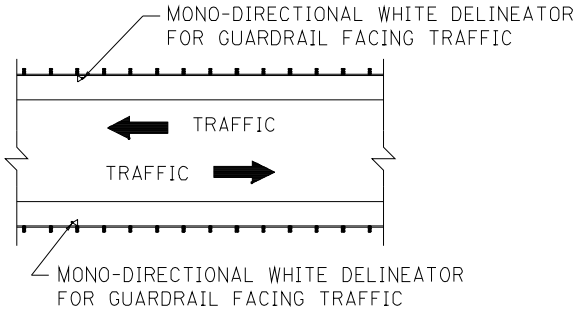

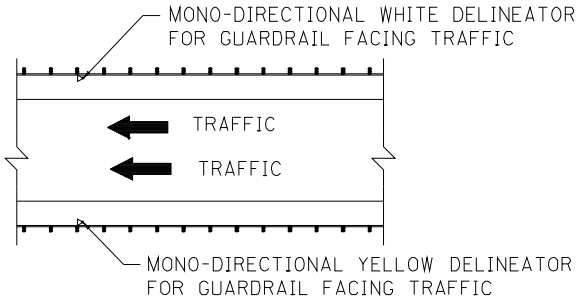

PLACEMENT OF DELINEATORS
FOR GUARDRAIL

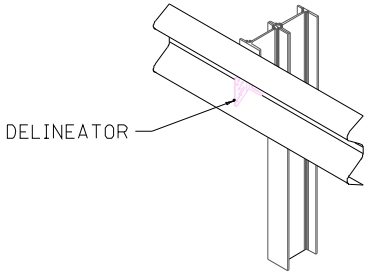

ISOMETRIC VIEW

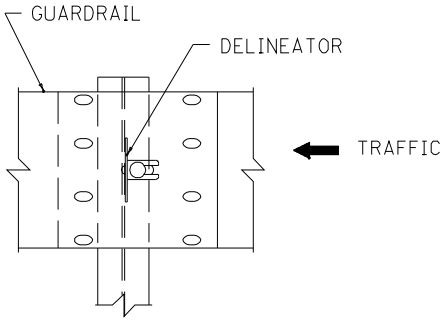

FRONT VIEW

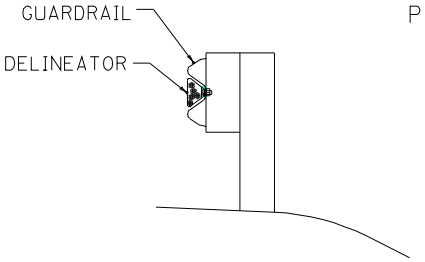

DELINEATOR SPACINGS ON HORIZONTAL CURVES	
DEGREE OF CURVE	SPACING ON CURVES
≤ 2°	100'
> 2° ≤ 4°	75'
> 4°	50'

SPACING ON TANGENTS = 100' INTERVALS

KENTUCKY DEPARTMENT OF HIGHWAYS

DELINEATORS FOR GUARDRAIL

SUBMITTED William S. Zalick — TEBM DIVISION OF DESIGN — 12-1-99 DATE

COUNTY OF	ITEM NO.	SHEET NO.

PIPE DIA. (IN)	PIPE TYPE	CIRCULAR PIPE COVER HEIGHTS IN FEET					
		2-5	5-10	10-15	15-20	20-25	25-30
12 & 15	2⅔"×½" CSPHS (1)	16 GA.					
	2⅔"×½" CSPLS (1)	16 GA.					
	2⅔"×½" CAPHS	16 GA.					
	PVC	SMOOTH WALL (SOLID WALL)					
	HDPE					FF	
	RCP (11)						
18	2⅔"×½" CSPHS (1)	16 GA.					
	2⅔"×½" CSPLS (1)	16 GA.					
	2⅔"×½" CAPHS	16 GA.					
	SRS (1)	16 GA.					
	SRA	16 GA.					
	PVC	RIBBED (PROFILE WALL)					
	HDPE					FF	
	RCP (11)						
		2-5	5-10	10-15	15-20	20-25	25-30

PIPE DIA. (IN)	PIPE TYPE	CIRCULAR PIPE COVER HEIGHTS IN FEET											
		2-5	5-10	10-15	15-20	20-25	25-30	30-35	35-40	40-45	45-50	50-55	55-60	60-65
21	2⅔"×½" CSPHS (1)	16 GA.												
	2⅔"×½" CSPLS (1)	16 GA.					10 GA.							
	2⅔"×½" CAPHS	16 GA.												
	SRS (1)	16 GA.												
	SRA	16 GA.				14 GA.								
	PVC	RIBBED (PROFILE WALL)												
	HDPE					FF								
	RCP (11)													
24 (6)	2⅔"×½" CSPHS (1)	16 GA.											14 GA.	
	2⅔"×½" CSPLS (1)	16 GA.					10 GA.							
	2⅔"×½" CAPHS	16 GA.								14 GA.		12 GA.		
	SRS (1)	16 GA.							14 GA.			12 GA.		
	SRA	16 GA.				14 GA.		12 GA.			10 GA.			
	PVC	RIBBED (PROFILE WALL)												
	HDPE					FF								
	RCP (11)													
		2-5	5-10	10-15	15-20	20-25	25-30	30-35	35-40	40-45	45-50	50-55	55-60	60-65

NOTES

(1) GAGES FOR CORRUGATED STEEL PIPE ITEMS SHOWN ARE BASED ON ALUMINUM-COATED TYPE 2 STEEL AS PER AASHTO M-274. ALUMINUM COATED TYPE 2 STEEL IS ONLY PERMITTED IN Ph RANGES OF 5 TO 9

2. WHEN CORRUGATED STEEL PIPE IS ZINC COATED (GALVANIZED) THE GAGE SHALL BE ONE GAGE HEAVIER THAN SHOWN IN THE TABLES.
3. CSP, CAP, SRS AND SRA ARE SHOWN IN GAGE.
4. MAXIMUM COVER HEIGHT MEASURED FROM TOP OF PIPE TO SUBGRADE ELEVATION SHALL GOVERN GAGE OF PIPE TO BE USED FOR ENTIRE LENGTH OF PIPE INSTALLATION.
5. MINIMUM COVER HEIGHTS FOR PIPE SHALL BE 2 FEET. GAGE OF PIPE FOR COVER HEIGHTS LESS THAN 2 FEET SHALL BE THAT SHOWN FOR COVER HEIGHTS OF 30 FEET (SEE STD. SPECIFICATIONS FOR BACKFILL). HDPE AND PVC SHALL NOT BE PERMITTED FOR COVER HEIGHTS LESS THAN 2 FEET.

(6) 24" DIA. PIPE IS MINIMUM SIZE FOR COVER HEIGHTS FROM 30 FEET TO 65 FEET.

7. MINIMUM COVER HEIGHT FOR ENTRANCE PIPE SHALL BE 0.5 FEET.
8. GAGE OF ENTRANCE PIPE FOR COVER HEIGHTS LESS THAN 2 FEET SHALL MEET THE FOLLOWING REQUIREMENTS:
   a. GAGE OF CSP SHALL BE THAT SHOWN FOR HEIGHTS OF 30 FEET.
   b. GAGE OF CAP SHALL BE ONE GAGE HEAVIER THAN SHOWN IN THE TABLE.
9. ALL CIRCULAR STRUCTURAL PLATE SHALL BE 5% VERTICALLY ELONGATED.
10. SEE CURRENT STANDARD DRAWING RDI-035 FOR COATINGS, LININGS AND PAVINGS FOR NON-STRUCTURAL PIPE.

(11) SEE DETAIL SHEET "PIPE BEDDING FOR CULVERTS, ENTRANCE, AND STORM SEWER REINFORCED CONC. PIPE" AND DETAIL SHEET "PIPE BEDDING TRENCH CONDITION REINFORCED CONC. PIPE" FOR RCP COVER HEIGHT AND BEDDING REQUIREMENTS.

LEGEND

CSPHS: CORRUGATED STEEL PIPE WITH HELICAL LOCK SEAM OR HELICAL WELDED SEAM (HELICAL CORR.)
CSPLS: CORRUGATED STEEL PIPE WITH LONGITUDINAL RIVETED OR SPOT WELDED SEAM (ANNULAR CORR.)
CAPHS: CORRUGATED ALUMINUM ALLOY PIPE WITH HELICAL LOCK SEAM (HELICAL CORR.)
HDPE: HIGH DENSITY POLYETHYLENE PIPE
PVC: POLYVINYL CHLORIDE
SRS: SPIRAL RIB STEEL
SRA: SPIRAL RIB ALUMINUM
RCP: CIRCULAR REINFORCED CONCRETE PIPE
FF: FLOWABLE FILL REQUIRED

12" PIPE - 24" PIPE

KENTUCKY
DEPARTMENT OF HIGHWAYS

CULVERT, ENTRANCE & STORM SEWER PIPE TYPES & COVER HEIGHTS

APPROVED [signature] TEBM DIVISION OF DESIGN 04-25-08 DATE

SHEET 1 OF 8

COUNTY OF	ITEM NO.	SHEET NO.

PIPE DIA. (IN)	PIPE TYPE	CIRCULAR PIPE COVER HEIGHTS IN FEET (3)												
		2-5	5-10	10-15	15-20	20-25	25-30	30-35	35-40	40-45	45-50	50-55	55-60	60-65
27 & 30 (8)	2⅔"×½" CSPHS (1)	16 GA.								14 GA.			12 GA.	
	2⅔"×½" CSPLS (1)	16 GA.				12 GA.								
	2⅔"×½" CAPHS	14 GA.								12 GA.			10 GA.	
	SRS (1)	16 GA.						14 GA.		12 GA.				
	SRA	16 GA.			14 GA.		12 GA.		10 GA.					
	PVC	RIBBED (PROFILE WALL)												
	HDPE					FF								
	RCP (10)													
36	2⅔"×½" CSPHS (1)	14 GA.									12 GA.			10 GA.
	2⅔"×½" CSPLS (1)	14 GA.			12 GA.		10 GA.							
	2⅔"×½" CAPHS	14 GA.						12 GA.			10 GA.			8 GA.
	SRS (1)	14 GA.							12 GA.					
	SRA	14 GA.				12 GA.		10 GA.						
	PVC	RIBBED (PROFILE WALL)												
	HDPE					FF								
	RCP (10)													
42	2⅔"×½" CSPHS (1)	14 GA.								12 GA.			10 GA.	
	2⅔"×½" CSPLS (1)	14 GA.					12 GA.		10 GA.					
	2⅔"×½" CAPHS	12 GA.								10 GA.		8 GA.		
	SRS (1)	14 GA.						12 GA.						
	SRA	12 GA.					10 GA.							
	PVC	RIBBED (PROFILE WALL)												
	HDPE													
	RCP (10)													
		2-5	5-10	10-15	15-20	20-25	25-30	30-35	35-40	40-45	45-50	50-55	55-60	60-65

LEGEND

CSPHS: CORRUGATED STEEL PIPE WITH HELICAL LOCK SEAM OR HELICAL WELDED SEAM (HELICAL CORR.)

CSPLS: CORRUGATED STEEL PIPE WITH LONGITUDINAL RIVETED OR SPOT WELDED SEAM (ANNULAR CORR.)

CAPHS: CORRUGATED ALUMINUM ALLOY PIPE WITH HELICAL LOCK SEAM (HELICAL CORR.)

HDPE: HIGH DENSITY POLYETHYLENE PIPE

PVC: POLYVINYL CHLORIDE

SRS: SPIRAL RIB STEEL

SRA: SPIRAL RIB ALUMINUM

RCP: CIRCULAR REINFORCED CONCRETE PIPE

FF: FLOWABLE FILL REQUIRED

NOTES CONTINUED

(10) SEE DETAIL SHEET "PIPE BEDDING FOR CULVERTS, ENTRANCE, AND STORM SEWER REINFORCED CONC. PIPE" AND DETAIL SHEET "PIPE BEDDING TRENCH CONDITION REINFORCED CONC. PIPE" FOR RCP COVER HEIGHT AND BEDDING REQUIREMENTS.

NOTES

(1) GAGES FOR CORRUGATED STEEL PIPE ITEMS SHOWN ARE BASED ON ALUMINUM-COATED TYPE 2 STEEL AS PER AASHTO M-274. ALUMINUM COATED TYPE 2 STEEL IS ONLY PERMITTED IN Ph RANGES OF 5 TO 9.

2. WHEN CORRUGATED STEEL PIPE IS ZINC COATED (GALVANIZED) THE GAGE SHALL BE ONE GAGE HEAVIER THAN SHOWN IN THE TABLES.

(3) SEE CURRENT STANDARD DRAWING RDI-001 FOR EXPLANATION OF COVER HEIGHTS LESS THAN 2 FEET.

4. CSP, CAP, SRS AND SRA ARE SHOWN IN GAGE.

5. MAXIMUM COVER HEIGHT MEASURED FROM TOP OF PIPE TO SUB GRADE ELEVATION SHALL GOVERN GAGE OF PIPE TO BE USED FOR ENTIRE LENGTH OF PIPE INSTALLATION.

6. MINIMUM COVER HEIGHT FOR ENTRANCE PIPE SHALL BE 0.5 FEET.

7. ALL CIRCULAR STRUCTURAL PLATE SHALL BE 5% VERTICALLY ELONGATED.

(8) ENTRANCE PIPE GREATER THAN 30" DIA. SHALL BE CULVERT PIPE.

9. SEE CURRENT STANDARD DRAWING RDI-035 FOR COATINGS, LININGS AND PAVINGS FOR NON-STRUCTURAL PIPE.

SHEET 2 OF 8

27" PIPE - 42" PIPE

KENTUCKY DEPARTMENT OF HIGHWAYS

CULVERT, ENTRANCE & STORM SEWER PIPE TYPES & COVER HEIGHTS

APPROVED [signature] TBM DIVISION OF DESIGN 04-25-08 DATE

COUNTY OF	ITEM NO.	SHEET NO.

PIPE DIA. (IN)	PIPE TYPE	CIRCULAR PIPE COVER HEIGHTS IN FEET (3)																						
		2-5	5-10	10-15	15-20	20-25	25-30	30-35	35-40	40-45	45-50	50-55	55-60	60-65	65-70	70-75	75-80	80-85	85-90	90-95	95-100	100-105	105-110	110-115	115-120
48	2⅔"x½" CSPHS (1)	14 GA.							12 GA.		10 GA.														
	2⅔"x½" CSPLS (1)	14 GA.				12 GA.																			
	2⅔"x½" CAPHS	12 GA.							10 GA.		8 GA.														
	SRS (1)	14 GA.					12 GA.																		
	SRA	12 GA.					10 GA.																		
	PVC	RIBBED (PROFILE WALL)																							
	HDPE																								
	RCP (9)																								
54 (7)	2⅔"x½" CSPHS (1)	14 GA.						12 GA.		10 GA.															
	2⅔"x½" CSPLS (1)	14 GA.				12 GA.																			
	3"x1" CSPHS (1)	14 GA.							12 GA.		10 GA.														
	3"x1" CSPLS (1)	14 GA.			12 GA.			10 GA.		8 GA.															
	5"x1" CSPHS (1)	14 GA.						12 GA.		10 GA.															
	2⅔"x½" CAPHS	12 GA.					10 GA.		8 GA.																
	3"x1" CAPHS	14 GA.					12 GA.		10 GA.		8 GA.														
	SRS (1)	14 GA.				12 GA.																			
	SRA	12 GA.				10 GA.																			
	RCP (9)																								
		2-5	5-10	10-15	15-20	20-25	25-30	30-35	35-40	40-45	45-50	50-55	55-60	60-65	65-70	70-75	75-80	80-85	85-90	90-95	95-100	100-105	105-110	110-115	115-120

NOTES

(1) GAGES FOR CORRUGATED STEEL PIPE ITEMS SHOWN ARE BASED ON ALUMINUM-COATED TYPE 2 STEEL AS PER AASHTO M-274. ALUMINUM COATED TYPE 2 STEEL IS ONLY PERMITTED IN Ph RANGES OF 5 TO 9.

2. WHEN CORRUGATED STEEL PIPE IS ZINC COATED (GALVANIZED) THE GAGE SHALL BE ONE GAGE HEAVIER THAN SHOWN IN THE TABLES.

(3) SEE CURRENT STANDARD DRAWING RDI-001 FOR EXPLANATION OF COVER HEIGHTS LESS THAN 2 FEET.

4. CSP, CAP, SRS AND SRA ARE SHOWN IN GAGE.

5. MAXIMUM COVER HEIGHT MEASURED FROM TOP OF PIPE TO SUBGRADE ELEVATION SHALL GOVERN GAGE OF PIPE TO BE USED FOR ENTIRE LENGTH OF PIPE INSTALLATION.

6. ALL CIRCULAR STRUCTURAL PLATE SHALL BE 5% VERTICALLY ELONGATED.

(7) 54" DIA. PIPE IS MINIMUM SIZE FOR COVER HEIGHTS GREATER THAN 65 FEET.

8. SEE CURRENT STANDARD DRAWING RDI-035 FOR COATINGS, LININGS AND PAVINGS FOR NON-STRUCTURAL PIPE.

(9) SEE DETAIL SHEET "PIPE BEDDING FOR CULVERTS, ENTRANCE, AND STORM SEWER REINFORCED CONC. PIPE" AND DETAIL SHEET "PIPE BEDDING TRENCH CONDITION REINFORCED CONC. PIPE" FOR RCP COVER HEIGHT AND BEDDING REQUIREMENTS.

LEGEND

CSPHS: CORRUGATED STEEL PIPE WITH HELICAL LOCK SEAM OR HELICAL WELDED SEAM (HELICAL CORR.)

CSPLS: CORRUGATED STEEL PIPE WITH LONGITUDINAL RIVETED OR SPOT WELDED SEAM (ANNULAR CORR.)

CAPHS: CORRUGATED ALUMINUM ALLOY PIPE WITH HELICAL LOCK SEAM (HELICAL CORR.)

HDPE: HIGH DENSITY POLYETHYLENE PIPE

PVC: POLYVINYL CHLORIDE

SRS: SPIRAL RIB STEEL

SRA: SPIRAL RIB ALUMINUM

RCP: CIRCULAR REINFORCED CONCRETE PIPE

48" PIPE - 54" PIPE

KENTUCKY
DEPARTMENT OF HIGHWAYS

CULVERT & STORM SEWER PIPE TYPES & COVER HEIGHTS

APPROVED [signature] TEBM DIVISION OF DESIGN 04-25-08 DATE

SHEET 3 OF 8

011

PART III

EMPLOYMENT, WAGE AND RECORD REQUIREMENTS

TRANSPORTATION CABINET
DEPARTMENT OF HIGHWAYS

LABOR AND WAGE REQUIREMENTS
APPLICABLE TO OTHER THAN FEDERAL-AID SYSTEM PROJECTS

I. Application
II. Nondiscrimination of Employees (KRS 344)
III. Payment of Predetermined Minimum Wages
IV. Statements and Payrolls

I. APPLICATION

1. These contract provisions shall apply to all work performed on the contract by the contractor with his own organization and with the assistance of workmen under his immediate superintendence and to all work performed on the contract by piecework, station work or by subcontract. The contractor's organization shall be construed to include only workmen employed and paid directly by the contractor and equipment owned or rented by him, with or without operators.

2. The contractor shall insert in each of his subcontracts all of the stipulations contained in these Required Provisions and such other stipulations as may be required.

3. A breach of any of the stipulations contained in these Required Provisions may be grounds for termination of the contract.

II. NONDISCRIMINATION OF EMPLOYEES

AN ACT OF THE KENTUCKY
GENERAL ASSEMBLY TO PREVENT
DISCRIMINATION IN EMPLOYMENT
KRS CHAPTER 344
EFFECTIVE JUNE 16, 1972

The contract on this project, in accordance with KRS Chapter 344, provides that during the performance of this contract, the contractor agrees as follows:

1. The contractor shall not fail or refuse to hire, or shall not discharge any individual, or otherwise discriminate against an individual with respect to his compensation, terms, conditions, or privileges of employment, because of such individual's race, color, religion, national origin, sex, disability or age (between forty and seventy); or limit, segregate, or classify his employees in any way which would deprive or tend to deprive an individual of employment opportunities or otherwise adversely affect his status as an employee, because of such individual's race, color, religion, national origin, sex, disability or age (between forty and seventy). The contractor agrees to post in conspicuous places, available to employees and applicants for employment, notices to be provided setting forth the provisions of this nondiscrimination clause.

2. The contractor shall not print or publish or cause to be printed or published a notice or advertisement relating to employment by such an employer or membership in or any classification or referral for employment by the employment agency, indicating any preference, limitation, specification, or discrimination, based on race, color, religion, national origin, sex, disability or age (between forty and seventy), except that such notice or advertisement may indicate a preference, limitation, or specification based on religion, or national origin when religion, or national origin is a bona fide occupational qualification for employment.

3. If the contractor is in control of apprenticeship or other training or retraining, including on-the-job training programs, he shall not discriminate against an individual because of his race, color, religion, national origin, sex, disability or age (between forty and seventy), in admission to, or employment in any program established to provide apprenticeship or other training.

4. The contractor will send to each labor union or representative of workers with which he has a collective bargaining agreement or other contract or understanding, a notice to be provided advising the said labor union or workers' representative of the contractor's commitments under this section, and shall post copies of the notice in conspicuous places available to employees and applicants for employment. The contractor will take such action with respect to any subcontract or purchase order as the administrating agency may direct as a means of enforcing such provisions, including sanctions for non-compliance.

III. PAYMENT OF PREDETERMINED MINIMUM WAGES

1. These special provisions are supplemented elsewhere in the contract by special provisions which set forth certain predetermined minimum wage rates. The contractor shall pay not less than those rates.

2. The minimum wage determination schedule shall be posted by the contractor, in a manner prescribed by the Department of Highways, at the site of the work in prominent places where it can be easily seen by the workers.

IV. STATEMENTS AND PAYROLLS

1. All contractors and subcontractors affected by the terms of KRS 337.505 to 337.550 shall keep full and accurate payroll records covering all disbursements of wages to their employees to whom they are required to pay not less than the prevailing rate of wages. Payrolls and basic records relating thereto will be maintained during the course of the work and preserved for a period of one (1) year from the date of completion of this contract.

2. The payroll records shall contain the name, address and social security number of each employee, his correct classification, rate of pay, daily and weekly number of hours worked, itemized deductions made and actual wages paid.

3. The contractor shall make his daily records available at the project site for inspection by the State Department of Highways contracting office or his authorized representative.

Periodic investigations shall be conducted as required to assure compliance with the labor provisions of the contract. Interrogation of employees and officials of the contractor shall be permitted during working hours.

Aggrieved workers, Highway Managers, Assistant District Engineers, Resident Engineers and Project Engineers shall report all complaints and violations to the Division of Contract Procurement.

The contractor shall be notified in writing of apparent violations. The contractor may correct the reported violations and notify the Department of Highways of the action taken or may request an informal hearing. The request for hearing shall be in writing within ten (10) days after receipt of the notice of the reported violation. The contractor may submit

records and information which will aid in determining the true facts relating to the reported violations.

Any person or organization aggrieved by the action taken or the findings established as a result of an informal hearing by the Division of Contract Procurement may request a formal hearing.

4. The wages of labor shall be paid in legal tender of the United States, except that this condition will be considered satisfied if payment is made by a negotiable check, on a solvent bank, which may be cashed readily by the employee in the local community for the full amount, without discount or collection charges of any kind. Where checks are used for payments, the contractor shall make all necessary arrangements for them to be cashed and shall give information regarding such arrangements.

5. No fee of any kind shall be asked or accepted by the contractor or any of his agents from any person as a condition of employment on the project.

6. No laborers shall be charged for any tools used in performing their respective duties except for reasonably avoidable loss or damage thereto.

7. Every employee on the work covered by this contract shall be permitted to lodge, board, and trade where and with whom he elects and neither the contractor nor his agents, nor his employees shall directly or indirectly require as a condition of employment that an employee shall lodge, board or trade at a particular place or with a particular person.

8. Every employee on the project covered by this contract shall be an employee of either the prime contractor or an approved subcontractor.

9. No charge shall be made for any transportation furnished by the contractor or his agents to any person employed on the work.

10. No individual shall be employed as a laborer or mechanic on this contract except on a wage basis, but this shall not be construed to prohibit the rental of teams, trucks or other equipment from individuals.

No Covered employee may be employed on the work except in accordance with the classification set forth in the schedule mentioned above; provided, however, that in the event additional classifications are required, application shall be made by the contractor to the Department of Highways and (1) the Department shall request appropriate classifications and rates from the proper agency, or (2) if there is urgent need for additional classification to avoid undue delay in the work, the contractor may employ such workmen at rates deemed comparable to rates established for similar classifications provided he has made written application through the Department of Highways, addressed to the proper agency, for the supplemental rates. The contractor shall retroactively adjust, upon receipt of the supplemental rates schedule, the wages of any employee paid less than the established rate and may adjust the wages of any employee overpaid.

11. No contractor or subcontractor contracting for any part of the contract work which may require or involve the employment of laborers or mechanics shall require or permit any laborer or mechanic in any work-week in which he is employed on such work, to work in excess of eight hours in any calendar day or in excess of forty hours in such work-week unless such laborer or mechanic receives compensation at a rate not less than one and one half times his basic rate of pay for all hours worked in excess of eight hours in any calendar day or in excess of forty hours in such work-week. A laborer, workman or mechanic and an employer may enter into a written agreement or a collective bargaining agreement to work more than eight (8) hours a calendar day but not more than ten (10) hours a calendar day for the straight time hourly rate. This agreement shall be in writing and shall be executed prior to the employee working in excess of eight (8) hours, but not more than ten (10) hours, in any one (1) calendar day.

12. Payments to the contractor may be suspended or withheld due to failure of the contractor to pay any laborer or mechanic employed or working on the site of the work, all or part of the wages required under the terms of the contract. The Department may suspend or withhold payments only after the contractor has been given written notice of the alleged violation and the contractor has failed to comply with the wage determination of the Department of Highways.

13. Contractors and subcontractors shall comply with the sections of Kentucky Revised Statutes, Chapter 337 relating to contracts for Public Works.

Revised 2-16-95

EXECUTIVE BRANCH CODE OF ETHICS

In the 1992 regular legislative session, the General Assembly passed and Governor Brereton Jones signed Senate Bill 63 (codified as KRS 11A), the Executive Branch Code of Ethics, which states, in part:

> KRS 11A.040 (6) provides:
>
> No present or former public servant shall, within six (6) months of following termination of his office or employment, accept employment, compensation or other economic benefit from any person or business that contracts or does business with the state in matters in which he was directly involved during his tenure. This provision shall not prohibit an individual from returning to the same business, firm, occupation, or profession in which he was involved prior to taking office or beginning his term of employment, provided that, for a period of six (6) months, he personally refrains from working on any matter in which he was directly involved in state government. This subsection shall not prohibit the performance of ministerial functions, including, but not limited to, filing tax returns, filing applications for permits or licenses, or filing incorporation papers.
>
> KRS 11A.040 (8) states:
>
> A former public servant shall not represent a person in a matter before a state agency in which the former public servant was directly involved, for a period of one (1) year after the latter of:
>
> a) The date of leaving office or termination of employment; or
> b) The date the term of office expires to which the public servant was elected.

This law is intended to promote public confidence in the integrity of state government and to declare as public policy the idea that state employees should view their work as a public trust and not as a way to obtain private benefits.

If you have worked for the executive branch of state government within the past six months, you may be subject to the law's prohibitions. The law's applicability may be different if you hold elected office or are contemplating representation of another before a state agency.

Also, if you are affiliated with a firm which does business with the state and which employs former state executive-branch employees, you should be aware that the law may apply to them.

In case of doubt, the law permits you to request an advisory opinion from the Executive Branch Ethics Commission, Room 136, Capitol Building, 700 Capitol Avenue, Frankfort, Kentucky 40601; telephone (502) 564-7954.

Kentucky Equal Employment Opportunity Act of 1978

The requirements of the Kentucky Equal Employment Opportunity Act of 1978 (KRS 45.560-45.640) shall not apply to this Contract.

TRANSPORTATION CABINET
DIVISION OF CONSTRUCTION PROCUREMENT
COMPLIANCE SECTION
PROJECT WAGE RATES

WORKERS……..MINIMUM HOURLY RATE…..$7.25

Note: Parts III and IV of **"Labor and Wage Requirements Applicable to Other Than Federal-Aid System Projects"** do not apply to this project.

EMPLOYEE RIGHTS

UNDER THE FAIR LABOR STANDARDS ACT

THE UNITED STATES DEPARTMENT OF LABOR WAGE AND HOUR DIVISION

FEDERAL MINIMUM WAGE

$7.25 PER HOUR

BEGINNING JULY 24, 2009

OVERTIME PAY

At least 1½ times your regular rate of pay for all hours worked over 40 in a workweek.

CHILD LABOR

An employee must be at least **16** years old to work in most non-farm jobs and at least **18** to work in non-farm jobs declared hazardous by the Secretary of Labor.

Youths **14** and **15** years old may work outside school hours in various non-manufacturing, non-mining, non-hazardous jobs under the following conditions:

No more than

- **3** hours on a school day or **18** hours in a school week;
- **8** hours on a non-school day or **40** hours in a non-school week.

Also, work may not begin before **7 a.m.** or end after **7 p.m.**, except from June 1 through Labor Day, when evening hours are extended to **9 p.m.** Different rules apply in agricultural employment.

TIP CREDIT

Employers of "tipped employees" must pay a cash wage of at least $2.13 per hour if they claim a tip credit against their minimum wage obligation. If an employee's tips combined with the employer's cash wage of at least $2.13 per hour do not equal the minimum hourly wage, the employer must make up the difference. Certain other conditions must also be met.

ENFORCEMENT

The Department of Labor may recover back wages either administratively or through court action, for the employees that have been underpaid in violation of the law. Violations may result in civil or criminal action.

Employers may be assessed civil money penalties of up to $1,100 for each willful or repeated violation of the minimum wage or overtime pay provisions of the law and up to $11,000 for each employee who is the subject of a violation of the Act's child labor provisions. In addition, a civil money penalty of up to $50,000 may be assessed for each child labor violation that causes the death or serious injury of any minor employee, and such assessments may be doubled, up to $100,000, when the violations are determined to be willful or repeated. The law also prohibits discriminating against or discharging workers who file a complaint or participate in any proceeding under the Act.

ADDITIONAL INFORMATION

- Certain occupations and establishments are exempt from the minimum wage and/or overtime pay provisions.
- Special provisions apply to workers in American Samoa and the Commonwealth of the Northern Mariana Islands.
- Some state laws provide greater employee protections; employers must comply with both.
- The law requires employers to display this poster where employees can readily see it.
- Employees under 20 years of age may be paid $4.25 per hour during their first 90 consecutive calendar days of employment with an employer.
- Certain full-time students, student learners, apprentices, and workers with disabilities may be paid less than the minimum wage under special certificates issued by the Department of Labor.

For additional information:

1-866-4-USWAGE

(1-866-487-9243) TTY: 1-877-889-5627

WHD U.S. Wage and Hour Division

WWW.WAGEHOUR.DOL.GOV

U.S. Department of Labor | Wage and Hour Division

WHD Publication 1088 (Revised July 2009)

PART IV

INSURANCE

INSURANCE

The Contractor shall procure and maintain the following insurance in addition to the insurance required by law:

1) Commercial General Liability-Occurrence form – not less than $2,000,000 General aggregate, $2,000,000 Products & Completed Aggregate, $1,000,000 Personal & Advertising, $1,000,000 each occurrence.

2) Automobile Liability- $1,000,000 per accident

3) Employers Liability:

   a) $100,000 Each Accident Bodily Injury
   b) $500,000 Policy limit Bodily Injury by Disease
   c) $100,000 Each Employee Bodily Injury by Disease

4) The insurance required above must be evidenced by a Certificate of Insurance and this Certificate of Insurance must contain one of the following statements:
   a) "policy contains no deductible clauses."
   b) "policy contains _____ (amount) deductible property damage clause but company will pay claim and collect the deductible from the insured."

5) KENTUCKY WORKMEN'S COMPENSATION INSURANCE. The contractor shall furnish evidence of coverage of all his employees or give evidence of self-insurance by submitting a copy of a certificate issued by the Workmen's Compensation Board.

The cost of insurance is incidental to all contract items. All subcontractors must meet the same minimum insurance requirements.

PART V

BID ITEMS

CONTRACT ID: 112316
COUNTY: ROWAN
PROPOSAL: FE06 103 0060 016-018

PAGE: 1
LETTING: 10/21/11
CALL NO: 302

LINE NO	ITEM	DESCRIPTION	APPROXIMATE UNIT QUANTITY	UNIT PRICE	AMOUNT
	SECTION 0001	ROADWAY			
0010	00001	DGA BASE	25.000 TON		
0020	00462	CULVERT PIPE-18 IN	30.000 LF		
0030	01982	DELINEATOR FOR GUARDRAIL-WHITE	82.000 EACH		
0040	02351	GUARDRAIL-STEEL W BEAM-S FACE	4,087.500 LF		
0050	02360	GUARDRAIL TERMINAL SECTION NO 1	9.000 EACH		
0060	02367	GUARDRAIL END TREATMENT TYPE 1	3.000 EACH		
0070	02373	GUARDRAIL END TREATMENT TYPE 3	1.000 EACH		
0080	02396	REMOVE GUARDRAIL END TREATMENT	1.000 EACH		
0090	02562	SIGNS	150.000 SQFT		
0100	21741NC	MAINTAIN & CONTROL TRAFFIC	1.000 EACH		
0110	23896EC	CRUSHED AGGREGATE SIZE NO. 10	20.000 TON		
	SECTION 0002	DEMOBILIZATION			
0120	02569	DEMOBILIZATION (AT LEAST 1.5%)	LUMP		
		TOTAL BID			