CALL NO. 203

CONTRACT ID. 111051

CLARK - MONTGOMERY COUNTIES

FED/STATE PROJECT NUMBER 121GR11D051-IM

DESCRIPTION LEXINGTON-ASHLAND ROAD (I-64)

WORK TYPE ASPHALT REHAB WITH BRIDGE (S)

PRIMARY COMPLETION DATE 8/1/2012

LETTING DATE: October 21, 2011

Sealed Bids will be received electronically through the Bid Express bidding service until 10:00 AM EASTERN DAYLIGHT TIME October 21, 2011. Bids will be publicly announced at 10:00 AM EASTERN DAYLIGHT TIME.

DBE CERTIFICATION REQUIRED - 15%

REQUIRED BID PROPOSAL GUARANTY: Not less than 5% of the total bid.

TABLE OF CONTENTS

PART I SCOPE OF WORK
- PROJECT(S), COMPLETION DATE(S), & LIQUIDATED DAMAGES
- CONTRACT NOTES
- FEDERAL CONTRACT NOTES
- SIGNIFICANT PROJECT -PROJECT TRAFFIC COORDINATOR (PTC)
- ASPHALT MIXTURE
- DGA BASE
- DGA BASE FOR SHOULDERS
- INCIDENTAL SURFACING
- ASPHALT PAVEMENT RIDE QUALITY
- FUEL AND ASPHALT PAY ADJUSTMENT
- COMPACTION OPTION A
- SPECIAL NOTE(S) APPLICABLE TO PROJECT
- UTILITY CLEARANCE
- MATERIAL SUMMARY

PART II SPECIFICATIONS AND STANDARD DRAWINGS
- SPECIFICATIONS REFERENCE
- SUPPLEMENTAL SPECIFICATIONS

PART III EMPLOYMENT, WAGE AND RECORD REQUIREMENTS
- FEDERAL-AID CONSTRUCTION CONTRACTS - FHWA 1273
- NONDISCRIMINATION OF EMPLOYEES
- EXECUTIVE BRANCH CODE OF ETHICS
- PROJECT WAGE RATES
- NOTICE OF REQUIREMENT FOR AFFIRMATIVE ACTION TO ENSURE EEO
- NOTICE OF REQUIREMENT FOR AFFIRMATIVE ACTION TO ENSURE EEO

PART IV INSURANCE

PART V BID ITEMS

PART I

SCOPE OF WORK

CONTRACT ID - 111051 ADMINISTRATIVE DISTRICT - 07

PROJECT(S) IDENTIFICATION AND DESCRIPTION:

COUNTY - CLARK, MONTGOMERY
121GR11D051-IM LEXINGTON-ASHLAND ROAD (I-64)

COUNTY - CLARK PES - DE02500641151
IM 0645(080)
LEXINGTON-ASHLAND ROAD (I-64) MILL AND RESURFACE EAST AND WESTBOUND DIRECTIONS FROM MP 101.7 TO MP 104.26 IN CLARK COUNTY. ASPHALT REHAB WITH BRIDGE (S). SYP NO. 07-02032.00.

GEOGRAPHIC COORDINATES LATITUDE 38^02'54" LONGITUDE 84^03'52"

COUNTY - MONTGOMERY PES - DE08700641151
IM 0645(080)
LEXINGTON-ASHLAND ROAD (I-64) MILL AND RESURFACE EAST AND WESTBOUND DIRECTIONS FROM MP 104.26 TO MP 112.1 IN MONTGOMERY COUNTY. ASPHALT REHAB WITH BRIDGE (S). SYP NO. 07-02032.00.
GEOGRAPHIC COORDINATES LATITUDE 38^04'28" LONGITUDE 83^58'24"

COMPLETION DATE(S):
COMPLETION DATE - August 01, 2012
APPLIES TO ENTIRE CONTRACT

CONTRACT NOTES

PROPOSAL ADDENDA

All addenda to this proposal must be applied when calculating bid and certified in the bid packet submitted to the Kentucky Department of Highways. Failure to use the correct and most recent addenda may result in the bid being rejected.

BID SUBMITTAL

Bidder must use the Department's Expedite Bidding Program available on the Internet web site of the Department of Highways, Division of Construction Procurement. (www.transportation.ky.gov/contract)

The Bidder must download the bid file located on the Bid Express website (www.bidx.com) to prepare a bid packet for submission to the Department. The bidder must submit electronically using Bid Express.

JOINT VENTURE BIDDING

Joint venture bidding is permissible. All companies in the joint venture must be prequalified in one of the work types in the Qualifications for Bidders for the project. The bidders must get a vendor ID for the joint venture from the Division of Construction Procurement and register the joint venture as a bidder on the project. Also, the joint venture must obtain a digital ID from Bid Express to submit a bid. A joint bid bond of 5% may be submitted for both companies or each company may submit a separate bond of 5%.

UNDERGROUND FACILITY DAMAGE PROTECTION

The contractor is advised that the Underground Facility Damage Protection Act of 1994, became law January 1, 1995. It is the contractor's responsibility to determine the impact of the act regarding this project, and take all steps necessary to be in compliance with the provision of the act.

REGISTRATION WITH THE SECRETARY OF STATE BY A FOREIGN ENTITY

Pursuant to KRS 176.085(1)(b), an agency, department, office, or political subdivision of the Commonwealth of Kentucky shall not award a state contract to a person that is a foreign entity required by KRS 14A.9-010 to obtain a certificate of authority to transact business in the Commonwealth ("certificate") from the Secretary of State under KRS 14A.9-030 unless the person produces the certificate within fourteen (14) days of the bid or proposal opening. If the foreign entity is not required to obtain a certificate as provided in KRS 14A.9-010, the foreign entity should identify the applicable exception. Foreign entity is defined within KRS 14A.1-070.

For all foreign entities required to obtain a certificate of authority to transact business in the Commonwealth, if a copy of the certificate is not received by the contracting agency within the time frame identified above, the foreign entity's solicitation response shall be deemed non-responsive or the awarded contract shall be cancelled.

Businesses can register with the Secretary of State at https://secure.kentucky.gov/sos/ftbr/welcome.aspx .

ACCESS TO RECORDS

The contractor, as defined in KRS 45A.030 (9) agrees that the contracting agency, the Finance and Administration Cabinet, the Auditor of Public Accounts, and the Legislative Research Commission, or their duly authorized representatives, shall have access to any books, documents, papers, records, or other evidence, which are directly pertinent to this contract for the purpose of financial audit or program review. Records and other prequalification information confidentially disclosed as part of the bid process shall not be deemed as directly pertinent to the contract and shall be exempt from disclosure as provided in KRS 61.878(1)(c). The contractor also recognizes that any books, documents, papers, records, or other evidence, received during a financial audit or program review shall be subject to the Kentucky Open Records Act, KRS 61.870 to 61.884.

In the event of a dispute between the contractor and the contracting agency, Attorney General, or the Auditor of Public Accounts over documents that are eligible for production and review, the Finance and Administration Cabinet shall review the dispute and issue a determination, in accordance with Secretary's Order 11-004. (See attachment)

SPECIAL NOTE FOR PROJECT QUESTIONS DURING ADVERTISEMENT

Questions about projects during the advertisement should be submitted in writing to the Division of Construction Procurement. This may be done by fax (502) 564-7299 or email to kytc.projectquestions@ky.gov. The Department will attempt to answer all submitted questions. The Department reserves the right not to answer if the question is not pertinent or does not aid in clarifying the project intent.

The deadline for posting answers will be 3:00 pm Eastern Daylight Time, the day preceding the Letting. Questions may be submitted until this deadline with the understanding that the later a question is submitted, the less likely an answer will be able to be provided.

The questions and answers will be posted for each Letting under the heading "Questions & Answers" on the Construction Procurement website (www.transportation.ky.gov/contract). The answers provided shall be considered part of

this Special Note and, in case of a discrepancy, will govern over all other bidding documents.

09/30/2011

FEDERAL CONTRACT NOTES

The Kentucky Department of Highways, in accordance with the Regulations of the United States Department of Transportation 23 CFR 635.112 (h), hereby notifies all bidders that failure by a bidder to comply with all applicable sections of the current Kentucky Standard Specifications, including, but not limited to the following, may result in a bid not being considered responsive and thus not eligible to be considered for award:

102.02 Current Capacity Rating 102.10 Delivery of Proposals
102.08 Irregular Proposals 102.14 Disqualification of Bidders
102.09 Proposal Guaranty

CIVIL RIGHTS ACT OF 1964

The Kentucky Department of Highways, in accordance with the provisions of Title VI of the Civil Rights Act of 1964 (78 Stat. 252) and the Regulations of the Federal Department of Transportation (49 C.F.R., Part 21), issued pursuant to such Act, hereby notifies all bidders that it will affirmatively insure that the contract entered into pursuant to this advertisement will be awarded to the lowest responsible bidder without discrimination on the ground of race, color, or national origin.

NOTICE TO ALL BIDDERS

To report bid rigging activities call: 1-800-424-9071.

The U.S. Department of Transportation (DOT) operates the above toll-free “hotline” Monday through Friday, 8:00 a.m. to 5:00 p.m. eastern time. Anyone with knowledge of possible bid rigging, bidder collusion, or other fraudulent activities should use the “hotline” to report such activities.

The “hotline” is part of the DOT’s continuing effort to identify and investigate highway construction contract fraud and abuse and is operated under the direction of the DOT Inspector General. All information will be treated confidentially and caller anonymity will be respected.

FHWA 1273

Contrary to Paragraph VI of FHWA 1273, contractors on National Highway System (NHS) projects of $1 million or more are no longer required to submit Form FHWA-47.

SECOND TIER SUBCONTRACTS

Second Tier subcontracts on federally assisted projects shall be permitted. However, in the case of DBE’s, second tier subcontracts will only be permitted where the other subcontractor is also a DBE. All second tier subcontracts shall have the consent of both the Contractor and the Engineer.

DISADVANTAGED BUSINESS ENTERPRISE PROGRAM

It is the policy of the Kentucky Transportation Cabinet ("the Cabinet") that Disadvantaged Business Enterprises ("DBE") shall have the opportunity to participate in the performance of highway construction projects financed in whole or in part by Federal Funds in order to create a level playing field for all businesses who wish to contract with the Cabinet. To that end, the Cabinet will comply with the regulations found in 49 CFR Part 26, and the definitions and requirements contained therein shall be adopted as if set out verbatim herein.

The Cabinet, contractors, subcontractors, and sub-recipients shall not discriminate on the basis of race, color, national origin, or sex in the performance of work performed pursuant to Cabinet contracts. The contractor shall carry out applicable requirements of 49 CFR 26 in the award and administration of federally assisted highway construction projects. The contractor will include this provision in all its subcontracts and supply agreements pertaining to contracts with the Cabinet.

Failure by the contractor to carry out these requirements is a material breach of its contract with the Cabinet, which may result in the termination of the contract or such other remedy as the Cabinet deems necessary.

DBE GOAL

The Disadvantaged Business Enterprise (DBE) goal established for this contract, as listed on the front page of the proposal, is the percentage of the total value of the contract.

The contractor shall exercise all necessary and reasonable steps to ensure that Disadvantaged Business Enterprises participate in a least the percent of the contract as set forth above as goals for this contract.

OBLIGATION OF CONTRACTORS

Each contractor prequalified to perform work on Cabinet projects shall designate and make known to the Cabinet a liaison officer who is assigned the responsibility of effectively administering and promoting an active program for utilization of DBEs.

If a formal goal has not been designated for the contract, all contractors are encouraged to consider DBEs for subcontract work as well as for the supply of material and services needed to perform this work.

Contractors are encouraged to use the services of banks owned and controlled by minorities and women.

CERTIFICATION OF CONTRACT GOAL

Contractors shall include the following certification in bids for projects for which a DBE goal has been established. BIDS SUBMITTED WHICH DO NOT INCLUDE CERTIFICATION OF DBE PARTICIPATION WILL NOT BE ACCEPTED. These bids will not be considered for award by the Cabinet and they will be returned to the bidder.

"The bidder certifies that it has secured participation by Disadvantaged Business Enterprises ("DBE") in the amount of ____ percent of the total value of this contract and that the DBE participation is in compliance with the requirements of 49 CFR 26 and the policies of the Kentucky Transportation Cabinet pertaining to the DBE Program."

The certification statement is located in the electronic bid file. All contractors must certify their DBE participation on that page. DBEs utilized in achieving the DBE goal must be certified and prequalified for the work items at the time the bid is submitted.

DBE PARTICIPATION PLAN

Lowest responsive bidders must submit the *DBE Plan/ Subcontractor Request*, form TC 63-35 DBE, within 10 days of the letting. This is necessary before the Awards Committee will review and make a recommendation. **The project will not be considered for award prior to submission and approval of the apparent low bidder's DBE Plan/Subcontractor Request.**

The DBE Participation Plan shall include the following:

1 Name and address of DBE Subcontractor(s) and/or supplier(s) intended to be used in the proposed project;

2 Description of the work each is to perform including the work item , unit, quantity, unit price and total amount of the work to be performed by the individual DBE. The Project Code Number (PCN), Category Number, and the Project Line Number can be found in the "material listing" on the Construction Procurement website under the specific letting;

3 The dollar value of each proposed DBE subcontract and the percentage of total project contract value this represents. DBE participation may be counted as follows; a) If DBE suppliers and manufactures assume actual and contractual responsibility, the dollar value of materials to be furnished will be counted toward the goal as follows:

- The entire expenditure paid to a DBE manufacturer;
- 60 percent of expenditures to DBE suppliers that are not manufacturers provided the supplier is a regular dealer in the product involved. A regular dealer must be engaged in, as its principal business and in its own name, the sale of products to the public, maintain an inventory and own and operate distribution equipment; and
- the amount of fees or commissions charged by the DBE firms for a bona fide service, such as professional, technical, consultant, or managerial services and assistance in the procurement of essential personnel,

facilities, equipment, materials, supplies, delivery of materials and supplies or for furnishing bonds, or insurance, providing such fees or commissions are determined to be reasonable and customary.

b) The dollar value of services provided by DBEs such as quality control testing, equipment repair and maintenance, engineering, staking, etc.;

c) The dollar value of joint ventures. DBE credit for joint ventures will be limited to the dollar amount of the work actually performed by the DBE in the joint venture;

4 Written and signed documentation of the bidder's commitment to use a DBE contractor whose participation is being utilized to meet the DBE goal; and

5 Written and signed confirmation from the DBE that it is participating in the contract as provided in the prime contractor's commitment.

Upon award and before a work order will be issued, contractors must submit the signed subcontract between the contractor and the DBE contractor, the DBE's certificate of insurance, and an affidavit for bidders, offerors, and contractors from the DBE to the Division of Construction Procurement. The affidavit can be found on the Construction Procurement website. If the DBE is a supplier of materials for the project, a signed purchase order and an affidavit for bidders, offerors, and contractors must be submitted to the Division of Construction Procurement.

Changes to DBE Participation Plans must be approved by the Cabinet. The Cabinet may consider extenuating circumstances including, but not limited to, changes in the nature or scope of the project, the inability or unwillingness of a DBE to perform the work in accordance with the bid, and/or other circumstances beyond the control of the prime contractor.

CONSIDERATION OF GOOD FAITH EFFORTS REQUESTS

If the DBE participation submitted in the bid by the apparent lowest responsive bidder does not meet or exceed the DBE contract goal, the apparent lowest responsive bidder must submit a Good Faith Effort Package to satisfy the Cabinet that sufficient good faith efforts were made to meet the contract goals prior to submission of the bid. Efforts to increase the goal after bid submission will not be considered in justifying the good faith effort, unless the contractor can show that the proposed DBE was solicited prior to the letting date. DBEs utilized in achieving the DBE goal must be certified and prequalified for the work items at the time the bid is submitted. One complete set and nine (9) copies of this information must be received in the office of the Division of Contract Procurement no later than 12:00 noon of the tenth calendar day after receipt of notification that they are the apparent low bidder.

Where the information submitted includes repetitious solicitation letters it will be acceptable to submit a sample representative letter along with a distribution list of the firms solicited. Documentation of DBE quotations shall be a part of the good faith effort submittal as necessary to demonstrate compliance with the factors listed below which the Cabinet considers in judging good faith efforts. This documentation may include written subcontractors' quotations, telephone log notations of verbal quotations, or other types of quotation documentation.

The Good Faith Effort Package shall include, but may not be limited to information showing evidence of the following:

1 Whether the bidder attended any pre-bid meetings that were scheduled by the Cabinet to inform DBEs of subcontracting opportunities;
2 Whether the bidder provided solicitations through all reasonable and available means;
3 Whether the bidder provided written notice to all DBEs listed in the DBE directory at the time of the letting who are prequalified in the areas of work that the bidder will be subcontracting;
4 Whether the bidder followed up initial solicitations of interest by contacting DBEs to determine with certainly whether they were interested. If a reasonable amount of DBEs within the targeted districts do not provide an intent to quote or no DBEs are prequalified in the subcontracted areas, the bidder must notify the DBE Liaison in the Office of Minority Affairs to give notification of the bidder's inability to get DBE quotes;
5 Whether the bidder selected portions of the work to be performed by DBEs in order to increase the likelihood of meeting the contract goals. This includes, where appropriate, breaking out contract work items into economically feasible units to facilitate DBE participation, even when the prime contractor might otherwise perform these work items with its own forces;
6 Whether the bidder provided interested DBEs with adequate and timely information about the plans, specifications, and requirements of the contract;
7 Whether the bidder negotiated in good faith with interested DBEs not rejecting them as unqualified without sound reasons based on a thorough investigation of their capabilities. Any rejection should be so noted in writing with a description as to why an agreement could not be reached;
8 Whether quotations were received from interested DBE firms but were rejected as unacceptable without sound reasons why the quotations were considered unacceptable. The fact that the DBE firm's quotation for the work is not the lowest quotation received will not in itself be considered as a sound reason for rejecting the quotation as unacceptable. The fact that the bidder has the ability and/or desire to perform the contract work with its own forces will not be considered a sound reason for rejecting a DBE quote. Nothing in this provision shall be construed to require the bidder to accept unreasonable quotes in order to satisfy DBE goals;
9 Whether the bidder specifically negotiated with subcontractors to assume part of the responsibility to meet the contract DBE goal when the work to be subcontracted includes potential DBE participation;
10 Whether the bidder made any efforts and/or offered assistance to interested DBEs in obtaining the necessary equipment, supplies, materials, insurance and/or bonding to satisfy the work requirements of the bid proposal; and
11 Any other evidence that the bidder submits which may show that the bidder has made reasonable good faith efforts to include DBE participation.

FAILURE TO MEET GOOD FAITH REQUIREMENT

Where the apparent lowest responsive bidder fails to submit sufficient participation by DBE firms to meet the contract goal and upon a determination by the Good Faith Committee based upon the information submitted that the apparent lowest responsive bidder failed to make sufficient reasonable efforts to meet the contract goal, the bidder will be offered the opportunity to meet in person for administrative reconsideration. The bidder will be notified of the Committee's decision within 24 hours of its decision. The bidder will have 24 hours to request reconsideration of the Committee's decision. The reconsideration meeting will be held within two days of the receipt of a request by the bidder for reconsideration.

The request for reconsideration will be heard by the Office of the Secretary. The bidder will have the opportunity to present written documentation or argument concerning the issue of whether it met the goal or made an adequate good faith effort. The bidder will receive a written decision on the reconsideration explaining the basis for the finding that the bidder did or did not meet the goal or made adequate Good Faith efforts to do so.

The result of the reconsideration process is not administratively appealable to the Cabinet or to the United States Department of Transportation.

The Cabinet reserves the right to award the contract to the next lowest responsive bidder or to rebid the contract in the event that the contract is not awarded to the low bidder as the result of a failure to meet the good faith requirement.

SANCTIONS FOR FAILURE TO MEET DBE REQUIREMENTS OF THE PROJECT

Failure by the prime contractor to fulfill the DBE requirements of a project under contract or to demonstrate good faith efforts to meet the goal constitutes a breach of contract. When this occurs, the Cabinet will hold the prime contractor accountable, as would be the case with all other contract provisions. Therefore, the contractor's failure to carry our the DBE contract requirements shall constitute a breach of contract and as such the Cabinet reserves the right to exercise all administrative remedies at its disposal including, but not limited to the following:

- Disallow credit toward the DBE goal;
- Withholding progress payments;
- Withholding payment to the prime in an amount equal to the unmet portion of the contract goal; and/or
- Termination of the contract.

PROMPT PAYMENT

The prime contractor will be required to pay the DBE within seven (7) working days after he or she has received payment from the Kentucky Transportation Cabinet for work performed or materials furnished.

CONTRACTOR REPORTING

All contractors must keep detailed records and provide reports to the Cabinet on their progress in meeting the DBE requirement on any highway contract. These records may include, but shall not be limited to payroll, lease agreements, cancelled payroll checks, executed subcontracting agreements, etc. Prime contractors will be required to submit certified reports on monies paid to each DBE subcontractor or supplier utilized to meet a DBE goal.

Payment information that needs to be reported includes date the payment is sent to the DBE, check number, Contract ID, amount of payment and the check date. Before Final Payment is made on this contract, the Prime Contractor will certify that all payments were made to the DBE subcontractor and/or DBE suppliers.

The Prime Contractor should supply the payment information at the time the DBE is compensated for their work. Form to use is located at:
http://transportation.ky.gov/construction/forms/DBEcheck.xls

Photocopied payments and completed form to be submitted to: Office of Civil Rights and Small Business Development 6th Floor West 200 Mero Street Frankfort, KY 40622

DEFAULT OR DECERTIFICATION OF THE DBE

If the DBE subcontractor or supplier is decertified or defaults in the performance of its work, and the overall goal cannot be credited for the uncompleted work, the prime contractor may utilize a substitute DBE or elect to fulfill the DBE goal with another DBE on a different work item. If after exerting good faith effort in accordance with the Cabinet's Good Faith Effort policies and procedures, the prime contractor is unable to replace the DBE, then the unmet portion of the goal may be waived at the discretion of the Cabinet.

09/14/11

KYTC
DBE Payments

updated 2/28/08

Prime Contractor	Cont-ID
DBE Contractor	**CHECK #**
PAYMENT DATE	**Amount of Payment**

Use the section below to show multiple payments using the same check

Cont-ID	Amount	Cont-ID	Amount

Comments:

attach copy of check here

Mail to:
Office of Civil Rights and Small Business Development
200 Mero Street
6th Floor West TCOB
Frankfort, KY 40622

to be Submitted within 7 days of receipt of payment from KYTC

PROJECT TRAFFIC COORDINATOR (PTC)

Be advised this project is a significant project pursuant to section 112.03.12.

ASPHALT MIXTURE

Unless otherwise noted, the Department estimates the rate of application for all asphalt mixtures to be 110 lbs/sy per inch of depth.

DGA BASE

Unless otherwise noted, the Department estimates the rate of application for DGA Base to be 115 lbs/sy per inch of depth.

DGA BASE FOR SHOULDERS

Unless otherwise noted, the Department estimates the rate of application for DGA Base for Shoulders to be 115 lbs/sy per inch of depth. The Department will not measure necessary grading and/or shaping of existing shoulders prior to placing of DGA Base, but shall be incidental to the Contract unit price per ton for DGA Base.

Accept payment at the Contract unit price per ton as full compensation for all labor, materials, equipment, and incidentals for grading and/or shaping of existing shoulders and furnishing, placing, and compacting the DGA Base.

INCIDENTAL SURFACING

The Department has included in the quantities of asphalt mixtures established in the proposal estimated quantities required for resurfacing or surfacing mailbox turnouts, farm field entrances, residential and commercial entrances, curve widening, ramp gores and tapers, and road and street approaches, as applicable. Pave these areas to the limits as shown on Standard Drawing RPM-110-05 or as directed by the Engineer. In the event signal detectors are present in the intersecting streets or roads, pave the crossroads to the right of way limit or back of the signal detector, whichever is the farthest back of the mainline. Surface or resurface these areas as directed by the Engineer. The Department will not measure placing and compacting for separate payment but shall be incidental to the Contract unit price for the asphalt mixtures.

ASPHALT PAVEMENT RIDE QUALITY

Pavement Rideability Requirements shall apply on this project in accordance with Section 410 of the current Standard Specifications.

FUEL AND ASPHALT PAY ADJUSTMENT

The Department has included the Contract items Asphalt Adjustment and Fuel Adjustment for possible future payments at an established Contract unit price of $1.00. The Department will calculate actual adjustment quantities after work is completed. If existing Contract amount is insufficient to pay all items on the contract with the adjustments, the Department will establish additional monies with a change order.

OPTION A

Be advisedthat the Department will accept compaction of asphalt mixtures furnished for driving lanes and ramps, at 1 inch (25mm) or greater, on this project according to OPTION A in accordance with Section 402 and Section 403 of the current Standard Specifications. The Department will require joint cores as described in Section 402.03.02 for surface mixtures only. The Department will accept compaction of all other asphalt mixtures according to OPTION B.

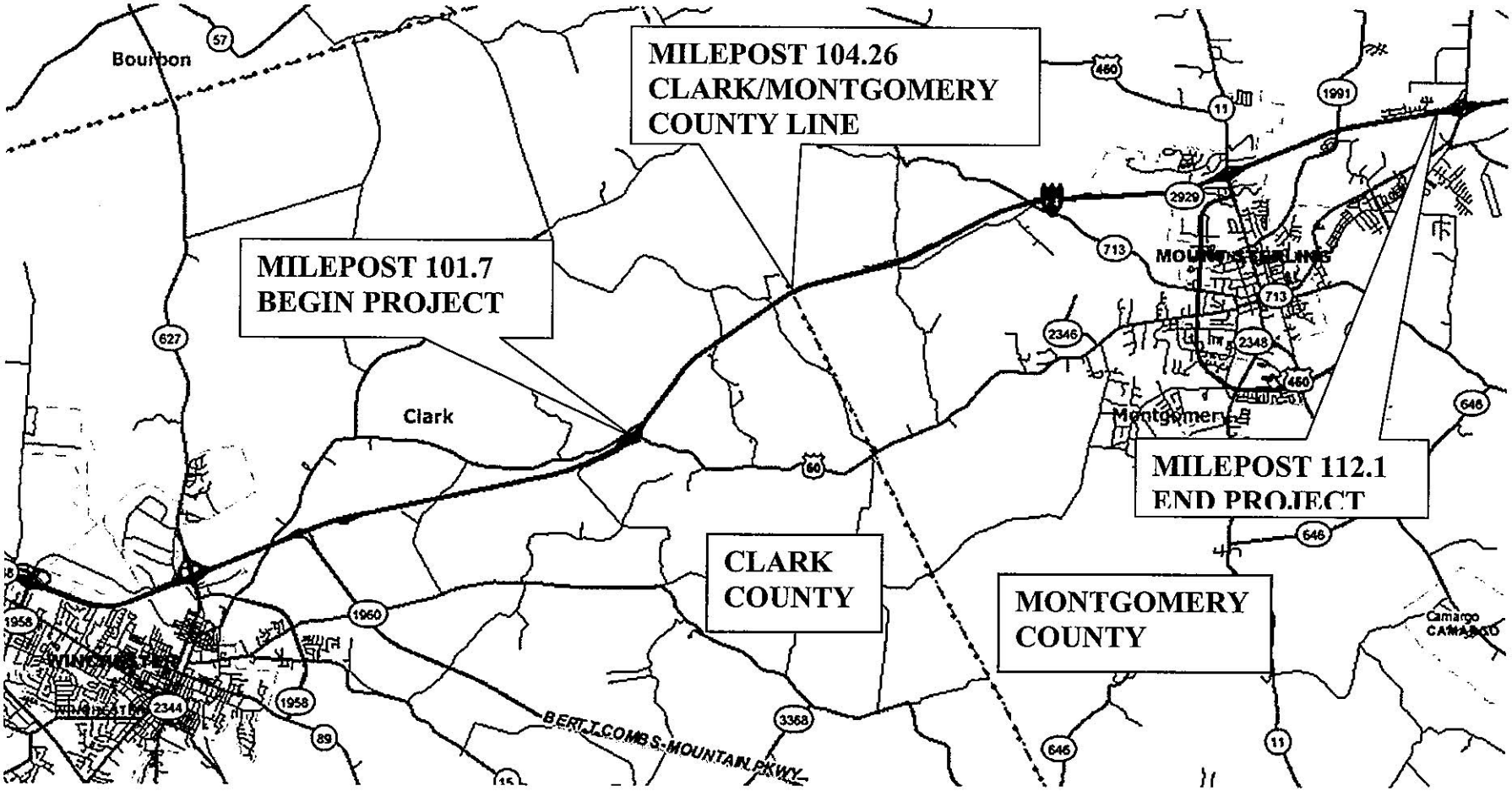

ITEM NUMBERS: 7-2032.00 PROJECT NUMBERS: FD52 025 0064 101-105, FD52 087 0064 104-113

CONSTRUCTION NUMBER: IM 0645(080) LETTING DATE: September 23, 2011

RECOMMENDED BY: _____ DATE: 8-15-11
Project Manager

PLAN APPROVED BY: _____ DATE: 8/15/11
State Highway Engineer

FHWA APPROVED BY: _____ DATE: _____

COUNTY OF	ITEM NO.	SHEET NO.
CLARK/ MONTGOMERY	7-2032.00	

I–64
EXISTING TYPICAL SECTIONS

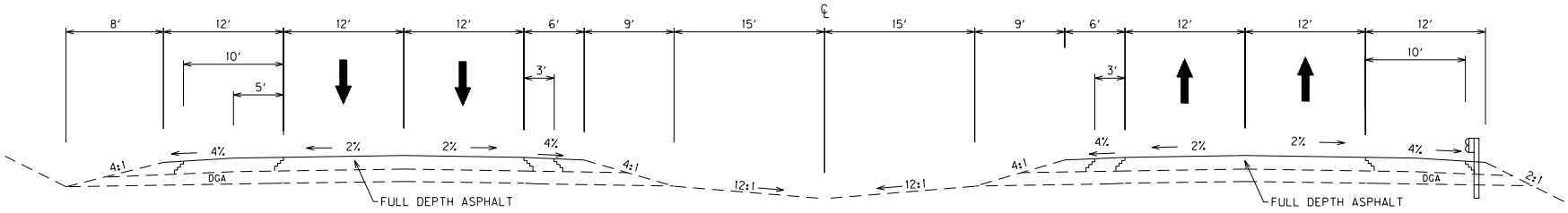

WESTBOUND LANES

EASTBOUND LANES

NORMAL SECTION

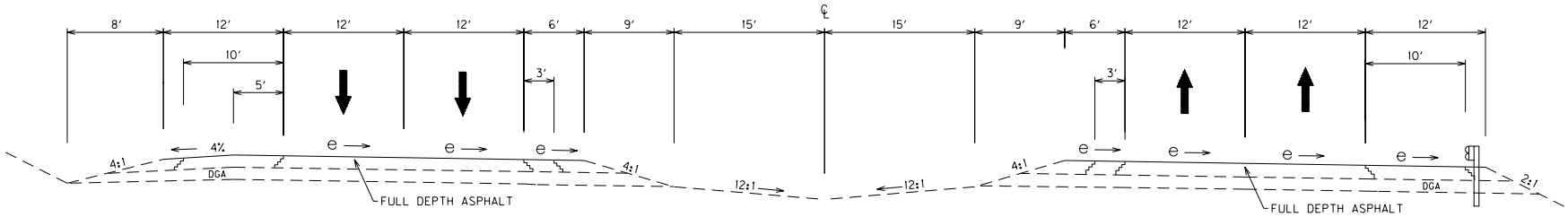

WESTBOUND LANES

EASTBOUND LANES

SUPERELEVATED SECTION

I-64
TYPICAL SECTIONS

COUNTY OF	ITEM NO.	SHEET NO.
CLARK/ MONTGOMERY	7-2032.00	

I–64
PROPOSED TYPICAL SECTIONS
M.P. 101.71 TO M.P. 112.10

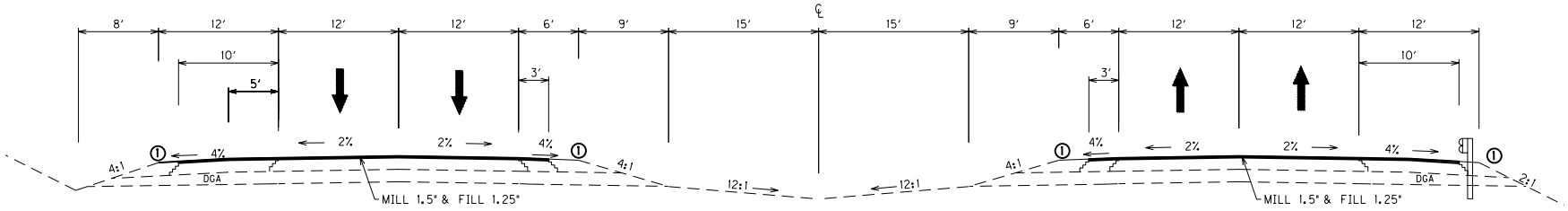

WESTBOUND LANES

EASTBOUND LANES

NORMAL SECTION

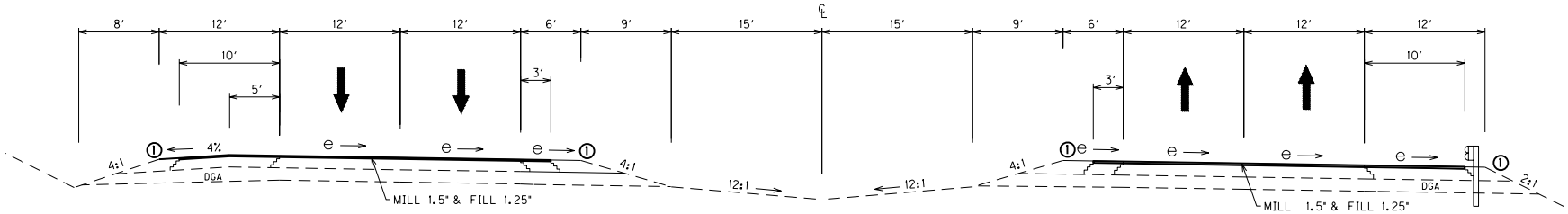

WESTBOUND LANES

EASTBOUND LANES

SUPERELEVATED SECTION

① ASPHALT SEAL
2 APPLICATIONS:
ASPHALT SEAL AGGREGATE - 20 LB/SY
EMULSIFIED ASPHALT RS-2 - 2.4 LB/SY
WIDTH VARIES, TO BE DETERMINED BY THE ENGINEER

PAVEMENT REHABILITATION

DRIVING LANES & INSIDE SHOULDERS

SURFACE -- 1.25" CL4 ASPHALT SURFACE 0.38A PG76-22
1.5" ASPHALT MILLING AND TEXTURING

OUTSIDE SHOULDER

SURFACE -- 1.25" CL3 ASPHALT SURFACE 0.38D PG64-22
1.5" ASPHALT MILLING AND TEXTURING

I-64
TYPICAL SECTIONS

COUNTY OF	ITEM NO.
CLARK/ MONTGOMERY	7-2032.00

TYPICAL SECTIONS
RAMPS

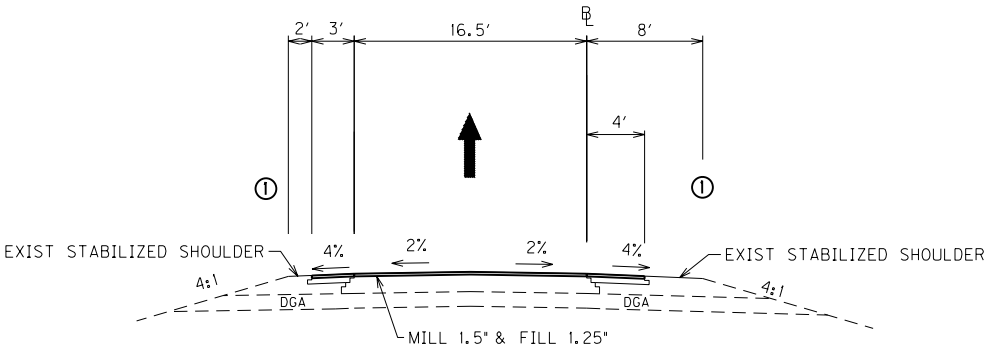

NORMAL SECTION

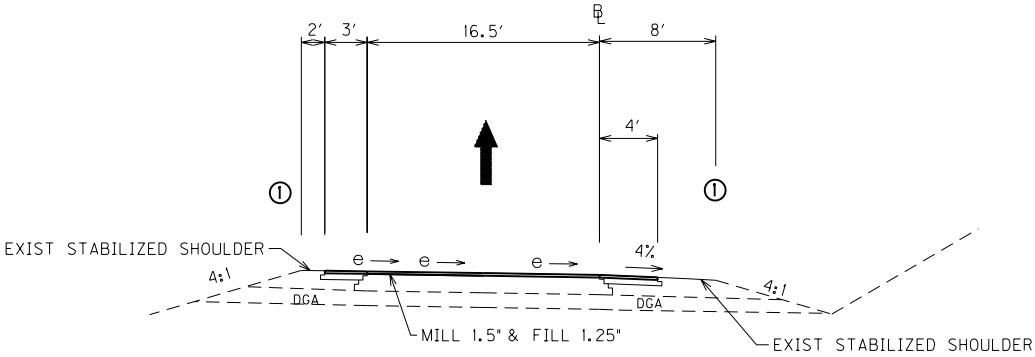

SUPERELEVATED SECTION

PAVEMENT REHABILITATION

DRIVING LANE & BOTH SHOULDERS

SURFACE -- 1.25" CL4 ASPHALT SURFACE 0.38A PG76-22
1.5" ASPHALT MILLING AND TEXTURE

1 ASPHALT SEAL
2 APPLICATIONS:
ASPHALT SEAL AGGREGATE - 20 LB/SY
EMULSIFIED ASPHALT RS-2 - 2.4 LB/SY
WIDTH VARIES, TO BE DETERMINED BY THE ENGINEER

DETAIL SHEET

COUNTY OF	ITEM NO.
CLARK/ MONTGOMERY	7-2032.00

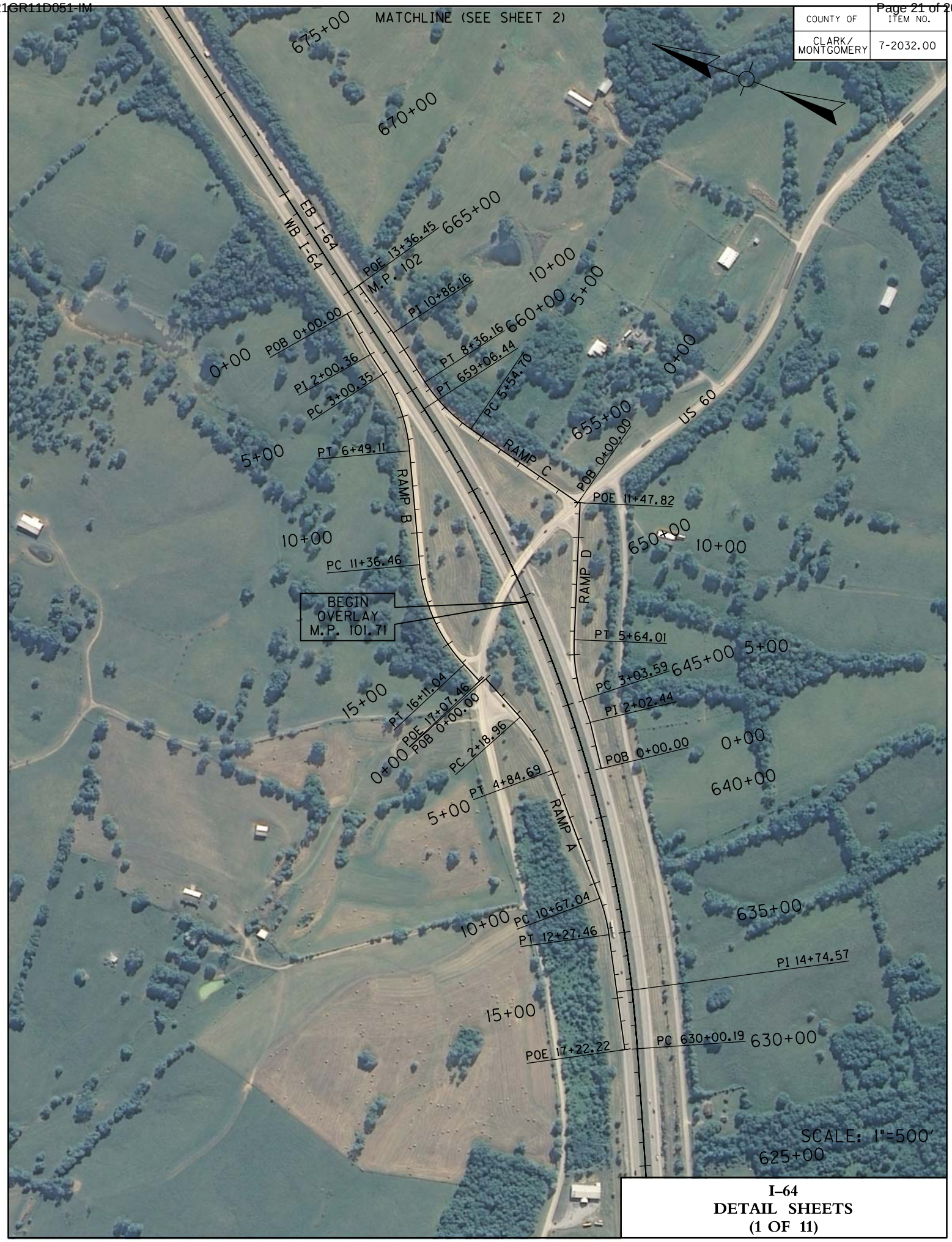

I–64
DETAIL SHEETS
(1 OF 11)

I–64
DETAIL SHEETS
(2 OF 11)

I–64
DETAIL SHEETS
(3 OF 11)

I–64
DETAIL SHEETS
(4 OF 11)

COUNTY OF	ITEM NO.
CLARK/ MONTGOMERY	7-2032.00

I–64
DETAIL SHEETS
(5 OF 11)

I–64
DETAIL SHEETS
(6 OF 11)

COUNTY OF	ITEM NO.
CLARK/ MONTGOMERY	7-2032.00

I–64
DETAIL SHEETS
(7 OF 11)

COUNTY OF	ITEM NO.
CLARK/ MONTGOMERY	7-2032.00

I–64
DETAIL SHEETS
(8 OF 11)

COUNTY OF	ITEM NO.
CLARK/ MONTGOMERY	7-2032.00

I–64
DETAIL SHEETS
(9 OF 11)

I–64
DETAIL SHEETS
(10 OF 11)

I–64
DETAIL SHEETS
(11 OF 11)

I-64
CLARK COUNTY / MONTGOMERY COUNTY
PAVEMENT REHABILITATION, MILEPOST 101.71 TO 112.1
ITEM NO. 7-2032.00
GENERAL SUMMARY

ITEM NUMBER	ITEM		UNIT	CLARK COUNTY	MONTGOMERY COUNTY	PROJECT TOTAL
1	DGA BASE		TON	192	1042	1234
78	CRUSHED AGGREGATE SIZE NO. 2	(1)	TON	100	400	500
100	ASPHALT SEAL AGGREGATE	(2)	TON	654	1806	2460
194	LEVELING AND WEDGING PG76-22		TON	250	750	1000
291	EMULSIFIED ASPHALT RS-2	(2)	TON	78	217	295
339	CL3 ASPH SURF 0.38D PG64-22		TON	1969	6070	8039
342	CL4 ASPH SURF 0.38A PG76-22		TON	6044	17058	23102
461	CULVERT PIPE - 15 IN		LIN FT	164	156	320
462	CULVERT PIPE - 18 IN		LIN FT	12	16	28
464	CULVERT PIPE - 24 IN		LIN FT	60	36	96
1310	REMOVE PIPE		LIN FT	240	204	444
1441	SLOPED BOX INLET OR OUTLET TY 2		EACH	2	0	2
1480	CURB BOX INLET TYPE B		EACH	4	2	6
1502	DROP BOX INLET TYPE 5A		EACH	1	0	1
1891	ISLAND HEADER CURB TYPE 2		LIN FT	118	109	227
1982	DELINEATOR FOR GUARDRAIL-WHITE		EACH	126	340	466
1983	DELINEATOR FOR GUARDRAIL-YELLOW		EACH	14	8	22
1984	DELINEATOR FOR BARRIER-WHITE		EACH	0	15	15
1985	DELINEATOR FOR BARRIER-YELLOW		EACH	0	15	15
2003	RELOCATE TEMP CONC BARRIER	(3)	LIN FT	0	800	800
2220	FLOWABLE FILL	(4)	CU YD	1	4	5
2223	GRANULAR EMBANKMENT	(5)	CU YD	125	0	125
2237	DITCHING	(6)	LIN FT	13530	41471	55001
2262	FENCE - WOVEN WIRE TYPE I		LIN FT	27367	76039	103406
2265	REMOVE FENCE		LIN FT	27367	76039	103406
2351	GUARDRAIL-STEEL W BEAM-S FACE		LIN FT	0.0	200.0	200.0
2352	GUARDRAIL-STEEL W BEAM-D FACE		LIN FT	0.0	275.0	275.0
2363	GUARDRAIL CONNECTOR TO BRIDGE END TY A		EACH	4	5	9
2365	CRASH CUSHION TYPE IX-A		EACH	0	2	2
2367	GUARDRAIL END TREATMENT TYPE 1		EACH	11	20	31
2369	GUARDRAIL END TREATMENT TYPE 2A		EACH	7	25	32
2373	GUARDRAIL END TREATMENT TYPE 3		EACH	0	4	4
2381	REMOVE GUARDRAIL		LIN FT	8912.5	27062.5	35975.0
2383	REMOVE AND RESET GUARDRAIL		LIN FT	0.0	500.0	500.0
2387	GUARDRAIL CONNECTOR TO BRIDGE END TY A-1		EACH	1	2	3
2391	GUARDRAIL END TREATMENT TYPE 4A		EACH	1	0	1
2483	CHANNEL LINING CLASS II	(7)	TON	106	843	949
2484	CHANNEL LINING CLASS III	(7)	TON	327	2011	2338
2562	SIGNS	(8)	SQ FT	500	500	1000
2565	OBJECT MARKER TY 2	(9)	EACH	4	4	8
2568	MOBILIZATION		LUMP SUM	1	1	2
2569	DEMOBILIZATION		LUMP SUM	1	1	2
2599	FABRIC GEOTEXTILE TYPE IV	(5)	SQ YD	100	0	100
2650	MAINTAIN AND CONTROL TRAFFIC		LUMP SUM	1	1	2
2671	PORTABLE CHANGEABLE MESSAGE SIGN	(10)	EACH	4	4	8
2676	MOBILIZATION FOR MILLING & TEXTURING		LUMP SUM	1	1	2
2696	SHOULDER RUMBLE STRIPS-SAWED		LIN FT	52506	160760	213266
2677	ASPHALT PAVE MILLING & TEXTURING		TON	9615	27631	37246
2714	SHOULDERING		LIN FT	58592	160760	219352
2898	RELOCATE CRASH CUSHION	(3)	EACH	0	2	2

I-64
CLARK COUNTY / MONTGOMERY COUNTY
PAVEMENT REHABILITATION, MILEPOST 101.71 TO 112.1
ITEM NO. 7-2032.00
GENERAL SUMMARY

ITEM NUMBER	ITEM		UNIT	CLARK COUNTY	MONTGOMERY COUNTY	PROJECT TOTAL
3171	CONCRETE BARRIER WALL TYPE 9T	(3)	LIN FT	0	800	800
5950	EROSION CONTROL BLANKET	(11)	SQ YD	3000	9000	12000
6412	STEEL POST MILE MARKERS		EACH	6	16	22
6417	FLEXIBLE DELINEATOR POST-W		EACH	177	421	598
6418	FLEXIBLE DELINEATOR POST-Y		EACH	42	10	52
6511	PAVEMENT STRIPING-TEMP PAINT -6 INCH		LIN FT	108240	331760	440000
6592	PAVEMENT MARKER TYPE V- B W/R		EACH	352	1204	1556
6593	PAVEMENT MARKER TYPE V- B Y/R		EACH	84	0	84
6600	REMOVE PAVEMENT MARKER TYPE V		EACH	200	900	1100
8100	CONCRETE - CLASS A		CU YD	8	13	21
8150	STEEL REINFORCEMENT		LB	54	98	152
8905	CRASH CUSHION TY VI CLASS CT	(3)	EACH	0	2	2
10020NS	FUEL ADJUSTMENT		DOLLAR	11297	32644	43941
10030NS	ASPHALT ADJUSTMENT		DOLLAR	19907	57525	77432
20366NN	REPLACE GRATE		EACH	10	8	18
20432ES112	REMOVE CRASH CUSHION		EACH	0	2	2
20465EC	CLEAN CULVERT		LUMP SUM	1	1	2
2230	EMBANKMENT IN PLACE	(11)	CU YD	2500	7500	10000
21802EN	GUARDRAIL-STEEL W BEAM-S FACE (7 FT POST)		LIN FT	8662.5	26812.5	35475.0
23143ED	K.P.D.E.S. PERMIT AND TEMPORARY EROSION CONTROL		LUMP SUM	1	1	2
23237EN10W	WATERBLAST STRIPE REMOVAL		LIN FT	1250	3750	5000
24189ER	DURABLE WATERBORNE MARKING-6 IN W		LIN FT	37108	103678	140786
24190ER	DURABLE WATERBORNE MARKING-6 IN Y		LIN FT	30133	82800	112933
24191ER	DURABLE WATERBORNE MARKING-12 IN W	(12)	LIN FT	370	3186	3556

(1) For bidding purposes only. Crushed Aggregate size no. 2 shall be used for slope stabilization as directed by the Engineer.

(2) Quantity for asphalt seal on shoulders. See Typical Sections.

(3) To be used for traffic control along bridge repair areas. No substitutions will be accepted for Temporary Concrete Barrier Wall

(4) For bidding purposes only. Flowable fill may be used at eroded drop box inlets and headwalls in leiu of channel lining as directed by the Engineer.

(5) These Quantities are intended for the purpose of treatment of open sinkholes found during construction. Locations and treatment of sinkholes shall be verified by field Engineer.

(6) Ditching is intended for repair of the eroded areas in the median, pipe outlet ditches, roadway ditches, cleaning of drainage structures, including inlets, outlets, pipes and perforated pipe headwalls (see Proposal Notes). Any embankment required is incidental to ditching.

(7) Geotextile Fabric Type I to be placed under Channel Lining is considered incidental to the lining.
Any excavation required to place the Channel Lining Class II or Class III is incidental to the lining.

(8) This quantity is intended for temporary traffic control signs and includes initial placement only. Any relocation of these temporary signs required will not be paid for directly but will be considered incidental to "Maintain and Control Traffic."

(9) To be placed at bridge approaches.

(10) The quantity for these items includes initial placement and based on the maximum number in place at one time. Any relocation required will not be paid for directly but will be considered incidental to "Maintain and Control Traffic."

(11) For bidding purposes only. To be used as directed by the Engineer.

(12) Includes quantities to restripe gores for the ramps on the east side of the US 60 interchange (Exit 101) and for all four ramps of the US 460/KY 11 interchange (Exit 110).

NOTE: Quantities from all summaries, except traffic loops and structures, have been carried over and included in this General Summary

I-64
CLARK COUNTY / MONTGOMERY COUNTY
PAVEMENT REHABILITATION, MILEPOST 101.71 TO 112.1
ITEM NO. 7-2032.00

PAVING AREAS MAINLINE

ITEM		TOTAL
INSIDE SHOULDER AND DRIVING LANES		**S.Y.**
1.25" CL4 ASPH SURF 0.38A PG76-22		328068
OUTSIDE SHOULDER		**S.Y.**
1.25" CL3 ASPH SURF 0.38D PG64-22	(3), (4)	116926
ASPHALT PAVE MILLING & TEXTURING		**S.Y.**
PROJECT LIMITS (1.5")	(4)	453939
ASPHALT SEAL COAT		**S.Y.**
EMULSIFIED ASPHALT RS-2 (2 APPLICATIONS)		117876
ASPHALT SEAL AGGREGATE (2 APPLICATIONS)		117876

PAVING AREAS US 60 RAMPS

ITEM	TOTAL
US 60 RAMP B (WB EXIT) - LANES & SHOULDERS	**S.Y.**
1.25" CL4 ASPH SURF 0.38A PG76-22	4390
US 60 RAMP C (EB ENT) - LANES & SHOULDERS	**S.Y.**
1.25" CL4 ASPH SURF 0.38A PG76-22	3085
ASPHALT SEAL COAT	**S.Y.**
EMULSIFIED ASPHALT RS-2 (2 APPLICATIONS)	3381
ASPHALT SEAL AGGREGATE (2 APPLICATIONS)	3381

PAVING SUMMARY

CODE		ITEM	NOTES	UNITS	CLARK CO	MONT. CO.	**PROJECT**
1		DGA BASE	(1)	TON	192	1042	**1234**
194		LEVELING AND WEDGING PG76-22	(2)	TON	250	750	**1000**
342		CL4 ASPH SURF 0.38A PG76-22		TON	6044	17058	**23102**
339		CL3 ASPH SURF 0.38D PG64-22		TON	1969	6070	**8039**
2677		ASPHALT PAVE MILLING & TEXTURING		TON	9615	27631	**37246**
2696		SHOULDER RUMBLE STRIPS - SAWED		LIN. FT.	52506	160760	**213266**
100		ASPHALT SEAL AGGREGATE		TON	654	1806	**2460**
291		EMULSIFIED ASPHALT RS-2		TON	78	217	**295**

(1) TO BE USED FOR EMBANKMENT CONSTRUCTION AT PROPOSED GUARDRAIL END TREATMENTS AS DIRECTED BY THE ENGINEER

(2) INCLUDES 1000 TONS FOR LEVELING & WEDGING TO BE USED AS DIRECTED BY THE ENGINEER

(3) DO NOT MILL OR RESURFACE THE OUTSIDE SHOULDERS EASTBOUND FROM MP 109.30 TO MP 109.47 AND MP 109.83 TO MP 110.11 AND WESTBOUND FROM MP 109.19 TO MP 109.48 AND MP 109.82 TO MP 109.93.

(4) INCLUDES 1470 SQ YDS FOR RESURFACING RAMPS AT WESTBOUND REST AREA AS DIRECTED BY THE ENGINEER

ALL QUANTITIES HAVE BEEN CARRIED OVER AND INCLUDED IN THE GENERAL SUMMARY

I-64
CLARK COUNTY / MONTGOMERY COUNTY
PAVEMENT REHABILITATION, MILEPOST 101.6 TO 112.1
ITEM NO. 7-2032.00
EASTBOUND GUARDRAIL SUMMARY

SIDE	FROM MILEPOST	TO MILEPOST	GUARDRAIL-STEEL W BEAM-S FACE (7 FT POST) (LF)	GUARDRAIL-STEEL W BEAM-S FACE (LF)	GUARDRAIL-STEEL W BEAM-D FACE (LF)	GUARDRAIL CONNECTOR TO BRIDGE END TY A (EACH)	CRASH CUSHION TYPE IX-A (EACH)	GUARDRAIL END TREATMENT TYPE 1 (EACH)	GUARDRAIL END TREATMENT TYPE 2A (EACH)	GUARDRAIL END TREATMENT TYPE 3 (EACH)	GUARDRAIL CONNECTOR TO BRIDGE END TY A-1 (EACH)	GUARDRAIL END TREATMENT TYPE 4A (EACH)	REMOVE GUARDRAIL (LF)	REMOVE CRASH CUSHION (EACH)	REMOVE AND RESET GUARDRAIL (LF)	DESCRIPTION
ITEM NO.			21802EN	2351	2352	2363	2365	2367	2369	2373	2387	2391	2381	20432ES112	2383	
RT	101.711	101.755	237.5						1				237.5			TIE TO EXISTING GUARDRAIL
RT	102.479	102.588	525.0					1					525.0			TIE TO EXISTING GUARDRAIL
RT	102.639	102.754	612.5						1				612.5			TIE TO EXISTING GUARDRAIL
RT	103.047	103.258	1062.5					1	1				1112.5			
RT	103.562	103.641	362.5					1	1				387.5			EXTEND EXISTING 25 FT
RT	103.722	103.974	1312.5			1		1					1337.5			
RT	104.173	104.260	412.5					1					462.5			
RT	101.79	101.92	687.5					1	1				687.5			ENTRANCE RAMP FROM US 60, EXTEND EXISTING 50 FT
EB CLARK COUNTY TOTALS			**5212.5**	**0**	**0**	**1**	**0**	**6**	**5**	**0**	**0**	**0**	**5362.5**	**0**	**0**	
RT	104.260	104.382	637.5						1				637.5			
RT	104.530	104.689	787.5					1	1				762.5			EXTEND EXISTING 75 FT
RT	105.427	105.535	575.0			1				1			462.5			
MED	105.486	105.538		100.0	137.5	1	1						400.0	1		
RT	105.567	105.871	1600.0						1		1		1600.0			
RT	106.142	106.283	750.0						1	1			637.5			
RT	106.332	106.487	762.5					1	1				787.5			EXTEND EXISTING 25 FT
RT	107.130	107.263	662.5			1		1					662.5			EXTEND EXISTING 50 FT
RT	107.652	107.757	500.0					1	1				500.0			EXTEND EXISTING 50 FT
RT	108.171	108.522	1800.0					1	1				1775.0			EXTEND EXISTING 75 FT
RT	108.720	108.933	1125.0						1	1			1025.0			
RT	109.211	109.301	425.0					1	1				450.0			EXTEND EXISTING 25 FT
RT	110.435	110.579	712.5					1	1				737.5			EXTEND EXISTING 25 FT
RT	111.167	111.538	1900.0					1	1				1850.0			EXTEND EXISTING 100 FT
RT	111.766	112.099	1700.0					1					1725.0			EXTEND EXISTING 25 FT, TIE TO EXISTING GUARDRAIL
EB MONTGOMERY CO. TOTALS			**13937.5**	**100**	**137.5**	**3**	**1**	**9**	**11**	**3**	**1**	**0**	**14012.5**	**1**	**0**	
EASTBOUND TOTALS			**19150**	**100**	**137.5**	**4**	**1**	**15**	**16**	**3**	**1**	**0**	**19375**	**1**	**0**	

All quantities have been carried over and included in the General Summary.

I-64
CLARK COUNTY / MONTGOMERY COUNTY
PAVEMENT REHABILITATION, MILEPOST 101.6 TO 112.1
ITEM NO. 7-2032.00
WESTBOUND GUARDRAIL SUMMARY

SIDE	FROM MILEPOST	TO MILEPOST	GUARDRAIL-STEEL W BEAM-S FACE (7 FT POST) (LF)	GUARDRAIL-STEEL W BEAM-S FACE (LF)	GUARDRAIL-STEEL W BEAM-D FACE (LF)	GUARDRAIL CONNECTOR TO BRIDGE END TY A (EACH)	CRASH CUSHION TYPE IX-A (EACH)	GUARDRAIL END TREATMENT TYPE 1 (EACH)	GUARDRAIL END TREATMENT TYPE 2A (EACH)	GUARDRAIL END TREATMENT TYPE 3 (EACH)	GUARDRAIL CONNECTOR TO BRIDGE END TY A-1 (EACH)	GUARDRAIL END TREATMENT TYPE 4A (EACH)	REMOVE GUARDRAIL (LF)	REMOVE CRASH CUSHION (EACH)	REMOVE AND RESET GUARDRAIL (LF)	DESCRIPTION
ITEM NO.			21802EN	2351	2352	2363	2365	2367	2369	2373	2387	2391	2381	20432ES112	2383	
LT	101.727	101.777	212.5			1		1					262.5			
LT	102.485	102.576	487.5						1		1		487.5			
LT	102.626	102.817	962.5			1		1					1012.5			
LT	103.110	103.305	975.0					1	1				975.0			EXTEND EXISTING 50 FT
LT	103.956	104.019	312.5			1		1					312.5			EXTEND EXISTING 50 FT
LT	101.66	101.77	500.0					1				1	500.0			EXIT RAMP TO US 60, EXTEND EXISTING 50 FT
WB CLARK COUNTY TOTALS			**3450**	**0**	**0**	**3**	**0**	**5**	**2**	**0**	**1**	**1**	**3550**	**0**	**0**	
LT	104.261	104.426	825.0					1	1				825.0			EXTEND EXISTING 50 FT
LT	104.489	104.709	1112.5					1	1				1112.5			EXTEND EXISTING 50 FT
LT	104.885	105.544	3500.0						1		1		3500.0			
MED	105.570	105.622		100.0	137.5	1	1						237.5	1		
LT	105.572	105.631	262.5			1		1					262.5			EXTEND EXISTING 50 FT
LT	105.781	105.886	500.0					1	1				525.0			EXTEND EXISTING 25 FT
LT	106.192	106.311	575.0					1	1				600.0			EXTEND EXISTING 25 FT
LT	106.372	106.655	1437.5					1	1				1412.5			EXTEND EXISTING 75 FT
LT	106.708	106.845	725.0						1	1			612.5			
LT	107.145	107.289	712.5					1	1				762.5			
LT	108.379	108.488	525.0					1	1				525.0			
LT	108.833	108.963	637.5					1	1				612.5			EXTEND EXISTING 75 FT
LT	109.141	109.190	262.5						1				262.5			TIE TO EXISTING GUARDRAIL
LT	110.464	110.689	1137.5					1	1				1137.5			EXTEND EXISTING 50 FT
LT	111.507	111.583	350.0					1	1				350.0			EXTEND EXISTING 50 FT
LT	112.040	112.099	312.500						1				312.500			TIE TO EXISTING GUARDRAIL
															500.0	***FOR BIDDING PURPOSES ONLY***
WB MONTGOMERY CO. TOTALS			**12875**	**100**	**137.5**	**2**	**1**	**11**	**14**	**1**	**1**	**0**	**13050**	**1**	**500**	
WESTBOUND TOTALS			**16325**	**100**	**137.5**	**5**	**1**	**16**	**16**	**1**	**2**	**1**	**16600**	**1**	**500**	

CLARK CO. TOTALS	**8662.5**	**0**	**0**	**4**	**0**	**11**	**7**	**0**	**1**	**1**	**8912.5**	**0**	**0**	
MONTGOMERY CO. TOTALS	**26812.5**	**200**	**275**	**5**	**2**	**20**	**25**	**4**	**2**	**0**	**27062.5**	**2**	**500**	
PROJECT TOTALS	**35475**	**200**	**275**	**9**	**2**	**31**	**32**	**4**	**3**	**1**	**35975**	**2**	**500**	

All quantities have been carried over and included in the General Summary.

I-64

CLARK COUNTY / MONTGOMERY COUNTY

PAVEMENT REHABILITATION, MILEPOST 101.71 TO 112.1

ITEM NO. 7-2032.00

PIPE & DRAINAGE SUMMARY

			CULVERT PIPE - 15 IN	CULVERT PIPE - 18 IN	CULVERT PIPE - 24 IN	REMOVE PIPE	SLOPED BOX INLET OR OUTLET TY -2 (5)	CURB BOX INLET TYPE B (1) (5)	DROP BOX INLET TYPE 5A (1) (5)	ISLAND HEADER CURB TYPE 2	CHANNEL LINING CLASS II (2)	CHANNEL LINING CLASS III (2)	CONCRETE -CLASS A	STEEL REINFORCEMENT	REPLACE GRATE	CLEAN CULVERT	CLEAN INLET/ OUTLET (3)	COMMENTS
			LF				EACH			LF	TONS		CU YD	LB	EACH	LS	EACH	
			461	462	464	1310	1441	1480	1502	1891	2483	2484	8100	8150	20366NN	20465EC	---	
SIDE	**MILEPOST**	**MILEPOST**																---
MED	101.69	---													1			DBI TY 5A
LT	101.70	---									5							CONST. CHANNEL LINING AT OUTLET ON US 60 WB RAMP B
LT	101.71	---													1			18 IN S&F BOX ON US 60 WB RAMP B
RT	101.80	---									2							CONST. CHANNEL LINING AT DOUBLE DBI
LT	101.82	---													1			DOUBLE DBI
LT	102.05	---															1	
MED	102.05	---									1							CONST. CHANNEL LINING AT MEDIAN DBI
LT	102.05	---															1	
MED	102.10	---					1											CONNECT TO EXISTING CMP FOR U-TURN DRAINAGE
MED	102.11	---					1											CONNECT TO EXISTING CMP FOR U-TURN DRAINAGE
MED	102.14	---									1							CONST. CHANNEL LINING AT MEDIAN DBI
RT	102.20	---															1	
MED	102.40	---													1			DBI TY 1
LT	102.53	---			8	8					5		1.35	8				CONST. 24 IN S&F HDWL IN PLACE (1) (5) AND CHANNEL LINING AT OUTLET
LT	102.58	---															1	
LT	102.59	---	82			82		1		17	5		0.75	7				REMOVE DBI, CONST. ISLAND HEADER CURB, CURB BOX INLET L=10', 82 LF OF PIPE , 15 IN S&F HDWL AND CHANNEL LINING AT OUTLET
MED LT	102.59	---				4		1		17								REMOVE DBI, CONST. ISLAND HEADER CURB AND CURB BOX INLET L=10'
MED RT	102.59					4		1		17								REMOVE DBI, CONST. ISLAND HEADER CURB AND CURB BOX INLET L=10'
RT	102.59		82			82		1		17	5		0.75	7				REMOVE DBI, CONST. ISLAND HEADER CURB, CURB BOX INLET L=10', 82 LF OF PIPE , 15 IN S&F HDWL AND CHANNEL LINING AT OUTLET
LT	102.64	---								25								CONST. ISLAND HEADER CURB AT BRIDGE END
MED LT	102.64	---								25								CONST. ISLAND HEADER CURB AT BRIDGE END
RT	102.59	---															1	
MED	102.65	---															1	
LT	102.70	---														1		12X6 RCBC
MED	102.70	---													1			DBI TY 5A
RT	102.84	---													1			18 IN SLOPED BOX OUTLET
MED	102.84	---		4					1									CONST. IN PLACE
RT	102.85	---													1			18 IN S&F BOX
RT	102.85	---													1			18 IN S&F BOX
LT	102.88	---									5						1	REMOVE PAVED DITCH AND CONST. CHANNEL LINING
LT	103.02	---													1			24 IN S&F BOX
RT	103.00	---										7						CONST. CHANNEL LINING AT END OF PAVED DITCH
RT	103.01	---													1			18 IN SLOPED BOX OUTLET
RT	103.11	---									3							CONST. CHANNEL LINING AT OUTLET
RT	103.18	---														1		4X4 RCBC
LT	103.42	---															1	
LT	103.48	---															1	
MED	103.49	---									1							CONST. CHANNEL LINING AT MEDIAN DBI
CLARK COUNTY SHEET 1 TOTALS			**164**	**4**	**8**	**180**	**2**	**4**	**1**	**118**	**33**	**7**	**2.85**	**22**	**10**	**2**	**9**	**----**

I-64

CLARK COUNTY / MONTGOMERY COUNTY

PAVEMENT REHABILITATION, MILEPOST 101.71 TO 112.1

ITEM NO. 7-2032.00

PIPE & DRAINAGE SUMMARY

			CULVERT PIPE - 15 IN	CULVERT PIPE - 18 IN	CULVERT PIPE - 24 IN	REMOVE PIPE	SLOPED BOX INLET OR OUTLET TY -2 (5)	CURB BOX INLET TYPE B (1) (5)	DROP BOX INLET TYPE 5A (1) (5)	ISLAND HEADER CURB TYPE 2	CHANNEL LINING CLASS II (2)	CHANNEL LINING CLASS III (2)	CONCRETE -CLASS A	STEEL REINFORCEMENT	REPLACE GRATE	CLEAN CULVERT	CLEAN INLET/ OUTLET (3)	COMMENTS
			LF				EACH			LF	TONS		CU YD	LB	EACH	LS	EACH	
			461	462	464	1310	1441	1480	1502	1891	2483	2484	8100	8150	20366NN	20465EC	---	
SIDE	**MILEPOST**	**MILEPOST**																---
RT	103.61	---			24	24					5	60	1.35	8				CONST. 24 IN S&F HDWL IN PLACE (1) (4) (5) AND CHANNEL LINING AT OUTLET
RT	103.60	---			20	20					5	60	1.35	8				CONST. 24 IN S&F HDWL IN PLACE (1) (4) (5) AND CHANNEL LINING AT OUTLET
LT	103.65	---															1	
MED	103.65	---									1							CONST. CHANNEL LINING AT MEDIAN DBI
LT	103.64	103.67									43							REMOVE PAVED DITCH AND CONST. CHANNEL LINING
LT	103.80	---															1	
MED	103.80	---									2							CONST. CHANNEL LINING AT MEDIAN DBI
RT	103.80	---		8		8					5		0.93	8				CONST. 18 IN S&F HDWL IN PLACE (1) (4) (5) AND CHANNEL LINING AT OUTLET
LT	103.84	103.92										200						REMOVE PAVED DITCH AND CONST. CHANNEL LINING
LT	103.85	---									5							REMOVE PAVED DITCH AND CONST. CHANNEL LINING
RT	103.86	---			8	8					5		1.35	8				CONST. 24 IN S&F HDWL IN PLACE (1) (5) AND CHANNEL LINING AT OUTLET
MED	104.01	---									2							CONST. CHANNEL LINING AT MEDIAN DBI
RT	104.18	---															1	
CLARK COUNTY SHEET 2 TOTALS			**0**	**8**	**52**	**60**	**0**	**0**	**0**	**0**	**73**	**320**	**4.98**	**32**	**0**	**0**	**3**	**----**
CLARK COUNTY TOTALS			**164**	**12**	**60**	**240**	**2**	**4**	**1**	**118**	**106**	**327**	**7.83**	**54**	**10**	**2**	**12**	**----**
LT	104.26	104.32									118							REMOVE PAVED DITCH AND CONST. CHANNEL LINING
RT	104.31																1	
LT	104.35	---	8			8					5		0.75	7				CONST. 15 IN S&F HDWL (1) (4) (5) , CONNECT TO EXISTING CMP, AND CONST. CHANNEL LINING AT OUTLET
LT	104.51	---									5		0.93	8				CONST. 18 IN S&F HDWL (5) , CONNECT TO EXISTING CMP, AND CONST. CHANNEL LINING AT OUTLET
RT	104.56	104.64										497					1	REMOVE PAVED DITCH AND CONST. CHANNEL LINING
MED	104.89	---									1							CONST. CHANNEL LINING AT MEDIAN DBI
LT	104.89	---									5							CONST. CHANNEL LINING AT OUTLET
RT	105.00	---													1			DBI TY 1
RT	105.20	---													1			DBI TY 1
LT	105.20	---									5							CONST. CHANNEL LINING AT HDWL
LT	105.35	---		8		8							0.93	8				CONST. 18 IN S&F HDWL IN PLACE (1) (4) (5) AND CHANNEL LINING AT OUTLET
LT	105.43	---	8			8					5		0.75	7				CONST. 15 IN S&F HDWL IN PLACE (1) (4) (5) AND CHANNEL LINING AT OUTLET
LT	105.51	---										50				1		CONST. CHANNEL LINING AT HDWL
RT	105.52	---										50						CONST. CHANNEL LINING AT HDWL
LT	105.53	---	100			100		1		17	5		0.75	7				REMOVE DBI, CONST. ISLAND HEADER CURB, CURB BOX INLET L=10', 100 LF OF PIPE , 15 IN S&F HDWL AND CHANNEL LINING AT OUTLET
MONTGOMERY COUNTY SHEET 2 TOTALS			**116**	**8**	**0**	**124**	**0**	**1**	**0**	**17**	**149**	**597**	**4.11**	**37**	**2**	**1**	**2**	**----**

I-64

CLARK COUNTY / MONTGOMERY COUNTY

PAVEMENT REHABILITATION, MILEPOST 101.71 TO 112.1

ITEM NO. 7-2032.00

PIPE & DRAINAGE SUMMARY

			CULVERT PIPE - 15 IN	CULVERT PIPE - 18 IN	CULVERT PIPE - 24 IN	REMOVE PIPE	SLOPED BOX INLET OR OUTLET TY -2 (5)	CURB BOX INLET TYPE B (1) (5)	DROP BOX INLET TYPE 5A (1) (5)	ISLAND HEADER CURB TYPE 2	CHANNEL LINING CLASS II (2)	CHANNEL LINING CLASS III (2)	CONCRETE -CLASS A	STEEL REINFORCEMENT	REPLACE GRATE	CLEAN CULVERT	CLEAN INLET/ OUTLET (3)	COMMENTS
			LF				EACH			LF	TONS		CU YD	LB	EACH	LS	EACH	
			461	462	464	1310	1441	1480	1502	1891	2483	2484	8100	8150	20366NN	20465EC	---	
SIDE	MILEPOST	MILEPOST																---
MED RT	105.53	---	8			4		1		17								REMOVE DBI, CONST. ISLAND HEADER CURB, CURB BOX INLET L=10', AND 8 LF OF PIPE
RT	105.53									25								CONST. ISLAND HEADER CURB AT BRIDGE END
LT	105.57									25								CONST. ISLAND HEADER CURB AT BRIDGE END
MED LT	105.57									25								CONST. ISLAND HEADER CURB AT BRIDGE END
RT	105.58	---	8			8					5		0.75	7				CONST. 15 IN S&F HDWL IN PLACE (1) (4) (5) AND CHANNEL LINING AT OUTLET
LT	105.56	105.62										131						REMOVE PAVED DITCH AND CONST. CHANNEL LINING
RT	105.67	---									8							REMOVE FLUME AND PAVED DITCH, CONST. CHANNEL LINING
RT	105.81	---									8							CONST. CHANNEL LINING AT HDWL
LT	105.78	105.88										233						REMOVE PAVED DITCH AND CONST. CHANNEL LINING
RT	105.88	105.90									52							REMOVE PAVED DITCH AND CONST. CHANNEL LINING
MED	105.86	---									2							CONST. CHANNEL LINING AT MEDIAN DBI
RT	105.86				12	12						172	1.35	8				CONST. 24 IN S&F HDWL IN PLACE (1) (4) (5) AND CHANNEL LINING AT OUTLET
LT	106.22	106.23										31						CONST. CHANNEL LINING IN DITCH
RT	106.23	106.25										54						REMOVE PAVED DITCH AND CONST. CHANNEL LINING
LT	106.23	---			8	8					10		1.35	8				CONST. 24 IN S&F HDWL IN PLACE (1) (5) AND CHANNEL LINING AT OUTLET
LT	106.40	---		8		8					10		0.93	8				CONST. 18 IN S&F HDWL IN PLACE (1) (4) (5) AND CHANNEL LINING AT OUTLET
LT	106.41	---			8	8					10		1.35	8				CONST. 24 IN S&F HDWL IN PLACE (1) (5) AND CHANNEL LINING AT OUTLET
LT	106.46	---															1	
RT	106.59	---									2							CONST. CHANNEL LINING AT DBI
LT	106.59	---															1	
RT	106.74	106.78									54							REMOVE PAVED DITCH AND CONST. CHANNEL LINING
LT	106.75	---															1	
LT	107.00	---									2							CONST. CHANNEL LINING AT DBI
RT	106.99	107.13									246							REMOVE PAVED DITCH AND CONST. CHANNEL LINING
RT	107.02	---									5				1			CONST. CHANNEL LINING AT 30 IN S&F OUTLET
LT	107.12	107.16									61							REMOVE PAVED DITCH AND CONST. CHANNEL LINING
RT	107.13	---													1			48 IN SLOPED SAFETY BOX
RT	107.17	---													1			15 IN BOX OUTLET
LT	107.17	---										27				1		48 IN CULVERT
LT	107.21	---															1	
RT	107.39	---									4				1			CONST. CHANNEL LINING AT DBI TY 1
LT	107.40	---															1	
RT	107.72	---															1	
MONTGOMERY COUNTY SHEET 3 TOTALS			**16**	**8**	**28**	**48**	**0**	**1**	**0**	**92**	**479**	**648**	**5.73**	**39**	**4**	**1**	**6**	**----**

I-64

CLARK COUNTY / MONTGOMERY COUNTY

PAVEMENT REHABILITATION, MILEPOST 101.71 TO 112.1

ITEM NO. 7-2032.00

PIPE & DRAINAGE SUMMARY

			CULVERT PIPE - 15 IN	CULVERT PIPE - 18 IN	CULVERT PIPE - 24 IN	REMOVE PIPE	SLOPED BOX INLET OR OUTLET TY -2 (5)	CURB BOX INLET TYPE B (1) (5)	DROP BOX INLET TYPE 5A (1) (5)	ISLAND HEADER CURB TYPE 2	CHANNEL LINING CLASS II (2)	CHANNEL LINING CLASS III (2)	CONCRETE -CLASS A	STEEL REINFORCEMENT	REPLACE GRATE	CLEAN CULVERT	CLEAN INLET/ OUTLET (3)	COMMENTS
			LF				EACH			LF	TONS		CU YD	LB	EACH	LS	EACH	
			461	462	464	1310	1441	1480	1502	1891	2483	2484	8100	8150	20366NN	20465EC	---	
SIDE	**MILEPOST**	**MILEPOST**																---
RT	107.99	---									2							CONST. CHANNEL LINING AT DBI
RT	108.25	108.32									120							REMOVE PAVED DITCH AND CONST. CHANNEL LINING
RT	108.32	---			8	8					15		1.35	8				CONST. 24 IN S&F HDWL IN PLACE (1) (5) AND CHANNEL LINING AT OUTLET
RT	108.39	---									4							CONST. CHANNEL LINING AT HDWL
LT	108.42	---														1		ARCH CULVERT
RT	108.48	108.43										139						REMOVE PAVED DITCH AND CONST. CHANNEL LINING
LT	108.49	---													1			18 IN SLOPED BOX OUTLET
RT	108.70	---													1			18 IN S&F BOX
LT	108.79	---									2							CONST. CHANNEL LINING AT DBI
LT	108.87	---															1	
RT	108.92	---	8			8					5		0.75	7				CONST. 15 IN S&F HDWL IN PLACE (1) (4) (5) AND CHANNEL LINING AT OUTLET
RT	108.84	108.94										222						REMOVE PAVED DITCH AND CONST. CHANNEL LINING
LT	109.15	---									15							CONST. CHANNEL LINING AT HDWL
MED	109.44	---									6							CONST. CHANNEL LINING AT DBI
LT	109.44	---															1	
LT	109.52	---									2							CONST. CHANNEL LINING AT DBI
MED	109.66	---															1	
RT	109.74	---															1	
RT	109.76	---															1	
LT	109.76	---									2							CONST. CHANNEL LINING AT DBI
MED	109.92	---									2							CONST. CHANNEL LINING AT DBI
LT	110.20	---															1	
RT	110.20	---									2							
RT	110.33	---															1	RESET GRATE ON DBI
MED	110.34	---									2							
LT	110.45	110.50										123						REMOVE PAVED DITCH AND CONST. CHANNEL LINING
LT	110.47	---	8			8						33	0.75	7				CONST. 15 IN S&F HDWL IN PLACE (1) (4) (5), CHANNEL LINING AT OUTLET, REGRADE & CONST. CHANNEL LINING IN PLACE OF EXISTING ASPHALT FLUME
RT	110.50	---															1	ARCH CULVERT
LT	110.55	---	8			8					5							CONST. 15 IN S&F HDWL IN PLACE (1) (4) (5) AND CHANNEL LINING AT OUTLET
RT	110.50	110.56										138						REMOVE PAVED DITCH AND CONST. CHANNEL LINING
RT	110.62	---																
RT	111.22	---															1	
LT	111.35	---									4							CONST. CHANNEL LINING AT HDWL
RT	111.37	---									15							CONST. CHANNEL LINING AT HDWL
LT	111.53	---														1		12X12 RCBC
LT	111.53	111.57										111						REMOVE PAVED DITCH AND CONST. CHANNEL LINING. DO NOT DISTURB HDWL APRON AT LT MP 111.54
MONTGOMERY COUNTY SHEET 4 TOTALS			**24**	**0**	**8**	**32**	**0**	**0**	**0**	**0**	**203**	**766**	**2.85**	**22**	**2**	**2**	**9**	**----**

I-64

CLARK COUNTY / MONTGOMERY COUNTY

PAVEMENT REHABILITATION, MILEPOST 101.71 TO 112.1

ITEM NO. 7-2032.00

PIPE & DRAINAGE SUMMARY

			CULVERT PIPE - 15 IN	CULVERT PIPE - 18 IN	CULVERT PIPE - 24 IN	REMOVE PIPE	SLOPED BOX INLET OR OUTLET TY -2 (5)	CURB BOX INLET TYPE B (1) (5)	DROP BOX INLET TYPE 5A (1) (5)	ISLAND HEADER CURB TYPE 2	CHANNEL LINING CLASS II (2)	CHANNEL LINING CLASS III (2)	CONCRETE -CLASS A	STEEL REINFORCEMENT	REPLACE GRATE	CLEAN CULVERT	CLEAN INLET/ OUTLET (3)	COMMENTS
			LF				EACH			LF	TONS		CU YD	LB	EACH	LS	EACH	
			461	462	464	1310	1441	1480	1502	1891	2483	2484	8100	8150	20366NN	20465EC	---	
SIDE	**MILEPOST**	**MILEPOST**																---
RT	111.74	---															1	
MED	111.83	---									5							CONST. CHANNEL LINING AT OUTLET
LT	111.83	---									3							CONST. CHANNEL LINING AT DBI
MED	111.89	---									2							CONST. CHANNEL LINING AT MED DBI
MED	112.02	---														1		60 IN CULVERT
MED	112.17	---									2							CONST. CHANNEL LINING AT MED DBI
MONTGOMERY COUNTY SHEET 5 TOTALS			**0**	**0**	**0**	**0**	**0**	**0**	**0**	**0**	**12**	**0**	**0.00**	**0**	**0**	**1**	**1**	**----**
MONTGOMERY COUNTY DRAINAGE TOTALS			**156**	**16**	**36**	**204**	**0**	**2**	**0**	**109**	**843**	**2011**	**12.69**	**98**	**8**	**5**	**18**	**----**
CLARK COUNTY DRAINAGE TOTALS			**164**	**12**	**60**	**240**	**2**	**4**	**1**	**118**	**106**	**327**	**7.83**	**54**	**10**	**2**	**12**	**----**
PROJECT TOTALS			**320**	**28**	**96**	**444**	**2**	**6**	**1**	**227**	**949**	**2338**	**20.52**	**152**	**18**	**7**	**30**	**----**

All quantities have been carried over and included in the General Summary.

(1) REMOVAL OF EXISTING DRAINAGE STRUCTURE IS INCIDENTAL TO CONSTRUCTION OF NEW DRAINAGE STRUCTURE
(2) REMOVE AND/OR BREAK PAVED DITCH IS INCIDENTAL TO CHANNEL LINING CLASS II or III
(3) THE ITEM "CLEAN INLET/OUTLET" IS INCENDENTAL TO PAY ITEM "DITCHING". THIS MAY NOT INCLUDE ALL DRAINAGE STRUCTURES TO BE CLEANED. OTHER STRUCTURES SHALL ALSO BE CLEANED ACCORDING TO SPECIFICATIONS FOR "DITCHING".
(4) REMOVAL OF APRON IS INCIDENTAL TO THE CONSTRUCTION OF NEW HEADWALL
(5) ANY EMBANKMENT REQUIRED FOR PLACEMENT OF DRAINAGE STRUCTURES IS INCIDENTAL TO PAY ITEM FOR STRUCTURES

CLARK & MONTGOMERY COUNTIES
I-64
FD52 025 0064 101-105
FD52 087 0064 104-113
Item No. 7-2032.00

THIS PROJECT IS A FULLY CONTROLLED ACCESS HIGHWAY

I. DESCRIPTION

Perform all work in accordance with the Department's 2008 Standard Specifications, Supplemental Specifications and other applicable Special Provisions, applicable Standard and Sepia Drawings, except as hereafter specified. Article references are to the Standard Specifications. Furnish all materials, labor, equipment, and incidentals for the following work:

(1) Maintain and Control Traffic; (2) Remove and replace Guardrail and Guardrail End treatments at the locations listed and/or as directed by the Engineer; (3) Type V pavement markers; (4) Asphalt Pavement Milling and Texturing; (5) Asphalt Surface and Asphalt Base at locations listed and/or as directed by the Engineer; and (6) All other work specified as part of this contract.

II. MATERIALS

Except as specified in these notes or on the drawings, all materials will be according to the Standard Specifications and applicable Special Provisions and Special Notes. The Department will sample and test all materials according to Department's Sampling Manual and the Contractor will have the materials available for sampling a sufficient time in advance of the use of the materials to allow for the necessary time for testing, unless otherwise specified in these notes.

A. **Maintain and Control Traffic.** See Traffic Control Plan.

B. **Dense Graded Aggregate.** Crushed Stone Base may not be furnished in lieu of DGA.

C. **Pavement Markings -6 inch Tape.** Use Durable Waterborne Markings for pavement striping (12 inch at entrance and exit ramp tapers).

D. **Channel Lining Class II & III.** Channel lining will be limestone and is to be placed at pipe outlets with significant erosion and in ditch repair locations as directed by the Engineer.

E. **Erosion Control Blanket.** Erosion control blanket is to be placed in all ditching areas when ditching is complete, on slope stabilization areas, or as directed by the Engineer. Use Seed Mixture No. 1

III. CONSTRUCTION METHODS

A. **Maintain and Control Traffic.** See Traffic Control Plan.

B. **Site Preparation.** Be responsible for all site preparation. Do not disturb existing signs. This item will include, but is not limited to, incidental excavation and backfilling;removal of all obstructions or any other items;disposal of materials; sweeping and removal of debris;shoulder preparation and restoration, temporary and permanent erosion and pollution control;and all incidentals. Site preparation will be only as approved or directed by the Engineer. Other than the bid items listed, no direct payment will be made for site preparation, but will be incidental to the other items of work.

C. **Disposal of Waste.** Dispose of all cuttings, debris, and other waste off the right-of-way at approved sites obtained by the Contractor at no additional cost to the Department. The contractor will be responsible for obtaining any necessary permits for this work. Temporary openings in the right of way fence for direct access to waste sites off the right of way or for access to other public roads will not be allowed. No separate payment will be made for the disposal of waste and debris from the project or obtaining the necessary permits, but will be incidental to the other items of the work.

D. **Final Dressing, Clean Up, and Seeding and Protection.** After all work is completed, completely remove all debris from the job site. Perform Class A Final Dressing on all disturbed areas. Sow disturbed earthen areas with Seed Mixture No. I. These items are incidental to other items in the contract.

E. **Guardrail.** Remove and replace guardrail and guardrail End Treatments listed in the Guardrail Summary or as directed by the Engineer. Quantities are approximate only. Actual locations will be determined by the Engineer at the time of construction. Grade and reshape shoulders to proper template for new End Treatment. Utilize DGA for embankment when required for new end treatments. Remove any existing guardrail with a lane closure in place. Do not leave the area unprotected. After the guardrail is removed, a shoulder closure shall remain in place until the guardrail is replaced in that area. The Contractor shall deliver existing salvaged guardrail system materials to the Central Sign Shop and Recycle center at 1224 Wilkinson Blvd in Frankfort, KY. Contact Section Supervisor at (502) 564-8187 to schedule the delivery of material. Deliver the material between the hours of 8:00AM and 3:00PM, Monday through Friday. There is a guardrail

delivery verification sheet which must be completed.

F. **Pavement Striping and Pavement Markers.** Permanent striping will be in accordance with Section 112, except that:

(1). Striping will be 6" in width, except 12" in gore area;
(2). Permanent striping will be in place before a lane is opened to traffic; and
(3). Permanent striping will be 6" Durable Waterborne Marking.

G **On-Site Inspection.** Each Contractor submitting a bid for this work will make a thorough inspection of the site prior to submitting a bid and will thoroughly familiarize himself with existing conditions so that the work can be expeditiously performed after a contract is awarded. Submission of a bid will be considered evidence of this inspection having been made. Any claims resulting from site conditions will not be honored by the Department.

H **Caution:** Information shown on the drawings and in this proposal and the types and quantities of work listed are not to be taken as an accurate or complete evaluation of the material and conditions to be encountered during construction. The bidder must draw his own conclusions as to the conditions encountered. The Department does not give any guarantee as to the accuracy of the data and no claim will be considered for additional compensation if the conditions encountered are not in accordance with the information above.

I. **Utility Clearance.** It is not anticipated that utility facilities will need to be relocated and/or adjusted;however, in the event that it is discovered that the work does require that utilities be relocated and/or adjusted, the utility companies will work concurrently with the Contractor while relocating their facilities.

IV. METHOD OF MEASUREMENT

A. **Maintain and Control Traffic.** See Traffic Control Plan.

B. **Site Preparation.** Other than the bid items listed, site preparation will not be measured for payment, but will be incidental to the other items of work.

C. **Dense Graded Aggregate.** DGA will be used for embankment at proposed guardrail end treatment locations and other locations as directed by the Engineer.

D. **Raised Pavement Markers and Permanent Striping.** Permanent striping, Durable Waterborne Marking (6" and 12"), is measured per linear foot. See Traffic Control Plan. Type V Pavement Markers are measured as each.

E. **Erosion Control.** Erosion control items not listed as bid items will not be measured for payment, but will be considered incidental to the "lump sum" price for the bid item "K.P.D.E.S Permit & Temporary Erosion Control".

F. **Erosion Control Blanket.** Erosion Control Blanket is measured by square yard and is to be used in ditching areas and slope stabilization areas as directed by the Engineer.

G **Embankment.** Embankment is measured by cubic yard and is to be placed in pipe repair/extension locations, slope stabilization areas and as directed by the Engineer. Contrary to the Standard Specifications, payment will be based on measured quantity **NOT** plan quantity.

V. BASIS OF PAYMENT

No direct payment will be made other than for the bid items listed. All other items required to complete the construction will be incidental to the bid items listed. Existing signs damaged by the Contractor will be replaced by the Contractor at his expense.

A. **Maintain and Control Traffic.** See Traffic Control Plan.

B. **Site Preparation.** Other than the bid items listed, no direct payment will be allowed for site preparation, but will be incidental to the other items of work.

C. **Dense Grade Aggregate.** See Section 302 of the Standard Specifications.

D. **Raised Pavement Markers and Permanent Striping.** See Traffic Control Plan.

NOTES APPLICABLE TO PROJECT
PAVEMENT REHABILITATION
I-64 CLARK & MONTGOMERY COUNTIES
Item No. 7-2032.00

---

1. The dimensions shown on the typical section for pavement and shoulder widths and thickness are nominal or typical dimensions. The actual dimensions to be constructed may be varied to fit existing conditions as directed or approved by the Engineer. It is not intended that existing pavement or shoulders be widened unless otherwise specified in the Proposal.

2. The contractor is to be advised of the locations of overhead utility wires on the project. The following locations are approximate:

   I-64 M.P. 101.9
   I-64 M.P. 103.16
   I-64 M.P. 103.76
   I-64 M.P. 104.02
   I-64 M.P. 106.01
   I-64 M.P. 107.84
   I-64 M.P. 109.60
   I-64 M.P. 110.9
   I-64 M.P. 111.01
   I-64 M.P. 111.50

   CAUTION: Other overhead utility locations may exist. These and all other utilities should be avoided on this project. If any utility is impacted, it will be the contractor's responsibility to contact the affected utility and cover any costs associated with the impact.

3. The contractor is to be advised of the locations of underground utilities on the project. The following locations are approximate:

   I-64 M.P. 108.36 (Texas Eastern Gas Pipeline (#0 and #5 Crossings)
   I-64 M.P. 108.52 (Texas Eastern Gas Pipeline (#5) Crossing)

   CAUTION: Other underground utility locations may exist. These and all other utilities should be avoided on this project. If any utility is impacted, it will be the contractor's responsibility to contact the affected utility and cover any costs associated with the impact.

4. All Milepost signs within the project limits are to be replaced in their current locations.

   NOTE: Some existing Mileposts may be in incorrect locations, therefore replacement should be approved and/or directed by the Engineer. The contractor will be responsible for the replacement of milepost signs if damaged during construction.

5. Areas throughout the project have foreslopes and shoulders that are eroding significantly. These areas shall be regraded and dressed as directed by the Engineer. Quantities for DGA, Asphalt Seal Coat, and Crushed Aggregate No. 2 are included in the General Summary. Pavement millings are to be used in lieu of DGA, to complete this work, as directed by the Engineer.

6. A majority of the project length has a minimum 1.5" drop off at the edge of pavement. All shoulders throughout the project are to be reshaped utilizing asphalt pavement millings or DGA as directed by the Engineer. A quantity of "Shouldering" is included to place, compact and shape the asphalt millings as directed by the Engineer. All shoulders are to receive two applications of asphalt seal coat. The width of the asphalt seal may vary throughout the project. The actual width shall be as directed by the Engineer. Quantities of emulsified asphalt and asphalt seal aggregate are included in the General Summary for a project wide shoulder repair. Quantities for DGA, emulsified asphalt, and asphalt seal aggregate for guardrail end treatment replacements are also be included in this proposal.

7. Approximately 6000 tons of asphalt pavement millings from the project are to become the property of the Department. Two thousand tons of millings are to be delivered to the Clark County Maintenance Garage, 1055 Early Drive, Winchester, KY 40391, and four thousand tons of millings are to be delivered to the Montgomery County Maintenance Garage, 117 Adena Drive, Mount Sterling, KY 40353, as Directed by the Engineer. No additional payment will be considered for the delivery of the asphalt milling. This delivery will be considered incidental to the bid item "Asphalt Pavement Milling and Texturing." Any asphalt millings remaining, after all shoulder work, slope regrading and 6000 tons has been delivered to the Department's Maintenance Facilities, will be made available to the Contractor for the agreed cost of $7.50 per ton as stated in the "Special Note for Asphalt Milling and Texturing."

8. The two existing median u-turn locations (MP 102.09 and MP 105.67) within the project limits are to be milled and resurfaced with this project.

9 The existing roll curb islands on the US 60 interchange (Exit 101) ramps are not to be disturbed. If the curb is damaged during construction, the Contractor will be responsible for replacing any damaged curb at no cost to the Department.

10. Most of the existing Guardrail, End Treatments, and Terminal Sections are to be replaced with this project. The location of new guardrail segments and end treatments are listed on the Guardrail Summary by milepoints. Exact placement is to be approved by the Engineer during construction. Guardrail installation is to take place one week after the general milling & filling paving operations are completed.

11. Median guardrail and crash cushions at overhead bridge structures and at the bridge over Stoner Creek are not to be disturbed with this project unless otherwise directed by the Engineer.

12. The Contractor shall deliver existing salvaged guardrail system and aluminum bridge rail materials to the Central Sign Shop and Recycle center at 1224 Wilkinson Blvd in Frankfort, KY. Contact Section Supervisor at (502) 564-8187 to schedule the delivery of material. Deliver the material between the hours of 8:00AM and 3:00PM, Monday through Friday. There is a guardrail delivery verification sheet which must be completed and signed by the Contractor, Engineer and a representative of the Central Sign Shop and Recycle Center. Remove any existing guardrail with a lane closure in place. Do not leave the area unprotected. After the guardrail is removed, a shoulder closure shall remain in place until the guardrail is replaced in that area. A maximum of seven calendar days will be allowed between the removal of a guardrail section and the installation of new guardrail at that same location.

13. A quantity of "Fence - Woven Wire Type I" and "Remove Fence" is included for replacement of all existing RW fence within the project limits. RW fence shall not be replaced from WB M.P. 109.19 to 109.39 and EB M.P. 109.31 to 110.11.

    The contractor shall reference the existing fence prior to its removal and shall construct the new fence in the same location or as specified in the plans. The contractor shall preserve, to the maximum extent possible, the vegetative screen along the existing fences. Total clearing of all vegetation along the fences will not be permitted. Selective manual clearing shall be used to provide only clearance necessary to permit the removal and replacement of the fence. The cost of this clearing shall be incidental to the unit price bid for "Removing Fence". In select locations, temporary fencing may be required as directed by the Engineer. Temporary fencing will not be measured for payment and will be considered incidental to the bid item "Fence-Woven Wire Type 1".

14. Delineators shall meet the requirements of Section 830 and 838 of the Standard Specifications, and be placed in accordance with Section 3D of the M.U.T.C.D., current edition.

15. If any pipe culvert structure under pavement is required to be replaced during construction, the new trench shall be backfilled with flowable fill. The quantity of flowable fill will not be measured for payment and will be considered incidental to the unit price of the new culvert pipe.

16. The existing edge drain system is to be preserved. Any part of the edge drain system damaged during construction will be replaced at the contractor's expense. The Contractor shall clean all existing perforated pipe headwalls on the project. The cleaning of these headwalls is incidental to the bid item for "Ditching".

17. A quantity of Channel Lining Class II & Channel Lining Class III has been included to be applied to eroded areas around drainage outlets and for some of the areas that are to be ditched. The actual limits of ditching and/or channel lining shall be as directed and/or approved by the Engineer. Geotextile Fabric Type I will not be measured for payment and will be considered incidental to channel lining.

18. Several grates on existing drainage structures are missing throughout the project. The grates are to be replaced as directed by the Engineer. These grates are to be replaced as prior to November 15, 2011. Grate replacement will be measured and payment will be made by "each" for the bid item "Replace Grate". All grates are to be tack welded in place or secured in some other manner as directed/approved by the Engineer. Each grate will only be paid for the initial placement. Any additional grate replacements required during construction will be replaced at the contractor's expense.

19. Any roadway signs that are damaged during construction are to be replaced at the contractor's expense.

20. Any light poles that are damaged during construction are to be replaced at the contractor's expense.

21. The cleaning of existing pipe culvert inlets and outlets 36 inches or less in diameter are incidental to the bid item for "Ditching" in accordance with Section 209.03.01 of the 2008 Edition of the Standard Specifications for Road and Bridge Construction. This includes the cleaning of existing perforated pipe headwalls.

22. Locations and quantities for median drop box inlet repairs have been included in the "Pipe and Drainage Summary". These specified drop box inlets have moderate to severe erosion around the inlet and need to be repaired and re-graded. A quantity has been included for Channel Lining, Embankment and Erosion Control Blanket when existing drop box can be used as is. Otherwise, the inlet shall be replaced or reconstructed as specified in the Pipe and Drainage Summary. The need for replacement, reconstruction, or re-grading of inlets, and the locations for such, shall be as directed by the Engineer.

23. Two existing sinkholes have been identified on this project that require treatment. These locations include LT MP 102.01 and RT MP 103.00. These locations, along with any others that may be discovered during construction, shall be treated according to the active sepia drawing, "Treatment of Open Sinkholes", or as directed by the Engineer. Quantities for "Fabric-Geotextile Type IV" and "Granular Embankment" have been included to treat sinkholes.

24. The specified completion date for the overall project is August 1, 2012. Contrary to section 108, liquidated damages will be charged during the months of December through March.

TRAFFIC CONTROL PLAN
CLARK & MONTGOMERY COUNTIES
I-64
FD52 025 0064 101-105
FD52 087 0064 104-113
Item No. 7-2032.00

THIS PROJECT IS A FULLY CONTROLLED ACCESS HIGHWAY

TRAFFIC CONTROL GENERAL

Except as provided herein, "Maintain and Control Traffic" shall be in accordance with the 2008 Standard Specifications and the Standard Drawings, current editions. Except for the roadway and traffic control bid items listed, all items of work necessary to maintain and control traffic will be paid at the lump sum bid price to "Maintain and Control Traffic." All lane closures used on the Project will be in compliance with the appropriate Standard Drawings. Do NOT use cones for lane closures or shoulder closures.

Contrary to Section 106.01, traffic control devices used on this project may be new, or used in like new condition at the beginning of the work and maintained in like new condition until completion of the work. Traffic control devices will conform to current MUTCD.

Reduce the speed limit in work areas to 55 miles per hour (35 miles per hour for ramps) and establish double fines for work zone speeding violations. The extent of these areas within the project limits will be restricted to the proximity of actual work areas as determined by the Engineer. Notify the Engineer a minimum of 12 hours prior to using the double fine signs. At the beginning of the work zone, the "WARNING FINE DOUBLED IN WORK ZONE" signs will be dual mounted. At the end of the work zone, the "END DOUBLE FINE" signs will be dual mounted as well. Remove or cover the signs when the highway work zone does not have workers present for more than a two-hour period of time. Payment for the signs will be at the unit bid price for signs erected. Any relocation or covering of the signs will be incidental to "Maintain and Control Traffic," lump sum.

PROJECT PHASING & CONSTRUCTION PROCEDURES

No lane closures or road closures will be allowed during the following days unless otherwise directed and/or approved by the Engineer:

October 14-17, 2011	Mt. Sterling Court Days
November 24-27, 2011	Thanksgiving Weekend
December 23-26, 2011	Christmas Weekend
December 31, 2011-January 2, 2012	New Years Weekend
To be determined by the department	Spring Break (KEA)
April 6-8, 2012	Easter Weekend
May 25-28, 2012	Memorial Day Weekend
July 3-5, 2012	Independence Day

The Contractor will be permitted to close the US 60 bridge over I-64, at MP 101.74, for one full week to complete the proposed deck repairs and overlay. All four ramps at the interchange are to remain open allowing right turns onto the I-64 entrance ramps and right turns off of the I-64 exit ramps. Please refer to the "Special Note for Fixed Completion Date and Liquidated Damages" for damage rates per hour associated with failure to reopen the US 60 bridge to traffic during the specified time period. Liquidated Damages, at the rate specified per hour in the "Special Note for Fixed Completion Date and Liquidated Damages", will be assessed for each hour two lane-two way traffic is not maintained.

All wide load traffic heading to the I-64 project area during bridge construction repairs is to be advised to use alternate routes via Portable Changeable Message Signs as directed by the Engineer. Signed detour routes will not be required. The Contractor is to complete all mainline bridge work prior to implementing any closures for the proposed work on the US 60 bridge over I-64 at Exit 101 to maintain US 60 as a viable detour route for the entire project, if needed.

No full depth pavement repairs are anticipated with this project. If, for any reason, full depth pavement removal is deemed necessary by the Engineer, the work shall be completed as expeditiously as possible. Once removal of pavement at a particular repair location has begun, work continuously to complete the work and eliminate the "hole" within the time a lane closure is allowed. Place Type III Barricades immediately in front of pavement removal areas. Type III Barricades will not be measured for payment and will be considered incidental to "Maintain and Control Traffic."

Access to all ramps at all interchanges on the project shall be maintained at all times unless otherwise directed by the Engineer. All diversions to access ramps in areas of lane closures shall be approved by the Engineer prior to implementing the particular lane closure

Note that lane shifts are required throughout the project. See the Exhibits for lane locations and widths. Stripe according to the MUTCD. During Construction, barrels used for traffic control shall be moved to accommodate the greatest lane width allowable for through traffic and minimize traffic on the shoulders throughout the project. The barrels will need to be moved throughout all operations during the workday.

During the days and hours when a lane closure is allowed, implement the following procedures: Maintain traffic as specified in the phasing notes and typical sections. Any other work not requiring traffic lane widths to be restricted due to barrels or equipment encroaching into the driving lanes can be done during the remaining hours when two lanes of traffic must be maintained. Please refer to the "Special Note for Fixed Completion Date and Liquidated Damages" for damage rates per hour associated with failure to maintain the required number of lanes during the specified time period. Liquidated Damages, at the rate specified per hour in the "Special Note for Fixed Completion Date and Liquidated Damages", will be assessed for each hour two lanes of traffic is not maintained.

The contractor must notify the Engineer at least fourteen (14) days prior to the beginning of each construction phase in either direction.

SHOULDER PREPARATION AND RESTORATION

The clear lane width will be 11 feet;however, ma ke provisions for the passage of wide loads up to 16'that can not otherwise use the wide load detour. Use a lane closure all times when work is performed in the lane or adjacent shoulder. Shoulders used as temporary roadways will be inspected by the Engineer and if deemed necessary by the Engineer, repaired with asphalt mixture for level & wedging as directed prior to opening to traffic. Perform any maintenance of the shoulder as deemed necessary by the Engineer in order to maintain traffic. Remove failed materials and perform additional patching as directed by the Engineer during the time the shoulder is used as a travel lane. Patch and remove any foreign debris on the shoulders as directed by the Engineer. Remove existing striping by water blasting where required or as directed by the Engineer.

The shoulders are to be inspected and low spots refilled to the satisfaction of the Engineer prior to placing traffic on the shoulders. Daytime shoulder closures will be permitted to repair the stabilized shoulders. Install delineators for the existing guardrail and bridges before shifting traffic onto the shoulders. All work required for shoulder preparation and restoration is incidental to the lump sum bid item for "Maintian and Control Traffic."

PHASE I

Shift traffic to the inside lanes and shoulders and close the outside lanes to traffic. Install temporary barrier wall along the bridge over Prewitt-Grassy Lick Road (see traffic control typical sections). Perform all bridge repairs and barrier retrofit for outside shoulders and driving lane. Perform all bridge and barrier retrofit for outside shoulders and driving lane. Mill 1.5 inches and place 1.25 inches of surface pavement on outside shoulders and outside driving lanes. Perform all roadside work during Phase I. All ramp work will be completed during this phase.

PHASE II

Shift traffic to the outside lanes and shoulders and close the inside lanes to traffic. Shift temporary barrier wall at the approached to the bridge over Prewitt-Grassy Lick Road (see traffic control typical sections). Perform all bridge repairs and barrier retrofit for inside shoulders and driving lane. Mill 1.5 inches of surface pavement and place 1.25 inches of surface pavement for inside shoulders and driving lane. Perform all median work during this phase.

PHASE IA & IIA – TRAFFIC COUNTING INDUCTANCE LOOPS

After asphalt pavement milling operations are completed install traffic counting inductance loops. Close one lane, in the direction of work only, using drums and flashing arrows in accordance with the Standard Drawings and these notes. Lane closures will be permitted only during hours of actual operations. Lane closures will be shortened, reduced to a shoulder closure, or removed as appropriate, when the Contractor does not have active operations requiring a lane closure.

PHASE III – PERMANENT STRIPING

After all other work is completed, place permanent striping. Mobile operations may be utilized. In addition to newly paved areas, place permanent striping on bridge decks within the project limits.

LANE CLOSURES

Limit the lengths of lane closures to only that needed for actual operations in accordance with the phasing specified herein, or as directed by the Engineer up to a maximum of four miles long with a minimum of one mile between successive lane closures. Contrary to section 112, lane closures will **NOT** be measured for payment, but are considered incidental to the lump sum bid item for "Maintain and Control Traffic."

SIGNS

Additional traffic control signs in addition to normal lane closure signing detailed on the Standard Drawings may be required by the Engineer. Additional signs needed for lane closures may include, but are not limited to, dual mounted TRUCKS USE LEFT/RIGHT LANE, LEFT/RIGHT LANE CLOSED 1 MILE, LEFT/RIGHT LANE CLOSED 2 MILE, LEFT/RIGHT LANE CLOSED 3 MILE, SLOWED/STOPPED TRAFFIC AHEAD. Signage for reduced speed limits and double fine work zones will be furnished, relocated, and maintained by the Contractor.

Contrary to section 112, Individual signs will be measured only once for payment, regardless of how many times they are set, reset, removed, and relocated during the duration of the project. Replacements for damaged signs or signs directed to be replaced by the Engineer due to poor legibility or reflectivity will not be measured for payment.

A quantity of signs has been included for lane shifts, "Roadwork Ahead" signs on entrance ramps, and extra double fine signs and speed limit signs between interchanges to be paid only once no matter how many times they are moved or relocated.

FLASHING ARROW

Flashing arrows will not be measured for payment and will be considered incidental to the bid item "Maintain and Control Traffic". The Department **WILL NOT** take possession of the flashing arrows upon completion of the work.

TEMPORARY CONCRETE MEDIAN WALL

The Department **WILL NOT** take possession of the temporary concrete barrier wall Type 9T used for the bridge repair operations upon completion of the work.

PORTABLE CHANGEABLE MESSAGE SIGNS

Provide portable changeable message signs (PCMS) in advance of and within the project at locations to be determined by the Engineer. If work is in progress concurrently in both directions, or if more than one lane closure is in place in the same direction of travel, provide additional PCMS. Place PCMS one mile in advance of the anticipated queue at each lane closure. As the actual queue lengthens and/or shortens relocate or provide additional PCMS so that traffic has warning of slowed or stopped traffic at least one mile but not more than two miles before reaching the end of the actual queue. The locations designated may vary as the work progresses. The messages required to be provided will be designated by the Engineer. The PCMS will be in operation at all times. In the event of damage or mechanical/electrical failure, the contractor will repair or replace the PCMS immediately. PCMS will be paid for once, no matter how many times they are moved or relocated.

The Department **WILL NOT** take possession of the signs upon completion of the work.

TRUCK MOUNTED ATTENUATORS

Furnish and install MUTCD approved truck mounted attenuators (TMA) in advance of work areas when workers are present less than 12 feet from traffic. If there is less than 500 feet between work sites, only a single TMA will be required at a location directed by the Engineer. Locate the TMAs at the individual work sites and move them as the work zone moves within the project limits. All details of the TMA installations shall be approved by the Engineer. TMA will not be measured for payment, but are incidental to "Maintain and Control Traffic," lump sum. The Department **WILL NOT** take possession of the TMAs upon completion of the work.

PAVEMENT MARKINGS

If lane closures are in place during nighttime hours, remove or cover the lenses of raised pavement markers that do not conform to the traffic control scheme in use, or as directed by the Engineer. Replace or uncover lenses before a closed lane is reopened to traffic. No direct payment will be made for removing and replacing or covering and uncovering the lenses, but will be incidental to "Maintain and Control Traffic," lump sum.

Place temporary and permanent striping in accordance with Section 112, except that:

1. Temporary and permanent striping will be 6" in width
2. If the contractor's operations or phasing requires temporary markings which must be subsequently removed from the ultimate pavement, an approved removable lane tape will be used; however removable tape will be measured and paid as Pavement Striping-Temporary Paint 6"
3. Edge lines will be required for temporary striping
4. Existing, temporary, or permanent striping will be in place before a lane is opened to traffic
5. Place permanent striping on bridge decks and pavement within the project limits.
6. Permanent striping will be Durable Waterborne Markings

Should the Contractor change the existing striping pattern, the Contractor is to restripe the roadway back to its original configuration after a certain period of time especially if no work is anticipated for a period of time (i.e. Winter shutdown).

PAVEMENT EDGE DROP-OFFS

Pavement edge drop-offs will be protected by a lane or shoulder closure. Lane closures will be protected with plastic drums, vertical panels, or barricades as shown on the Standard Drawings.

Pavement edges that traffic is not expected to cross, except accidentally, shall be treated as follows:

Less than 2" – Protect with a lane closure.

2" to 4" – Protect with a lane closure. Place plastic drums, vertical panels, or barricades every 50 feet. Cones may not be used in place of plastic drums, panels, and barricades at any time. Construct a wedge with compacted cuttings from milling, trenching, or asphalt mixtures with a 3:1 or flatter slope, when work is not active in the drop-off area. Place Type III Barricades at the beginning of the lane closures, and place additional Type III Barricades spaced at 2,500 feet during the time the lane closure is in place.

Greater than 4" – Pavement Repair areas – In areas where pavement is to be removed, work should proceed continuously so that traffic is exposed to a drop-off for the minimum amount of time necessary to bring the pavement back up to existing grade. Barrel spacing should be 20 feet and appropriate lighting should be utilized to illuminate the area during nighttime operations.

Guardrail Installation – Guardrail installation is to take place no more than one week after the general milling & filling paving operations are completed. All areas from which guardrail is removed shall be protected by a shoulder closure or other method approved by the Engineer until the new guardrail is installed. A maximum of seven calendar days will be allowed between the removal of a guardrail section and the installation of new guardrail at that same location.

TRAFFIC COORDINATOR

Designate an employee to be traffic coordinator. The designated Traffic Coordinator must be certified by the American Traffic Safety Services Association (ATSSA). The Traffic Coordinator will inspect the project maintenance of traffic once every two hours during the Contractor's operations and at any time a lane closure is in place. The Traffic Coordinator will report all incidents throughout the work zone to the Engineer on the project. The Contractor will furnish the name and telephone number where the Traffic Coordinator can be contacted at all times.

During any period when a lane closure is in place, the Traffic Coordinator will arrange for personnel to be present on the project at all times to inspect the traffic control, maintain the signing and devices, and relocate portable changeable message boards as queue lengths change. The personnel will have access on the project to a radio or telephone to be used in case of emergencies or accidents.

COORDINATION OF WORK

The Contractor is advised that other projects may be in progress within or in the near vicinity of this project. The traffic control of those projects may affect this project and the traffic control of this project may affect those projects. The Contractor will coordinate the work on this project with the work of the other contractors. In case of conflict, the Engineer will determine the relative priority to give to work phasing on the various projects.

CONTRACTOR'S AND CONTRACTOR'S EMPLOYEES' VEHICLES

Do not use or allow employees to use median crossovers at any time except when inside lanes are closed for construction. In all other phases of construction, change vehicular direction of travel only at interchanges.

COUNTY OF	ITEM NO.	SHEET NO.
CLARK MONTGOMERY	7-2032.00	

I–64
MAINTENANCE OF TRAFFIC
TYPICAL SECTIONS

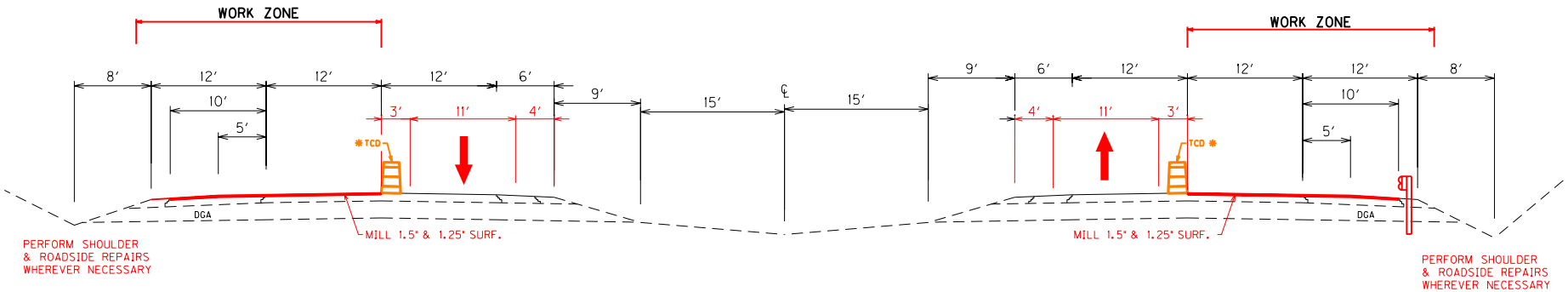

WESTBOUND LANES

EASTBOUND LANES

PHASES I

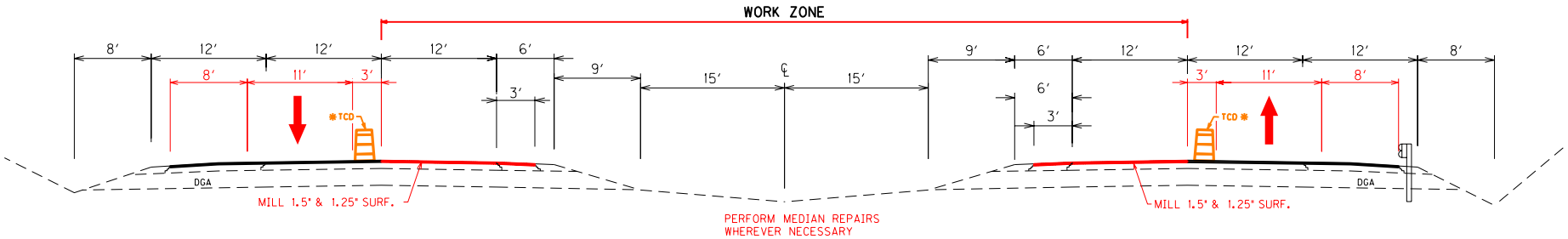

WESTBOUND LANES

PHASES II

EASTBOUND LANES

ASPHALT SEAL
2 APPLICATIONS:
ASPHALT SEAL AGGREGATE - 20 LB/SY
EMULSIFIED ASPHALT RS-2 - 2.4 LB/SY

* BARRELS SHALL BE MOVED ALONG WITH THE MILLING & PAVING OPERATIONS TO MINIMIZE TRAFFIC ON SHOULDERS.

I-64 MAINTENANCE OF TRAFFIC
TYPICAL SECTIONS SHEET 1 OF 2

COUNTY OF	ITEM NO.	SHEET NO.
CLARK MONTGOMERY	7-2032.00	

I–64
MAINTENANCE OF TRAFFIC
BRIDGE TYPICAL SECTIONS

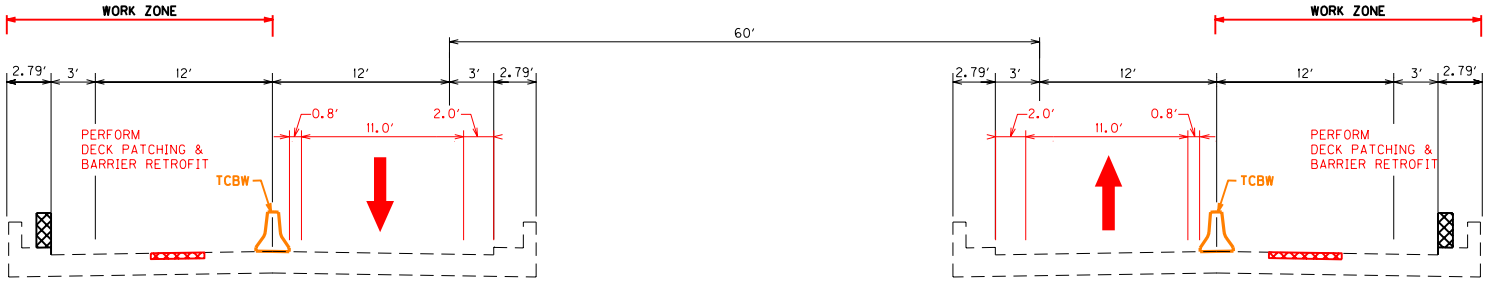

WESTBOUND LANES

EASTBOUND LANES

PHASE I

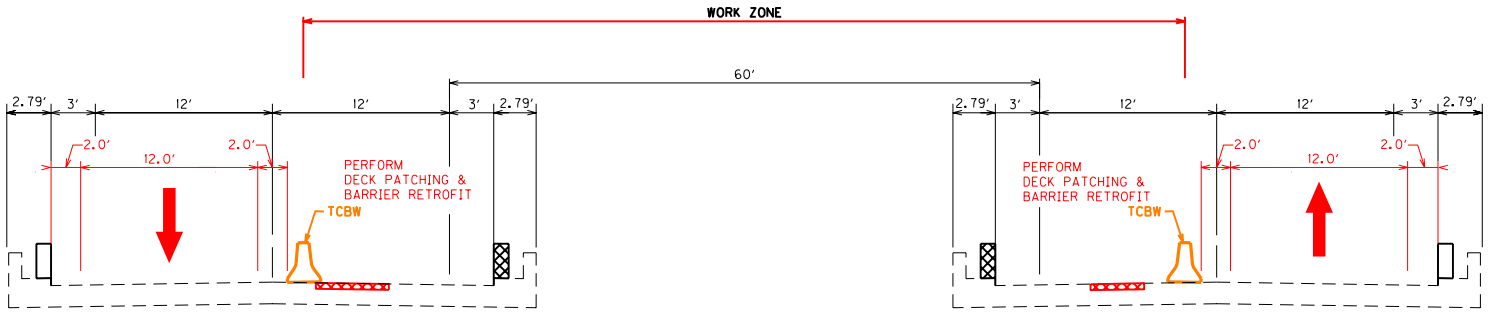

WESTBOUND LANES

EASTBOUND LANES

PHASE II

BRIDGE LANE CLOSURE

LANE CLOSURES TO BE USED FOR BRIDGE DECK AND RAILING WORK AT THE FOLLOWING BRIDGES:

-PREWITT-GRASSY LICK ROAD

CONSTRUCT DURING THIS PHASE

I-64 MAINTENANCE OF TRAFFIC
TYPICAL SECTIONS SHEET 2 OF 2

COUNTY OF	ITEM NO.	SHEET NO.
CLARK MONTGOMERY	7-2032.00	

BRIDGES M.O.T. PHASING

(DIMENSIONS SHOWN ARE MINIMUMS)

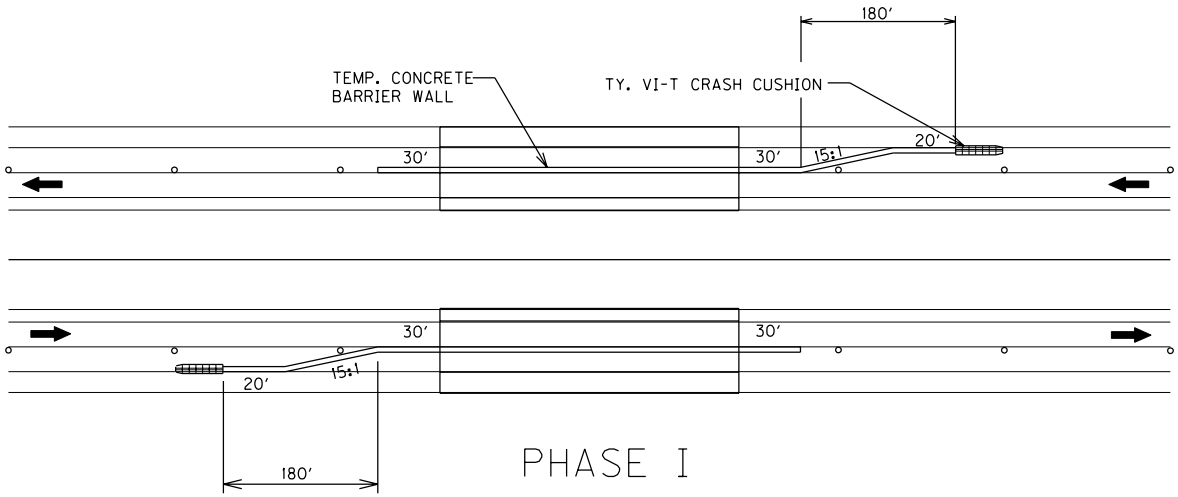

PHASE I

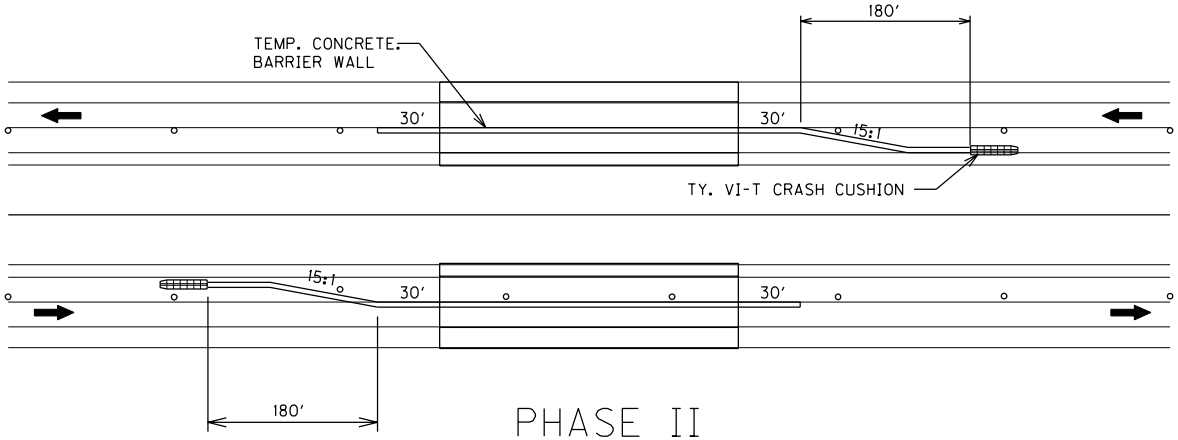

PHASE II

I-64 MAINTENANCE OF TRAFFIC
BRIDGE PHASING

COUNTY OF	ITEM NO.	SHEET NO.
CLARK/ MONTGOMERY	7-2032.00	

EXISTING BRIDGE CLEARANCE
US 60 – M.P. 101.735

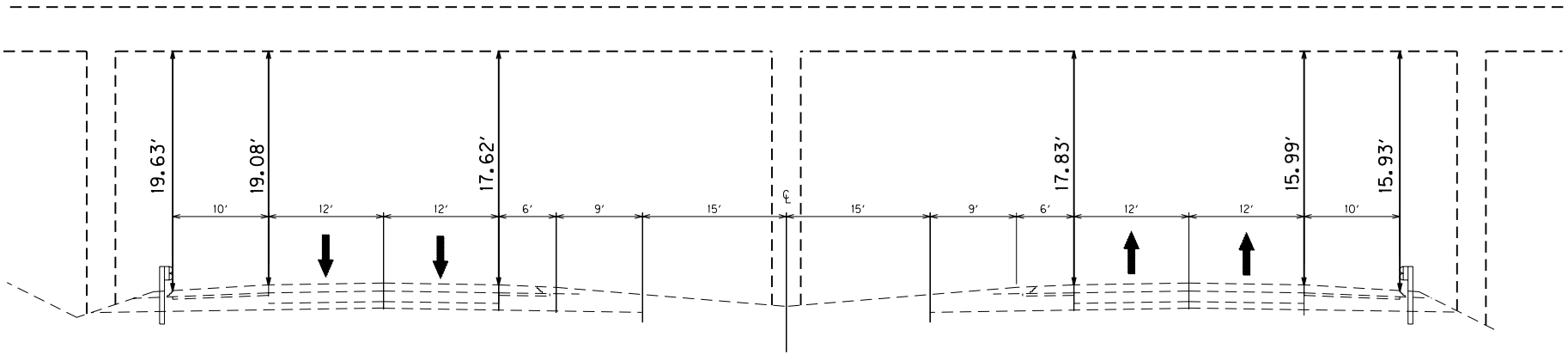

WESTBOUND LANES **EASTBOUND LANES**

NOTE: THIS EXHIBIT IS SHOWN FOR INFORMATION PURPOSES ONLY.
THE DIMENSIONS SHOWN ARE APPROXIMATE AND THERE IS NO GUARANTEE OF ACCURACY.
THE CONTRACTOR IS RESPONSIBLE FOR VERIFYING THE ACTUAL DIMENSIONS IN THE FIELD.

SCHEMATIC ONLY
NOT TO SCALE

I-64
TYPICAL SECTIONS

COUNTY OF	ITEM NO.	SHEET NO.
CALRK/ MONTGOMERY	7-2032.00	

EXISTING BRIDGE CLEARANCE
WADES MILL RD – M.P. 103.981

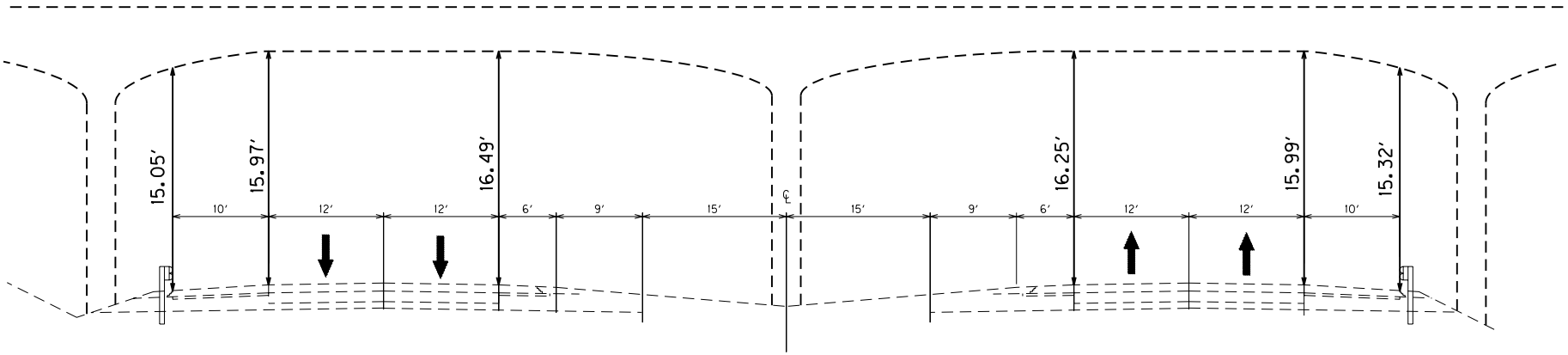

WESTBOUND LANES **EASTBOUND LANES**

NOTE: THIS EXHIBIT IS SHOWN FOR INFORMATION PURPOSES ONLY.
THE DIMENSIONS SHOWN ARE APPROXIMATE AND THERE IS NO GUARANTEE OF ACCURACY.
THE CONTRACTOR IS RESPONSIBLE FOR VERIFYING THE ACTUAL DIMENSIONS IN THE FIELD.

SCHEMATIC ONLY
NOT TO SCALE

I-64
TYPICAL SECTIONS

COUNTY OF	ITEM NO.	SHEET NO.
CLARK/ MONTGOMERY	7-2032.00	

EXISTING BRIDGE CLEARANCE
KY 713 – M.P. 107.254

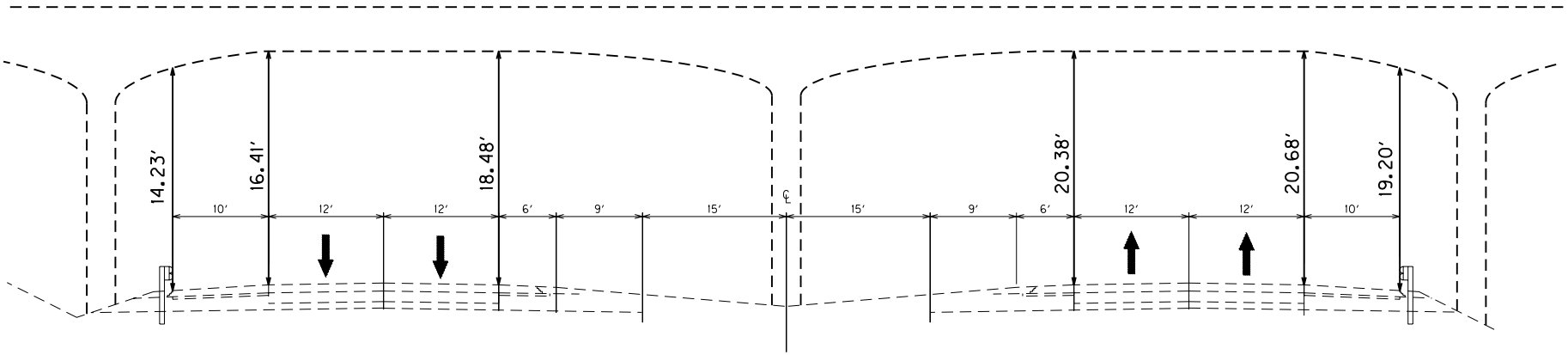

WESTBOUND LANES **EASTBOUND LANES**

NOTE: THIS EXHIBIT IS SHOWN FOR INFORMATION PURPOSES ONLY.
THE DIMENSIONS SHOWN ARE APPROXIMATE AND THERE IS NO GUARANTEE OF ACCURACY.
THE CONTRACTOR IS RESPONSIBLE FOR VERIFYING THE ACTUAL DIMENSIONS IN THE FIELD.

SCHEMATIC ONLY
NOT TO SCALE

I-64
TYPICAL SECTIONS

COUNTY OF	ITEM NO.	SHEET NO.
CLARK/ MONTGOMERY	7-2032.00	

EXISTING BRIDGE CLEARANCE
US 460 /KY 11 – M.P. 109.621

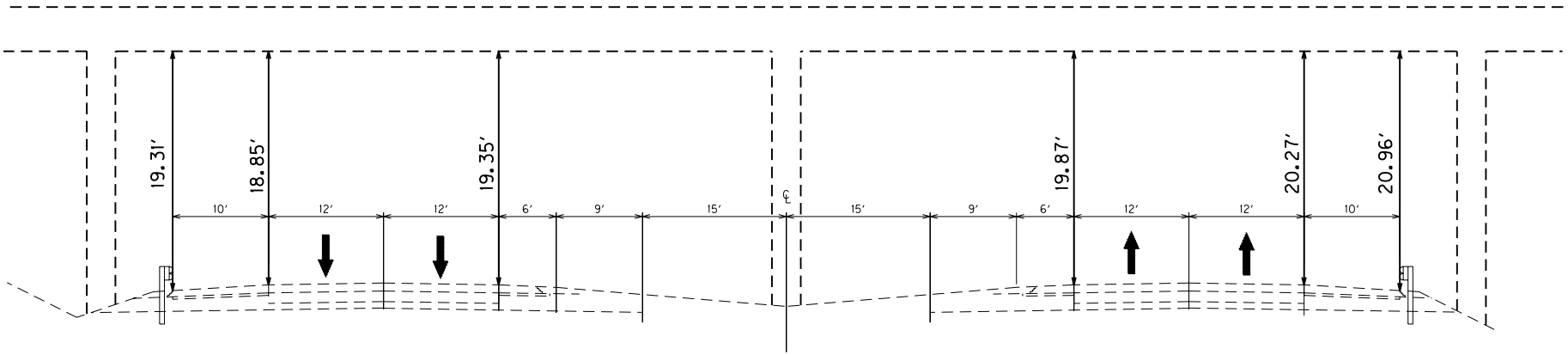

WESTBOUND LANES **EASTBOUND LANES**

NOTE: THIS EXHIBIT IS SHOWN FOR INFORMATION PURPOSES ONLY.
THE DIMENSIONS SHOWN ARE APPROXIMATE AND THERE IS NO GUARANTEE OF ACCURACY.
THE CONTRACTOR IS RESPONSIBLE FOR VERIFYING THE ACTUAL DIMENSIONS IN THE FIELD.

SCHEMATIC ONLY
NOT TO SCALE

I-64
TYPICAL SECTIONS

COUNTY OF	ITEM NO.	SHEET NO.
CLARK/ MONTGOMERY	7-2032.00	

EXISTING BRIDGE CLEARANCE
KY 1991 – M.P. 111.003

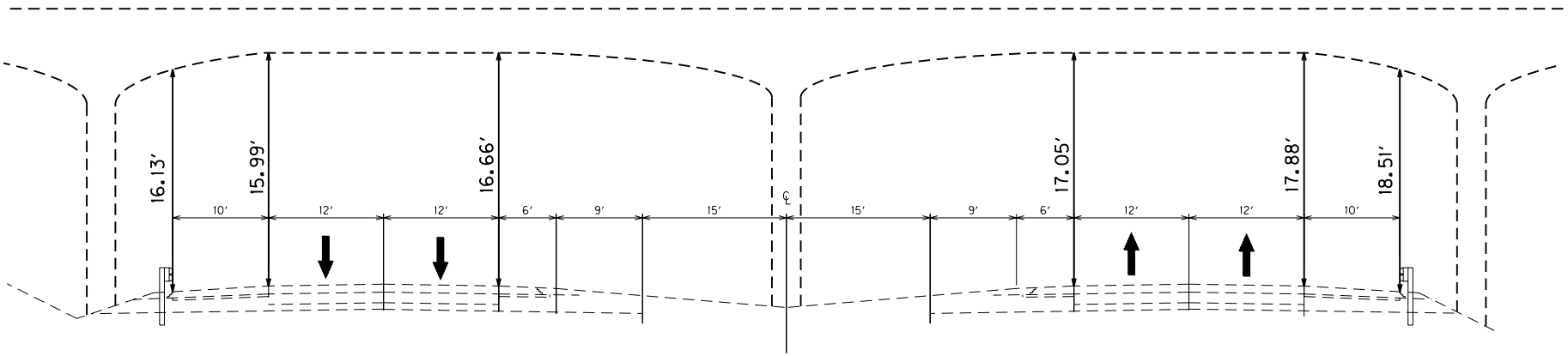

WESTBOUND LANES **EASTBOUND LANES**

NOTE: THIS EXHIBIT IS SHOWN FOR INFORMATION PURPOSES ONLY.
THE DIMENSIONS SHOWN ARE APPROXIMATE AND THERE IS NO GUARANTEE OF ACCURACY.
THE CONTRACTOR IS RESPONSIBLE FOR VERIFYING THE ACTUAL DIMENSIONS IN THE FIELD.

SCHEMATIC ONLY
NOT TO SCALE

I-64
TYPICAL SECTIONS

REFERENCES

1. Kentucky Transportation Cabinet, Department of Highways, Standard Specifications for Road and Bridge Construction, Edition of 2008.

2. FHWA Manual on Uniform Traffic Control Devices – 2009 Edition.

3. Active Sepia List

Drawing No.	Drawing Name
001	Delineators at Narrow Shoulder Bridges
002	Delineators for Guardrail
003	Treatment of Open Sinkholes
004	Concrete Barrier Wall Type 9T (Temporary)
006	Woven Wire Fence Type I
009	Culvert, Entrance & Storm Sewer Pipe Types & Cover Heights
010	Culvert, Entrance & Storm Sewer Pipe Types & Cover Heights
011	Culvert & Storm Sewer Pipe Types & Cover Heights
020	Guardrail End Treatment Type 4A

4. Kentucky Department of Highways Standard Drawings, current editions, as applicable:

RBB-002-08	GUARDRAIL AND BRIDGE END DRAINAGE FOR TWIN STRUCTURES
RBB-003-02	LAYOUT OF GUARDRAIL AT TWIN STRUCTURES-DEPRESSED MEDIAN
RBB-010-04	GUARDRAIL TRANSITION FROM NORMAL SHOULDER TO NARROW BRIDGE
RBC-001-09	GUARDRAIL CONNECTOR TO BRIDGE END TYPE A AND A-1
RBC-002-01	GUARDRAIL CONNECTOR TO BRIDGE END TYPE A AND A-1 COMPONENTS
RBC-003-07	GUARDRAIL CONNECTOR TO BRIDGE END TYPE A AND A-1 COMPONENTS
RBE-100-09	CRASH CUSHION TYPE VI-BT & CT
RBE-205-04	CRASH CUSHION TYPE IX-A
RBI-001-09	TYPICAL GUARDRAIL INSTALLATIONS
RBI-002-06	TYPICAL GUARDRAIL INSTALLATIONS
RBI-004-03	INSTALLATION OF GUARDRAIL END TREATMENT TYPE 1
RBI-005-07	GUARDRAIL INSTALLATION AT BRIDGE COLUMNS
RBI-006-06	GUARDRAIL INSTALLATION AT SIGN SUPPORTS
RBM-020-08	DELINEATORS FOR CONCRETE BARRIERS
RBR-001-11	STEEL BEAM GUARDRAIL (W-BEAM)
RBR-005-10	GUARDRAIL COMPONENTS
RBR-010-05	GUARDRAIL TERMINAL SECTIONS
RBR-015-04	GUARDRAIL POSTS
RBR-016-04	GUARDRAIL POSTS
RBR-020-03	GUARDRAIL END TREATMENT TYPE 1
RBR-025-03	GUARDRAIL END TREATMENT TYPE 2A
RBR-030-04	GUARDRAIL END TREATMENT TYPE 3

RBR-031	GUARDRAIL END TREATMENT TYPE 3 PIPE DRAINAGE DETAIL
RBR-100-05	STEEL BEAM GUARDRAIL (THRIE BEAM)
RDB-001-11	DROP BOX INLET TYPE 1
RDB-005-08	DROP BOX INLET TYPE 5A-5B-5C-5D-5E AND 5F
RDB-111-07	SLOPED BOX INLET OR OUTLET TYPE 2
RDB-280-05	CURB BOX INLET TYPE B (DETAIL DRAWING)
RDB-281-02	CURB BOX INLET TYPE B (STEEL DRAWING)
RDB-282-03	CURB BOX INLET TYPE B (TOP PHASE TABLES)
RDB-283-03	CURB BOX INLET TYPE B (DETAIL AND BAR CHART FOR 8” LID)
RDD-040-04	CHANNEL LINING CLASS II AND III
RDI-020-08	PIPE BEDDING FOR CULVERTS ENTRANCE AND STORM SEWER PIPE
RDI-021	PIPE BEDDING FOR CULVERTS ENTRANCE AND STORM SEWER REINFORCED CONC. PIPE
RDI-025-04	PIPE BEDDING TRENCH CONDITION
RDI-026	PIPE BEDDING TRENCH CONDITION REINFORCED CONC. PIPE
RDI-045-01	TYPICAL MEDIAN DRAIN INSTALLATIONS
RDH-020-03	SLOPED & FLARED HEADWALLS FOR 12” TO 27” PIPE
RDX-160-05	SECURITY DEVCES FOR FRAMES, GRATES AND LIDS
RDX-210-02	TEMPORARY SILT FENCE
RDX-220-04	SILT TRAP - TYPE A
RDX-225	SILT TRAP - TYPE B
RDX-230	SILT TRAP - TYPE C
RFW-001-04	FENCING DETAILS
RGS-002-05	SUPERELEVATION FOR MULTILANE PAVEMENTS
RGX-001-05	MISCELLANEOUS STANDARDS PART 1
RGX-200	ONE POINT PROCTER FAMILY OF CURVES
RPM-001-03	PERMANENT U-TURN MEDIAN OPENING
RPM-100-09	CURB AND GUTTER, CURBS AND VALLEY GUTTER
TPM-105-01	PAVEMENT MARKER ARRANGEMENTS MULTI-LANE ROADWAYS
TPM-125-01	PAVEMENT MARKER ARRANGEMENT EXIT-GORE AND OFF-RAMP
TPM-130-01	PAVEMENT MARKER ARRANGEMENTS ON-RAMP WITH TAPERED ACCELERATION LANE
TPM-135-01	PAVEMENT MARKER ARRANGEMENT ON-RAMP WITH PARALLEL ACCELERATION LANE
TTC-100-01	LANE CLOSURE TWO LANE HIGHWAY CASE I
TTC-110-01	LANE CLUSURE USING TRAFFIC SIGNALS
TTC-115-01	LANE CLOSURE MULTI-LANE HIGHWAY CASE I
TTC-120-01	LANE CLOSURE MULTI-LANE HIGHWAY CASE II
TTC-135-01	SHOULDER CLOSURE
TTC-155-01	TEMPORARY PAVEMENT MARKER ARRANGEMENTS FOR CONSTRUCTION ZONES
TTC-160-01	TEMPORARY PAVEMENT MARKER ARRANGEMENTS FOR LANE CLOSURES
TTD-110-01	POST SPLICING DETAIL
TTD-120	WORK ZONE SPEED LIMIT AND DOUBLE FINE SIGNS
TTD-125	PAVEMENT CONDITION WARNING SIGNS
TTS-110-01	MOBILE OPERATION FOR PAINT STRIPING CASE III
TTS-115-01	MOBILE OPERATION FOR PAINT STRIPING CASE IV

5. Kentucky Transportation Cabinet, Department of Highways, Standard Specifications for Road and Bridge Construction, Edition of 2008, Appendix B - Supplemental Specifications, as applicable:

Special Note 1I	Portable Changeable Message Signs (1/5/2010)
Special Note 9Y	Material Transfer Vehicle (3/12/2008)
Special Note 10W	Waterblasting Striping Removal (1/1/2008)
Special Note	Typical Section Dimensions *attached*
Special Note	Before You Dig *attached*
Special Note	Guardrail Delivery Verification Sheet *attached*
Special Note	Fixed Completion Date and Liquidated Damages *attached*
Special Note	Erosion Prevention and Sediment Control *attached*
Special Note	Asphalt Milling and Texturing *attached*
Special Note	Shoulder Preparation and Restoration *attached* (See MOT Notes)
Special Note	Installation of Traffic Counting Inductance Loops and Axle Sensors *attached*
Special Note	Bridge Repair Items *attached*

6. Plan Note No. 444 Option A
   Plan Note No. 447

SPECIAL NOTE FOR TYPICAL SECTION DIMENSIONS
I-64

The dimensions shown on the typical sections for pavement and shoulder widths are nominal or typical dimensions. The actual dimensions to be constructed may be varied to fit existing conditions as directed or approved by the Engineer. It is not intended that existing pavement or shoulders be widened unless specified elsewhere in the Proposal.

SPECIAL NOTE FOR BEFORE YOU DIG

Call 1-800-752-6007 toll free a minimum of two and no more than ten business days prior to excavation for information on the location of existing under-ground utilities which subscribe to the before-u-dig (BUD) service. Coordinate excavation with all utility owners, including those who do not subscribe to BUD.

Guardrail Delivery Verification Sheet

Item No. 7-2032.00

Guardrail, End Treatment, Terminal Section or Post Type	Unit	Field Verified Amount	Delivered Amount
Guardrail-Steel W Beam	LF		
Temporary Guardrail	LF		
Guardrail Terminal Section	Each		
Guardrail Terminal Section	Each		
Crash Cushion Type Ix-A	Each		
Guardrail End Treatment Type 1	Each		
Guardrail End Treatment Type 2a	Each		
Guardrail End Treatment Type 3	Each		
Guardrail End Treatment Type 4a	Each		
Guardrail End Treatment Type 7	Each		
Guardrail Connector To Bridge End	Each		
Guardrail Connector To Conc Med Barr	Each		
Guardrail Connect-Shld Bridge Pier	Each		
Timber Guardrail Post	Each		
Steel Guardrail Post	Each		

Removed guardrail, end treatments, terminal sections, and posts shall be delivered to the Central Sign Shop and Recycle Center in Frankfort, KY (502-564-8187) between the hours of 8:00 AM and 3:00 PM Monday through Friday and shall be neatly stacked in accordance with section 719.03.07 of the standard specifications. Contractor, engineer, and Central Sign Shop and Recycle Center representative must all sign off on this sheet before payment may be made.

	Printed Name	Signature	Date
Resident Engineer (or Representative)			
Contractor (or Representative)			
Central Sign Shop and Recycle Center Representative			

Special Note For Fixed Completion Date and Liquidated Damages Clark and Montgomery Counties Item No. 7-2032

Contrary to Section 108.09, Liquidated Damages of $2500 per day will be assessed for each day or fraction thereof work remains uncompleted beyond the Specified Completion Date. This project has a Fixed Completion Date of August 1, 2012.

In addition to the Liquidated Damages specified above, Liquidated Damages in the following amounts will be charged when a mainline lane closure remains in place during the prohibited period outlined in the Traffic Control Plan:

Mainline: $500 for each hour or fraction thereof

In addition to the Liquidated Damages specified above, Liquidated Damages in the following amounts will be charged when the US 60 bridge closure remains in place during the prohibited period outlined in the Traffic Control Plan:

US 60: $1000 for each hour or fraction thereof

These hourly disincentives will still be in effect after the Fixed Completion Dates and will be charged in addition to the $2,500 per calender day if warranted. The contractor is expected to make every effort to complete the work in order to open the lane closure within a specified timeframe.

If work is delayed by inclement weather, the minimum work required to allow removal of the lane closure, as directed by the Engineer, shall be resumed immediately as soon as weather permits or the Department will begin to assess Liquidated Damages as specified herein.

Contrary to Section 108.09 of the Standard Specifications, **the disincentive fee will be charged during those periods when seasonal limitations of the Contract prohibit the Contractor from working on a controlling item or operation. This includes the months from December through March.**

All liquidated damages will be applied cumulatively.

All other applicable portions of Section 108 apply.

Special Note For:
Erosion Prevention and Sediment Control
Items 7-2032: I-64 Pavement Rehabilitation
Clark and Montgomery Cos.

The Contractor shall be responsible for filing the Kentucky Pollution Discharge Elimination System (KPDES) KYR10 permit Notice of Intent (NOI) with the Kentucky Division of Water (DOW) and any KPDES local Municipal Separate Storm Sewer System (MS4) program that has jurisdiction. The NOI shall name the contractor as the Facility Operator and include the KYTC Contract ID Number (CID) for reference.

The Contractor shall perform all temporary erosion/sediment control functions including: providing a Best Management Practice (BMP) Plan, conducting required inspections, modifying the BMP plan documents as construction progresses and documenting the installation and maintenance of BMPs in conformance with the KPDES KYR10 permit effective on August 1, 2009 or a permit re-issued to replace that KYR10 permit. This work shall be conducted in conformance with the requirements of Section 213 of KYTC 2008 Department of Highways, Standard Specifications for Road and Bridge Construction.

Contrary to Section 213.03.03, paragraph 2, the Engineer shall conduct inspections as needed to verify compliance with Section 213 of KYTC 2008 Department of Highways, Standard Specifications for Road and Bridge Construction. The Engineer's inspections shall be performed a minimum of once per month and within seven days after a storm of ½ inch or greater. Copies of the Engineer's inspections shall not be provided to the contractor unless improvements to the BMP's are required. The contractor shall initiate corrective action within 24 hours of any reported deficiency and complete the work within 5 days. The Engineer shall use Form TC 63-61 A for this report. Inspections performed by the Engineer do not relieve the Contractor of any responsibility for compliance with the KPDES permit.

Contrary to Section 213.05, bid items for temporary BMPs will not be listed and will be replaced with one lump sum item for the services. Payment will be pro-rated based on the Project Schedule as submitted by the Contractor and as agreed to by the Engineer.

The contractor shall be responsible for applying "good engineering practices" as required by the KPDES permit. The contractor may use any temporary BMPs with the approval of the KYTC Engineer.

The contractor shall provide the Engineer copies of all documents required by the KPDES permit at the time they are prepared.

The contractor shall be responsible for the examination of the soils to be encountered and make his own independent determination of the temporary BMPs that will be required to accomplish effective erosion prevention and sediment control.

The Contractor shall be responsible for filing the KPDES permit Notice of Termination (NOT) with the Kentucky DOW and any local MS4 program that has jurisdiction. The NOT shall be filed after the Engineer agrees that the project is stabilized or the project has been formally accepted.

Payment: Payment will be at the contract unit price for K.P.D.E.S Permit & Temporary Erosion Control: Lump Sum.

SPECIAL NOTE FOR
ASPHALT MILLING AND TEXTURING

Contrary to Section 408 of the current Standard Specifications, the material obtained from the milling operations shall become the property of the Department. Deliver this material to the nearest State Maintenance facility in the County where the project is located unless otherwise stated in the contract. The Contractor, at his option, may elect to keep this material at an agreed cost of $7.50 per ton. The cost to the Contractor for this material will be deducted from money due on the Contract.

Notice to Contractor

Transfer of millings to the state maintenance facility is considered a part of the construction project, therefore truck operators are subject to receiving prevailing wages.

Site Drawing

Clark Co. , I-64 , Sta. 504, MP~104.0

Figure 1

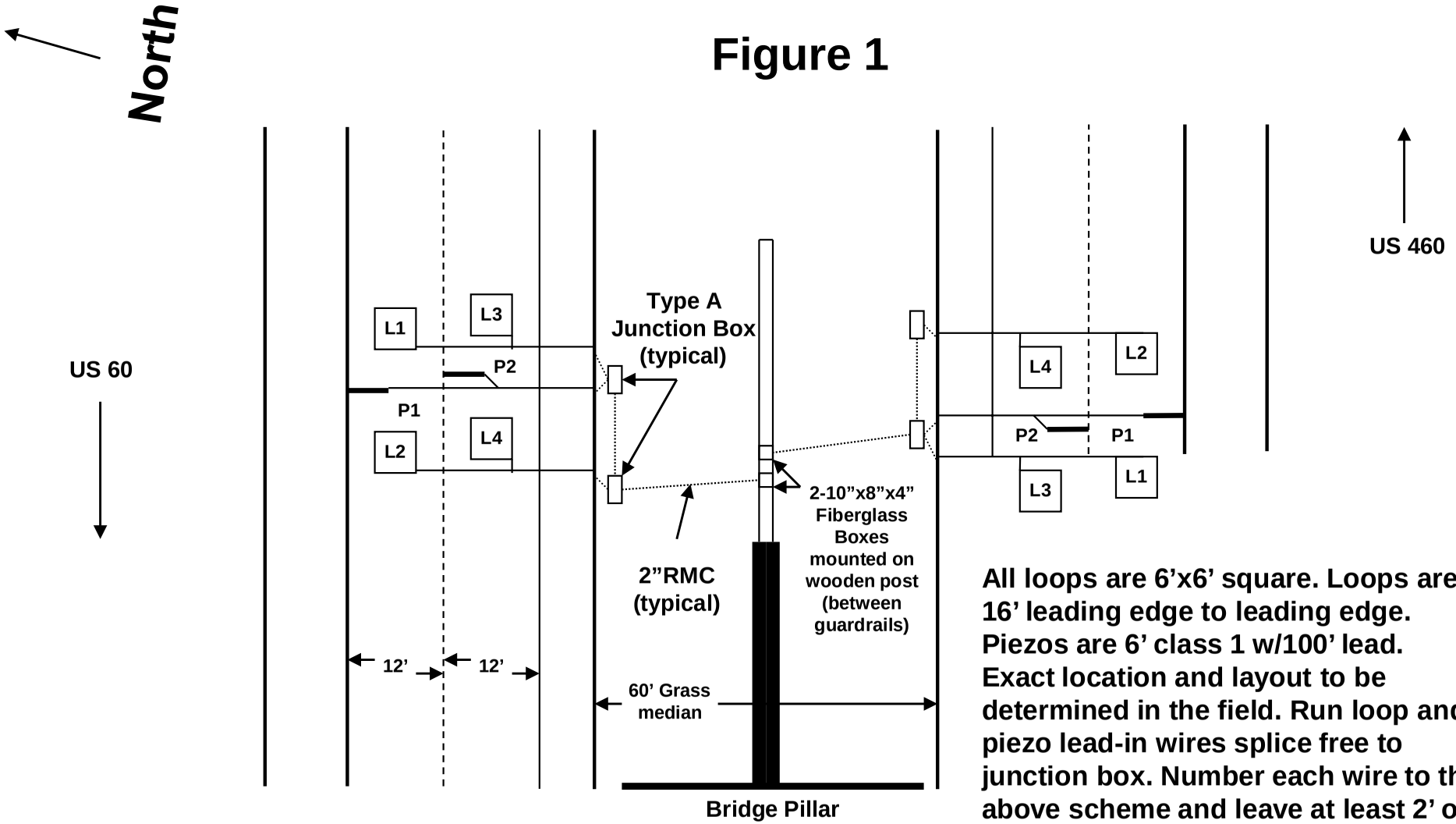

All loops are 6’x6’ square. Loops are 16’ leading edge to leading edge. Piezos are 6’ class 1 w/100’ lead. Exact location and layout to be determined in the field. Run loop and piezo lead-in wires splice free to junction box. Number each wire to the above scheme and leave at least 2’ of slack in cabinets and junction boxes.

NOT TO SCALE

8/04/2011

Site Drawing

Montgomery Co. , I-64 , Sta. 002, MP~111.0

Figure 1a

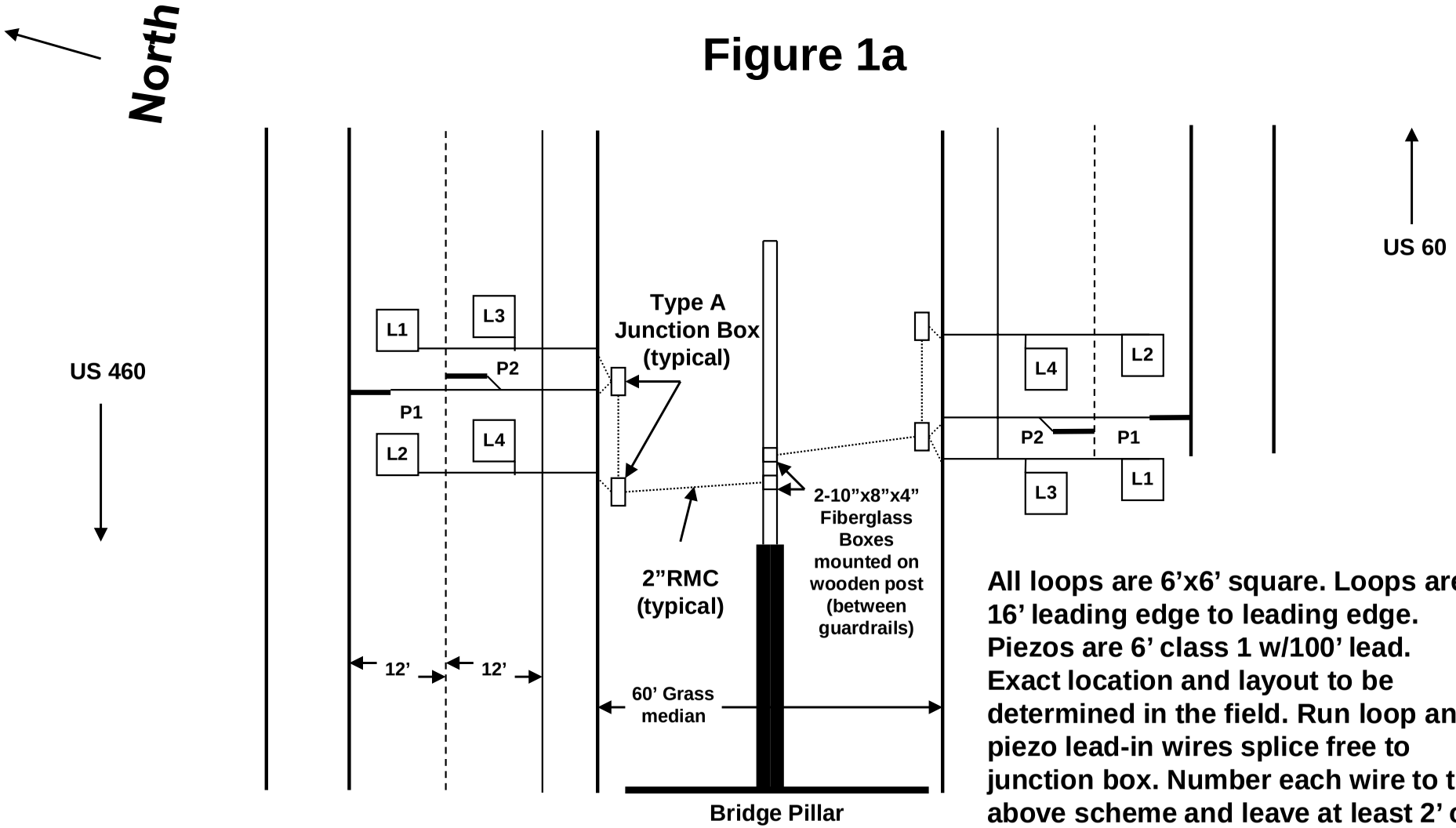

All loops are 6’x6’ square. Loops are 16’ leading edge to leading edge. Piezos are 6’ class 1 w/100’ lead. Exact location and layout to be determined in the field. Run loop and piezo lead-in wires splice free to junction box. Number each wire to the above scheme and leave at least 2’ of slack in cabinets and junction boxes.

NOT TO SCALE

8/04/2011

GENERAL NOTES
CLARK AND MONTGOMERY COUNTIES – I -64
TRAFFIC DATA COLLECTION STATIONS
STA. 504 (MP104.0)
STA. 002 (MP111.0)

GENERAL NOTES:

The Division of Planning needs to re-establish traffic data collection stations within the construction project in Clark and Montgomery Counties on I-64. The Division of Planning traffic data collection station is to be installed at the following sites:

1. STA. 504 at mile point (MP) 104.0 (Clark County)
2. STA. 002 at mile point (MP) 111.0 (Montgomery County)

Contractor will proceed with the installation of traffic sensors. Exact site location will be determined in the field. Contractor shall install two (2) loop sensors and one (1) piezoelectric sensor in each lane.

Contractor shall install a total of eight (8) loop sensors and four (4) piezoelectric sensors in the roadway at each station as shown in Figure 1, and 1a. The loop and piezo lead-in wires will be run splice-free to a cabinet off the shoulder as indicated in the attached drawings. The contractor will provide and use all new materials for this reconstruction.

Installation shall be coordinated with and approved by appropriate Division of Planning staff. Reference, "Special Notes for Installation of Traffic Counting Inductance Loops" for materials, construction and installation details and standard details for installation of Traffic Counting Inductive Loops and Axle Sensors. Also see the Standard Details for Installation of Traffic Counting Inductance Loops and Axle Sensors, Location Drawings, Location Table and Estimate of Quantities, in regard to this specific project.

Note:

The Special Notes for Installation of Traffic Counting Inductance Loops and Axle Sensors are generic. Only the sections that pertain to the specified location and the bid items listed in this summary are applicable. All piezoelectric sensors will be **Class I - 6' long with 100' tails**.

SPECIAL NOTES:

The mile points listed in the proposal are approximate only. The Engineer, in coordination with the Central Office Division of Planning, will designate the exact location at the time of construction. See Site Drawing sheets for more detail as to where each site is to be located.

Notify the Central Office Division of Planning (502-564-7183, Equipment Management Team) a minimum of 14 days prior to beginning work in order for them to have the option to be present during sensor installation. The Engineer will contact and maintain liaison with the District Planning Engineer and the Central Office Division of Planning in order to coordinate the work.

LOCATION TABLE
CLARK AND MONTGOMERY COUNTIES – I-64
TRAFFIC DATA COLLECTION STATIONS
STA. 504 (MP 104.0)
STA. 002 (MP 111.0)

LOCATION TABLE:

STATION	DESCRIPTION	LOOP STATION LIMITS	STATION LOCATION	PIEZOS	LOOPS	PROJECT MP LIMITS
504	2 Loops/ 1 Piezo per Lane	101.735 - 109.621	104.0	4	8	101.6 – 112.1
002	2 Loops/ 1 Piezo per Lane	109.621 – 112.498	111.0	4	8	101.6 – 112.1

LOOP STATION 504 is located on I-64 MP 104.0 (Clark County). This station has four (4) lanes of traffic. Each lane will have a loop-piezo-loop configuration of sensors installed as depicted in Figure 1. The contractor shall install the sensors in each lane and run the loop and piezo lead-in wires splice-free through the junction boxes to the 10”x8”x4” cabinets mounted as depicted in Figure 1. All new materials shall be utilized for this reconstruction.

ESTIMATE OF QUANITIES:

CODE	DESCRIPTION	UNIT	QUANTITY
4795	CONDUIT 2 INCH	LIN FT	110
4820	TRENCHING AND BACKFILLING	LIN FT	105
4829	PIEZOELETRIC SENSOR	EACH	4
4830	LOOP WIRE	LIN FT	1770
4895	LOOP SAW SLOT AND FILL	LIN FT	344
20360ES818	WOOD POST	EACH	1
20391NS835	TYPE A JUNCTION BOX	EACH	4
20468EC	10”x8”x4” CABINET W/LATCH	EACH	2

LOOP STATION 002 is located on I-64 MP 111.0 (Montgomery County). This station has four (4) lanes of traffic. Each lane will have a loop-piezo-loop configuration of sensors installed as depicted in Figure 1a. The contractor shall install the sensors in each lane and run the loop and piezo lead-in wires splice-free through the junction boxes to the 10”x8”x4” cabinets mounted as depicted in Figure 1a. All new materials shall be utilized for this reconstruction.

ESTIMATE OF QUANTITIES:

CODE	DESCRIPTION	UNIT	QUANTITY
4795	CONDUIT 2 INCH	LIN FT	110
4820	TRENCHING AND BACKFILLING	LIN FT	105
4829	PIEZOELETRIC SENSOR	EACH	4
4830	LOOP WIRE	LIN FT	1770
4895	LOOP SAW SLOT AND FILL	LIN FT	344
20360ES818	WOOD POST	EACH	1
20391NS835	TYPE A JUNCTION BOX	EACH	4
20468EC	10”x8”x4” CABINET W/LATCH	EACH	2

Contractor is responsible for the above materials listing. Specifications on materials and installation instructions for loops are found in the Special Notes for Installation of Traffic Counting Inductance Loops and Axle Sensors.

DIVISION OF PLANNING

STANDARD DETAILS FOR INSTALLATION OF TRAFFIC COUNTING INDUCTANCE LOOPS AND AXLE SENSORS

DRAWINGS ARE NOT TO SCALE

4/2/2010

Rev. 3/10

Junction Box Type 6”x 6”x 4” Detail

Figure 2a

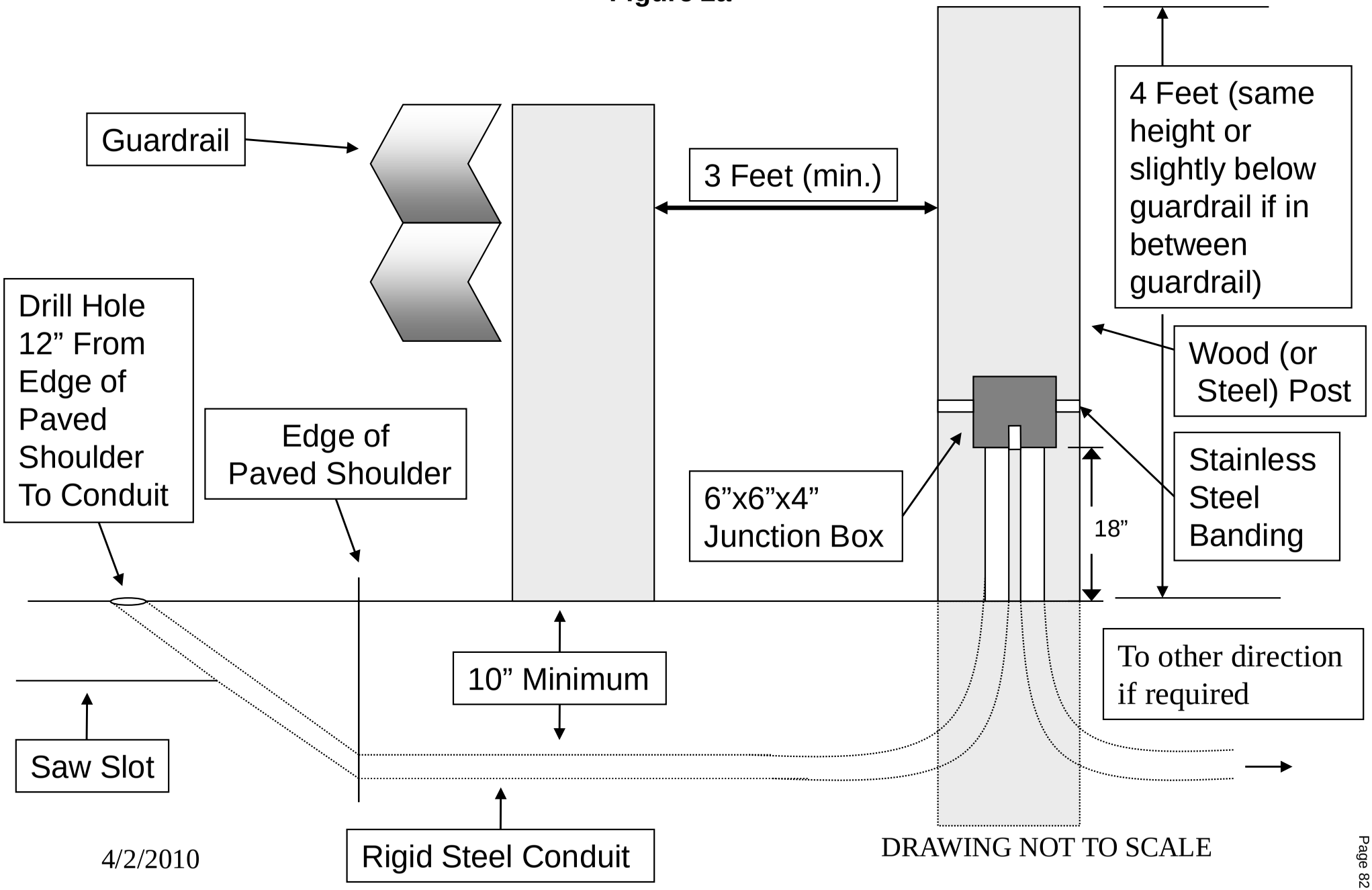

4/2/2010

Junction Box Type 10”x 8”x 4” Detail

Figure 2b

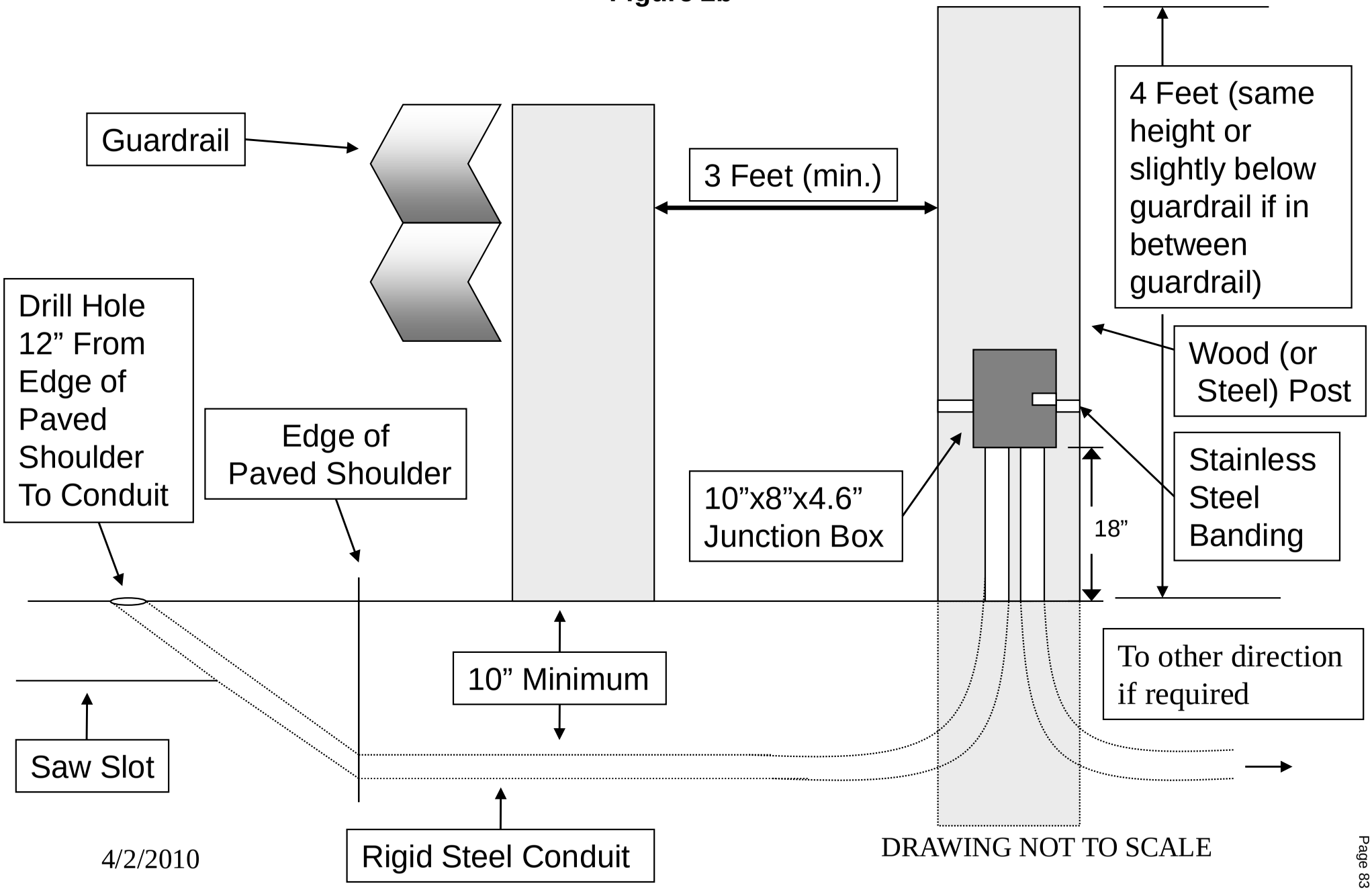

4/2/2010

Junction Box Type 10”x 8”x 4” Detail

Figure 2c

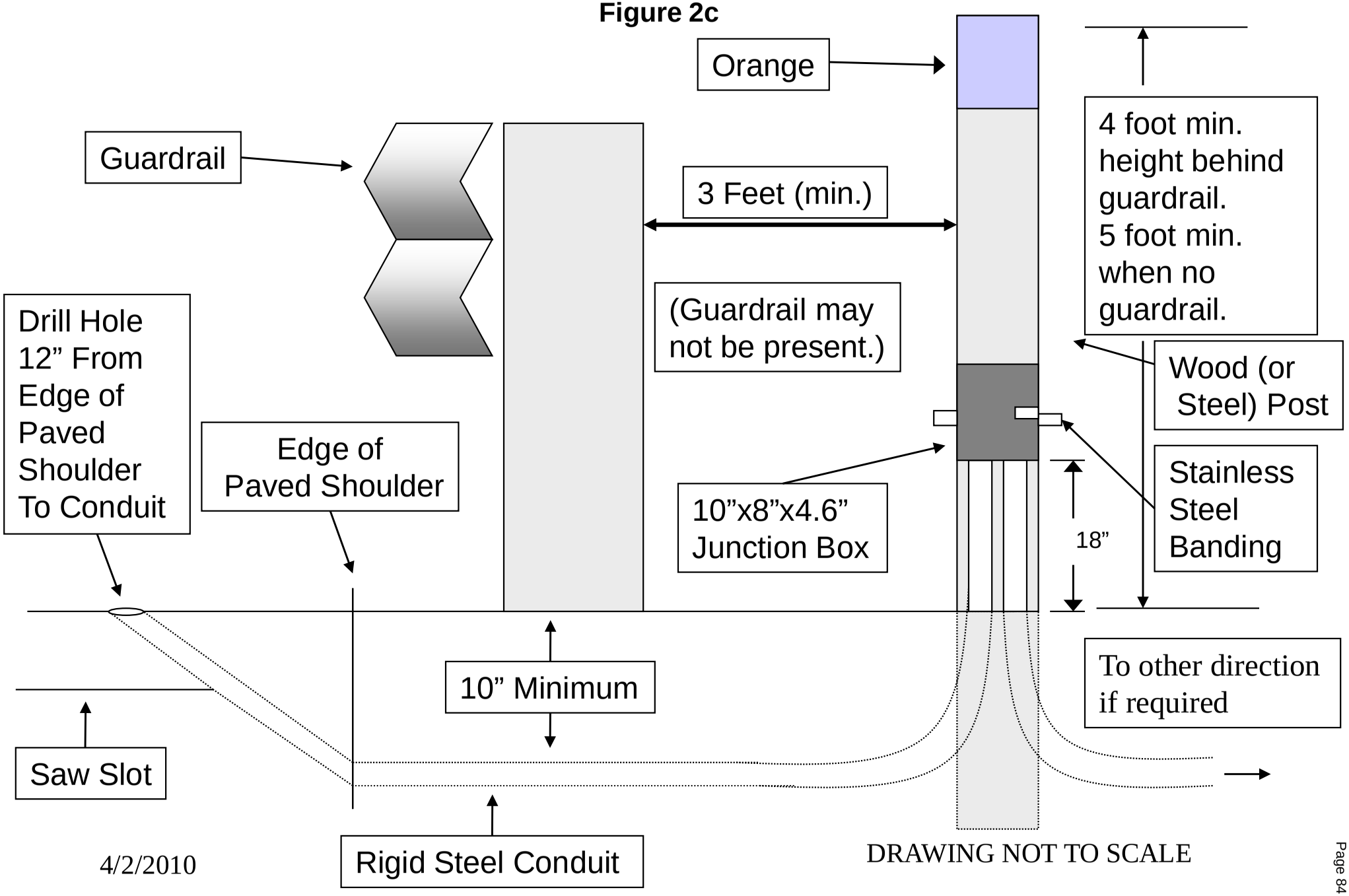

4/2/2010

Junction Box Type A Installation

Figure 3a

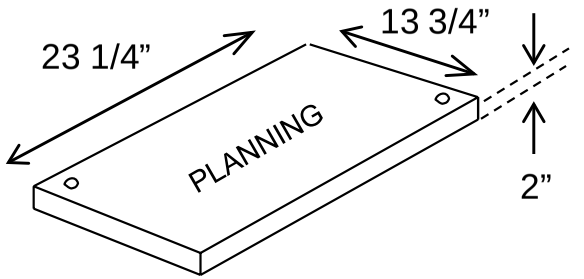

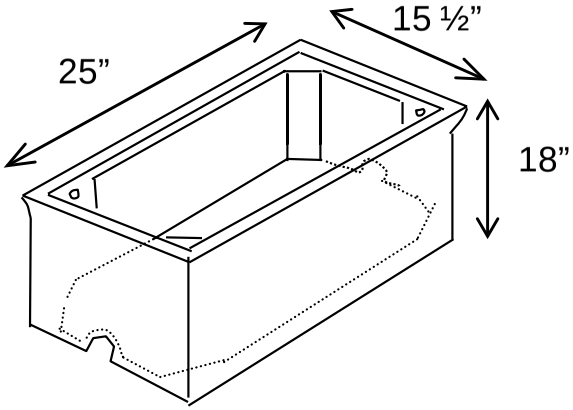

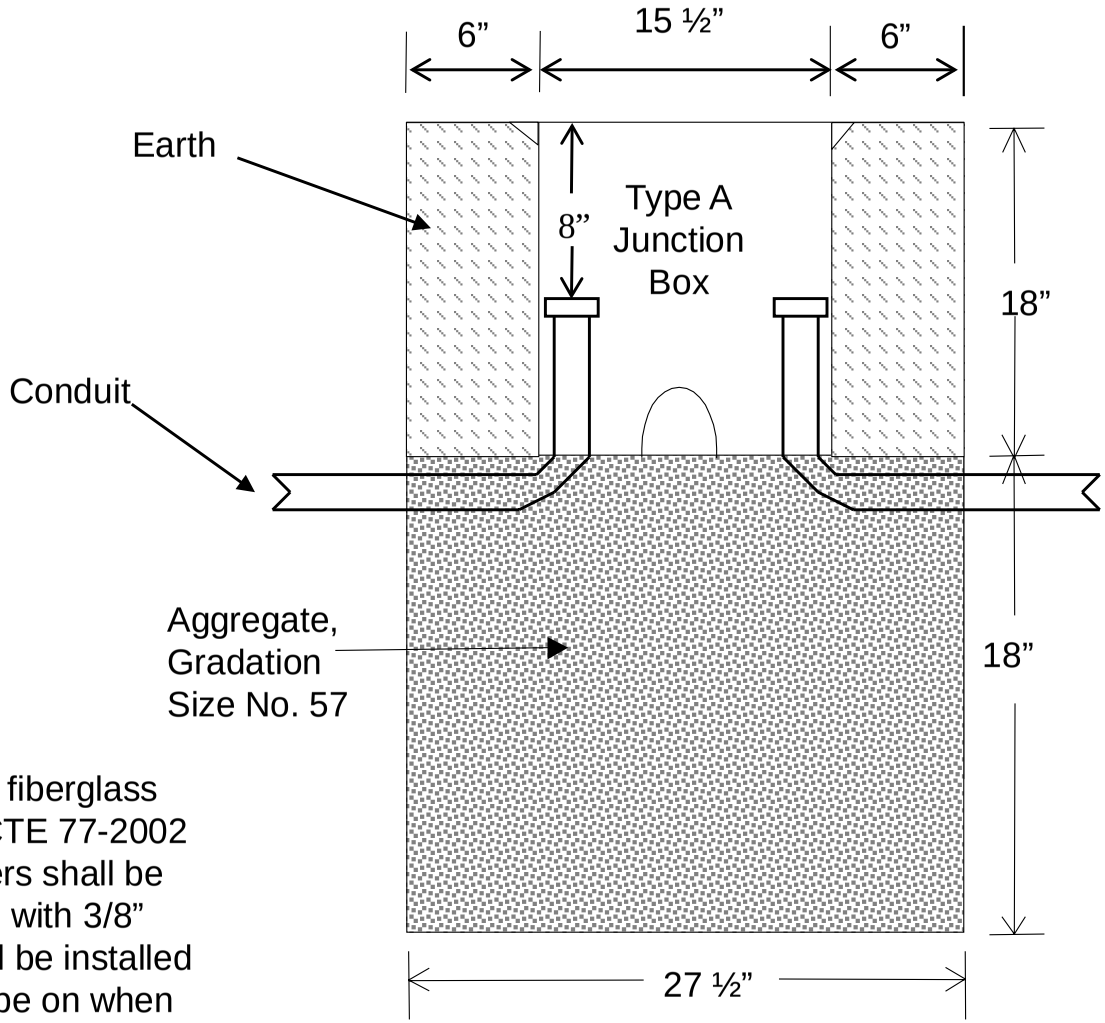

Junction box shall be constructed of a fiberglass reinforced polymer concrete, ANSI/SCTE 77-2002 Tier 15 style or approved equal. Covers shall be marked “PLANNING” and be attached with 3/8” stainless hex bolts. Junction box shall be installed flush with ground line. Covers should be on when filling in around the box.

DRAWING NOT TO SCALE

4/2/2010

Junction Box Type B Installation

Figure 3b

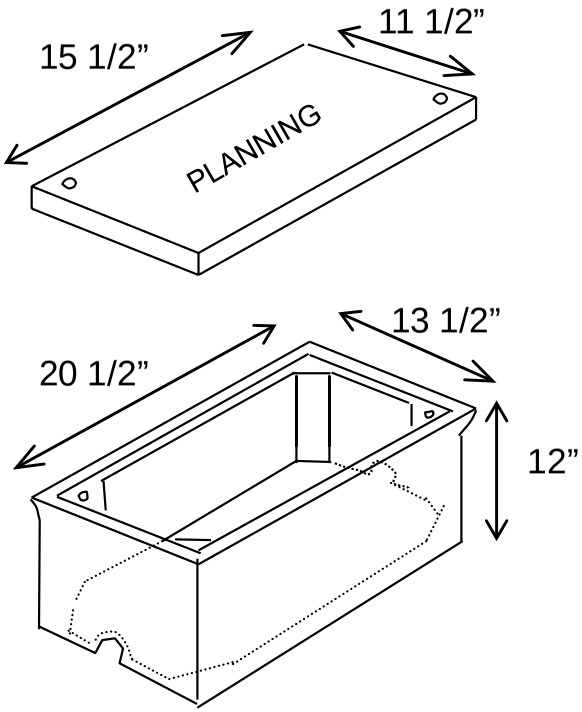

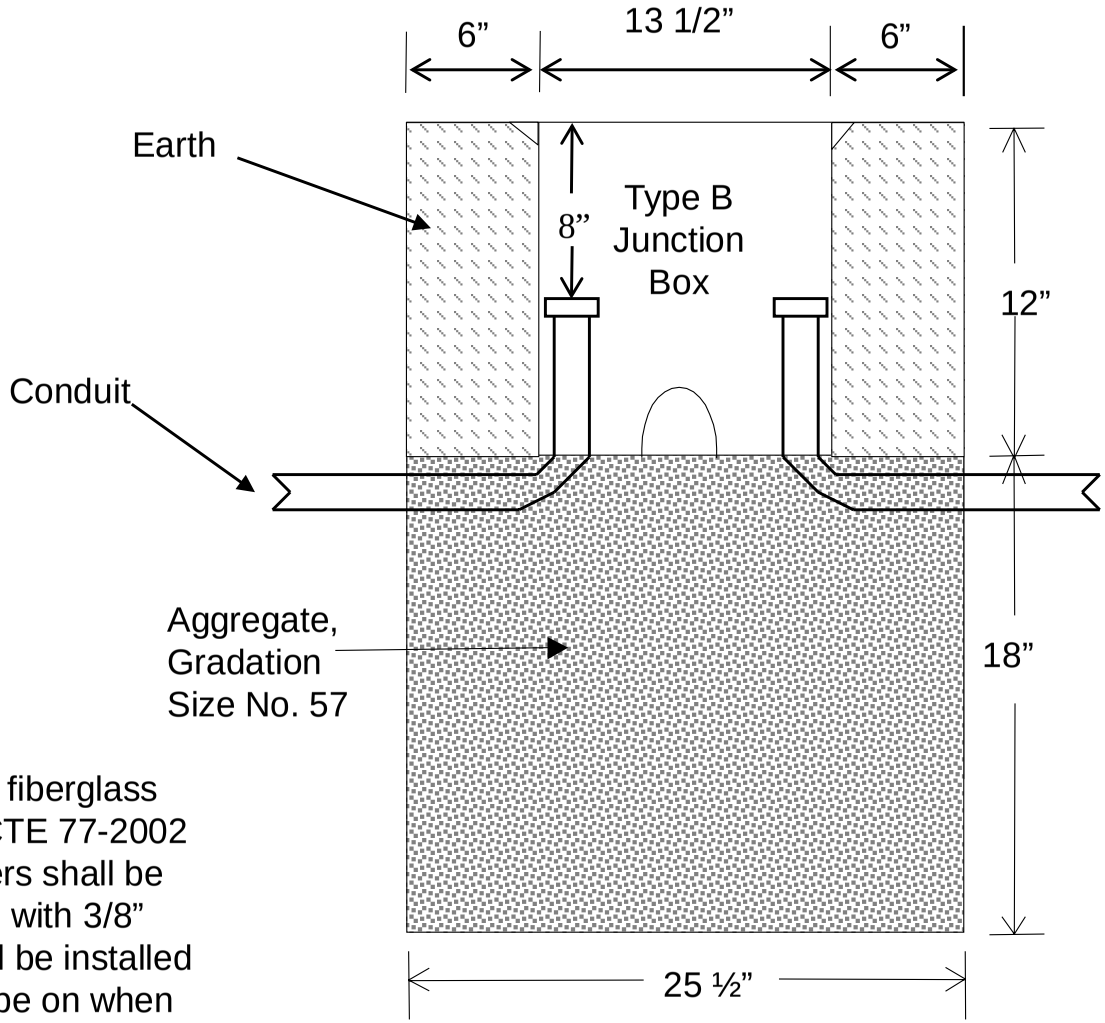

Junction box shall be constructed of a fiberglass reinforced polymer concrete, ANSI/SCTE 77-2002 Tier 15 style or approved equal. Covers shall be marked “PLANNING” and be attached with 3/8” stainless hex bolts. Junction box shall be installed flush with ground line. Covers should be on when filling in around the box.

DRAWING NOT TO SCALE

4/2/2010

Junction Box Type C Installation

Figure 3c

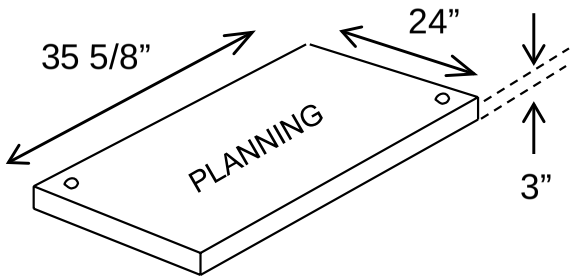

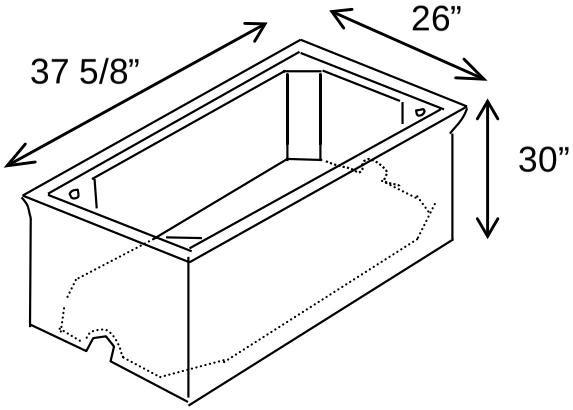

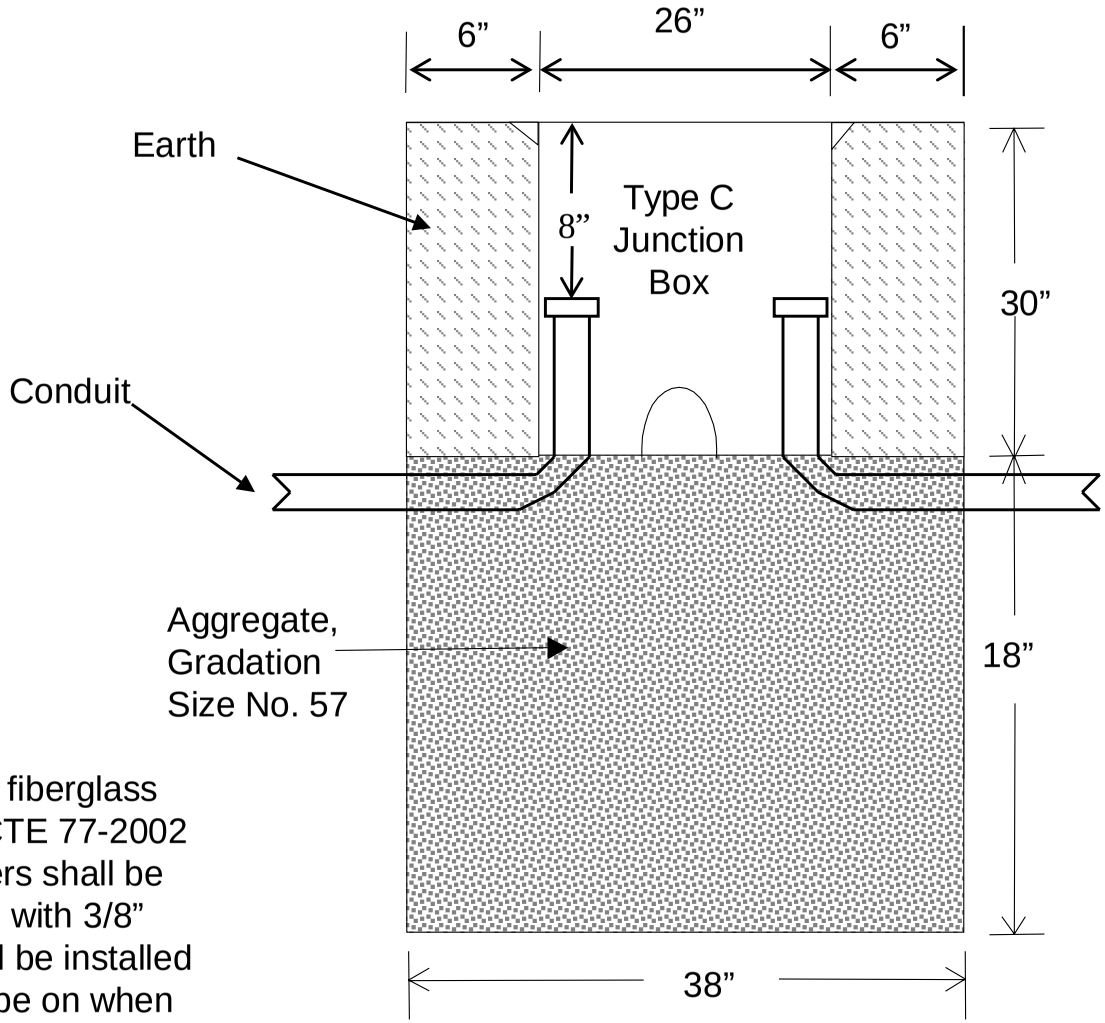

Junction box shall be constructed of a fiberglass reinforced polymer concrete, ANSI/SCTE 77-2002 Tier 15 style or approved equal. Covers shall be marked “PLANNING” and be attached with 3/8” stainless hex bolts. Junction box shall be installed flush with ground line. Covers should be on when filling in around the box.

DRAWING NOT TO SCALE

4/2/2010

Loop Installation Instructions

Loop Installation in Existing Roadways
Figure 4

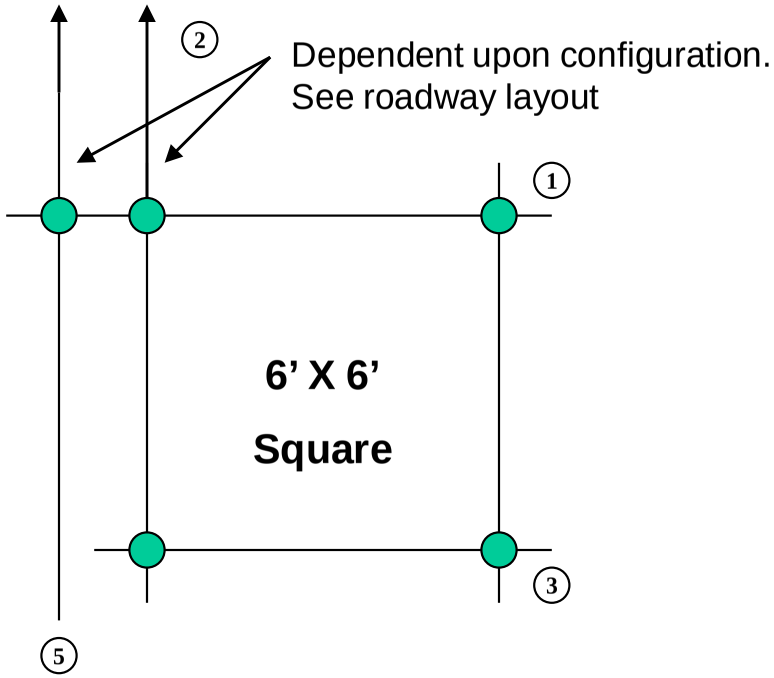

Saw Slot Plan

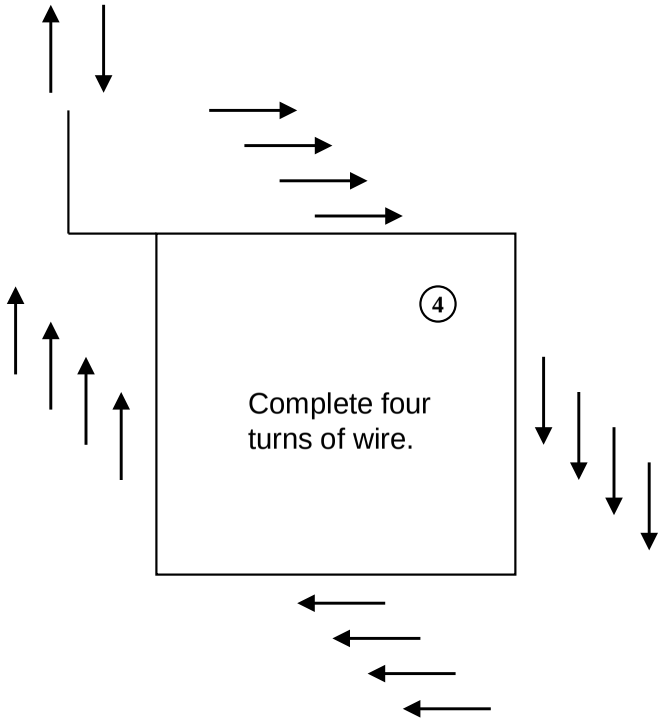

Loop Wiring Plan

Notes:

1. Overlap cuts so that slots are full depth at corners.
2. Configuration is dependent upon loop layout.
3. Drill 1.5" hole in each corner to prevent sharp bends in the wire.
4. Unless denoted otherwise, all loops are 6' x 6' square, positioned in center of lane with 4 turns of 14 AWG loop wire.
5. The distance between adjacent loops is 6' for 12' lanes, 5.5' for 11' lanes, etc. It cannot be less than the loop is wide.

4/2/2010

Loop Installation in Roadway

Figure 5

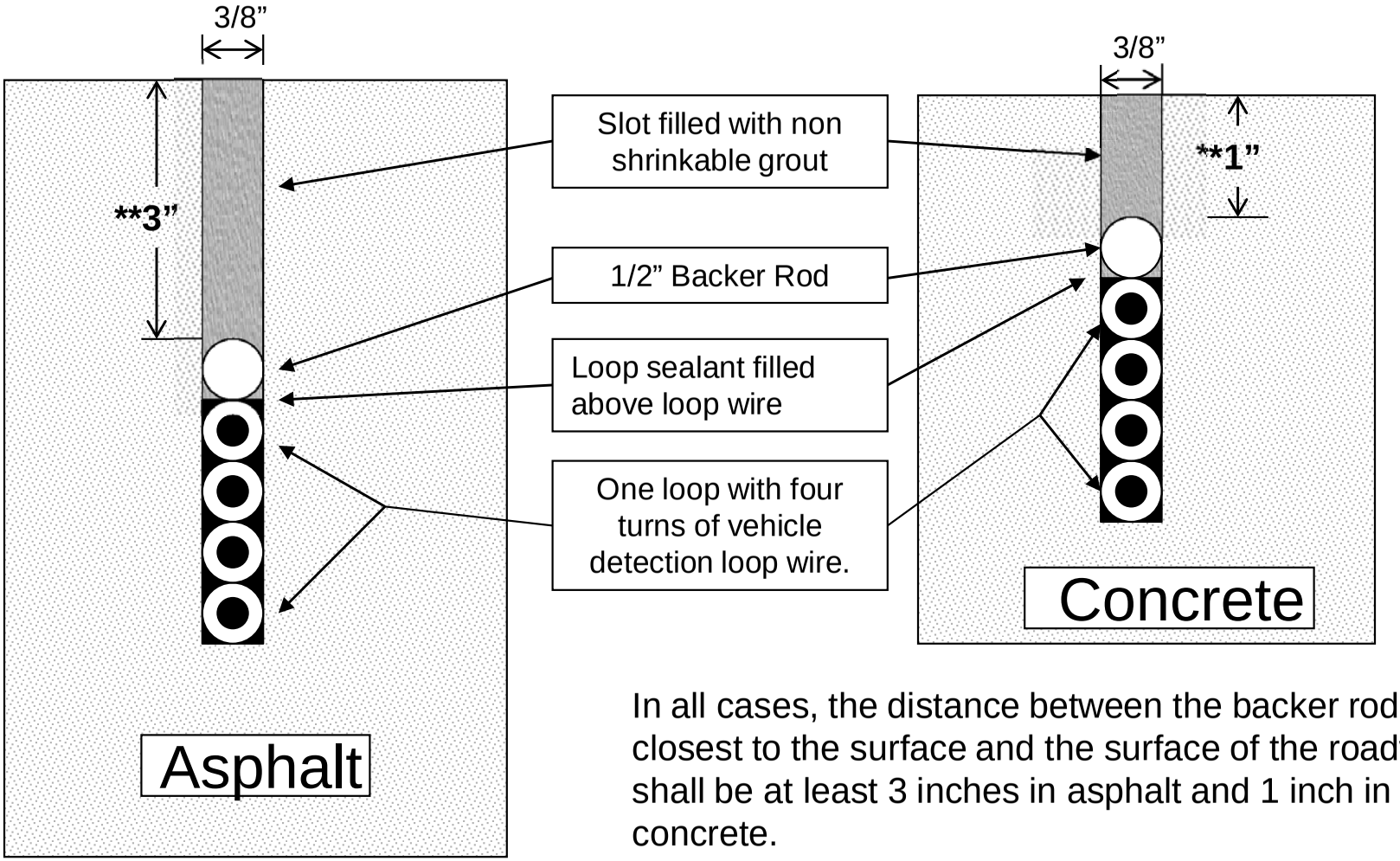

In all cases, the distance between the backer rod closest to the surface and the surface of the roadway shall be at least 3 inches in asphalt and 1 inch in concrete.

**Saw slot level shall be lowered at edge of roadway to meet the conduit level.

DRAWING NOT TO SCALE

Loop Characteristics

Figure 6

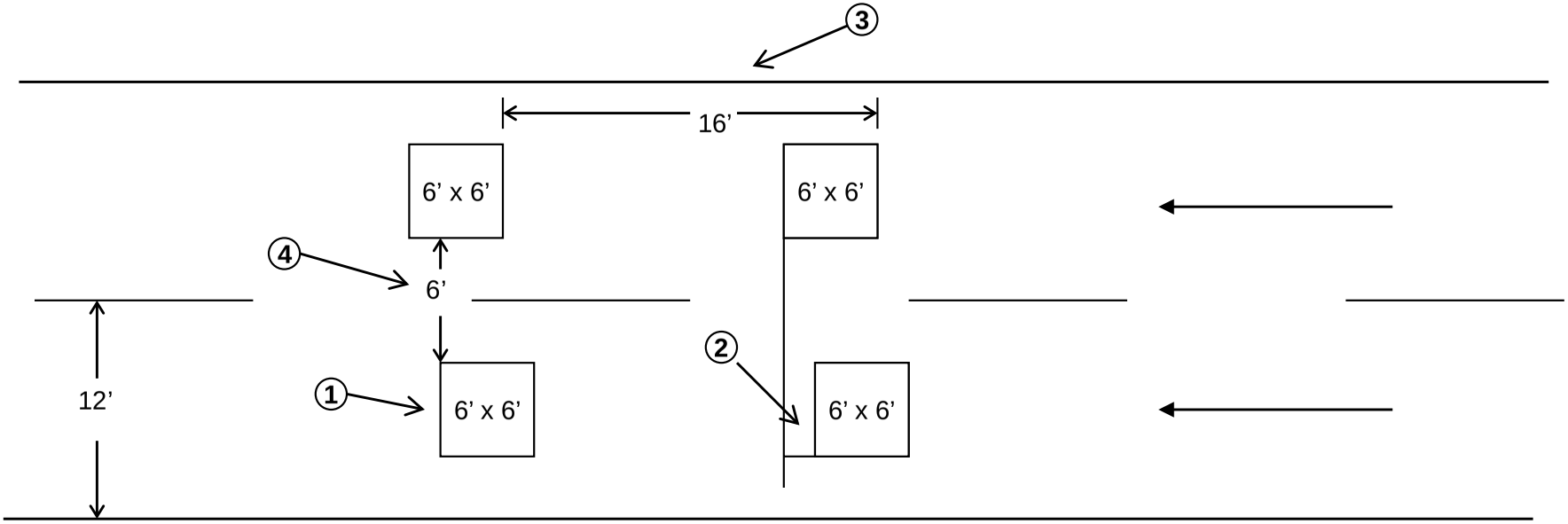

1. Unless denoted otherwise, all loops are 6' x 6' square, positioned in center of lane with 4 turns of 14 AWG loop wire.
2. Minimum 12" between loop and lead-ins. Lead-ins should be on the trailing edge of the loop.
3. If two loops are installed in a lane, space loops 16' from leading edge to leading edge unless denoted otherwise.
4. This distance is typically 6' for 12' lanes, 5.5' for 11' lanes, etc. It cannot be less than the loop is wide.

Galvanized Steel Cabinet and Post Installation

Figure 7a

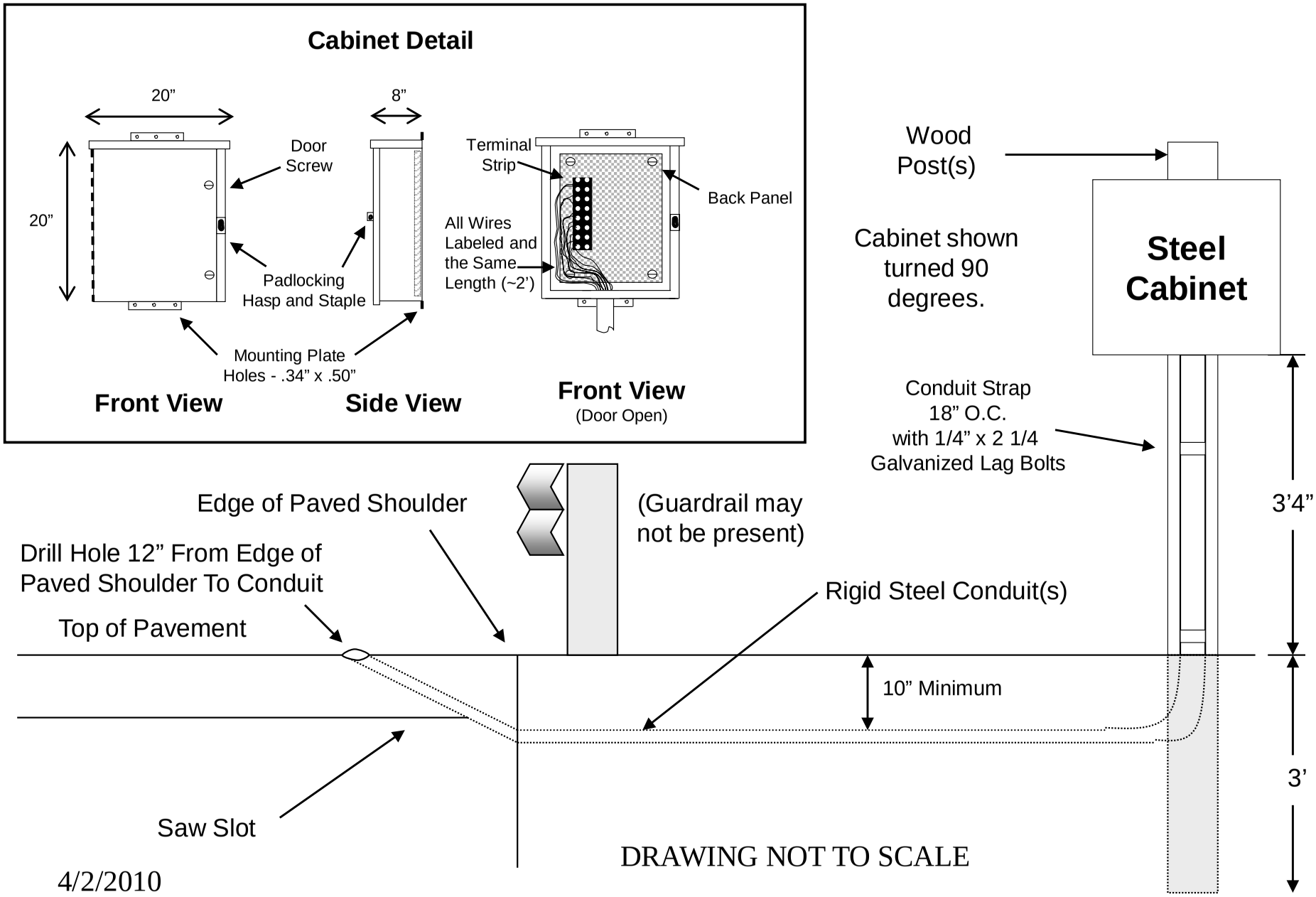

4/2/2010

Galvanized Steel Cabinet and Post Installation

Figure 7b

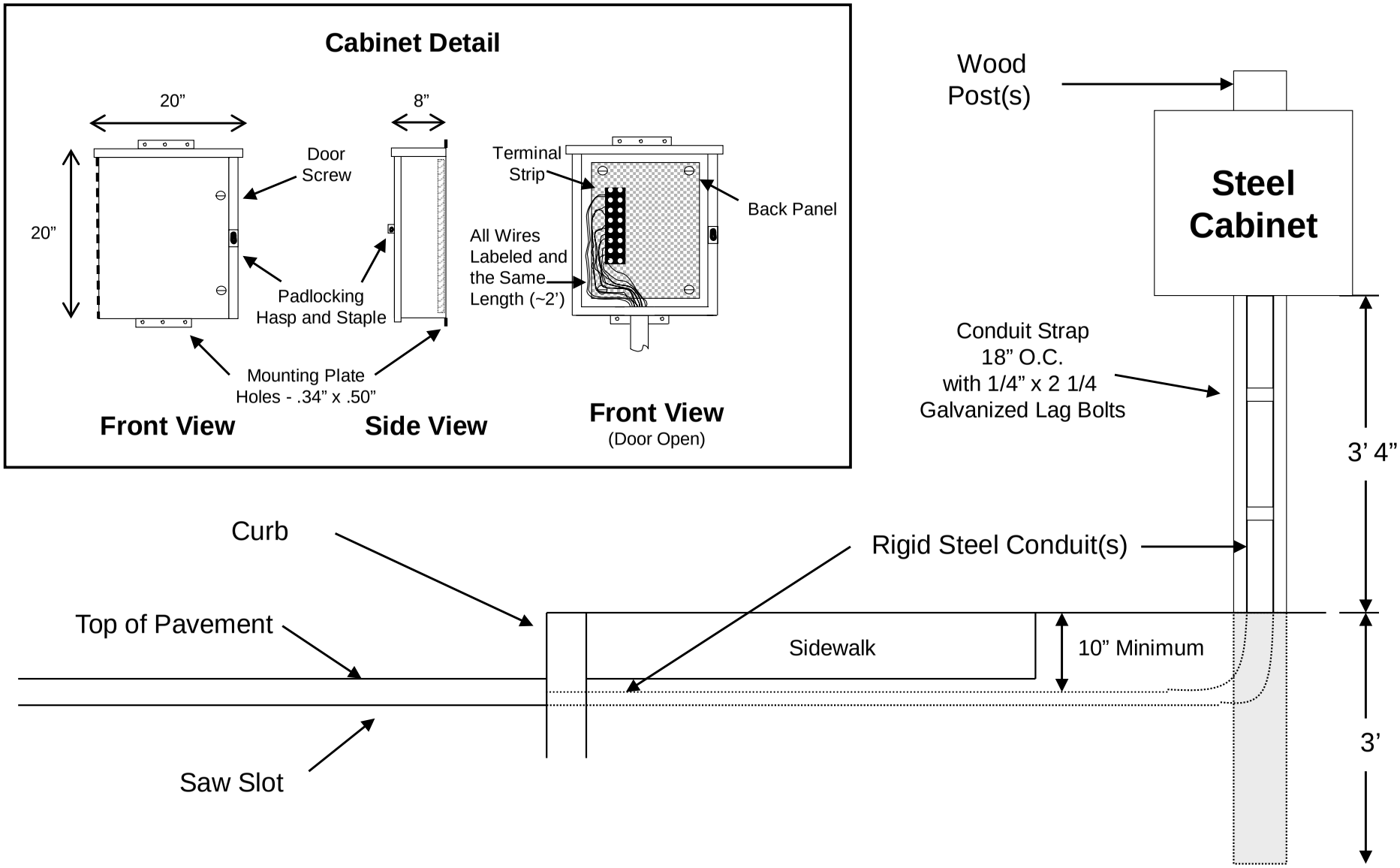

DRAWING NOT TO SCALE

4/2/2010

Galvanized Steel Cabinet and Post Installation

Figure 7c

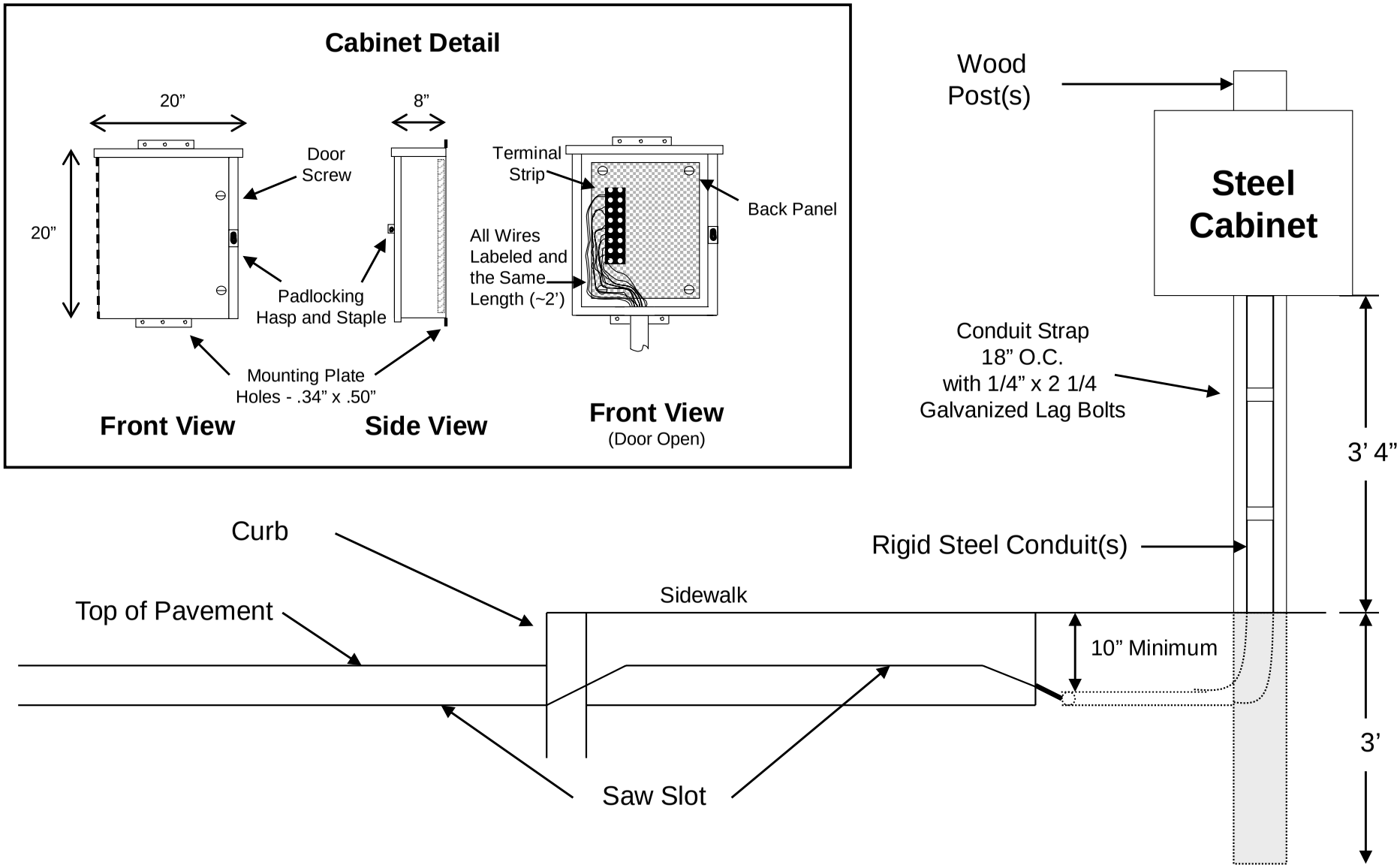

DRAWING NOT TO SCALE

4/2/2010

Cabinet Type G

Figure 8

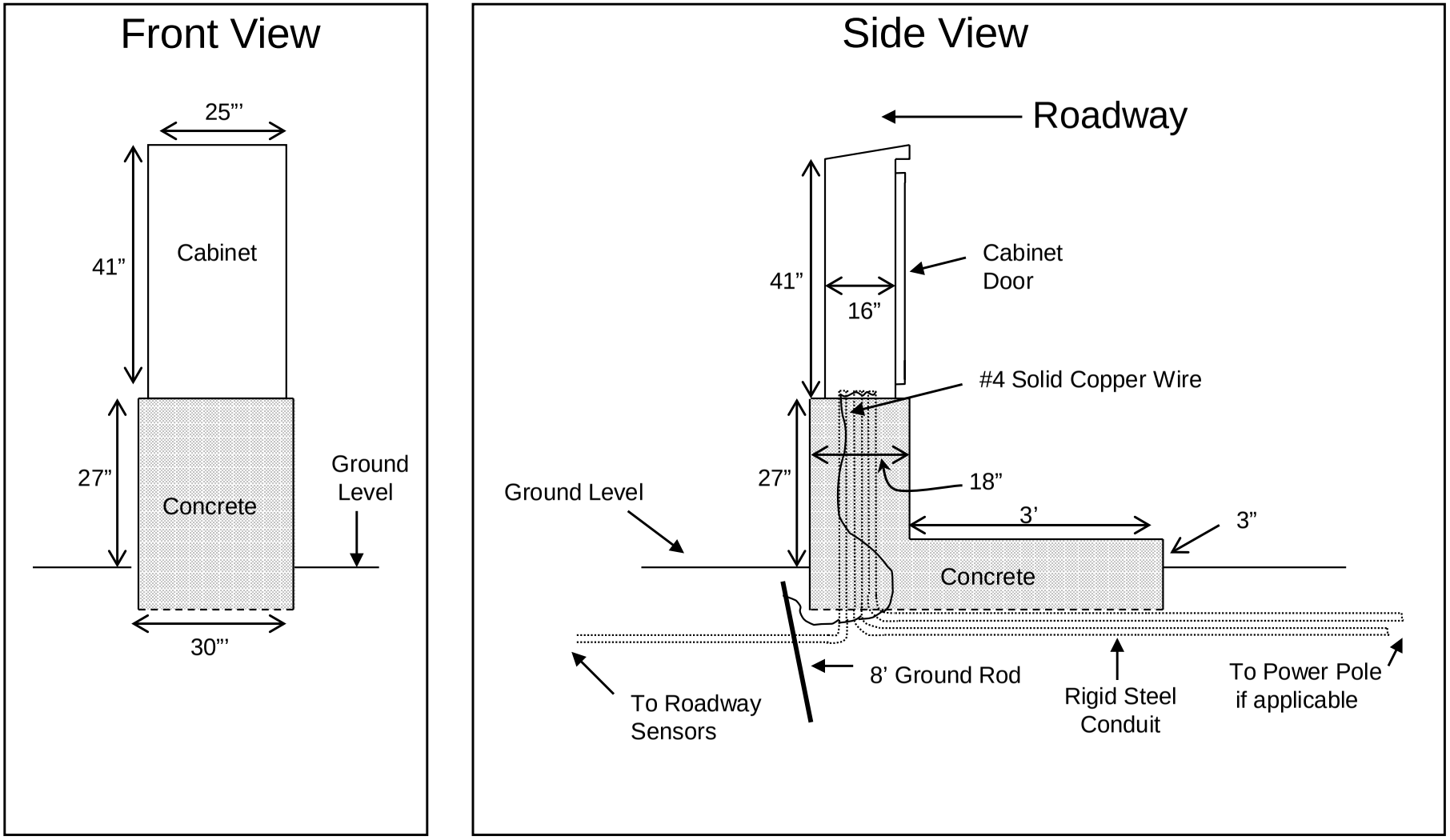

DRAWING NOT TO SCALE

4/2/2010

Base Mounted 170 Cabinet Detail

Figure 9a

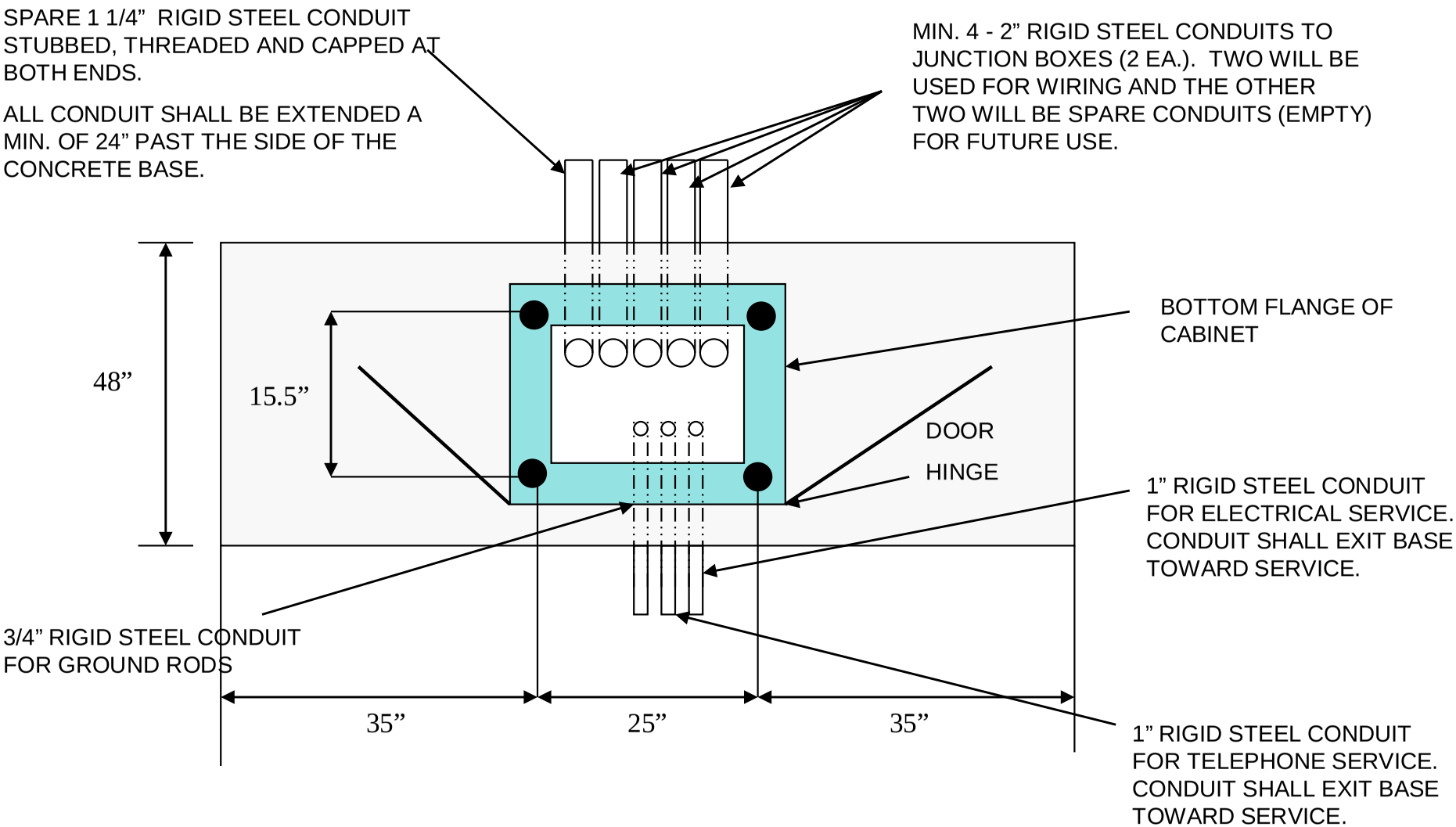

TOP VIEW

4/2/2010

DRAWING NOT TO SCALE

Base Mounted 170 Cabinet Detail

Figure 9b

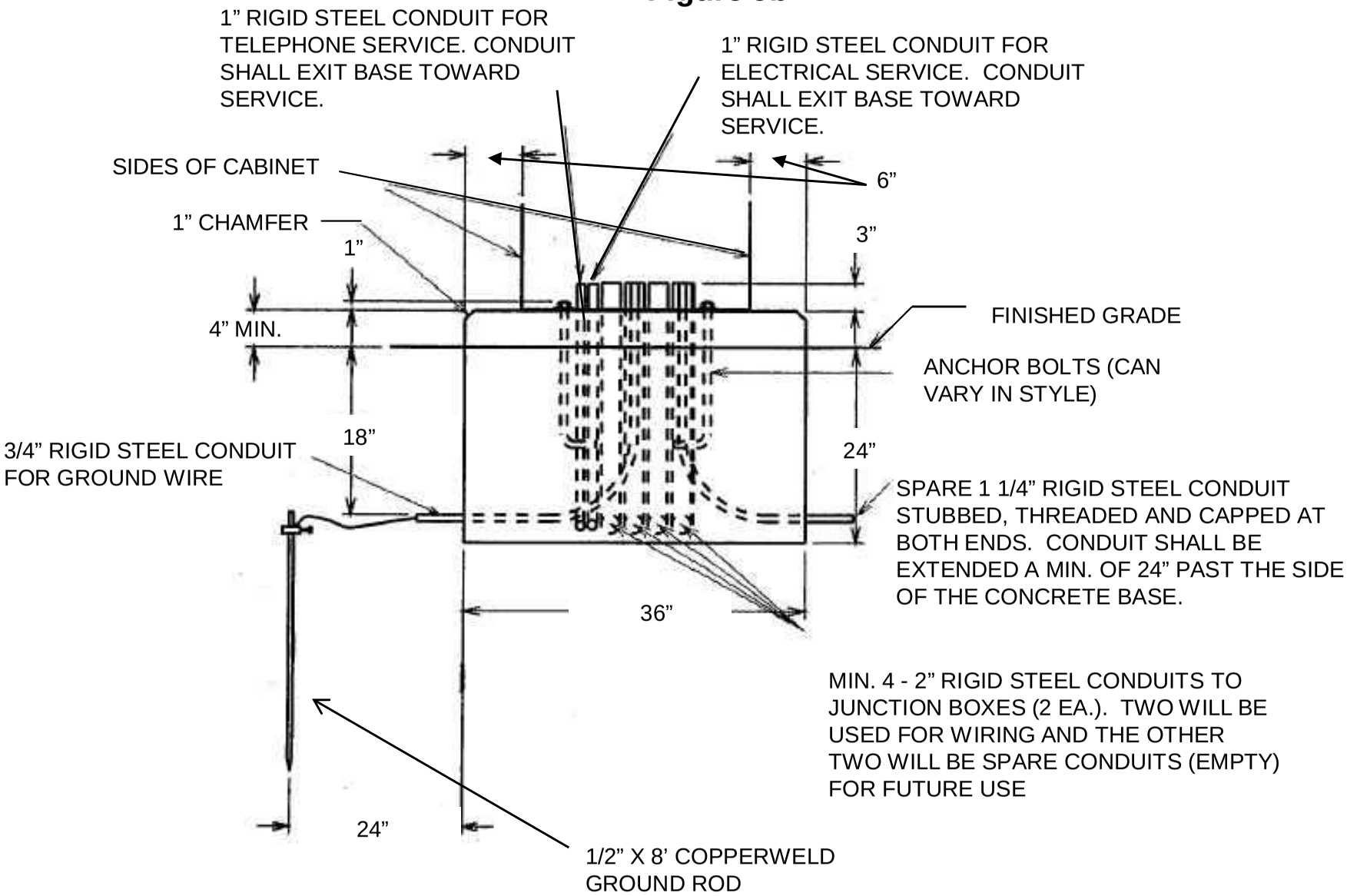

SIDE VIEW

DRAWING NOT TO SCALE

4/2/2010

Rev.03/10

DIVISION OF PLANNING

SPECIAL NOTES FOR INSTALLATION OF TRAFFIC COUNTING INDUCTANCE LOOPS AND AXLE SENSORS

I. DESCRIPTION

Except as specified in these notes, perform all work according to the Department's Current Edition Standard Specifications, applicable Special Provisions and Special Notes, Sepia and Standard Drawings, and the drawings elsewhere in this proposal. Article references are to the Standard Specifications.

Furnish all materials, labor, equipment, and incidentals for the following work: (1) Maintain and control traffic; (2) install inductive loops; and (3) all other work required by the Specifications, Standard Drawings, Special Notes and the drawings in the proposal. The details of the project will be supplied in addition to these Special Notes.

II. MATERIALS

The Department will sample and test all materials according to Department's Sampling Manual. Have all materials available for sampling a sufficient time in advance of the use of the materials to allow for the necessary time for testing, unless otherwise specified in these notes. All materials shall be approved prior to being utilized. The Contractor shall submit for approval five (5) copies of descriptive literature, drawings, and any requested design data for the materials he proposes to use. No substitutions for approved materials will be made without the written approval of the Engineer.

A. Maintain and Control Traffic. See Traffic Control Plan.

B. Junction Box Type 6 in. x 6 in. x 4 in. The junction box shall have minimum inside dimensions of at least 6 inches high by 6 inches wide by 4 inches deep, made of a UV stabilized nonmetallic material (plastic) or non-rusting metal, and be weatherproof (NEMA 4X enclosure). It shall have a removable replaceable door with a continuous durable weatherproof gasket between the body and overhanging door to ensure a watertight seal. The door shall be hinged with stainless steel screws, hinge(s) and pin(s). The door shall also have a stainless steel padlockable latch on the side opposite the hinge(s). An approved enclosure is the Hubbell-Wiegmann model VJ606HWPL1.

C. Junction Box Type 10 in. x 8 in. x 4 in. The junction box shall have minimum inside dimensions of at least 10 inches high by 8 inches wide by 4.6 inches deep, made of a UV stabilized nonmetallic material (plastic) or non-rusting metal, and be weatherproof (NEMA 4X enclosure). It shall have a removable replaceable door with a continuous durable weatherproof gasket between the body and overhanging door to ensure a watertight seal. The door shall be hinged with stainless steel screws, hinge(s) and pin(s). The door shall also

have a stainless steel padlockable latch on the side opposite the hinge(s). An approved enclosure is the Hubbell-Wiegmann model VJ1008HWPL1.

D. Junction Box Type A. The junction box Type A shall be constructed of a fiberglass reinforced polymer concrete, ANSI/SCTE 77-2002 Tier 15 Style, or approved equal. It shall have nominal inside dimensions of 13 inches wide by 24 inches long by 18 inches deep with an open bottom. The removable cover shall be attached with a minimum of two 3/8-inch stainless steel hex bolts and washers.

E. Junction Box Type B. The junction box Type B shall be constructed of a fiberglass reinforced polymer concrete, ANSI/SCTE 77-2002 Tier 15 Style, or approved equal. It shall have nominal inside dimensions of 11 inches wide by 18 inches long by 12 inches deep with an open bottom. The removable cover shall be attached with a minimum of two 3/8-inch stainless steel hex bolts and washers.

F. Junction Box Type C. The junction box Type C shall be constructed of a fiberglass reinforced polymer concrete, ANSI/SCTE 77-2002 Tier 15 Style, or approved equal. It shall have nominal inside dimensions of 24 inches wide by 36 inches long by 30 inches deep with an open bottom. The removable cover shall be attached with a minimum of two 3/8-inch stainless steel hex bolts and washers.

G. Cabinet Type G. A controller cabinet Type G shall be constructed of type 5052-H32 sheet aluminum with a minimum thickness of 0.125 inches. The cabinet shall meet or exceed the industry standards set forth by the UL 50 and the National Electrical Manufacturer's Association (NEMA) 3R. The cabinet shall have a dimension of 41 inches high by 25 inches wide by 16 inches deep. The cabinet shall include kits for a back panel and two shelves. The cabinet shall be designed with a sloped top to prevent the accumulation of water on its top surface. The single door opening shall be double flanged on all four sides, hinged on the right side, equipped with a three-point latching mechanism, and include a door restraint. The door shall be equipped with a Corbin tumbler #2 lock. The cabinet shall be equipped with two adjustable "C" mounting channels on both side and back walls to allow for versatile positioning of shelves. Manufacturer's shop drawings shall be submitted demonstrating details of equipment housing and installation. If electrical service is specified, a 120-volt GFCI AC duplex receptacle shall be provided in the cabinet.

An approved source is provided below. Other approved equal cabinets may be furnished if approved by a representative of the Central Office, Division of Planning. To be considered approved equal, the cabinet shall meet the above requirements and match the specified detailed dimensions.

Econolite Control Products.
P.O. Box 6150
3360 E. La Palma
Anaheim, California 92806-2856

H. Galvanized Steel Cabinet. The cabinet shall be a hinged cover NEMA Type 3R medium enclosure, constructed of 16 or 14 gauge galvanized steel, and have inside dimensions of 20 inches high by 20 inches wide by 8 inches deep. This shall be the standard size that contractors shall place their bids on. The cabinet shall meet the industry standards set forth by the Underwriters Laboratories Inc. (UL) 50 and the National Electrical Manufacturers Association (NEMA). The finish shall consist of an American National Standards Institute (ANSI) 61 gray polyester powder finish inside and out over the galvanized steel. The cabinet shall have the following features:

- Drip shield top and seam-free sides, front, and back, to provide protection in outdoor installations against rain, sleet, and snow.
- 16 gauge galvanized steel continuous stainless steel pin.
- Cover fastened securely with captive plated steel screws.
- Hasp and staple provided for padlocking.
- No gaskets or knockouts.
- Back plate mounted inside the cabinet for terminal strip installation.

An approved source is provided below. Other approved equal cabinets may be furnished if approved by a representative of the Central Office, Division of Planning. To be considered approved equal, the cabinet shall meet the above requirements and match the specified detailed dimensions.

Hoffman Engineering Co.
World Headquarters
900 Ehlen Drive
Anoka, Minnesota 55303-7504

I. Wood Post. The wood post shall be 4 inches by 4 inches by 8 feet long, and is pretreated to conform to the American Wood Preservers' Association (AWPA) C-14. All wood posts shall be sawed on all four sides, having both ends square, and conform to the dimensions specified. The wood post is described in detail in Section 820.01 of the Kentucky Transportation Cabinet, Department of Highways, Standard Specifications for Road and Bridge Construction, Current Edition.

J. Conduit. Conduit shall be rigid steel waterproofed conduit unless otherwise specified. All conduits shall be galvanized inside and out and shall conform to the Underwriters' Laboratories (UL) requirements for rigid metallic conduit. IMC will not be accepted. Furnish all conduit fittings, bodies, boxes, joints, couplings and mounting hardware.

K. Loop Wire. All loop wire shall be plainly marked in accordance with the provisions of the current editions of the National Electric Code (NEC). The wire shall be 14-gauge single conductor, insulated in polyethylene (PE) with a 0.004-inch thick nylon coating, and enclosed in a 0.030-inch thick PE tube jacket. The wire shall meet the requirements of the International Municipal Signal Association (IMSA) Specification No. 51-7- latest edition. Any other wire shall be of appropriate size and type per the NEC and Section

834.01 Wiring of the Kentucky Transportation Cabinet, Department of Highways, Standard Specifications for Road and Bridge Construction, Current Edition.

L. Cable No. 14/1 Pair. Cable No. 14/1 pair or loop lead-in cable shall be 14 AWG, stranded, paired conductors, electrically shielded and shall conform to IMSA 19-2. All cable shall be plainly marked in accordance with the provisions of the National Electric Code.

M. Traffic Loop Encapsulant. The traffic loop encapsulant shall consist of a one-part polyurethane as described in Section 835.06 of the Kentucky Transportation Cabinet, Department of Highways Standard Specifications for Road and Bridge Construction, Current Edition.

N. Non-Shrinkable Grout. The grout used shall be non-shrinkable and meet the Department of Highways Standard Specifications for Road and Bridge Construction, Current Edition.

O. Backer Rod. Use backer rod of 1/2” diameter that meets the Department of Highways Standard Specifications for Road and Bridge Construction, Current Edition.

P. Seeding and Protection. Use seed mixture No. I per Section 212-Erosion Control of the Department's Current Edition Standard Specifications for Road and Bridge Construction book.

Q. Electrical Service. The contractor shall initiate a work order for the installation of electrical service to the power site. A representative from the Division of Planning and the local utility company shall be consulted prior to choosing an exact location for the pole. The contractor shall be responsible for clearing the right-of-way for the electrical service drop. The electrical service shall be a minimum 60-ampere, which is capable of supplying 120 volts or 240 volts to the electronics. The installation and materials specified in the construction notes below, shall be made incidental to the bid item established for electrical service. A 120-volt GFCI AC duplex receptacle shall be provided in the cabinet. Contractor is responsible for correct size and type of wire. Contractor is responsible for obtaining any and all electrical inspections, memberships, meter base and any other requirements by the utilities serving the installation and pays all fees required.

R. Piezoelectric Sensors. The sensor shall consist of a metal strip 0.260" wide x 0.063" thick; ±0.005" and be furnished in the specified lengths. The sensor shall include a 100-foot electrical coax-cable connected to one end. The coax-cable shall be RG 58 type with an underground/direct burial rated outer jacket. The OD of the cable is 0.187". The nominal capacitance of the cable is 27 pF/ft. Piezo lead-in cables are to be run splice free to their cabinets. Many installations exceed the 100-foot length so the piezo should be ordered with a lead-in of appropriate length. Standard lead-ins can be ordered from 100 to 500 feet in 50-foot increments. The manufacturer should be contacted regarding longer distances.

1. **Piezoelectric Sensor: Roadtrax BL Class I or Approved Equal**. Furnish Class I Piezoelectric Sensor to be used to collect truck weigh-in-motion data. Class I sensors are typically furnished in 6- or 11-foot lengths. See Notes and Estimate of Quantities for sensor type and length. One installation bracket for every 6 inches of sensor length shall also be supplied.

The vendors listed below are known distributors of the Roadtrax BL Class I sensors. Other approved equal sensors may be furnished if approved by a representative of the Central Office, Division of Planning. To be considered approved equal, the sensors shall meet the above requirements and match the specified detailed dimensions.

DIA-L Associates
P. 3302 Aquia Drive
Stafford, VA 22554

Measurement Specialties, Inc.
80 Little Falls Road
Fairfield, NJ 07004

International Road Dynamics, Inc.
702 43rd Street East
Saskatoon, Saskatchewan
Canada, S7K3T9

Grout material shall display fast cure times; tack free in 10 minutes and open to traffic in 40 minutes with full cure within an hour. Material shall have excellent adhesion to concrete and asphalt. It should display excellent chemical resistance, water insensitivity, and thermal stability at high and low temperatures. Ample encapsulation material shall be supplied for each sensor for its proper installation. Approved encapsulation material by the piezo manufacturer includes AS475 Axle Sensor Grout or approved equal. This is a durable two-part resin-based grout suitable for asphalt and concrete applications having the following typical physical properties:

.

Compressive Strength (psi)	ASTM D638	5000 min.
Water Absorbtion	ASTM D570	0.3% max
Wear Resistance	ASTM D4060	CS10 wheel, 1000 gm load 1000 cycles, 186 mg loss

The vendors listed below are known distributors of the approved grout.

DIA-L Associates
P. 3302 Aquia Drive
Stafford, VA 22554
(540) 659-2264

Measurement Specialties, Inc.
80 Little Falls Road
Fairfield, NJ 07004

PAT Traffic Control Corporation
1665 Orchard Drive
Chambersburg, PA 17201

International Road Dynamics, Inc.
702 43rd Street East
Saskatoon, Saskatchewan
Canada, S7K3T9

III. CONSTRUCTION METHODS

The plans indicate the extent and general arrangement of the installation and are for general guidance. When the contractor deems any modifications of the plans or specifications necessary, details of such changes and the reasons shall be submitted in writing to the Resident Engineer for written approval prior to begin the modified work.

Once the project has been let and awarded, the Division of Construction shall notify the Division of Planning of the scheduled date for a Pre-Construction meeting so that prior arrangements can be made to attend. This will allow the Division of Planning an opportunity to address their concerns and answer any questions that the contractor may have before beginning the work. Planning shall also be notified two weeks before work pertaining to these specifications begins to ensure their personnel are present during sensor installation and once the work has been completed so that their representative can perform a final inspection. The Division of Construction then reviews Planning's final inspection report and determine whether the work is in compliance with the specifications before awarding payment to the contractor.

A. Maintain and Control Traffic. See Traffic Control Plan.

B. Junction Box Type 6" x 6" x 4" or 10" x 8" x 4" (as noted). The contractor shall stub the rigid steel conduit to the junction box so the bottom of the box is approximately 18” above the ground. The junction box shall be located at or beyond the shoulder and mounted on the side of a post approximately 3 feet beyond the guardrail post using banding material or other appropriate mounting hardware with the hinge side up. See Figures 2a and 2b for additional details. Leave approximately 18” of slack lead-in wire coiled inside the junction box. Permanent identification numbers shall be affixed to all wires in each junction box and cabinet in order to distinguish between the loops and/or sensors. See Location Drawing for sensor numbers to be placed on all lead-ins.

C. Junction Box Type A (or B or C). Install the Junction Box Type A near the edge of pavement and flush with the ground level (see Figure 3). Place roughly 18 inches of No. 57 aggregate underneath the junction box Type B to allow drainage. Extend the loop lead-in wires splice-free to the cabinet. Run the wire from the junction box Type A through the conduit at a minimum depth of 6 inches. Stub the conduit up into the junction box Type A from its base to accommodate the lead-in wires. Leave at least 2 feet of slack lead-in wire coiled inside the junction box Type A. The conduit fittings, backfilling, and aggregate shall be incidental to the junction box Type A. Permanent identification numbers shall be affixed to all wires in each junction box and cabinet in order to distinguish between the loops and/or sensors. See Location Drawing for sensor numbers to be placed on all lead-ins.

D. Cabinet Type G. Locate the cabinet sufficiently beyond the roadside by determining the minimum clear zones in accordance with the “Roadside Design Guide”. Place a concrete foundation of appropriate size for mounting the cabinet. The cabinet shall be mounted on the concrete base such that the bottom of the cabinet is 27" above the ground. The door of the cabinet shall open away from traffic. Fasten the cabinet to the foundation

using anchor rods and caulk the gap between the cabinet and the base. Stub rigid conduit up into the cabinet from its base. Install an extra 1 ¼" conduit to be stubbed out in the bottom of the cabinet and run out 2 feet from the concrete base and plugged with duct seal or taped shut with electrical tape toward the roadway for future use. An 8' copper clad ground rod shall be driven into the soil and bonded to the rigid conduit via #4 solid copper wire and ran through the concrete and up into the cabinet. A ¾" rigid steel conduit shall be stubbed up into the cabinet and run 2 feet up the electrical service pole and terminated to a ¾" weatherhead. This conduit shall be run in the same ditch as the electrical service. If electrical service is not provided as an item in the contract, the ¾" rigid steel conduit shall be run out 2 feet from the concrete base and plugged with plumbers putty or taped shut with electrical tape. The location of the plugged end shall be marked with a wooden stake and labeled "¾ in. conduit end" (see Figure 8). A 120-volt, 20-amp GFCI AC duplex receptacle shall be provided in the cabinet.

Leave at least 5 feet of slack lead-in wire in the cabinet. Include the following major items as incidental to the cost of the cabinet: concrete foundation, anchor rods, ground rod, #4 solid copper wire, bonding clamps, and caulking. The Division of Planning will supply additional harnesses and do final connections inside the cabinet. Permanent identification numbers shall be affixed to all wires in each junction box and cabinet in order to distinguish between the loops and/or sensors. See Location Drawing for sensor numbers to be placed on all lead-ins.

E. Install Base Mount Enclosure. Locate the cabinet sufficiently beyond the roadside by determining the minimum clear zones in accordance with the "Roadside Design Guide". For this project, a base mount Model 170 Controller Cabinet, without anchor bolts, will be State-furnished. The contractor shall construct each cabinet foundation as shown on the plans per the attached Figures 9a and 9b, "Base Mounted 170 Cabinet Detail", (including furnishing and installing anchor bolts). Contractor shall install the cabinet on the concrete base such that the doors of the cabinet open away from traffic (hinges are away from traffic), and shall make all field wiring connections to the sensors, electrical and telephone services (as applicable). Fasten the cabinet to the foundation using anchor rods and caulk the gap between the cabinet and the base. Stub rigid conduit up into the cabinet from its base. Install an extra 1 ¼" conduit to be stubbed out in the bottom of the cabinet and run out 2 feet from the concrete base and plugged with duct seal or taped shut with electrical tape toward the roadway for future use. An 8' copper clad ground rod shall be driven into the soil and bonded to the rigid conduit via #4 solid copper wire and ran through the concrete and up into the cabinet. Two 1" rigid steel conduits shall be stubbed up into the cabinet, one for electrical service and one for telephone service (whether installed at this time or in the future). They shall be run a minimum of 2 feet up the electrical service pole and/or telephone source and terminated to 1" weatherheads. These conduits shall be run in the same ditch if possible. If electrical service is not provided as an item in the contract, the 1" rigid steel conduit shall be run out 2 feet from the concrete base and plugged with plumbers putty or taped shut with electrical tape. The location of the plugged end shall be marked with a wooden stake and labeled "1 in. conduit end". A 120-volt, 20-amp GFCI AC duplex receptacle shall be provided in the cabinet.

Leave at least 6 feet of slack sensor lead-in wire in the cabinet. Include the following major items as incidental to the cost of this bid item: concrete foundation, anchor rods and associated hardware, ground rod, #4 solid copper wire, bonding clamps, caulking, electrical material and connections (if applicable). The Division of Planning will supply the cabinet, additional harnesses and do final sensor connections inside the cabinet. Permanent identification numbers shall be affixed to all wires in each junction box and cabinet in order to distinguish between the loops and/or other sensors. See Location Drawing for sensor numbers to be placed on all lead-ins.

F. Galvanized Steel Cabinet. The contractor shall determine the amount of clearance required from the road to the cabinet for each specific station location. The "Roadside Design Guide", developed by the American Association of State Highway Officials (AASHTO), shall be used as a tool to determine roadside safety based on design and speed limit. The contractor and Planning shall discuss and resolve any conflicts in the Pre-Construction meeting that might arise from following the station descriptions of the Location Table.

Use terminal strips on the back plate with a minimum of eight terminals each and 7/16-inch spacing (center to center) to mount inside the cabinet in order to connect the lead-in wires to the cable assemblies. Use screw type terminal strips to accommodate wire with spade-tongue ends. Allow for at least 20 inches of slack lead-in wire in the cabinet before connecting them to the terminal strip. Wires connected to the terminal strips shall have insulated, solderless, spade tongue terminals of correct wire and stud size. Wires shall be labeled correctly. See Location Drawing and Wiring Table.

Permanent identification numbers shall be affixed to all wires in each junction box and cabinet in order to distinguish between the loops and/or sensors. See Location Drawing for sensor numbers to be placed on all lead-ins.

G. Wood Post. Set the treated-wood post 3 feet below the ground and place the backfill material in the hole, compacting until flush with the existing earth. Mount the cabinet to the post using ¼" x 2 ½" galvanized lag bolts at the top and bottom of the cabinet. The base of the cabinet shall be 4 feet above ground level. Stub the rigid steel conduit up into the base of the cabinet. Affix the conduit to the post using two conduit straps, a maximum of 18" on-center, and ¼" x 2 ½" galvanized lag bolts. Cabinet door shall open facing away from traffic (see Figure 7).

H. Conduit. Rigid steel waterproofed conduit encasement shall be provided for all conductors where conductors run to a junction box or cabinet. All conduit installations shall conform to the provisions of the NEC, except where directed otherwise. Bonded slip joints will be permitted for joining rigid conduit to the junction box or cabinet. Where a standard coupling cannot be used, an approved threaded union coupling shall be used.

All conduit ends shall be reamed to remove burrs and sharp edges. Damaged portions of the galvanized surfaces and untreated threads resulting from field cuts shall be painted with a rust inhibitive paint. Conduit bends shall have a radius of no less than 12 times the nominal diameter of the conduit, unless otherwise shown on the plans.

Conduit that will be subject to regular pressure from traffic shall be laid to a minimum depth of 24 inches below grade. Conduit that will not be subject to regular pressure from traffic shall be laid to a minimum depth of 6 inches below grade. All conduit openings shall be waterproofed with a flexible, removable sealant, including those ending in junction boxes and cabinets. This shall be accomplished using duct seal, or plumber's putty, by working it around the wires and then extending it 1 inch into the end of the conduit. After the conduit has been installed and before the backfilling is started, the conduit installation shall be inspected and approved by the Engineer. In backfilling trenches, the backfill material shall be placed and compacted in lifts of 9 inches or less. Any area disturbed as a result of the contractor's operations shall be restored to the satisfaction of the Engineer.

I. Wiring. All wiring shall conform to the provisions of the NEC unless otherwise shown on the plans. Permanent identification numbers shall be affixed to all wires in each junction box and cabinet in order to distinguish between the loops and/or sensors. See Location Drawing Figure 1 for sensor numbers to be placed on all lead-ins. All wiring shall be taken to a cabinet or junction box. Leave at least 2 feet of "slack" lead-in wire inside each Type B junction box and steel cabinet, a minimum of 4 feet of wire inside the Type G cabinet and a minimum of 6 feet of wire inside the base mounted Type 170 cabinet.

J. Splicing. Sensor lead-in cable lengths for each sensor shall allow sufficient but not excessive slack for splicing connections. All splices shall conform to the provisions of the NEC unless otherwise shown on the plans. Loop lead-in wire splices to shielded pair cables shall be twisted and soldered. Other splices shall be twisted and soldered or made with mechanical connectors of a type approved by the Engineer. Splices for loop wire shall be protected by either heat shrink tubing or a double spiral wrapping of vinyl electrical tape. For splicing home-run coax cable to the sensor's lead-in cable, the same coax cable, supplied by the manufacturer, shall be used. For coax-cable splices, the contractor shall provide kits (3M Scotchcast 3832 Buried Service Wire Encapsulation Kit or equal) to protect them. All splices are to be made in junction boxes unless approved by a representative of the Division of Planning.

K. Loops. A location table is furnished in the Supplemental Notes, along with an estimate of quantities, to display the approximate location for loop installation in the existing pavement. The contractor and a representative of Planning will verify the precise location on site. The contractor shall be careful to avoid expansion joints and pavement sections where potholes, cracks, or any other roadway flaws exist. This will not only facilitate installation of the equipment, but also will increase the accuracy and service life span of the sensors.

There shall be a minimum of 6 feet between loops in adjacent lanes for 12-foot wide lanes. Unless indicated otherwise, loops in the same lane shall be spaced 16 feet from leading edge to leading edge (see Figure 6). All loop dimensions shall be 6 feet by 6 feet square unless otherwise indicated by the Location Drawing. Center and mark each loop in the lane such that its sides are parallel and perpendicular to the direction of traffic. Make the saw-cut for the loop 3/8-inch wide and at a depth such that the top of the backer rod is a minimum of 1 inch below the surface of rigid (PCC/Concrete) pavement or 3 inches below the surface of asphalt pavement (see Figure 5). Drill a 1.5" hole at all four corners of the loop to prevent sharp bends in the wire (see Figure 4).

Make the saw-cut for the home run slot 3/8 inch wide. Since it may contain several lead-in wires, the depth should be such that the top of the backer rod is a minimum of 1 inch below the surface of rigid (concrete) pavement or 3 inches below the surface of bituminous (asphalt) pavement. Depending on the number of road sensors at a particular site, the home run slot will gradually need to be cut deeper as you approach the shoulder in order to maintain the minimum depth for the top lead-in wire and directly enter the buried conduit (10 inch depth).

Clean the mud, debris, water, and loose particles from the slot, roadway and surrounding areas. A high-pressure washer shall be used to wash the area followed by clean (oil free) compressed air.

Measure out the appropriate length of loop lead-in wire to allow slack in the final cabinet or junction box. Insert the loop wire into the loop slot for four rotations (see Figure 5). Push the wire in with a wooden stick, such as a paint stir stick or other blunt wooden object. If the wire insulation is broken, apply heat shrink tubing or a double wrapping of vinyl electrical tape to protect from corrosion. Extend the loop lead-in wire splice-free to the junction box or cabinet. Exceptions to this shall be considered on a case-by-case basis and must be approved by the Engineer. If splices cannot be avoided, every effort shall be made to locate them in a junction box. If loop lead-in cable (Cable No. 14/1 Pair) is specified, loop wires shall be twisted and run to the nearest type Junction Box and the wires twisted and soldered to the lead-in cable. The lead-in cable shall then be run splice free to the cabinet ensuring that extra cable is left in each subsequent junction box that it may be run through as well as the cabinet. All wires and cables shall be labeled in each junction box and cabinet.

Twist each pair of loop lead-in wires, exclusive of shielded coax-cable, with three to five turns per foot before placement into the conduit, junction box, and cabinet. Do not twist different pairs of loop wire together. Once the loop wire is installed in the roadway, apply enough loop encapsulant to just cover the loop wires in the saw slot. Once this is done, cover the encapsulated loop wire with backer rod throughout the entire loop and tail saw slots. Finish filling the saw cut with a mixture of non-shrinkable grout and water. Every attempt should be made to alleviate air pockets and low spaces should be refilled. Any excess grout shall be cleaned from the roadway via squeegee, etc. to help alleviate tracking. The loop encapsulant, backer rod and non-shrinkable grout shall be

incidental to the bid item "Loop Saw Slot and Fill".

On resurfacing, rehabilitation, and new construction projects that include new asphalt pavement, the Contractor shall install loops prior to laying the final surface course. On projects with milling and texturing, the Contractor may install the loops prior to or after the milling operation; however, if installed prior to milling, the Contractor shall be responsible for ensuring that the loops are installed at a depth such that the milling operation will not disturb the newly installed loops. The Contractor shall correct damage caused by the milling operations to newly installed loops prior to placement of the final surface course at no additional cost to the Cabinet.

For projects that include the installation of new asphalt and piezoelectric sensors, the Contractor shall mark or otherwise reference all loops installed prior to the final surface course such that the loops can be accurately located when the piezoelectric sensors are installed after placement of the final surface course.

For projects that do not have asphalt surfacing, the Contractor shall install the loops in the surface of the pavement.

The Prime Contractor shall coordinate the installation of loops with the electrical sub-Contractor and the Engineer and shall be responsible for correct operation of the completed installation.

All loop inductance readings shall be between 100 and 300 microhenries. The loop inductance between two loops in the same lane shall be within 20 microhenries of each other. Inductance loop conductors shall test free of shorts and unauthorized grounds. Upon completion of the project, all loops must pass an insulation resistance test of at least 100 million ohms to ground when tested with a 500 Volt direct current potential in a reasonably dry atmosphere between conductors and ground.

L. Electrical Service. A treated-wood service pole, per Section 820 of the Department's Current Edition Standard Specifications, with a 20-foot minimum length and a 6- to 12-inch diameter, or approved equal, is to be furnished by the Contractor. Install the electrical service pole adjacent to the cabinet at a depth of at least 4 feet while maintaining a 12-foot minimum clearance for the electrical service drop. Compact the backfill material to support the electrical service drop without leaning. Install an appropriate pole support guy wire and anchor if necessary. Install rigid conduit up the length of the pole with three separate insulated conductors (No. 4 copper wire) in the conduit and a weatherhead at the top.

Space the conduit straps 30 inches apart and leave 24 inches of cable for the drip loop. Install a meter-base and a disconnect panel with a 20-ampere circuit breaker inside. A 120-volt, 20-amp GFCI AC duplex receptacle shall be provided in the cabinet. A manufactured weatherproof hub connector is required to connect the meter-base to the disconnect panel. Do not use service entrance cable inside the conduit. The conduit from the disconnect panel is required to be at a depth of 6 inches below grade. Install a 5/8-

inch by 8-foot ground rod below the finished grade. Extend the ground wire through a separate hole in the disconnect panel and clamp to the ground rod. Install a 1" rigid conduit to 2 feet above ground level and install a weatherhead at the top opening. This conduit shall be run to and stubbed up into the Cabinet. The conduit shall be attached to the pole at a minimum of 2" from ground level and 2" from the weatherhead.

M. Piezoelectric Sensor, Roadtrax BL Class I or Approved Equal. Determine where on the roadway the piezoelectric sensor will be installed. Roadway ruts shall not be in excess of 1/2 inch under a 4-foot straight edge. Install the piezoelectric sensor perpendicular to traffic. Locate the sensor in the lane as shown on the site detail sheet. Eleven-feet length sensors should be centered in the lane. The following is a typical step by step procedure for the installation of a piezoelectric sensor. Refer specifically to the manufacturer's current instructions provided with the sensor prior to installation. Piezoelectric sensors are always installed at the final surface of the pavement.

1. Carefully mark the slot to be cut, perpendicular to the flow of traffic. Ensure that the sensors are properly positioned in the lane.
2. It is strongly recommended that a ¾" wide diamond blade be used for cutting the slot, or that blades be ganged together to get a single ¾ inch wide cut. The slot shall be wet cut to minimize damage to the road.
3. Cut a slot ¾ inch wide (±1/16") by 1" minimum deep. The slot should be 8" longer than the sensor (including the lead attachment). Drop the saw blade an extra ½" down on both ends of the sensor. The lead out should be centered on the slot.
4. Cut the home-run slot for the coax-cable ¼-inch wide and at a depth so that the cable is a minimum of 1 inch below the road surface in rigid pavement (concrete) or 3 inches below the road surface in bituminous (asphalt) pavement.
5. Sweep and wash out all debris left in the slot and ensure it is clean and dry.
6. Use high pressure water, or water and oil-free compressed air to clean <u>ALL</u> foreign and loose matter out of the slot and within 1 foot on all sides of the slot.
7. Totally remove excess water and debris from roadway and shoulder area. Debris should be disposed of properly.
8. Carefully dry the slot, and within 1 foot on all sides of the slot, using oil-free forced air, torpedo heaters, electric heaters, or natural evaporation, depending on weather conditions. Be very careful not to burn the asphalt if heat is used.
9. Place a strip of duct tape on the pavement along the length of both sides of the sensor slot. Place the 2-4" wide duct tape 1/8" away from the slot.
10. Remove BL sensor from the box. Visually inspect each sensor to ensure it is straight without any twists or curls. Check lead attachment and passive cable for cuts, gaps, cracks and/or bare wire. Verify the correct sensor (type and length) is being installed by checking the data sheet. Verify there is sufficient cable to reach the cabinet.
11. Test the sensor for Capacitance, Dissipation Factor and Resistance, according to the directions enclosed with the sensor. Capacitance and dissipation should be within ±20% of the enclosed data sheet. Resistance (using the 20M setting) should be infinite. Record the sensor serial number and the test results. This information should be stored in the counter cabinet and/or returned to KYTC Planning personnel.

12. Lay the sensor on the tape next to the slot. Ensure that the sensor is straight and flat. Ensure that you are wearing clean protective latex (or equivalent) gloves at all times when handling sensors.
13. Clean sensor with steel wool or emery pad. Wipe down with alcohol and clean lint-free cloth.
14. Place the installation bracket clips on the sensor, about every 6" for the length of the sensor.
15. Bend the end of the sensor downward at a 30° angle. Bend the lead attachment end down at a 15° angle and then 15° back up until level (forming a lazy Z)
16. Place the sensor in the slot, with the brass element 3/8" below the road surface along the entire length. The end of the sensor should be at least 2” from the end of the slot and the tip should not touch the bottom of the slot. The top of the plastic installation bracket clips should be 1/8" below the surface of the road. The lead attachment should also not touch the bottom or sides of the slot. Ensure the ends of the sensors are pushed down sufficiently per the manufacturer’s instructions.
17. Visually inspect the length of the sensor to ensure it is at uniform depth along its length and it is level (not twisted, canted or bent).
18. Block off the ends of the slot using plumbers putty. Ensure that there are adequate “dams” at both ends so that the encapsulation material does not flow out. On the passive cable end, the dam should be about 3-5" past the end of the lead attachment area.
19. The encapsulation material should be placed full depth, overfilled, and allowed to cure 10 minutes before shaving level with the surface. Ensure it fills around and underneath the sensor completely and there is not a trough on top.
20. Remove the tape on the sides of the sensor as soon as the adhesive starts to cure.
21. Carefully remove all the plumbers putty from ends of the sensor.
22. Route the lead in cable through the slot cut for it, and cover with approved loop sealant.
23. After the encapsulant has hardened, grind the top of the installation using an angle grinder. The profile should be flush with the road surface or with a slight, 1/16" mound. There shall be no concave portion to the mound.
24. Clean up the site. Sealant curing time varies with temperature and humidity. Contractor shall ensure that the complete curing of the encapsulation material has taken place prior to subjecting the sensors to traffic.

After the installation is complete, the minimum output voltages of each piezoelectric sensor shall meet the following: 1.5 Volts (peak) for a 10,000 pound axle and 200 millivolts (peak) for a car axle. The piezoelectric sensor lead-in cable is part of the sensor and can be ordered in different lengths (100' standard). Piezoelectric sensor lead-in cable shall not be spliced.

N. Cleanup and Restoration. The contractor will be responsible for all damage to public and/or private property resulting from his work. Upon completion of the work, restore all disturbed highway features in like kind design and materials. This includes any filling of ruts and leveling ground appropriately. Clean the site and dispose of all waste and debris off the right-of-way at sites obtained by the contractor at no additional cost to the

Department. Sow all disturbed earthen areas with Seed Mixture No. I per Section 212.03.03 Permanent Seeding and Protection of the Kentucky Transportation Cabinet, Department of Highways, Standard Specifications for Road and Bridge Construction, Current Edition. Seeding, silt fence and other erosion control items will be considered incidental to other bid items.

O. On-Site Inspection. Each contractor submitting a bid for this work shall make a thorough inspection of the site prior to submitting his bid and shall thoroughly familiarize themselves with existing conditions so that the work can be expeditiously performed after a contract is awarded. Submission of a bid will be considered evidence of this inspection having been made. The Department will not honor any claims resulting from site conditions.

P. Property Damage. The contractor will be responsible for all damage to public and/or private property resulting from his work.

Q. Caution. Information shown on the plans and in this proposal and the types and quantities of work listed are not to be taken as an accurate or complete evaluation of the material and conditions to be encountered during construction. The bidder must draw his own conclusion as to the conditions encountered. The Department does not give any guarantee as to the accuracy of the data and no claim will be considered for additional compensation if the conditions encountered are not in accordance with the information shown.

R. Utility Clearance. It is not anticipated that utility facilities will need to be relocated and/or adjusted; however, in the event that it is discovered that the work does require that utilities be relocated and/or adjusted, the utility companies will work concurrently with the contractor while relocating their facilities.

S. Site Inspections. All sensors are to be tested by a member of the Central Office Division of Planning equipment staff after the installation is complete to verify that the station is operating properly. Tests shall demonstrate that the system operates in accordance with the plans and specifications. Inductance loop conductors shall test free of shorts and unauthorized grounds and shall have an insulating resistance of at least 100 megaohms when tested with a 500 volt direct current potential in a reasonably dry atmosphere between conductors and ground. If the sensors do not meet the specifications and/or KYTC's traffic recording equipment does not perform properly because of an improperly functioning sensor, the contractor shall be responsible for the replacement of the faulty sensor(s), as soon as practicable at their total cost.

IV. BID NOTES AND METHOD OF MEASUREMENT FOR PAYMENT

Only the bid items listed will be measured for payment. All other items required to complete the vehicle detection installation shall be incidental to the other items of work. Payment at the contract unit price shall be full compensation for all materials, labor, equipment and incidentals to furnish and install these items.

A. Maintain and Control Traffic. See Traffic Control Plan.

B. Junction Box Type 6" x 6" x 4" (or Type 10" x 8" x 4" if noted). Each type junction box shall include furnishing and installing specified junction box in accordance with the specifications. This item includes connectors, splice sleeves, conduit fittings, mounting materials and any other items required to complete this part of the installation. Incidental to this item is furnishing and installing any specified post (wood, channel, metal, etc.) as required for the installation.

C. Junction Box Type A (B or C). Each type junction box shall include furnishing and installing specified junction box in accordance with the specifications. This item includes concrete (if required), #57 aggregate, conduit fittings and backfilling around the unit.

D. Cabinet Type G (NEMA-3R). Cabinet (each) shall include furnishing and installing a Type G cabinet as specified. This item shall include constructing the concrete base or mounting cabinet to pole, installation of duplex receptacle and connection of all detectors (where applicable). Incidental to this item shall be furnishing, installing electrical service conductors, conduits, fused cutout, ground rods, all internal shelving, brackets, any necessary pole mounting hardware and electrical inspection fees.

E. Install Base Mount Enclosure. Install base mount enclosure (each) shall include installing a State-furnished cabinet or enclosure as specified. This item shall include all materials and labor for constructing the concrete base (or, if specified, mounting cabinet to pole), installation of the cabinet, duplex receptacle and connection of all detectors (where applicable). Incidental to this item shall be furnishing, installing electrical service conductors, conduits, fused cutout, ground rods, telephone service conduits from the cabinet to the telephone company disconnect box, all internal shelving, brackets, anchor bolts, any necessary pole mounting hardware and electrical inspection fees if applicable.

F. Galvanized Steel Cabinet. Cabinet (each) shall include furnishing and installing a galvanized steel cabinet and post(s) as specified on the drawing. This item shall include mounting the cabinet to post and the connection of all detectors. Incidental to this item shall be furnishing and installing conductors, conduit, ground rods, any necessary pole mounting hardware and any electrical inspection fees.

G. Wood Post. Wood post (each) shall include furnishing and installing a wood post as specified. This item includes excavation, concrete (if required), and backfilling around the unit.

H. Conduit. Conduit shall include furnishing and installing specified conduit in accordance with specifications. This item includes conduit fittings, bodies, boxes, expansion joints, couplings, duct seal, bonding straps and any other necessary hardware. Conduit will be measured in linear feet.

I. Wire (or Cable). Wire or cable shall include furnishing and installing specified wire or cable within conduit, saw slot, or overhead as indicated on the detail sheets. This can include, but is not limited to: loop wire**,** Cable No. 14/1 Pair, etc. Incidental to this item shall be the labeling of all wires and cables in each junction box, cabinet and splice box; furnishing and installing of splice boots, cable rings or other hardware required for installing cable. Loop wire and cable will be measured in linear feet.

J. Loop Saw Slot and Fill. Loop saw slot and fill shall include sawing, cleaning and filling saw slots for induction loops, lead-in wires, etc. with loop sealant or specified approved material. Sawing and filling slot for wire will be measured in linear feet.

K. Trenching and Backfilling. Trenching and backfilling shall include excavation, backfilling, temporary erosion control, seeding, protection and restoration of disturbed areas to original condition. This item includes concrete, asphalt or approved replacement material for sidewalks, curbs, roadways, etc. (if required). Trenching and backfilling will be measured in linear feet.

L. Electrical Service. Electrical services shall include all related work, labor, materials (e.g. meter, straps, conduit, fittings, wire, etc.) and fees towards furnishing and installing an electrical service, which has passed all required inspections. This will be measured in individual units each.

M. Telephone Service. Telephone services shall include all related work, labor, materials (e.g. meter, straps, conduit, fittings, wire, etc.) and fees towards furnishing and installing a telephone service, which has passed all required inspections. This will be measured in individual units each.

N. Piezoelectric Sensor or Approved Equal**.** Piezoelectric sensor (each) shall include furnishing and installing a Class I Piezoelectric Sensor in accordance with the specifications. Lead-in wire, splice kits, encapsulation material, grout, testing, and accessories shall be incidental to this bid item.

REFERENCES

1. Kentucky Transportation Cabinet, Department of Highways Standard Specifications for Road and Bridge Construction, Current Edition, and Supplemental Specifications.

2. National Electrical Code (NEC), latest edition.

3. International Municipal Signal Association (IMSA) Specification No. 51-7- latest edition.

4. FHWA Manual of Uniform Traffic Control Devices, latest edition.

5. "Roadside Design Guide", developed in 1996 by the American Association of State Highway and Transportation Officials (AASHTO).

6. Kentucky Department of Highways Standard Drawings, current editions, as applicable:

TTC-115	Lane Closure Case I
TTC-135	Shoulder Closure
TTD-110	Post Splicing Detail

Updated: March 31, 2010

CLARK AND MONTGOMERY COUNTIES, I-64

ITEM NO. 7-2032.00

BRIDGE REHABILITATION
(TWO LOCATIONS)

MILE POINT 101.7 TO 112.1

INDEX

- SPECIAL NOTE FOR REPLACING EXPANSION DAMS WITH ARMORED EDGES FOR CONCRETE BRIDGES
- SPECIAL NOTE FOR ELIMINATING TRANSVERSE JOINTS ON BRIDGES
- SPECIAL NOTE FOR BRIDGE RESTORATION AND WATERPROOFING WITH CONCRETE OVERLAYS
- SPECIAL NOTE FOR CONCRETE PATCHING REPAIR
- SPECIAL NOTE FOR BRIDGE BARRIER RETROFIT
- US 60 OVER I-64 (025B00009N)
- I-64 OVER PREWITT GRASSY-LICK ROAD (087B00024R&L)

SPECIAL NOTE FOR REPLACING EXPANSION DAMS WITH ARMORED EDGES FOR CONCRETE BRIDGES

I. DESCRIPTION

Perform all work in accordance with the Kentucky Transportation Cabinet, Department of Highway's 2008 Standard Specifications for Road and Bridge Construction and applicable Supplemental Specifications, the Standard Drawings, this Note, and the attached detail drawings. Section references are to the Standard Specifications.

This work consists of the following:

(1) Furnish all labor, materials, tools, and equipment
(2) Remove existing concrete and expansion devices
(3) Install armored edges and new concrete as specified and in accordance with the attached detail drawings
(4) Install new joint seals
(5) Maintain and control traffic
(6) Any other work specified as part of this contract.

II. MATERIALS

A. Class "M" Concrete. Use either "M1" or "M2". See Section 601.
B. Structural Steel. Use new, commercial grade steel suitable for welding. The Engineer will base acceptance on visual inspection. See manufacturer's specifications for Armored Edges on Strip Seal Expansion Dams.
C. Stud Anchors. The armored edge stud anchors are ¾" x 6" embedded stud shear connectors conforming to ASTM A108, Grade 1015 (Nelson Studs or equal).
D. Steel Reinforcement - Epoxy Coated. Use Grade 60. See Section 602.
E. Epoxy Bond Coat. See Section 511.
F. Preformed Expansion Joint Strip Seals. Provide 4" Seals, See Section 807.03.03.

III. EQUIPMENT

A. Hammer. Provide Power driven Hammers lighter than nominal 45 lb. class.
B. Sawing Equipment. Sawing equipment shall be a concrete saw capable of sawing concrete to the specified depth.
C. Hydraulic Impact Equipment. Hydraulic Impact/Skid Steer Type Equipment with a maximum rated striking Energy of 360 ft-lbs are permitted only in areas of concrete removal more than 1 foot away from existing beams, girders or other supporting structures that are to remain in service, or more than 6 inches away from boundaries of surface areas to remain in service. The Contractor is to provide data information to the engineer on the equipment they wish to utilize to ensure compliance with this note.

IV. CONSTRUCTION

A. Remove Existing Materials. Remove the existing expansion dam and specified areas of concrete as shown on the attached sketches. Remove debris and/or expansion joint filler as directed by the Engineer. When deteriorated concrete adjacent to the limits of removal is encountered, extend the removal area as directed by the Engineer. Dispose of all removed material entirely away from the job site. This work is incidental to the contract unit price for "Expansion Joint Replacement". Clean and leave all existing steel reinforcement encountered in place. Damaged steel reinforcement will be repaired/replaced as directed by the Engineer at no additional cost to the department.

B. Place New Concrete and Armored Edges. After all specified existing materials have been removed; place new armored edges to match the grade of the proposed overlay (See attached detail drawings). Place the new Class "M" concrete to the proposed grade and finish with broom strokes drawn transversely from curb to curb (See attached detail drawings).

Blast clean all areas of existing concrete and structural steel to come in contact with new concrete until free of all laitance and deleterious substances immediately prior to the placement of the Class "M" Concrete. The surface areas of existing concrete to come in contact with the new Class "M" Concrete are to be coated with an epoxy bond coat immediately prior to placing new concrete in accordance with Section 511. The interfaces of the new and old concrete shall be as nearly vertical and horizontal as possible.

C. Additional Steel Reinforcement. Furnish for this work, as directed by the Engineer, steel reinforcement as shown in the attached detail drawings. All steel reinforcement shall be epoxy coated in accordance with Section 811.10. Splice these bars to the existing reinforcement in the deck in the areas of removed concrete as shown in the attached detail drawings or as directed by the Engineer. Ensure that all exposed steel reinforcement is tied in accordance with Section 602.03.04 prior to pouring the new Class "M" concrete. Field cutting and bending is permitted. Do not place any additional steel reinforcement above the height of the top row of Nelson studs on the armored edges.

In addition to the reinforcing bars shown in the detail drawings, provide an extra 40 linear feet of epoxy coated steel reinforcing bars ½" by 20-ft lengths minimum. These bars are to be placed as directed by the Engineer in areas with highly corroded existing reinforcement (section loss greater than 20%). Field cutting and bending is permitted. Deliver unused bars to the local maintenance facility.

Reinforcement and bar splices are incidental to the contract unit price for "Expansion Joint Replacement-4 IN" or "Replace Armored Edge".

D. Preformed Expansion Joint Strip Seals. Place the strip seal in one continuous, unbroken length. Place joints as recommended by the manufacturer and in accordance with Section 609.03.04 (E).

E. Shop Plans. Shop Plans will not be required. The contractor is responsible for obtaining field measurements and supplying properly sized materials to complete the work.

V. MEASUREMENT

A. Expansion Joint Replacement – 4 IN. The Department will measure the quantity in linear feet as the horizontal distance between the inside face of the barriers along the centerline of the joint (as shown on the detail drawings).

VI. PAYMENT

A. Expansion Joint Replacement – 4 IN. Payment at the contract unit price per linear foot is full compensation for removing specified existing materials, furnishing and installing the new armored edges, concrete, reinforcement, preformed expansion joint strip seal, and all incidental items necessary to complete the work within the specified pay limits as specified by this note and as shown on the attached detail drawings.

The Department will consider payment as full compensation for all work required by this note and the attached detail drawings.

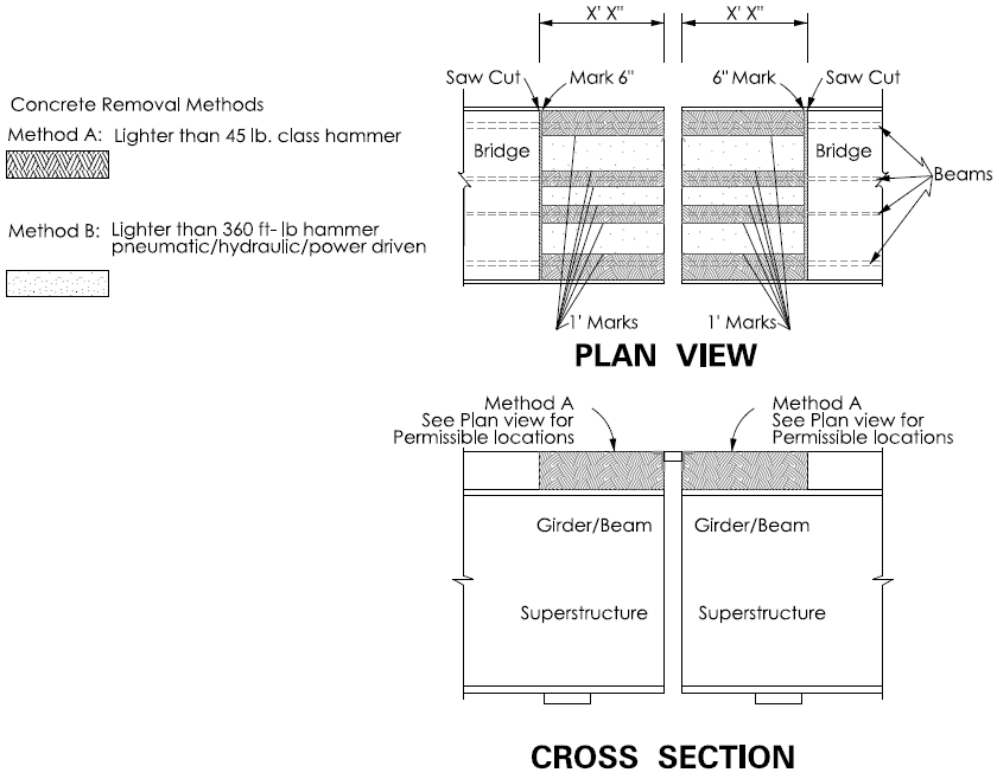

SPECIAL NOTE FOR ELIMINATING TRANSVERSE JOINTS ON BRIDGES

I. DESCRIPTION

Perform all work in accordance with the Kentucky Transportation Cabinet, Department of Highway's 2008 Standard Specifications for Road and Bridge Construction and applicable Supplemental Specifications, the Standard Drawings, this Note, and the attached detail drawings. Section references are to the Standard Specifications.

This work consists of the following:

(1) Furnish all labor, materials, tools, and equipment
(2) Remove existing concrete to eliminate the transverse joint
(3) Install additional steel reinforcement, new armored edge and new concrete as specified and in accordance with the attached detail drawings
(4) Maintain and control traffic
(5) Any other work specified as part of this contract.

II. MATERIALS

A. Class "M" Concrete. Use either "M1" or "M2". See Section 601.
B. Steel Reinforcement - Epoxy Coated. Use Grade 60. See Section 602.
C. Epoxy Bond Coat. See Section 511.

III. EQUIPMENT

A. Hammer. Provide Power driven Hammers lighter than nominal 45 lb. class.
B. Sawing Equipment. Sawing equipment shall be a concrete saw capable of sawing concrete to the specified depth.
C. Hydraulic Impact Equipment. Hydraulic Impact/Skid Steer Type Equipment with a maximum rated striking Energy of 360 ft-lbs are permitted only in areas of concrete removal more than 1 foot away from existing beams, girders or other supporting structures that are to remain in service, or more than 6 inches away from boundaries of surface areas to remain in service. The Contractor is to provide data information to the engineer on the equipment they wish to utilize to ensure compliance with this note.

IV. CONSTRUCTION

A. Remove Existing Materials. Remove the existing transverse joints, joint filler, and specified areas of concrete as shown on the attached detail drawings or as directed by the Engineer. When deteriorated concrete adjacent to the limits of removal is encountered, extend the removal area as directed by the Engineer. Dispose of all removed material entirely away from the job site. This work is incidental to the contract unit price for "Eliminate Transverse Joint".

Clean and leave all existing steel reinforcement encountered in place. Damaged steel reinforcement will be repaired/replaced as directed by the Engineer at no additional cost to the Department.

B. Place New Concrete and Armored Edges. After all specified existing materials have been removed; place new armored edges to match the proposed grade (See attached detail drawings). At bridge ends, place the new Class "M" concrete to the proposed grade and finish with broom strokes drawn transversely from gutterline to gutterline. For eliminating joints over piers, place the new Class "M" Concrete to the scarified grade and finish it to receive the new overlay. On the curb and/or brush block, place the new concrete to the original grade shown on the detail drawings and finish to match the existing surface.

Blast clean all areas of existing concrete and structural steel to come in contact with new concrete until free of all laitance and deleterious substances immediately prior to the placement of the new concrete. The surface areas of existing concrete to come in contact with the new concrete are to be coated with an epoxy bond coat immediately prior to placing new concrete in accordance with Section 511. The interfaces of the new and old concrete shall be as nearly vertical and horizontal as possible.

C. Steel Reinforcement. Furnish for this work steel reinforcement as shown in the attached detail drawings. All steel reinforcement shall be epoxy coated in accordance with Section 811.10. Splice these bars to the existing reinforcement in the deck and backwall in the areas of removed concrete as shown on the attached detail drawings or directed by the Engineer. Ensure that all exposed steel reinforcement is tied in accordance with Section 602.03.04 prior to pouring the new concrete. In addition to the reinforcing bars shown in the detail drawings, provide an extra 60 linear feet of epoxy coated steel reinforcing bars ½" by 20-ft lengths minimum. These bars are to be placed as directed by the Engineer in areas with highly corroded existing reinforcement (section loss greater than 20%). Field cutting and bending is permitted. Deliver unused bars to the local maintenance facility.

Reinforcement, bar splices, and mechanical connectors are incidental to the contract unit price for "Eliminate Transverse Joint".

D. Shop Plans. Shop Plans will <u>not</u> be required. The contractor is responsible for obtaining field measurements and supplying properly sized materials to complete the work.

V. MEASUREMENT

A. Eliminate Transverse Joint. The Department will measure the quantity in linear feet as the horizontal distance between the inside face of the barriers along the centerline of the joint (as shown on the detail drawings).

VI. PAYMENT

A. Eliminate Transverse Joint. Payment at the contract unit price per linear foot is full compensation for removing and disposing of the specified existing materials; furnishing and installing the concrete, steel reinforcement and armored edge; and all incidental items necessary to complete the work within the specified pay limits as specified by this note and as shown on the attached detail drawings.

The Department will consider payment as full compensation for all work required by this note and the attached detail drawings.

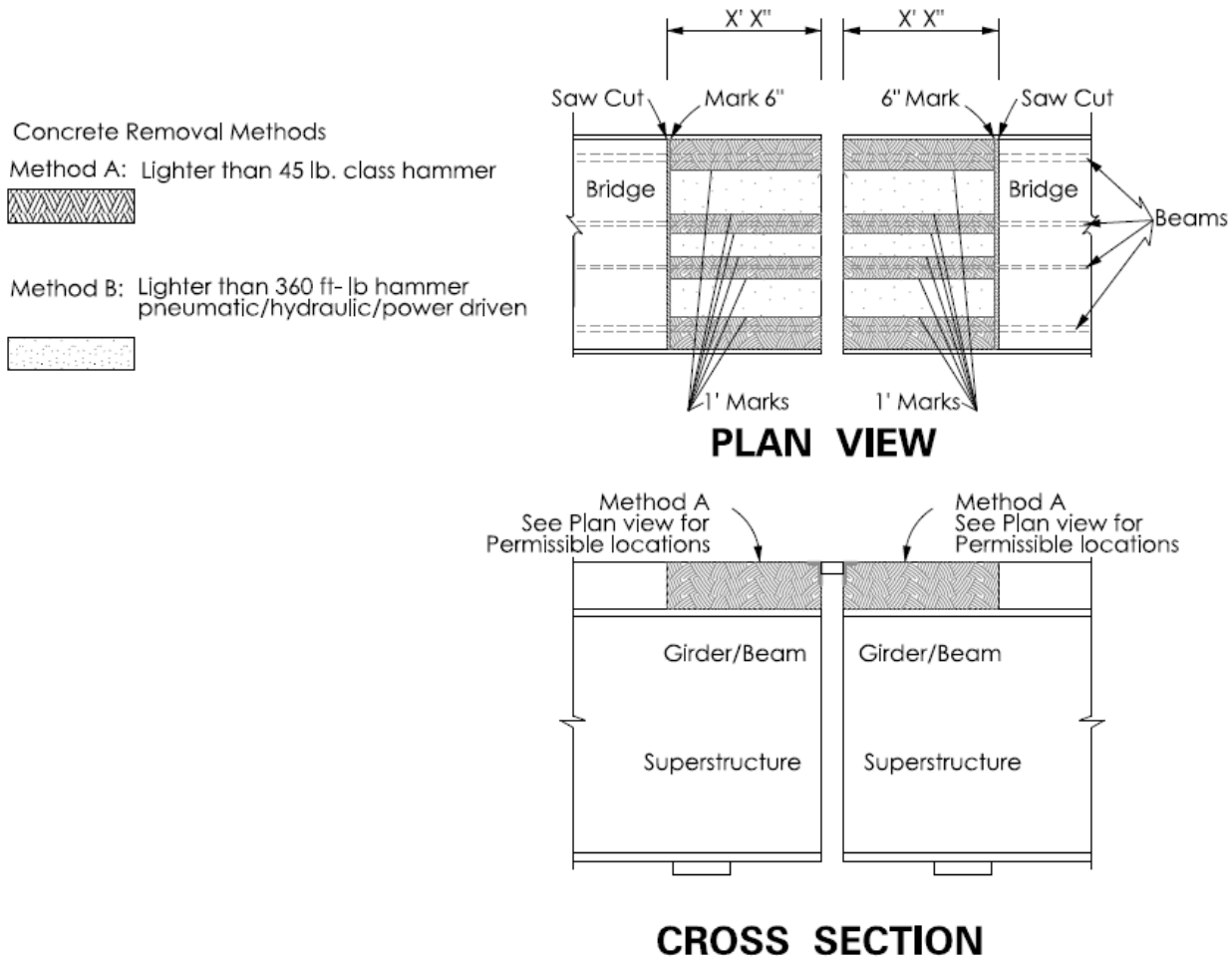

SPECIAL NOTE FOR BRIDGE RESTORATION AND WATERPROOFING WITH CONCRETE OVERLAYS

I. DESCRIPTION

Perform all work in accordance with the Kentucky Transportation Cabinet, Department of Highway's 2008 Standard Specifications for Road and Bridge Construction and applicable Supplemental Specifications, the Standard Drawings, this Note, and the attached detail drawings. Section references are to the Standard Specifications.

This work consists of the following:

(1) Furnish all labor, materials, tools, and equipment
(2) Remove the existing overlay
(3) Where required, repair the existing deck with partial and full depth patches, and repair/replace damaged and corroded reinforcement bars
(4) Place new concrete overlay and epoxy-sand slurry in accordance with Section 606
(5) Maintain and control traffic
(6) Any other work specified as part of this contract

All construction will be in accordance with Section 606 unless otherwise specified.

II. MATERIALS

A. Latex Concrete. See Section 606.03.17 and use Type III cement
B. Class "M" Concrete. Use either "M1" or "M2". See Section 601.
C. Epoxy-Sand Slurry. See Section 606.03.10.
D. Bituminous Asphalt. Use CL4 ASPH SURF 0.38A PG 76-22.

III. CONSTRUCTION

A. Remove Existing Overlay. In addition to Section 606.03.03, totally remove the existing concrete overlay by grinding or scarifying the deck to a depth slightly below or equal to the original bridge slab surface. Machine preparation of the existing slab to a depth of at least ¼" below the existing surface is NOT required. When removal of an existing overlay is a pay item, no payment will be allowed for "Machine Preparation of Existing Slab". This work is incidental to the pay item "Removal of Epoxy, Bituminous or Foreign Overlay".

B. Partial and Full Depth Slab Repair: Prior to the placement of the overlay, as directed by the Engineer, repair all partial and full-depth patches in accordance with Section 606.03.05 and Section 606.03.06. As part of the deck patching, repair/replace all damaged or severely corroded reinforcing bars. Contrary to the Standard Specifications, all partial depth slab repair concrete shall be the same material as used for the overlay and shall be placed

monolithically with the overlay. The pay item "Concrete Overlay – Latex" includes a quantity overrun for partial depth patching. The Department will not measure material removal, forming, blast cleaning, or retying steel reinforcement in the patches and will consider this work incidental to the pay item "Concrete Class M Full Depth Patch" for full depth patches or "Concrete Overlay – Latex" for partial depth patches.

C. Surface Texturing. Texture the concrete surface of the overlay in accordance with Section 609.03.10. The minimum thickness of the textured overlay shall be 1 ¼" for the Latex Cement Concrete.

D. Asphalt Approach Pavement. Backfill and compact the area of pavement removed for placing the new armored edge with material and methods approved by the Engineer. Mill the existing asphalt pavement on each end of the bridge for a distance of 50-ft. The grinding depth may vary depending on the condition of the existing approach and final elevation of the bridge end. Remove the bituminous material uniformly by making an edge key. Dispose of all removed material away from the site. Provide a smooth transition to the finished bridge with a new bituminous overlay of compacted depth of approximately 1 ¼" at each end of the bridge.

IV. MEASUREMENT

See Section 606 and the following:

A. Asphalt Approach Pavement. The Department will measure the quantity in square yards, which shall include all labor, equipment, and material needed to complete this work. The department will measure along the centerline from each end of the structure to the point where the new pavement ties into the existing pavement and across the width of the new pavement perpendicular to the centerline of the roadway.

V. PAYMENT

See Section 606 and the following:

A. Asphalt Approach Pavement. The Department will make payment for the completed and accepted quantity of this work under the pay item "Bridge Overlay Approach Pavement".

SPECIAL NOTE FOR CONCRETE PATCHING REPAIR

I. DESCRIPTION

Perform all work in accordance with the Kentucky Transportation Cabinet, Department of Highway's 2008 Standard Specifications for Road and Bridge Construction and applicable Supplemental Specifications, the Standard Drawings, and this Note. Section references are to the Standard Specifications.

This work consists of the following:

(1) Furnish all labor, materials, tools, and equipment
(2) Remove the existing spalled or deteriorated concrete
(3) Place hook fasteners and welded wire fabric over surfaces to be repaired (where applicable)
(4) Blast clean and prime the surfaces immediately prior to patching
(5) Apply concrete patching as specified by this note
(6) Finish and cure the patched surface
(7) Maintain and control traffic
(8) Any other work specified as part of this contract

II. MATERIALS

A. Concrete. Approved Concrete Product for Vertical and Overhead Repair Patch. Conform to Manufacturer's Technical Guidance.
B. Steel Reinforcement. Use Grade 60. See Section 602.
C. Welded Steel Wire Fabric (WWF). Conform to Section 811.
D. Hook Fasteners. Use Commercial Grade Galvanized Hook Fasteners. Minimum 3/16" Diameter.

III. CONSTRUCTION

A. Remove Deteriorated Concrete. Prior to beginning the concrete repairs, provide safe access to the substructure, in accordance with Section 107.01.01, for the Engineer to sound possible repair areas. The Engineer will sound the concrete with a hammer and mark the areas of concrete to be removed and patched. The Contractor shall remove specified areas of loose, spalled, deteriorated, and delaminated concrete. Care shall be exercised not to damage areas of sound concrete or reinforcing steel during concrete removal operations. Unless specifically directed by the Engineer, depth of removal shall not exceed six inches. Concrete removal shall be in accordance with a sequence approved by the Engineer. Concrete removal shall be accomplished by light duty electric or pneumatic chipping hammers (not to exceed 15 lbs.). If sound concrete is encountered before existing reinforcing steel is exposed, the surface shall be prepared and repaired without further removal of the concrete. When corroded reinforcing steel is exposed, concrete removal shall continue until there is a minimum ¾ inch clearance around the exposed, corroded reinforcing bar. Care shall be taken to not damage bond to adjacent non-exposed reinforcing steel during concrete removal processes.

The outer edge of all areas to be patched shall be saw cut to a minimum depth of ¾ inch to prevent feathering, unless otherwise approved by the Engineer.

After all deteriorated concrete has been removed, the repair surface to receive concrete patching shall be prepared by abrasive blast cleaning. Abrasive blast cleaning shall remove all fractured surface concrete and all traces of any unsound material or contaminants such as oil, grease, dirt, slurry, or any materials which could interfere with the bond of freshly placed concrete.

B. Steel Reinforcement. All corroded reinforcing steel exposed during concrete removal shall have corrosion products removed by abrasive grit blasting or wire brush, whichever is more appropriate. Furnish for replacement, as directed by the Engineer, 650 linear feet of steel reinforcing bars ½" diameter by 20-foot lengths. Place these bars in areas deemed by the Engineer to require additional reinforcement. Field cutting and bending is permitted. Deliver unused bars to the local maintenance facility.

Reinforcing steel displaying deep pitting or loss of more than 20 percent of cross-sectional area shall be removed and replaced. Such bars shall be placed in accordance with the recommendations of ACI 506R, Sections 5.4 and 5.5. In particular, bars shall not be bundled in lapped splices, but shall be placed such that the minimum spacing around each bar is three times the maximum aggregate size to allow for proper encapsulation with concrete patching. Intersecting reinforcing bars shall be tightly secured to each other using tie wire and adequately supported to minimize movement during concrete placement.

Welded wire fabric shall be provided at each repair area larger than one square foot if the depth of the repair exceeds three inches from the original dimension of the repaired member. Sheets of adjoining WWF shall be lapped by at least one and one-half spaces at all intersections, in both directions, and be securely fastened. WWF shall be supported no closer than ½ inch to the prepared concrete surface and shall have a minimum concrete cover of 1- ½" inches. WWF shall be fastened to preset anchors on a grid of not more than 12 inches square. Large knots of tie wire which could result in sand pockets and voids during patching shall be avoided.

C. Hook Fasteners. Hook fasteners shall be positioned at the spacing as stated above or as directed by the Engineer. Any given area shall have a minimum of four anchors. The WWF shall not move or deform excessively during concrete patching. Hook Fasteners shall be of commercial grade galvanized steel with a minimum diameter of 3/16". They may be mechanically set or grouted, as approved by the Engineer.

D. **Application of Concrete Patching Material.** Place and finish the new concrete for the patching area in accordance with the manufacturer's recommendations (mixing method, slump, etc.). The Engineer shall approve the Contractor's method of placing and consolidating the concrete prior to the beginning of this operation. The Contractor may form concrete to match the original as-built dimensions where the depth of repair area is four inches or more; however, appropriate approved material must be used to conform to the requirements of Section 601.

E. **Curing.** On completion of finishing operations, patching concrete shall immediately be prevented from drying out and cracking by fogging, wetting, and/or any appropriate method approved by the Engineer. Curing shall continue for the duration recommended by the product manufacturer.

Each Contractor shall make a thorough inspection of the site prior to submitting a bid for this work. No sketches of anticipated patching areas are included in this proposal; therefore, it is particularly important that each bidder inspect the site to become thoroughly familiar with the existing conditions and anticipated patching areas, so that work can be expeditiously performed after a contract is awarded. Submission of a bid will be considered evidence of this inspection having been made. Any claims resulting from site conditions will not be honored by the Department.

Quantities given are approximate and were estimated from a visual inspection at ground level. The quantity for "Concrete Patching Repair" shall be bid with the contingency that the quantities may be increased, decreased, or eliminated by the Engineer.

Dispose of all removed material entirely away from the job site as approved by the Engineer. This work is incidental to the contract unit price for "Concrete Patching Repair".

IV. MEASUREMENT

A. **Concrete Patching Repair.** The Department will measure the quantity in square feet of each area restored including all faces of a repair to an edge or corner.
B. **Steel Reinforcement.** See Section 602.
C. **Welded Wire Fabric and Hook Fasteners.** These will not be measured for payment, but shall be considered incidental to "Concrete Patching Repair".

V. PAYMENT

A. **Concrete Patching Repair.** Payment at the contract unit price per square foot is full compensation for the following: (1) Furnish all labor, materials, tools, equipment; (2) remove and dispose of spalled and delaminated concrete; (3) prepare surface for patching; (4) place, finish (trowel to a smooth surface) and cure new concrete patches; and (5) all incidentals necessary to complete the work as specified by this note.
B. **Steel Reinforcement.** See Section 602.

The Department will consider payment as full compensation for all work required by this note.

SPECIAL NOTE FOR BRIDGE BARRIER RETROFIT

I. DESCRIPTION

Perform all work in accordance with the Kentucky Transportation Cabinet, Department of Highway's 2008 Standard Specifications for Road and Bridge Construction and applicable Supplemental Specifications, the Standard Drawings, this Note, and the attached detail drawings. Section references are to the Standard Specifications.

This work consists of the following:

(1) Furnish all labor, materials, tools, and equipment
(2) Remove existing guardrail attachment blocks and all metal railing and posts on the bridge.
(3) Install additional steel reinforcement and new concrete as specified and in accordance with the attached detail drawings
(4) Masonry coat all new concrete
(5) Maintain and control traffic
(6) Any other work specified as part of this contract

II. MATERIALS

A. Class "AA" Concrete. See Section 601.
B. Steel Reinforcement-Epoxy Coated. Use Grade 60. See Section 602.

III. CONSTRUCTION

A. Remove Existing Materials. Remove the existing guardrail attachment blocks to the limits shown on the plans. Dispose of removed material entirely away from the job site. This work shall be included in the contract unit price for "Bridge Barrier Retrofit".

Remove existing aluminum rail and post system attached to concrete plinth. The Contractor shall deliver existing aluminum rail system materials to the Central Sign Shop and Recycle Center at 1224 Wilkinson Blvd in Frankfort, KY. Contact Section Supervisor at (502) 564-8187 to schedule the delivery of material. Deliver the material between the hours of 8:00AM and 3:00PM, Monday through Friday. This work shall be included in the contract unit price for "Bridge Barrier Retrofit".

Remove the W-beam guardrail and posts along the inside shoulder of the eastbound bridge. See the Guardrail Summary.

Remove all material as directed by the Engineer. A lane closure must be in place before removing any existing material. Do not leave the area unprotected.

B. Steel Reinforcement. All steel reinforcement shall be epoxy-coated in accordance with Section 811.10. Install the steel reinforcement in accordance with Section 602 and as directed by the Engineer. In the attached detail drawings, dimensions shown from face of concrete to bars are clear distances unless otherwise shown. Spacing of bars is from center to center of bars. Payment for steel reinforcement will be incidental to "Bridge Barrier Retrofit".

C. Place New Concrete. Blast clean all areas of existing concrete and structural steel to come in contact with new concrete until free of all laitance and deleterious substances immediately prior to the placement of the Class "AA" Concrete. The surface areas of existing concrete to come in contact with the new Class "AA" Concrete are to be coated with an epoxy bond coat immediately prior to placing new concrete in accordance with Section 511. This work is incidental to the pay item "Bridge Barrier Retrofit".

D. Masonry Coating. A masonry coating shall be applied to all new concrete surfaces. Payment for this work is incidental to "Bridge Barrier Retrofit".

E. Bonding of Drilled Reinforcement. Where shown on the plans, drill holes and anchor/bond new reinforcement into existing concrete using an approved adhesive conforming to Section 826 or Special Note 6J. Embedment shall be sufficient to develop the full tensile strength of the reinforcing bar and shall be no less than the minimum embedment shown in the plans. Installation and hole diameter shall be in strict conformance with the manufacturer's recommendations and Section 511 of the Standard Specifications. Holes shall be core drilled, wire brushed and blown out with air from the bottom up to ensure good bonding.

IV. MEASUREMENT

A. Bridge Barrier Retrofit. The Department will measure the quantity in linear feet measured along gutterline from end to end of bridge barrier retrofit.

V. PAYMENT

A. Bridge Barrier Retrofit. Payment for this item of work shall be at the contract unit price and payment will be full compensation for the following: (1) Furnish all labor, materials, tools, and equipment; (2) Remove existing materials: (3) Install additional steel reinforcement and new concrete; (4) Masonry coat all new concrete surfaces; and (5) Any other work specified as part of this contract and the attached detail drawings.

The Department will consider payment as full compensation for all work required by this note and the detail drawings.

US 60 OVER I-64 (025B00009N)

(MP 101.7)

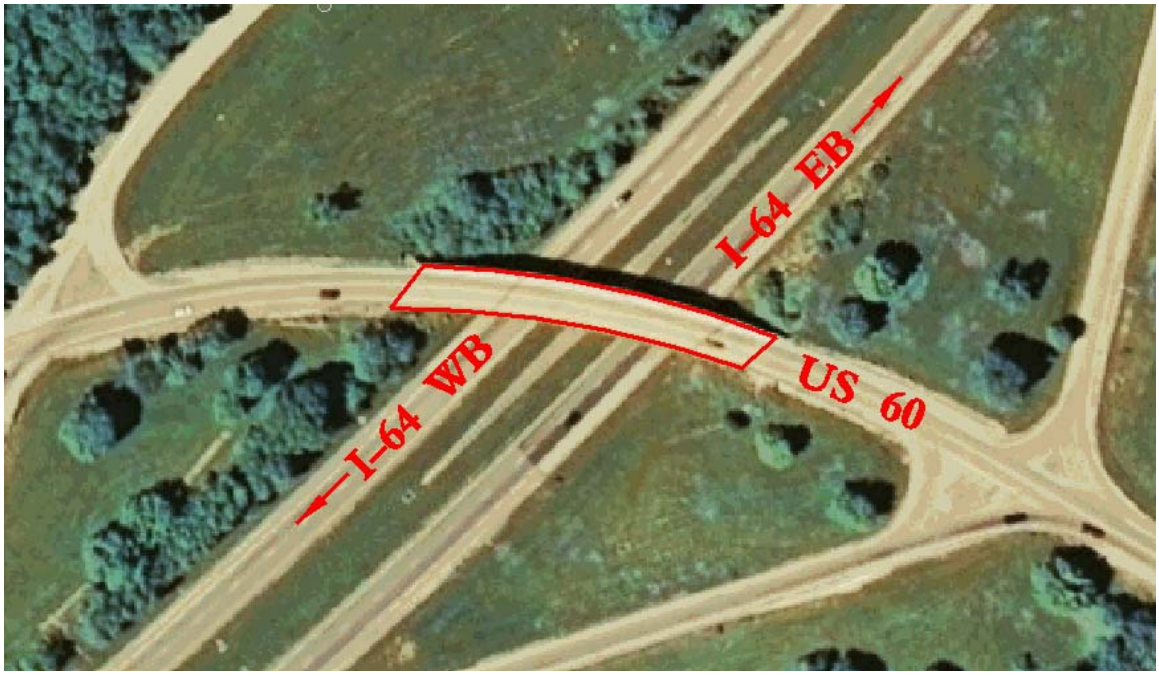

SUMMARY OF QUANTITIES			
ITEM CODE	**DESCRIPTION**	**QUANTITY**	**UNIT**
8510	REMOVE EPOXY, BITUMINOUS, OR FOREIGN OVERLAY	1055	SQYD
8526	CONCRETE CLASS M FULL DEPTH PATCH	4	CUYD
8549	BLAST CLEANING	1275	SQYD
8534	CONCRETE OVERLAY – LATEX	42	CUYD
8504	EPOXY SAND SLURRY	290	SQYD
3300	ELIMINATE TRANSVERSE JOINTS	132	LF
3298	EXPANSION JOINT REPLACEMENT – 4 IN	88	LF
22146EN	CONCRETE PATCHING REPAIR	1300	SQFT
8151	STEEL REINFORCEMENT – EPOXY COATED	350	LB
3304	BRIDGE OVERLAY APPROACH PAVEMENT	360	SQYD
6554	PAVE STRIPING – DUR TY 1 – 4 IN W	600	LF
6555	PAVE STRIPING – DUR TY 1 - 4 IN Y	600	LF

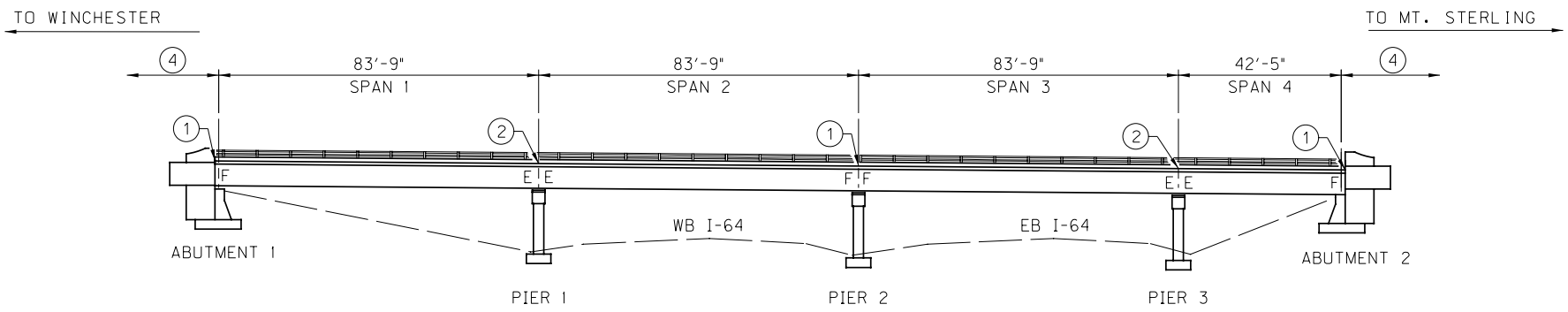

ELEVATION

NTS

NOTATIONS:

1. ELIMINATE TRANSVERSE JOINT
2. EXPANSION JOINT REPLACE, 4"
3. REMOVE EXISTING OVERLAY, PARTIAL/FULL DEPTH PATCHING, NEW LATEX CONCRETE OVERLAY, NEW PAVEMENT STRIPING
4. ASPHALT APPROACH PAVEMENT, 50' FROM EACH END OF BRIDGE

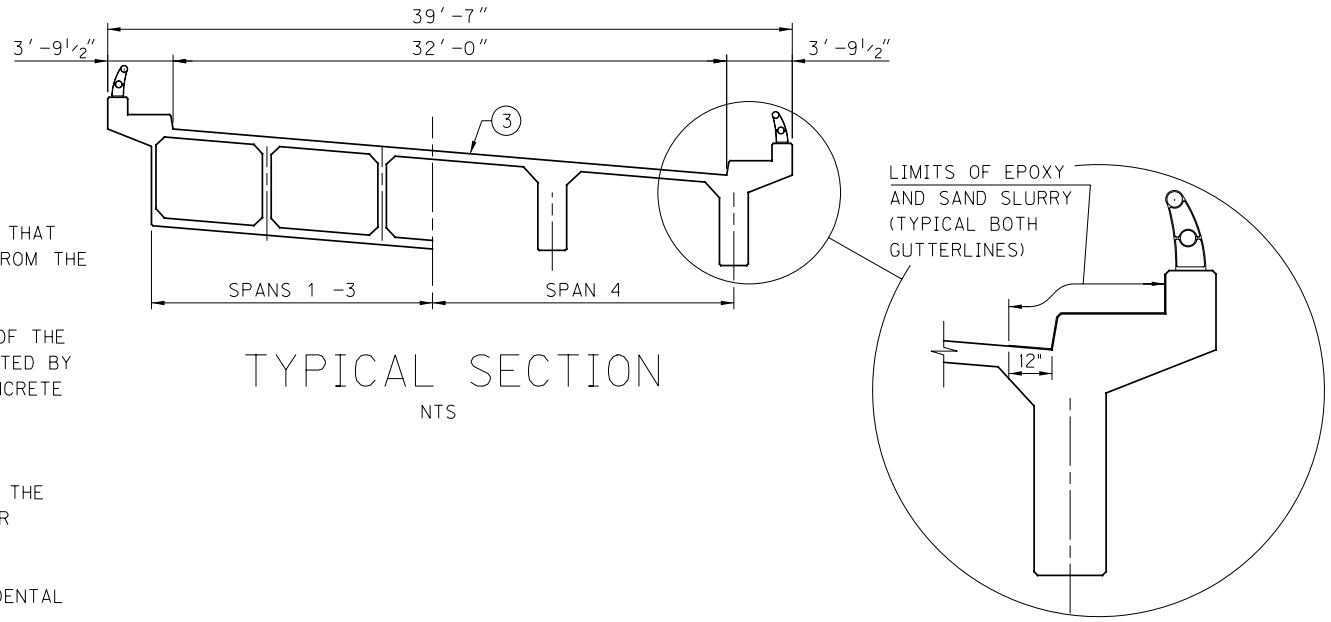

TYPICAL SECTION

NTS

NOTE:
ALL DIMENSIONS ON THESE DETAIL SHEETS THAT REFER TO THE EXISTING STRUCTURE ARE FROM THE EXISTING PLANS AND ARE APPROXIMATE.

PATCH SPALLED AND DELAMINATED AREAS OF THE PIERS, BEAMS, AND DECK SOFFIT AS DIRECTED BY THE ENGINEER. SEE SPECIAL NOTE FOR CONCRETE PATCHING REPAIR.

IF DISTURBED DURING CONSTRUCTION, THE W-BEAM GUARDRAILS AND CONNECTIONS AT THE BRIDGE ENDS SHALL BE RESTORED TO THEIR ORIGINAL CONDITION AFTER WORK IS COMPLETED. ANY WORK ASSOCIATED WITH THE GUARDRAILS AND CONNECTION IS INCIDENTAL TO THE "CONCRETE OVERLAY-LAYTEX" CONTRACT ITEM.

ENTRAN

ELEVATION AND TYPICAL SECTION

COUNTY:	CLARK
ROUTE:	US 60
CROSSING:	I-64

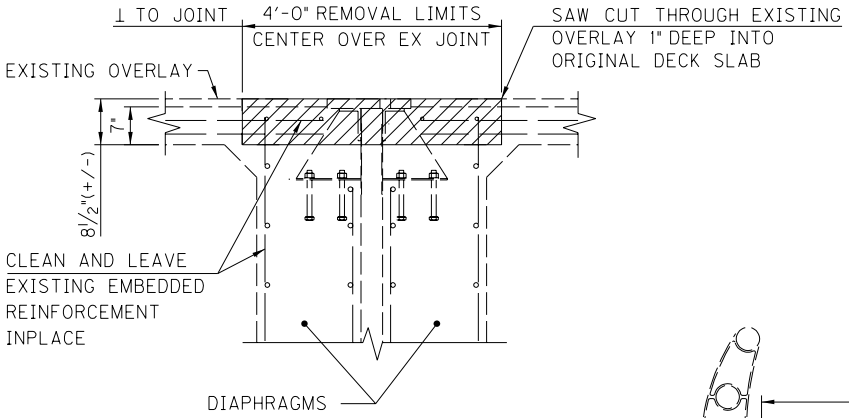

EXISTING SECTION
AT PIERS 1 & 3
(SHOWING REMOVAL)

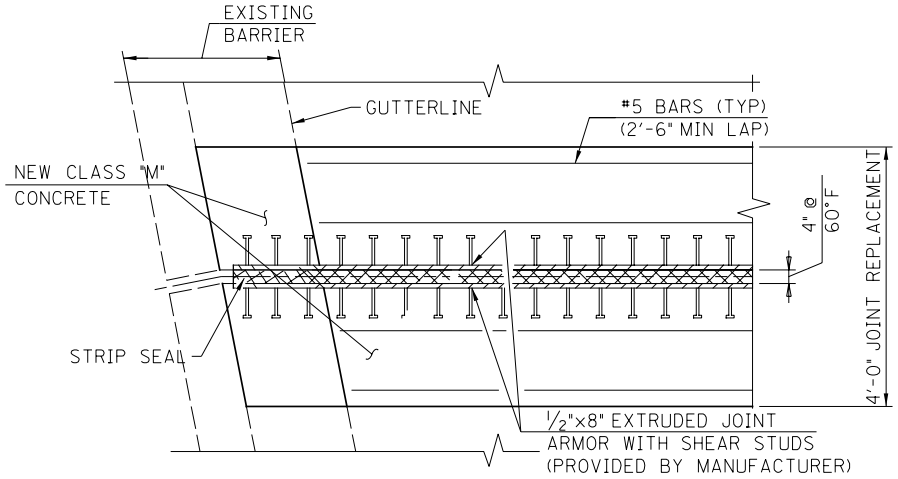

PLAN AT PIERS 1 & 3
(33° SKEW)

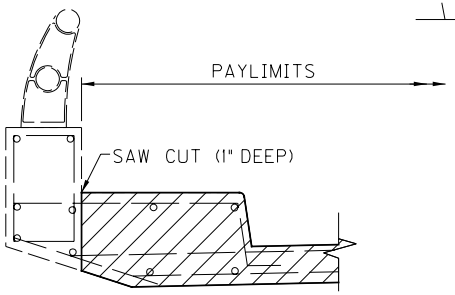

EXISTING SECTION
AT BARRIER
(SHOWING REMOVAL)

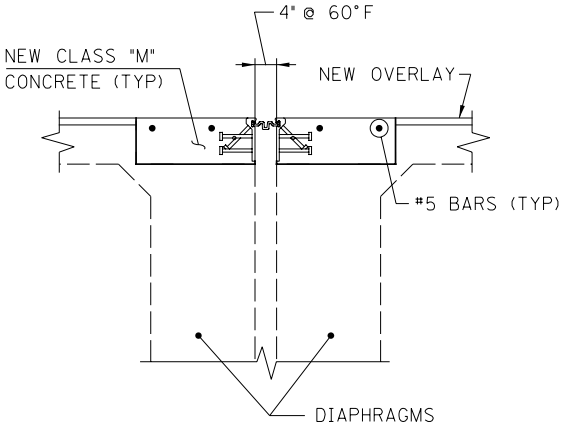

PROPOSED SECTION
AT PIERS 1 & 3
(EXISTING REINFORCING NOT SHOWN FOR CLARITY)

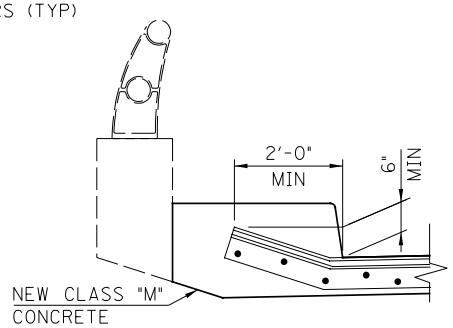

PROPOSED SECTION
AT BARRIER

NOTES:

REMOVE HATCHED AREAS OF CONCRETE, EXPANSION DEVICE & ARMORED EDGE (IF PRESENT).
WHEN DETERIORATED CONCRETE ADJACENT TO LIMITS OF REMOVAL IS ENCOUNTERED, EXTEND THE REMOVAL AREA AS DIRECTED BY THE ENGINEER.

CLEAN & LEAVE EXISTING REINFORCEMENT IN PLACE. IN AREAS WITH HIGHLY CORRODED EXISTING REINFORCING, PROVIDE ADDITIONAL BARS AS DEEMED NECESSARY BY THE ENGINEER.

ROUGHEN EXISTING CONCRETE WHEN IN CONTACT WITH NEW CONCRETE.

FOR BONDING NEW CONCRETE TO EXISTING SURFACES, SEE SECTION 511 OF THE STANDARD SPECIFICATIONS.

PREFORMED EXPANSION JOINT STRIP SEAL SHALL BE EITHER ONE OF THE FOLLOWING OR AN APPROVED EQUIVALENT:

D.S. BROWN COMPANY
L2-400 WITH SSPA STEELFLEX RAIL

WATSON BOWMAN ACME
SE-400 WITH TYPE "P" RAIL

ADJUST JOINT OPENING FOR ACTUAL INSTALLATION TEMPERATURE ACCORDING TO STD DWG BJE-001-11

SEE SPECIAL NOTE FOR MORE INFORMATION.

(SHEET 1 OF 1)

ENTRAN

EXPANSION JOINT REPLACEMENT 4 INCH

COUNTY: CLARK
ROUTE: US 60
CROSSING: I-64

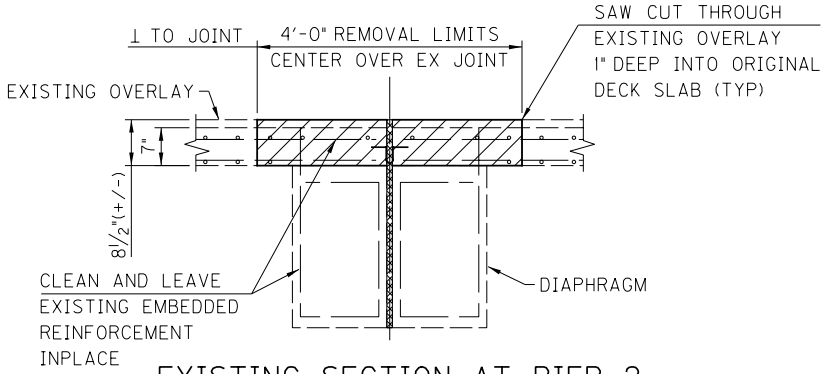

EXISTING SECTION AT PIER 2
(SHOWING REMOVAL)

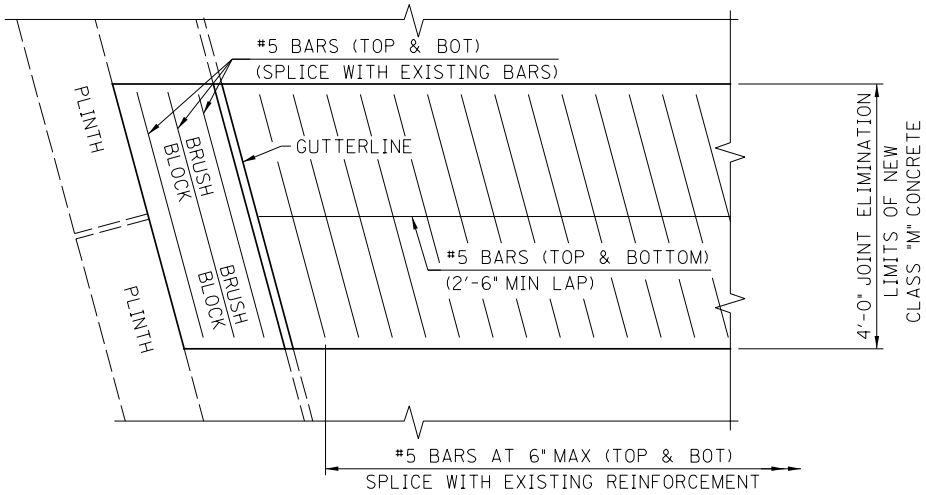

PLAN AT PIER 2
(33° SKEW)

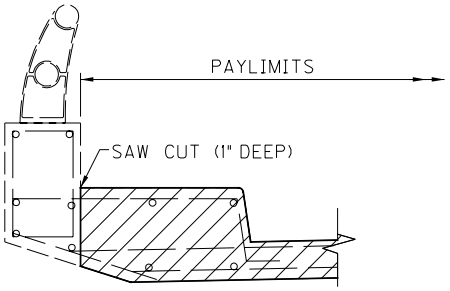

EXISTING SECTION
AT BARRIER
(SHOWING REMOVAL)

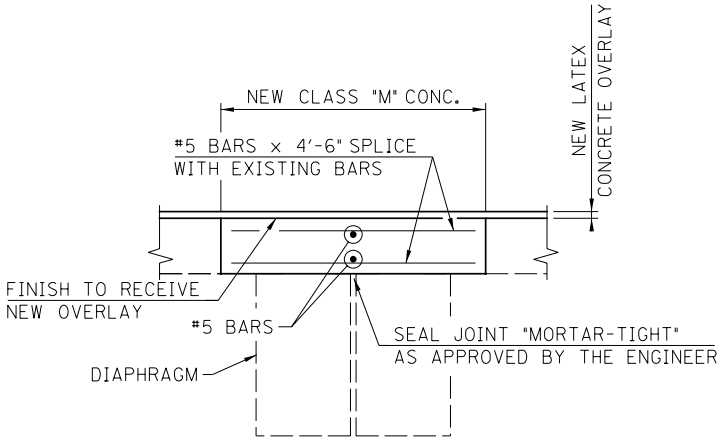

PROPOSED SECTION
(EXISTING REINFORCING NOT SHOWN FOR CLARITY)

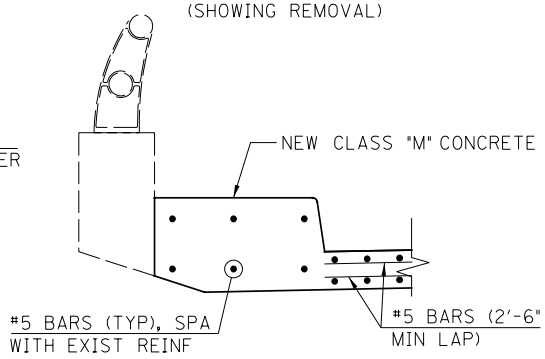

PROPOSED SECTION
AT BARRIER

NOTES:

REMOVE HATCHED AREAS OF CONCRETE AND EXPANSION DEVICE AND ARMORED EDGE (IF PRESENT). WHEN DETERIORATED CONCRETE ADJACENT TO LIMITS OF REMOVAL IS ENCOUNTERED, EXTEND THE REMOVAL AREA AS DIRECTED BY THE ENGINEER.

CLEAN & LEAVE EXISTING REINFORCEMENT IN PLACE. IN AREAS WITH HIGHLY CORRODED EXISTING REINFORCING, PROVIDE ADDITIONAL BARS AS DEEMED NECESSARY BY THE ENGINEER.

ROUGHEN EXISTING CONCRETE WHEN IN CONTACT WITH NEW CONCRETE.

FOR BONDING NEW CONCRETE TO EXISTING SURFACES, SEE SECTION 511 OF THE STANDARD SPECIFICATIONS.

SEE SPECIAL NOTE FOR MORE INFORMATION.

(SHEET 1 OF 1)

ENTRAN

ELIMINATE TRANSVERSE JOINT (AT PIER 2)

COUNTY: CLARK
ROUTE: US 60
CROSSING: I-64

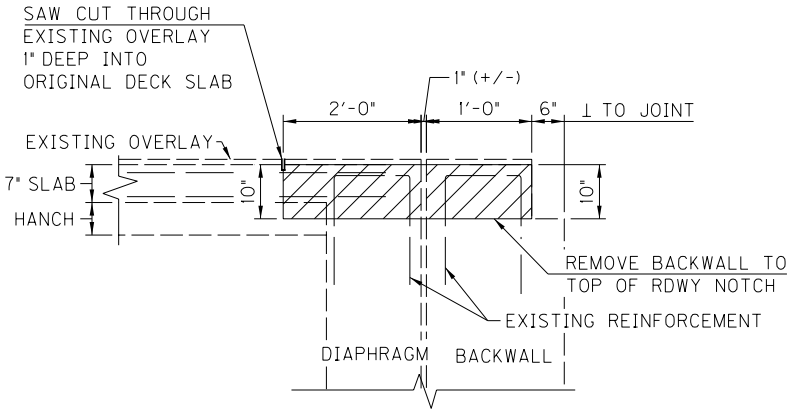

EXISTING SECTION AT ABUTMENTS
(SHOWING REMOVAL)

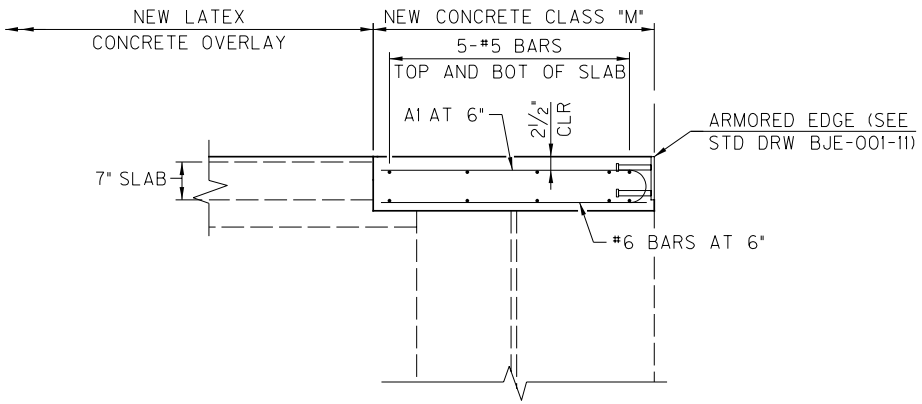

PROPOSED SECTION AT ABUTMENTS
(EXISTING REINFORCING NOT SHOWN FOR CLARITY)

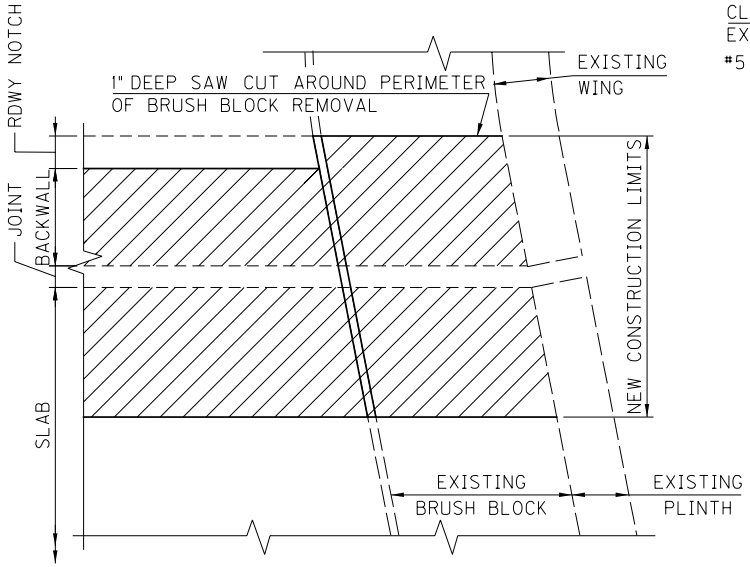

PLAN AT ABUTMENTS
(SHOWING REMOVAL)

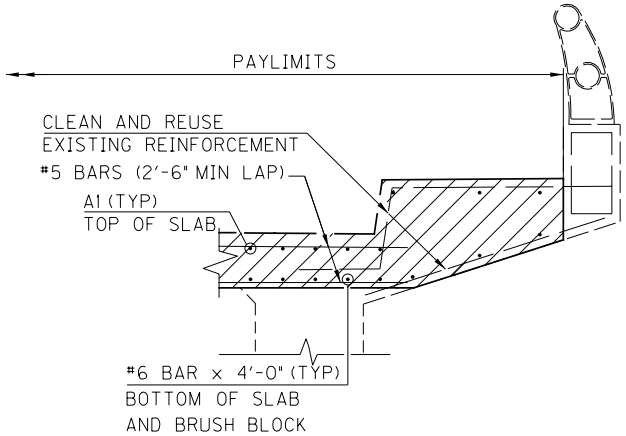

SECTION AT BARRIER
(SHOWING REMOVAL AND PROPOSED)

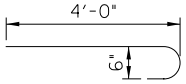

A1
#6 BARS

NOTES:

REMOVE HATCHED AREAS OF CONCRETE, EXPANSION DEVICE & ARMORED EDGE (IF PRESENT). WHEN DETERIORATED CONCRETE ADJACENT TO LIMITS OF REMOVAL IS ENCOUNTERED, EXTEND THE REMOVAL AREA AS DIRECTED BY THE ENGINEER.

CLEAN & LEAVE EXISTING REINFORCEMENT IN PLACE. IN AREAS WITH HIGHLY CORRODED EXISTING REINFORCING, PROVIDE ADDITIONAL BARS AS DEEMED NECESSARY BY THE ENGINEER.

ROUGHEN EXISTING CONCRETE WHEN IN CONTACT WITH NEW CONCRETE.

FOR BONDING NEW CONCRETE TO EXISTING SURFACES, SEE SECTION 511 OF THE STANDARD SPECIFICATIONS.

SEE SPECIAL NOTE FOR MORE INFORMATION.

(SHEET 1 OF 1)

ENTRAN

ELIMINATE TRANSVERSE JOINT AT ABUTMENTS

COUNTY: CLARK
ROUTE: US 60
CROSSING: I-64

I-64 OVER PREWITT GRASSY-LICK ROAD (087B00024R&L)

(MP 105.6)

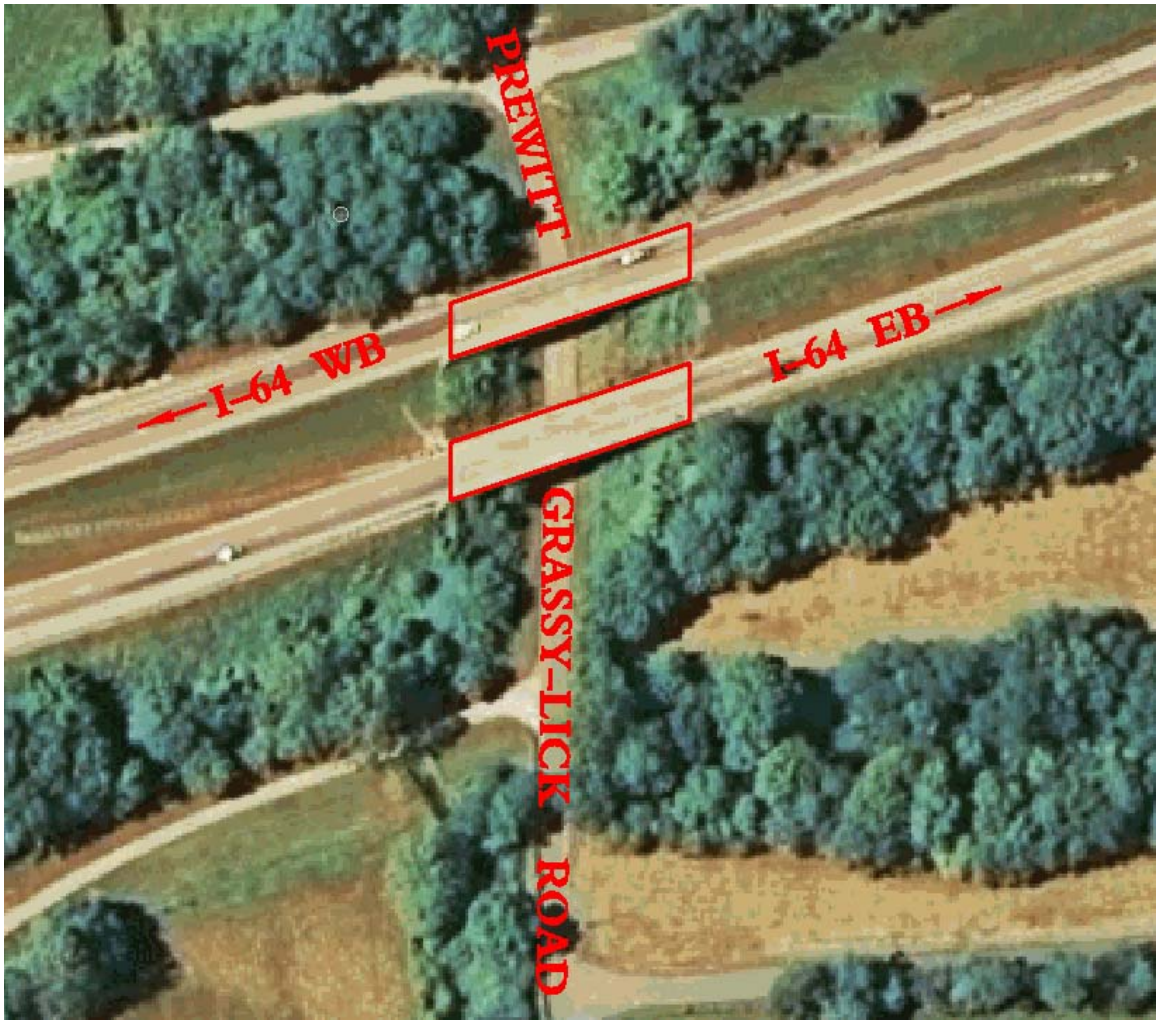

SUMMARY OF QUANTITIES			
ITEM CODE	**DESCRIPTION**	**QUANTITY**	**UNIT**
23032EN	BRIDGE BARRIER RETROFIT	672	LF
2110	PARTIAL DEPTH PATCHING	60	CUFT
22146EN	CONCRETE PATCHING REPAIR	400	SQFT
8151	STEEL REINFORCEMENT – EPOXY COATED	100	LB

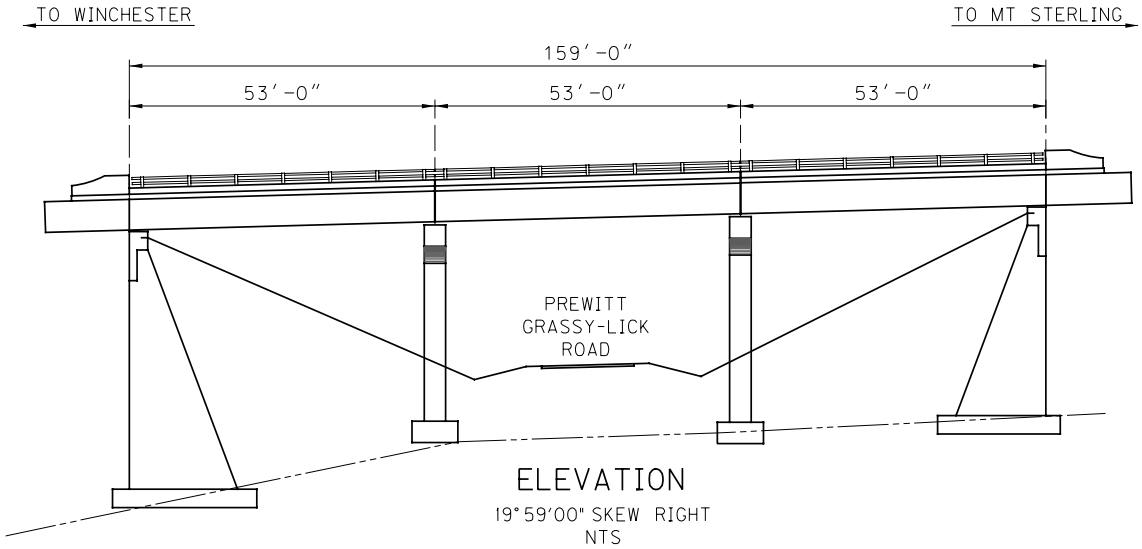

ELEVATION

19°59'00" SKEW RIGHT
NTS

NOTES:

PATCH SPALLED AND DELAMINATED AREAS OF THE EXISTING OVERLAY AND DECK WITH CLASS 'M' CONCRETE. AREAS TO BE REPAIRED SHALL BE DESIGNATED BY THE ENGINEER. SAW CUT THE BOUNDARY OF THE AREAS TO BE REPAIRED TO PRODUCE A NEAT, RECTANGULAR PATCH. MINIMUM DEPTH OF CONCRETE REMOVAL SHALL BE THE THICKNESS OF THE EXISTING OVERLAY. PERFORM WORK IN ACCORDANCE WITH THE STANDARD SPECIFICATIONS AND/OR AS DIRECTED BY THE ENGINEER. PAYMENT AT THE CONTRACT UNIT PRICE PER CUBIC FOOT OF PATCHING WILL BE MADE UNDER THE BID ITEM "PARTIAL DEPTH PATCHING" AND WILL INCLUDE ALL LABOR, EQUIPMENT, AND MATERIALS NEEDED TO COMPLETE THE WORK.

PATCH SPALLED AND DELAMINATED AREAS OF THE PIER CAPS, ABUTMENTS, BEAMS, AND DECK SOFFIT AS DIRECTED BY THE ENGINEER. SEE SPECIAL NOTE FOR CONCRETE PATCHING REPAIR.

DO NOT DISTURB THE EXISTING BITUMINOUS JOINTS ON THE BRIDGE. DAMAGED JOINTS WILL BE REPAIRED OR REPLACED AS DIRECTED BY THE ENGINEER (IN COORDINATION WITH THE BRIDGE PRESERVATION BRANCH) AT NO ADDITIONAL COST TO THE DEPARTMENT.

ALL DIMENSIONS ON THESE DETAIL SHEETS THAT REFER TO THE EXISTING STRUCTURE ARE FROM THE EXISTING PLANS AND ARE APPROXIMATE.

ALL REPAIRS TYPICAL FOR EB & WB BRIDGES, UNLESS NOTED OTHERWISE

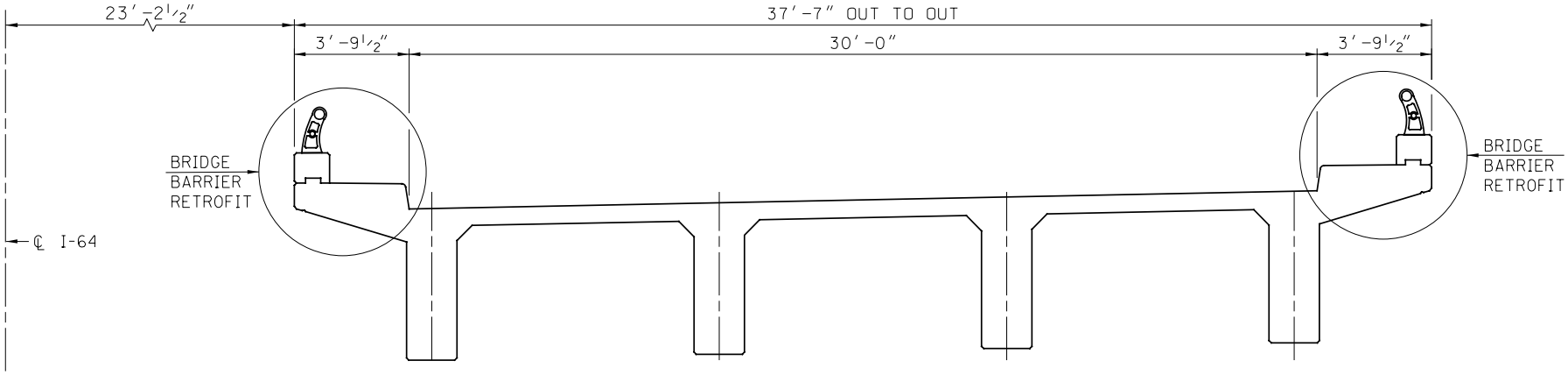

TYPICAL SECTION

NTS

ENTRAN

ELEVATION AND TYPICAL SECTION

COUNTY: MONTGOMERY
ROUTE: I-64
CROSSING: PREWITT GRASSY-LICK ROAD

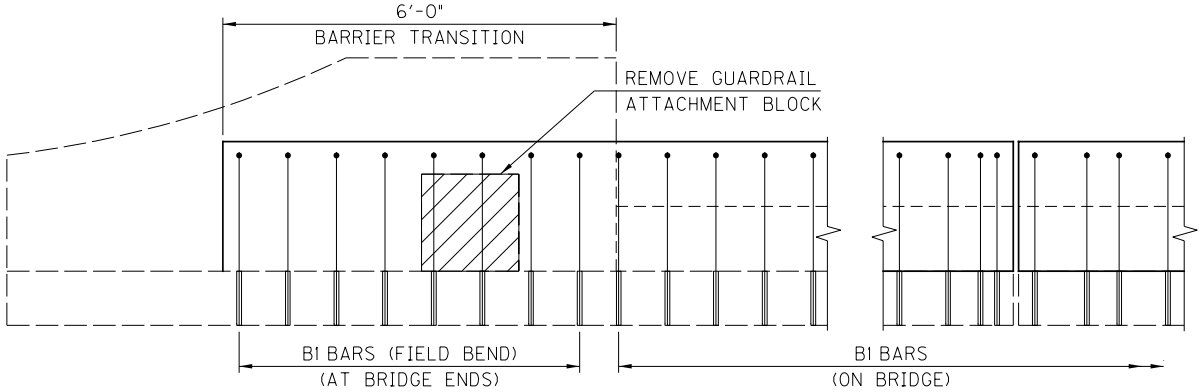

ELEVATION AT BRIDGE END & JOINTS

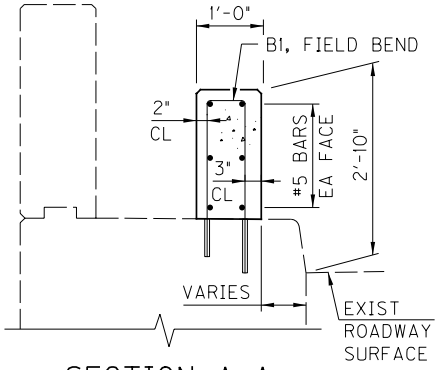

SECTION A-A
(AT BRIDGE ENDS)

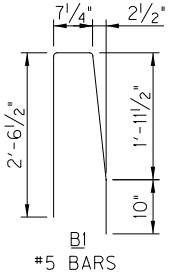

NOTES:
CORE DRILL AND GROUT B1 BARS TO EXISTING BRUSH BLOCK TO OBTAIN FULL TENSILE STRENGTH OF GRADE 60 STEEL REINFORCEMENT. SEE SPECIAL NOTE.

FOR BONDING NEW CONCRETE TO EXISTING SURFACES, SEE SECTION 511 OF THE STANDARD SPECIFICATIONS.

APPLY MASONRY COATING TO BARRIER & WINGWALL. SEE SPECIAL NOTE FOR LIMITS.

NEW CONCRETE IS TO BE CLASS "AA".

ATTACH GUARDRAIL CONNECTOR (TYPE A OR A-1) TO BARRIER RETROFIT AT BRIDGE ENDS IN GENERAL CONFORMITY TO STD DWG RBC-001-09 WITH ALL MODIFICATIONS APPROVED BY THE ENGINEER.

REMOVE W-BEAM GUARDRAIL AND POSTS ALONG INSIDE GUTTERLINE OF EASTBOUND BRIDGE. SEE GUARDRAIL SUMMARY.

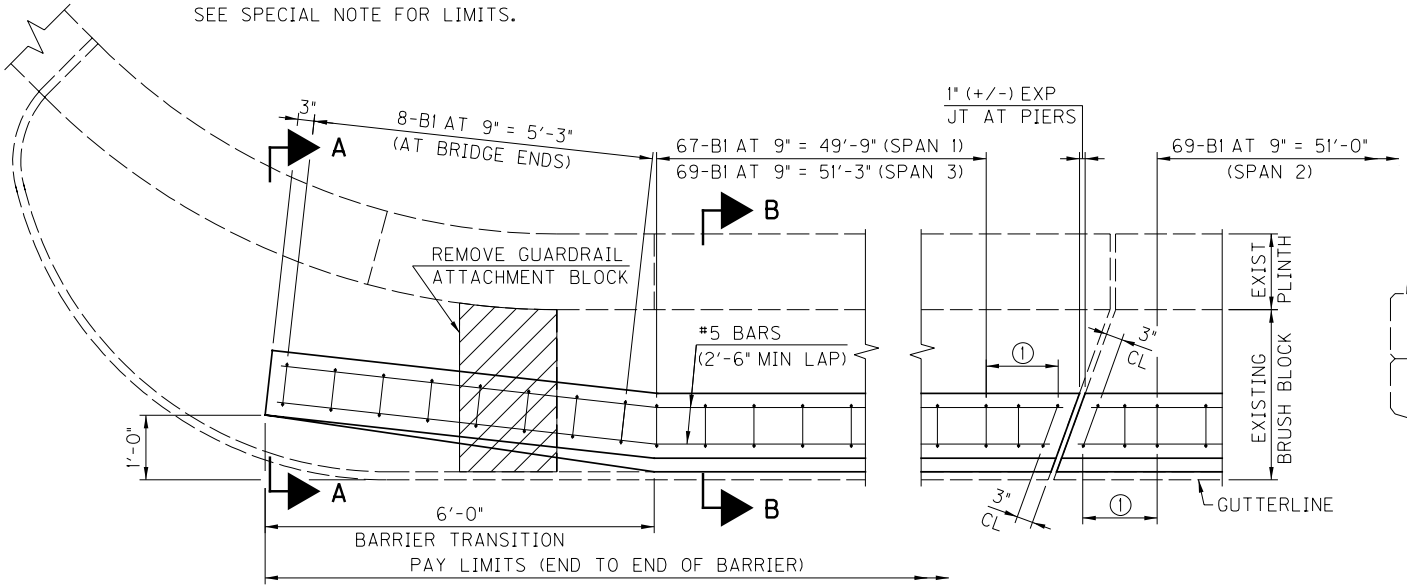

PLAN AT BRIDGE END & JOINTS

1 2 EVEN SPACES (6" MAX)

REMOVE EXISTING METAL RAIL AND POSTS. DISPOSE OF IN ACCORDANCE WITH SPECIAL NOTE. WORK IS INCIDENTAL TO THE BID ITEM "BRIDGE BARRIER RETROFIT".

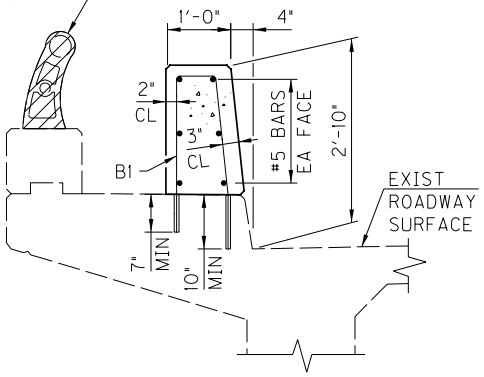

SECTION B-B
(ON BRIDGE)

(SHEET 1 OF 1)

ENTRAN

BRIDGE BARRIER RETROFIT

COUNTY:	MONTGOMERY
ROUTE:	I-64
CROSSING:	PREWITT GRASSY-LICK ROAD

PUBLIC INFORMATION PLAN

- **Project: Interstate 64 Pavement Rehabilitation Project**
- **Location: Clark and Montgomery Counties**
- **Area: Mile Points – 101.6 to 112.10**
- **Project Number: 7-2032.0**
- **Additional Information: The rehabilitation will take place on the east and west lanes of Interstate 64. This project will enhance the ride of the pavement and increase the life of the road through repairs.**

The primary goal of the Public Information Plan (PIP) is to inform the motoring public and area stakeholders of project information including Maintenance of Traffic (MOT).

The KYTC District 7 Public Information Officer (PIO) will coordinate and disseminate to stakeholders and the media appropriate information regarding the construction plans.

Local Stakeholders

Elected Officials

- State Senator R. J. Palmer II – (502) 564-8100; R J.Palmer@lrc.ky.gov
- State Representative Richard Henderson – (502) 564-8100; richard.henderson@lrc.ky.gov
- State Representative Donna Mayfield – (502) 564-8100; donna.mayfield@lrc.ky.gov
- Clark County Judge/Executive Henry Branham – (859) 745-0200; clarkcountyjudge@yahoo.com
- Clark County Deputy Judge/Executive Liz Elswick – (859) 745-0200; clarkcountydeputyjudge@yahoo.com
- Montgomery County Judge/Executive Wallace Johnson – (859) 498-8707; wallace.johnson@ky.gov

Local Agencies

- Winchester Police Chief Kevin Palmer – (859) 745-7400; kpalmer@winchesterky.com
- Clark County Sheriff Berl Perdue Jr. – (859) 744-4390; bperdue@clarkcokysheriff.com
- Clark County Fire Chief Ralph Ladson – (859) 745-0260; chiefladson@yahoo.com
- Winchester Fire Chief Daniel Castle – (859) 744-1587; dcastle@winchesterky.com
- Clark County Industrial Authority Director Todd Denham – (859) 744-6420; Todd@winchesterindustryky.com
- Winchester Public Works Director Patrick Clark – (859) 744-3253; pclark@winchesterky.com
- Clark County Postmaster Lisa A. Newton – (859) 744-6186; Lisa.A.Newton@usps.gov
- Clark County Tourism Director Nancy Turner – (859) 744-6420; nancy@tourwinchester.com
- Mt. Sterling Police Chief Michael Schnell – (859) 498-8720; michael.schnell@ky.gov
- Montgomery County Sheriff Fred Shortridge – (859) 498-8694; fred.shortridge@ky.gov
- Montgomery County Fire Chief Larry Potter – (859) 498-1318; larry.potter@ky.gov
- Montgomery County Road Supervisor Troy Wilson – (859) 498 – 8750; troywilson@ky.gov

- Montgomery County School Superintendent Daniel Freeman – (859) 497-8760; danielfreeman@montgomery.kyschools.us
- Montgomery County Pupil Transportation Director Karen Gullett – (859) 497-8797; karengullett@montgomery.kyschools.us
- Mt. Sterling Economic Development Director Sandy Romonesko – (859) 498 – 5343; Sandy.romonesko@ky.gov
  Mt. Sterling Tourism Director Tracey Pearce – (859) 498-8732; tracey.pearce@ky.gov
- Virgie Long, Over Dimensional Permits (KYTC Central Office) – (502) 564-7150; virgie.long@ky.gov

Utility Companies

- Local utility companies will be apprised of this project by District 7 staff.

Neighborhoods and their Mayors

- Mayor Ed Burtner, City of Winchester – (859) 744-2821; eburtner@winchesterky.com
- Mayor Gary Williamson, City of Mt. Sterling – (859) 498-8725; gary.williamson@ky.gov

TRUCKING FIRMS AND OUT OF STATE STAKEHOLDERS

Information will be distributed electronically to trucking firms via Rick Taylor at the Department of Vehicle Regulation (502-564-4540; rick.taylor@ky.gov). Information will also be posted on the 511 website (www.511.ky.gov) and on the 511 telephone information system.

PRESENTATIONS

A project description including anticipated schedule will be provided to the media, stakeholders and other emergency service agencies via e-mail prior to construction. Information will be provided to these groups via traffic advisories and press releases.

MEDIA RELATIONS

The District PIO will prepare an initial news release regarding the contract award for the project. The PIO will conduct interviews with the media throughout the project duration to keep the public informed of construction progress. Traffic advisories will be submitted to the media when a change in the MOT occurs. The contractor must provide to the PIO via the Resident Engineer notification of any change in the MOT at least three (3) days prior to the change.

UTILITY NOTES TO BE INCLUDED IN THE PROPOSAL
SPECIAL NOTES FOR UTILITY CLEARANCE
IMPACT ON CONSTRUCTION

CLARK - MONTGOMERY COUNTY
WINCHESTER – CATLETTSBURG ROAD (I – 64)
PAVEMENT REHABILITATION
MILL AND RESURFACE
EASTBOUND AND WESTBOUND
FROM MILEPOINT 101.7 TO MILEPOINT 112.1
FD04 025 85704
FD04 087 85704
ITEM NO. 7-2032.00

The following companies/individuals may have utility facilities located on the subject project:

Kentucky Utilities Company
820 West Broadway
Louisville, Kentucky 40232-2020
Mr. Greg Geiser
(502) 627-3708

Windstream
130 West New Circle Road
Suite 170
Lexington, Kentucky 40505-1408
Mr. Gene Dunn
(859) 357-6216

AT&T – Kentucky
29 Wills Branch
Prestonsburg, Kentucky 41653
Mr. Jack Salyer
(606) 874-2715

AT&T – Legacy
5390 Overbend Trail
Suwanee, Georgia 30024
Mr. Scott Logeman
(770) 335-8255

East Clark County Water District
118 Hopkins Lane
Winchester, Kentucky 40391
Mr. William Ballard
(859) 745-1458

Winchester Municipal Utilities – Water and Sewer
150 North Main Street
Winchester, Kentucky 40392
Mr. Duke Dryden
(859) 745-5434

Mt. Sterling Water and Sewer
300 East Main Street
Mt. Sterling, Kentucky 40353
Mr. Dave Pearce
(859) 498-0166

Kentucky-American Water Company
2300 Richmond Road
Lexington, Kentucky 40502
Mr. Jason Hurt
(859) 335-3415

Columbia Gas of Kentucky, Inc.
2001 Mercer Road
Lexington, Kentucky 40512
Mr. Bryan Slone
(859) 288-0253

Delta Natural Gas Company
3617 Lexington Road
Winchester, Kentucky 40391
Mr. Alan Heath
(859) 744-6171

The Contractor should note that this may not be a complete list of the utility owners involved. The Contractor is advised to contact the BUD one-call system; however, the Contractor should be aware that not all owners may be a member of the BUD one-call system.

COORDINATION WITH UTILITY FACILITY OWNERS

The Contractor will be responsible for contacting all utility facility owners on the subject project to have existing facilities located in the field. The Contractor will coordinate his activities with the utility facility owners to minimize and, where possible, avoid conflicts with utility facilities.

Where conflicts with utility facilities are unavoidable the Contractor will coordinate any necessary relocation work with the facility owner. ***There will be no damages awarded for delays caused by necessary utility relocations and/or adjustments.***

PROTECTION OF UTILITY FACILITIES

The location of utilities provided in the contract documents has been furnished by the facility owners and/or by reviewing record drawings, and may not be accurate. It will be the roadway Contractor's responsibility to locate utility facilities prior to excavating by calling the various utility facility owners, and by examining any supplemental information supplied by the Cabinet. The Contractor shall determine the exact location and elevation of underground utility facilities, by hand-digging if necessary, to expose utilities prior to beginning excavation in the area of underground utility facilities. The cost for repair, and any other associated costs, for any damage to utility facilities caused by the roadway Contractor's operation will be borne by the roadway Contractor.

It is the Contractor's responsibility to contact the BUD One-Call system; however, the Contractor should be aware that owners of underground facilities are not required to be members of the BUD One-Call system. It may be necessary for the Contractor to contact the County Court Clerk to determine what utility Companies have facilities in the project area.

BEFORE YOU DIG

The contractor is instructed to call 1-800-752-6007 to reach KY 811, the One-Call System for information on the location of existing underground utilities. The call is to be placed a minimum of two (2) and no more than ten (10) business days prior to excavation. The contractor should be aware that owners of underground facilities are not required to be members of the KY 811 One-Call Before-U-Dig (BUD) service. The contractor must coordinate excavation with the utility owners, including those whom do not subscribe to KY 811. It may be necessary for the contractor to contact the County Court Clerk to determine what utility companies have facilities in the area.

RAILROAD FACILITIES

There may or may not be railroad facilities associated with this project.

MATERIAL SUMMARY CONTRACT ID: 111051

IM 0645(080) PES NO: DE02500641151
LEXINGTON-ASHLAND ROAD (I-64) MILL AND RESURFACE EAST AND WESTBOUND DIRECTIONS FROM MP 101.7 TO MP 104.26 IN CLARK COUNTY

LINE NO	BID CODE	DESCRIPTION	QUANTITY	UNIT
0010	00001	DGA BASE	192.00	TON
0020	00078	CRUSHED AGGREGATE SIZE NO 2	100.00	TON
0030	00100	ASPHALT SEAL AGGREGATE	654.00	TON
0040	00194	LEVELING & WEDGING PG76-22	250.00	TON
0050	00291	EMULSIFIED ASPHALT RS-2	78.00	TON
0060	00339	CL3 ASPH SURF 0.38D PG64-22	1,969.00	TON
0070	00342	CL4 ASPH SURF 0.38A PG76-22	6,044.00	TON
0080	00461	CULVERT PIPE-15 IN	164.00	LF
0090	00462	CULVERT PIPE-18 IN	12.00	LF
0100	00464	CULVERT PIPE-24 IN	60.00	LF
0110	01310	REMOVE PIPE	240.00	LF
0120	01441	SLOPED BOX INLET-OUTLET TYPE 2	2.00	EACH
0130	01480	CURB BOX INLET TYPE B	4.00	EACH
0140	01502	DROP BOX INLET TYPE 5A	1.00	EACH
0150	01891	ISLAND HEADER CURB TYPE 2	118.00	LF
0160	01982	DELINEATOR FOR GUARDRAIL-WHITE	126.00	EACH
0170	01983	DELINEATOR FOR GUARDRAIL-YELLOW	14.00	EACH
0180	02220	FLOWABLE FILL	1.00	CUYD
0190	02223	GRANULAR EMBANKMENT	125.00	CUYD
0200	02237	DITCHING	13,530.00	LF
0210	02262	FENCE-WOVEN WIRE TYPE 1	27,367.00	LF
0220	02265	REMOVE FENCE	27,367.00	LF
0230	02363	GUARDRAIL CONNECTOR TO BRIDGE END TY A	4.00	EACH
0240	02367	GUARDRAIL END TREATMENT TYPE 1	11.00	EACH
0250	02369	GUARDRAIL END TREATMENT TYPE 2A	7.00	EACH
0260	02381	REMOVE GUARDRAIL	8,912.50	LF
0270	02387	GUARDRAIL CONNECTOR TO BRIDGE END TY A	1.00	EACH
0280	02391	GUARDRAIL END TREATMENT TYPE 4A	1.00	EACH
0290	02483	CHANNEL LINING CLASS II	106.00	TON
0300	02484	CHANNEL LINING CLASS III	327.00	TON
0310	02562	SIGNS	500.00	SQFT
0320	02565	OBJECT MARKER TYPE 2	4.00	EACH
0330	02599	FABRIC-GEOTEXTILE TYPE IV	100.00	SQYD
0340	02650	MAINTAIN & CONTROL TRAFFIC CLARK CO.	1.00	LS
0350	02671	PORTABLE CHANGEABLE MESSAGE SIGN	4.00	EACH
0360	02676	MOBILIZATION FOR MILL & TEXT CLARK CO.	1.00	LS
0370	02677	ASPHALT PAVE MILLING & TEXTURING	9,615.00	TON
0380	02696	SHOULDER RUMBLE STRIPS-SAWED	52,506.00	LF
0390	02714	SHOULDERING	58,592.00	LF
0400	05950	EROSION CONTROL BLANKET	3,000.00	SQYD
0410	06412	STEEL POST MILE MARKERS	6.00	EACH
0420	06417	FLEXIBLE DELINEATOR POST-W	177.00	EACH
0430	06418	FLEXIBLE DELINEATOR POST-Y	42.00	EACH
0440	06511	PAVE STRIPING-TEMP PAINT-6 IN	108,240.00	LF
0450	06592	PAVEMENT MARKER TYPE V-B W/R	352.00	EACH
0460	06593	PAVEMENT MARKER TYPE V-B Y/R	84.00	EACH
0470	06600	REMOVE PAVEMENT MARKER TYPE V	200.00	EACH
0480	08100	CONCRETE-CLASS A	8.00	CUYD
0490	08150	STEEL REINFORCEMENT	54.00	LB
0500	10020NS	FUEL ADJUSTMENT	11,297.00	DOLL

MATERIAL SUMMARY CONTRACT ID: 111051

0510	10030NS	ASPHALT ADJUSTMENT	19,907.00	DOLL
0520	20366NN	REPLACE GRATE	10.00	EACH
0530	20465EC	CLEAN CULVERT	1.00	LS
0540	21533EN	EMBANKMENT	2,500.00	CUYD
0550	21802EN	G/R STEEL W BEAM-S FACE (7 FT POST)	8,662.50	LF
0560	23143ED	KPDES PERMIT AND TEMP EROSION CONTROL CLARK CO.	1.00	LS
0570	23237EN10W	WATERBLAST STRIPE REMOVAL	1,250.00	LF
0580	24189ER	DURABLE WATERBORNE MARKING-6 IN W	37,108.00	LF
0590	24190ER	DURABLE WATERBORNE MARKING-6 IN Y	30,133.00	LF
0600	24191ER	DURABLE WATERBORNE MARKING-12 IN W	370.00	LF
0610	03298	EXPAN JOINT REPLACE 4 IN	88.00	LF
0620	03300	ELIMINATE TRANSVERSE JOINT	132.00	LF
0630	03304	BRIDGE OVERLAY APPROACH PAVEMENT	360.00	SQYD
0640	06554	PAVE STRIPING-DUR TY 1-4 IN W	600.00	LF
0650	06555	PAVE STRIPING-DUR TY 1-4 IN Y	600.00	LF
0660	08151	STEEL REINFORCEMENT-EPOXY COATED	350.00	LB
0670	08504	EPOXY SAND SLURRY	290.00	SQYD
0680	08510	REM EPOXY BIT FOREIGN OVERLAY	1,055.00	SQYD
0690	08526	CONC CLASS M FULL DEPTH PATCH	4.00	CUYD
0700	08534	CONCRETE OVERLAY-LATEX	42.00	CUYD
0710	08549	BLAST CLEANING	1,275.00	SQYD
0720	22146EN	CONCRETE PATCHING REPAIR	1,300.00	SQFT
0730	04795	CONDUIT-2 IN	110.00	LF
0740	04820	TRENCHING AND BACKFILLING	105.00	LF
0750	04829	PIEZOELECTRIC SENSOR	4.00	EACH
0760	04830	LOOP WIRE	1,770.00	LF
0770	04895	LOOP SAW SLOT AND FILL	344.00	LF
0780	20360ES818	WOOD POST	1.00	EACH
0790	20391NS835	JUNCTION BOX TYPE A	4.00	EACH
0800	20468EC	JUNCTION BOX-10 X 8 X 4	2.00	EACH
0810	02568	MOBILIZATION	1.00	LS
0820	02569	DEMOBILIZATION	1.00	LS

IM 0645(080) PES NO: DE08700641151
LEXINGTON-ASHLAND ROAD (I-64) MILL AND RESURFACE EAST AND WESTBOUND DIRECTIONS FROM MP 104.26 TO MP 112.1 IN MONTGOMERY COUNTY

LINE NO	BID CODE	DESCRIPTION	QUANTITY	UNIT
0010	00001	DGA BASE	1,042.00	TON
0020	00078	CRUSHED AGGREGATE SIZE NO 2	400.00	TON
0030	00100	ASPHALT SEAL AGGREGATE	1,806.00	TON
0040	00194	LEVELING & WEDGING PG76-22	750.00	TON
0050	00291	EMULSIFIED ASPHALT RS-2	217.00	TON
0060	00339	CL3 ASPH SURF 0.38D PG64-22	6,070.00	TON
0070	00342	CL4 ASPH SURF 0.38A PG76-22	17,058.00	TON
0080	00461	CULVERT PIPE-15 IN	156.00	LF
0090	00462	CULVERT PIPE-18 IN	16.00	LF
0100	00464	CULVERT PIPE-24 IN	36.00	LF
0110	01310	REMOVE PIPE	204.00	LF
0120	01480	CURB BOX INLET TYPE B	2.00	EACH
0130	01502	DROP BOX INLET TYPE 5A	1.00	EACH
0140	01891	ISLAND HEADER CURB TYPE 2	109.00	LF
0150	01982	DELINEATOR FOR GUARDRAIL-WHITE	340.00	EACH
0160	01983	DELINEATOR FOR GUARDRAIL-YELLOW	8.00	EACH
0170	01984	DELINEATOR FOR BARRIER-WHITE	15.00	EACH
0180	01985	DELINEATOR FOR BARRIER-YELLOW	15.00	EACH
0190	02003	RELOCATE TEMP CONC BARRIER	800.00	LF
0200	02220	FLOWABLE FILL	4.00	CUYD
0210	02237	DITCHING	41,471.00	LF
0220	02262	FENCE-WOVEN WIRE TYPE 1	76,039.00	LF
0230	02265	REMOVE FENCE	76,039.00	LF
0240	02351	GUARDRAIL-STEEL W BEAM-S FACE	200.00	LF
0250	02352	GUARDRAIL-STEEL W BEAM-D FACE	275.00	LF
0260	02363	GUARDRAIL CONNECTOR TO BRIDGE END TY A	5.00	EACH
0270	02365	CRASH CUSHION TYPE IX-A	2.00	EACH
0280	02367	GUARDRAIL END TREATMENT TYPE 1	20.00	EACH
0290	02369	GUARDRAIL END TREATMENT TYPE 2A	25.00	EACH
0300	02373	GUARDRAIL END TREATMENT TYPE 3	4.00	EACH
0310	02381	REMOVE GUARDRAIL	27,062.00	LF
0320	02383	REMOVE & RESET GUARDRAIL	500.00	LF
0330	02387	GUARDRAIL CONNECTOR TO BRIDGE END TY A	2.00	EACH
0340	02483	CHANNEL LINING CLASS II	843.00	TON
0350	02484	CHANNEL LINING CLASS III	2,011.00	TON
0360	02562	SIGNS	500.00	SQFT

0370	02565	OBJECT MARKER TYPE 2	4.00	EACH
0380	02650	MAINTAIN & CONTROL TRAFFIC MONTGOMERY CO.	1.00	LS
0390	02671	PORTABLE CHANGEABLE MESSAGE SIGN	4.00	EACH
0400	02676	MOBILIZATION FOR MILL & TEXT MONTGOMERY CO.	1.00	LS
0410	02677	ASPHALT PAVE MILLING & TEXTURING	27,631.00	TON
0420	02696	SHOULDER RUMBLE STRIPS-SAWED	160,760.00	LF
0430	02714	SHOULDERING	160,760.00	LF
0440	02898	RELOCATE CRASH CUSHION	2.00	EACH
0450	03171	CONCRETE BARRIER WALL TYPE 9T	800.00	LF
0460	05950	EROSION CONTROL BLANKET	9,000.00	SQYD
0470	06412	STEEL POST MILE MARKERS	16.00	EACH
0480	06417	FLEXIBLE DELINEATOR POST-W	421.00	EACH
0490	06418	FLEXIBLE DELINEATOR POST-Y	10.00	EACH
0500	06511	PAVE STRIPING-TEMP PAINT-6 IN	331,760.00	LF
0510	06592	PAVEMENT MARKER TYPE V-B W/R	1,204.00	EACH
0520	06600	REMOVE PAVEMENT MARKER TYPE V	900.00	EACH
0530	08100	CONCRETE-CLASS A	13.00	CUYD
0540	08150	STEEL REINFORCEMENT	98.00	LB
0550	08905	CRASH CUSHION TY VI CLASS CT	2.00	EACH
0560	10020NS	FUEL ADJUSTMENT	32,644.00	DOLL
0570	10030NS	ASPHALT ADJUSTMENT	57,525.00	DOLL
0580	20366NN	REPLACE GRATE	8.00	EACH
0590	20432ES112	REMOVE CRASH CUSHION	2.00	EACH
0600	20465EC	CLEAN CULVERT MONTGOMERY CO.	1.00	LS
0610	21533EN	EMBANKMENT	7,500.00	CUYD
0620	21802EN	G/R STEEL W BEAM-S FACE (7 FT POST)	26,812.50	LF
0630	23143ED	KPDES PERMIT AND TEMP EROSION CONTROL MONTGOMERY CO.	1.00	LS
0640	23237EN10W	WATERBLAST STRIPE REMOVAL	3,750.00	LF
0650	24189ER	DURABLE WATERBORNE MARKING-6 IN W	103,678.00	LF
0660	24190ER	DURABLE WATERBORNE MARKING-6 IN Y	82,800.00	LF
0670	24191ER	DURABLE WATERBORNE MARKING-12 IN W	3,186.00	LF
0680	02110	PARTIAL DEPTH PATCHING	60.00	CUFT
0690	08151	STEEL REINFORCEMENT-EPOXY COATED	100.00	LB
0700	22146EN	CONCRETE PATCHING REPAIR	400.00	SQFT
0710	23032EN	BRIDGE BARRIER RETROFIT	672.00	LF
0720	04795	CONDUIT-2 IN	110.00	LF
0730	04820	TRENCHING AND BACKFILLING	105.00	LF
0740	04829	PIEZOELECTRIC SENSOR	4.00	EACH
0750	04830	LOOP WIRE	1,770.00	LF
0760	04895	LOOP SAW SLOT AND FILL	344.00	LF
0770	20360ES818	WOOD POST	1.00	EACH
0780	20391NS835	JUNCTION BOX TYPE A	4.00	EACH
0790	20468EC	JUNCTION BOX-10 X 8 X 4	2.00	EACH
0800	02568	MOBILIZATION	1.00	LS
0810	02569	DEMOBILIZATION	1.00	LS

PART II

SPECIFICATIONS AND STANDARD DRAWINGS

SPECIFICATIONS REFERENCE

Any reference in the plans or proposal to the *Standard Specifications for Road and Bridge Construction, Edition of 2004*, and *Standard Drawings, Edition of 2000* are superseded by *Standard Specifications for Road and Bridge Construction, Edition of 2008* and *Standard Drawings, Edition of 2003 with the 2008 Revision.*

Supplemental Specifications to The Standard Specifications for Road and Bridge Construction, 2008 Edition

(Effective with the July15, 2011 Letting)

SUBSECTION: **REVISION:**	101.02 Abbreviations. Insert the following abbreviation and text into the section: KEPSC Kentucky Erosion Prevention and Sediment Control
SUBSECTION: **REVISION:**	101.03 Definitions. Replace the definition for Specifications – *Special Provisions* with the following: Additions and revisions to the Standard and Supplemental Specifications covering conditions peculiar to an individual project.
SUBSECTION: **REVISION:**	102.03 Contents of the Bid Proposal Form. Replace the first sentence of the first paragraph with the following: The Bid Proposal form will be available on the Department internet website (http://transportation.ky.gov/contract/). Delete the second paragraph. Delete the last paragraph.
SUBSECTION: **REVISION:**	102.04 Issuance of Bid Proposal Form. Replace Heading with the following: 102.04 Bidder Registration. Replace the first sentence of the first paragraph with the following: The Department reserves the right to disqualify or refuse to place a bidder on the eligible bidder's list for a project for any of the following reasons: Replace the last sentence of the subsection with the following: The Department will resume placing the bidder on the eligible bidder's list for projects after the bidder improves his operations to the satisfaction of the State Highway Engineer.
SUBSECTION: **REVISION:**	102.06 Examination of Plans, Specifications, Special Provisions, Special Notes, and Site of Work. Replace the first paragraph with the following: Examine the site of the proposed work, the Bid Proposal, Plans, specifications, contract forms, and bulletins and addendums posted to the Department's website and the Bid Express Bidding Service Website before submitting the Bid Proposal. The Department considers the submission of a Bid Proposal prima facie evidence that the bidder has made such examination and is satisfied as to the conditions to be encountered in performing the work and as to the requirements of the Contract.
SUBSECTION: **REVISION:**	102.07.01 General. Replace the first sentence with the following: Submit the Bid Proposal on forms furnished on the Bid Express Bidding Service website (www.bidx.com). Replace the first sentence of the third paragraph with the following: Bid proposals submitted shall use an eligible Digital ID issued by Bid Express.

Supplemental Specifications to The Standard Specifications for Road and Bridge Construction, 2008 Edition

(Effective with the July15, 2011 Letting)

SUBSECTION: **REVISION:**	102.07.02 Computer Bidding. Replace the first paragraph with the following: Subsequent to registering for a specific project, use the Department's Expedite Bidding Program on the internet website of the Department of Highways, Division of Construction Procurement (http://transportation.ky.gov/contract/). Download the bid file from the Bid Express Bidding Service Website to prepare a Bid Proposal for submission to the Department. Submit Bid Proposal electronically through Bid Express Bidding Service. Delete the second and third paragraph.
SUBSECTION: **REVISION:**	102.08 Irregular Bid Proposals. Delete the following from the first paragraph: 4) fails to submit a disk created from the Highway Bid Program. Replace the second paragraph with the following: The Department will consider Bid Proposals irregular and may reject them for the following reasons: 1) when there are unauthorized additions, conditional or alternate bids, or irregularities of any kind which may tend to make the Bid Proposal incomplete, indefinite, or ambiguous as to its meaning; or 2) when the bidder adds any provisions reserving the right to accept or reject an award, or to enter into a Contract pursuant to an award; or 3) any failure to comply with the provisions of Subsection 102.07; or 4) Bid Proposals in which the Department determines that the prices are unbalanced; or when the sum of the total amount of the Bid Proposal under consideration exceeds the bidder's Current Capacity Rating.
SUBSECTION: **REVISION:**	102.09 Bid Proposal Guaranty. Insert the following after the first sentence: Bid Proposals must have a bid proposal guaranty in the amount indicated in the bid proposal form accompany the submittal. A guaranty in the form of a paper bid bond, cashier's check, or certified check in an amount no less than the amount indicated on the submitted electronic bid is required when the electronic bid bond was not utilized with the Bid Express Bidding Service. Paper bid bonds must be delivered to the Division of Construction Procurement prior to the time of the letting.
SUBSECTION: **REVISION:**	102.10 Delivery of Bid Proposals. Replace paragraph with the following: Submit all Bid Proposals prior to the time specified in the Notice to Contractors. All bids shall be submitted electronically using Bid Express Bidding Services. Electronically submitted bids must be done in accordance with the requirements of the Bid Express Bidding Service.
SUBSECTION: **REVISION:**	102.11 Withdrawal or Revision of Bid Proposals. Replace the paragraph with the following: Bid Proposals can be withdrawn in accordance the requirements of the Bid Express Bidding Service prior to the time of the Letting.

Supplemental Specifications to The Standard Specifications for Road and Bridge Construction, 2008 Edition

(Effective with the July15, 2011 Letting)

SUBSECTION: **REVISION:**	102.13 Public Opening of Bid Proposals. Replace Heading with the following: 102.13 Public Announcement of Bid Proposals. Replace the paragraph with the following: The Department will publicly announce all Bid Proposals at the time indicated in the Notice to Contractors.
SUBSECTION: **REVISION:**	103.02 Award of Contract. Replace the first sentence of the third paragraph with the following: The Department will normally award the Contract within 10 working days after the date of receiving Bid Proposals unless the Department deems it best to hold the Bid Proposals of any or all bidders for a period not to exceed 60 calendar days for final disposition of award.
SUBSECTION: **REVISION:**	105.02 Plans and Working Drawings. Insert the following after the fourth paragraph: Submit electrical shop drawings, design data, and descriptive literature for materials in electronic format to the Division of Traffic Operations for approval. Drawings and literature shall be submitted for lighting and signal components. Notify the Engineer when submitting information to the Division of Traffic Operations. Do not begin work until shop drawings are approved. Submit shop drawings for traffic counting equipment and materials in electronic format to the Engineer or the Division of Planning. Notify the Engineer when submitting information directly to the Division of Planning. Do not begin work until shop drawings are reviewed and approved.
SUBSECTION: **REVISION:**	105.03 Record Plans. Replace the section with the following: Record Plans are those reproductions of the original Plans on which the accepted Bid Proposal was based and, and signed by a duly authorized representative of the Department. The Department will make these plans available for inspection in the Central Office at least 24 hours prior to the time of opening bids and up to the time of letting of a project or projects. The quantities appearing on the Record Plans are the same as those on which Bid Proposals are received. The Department will use these Record Plans as the controlling plans in the prosecution of the Contract. The Department will not make any changes on Record Plans subsequent to their issue unless done so by an approved contract modification. The Department will make 2 sets of Record Plans for each project, and will maintain one on file in the Central Office and one of file in the District Office. The Department will furnish the Contractor with the following: 1 full size, 2 half size and an electronic file copy of the Record Plans at the Pre-Construction conference.

Supplemental Specifications to The Standard Specifications for Road and Bridge Construction, 2008 Edition

(Effective with the July15, 2011 Letting)

SUBSECTION: **REVISION:**	105.12 Final Inspection and Acceptance of Work. Insert the following paragraphs after the first paragraph: Notify the Engineer when all electrical items are complete. A notice of the electrical work completion shall be made in writing to the Contractor. Electrical items will be inspected when the electrical work is complete and are not subject to waiting until the project as a whole has been completed. The Engineer will notify the Division of Traffic Operations within 3 days that all electrical items are complete and ready for a final inspection. A final inspection will be completed within 90 days after the Engineer notifies the Division of Traffic Operations of the electrical work completion. Energize all electrical items prior to notifying the Engineer that all electrical items are complete. Electrical items must remain operational until the Division of Traffic Operations has inspected and accepted the electrical portion of the project. Payment for the electrical service is the responsibility of the Contractor from the time the electrical items are energized until the Division of Traffic Operations has accepted the work. Complete all corrective work within 90 calendar days of receiving the original electrical inspection report. Notify the Engineer when all corrective work is complete. The Engineer will notify the Division of Traffic Operations that the corrective work has been completed and the project is ready for a follow-up inspection. Upon re-inspection, if additional corrective work is required, complete within the same 90 calendar day allowance. The Department will not include time between completion of the corrective work and the follow up electrical inspection(s). The 90 calendar day allowance is cumulative regardless of the number of follow-up electrical inspections required. The Department will assume responsibility for the electrical service on a project once the Division of Traffic Operations gives final acceptance of the electrical items on the project. The Department will also assume routine maintenance of those items. Any damage done to accepted electrical work items by other Contractors shall be the responsibility of the Prime Contractor. The Department will not be responsible for repairing damage done by other contractors during the construction of the remaining project. Failure to complete the electrical corrective work within the 90 calendar day allowance will result in penalties assessed to the project. Penalties will be assessed at ½ the rate of liquidated damages established for the contract. Replace the following in the second sentence of the second paragraph: Replace Section 213 with Section 212. Delete the fifth paragraph from the section.
SUBSECTION: **REVISION:**	105.13 Claim Resolution Process. Replace the last sentence of the 3. Bullet with the following: If the Contractor did not submit an as-bid schedule at the Pre-Construction Meeting or a written narrative in accordance with Subsection 108.02, the Cabinet will not consider the claim for delay. Delete the last paragraph from the section.

Supplemental Specifications to The Standard Specifications for Road and Bridge Construction, 2008 Edition

(Effective with the July15, 2011 Letting)

SUBSECTION: 106.04 Buy America Requirement.
REVISION: Replace the section with the following:

106.04 Buy America Requirement. Follow the "Buy America" provisions as required by Title 23 Code of Federal Regulations § 635.410. Except as expressly provided herein all manufacturing processes of steel or iron materials including but not limited to structural steel, guardrail materials, corrugated steel, culvert pipe, structural plate, prestressing strands, and steel reinforcing bars shall occur in the United States of America, including the application of:

- Coating,
- Galvanizing,
- Painting, and
- Other coating that protects or enhances the value of steel or iron products.

The following are exempt, unless processed or refined to include substantial amounts of steel or iron material, and may be used regardless of source in the domestic manufacturing process for steel or iron material:

- Pig iron,
- Processed, pelletized, and reduced iron ore material, or
- Processed alloys.

The Contractor shall submit a certification stating that all manufacturing processes involved with the production of steel or iron materials occurred in the United States.

Produce, mill, fabricate, and manufacture in the United States of America all aluminum components of bridges, tunnels, and large sign support systems, for which either shop fabrication, shop inspection, or certified mill test reports are required as the basis of acceptance by the Department.

Use foreign materials only under the following conditions:

1) When the materials are not permanently incorporated into the project; or
2) When the delivered cost of such materials used does not exceed 0.1 percent of the total Contract amount or $2,500.00, whichever is greater.

The Contractor shall submit to the Engineer the origin and value of any foreign material used.

SUBSECTION: 106.10 Field Welder Certification Requirements.
REVISION: Insert the following sentence before the first sentence of the first paragraph:

All field welding must be performed by a certified welder unless otherwise noted.

SUBSECTION: 108.02 Progress Schedule.
REVISION: Insert the following prior to the first paragraph:

Specification 108.02 applies to all Cabinet projects except the following project types:

- Right of Way Mowing and/or Litter Removal
- Waterborne Paint Striping
- Projects that contain Special Provision 82
- Projects that contain the Special Note for CPM Scheduling

Insert the following paragraph after paragraph two:

Working without the submittal of a Written Narrative is violation of this specification and additionally voids the Contractor's right to delay claims.

Insert the following paragraph after paragraph six:

The submittal of bar chart or Critical Path Method schedule does not relieve the Contractor's requirement to submit a Written Narrative schedule.

Supplemental Specifications to The Standard Specifications for Road and Bridge Construction, 2008 Edition

(Effective with the July15, 2011 Letting)

	Insert the following at the beginning of the first paragraph of A) Written Narrative.: Submit the Written Narrative Schedule using form TC 63-50 available at the Division of Construction's website (http://www.transportation.ky.gov/construction/ResCenter/ResCenter.htm). Replace Part A) Written Narrative 1. And 2. with the following: 1. Provide a description that includes how the Contractor will sequence and stage the work, how the Contractor plans to maintain and control traffic being specific and detailed, and what equipment and crew sizes are planned to execute the work. 2. Provide a list of project milestones including, if applicable, winter shut-downs, holidays, or special events. The Contractor shall describe how these milestones and other dates effect the prosecution of the work. Also, include start date and completion date milestones for the contract, each project if the contract entails multiple projects, each phase of work, site of work, or segment of work as divided in the project plans, proposal, or as subdivided by the Contractor.
SUBSECTION: **REVISION:**	109.07.01 Liquid Asphalt. Add the following to the Adjustable Contract Items: • Stone Matrix Asphalt for Base • Stone Matrix Asphalt for Surface
SUBSECTION: **REVISION:**	110.01 Mobilization. Replace paragraph three with the following: Do not bid an amount for Mobilization that exceeds 5 percent of the sum of the total amounts bid for all items in the Bid Proposal, excluding Mobilization, Demobilization, and contingent amounts established for adjustments and incentives. The Department will automatically adjust any Bid Proposals that are in excess of this amount down to 5 percent to compare Bid Proposals and award the Contract. The Department will award a Contract for the actual amount bid when the amount bid for Mobilization is less than 5 percent, or the Department will award the Contract for the adjusted bid amount of 5 percent when the amount bid for Mobilization is greater than 5 percent. If any errors in unit bid prices for other Contract items in a Contractor's Bid Proposal are discovered after bid opening and such errors reduce the total amount bid for all other items, excluding Mobilization, Demobilization, and contingent amounts established for adjustments and incentives, so that the percent bid for Mobilization is larger than 5 percent, the Department will adjust the amount bid for Mobilization to 5 percent of the sum of the corrected total bid amounts.
SUBSECTION: **REVISION:**	110.02 Demobilization. Replace the third paragraph with the following: Bid an amount for Demobilization that is a minimum of $1,000 or 1.5 percent of the sum of the total amounts bid for all other items in the Bid Proposal, excluding Mobilization, Demobilization, and contingent amounts established for adjustments and incentives. The Department will automatically adjust any Bid Proposal that is less than this amount up to $1,000 or 1.5 percent to compare Bid Proposals and award the Contract. The Department will award a Contract for the actual amount bid when the amount bid for demobilization exceeds 1.5 percent, or the Department will award the Contract for the adjusted bid amount when the amount bid for demobilization is less than the minimum of $1,000 or less than 1.5 percent of the sum of the total amounts bid for all other items in the Bid Proposal, excluding Mobilization, Demobilization, and contingent amounts established for adjustments and incentives.
SUBSECTION: **REVISION:**	110.04 Payment. Insert the following paragraph following the demobilization payment schedule (4th paragraph): The Department will withhold an amount equal to $1,000 for demobilization, regardless of the schedule listed above. The $1,000 withheld for demobilization will be paid when the final estimate is paid.

Supplemental Specifications to The Standard Specifications for Road and Bridge Construction, 2008 Edition

(Effective with the July15, 2011 Letting)

SUBSECTION: **REVISION:**	112.03.01 General Traffic Control. Replace paragraph three with the following: All flaggers shall be trained in current MUTCD flagging procedures. Proof of training must be available for review at the Department's request. Flagging credentials must be current within the last 5 years.
SUBSECTION: **PART:** **REVISION:**	112.03.11 Temporary Pavement Markings. B) Placement and Removal of Temporary Striping. Replace the 2nd sentence of the first paragraph with the following: On interstates and parkways, and other roadways approved by the State Highway Engineer, install pavement striping that is 6 inches in width.
SUBSECTION: **REVISION:**	112.03.12 Project Traffic Coordinator (PTC). Add the following at the end of the subsection: After October 1, 2008 the Department will require the PTC to have successfully completed the applicable qualification courses. Personnel that have not successfully completed the applicable courses by that date will not be considered qualified. Prior to October 1, 2008, conform to Subsection 108.06 A) and ensure the designated PTC has sufficient skill and experience to properly perform the task.
SUBSECTION: **REVISION:**	112.03.15 Non-Compliance of Maintain and Control of Traffic. Add the following section: **112.03.15 Non-Compliance of Maintain and Control of Traffic.** It is the Contractor's responsibility to conform to the traffic control requirements in the TCP, Proposal, plan sheets, specifications, and the Manual on Uniform Traffic Control Devices. Unless specified elsewhere in the contract, a penalty will be assessed in the event of non-compliance with Maintain and Control of Traffic requirements. These penalties will be assessed when the Contractor fails to correct a situation or condition of non-compliance with the contract traffic control requirements after being notified by the Engineer. The calculation of accrued penalties for non-compliance will be based upon the date/time of notification by the Engineer. The amount of the penalty assessed for non-compliance will be determined based upon the work zone duration, as defined by the MUTCD, and will be the greatest of the different calculation methods indicated below: A) Long-term stationary work that occupies a location more than 3 days. Correct the non-compliant issue within 24 hours from initial notification by the Engineer. If the issue is not corrected within 24 hours from the initial notification, a penalty for non-compliance will be assessed on a daily basis beginning from the initial notification of non-compliance. The Contractor will be assessed a $1,000 daily penalty or the amount equal to the contract liquidated damages in Section 108.09, whichever of the 2 is greater. The penalty for non-compliance will escalate as follows for continued non-compliance after the initial notification. 3 Days after Notification $1,500 daily penalty or 1.5 times the contract liquidated damages daily charge rate in Section 108.09, whichever is greater. 7 Days after Notification $2,000 daily penalty or double the contract liquidated damages daily charge rate in Section 108.09, whichever is greater.

Supplemental Specifications to The Standard Specifications for Road and Bridge Construction, 2008 Edition

(Effective with the July15, 2011 Letting)

	B) Intermediate-term stationary work that occupies a location more than one daylight period up to 3 days, or nighttime work lasting more than 1 hour. Correct the non-compliant issue within 4 hours from initial notification by the Engineer. If the issue is not corrected within 4 hours from notification, a penalty for non-compliance will be assessed on an hourly basis beginning from the initial notification of non-compliance. The penalty for non-compliance will be assessed at $200 per hour. C) Short-term stationary is work that occupies a location for more than 1 hour within a single 24-hour period. Correct the non-compliant issue within 1 hour from initial notification by the Engineer. If the issue is not corrected within 1 hour from notification, a penalty for non-compliance will be assessed on an hourly basis beginning from the initial notification of non-compliance. The penalty for non-compliance will be assessed at $200 per hour. If the Contractor remains in violation of the Maintain and Control of Traffic requirements, or if the Department determines it to be in the public's interest, work will be suspended in accordance with Section 108.08 until the deficiencies are corrected. The Department reserves the right to correct deficiencies by any means available and charge the Contractor for labor, equipment, and material costs incurred in emergency situations.
SUBSECTION: **REVISION:**	206.03.02 Embankment Replace the last paragraph with the following: When rock roadbed is specified, construct the upper 2 feet of the embankment according to Subsection 204.03.09 A).
SUBSECTION: **REVISION:**	213.03.03 Inspection and Maintenance. Replace the last sentence of the second paragraph with the following: Initiate corrective action within 24 hours of any noted deficiency and complete the work within 7 calendar days of receipt of the report. The Contractor shall make a concentrated effort to complete any corrective action required prior to the next predicted rainfall event. Insert the following paragraph after the second paragraph: When the Contractor is required to obtain the KPDES permit, it is their responsibility to ensure compliance with the inspection and maintenance requirements of the permit. The Engineer will perform verification inspections a minimum of once per month and within 7 days of a ½ inch or greater rainfall event. The Engineer will document these inspections using Form TC 63-61 A. The Engineer will provide copies of the inspection only when improvements to the BMP's are required. Verification inspections performed by the Engineer do not relieve the Contractor of any responsibility for compliance with the KPDES permit. Initiate corrective action within 24 hours of any noted deficiency and complete the work within 7calendar days of receipt of the report. The Contractor shall make a concentrated effort to complete any corrective action required prior to the next predicted rainfall event.

Supplemental Specifications to The Standard Specifications for Road and Bridge Construction, 2008 Edition

(Effective with the July15, 2011 Letting)

SUBSECTION: **PART:** **REVISION:**	213.03.05 Temporary Control Measures. E) Temporary Seeding and Protection. Replace the first paragraph with the following: Apply an Annual Rye seed mix at a rate of 100 pounds per acre during the months of March through August. In addition to the Annual Rye, add 10 pounds of German Foxtail-Millet (Setaria italica), when performing temporary seeding during the months of June through August. During the months of September through February, apply Winter Wheat or Rye Grain at a rate of 100 pounds per acre. Obtain the Engineer's approval prior to the application of the seed mixture.
SUBSECTION: **PART:** **REVISION:**	213.03.05 Temporary Control Measures. F) Temporary Mulch. Replace the last sentence with the following: Place temporary mulch to an approximate 2-inch loose depth (2 tons per acre) and anchor it into the soil by mechanically crimping it into the soil surface or applying tackifier to provide a protective cover. Regardless of the anchoring method used, ensure the protective cover holds until disturbance is required or permanent controls are in installed.
SUBSECTION: **REVISION:**	303.05 Payment. Replace the second paragraph of the section with the following: The Department will make payment for Drainage Blanket-Type II (ATDB) according to the Lot Pay Adjustment Schedule for Specialty Mixtures in Section 402.
SUBSECTION: **PART:** **REVISION:**	401.02.04 Special Requirements for Dryer Drum Plants. F) Production Quality Control. Replace the first sentence with the following: Stop mixing operations immediately if, at any time, a failure of the automatic electronic weighing system of the aggregate feed, asphalt binder feed, or water injection system control occurs.
SUBSECTION: **REVISION:**	401.02.04 Special Requirements for Dryer Drum Plants. Add the following: Part G) **Water Injection System.** Provided each system has prior approval as specified in Subsection 402.01.01, the Department will allow the use of water injection systems for purposes of foaming the asphalt binder and lowering the mixture temperature for production of Warm Mix Asphalt (WMA). Ensure the equipment for water injection meets the following requirements: 1) Injection equipment computer controls are automatically coupled to the plants controls (manual operation is not permitted); 2) Injection equipment has variable controls that introduce water ratios based on production rates of mixtures; 3) Injects water into the flow of asphalt binder prior to contacting the aggregate; 4) Provides alarms on the water injection system that operate when the flow of water is interrupted or deviates from the prescribed water rate.
SUBSECTION: **REVISION:**	401.03.01 Preparation of Mixtures. Replace the last sentence of the second paragraph with the following: Do not use asphalt binder while it is foaming in a storage tank.

Supplemental Specifications to The Standard Specifications for Road and Bridge Construction, 2008 Edition

(Effective with the July15, 2011 Letting)

SUBSECTION: 401.03.01 Preparation of Mixtures.
REVISION: Replace the third paragraph and Mixing and Laying Temperature table with the following:

Maintain the temperature of the component materials and asphalt mixture within the ranges listed in the following table:

MIXING AND LAYING TEMPERATURES (ºF)			
Material		Minimum	Maximum
Aggregates		240	330
Aggregates used with Recycled Asphalt Pavement (RAP)		240	—
Asphalt Binders	PG 64-22	230	330
	PG 76-22	285	350
Asphalt Mixtures at Plant (Measured in Truck)	PG 64-22 HMA	250	330
	PG 76-22 HMA	310	350
	PG 64-22 WMA	230	275
	PG 76-22 WMA	250	300
Asphalt Mixtures at Project (Measured in Truck When Discharging)	PG 64-22 HMA	230	330
	PG 76-22 HMA	300	350
	PG 64-22 WMA	210	275
	PG 76-22 WMA	240	300

SUBSECTION: 402.01 Description.
REVISION: Replace the paragraph with the following:

Provide the process control and acceptance testing of all classes and types of asphalt mixtures which may be furnished either as hot mix asphalt (HMA) or warm mix asphalt (WMA) produced with water injection systems.

SUBSECTION 402.01.01 Warm Mix Asphalt (WMA) Evaluation and Approval.
REVISION: Add the following subsection:

402.01.01 Warm Mix Asphalt (WMA) Evaluation and Approval.
The Department will evaluate trial production of WMA by use of a water injection system provided the system is installed according to the manufacturer's requirements and satisfies the requirements of Section 401. Evaluation will include production and placement of WMA to demonstrate adequate mixture quality including volumetric properties and density by Option A as specified in Subsection 402.03.02 D). Do not place WMA for evaluation on Department projects. Provided production and placement operations satisfy the applicable quality levels, the Department will approve WMA production on Department projects using the water injection system as installed on the specific asphalt mixing plant evaluated.

SUBSECTION: 402.05.02 Asphalt Mixtures and Mixtures With RAP.
REVISION: Replace Subsection Title as below:

402.05.02 Asphalt Mixtures, HMA and WMA, Including Mixtures With RAP.

SUBSECTION: 402.05.02 Asphalt Mixtures, HMA and WMA, Including Mixtures With RAP.
REVISION: Replace the paragraph with the following:

The Department will pay for the mixture at the Contract unit bid price and apply a Lot Pay Adjustment for each lot placed based on the degree of compliance with the specified tolerances. Using the appropriate Lot Pay Adjustment Schedule, the Department will assign a pay value for the applicable properties within each sublot and average the sublot pay values to determine the pay value for a given property for each lot. The Department will apply the Lot Pay Adjustment for each lot to a defined unit price of $50.00 per ton. The Department will calculate the Lot Pay Adjustment using all possible incentives and disincentives but will not allow the overall pay value for a lot to exceed 1.00.

Supplemental Specifications to The Standard Specifications for Road and Bridge Construction, 2008 Edition

(Effective with the July15, 2011 Letting)

SUBSECTION: 402.05.02 Asphalt Mixtures, HMA and WMA, Including Mixtures With RAP.
PART: C) Conventional and RAP Mixtures Placed on Shoulders.
REVISION: Replace Title and Text with the following:

C) HMA, WMA and RAP Mixtures Placed on Shoulders or Placed as Asphalt Pavement Wedge.

1) Placed monolithically with the Mainline – Width of 4 feet or less. The Department will pay as mainline mixture.
2) Placed monolithically with the Mainline – Width of greater than 4 feet. The Department will pay as mainline mixture but use 1.00 for the Lane and Joint Density Pay Value for shoulder or Asphalt Pavement Wedge quantities.
3) Placed Separately. The Department will use 1.00 for the Lane and Joint Density Pay Value.

SUBSECTION: 402.05.02 Asphalt Mixtures, HMA and WMA, Including Mixtures With RAP.
PART: D) Conventional and RAP Mixtures Placed Monolithically as Asphalt Pavement Wedge.
REVISION: Replace the title with the following:
D) HMA, WMA, and RAP Mixtures Placed Monolithically as Asphalt Pavement Wedge.

Delete the following:
D) HMA, WMA, and RAP Mixtures Placed Monolithically as Asphalt Pavement Wedge. The Department will pay as mainline mixture but use a 1.00 pay value for all properties.

SUBSECTION: 402.05.02 Asphalt Mixtures for Temporary Pavement.
PART: E) Asphalt Mixtures for Temporary Pavement.
REVISION: Replace E) Asphalt Mixtures for Temporary Pavement with the following:

D) Asphalt Mixtures for Temporary Pavement.

SUBSECTION: 402.05.02 Asphalt Mixtures, HMA and WMA, Including Mixtures With RAP.
PART: Lot Pay Adjustment Schedule, Compaction Option A, Base and Binder Mixtures
TABLES: VMA
REVISION: Replace the VMA table with the following:

VMA	
Pay Value	Deviation From Minimum
1.00	≥ min. VMA
0.95	0.1-0.5 below min.
0.90	0.6-1 0 below min.
(1)	> 1.0 below min.

SUBSECTION: 402.05.02 Asphalt Mixtures, HMA and WMA, Including Mixtures With RAP.
PART: Lot Pay Adjustment Schedule, Compaction Option A, Surface Mixtures
TABLES: VMA
REVISION: Replace the VMA table with the following:

VMA	
Pay Value	Deviation From Minimum
1.00	≥ min. VMA
0.95	0.1-0.5 below min.
0.90	0.6-1.0 below min.
(1)	> 1.0 below min.

Supplemental Specifications to The Standard Specifications for Road and Bridge Construction, 2008 Edition

(Effective with the July15, 2011 Letting)

SUBSECTION: 402.05.02 Asphalt Mixtures, HMA and WMA, Including Mixtures With RAP.
PART: Lot Pay Adjustment Schedule, Compaction Option B Mixtures
TABLE: VMA
REVISION: Replace the VMA table with the following:

VMA	
Pay Value	Deviation From Minimum
1.00	≥min. VMA
0.95	0 1-0.5 bel w min.
0.9	0.6-1.0 below min.
(2)	> 1.0 below min.

SUBSECTION: 403.03.03 Preparation of Mixture.
PART: C) Mix Design Criteria.
NUMBER: 1) Preliminary Mix Design.
REVISION: Replace the last two sentences of the paragraph and table with the following:

Complete the volumetric mix design at the appropriate number of gyrations as given in the table below for the number of 20-year ESAL's. The Department will define the relationship between ESAL classes, as given in the bid items for Superpave mixtures, and 20-year ESAL ranges as follows:

		Number of Gyrations		
Class	**ESAL's (millions)**	$N_{initial}$	N_{design}	N_{max}
2	< 3.0	6	50	75
3	3.0 to < 30.0	7	75	115
4	≥ 30.0	8	100	160

SUBSECTION: 403.03.09 Leveling and Wedging, and Scratch Course.
PART: A) Leveling and Wedging.
REVISION: Replace the first sentence of the first paragraph with the following:

Conform to the gradation requirements (control points) of AASHTO M 323 for base, binder, or surface as the Engineer directs.

SUBSECTION: 403.03.09 Leveling and Wedging, and Scratch Course.
PART: B) Scratch Course.
REVISION: Replace the second sentence of the first paragraph with the following:

Conform to the gradation requirements (control points) of AASHTO M 323 for base, binder, or surface as the Engineer directs.

SUBSECTION: 407.01 DESCRIPTION.
REVISION: Replace the first sentence of the paragraph with the following:

Construct a pavement wedge composed of a hot-mixed or warm-mixed asphalt mixture.

SUBSECTION: 409.01 DESCRIPTION.
REVISION: Replace the first sentence of the paragraph with the following:

Use reclaimed asphalt pavement (RAP) from Department projects or other approved sources in hot mix asphalt (HMA) or warm mix asphalt (WMA) provided mixture requirements are satisfied.

SUBSECTION: 410.01 DESCRIPTION.
REVISION: Delete the second sentence of the paragraph.

Supplemental Specifications to The Standard Specifications for Road and Bridge Construction, 2008 Edition

(Effective with the July15, 2011 Letting)

SUBSECTION: 410.03.01 Corrective Work.
REVISION: Replace the last sentence of the paragraph with the following:

Provide a final surface comparable to the adjacent pavement that does not require corrective work in respect to texture, appearance, and skid resistance.

SUBSECTION: 410.03.02 Ride Quality.
PART: B) Requirements.
NUMBER: 1) Category A.
REVISION: Replace the last sentence of the first paragraph with the following:

At the Department's discretion, a pay deduction of $1200 per 0.1-lane-mile section may be applied in lieu of corrective work.

SUBSECTION: 410.03.02 Ride Quality.
PART: B) Requirements.
NUMBER: 2) Category B.
REVISION: Replace the second and third sentence of the first paragraph with the following:

When the IRI is greater than 90 for a 0.1-mile section, perform corrective work, or remove and replace the pavement to achieve the specified IRI. At the Department's discretion, a pay deduction of $750 per 0.1-lane-mile section may be applied in lieu of corrective work.

SUBSECTION: 410.05 PAYMENT.
REVISION: Add the following sentence to the end of the first paragraph:

The sum of the pay value adjustments for ride quality shall not exceed $0 for the project as a whole.

SUBSECTION: 413.05.02 CL3 SMA BASE 1.00D PG76-22.
REVISION: Insert the following sentence between the first and second sentence of the first paragraph:

The Department will calculate the Lot Pay Adjustment using all possible incentives and disincentives but will not allow the overall pay value for a lot to exceed 1.00.

SUBSECTION: 413.05.02 CL3 SMA BASE 1.00D PG 76-22.
TABLE: JOINT DENSITY TABLE
REVISION: Replace the joint density table with the following:

LANE DENSITY	
Pay Value	Test Result (%)
1.05	95.0-96.5
1.00	93.0-94.9
0.95	92.0-92.9 or 96.6-97.0
0.90	91.0-91.9 or 97.1-97.5
(1)	< 91.0 or > 97.5

SUBSECTION: 413.05.03 CL3 SMA SURF 0.50A PG76-22 and CL3 SMA SURF 0.38A PG76-22.
REVISION: Insert the following sentence between the first and second sentence of the first paragraph:

The Department will calculate the Lot Pay Adjustment using all possible incentives and disincentives but will not allow the overall pay value for a lot to exceed 1.00.

Supplemental Specifications to The Standard Specifications for Road and Bridge Construction, 2008 Edition

(Effective with the July15, 2011 Letting)

SUBSECTION: 413.05.03 CL3 SMA SURF 0.50A PG76-22 and CL3 SMA SURF 0.38A PG76-22.
TABLE: JOINT DENSITY TABLE
REVISION: Replace the joint density table with the following:

DENSITY		
Pay Value	Lane Density Test Result (%)	Joint Density Test Result (%)
1.05	95.0-96.5	92.0-96.0
1.00	93.0-94.9	90.0-91.9
0.95	92.0-92.9 or 96.6-97.0	89.0-89.9 or 96.1-96.5
0.90	91.0-91.9 or 97.1-97.5	88.0-88.9 or 96.6-97.0
0.75	----	< 88.0 or > 97.0
(1)	< 91.0 or > 97.5	----

SUBSECTION: 501.05.02 Ride Quality.
REVISION: Add the following sentence to the end of the first paragraph:

The sum of the pay value adjustments for the ride quality shall not exceed $0 for the project as a whole.

SUBSECTION: 505.03.04 Detectable Warnings.
REVISION: Replace the first sentence with the following:

Install detectable warning pavers at all sidewalk ramps and on all commercial entrances according to the Standard Drawings.

SUBSECTION: 505.04.04 Detectable Warnings.
REVISION: Replace the paragraph with the following:

The Department will measure the quantity in square feet. All retrofit applications for maintenance projects will require the removal of existing sidewalks to meet the requirements of the standard drawings applicable to the project. The cost associated with the removal of the existing sidewalk will be incidental to the detectable warnings bid item or incidental to the bid item for the construction of the concrete sidewalk unless otherwise noted.

SUBSECTION: 505.05 PAYMENT.
REVISION: Add the following to the bid item table:

Code	Pay Item	Pay Unit
23158ES505	Detectable Warnings	Square Foot

SUBSECTION: 509.01 DESCRIPTION.
REVISION: Replace the second paragraph with the following:

The Department may allow the use of similar units that conform to the National Cooperative Highway Research Program (NCHRP) 350 Test Level 3 (TL-3) requirements and the typical features depicted by the Standard Drawings. Obtain the Engineers approval prior to use. Ensure the barrier wall shape, length, material, drain slot dimensions and locations typical features are met and the reported maximum deflection is 3 feet or less from the NCHRP 350 TL-3 for Test 3 – 11 (pickup truck impacting at 60 mph at a 25-degree angle.)

Supplemental Specifications to The Standard Specifications for Road and Bridge Construction, 2008 Edition

(Effective with the July15, 2011 Letting)

SUBSECTION: **REVISION:**	601.03.02 Concrete Producer Responsibilities. Replace the first sentence with the following: Obtain the concrete from producers that are in compliance with KM 64-323 and on the Department's List of Approved Materials. Add the following to the first paragraph: If a concrete plant becomes unqualified during a project and there are no other qualified plants in the region, the Department will provide qualified personnel to witness and ensure the producer follows the required specifications. The Department will assess the Contractor a $100 per hour charge for this service.
SUBSECTION: **PART:** **REVISION:**	601.03.02 Concrete Producer Responsibilities. B) Certified Personnel. Replace the second sentence with the following: Ensure that the concrete technicians are certified as ACI Level I (Level I) and KRMCA Level II (Level II).
SUBSECTION: **PART:** **REVISION:**	601.03.02 Concrete Producer Responsibilities. C) Quality Control. Replace the second sentence with the following: Ensure that the Level II concrete technician is present when work is in progress and is responsible for inspecting trucks, batch weight calculations, monitoring batching, making mixture adjustments, reviewing the slump, air content, unit weight, temperature, and aggregate tests, all to provide conforming concrete to the project.
SUBSECTION: **PART:** **REVISION:**	601.03.02 Concrete Producer Responsibilities. D) Producer Testing. Replace with the following: When producing for state work, have a Qualified Concrete Aggregate Technician or KYTC Qualified Aggregate Technician perform, at a minimum, weekly gradations and minus 200 wash tests and daily moisture contents of coarse and fine aggregate (Fine aggregates will not require a minus 200 wash test). Using the daily moisture contents, adjust the approved mix design accordingly prior to production. Ensure that the Level II concrete technician is present when work is in progress and is responsible for inspecting trucks, batch weight calculations, monitoring batching, making mixture adjustments, reviewing the slump, air content, unit weight, temperature, and aggregate tests, all to provide conforming concrete to the project.
SUBSECTION: **PART:** **REVISION:**	601.03.02 Concrete Producer Responsibilities. E) Trip Tickets. Replace the second sentence with the following: Include on the trip ticket the Sample ID for the approved mix design and a statement certifying that the data on the ticket is correct and that the mixture conforms to the mix design.
SUBSECTION: **PART:** **NUMBER:** **REVISION:**	601.03.03 Proportioning and Requirements. C) Mixtures Using Type IP, IS, and I(SM) Cement or Mineral Admixtures 2) Mineral Admixtures. Replace the second sentence with the following: Reduction of the total cement content by a combination of mineral admixtures will be allowed, up to a maximum of 40 percent.

Supplemental Specifications to The Standard Specifications for Road and Bridge Construction, 2008 Edition

(Effective with the July15, 2011 Letting)

SUBSECTION: **PART:** **NUMBER:** **LETTER:** **REVISION:**	601.03.03 Proportioning and Requirements. C) Mixtures Using Type IP, IS, and I(SM) Cement or Mineral Admixtures 2) Mineral Admixtures. a) Fly Ash. Delete the last sentence of the third paragraph.
SUBSECTION: **PART:** **NUMBER:** **LETTER:** **REVISION:**	601.03.03 Proportioning and Requirements. C) Mixtures Using Type IP, IS, and I(SM) Cement or Mineral Admixtures 2) Mineral Admixtures. b) Ground Granulated Blast Furnace Slag (GGBF Slag). Delete the second sentence of the third paragraph.
SUBSECTION: **PART:** **REVISION:**	601.03.03 Proportioning and Requirements. E) Measuring. Add the following sentence: Conform to the individual ingredient material batching tolerances in Appendix A.
SUBSECTION: **PART:** **REVISION:**	601.03.09 Placing Concrete. A) General. Replace the last sentence of the fourth paragraph with the following: Do not use aluminum or aluminum alloy troughs, pipes, or chutes that have surface damage or for lengths greater than 20 feet. Replace the second sentence of the fifth paragraph with the following: When pumping, equip the delivery pipe with a nozzle, having a minimum of 2 right angles, at the discharge end. Alternate nozzles or restriction devices may be allowed with prior approval by the Engineer.
SUBSECTION: **REVISION:**	605.02.05 Forms. Delete the last sentence.
SUBSECTION: **REVISION:**	605.03.04 Tack Welding. Replace with the following: The Department does not allow tack welding.
SUBSECTION: **REVISION:**	606.02.11 Coarse Aggregate. Replace with the following: Conform to Section 805, size No. 8 or 9-M.
SUBSECTION: **PART:** **REVISION:**	609.03.04 Expansion and Fixed Joints. D) Preformed Neoprene Joint Seals. Replace the last sentence of paragraph seven with the following: Field splices will not be allowed during partial width construction. It is Contractor's responsibility to determine and install the length of seal required for the joint to barrier wall as per the standard drawing.
SUBSECTION: **REVISION:**	609.03.09 Finish with Burlap Drag. Delete the entire section.
SUBSECTION: **REVISION:**	609.04.06 Joint Sealing. Replace Subsection 601.04 with the following: Subsection 606.04.08.

Supplemental Specifications to The Standard Specifications for Road and Bridge Construction, 2008 Edition

(Effective with the July15, 2011 Letting)

SUBSECTION: **REVISION:**	609.05 Payment. Replace the Pay Unit for Joint Sealing with the following: See Subsection 606.05.
SUBSECTION: **REVISION:**	701.03.06 Initial Backfill. Replace the first sentence of the last paragraph with the following: When the Contract specifies, perform quality control testing to verify compaction according to KM 64-512.
SUBSECTION: **REVISION:**	701.03.08 Testing of Pipe. Replace and rename the subsection with the following: **701.03.08 Inspection of Pipe.** The engineer will visually inspect all pipe. The Department will require camera/video inspection on a minimum of 50 percent of the linear feet of all installed pipe structures. Conduct camera/video inspection according to KM 64-114. The pipe to be installed under pavement will be selected first. If the total linear feet of pipe under pavement is less than 50 percent of the linear feet of all pipe installed, the Engineer will randomly select installations from the remaining pipe structures on the project to provide for the minimum inspection requirement. The pipe will be selected in complete runs (junction-junction or headwall-headwall) until the total linear feet of pipe to be inspected is at least 50 percent of the total linear feet of all installed pipe on the project. Unless the Engineer directs otherwise, schedule the inspections no sooner than 30 days after completing the installation and completion of earthwork to within 1 foot of the finished subgrade. When final surfacing conflicts with the 30-day minimum, conduct the inspections prior to placement of the final surface. The contractor must ensure that all pipe are free and clear of any debris so that a complete inspection is possible. Notify the Engineer immediately if distresses or locations of improper installation are discovered. When camera testing shows distresses or improper installation in the installed pipe, the Engineer may require additional sections to be tested. Provide the video and report to the Engineer when testing is complete in accordance with KM 64-114. Pipes that exhibit distress or signs of improper installation may necessitate repair or removal as the Engineer directs. These signs include, but are not limited to: deflection, cracking, joint separation, sagging or other interior damage. If corrugated metal or thermoplastic pipes exceed the deflection and installation thresholds indicated in the table below, provide the Department with an evaluation of each location conducted by a Professional Engineer addressing the severity of the deflection, structural integrity, environmental conditions, design service life, and an evaluation of the factor of safety using Section 12, "Buried Structures and Tunnel Liners," of the AASHTO LRFD Bridge Design Specifications. Based on the evaluation, the Department may allow the pipe to remain in place at a reduced unit price as shown in the table below. Provide 5 business days for the Department to review the evaluation. When the pipe shows deflection of 10 percent or greater, remove and replace the pipe. When the camera/video or laser inspection results are called into question, the Department may require direct measurements or mandrel testing. The Cabinet may elect to conduct Quality Assurance verifications of any pipe inspections.
SUBSECTION: **REVISION:**	701.04.07 Testing. Replace and rename the subsection with the following: **701.04.07 Pipeline Video Inspection.** The Department will measure the quantity in linear feet along the pipe invert of the structure inspected. When inspection above the specified 50 percent is performed due to a disagreement or suspicion of additional distresses and the Department is found in error, the Department will measure the quantity as Extra Work according to Subsection 104.03. However, if additional distresses or non-conformance is found, the Department will not measure the additional inspection for payment.

Supplemental Specifications to The Standard Specifications for Road and Bridge Construction, 2008 Edition

(Effective with the July15, 2011 Letting)

SUBSECTION: 701.05 PAYMENT.
REVISION: Add the following pay item to the list of pay items:

Code	Pay Item	Pay Unit
23131ER701	Pipeline Video Inspection	Linear Foot

SUBSECTION: 701.05 PAYMENT
TABLE: PIPE DEFLECTION DETERMINED BY CAMERA TESTING
REVISION: Replace this table with the following table and note:

PIPE DEFLECTION	
Amount of Deflection (%)	Payment
0.0 to 5.0	100% of the Unit Bid Price
5.1 to 9.9	50% of the Unit Bid Price (1)
10 or greater	Remove and Replace

(1) Provide Structural Analysis as indicated above. Based on the structural analysis, pipe may be allowed to remain in place at the reduced unit price.

SUBSECTION: 701.05 PAYMENT
TABLE: PIPE DEFLECTION DETERMINED BY MANDREL TESTING
REVISION: Delete this table.

SUBSECTION: 713.02.01 Paint.
REVISION: Replace with the following:

Conform to Section 842 and Section 846.

SUBSECTION: 713.03 CONSTRUCTION.
REVISION: Replace the first sentence of the second paragraph with the following:

On interstates and parkways, and other routes approved by the State Highway Engineer, install pavement striping that is 6 inches in width.

SUBSECTION: 713.03.03 Paint Application.
REVISION: Replace the second paragraph with the following table:

Material	Paint Application Rate	Glass Beads Application Rate
4 inch waterborne paint	Min. of 16.5 gallons/mile	Min. of 6 pounds/gallon
6 inch waterborne paint	Min. of 24.8 gallons/mile	Min. of 6 pounds/gallon
6 inch durable waterborne paint	Min. of 36 gallons/mile	Min. of 6 pounds/gallon

SUBSECTION: 713.03.04 Marking Removal.
REVISION: Replace the last sentence of the paragraph with the following:

Vacuum all marking material and removal debris concurrently with the marking removal operation.

SUBSECTION: 713.05 PAYMENT.
REVISION: Insert the following codes and pay items below the Pavement Striping – Permanent Paint:

Code	Pay Item	Pay Unit
24189ER	Durable Waterborne Marking – 6 IN W	Linear Foot
24190ER	Durable Waterborne Marking – 6 IN Y	Linear Foot
24191ER	Durable Waterborne Marking – 12 IN W	Linear Foot

Supplemental Specifications to The Standard Specifications for Road and Bridge Construction, 2008 Edition

(Effective with the July15, 2011 Letting)

SUBSECTION: **REVISION:**	714.03 CONSTRUCTION. Insert the following paragraph at the end of the third paragraph: Use Type I Tape for markings on bridge decks, JPC pavement and JPC intersections. Thermoplastic should only be used for markings on asphalt pavement.
SUBSECTION: **REVISION:**	714.03.07 Marking Removal. Replace the third sentence of the paragraph with the following: Vacuum all marking material and removal debris concurrently with the marking removal operation.
SUBSECTION: **REVISION:**	716.01 DESCRIPTION. Insert the following after the first sentence: Energize lighting as soon as it is fully functional and ready for inspection. Ensure that lighting remains operational until the Division of Traffic Operations has provided written acceptance of the electrical work.
SUBSECTION: **REVISION:**	716.02.01 Roadway Lighting Materials. Replace the last two sentences of the paragraph with the following: Submit for material approval an electronic file of descriptive literature, drawings, and any requested design data to the Division of Traffic Operations. Do not begin work until shop drawings are approved. Notify the Engineer when submitting any information to the Division of Traffic Operations. Do not make substitutions for approved materials without written permission as described above.
SECTION: **REVISION:**	717 – THERMOPLASTIC INTERSECTION MARKINGS. Replace the section name with the following: INTERSECTION MARKINGS.
SUBSECTION: **REVISION:**	717.01 DESCRIPTION: Replace the paragraph with the following: Furnish and install thermoplastic or Type I tape intersection markings (Stop Bars, Crosswalks, Turn Arrows, etc.) Thermoplastic markings may be installed by either a machine applied, screed extrusion process or by applying preformed thermoplastic intersection marking material.
SUBSECTION: **REVISION:**	717.02 MATERIALS AND EQUIPMENT. Insert the following subsection: 717.02.06 Type I Tape. Conform to Section 836.
SUBSECTION: **REVISION:**	717.03.03 Application. Insert the following part to the subsection: B) Type I Tape Intersection Markings. Apply according to the manufacturer's recommendations. Cut all tape at pavement joints when applied to concrete surfaces.

Supplemental Specifications to The Standard Specifications for Road and Bridge Construction, 2008 Edition

(Effective with the July15, 2011 Letting)

SUBSECTION: 717.03.05 Proving Period.
PART: A) Requirements.
REVISION: Insert the following to this section:

2) Type I Tape. During the proving period, ensure that the pavement marking material shows no signs of failure due to blistering, excessive cracking, bleeding, staining, discoloration, oil content of the pavement materials, drippings, chipping, spalling, poor adhesion to the pavement, loss of retroreflectivity, vehicular damage, and normal wear. Type I Tape is manufactured off site and warranted by the manufacturer to meet certain retroreflective requirements. As long as the material is adequately bonded to the surface and shows no signs of failure due to the other items listed in Subsection 714.03.06 A) 1), retroreflectivity readings will not be required. In the absence of readings, the Department will accept tape based on a nighttime visual observation.

SUBSECTION: 717.03.06 Marking Removal.
REVISION: Replace the third sentence of the paragraph with the following:

Vacuum all marking material and removal debris concurrently with the marking removal operation.

SUBSECTION: 717.05 PAYMENT.
REVISION: Insert the following bid item codes:

Code	Pay Unit	Pay Item
06563	Pave Marking – R/R X Bucks 16 IN	Linear Foot
20782NS714	Pave Marking Thermo – Bike	Each
23251ES717, 23264ES717	Pave Mark TY I Tape X-Walk, Size	Linear Foot
23252ES717, 23265ES717	Pave Mark TY I Tape Stop Bar, Size	Linear Foot
23253ES717	Pave Mark TY I Tape Cross Hatch	Square Foot
23254ES717	Pave Mark TY I Tape Dotted Lane Extension	Linear Foot
23255ES717	Pave Mark TY I Tape Arrow, Type	Each
23268ES717-23270ES717		
23256ES717	Pave Mark TY I Tape- ONLY	Each
23257ES717	Pave Mark TY I Tape- SCHOOL	Each
23266ES717	Pave Mark TY 1 Tape R/R X Bucks-16 IN	Linear Foot
23267ES717	Pave Mark TY 1 Tape-Bike	Each

SUBSECTION: 725.02.02 Type VI Class C & CT.
REVISION: Replace bullet 2) with the following:

2) The SCI100GM System as developed by SCI Products, Inc. of St. Charles, Illinois. For all miscellaneous metal work conform to ASTM A 36 and galvanize according to ASTM A 123. For the SCI100GM fender panels conform to AASHTO 180. Galvanize the SCI100GM fender panels and SCI100GM -beam connectors after fabrication according to ASTM A 123.

SUBSECTION: 725.02.04 Type VII Class C.
REVISION: Replace bullet 2) with the following:

2) The SCI100GM System as developed by SCI Products, Inc. of St. Charles, Illinois. For all miscellaneous metal work conform to ASTM A 36 and galvanize according to ASTM A 123. For the SCI100GM fender panels conform to AASHTO 180. Galvanize the SCI100GM fender panels and SCI100GM-beam connectors after fabrication according to ASTM A 123.

SUBSECTION: 801.01 REQUIREMENTS.
REVISION: Delete the fourth sentence of the first paragraph and add the following to the second paragraph.

When supplying cement with a SO_3 content above the value in table I of ASTM C 150, include supportive ASTM C 1038 14-day expansion test data for the supplied SO_3 content on the certification.

Supplemental Specifications to The Standard Specifications for Road and Bridge Construction, 2008 Edition

(Effective with the July15, 2011 Letting)

SUBSECTION: **REVISION:**	805.01 GENERAL. Replace the second paragraph with the following: The Department's List of Approved Materials includes the Aggregate Source List, the list of Class A and Class B Polish-Resistant Aggregate Sources, and the Concrete Restriction List.
SUBSECTION: **REVISION:**	805.04 CONCRETE. Delete footnote (1) The permissible lightweight particle content of gravel coarse aggregate for reinforced concrete box culvert sections, concrete pipe, pipe arches, or for use only in concrete that will be permanently protected from freezing by 2 feet or more of cover is 10.0 percent.
SUBSECTION: **REVISION:**	805.04 CONCRETE. Replace the "AASHTO T 160" reference in first sentence of the third paragraph with "KM 64-629"
SUBSECTION: **TABLE:** **PART:** **REVISION:**	805.15 GRADATION ACCEPTANCE OF NON-SPECIFICATION COARSE AGGREGATE. AGGREGATE SIZE USE Cement Concrete Structures and Incidental Construction Replace "9-M for Waterproofing Overlays" with "8 or 9-M for Waterproofing Overlays"

Supplemental Specifications to The Standard Specifications for Road and Bridge Construction, 2008 Edition

(Effective with the July15, 2011 Letting)

SUBSECTION: 805.15 GRADATION ACCEPTANCE OF NON-SPECIFICATION COARSE AGGREGATE.
REVISION: Replace the "SIZES OF COARSE AGGREGATES" table in with the following:

SIZES OF COARSE AGGREGATES

	Sieve	AMOUNTS FINER THAN EACH LABORATORY SIEVE (SQUARE OPENINGS) PERCENTAGE BY WEIGHT															
Aggregate Size	Nominal [3] Maximum Aggregate Size	4 inch	3 1/2 inch	3 inch	2 1/2 inch	2 inch	1 1/2 inch	1 inch	3/4 inch	1/2 inch	3/8 inch	No. 4	No. 8	No. 16	No. 30	No. 100	No. 200
1	3 ½ inch	100	90-100		25-60		0-15		0-5								
2	2 ½ inch			100	90-100	35-70	0-15		0-5								
23	2 inch			100		40-90		0-15		0-5							
3	2 inch				100	90-100	35-70	0-15		0-5							
357	2 inch				100	95-100		35-70		10-30		0-5					
4	1 ½ inch					100	90-100	20-55	0-15		0-5						
467	1 ½ inch					100	95-100		35-70		10-30	0-5					
5	1 inch						100	90-100	20-55	0-10	0-5						
57	1 inch						100	95-100		25-60		0-10	0-5				
610	1 inch						100	85-100		40-75		15-40					
67	3/4 inch							100	90-100		20-55	0-10	0-5				
68	3/4 inch							100	90-100		30-65	5-25	0-10	0-5			
710	3/4 inch							100	80-100		30-75	0-30					
78	1/2 inch								100	90-100	40-75	5-25	0-10	0-5			
8	3/8 inch									100	85-100	10-30	0-10	0-5			
9-M	3/8 inch									100	75-100	0-25	0-5				
10[2]	No. 4										100	85-100				10-30	
11[2]	No. 4										100	40-90	10-40			0-5	
DENSE GRADED AGGREGATE [1]	3/4 inch							100	70-100		50-80	30-65			10-40		4-13
CRUSHED STONE BASE [1]	1 ½ inch				100		90-100		60-95		30-70	15-55			5-20		0-8

(1) *Gradation performed by wet sieve KM 64-620 or AASHTO T 11/T 27.*
(2) *Sizes shown for convenience and are not to be considered as coarse aggregates.*
(3) *Nominal Maximum Size is the largest sieve on the gradation table for an aggregate size on which any material may be retained.*

Note: The Department will allow blending of same source/same type aggregate when precise procedures are used such as cold feed, belt, or equivalent and combining of sizes or types of aggregate using the weigh hopper at concrete plants or controlled feed belts at the pugmill to obtain designated sizes.

Supplemental Specifications to The Standard Specifications for Road and Bridge Construction, 2008 Edition

(Effective with the July15, 2011 Letting)

SUBSECTION: 805.16 SAMPLING AND TESTING.
REVISION: Replace the "AASHTO T 160" method with the "KM 64-629" method for the Concrete Beam Expansion Test.

Replace the "ASTM D 3042" method with the "KM 64-625" method for Insoluble Residue.

SUBSECTION: 810.04.01 Coating Requirements.
REVISION: Replace the "Subsection 806.07" references with "Subsection 806.06"

SUBSECTION: 810.06.01 Polyvinyl Chloride (PVC) Pipe.
PART: B) Culvert and Entrance Pipe.
REVISION: Replace the title with the following:

B) Culvert Pipe, Storm Sewer, and Entrance Pipe.

SUBSECTION: 823.02 LIQUID MEMBRANE FORMING COMPOUNDS.
REVISION: Add the following:

Effective July 1, 2011, to remain on or be added to the Department's approved list, products must have completed testing or been submitted for testing through the National Transportation Product Evaluation Program (NTPEP) for Concrete Curing Compounds.

SUBSECTION: 837.03 APPROVAL.
REVISION: Replace the last sentence with the following:

The Department will sample and evaluate for approval each lot of thermoplastic material delivered for use per contract prior to installation of the thermoplastic material. Do not allow the installation of thermoplastic material until it has been approved by the Division of Materials. Allow the Department a minimum of 10 working days to evaluate and approve thermoplastic material.

SUBSECTION: 837.03.01 Composition.
REVISION: COMPOSITION Table:

Replace

Lead Chromate	0.0 max.	4.0 min.

with

Heavy Metals Content	Comply with 40 CFR 261

SUBSECTION: 842.02 APPROVAL.
TABLE: PAINT COMPOSITION
REVISION: Revise the following in the table:

Replace the 2.0ΔE* values in the table with 4.0ΔE* for both Yellow and White Paint on both the Daytime and Nighttime Color Spectrophotometer.

SECTION: DIVISION 800 MATERIAL DETAILS
REVISION: Add the following section in Division 800

SECTION 846 – DURABLE WATERBORNE PAINT

846.01 DESCRIPTION. This section covers quick-drying durable waterborne pavement striping paint for permanent applications. The paint shall be ready-mixed, one-component, 100% acrylic waterborne striping paint suitable for application on such traffic-bearing surfaces as Portland cement concrete, bituminous cement concrete, asphalt, tar, and previously painted areas of these surfaces.

846.02 Approval. Select materials that conform to the composition requirements below. Provide independent analysis data and certification for each formulation stating the total concentration of each heavy metal present, the test method used for each determination, and compliance to 40 CFR 261 for leachable heavy metals content. Submit initial samples for approval before beginning striping

Supplemental Specifications to The Standard Specifications for Road and Bridge Construction, 2008 Edition
(Effective with the July15, 2011 Letting)

operations. The initial sample may be sent from the manufacture of the paint. The Department will randomly sample and evaluate the paint each week that the striping operations are in progress.

The non-volatile portion of the vehicle shall be composed of a 100% acrylic polymer as determined by infrared spectral analysis. The acrylic resin used shall be a 100% cross-linking acrylic as evidenced by infrared peaks at wavelengths 1568, 1624, and 1672 cm-1 with intensities equal to those produced by an acrylic resin known to be 100% cross-linking.

PAINT COMPOSITION		
Property and Test Method	Yellow	White
Daytime Color (CIELAB) Spectrophotometer using illuminant D65 at 45º illumination and 0º viewing with a 2º observer	L* 81.76 a* 19.79 b* 89.89 Maximum allowa le variation 4.0ΔE*	L* 93.51 a* -1.01 b* 0.70 Maximum allowable variation 4.0ΔE*
Nighttime Color (CIELAB) Spectrophotometer using illuminant A at 45º illumination and 0º viewing with a 2º observer	L* 86.90 a* 24.80 b* 95.45 Maximum allowable variation 4.0ΔE*	L* 93.45 a* -0.79 b* 0.43 Maximum allowable variation 4.0ΔE*
Heavy Metals Content	Comply with 40 CFR 261	Comply with 40 CFR 261
Titanium Dioxide ASTM D 4764	NA	10% by weight of pigment min.
VOC ASTM D 2369 and D 4017	1.25 lb/gal max.	1.25 l /gal ma .
Contrast Ratio (at 15 mils wft)	0.97	0.99

846.02.01 Manufacturers Certification. Provide a certification of analysis for each lot of traffic paint produced stating conformance to the requirements of this section. Report the formulation identification, traffic paint trade name, color, date of manufacturer, total quantity of lot produced, actual quantity of traffic paint represented, sampling method utilized to obtain the samples, and data for each sample tested to represent each lot produced.

846.03 ACCEPTANCE PROCEDURES FOR NON-SPECIFICATION DURABLE WATERBORNE PAVEMENT STRIPING PAINT. When non-specification paint is inadvertently incorporated into the work the Department will accept the material with a reduction in pay. The percentage deduction is cumulative based on its compositional properties, but will not exceed 60 percent. The Department will calculate the payment reduction on the unit bid price for the routes where the non-specification paint was used.

DURABLE WATERBORNE PAVEMENT STRIPING PAINT REDUCTION SCHEDULE						
Non-conforming Property	Resin	Color	Contrast	TiO_2	VOC	Heavy Metals Content
Reduction Rate	60%	10%	10%	10%	60%	60%

Supplemental Specifications to The Standard Specifications for Road and Bridge Construction, 2008 Edition

(Effective with the July15, 2011 Letting)

APPENDIX A:	TABLUATION OF CONSTRUCTION TOLERANCES.
PART:	601.03.03
REVISION:	Replace with the following: Concrete accuracy of individual ingredient material for each batch. ± 2.0% for aggregates ± 1.0% for water ± 1.0% for cement in batches of 4 cubic yards or greater ± 1.0% for total cementitious materials in batches of 4 cubic yards or greater 0.0% to + 4.0% for cement in batches less than 4 cubic yards 0.0% to + 4.0% for total cementitious materials in batches less than 4 cubic yards ± 3.0% for admixtures
APPENDIX A:	TABLUATION OF CONSTRUCTION TOLERANCES.
PART:	601.03.03 C) 2)
REVISION:	Delete

PART III

EMPLOYMENT, WAGE AND RECORD REQUIREMENTS

REQUIRED CONTRACT PROVISIONS
FEDERAL-AID CONSTRUCTION CONTRACTS

		Page
I.	General	1
II.	Nondiscrimination	1
III.	Nonsegregated Facilities	3
IV.	Payment of Predetermined Minimum Wage	3
V.	Statements and Payrolls	6
VI.	Record of Materials, Supplies, and Labor	6
VII.	Subletting or Assigning the Contract	7
VIII.	Safety: Accident Prevention	7
IX.	False Statements Concerning Highway Projects	7
X.	Implementation of Clean Air Act and Federal Water Pollution Control Act	8
XI.	Certification Regarding Debarment, Suspension, Ineligibility, and Voluntary Exclusion	8
XII.	Certification Regarding Use of Contract Funds for Lobbying	9

ATTACHMENTS

A. Employment Preference for Appalachian Contracts (included in Appalachian contracts only)

I. GENERAL

1. These contract provisions shall apply to all work performed on the contract by the contractor's own organization and with the assistance of workers under the contractor's immediate superintendence and to all work performed on the contract by piecework, station work, or by subcontract.

2. Except as otherwise provided for in each section, the contractor shall insert in each subcontract all of the stipulations contained in these Required Contract Provisions, and further require their inclusion in any lower tier subcontract or purchase order that may in turn be made. The Required Contract Provisions shall not be incorporated by reference in any case. The prime contractor shall be responsible for compliance by any subcontractor or lower tier subcontractor with these Required Contract Provisions.

3. A breach of any of the stipulations contained in these Required Contract Provisions shall be sufficient grounds for termination of the contract.

4. A breach of the following clauses of the Required Contract Provisions may also be grounds for debarment as provided in 29 CFR 5.12:

Section I, paragraph 2;
Section IV, paragraphs 1, 2, 3, 4, and 7;
Section V, paragraphs 1 and 2a through 2g.

5. Disputes arising out of the labor standards provisions of Section IV (except paragraph 5) and Section V of these Required Contract Provisions shall not be subject to the general disputes clause of this contract. Such disputes shall be resolved in accordance with the procedures of the U.S. Department of Labor (DOL) as set forth in 29 CFR 5, 6, and 7. Disputes within the meaning of this clause include disputes between the contractor (or any of its subcontractors) and the contracting agency, the DOL, or the contractor's employees or their representatives.

6. **Selection of Labor:** During the performance of this contract, the contractor shall not:

a. discriminate against labor from any other State, possession, or territory of the United States (except for employment preference for Appalachian contracts, when applicable, as specified in Attachment A), or

b. employ convict labor for any purpose within the limits of the project unless it is labor performed by convicts who are on parole, supervised release, or probation.

II. NONDISCRIMINATION

(Applicable to all Federal-aid construction contracts and to all related subcontracts of $10,000 or more.)

1. **Equal Employment Opportunity:** Equal employment opportunity (EEO) requirements not to discriminate and to take affirmative action to assure equal opportunity as set forth under laws, executive orders, rules, regulations (28 CFR 35, 29 CFR 1630 and 41 CFR 60) and orders of the Secretary of Labor as modified by the provisions prescribed herein, and imposed pursuant to 23 U.S.C. 140 shall constitute the EEO and specific affirmative action standards for the contractor's project activities under this contract. The Equal Opportunity Construction Contract Specifications set forth under 41 CFR 60-4.3 and the provisions of the American Disabilities Act of 1990 (42 U.S.C. 12101 et seq.) set forth under 28 CFR 35 and 29 CFR 1630 are incorporated by reference in this contract. In the execution of this contract, the contractor agrees to comply with the following minimum specific requirement activities of EEO:

a. The contractor will work with the State highway agency (SHA) and the Federal Government in carrying out EEO obligations and in their review of his/her activities under the contract.

b. The contractor will accept as his operating policy the following statement:

"It is the policy of this Company to assure that applicants are employed, and that employees are treated during employment, without regard to their race, religion, sex, color, national origin, age or disability. Such action shall include: employment, upgrading, demotion, or transfer; recruitment or recruitment advertising; layoff or termination; rates of pay or other forms of compensation; and selection for training, including apprenticeship, preapprenticeship, and/or on-the-job training."

2. **EEO Officer:** The contractor will designate and make known to the SHA contracting officers an EEO Officer who will have the responsibility for and must be capable of effectively administering and promoting an active contractor program of EEO and who must be assigned adequate authority and responsibility to do so.

3. **Dissemination of Policy:** All members of the contractor's staff who are authorized to hire, supervise, promote, and discharge employees, or who recommend such action, or who are substantially involved in such action, will be made fully cognizant of, and will implement, the contractor's EEO policy and contractual responsibilities to provide EEO in each grade and classification of employment. To ensure that the above agreement will be met, the following actions will be taken as a minimum:

a. Periodic meetings of supervisory and personnel office employees will be conducted before the start of work and then not less often than once every six months, at which time the contractor's EEO policy and its implementation will be reviewed and explained. The meetings will be conducted by the EEO Officer.

b. All new supervisory or personnel office employees will be given a thorough indoctrination by the EEO Officer, covering all major aspects of the contractor's EEO obligations within thirty days following their reporting for duty with the contractor.

c. All personnel who are engaged in direct recruitment for the project will be instructed by the EEO Officer in the contractor's procedures for locating and hiring minority group employees.

d. Notices and posters setting forth the contractor's EEO policy will be placed in areas readily accessible to employees, applicants for employment and potential employees.

e. The contractor's EEO policy and the procedures to implement such policy will be brought to the attention of employees by means of meetings, employee handbooks, or other appropriate means.

4. **Recruitment:** When advertising for employees, the contractor will include in all advertisements for employees the notation: "An Equal Opportunity Employer." All such advertisements will be placed in publications having a large circulation among minority groups in the area from which the project work force would normally be derived.

a. The contractor will, unless precluded by a valid bargaining agreement, conduct systematic and direct recruitment through public and private employee referral sources likely to yield qualified minority group applicants. To meet this requirement, the contractor will identify sources of potential minority group employees, and establish with such identified sources procedures whereby minority group applicants may be referred to the contractor for employment consideration.

b. In the event the contractor has a valid bargaining agreement providing for exclusive hiring hall referrals, he is expected to observe the provisions of that agreement to the extent that the system permits the contractor's compliance with EEO contract provisions. (The DOL has held that where implementation of such agreements have the effect of discriminating against minorities or women, or obligates the contractor to do the same, such implementation violates Executive Order 11246, as amended.)

c. The contractor will encourage his present employees to refer minority group applicants for employment. Information and procedures with regard to referring minority group applicants will be discussed with employees.

5. **Personnel Actions:** Wages, working conditions, and employee benefits shall be established and administered, and personnel actions of every type, including hiring, upgrading, promotion, transfer, demotion, layoff, and termination, shall be taken without regard to race, color, religion, sex, national origin, age or disability. The following procedures shall be followed:

a. The contractor will conduct periodic inspections of project sites to insure that working conditions and employee facilities do not indicate discriminatory treatment of project site personnel.

b. The contractor will periodically evaluate the spread of wages paid within each classification to determine any evidence of discriminatory wage practices.

c. The contractor will periodically review selected personnel actions in depth to determine whether there is evidence of discrimination. Where evidence is found, the contractor will promptly takecorrective action. If the review indicates that the discrimination may extend beyond the actions reviewed, such corrective action shall include all affected persons.

d. The contractor will promptly investigate all complaints of alleged discrimination made to the contractor in connection with his obligations under this contract, will attempt to resolve such complaints, and will take appropriate corrective action within a reasonable time. If the investigation indicates that the discrimination may affect persons other than the complainant, such corrective action shall include such other persons. Upon completion of each investigation, the contractor will inform every complainant of all of his avenues of appeal.

6. **Training and Promotion:**

a. The contractor will assist in locating, qualifying, and increasing the skills of minority group and women employees, and applicants for employment.

b. Consistent with the contractor's work force requirements and as permissible under Federal and State regulations, the contractor shall make full use of training programs, i.e., apprenticeship, and on-the-job training programs for the geographical area of contract performance. Where feasible, 25 percent of apprentices or trainees in each occupation shall be in their first year of apprenticeship or training. In the event a special provision for training is provided under this contract, this subparagraph will be superseded as indicated in the special provision.

c. The contractor will advise employees and applicants for employment of available training programs and entrance requirements for each.

d. The contractor will periodically review the training and promotion potential of minority group and women employees and will encourage eligible employees to apply for such training and promotion.

7. **Unions:** If the contractor relies in whole or in part upon unions as a source of employees, the contractor will use his/her best efforts to obtain the cooperation of such unions to increase opportunities for minority groups and women within the unions, and to effect referrals by such unions of minority and female employees. Actions by the contractor either directly or through a contractor's association acting as agent will include the procedures set forth below:

a. The contractor will use best efforts to develop, in cooperation with the unions, joint training programs aimed toward qualifying more minority group members and women for membership in the unions and increasing the skills of minority group employees and women so that they may qualify for higher paying employment.

b. The contractor will use best efforts to incorporate an EEO clause into each union agreement to the end that such union will be contractually bound to refer applicants without regard to their race, color, religion, sex, national origin, age or disability.

c. The contractor is to obtain information as to the referral practices and policies of the labor union except that to the extent such information is within the exclusive possession of the labor union and such labor union refuses to furnish such information to the contractor, the contractor shall so certify to the SHA and shall set forth what efforts have been made to obtain such information.

d. In the event the union is unable to provide the contractor with a reasonable flow of minority and women referrals within thetime limit set forth in the collective bargaining agreement, the contractor will, through independent recruitment efforts, fill the employment vacancies without regard to race, color, religion, sex, national origin,

age or disability; making full efforts to obtain qualified and/or qualifiable minority group persons and women. (The DOL has held that it shall be no excuse that the union with which the contractor has a collective bargaining agreement providing for exclusive referral failed to refer minority employees.) In the event the union referral practice prevents the contractor from meeting the obligations pursuant to Executive Order 11246, as amended, and these special provisions, such contractor shall immediately notify the SHA.

8. **Selection of Subcontractors, Procurement of Materials and Leasing of Equipment:** The contractor shall not discriminate on the grounds of race, color, religion, sex, national origin, age or disability in the selection and retention of subcontractors, including procurement of materials and leases of equipment.

a. The contractor shall notify all potential subcontractors and suppliers of his/her EEO obligations under this contract.

b. Disadvantaged business enterprises (DBE), as defined in 49 CFR 23, shall have equal opportunity to compete for and perform subcontracts which the contractor enters into pursuant to this contract. The contractor will use his best efforts to solicit bids from and to utilize DBE subcontractors or subcontractors with meaningful minority group and female representation among their employees. Contractors shall obtain lists of DBE construction firms from SHA personnel.

c. The contractor will use his best efforts to ensure subcontractor compliance with their EEO obligations.

9. **Records and Reports:** The contractor shall keep such records as necessary to document compliance with the EEO requirements. Such records shall be retained for a period of three years following completion of the contract work and shall be available at reasonable times and places for inspection by authorized representatives of the SHA and the FHWA.

a. The records kept by the contractor shall document the following:

(1) The number of minority and non-minority group members and women employed in each work classification on the project;

(2) The progress and efforts being made in cooperation with unions, when applicable, to increase employment opportunities for minorities and women;

(3) The progress and efforts being made in locating, hiring, training, qualifying, and upgrading minority and female employees; and

(4) The progress and efforts being made in securing the services of DBE subcontractors or subcontractors with meaningful minority and female representation among their employees.

b. The contractors will submit an annual report to the SHA each July for the duration of the project, indicating the number of minority, women, and non-minority group employees currently engaged in each work classification required by the contract work. This information is to be reported on Form FHWA-1391. If on-the-job training is being required by special provision, the contractor will be required to collect and report training data.

III. NONSEGREGATED FACILITIES

(Applicable to all Federal-aid construction contracts and to all related subcontracts of $10,000 or more.)

a. By submission of this bid, the execution of this contract or subcontract, or the consummation of this material supply agreement or purchase order, as appropriate, the bidder, Federal-aid construction contractor, subcontractor, material supplier, or vendor, as appropriate, certifies that the firm does not maintain or provide for its employees any segregated facilities at any of its establishments, and that the firm does not permit its employees to perform their services at any location, under its control, where segregated facilities are maintained. The firm agrees that a breach of this certification is a violation of the EEO provisions of this contract. The firm further certifies that no employee will be denied access to adequate facilities on the basis of sex or disability.

b. As used in this certification, the term "segregated facilities" means any waiting rooms, work areas, restrooms and washrooms, restaurants and other eating areas, timeclocks, locker rooms, and other storage or dressing areas, parking lots, drinking fountains, recreation or entertainment areas, transportation, and housing facilities provided for employees which are segregated by explicit directive, or are, in fact, segregated on the basis of race, color, religion, national origin, age or disability, because of habit, local custom, or otherwise. The only exception will be for the disabled when the demands for accessibility override (e.g. disabled parking).

c. The contractor agrees that it has obtained or will obtain identical certification from proposed subcontractors or material suppliers prior to award of subcontracts or consummation of material supply agreements of $10,000 or more and that it will retain such certifications in its files.

IV. PAYMENT OF PREDETERMINED MINIMUM WAGE

(Applicable to all Federal-aid construction contracts exceeding $2,000 and to all related subcontracts, except for projects located on roadways classified as local roads or rural minor collectors, which are exempt.)

1. **General:**

a. All mechanics and laborers employed or working upon the site of the work will be paid unconditionally and not less often than once a week and without subsequent deduction or rebate on any account [except such payroll deductions as are permitted by regulations (29 CFR 3) issued by the Secretary of Labor under the Copeland Act (40 U.S.C. 276c)] the full amounts of wages and bona fide fringe benefits (or cash equivalents thereof) due at time of payment. The payment shall be computed at wage rates not less than those contained in the wage determination of the Secretary of Labor (hereinafter "the wage determination") which is attached hereto and made a part hereof, regardless of any contractual relationship which may be alleged to exist between the contractor or its subcontractors and such laborers and mechanics. The wage determination (including any additional classifications and wage rates conformed under paragraph 2 of this Section IV and the DOL poster (WH-1321) or Form FHWA-1495) shall be posted at all times by the contractor and its subcontractors at the site of the work in a prominent and accessible place where it can be easily seen by the workers. For the purpose of this Section, contributions made or costs reasonably anticipated for bona fide fringe benefits under Section 1(b)(2) of the Davis-Bacon Act (40 U.S.C. 276a) on behalf of laborers or mechanics are considered wages paid to such laborers or mechanics, subject to the provisions of Section IV, paragraph 3b, hereof. Also, for the purpose of this Section, regular contributions made or costs incurred for more than a weekly period (but not less often than quarterly) under plans, funds, or programs, which cover the particular weekly period, are deemed to be constructively made or incurred during such weekly period. Such laborers and mechanics

shall be paid the appropriate wage rate and fringe benefits on the wage determination for the classification of work actually performed, without regard to skill, except as provided in paragraphs 4 and 5 of this Section IV.

b. Laborers or mechanics performing work in more than one classification may be compensated at the rate specified for each classification for the time actually worked therein, provided, that the employer's payroll records accurately set forth the time spent in each classification in which work is performed.

c. All rulings and interpretations of the Davis-Bacon Act and related acts contained in 29 CFR 1, 3, and 5 are herein incorporated by reference in this contract.

2. **Classification:**

a. The SHA contracting officer shall require that any class of laborers or mechanics employed under the contract, which is not listed in the wage determination, shall be classified in conformance with the wage determination.

b. The contracting officer shall approve an additional classification, wage rate and fringe benefits only when the following criteria have been met:

(1) the work to be performed by the additional classification requested is not performed by a classification in the wage determination;

(2) the additional classification is utilized in the area by the construction industry;

(3) the proposed wage rate, including any bona fide fringe benefits, bears a reasonable relationship to the wage rates contained in the wage determination; and

(4) with respect to helpers, when such a classification prevails in the area in which the work is performed.

c. If the contractor or subcontractors, as appropriate, the laborers and mechanics (if known) to be employed in the additional classification or their representatives, and the contracting officer agree on the classification and wage rate (including the amount designated for fringe benefits where appropriate), a report of the action taken shall be sent by the contracting officer to the DOL, Administrator of the Wage and Hour Division, Employment Standards Administration, Washington, D.C. 20210. The Wage and Hour Administrator, or an authorized representative, will approve, modify, or disapprove every additional classification action within 30 days of receipt and so advise the contracting officer or will notify the contracting officer within the 30-day period that additional time is necessary.

d. In the event the contractor or subcontractors, as appropriate, the laborers or mechanics to be employed in the additional classification or their representatives, and the contracting officer do not agree on the proposed classification and wage rate (including the amount designated for fringe benefits, where appropriate), the contracting officer shall refer the questions, including the views of all interested parties and the recommendation of the contracting officer, to the Wage and Hour Administrator for determination. Said Administrator, or an authorized representative, will issue a determination within 30 days of receipt and so advise the contracting officer or will notify the contracting officer within the 30-day period that additional time is necessary

e. The wage rate (including fringe benefits where appropriate) determined pursuant to paragraph 2c or 2d of this Section IV shall be paid to all workers performing work in the additional classification from the first day on which work is performed in the classification.

3. **Payment of Fringe Benefits:**

a. Whenever the minimum wage rate prescribed in the contract for a class of laborers or mechanics includes a fringe benefit which is not expressed as an hourly rate, the contractor or subcontractors, as appropriate, shall either pay the benefit as stated in the wage determination or shall pay another bona fide fringe benefit or an hourly case equivalent thereof.

b. If the contractor or subcontractor, as appropriate, does not make payments to a trustee or other third person, he/she may consider as a part of the wages of any laborer or mechanic the amount of any costs reasonably anticipated in providing bona fide fringe benefits under a plan or program, provided, that the Secretary of Labor has found, upon the written request of the contractor, that the applicable standards of the Davis-Bacon Act have been met. The Secretary of Labor may require the contractor to set aside in a separate account assets for the meeting of obligations under the plan or program.

4. **Apprentices and Trainees (Programs of the U.S. DOL) and Helpers:**

a. Apprentices:

(1) Apprentices will be permitted to work at less than the predetermined rate for the work they performed when they are employed pursuant to and individually registered in a bona fide apprenticeship program registered with the DOL, Employment and Training Administration, Bureau of Apprenticeship and Training, or with a State apprenticeship agency recognized by the Bureau, or if a person is employed in his/her first 90 days of probationary employment as an apprentice in such an apprenticeship program, who is not individually registered in the program, but who has been certified by the Bureau of Apprenticeship and Training or a State apprenticeship agency (where appropriate) to be eligible for probationary employment as an apprentice.

(2) The allowable ratio of apprentices to journeyman-level employees on the job site in any craft classification shall not be greater than the ratio permitted to the contractor as to the entire work force under the registered program. Any employee listed on a payroll at an apprentice wage rate, who is not registered or otherwise employed as stated above, shall be paid not less than the applicable wage rate listed in the wage determination for the classification of work actually performed. In addition, any apprentice performing work on the job site in excess of the ratio permitted under the registered program shall be paid not less than the applicable wage rate on the wage determination for the work actually performed. Where a contractor or subcontractor is performing construction on a project in a locality other than that in which its program is registered, the ratios and wage rates (expressed in percentages of the journeyman-level hourly rate) specified in the contractor's or subcontractor's registered program shall be observed.

(3) Every apprentice must be paid at not less than the rate specified in the registered program for the apprentice's level ofprogress, expressed as a percentage of the journeyman-level hourly rate specified in the applicable wage determination. Apprentices shall be paid fringe benefits in accordance with the provisions of the apprenticeship program. If the apprenticeship program does not specify fringe benefits, apprentices must be paid the full amount of fringe benefits listed on the wage determination for the applicable

classification. If the Administrator for the Wage and Hour Division determines that a different practice prevails for the applicable apprentice classification, fringes shall be paid in accordance with that determination.

(4) In the event the Bureau of Apprenticeship and Training, or a State apprenticeship agency recognized by the Bureau, withdraws approval of an apprenticeship program, the contractor or subcontractor will no longer be permitted to utilize apprentices at less than the applicable predetermined rate for the comparable work performed by regular employees until an acceptable program is approved.

b. Trainees:

(1) Except as provided in 29 CFR 5.16, trainees will not be permitted to work at less than the predetermined rate for the work performed unless they are employed pursuant to and individually registered in a program which has received prior approval, evidenced by formal certification by the DOL, Employment and Training Administration.

(2) The ratio of trainees to journeyman-level employees on the job site shall not be greater than permitted under the plan approved by the Employment and Training Administration. Any employee listed on the payroll at a trainee rate who is not registered and participating in a training plan approved by the Employment and Training Administration shall be paid not less than the applicable wage rate on the wage determination for the classification of work actually performed. In addition, any trainee performing work on the job site in excess of the ratio permitted under the registered program shall be paid not less than the applicable wage rate on the wage determination for the work actually performed.

(3) Every trainee must be paid at not less than the rate specified in the approved program for his/her level of progress, expressed as a percentage of the journeyman-level hourly rate specified in the applicable wage determination. Trainees shall be paid fringe benefits in accordance with the provisions of the trainee program. If the trainee program does not mention fringe benefits, trainees shall be paid the full amount of fringe benefits listed on the wage determination unless the Administrator of the Wage and Hour Division determines that there is an apprenticeship program associated with the corresponding journeyman-level wage rate on the wage determination which provides for less than full fringe benefits for apprentices, in which case such trainees shall receive the same fringe benefits as apprentices.

(4) In the event the Employment and Training Administration withdraws approval of a training program, the contractor or subcontractor will no longer be permitted to utilize trainees at less than the applicable predetermined rate for the work performed until an acceptable program is approved.

c. Helpers:

Helpers will be permitted to work on a project if the helper classification is specified and defined on the applicable wage determination or is approved pursuant to the conformance procedure set forth in Section IV.2. Any worker listed on a payroll at a helper wage rate, who is not a helper under a approved definition, shall be paid not less than the applicable wage rate on the wagedetermination for the classification of work actually performed.

5. **Apprentices and Trainees (Programs of the U.S. DOT):**

Apprentices and trainees working under apprenticeship and skill training programs which have been certified by the Secretary of Transportation as promoting EEO in connection with Federal-aid highway construction programs are not subject to the requirements of paragraph 4 of this Section IV. The straight time hourly wage rates for apprentices and trainees under such programs will be established by the particular programs. The ratio of apprentices and trainees to journeymen shall not be greater than permitted by the terms of the particular program.

6. **Withholding:**

The SHA shall upon its own action or upon written request of an authorized representative of the DOL withhold, or cause to be withheld, from the contractor or subcontractor under this contract or any other Federal contract with the same prime contractor, or any other Federally-assisted contract subject to Davis-Bacon prevailing wage requirements which is held by the same prime contractor, as much of the accrued payments or advances as may be considered necessary to pay laborers and mechanics, including apprentices, trainees, and helpers, employed by the contractor or any subcontractor the full amount of wages required by the contract. In the event of failure to pay any laborer or mechanic, including any apprentice, trainee, or helper, employed or working on the site of the work, all or part of the wages required by the contract, the SHA contracting officer may, after written notice to the contractor, take such action as may be necessary to cause the suspension of any further payment, advance, or guarantee of funds until such violations have ceased.

7. **Overtime Requirements:**

No contractor or subcontractor contracting for any part of the contract work which may require or involve the employment of laborers, mechanics, watchmen, or guards (including apprentices, trainees, and helpers described in paragraphs 4 and 5 above) shall require or permit any laborer, mechanic, watchman, or guard in any workweek in which he/she is employed on such work, to work in excess of 40 hours in such workweek unless such laborer, mechanic, watchman, or guard receives compensation at a rate not less than one-and-one-half times his/her basic rate of pay for all hours worked in excess of 40 hours in such workweek.

8. **Violation:**

Liability for Unpaid Wages; Liquidated Damages: In the event of any violation of the clause set forth in paragraph 7 above, the contractor and any subcontractor responsible thereof shall be liable to the affected employee for his/her unpaid wages. In addition, such contractor and subcontractor shall be liable to the United States (in the case of work done under contract for the District of Columbia or a territory, to such District or to such territory) for liquidated damages. Such liquidated damages shall be computed with respect to each individual laborer, mechanic, watchman, or guard employed in violation of the clause set forth in paragraph 7, in the sum of $10 for each calendar day on which such employee was required or permitted to work in excess of the standard work week of 40 hours without payment of the overtime wages required by the clause set forth in paragraph 7.

9. **Withholding for Unpaid Wages and Liquidated Damages:**

The SHA shall upon its own action or upon written request of any authorized representative of the DOL withhold, or cause to be withheld, from any monies payable on account of work performed by the contractor or subcontractor under any such contract or any other Federal contract with the same prime contractor, or any other Federally-assisted contract subject to the Contract Work Hours and Safety Standards Act, which is held by the same prime contractor, such sums as may be determined to be necessary to satisfy any

liabilities of such contractor or subcontractor for unpaid wages and liquidated damages as provided in the clause set forth in paragraph 8 above.

V. STATEMENTS AND PAYROLLS

(Applicable to all Federal-aid construction contracts exceeding $2,000 and to all related subcontracts, except for projects located on roadways classified as local roads or rural collectors, which are exempt.)

1. **Compliance with Copeland Regulations (29 CFR 3):**

The contractor shall comply with the Copeland Regulations of the Secretary of Labor which are herein incorporated by reference.

2. **Payrolls and Payroll Records:**

a. Payrolls and basic records relating thereto shall be maintained by the contractor and each subcontractor during the course of the work and preserved for a period of 3 years from the date of completion of the contract for all laborers, mechanics, apprentices, trainees, watchmen, helpers, and guards working at the site of the work.

b. The payroll records shall contain the name, social security number, and address of each such employee; his or her correct classification; hourly rates of wages paid (including rates of contributions or costs anticipated for bona fide fringe benefits or cash equivalent thereof the types described in Section 1(b)(2)(B) of the Davis Bacon Act); daily and weekly number of hours worked; deductions made; and actual wages paid. In addition, for Appalachian contracts, the payroll records shall contain a notation indicating whether the employee does, or does not, normally reside in the labor area as defined in Attachment A, paragraph 1. Whenever the Secretary of Labor, pursuant to Section IV, paragraph 3b, has found that the wages of any laborer or mechanic include the amount of any costs reasonably anticipated in providing benefits under a plan or program described in Section 1(b)(2)(B) of the Davis Bacon Act, the contractor and each subcontractor shall maintain records which show that the commitment to provide such benefits is enforceable, that the plan or program is financially responsible, that the plan or program has been communicated in writing to the laborers or mechanics affected, and show the cost anticipated or the actual cost incurred in providing benefits. Contractors or subcontractors employing apprentices or trainees under approved programs shall maintain written evidence of the registration of apprentices and trainees, and ratios and wage rates prescribed in the applicable programs.

c. Each contractor and subcontractor shall furnish, each week in which any contract work is performed, to the SHA resident engineer a payroll of wages paid each of its employees (including apprentices, trainees, and helpers, described in Section IV, paragraphs 4 and 5, and watchmen and guards engaged on work during the preceding weekly payroll period). The payroll submitted required to be maintained under paragraph 2b of this Section V. This information may be submitted in any form desired. Optional Form WH-347 is available for this purpose and may be purchased from the Superintendent of Documents (Federal stock number 029-005-0014-1), U.S. Government Printing Office, Washington, D.C. 20402. The prime contractor is responsible for the submission of copies of payrolls by all subcontractors.

d. Each payroll submitted shall be accompanied by a "Statement of Compliance," signed by the contractor or subcontractor or his/her agent who pays or supervises the payment of the persons employed under the contract and shall certify the following:

(1) that the payroll for the payroll period contains the information required to be maintained under paragraph 2b of this Section V and that such information is correct and complete;

(2) that such laborer or mechanic (including each helper, apprentice, and trainee) employed on the contract during the payroll period has been paid the full weekly wages earned, without rebate, either directly or indirectly, and that no deductions have been made either directly or indirectly from the full wages earned, other than permissible deductions as set forth in the Regulations, 29 CFR 3;

(3) that each laborer or mechanic has been paid not less that the applicable wage rate and fringe benefits or cash equivalent for the classification of worked performed, as specified in the applicable wage determination incorporated into the contract.

e. The weekly submission of a properly executed certification set forth on the reverse side of Optional Form WH-347 shall satisfy the requirement for submission of the "Statement of Compliance" required by paragraph 2d of this Section V.

f. The falsification of any of the above certifications may subject the contractor to civil or criminal prosecution under 18 U.S.C. 1001 and 31 U.S.C. 231.

g. The contractor or subcontractor shall make the records required under paragraph 2b of this Section V available for inspection, copying, or transcription by authorized representatives of the SHA, the FHWA, or the DOL, and shall permit such representatives to interview employees during working hours on the job. If the contractor or subcontractor fails to submit the required records or to make them available, the SHA, the FHWA, the DOL, or all may, after written notice to the contractor, sponsor, applicant, or owner, take such actions as may be necessary to cause the suspension of any further payment, advance, or guarantee of funds. Furthermore, failure to submit the required records upon request or to make such records available may be grounds for debarment action pursuant to 29 CFR 5.12.

VI. RECORD OF MATERIALS, SUPPLIES, AND LABOR

1. On all Federal-aid contracts on the National Highway System, except those which provide solely for the installation of protective devices at railroad grade crossings, those which are constructed on a force account or direct labor basis, highway beautification contracts, and contracts for which the total final construction cost for roadway and bridge is less than $1,000,000 (23 CFR 635) the contractor shall:

a. Become familiar with the list of specific materials and supplies contained in Form FHWA-47, "Statement of Materials and Labor Used by Contractor of Highway Construction Involving Federal Funds," prior to the commencement of work under this contract.

b. Maintain a record of the total cost of all materials and supplies purchased for and incorporated in the work, and also of the quantities of those specific materials and supplies listed on Form FHWA-47, and in the units shown on Form FHWA-47.

c. Furnish, upon the completion of the contract, to the SHA resident engineer on Form FHWA-47 together with the data required in paragraph 1b relative to materials and supplies, a final labor summary of all contract work indicating the total hours worked and the total amount earned.

2. At the prime contractor's option, either a single report covering all contract work or separate reports for the contractor and for each subcontract shall be submitted.

VII. SUBLETTING OR ASSIGNING THE CONTRACT

1. The contractor shall perform with its own organization contract work amounting to not less than 30 percent (or a greater percentage if specified elsewhere in the contract) of the total original contract price, excluding any specialty items designated by the State. Specialty items may be performed by subcontract and the amount of any such specialty items performed may be deducted from the total original contract price before computing the amount of work required to be performed by the contractor's own organization (23 CFR 635).

a. "Its own organization" shall be construed to include only workers employed and paid directly by the prime contractor and equipment owned or rented by the prime contractor, with or without operators. Such term does not include employees or equipment of a subcontractor, assignee, or agent of the prime contractor.

b. "Specialty Items" shall be construed to be limited to work that requires highly specialized knowledge, abilities, or equipment not ordinarily available in the type of contracting organizations qualified and expected to bid on the contract as a whole and in general are to be limited to minor components of the overall contract.

2. The contract amount upon which the requirements set forth in paragraph 1 of Section VII is computed includes the cost of material and manufactured products which are to be purchased or produced by the contractor under the contract provisions.

3. The contractor shall furnish (a) a competent superintendent or supervisor who is employed by the firm, has full authority to direct performance of the work in accordance with the contract requirements, and is in charge of all construction operations (regardless of who performs the work) and (b) such other of its own organizational resources (supervision, management, and engineering services) as the SHA contracting officer determines is necessary to assure the performance of the contract.

4. No portion of the contract shall be sublet, assigned or otherwise disposed of except with the written consent of the SHA contracting officer, or authorized representative, and such consent when given shall not be construed to relieve the contractor of any responsibility for the fulfillment of the contract. Written consent will be given only after the SHA has assured that each subcontract is evidenced in writing and that it contains all pertinent provisions and requirements of the prime contract.

VIII. SAFETY: ACCIDENT PREVENTION

1. In the performance of this contract the contractor shall comply with all applicable Federal, State, and local laws governing safety, health, and sanitation (23 CFR 635). The contractor shall provideall safeguards, safety devices and protective equipment and take any other needed actions as it determines, or as the SHA contracting officer may determine, to be reasonably necessary to protect the life and health of employees on the job and the safety of the public and to protect property in connection with the performance of the work covered by the contract.

2. It is a condition of this contract, and shall be made a condition of each subcontract, which the contractor enters into pursuant to this contract, that the contractor and any subcontractor shall not permit any employee, in performance of the contract, to work in surroundings or under conditions which are unsanitary, hazardous or dangerous to his/her health or safety, as determined under construction safety and health standards (29 CFR 1926) promulgated by the Secretary of Labor, in accordance with Section 107 of the Contract Work Hours and Safety Standards Act (40 U.S.C. 333).

3. Pursuant to 29 CFR 1926.3, it is a condition of this contract that the Secretary of Labor or authorized representative thereof, shall have right of entry to any site of contract performance to inspect or investigate the matter of compliance with the construction safety and health standards and to carry out the duties of the Secretary under Section 107 of the Contract Work Hours and Safety Standards Act (40 U.S.C. 333).

IX. FALSE STATEMENTS CONCERNING HIGHWAY PROJECTS

In order to assure high quality and durable construction in conformity with approved plans and specifications and a high degree of reliability on statements and representations made by engineers, contractors, suppliers, and workers on Federal-aid highway projects, it is essential that all persons concerned with the project perform their functions as carefully, thoroughly, and honestly as possible. Willful falsification, distortion, or misrepresentation with respect to any facts related to the project is a violation of Federal law. To prevent any misunderstanding regarding the seriousness of these and similar acts, the following notice shall be posted on each Federal-aid highway project (23 CFR 635) in one or more places where it is readily available to all persons concerned with the project:

NOTICE TO ALL PERSONNEL ENGAGED ON FEDERAL-AID HIGHWAY PROJECTS

18 U.S.C. 1020 reads as follows:

"Whoever, being an officer, agent, or employee of the United States, or of any State or Territory, or whoever, whether a person, association, firm, or corporation, knowingly makes any false statement, false representation, or false report as to the character, quality, quantity, or cost of the material used or to be used, or the quantity or quality of the work performed or to be performed, or the cost thereof in connection with the submission of plans, maps, specifications, contracts, or costs of construction on any highway or related project submitted for approval to the Secretary of Transportation; or

Whoever knowingly makes any false statement, false representation, false report or false claim with respect to the character, quality, quantity, or cost of any work performed or to be performed, or materials furnished or to be furnished, in connection with the construction of any highway or related project approved by the Secretary of Transportation; or

Whoever knowingly makes any false statement or false representation as to material fact in any statement, certificate, or report submitted pursuant to provisions of the Federal-aid Roads Act approved July 1, 1916, (39 Stat. 355), as amended andsupplemented;

Shall be fined not more that $10,000 or imprisoned not more than 5 years or both."

X. IMPLEMENTATION OF CLEAN AIR ACT AND FEDERAL WATER POLLUTION CONTROL ACT

(Applicable to all Federal-aid construction contracts and to all related subcontracts of $100,000 or more.)

By submission of this bid or the execution of this contract, or subcontract, as appropriate, the bidder, Federal-aid construction contractor, or subcontractor, as appropriate, will be deemed to have stipulated as follows:

1. That any facility that is or will be utilized in the performance of this contract, unless such contract is exempt under the Clean Air Act, as amended (42 U.S.C. 1857 et seq., as amended by Pub.L. 91-604), and under the Federal Water Pollution Control Act, as amended (33 U.S.C. 1251 et seq., as amended by Pub.L. 92-500), Executive Order 11738, and regulations in implementation thereof (40 CFR 15) is not listed, on the date of contract award, on the U.S. Environmental Protection Agency (EPA) List of Violating Facilities pursuant to 40 CFR 15.20.

2. That the firm agrees to comply and remain in compliance with all the requirements of Section 114 of the Clean Air Act and Section 308 of the Federal Water Pollution Control Act and all regulations and guidelines listed thereunder.

3. That the firm shall promptly notify the SHA of the receipt of any communication from the Director, Office of Federal Activities, EPA, indicating that a facility that is or will be utilized for the contract is under consideration to be listed on the EPA List of Violating Facilities.

4. That the firm agrees to include or cause to be included the requirements of paragraph 1 through 4 of this Section X in every nonexempt subcontract, and further agrees to take such action as the government may direct as a means of enforcing such requirements.

XI. CERTIFICATION REGARDING DEBARMENT, SUSPENSION, INELIGIBILITY AND VOLUNTARY EXCLUSION

1. **Instructions for Certification - Primary Covered Transactions:**

(Applicable to all Federal-aid contracts - 49 CFR 29)

a. By signing and submitting this proposal, the prospective primary participant is providing the certification set out below.

b. The inability of a person to provide the certification set out below will not necessarily result in denial of participation in this covered transaction. The prospective participant shall submit an explanation of why it cannot provide the certification set out below. The certification or explanation will be considered in connection with the department or agency's determination whether to enter into this transaction. However, failure of the prospective primary participant to furnish a certification or an explanation shall disqualify such a person from participation in this transaction.

c. The certification in this clause is a material representation of fact upon which reliance was placed when the department or agency determined to enter into this transaction. If it is later determined that the prospective primary participant knowinglyrendered an erroneous certification, in addition to other remedies available to the Federal Government, the department or agency may terminate this transaction for cause of default.

d. The prospective primary participant shall provide immediate written notice to the department or agency to whom this proposal is submitted if any time the prospective primary participant learns that its certification was erroneous when submitted or has become erroneous by reason of changed circumstances.

e. The terms "covered transaction," "debarred," "suspended," "ineligible," "lower tier covered transaction," "participant," "person," "primary covered transaction," "principal," "proposal," and "voluntarily excluded," as used in this clause, have the meanings set out in the Definitions and Coverage sections of rules implementing Executive Order 12549. You may contact the department or agency to which this proposal is submitted for assistance in obtaining a copy of those regulations.

f. The prospective primary participant agrees by submitting this proposal that, should the proposed covered transaction be entered into, it shall not knowingly enter into any lower tier covered transaction with a person who is debarred, suspended, declared ineligible, or voluntarily excluded from participation in this covered transaction, unless authorized by the department or agency entering into this transaction.

g. The prospective primary participant further agrees by submitting this proposal that it will include the clause titled "Certification Regarding Debarment, Suspension, Ineligibility and Voluntary Exclusion-Lower Tier Covered Transaction," provided by the department or agency entering into this covered transaction, without modification, in all lower tier covered transactions and in all solicitations for lower tier covered transactions.

h. A participant in a covered transaction may rely upon a certification of a prospective participant in a lower tier covered transaction that is not debarred, suspended, ineligible, or voluntarily excluded from the covered transaction, unless it knows that the certification is erroneous. A participant may decide the method and frequency by which it determines the eligibility of its principals. Each participant may, but is not required to, check the nonprocurement portion of the "Lists of Parties Excluded From Federal Procurement or Nonprocurement Programs" (Nonprocurement List) which is compiled by the General Services Administration.

i. Nothing contained in the foregoing shall be construed to require establishment of a system of records in order to render in good faith the certification required by this clause. The knowledge and information of participant is not required to exceed that which is normally possessed by a prudent person in the ordinary course of business dealings.

j. Except for transactions authorized under paragraph f of these instructions, if a participant in a covered transaction knowingly enters into a lower tier covered transaction with a person who is suspended, debarred, ineligible, or voluntarily excluded from participation in this transaction, in addition to other remedies available to the Federal Government, the department or agency may terminate this transaction for cause or default.

* * * * *

Certification Regarding Debarment, Suspension, Ineligibility and Voluntary Exclusion--Primary Covered Transactions

1. The prospective primary participant certifies to the best of its knowledge and belief, that it and its principals:

a. Are not presently debarred, suspended, proposed for debarment, declared ineligible, or voluntarily excluded from covered transactions by any Federal department or agency;

b. Have not within a 3-year period preceding this proposal been convicted of or had a civil judgement rendered against them for commission of fraud or a criminal offense in connection with obtaining, attempting to obtain, or performing a public (Federal, State or local) transaction or contract under a public transaction; violation of Federal or State antitrust statutes or commission of embezzlement, theft, forgery, bribery, falsification or destruction of records, making false statements, or receiving stolen property;

c. Are not presently indicted for or otherwise criminally or civilly charged by a governmental entity (Federal, State or local) with commission of any of the offenses enumerated in paragraph 1b of this certification; and

d. Have not within a 3-year period preceding this application/proposal had one or more public transactions (Federal, State or local) terminated for cause or default.

2. Where the prospective primary participant is unable to certify to any of the statements in this certification, such prospective participant shall attach an explanation to this proposal.

* * * * *

2. **Instructions for Certification - Lower Tier Covered Transactions:**

(Applicable to all subcontracts, purchase orders and other lower tier transactions of $25,000 or more - 49 CFR 29)

a. By signing and submitting this proposal, the prospective lower tier is providing the certification set out below.

b. The certification in this clause is a material representation of fact upon which reliance was placed when this transaction was entered into. If it is later determined that the prospective lower tier participant knowingly rendered an erroneous certification, in addition to other remedies available to the Federal Government, the department, or agency with which this transaction originated may pursue available remedies, including suspension and/or debarment.

c. The prospective lower tier participant shall provide immediate written notice to the person to which this proposal is submitted if at any time the prospective lower tier participant learns that its certification was erroneous by reason of changed circumstances.

d. The terms "covered transaction," "debarred," "suspended," "ineligible," "primary covered transaction," "participant," "person," "principal," "proposal," and "voluntarily excluded," as used in this clause, have the meanings set out in the Definitions and Coverage sections of rules implementing Executive Order 12549. You may contact the person to which this proposal is submitted for assistance in obtaining a copy of those regulations.

e. The prospective lower tier participant agrees by submitting this proposal that, should the proposed covered transaction be entered into, it shall not knowingly enter into any lower tier covered transaction with a person who is debarred, suspended, declared ineligible, or voluntarily excluded from participation in this covered transaction, unless authorized by the department or agency with which this transaction originated.

f. The prospective lower tier participant further agrees by submitting this proposal that it will include this clause titled "Certification Regarding Debarment, Suspension, Ineligibility and Voluntary Exclusion-Lower Tier Covered Transaction," without modification, in all lower tier covered transactions and in all solicitations for lower tier covered transactions.

g. A participant in a covered transaction may rely upon a certification of a prospective participant in a lower tier covered transaction that is not debarred, suspended, ineligible, or voluntarily excluded from the covered transaction, unless it knows that the certification is erroneous. A participant may decide the method and frequency by which it determines the eligibility of its principals. Each participant may, but is not required to, check the Nonprocurement List.

h. Nothing contained in the foregoing shall be construed to require establishment of a system of records in order to render in good faith the certification required by this clause. The knowledge and information of participant is not required to exceed that which is normally possessed by a prudent person in the ordinary course of business dealings.

i. Except for transactions authorized under paragraph e of these instructions, if a participant in a covered transaction knowingly enters into a lower tier covered transaction with a person who is suspended, debarred, ineligible, or voluntarily excluded from participation in this transaction, in addition to other remedies available to the Federal Government, the department or agency with which this transaction originated may pursue available remedies, including suspension and/or debarment.

* * * * *

Certification Regarding Debarment, Suspension, Ineligibility and Voluntary Exclusion--Lower Tier Covered Transactions:

1. The prospective lower tier participant certifies, by submission of this proposal, that neither it nor its principals is presently debarred, suspended, proposed for debarment, declared ineligible, or voluntarily excluded from participation in this transaction by any Federal department or agency.

2. Where the prospective lower tier participant is unable to certify to any of the statements in this certification, such prospective participant shall attach an explanation to this proposal.

* * * * *

XII. CERTIFICATION REGARDING USE OF CONTRACT FUNDS FOR LOBBYING

(Applicable to all Federal-aid construction contracts and to all related subcontracts which exceed $100,000 - 49 CFR 20)

1. The prospective participant certifies, by signing and submitting this bid or proposal, to the best of his or her knowledge and belief, that:

a. No Federal appropriated funds have been paid or will be paid, by or on behalf of the undersigned, to any person for influencing or attempting to influence an officer or employee of any Federal agency, a Member of Congress, an officer or employee of Congress, or an employee of a Member of Congress in connection with the awarding of any Federal contract, the making of any Federal grant, the making of any Federal loan, the entering into of any cooperative agreement, and the extension, continuation, renewal, amendment, or modification of any Federal contract, grant, loan, or cooperative agreement.

b. If any funds other than Federal appropriated funds have been paid or will be paid to any person for influencing or attempting to influence an officer or employee of any Federal agency, a Member of Congress, an officer or employee of Congress, or an employee of a Member of Congress in connection with this Federal contract, grant, loan, or cooperative agreement, the undersigned shall complete and submit Standard Form-LLL, "Disclosure Form to Report Lobbying," in accordance with its instructions.

2. This certification is a material representation of fact upon which reliance was placed when this transaction was made or entered into. Submission of this certification is a prerequisite for making or entering into this transaction imposed by 31 U.S.C. 1352. Any person who fails to file the required certification shall be subject to a civil penalty of not less than $10,000 and not more than $100,000 for each such failure.

3. The prospective participant also agrees by submitting his or her bid or proposal that he or she shall require that the language of this certification be included in all lower tier subcontracts, which exceed $100,000 and that all such recipients shall certify and disclose accordingly.

KENTUCKY TRANSPORTATION CABINET
DEPARTMENT OF HIGHWAYS

EMPLOYMENT REQUIREMENTS
RELATING TO
NONDISCRIMINATION OF EMPLOYEES
(APPLICABLE TO FEDERAL-AID SYSTEM CONTRACTS)

AN ACT OF THE KENTUCKY GENERAL ASSEMBLY TO PREVENT DISCRIMINATION IN EMPLOYMENT

KRS CHAPTER 344
EFFECTIVE JUNE 16, 1972

The contract on this project, in accordance with KRS Chapter 344, provides that during the performance of this contract, the contractor agrees as follows:

1. The contractor shall not fail or refuse to hire, or shall not discharge any individual, or otherwise discriminate against an individual with respect to his compensation, terms, conditions, or privileges of employment, because of such individual's race, color, religion, national origin, sex, disability or age (between forty and seventy); or limit, segregate, or classify his employees in any way which would deprive or tend to deprive an individual of employment opportunities or otherwise adversely affect his status as an employee, because of such individual's race, color, religion, national origin, sex, disability or age (between forty and seventy). The contractor agrees to post in conspicuous places, available to employees and applicants for employment, notices to be provided setting forth the provisions of this nondiscrimination clause.

2. The contractor shall not print or publish or cause to be printed or published a notice or advertisement relating to employment by such an employer or membership in or any classification or referral for employment by the employment agency, indicating any preference, limitation, specification, or discrimination, based on race, color, religion, national origin, sex, disability or age (between forty and seventy), except that such notice or advertisement may indicate a preference, limitation, or specification based on religion, or national origin when religion, or national origin is a bona fide occupational qualification for employment.

3. If the contractor is in control of apprenticeship or other training or retraining, including on-the-job training programs, he shall not discriminate against an individual because of his race, color, religion, national origin, sex, disability or age (between forty and seventy), in admission to, or employment in any program established to provide apprenticeship or other training.

4. The contractor will send to each labor union or representative of workers with which he has a collective bargaining agreement or other contract or understanding, a notice to be provided advising the said labor union or workers' representative of the contractor's commitments under this section, and shall post copies of the notice in conspicuous places available to employees and applicants for employment. The contractor will take such action with respect to any subcontract or purchase order as the administrating agency may direct as a means of enforcing such provisions, including sanctions for non-compliance.

REVISED: 12-3-92

EXECUTIVE BRANCH CODE OF ETHICS

In the 1992 regular legislative session, the General Assembly passed and Governor Brereton Jones signed Senate Bill 63 (codified as KRS 11A), the Executive Branch Code of Ethics, which states, in part:

KRS 11A.040 (6) provides:

No present or former public servant shall, within six (6) months of following termination of his office or employment, accept employment, compensation or other economic benefit from any person or business that contracts or does business with the state in matters in which he was directly involved during his tenure. This provision shall not prohibit an individual from returning to the same business, firm, occupation, or profession in which he was involved prior to taking office or beginning his term of employment, provided that, for a period of six (6) months, he personally refrains from working on any matter in which he was directly involved in state government. This subsection shall not prohibit the performance of ministerial functions, including, but not limited to, filing tax returns, filing applications for permits or licenses, or filing incorporation papers.

KRS 11A.040 (8) states:

A former public servant shall not represent a person in a matter before a state agency in which the former public servant was directly involved, for a period of one (1) year after the latter of:

a) The date of leaving office or termination of employment; or
b) The date the term of office expires to which the public servant was elected.

This law is intended to promote public confidence in the integrity of state government and to declare as public policy the idea that state employees should view their work as a public trust and not as a way to obtain private benefits.

If you have worked for the executive branch of state government within the past six months, you may be subject to the law's prohibitions. The law's applicability may be different if you hold elected office or are contemplating representation of another before a state agency.

Also, if you are affiliated with a firm which does business with the state and which employs former state executive-branch employees, you should be aware that the law may apply to them.

In case of doubt, the law permits you to request an advisory opinion from the Executive Branch Ethics Commission, Room 136, Capitol Building, 700 Capitol Avenue, Frankfort, Kentucky 40601; telephone (502) 564-7954.

General Decision Number: KY100211 10/07/2011 KY211

State: Kentucky

Construction Type: Highway

Counties: Anderson, Bath, Bourbon, Boyd, Boyle, Bracken, Breckinridge, Bullitt, Carroll, Carter, Clark, Elliott, Fayette, Fleming, Franklin, Gallatin, Grant, Grayson, Greenup, Hardin, Harrison, Henry, Jefferson, Jessamine, Larue, Lewis, Madison, Marion, Mason, Meade, Mercer, Montgomery, Nelson, Nicholas, Oldham, Owen, Robertson, Rowan, Scott, Shelby, Spencer, Trimble, Washington and Woodford Counties in Kentucky.

HIGHWAY CONSTRUCTION PROJECTS (excluding tunnels, building structures in rest area projects & railroad construction; bascule, suspension & spandrel arch bridges designed for commercial navigation, bridges involving marine construction; and other major bridges).

Modification Number	Publication Date
0	10/22/2010
1	11/05/2010
2	12/03/2010
3	12/17/2010
4	12/31/2010
5	01/28/2011
6	03/25/2011
7	05/06/2011
8	06/03/2011
9	07/01/2011
10	07/22/2011
11	07/29/2011
12	08/12/2011
13	08/26/2011
14	09/16/2011
15	09/23/2011
16	10/07/2011

BRIN0004-003 06/01/2011

BRECKENRIDGE COUNTY

	Rates	Fringes
BRICKLAYER	$ 24.11	10.07

BRKY0001-005 06/01/2011

BULLITT, CARROLL, GRAYSON, HARDIN, HENRY, JEFFERSON, LARUE, MARION, MEADE, NELSON, OLDHAM, SHELBY, SPENCER, & TRIMBLE COUNTIES:

	Rates	Fringes
BRICKLAYER	$ 24.11	10.07

BRKY0002-006 06/01/2011

BRACKEN, GALLATIN, GRANT, MASON & ROBERTSON COUNTIES:

	Rates	Fringes
BRICKLAYER	$ 26.57	10.26

BRKY0007-004 06/01/2011

BOYD, CARTER, ELLIOT, FLEMING, GREENUP, LEWIS & ROWAN COUNTIES:

	Rates	Fringes
BRICKLAYER	$ 28.29	16.80

BRKY0017-004 06/01/2009

ANDERSON, BATH, BOURBON, BOYLE, CLARK, FAYETTE, FRANKLIN, HARRISON, JESSAMINE, MADISON, MERCER, MONTGOMERY, NICHOLAS, OWEN, SCOTT, WASHINGTON & WOODFORD COUNTIES:

	Rates	Fringes
BRICKLAYER	$ 24.11	9.97

CARP0064-001 07/01/2011

	Rates	Fringes
CARPENTER	$ 25.95	13.26
Diver	$ 39.30	13.26
PILEDRIVERMAN	$ 26.20	13.26

ELEC0212-008 05/31/2011

BRACKEN, GALLATIN and GRANT COUNTIES

	Rates	Fringes
ELECTRICIAN	$ 26.11	14.94

ELEC0212-014 06/27/2011

BRACKEN, GALLATIN & GRANT COUNTIES:

	Rates	Fringes
Sound & Communication Technician	$ 21.55	8.46

ELEC0317-012 06/01/2010

BOYD, CARTER, ELLIOT & ROWAN COUNTIES:

	Rates	Fringes
Electricians:		
Cable Splicer	$ 32.68	18.13

Electrician.....$ 31.87 19.58

ELEC0369-007 05/26/2010

ANDERSON, BATH, BOURBON, BOYLE, BRECKINRIDGE, BULLITT, CARROLL, CLARK, FAYETTE, FRAONKLIN, GRAYSON, HARDIN, HARRISON, HENRY, JEFFERSON, JESSAMINE, LARUE, MADISON, MARION, MEADE, MERCER, MONTGOMERY, NELSON, NICHOLAS, OLDHAM, OWEN, ROBERTSON, SCOTT, SHELBY, SPENCER, TRIMBLE, WASHINGTON, & WOODFORD COUNTIES:

	Rates	Fringes
ELECTRICIAN.....	$ 29.27	13.08

ELEC0575-002 05/31/2010

FLEMING, GREENUP, LEWIS & MASON COUNTIES:

	Rates	Fringes
ELECTRICIAN.....	$ 30.69	12.48

ENGI0181-018 07/01/2011

	Rates	Fringes
Operating Engineer:		
GROUP 1.....	$ 26.50	13.00
GROUP 2.....	$ 24.08	13.00
GROUP 3.....	$ 24.46	13.00
GROUP 4.....	$ 23.82	13.00

OPERATING ENGINEER CLASSIFICATIONS

GROUP 1 - A-Frame Winch Truck; Auto Patrol; Backfiller; Batcher Plant; Bituminous Paver; Bituminous Transfer Machine; Boom Cat; Bulldozer; Mechanic; Cableway; Carry-All Scoop; Carry Deck Crane; Central Compressor Plant; Cherry Picker; Clamshell; Concrete Mixer (21 cu. ft. or Over); Concrete Paver; Truck-Mounted Concrete Pump; Core Drill; Crane; Crusher Plant; Derrick; Derrick Boat; Ditching & Trenching Machine; Dragline; Dredge Operator; Dredge Engineer; Elevating Grader & Loaders; Grade-All; Gurries; Heavy Equipment Robotics Operator/Mechanic; High Lift; Hoe-Type Machine; Hoist (Two or More Drums); Hoisting Engine (Two or More Drums); Horizontal Directional Drill Operator; Hydrocrane; Hyster; KeCal Loader; LeTourneau; Locomotive; Mechanic; Mechanically Operated Laser Screed; Mechanic Welder; Mucking Machine; Motor Scraper; Orangepeel Bucket; Overhead Crane; Piledriver; Power Blade; Pumpcrete; Push Dozer; Rock Spreader, attached to equipment; Rotary Drill; Roller (Bituminous); Rough Terrain Crane; Scarifier; Scoopmobile; Shovel; Side Boom; Subgrader; Tailboom; Telescoping Type Forklift; Tow or Push Boat; Tower Crane (French, German & other types); Tractor Shovel; Truck Crane; Tunnel Mining Machines, including Moles, Shields or similar types of Tunnel Mining Equipment

GROUP 2 - Air Compressor (Over 900 cu. ft. per min.);

Bituminous Mixer; Boom Type Tamping Machine; Bull Float; Concrete Mixer (Under 21 cu. ft.); Dredge Engineer; Electric Vibrator; Compactor/Self-Propelled Compactor; Elevator (One Drum or Buck Hoist); Elevator (When used to Hoist Building Material); Finish Machine; Firemen & Hoist (One Drum); Flexplane; Forklift (Regardless of Lift Height); Form Grader; Joint Sealing Machine; Outboard Motor Boat; Power Sweeper (Riding Type); Roller (Rock); Ross Carrier; Skid Mounted or Trailer Mounted Conrete Pump; Skid Steer Machine with all Attachments; Switchman or Brakeman; Throttle Valve Person; Tractair & Road Widening Trencher; Tractor (50 H.P. or Over); Truck Crane Oiler; Tugger; Welding Machine; Well Points; & Whirley Oiler

GROUP 3 - All Off Road Material Handling Equipment, including Articulating Dump Trucks; Greaser on Grease Facilities servicing Heavy Equipment

GROUP 4 - Bituminous Distributor; Burlap & Curing Machine; Cement Gun; Concrete Saw; Conveyor; Deckhand Oiler; Grout Pump; Hydraulic Post Driver; Hydro Seeder; Mud Jack; Oiler; Paving Joint Machine; Power Form Handling Equipment; Pump; Roller (Earth); Steerman; Tamping Machine; Tractor (Under 50 H.P.); & Vibrator

CRANES - with booms 150 ft. & Over (Including JIB), and where the length of the boom in combination with the length of the piling leads equals or exceeds 150 ft. - $1.00 over Group 1 rate

EMPLOYEES ASSIGNED TO WORK BELOW GROUND LEVEL ARE TO BE PAID 10%
ABOVE BASIC WAGE RATE. THIS DOES NOT APPLY TO OPEN CUT WORK.

IRON0044-009 06/01/2011

BRACKEN, GALLATIN, GRANT, HARRISON, ROBERTSON,
BOURBON (Northern third, including Townships of Jackson, Millersburg, Ruddel Mills & Shawhan);
CARROLL (Eastern third, including the Township of Ghent);
FLEMING (Western part, excluding Townships of Beechburg, Colfax, Elizaville, Flemingsburg, Flemingsburg Junction, Foxport, Grange City, Hillsboro, Hilltop, Mount Carmel, Muses Mills, Nepton, Pecksridge, Plummers Landing, Plummers Mill, Poplar Plains, Ringos Mills, Tilton & Wallingford);
MASON (Western two-thirds, including Townships of Dover, Lewisburg, Mays Lick, Maysville, Minerva, Moranburg, Murphysville, Ripley, Sardis, Shannon, South Ripley & Washington);
NICHOLAS (Townships of Barefoot, Barterville, Carlisle, Ellisville, Headquarters, Henryville, Morningglory, Myers & Oakland Mills);
OWEN (Townships of Beechwood, Bromley, Fairbanks, Holbrook, Jonesville, Long Ridge, Lusby's Mill, New, New Columbus, New Liberty, Owenton, Poplar Grove, Rockdale, Sanders, Teresita & Wheatley);
SCOTT (Northern two-thirds, including Townships of Biddle, Davis, Delaplain, Elmville, Longlick, Muddy Ford, Oxford, Rogers Gap, Sadieville, Skinnersburg & Stonewall)

	Rates	Fringes
IRONWORKER		
Fence Erector	$ 22.92	17.20
Structural	$ 25.50	17.20

IRON0070-006 06/01/2011

ANDERSON, BOYLE, BRECKINRIDGE, BULLITT, FAYETTE, FRANKLIN, GRAYSON, HARDIN, HENRY, JEFFERSON, JESSAMINE, LARUE, MADISON, MARION, MEADE, MERCER, NELSON, OLDHAM, SHELBY, SPENCER, TRIMBLE, WASHINGTON & WOODFORD
BOURBON (Southern two-thirds, including Townships of Austerlity, Centerville, Clintonville, Elizabeth, Hutchison, Littlerock, North Middletown & Paris);
CARROLL (Western two-thirds, including Townships of Carrollton, Easterday, English, Locust, Louis, Prestonville & Worthville);
CLARK (Western two-thirds, including Townships of Becknerville, Flanagan, Ford, Pine Grove, Winchester & Wyandotte);
OWEN (Eastern eighth, including Townships of Glenmary, Gratz, Monterey, Perry Park & Tacketts Mill);
SCOTT (Southern third, including Townships of Georgetown, Great Crossing, Newtown, Stampling Ground & Woodlake);

	Rates	Fringes
IRONWORKER	$ 25.77	18.28

IRON0372-006 06/26/2011

BRACKEN, GALLATIN, GRANT, HARRISON and ROBERTSON
BOURBON (Northern third, including Townships of Jackson, Millersburg, Ruddel Mills & Shawhan);
CARROLL (Eastern third, including the Township of Ghent);
FLEMING (Western part, Excluding Townships of Beechburg, Colfax, Elizaville, Flemingsburg, Flemingsburg Junction, Foxport, Grange City, Hillsboro, Hilltop, Mount Carmel, Muses Mills, Nepton, Pecksridge, Plummers Landing, Plummers Mill, Poplar Plains,
Ringos Mills, Tilton & Wallingford);
MASON (Western two-thirds, including Townships of Dover, Lewisburg, Mays Lick, Maysville, Minerva, Moranburg, Murphysville, Ripley, Sardis, Shannon, South Ripley & Washington);
NICHOLAS (Townships of Barefoot, Barterville, Carlisle, Ellisville, Headquarters, Henryville, Morningglory, Myers & Oakland Mills);
OWEN (Townships of Beechwood, Bromley, Fairbanks, Holbrook, Jonesville, Long Ridge, Lusby's Mill, New, New Columbus, New Liberty, Owenton, Poplar Grove, Rockdale, Sanders, Teresita & Wheatley);
SCOTT (Northern two-thirds, including Townships of Biddle, Davis,Delaplain, Elmville, Longlick, Muddy Ford, Oxford, Rogers Gap, Sadieville, Skinnersburg & Stonewall) COUNTIES

	Rates	Fringes

IRONWORKER, REINFORCING
Beyond 30-mile radius of
Hamilton County, Ohio
Courthouse.....$ 26.75 17.40
Up to & including 30-mile
radius of Hamilton County,
Ohio Courthouse.....$ 26.50 17.40

IRON0769-007 06/01/2011

BATH, BOYD, CARTER, ELLIOTT, GREENUP, LEWIS, MONTGOMERY & ROWAN
CLARK (Eastern third, including townships of Bloomingdale,
Hunt, Indian Fields, Kiddville, Loglick, Rightangele & Thomson);
FLEMING (Townships of Beechburg, Colfax, Elizaville,
Flemingsburg, Flemingsburg Junction, Foxport, Grange City,
Hillsboro, Hilltop, Mount Carmel, Muses Mills, Nepton,
Pecksridge, Plummers Landing, Plummers Mill, Poplar Plains,
Ringos Mills, Tilton & Wallingford);
MASON (Eastern third, including Townships of Helena, Marshall,
Orangeburg, Plumville & Springdale);
NICHOLAS (Eastern eighth, including the Township of Moorefield
Sprout)

	Rates	Fringes
IRONWORKER	$ 30.96	18.07
ZONE 1	$ 29.59	18.07
ZONE 2	$ 31.36	18.07
ZONE 3	$ 32.96	18.07

ZONE 1 - Up to 10 mi. radius of union hall, Ashland, Ky.,
1643 Greenup Avenue
ZONE 2 - 10 to 50 mi. radius of union hall;
ZONE 3 - 50 mi. radius and beyond

---

* LABO0189-003 07/01/2011

BATH, BOURBON, BOYD, BOYLE, BRACKEN, CARTER, CLARK, ELLIOTT,
FAYETTE, FLEMING, FRANKLIN, GALLATIN, GRANT, GREENUP, HARRISON,
JESSAMINE, LEWIS, MADISON, MASON, MERCER, MONTGOMERY, NICHOLAS,
OWEN, ROBERTSON, ROWAN, SCOTT, & WOOLFORD COUNTIES

	Rates	Fringes
Laborers:		
GROUP 1	$ 20.81	10.85
GROUP 2	$ 21.06	10.85
GROUP 3	$ 21.11	10.85
GROUP 4	$ 21.71	10.85

LABORERS CLASSIFICATIONS

GROUP 1 - Aging & Curing of Concrete; Asbestos Abatement
Worker; Asphalt Plant; Asphalt; Batch Truck Dump; Carpenter
Tender; Cement Mason Tender; Cleaning of Machines;
Concrete; Demolition; Dredging; Environmental - Nuclear,
Radiation, Toxic & Hazardous Waste - Level D; Flagperson;
Grade Checker; Hand Digging & Hand Back Filling; Highway

Marker Placer; Landscaping, Mesh Handler & Placer; Puddler; Railroad; Rip-rap & Grouter; Right-of-Way; Sign, Guard Rail & Fence Installer; Signal Person; Sound Barrier Installer; Storm & Sanitary Sewer; Swamper; Truck Spotter & Dumper; Wrecking of Concrete Forms; General Cleanup

GROUP 2 - Batter Board Man (Sanitary & Storm Sewer); Brickmason Tender; Mortar Mixer Operator; Scaffold Builder; Burner & Welder; Bushammer; Chain Saw Operator; Concrete Saw Operator; Deckhand Scow Man; Dry Cement Handler; Environmental - Nuclear, Radiation, Toxic & Hazardous Waste - Level C; Forklift Operator for Masonary; Form Setter; Green Concrete Cutting; Hand Operated Grouter & Grinder Machine Operator; Jackhammer; Pavement Breaker; Paving Joint Machine; Pipelayer; Plastic Pipe Fusion; Power Driven Georgia Buggy & Wheel Barrow; Power Post Hole Digger; Precast Manhole Setter; Walk-Behind Tamper; Walk-Behind Trencher; Sand Blaster; Concrete Chipper; Surface Grinder; Vibrator Operator; Wagon Driller

GROUP 3 - Asphalt Luteman & Raker; Gunnite Nozzleman; Gunnite Operator & Mixer; Grout Pump Operator; Side Rail Setter; Rail Paved Ditches; Screw Operator; Tunnel (Free Air); Water Blaster

GROUP 4 - Caisson Worker (Free Air); Cement Finisher; Environmental - Nuclear, Radiation, Toxic & Hazardous Waste - Levels A & B; Miner & Driller (Free Air); Tunnel Blaster; & Tunnel Mucker (Free Air); Directional & Horizontal Boring; Air Track Drillers (All Types); Powdermen & Blasters; Troxler & Concrete Tester if Laborer is Utilized

---

* LABO0189-008 07/01/2011

ANDERSON, BULLITT, CARROLL, HARDIN, HENRY, JEFFERSON, LARUE, MARION, MEADE, NELSON, OLDHAM, SHELBY, SPENCER, TRIMBLE & WASHINGTON COUNTIES

	Rates	Fringes
Laborers:		
GROUP 1	$ 21.26	10.40
GROUP 2	$ 21.51	10.40
GROUP 3	$ 21.56	10.40
GROUP 4	$ 22.16	10.40

LABORERS CLASSIFICATIONS

GROUP 1 - Aging & Curing of Concrete; Asbestos Abatement Worker; Asphalt Plant; Asphalt; Batch Truck Dump; Carpenter Tender; Cement Mason Tender; Cleaning of Machines; Concrete; Demolition; Dredging; Environmental - Nuclear, Radiation, Toxic & Hazardous Waste - Level D; Flagperson; Grade Checker; Hand Digging & Hand Back Filling; Highway Marker Placer; Landscaping, Mesh Handler & Placer; Puddler; Railroad; Rip-rap & Grouter; Right-of-Way; Sign, Guard Rail & Fence Installer; Signal Person; Sound Barrier Installer; Storm & Sanitary Sewer; Swamper; Truck Spotter & Dumper; Wrecking of Concrete Forms; General Cleanup

GROUP 2 - Batter Board Man (Sanitary & Storm Sewer); Brickmason Tender; Mortar Mixer Operator; Scaffold Builder; Burner & Welder; Bushammer; Chain Saw Operator; Concrete Saw Operator; Deckhand Scow Man; Dry Cement Handler; Environmental - Nuclear, Radiation, Toxic & Hazardous Waste - Level C; Forklift Operator for Masonary; Form Setter; Green Concrete Cutting; Hand Operated Grouter & Grinder Machine Operator; Jackhammer; Pavement Breaker; Paving Joint Machine; Pipelayer; Plastic Pipe Fusion; Power Driven Georgia Buggy & Wheel Barrow; Power Post Hole Digger; Precast Manhole Setter; Walk-Behind Tamper; Walk-Behind Trencher; Sand Blaster; Concrete Chipper; Surface Grinder; Vibrator Operator; Wagon Driller

GROUP 3 - Asphalt Luteman & Raker; Gunnite Nozzleman; Gunnite Operator & Mixer; Grout Pump Operator; Side Rail Setter; Rail Paved Ditches; Screw Operator; Tunnel (Free Air); Water Blaster

GROUP 4 - Caisson Worker (Free Air); Cement Finisher; Environmental - Nuclear, Radiation, Toxic & Hazardous Waste - Levels A & B; Miner & Driller (Free Air); Tunnel Blaster; & Tunnel Mucker (Free Air); Directional & Horizontal Boring; Air Track Drillers (All Types); Powdermen & Blasters; Troxler & Concrete Tester if Laborer is Utilized

---

* LABO0189-009 07/01/2011

BRECKINRIDGE & GRAYSON COUNTIES

	Rates	Fringes
Laborers:		
GROUP 1	$ 21.51	10.15
GROUP 2	$ 21.76	10.15
GROUP 3	$ 21.81	10.15
GROUP 4	$ 22.41	10.15

LABORERS CLASSIFICATIONS

GROUP 1 - Aging & Curing of Concrete; Asbestos Abatement Worker; Asphalt Plant; Asphalt; Batch Truck Dump; Carpenter Tender; Cement Mason Tender; Cleaning of Machines; Concrete; Demolition; Dredging; Environmental - Nuclear, Radiation, Toxic & Hazardous Waste - Level D; Flagperson; Grade Checker; Hand Digging & Hand Back Filling; Highway Marker Placer; Landscaping, Mesh Handler & Placer; Puddler; Railroad; Rip-rap & Grouter; Right-of-Way; Sign, Guard Rail & Fence Installer; Signal Person; Sound Barrier Installer; Storm & Sanitary Sewer; Swamper; Truck Spotter & Dumper; Wrecking of Concrete Forms; General Cleanup

GROUP 2 - Batter Board Man (Sanitary & Storm Sewer); Brickmason Tender; Mortar Mixer Operator; Scaffold Builder; Burner & Welder; Bushammer; Chain Saw Operator; Concrete Saw Operator; Deckhand Scow Man; Dry Cement Handler; Environmental - Nuclear, Radiation, Toxic & Hazardous Waste - Level C; Forklift Operator for Masonary; Form Setter; Green Concrete Cutting; Hand Operated Grouter & Grinder

Machine Operator; Jackhammer; Pavement Breaker; Paving Joint Machine; Pipelayer; Plastic Pipe Fusion; Power Driven Georgia Buggy & Wheel Barrow; Power Post Hole Digger; Precast Manhole Setter; Walk-Behind Tamper; Walk-Behind Trencher; Sand Blaster; Concrete Chipper; Surface Grinder; Vibrator Operator; Wagon Driller

GROUP 3 - Asphalt Luteman & Raker; Gunnite Nozzleman; Gunnite Operator & Mixer; Grout Pump Operator; Side Rail Setter; Rail Paved Ditches; Screw Operator; Tunnel (Free Air); Water Blaster

GROUP 4 - Caisson Worker (Free Air); Cement Finisher; Environmental - Nuclear, Radiation, Toxic & Hazardous Waste - Levels A & B; Miner & Driller (Free Air); Tunnel Blaster; & Tunnel Mucker (Free Air); Directional & Horizontal Boring; Air Track Drillers (All Types); Powdermen & Blasters; Troxler & Concrete Tester if Laborer is Utilized

---

PAIN0012-005 06/11/2005

BATH, BOURBON, BOYLE, CLARK, FAYETTE, FLEMING, FRANKLIN, HARRISON, JESSAMINE, MADISON, MERCER, MONTGOMERY, NICHOLAS, ROBERTSON, SCOTT & WOODFORD COUNTIES:

	Rates	Fringes
PAINTER		
Bridge/Equipment Tender and/or Containment Builder	$ 18.90	5.90
Brush & Roller	$ 21.30	5.90
Elevated Tanks; Steeplejack Work; Bridge & Lead Abatement	$ 22.30	5.90
Sandblasting & Waterblasting	$ 22.05	5.90
Spray	$ 21.80	5.90

PAIN0012-017 05/02/2011

BRACKEN, GALLATIN, GRANT, MASON & OWEN COUNTIES:

	Rates	Fringes
PAINTER (Heavy & Highway Bridges - Guardrails - Lightpoles - Striping)		
Bridge Equipment Tender and Containment Builder	$ 20.27	8.10
Brush & Roller	$ 23.85	8.10
Elevated Tanks; Steeplejack Work; Bridge & Lead Abatement	$ 23.85	8.10
Sandblasting & Water Blasting	$ 24.60	8.10
Spray	$ 24.35	8.10

PAIN0118-004 05/01/2010

ANDERSON, BRECKINRIDGE, BULLITT, CARROLL, GRAYSON, HARDIN, HENRY, JEFFERSON, LARUE, MARION, MEADE, NELSON, OLDHAM, SHELBY, SPENCER, TRIMBLE & WASHINGTON COUNTIES:

	Rates	Fringes
PAINTER		
Brush & Roller	$ 18.50	10.30
Spray, Sandblast, Power Tools, Waterblast & Steam Cleaning	$ 19.50	10.30

PAIN1072-003 12/01/2010

BOYD, CARTER, ELLIOTT, GREENUP, LEWIS and ROWAN COUNTIES

	Rates	Fringes
Painters:		
Bridges; Locks; Dams; Tension Towers & Energized Substations	$ 29.03	11.90
Power Generating Facilities	$ 25.79	11.90

PLUM0248-003 06/01/2011

BOYD, CARTER, ELLIOTT, GREENUP, LEWIS & ROWAN COUNTIES:

	Rates	Fringes
Plumber and Steamfitter	$ 32.00	16.24

PLUM0392-007 09/01/2011

BRACKEN, CARROLL (Eastern Half), GALLATIN, GRANT, MASON, OWEN & ROBERTSON COUNTIES:

	Rates	Fringes
Plumbers and Pipefitters	$ 29.30	15.74

PLUM0502-003 08/01/2011

BRECKINRIDGE, BULLITT, CARROLL (Western Half), FRANKLIN (Western three-fourths), GRAYSON, HARDIN, HENRY, JEFFERSON, LARUE, MARION, MEADE, NELSON, OLDHAM, SHELBY, SPENCER, TRIMBLE & WASHINGTON COUNTIES

	Rates	Fringes
PLUMBER	$ 31.00	16.13

SUKY2010-160 10/08/2001

	Rates	Fringes
Truck drivers:		

GROUP 1.....$ 16.57 7.34
GROUP 2.....$ 16.68 7.34
GROUP 3.....$ 16.86 7.34
GROUP 4.....$ 16.96 7.34

TRUCK DRIVER CLASSIFICATIONS

GROUP 1 - Mobile Batch Truck Tender

GROUP 2 - Greaser; Tire Changer; & Mechanic Tender

GROUP 3 - Single Axle Dump; Flatbed; Semi-trailer or Pole Trailer when used to pull building materials and equipment; Tandem Axle Dump; Distributor; Mixer; & Truck Mechanic

GROUP 4 - Euclid & Other Heavy Earthmoving Equipment & Lowboy; Articulator Cat; 5-Axle Vehicle; Winch & A-Frame when used in transporting materials; Ross Carrier; Forklift when used to transport building materials; & Pavement Breaker

---

WELDERS - Receive rate prescribed for craft performing operation to which welding is incidental.

==========

Unlisted classifications needed for work not included within the scope of the classifications listed may be added after award only as provided in the labor standards contract clauses (29 CFR 5.5(a)(1)(ii)).

In the listing above, the "SU" designation means that rates listed under the identifier do not reflect collectively bargained wage and fringe benefit rates. Other designations indicate unions whose rates have been determined to be prevailing.

WAGE DETERMINATION APPEALS PROCESS

1.) Has there been an initial decision in the matter? This can be:

* an existing published wage determination
* a survey underlying a wage determination
* a Wage and Hour Division letter setting forth a position on a wage determination matter
* a conformance (additional classification and rate) ruling

On survey related matters, initial contact, including requests for summaries of surveys, should be with the Wage and Hour Regional Office for the area in which the survey was conducted because those Regional Offices have responsibility for the Davis-Bacon survey program. If the response from this initial contact is not satisfactory, then the process described in 2.) and 3.) should be followed.

With regard to any other matter not yet ripe for the formal process described here, initial contact should be with the Branch of Construction Wage Determinations. Write to:

Branch of Construction Wage Determinations
Wage and Hour Division
U.S. Department of Labor
200 Constitution Avenue, N.W.
Washington, DC 20210

2.) If the answer to the question in 1.) is yes, then an interested party (those affected by the action) can request review and reconsideration from the Wage and Hour Administrator (See 29 CFR Part 1.8 and 29 CFR Part 7). Write to:

Wage and Hour Administrator
U.S. Department of Labor
200 Constitution Avenue, N.W.
Washington, DC 20210

The request should be accompanied by a full statement of the interested party's position and by any information (wage payment data, project description, area practice material, etc.) that the requestor considers relevant to the issue.

3.) If the decision of the Administrator is not favorable, an interested party may appeal directly to the Administrative Review Board (formerly the Wage Appeals Board). Write to:

Administrative Review Board
U.S. Department of Labor
200 Constitution Avenue, N.W.
Washington, DC 20210

4.) All decisions by the Administrative Review Board are final.

END OF GENERAL DECISION

Fringe benefit amounts are applicable for all hours worked except when otherwise noted.

These rates are listed pursuant to the Kentucky Determination No. CR-11-III- HWY dated August 04, 2011

No laborer, workman or mechanic shall be paid at a rate less than that of a Journeyman except those classified as bona fide apprentices.

Apprentices or trainees shall be permitted to work as such subject to Administrative Regulations adopted by the Commissioner of Workplace Standards. Copies of these regulations will be furnished upon request from any interested person.

Before using apprentices on the job the contractor shall present to the Contracting Officer written evidence of registration of such employees in a program of a State apprenticeship and training agency approved and recognized by the U. S. Bureau of Apprenticeship and Training. In the absence of such a State agency, the contractor shall submit evidence of approval and registration by the U. S. Bureau of Apprenticeship and Training.

The contractor shall submit to the Contracting Officer, written evidence of the established apprenticeship-journeyman ratios and wage rates in the project area, which will be the basis for establishing such ratios and rates for the project under the applicable contract provisions.

TO: EMPLOYERS/EMPLOYEES

PREVAILING WAGE SCHEDULE:

The wages indicated on this wage schedule are the least permitted to be paid for the occupations indicated. When an employee works in more than one classification, the employer must record the number of hours worked in each classification at the prescribed hourly base rate.

OVERTIME:

Overtime is to be paid after an employee works eight (8) hours a day or forty (40) hours a week, whichever gives the employee the greater wages. At least time and one-half the base rate is required for all overtime. A laborer, workman or mechanic and an employer may enter into a written agreement or a collective bargaining agreement to work more than eight (8) hours a calendar day but not more than ten (10) hours a calendar day for the straight time hourly rate. Wage violations or questions should be directed to the designated Engineer or the undersigned.

Ryan Griffith, Director
Division of Construction Procurement
Frankfort, Kentucky 40622

NOTICE OF REQUIREMENT FOR AFFIRMATIVE ACTION TO ENSURE EQUAL EMPLOYMENT OPPORTUNITY (Executive Order 11246)

1. The Offeror's or Bidder's attention is called to the "Equal Opportunity Clause" and the "Standard Federal Equal Employment Specifications" set forth herein.

2. The goals and timetables for minority and female participation, expressed in percentage terms for the Contractor's aggregate work force in each trade on all construction work in the covered area, are as follows:

GOALS FOR MINORITY PARTICIPATION IN EACH TRADE	GOALS FOR FEMALE PARTICIPATION IN EACH TRADE
10.8%	6.9%

These goals are applicable to all the Contractor's construction work (whether or not it is Federal or federally-assisted) performed in the covered area. If the contractor performs construction work in a geographical area located outside of the covered area, it shall apply the goals established for such geographical area where the work is actually performed. With regard to this second area, the contractor also is subject to the goals for both its federally involved and non-federally involved construction.

The Contractor's compliance with the Executive Order and the regulations in CFR Part 60-4 shall be based on its implementation of the Equal Opportunity Clause, specific affirmative action obligations required by the specifications set forth in 41 CFR 60-4, 3(a), and its efforts to meet the goals. The hours of minority and female employment and training must be substantially uniform throughout the length of the contract, and in each trade, and the contractor shall make a good faith effort to employ minorities and women evenly on each of its projects. The transfer of minority or female employees or trainees from Contractor to Contractor or from project to project for the sole purpose of meeting the Contractor's goals shall be a violation of the contract, the Executive Order and the regulations in 41 CFR Part 60-4. Compliance with the goals will be measured against the total work hours performed.

3. The Contractor shall provide written notification to the Director of the Office of Federal Contract Compliance Programs within ten (10) working days of award of any construction subcontract in excess of $10,000.00 at any tier for construction work under the contract resulting from this solicitation. The notification shall list the name, address and telephone number of the subcontractor; employer identification number of the subcontractor; estimated dollar amount of the subcontract; estimated starting and completion dates of the subcontract; and the geographical area in which the subcontract is to be performed. The notification shall be mailed to:

Evelyn Teague, Regional Director
Office of Federal Contract Compliance Programs
61 Forsyth Street, SW, Suite 7B75
Atlanta, Georgia 30303-8609

4. As used in this Notice, and in the contract resulting from this solicitation, the **"covered area"** is Clark County.

NOTICE OF REQUIREMENT FOR AFFIRMATIVE ACTION TO ENSURE EQUAL EMPLOYMENT OPPORTUNITY (Executive Order 11246)

1. The Offeror's or Bidder's attention is called to the "Equal Opportunity Clause" and the "Standard Federal Equal Employment Specifications" set forth herein.

2. The goals and timetables for minority and female participation, expressed in percentage terms for the Contractor's aggregate work force in each trade on all construction work in the covered area, are as follows:

GOALS FOR MINORITY PARTICIPATION IN EACH TRADE	GOALS FOR FEMALE PARTICIPATION IN EACH TRADE
7.0%	6.9%

These goals are applicable to all the Contractor's construction work (whether or not it is Federal or federally-assisted) performed in the covered area. If the contractor performs construction work in a geographical area located outside of the covered area, it shall apply the goals established for such geographical area where the work is actually performed. With regard to this second area, the contractor also is subject to the goals for both its federally involved and non-federally involved construction.

The Contractor's compliance with the Executive Order and the regulations in CFR Part 60-4 shall be based on its implementation of the Equal Opportunity Clause, specific affirmative action obligations required by the specifications set forth in 41 CFR 60-4, 3(a), and its efforts to meet the goals. The hours of minority and female employment and training must be substantially uniform throughout the length of the contract, and in each trade, and the contractor shall make a good faith effort to employ minorities and women evenly on each of its projects. The transfer of minority or female employees or trainees from Contractor to Contractor or from project to project for the sole purpose of meeting the Contractor's goals shall be a violation of the contract, the Executive Order and the regulations in 41 CFR Part 60-4. Compliance with the goals will be measured against the total work hours performed.

3. The Contractor shall provide written notification to the Director of the Office of Federal Contract Compliance Programs within ten (10) working days of award of any construction subcontract in excess of $10,000.00 at any tier for construction work under the contract resulting from this solicitation. The notification shall list the name, address and telephone number of the subcontractor; employer identification number of the subcontractor; estimated dollar amount of the subcontract; estimated starting and completion dates of the subcontract; and the geographical area in which the subcontract is to be performed. The notification shall be mailed to:

Evelyn Teague, Regional Director
Office of Federal Contract Compliance Programs
61 Forsyth Street, SW, Suite 7B75
Atlanta, Georgia 30303-8609

4. As used in this Notice, and in the contract resulting from this solicitation, the **"covered area"** is Montgomery County.

PART IV

INSURANCE

INSURANCE

The Contractor shall procure and maintain the following insurance in addition to the insurance required by law:

1) Commercial General Liability-Occurrence form – not less than $2,000,000 General aggregate, $2,000,000 Products & Completed Aggregate, $1,000,000 Personal & Advertising, $1,000,000 each occurrence.

2) Automobile Liability- $1,000,000 per accident

3) Employers Liability:

   a) $100,000 Each Accident Bodily Injury
   b) $500,000 Policy limit Bodily Injury by Disease
   c) $100,000 Each Employee Bodily Injury by Disease

4) The insurance required above must be evidenced by a Certificate of Insurance and this Certificate of Insurance must contain one of the following statements:
   a) "policy contains no deductible clauses."
   b) "policy contains _____ (amount) deductible property damage clause but company will pay claim and collect the deductible from the insured."

5) KENTUCKY WORKMEN'S COMPENSATION INSURANCE. The contractor shall furnish evidence of coverage of all his employees or give evidence of self-insurance by submitting a copy of a certificate issued by the Workmen's Compensation Board.

The cost of insurance is incidental to all contract items. All subcontractors must meet the same minimum insurance requirements.

PART V

BID ITEMS

CONTRACT ID: 111051
COUNTY: CLARK, MONTGOMERY
PROPOSAL: 121GR11D051-IM

PAGE: 1
LETTING: 10/21/11
CALL NO: 203

LINE NO	ITEM	DESCRIPTION	APPROXIMATE UNIT QUANTITY	UNIT PRICE	AMOUNT
	SECTION 0001	ROADWAY			
0010	00001	DGA BASE	1,234.000 TON		
0020	00078	CRUSHED AGGREGATE SIZE NO 2	500.000 TON		
0030	00100	ASPHALT SEAL AGGREGATE	2,460.000 TON		
0040	00194	LEVELING & WEDGING PG76-22	1,000.000 TON		
0050	00291	EMULSIFIED ASPHALT RS-2	295.000 TON		
0060	00339	CL3 ASPH SURF 0.38D PG64-22	8,039.000 TON		
0070	00342	CL4 ASPH SURF 0.38A PG76-22	23,102.000 TON		
0080	00461	CULVERT PIPE-15 IN	320.000 LF		
0090	00462	CULVERT PIPE-18 IN	28.000 LF		
0100	00464	CULVERT PIPE-24 IN	96.000 LF		
0110	01310	REMOVE PIPE	444.000 LF		
0120	01441	SLOPED BOX INLET-OUTLET TYPE 2	2.000 EACH		
0130	01480	CURB BOX INLET TYPE B	6.000 EACH		
0140	01502	DROP BOX INLET TYPE 5A	2.000 EACH		
0150	01891	ISLAND HEADER CURB TYPE 2	227.000 LF		
0160	01982	DELINEATOR FOR GUARDRAIL-WHITE	466.000 EACH		
0170	01983	DELINEATOR FOR GUARDRAIL-YELLOW	22.000 EACH		
0180	01984	DELINEATOR FOR BARRIER-WHITE	15.000 EACH		
0190	01985	DELINEATOR FOR BARRIER-YELLOW	15.000 EACH		
0200	02003	RELOCATE TEMP CONC BARRIER	800.000 LF		

KENTUCKY TRANSPORTATION CABINET
DEPARTMENT OF HIGHWAYS
FRANKFORT, KY 40622

CONTRACT ID: 111051
COUNTY: CLARK, MONTGOMERY
PROPOSAL: 121GR11D051-IM

PAGE: 2
LETTING: 10/21/11
CALL NO: 203

LINE NO	ITEM	DESCRIPTION	APPROXIMATE UNIT QUANTITY	UNIT PRICE	AMOUNT
0210	02220	FLOWABLE FILL	5.000 CUYD		
0220	02223	GRANULAR EMBANKMENT	125.000 CUYD		
0230	02237	DITCHING	55,001.000 LF		
0240	02262	FENCE-WOVEN WIRE TYPE 1	103,406.000 LF		
0250	02265	REMOVE FENCE	103,406.000 LF		
0260	02351	GUARDRAIL-STEEL W BEAM-S FACE	200.000 LF		
0270	02352	GUARDRAIL-STEEL W BEAM-D FACE	275.000 LF		
0280	02363	GUARDRAIL CONNECTOR TO BRIDGE END TY A	9.000 EACH		
0290	02365	CRASH CUSHION TYPE IX-A	2.000 EACH		
0300	02367	GUARDRAIL END TREATMENT TYPE 1	31.000 EACH		
0310	02369	GUARDRAIL END TREATMENT TYPE 2A	32.000 EACH		
0320	02373	GUARDRAIL END TREATMENT TYPE 3	4.000 EACH		
0330	02381	REMOVE GUARDRAIL	35,974.500 LF		
0340	02383	REMOVE & RESET GUARDRAIL	500.000 LF		
0350	02387	GUARDRAIL CONNECTOR TO BRIDGE END TY A-1	3.000 EACH		
0360	02391	GUARDRAIL END TREATMENT TYPE 4A	1.000 EACH		
0370	02483	CHANNEL LINING CLASS II	949.000 TON		
0380	02484	CHANNEL LINING CLASS III	2,338.000 TON		
0390	02562	SIGNS	1,000.000 SQFT		
0400	02565	OBJECT MARKER TYPE 2	8.000 EACH		
0410	02599	FABRIC-GEOTEXTILE TYPE IV	100.000 SQYD		

KENTUCKY TRANSPORTATION CABINET
DEPARTMENT OF HIGHWAYS
FRANKFORT, KY 40622

CONTRACT ID: 111051
COUNTY: CLARK, MONTGOMERY
PROPOSAL: 121GR11D051-IM

PAGE: 3
LETTING: 10/21/11
CALL NO: 203

LINE NO	ITEM	DESCRIPTION	APPROXIMATE UNIT QUANTITY	UNIT PRICE	AMOUNT
0420	02650	MAINTAIN & CONTROL TRAFFIC CLARK CO.	(1.00) LS		
0430	02650	MAINTAIN & CONTROL TRAFFIC MONTGOMERY CO.	(1.00) LS		
0440	02671	PORTABLE CHANGEABLE MESSAGE SIGN	8.000 EACH		
0450	02676	MOBILIZATION FOR MILL & TEXT CLARK CO.	(1.00) LS		
0460	02676	MOBILIZATION FOR MILL & TEXT MONTGOMERY CO.	(1.00) LS		
0470	02677	ASPHALT PAVE MILLING & TEXTURING	37,246.000 TON		
0480	02696	SHOULDER RUMBLE STRIPS-SAWED	213,266.000 LF		
0490	02714	SHOULDERING	219,352.000 LF		
0500	02898	RELOCATE CRASH CUSHION	2.000 EACH		
0510	03171	CONCRETE BARRIER WALL TYPE 9T	800.000 LF		
0520	05950	EROSION CONTROL BLANKET	12,000.000 SQYD		
0530	06412	STEEL POST MILE MARKERS	22.000 EACH		
0540	06417	FLEXIBLE DELINEATOR POST-W	598.000 EACH		
0550	06418	FLEXIBLE DELINEATOR POST-Y	52.000 EACH		
0560	06511	PAVE STRIPING-TEMP PAINT-6 IN	440,000.000 LF		
0570	06592	PAVEMENT MARKER TYPE V-B W/R	1,556.000 EACH		
0580	06593	PAVEMENT MARKER TYPE V-B Y/R	84.000 EACH		
0590	06600	REMOVE PAVEMENT MARKER TYPE V	1,100.000 EACH		
0600	08100	CONCRETE-CLASS A	21.000 CUYD		
0610	08150	STEEL REINFORCEMENT	152.000 LB		
0620	08905	CRASH CUSHION TY VI CLASS CT	2.000 EACH		

KENTUCKY TRANSPORTATION CABINET
DEPARTMENT OF HIGHWAYS
FRANKFORT, KY 40622

CONTRACT ID: 111051
COUNTY: CLARK, MONTGOMERY
PROPOSAL: 121GR11D051-IM

PAGE: 4
LETTING: 10/21/11
CALL NO: 203

LINE NO	ITEM	DESCRIPTION	APPROXIMATE UNIT QUANTITY	UNIT PRICE	AMOUNT
0630	10020NS	FUEL ADJUSTMENT	43,941.000 DOLL	1.00	43,941.00
0640	10030NS	ASPHALT ADJUSTMENT	77,432.000 DOLL	1.00	77,432.00
0650	20366NN	REPLACE GRATE	18.000 EACH		
0660	20432ES112	REMOVE CRASH CUSHION	2.000 EACH		
0670	20465EC	CLEAN CULVERT	(1.00) LS		
0680	20465EC	CLEAN CULVERT MONTGOMERY CO.	(1.00) LS		
0690	21533EN	EMBANKMENT	10,000.000 CUYD		
0700	21802EN	G/R STEEL W BEAM-S FACE (7 FT POST)	35,475.000 LF		
0710	23143ED	KPDES PERMIT AND TEMP EROSION CONTROL CLARK CO.	(1.00) LS		
0720	23143ED	KPDES PERMIT AND TEMP EROSION CONTROL MONTGOMERY CO.	(1.00) LS		
0730	23237EN10W	WATERBLAST STRIPE REMOVAL	5,000.000 LF		
0740	24189ER	DURABLE WATERBORNE MARKING-6 IN W	140,786.000 LF		
0750	24190ER	DURABLE WATERBORNE MARKING-6 IN Y	112,933.000 LF		
0760	24191ER	DURABLE WATERBORNE MARKING-12 IN W	3,556.000 LF		
	SECTION 0002	BRIDGE			
0770	02110	PARTIAL DEPTH PATCHING	60.000 CUFT		
0780	03298	EXPAN JOINT REPLACE 4 IN	88.000 LF		
0790	03300	ELIMINATE TRANSVERSE JOINT	132.000 LF		
0800	03304	BRIDGE OVERLAY APPROACH PAVEMENT	360.000 SQYD		
0810	06554	PAVE STRIPING-DUR TY 1-4 IN W	600.000 LF		
0820	06555	PAVE STRIPING-DUR TY 1-4 IN Y	600.000 LF		

KENTUCKY TRANSPORTATION CABINET
DEPARTMENT OF HIGHWAYS
FRANKFORT, KY 40622

CONTRACT ID: 111051
COUNTY: CLARK, MONTGOMERY
PROPOSAL: 121GR11D051-IM

PAGE: 5
LETTING: 10/21/11
CALL NO: 203

LINE NO	ITEM	DESCRIPTION	APPROXIMATE UNIT QUANTITY	UNIT PRICE	AMOUNT
0830	08151	STEEL REINFORCEMENT-EPOXY COATED	450.000 LB		
0840	08504	EPOXY SAND SLURRY	290.000 SQYD		
0850	08510	REM EPOXY BIT FOREIGN OVERLAY	1,055.000 SQYD		
0860	08526	CONC CLASS M FULL DEPTH PATCH	4.000 CUYD		
0870	08534	CONCRETE OVERLAY-LATEX	42.000 CUYD		
0880	08549	BLAST CLEANING	1,275.000 SQYD		
0890	22146EN	CONCRETE PATCHING REPAIR	1,700.000 SQFT		
0900	23032EN	BRIDGE BARRIER RETROFIT	672.000 LF		
	SECTION 0003	TRAFFIC LOOPS			
0910	04795	CONDUIT-2 IN	220.000 LF		
0920	04820	TRENCHING AND BACKFILLING	210.000 LF		
0930	04829	PIEZOELECTRIC SENSOR	8.000 EACH		
0940	04830	LOOP WIRE	3,540.000 LF		
0950	04895	LOOP SAW SLOT AND FILL	688.000 LF		
0960	20360ES818	WOOD POST	2.000 EACH		
0970	20391NS835	JUNCTION BOX TYPE A	8.000 EACH		
0980	20468EC	JUNCTION BOX-10 X 8 X 4	4.000 EACH		
	SECTION 0004	MOB AND DEMOB			
0990	02568	MOBILIZATION (NO MORE THAN 5%)	LUMP		
1000	02569	DEMOBILIZATION (AT LEAST 1.5%)	LUMP		
		TOTAL BID			