FILE NAME: $$$$design$file$$specification$$$$ USERNAME: $$$$plotted$by$$$$ DATE: $$$$DATE$$$$

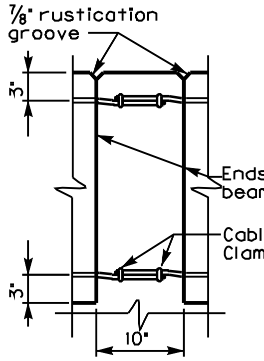

SECTION C–C

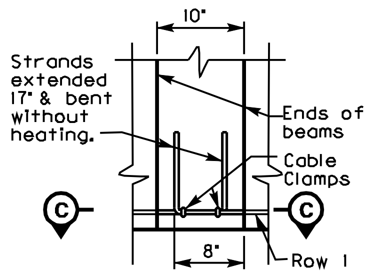

STRAND SPLICE DETAIL

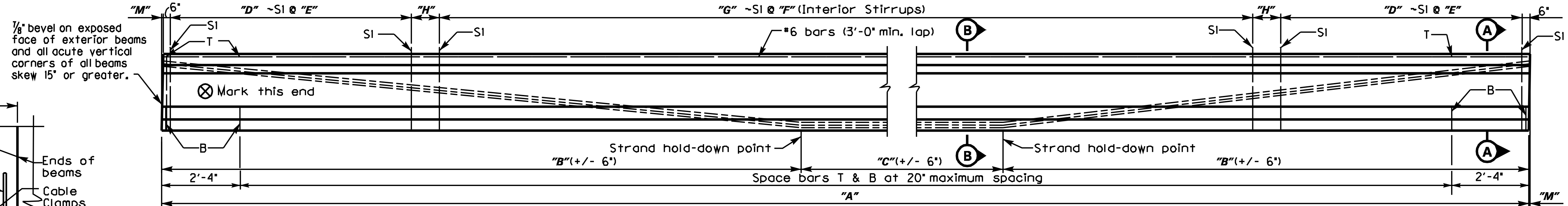

ELEVATION OF BEAM

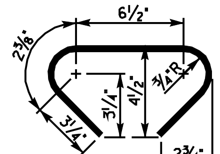

T Bar
~Size #4~

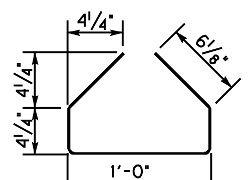

B Bar
~Size #3~

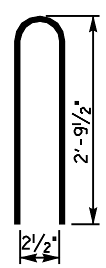

S1(e)
~Size #4~

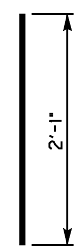

S2
~Size #5~

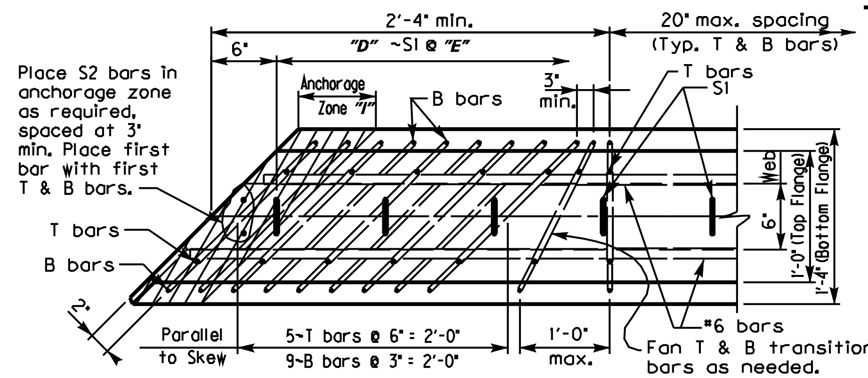

TYPICAL SKEWED END TREATMENT

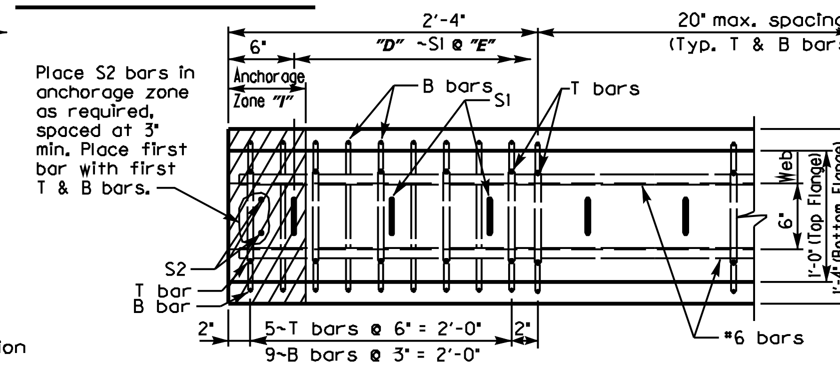

TYPICAL SQUARED END TREATMENT

NOTE: Ensure #6 bars maintain a 1" clearance from each end of the beam.

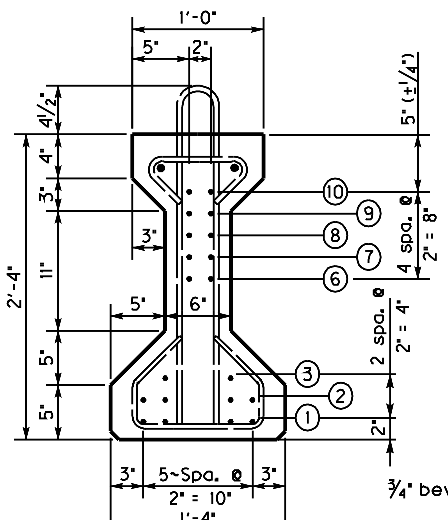

SECTION A–A

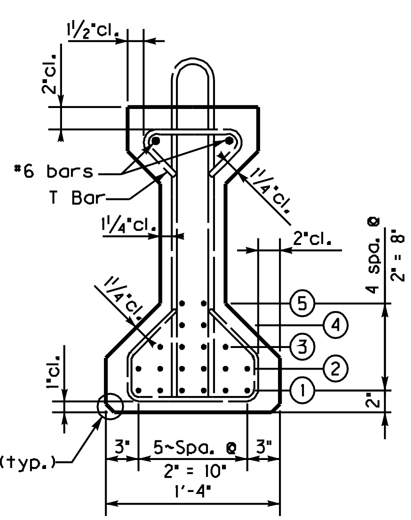

SECTION B–B

General Notes

CONCRETE: Ensure prestressed girder concrete is in accordance with these plans and the specifications.

MATERIALS DESIGN SPECIFICATIONS: For prestressed beams:
FY = 60,000 psi F'S = 270,000 psi

PRESTRESSING REINFORCEMENT: Ensure that strands are 1/2" (nominal diameter, 0.153 sq. in.), uncoated seven-wire stress relieved, low-relaxation conforming to AASHTO M 203, Grade 270. Billing of the cost for redesign of beam and subsequent plan modifications will be made for any request of alternate strand type or arrangement. The designer of the original plans is responsible for the billing and work.

CONSTRUCTION METHOD: Pretension all beams. Ensure concrete has attained f'ci (shown in the table) in standard test cylinders that are made and cured identically with the beams without bond stresses being transferred to the concrete or releasing the end anchors. Attain f'c (shown in the table) at or prior to 28 days. Apply an initial force of 31,003 lbs. per low-relaxation strand to develop a stress of 202,500 psi. No beam will be accepted that is honeycombed to the extent that strength of the beam or resistance to deterioration has been affected. An allowance of 0.0005L is made for shortening of beams due to shrinkage and elastic change. Show a detensioning plan by sequential numbering of the strand pattern on the shop plans.

LIFTING DEVICES: Detail lifting devices on the shop plans. Loads are to be distributed equally to each device.

BEARING DEVICES: Include the price for lead plates and/or bearing pads in the bid for precast beams.

FABRICATION: Beams shall not be fabricated more than 120 days before the deck is to be poured.

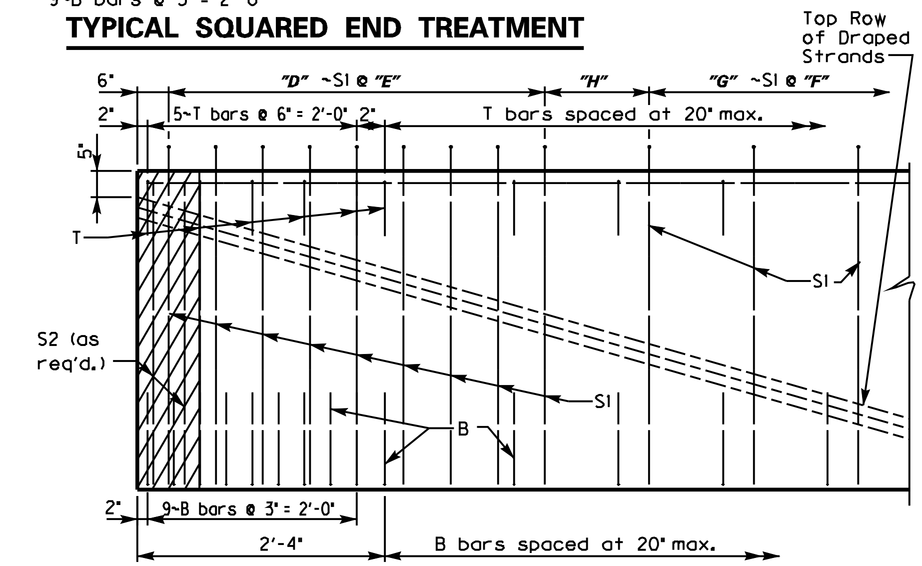

PARTIAL SECTION ON CENTERLINE

Strand Data with number indicated in rows																													Concrete Stress (psi)		No. of S Bars		Hold-Down Capacity	Beam Data (measured along centerline)													Maximum Allowable Camber
Mark	Midspan (SECTION B–B)									End (SECTION A–A)																		Total No.						Total No.	Dimensions											Approximate Weight	
	①	②	③	④	⑤					①	②	③			⑥	⑦	⑧	⑨	⑩										f'ci	f'c	S1	S2	lbs.		A	B	C	D	E	F	G	H	I		M		

SHEET LOCATION:

REVISION	DATE

DATE:	CHECKED BY
DESIGNED BY:	
DETAILED BY:	

Commonwealth of Kentucky
DEPARTMENT OF HIGHWAYS

COUNTY

ROUTE | CROSSING

PPC I-BEAM, TYPE 1, DETAILS

PREPARED BY
Division of Bridge Design

SHEET NO.

DRAWING NO.