URS

US60 TENNESSEE RIVER BRIDGE

Michael J. Zwick, P.E.

Donald Nick Corda, P.E.

Craig R. Klusman, P.E.

Presentation to SASHTO / KYTC Partnering Conference

- Project Background and History
- Aesthetic Considerations
- Results of Preliminary Design
- Truss Design
- Design of Truss Connections
- Inspection Access
- Project Status

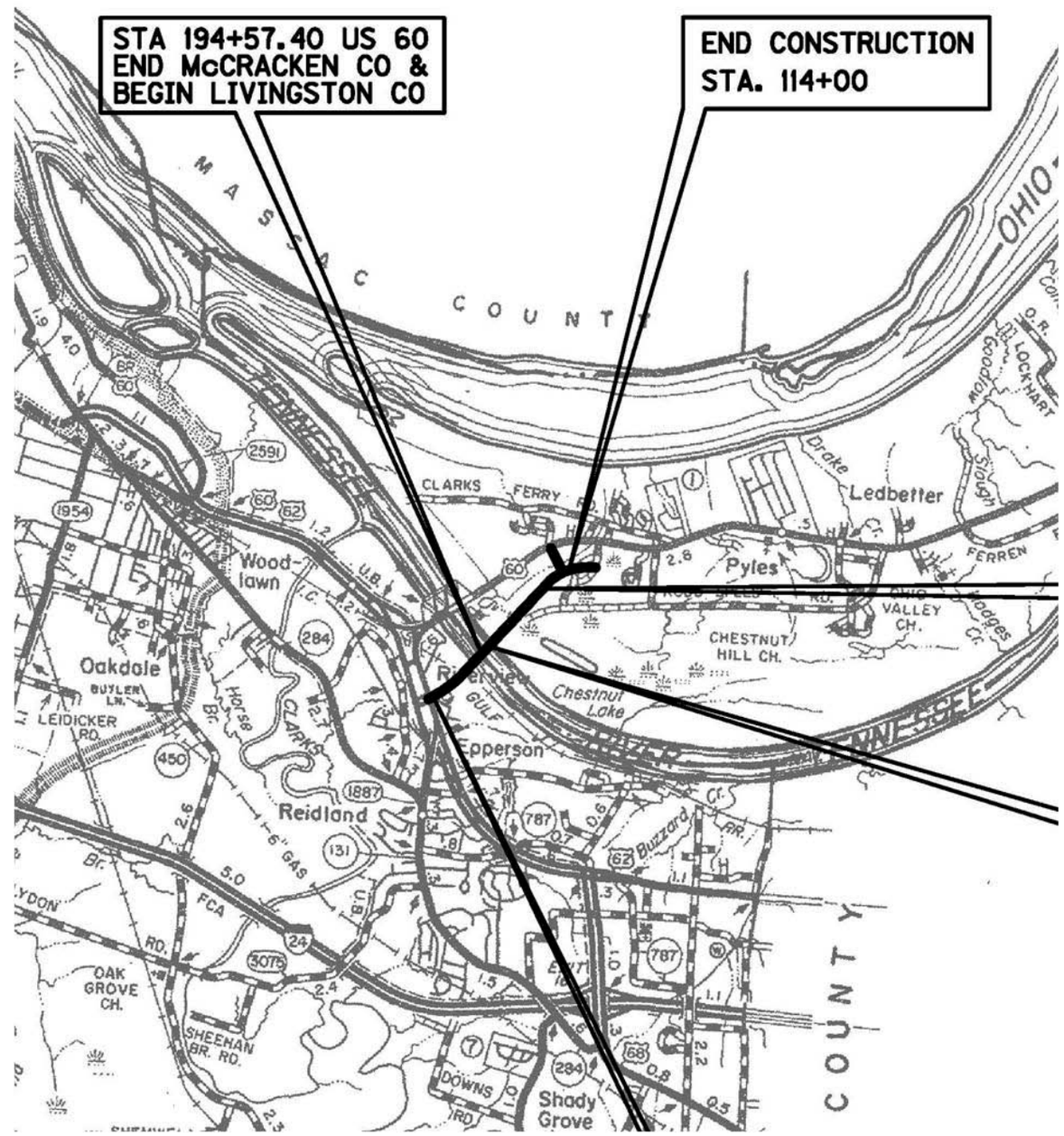

Paducah, KY

US60 Design Team

URS

KENTUCKY TRANSPORTATION CABINET

ENTRAN®

JENKINS ENGINEERING COMPANY

BACKGROUND AND HISTORY

C.J. Mahan Construction awarded contract for pier January 2006

- Piers designed by Division of Structural Design
- Contract only included four primary piers (Piers 6 through 9)
- Span arrangement of piers 500’, 900’, 400’

BACKGROUND AND HISTORY

May 2006 VE Study

- Driven by concerns for Aesthetic appearance of proposed truss “tunnel effect”
- Reviewed various options for replacement including improved truss, tied arches and cable stayed
- Conclusion “to significantly improve the appearance of the bridge, an entire redesign is necessary”.

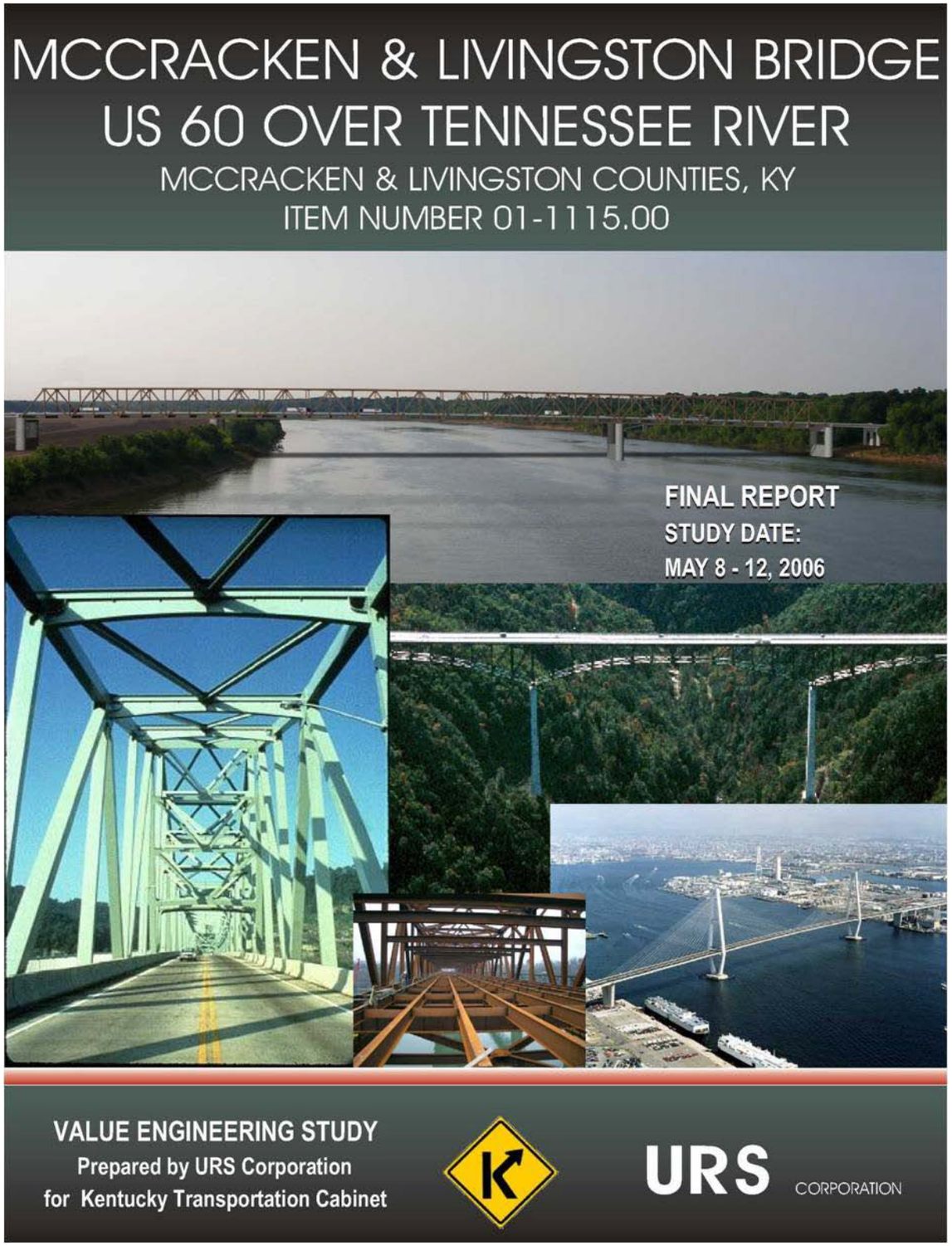

BACKGROUND AND HISTORY

2006 Public Involvement Process to Develop "Desired Look of Truss"

- Warren Truss with no Verticals (Similar to Cooper River Bridge in Charleston)
- Minimize lateral bracing for more open design
- Attention to Connection Details
- 60 foot depth of truss

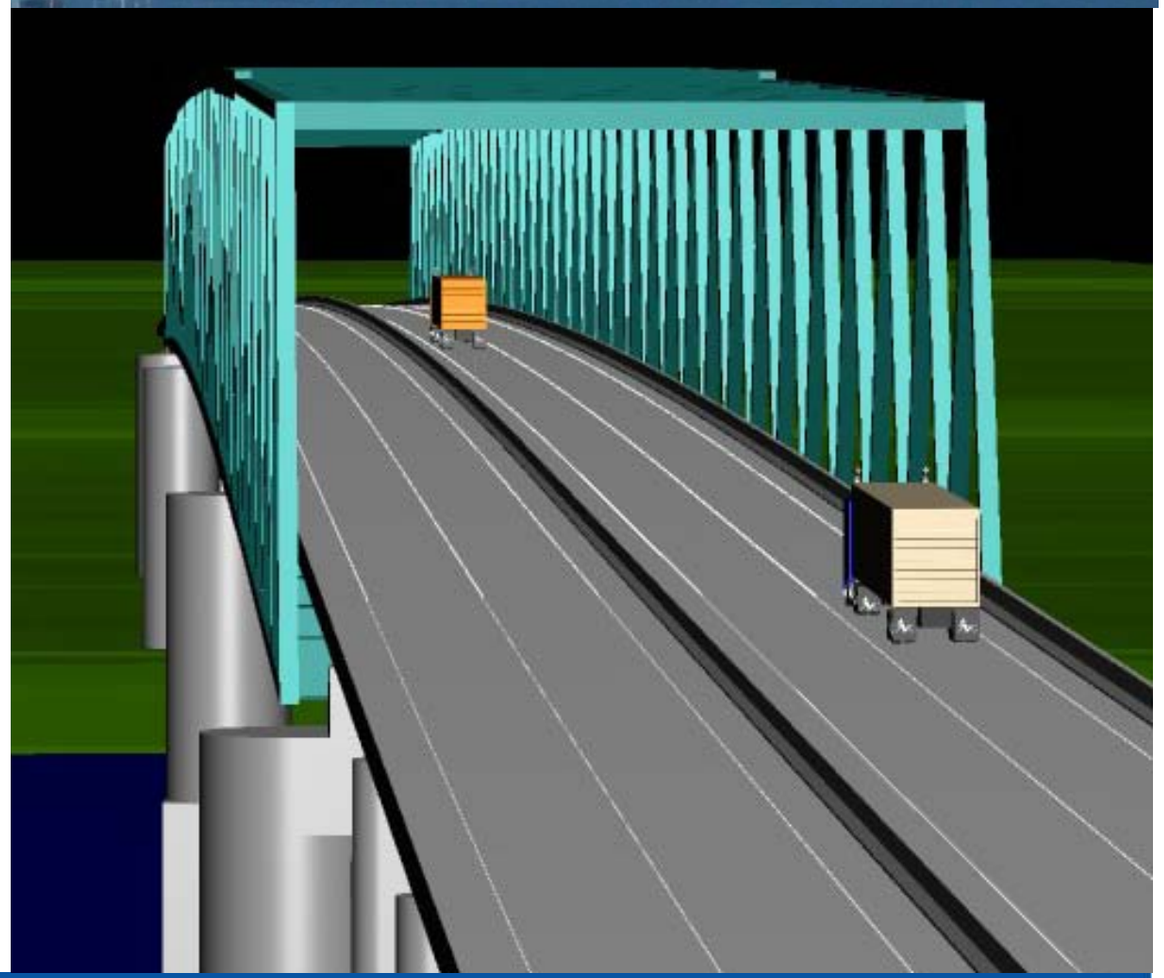

BACKGROUND AND HISTORY

URS Team authorized to proceed with final design of Truss May 12, 2009

- Design truss to fit nearly complete piers with little modification
- Incorporate public involvement comments
- Incorporate inspection access elements.

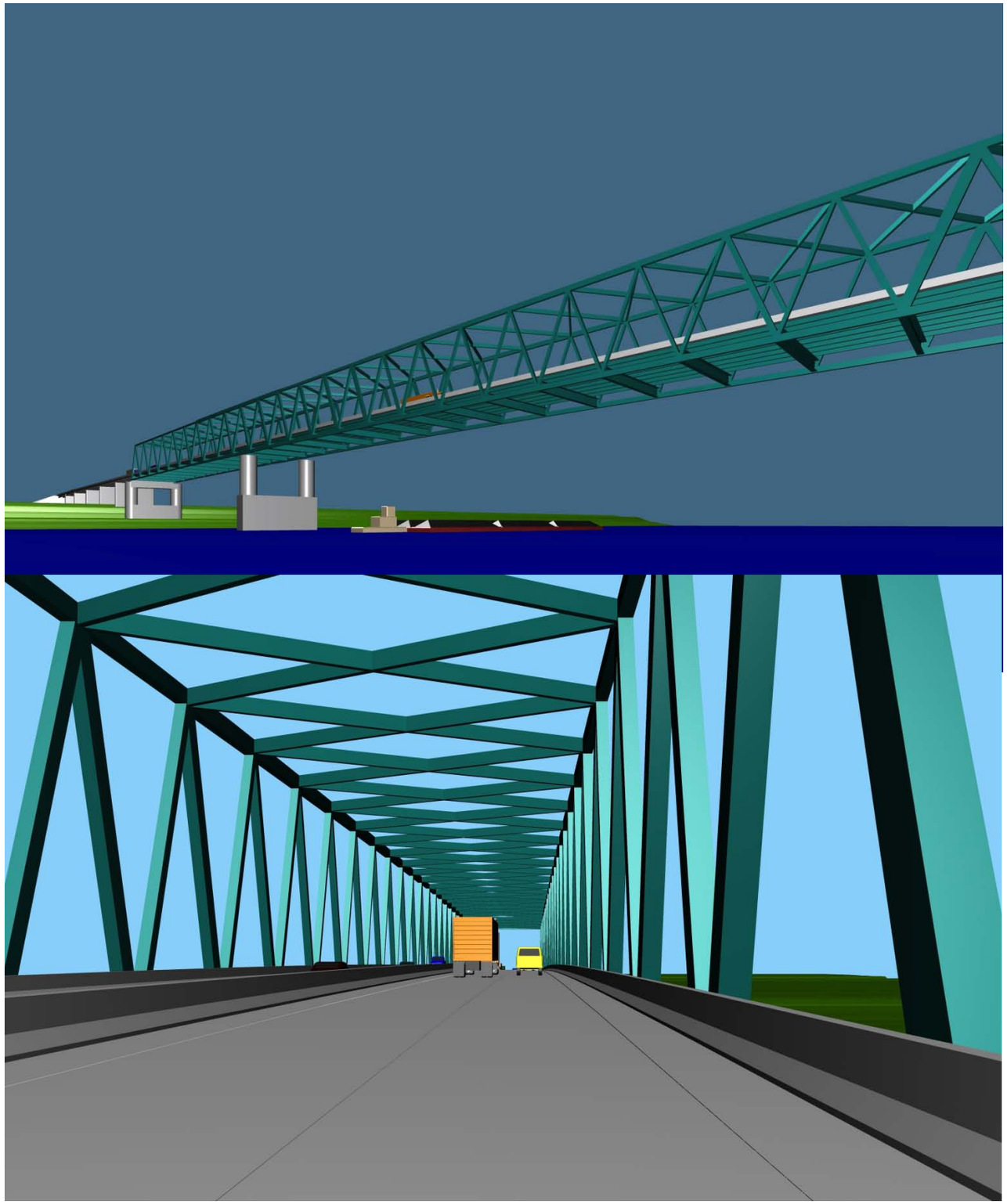

AESTHETICS

A visualization exercise using the Taylor Southgate Bridge in Cincinnati

AESTHETICS

Sway Bracing and Verticals

Tunnel Effect

AESTHETICS

How does the elimination of Sway Bracing change the appearance of a truss?

AESTHETICS

How does the elimination of Portal Frames change the appearance of a truss?

AESTHETICS

How does the elimination of Verticals change the appearance of a truss?

AESTHETICS

Lets now compare the results.

OTHER AESTHETICS CONSIDERATIONS

Use of Closed Box Section for all Truss Members

RESULTS OF PRELIMINARY DESIGN

2006 Public Involvement Process to Develop "Desired Look of Truss"

TRUSS DESIGN

Design Considerations

- Retain Existing Piers – Span Lengths – Truss Configuration
- Use “Normal Framing Plan” on Center Skewed Piers (3.5 degrees)
- Simplification of Bracing System
- No Interior Deck Joints
- Design Bearings to Accommodate Seismic Loads with NO Retrofits of Constructed Piers

TRUSS DESIGN

Final Design Methodology

- Load Factor Design
- Site-Specific Seismic Response
- Three-Dimensional Modeling
  - Truss Main Members Have Adequate Capacity with Standard Two-Dimensional Modeling (Simplify Load Ratings)
- Latest Guidelines for Connection Design / Detailing
- Painted Weathering Steel Grade 50 and 70

TRUSS DESIGN

100-Foot Panel Spacing from VE Study

50-Foot Panel Spacing from Public Involvement

TRUSS DESIGN

Main Truss Configuration

- Equilateral Triangles – Similar Joint Spacing
- Minimal Number of Joints – Detailing Costs
  - Optimize with Consideration of Floor System
- No Truss Member Splices – Plate Availability
- Welded Closed-Box Sections
- Panel Spacing – Bottom Chord
  - 10 @ 62’-6”
  - 10 @ 64’-2”
  - 8 @ 66’ – 8”

TRUSS DESIGN

Truss Framing

- Three Spans – 500 Ft / 900 Ft / 400 Ft
- Uniform 60 Ft Depth of Structure
- Warren Bracing – No Verticals
- Similar Panel Spacing

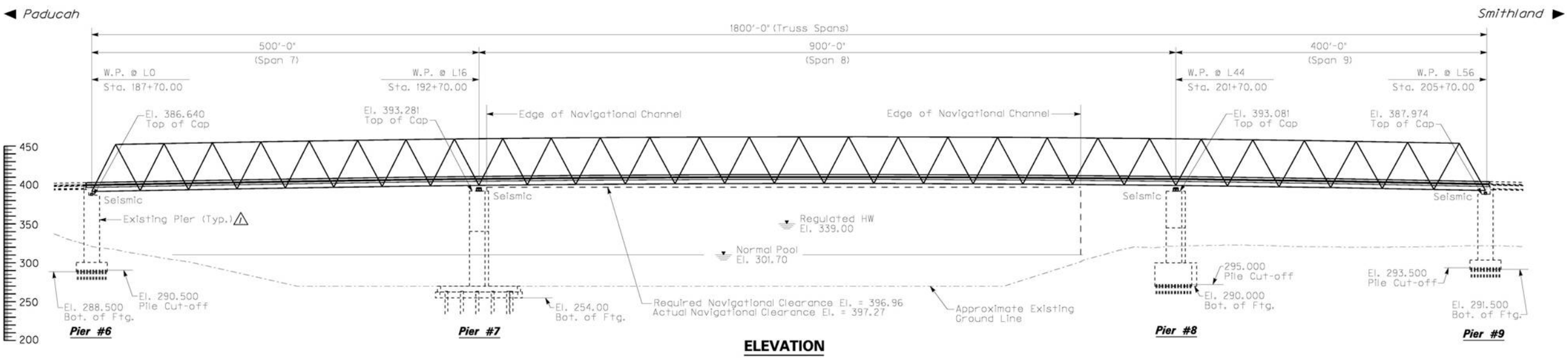

TRUSS DESIGN

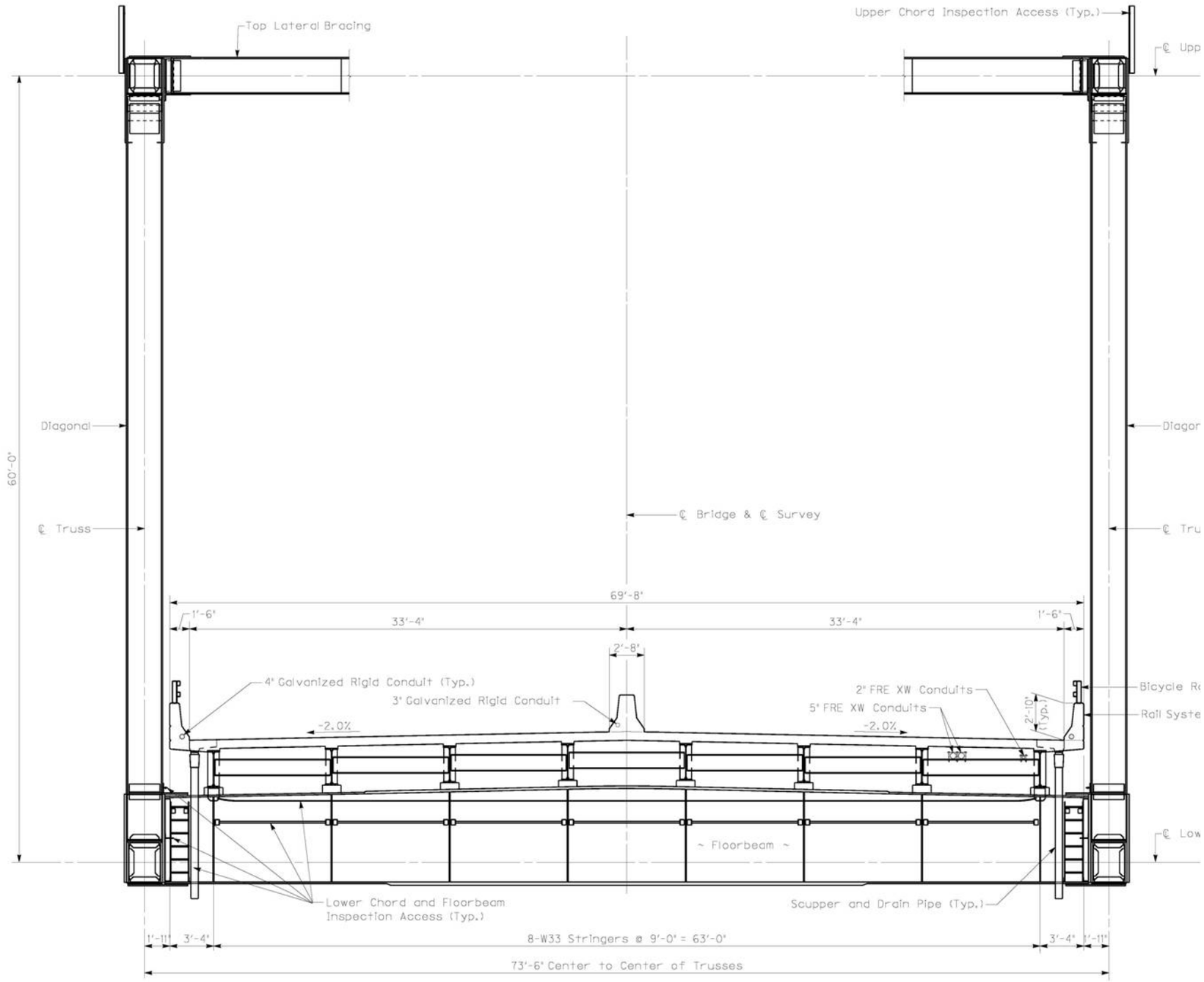

Typical Section

TRUSS DESIGN

Truss Section

- Four Traffic Lanes with Shoulders
- Economical Design of Floor System Components
- No Interior Deck Joints – Maintenance
- Long-Life Bronze Stringer Bearings

FINAL DESIGN

Framing – Top Chord Bracing

- All Rolled Sections
  - Reduced Fabrication Costs
- Simplification of Detailing
- Three-Dimensional Modeling
- Elimination of Unnecessary Load Paths

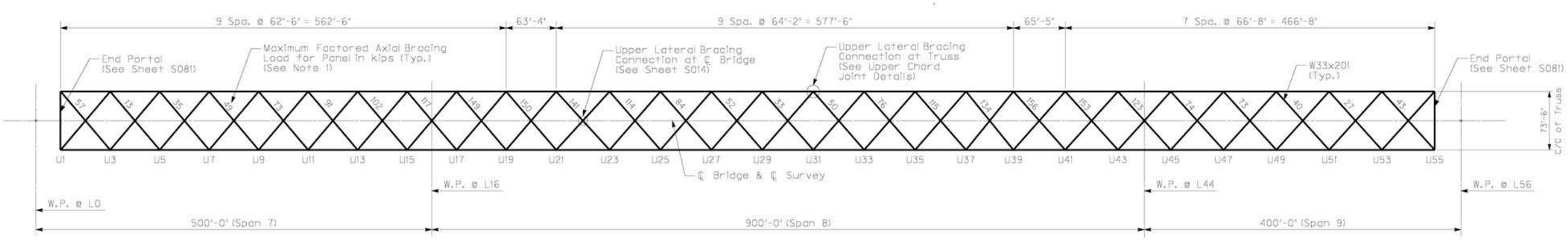

UPPER LATERAL BRACING PLAN

TRUSS DESIGN

Top Chord Bracing

- End Portals – Closed Boxes (Aesthetics)
- Elimination of Interior Portals and Sway Bracing
- Bracing Elements at Interior Piers are Satisfactory for Portal Loads

TRUSS DESIGN

Framing – Bottom Chord Bracing

- All Rolled Sections
  - Reduced Fabrication Costs
- Diamond Pattern – Simplification of Floor Beam Connections at Panel Points
- Provide Lateral Support of Floor Beams – Longitudinal Deck Movement

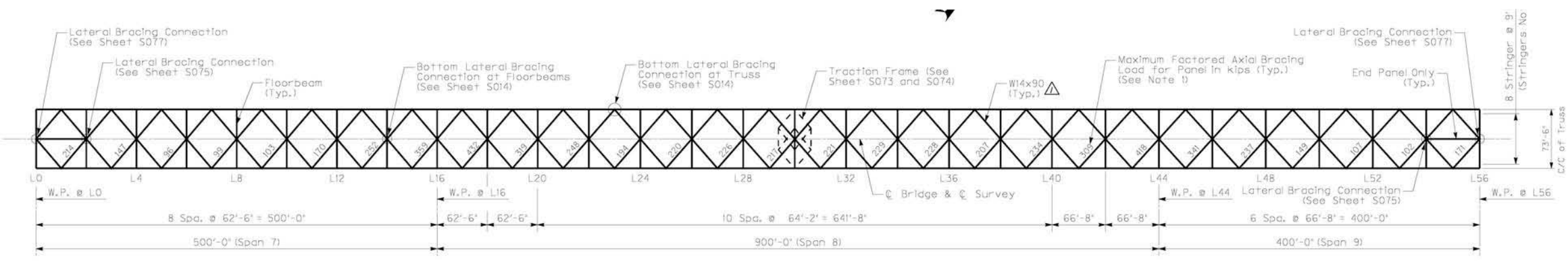

LOWER LATERAL BRACING PLAN

TRUSS DESIGN

Bottom Chord Bracing

- Three-Dimensional Modeling
- Over-Sized Bolt Holes – Accommodate Movement During Construction
- Center Traction Frame – Placement of Continuous Deck

TRUSS DESIGN

Other Design Considerations

- Global Three-Dimensional Modeling – Site Specific Seismic Response
- Dynamic Isolation Bearings – No Pier Retrofits Required
- Elimination of ALL Intermediate Deck Joints – Low Maintenance Design
- Three-Dimensional Analysis of Floor System – Temperature Loads and Construction
- Provision of Maintenance Access
- Provision of Lightning Protection System

DESIGN OF TRUSS CONNECTIONS

Design Criteria

- Bolts
  - A325 Type 1 Galvanized
  - ⅞” or 1⅛” diameter
  - Threads Precluded from Shear Plane
- M-270 Grade 50W Steel
- Compact Connections

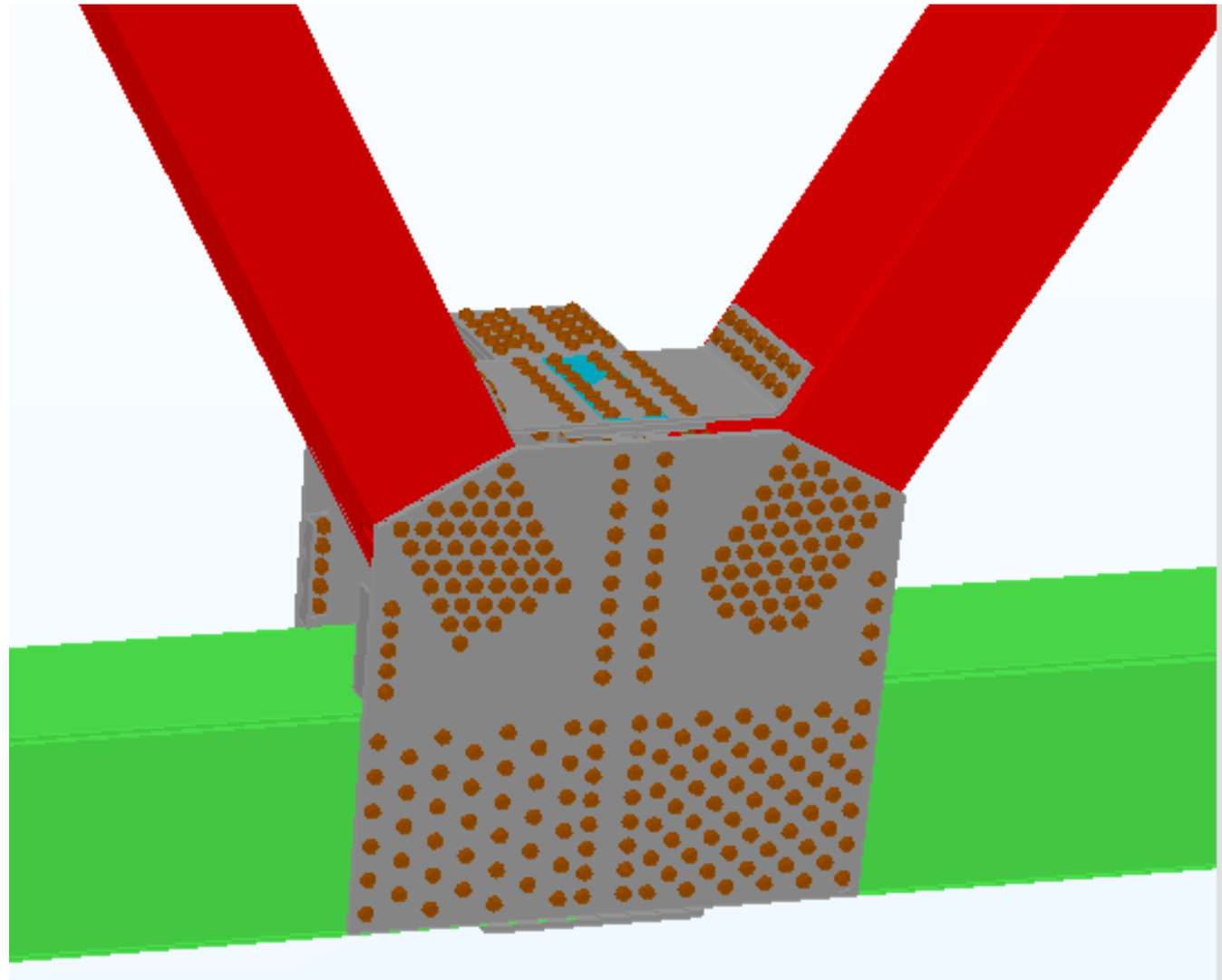

DESIGN OF TRUSS CONNECTIONS

Splices

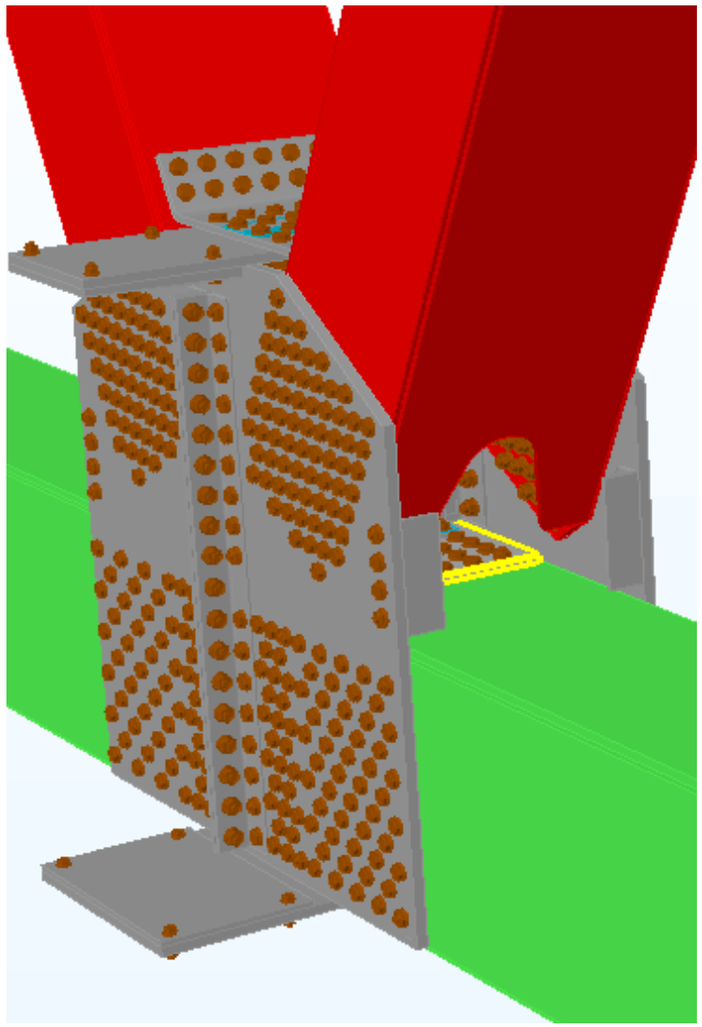

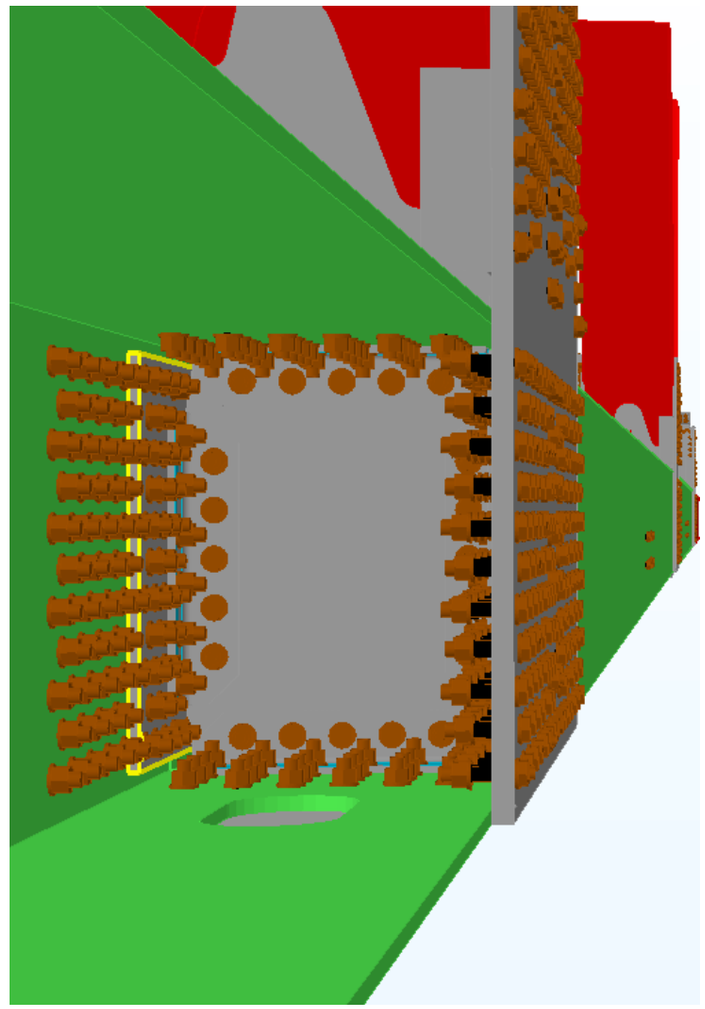

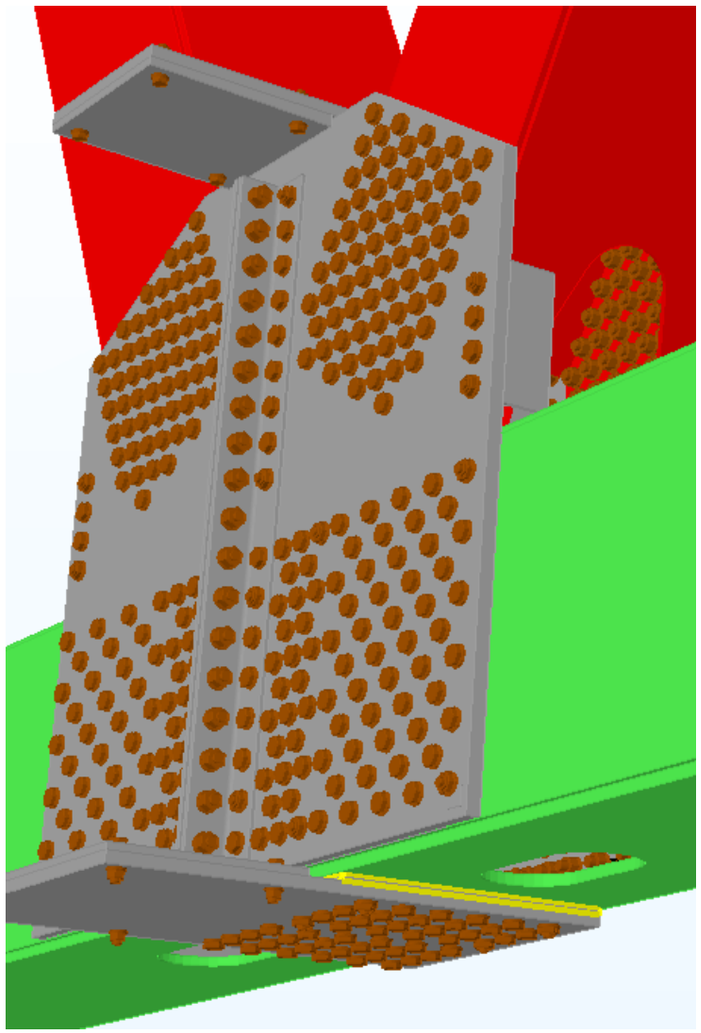

DESIGN OF TRUSS CONNECTIONS

Floorbeam Tie Plates

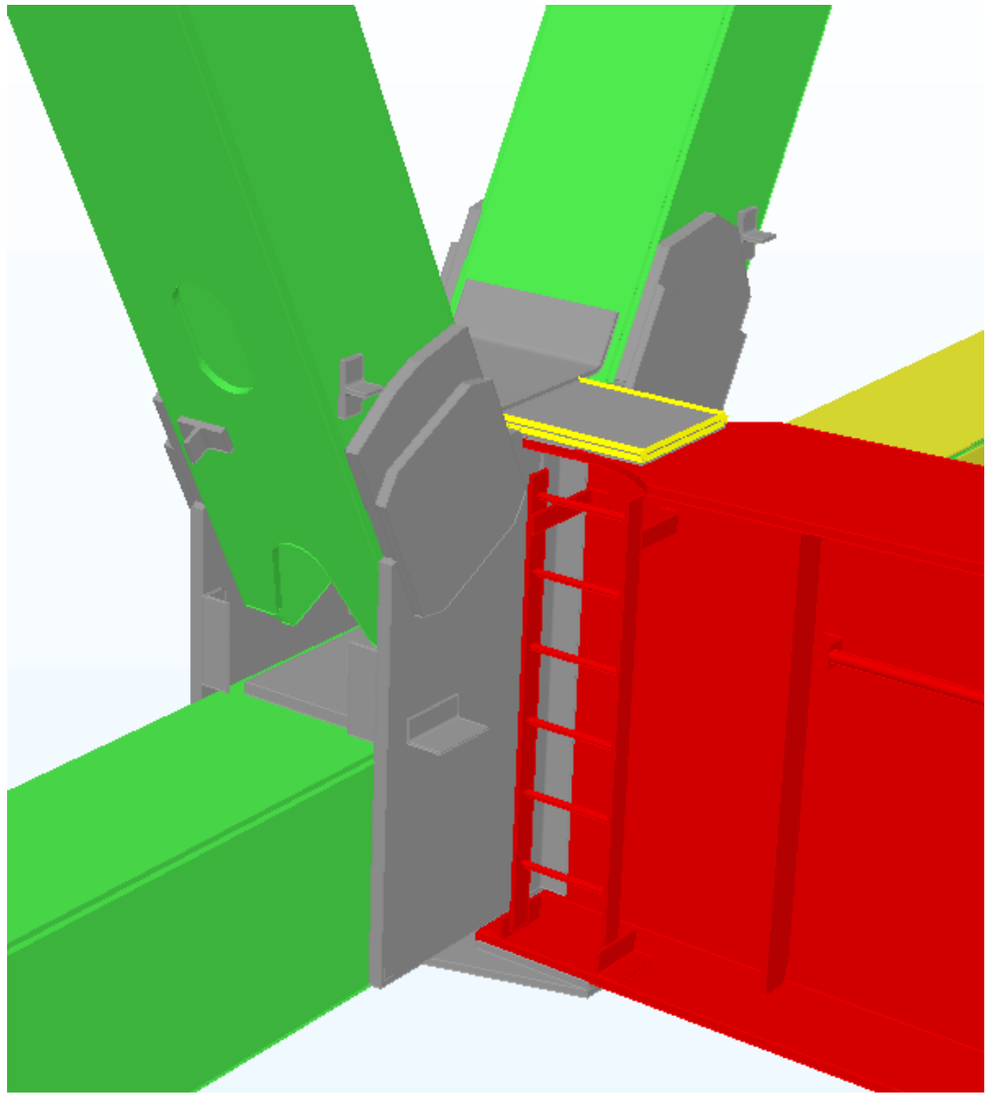

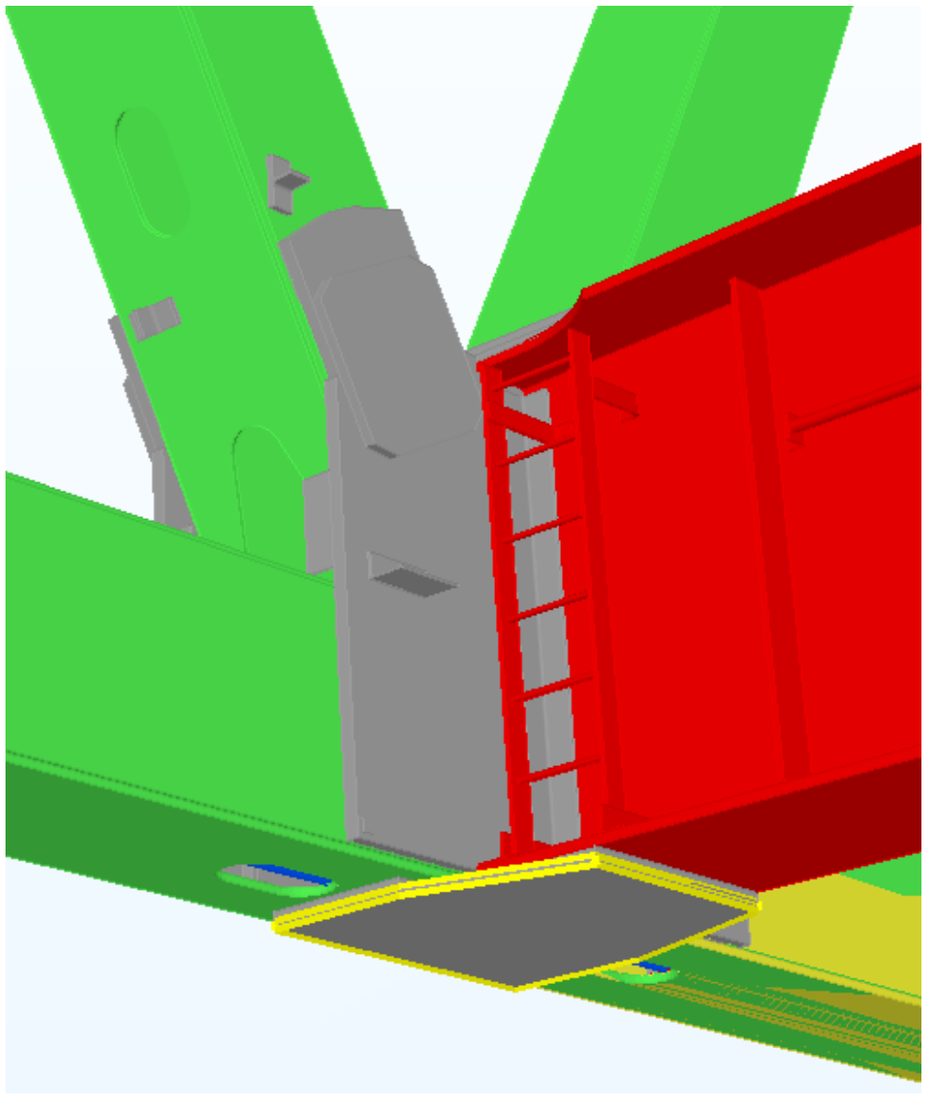

DESIGN OF TRUSS CONNECTIONS

Shear Plates

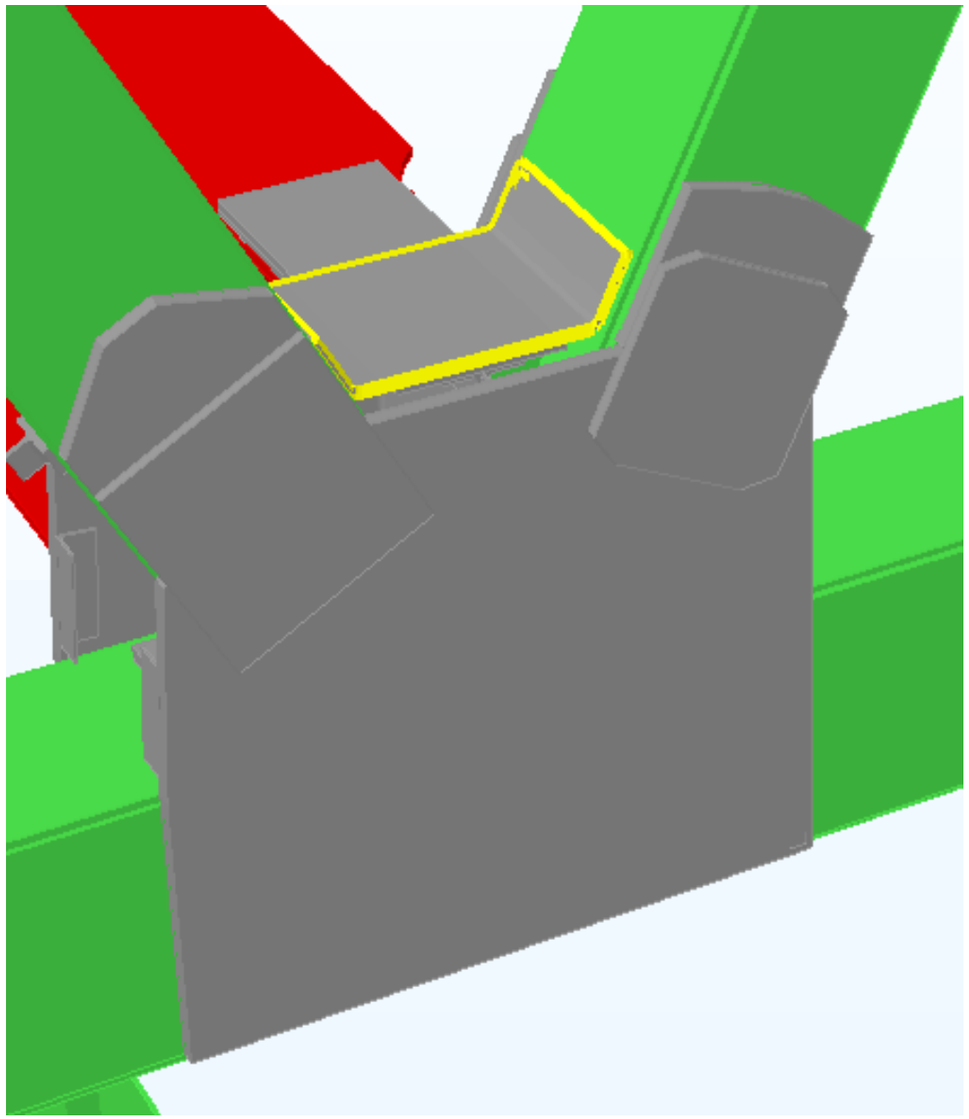

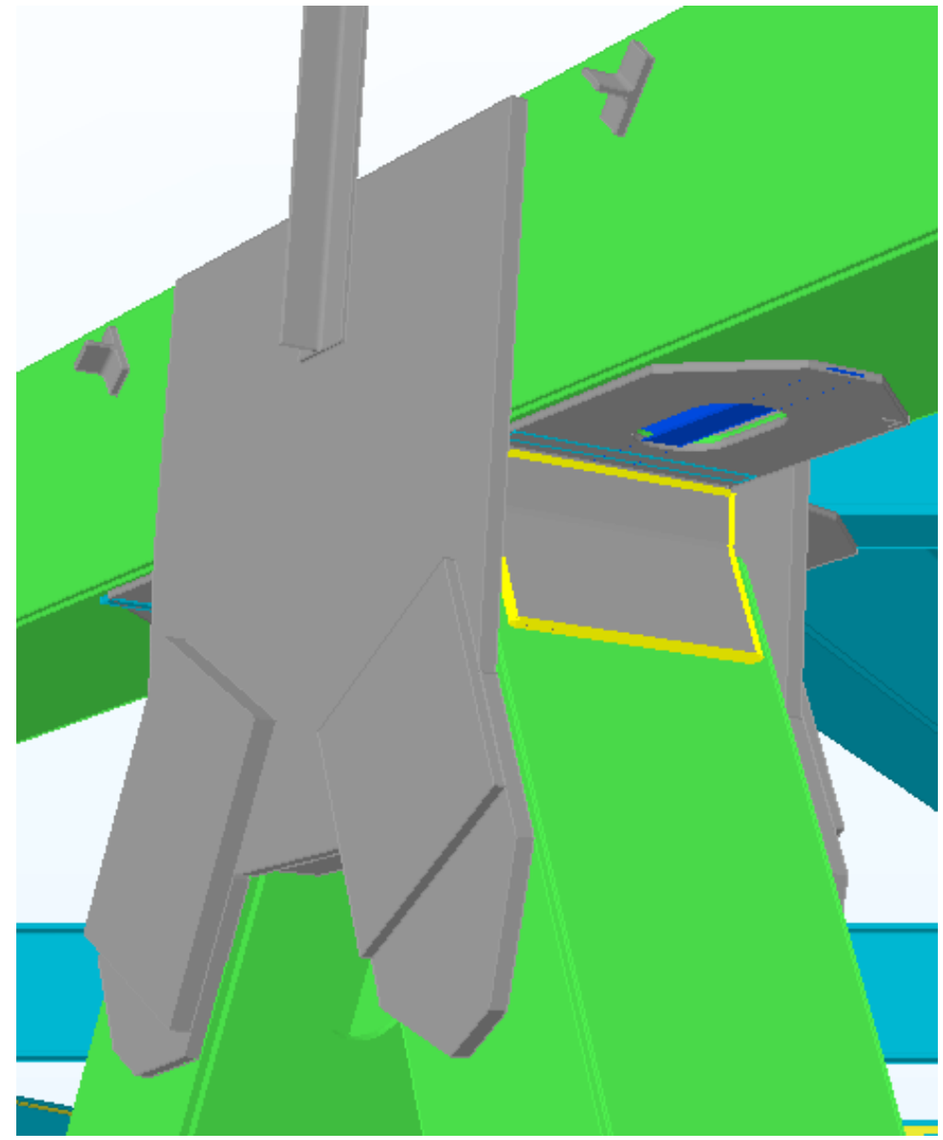

DESIGN OF TRUSS CONNECTIONS

Upper Chord Connections

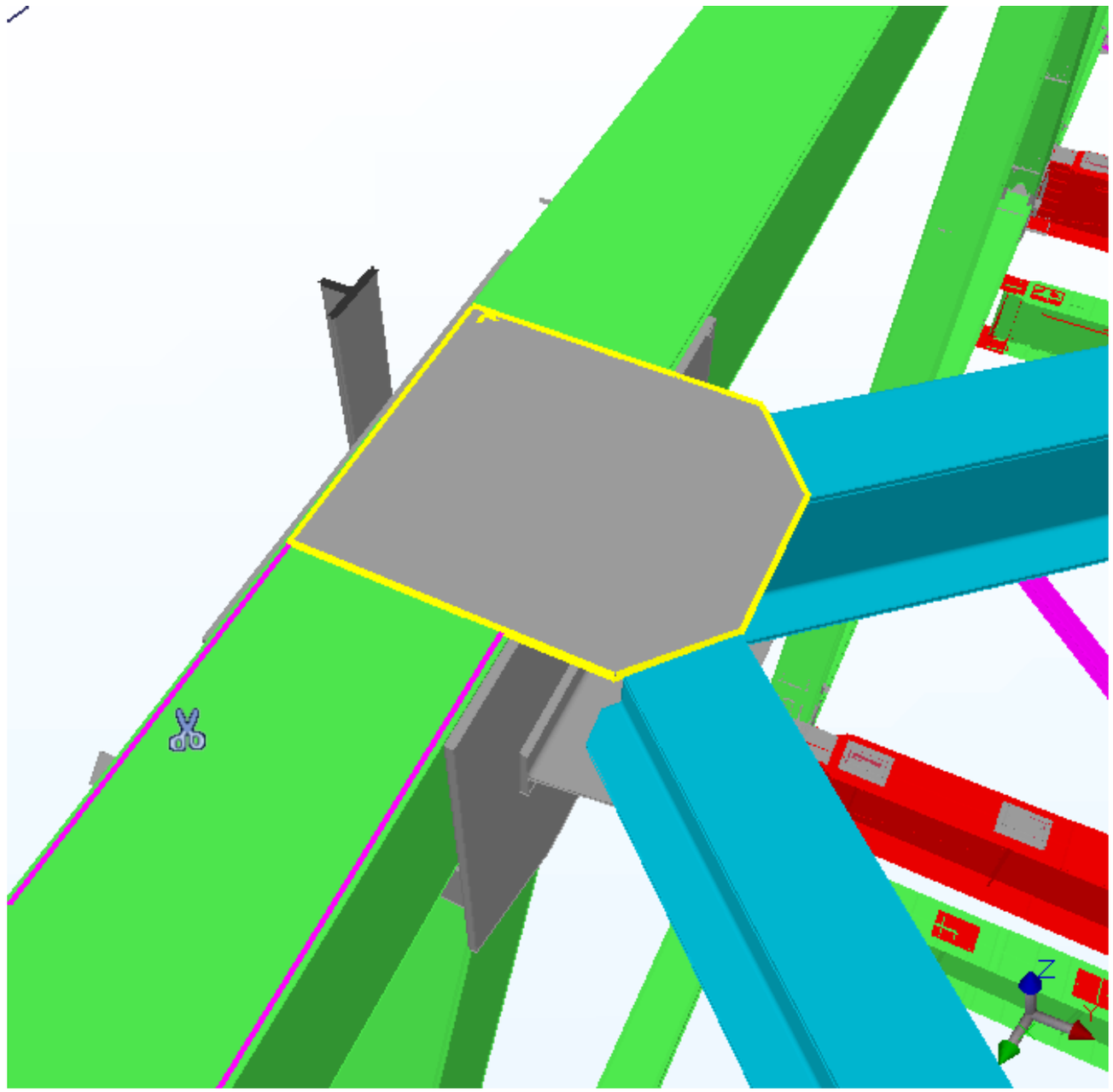

DESIGN OF TRUSS CONNECTIONS

Upper Chord Connections

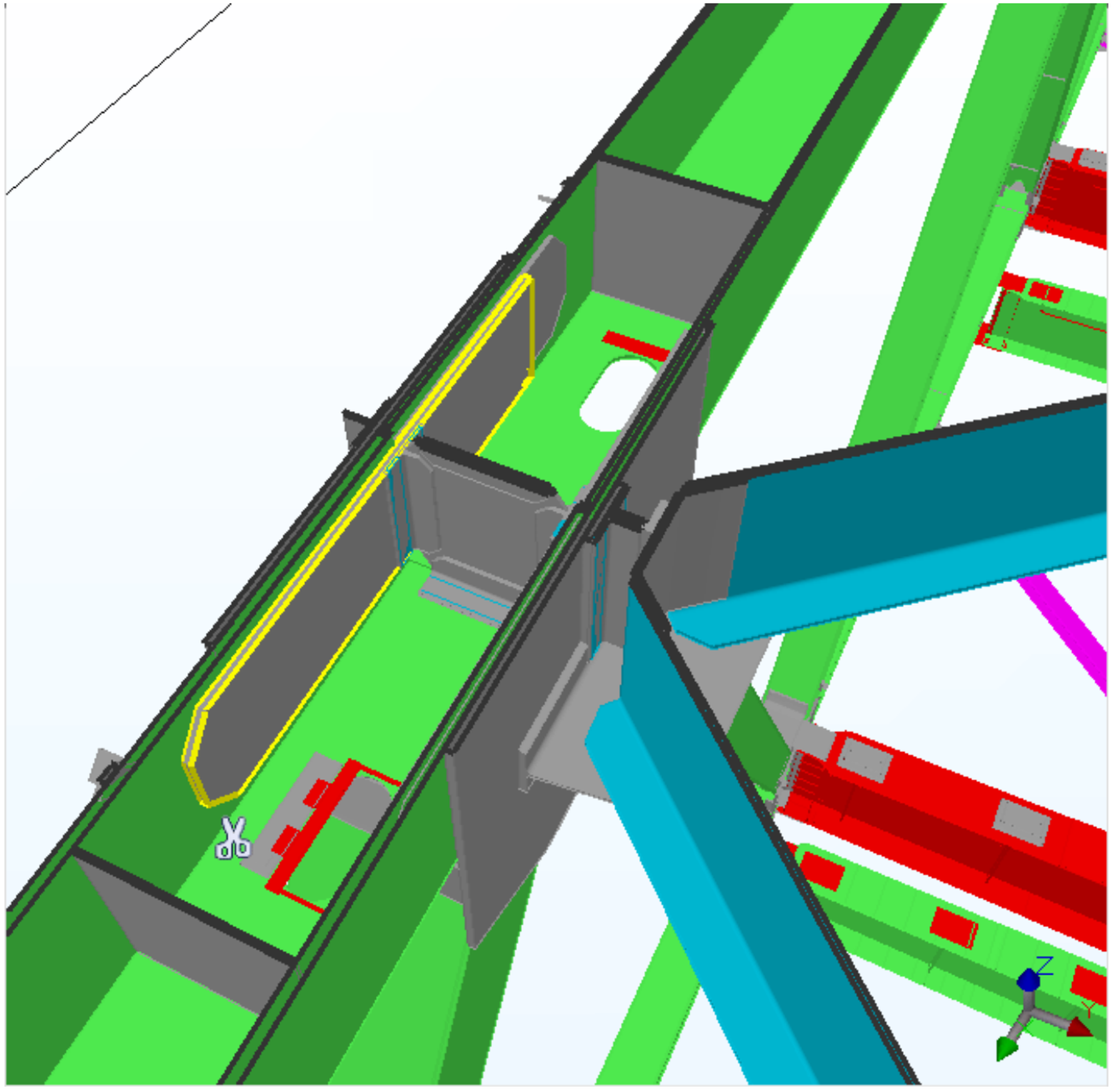

DESIGN OF TRUSS CONNECTIONS

Upper Chord Connections

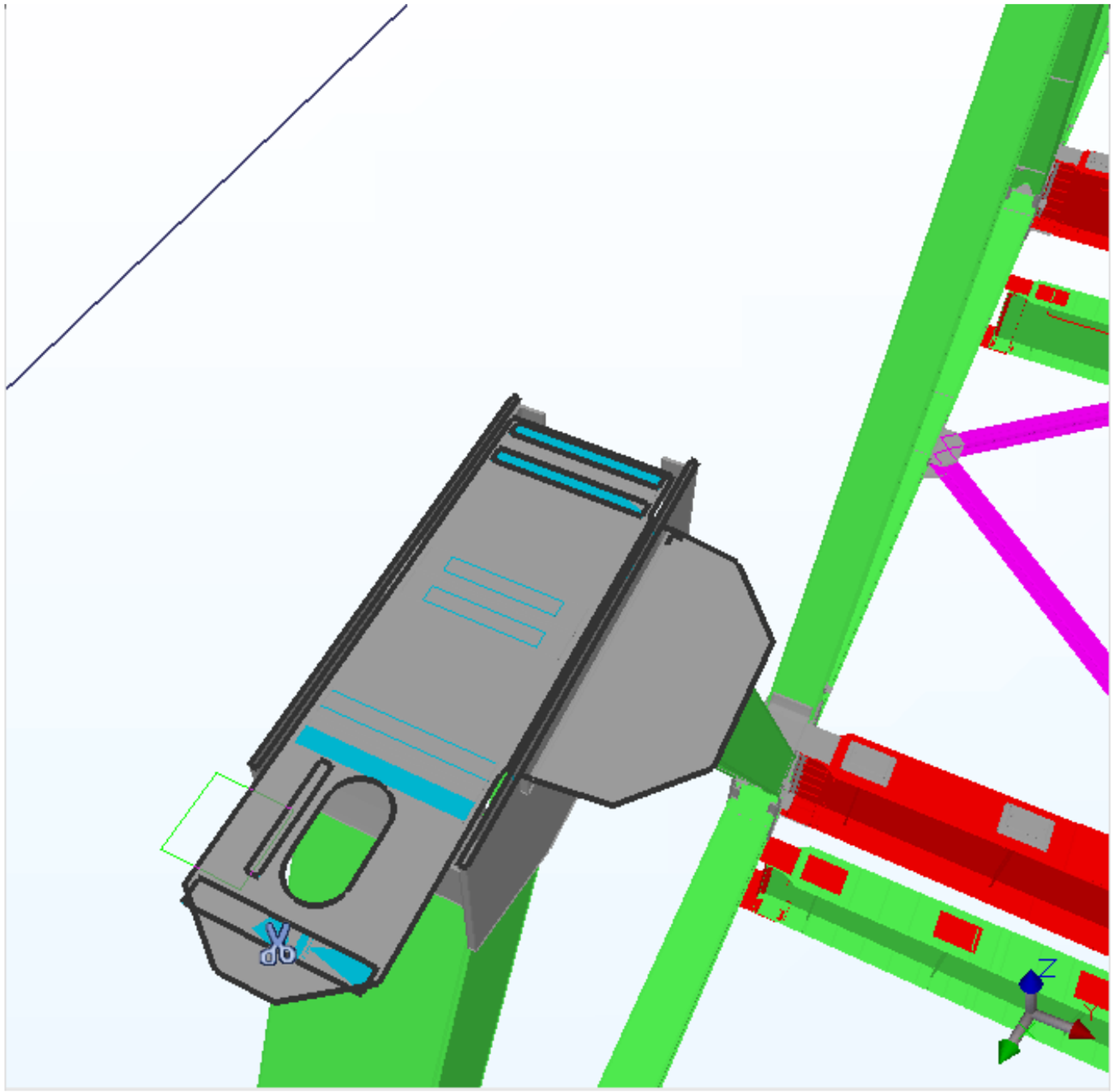

DESIGN OF TRUSS CONNECTIONS

Upper Chord Connections

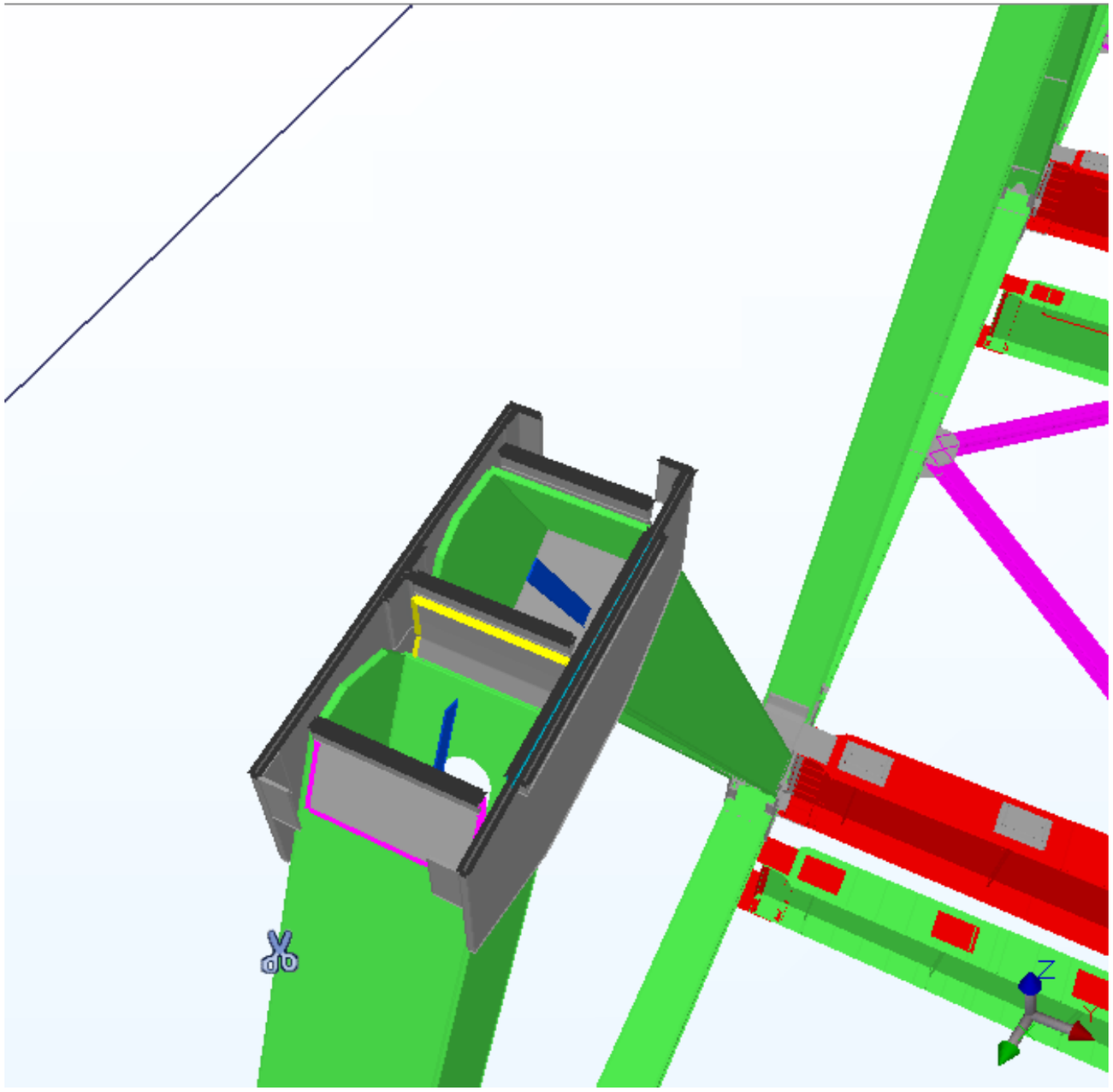

DESIGN OF TRUSS CONNECTIONS

Double Shear Splice Plates

- Diagonals
- Benefits
  - Compact Connection
  - Tension Area Net Section Loss Reduction

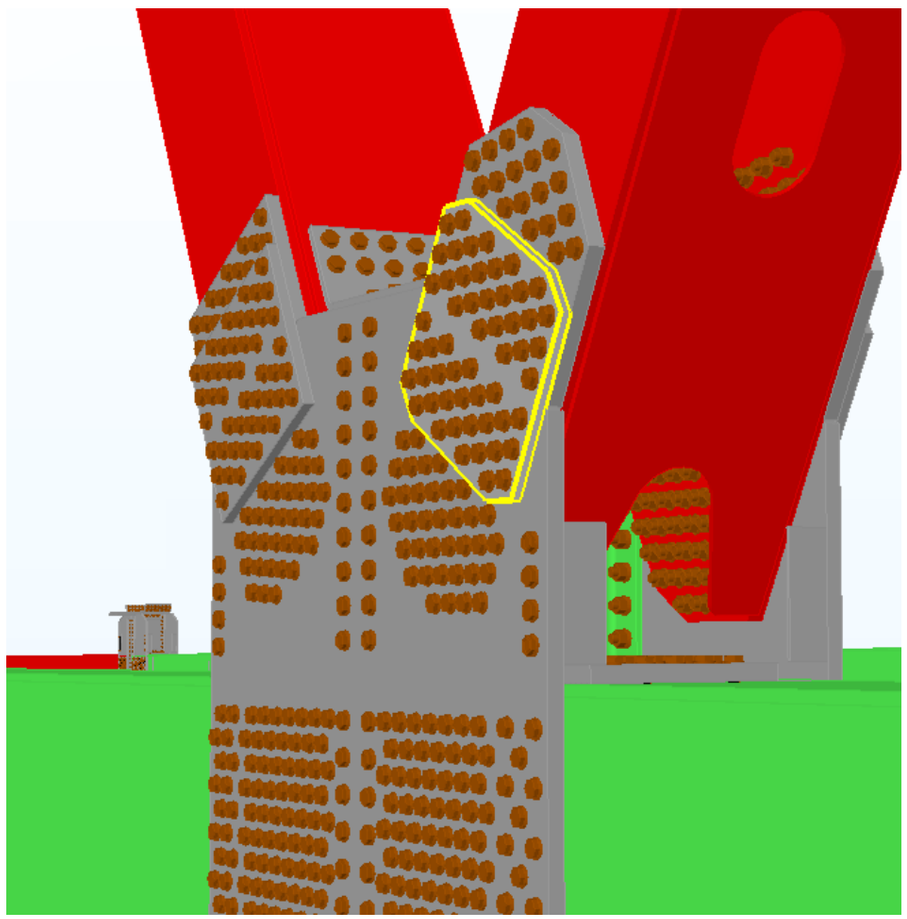

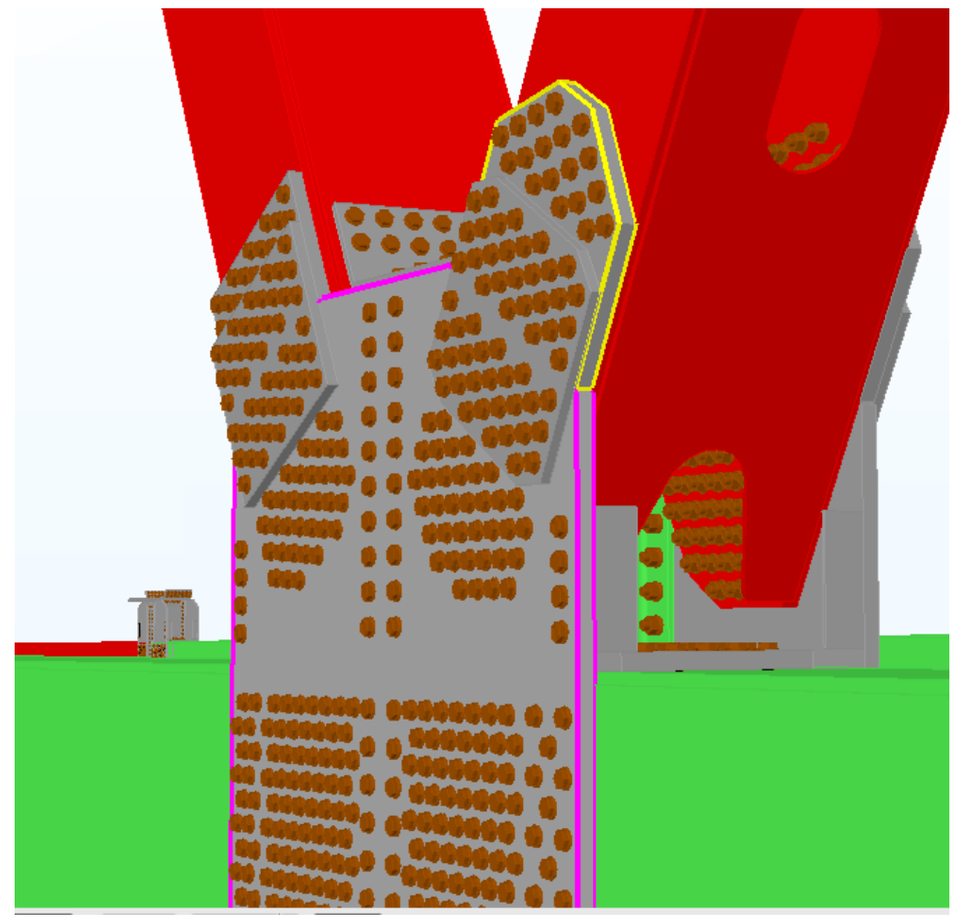

DESIGN OF TRUSS CONNECTIONS

Double Shear Splice Plates

- Combs-Hehl Bridge
  - Problem: Cracked Plates
  - Cause: Out-of-Specification Steel
  - Possible Contributors:
    - Insufficient fill plate development
    - Fill plate thickness
    - Lack of primer on faying surfaces
- US 60 Implications
  - Even stress distribution
  - Grade 50W steel (toughness)
  - Designate plates as fracture critical material
  - Develop fill plates for slip

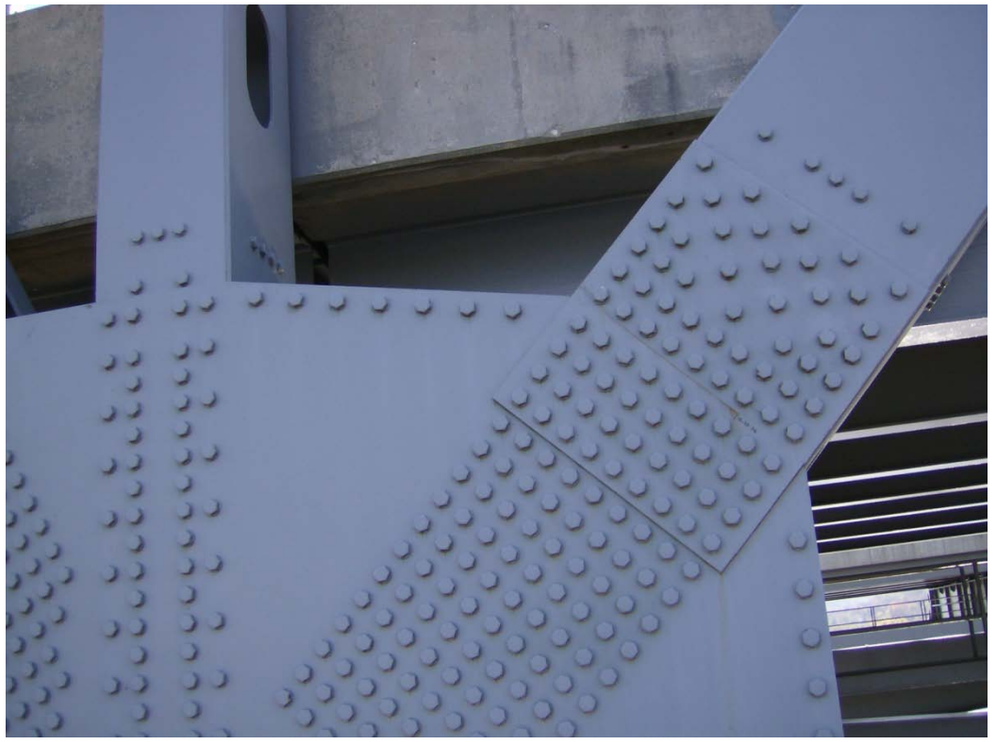

DESIGN OF TRUSS CONNECTIONS

Design Criteria - Tension Area
Net Section Loss Reduction

- Truss Design Benefits
  - Gross Effective Area
- Connection Design
  - Extend Fills
  - Stagger Bolts
  - Specify Required Spacing

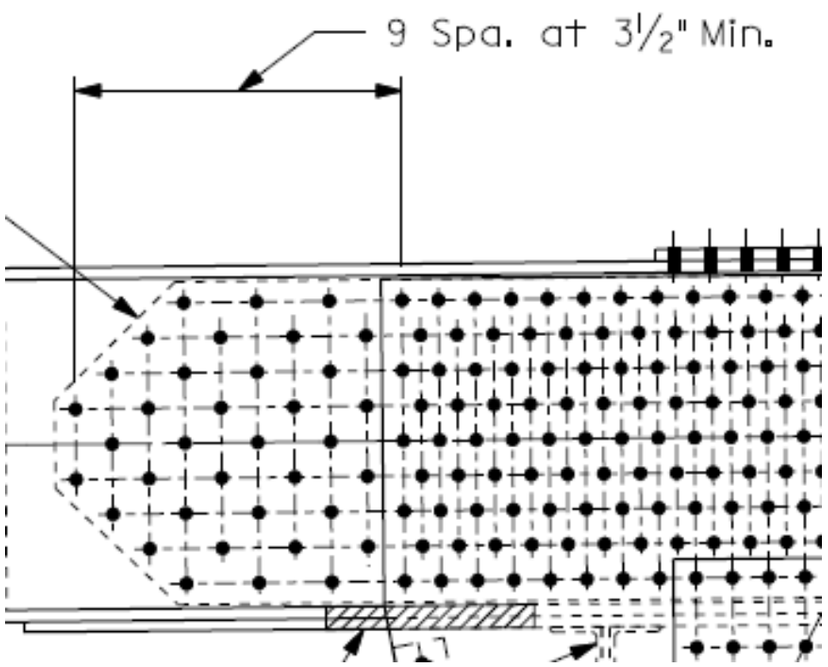

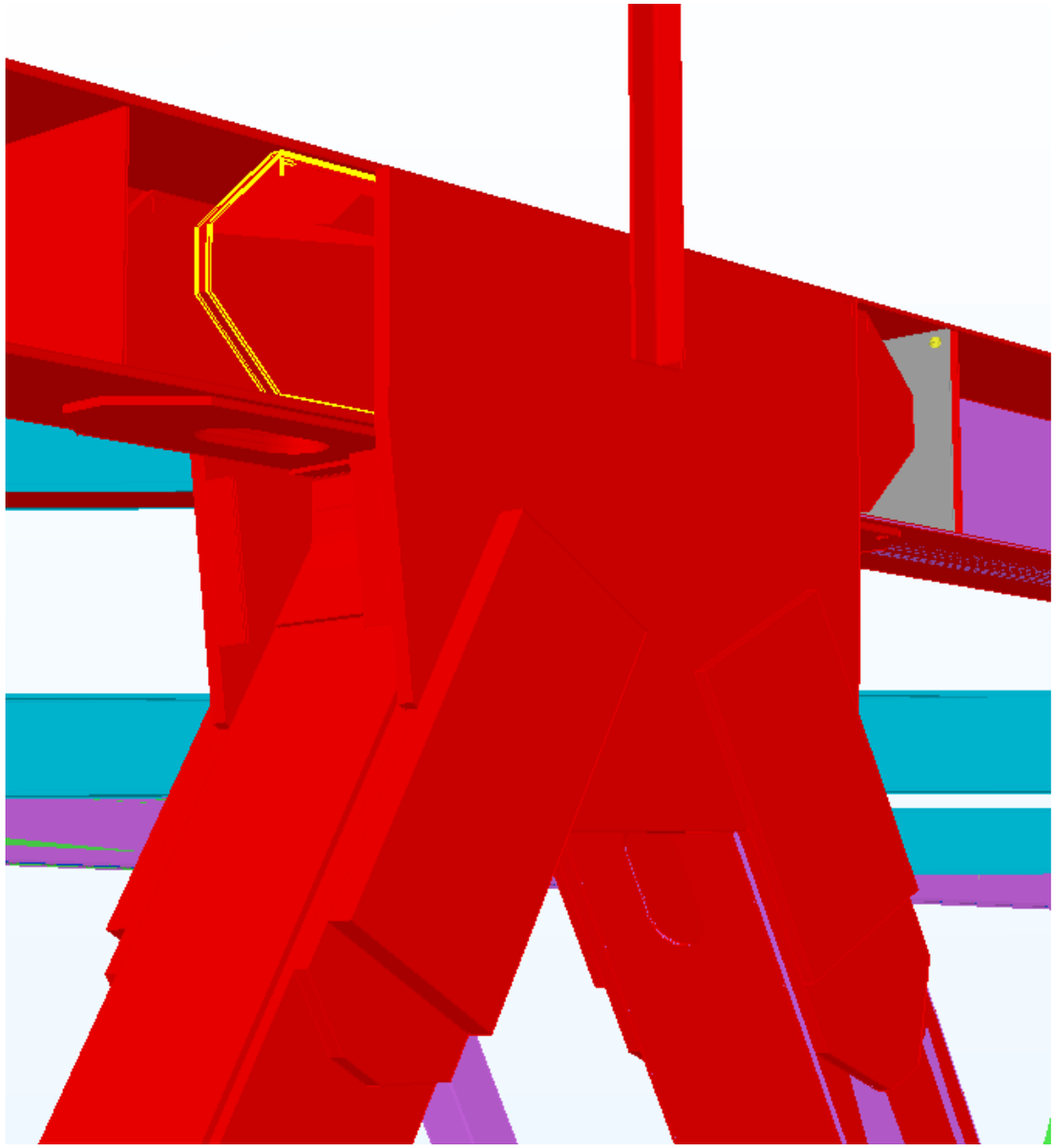

DESIGN OF TRUSS CONNECTIONS

Knuckle / Weldment (Connection at Bearings)

- Design Features
  - Welded Assembly
  - Mill to Bear Chords
  - Spliced Diagonal Connections
  - Floorbeam Splice

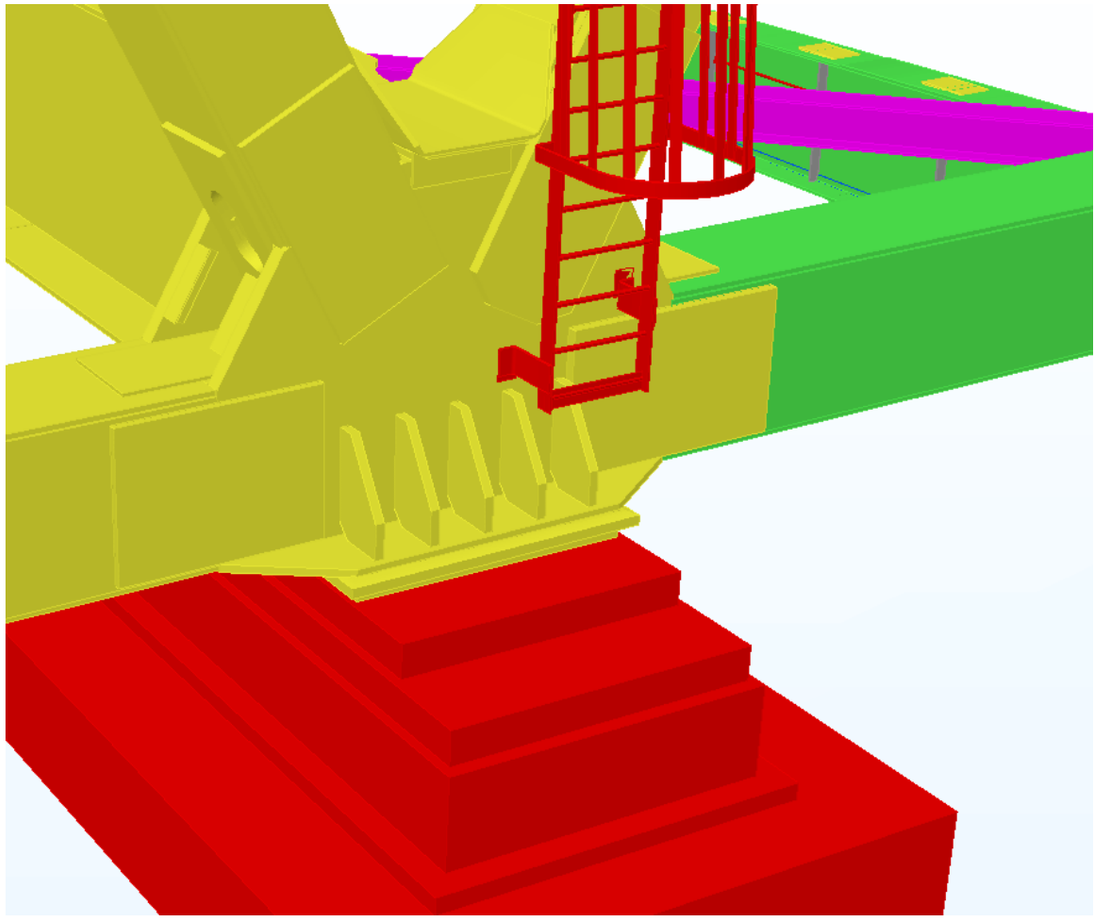

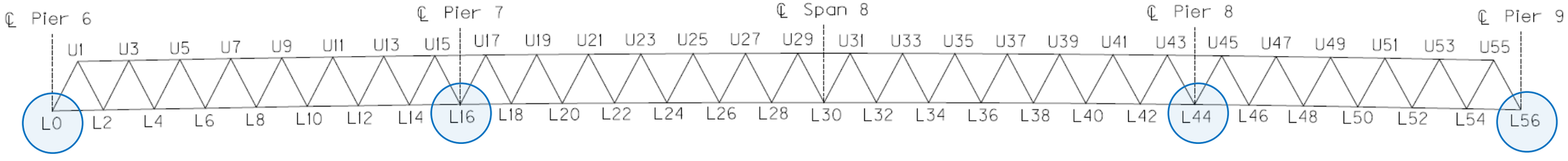

DESIGN OF TRUSS CONNECTIONS

Knuckles / Weldment (Connection at Bearings)

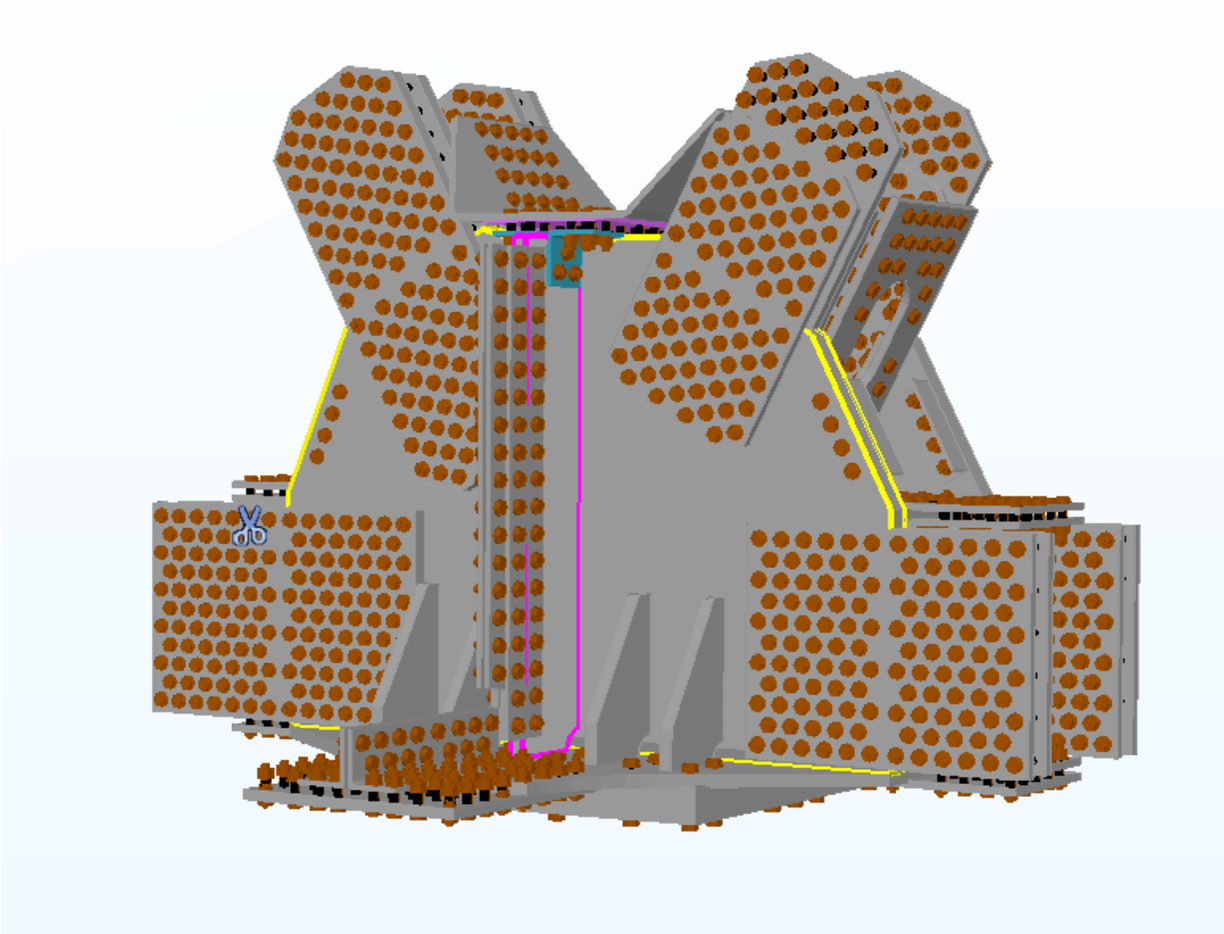

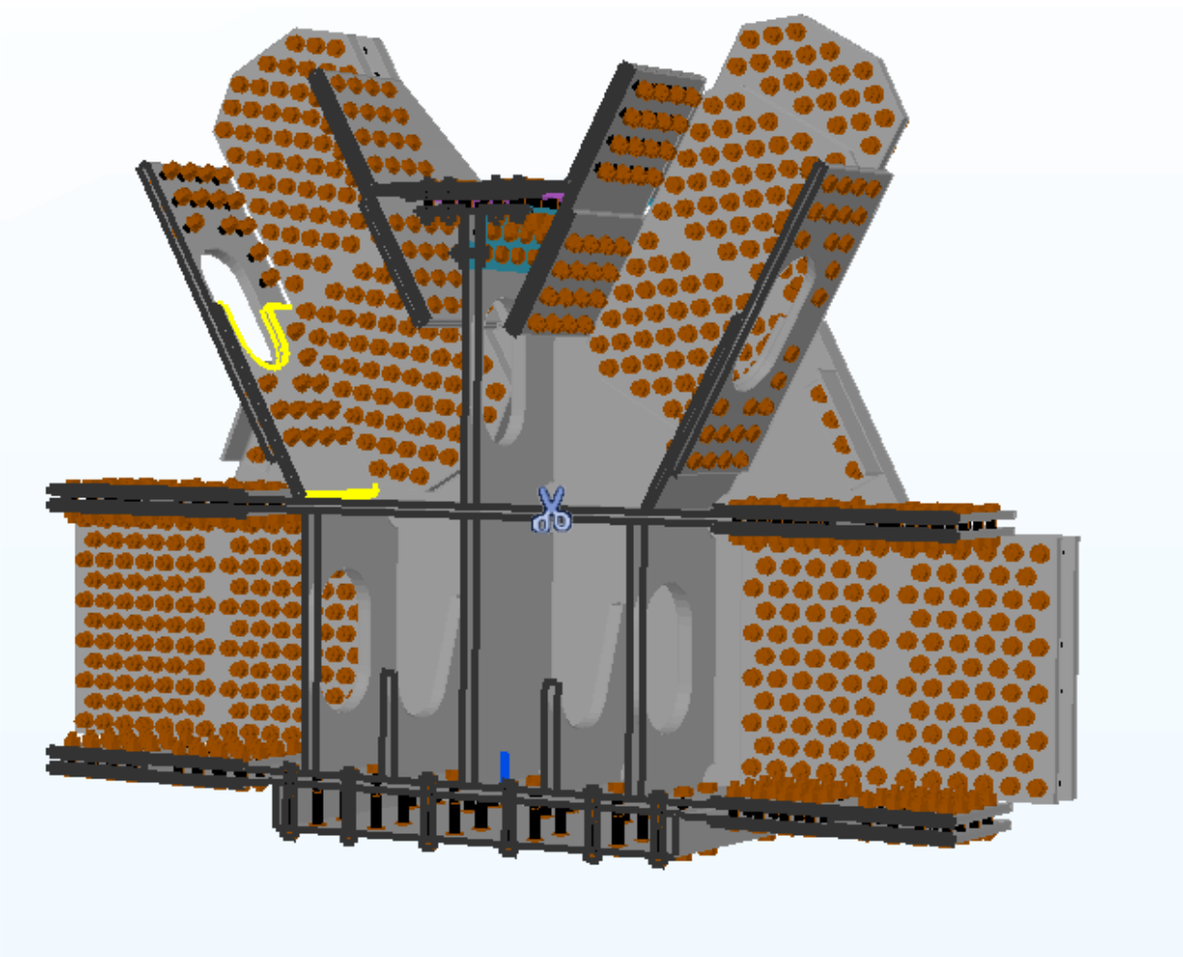

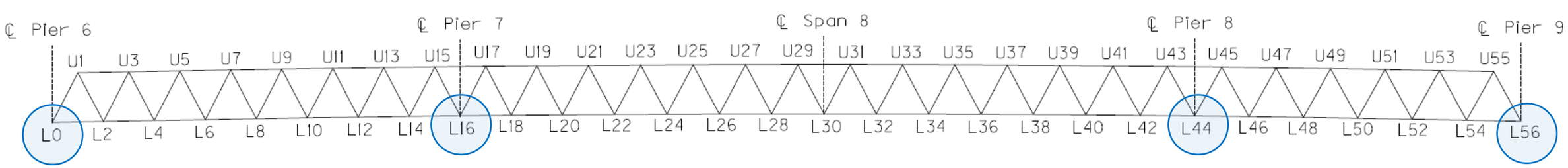

DESIGN OF TRUSS CONNECTIONS

Design Methodology

1. Determine Connection Forces
2. Distribute Forces among Gusset & Splice Plates
3. Determine Required Number of Bolts
4. Size Plates
5. Check Block Shear – Design for Total Shear

Inspection Access Components

Inspector-Friendly Accommodations

- Lower Chord Access
- Floorbeam Access
- Upper Chord Access
- Pier Access
- Navigation Light Access

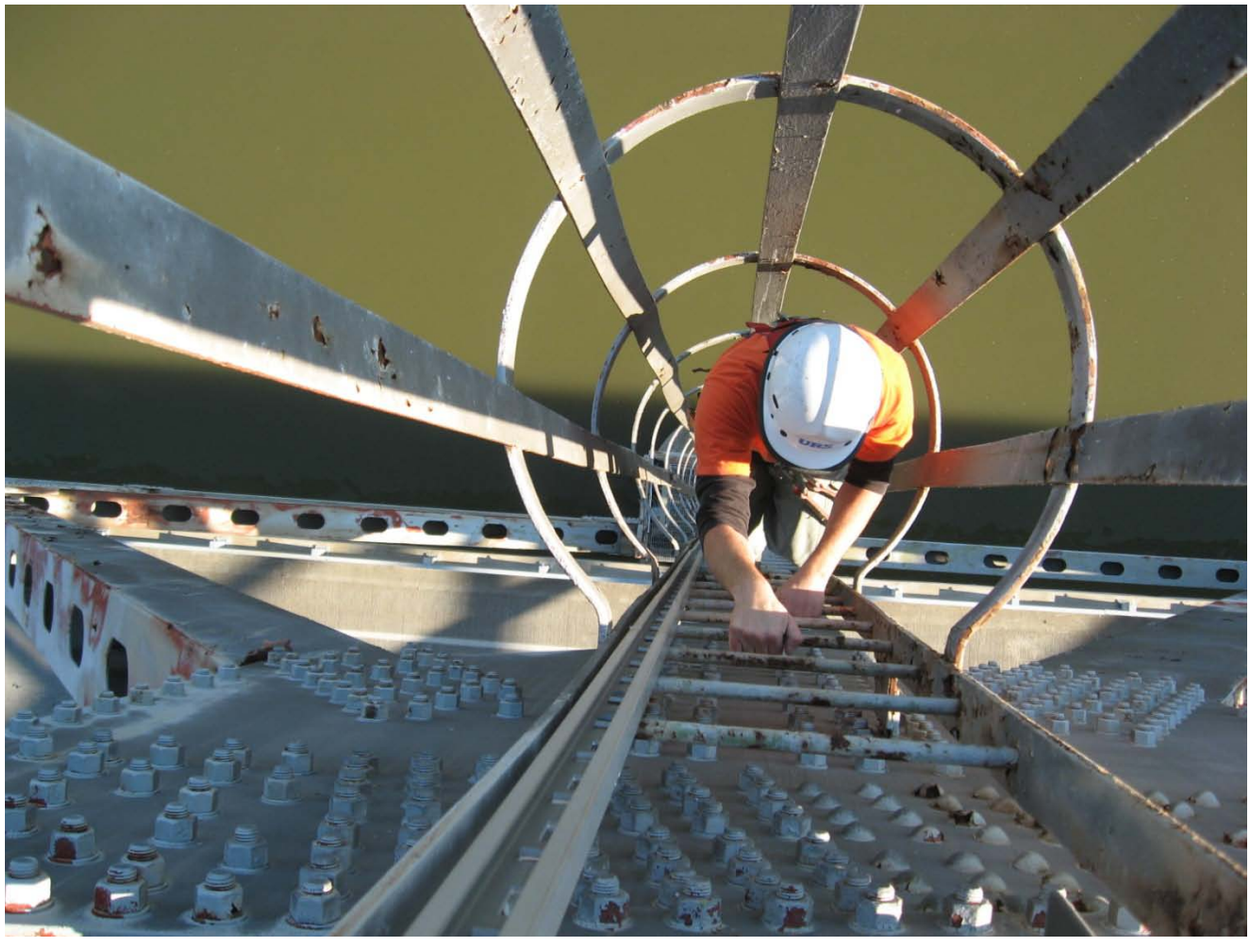

Inspection Access Components

Lower Chord Access

- Fall-Protection Tie-Off
- Gusset Steps
- Floorbeam Ladders

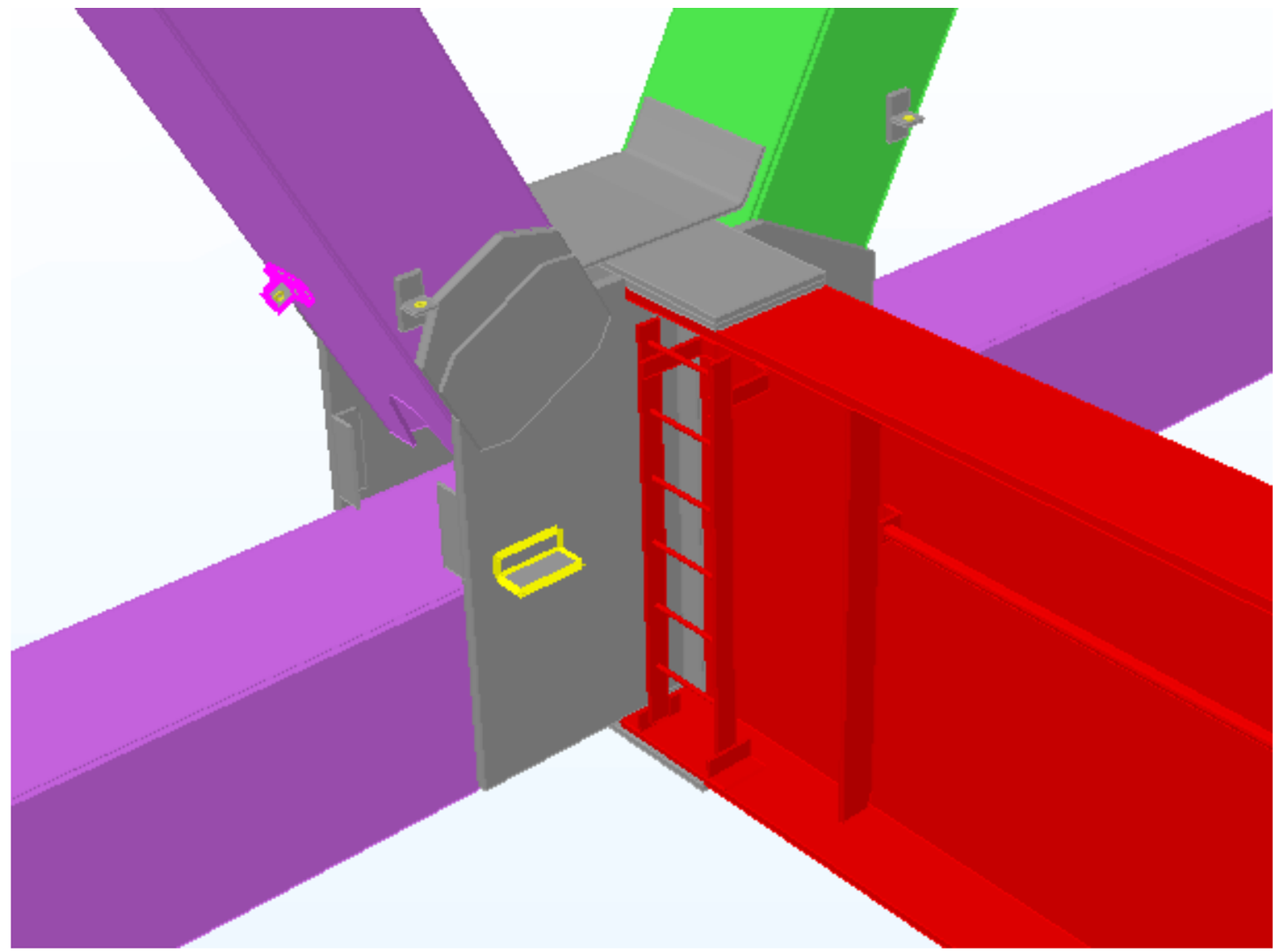

Inspection Access Components

Floorbeam Access

- Wide Bottom Flange
- Handrail
- Fall Protection Tie-Off

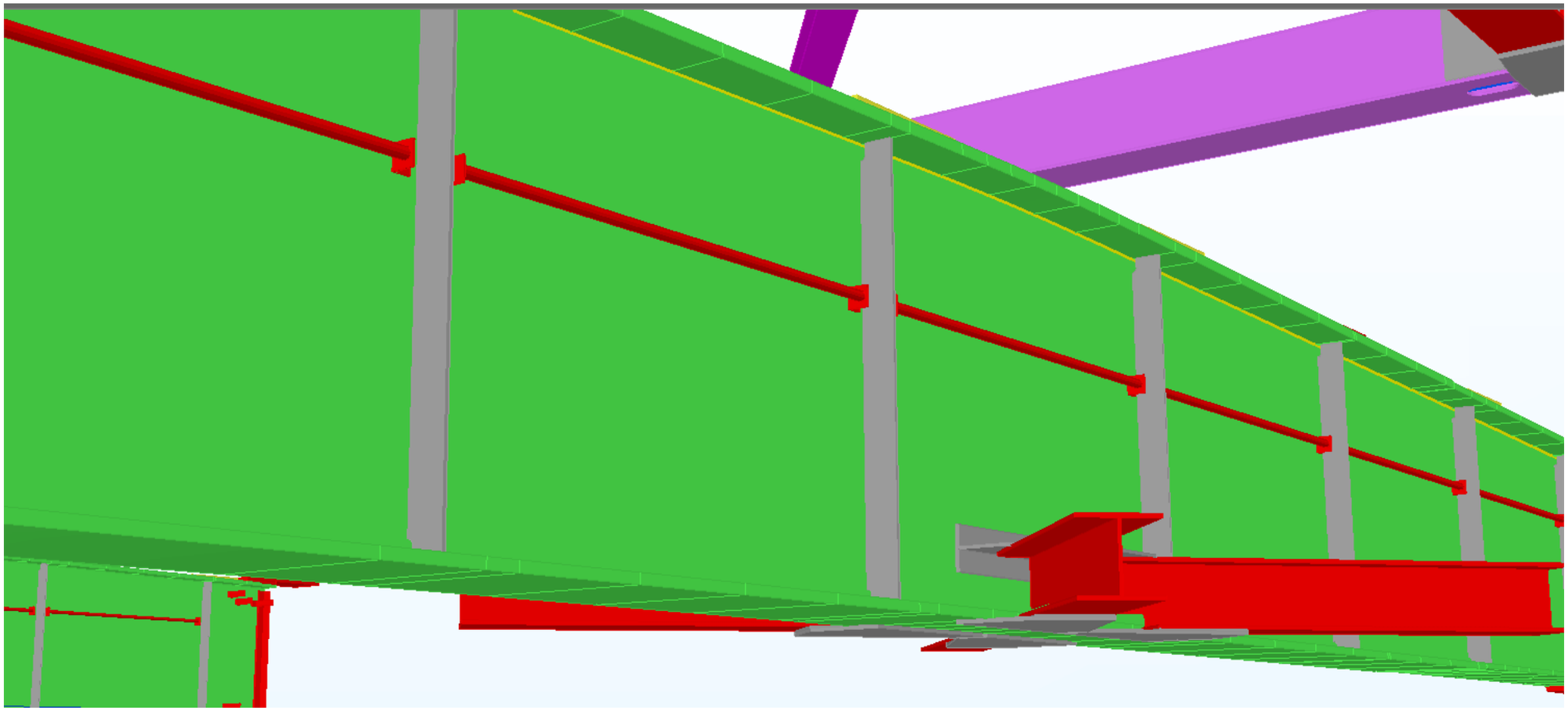

Inspection Access Components

Upper Chord Access

- End Post Ladders
- Fall Protection Tie-Off

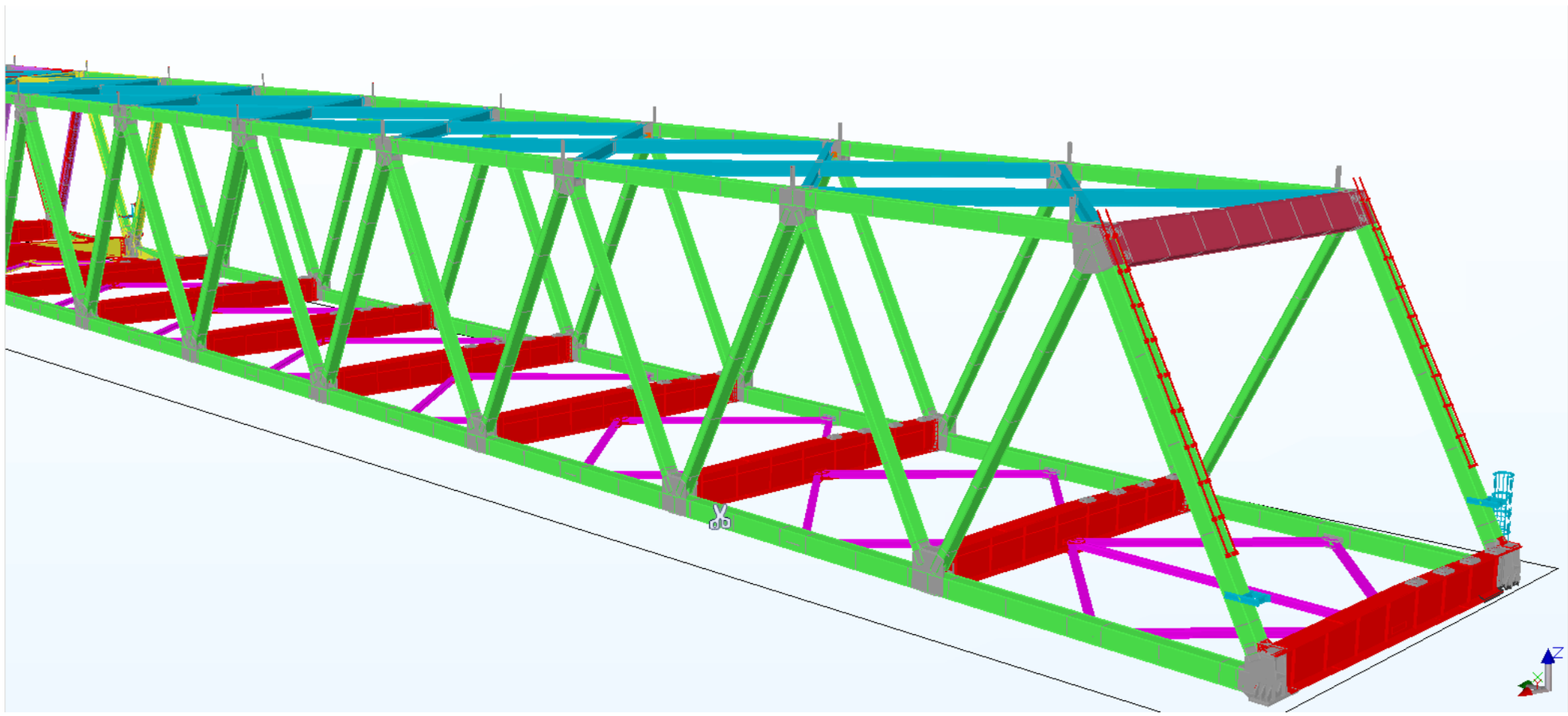

Inspection Access Components

Pier & Navigation Light Access

- Deck Level Platforms
- Ladders w. Safety Cages
- Handrail

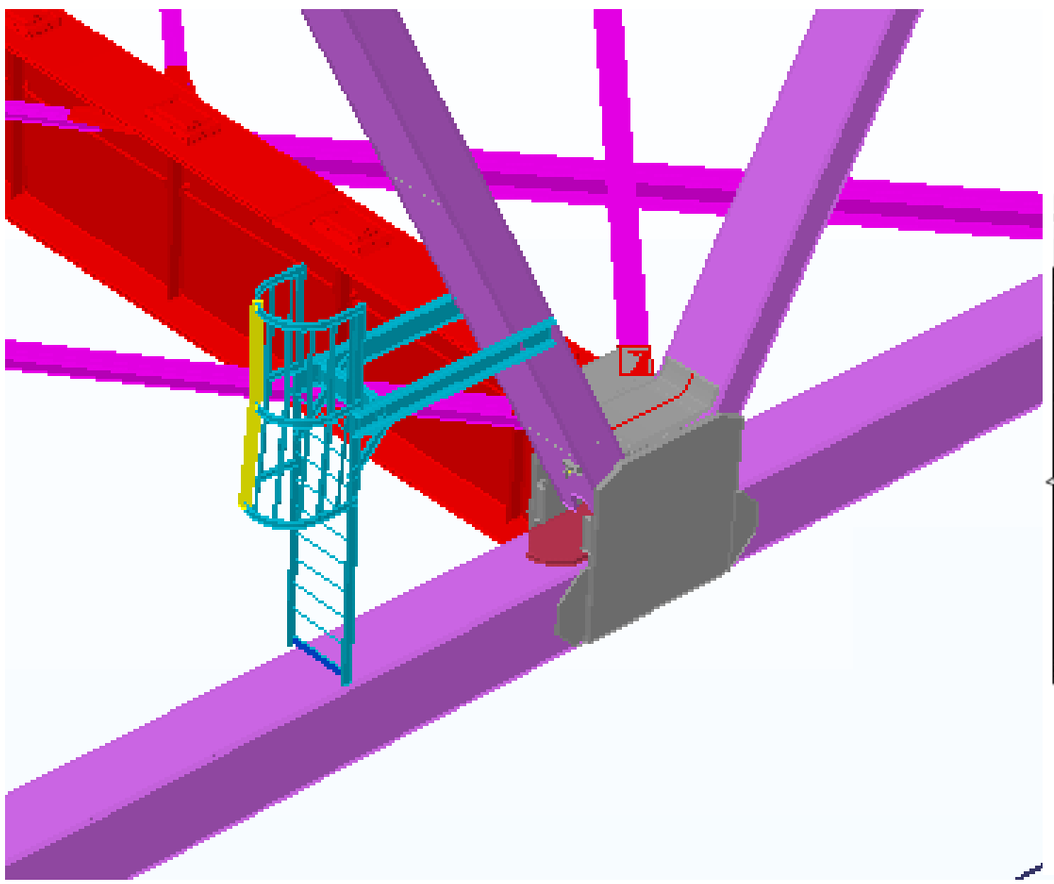

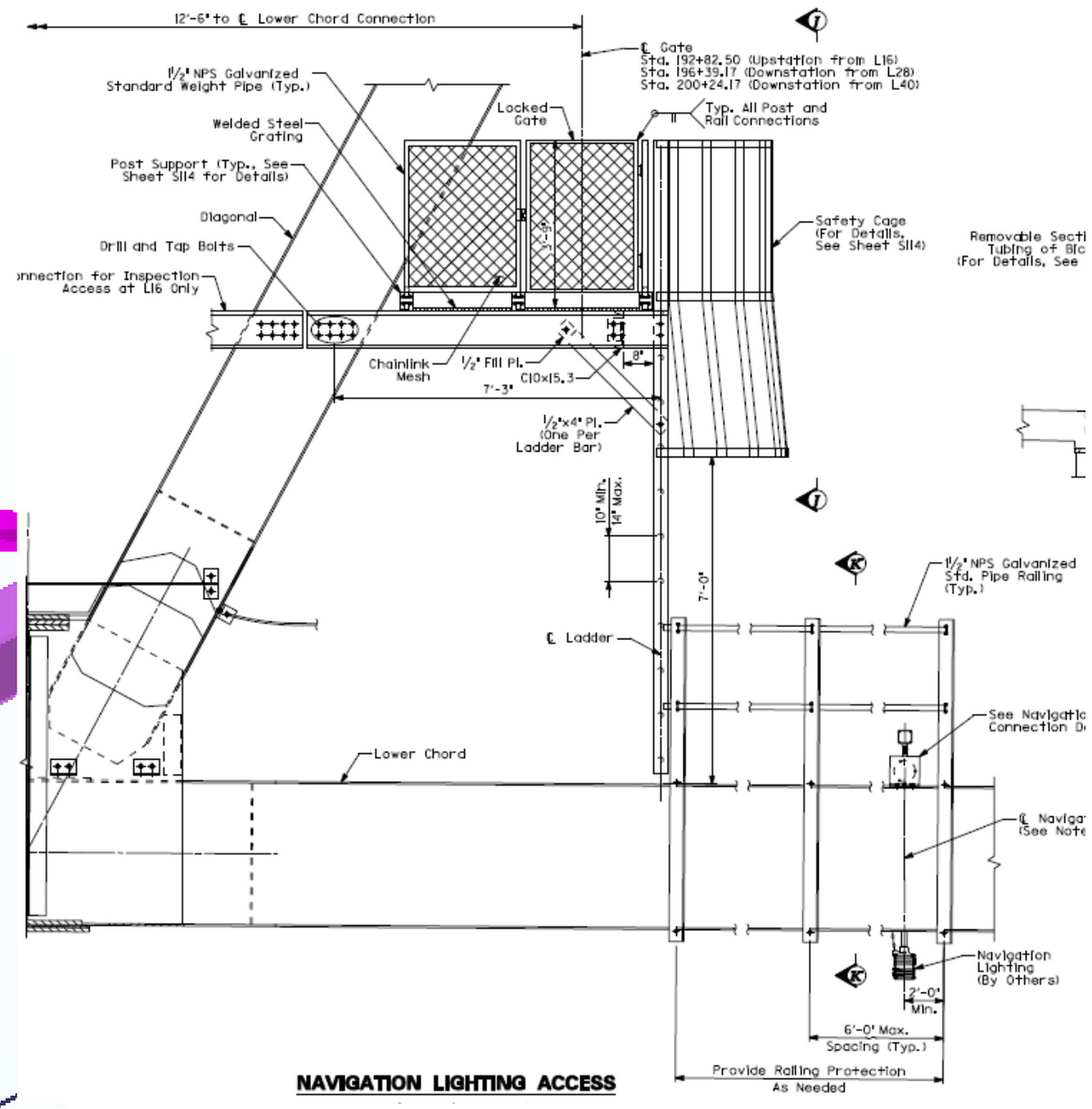

PROJECT STATUS

Shop Drawing

- To Date: 1,727 Shop Drawings have been Reviewed
  - Including resubmittals, 3,929 individual sheet submitted to date
- All major components of the structural steel have now been reviewed.

PROJECT STATUS

Erection Sequence

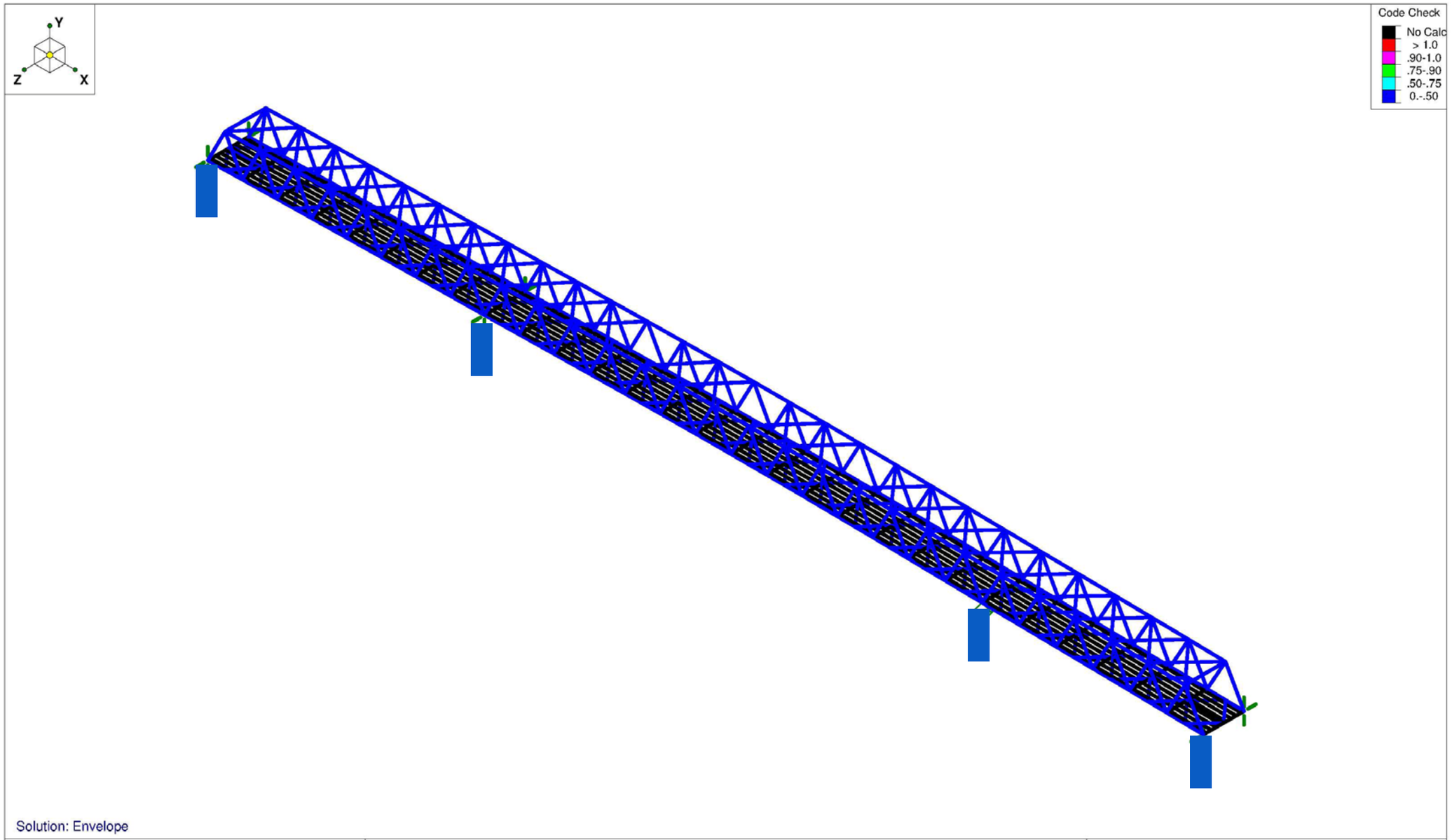

HHA		
HIRSCHMUGL	CJM TENNESSEE RIVER BRIDGE	July 10, 2011 at 4:30 PM
	STAGE 31	11.07.10 CJM LB STG 31 LRFD.r3d

PROJECT STATUS

Questions?