72″

MARK	SIZE	NO ①	LGTH FT	LGTH IN	K FT	K IN
A1	5	2	9	6		
A2	5	2	12	6		
B1	5	4	3	1		
B2	5	4	3	10		
B3	5	4	4	7		
B4	5	4	5	4		
B5	5	4	6	2		
B6	5	14	7	1		
C1	4	2	6	11		
C2	4	2	9	5		
C3	4	2	11	10		
C4	4	2	14	7		
C5	4	2	17	1		
C6	4	4	17	4		
E1	5	2	15	2	10	2
E2	5	2	15	6	10	6
F	4	10	1	9	0	6
G1	4	1	8	8		
G2	4	3	12	5		
G3	4	3	16	4		
G4	4	3	18	9		
H	4	10	11	5	9	3
J1	5	4	3	1		
J2	5	4	4	1		
J3	5	4	5	2		
J4	5	4	6	3		
J5	5	2	7	4		
K1	4	2	2	7		
K2	4	2	4	4		
K3	4	2	6	5		
K4	4	2	8	3		
K5	4	4	8	5		
M	4	26	3	9		
N1	4	7	8	5		
N2	4	7	17	3		
P	5	26	5	3	3	6
Q	5	3	6	10		
R	5	7	2	9		
S1	5	4	1	9		
S2	5	4	3	3		
S3	5	4	4	6		
T1	5	2	1	6		
T2	5	4	3	3		
T3	5	4	6	3		

78″

MARK	SIZE	NO ①	LGTH FT	LGTH IN	K FT	K IN
A1	5	2	10	3		
A2	5	2	13	4		
B1	5	4	3	3		
B2	5	4	4	0		
B3	5	4	4	9		
B4	5	4	5	7		
B5	5	4	6	4		
B6	5	4	7	1		
B7	5	14	7	7		
C1	4	2	8	7		
C2	4	2	11	1		
C3	4	2	13	9		
C4	4	2	16	3		
C5	4	6	18	7		
E1	5	2	15	11	10	11
E2	5	2	16	3	11	3
F	4	11	1	9	0	6
G1	4	2	10	3		
G2	4	3	14	0		
G3	4	3	17	9		
G4	4	3	20	5		
H	4	11	11	8	9	6
J1	5	4	3	4		
J2	5	4	4	5		
J3	5	4	5	5		
J4	5	4	6	6		
J5	5	2	7	7		
K1	4	2	1	10		
K2	4	2	3	9		
K3	4	2	5	7		
K4	4	2	7	6		
K5	4	6	9	0		
M	4	28	3	9		
N1	4	7	9	0		
N2	4	7	18	9		
P	5	28	5	6	3	9
Q	5	3	7	5		
R	5	8	2	8		
S1	5	2	1	3		
S2	5	4	2	3		
S3	5	4	3	6		
S4	5	4	5	0		
T1	5	4	2	3		
T2	5	4	4	3		
T3	5	4	6	6		

84″

MARK	SIZE	NO ①	LGTH FT	LGTH IN	K FT	K IN
A1	5	2	10	10		
A2	5	2	14	2		
B1	5	4	3	6		
B2	5	4	4	3		
B3	5	4	5	1		
B4	5	4	5	10		
B5	5	4	6	7		
B6	5	4	7	4		
B7	5	16	8	1		
C1	4	2	7	10		
C2	4	2	10	6		
C3	4	2	13	1		
C4	4	2	15	7		
C5	4	2	18	3		
C6	4	6	19	10		
E1	5	2	16	9	11	9
E2	5	2	17	1	12	1
F	4	12	1	9	0	6
G1	4	2	11	9		
G2	4	3	15	6		
G3	4	3	19	5		
G4	4	3	22	0		
H	4	12	12	8	10	6
J1	5	4	3	7		
J2	5	4	4	7		
J3	5	4	5	8		
J4	5	4	6	9		
J5	5	4	7	9		
K1	4	2	1	0		
K2	4	2	2	9		
K3	4	2	4	9		
K4	4	2	6	7		
K5	4	2	8	6		
K6	4	6	9	7		
M	4	30	3	9		
N1	4	7	9	8		
N2	4	7	19	10		
P	5	30	5	9	4	0
Q	5	3	8	0		
R	5	8	2	10		
S1	5	4	1	3		
S2	5	4	3	3		
S3	5	4	4	3		
S4	5	4	5	6		
T1	5	4	2	3		
T2	5	4	5	3		
T3	5	4	7	3		

90″

MARK	SIZE	NO ①	LGTH FT	LGTH IN	K FT	K IN
A1	5	2	11	7		
A2	5	2	15	1		
B1	5	4	3	8		
B2	5	4	4	6		
B3	5	4	5	4		
B4	5	4	6	1		
B5	5	4	6	9		
B6	5	4	7	7		
B7	5	4	8	4		
B8	5	14	8	8		
C1	4	2	9	8		
C2	4	2	12	2		
C3	4	2	14	10		
C4	4	2	17	6		
C5	4	2	20	1		
C6	4	6	21	1		
E1	5	2	17	6	12	6
E2	5	2	17	10	12	10
F	4	13	1	9	0	6
G1	4	3	13	3		
G2	4	3	17	0		
G3	4	3	20	10		
G4	4	3	23	5		
H	4	12	13	8	11	0
J1	5	4	3	10		
J2	5	4	4	10		
J3	5	4	5	11		
J4	5	4	6	11		
J5	5	4	7	0		
K1	4	2	2	0		
K2	4	2	3	10		
K3	4	2	5	9		
K4	4	2	7	8		
K5	4	2	9	7		
K6	4	6	10	3		
M	4	31	4	9		
N1	4	8	10	3		
N2	4	8	21	1		
P	6	31	6	6	4	3
Q	5	4	8	7		
R	5	9	3	3		
S1	5	4	1	6		
S2	5	4	3	3		
S3	5	4	4	3		
S4	5	4	5	9		
T1	5	4	2	3		
T2	5	4	5	3		
T3	5	4	7	9		

96″

MARK	SIZE	NO ①	LGTH FT	LGTH IN	K FT	K IN
A1	5	2	12	3		
A2	5	2	15	11		
B1	5	4	4	0		
B2	5	4	4	9		
B3	5	4	5	6		
B4	5	4	6	3		
B5	5	4	7	1		
B6	5	4	7	10		
B7	5	4	8	7		
B8	5	18	9	3		
C1	4	2	8	11		
C2	4	2	11	6		
C3	4	2	14	2		
C4	4	2	16	9		
C5	4	2	19	5		
C6	4	2	21	11		
C7	4	6	22	3		
E1	5	2	18	4	13	4
E2	5	2	18	8	13	8
F	4	14	1	9	0	6
G1	4	3	14	9		
G2	4	3	18	7		
G3	4	3	22	4		
G4	4	3	25	0		
H	4	13	14	2	11	6
J1	5	4	4	1		
J2	5	4	5	1		
J3	5	4	6	2		
J4	5	4	7	2		
J5	5	4	8	2		
J6	5	2	9	3		
K1	4	2	3	1		
K2	4	2	4	11		
K3	4	2	6	10		
K4	4	2	8	9		
K5	4	2	10	7		
K6	4	6	10	10		
M	4	34	4	9		
N1	4	8	10	10		
N2	4	8	22	3		
P	6	34	6	9	4	6
Q	5	4	9	2		
R	5	9	3	5		
S1	5	4	2	3		
S2	5	4	3	3		
S3	5	4	5	3		
S4	5	4	6	3		
T1	5	4	3	3		
T2	5	4	5	6		
T3	5	4	8	3		

NOTES

1. ① NUMBER OF BARS IN ONE HEADWALL.
2. DIMENSIONS ARE O. TO O. OF BARS.
3. ALL BARS ARE STRAIGHT EXCEPT THOSE SHOWN BELOW.

BENT BAR SHAPES

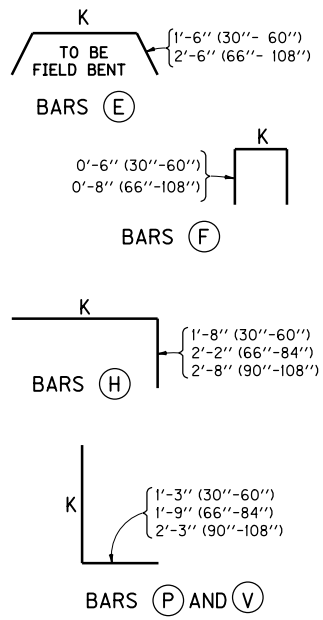

(USE WITH CURRENT RDH-120)

KENTUCKY
DEPARTMENT OF HIGHWAYS

BILL OF REINFORCEMENT
72″ TO 96″ DIAMETER
CIRCULAR PIPE HEADWALLS
30° SKEW

STANDARD DRAWING NO. RDH-332-03

SUBMITTED John B Sachatello — DIRECTOR DIVISION OF DESIGN — 12-1-99 DATE

APPROVED J M Yowell — STATE HIGHWAY ENGINEER — 12-1-99 DATE