**CALL NO. 420**

**CONTRACT ID. 163125**

**LAUREL COUNTY**

**FED/STATE PROJECT NUMBER 063GR16000R25-CB06**

**DESCRIPTION VARIOUS ROUTES IN LAUREL COUNTY**

**WORK TYPE ASPHALT RESURFACING**

**PRIMARY COMPLETION DATE 11/15/2016**

**LETTING DATE: June 24,2016**

Sealed Bids will be received electronically through the Bid Express bidding service until 10:00 AM EASTERN DAYLIGHT TIME June 24,2016. Bids will be publicly announced at 10:00 AM EASTERN DAYLIGHT TIME.

**NO PLANS ASSOCIATED WITH THIS PROJECT.**

**REQUIRED BID PROPOSAL GUARANTY:** Not less than 5% of the total bid.

# TABLE OF CONTENTS

PART I SCOPE OF WORK

- PROJECT(S), COMPLETION DATE(S), & LIQUIDATED DAMAGES
- CONTRACT NOTES
- STATE CONTRACT NOTES
- ASPHALT MIXTURE
- INCIDENTAL SURFACING
- FUEL AND ASPHALT PAY ADJUSTMENT
- COMPACTION OPTION B
- EDGE KEY
- ASPHALT MILLING AND TEXTURING
- TYPICAL SECTION DIMENSIONS
- TRAFFIC CONTROL PLAN 2 LANE
- SKETCH MAP(S)
- MATERIAL SUMMARY
- SUMMARY SHEET(S)
- TYPICAL SECTION(S)

PART II SPECIFICATIONS AND STANDARD DRAWINGS

- SPECIFICATIONS REFERENCE
- SUPPLEMENTAL SPECIFICATION
- STANDARD DRAWINGS THAT APPLY

PART III EMPLOYMENT, WAGE AND RECORD REQUIREMENTS

- LABOR AND WAGE REQUIREMENTS
- EXECUTIVE BRANCH CODE OF ETHICS
- KENTUCKY EQUAL EMPLOYMENT OPPORTUNITY ACT OF 1978 LOCALITY 1,2,3,4 / STATE (OVER 250,000)
- PROJECT WAGE RATES LOCALITY 2 / STATE

PART IV INSURANCE

PART V BID ITEMS

# PART I

# SCOPE OF WORK

# ADMINISTRATIVE DISTRICT - 11

**CONTRACT ID - 163125**

**063GR16000R25**

**COUNTY - LAUREL**

**PCN - 1106303121601**
**CB06 063 0312 002-005**

LAUREL LAKE ROAD N (KY 312) (MP 2.506) FROM GERMAN LANE EXTENDING SOUTHEAST TO KY 363 (MP 4.071), A DISTANCE OF 01.57 MILES.ASPHALT RESURFACING

GEOGRAPHIC COORDINATES LATITUDE 37:00:04.00 LONGITUDE 84:10:17.00

**PCN - 1106306381601**
**CB06 063 0638 003-009**

MCWHORTER ROAD (KY 638) (MP 3.252) FROM KY 586 EXTENDING NORTHEAST TO KY 578 (MP 8.760), A DISTANCE OF 05.51 MILES.ASPHALT RESURFACING

GEOGRAPHIC COORDINATES LATITUDE 37:11:51.00 LONGITUDE 84:01:20.00

**PCN - 1106308301601**
**CB06 063 0830 007-011**

ROUGH CREEK ROAD (KY 830) (MP 7.364) FROM KY 1189 EXTENDING NORTHWEST TO KY 1189 (MP 10.084), A DISTANCE OF 02.72 MILES.ASPHALT RESURFACING

GEOGRAPHIC COORDINATES LATITUDE 37:03:47.00 LONGITUDE 83:58:48.00

**PCN - 1106310351601**
**CB06 063 1035 000-003**

PINE TOP ROAD (KY 1035) (MP 0.000) FROM BEGINNING OF STATE MAINTENANCE EXTENDING NORTH TO KY 1956 (MP 2.210), A DISTANCE OF 02.21 MILES.ASPHALT RESURFACING

GEOGRAPHIC COORDINATES LATITUDE 37:08:18.00 LONGITUDE 84:08:23.00

**COMPLETION DATE(S):**

COMPLETED BY 11/15/2016 APPLIES TO ENTIRE PROPOSAL

# CONTRACT NOTES

## PROPOSAL ADDENDA

All addenda to this proposal must be applied when calculating bid and certified in the bid packet submitted to the Kentucky Department of Highways. Failure to use the correct and most recent addenda may result in the bid being rejected.

## BID SUBMITTAL

Bidder must use the Department's Expedite Bidding Program available on the Internet web site of the Department of Highways, Division of Construction Procurement. (www.transportation.ky.gov/construction-procurement)

The Bidder must download the bid file located on the Bid Express website (www.bidx.com) to prepare a bid packet for submission to the Department. The bidder must submit electronically using Bid Express.

## JOINT VENTURE BIDDING

Joint venture bidding is permissible. All companies in the joint venture must be prequalified in one of the work types in the Qualifications for Bidders for the project. The bidders must get a vendor ID for the joint venture from the Division of Construction Procurement and register the joint venture as a bidder on the project. Also, the joint venture must obtain a digital ID from Bid Express to submit a bid. A joint bid bond of 5% may be submitted for both companies or each company may submit a separate bond of 5%.

## UNDERGROUND FACILITY DAMAGE PROTECTION

The contractor shall make every effort to protect underground facilities from damage as prescribed in the Underground Facility Damage Protection Act of 1994, Kentucky Revised Statute KRS 367.4901 to 367.4917. It is the contractor's responsibility to determine and take steps necessary to be in compliance with federal and state damage prevention directives. When prescribed in said directives, the contractor shall submit Excavation Locate Requests to the Kentucky Contact Center (KY811) via web ticket entry. The submission of this request does not relieve the contractor from the responsibility of contacting non-member facility owners, whom shall be contacted through their individual Protection Notification Center. Non-compliance with these directives can result in the enforcement of penalties.

## SPECIAL NOTE FOR COMPOSITE OFFSET BLOCKS

Contrary to the Standard Drawings (2016 edition) the Cabinet will allow 6" composite offset blocks in lieu of wooden offset blocks, except as specified on proprietary end treatments and crash cushions. The composite blocks shall be selected from the Cabinet's List of Approved Materials.

## REGISTRATION WITH THE SECRETARY OF STATE BY A FOREIGN ENTITY

Pursuant to KRS 176.085(1)(b), an agency, department, office, or political subdivision of the Commonwealth of Kentucky shall not award a state contract to a person that is a foreign entity required by KRS 14A.9-010 to obtain a certificate of authority to transact business in the Commonwealth ("certificate") from the Secretary of State under KRS 14A.9-030 unless the person produces the certificate within fourteen (14) days of the bid or proposal opening. If the foreign entity is not required to obtain a certificate as provided in KRS 14A.9-010, the foreign entity should identify the applicable exception. Foreign entity is defined within KRS 14A.1-070.

**For all foreign entities required to obtain a certificate of authority to transact business in the Commonwealth, if a copy of the certificate is not received by the contracting agency within the time frame identified above, the foreign entity's solicitation response shall be deemed non-responsive or the awarded contract shall be cancelled.**

Businesses can register with the Secretary of State at https://secure.kentucky.gov/sos/ftbr/welcome.aspx .

## SPECIAL NOTE FOR PROJECT QUESTIONS DURING ADVERTISEMENT

Questions about projects during the advertisement should be submitted in writing to the Division of Construction Procurement. This may be done by fax (502) 564-7299 or email to kytc.projectquestions@ky.gov. The Department will attempt to answer all submitted questions. The Department reserves the right not to answer if the question is not pertinent or does not aid in clarifying the project intent.

The deadline for posting answers will be 3:00 pm Eastern Daylight Time, the day preceding the Letting. Questions may be submitted until this deadline with the understanding that the later a question is submitted, the less likely an answer will be able to be provided.

The questions and answers will be posted for each Letting under the heading "Questions & Answers" on the Construction Procurement website (www.transportation.ky.gov/contract). The answers provided shall be considered part of this Special Note and, in case of a discrepancy, will govern over all other bidding documents.

## HARDWOOD REMOVAL RESTRICTIONS

The US Department of Agriculture has imposed a quarantine in Kentucky and several surrounding states, to prevent the spread of an invasive insect, the emerald ash borer. Hardwood cut in conjunction with the project may not be removed from the state. Chipping or burning on site is the preferred method of disposal.

## INSTRUCTIONS FOR EXCESS MATERIAL SITES AND BORROW SITES

Identification of excess material sites and borrow sites shall be the responsibility of the Contractor. The Contractor shall be responsible for compliance with all applicable state and federal laws and may wish to consult with the US Fish and Wildlife Service to seek protection under Section 10 of the Endangered Species Act for these activities.

**ACCESS TO RECORDS**

The contractor, as defined in KRS 45A.030 (9) agrees that the contracting agency, the Finance and Administration Cabinet, the Auditor of Public Accounts, and the Legislative Research Commission, or their duly authorized representatives, shall have access to any books, documents, papers, records, or other evidence, which are directly pertinent to this contract for the purpose of financial audit or program review. Records and other prequalification information confidentially disclosed as part of the bid process shall not be deemed as directly pertinent to the contract and shall be exempt from disclosure as provided in KRS 61.878(1)(c). The contractor also recognizes that any books, documents, papers, records, or other evidence, received during a financial audit or program review shall be subject to the Kentucky Open Records Act, KRS 61.870 to 61.884.

In the event of a dispute between the contractor and the contracting agency, Attorney General, or the Auditor of Public Accounts over documents that are eligible for production and review, the Finance and Administration Cabinet shall review the dispute and issue a determination, in accordance with Secretary's Order 11-004.

06/01/16

## SPECIAL NOTE FOR RECIPROCAL PREFERENCE

### Reciprocal preference to be given by public agencies to resident bidders

**By reference, KRS 45A.490 to 45A.494 are incorporated herein and in compliance regarding the bidders residency. Bidders who want to claim resident bidder status should complete the Affidavit for Claiming Resident Bidder Status along with their bid in the Expedite Bidding Program. Submittal of the Affidavit should be done along with the bid in Bid Express.**

**ASPHALT MIXTURE**

Unless otherwise noted, the Department estimates the rate of application for all asphalt mixtures to be 110 lbs/sy per inch of depth.

**INCIDENTAL SURFACING**

The Department has included in the quantities of asphalt mixtures established in the proposal estimated quantities required for resurfacing or surfacing mailbox turnouts, farm field entrances, residential and commercial entrances, curve widening, ramp gores and tapers, and road and street approaches, as applicable. Pave these areas to the limits as shown on Standard Drawing RPM-110-06 or as directed by the Engineer. In the event signal detectors are present in the intersecting streets or roads, pave the crossroads to the right of way limit or back of the signal detector, whichever is the farthest back of the mainline. Surface or resurface these areas as directed by the Engineer. The Department will not measure placing and compacting for separate payment but shall be incidental to the Contract unit price for the asphalt mixtures.

**FUEL AND ASPHALT PAY ADJUSTMENT**

The Department has included the Contract items Asphalt Adjustment and Fuel Adjustment for possible future payments at an established Contract unit price of $1.00. The Department will calculate actual adjustment quantities after work is completed. If existing Contract amount is insufficient to pay all items on the contract with the adjustments, the Department will establish additional monies with a change order.

**OPTION B**

Be advised that the Department will control and accept compaction of asphalt mixtures furnished on this project under OPTION B in accordance with Sections 402 and 403.

## SPECIAL NOTE FOR EDGE KEY

Construct Edge Keys at the beginning of project, end of project, at railroad crossings, and at ramps, as applicable. Unless specified in the Contract or directed by the Engineer, do not construct edge keys at intersecting streets, roads, alleys, or entrances. Cut out the existing asphalt surface to the required depth and width shown on the drawing and heel the new surface into the existing surface. The Department will make payment for this work at the Contract unit price per ton for Asphalt Pavement Milling and Texturing, which shall be full compensation for all labor, materials, equipment, and incidentals for removal and disposal of the existing asphalt surface required to construct the edge key.

EDGE KEY

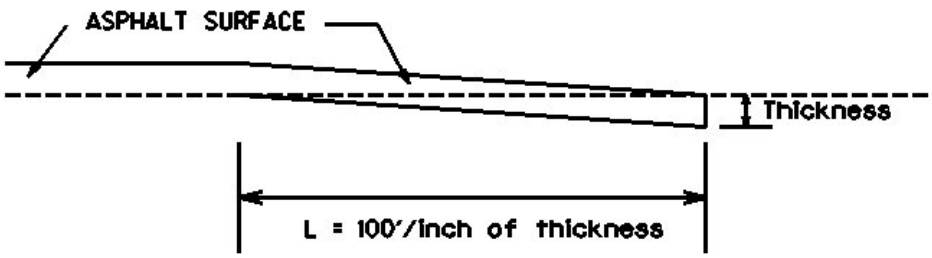


**Thickness = 1 Inch**

**L = 100 LF**

**L= Length of Edge Key**

1-3309 Edge key by Ton
01/02//2012

# SPECIAL NOTE FOR
# ASPHALT MILLING AND TEXTURING

Begin paving operations within **48 hours** of commencement of the milling operation. Continue paving operations continuously until completed. If paving operations are not begun within this time period, the Department will assess liquidated damages at the rate prescribed by Section 108.09 until such time as paving operations are begun.

Take possession of the millings and recycle the millings or dispose of the millings off the Right-of-Way at sites obtained by the Contractor at no additional cost to the Department.

1-3520 48 hours Contractor keeps millings
01/2/2012

## SPECIAL NOTE FOR TYPICAL SECTION DIMENSIONS

Consider the dimensions shown on the typical sections for pavement and shoulder widths and thickness' to be nominal or typical dimensions. The Engineer may direct or approve varying the actual dimensions to be constructed to fit existing conditions. Do not widen existing pavement or shoulders unless specified elsewhere in this proposal or directed by the engineer.

1-3725 Typical Section Dimensions
01/02/2012

# TRAFFIC CONTROL PLAN

## TRAFFIC CONTROL GENERAL

Except as provided herein, maintain and control traffic in accordance with the Standard and Supplemental Specifications and the Standard and Sepia Drawings, current editions. Except for the roadway and traffic control bid items listed, all items of work necessary to maintain and control traffic will be paid at the lump sum bid price to "Maintain and Control Traffic".

Contrary to Section 106.01, furnish new, or used in like new condition, traffic control devices at the beginning of the work and maintain in like new condition until completion of the work.

## PROJECT PHASING & CONSTRUCTION PROCEDURES

The Engineer may specify days and hours when lane closures will not be allowed.

Maintain alternating one way traffic during construction. Provide a minimum clear lane width of 8 feet; however, provide for passage of vehicles of up to 16 feet in width. If traffic should be stopped due to construction operations, and a school bus on an official run arrives on the scene, make provisions for the passage of the bus as quickly as possible.

## LANE CLOSURES

Do not leave lane closures in place during non-working hours.

## SIGNS

Contrary to section 112.04.02, only long term signs (signs intended to be continuously in place for more than 3 days) will be measured for payment; short term signs (signs intended to be left in place for 3 days or less) will not be measured for payment but will be incidental to Maintain and Control Traffic.

## CHANGEABLE MESSAGE SIGNS

If deemed necessary by the Engineer, the Department will furnish, operate, and maintain Changeable Message Signs.

**BARRICADES**

The Department will not measure barricades used in lieu of barrels and cones for channelization or delineation, but shall be incidental to Maintain and Control Traffic according to Section 112.04.01.

The Department will measure barricades used to protect pavement removal areas in individual units Each. The Department will measure for payment the maximum number of barricades in concurrent use at the same time on a single day on all sections of the contract. The Department will measure individual barricades only once for payment, regardless of how many times they are set, reset, removed, and relocated during the duration of the project. The Department will not measure replacements for damaged barricades the Engineer directs to be replaced due to poor condition or reflectivity. Retain possession of the Barricades upon completion of construction.

**PAVEMENT MARKINGS**

If there is to be a deviation from the existing striping plan, the Engineer will furnish the Contractor a striping plan prior to placement of the final surface course.

Install Temporary Striping according to Section 112 with the following exception:

> If the Contractor's operations or phasing requires temporary markings that must subsequently be removed from the final surface course, use an approved removable lane tape; however, the Department will not measure removable lane tape for separate payment, but will measure and pay for removable lane tape as temporary striping.

**PAVEMENT EDGE DROP-OFFS**

Do not allow a pavement edge between opposing directions of traffic or lanes that traffic is expected to cross in a lane change situation with an elevation difference greater than 1½". Place Warning signs (MUTCD W8-11 or W8-9A) in advance of and at 1500' intervals throughout the drop-off area. Dual post the signs on both sides of the traveled way. Wedge all transverse transitions between resurfaced and unresurfaced areas which traffic may cross with asphalt mixture for leveling and wedging. Remove the wedges prior to placement of the final surface course.

Protect pavement edges that traffic is not expected to cross, except accidentally, as follows:

Less than 2" - No protection required.

2” to 4” - Place plastic drums, vertical panels, or barricades every 50 feet. During daylight working hours only, the Engineer will allow the Contractor to use cones in lieu of plastic drums, panels, and barricades. Wedge the drop-off with DGA or asphalt mixture for leveling and wedging with a 1:1 or flatter slope in daylight hours, or 3:1 or flatter slope during nighttime hours, when work is not active in the drop-off area.

Greater than 4’ - Protect drop-offs greater than 4 inches within 10 feet of traffic by placing drums, vertical panels, or barricades every 25 feet. The Engineer will not allow the use of cones in lieu of drums, vertical panels, or barricades for drop-offs greater than 4”. Place Type III Barricades directly in front of the drop-off facing on coming traffic in both directions of travel. Provide warning signs as shown on the Standard Drawings or as directed by the Engineer

Pedestrians & Bicycles - Protect pedestrian and bicycle traffic as directed by the engineer.

**THERMOPLASTIC INTERSECTION MARKING**

All items required for lane closures related to this item of work shall be considered incidental to bid item "Maintain and Control Traffic". The Contractor shall be required to locate, document, and replace the markings that are existing in the field upon completion of project or as directed by Engineer.

# LAUREL COUNTY
## RS PROGRAM 2016-2017

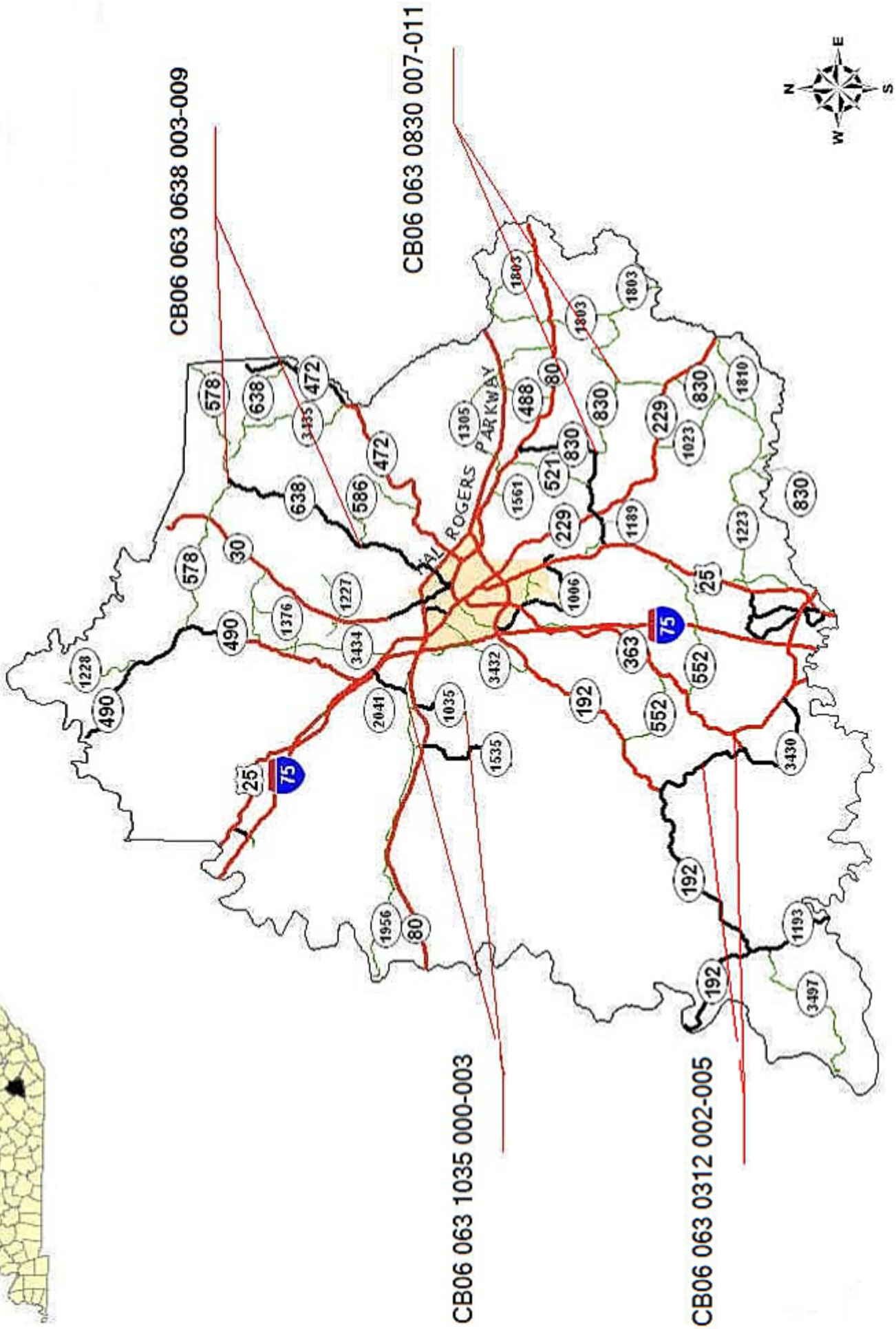

# MATERIAL SUMMARY

**CONTRACT ID: 163125** **063GR16000R25-CB06** **1106303121601**

LAUREL LAKE ROAD N (KY 312) FROM GERMAN LANE EXTENDING SOUTHEAST TO KY 363 ASPHALT RESURFACING, A DISTANCE OF 1.57 MILES.

| Project Line No | Bid Code | DESCRIPTION | Quantity | Unit |
|---|---|---|---|---|
| 0005 | 00190 | LEVELING & WEDGING PG64-22 | 217.00 | TON |
| 0010 | 00301 | CL2 ASPH SURF 0.38D PG64-22 | 1,365.00 | TON |
| 0015 | 02562 | TEMPORARY SIGNS | 310.00 | SQFT |
| 0020 | 02650 | MAINTAIN & CONTROL TRAFFIC - (KY 312) | 1.00 | LS |
| 0025 | 06510 | PAVE STRIPING-TEMP PAINT-4 IN | 8,265.00 | LF |
| 0030 | 06514 | PAVE STRIPING-PERM PAINT-4 IN | 16,530.00 | LF |
| 0035 | 06568 | PAVE MARKING-THERMO STOP BAR-24IN | 30.00 | LF |
| 0040 | 10020NS | FUEL ADJUSTMENT | 2,462.00 | DOLL |
| 0045 | 10030NS | ASPHALT ADJUSTMENT | 6,185.00 | DOLL |
| 0050 | 02569 | DEMOBILIZATION | 1.00 | LS |

**CONTRACT ID: 163125** **063GR16000R25-CB06** **1106306381601**

MCWHORTER ROAD (KY 638) FROM KY 586 EXTENDING NORTHEAST TO KY 578 ASPHALT RESURFACING, A DISTANCE OF 5.51 MILES.

| Project Line No | Bid Code | DESCRIPTION | Quantity | Unit |
|---|---|---|---|---|
| 0005 | 00190 | LEVELING & WEDGING PG64-22 | 637.00 | TON |
| 0010 | 00301 | CL2 ASPH SURF 0.38D PG64-22 | 4,785.00 | TON |
| 0015 | 02562 | TEMPORARY SIGNS | 490.00 | SQFT |
| 0020 | 02650 | MAINTAIN & CONTROL TRAFFIC - (KY 638) | 1.00 | LS |
| 0025 | 02676 | MOBILIZATION FOR MILL & TEXT - (KY 638) | 1.00 | LS |
| 0030 | 02677 | ASPHALT PAVE MILLING & TEXTURING | 45.00 | TON |
| 0035 | 06510 | PAVE STRIPING-TEMP PAINT-4 IN | 29,085.00 | LF |
| 0040 | 06514 | PAVE STRIPING-PERM PAINT-4 IN | 58,170.00 | LF |
| 0045 | 10020NS | FUEL ADJUSTMENT | 8,440.00 | DOLL |
| 0050 | 10030NS | ASPHALT ADJUSTMENT | 21,198.00 | DOLL |
| 0055 | 02569 | DEMOBILIZATION | 1.00 | LS |

# MATERIAL SUMMARY

**CONTRACT ID: 163125** **063GR16000R25-CB06** **1106308301601**

ROUGH CREEK ROAD (KY 830) FROM KY 1189 EXTENDING NORTHWEST TO KY 1189 ASPHALT RESURFACING, A DISTANCE OF 2.72 MILES.

| Project Line No | Bid Code | DESCRIPTION | Quantity | Unit |
|---|---|---|---|---|
| 0005 | 00190 | LEVELING & WEDGING PG64-22 | 387.00 | TON |
| 0010 | 00301 | CL2 ASPH SURF 0.38D PG64-22 | 2,415.00 | TON |
| 0015 | 02562 | TEMPORARY SIGNS | 330.00 | SQFT |
| 0020 | 02650 | MAINTAIN & CONTROL TRAFFIC - (KY 830) | 1.00 | LS |
| 0025 | 02676 | MOBILIZATION FOR MILL & TEXT - (KY 830) | 1.00 | LS |
| 0030 | 02677 | ASPHALT PAVE MILLING & TEXTURING | 15.00 | TON |
| 0035 | 06510 | PAVE STRIPING-TEMP PAINT-4 IN | 14,362.00 | LF |
| 0040 | 06514 | PAVE STRIPING-PERM PAINT-4 IN | 28,724.00 | LF |
| 0045 | 10020NS | FUEL ADJUSTMENT | 4,361.00 | DOLL |
| 0050 | 10030NS | ASPHALT ADJUSTMENT | 10,955.00 | DOLL |
| 0055 | 02569 | DEMOBILIZATION | 1.00 | LS |

**CONTRACT ID: 163125** **063GR16000R25-CB06** **1106310351601**

PINE TOP ROAD (KY 1035) FROM BEGINNING OF STATE MAINTENANCE EXTENDING NORTH TO KY 1956 ASPHALT RESURFACING, A DISTANCE OF 2.21 MILES.

| Project Line No | Bid Code | DESCRIPTION | Quantity | Unit |
|---|---|---|---|---|
| 0005 | 00190 | LEVELING & WEDGING PG64-22 | 307.00 | TON |
| 0010 | 00301 | CL2 ASPH SURF 0.38D PG64-22 | 1,925.00 | TON |
| 0015 | 02562 | TEMPORARY SIGNS | 350.00 | SQFT |
| 0020 | 02650 | MAINTAIN & CONTROL TRAFFIC - (KY 1035) | 1.00 | LS |
| 0025 | 06510 | PAVE STRIPING-TEMP PAINT-4 IN | 11,670.00 | LF |
| 0030 | 06514 | PAVE STRIPING-PERM PAINT-4 IN | 23,340.00 | LF |
| 0035 | 06568 | PAVE MARKING-THERMO STOP BAR-24IN | 45.00 | LF |
| 0040 | 10020NS | FUEL ADJUSTMENT | 3,474.00 | DOLL |
| 0045 | 10030NS | ASPHALT ADJUSTMENT | 8,726.00 | DOLL |
| 0050 | 02569 | DEMOBILIZATION | 1.00 | LS |

# Milling
# Summary
# CB06 063 0638 003-009

| | | | | Total | 45 |
|---|---|---|---|---|---|
| **Milepoint** | **Comment** | **Length** | **Width** | **Avg Depth** | **Tons** |
| **3.252** | **EDGE KEY @ START** | **100** | **22** | **0.5** | **6.72** |
| **4.897** | **LEADING APPROACH 063B00094N** | **100** | **22** | **0.5** | **6.72** |
| **4.903** | **TRAILING APPROACH 063B00094N** | **100** | **22** | **0.5** | **6.72** |
| **7.792** | **LEADING APPROACH 063B00061N** | **100** | **22** | **0.5** | **6.72** |
| **7.814** | **TRAILING APPROACH 063B00061N** | **100** | **22** | **0.5** | **6.72** |
| **8.76** | **EDGE KEY @ END** | **100** | **22** | **0.5** | **6.72** |

# Milling
# Summary
# CB06 063 0830 007-011

| | | | | Total | 15 |
|---|---|---|---|---|---|
| **Milepoint** | **Comment** | **Length** | **Width** | **Avg Depth** | **Tons** |
| **9.786** | **LEADING APPROACH 063B00110N** | **100** | **23** | **0.5** | **7.028** |
| **9.808** | **TRAILING APPROACH 063B00110N** | **100** | **23** | **0.5** | **7.028** |
| | | | | | **0** |
| | | | | | **0** |
| | | | | | **0** |
| | | | | | **0** |
| | | | | | **0** |
| | | | | | 0 |
| | | | | | 0 |
| | | | | | 0 |
| | | | | | 0 |
| | | | | | 0 |
| | | | | | 0 |
| | | | | | 0 |
| | | | | | 0 |
| | | | | | 0 |
| | | | | | 0 |
| | | | | | 0 |
| | | | | | 0 |
| | | | | | 0 |
| | | | | | 0 |
| | | | | | 0 |
| | | | | | 0 |
| | | | | | 0 |
| | | | | | 0 |

# Laurel County
## THERMOPLASTIC INTERSECTION PAVEMENT MARKINGS SUMMARY
## CB06 063 0312 002-005

| MPT. | INTERSECTION | X-WALKS 6 INCH LF | STP BARS 24 INCH LF | ARROWS CURVE EA | ARROWS STR EA | ARROWS COMB EA | "ONLY" EA | CATRAXX 6 INCH LF | RAILROAD "R" 6 FOOT EA | RAILROAD CROSS BUCK 16" LF | NOTES |
|---|---|---|---|---|---|---|---|---|---|---|---|
| 4.071 | KY 363 | | 30 | | | | | | | | |
| | | | | | | | | | | | |
| | | | | | | | | | | | |
| | | | | | | | | | | | |
| | | | | | | | | | | | |
| | | | | | | | | | | | |
| | | | | | | | | | | | |
| | | | | | | | | | | | |
| | | | | | | | | | | | |
| | | | | | | | | | | | |
| | | | | | | | | | | | |
| | | | | | | | | | | | |
| | | | | | | | | | | | |
| | | | | | | | | | | | |
| | | | | | | | | | | | |
| | | | | | | | | | | | |
| | | | | | | | | | | | |
| TOTAL | | 0 | 30 | 0 | 0 | 0 | 0 | 0 | 0 | 0 | |

# Laurel County
## THERMOPLASTIC INTERSECTION PAVEMENT MARKINGS SUMMARY
## CB06 063 1035 000-003

| MPT. | INTERSECTION | X-WALKS 6 INCH LF | STP BARS 24 INCH LF | ARROWS CURVE EA | ARROWS STR EA | ARROWS COMB EA | "ONLY" EA | CATRAXX 6 INCH LF | RAILROAD "R" 6 FOOT EA | RAILROAD CROSS BUCK 16" LF |
|---|---|---|---|---|---|---|---|---|---|---|
| 1.982 | KY 80 | | 30 | | | | | | | |
| 2.21 | KY 1956 | | 15 | | | | | | | |
| | | | | | | | | | | |
| | | | | | | | | | | |
| | | | | | | | | | | |
| | | | | | | | | | | |
| | | | | | | | | | | |
| | | | | | | | | | | |
| | | | | | | | | | | |
| | | | | | | | | | | |
| | | | | | | | | | | |
| | | | | | | | | | | |
| | | | | | | | | | | |
| | | | | | | | | | | |
| | | | | | | | | | | |
| | | | | | | | | | | |
| | | | | | | | | | | |
| TOTAL | | 0 | 45 | 0 | 0 | 0 | 0 | 0 | 0 | 0 |

# LAUREL COUNTY

## CB06 063 0638 003-009
## TYPICAL SECTION
## MILEPOINTS 3.252 - 8.760

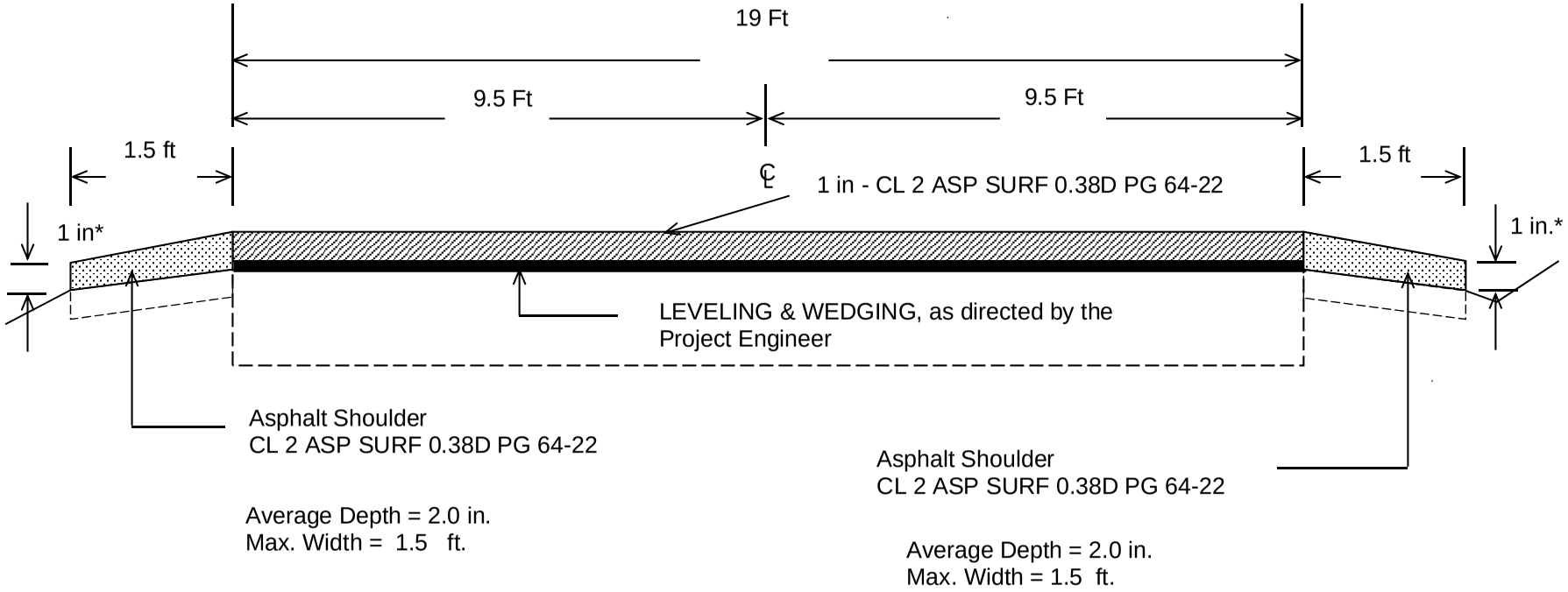


***Where Existing Site Conditions Permit**

# LAUREL COUNTY

## CB06 063 0312 002-005
## TYPICAL SECTION
## MILEPOINTS 2.506 - 4.071

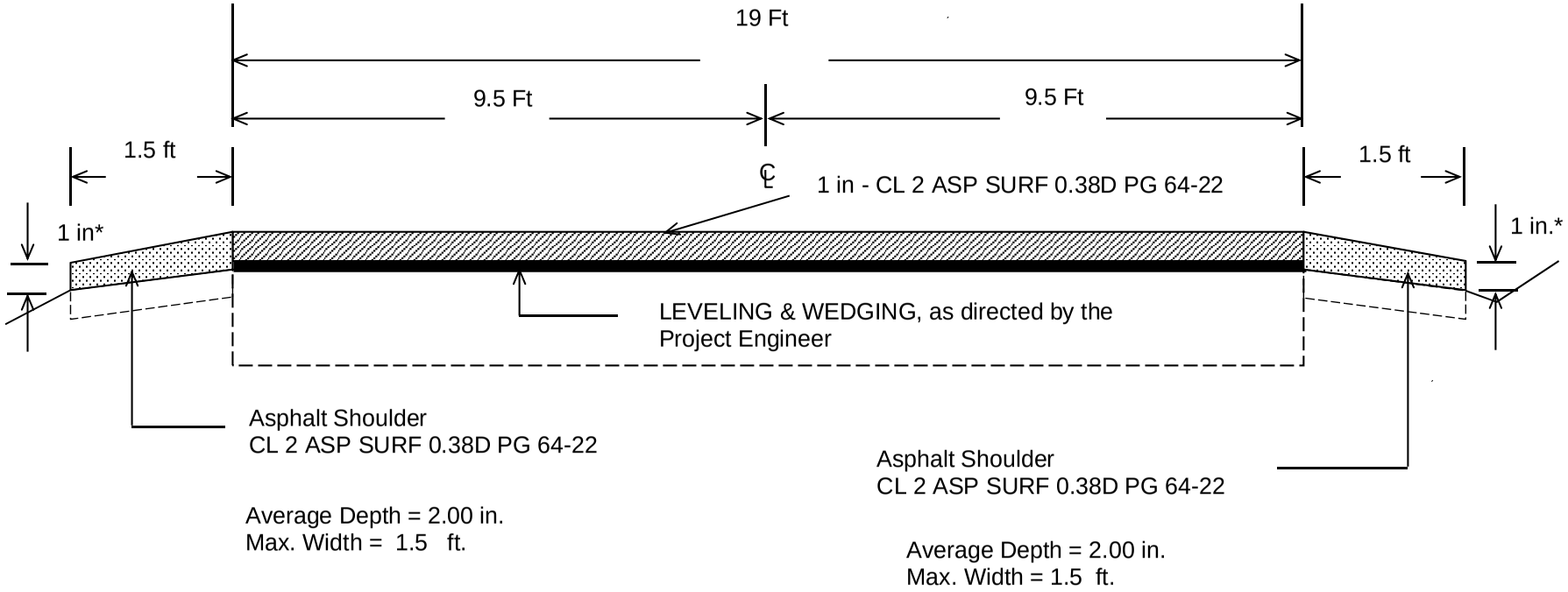


***Where Existing Site Conditions Permit**

# LAUREL COUNTY

## CB06 063 1035 000-003
## TYPICAL SECTION
## MILEPOINTS 0.000 - 2.210

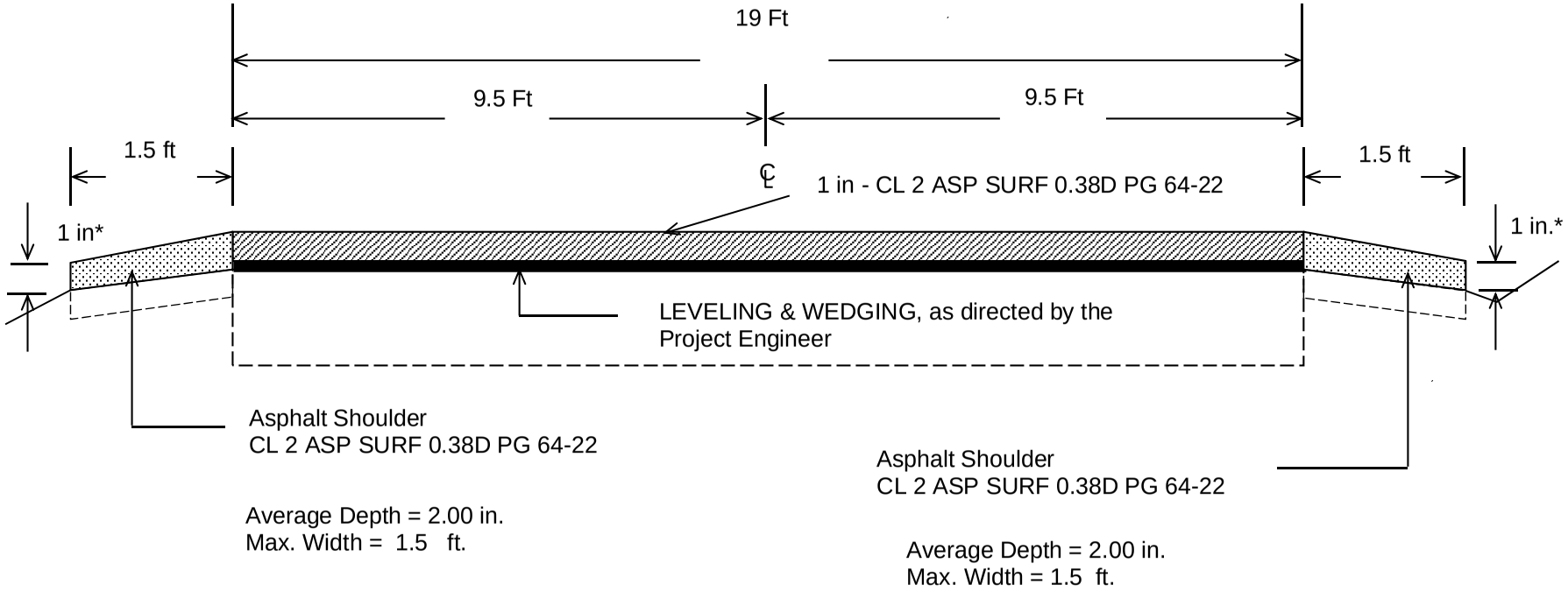


***Where Existing Site Conditions Permit**

# LAUREL COUNTY

## CB06 063 0830 007-011
## TYPICAL SECTION
## MILEPOINTS 7.364 - 10.084

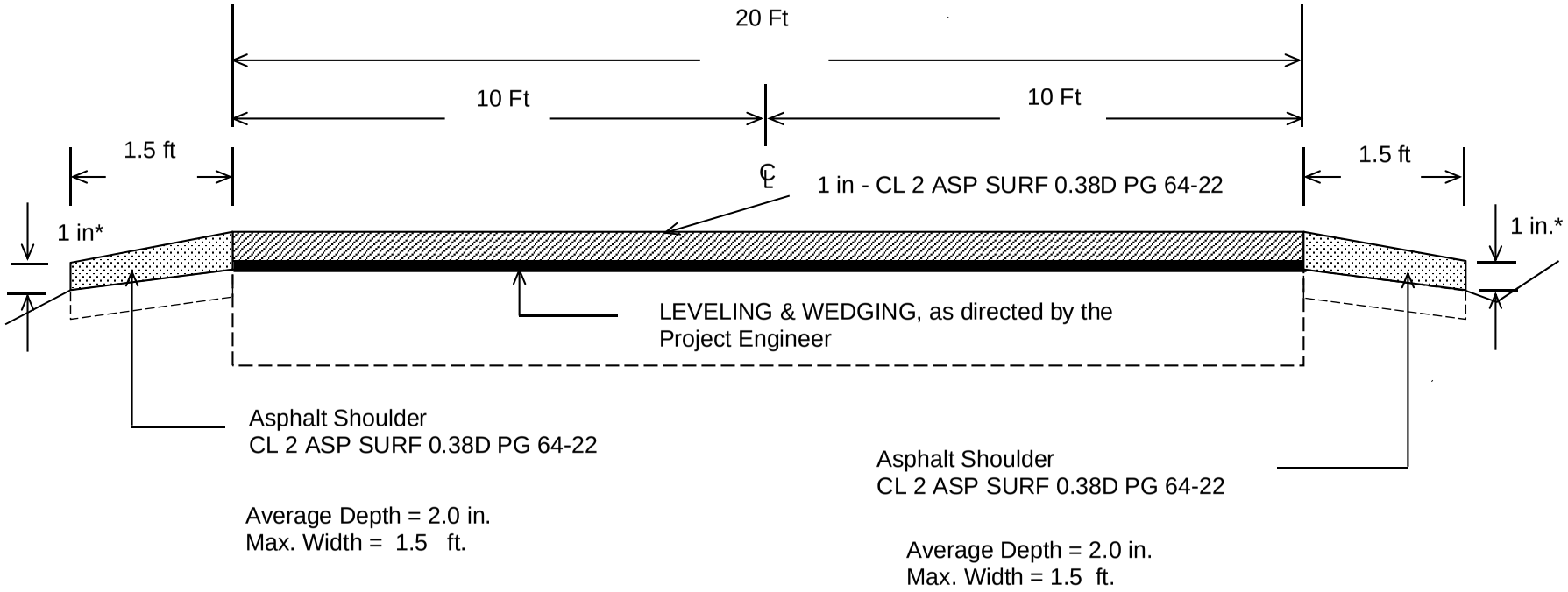


***Where Existing Site Conditions Permit**

# PART II

# SPECIFICATIONS AND STANDARD DRAWINGS

## SPECIFICATIONS REFERENCE

Any reference in the plans or proposal to previous editions of the *Standard Specifications for Road and Bridge Construction* and *Standard Drawings* are superseded by *Standard Specifications for Road and Bridge Construction, Edition of 2012* and *Standard Drawings, Edition of 2016.*

# Supplemental Specifications to the Standard Specifications for Road and Bridge Construction, 2012 Edition Effective with the April 29, 2016 Letting

| | |
|---|---|
| **Subsection:**<br>**Revision:** | 101.03 DEFINITIONS<br>Add the following Definitions to this section:<br>**Superpave Mix Design Technologist (SMDT)** - An inspector qualified by the KYTC to submit, adjust, or approve asphalt mix designs.<br><br>**Superpave Plant Technologist (SPT)** - An inspector qualified by the KYTC to perform routine inspection and process control, acceptance, or verification testing on asphalt mixtures. |
| **Subsection:**<br>**Revision:** | 102.15 Process Agent.<br>Replace the 1st paragraph with the following:<br>Every corporation doing business with the Department shall submit evidence of compliance with KRS Sections 14A.4-010, 271B.11-010, 271B.11-070, 271B.11-080, 271B.5-010 and 271B.16-220, and file with the Department the name and address of the process agent upon whom process may be served. |
| **Subsection:**<br>**Revision:** | 105.13 Claims Resolution Process.<br>Delete all references to TC 63-34 and TC 63-44 from the subsection as these forms are no longer available through the forms library and are forms generated within the AASHTO SiteManager software. |
| **Subsection:**<br>**Revision:** | 108.01 Subcontracting of Contract.<br>Replace the section with the following:<br>Do not subcontract, sell, transfer, assign, or otherwise dispose of the Contract or any portion of the Contract or Contracts, or of the right, title, or interest therein, without the Engineer's written consent. If the Contractor chooses to subcontract any portion of the Contract, a written request to sublet work must be submitted on the Subcontract Request (TC 63-35) form for the Engineer's approval. When directed by the Engineer, submit a certified copy of the actual subcontract agreement executed between the parties.<br><br>The Engineer will allow the Contractor to subcontract a portion, but the Contractor must perform with his own organization work amounting to no less than 30 percent of the total Contract cost. The Engineer will not allow any subcontractor to exceed the percentage to be performed by the Contractor and will require the Contractor to maintain a supervisory role over the entire project.<br><br>Do not allow any subcontractor to further subcontract any portion of the work without obtaining written consent from the Engineer. When the Engineer gives such consent, the first tier subcontractor may further subcontract a portion of his work not to exceed 50 percent of the work originally subcontracted to him by the Contractor. Do not allow any second tier subcontractor to subcontract any portion of the work.<br><br>Extra work performed by subcontractors in accordance with Section 109 will not be utilized in the computation of total dollar amount subcontracted. Subcontract percentages are based upon the original contract amount.<br><br>Payment to subcontractors for satisfactory performance of their work or materials supplied must be made within 7 calendar days from receipt of payment from the Engineer. Upon request by the Engineer, provide proof that payment has been made to the subcontractor within the 7 calendar days. Progress payments may be withheld for failure to comply with this request |

**Supplemental Specifications to the**
**Standard Specifications for Road and Bridge Construction, 2012 Edition**
**Effective with the April 29, 2016 Letting**

| | |
|---|---|
| | The Engineer's written consent to subcontract, assign, or otherwise dispose of any portion of the Contract does not, under any circumstances, relieve the Contractor or the surety of their respective liabilities and obligations under the Contract. The Engineer will make transactions only with the Contractor. The Engineer will recognize subcontractors only in the similar capacity of employees or workers of the Contractor who are subject to the same requirements as to character and competence as specified in Subsection 108.06.<br><br>Lease agreements are acceptable on Department projects. No additional paperwork is needed when equipment is rented from a commercial rental company unless the leased equipment comes with an operator. In these circumstances, payroll records for the operator of the leased equipment must be maintained and submitted by the contractor in accordance with Department policy.<br><br>Lease agreements between contractors that involve equipment only will require the submittal of a TC 63-71 Department Equipment Rental Form. If a Contractor is found to be in violation of these requirements, the Engineer reserves the right to withhold payment for the work which was performed in violation of these requirements. This provision does not include the lease or use of equipment from a corporation or company wholly owned by the Contractor. The Contractor shall not use equipment in the performance of the Contract to which title is not held by the Contractor or an approved subcontractor without a submitted lease agreement.<br><br>If a public official has provided a documented Declaration of Emergency, then the Engineer may verbally waive the requirement of submitting a TC 63-71 Department Equipment Rental Form until the situation has ended. After the emergency situation ends, immediately remove the equipment from the project or submit a completed TC 63-71 Department Equipment Rental Form to the Engineer. |
| **Subsection:**<br>**Revision:** | 108.03 Preconstruction Conference.<br>Replace 8) Staking with the following:<br>8) Staking (designated by a Professional Engineer or Land Surveyor licensed in the Commonwealth of Kentucky. |
| **Subsection:**<br>**Revision:** | 109.07.02 Fuel.<br>Revise item Crushed Aggregate Used for Embankment Stabilization to the following:<br>Crushed Aggregate<br>Used for Stabilization of Unsuitable Materials<br>Used for Embankment Stabilization |
| | Delete the following item from the table.<br>~~Crushed Sandstone Base (Cement Treated)~~ |
| **Subsection:**<br>**Revision:** | 110.02 Demobilization.<br>Replace the first part of the first sentence of the second paragraph with the following:<br>Perform all work and operations necessary to accomplish final clean-up as specified in the first paragraph of Subsection 105.12; |
| **Subsection:**<br>**Revision:** | 112.03.12 Project Traffic Coordinator (PTC).<br>Replace the last paragraph of this subsection with the following:<br>Ensure the designated PTC has sufficient skill and experience to properly perform the task assigned and has successfully completed the qualification courses. |

**Supplemental Specifications to the**
**Standard Specifications for Road and Bridge Construction, 2012 Edition**
**Effective with the April 29, 2016 Letting**

| | |
|---|---|
| **Subsection:**<br>**Revision:** | 112.04.18 Diversions (By-Pass Detours).<br>Insert the following sentence after the 2nd sentence of this subsection.<br>The Department will not measure temporary drainage structures for payment when the contract documents provide the required drainage opening that must be maintained with the diversion. The temporary drainage structures shall be incidental to the construction of the diversion. If the contract documents fail to provide the required drainage opening needed for the diversion, the cost of the temporary drainage structure will be handled as extra work in accordance with section 109.04. |
| **Subsection:**<br>**Revision:** | 201.03.01 Contractor Staking.<br>Replace the first paragraph with the following: Perform all necessary surveying under the general supervision of a Professional Engineer or Land Surveyor licensed in the Commonwealth of Kentucky. |
| **Subsection:**<br>**Revision:** | 201.04.01 Contractor Staking.<br>Replace the last sentence of the paragraph with the following: Complete the general layout of the project under the supervision of a Professional Engineer or Land Surveyor licensed in the Commonwealth of Kentucky. |
| **Subsection:**<br>**Revision:** | 206.04.01 Embankment-in-Place.<br>Replace the fourth paragraph with the following: The Department will not measure **suitable** excavation included in the original plans that is disposed of for payment and will consider it incidental to Embankment-in-Place. |
| **Subsection:**<br>**Revision:** | 208.02.01 Cement.<br>Replace paragraph with the following:<br>Select Type I or Type II cement conforming to Section 801. Use the same type cement throughout the work. |
| **Subsection:**<br>**Revision:** | 208.03.06 Curing and Protection.<br>Replace the fourth paragraph with the following:<br>Do not allow traffic or equipment on the finished surface until the stabilized subgrade has cured for a total of 7-days with an ambient air temperature above 40 degrees Fahrenheit. A curing day consists of a continuous 24-hour period in which the ambient air temperature does not fall below 40 degrees Fahrenheit. Curing days will not be calculated consecutively, but must total seven (7) , 24-hour days with the ambient air temperature remaining at or above 40 degrees Fahrenheit before traffic or equipment will be allowed to traverse the stabilized subgrade. The Department may allow a shortened curing period when the Contractor requests. The Contractor shall give the Department at least 3 day notice of the request for a shortened curing period. The Department will require a minimum of 3 curing days after final compaction. The Contractor shall furnish cores to the treated depth of the roadbed at 500 feet intervals for each lane when a shortened curing time is requested. The Department will test cores using an unconfined compression test. Roadbed cores must achieve a minimum strength requirement of 80 psi. |
| **Subsection:**<br>**Revision:** | 208.03.06 Curing and Protection.<br>Replace paragraph eight with the following:<br>At no expense to the Department, repair any damage to the subgrade caused by freezing. |

**Supplemental Specifications to the**
**Standard Specifications for Road and Bridge Construction, 2012 Edition**
**Effective with the April 29, 2016 Letting**

| | |
|---|---|
| **Subsection:**<br>**Part:**<br>**Revision:** | 212.03.03 Permanent Seeding and Protection.<br>A) Seed Mixtures for Permanent Seeding.<br>Revise **Seed Mix Type I** to the mixture shown below:<br>50% Kentucky 31 Tall Fescue (Festuca arundinacea)<br>35% Hard Fescue (Festuca (Festuca longifolia)<br>10% Ryegrass, Perennial (Lolium perenne)<br>5% White Dutch Clover (Trifolium repens) |
| **Subsection:**<br>**Part:**<br>**Number:**<br>**Revision:** | 212.03.03 Permanent Seeding and Protection.<br>A) Seed Mixtures for Permanent Seeding.<br>2)<br>Replace the paragraph with the following:<br>Permanent Seeding on Slopes Greater than 3:1 in Highway Districts 4, 5, 6, and 7. Apply seed mix Type II at a minimum application rate of 100 pounds per acre. If adjacent to a golf course replace the crown vetch with Kentucky 31 Tall Fescue. |
| **Subsection:**<br>**Part:**<br>**Number:**<br>**Revision:** | 212.03.03 Permanent Seeding and Protection.<br>A) Seed Mixtures for Permanent Seeding.<br>3)<br>Replace the paragraph with the following:<br>Permanent Seeding on Slopes Greater than 3:1 in Highway Districts 1, 2, 3, 8, 9, 10, 11, and 12. Apply seed mix Type III at a minimum application rate of 100 pounds per acre. If adjacent to crop land or golf course, replace the Sericea Lespedeza with Kentucky 31 Fescue. |
| **Subsection:**<br>**Part:**<br>**Revision:** | 212.03.03 Permanent Seeding and Protection.<br>B) Procedures for Permanent Seeding.<br>Delete the first sentence of the section. |
| **Subsection:**<br>**Part:**<br>**Revision:** | 212.03.03 Permanent Seeding and Protection.<br>B) Procedures for Permanent Seeding.<br>Replace the second and third sentence of the section with the following:<br>Prepare a seedbed and apply an initial fertilizer that contains a minimum of 100 pounds of nitrogen, 100 pounds of phosphate, and 100 pounds of potash per acre. Apply agricultural limestone to the seedbed when the Engineer determines it is needed. When required, place agricultural limestone at a rate of 3 tons per acre. |
| **Subsection:**<br>**Part:**<br>**Revision:** | 212.03.03 Permanent Seeding and Protection.<br>D) Top Dressing.<br>Change the title of part to D) Fertilizer. |
| **Subsection:**<br>**Part:**<br>**Revision:** | 212.03.03 Permanent Seeding and Protection.<br>D) Fertilizer.<br>Replace the first paragraph with the following:<br>Apply fertilizer at the beginning of the seeding operation and after vegetation is established. Use fertilizer delivered to the project in bags or bulk. Apply initial fertilizer to all areas prior to the seeding or sodding operation at the application rate specified in 212.03.03 B). Apply 20-10-10 fertilizer to the areas after vegetation has been established at a rate of 11.5 pounds per 1,000 square feet. Obtain approval from the Engineer prior to the 2nd fertilizer application. Reapply fertilizer to any area that has a streaked appearance. The reapplication shall be at no additional cost to the Department. Re-establish any vegetation severely damaged or destroyed because of an excessive application of fertilizer at no cost to the Department. |
| **Subsection:**<br>**Part:**<br>**Revision:** | 212.03.03 Permanent Seeding and Protection.<br>D) Fertilizer.<br>Delete the second paragraph. |

**Supplemental Specifications to the**
**Standard Specifications for Road and Bridge Construction, 2012 Edition**
**Effective with the April 29, 2016 Letting**

| | |
|---|---|
| **Subsection:**<br>**Revision:** | 212.04.04 Agricultural Limestone.<br>Replace the entire section with the following:<br>The Department will measure the quantity of agricultural limestone in tons. |
| **Subsection:**<br>**Revision:** | 212.04.05 Fertilizer.<br>Replace the entire section with the following:<br>The Department will measure fertilizer used in the seeding or sodding operations for payment. The Department will measure the quantity by tons. |
| **Subsection:**<br>**Revision:** | 212.05 PAYMENT.<br>Delete the following item code:<br>Code — Pay Item — Pay Unit<br>05966 — Topdressing Fertilizer — Ton |
| **Subsection:**<br>**Revision:** | 212.05 PAYMENT.<br>Add the following pay items:<br>Code — Pay Item — Pay Unit<br>05963 — Initial Fertilizer — Ton<br>05964 — 20-10-10 Fertilizer — Ton<br>05992 — Agricultural Limestone — Ton |
| **Subsection:**<br>**Revision:** | 213.03.02 Progress Requirements.<br><br>Replace the third paragraph with the following:<br>After exposing areas of erodible material, make every effort to stabilize and protect the areas as quickly as possible. Permanently seed and mulch all areas at final grade within 14 days. Temporary stabilization practices on those portions of the project where construction activities have temporarily ceased shall be initiated within 14 days of the date of activity cessation. The Engineer will suspend grading operations for instances where the Contractor fails to sustain erosion control measures to effectively control erosion and to prevent water pollution in accordance with the KPDES Permit. In addition, the Engineer will withhold monies due on current estimates until corrective work has been initiated and is continuously progressing to remediate noted deficiencies. Additionally, should noted deficiencies not be adequately addressed to the satisfaction of the Engineer within 7 calendar days of receipt of written notification of deficiencies, the Department will apply a penalty equal to the daily liquidated damages rate until all aspects of the work have been completed. |
| **Subsection:**<br>**Part:**<br>**Revision:** | 213.03.05 Temporary Control Measures.<br>E) Temporary Seeding and Protection.<br>Delete the second sentence of the first paragraph. |
| **Subsection:**<br>**Table:**<br>**Revision:** | 304.02.01 Physical Properties.<br>Required Geogrid Properties<br>Replace all references to Test Method "GRI-GG2-87" with ASTM D 7737. |
| **Subsection:**<br>**Part:**<br>**Revision:** | 402.03.02 Contractor Quality Control and Department Acceptance.<br>B) Sampling.<br>Replace the second sentence with the following:<br>The Department will determine when to obtain the quality control samples using the random-number feature of the mix design submittal and approval spreadsheet. The Department will randomly determine when to obtain the verification samples required in Subsections 402.03.03 and 402.03.04 using the Asphalt Mixture Sample Random Tonnage Generator. |

**Supplemental Specifications to the**
**Standard Specifications for Road and Bridge Construction, 2012 Edition**
**Effective with the April 29, 2016 Letting**

| | |
|---|---|
| **Subsection:**<br>**Part:**<br>**Number:**<br>**Revision:** | 402.03.02 Contractor Quality Control and Department Acceptance.<br>D) Testing Responsibilities.<br>3) VMA.<br>Add the following paragraph below Number 3) VMA:<br>Retain the AV/VMA specimens and one additional corresponding $G_{mm}$ sample for 5 working days for mixture verification testing by the Department. For Specialty Mixtures, retain a mixture sample for 5 working days for mixture verification testing by the Department. When the Department's test results do not verify that the Contractor's quality control test results are within the acceptable tolerances according to Subsection 402.03.03, retain the samples and specimens from the affected sublot(s) for the duration of the project. |
| **Subsection:**<br>**Part:**<br>**Number:**<br>**Revision:** | 402.03.02 Contractor Quality Control and Department Acceptance.<br>D) Testing Responsibilities.<br>4) Density.<br>Replace the second sentence of the Option A paragraph with the following:<br>Perform coring by the end of the following work day. |
| **Subsection:**<br>**Part:**<br>**Number:**<br>**Revision:** | 402.03.02 Contractor Quality Control and Department Acceptance.<br>D) Testing Responsibilities.<br>5) Gradation.<br>Delete the second paragraph. |
| **Subsection:**<br>**Part:**<br>**Number:**<br>**Revision:** | 402.03.02 Contractor Quality Control and Department Acceptance.<br>H) Unsatisfactory Work.<br>1) Based on Lab Data.<br>Replace the second paragraph with the following:<br>When the Engineer determines that safety concerns or other considerations prohibit an immediate shutdown, continue work and the Department will make an evaluation of acceptability according to Subsection 402.03.05. |
| **Subsection:**<br>**Revision:** | 402.03.03 Verification.<br>Replace the first paragraph with the following:<br>**402.03.03 Mixture Verification.** For volumetric properties, the Department will perform a minimum of one verification test for AC, AV, and VMA according to the corresponding procedures as given in Subsection 402.03.02. The Department will randomly determine when to obtain the verification sample using the Asphalt Mixture Sample Random Tonnage Generator. For specialty mixtures, the Department will perform one AC and one gradation determination per lot according to the corresponding procedures as given in Subsection 402.03.02. However, Department personnel will not perform AC determinations according to KM 64-405. The Contractor will obtain a quality control sample at the same time the Department obtains the mixture verification sample and perform testing according to the procedures given in Subsection 402.03.02. If the Contractor's quality control sample is verified by the Department's test results within the tolerances provided below, the Contractor's sample will serve as the quality control sample for the affected sublot. The Department may perform the mixture verification test on the Contractor's equipment or on the Department's equipment. |
| **Subsection:**<br>**Part:**<br>**Revision:** | 402.03.03 Verification.<br>A) Evaluation of Sublot(s) Verified by Department.<br>Replace the third sentence of the second paragraph with the following:<br>When the paired *t* -test indicates that the Contractor's data and Department's data are possibly not from the same population, the Department will investigate the cause for the difference according to Subsection 402.03.05 and implement corrective measures as the Engineer deems appropriate. |

**Supplemental Specifications to the**
**Standard Specifications for Road and Bridge Construction, 2012 Edition**
**Effective with the April 29, 2016 Letting**

| | |
|---|---|
| **Subsection:**<br>**Part:**<br>**Revision:** | 402.03.03 Verification.<br>B) Evaluation of Sublots Not Verified by Department.<br>Replace the third sentence of the first paragraph with the following:<br>When differences between test results are not within the tolerances listed below, the Department will resolve the discrepancy according to Subsection 402.03.05. |
| **Subsection:**<br>**Part:**<br>**Revision:** | 402.03.03 Verification.<br>B) Evaluation of Sublots Not Verified by Department.<br>Replace the third sentence of the second paragraph with the following:<br>When the $F$-test or $t$-test indicates that the Contractor's data and Department's data are possibly not from the same population, the Department will investigate the cause for the difference according to Subsection 402.03.05 and implement corrective measures as the Engineer deems appropriate. |
| **Subsection:**<br>**Part:**<br>**Revision:** | 402.03.03 Verification.<br>C) Test Data Patterns.<br>Replace the second sentence with the following:<br>When patterns indicate substantial differences between the verified and non-verified sublots, the Department will perform further comparative testing according to subsection 402.03.05. |
| **Subsection:**<br>**Revision:** | 402.03 CONSTRUCTION.<br>Add the following subsection: **402.03.04 Testing Equipment and Technician Verification.**<br>For mixtures with a minimum quantity of 20,000 tons and for every 20,000 tons thereafter, the Department will obtain an additional verification sample at random using the Asphalt Mixture Sample Random Tonnage Generator in order to verify the integrity of the Contractor's and Department's laboratory testing equipment and technicians. The Department will obtain a mixture sample of at least 150 lb at the asphalt mixing plant according to KM 64-425 and split it according to AASHTO R 47. The Department will retain one split portion of the sample and provide the other portion to the Contractor. At a later time convenient to both parties, the Department and Contractor will simultaneously reheat the sample to the specified compaction temperature and test the mixture for AV and VMA using separate laboratory equipment according to the corresponding procedures given in Subsection 402.03.02. The Department will evaluate the differences in test results between the two laboratories. When the difference between the results for AV or VMA is not within ± 2.0 percent, the Department will investigate and resolve the discrepancy according to Subsection 402.03.05. |
| **Subsection:**<br>**Revision:** | 402.03.04 Dispute Resolution.<br>Change the subsection number to 402.03.05. |
| **Subsection:**<br>**Part:**<br>**Table:**<br>**Revision:** | 402.05 PAYMENT.<br>Lot Pay Adjustment Schedule Compaction Option A Base and Binder Mixtures<br>AC<br>Replace the Deviation from JMF(%) that corresponds to a Pay Value of 0.95 to ±0.6. |
| **Subsection:**<br>**Revision:** | 403.01 Description.<br>Replace the sentence three and four of the first paragraph with the following:<br>Provide a Superpave Plant Technologist (SPT) or Superpave Mix Design Technician (SMDT) qualified by the Laboratories' Quality Acceptance program. Be available to address all Quality Control concerns arising during work performed under section 403. |
| **Subsection:**<br>**Revision:** | 403.02.10 Material Transfer Vehicle (MTV).<br>Replace the first sentence with the following:<br>In addition to the equipment specified above, provide a MTV with the following minimum characteristics: |

**Supplemental Specifications to the**
**Standard Specifications for Road and Bridge Construction, 2012 Edition**
**Effective with the April 29, 2016 Letting**

| | |
|---|---|
| **Subsection:**<br>**Part:**<br>**Number:**<br>**Revision:** | 403.03.03 Preparation of Mixture<br>C) Mix Design Criteria<br>2)<br>Revise part 2) to read as follows: Selection of Optimum AC. Normally, the Department will approve the AC at an air-void content of 4.0 percent. The Engineer may assign an AC corresponding to other air-void levels as deemed appropriate. Ensure the optimum AC is a minimum of 5.2 percent by weight of the total mixture for all 0.5-inch nominal surface mixtures and 5.5 percent by weight of the total mixture for all 0.38-inch nominal surface mixtures. |
| **Subsection:**<br>**Revision:** | 412.02.09 Material Transfer Vehicle (MTV).<br>Replace the paragraph with the following:<br>Provide and utilize a MTV with the minimum characteristics outlined in section 403.02.10. |
| **Subsection:**<br>**Revision:** | 412.03.07 Placement and Compaction.<br>Replace the first paragraph with the following:<br>Use a MTV when placing SMA mixture in the driving lanes. The MTV is not required on ramps and/or shoulders unless specified in the contract. When the Engineer determines the use of the MTV is not practical for a portion of the project, the Engineer may waive its requirement for that portion of pavement by a letter documenting the waiver. |
| **Subsection:**<br>**Revision:** | 412.04 MEASUREMENT.<br>Add the following subsection:<br>412.04.03. Material Transfer Vehicle (MTV). The Department will not measure the MTV for payment and will consider its use incidental to the asphalt mixture. |
| **Subsection:**<br>**Part:**<br>**Revision:** | 501.03.19 Surface Tolerances and Testing Surface.<br>B) Ride Quality.<br>Add the following to the end of the first paragraph:<br>The Department will specify if the ride quality requirements are Category A or Category B when ride quality is specified in the Contract. Category B ride quality requirements shall apply when the Department fails to classify which ride quality requirement will apply to the Contract. |
| **Subsection:**<br>**Revision:** | 501.03.05 Weather Limitations and Protection.<br>Replace the reference to Subsection 501.03.19 in Paragraph 5, with Subsection 501.03.20. |
| **Subsection:**<br>**Revision:** | 601.02.02 Cement<br>Replace the third sentence with the following: The Department will allow the use of Type IP(≤20), Type IS(≤30), Type IL, Type II, and Type III when the Engineer approves. |
| **Subsection:**<br>**Revision:** | 601.02.02 Cement<br>Replace the fifth sentence with the following: If unsatisfactory test results are obtained using Type IP(≤20), Type IS(≤30), Type IL, Type II, or Type III cement complete the work using Type I cement. |

**Supplemental Specifications to the**
**Standard Specifications for Road and Bridge Construction, 2012 Edition**
**Effective with the April 29, 2016 Letting**

**Subsection:** 601.03.02 Concrete Producer Responsibilities.
**Part:** E) Trip Tickets.
**Revision:** Replace the section with the following:
Furnish a trip ticket containing the minimum information shown in the table below. Certify that the data on the ticket is correct and that the mixture conforms to the approved mix design. Ensure that the plant manager or a Level II concrete technician signs the ticket. The Department's jobsite inspector will complete all other necessary information on the back of the trip ticket.

| | | | | |
|---|---|---|---|---|
| Contract Id: | Proj. Number: | Date: | County: | |
| Truck No: | Producer Name: | | SiteManager Sample Id: | |
| Qty($Yds^3$): | Time Loaded (Non Agitated Concrete Only): | | | |
| Begin Mixing Time: _____ AM ____ PM ____ REV _____ | | | | |
| Set Retarder Used | | Yes ___ | Type____ | No____ |
| Water Reducer Used | | Yes ___ | Type____ | No____ |
| Water Underrun _____ Gal/$Yd^3$ _____ Total Gallons | | | | |
| Design W/C: | Actual W/C: | Slump (inches) | | |
| ***Batch Weight Information:*** | | | | |
| Material: | Description: | Design Qty: | Required: | Batched: |
| | | | | |
| | | | | |
| Remarks: | | | | |
| | | | | |

| | | | | | | | |
|---|---|---|---|---|---|---|---|
| Material: | Description: | Design Qty: | Required: | Batched: | %Var: | %Moisture: | Actual: |

*The data on this ticket is correct for the approved concrete mix design.*

Signature: _____ Date: _____

KRMCA Level II Technician or Plant Manager

**Subsection:** 601.03.03 Proportioning and Requirements
**Part:** A) Concrete
**Revision:** Revise Table for INGREDIENT PROPORTIONS AND REQUIREMENTS FOR VARIOUS CLASSES OF CONCRETE as follows: Replace "M1 w/ Type 1 cement" with "M1 w/ Type 1 or blended hydraulic cement"

**Subsection:** 601.03.03 Proportioning and Requirements
**Part:** C) Mixtures Using Type IP, IS, and I(SM) Cement or Mineral Admixtures
**Revision:** Revise part C) header to read as follows: Mixtures Using Type IP(≤20), IS(≤30), and IL Cement and Mineral Admixtures.

**Subsection:** 601.03.03 Proportioning and Requirements
**Part:** C) Mixtures Using Type IP, IS, and I(SM) Cement or Mineral Admixtures
**Number:** 1)
**Revision:** Revise first sentence to read as follows: Type IP(≤20), IS(≤30), IL Cement.

**Subsection:** 601.03.03 Proportioning and Requirements
**Part:** C) Mixtures Using Type IP, IS, and I(SM) Cement or Mineral Admixtures
**Number:** 2)
**Revision:** Revise second sentence to read as follows: The use of fly ash, blast furnace slag cement, or micosilica in concrete is the Contractor's option.

**Supplemental Specifications to the**
**Standard Specifications for Road and Bridge Construction, 2012 Edition**
**Effective with the April 29, 2016 Letting**

| | |
|---|---|
| **Subsection:**<br>**Part:**<br>**Number:**<br>**Revision:** | 601.03.03 Proportioning and Requirements<br>C) Mixtures Using Type IP, IS, and I(SM) Cement or Mineral Admixtures<br>2)<br>Revise the first sentence in the second paragraph to read as follows: When the ability to use blast furnace slag cement or microsilica has not been demonstrated have the concrete producer provide trial batches in accordance with Subsection 601.03.02 G) 1). |
| **Subsection:**<br>**Part:**<br>**Number:**<br>**Part:**<br>**Revision:** | 601.03.03 Proportioning and Requirements<br>C) Mixtures Using Type IP, IS, and I(SM) Cement or Mineral Admixtures<br>2)<br>b)<br>Revise first sentence to read as follows: Blast Furnace Slag Cement |
| **Subsection:**<br>**Part:**<br>**Number:**<br>**Part:**<br>**Revision:** | 601.03.03 Proportioning and Requirements<br>C) Mixtures Using Type IP, IS, and I(SM) Cement or Mineral Admixtures<br>2)<br>b)<br>Revise second sentence to read as follows: When added as a separate ingredient, use Grade 120 or Grade 100 slag to reduce the quantity of cement, except do not use blast furnace slag cement to reduce the quantity of Type IS(≤30) cement. |
| **Subsection:**<br>**Part:**<br>**Number:**<br>**Part:**<br>**Revision:** | 601.03.03 Proportioning and Requirements<br>C) Mixtures Using Type IP, IS, and I(SM) Cement or Mineral Admixtures<br>2)<br>b)<br>In part b), replace all references to "GGBF slag" with "blast furnace slag cement". |
| **Subsection:**<br>**Part:**<br>**Revision:** | 601.03.04 Classes and Primary Uses<br>H) Class M1<br>Revise part H) to read as follows: High early strength for bridge joint repair and full or partial depth bridge deck patching. (Type 1 cement or blended hydraulic cement) |
| **Subsection:**<br>**Revision:** | 603.03.06 Cofferdams.<br>Replace the seventh sentence of paragraph one with the following:<br>Submit drawings that are stamped by a Professional Engineer licensed in the Commonwealth of Kentucky. |
| **Subsection:**<br>**Revision:** | 605.03.04 Tack Welding.<br>Insert the subsection and the following:<br>605.03.04 Tack Welding. The Department does not allow tack welding. |
| **Subsection:**<br>**Part:**<br>**Number:**<br>**Revision:** | 606.03.17 Special Requirements for Latex Concrete Overlays.<br>A) Existing Bridges and New Structures.<br>1) Prewetting and Grout-Bond Coat.<br>Add the following sentence to the last paragraph: Do not apply a grout-bond coat on bridge decks prepared by hydrodemolition. |
| **Subsection:**<br>**Revision:** | 609.03 Construction.<br>Replace Subsection 609.03.01 with the following:<br>609.03.01 A) Swinging the Spans. Before placing concrete slabs on steel spans or precast concrete release the temporary erection supports under the bridge and swing the span free on its supports.<br>609.03.01 B) Lift Loops. Cut all lift loops flush with the top of the precast beam once the beam is placed in the final location and prior to placing steel reinforcement. At locations where lift loops are cut, paint the top of the beam with galvanized or epoxy paint. |

**Supplemental Specifications to the**
**Standard Specifications for Road and Bridge Construction, 2012 Edition**
**Effective with the April 29, 2016 Letting**

| | |
|---|---|
| **Subsection:**<br>**Revision:** | 611.03.02 Precast Unit Construction.<br>Replace the first sentence of the subsection with the following:<br>Construct units according to ASTM C1577, **replacing Table 1 (Design Requirements for Precast Concrete Box Sections Under Earth, Dead and HL-93 Live Load Conditions) with KY Table 1 (Precast Culvert KYHL-93 Design Table)**, and Section 605 with the following exceptions and additions: |
| **Subsection:**<br>**Number:**<br>**Revision:** | 613.03.01 Design.<br>2)<br>Replace "AASHTO Standard Specifications for Highway Bridges" with "AASHTO LRFD Bridge Design Specifications" |
| **Subsection:**<br>**Revision:** | 615.06.02<br>Add the following sentence to the end of the subsection.<br>The ends of units shall be normal to walls and centerline except exposed edges shall be beveled ¾ inch. |
| **Subsection:**<br>**Revision:** | 615.06.03 Placement of Reinforcement in Precast 3-Sided Units.<br>Replace the reference of 6.6 in the section to 615.06.06. |
| **Subsection:**<br>**Revision:** | 615.06.04 Placement of Reinforcement for Precast Endwalls.<br>Replace the reference of 6.7 in the section to 615.06.07. |
| **Subsection:**<br>**Revision:** | 615.06.06 Laps, Welds, and Spacing for Precast 3-Sided Units.<br>Replace the subsection with the following:<br>Tension splices in the circumferential reinforcement shall be made by lapping. Laps may not be tack welded together for assembly purposes. For smooth welded wire fabric, the overlap shall meet the requirements of AASHTO 2012 Bridge Design Guide Section 5.11.2.5.2 and AASHTO 2012 Bridge Design Guide Section 5.11.6.3. For deformed welded wire fabric, the overlap shall meet the requirements of AASHTO 2012 Bridge Design Guide Section 5.11.2.5.1 and AASHTO 2012 Bridge Design Guide Section 5.11.6.2. The overlap of welded wire fabric shall be measured between the outer most longitudinal wires of each fabric sheet. For deformed billet-steel bars, the overlap shall meet the requirements of AASHTO 2012 Bridge Design Guide Section 5.11.2.1. For splices other than tension splices, the overlap shall be a minimum of 12" for welded wire fabric or deformed billet-steel bars. The spacing center to center of the circumferential wires in a wire fabric sheet shall be no less than 2 inches and no more than 4 inches. The spacing center to center of the longitudinal wires shall not be more than 8 inches. The spacing center to center of the longitudinal distribution steel for either line of reinforcing in the top slab shall be not more than 16 inches. |
| **Subsection:**<br>**Revision:** | 615.06.07 Laps, Welds, and Spacing for Precast Endwalls.<br>Replace the subsection with the following:<br>Splices in the reinforcement shall be made by lapping. Laps may not be tack welded together for assembly purposes. For smooth welded wire fabric, the overlap shall meet the requirements of AASHTO 2012 Bridge Design Guide Section 5.11.2.5.2 and AASHTO 2012 Bridge Design Guide Section 5.11.6.3. For deformed welded wire fabric, the overlap shall meet the requirements of AASHTO 2012 Bridge Design Guide Section 5.11.2.5.1 and AASHTO 2012 Bridge Design Guide Section 5.11.6.2. For deformed billet-steel bars, the overlap shall meet the requirements of AASHTO 2012 Bridge Design Guide Section 5.11.2.1. The spacing center-to-center of the wire fabric sheet shall not be less than 2 inches or more than 8 inches. |

**Supplemental Specifications to the**
**Standard Specifications for Road and Bridge Construction, 2012 Edition**
**Effective with the April 29, 2016 Letting**

| | |
|---|---|
| **Subsection:**<br>**Revision:** | 615.08.01 Type of Test Specimen.<br>Replace the subsection with the following:<br>Start-up slump, air content, unit weight, and temperature tests will be performed each day on the first batch of concrete. Acceptable start-up results are required for production of the first unit. After the first unit has been established, random acceptance testing is performed daily for each 50 $yd^3$ (or fraction thereof). In addition to the slump, air content, unit weight, and temperature tests, a minimum of one set of cylinders shall be required each time plastic property testing is performed. |
| **Subsection:**<br>**Revision:** | 615.08.02 Compression Testing.<br>Delete the second sentence. |
| **Subsection:**<br>**Revision:** | 615.08.04 Acceptability of Core Tests.<br>Delete the entire subsection. |
| **Subsection:**<br>**Revision:** | 615.12 Inspection.<br>Add the following sentences to the end of the subsection: Units will arrive at jobsite with the "Kentucky Oval" stamped on the unit which is an indication of acceptable inspection at the production facility. Units shall be inspected upon arrival for any evidence of damage resulting from transport to the jobsite. |
| **Subsection:**<br>**Revision:** | 701.04.16 Deduction for Pipe Deflection.<br>Insert the following at the end of the paragraph:<br>The section length is determined by the length of the pipe between joints where the failure occurred. |
| **Subsection:**<br>**Revision:** | 716.02.02 Paint.<br>Replace sentence with the following: Conform to Section 821. |
| **Subsection:**<br>**Revision:** | 716.03 CONSTRUCTION.<br>Replace bullet 5) with the following: 5) AASHTO Standard Specifications for Structural Supports for Highway Signs, Luminaires, and Traffic Signals, 2013-6th Edition with current interims, |
| **Subsection:**<br>**Revision:** | 716.03.02 Lighting Standard Installation.<br>Replace the paragraph with the following:<br>Locate poles to avoid trees, drainage, structures, etc. Regardless of the station & offset noted, locate all poles/bases behind guardrail a minimum of 4 feet behind the face of the guardrail. All poles shall be placed as close to stations and offsets as stated on Plans to provide proper illumination. If any pole needs to be relocated from stations indicated, the Division of Traffic Operations shall be contacted. When submitting brochures for suggested luminaires include iso lux curves, IES type distribution, lamp lumens, and typical ballast factor used for each type of luminaire. Submit the photometric data in a digital IES format to the Division of Traffic Operations. Include with the submittal a point of contact and phone number to answer technical questions about the luminaire. |
| **Subsection:**<br>**Part:**<br>**Revision:** | 716.03.02 Lighting Standard Installation.<br>A) Conventional Installation.<br>Replace the third sentence with the following: Orient the transformer base so the door is positioned on the side away from on-coming traffic. |
| **Subsection:**<br>**Part:**<br>**Number:**<br>**Revision:** | 716.03.02 Lighting Standard Installation.<br>A) Conventional Installation.<br>1) Breakaway Installation and Requirements.<br>Replace the first sentence with the following: For breakaway supports, conform to Section 12 of the AASHTO Standard Specifications for Structural Supports for Highway Signs, Luminaires, and Traffic Signals, 2013-6th Edition with current interims. |

**Supplemental Specifications to the**
**Standard Specifications for Road and Bridge Construction, 2012 Edition**
**Effective with the April 29, 2016 Letting**

**Subsection:** 716.03.02 Lighting Standard Installation.
**Part:** B) High Mast Installation
**Revision:** Replace the first three sentences of the first paragraph with the following: Install each high mast pole as noted on Plans. Install each high mast pole on a separate circuit and use luminaires with light patterns as indicated. Orient luminaires as shown in Plans.

**Subsection:** 716.03.02 Lighting Standard Installation.
**Part:** B) High Mast Installation
**Number:** 2) Concrete Base Installation
**Revision:** Modification of Chart and succeeding paragraphs within this section:

| Drilled Shaft Depth Data | | | | | | | |
|---|---|---|---|---|---|---|---|
| Level Ground | | 3:1 Ground Slope | | 2:1 Ground Slope | | 1.5:1 Ground Slope (2) | |
| Soil | Rock | Soil | Rock | Soil | Rock | Soil | Rock |
| 17 ft | 7 ft | 19 ft | 7 ft | 20 ft | 7 ft | (1) | 7 ft |

| Steel Requirements | | | |
|---|---|---|---|
| Vertical Bars | | Ties or Spiral | |
| Size | Total | Size | Spacing or Pitch |
| #10 | 16 | #4 | 12 inch |

Note 1: Shaft length is 22 feet for cohesive soil only. For cohesionless soil, contact Geotechnical Branch for design.
Note 2: Do not construct high mast drilled shafts on ground slopes steeper than 1.5:1 without the approval of the Division of Traffic Operations.

If rock is encountered during drilling operations and confirmed by the Engineer to be of sound quality, the shaft is only required to be further advanced into the rock by the length of rock socket shown in the design table. The total length of the shaft need not be longer than that of soil alone. Both longitudinal rebar length and number of ties or spiral length shall be adjusted

If a shorter depth is desired for the drilled shaft, the Contractor shall provide, for the state's review and approval, a detailed column design with individual site specific soil and rock analysis performed and approved by a Professional Engineer licensed in the Commonwealth of Kentucky.

Spiral reinforcement may be substituted for ties. If spiral reinforcement is used, one and one-half closed coils shall be provided at the ends of each spiral unit. Subsurface conditions consisting of very soft clay or very loose saturated sand could result in soil parameters weaker than those assumed. Engineer shall consult with the Geotechnical Branch if such conditions

The bottom of the drilled hole shall be firm and thoroughly cleaned so no loose or compressible materials are present at the time of the concrete placement. If the drilled hole contains standing water, the concrete shall be placed using a tremie to displace water. Continuous concrete flow will be required to insure full displacement of any water.

The reinforcement and anchor bolts shall be adequately supported in the proper positions so no movement occurs during concrete placement. Welding of anchor bolts to the reinforcing cage is unacceptable, templates shall be used. Exposed portions of the foundation shall be formed to create a smooth finished surface. All forming shall be removed upon completion of foundation construction.

**Supplemental Specifications to the**
**Standard Specifications for Road and Bridge Construction, 2012 Edition**
**Effective with the April 29, 2016 Letting**

| | |
|---|---|
| **Subsection:**<br>**Part:**<br>**Revision:** | 716.03.03 Trenching.<br>A) Trenching of Conduit for Highmast Ducted Cables.<br>Add the following after the first sentence: If depths greater than 24 inches are necessary, obtain the Engineer's approval and maintain the required conduit depths coming into the junction boxes. No payment for additional junction boxes for greater depths will be allowed. |
| **Subsection:**<br>**Part:**<br>**Revision:** | 716.03.03 Trenching.<br>B) Trenching of Conduit for Non-Highmast Cables.<br>Add the following after the second sentence: If depths greater than 24 inches are necessary for either situation listed previously, obtain the Engineer's approval and maintain the required conduit depths coming into the junction boxes. |
| **Subsection:**<br>**Revision:** | 716.03.04 Conduit Installation.<br>Replace the first two sentences of the paragraph with the following: Provide rigid steel conduit encasement for all conductors except as specified in the Contract. Provide conduit that is listed on the Department's List of Approved Materials. |
| **Subsection:**<br>**Part:**<br>**Number:**<br>**Revision:** | 716.03.04 Conduit Installation.<br>A) Conduit Requirements in Junction Boxes.<br>1) Highmast Ducted Cable.<br>Replace the first two sentences with the following: Install conduit horizontally through the junction box. Conduit shall be 4 inches from the bottom and 4 inches from the side of the junction box. |
| **Subsection:**<br>**Revision:** | 716.03.04 Conduit Installation.<br>Add the following to the Part to the Subsection: **G) Bore and Jack.** Construction methods shall be in accordance with Subsections 706.03.02, paragraphs 1, 2 and 4. |
| **Subsection:**<br>**Revision:** | 716.03.08 Splicing.<br>Replace the last sentence of the paragraph with the following: Ensure the splices are of the correct size for the wire being used. |
| **Subsection:**<br>**Revision:** | 716.03.10 Junction Boxes.<br>Replace subsection title with the following: Electrical Junction Box and replace the last sentence of the paragraph with the following: Any additional junction boxes shall be approved by the Engineer. |
| **Subsection:**<br>**Revision:** | 716.03.13 Temporary Lighting.<br>Change subsection heading to the following: **716.03.13 Temporary/Maintain Lighting.** |
| **Subsection:**<br>**Revision:** | 716.03.13 Temporary /Maintain Lighting.<br>Replace the entire section with the following:<br>The Contractor shall furnish and install all materials necessary to temporarily light the proposed roadway to design standards in Subsection 716.03. The Contractor shall submit his proposed design of temporary lighting to the Division of Traffic Operations for approval at least 30 days before installation.<br><br>Maintain all lighting elements impacted within or outside the project limits until new lighting elements are installed and a functional inspection has been performed on the new lighting elements. The Contractor shall submit a proposed design for maintaining lighting to the Division of Traffic Operations for approval at least 30 days before installation. |

**Supplemental Specifications to the**
**Standard Specifications for Road and Bridge Construction, 2012 Edition**
**Effective with the April 29, 2016 Letting**

| | |
|---|---|
| **Subsection:**<br>**Revision:** | 716.03.14 Remove Lighting.<br><br>Replace the section with the following: Remove all lighting equipment that is identified by the Engineer as no longer necessary including, but not limited to, the following: pole bases, poles, junction boxes, cabinets, and wood poles. Pole bases shall be removed a minimum of one foot below finished grade by chipping off or other method that is approved by the Engineer. Dispose of all removed concrete off right-of-way. Wood poles shall be removed a minimum of one foot below finished grade. Backfill holes with material approved by the Engineer. Conduit may be abandoned in the ground. All materials shall be removed from the project as directed by the Engineer. Transformers not owned by a utility shall be tested for PCB's and disposed of in accordance with state regulations. |
| **Subsection:**<br>**Revision:** | 716.03.15 Painting.<br><br>Replace the first sentence with the following: Clean non-galvanized or damaged surfaces of exposed junction boxes, pull boxes, control panels, poles, and similar equipment, and apply one coat of an inhibiting paint and two coats of aluminum paint. |
| **Subsection:**<br>**Revision:** | 716.04.01. Poles.<br>Change the subsection heading to 716.04.01 Pole and replace the last sentence of the subsection with the following: The Department will not measure anchor bolts, washers, nuts, anchor bolt covers, ground lugs, and any associated hardware for payment and will consider them incidental to this item of work. |
| **Subsection:**<br>**Revision:** | 716.04.02 High Mast Pole.<br><br>Replace the second sentence with the following: The Department will not measure the lowering device, anchor bolts, head frame assembly, cables, winch unit, power cables, wiring, connectors, circuit breakers, grounding lugs, ground wire, ground rods, conduits, test plugs,, adjustment and calibration of the unit to provide the desired operation, and any associated hardware for payment and will consider them incidental to this item of work. |
| **Subsection:**<br>**Revision:** | 716.04.03 Bracket.<br>Replace the second sentence with the following: The Department will not measure any associated hardware needed for attaching the bracket to the pole for payment and will consider them incidental to this item of work. |
| **Subsection:**<br>**Revision:** | 716.04.04 Pole Base.<br>Change the subsection heading to 716.04.04 Pole Bases and delete the paragraph. |
| **Subsection:**<br>**Revision:** | 716.04.04 Pole Bases.<br>Insert the following:<br>**A. Pole Base**. The Department will measure the quantity as each individual unit furnished and installed. The Department will not measure excavation, concrete, conduits, fittings, ground rods, ground wires, ground lugs, reinforcing steel, restoring disturbed areas to the satisfaction of the Engineer, and any associated hardware for payment and will consider them incidental to this item of work.<br>**B. Pole Base High Mast**. The Department will measure the quantity in cubic yards furnished and installed. The Department will not measure excavation, concrete, conduits, fittings, ground rods, ground wires, ground lugs, reinforcing steel, restoring disturbed areas to the satisfaction of the Engineer, and any associated hardware for payment and will consider them incidental to this item of work. |

**Supplemental Specifications to the**
**Standard Specifications for Road and Bridge Construction, 2012 Edition**
**Effective with the April 29, 2016 Letting**

| | |
|---|---|
| **Subsection:**<br>**Revision:** | 716.04.05 Pole Base in Median Wall.<br>Replace the last sentence with the following: The Department will not measure conduits, fittings, junction boxes, additional reinforcing steel, ground rods, ground wire, ground lugs, and aluminum cover plates (if specified) for payment, and will consider them incidental to this item of work. |
| **Subsection:**<br>**Revision:** | 716.04.06 Transformer Base.<br>Replace the last sentence with the following: The Department will not measure transformer door, ground lug, anchoring bolts, nuts, washers, and any associated hardware for payment and will consider them incidental to this item of work. The filling of any unused holes will also be considered incidental to this item of work. |
| **Subsection:**<br>**Revision:** | 716.04.07 Pole with Secondary Equipment.<br>Replace the heading with the following: 716.04.07 Pole with Secondary Control Equipment. |
| **Subsection:**<br>**Revision:** | 716.04.07 Pole with Secondary Control Equipment.<br>Replace the second and third sentence with the following: The Department will not measure mounting the cabinet to the pole, backfilling, restoration, any necessary hardware to anchor pole, electrical inspection fees, and required building fees involving utility secondary, and primary service for payment and will consider them incidental to this item of work. The Department will also not measure furnishing and installing electrical service conductors, specified conduits, meter base, transformer, service panel, fused cutout, fuses, lighting arrestors, photoelectrical control, circuit breaker, contactor, manual switch, ground rods, ground lugs, and ground wires for payment and will consider them incidental to this item of work. The filling of unused holes will also be considered incidental to this item of work. |
| **Subsection:**<br>**Revision:** | 716.04.08 Lighting Control Equipment.<br>Replace the paragraph with the following:<br>The Department will measure the quantity as each individual unit furnished and installed. The Department will not measure the concrete base, excavation, backfilling, restoration, any necessary anchors, electrical inspection fees, and required building fees involving utility secondary/primary service for payment and will consider them incidental to this item of work. The Department will also not measure furnishing and installing electrical service conductors, specified conduits, meter base, transformer, service panel, fused cutout, fuses, lighting arrestors, photoelectrical control, circuit breakers, contactor, manual switch, ground rods, ground lugs, and ground wires for payment and will consider them incidental to this item of work. The Department will not measure the filling of any unused holes with and will consider them incidental to this item of work. |
| **Subsection:**<br>**Revision:** | 716.04.09 Luminaire.<br>Replace the paragraph with the following: The Department will measure the quantity as each individual unit furnished and installed. The Department will not measure lamps, starters, ballasts, drivers, surge protection, dimming modules, photo-control receptacle, specified shielding (if required), and any adjustments necessary to provide the desired lighting pattern for payment and will consider them incidental to this item of work. |
| **Subsection:**<br>**Revision:** | 716.04.10 Fused Connector Kits.<br>Replace the heading with the following: 716.04.10 Fuse Connector Kits. |

**Supplemental Specifications to the**
**Standard Specifications for Road and Bridge Construction, 2012 Edition**
**Effective with the April 29, 2016 Letting**

| | |
|---|---|
| **Subsection:**<br>**Revision:** | 716.04.10 Fuse Connector Kits.<br>Replace the paragraph with the following: The Department will measure the quantity as each individual unit furnished and installed. The Department will not measure fuses/lugs for payment and will consider them incidental to this item of work. |
| **Subsection:**<br>**Revision:** | 716.04.11 Conduit.<br>Replace the second sentence with the following: The Department will not measure installation in ground or on structures, conduit fittings, test plugs, expansion joints with bonding straps, grounding lugs, drill anchors, clamps, and any additional hardware required for payment and will consider them incidental to this item of work. |
| **Subsection:**<br>**Revision:** | 716.04.12 Markers.<br>Replace the section with the following: The Department will measure the quantity as each individual unit furnished and installed. |
| **Subsection:**<br>**Revision:** | 716.04.13 Junction Box.<br>Replace the subsection title with the following: Electrical Junction Box Type Various. |
| **Subsection:**<br>**Revision:** | 716.04.13 Electrical Junction Box Type Various.<br>Replace the section with the following: The Department will measure the quantity as each individual unit furnished and installed. The Department will not measure additional junction boxes for greater depths than those identified in Plans, #57 aggregate, backfilling, restoration of disturbed areas to the satisfaction of the Engineer, geotextile filter fabric, concrete, hot dipped galvanized cover, stainless steel screws, rubber gasket, and any associated hardware for payment , and will consider them incidental to this item of work. |
| **Subsection:**<br>**Part:**<br>**Revision:** | 716.04.13 Junction Box.<br>A) Junction Electrical.<br>Delete Part A. |
| **Subsection:**<br>**Revision:** | 716.04.14 Trenching and Backfilling.<br>Replace the section with the following: The Department will measure the quantity in linear feet. The Department will not measure excavation, backfilling, underground utility warning tape (if required), and the restoration of disturbed areas to original condition for payment and will consider them incidental to this item of work. |
| **Subsection:**<br>**Revision:** | 716.04.15 Wire or Cable.<br>Replace the section with the following: The Department will measure the quantity in linear feet furnished and installed. The Department will not measure installation within conduit, splice boots, and any other hardware required for installing cable for payment and will consider them incidental to this item of work. |
| **Subsection:**<br>**Revision:** | 716.04.16 Ducted Cable.<br>Replace the second sentence of the paragraph with the following: The Department will not measure installation within trench or conduit and any other necessary hardware for payment and will consider them incidental to this item of work. |
| **Subsection:**<br>**Revision:** | 716.04.17 Temporary Lighting<br>Rename the subsection as follows: 716.04.17 Temporary Lighting/Maintain Lighting. |

**Supplemental Specifications to the**
**Standard Specifications for Road and Bridge Construction, 2012 Edition**
**Effective with the April 29, 2016 Letting**

| | |
|---|---|
| **Subsection:**<br>**Revision:** | 716.04.17 Temporary Lighting/Maintain Lighting.<br>Delete the paragraph and add the following parts:<br>A) Temporary Lighting. The Department will measure the quantity by lump sum. The Department will not measure poles, luminaires, wire, conduit, trenching and backfilling, control equipment, all relocations and removal, design (if required), and any other necessary hardware to make a complete installation for payment and will consider them incidental to this item of work.<br>B) Maintain Lighting. The Department will measure the quantity by lump sum. The Department will not measure maintenance of lighting elements and design (if required) for payment and will consider them incidental to this item of work. |
| **Subsection:**<br>**Revision:** | 716.04.18 Remove Lighting.<br>Replace the paragraph with the following: The Department will measure the quantity by lump sum. The Department will not measure backfilling and the disposal or transportation of equipment and materials associated with any structural or electrical component of the lighting system including, but not limited to pole bases, poles, junction boxes, cabinets, and wood poles for payment and will consider them incidental to this item of work. |
| **Subsection:**<br>**Revision:**<br>**Subsection:**<br>**Revision:** | 716.04.19 Remove Pole Base.<br>Delete Subsection.<br>716.04.20 Bore and Jack Conduit.<br>Renumber Subsection to 716.04.19 Bore and Jack Conduit. |
| **Subsection:**<br>**Revision:** | 716.04.19 Bore and Jack Conduit.<br>Replace the paragraph with the following: The Department will measure the quantity in linear feet. This item shall include all work necessary for boring and installing conduit under an existing roadway. |
| **Subsection:**<br>**Revision:** | 716.05 PAYMENT.<br>Revise the following under Code, Pay Item, and Pay Unit with the following:<br><br>Code — Pay Item — Pay Unit<br>04700-04701 — Pole(Various)Mtg Ht — Each<br>04710-04714 — Pole(Various)Mtg Ht High Mast — Each<br>04810-04811 — Electrical Junction Box (Various) — Each<br>20391NS835 — Electrical Junction Box Type A — Each<br>20392NS835 — Electrical Junction Box Type C — Each<br>04770-04773 — Luminaire (Various) — Each<br>04780 — Fuse Connector Kit — Each<br>20410ED — Maintain Lighting — Lump Sum<br>~~04941 — Remove Pole Base — Each~~ |
| **Subsection:**<br>**Revision:** | 723.02.02 Paint.<br>Replace sentence with the following: Conform to Section 821. |
| **Subsection:**<br>**Revision:** | 723.03 CONSTRUCTION.<br>Replace bullet 5) with the following: 5) AASHTO Standard Specifications for Structural Supports for Highway Signs, Luminaires, and Traffic Signals, 2013-6th Edition with current interims, |
| **Subsection:**<br>**Revision:** | 723.03.02 Poles and Bases Installation.<br>Replace the title with the following: 723.03.02 Pole and Base Installation. |

**Supplemental Specifications to the**
**Standard Specifications for Road and Bridge Construction, 2012 Edition**
**Effective with the April 29, 2016 Letting**

| | |
|---|---|
| **Subsection:**<br>**Revision:** | 723.03.02 Pole and Base Installation.<br>Replace the first paragraph with the following: Regardless of the station and offset noted, locate all poles/bases behind the guardrail a minimum of four feet from the front face of the guardrail to the front face of the pole base. Orient the handhole door away from traffic travel path. If pole base is installed within a sidewalk the top of the pole base shall be the same grade as the sidewalk. |
| **Subsection:**<br>**Part:**<br>**Revision:** | 723.03.02 Poles and Bases Installation.<br>A) Steel Strain and Mastarm Poles Installation<br>Replace the title of Part A) Steel Strain and Mast Arm Pole Installation. |
| **Subsection:**<br>**Part:**<br>**Revision:** | 723.03.02 Pole and Base Installation.<br>A) Steel Strain and Mast Arm Pole Installation.<br>Insert the following sentence at the beginning of the first paragraph: Install pole bases 4 to 6 inches above grade. |
| **Subsection:**<br>**Part:**<br>**Revision:** | 723.03.02 Pole and Base Installation.<br>A) Steel Strain and Mast Arm Pole Installation.<br>Replace the second paragraph with the following: For concrete base installation, see Subsection 716.03.02 B), 2), Paragraphs 2-6. Drilled shaft depth shall be based on the soil conditions encountered during drilling and slope condition at the site. Refer to the design chart below: |
| **Subsection:**<br>**Part:**<br>**Revision:** | 723.03.02 Pole and Base Installation.<br>B) Pedestal or Pedestal Post Installation.<br>Replace the second sentence with the following: If over 12 feet high the base shall have the minimum depth and diameter as Subsection 716.03.02 (A), paragraph 2. |
| **Subsection:**<br>**Part:**<br>**Revision:** | 723.03.02 Poles and Bases Installation.<br>B) Pedestal or Pedestal Post Installation.<br>Replace the fourth sentence of the paragraph with the following: For breakaway supports, conform to Section 12 of the AASHTO Standard Specifications for Structural Supports for Highway Signs, Luminaires, and Traffic Signals, 2013-6th Edition with current interims. |
| **Subsection:**<br>**Revision:** | 723.03.03 Trenching.<br>Replace the first sentence with the following: See Subsection 716.03.03 (B). |
| **Subsection:**<br>**Part:**<br>**Revision:** | 723.03.03 Trenching.<br>A) Under Roadway.<br>Delete Part A) Under Roadway. |
| **Subsection:**<br>**Revision:** | 723.03.05 Conduit Requirements in Junction Boxes.<br>Delete the Subsection and replace with the following:<br>723.03.05 Fuse Connector Kits. See Subsection 716.03.09. |
| **Subsection:**<br>**Revision:** | 723.03.06 Coupling Installation.<br>Delete the Subsection and replace with the following:<br>723.03.06 Painting. See Subsection 716.03.15. |
| **Subsection:**<br>**Revision:** | 723.03.07 Bonding Requirements.<br>Delete the Subsection and replace with the following:<br>723.03.07 Electrical Junction Boxes. See Subsection 716.03.10. |

**Supplemental Specifications to the**
**Standard Specifications for Road and Bridge Construction, 2012 Edition**
**Effective with the April 29, 2016 Letting**

| | |
|---|---|
| **Subsection:** | 723.03.08 Painting. |
| **Revision:** | Replace with 723.03.06 Painting. See Subsection 716.03.15. |
| **Subsection:** | 723.03.09 Underground Warning Tape. |
| **Revision:** | Renumber Subsection to 723.03.08 Underground Warning Tape. |
| **Subsection:** | 723.03.10 Backfilling and Disturbed Areas. |
| **Revision:** | Renumber Subsection to 723.03.09 Backfilling and Disturbed Areas. |
| **Subsection:** | 723.03.11 Wiring Installation. |
| **Revision:** | Renumber Subsection to 723.03.10 Wiring Installation. |
| **Subsection:** | 723.03.10 Wiring Installation. |
| **Revision:** | Add the following sentence between the fifth and sixth sentences: Provide an extra two feet of loop wire and lead-in past the installed conduit in poles, pedestals, and junction boxes. |
| **Subsection:** | 723.03.12 Loop Installation. |
| **Revision:** | Renumber Subsection to 723.03.11 Loop Installation. |
| **Subsection:** | 723.03.11 Loop Installation. |
| **Revision:** | Replace the fourth sentence of the 2nd paragraph with the following: Provide an extra two feet of loop wire and lead-in past the installed conduit in poles, pedestals, and junction boxes. |
| **Subsection:** | 723.03.13 Grounding Installation. |
| **Revision:** | Renumber Subsection to 723.03.12 Grounding Installation. |
| **Subsection:** | 723.03.12 Grounding Installation. |
| **Revision:** | Replace the reference to "Standard Detail Sheets" in the first sentence with "Plans". |
| **Subsection:** | 723.03.14 Splicing. |
| **Revision:** | Renumber Subsection to 723.03.13 Splicing. |
| **Subsection:** | 723.03.13 Splicing. |
| **Revision:** | Delete the reference to (IMSA 19-2) from the 5th sentence of the paragraph. |
| **Subsection:** | 723.03.15 Painting. |
| **Revision:** | Delete Subsection. |
| **Subsection:** | 723.03.14 Splicing. |
| **Revision:** | Replace with new Subsection 723.03.14 Remove Signal Equipment. |
| **Subsection:** | 723.03.14 Remove Signal Equipment. |
| **Revision:** | Insert the following for the new subsection: Remove all traffic signal equipment that is identified by the Engineer as no longer necessary including, but not limited to, the following: pole bases, poles, junction boxes, cabinets, wood poles, and advance warning flashers. Pole bases shall be removed a minimum of one foot below finished grade by chipping off or other method that is approved by the Engineer. Dispose of all removed concrete off right-of-way. Wood poles shall be removed a minimum of one foot below finished grade. Backfill holes with material approved by the Engineer. Conduit may be abandoned in the ground. Contact the district traffic Engineer to determine if any removed signal equipment needs to be returned to the district and to determine the location/time for such deliveries. |
| **Subsection:** | 723.05.16 Drawings. |
| **Revision:** | Renumber the Subsection to 723.03.15 Drawings. |

**Supplemental Specifications to the**
**Standard Specifications for Road and Bridge Construction, 2012 Edition**
**Effective with the April 29, 2016 Letting**

| | |
|---|---|
| **Subsection:** | 723.03.15 Drawings. |
| **Revision:** | Replace Subsection with the following: Before final inspection of the traffic control device, provide a complete set of reproducible as-built drawings that show the arrangement and locations of all equipment including: junction boxes, conduits, spare conduits, etc. Keep a daily record of all conduits placed in trenches, showing the distance from the pavement edge, the depth, and the length of runs, and indicate this information on the as-built drawings. |
| **Subsection:** | 723.03.17 Acceptance and Inspection Requirements. |
| **Revision:** | Renumber Subsection to 723.03.16 Acceptance and Inspection Requirements. |
| **Subsection:** | 723.03.16 Acceptance and Inspection Requirements. |
| **Revision:** | Replace the first paragraph of the section with the following: See Subsection 105.12. In coordination with the District Traffic Engineer, energize traffic control device as soon as it is fully functional and ready for inspection. After the work has been completed, conduct an operational test demonstrating that the system operates in accordance with the Plans in the presence of the Engineer. The Department will also conduct its own tests with its own equipment before final acceptance. Ensure that the traffic control device remains operational until the Division of Traffic Operations has provided written acceptance of the electrical work. |
| **Subsection:** | 723.04.01 Conduit. |
| **Revision:** | Replace the second sentence of the subsection with the following: The Department will not measure conduit fittings, ground lugs, test plugs, expansion joints, and clamps for payment and will consider them incidental to this item of work. |
| **Subsection:** | 723.04.02 Junction Box. |
| **Revision:** | Replace subsection title with the following: Electrical Junction Box Type Various. |
| **Subsection:** | 723.04.02 Electrical Junction Box Type Various. |
| **Revision:** | Replace the subsection with the following: The Department will measure the quantity as each individual unit furnished and installed. The Department will not measure additional junction boxes for greater depths than those identified in Plans, Aggregate (#57), backfilling, restoration of disturbed areas to the satisfaction of the Engineer, geotextile fabric, concrete, hot dipped galvanized cover, stainless steel screws, rubber gasket, and any associated hardware for payment and will consider them incidental to this item of work. |
| **Subsection:** | 723.04.03 Trenching and Backfilling. |
| **Revision:** | Replace the second sentence with the following: The Department will not measure excavation, backfilling, underground utility warning tape, and the restoration of disturbed areas to original condition for payment and will consider them incidental to this item of work. |
| **Subsection:** | 723.04.04 Open Cut Roadway. |
| **Revision:** | Replace the second sentence of the subsection with the following: The Department will not measure concrete, reinforcing steel, and asphalt for payment and will consider them incidental to this item of work. |
| **Subsection:** | 723.04.05 Loop Wire. |
| **Revision:** | Replace the second sentence of the subsection with the following: The Department will not measure splice boots, cable rings, and any other necessary hardware for payment and will consider them incidental to this item of work. |
| **Subsection:** | 723.04.06 Cable. |
| **Revision:** | Replace the second sentence of the subsection with the following: The Department will not measure splice boots, cable rings, and any other hardware for payment and will consider them incidental to this item of work. |

**Supplemental Specifications to the**
**Standard Specifications for Road and Bridge Construction, 2012 Edition**
**Effective with the April 29, 2016 Letting**

| | |
|---|---|
| **Subsection:** | 723.04.07 Pole-Wooden. |
| **Revision:** | Replace the second sentence of the subsection with the following: The Department will not measure excavation, backfilling, and restoring disturbed areas for payment and will consider them incidental to this item of work. |
| **Subsection:** | 723.04.08 Steel Strain Pole. |
| **Revision:** | Replace the second sentence of the subsection with the following: The Department will not measure excavation, backfilling, and restoring disturbed areas for payment and will consider them incidental to this item of work. |
| **Subsection:** | 723.04.09 Mast Arm Pole. |
| **Revision:** | Replace the second sentence of the subsection with the following: The Department will not measure anchor bolts, arms, mounting brackets, and any other necessary hardware for payment and will consider them incidental to this item of work. |
| **Subsection:** | 723.04.10 Signal Pedestal. |
| **Revision:** | Replace the second sentence of the subsection with the following: The Department will not measure excavation, concrete, reinforcing steel, conduits, fittings, ground rods, ground wire, ground lugs, backfilling, restoring disturbed areas, and other necessary hardware for payment and will consider them incidental to this item of work. |
| **Subsection:** | 723.04.11 Post. |
| **Revision:** | Replace the second sentence of the subsection with the following: The Department will not measure excavation, backfilling, and restoring disturbed areas for payment and will consider them incidental to this item of work. |
| **Subsection:** | 723.04.12 Anchor. |
| **Revision:** | Replace the second sentence of the subsection with the following: . The Department will not measure down-guy, messenger, clamps, guy guard, or insulators, and possible installation in various soil conditions for payment and will consider them incidental to this item of work. |
| **Subsection:** | 723.04.13 Messenger. |
| **Revision:** | Replace the second sentence of the subsection with the following: The Department will not measure strand vises, bolts, washers, and other necessary hardware for payment and will consider them incidental to this item of work. |
| **Subsection:** | 723.04.14 Install Signal LED. |
| **Revision:** | Revise subsection title to 723.04.14 Install Beacon Controller - 2 Circuit. |
| **Subsection:** | 723.04.14 Install Beacon Controller - 2 Circuit. |
| **Revision:** | Replace the subsection with the following: The Department will measure the quantity as each individual unit furnished and installed. The Department will not measure the controller housing, mounting equipment, S5-1 school zone sign, time clock, nema flasher, ground rods, ground wires, ground lugs, metering disconnect hardware, electrical inspection fees, and required building fees involving utility secondary/primary service for payment and will consider them incidental to this item of work. |

**Supplemental Specifications to the**
**Standard Specifications for Road and Bridge Construction, 2012 Edition**
**Effective with the April 29, 2016 Letting**

| | |
|---|---|
| **Subsection:** | 723.04.15 Loop Saw Slot and Fill. |
| **Revision:** | Replace the second sentence of the subsection with the following: The Department will not measure sawing, cleaning, filling induction loop saw slot, loop sealant, backer rod, drilling hole for conduit, and grout for payment and will consider them incidental to this item of work. |
| **Subsection:** | 723.04.16 Pedestrian Detector. |
| **Revision:** | Replace the subsection with the following: The Department will measure the quantity as each individual unit furnished, installed and connected to pole/pedestal. The Department will not measure installing R10-3e signs, detector housing, and installing mounting hardware for sign for payment and will consider them incidental to this item of work. |
| **Subsection:** | 723.04.17 Signal. |
| **Revision:** | Replace the second sentence of the subsection with the following: The Department will not measure furnishing and installing LED modules, retroreflective tape, back plates, and any other hardware for payment and will consider them incidental to this item of work. |
| **Subsection:** | 723.04.18 Signal Controller- Type 170. |
| **Revision:** | Replace the second sentence of the subsection with the following: The Department will not measure the concrete base, mounting the cabinet, connecting the signal and detectors, excavation, backfilling, restoration, any necessary pole mounting hardware, electric service, electrical inspection fees, and building fees involving secondary/primary service for payment and will consider them incidental to this item of work. The Department will also not measure furnishing and connecting the induction of loop amplifiers, pedestrian isolators, load switches, model 400 modem card, electrical service conductors, conduits, anchors, meter base, fused cutout, fuses, ground rods, ground wires, and ground lugs for payment and will consider them incidental to this item of work. |
| **Subsection:** | 723.04.19 Beacon Controller - 2 Circuit. |
| **Revision:** | Replace the second sentence of the subsection with the following: The Department will not measure the controller housing, mounting equipment, S5-1 school zone sign, time clock, nema flasher, ground rods, ground wires, ground lugs, metering disconnect hardware, electrical inspection fees, and required building fees involving utility secondary/primary service for payment and will consider them incidental to this item of work. |
| **Subsection:** | 723.04.20 Install Signal Controller - Type 170. |
| **Revision:** | Replace the paragraph with the following: The Department will measure the quantity as each individual unit installed. The Department will not measure the concrete base, mounting the cabinet, connecting the signal and detectors, excavation, backfilling, restoration, any necessary pole mounting hardware, electric service, electrical inspection fees, and required building fees involving utility secondary/primary service for payment and will consider them incidental to this item of work. The Department will also not measure connecting the induction loop amplifiers, pedestrian isolators, load switches, model 400 modem card for payment and will consider them incidental to this item of work. The Department will also not measure furnishing and installing electrical service conductors, conduits, anchors, meter base, fused cutout, fuses, ground rods, ground lugs, and ground wires for payment and will consider them incidental to this item of work. |
| **Subsection:** | 723.04.21 Install Steel Strain Pole. |
| **Revision:** | Replace the second sentence of the subsection with the following: The Department will not measure any necessary clamp assemblies for payment and will consider them incidental to this item of work. |

**Supplemental Specifications to the**
**Standard Specifications for Road and Bridge Construction, 2012 Edition**
**Effective with the April 29, 2016 Letting**

| | |
|---|---|
| **Subsection:**<br>**Revision:** | 723.04.22 Remove Signal Equipment.<br>Replace the paragraph with the following: The Department will measure the quantity by lump sum. The Department will not measure backfilling and the disposal or transportation of equipment and materials associated with any structural or electrical component of the signal system including, but not limited to pole bases, poles, junction boxes, cabinets, and wood poles for payment and will consider them incidental to this item of work. |
| **Subsection:**<br>**Revision:** | 723.04.23 Install Span/Pole Mounted Sign.<br>Replace the second sentence of the subsection with the following: The Department will not measure the hanger or any other hardware necessary to install the sign for payment and will consider them incidental to this item of work. |
| **Subsection:**<br>**Revision:** | 723.04.24 Install Pedestrian Head LED.<br>Insert the following sentence at the end of the paragraph: The Department will not measure the installation of LED modules and any other necessary hardware for payment and will consider them incidental to this item of work. |
| **Subsection:**<br>**Revision:** | 723.04.25 Install Signal LED.<br>Insert the following sentence at the end of the paragraph: The Department will not measure the installation of LED modules, retroreflective tape, back plates, and any other necessary hardware for payment and will consider them incidental to this item of work. |
| **Subsection:**<br>**Revision:** | 723.04.26 Install Coordinating Unit.<br>Replace the subsection with the following: The Department will measure the quantity as each individual unit installed. The Department will not measure radio, modem, cable(s), antenna(s), router, repeater, and any other necessary hardware for payment and will consider them incidental to this item of work. |
| **Subsection:**<br>**Revision:** | 723.04.27 Video Camera.<br>Replace the second sentence of the subsection with the following: The Department will not measure video modules, mounting bracket, truss type arm, power cable, coaxial cable, and any other necessary hardware for payment and will consider them incidental to this item of work. |
| **Subsection:**<br>**Revision:** | 723.04.28 Install Pedestrian Detector Audible.<br>Replace the second sentence with the following: The Department will not measure installing R10-3e sign, detector housing, and installing mounting hardware for payment and will consider them incidental to this item of work. |
| **Subsection:**<br>**Revision:** | 723.04.29 Audible Pedestrian Detector.<br>Replace the second sentence with the following: The Department will not measure furnishing and installing the R10-3e sign, detector housing, and installing mounting hardware for payment and will consider them incidental to this item of work. |
| **Subsection:**<br>**Revision:** | 723.04.30 Bore and Jack Conduit.<br>Replace the paragraph with the following: The Department will measure the quantity in linear feet. This item shall include all work necessary for boring and installing conduit under an existing roadway. |

**Supplemental Specifications to the**
**Standard Specifications for Road and Bridge Construction, 2012 Edition**
**Effective with the April 29, 2016 Letting**

| | |
|---|---|
| **Subsection:** | 723.04.31 Install Pedestrian Detector. |
| **Revision:** | Replace the paragraph with the following: The Department will measure the quantity as each individual unit installed and connected to pole/pedestal. The Department will not measure installing R 10-3e sign, detector housing, and installing mounting hardware for payment and will consider them incidental to this item of work. |
| **Subsection:** | 723.04.32 Install Mast Arm Pole. |
| **Revision:** | Replace the second sentence with the following: The Department will not measure installation of arms, signal mounting brackets, anchor bolts, and any other necessary hardware for payment and will consider them incidental to this item of work. |
| **Subsection:** | 723.04.33 Pedestal Post. |
| **Revision:** | Replace the second sentence with the following: The Department will not measure excavation, backfilling, restoration, furnishing and installing concrete, reinforcing steel, anchor bolts, conduit, fittings, ground rod, ground wire, ground lugs, or any other necessary hardware for payment and will consider them incidental to this item of work. |
| **Subsection:** | 723.04.34 Span Mounted Sign. |
| **Revision:** | Revise subsection title to 723.04.34 Span/Pole-Mounted Sign. |
| **Subsection:** | 723.04.34 Span/Pole-Mounted Sign. |
| **Revision:** | Replace the second sentence of the subsection with the following: The Department will not measure the hanger, sign, and any other necessary hardware for payment and will consider them incidental to this item of work. |
| **Subsection:** | 723.04.35 Remove and Reinstall Coordinating Unit. |
| **Revision:** | Add the following sentence to the end of the subsection: The Department will not measure removing, storage, reinstalling, and connecting radio, modem, cable(s), antenna(s), router, repeater, and any other necessary hardware for payment and will consider them incidental to this item of work. |
| **Subsection:** | 723.04.36 Traffic Signal Pole Base. |
| **Revision:** | Replace the second sentence of the subsection with the following: The Department will not measure excavation, backfilling, restoration, furnishing and installing reinforcing steel, anchor bolts, conduits, ground rods, ground wires, and ground lugs for payment and will consider them incidental to this item of work. |
| **Subsection:** | 723.04.37 Install Signal Pedestal. |
| **Revision:** | Replace the second sentence of the subsection with the following: . The Department will not measure excavation, backfilling, restoration, furnishing and installing concrete, reinforcing steel, conduits, fittings, ground rod, ground wire, ground lugs, and any other necessary hardware for payment and will consider them incidental to this item of work. |
| **Subsection:** | 723.04.38 Install Pedestal Post. |
| **Revision:** | Replace the second sentence of the subsection with the following: The Department will not measure excavation, backfilling, restoration, furnishing and installing concrete, reinforcing steel, conduit, fittings, ground rod, ground wire, ground lugs, and any other necessary hardware for payment and will consider them incidental to this item of work. |
| **Subsection:** | 723.04.39 Install Antenna. |
| **Revision:** | Replace the second sentence of the subsection with the following: The Department will not measure any other materials necessary to complete the installation for payment and will consider them incidental to this item of work. |

**Supplemental Specifications to the**
**Standard Specifications for Road and Bridge Construction, 2012 Edition**
**Effective with the April 29, 2016 Letting**

| | |
|---|---|
| **Subsection:**<br>**Revision:** | 723.05 PAYMENT.<br>Replace items 04810-04811, 20391NS835, 20392NS835,23052NN and add item number 24526ED under Code, Pay Item, and Pay Unit with the following:<br><br>Code — Pay Item — Pay Unit<br>04810 — Electrical Junction Box — Each<br>04811 — Electrical Junction Box Type B — Each<br>20391NS835 — Electrical Junction Box Type A — Each<br>20392NS835 — Electrical Junction Box Type C — Each<br>23052NN — Span/Pole-Mounted Sign — Each<br>24526ED — Install Beacon Controller 2 Cir — Each |
| **Subsection:**<br>**Revision:** | 801.01 REQUIREMENTS<br>Replace first sentence in paragraph one with the following: Provide Portland cement *or blended hydraulic cement* from approved mills listed in the Department's List of Approved Materials. |
| **Subsection:**<br>**Number:**<br>**Revision:** | 801.01 REQUIREMENTS<br>1)<br>Replace first sentence with the following: Type I, II, III, and IV *Portland cement* conforms to ASTM C 150. |
| **Subsection:**<br>**Number:**<br>**Revision:** | 801.01 REQUIREMENTS<br>3)<br>Replace the first sentence with the following: Type IP (≤20), Portland-pozzolan cement, conforms to ASTM C595, and the following additional requirements to Type IP (≤20). |
| **Subsection:**<br>**Number:**<br>**Part:**<br>**Revision:** | 801.01 REQUIREMENTS<br>3)<br>b)<br>Delete part b) |
| **Subsection:**<br>**Number:**<br>**Part:**<br>**Revision:** | 801.01 REQUIREMENTS<br>3)<br>c)<br>Rename Part c) to Part b) and replace the text with the following: The cement manufacturer shall furnish to the Engineer reports showing the results of tests performed on the fly ash used in the manufacture of the Type IP(≤20) cement shipped to the project. |
| **Subsection**<br>**Number:**<br>**Part:**<br>**Revision:** | 801.01 REQUIREMENTS<br>3)<br>d)<br>Rename Part d) to Part c) |
| **Subsection:**<br>**Number:**<br>**Part:**<br>**Revision:** | 801.01 REQUIREMENTS<br>3)<br>e)<br>Rename Part e) to Part d) and replace the text with the following: Use only one brand of Type IP(≤20) cement throughout the project, unless the Engineer approved a change in brand in writing. |
| **Subsection:**<br>**Number:**<br>**Revision:** | 801.01 REQUIREMENTS<br>4)<br>Replace first sentence with the following: Type IS(≤30), Portland blast furnace slag cement, conforms to ASTM C 595 and the following requirements: |

**Supplemental Specifications to the**
**Standard Specifications for Road and Bridge Construction, 2012 Edition**
**Effective with the April 29, 2016 Letting**

| | |
|---|---|
| **Subsection:** | 801.01 REQUIREMENTS |
| **Number:** | 4) |
| **Part:** | a) |
| **Revision:** | Replace part a) with the following: Use Grade 100 or 120 blast furnace slag cement conforming to the requirements of ASTM C 989. |
| **Subsection:** | 801.01 REQUIREMENTS |
| **Number:** | 4) |
| **Part:** | b) |
| **Revision:** | Delete part b) |
| **Subsection:** | 801.01 REQUIREMENTS |
| **Number:** | 4) |
| **Part:** | c) |
| **Revision:** | Rename Part c) to Part b) and replace the text with the following: The cement manufacturer shall furnish to the Engineer reports showing the results of the tests performed on the blast furnace slag cement used in the manufacturing of the Type IS(≤30) shipped to the project. |
| **Subsection:** | 801.01 REQUIREMENTS |
| **Number:** | 4) |
| **Part:** | d) |
| **Revision:** | Rename Part d) to Part c) |
| **Subsection:** | 801.01 REQUIREMENTS |
| **Number:** | 4) |
| **Part:** | e) |
| **Revision:** | Rename Part e) to Part d) and replace the text with the following: Use only one brand of Type IS(≤30) cement throughout the project, unless the Engineer approves otherwise. |
| **Subsection:** | 801.01 REQUIREMENTS |
| **Number:** | 5) |
| **Revision:** | Insert part 5) as the following: Type IL(5-15), Portland-limestone cement, conforms to ASTM C 595 and the following additional requirements: |
| **Subsection:** | 801.01 REQUIREMENTS |
| **Number:** | 5) |
| **Part:** | a) |
| **Revision:** | Insert part a) as the following: The cement manufacturer shall furnish to the Engineer reports showing the results of test performed on the limestone used in the manufacture of the Type IL cement shipped to the project. |
| **Subsection:** | 801.01 REQUIREMENTS |
| **Number:** | 5) |
| **Part:** | b) |
| **Revision:** | Insert part b) as the following: Use only one brand of Type IL cement throughout the project, unless the Engineer approves a brand change in writing. |
| **Subsection:** | 801.01 REQUIREMENTS |
| **Number:** | 5) |
| **Part:** | c) |
| **Revision:** | Insert part c) as the following: The Type IL blended cement shall be an intimate and uniform blend produced by intergrinding of the Portland cement and limestone. |
| **Subsection:** | 804.01.02 Crushed Sand. |
| **Revision:** | Delete last sentence of the section. |

**Supplemental Specifications to the**
**Standard Specifications for Road and Bridge Construction, 2012 Edition**
**Effective with the April 29, 2016 Letting**

**Subsection:** 804.01.06 Slag.
**Revision:** Add subsection and following sentence.
Provide blast furnace slag sand where permitted. The Department will allow steel slag sand only in asphalt surface applications.

**Subsection:** 804.04 Asphalt Mixtures.
**Revision:** Replace the subsection with the following:
Provide natural, crushed, conglomerate, or blast furnace slag sand, with the addition of filler as necessary, to meet gradation requirements. The Department will allow any combination of natural, crushed, conglomerate or blast furnace slag sand when the combination is achieved using cold feeds at the plant. The Engineer may allow other fine aggregates.

**Subsection:** 806.03.01 General Requirements.
**Revision:** Replace the second sentence of the paragraph with the following:
Additionally, the material must have a minimum solubility of 99.0 percent when tested according to AASHTO T 44 and PG 76-22 must exhibit a minimum recovery of 60 percent, with a $J_{NR}$ (non-recoverable creep compliance) between 0.1 and 0.5, when tested according to AASHTO TP 70.

**Subsection:** 806.03.01 General Requirements.
**Table:** PG Binder Requirements and Price Adjustment Schedule
**Revision:** Replace the Elastic Recovery, % [3] (AASHTO T301) and all corresponding values in the table with the following:

| Test | Specification | 100% Pay | 90% Pay | 80% Pay | 70% Pay | 50%Pay[1] |
|---|---|---|---|---|---|---|
| MSCR recovery, % [3] (AASHTO TP 70) | 60 Min. | ≥58 | 56 | 55 | 54 | <53 |

**Subsection:** 806.03.01 General Requirements.
**Table:** PG Binder Requirements and Price Adjustment Schedule
**Superscript:** (3)
**Revision:** Replace [3] with the following:
Perform testing at 64°C.

**Subsection:** 808.07 Polypropylene Waterproofing Membrane.
**Revision:** Replace the paragraph and table with the following: Furnish a layered waterproofing membrane. The layers will consist of an internal puncture resistant woven polypropylene fabric sandwiched between two rubberized mastic layers. The mastic will have a heavy polyethylene membrane attached on the top and the bottom mastic layer will be covered by a protective release film.

**Subsection:** 808.09 Acceptance.
**Revision:** Replace the reference to "KMIMS" in the second paragraph with SiteManager.

**Subsection:** 811.10.04 Properties of the Coated Bar.
**Part:** B) Flexibility of Coating.
**Revision:** Replace the second sentence of the paragraph with the following: Ensure that the coated bars are capable of being bent to 180 degrees (after rebound) over a mandrel, without any visible evidence of cracking the coating.

**Subsection:** 813.04 Gray Iron Castings.
**Revision:** Replace the reference to "AASHTO M105" with "ASTM A48".

**Subsection:** 813.09.02 High Strength Steel Bolts, Nuts, and Washers.
**Number:** A) Bolts.
**Revision:** Delete first paragraph and "Hardness Number" Table. Replace with the following:
A) Bolts. Conform to ASTM A325 (AASHTO M164) or ASTM A490 (AASHTO 253) as applicable.

**Supplemental Specifications to the**
**Standard Specifications for Road and Bridge Construction, 2012 Edition**
**Effective with the April 29, 2016 Letting**

| | |
|---|---|
| **Subsection:**<br>**Revision:** | 814.04.02 Timber Guardrail Posts.<br>Third paragraph, replace the reference to "AWPA C14" with "AWPA U1, Section B, Paragraph 4.1". |
| **Subsection:**<br>**Revision:** | 814.04.02 Timber Guardrail Posts.<br>Replace the first sentence of the fourth paragraph with the following:<br>Use any of the species of wood for round or square posts covered under AWPA U1. |
| **Subsection:**<br>**Revision:** | 814.04.02 Timber Guardrail Posts.<br>Fourth paragraph, replace the reference to "AWPA C2" with "AWPA U1, Section B, Paragraph 4.1". |
| **Subsection:**<br>**Revision:** | 814.04.02 Timber Guardrail Posts.<br>Delete the second sentence of the fourth paragraph. |
| **Subsection:**<br>**Revision:** | 814.05.02 Composite Plastic.<br>1) Add the following to the beginning of the first paragraph: Select composite offset blocks conforming to this section and assure blocks are from a manufacturer included on the Department's List of Approved Materials.<br>2) Delete the last paragraph of the subsection. |
| **Subsection:**<br>**Revision:** | 816.07.02 Wood Posts and Braces.<br>First paragraph, replace the reference to "AWPA C5" with "AWPA U1, Section B, Paragraph 4.1". |
| **Subsection:**<br>**Revision:** | 816.07.02 Wood Posts and Braces.<br>Delete the second sentence of the first paragraph. |
| **Subsection:**<br>**Revision:** | 818.07 Preservative Treatment.<br>First paragraph, replace all references to "AWPA C14" with "AWPA U1, Section A". |
| **Subsection:**<br>**Revision:** | 833.01.02 Sheeting Signs.<br>Replace the second sentence with the following: Provide a thickness of 125 mils if any single edge dimension of the sign exceeds 3 feet. |
| **Subsection:**<br>**Revision:** | 834.14 Lighting Poles.<br>Replace the first sentence with the following: Lighting pole design shall be in accordance with loading and allowable stress requirements of the AASHTO Standard Specifications for Structural Supports for Highway Signs, Luminaires, and Traffic Signals, 2013-6th Edition with current interims, with the exception of the following: The Cabinet will waive the requirement stated in the first sentence of Section 5.14.6.2 – Reinforced Holes and Cutouts for high mast poles (only). The minimum diameter at the base of the pole shall be 22 inches for high mast poles (only). |
| **Subsection**<br>**Revision:** | 834.14.03 High Mast Poles.<br>Remove the second and fourth sentence from the first paragraph. |
| **Subsection**<br>**Revision:** | 834.14.03 High Mast Poles.<br>Replace the third paragraph with the following: Provide calculations and drawings that are stamped by a Professional Engineer licensed in the Commonwealth of Kentucky. |

**Supplemental Specifications to the**
**Standard Specifications for Road and Bridge Construction, 2012 Edition**
**Effective with the April 29, 2016 Letting**

| | |
|---|---|
| **Subsection:**<br>**Revision:** | 834.14.03 High Mast Poles.<br>Replace paragraph six with the following: Provide a pole section that conforms to ASTM A 595 grade A with a minimum yield strength of 55 KSI or ASTM A 572 with a minimum yield strength of 55 KSI. Use tubes that are round or 16 sided with a four inch corner radius, have a constant linear taper of .144 in/ft and contain only one longitudinal seam weld. Circumferential welded tube butt splices and laminated tubes are not permitted. Provide pole sections that are telescopically slip fit assembled in the field to facilitate inspection of interior surface welds and the protective coating. The minimum length of the telescopic slip splices shall be 1.5 times the inside diameter of the exposed end of the female section. Use longitudinal seam welds as commended in Section 5.15 of the AASHTO 2013 Specifications. The thickness of the transverse base shall not be less than 2 inches. Plates shall be integrally welded to the tubes with a telescopic welded joint or a full penetration groove weld with backup bar.<br><br>The handhole cover shall be removable from the handhole frame. One the frame side opposite the hinge, provide a mechanism on the handhole cover/frame to place the Department's standard padlock as specified in Section 834.25. The handhole frame shall have two stainless studs installed opposite the hinge to secure the handhole cover to the frame which includes providing stainless steel wing nuts and washers. The handhole cover shall be manufactured from 0.25 inch thick galvanized steel (ASTM A 153) and have a neoprene rubber gasket that is permanently secured to the handhole frame to insure weather-tight protection. The hinge shall be manufactured from 7-guage stainless steel to provide adjustability to insure weather-tight fit for the cover. The minimum clear distance between the transverse plate and the bottom opening of the handhole shall not be less than the diameter of the bottom tube of the pole but needs to be at least 15 inches. Provide products that are hot-dip galvanized to the requirements of either ASTM A123 (fabricated products) or ASTM A 153 (hardware items). |
| **Subsection:**<br>**Revision:** | 834.16 ANCHOR BOLTS.<br>Insert the following sentence at the beginning of the paragraph: The anchor bolt design shall follow the NCHRP Report 494 Section 2.4 and NCHRP 469 Appendix A Specifications. |
| **Subsection:**<br>**Revision:** | 834.17.01 Conventional.<br>Add the following sentence after the second sentence: Provide a waterproof sticker mounted on the bottom of the housing that is legible from the ground and indicates the wattage of the fixture by providing the first two numbers of the wattage. |
| **Subsection:**<br>**Revision:** | 834.21.01 Waterproof Enclosures.<br>Replace the last five sentences in the second paragraph with the following sentences:<br>Provide a cabinet door with a louvered air vent, filter-retaining brackets and an easy to clean metal filter. Provide a cabinet door that is keyed with a factory installed standard no. 2 corbin traffic control key. Provide a light fixture with switch and bulb. Use a 120-volt fixture and utilize a L.E.D. bulb (equivalent to 60 watts minimum). Fixture shall be situated at or near the top of the cabinet and illuminate the contents of the cabinet. Provide a 120 VAC GFI duplex receptacle in the enclosure with a separate 20 amp breaker. |

**Supplemental Specifications to the**
**Standard Specifications for Road and Bridge Construction, 2012 Edition**
**Effective with the April 29, 2016 Letting**

| | |
|---|---|
| **Subsection:**<br>**Revision:** | 835.07 Traffic Poles.<br>Replace the first sentence of the first paragraph with the following: Pole diameter and wall thickness shall be calculated in accordance with the AASHTO Standard Specifications for Structural Supports for Highway Signs, Luminaires, and Traffic Signals, 2013-6th Edition with current interims. |
| **Subsection:**<br>**Revision:** | 835.07 Traffic Poles.<br>*Replace the first sentence of the fourth paragraph with the following: Ensure transverse plates have a thickness ≥ 2 inches.<br>*Add the following sentence to the end of the fourth paragraph: The bottom pole diameter shall not be less than 16.25 inches. |
| **Subsection:**<br>**Revision:** | 835.07 Traffic Poles.<br>Replace the third sentence of the fifth paragraph with the following: For anchor bolt design, pole forces shall be positioned in such a manner to maximize the force on any individual anchor bolt regardless of the actual anchor bolt orientation with the pole. |
| **Subsection:**<br>**Revision:** | 835.07 Traffic Poles.<br>Replace the first and second sentence of the sixth paragraph with the following:<br>The pole handhole shall be 25 inches by 6.5 inches. The handhole cover shall be removable from the handhole frame. On the frame side opposite the hinge, provide a mechanism on the handhole cover/frame to place the Department's standard padlock as specified in Section 834.25. The handhole frame shall have two stainless studs installed opposite the hinge to secure the handhole cover to the frame which includes providing stainless steel wing nuts and washers. The handhole cover shall be manufactured from 0.25 inch thick galvanized steel (ASTM 153) and have a neoprene rubber gasket that is permanently secured to the handhole frame to insure weather-tight protection. The hinge shall be manufactured from 7 gauge stainless steel to provide adjustability to insure a weather-tight fit for the cover. The minimum clear distance between the transverse plate and the bottom opening of the handhole shall not be less than the diameter of the bottom tube but needs to be at least 12 inches. |
| **Subsection:**<br>**Revision:** | 835.07 Traffic Poles.<br>*Replace the first sentence of the last paragraph with the following: Provide calculations and drawings that are stamped by a Professional Engineer licensed in the Commonwealth of Kentucky.<br>*Replace the third sentence of the last paragraph with the following: All tables referenced in 835.07 are found in the AASHTO Standard Specifications for Structural Supports for Highway Signs, Luminaires, and Traffic Signals, 2013-6th Edition with current interims. |
| **Subsection:**<br>**Revision:** | 835.07.01 Steel Strain Poles.<br>Replace the second sentence of the second paragraph with the following:<br>The detailed analysis shall be certified by a Professional Engineer licensed in the Commonwealth of Kentucky. |
| **Subsection:**<br>**Revision:** | 835.07.01 Steel Strain Poles.<br>Replace number 7. after the second paragraph with the following: 7. Fatigue calculations should be shown for all fatigue related connections. Provide the corresponding detail, stress category and example from table 11.9.3.1-1. |
| **Subsection:**<br>**Revision:** | 835.07.02 Mast Arm Poles.<br>Replace the second sentence of the fourth paragraph with the following: The detailed analysis shall be certified by a Professional Engineer licensed in the Commonwealth of Kentucky. |

**Supplemental Specifications to the**
**Standard Specifications for Road and Bridge Construction, 2012 Edition**
**Effective with the April 29, 2016 Letting**

**Subsection:** 835.07.02 Mast Arm Poles.
**Revision:** Replace number 7) after the fourth paragraph with the following: 7) Fatigue calculations should be shown for all fatigue related connections. Provide the corresponding detail, stress category and example from table 11.9.3.1-1.

**Subsection:** 835.07.03 Anchor Bolts.
**Revision:** Add the following to the end of the paragraph: There shall be two steel templates (one can be used for the headed part of the anchor bolt when designed in this manner) provided per pole. Templates shall be contained within a 26.5 inch diameter. All templates shall be fully galvanized (ASTM A 153).

**Subsection:** 835.16.05 Optical Units.
**Revision:** Replace the 3rd paragraph with the following:
The list of certified products can be found on the following website: http://www.intertek.com.

**Subsection:** 835.19.01 Pedestrian Detector Body.
**Revision:** Replace the first sentence with the following: Provide a four holed pole mounted aluminum rectangular housing that is compatible with the pedestrian detector.

**Subsection:** 843.01.01 Geotextile Fabric.
**Table:** TYPE I FABRIC GEOTEXTILES FOR SLOPE PROTECTION AND CHANNEL LINING
**Revision:** Add the following to the chart:

| Property | Minimum Value(1) | Test Method |
|---|---|---|
| CBR Puncture (lbs) | 494 | ASTM D6241 |
| Permittivity (1/s) | 0.7 | ASTM D4491 |

**Subsection:** 843.01.01 Geotextile Fabric.
**Table:** TYPE II FABRIC GEOTEXTILES FOR UNDERDRAINS
**Revision:** Add the following to the chart:

| Property | Minimum Value(1) | Test Method |
|---|---|---|
| CBR Puncture (lbs) | 210 | ASTM D6241 |
| Permittivity (1/s) | 0.5 | ASTM D4491 |

**Subsection:** 843.01.01 Geotextile Fabric.
**Table:** TYPE III FABRIC GEOTEXTILES FOR SUBGRADE OR EMBANKMENT STABILIZATION
**Revision:** Add the following to the chart:

| Property | Minimum Value(1) | Test Method |
|---|---|---|
| CBR Puncture (lbs) | 370 | ASTM D6241 |
| Permittivity (1/s) | 0.05 | ASTM D4491 |

**Subsection:** 843.01.01 Geotextile Fabric.
**Table:** TYPE IV FABRIC GEOTEXTILES FOR EMBANKMENT DRAINAGE BLANKETS AND PAVEMENT EDGE DRAINS
**Revision:** Add the following to the chart:

| Property | Minimum Value(1) | Test Method |
|---|---|---|
| CBR Puncture (lbs) | 309 | ASTM D6241 |
| Permittivity (1/s) | 0.5 | ASTM D4491 |

**Supplemental Specifications to the**
**Standard Specifications for Road and Bridge Construction, 2012 Edition**
**Effective with the April 29, 2016 Letting**

**Subsection:** 843.01.01 Geotextile Fabric.

**Table:** TYPE V HIGH STRENGTH GEOTEXTILE FABRIC

**Revision:** Make the following changes to the chart:

| Property | Minimum Value[1] | Test Method |
|---|---|---|
| CBR Puncture (lbs) | 618 | ASTM D6241 |
| Apparent Opening Size | U.S. #40[3] | ASTM D4751 |

[3] Maximum average roll value.

# 2016 STANDARD DRAWINGS THAT APPLY

## ROADWAY

### ~GENERAL~

MISCELLANEOUS STANDARDS

MISCELLANEOUS STANDARDS PART 1.....RGX-001-06

### ~PAVEMENT~

MEDIANS, CURBS, APPROACHES, ENTRANCES, ETC.

APPROACHES, ENTRANCES, AND MAIL BOX TURNOUT.....RPM-110-07

## TRAFFIC

### ~TEMPORARY~

DEVICES

LANE CLOUSRE TWO-LANE HIGHWAY .....TTC-100-04

# PART III

# EMPLOYMENT, WAGE AND RECORD REQUIREMENTS

# TRANSPORTATION CABINET
# DEPARTMENT OF HIGHWAYS

## LABOR AND WAGE REQUIREMENTS
## APPLICABLE TO OTHER THAN FEDERAL-AID SYSTEM PROJECTS

I. Application
II. Nondiscrimination of Employees (KRS 344)
III. Payment of Predetermined Minimum Wages
IV. Statements and Payrolls

### I. APPLICATION

1. These contract provisions shall apply to all work performed on the contract by the contractor with his own organization and with the assistance of workmen under his immediate superintendence and to all work performed on the contract by piecework, station work or by subcontract. The contractor's organization shall be construed to include only workmen employed and paid directly by the contractor and equipment owned or rented by him, with or without operators.

2. The contractor shall insert in each of his subcontracts all of the stipulations contained in these Required Provisions and such other stipulations as may be required.

3. A breach of any of the stipulations contained in these Required Provisions may be grounds for termination of the contract.

### II. NONDISCRIMINATION OF EMPLOYEES

AN ACT OF THE KENTUCKY
GENERAL ASSEMBLY TO PREVENT
DISCRIMINATION IN EMPLOYMENT
KRS CHAPTER 344
EFFECTIVE JUNE 16, 1972

The contract on this project, in accordance with KRS Chapter 344, provides that during the performance of this contract, the contractor agrees as follows:

1. The contractor shall not fail or refuse to hire, or shall not discharge any individual, or otherwise discriminate against an individual with respect to his compensation, terms, conditions, or privileges of employment, because of such individual's race, color, religion, national origin, sex, disability or age (between forty and seventy); or limit, segregate, or classify his employees in any way which would deprive or tend to deprive an individual of employment opportunities or otherwise adversely affect his status as an employee, because of such individual's race, color, religion, national origin, sex, disability or age (between forty and seventy). The contractor agrees to post in conspicuous places, available to employees and applicants for employment, notices to be provided setting forth the provisions of this nondiscrimination clause.

2. The contractor shall not print or publish or cause to be printed or published a notice or advertisement relating to employment by such an employer or membership in or any classification or referral for employment by the employment agency, indicating any preference, limitation, specification, or discrimination, based on race, color, religion, national origin, sex, disability or age (between forty and seventy), except that such notice or advertisement may indicate a preference, limitation, or specification based on religion, or national origin when religion, or national origin is a bona fide occupational qualification for employment.

3. If the contractor is in control of apprenticeship or other training or retraining, including on-the-job training programs, he shall not discriminate against an individual because of his race, color, religion, national origin, sex, disability or age (between forty and seventy), in admission to, or employment in any program established to provide apprenticeship or other training.

4. The contractor will send to each labor union or representative of workers with which he has a collective bargaining agreement or other contract or understanding, a notice to be provided advising the said labor union or workers' representative of the contractor's commitments under this section, and shall post copies of the notice in conspicuous places available to employees and applicants for employment. The contractor will take such action with respect to any subcontract or purchase order as the administrating agency may direct as a means of enforcing such provisions, including sanctions for non-compliance.

### III. PAYMENT OF PREDETERMINED MINIMUM WAGES

1. These special provisions are supplemented elsewhere in the contract by special provisions which set forth certain predetermined minimum wage rates. The contractor shall pay not less than those rates.

2. The minimum wage determination schedule shall be posted by the contractor, in a manner prescribed by the Department of Highways, at the site of the work in prominent places where it can be easily seen by the workers.

### IV. STATEMENTS AND PAYROLLS

1. All contractors and subcontractors affected by the terms of KRS 337.505 to 337.550 shall keep full and accurate payroll records covering all disbursements of wages to their employees to whom they are required to pay not less than the prevailing rate of wages. Payrolls and basic records relating thereto will be maintained during the course of the work and preserved for a period of one (1) year from the date of completion of this contract.

2. The payroll records shall contain the name, address and social security number of each employee, his correct classification, rate of pay, daily and weekly number of hours worked, itemized deductions made and actual wages paid.

3. The contractor shall make his daily records available at the project site for inspection by the State Department of Highways contracting office or his authorized representative.

Periodic investigations shall be conducted as required to assure compliance with the labor provisions of the contract. Interrogation of employees and officials of the contractor shall be permitted during working hours.

Aggrieved workers, Highway Managers, Assistant District Engineers, Resident Engineers and Project Engineers shall report all complaints and violations to the Division of Contract Procurement.

The contractor shall be notified in writing of apparent violations. The contractor may correct the reported violations and notify the Department of Highways of the action taken or may request an informal hearing. The request for hearing shall be in writing within ten (10) days after receipt of the notice of the reported violation. The contractor may submit

records and information which will aid in determining the true facts relating to the reported violations.

Any person or organization aggrieved by the action taken or the findings established as a result of an informal hearing by the Division of Contract Procurement may request a formal hearing.

4. The wages of labor shall be paid in legal tender of the United States, except that this condition will be considered satisfied if payment is made by a negotiable check, on a solvent bank, which may be cashed readily by the employee in the local community for the full amount, without discount or collection charges of any kind. Where checks are used for payments, the contractor shall make all necessary arrangements for them to be cashed and shall give information regarding such arrangements.

5. No fee of any kind shall be asked or accepted by the contractor or any of his agents from any person as a condition of employment on the project.

6. No laborers shall be charged for any tools used in performing their respective duties except for reasonably avoidable loss or damage thereto.

7. Every employee on the work covered by this contract shall be permitted to lodge, board, and trade where and with whom he elects and neither the contractor nor his agents, nor his employees shall directly or indirectly require as a condition of employment that an employee shall lodge, board or trade at a particular place or with a particular person.

8. Every employee on the project covered by this contract shall be an employee of either the prime contractor or an approved subcontractor.

9. No charge shall be made for any transportation furnished by the contractor or his agents to any person employed on the work.

10. No individual shall be employed as a laborer or mechanic on this contract except on a wage basis, but this shall not be construed to prohibit the rental of teams, trucks or other equipment from individuals.

No Covered employee may be employed on the work except in accordance with the classification set forth in the schedule mentioned above; provided, however, that in the event additional classifications are required, application shall be made by the contractor to the Department of Highways and (1) the Department shall request appropriate classifications and rates from the proper agency, or (2) if there is urgent need for additional classification to avoid undue delay in the work, the contractor may employ such workmen at rates deemed comparable to rates established for similar classifications provided he has made written application through the Department of Highways, addressed to the proper agency, for the supplemental rates. The contractor shall retroactively adjust, upon receipt of the supplemental rates schedule, the wages of any employee paid less than the established rate and may adjust the wages of any employee overpaid.

11. No contractor or subcontractor contracting for any part of the contract work which may require or involve the employment of laborers or mechanics shall require or permit any laborer or mechanic in any work-week in which he is employed on such work, to work in excess of eight hours in any calendar day or in excess of forty hours in such work-week unless such laborer or mechanic receives compensation at a rate not less than one and one half times his basic rate of pay for all hours worked in excess of eight hours in any calendar day or in excess of forty hours in such work-week. A laborer, workman or mechanic and an employer may enter into a written agreement or a collective bargaining agreement to work more than eight (8) hours a calendar day but not more than ten (10) hours a calendar day for the straight time hourly rate. This agreement shall be in writing and shall be executed prior to the employee working in excess of eight (8) hours, but not more than ten (10) hours, in any one (1) calendar day.

12. Payments to the contractor may be suspended or withheld due to failure of the contractor to pay any laborer or mechanic employed or working on the site of the work, all or part of the wages required under the terms of the contract. The Department may suspend or withhold payments only after the contractor has been given written notice of the alleged violation and the contractor has failed to comply with the wage determination of the Department of Highways.

13. Contractors and subcontractors shall comply with the sections of Kentucky Revised Statutes, Chapter 337 relating to contracts for Public Works.

Revised 2-16-95

# EXECUTIVE BRANCH CODE OF ETHICS

In the 1992 regular legislative session, the General Assembly passed and Governor Brereton Jones signed Senate Bill 63 (codified as KRS 11A), the Executive Branch Code of Ethics, which states, in part:

KRS 11A.040 (6) provides:

No present or former public servant shall, within six (6) months of following termination of his office or employment, accept employment, compensation or other economic benefit from any person or business that contracts or does business with the state in matters in which he was directly involved during his tenure. This provision shall not prohibit an individual from returning to the same business, firm, occupation, or profession in which he was involved prior to taking office or beginning his term of employment, provided that, for a period of six (6) months, he personally refrains from working on any matter in which he was directly involved in state government. This subsection shall not prohibit the performance of ministerial functions, including, but not limited to, filing tax returns, filing applications for permits or licenses, or filing incorporation papers.

KRS 11A.040 (8) states:

A former public servant shall not represent a person in a matter before a state agency in which the former public servant was directly involved, for a period of one (1) year after the latter of:

a) The date of leaving office or termination of employment; or
b) The date the term of office expires to which the public servant was elected.

This law is intended to promote public confidence in the integrity of state government and to declare as public policy the idea that state employees should view their work as a public trust and not as a way to obtain private benefits.

If you have worked for the executive branch of state government within the past six months, you may be subject to the law's prohibitions. The law's applicability may be different if you hold elected office or are contemplating representation of another before a state agency.

Also, if you are affiliated with a firm which does business with the state and which employs former state executive-branch employees, you should be aware that the law may apply to them.

In case of doubt, the law permits you to request an advisory opinion from the Executive Branch Ethics Commission, Room 136, Capitol Building, 700 Capitol Avenue, Frankfort, Kentucky 40601; telephone (502) 564-7954.

## Kentucky Equal Employment Opportunity Act of 1978

The requirements of the Kentucky Equal Employment Opportunity Act of 1978 (KRS 45.560-45.640) shall apply to this Contract. The apparent low Bidder will be required to submit EEO forms to the Division of Construction Procurement, which will then forward to the Finance and Administration Cabinet for review and approval. No award will become effective until all forms are submitted and EEO/CC has certified compliance. The required EEO forms are as follows:

- EEO-1: Employer Information Report
- Affidavit of Intent to Comply
- Employee Data Sheet
- Subcontractor Report

These forms are available on the Finance and Administration's web page under ***Vendor Information, Standard Attachments and General Terms*** at the following address: **https://www.eProcurement.ky.gov**.

Bidders currently certified as being in compliance by the Finance and Administration Cabinet may submit a copy of their approval letter in lieu of the referenced EEO forms.

For questions or assistance please contact the Finance and Administration Cabinet by email at **finance.contractcompliance@ky.gov** or by phone at 502-564-2874.

# KENTUCKY LABOR CABINET
# PREVAILING WAGE DETERMINATION
# CURRENT REVISION
# HIGHWAY CONSTRUCTION LOCALITY NO. II

Determination No. CR-15-II-HWY

Project No.
Highway

Date of Determination: July 20, 2015

This schedule of the prevailing rate of wages for Locality No. II including the counties of ADAIR, BARREN, BELL, BREATHITT, CASEY, CLAY, CLINTON, CUMBERLAND, ESTILL, FLOYD, GARRARD, GREEN, HARLAN, HART, JACKSON, JOHNSON, KNOTT, KNOX, LAUREL, LAWRENCE, LEE, LESLIE, LETCHER, LINCOLN, MCCREARY, MAGOFFIN, MARTIN, MENIFEE, METCALFE, MONROE, MORGAN, OWSLEY, PERRY, PIKE, POWELL, PULASKI, ROCKCASTLE, RUSSELL, TAYLOR, WAYNE, WHITLEY, and WOLFE has been determined in accordance with the provisions of KRS 337.505 to 337.550. This determination shall be referred to as Prevailing Wage Determination No. CR-15-II-HWY.

The following schedule of rates is to be used for highway construction projects advertised or awarded by the Kentucky Transportation Cabinet. This includes any contracts for the relocation of any utilities or other incidental construction projects advertised or awarded by public authorities as a result of the highway construction project.

Apprentices or trainees shall be permitted to work in accordance with Administrative Regulations. Copies of these regulations will be furnished upon request to any interested person.

Overtime is to be computed at not less than one and one-half (1 1/2) times the indicated BASE RATE for all hours worked in excess of eight (8) hours per day, or in excess of forty (40) hours per week. However, KRS 337.540 permits an employee and employer to agree, in writing, that the employee will be compensated at a straight time base rate for hours worked in excess of eight (8) hours in any one calendar day, but not more than ten (10) hours worked in any one calendar day, if such written agreement is prior to the over eight (8) hours in a calendar day actually being worked, or where provided for in a collective bargaining agreement. The fringe benefit rate is to be paid for each hour worked at a straight time rate for all hours worked. Fringe benefit amounts are applicable for all hours worked except when otherwise noted. Welders will receive rate for craft in which welding is incidental.

No laborer, workman or mechanic shall be paid at a rate less than that of the General Laborer except those classified as bona fide apprentices registered with the Kentucky State Apprenticeship Supervisor unless otherwise specified in this schedule of wage rates.

Anthony Russell, Commissioner
Department of Workplace Standards

| CLASSIFICATIONS | RATE AND FRINGE BENEFITS | |
|---|---|---|
| **BOILERMAKERS:** | BASE RATE | $24.65 |
| | FRINGE BENEFIT | 12.94 |
| **BRICKLAYERS:** | | |
| Bricklayers: | BASE RATE | $22.90 |
| | FRINGE BENEFITS | 8.50 |
| Stone Mason: | BASE RATE | $21.50 |
| | FRINGE BENEFITS | 8.50 |
| **CARPENTERS:** | | |
| Carpenters: | BASE RATE | $24.90 |
| | FRINGE BENEFITS | 14.50 |
| Piledrivers: | BASE RATE | $24.55 |
| | FRINGE BENEFITS | 14.50 |
| **CEMENT MASONS:** | BASE RATE | $21.25 |
| | FRINGE BENEFITS | 8.50 |
| **ELECTRICIANS:** | *BASE RATE | $29.36 |
| | FRINGE BENEFITS | 10.55 |

*When workmen are required to work from bosum chairs, trusses, stacks, tanks, scaffolds, catwalks, radio and T.V. towers, structural steel (open, unprotected, unfloored raw steel), and bridges or similar hazardous locations where workmen are subject to a direct fall, except where using JLG's and bucket trucks up to 75 feet: Add 25% to workman's base rate for 50 to 75 feet, and add 50% to workman's base rate for over 75 feet.

| | | |
|---|---|---|
| LINEMAN: | *BASE RATE | $30.09 |
| | FRINGE BENEFITS | 10.94 |
| EQUIPMENT OPERATOR: | *BASE RATE | $26.90 |
| | FRINGE BENEFITS | 10.31 |
| GROUNDSMAN: | *BASE RATE | $17.79 |
| | FRINGE BENEFITS | 8.51 |
| **IRONWORKERS:** | BASE RATE | $ 27.56 |
| | FRINGE BENEFITS | 20.57 |

CLASSIFICATIONS RATE AND FRINGE BENEFITS

## LABORERS:

GROUP 1: Aging and curing of concrete (any mode or method), asbestos abatement worker, asphalt plant laborers, asphalt laborers; batch truck dumpers; carpenter tenders, cement mason tenders, cleaning of machines, concrete laborers, demolition laborers, dredging laborers, drill helper, environmental laborer - nuclear, radiation, toxic and hazardous waste – Level D, flagmen, grade checkers, all hand digging and hand back filling, highway marker placers, landscaping laborers, mesh handlers and placers, puddler, railroad laborers, rip-rap and grouters, right of way laborers, sign, guard rail and fence installers (all types), signalmen, sound barrier installer, storm and sanitary sewer laborers, swampers, truck spotters and dumpers, wrecking of concrete forms, general cleanup:

| | | |
|---|---|---|
| HEAVY & HIGHWAY | BASE RATE | $21.80 |
| | FRINGE BENEFITS | 12.36 |

GROUP 2: Batter board men (sanitary and storm sewer), brickmason tenders, mortar mixer operator, scaffold builders, burner and welder, bushammers, chain saw operator, concrete saw operators, deckhand scow man, dry cement handlers, environmental laborers – nuclear, radiation, toxic and hazardous waste – Level C, forklift operators for masonry, form setters, green concrete cutting, hand operated grouter and grinder machine operator, jack hammers, lead paint abatement, pavement breakers, paving joint machine, pipe layers – laser operators (non-metallic), plastic pipe fusion, power driven Georgia buggy and wheel barrow, power post hole diggers, precast manhole setters, walk-behind tampers, walk-behind trenchers, sand blasters, concrete chippers, surface grinders, vibrator operators, wagon drillers:

| | | |
|---|---|---|
| HEAVY & HIGHWAY | BASE RATE | $22.05 |
| | FRINGE BENEFITS | 12.36 |

GROUP 3: Air track driller (all types), asphalt luteman and rakersm gunnite nozzleman, gunnite operators and mixers, grout pump operator, powderman and blaster, side rail setters, rail paved ditches, screw operators, tunnel laborers (free air), and water blasters:

| | | |
|---|---|---|
| HEAVY & HIGHWAY | BASE RATE | $22.10 |
| | FRINGE BENEFITS | 12.36 |

GROUP 4: Caisson workers (free air), cement finishers, environmental laborer – nuclear, radiation, toxic and hazardous waste – Level A and B, miners and drillers (free air), tunnel blasters, and tunnel mockers (free air), directional and horizontal boring, air track drillers (all types), powder man and blasters, troxler and concrete tester if laborer is utilized:

| | | |
|---|---|---|
| HEAVY & HIGHWAY | BASE RATE | $22.70 |
| | FRINGE BENEFITS | 12.36 |

---

## OPERATING ENGINEERS:

Group A-1:
NCCCO or OECP Certified; Crane, dragline, hoist (1 drum when used for stack or chimney construction or repair), hoisting engineer (2 or more drums), orangepeel, overhead crane, piledriver, truck crane, tower crane, hydraulic crane:

| | |
|---|---|
| BASE RATE | $31.08 |
| FRINGE BENEFITS | 14.40 |

CLASSIFICATIONS RATE AND FRINGE BENEFITS

**OPERATING ENGINEERS (CONTINUED):**

Group A:

Auto patrol, batcher plant, bituminous paver, cable-way, clamshell, concrete mixer (21 cu. ft. or over), concrete pump, crane, crusher plant, derrick, derrick boat, ditching and trenching machine, dragline, dredge engineer, elevator (regardless of ownership when used for hoisting any building material), elevating grader and all types of loaders, hoe-type machine, hoisting engine, locomotive, LeTourneau or carry-all scoop, bulldozer, mechanic, orangepeel bucket, piledriver, power blade, roller (bituminous), roller (earth), roller (rock), scarifier, shovel, tractor shovel, truck crane, well points, winch truck, push dozer, grout pump, high lift, fork lift (regardless of lift height), all types of boom cats, multiple operator, core drill, tow or push boat, A-Frame winch truck, concrete paver, gradeall, hoist, hyster, material pump, pumpcrete, ross carrier,sheepfoot, sideboom, throttle-valve man, rotary drill, power generator, mucking machine, rock spreader attached to equipment, scoopmobile, KeCal loader, tower cranes (French, German and other types), hydrocrane, tugger, backfiller gurries, self-propelled compactor, self-contained hydraulic percussion drill:

| | |
|---|---|
| BASE RATE | $29.95 |
| FRINGE BENEFITS | 14.40 |

Group B:

All air compressors (200 cu. ft. per min. or greater capacity), bituminous mixer, concrete mixer (under 21 cu. ft.), welding machine, form grader, tractor (50 H.P. and over), bull float, finish machine, outboard motor boat, brakeman, mechanic helper, whirly oiler, tractair and road widening trencher, articulating trucks:

| | |
|---|---|
| BASE RATE | $27.26 |
| FRINGE BENEFITS | 14.40 |

Group B2:

Greaser on grease facilities servicing heavy equipment:

| | |
|---|---|
| BASE RATE | $27.68 |
| FRINGE BENEFITS | 14.40 |

Group C:

Bituminous distributor, cement gun, conveyor, mud jack, paving joint machine, pump, tamping machine, tractors (under 50 H.P.), vibrator, oiler, air compressors (under 200 cu. ft. per min. capacity), concrete saw, burlap and curing machine, hydro seeder, power form handling equipment, deckhand oiler, hydraulic post driver:

| | |
|---|---|
| BASE RATE | $26.96 |
| FRINGE BENEFITS | 14.40 |

---

**PAINTERS:**

All Excluding Bridges:

| | |
|---|---|
| BASE RATE | $19.92 |
| FRINGE BENEFITS | 9.57 |

Bridges:

| | |
|---|---|
| BASE RATE | $23.92 |
| FRINGE BENEFITS | 10.07 |

---

| CLASSIFICATIONS | RATE AND FRINGE BENEFITS | |
|---|---|---|
| **PLUMBERS:** | BASE RATE | $22.52 |
| | FRINGE BENEFITS | 7.80 |
| **SHEET METAL:** | BASE RATE | $20.40 |
| | FRINGE BENEFITS | 7.80 |
| **TRUCK DRIVERS:** | | |
| Truck helper and warehouseman: | BASE RATE | $23.20 |
| | FRINGE BENEFITS | 14.50 |
| Driver, winch truck and A-Frame when used in transporting materials: | BASE RATE | $23.30 |
| | FRINGE BENEFITS | 14.50 |
| Driver, (semi-trailer or pole trailer), driver (dump truck, tandem axle), driver of distributor: | BASE RATE | $23.40 |
| | FRINGE BENEFITS | 14.50 |
| Driver on mixer trucks (all types): | BASE RATE | $23.45 |
| | FRINGE BENEFITS | 14.50 |
| Truck mechanic: | BASE RATE | $23.50 |
| | FRINGE BENEFITS | 14.50 |
| Driver (3 tons and under), tire changer and truck mechanic helper: | BASE RATE | $23.53 |
| | FRINGE BENEFITS | 14.50 |
| Driver on pavement breakers: | BASE RATE | $23.55 |
| | FRINGE BENEFITS | 14.50 |
| Driver (over 3 tons), driver (truck mounted rotary drill): | BASE RATE | $23.74 |
| | FRINGE BENEFITS | 14.50 |
| Driver, Euclid and other heavy earth moving equipment and Low Boy: | BASE RATE | $24.31 |
| | FRINGE BENEFITS | 14.50 |
| Greaser on greasing facilities: | BASE RATE | $24.40 |
| | FRINGE BENEFITS | 14.50 |

**Kentucky Determination No. CR-15-II-HWY dated July 20, 2015**

Fringe benefit amounts are applicable for all hours worked except when otherwise noted.

No laborer, workman or mechanic shall be paid at a rate less than that of the General Laborer except those classified as bona fide apprentices registered with the Kentucky State Apprenticeship Supervisor unless otherwise specified in this schedule of wage rates.

These rates are listed pursuant to the Kentucky Determination No. CR-15-II-HWY dated July 20, 2015. Apprentices or trainees shall be permitted to work as such subject to Administrative Regulations adopted by the Commissioner of Workplace Standards. Copies of these regulations will be furnished upon request from any interested person.

Before using apprentices on the job the contractor shall present to the Contracting Officer written evidence of registration of such employees in a program of a State apprenticeship and training agency approved and recognized by the U. S. Bureau of Apprenticeship and Training. In the absence of such a State agency, the contractor shall submit evidence of approval and registration by the U. S. Bureau of Apprenticeship and Training.

The contract or shall submit to the Contracting Officer, written evidence of the established apprenticeship-journeyman ratios and wage rates in the project area, which will be the basis for establishing such ratios and rates for the project under the applicable contract provisions.

**TO: EMPLOYERS/EMPLOYEES**

**PREVAILING WAGE SCHEDULE:**

**The wages indicated on this wage schedule are the least permitted to be paid for the occupations indicated. When an employee works in more than one classification, the employer must record the numbers of hours worked in each classification at the prescribed hourly base rate.**

**OVERTIME:**

**Overtime is to be paid after an employee works eight (8) hours a day or forty (40) hours a week, whichever gives the employee the greater wage. At least time and one-half the base rate is required for all overtime. A laborer, workman or mechanic and an employer may enter into a written agreement or a collective bargaining agreement to work more than eight (8) hours a calendar day but not more than ten (10) hours a calendar day for the straight time hourly rate. Wage violations or questions should be directed to the designated Engineer or to the undersigned.**

Director
Division of Construction Procurement
Frankfort, Kentucky 40622
502-564-3500

# PART IV

# INSURANCE

# INSURANCE

The Contractor shall procure and maintain the following insurance in addition to the insurance required by law:

1) Commercial General Liability-Occurrence form – not less than $2,000,000 General aggregate, $2,000,000 Products & Completed Aggregate, $1,000,000 Personal & Advertising, $1,000,000 each occurrence.

2) Automobile Liability- $1,000,000 per accident

3) Employers Liability:

   a) $100,000 Each Accident Bodily Injury
   b) $500,000 Policy limit Bodily Injury by Disease
   c) $100,000 Each Employee Bodily Injury by Disease

4) The insurance required above must be evidenced by a Certificate of Insurance and this Certificate of Insurance must contain one of the following statements:
   a) "policy contains no deductible clauses."
   b) "policy contains _____ (amount) deductible property damage clause but company will pay claim and collect the deductible from the insured."

5) KENTUCKY WORKMEN'S COMPENSATION INSURANCE. The contractor shall furnish evidence of coverage of all his employees or give evidence of self-insurance by submitting a copy of a certificate issued by the Workmen's Compensation Board.

The cost of insurance is incidental to all contract items. All subcontractors must meet the same minimum insurance requirements.

# PART V

# BID ITEMS

163125

# PROPOSAL BID ITEMS



**Report Date** 6/3/16

## Section: 0001 - PAVING

| LINE | BID CODE | ALT | DESCRIPTION | QUANTITY | UNIT | UNIT PRIC | FP | AMOUNT |
|---|---|---|---|---|---|---|---|---|
| 0010 | 00190 | | LEVELING & WEDGING PG64-22 | 1,548.00 | TON | | $ | |
| 0020 | 00301 | | CL2 ASPH SURF 0.38D PG64-22 | 10,490.00 | TON | | $ | |
| 0030 | 02562 | | TEMPORARY SIGNS | 1,480.00 | SQFT | | $ | |
| 0040 | 02650 | | MAINTAIN & CONTROL TRAFFIC (KY 1035) | 1.00 | LS | | $ | |
| 0050 | 02650 | | MAINTAIN & CONTROL TRAFFIC (KY 312) | 1.00 | LS | | $ | |
| 0060 | 02650 | | MAINTAIN & CONTROL TRAFFIC (KY 638) | 1.00 | LS | | $ | |
| 0070 | 02650 | | MAINTAIN & CONTROL TRAFFIC (KY 830) | 1.00 | LS | | $ | |
| 0080 | 02676 | | MOBILIZATION FOR MILL & TEXT (KY 638) | 1.00 | LS | | $ | |
| 0090 | 02676 | | MOBILIZATION FOR MILL & TEXT (KY 830) | 1.00 | LS | | $ | |
| 0100 | 02677 | | ASPHALT PAVE MILLING & TEXTURING | 60.00 | TON | | $ | |
| 0110 | 06510 | | PAVE STRIPING-TEMP PAINT-4 IN | 63,382.00 | LF | | $ | |
| 0120 | 06514 | | PAVE STRIPING-PERM PAINT-4 IN | 126,764.00 | LF | | $ | |
| 0130 | 06568 | | PAVE MARKING-THERMO STOP BAR-24IN | 75.00 | LF | | $ | |
| 0140 | 10020NS | | FUEL ADJUSTMENT | 18,737.00 | DOLL | $1.00 | $ | $18,737.00 |
| 0150 | 10030NS | | ASPHALT ADJUSTMENT | 47,064.00 | DOLL | $1.00 | $ | $47,064.00 |

## Section: 0002 - DEMOBILIZATION

| LINE | BID CODE | ALT | DESCRIPTION | QUANTITY | UNIT | UNIT PRIC | FP | AMOUNT |
|---|---|---|---|---|---|---|---|---|
| 0160 | 02569 | | DEMOBILIZATION | 1.00 | LS | | $ | |