**CALL NO. 416**

**CONTRACT ID. 142268**

**HOPKINS COUNTY**

**FED/STATE PROJECT NUMBER 054GR14P065-FE01**

**DESCRIPTION US 41 (2 SECTIONS) IN HOPKINS COUNTY**

**WORK TYPE JPC PAVEMENT REPAIRS**

**PRIMARY COMPLETION DATE 11/30/2014**

**LETTING DATE: May 30,2014**

Sealed Bids will be received electronically through the Bid Express bidding service until 10:00 AM EASTERN DAYLIGHT TIME May 30,2014. Bids will be publicly announced at 10:00 AM EASTERN DAYLIGHT TIME.

**NO PLANS ASSOCIATED WITH THIS PROJECT.**

**REQUIRED BID PROPOSAL GUARANTY:** Not less than 5% of the total bid.

# TABLE OF CONTENTS

PART I SCOPE OF WORK

- PROJECT(S), COMPLETION DATE(S), & LIQUIDATED DAMAGES
- CONTRACT NOTES
- STATE CONTRACT NOTES
- SIGNIFICANT PROJECT -PROJECT TRAFFIC COORDINATOR
- SURFACING AREAS
- FUEL AND ASPHALT PAY ADJUSTMENT
- SPECIAL NOTE(S) APPLICABLE TO PROJECT
- WASTE AND BORROW SITES
- TRAFFIC CONTROL PLAN 4 LANE
- TRAFFIC SIGNAL LOOP DETECTORS
- EROSION CONTROL PLAN FOR MAINTENANCE PROJECTS
- SKETCH MAP(S)
- MATERIAL SUMMARY
- SUMMARY SHEET(S)

PART II SPECIFICATIONS AND STANDARD DRAWINGS

- SPECIFICATIONS REFERENCE
- SUPPLEMENTAL SPECIFICATION
- PORTABLE CHANGEABLE SIGNS
- STANDARD DRAWINGS THAT APPLY ENTIRE LIST 2012
- SILT TRAP TYPE B

PART III EMPLOYMENT, WAGE AND RECORD REQUIREMENTS

- LABOR AND WAGE REQUIREMENTS
- EXECUTIVE BRANCH CODE OF ETHICS
- KENTUCKY EQUAL EMPLOYMENT OPPORTUNITY ACT OF 1978 LOCALITY 1,2,3,4 / STATE (OVER 250,000)
- PROJECT WAGE RATES LOCALITY 1 / FEDERAL & STATE

PART IV INSURANCE

PART V BID ITEMS

# PART I

# SCOPE OF WORK

# ADMINISTRATIVE DISTRICT - 02

**CONTRACT ID - 142268**

**054GR14P065-FE01**

**COUNTY - HOPKINS**

**PCN - MP05400411401**
**FE01 054 0041 012-016**

SOUTH MAIN STREET (US 41) (MP 13.100) FROM 300 FEET SOUTH OF NISBET STREET EXTENDING NORTH TO 40 FEET NORTH OF MCCOY AVENUE-WEST LAKE STREET (MP 15.746), A DISTANCE OF 02.65 MILES.JPC PAVEMENT REPAIRS

GEOGRAPHIC COORDINATES LATITUDE 37:18:19.00 LONGITUDE 87:30:36.00

**PCN - MP05400411402**
**FE01 054 0041 019-020**

NORTH MAIN STREET (US 41) (MP 19.057) FROM EASTBOUND 9004 RAMP EXTENDING NORTH TO 500 FEET NORTH OF KINGS WAY DRIVE-HICKORY DRIVE (MP 19.400), A DISTANCE OF 0.34 MILES.JPC PAVEMENT REPAIRS

GEOGRAPHIC COORDINATES LATITUDE 37:22:16.00 LONGITUDE 87:29:32.00

**COMPLETION DATE(S):**

COMPLETED BY 11/30/2014 APPLIES TO ENTIRE CONTRACT

# CONTRACT NOTES

## PROPOSAL ADDENDA

All addenda to this proposal must be applied when calculating bid and certified in the bid packet submitted to the Kentucky Department of Highways. Failure to use the correct and most recent addenda may result in the bid being rejected.

## BID SUBMITTAL

Bidder must use the Department's Expedite Bidding Program available on the Internet web site of the Department of Highways, Division of Construction Procurement. (www.transportation.ky.gov/construction-procurement)

The Bidder must download the bid file located on the Bid Express website (www.bidx.com) to prepare a bid packet for submission to the Department. The bidder must submit electronically using Bid Express.

## JOINT VENTURE BIDDING

Joint venture bidding is permissible. All companies in the joint venture must be prequalified in one of the work types in the Qualifications for Bidders for the project. The bidders must get a vendor ID for the joint venture from the Division of Construction Procurement and register the joint venture as a bidder on the project. Also, the joint venture must obtain a digital ID from Bid Express to submit a bid. A joint bid bond of 5% may be submitted for both companies or each company may submit a separate bond of 5%.

## UNDERGROUND FACILITY DAMAGE PROTECTION

The contractor is advised that the Underground Facility Damage Protection Act of 1994, became law January 1, 1995. It is the contractor's responsibility to determine the impact of the act regarding this project, and take all steps necessary to be in compliance with the provision of the act.

## SPECIAL NOTE FOR PIPE INSPECTION

Contrary to Section 701.03.08 of the 2012 Standard Specifications for Road and Bridge Construction and Kentucky Method 64-114, certification by the Kentucky Transportation Center for prequalified Contractors to perform laser/video inspection is not required on this contract. It will continue to be a requirement for the Contractor performing any laser/video pipe inspection to be prequalified for this specialized item with the Kentucky Transportation Cabinet-Division of Construction Procurement.

**SPECIAL NOTE FOR COMPOSITE OFFSET BLOCKS**

Contrary to the Standard Drawings (2012 edition) the Cabinet will allow 6" composite offset blocks in lieu of wooden offset blocks, except as specified on proprietary end treatments and crash cushions. The composite blocks shall be selected from the Cabinet's List of Approved Materials.

**REGISTRATION WITH THE SECRETARY OF STATE BY A FOREIGN ENTITY**

Pursuant to KRS 176.085(1)(b), an agency, department, office, or political subdivision of the Commonwealth of Kentucky shall not award a state contract to a person that is a foreign entity required by KRS 14A.9-010 to obtain a certificate of authority to transact business in the Commonwealth ("certificate") from the Secretary of State under KRS 14A.9-030 unless the person produces the certificate within fourteen (14) days of the bid or proposal opening. If the foreign entity is not required to obtain a certificate as provided in KRS 14A.9-010, the foreign entity should identify the applicable exception. Foreign entity is defined within KRS 14A.1-070.

**For all foreign entities required to obtain a certificate of authority to transact business in the Commonwealth, if a copy of the certificate is not received by the contracting agency within the time frame identified above, the foreign entity's solicitation response shall be deemed non-responsive or the awarded contract shall be cancelled.**

Businesses can register with the Secretary of State at https://secure.kentucky.gov/sos/ftbr/welcome.aspx .

**SPECIAL NOTE FOR PROJECT QUESTIONS DURING ADVERTISEMENT**

Questions about projects during the advertisement should be submitted in writing to the Division of Construction Procurement. This may be done by fax (502) 564-7299 or email to kytc.projectquestions@ky.gov. The Department will attempt to answer all submitted questions. The Department reserves the right not to answer if the question is not pertinent or does not aid in clarifying the project intent.

The deadline for posting answers will be 3:00 pm Eastern Daylight Time, the day preceding the Letting. Questions may be submitted until this deadline with the understanding that the later a question is submitted, the less likely an answer will be able to be provided.

The questions and answers will be posted for each Letting under the heading "Questions & Answers" on the Construction Procurement website (www.transportation.ky.gov/contract). The answers provided shall be considered part of

this Special Note and, in case of a discrepancy, will govern over all other bidding documents.

**HARDWOOD REMOVAL RESTRICTIONS**

The Kentucky Division of Forestry has imposed a quarantine in Anderson, Boone, Bourbon, Boyd, Boyle, Bracken, Campbell, Carroll, Fayette, Franklin, Gallatin, Garrard, Grant, Greenup, Hardin, Harrison, Henry, Jefferson, Jessamine, Kenton, Oldham, Owen, Pendleton, Scott, Shelby, Trimble, and Woodford Counties to prevent the spread of an invasive insect, the emerald ash borer. Hardwood cut in conjunction with the project may not be removed from the county of its origin. Chipping or burning on site is the preferred method of disposal.

**INSTRUCTIONS FOR EXCESS MATERIAL SITES AND BORROW SITES**

Identification of excess material sites and borrow sites shall be the responsibility of the Contractor. The Contractor shall be responsible for compliance with all applicable state and federal laws and may wish to consult with the US Fish and Wildlife Service to seek protection under Section 10 of the Endangered Species Act for these activities.

**ACCESS TO RECORDS**

The contractor, as defined in KRS 45A.030 (9) agrees that the contracting agency, the Finance and Administration Cabinet, the Auditor of Public Accounts, and the Legislative Research Commission, or their duly authorized representatives, shall have access to any books, documents, papers, records, or other evidence, which are directly pertinent to this contract for the purpose of financial audit or program review. Records and other prequalification information confidentially disclosed as part of the bid process shall not be deemed as directly pertinent to the contract and shall be exempt from disclosure as provided in KRS 61.878(1)(c). The contractor also recognizes that any books, documents, papers, records, or other evidence, received during a financial audit or program review shall be subject to the Kentucky Open Records Act, KRS 61.870 to 61.884.

In the event of a dispute between the contractor and the contracting agency, Attorney General, or the Auditor of Public Accounts over documents that are eligible for production and review, the Finance and Administration Cabinet shall review the dispute and issue a determination, in accordance with Secretary's Order 11-004. (See attachment)

10/29/12

Commonwealth of Kentucky
Finance and Administration Cabinet
**OFFICE OF THE SECRETARY**
Room 383, Capitol Annex
702 Capital Avenue
Frankfort, KY 40601-3462
(502) 564-4240
Fax (502) 564-6785

**Steven L. Beshear**
Governor

**Lori H. Flanery**
Secretary

**SECRETARY'S ORDER 11-004**

FINANCE AND ADMINISTRATION CABINET

**Vendor Document Disclosure**

**WHEREAS,** in order to promote accountability and transparency in governmental operations, the Finance and Administration Cabinet believes that a mechanism should be created which would provide for review and assistance to an Executive Branch agency if said agency cannot obtain access to documents that it deems necessary to conduct a review of the records of a private vendor that holds a contract to provide goods and/or services to the Commonwealth; and

**WHEREAS,** in order to promote accountability and transparency in governmental operations, the Finance and Administration Cabinet believes that a mechanism should be created which would provide for review and assistance to an Executive Branch agency if said agency cannot obtain access to documents that it deems necessary during the course of an audit, investigation or any other inquiry by an Executive Branch agency that involves the review of documents; and

**WHEREAS,** KRS 42.014 and KRS 12.270 authorizes the Secretary of the Finance and Administration Cabinet to establish the internal organization and assignment of functions which are not established by statute relating to the Finance and Administration Cabinet; further, KRS Chapter 45A.050 and 45A.230 authorizes the Secretary of the Finance and Administration Cabinet to procure, manage and control all supplies and services that are procured by the Commonwealth and to intervene in controversies among vendors and state agencies; and

**NOW, THEREFORE**, pursuant to the authority vested in me by KRS 42.014, KRS 12.270, KRS 45A.050, and 45A.230, I, Lori H. Flanery, Secretary of the Finance and Administration Cabinet, do hereby order and direct the following:

I. Upon the request of an Executive Branch agency, the Finance and Administration Cabinet ("FAC") shall formally review any dispute arising where the agency has requested documents from a private vendor that holds a state contract and the vendor has refused access to said documents under a claim that said documents are not directly pertinent or relevant to the agency's inquiry upon which the document request was predicated.

II. Upon the request of an Executive Branch agency, the FAC shall formally review any situation where the agency has requested documents that the agency deems necessary to

conduct audits, investigations or any other formal inquiry where a dispute has arisen as to what documents are necessary to conclude the inquiry.

III. Upon receipt of a request by a state agency pursuant to Sections I & II, the FAC shall consider the request from the Executive Branch agency and the position of the vendor or party opposing the disclosure of the documents, applying any and all relevant law to the facts and circumstances of the matter in controversy. After FAC's review is complete, FAC shall issue a Determination which sets out FAC's position as to what documents and/or records, if any, should be disclosed to the requesting agency. The Determination shall be issued within 30 days of receipt of the request from the agency. This time period may be extended for good cause.

IV. If the Determination concludes that documents are being wrongfully withheld by the private vendor or other party opposing the disclosure from the state agency, the private vendor shall immediately comply with the FAC's Determination. Should the private vendor or other party refuse to comply with FAC's Determination, then the FAC, in concert with the requesting agency, shall effectuate any and all options that it possesses to obtain the documents in question, including, but not limited to, jointly initiating an action in the appropriate court for relief.

V. Any provisions of any prior Order that conflicts with the provisions of this Order shall be deemed null and void.

## SPECIAL NOTE FOR RECIPROCAL PREFERENCE

### Reciprocal preference to be given by public agencies to resident bidders

**By reference, KRS 45A.490 to 45A.494 are incorporated herein and in compliance regarding the bidders residency. Bidders who want to claim resident bidder status should complete the Affidavit for Claiming Resident Bidder Status along with their bid in the Expedite Bidding Program. Submittal of the Affidavit should be done along with the bid in Bid Express.**

**PROJECT TRAFFIC COORDINATOR (PTC)**

Be advised this project is a significant project pursuant to section 112.03.12.

**SURFACING AREAS**

MP 13.100-15.746

The Department estimates the mainline surfacing width to be varied 48-60 feet.

The Department estimates the total mainline area to be surfaced to be 2,355 square yards.

MP 19.057-19.400

The Department estimates the mainline surfacing width to be 48 feet.

The Department estimates the total mainline area to be surfaced to be 1,380 square yards.

**FUEL AND ASPHALT PAY ADJUSTMENT**

The Department has included the Contract items Asphalt Adjustment and Fuel Adjustment for possible future payments at an established Contract unit price of $1.00. The Department will calculate actual adjustment quantities after work is completed. If existing Contract amount is insufficient to pay all items on the contract with the adjustments, the Department will establish additional monies with a change order.

# SPECIAL NOTE FOR JPC INTERSECTION PAVEMENT

## I. DESCRIPTION

Except as specified herein, construct Jointed Plain Concrete (JPC) intersection pavement in accordance with the Department's Standard and Supplemental Specifications, Special Provisions and Special Notes, and Standard and Sepia Drawings, current editions, and as directed by the Engineer. Section references are to the Standard Specifications. Furnish all materials, equipment, labor, and incidentals for:

(1) Removing asphalt and/or concrete pavement and replacing with JPC Pavement; (2) Maintaining and controlling traffic; and (3) All other work specified as part of this contract.

## II. MATERIALS

The Department will sample and test all materials according to the Department's sampling Manual. Make the materials available for sampling a sufficient time in advance of their use, to allow for the necessary time for testing, unless otherwise specified in these notes.

**A. Maintain and Control Traffic.** See Traffic Control Plan.

**B. Dense Graded Aggregate.** Do not furnish Crushed Stone Base in lieu of DGA.

**C. Jointed Plain Cement Concrete Pavement.** Use JPC Pavement 10 IN/24. At Contractor's request and at no additional cost to the Department, the Engineer may approve other high early strength rapid setting concrete. The Department will allow either central mixing or truck mixing.

**D. Joint Sealant.** Use hot poured elastic, no alternates.

**E. Traffic Signal Loops.** See Special Notes for Traffic Signal Preformed Loop Replacement.

## III. CONSTRUCTION METHODS

**A. Maintain and Control Traffic.** See Traffic Control Plan.

**B. Site Preparation.** Be responsible for all site preparation, including but not limited to, incidental excavation and backfilling; removal of all obstructions or any other items; disposal of materials; sweeping and removal of debris; shoulder preparation and restoration; temporary and permanent erosion and pollution control; final dressing, clean

up, and seeding; and all incidentals. Perform all Site Preparation only as approved or directed by the Engineer.

**C. Pavement Removal.** Consider pavement removal locations and dimensions shown on the drawings to be approximate only; the Engineer will determine exact locations and dimensions at the time of construction. Prior to removal, saw-cut existing asphalt and/or concrete pavement at locations directed by the Engineer to provide a neat edge where new concrete will adjoin existing pavement. Remove existing asphalt and/or concrete pavement, underlying stone base if necessary to provide for the specified thickness of the replacement JPC Pavement.

**D. Concrete Pavement Replacement.** Prior to pavement removal and placing JPC Pavement, obtain the Engineer's approval of proposed method of construction for ensuring and establishing a smooth profile. Immediately after removing asphalt pavement, stabilize the base as directed by the Engineer with DGA and place the replacement JPC in a continuous operation in accordance with the Traffic Control Plan Phasing and as directed by the Engineer. Construct the replacement JPC Pavement with a minimum depth of 10 inches; however, transition the finished grade to match adjacent pavement that is to remain in place; therefore, the actual thickness of the pavement may be greater than 10 inches in some areas. Consolidate the concrete, strike off, machine finish with a vibrating or roller screed, and straightedge the plastic concrete with a straightedge conforming to Section 501.02.18. Test the profile of the finished pavement with a 12 foot straight edge according to Section 501.03.19. Provide positive drainage upon completion of construction.

**E. Joint Sealing.** Saw, clean, and seal all transverse and longitudinal joints as shown on the standard drawings and as directed the Engineer.

**F. Traffic Signal Loops.** See Special Notes for Traffic Signal Preformed Loop Replacement. Protect lead wires from each loop to the junction box during each phase of the construction sequence at no additional cost to the Department.

**G. Disposal of Waste.** Dispose of all cuttings, debris, and other waste off the right-of-way at sites obtained by the Contractor at no additional cost to the Department. See Special Note for Waste and Borrow.

**H. Pavement Markings.** See traffic Control Plan.

**I. On-Site Inspection.** Prior to submitting a bid, make a thorough inspection of the site and become thoroughly familiar with the existing conditions so that the work can be expeditiously performed after a contract is awarded. The Department will consider submission of a bid as evidence of this inspection having been made. The Department will not honor any claims resulting from site conditions.

**J. Property Damage and Restoration.** Be responsible for all damage to public and/or private property resulting from the work. Repair or replace all damaged roadway features in like kind materials and design at no additional cost to the Department. Repair or replace damaged private property in like kind materials and design to the satisfaction of the owner.

**K. Caution.** Consider information shown on the drawings and in this proposal and the types and quantities of work listed are approximate only, and not as an accurate or complete evaluation of the material and conditions to be encountered during construction. The bidder must draw his own conclusion as to the conditions encountered. The Department does not give any guarantee as to the accuracy of the data and no claim will be considered for additional compensation if the conditions encountered are not in accordance with the information shown.

**L. Utility Clearance.** Determine the location of all underground and overhead utilities prior to construction. It is not anticipated that utility facilities will need to be relocated and/or adjusted; however, in the event that work does require relocation and/or adjustment, the utility companies will work concurrently with the Contractor while relocating their facilities.

**M. Final Dressing, Clean Up, and Seeding and Protection.** After all work is completed, remove all waste and debris from the construction sites. Remove all temporary shoulder widening and restore disturbed shoulders. Perform Class A final dressing on all disturbed areas. Sow disturbed earthen areas with Seed Mixture No. 1.

**N. Coordination of Work.** Be advised that other projects may be in progress within or in the near vicinity of this project. Take into consideration that the traffic control of those projects may affect this project and the traffic control of this project may affect those projects. Coordinate the work on this project with the work of the other contractors. In case of a conflict, the Engineer will determine the relative priority to give to work phasing on the various projects.

## IV. METHOD OF MEASUREMENT

The Department will measure only the bid items listed. All other items required to complete the construction shall be incidental to the listed bid items.

**A. Maintain and Control Traffic.** See Traffic Control Plan.

**B. Site Preparation.** Other than the bid items listed, site preparation will not be measured for payment, but will be incidental to the other items of the work.

**C. Remove Pavement.** The Department will measure removed asphalt pavement in square yards.

**D. JPC Pavement-10 IN/24.** See Section 502.04.01 and Section 501.04.01.

**E. Joint Sealing.** The Department will measure Joint Sealing for payment in Linear Feet.

**F. Signal Loops.** See Special Notes for Traffic Signal Preformed Loop Replacement.

**G. Smooth Dowels, Deformed Tie Bars, and Hook Bolts.** The Department will not measure smooth dowels, deformed tie bars and hook bolts, but will be incidental to JPC Pavement-10 IN/24.

## IV. BASIS OF PAYMENT

The Department will make payment only for the bid items listed. All other items required to complete the construction shall be incidental to the bid items listed.

**A. Maintain and Control Traffic.** See Traffic Control Plan.

**B. Remove Pavement.** Payment at the contract unit price per square yard shall be full compensation for saw cutting, milling and texturing, and removing existing pavement (asphalt and/or concrete); disposing of waste and debris.

**C. JPC Pavement-10 IN/24.** See Section 502.05.

**D. Joint Sealing.** Payment at the contract unit price per linear foot shall be full compensation for sawing, cleaning and resealing all transverse and longitudinal joints, and disposing of waste and debris.

**D. Signal Loops.** See Special Notes for Traffic Signal Preformed Loop Replacement.

## SPECIAL NOTE FOR STAKING

In addition to the requirements of Section 201, perform the following:

1. Contrary to Section 201.03.01, perform items 1-3 usually performed by the Engineer; and
2. Field survey the existing pavement in order to establish the existing cross slopes, transitions and profile. Irregularities in the existing pavement are to be eliminated with the construction of a smooth line and grade of the new JPC pavement to ensure the best rideability possible.
3. Verify intersection and lane profile and alignment and prepare a Drainage Development Worksheet to provide for positive drainage upon completion of construction; and
4. Prior to incorporating into the work, obtain the Engineers approval of all designs and revisions to be provided by the Contractor; and
5. Produce and furnish to the Engineer "As Built" plans; and
6. Perform any and all other staking operations required to control and construct the work.
7. No direct payment will be made for staking. Staking will be incidental to other items of work.

# SPECIAL PROVISION FOR WASTE AND BORROW SITES

Obtain U.S. Army Corps of Engineer's approval before utilizing a waste or borrow site that involves "Waters of the United States". The Corps of Engineers defines "Waters of the United States" as perennial or intermittent streams, ponds or wetlands. The Corps of Engineers also considers ephemeral streams, typically dry except during rainfall but having a defined drainage channel, to be jurisdictional waters. Direct questions concerning any potential impacts to "Waters of the United States" to the attention of the appropriate District Office for the Corps of Engineers for a determination prior to disturbance. Be responsible for any fees associated with obtaining approval for waste and borrow sites from the U.S. Army Corps of Engineer or other appropriate regulatory agencies.

1-296 Waste & Borrow Sites
01/02/2012

# TRAFFIC CONTROL PLAN

## TRAFFIC CONTROL GENERAL

Except as provided herein, maintain and control traffic in accordance with the Standard and Supplemental Specifications and the Standard and Sepia Drawings, current editions. Except for the roadway and traffic control bid items listed, all items of work necessary to maintain and control traffic will be paid at the lump sum bid price to "Maintain and Control Traffic".

Contrary to Section 106.01, furnish new, or used in like new condition, traffic control devices at the beginning of the work and maintain in like new condition until completion of the work.

## PROJECT PHASING & CONSTRUCTION PROCEDURES

The Engineer may specify additional days and hours when lane closures will not be allowed.

At locations with three or more lanes, maintain one lane of traffic in each direction at all times during construction. At locations with two lanes, maintain alternating one way traffic during construction. Provide a minimum clear lane width of 12 feet; however, provide for passage of vehicles of up to 16 feet in width. If traffic should be stopped due to construction operations, and a school bus on an official run arrives on the scene, make provisions for the passage of the bus as quickly as possible.

**Once work has begun, the contractor shall have 30 calendar days to complete the installation of the JPC pavement and remove all lane closures.**

## LANE CLOSURES

Do not leave lane closures in place during non-working hours.

## SIGNS

Contrary to section 112.04.02, only long term signs (signs intended to be continuously in place for more than 3 days) will be measured for payment; short term signs (signs intended to be left in place for 3 days or less) will not be measured for payment but will be incidental to Maintain and Control Traffic.

## CHANGEABLE MESSAGE SIGNS

Provide changeable message signs in advance of and within the project at locations determined by the Engineer. If work is in progress concurrently in both directions or if more than one lane closure is in place in the same direction of travel, provide additional changeable message signs as directed by the Engineer. Place changeable message signs one mile in advance of the anticipated queue at each lane closure. As the actual queue lengthens and/or shortens, relocate or provide additional changeable message signs so that traffic has warning of slowed or stopped traffic at least one mile but not more than two miles before reaching the end of the actual queue. The Engineer may vary the designated locations as the work progresses. The Engineer will determine the messages to be displayed. In the event of damage or mechanical/electrical failure, repair or replace the Changeable Message Sign within 24 hours. The Department will measure for payment the maximum number of Changeable Message Signs in concurrent use at the same time on a single day on all sections of the contract. The Department will measure individual Changeable Message Signs only once for payment, regardless of how many times they are set, reset, removed, and relocated during the duration of the project. The Department will not measure replacements for damaged Changeable Message Signs or for signs the Engineer directs be replaced due to poor condition or readability. Retain possession of the Changeable Message Signs upon completion of the work.

## ARROW PANELS

Use arrow panels as shown on the Standard Drawings or as directed by the Engineer. The Department will measure for payment the maximum number of arrow panels in concurrent use at the same time on a single day on all sections of the contract. The Department will measure for payment the maximum number of Changeable Message Signs in concurrent use at the same time on a single day on all sections of the contract. The Department will measure individual Arrow Panels only once for payment, regardless of how many times they are set, reset, removed, and relocated during the duration of the project. The Department will not measure replacements for damaged Arrow Panels or for panels signs the Engineer directs be replaced due to poor condition or readability for payment. Retain possession of the Arrow Panels upon completion of the work.

## TEMPORARY ENTRANCES

The Engineer will not require the Contractor to provide continuous access to farms, single family, duplex, or triplex residential properties during working hours; however, provide reasonable egress and ingress to each such property when actual operations are not in progress at that location. Limit the time during which a farm or residential entrance is blocked to the minimum length of time required for actual operations, not extended for the Contractor's convenience, and in no case exceeding six (6) hours. Notify all residents twenty-four hours in advance of any driveway or entrance closings and make any accommodations necessary to meet the access needs of disabled residents.

**Maintain direct access to all side streets and roads, schools, churches, commercial properties and apartments or apartment complexes of four or more units at all times.**

**Maintain direct access to all commercial business during all business hours, either by partial width construction or by completing work during non-business hours.**

The Department will measure asphalt materials required to construct and maintain any temporary entrances which may be necessary to provide temporary access; however, the Department will not measure aggregates, excavation, and/or embankment, but shall be incidental to Maintain and Control Traffic. The Engineer will determine the type of surfacing material, asphalt or aggregate, to be used at each entrance.

## TRAFFIC SIGNAL LOOPS

Install traffic signal loops according to the Special Notes for Traffic Signal Loop Replacement. Coordinate the placement of the loops with the Engineer.

## THERMOPLASTIC INTERSECTION MARKINGS

Consider the locations listed on the summary as approximate only. Prior to milling and/or resurfacing, locate and document the locations of the existing markings. After resurfacing, replace the markings at their approximate existing locations or as directed by Engineer. Place markings not existing prior to resurfacing as directed by the Engineer.

## BARRICADES

The Department will not measure barricades used in lieu of barrels and cones for channelization or delineation, but shall be incidental to Maintain and Control Traffic according to Section 112.04.01.

The Department will measure barricades used to protect pavement removal areas in individual units Each. The Department will measure for payment the maximum number of barricades in concurrent use at the same time on a single day on all sections of the contract. The Department will measure individual barricades only once for payment, regardless of how many times they are set, reset, removed, and relocated during the duration of the project. The Department will not measure replacements for damaged barricades the Engineer directs to be replaced due to poor condition or reflectivity. Retain possession of the Barricades upon completion of the work.

**PAVEMENT MARKINGS**

If there is to be a deviation from the existing striping plan, the Engineer will furnish the Contractor a striping plan prior to placement of the final surface course. Install Temporary Striping according to Section 112 with the following exceptions:

1. Place Temporary or Permanent Striping before opening a lane to traffic; and
2. If the Contractor's operations or phasing requires temporary markings that must subsequently be removed from the final surface course, use an approved removable lane tape; however, the Department will not measure removable lane tape for separate payment, but will measure and pay for removable lane tape as temporary striping.

**PAVEMENT EDGE DROP-OFFS**

Do not allow a pavement edge between opposing directions of traffic or lanes that traffic is expected to cross in a lane change situation with an elevation difference greater than 1½". Place Warning signs (MUTCD W8-11 or W8-9A) in advance of and at 1500' intervals throughout the drop-off area. Dual post the signs on both sides of the traveled way. Wedge all transverse transitions between resurfaced and unresurfaced areas which traffic may cross with asphalt mixture for leveling and wedging. Remove the wedges prior to placement of the final surface course.

Protect pavement edges that traffic is not expected to cross, except accidentally, as follows:

Less than 2" - No protection required.

2" to 4" - Place plastic drums, vertical panels, or barricades every 50 feet. During daylight working hours only, the Engineer will allow the Contractor to use cones in lieu of plastic drums, panels, and barricades. Wedge the drop-off with DGA or asphalt mixture for leveling and wedging with a 1:1 or flatter slope in daylight hours, or 3:1 or flatter slope during nighttime hours, when work is not active in the drop-off area.

Greater than 4' - Protect drop-offs greater than 4 inches within 10 feet of traffic by placing drums, vertical panels, or barricades every 25 feet. The Engineer will not allow the use of cones in lieu of drums, vertical panels, or barricades for drop-offs greater than 4". Place Type III Barricades directly in front of the drop-off facing on coming traffic in both directions of travel. Provide warning signs as shown on the Standard Drawings or as directed by the Engineer

Pedestrians & Bicycles - Protect pedestrian and bicycle traffic as directed by the engineer.

# USE AND PLACEMENT OF CHANGEABLE MESSAGE SIGNS

The following policy is based upon current Changeable Message Signs (CMS) standards and practice from many sources, including the Federal Highway Administration (FHWA), other State Departments of Transportation, and Traffic Safety Associations. It is understood that each CMS installation or use requires individual consideration due to the specific location or purpose. However, there will be elements that are constant in nearly all applications. Accordingly these recommended guidelines bring a level of uniformity, while still being open to regional experience and engineering judgment.

## Application

The primary purpose of CMS is to advise the driver of unexpected traffic and routing situations. Examples of applications where CMS can be effective include:

- Closures (road, lane, bridge, ramp, shoulder, interstate)
- Changes in alignment or surface conditions
- Significant delays, congestion
- Construction/maintenance activities (delays, future activities)
- Detours/alternative routes
- Special events with traffic and safety implications
- Crash/incidents
- Vehicle restrictions (width, height, weight, flammable)
- Advance notice of new traffic control devices
- Real-time traffic conditions (must be kept up to date)
- Weather /driving conditions, environmental conditions, Roadway Weather Information Systems
- Emergency Situations
- Referral to Highway Advisory Radio (if available)
- Messages as approved by the County Engineer's Office

**CMS should not be used for**:

- Replacement of static signs (e.g. road work ahead), regulatory signage (e.g. speed limits), pavement markings, standard traffic control devices, conventional warning or guide signs.
- Replacement of lighted arrow board
- Advertising (Don't advertise the event unless clarifying "action" to be taken by driver – e.g. Speedway traffic next exit)
- Generic messages
- Test messages (portable signs only)
- Describe recurrent congestion (e.g. rush hour)
- Public service announcements (not traffic related

**Messages**

Basic principles that are important to providing proper messages and insuring the proper operation of a CMS are:

- Visible for at least ½ mile under ideal daytime and nighttime conditions
- Legible from all lanes a minimum of 650 feet
- Entire message readable twice while traveling at the posted speed
- Nor more than two message panels should be used (three panels may be used on roadways where vehicles are traveling less than 45 mph). A panel is the message that fits on the face of the sign without flipping or scrolling.
- Each panel should convey a single thought; short and concise
- Do not use two unrelated panels on a sign
- Do not use the sign for two unrelated messages
- Should not scroll text horizontally or vertically
- Should not contain both the words left and right
- Use standardized abbreviations and messages
- Should be accurate and timely
- Avoid filler/unnecessary words and periods (hazardous, a, an, the)
- Avoid use of speed limits
- Use words (not numbers) for dates

**Placement**

Placement of the CMS is important to insure that the signs is visible to the driver and provides ample time to take any necessary action. Some of the following principles may only be applicable to controlled access roadways. The basic principles of placement for a CMS are:

- When 2 signs are needed, place on same side of roadway and at least 1,000 feet apart
- Place behind semi-rigid/rigid protection (guardrail, barrier) or outside of the clear zone
- Place 1,000 feet in advance of work zone; at least one mile ahead of decision point
- Normally place on right side of roadway; but should be placed closest to the affected lane so that either side is acceptable
- Signs should not be dual mounted (one on each side of roadway facing same direction)
- Point trailer hitch downstream
- Secure to immovable object to prevent thief (if necessary)
- Do not place in sags or just beyond crest
- Check for reflection of sun to prevent the blinding of motorist
- Should be turned ~3 degrees outward from perpendicular to the edge of pavement
- Bottom of sign should be 7 feet above the elevation of edge of roadway
- Should be removed when not in use
-

**Standard Abbreviations**

The following is a list of standard abbreviations to be used on CMS.

| Word | Abbrev. | Example |
|---|---|---|
| Access | ACCS | ACCIDENT AHEAD/USE ACCS RD NEXT RIGHT |
| Alternate | ALT | ACCIDENT AHEAD/USE ALT RTE NEXT RIGHT |
| Avenue | AVE | FIFTH AVE CLOSED/DETOUR NEXT LEFT |
| Blocked | BLKD | FIFTH AVE BLKD/MERGE LEFT |
| Boulevard | BLVD | MAIN BLVD CLOSED/USE ALT RTE |
| Bridge | BRDG | SMITH BRDG CLOSED/USE ALT RTE |
| Cardinal Directions | N, S, E, W | N I75 CLOSED/ DETOUR EXIT 30 |
| Center | CNTR | CNTR LANE CLOSED/MERGE LEFT |
| Commercial | COMM | OVRSZ COMM VEH/USE I275 |
| Condition | COND | ICY COND POSSIBLE |
| Congested | CONG | HVY CONG NEXT 3 MI |
| Construction | CONST | CONST WORK AHEAD/EXPECT DELAYS |
| Downtown | DWNTN | DWNTN TRAF USE EX 40 |
| Eastbound | E-BND | E-BND I64 CLOSED/DETOUR EXIT 20 |
| Emergency | EMER | EMER VEH AHEAD/PREPARE TO STOP |
| Entrance, Enter | EX, EXT | DWNTN TRAF USE EX 40 |
| Expressway | EXPWY | WTRSN EXPWY CLOSED/DETOUR EXIT 10 |
| Freeway | FRWY, FWY | GN SYNDR FWY CLOSED/DETOUR EXIT 15 |
| Hazardous Materials | HAZMAT | HAZMAT IN ROADWAY/ALL TRAF EXIT 25 |
| Highway | HWY | ACCIDENT ON AA HWY/EXPECT DELAYS |
| Hour | HR | ACCIDENT ON AA HWY/2 HR DELAY |
| Information | INFO | TRAF INFO TUNE TO 1240 AM |
| Interstate | I | E-BND I64 CLOSED/DETOUR EXIT 20 |
| Lane | LN | LN CLOSED/MERGE LEFT |
| Left | LFT | LANE CLOSED/MERGE LFT |
| Local | LOC | LOC TRAF USE ALT RTE |
| Maintenance | MAINT | MAINT WRK ON BRDG/SLOW |
| Major | MAJ | MAJ DELWAYS I75/USE ALT RTE |

| | | |
|---|---|---|
| Mile | MI | ACCIDENT 3 MI AHEAD/ USE ALT RTE |
| Minor | MNR | ACCIDENT 3 MI MNR DELAY |
| Minutes | MIN | ACCIDENT 3 MI/30 MIN DELAY |
| Northbound | N-BND | N-BND I75 CLOSED/ DETOUR EXIT 50 |
| Oversized | OVRSZ | OVRSZ COMM VEH/USE I275 NEXT RIGHT |
| Parking | PKING | EVENT PKING NEXT RGT |
| Parkway | PKWY | CUM PKWAY TRAF/DETOUR EXIT 60 |
| Prepare | PREP | ACCIDENT 3 MIL/PREP TO STOP |
| Right | RGT | EVENT PKING NEXT RGT |
| Road | RD | HAZMAT IN RD/ALL TRAF EXIT 25 |
| Roadwork | RDWK | RDWK NEXT 4 MI/POSSIBLE DELAYS |
| Route | RTE | MAJ DELAYS I75/USE ALT RTE |
| Shoulder | SHLDR | SHLDR CLOSED NEXT 5 MI |
| Slippery | SLIP | SLIP COND POSSIBLE/ SLOW SPD |
| Southbound | S-BND | S-BND I75 CLOSED/DETOUR EXIT 50 |
| Speed | SPD | SLIP COND POSSIBLE/ SLOW SPD |
| Street | ST | MAIN ST CLOSED/USE ALT RTE |
| Traffic | TRAF | CUM PKWAY TRAF/DETOUR EXIT 60 |
| Vehicle | VEH | OVRSZ COMM VEH/USE I275 NEXT RIGHT |
| Westbound | W-BND | W-BND I64 CLOSED/DETOUR EXIT 50 |
| Work | WRK | CONST WRK 2MI/POSSIBLE DELAYS |

Certain abbreviations are prone to inviting confusion because another word is abbreviated or could be abbreviated in the same way. DO NO USE THESE ABBREVIATIONS.

| **Abbrev.** | **Intended Word** | **Word Erroneously Given** |
|---|---|---|
| ACC | Accident | Access (Road) |
| CLRS | Clears | Colors |
| DLY | Delay | Daily |
| FDR | Feeder | Federal |
| L | Left | Lane (merge) |
| LOC | Local | Location |
| LT | Light (traffic) | Left |
| PARK | Parking | Park |
| POLL | Pollution (index) | Poll |
| RED | Reduce | Red |
| STAD | Stadium | Standard |

| | | |
|---|---|---|
| TEMP | Temporary | Temperature |
| WRNG | Warning | Wrong |

**TYPICAL MESSAGES**

The following is a list of typical messages used on CMS. The list consists of the reason or problem that you want the driver to be aware of and the action that you want the driver to take.

| **Reason/Problem** | Action |
|---|---|
| ACCIDENT | ALL TRAFFIC EXIT RT |
| ACCIDENT/XX MILES | AVOID DELAY USE XX |
| XX ROAD CLOSED | CONSIDER ALT ROUTE |
| XX EXIT CLOSED | DETOUR |
| BRIDGE CLOSED | DETOUR XX MILES |
| BRIDGE/(SLIPPERY, ICE, ETC.) | DO NOT PASS |
| CENTER/LANE/CLOSED | EXPECT DELAYS |
| DELAY(S), MAJOR/DELAYS | FOLLOW ALT ROUTE |
| DEBRIS AHEAD | KEEP LEFT |
| DENSE FOG | KEEP RIGHT |
| DISABLED/VEHICLE | MERGE XX MILES |
| EMER/VEHICLES/ONLY | MERGE LEFT |
| EVENT PARKING | MERGE RIGHT |
| EXIT XX CLOSED | ONE-WAY TRAFFIC |
| FLAGGER XX MILES | PASS TO LEFT |
| FOG XX MILES | PASS TO RIGHT |
| FREEWAY CLOSED | PREPARE TO STOP |
| FRESH OIL | REDUCE SPEED |
| HAZMAT SPILL | SLOW |
| ICE | SLOW DOWN |
| INCIDENT AHEAD | STAY IN LANE |
| LANES (NARROW, SHIFT, MERGE, ETC.) | STOP AHEAD |
| LEFT LANE CLOSED | STOP XX MILES |
| LEFT LANE NARROWS | TUNE RADIO 1610 AM |
| LEFT 2 LANES CLOSED | USE NN ROAD |
| LEFT SHOULDER CLOSED | USE CENTER LANE |
| LOOSE GRAVEL | USE DETOUR ROUTE |
| MEDIAN WORK XX MILES | USE LEFT TURN LANE |
| MOVING WORK ZONE, WORKERS IN ROADWAY | USE NEXT EXIT |
| NEXT EXIT CLOSED | USE RIGHT LANE |
| NO OVERSIZED LOADS | WATCH FOR FLAGGER |
| NO PASSING | |
| NO SHOULDER | |
| ONE LANE BRIDGE | |

PEOPLE CROSSING
RAMP CLOSED
RAMP (SLIPPERY, ICE, ETC.)
RIGHT LANE CLOSED
RIGHT LANE NARROWS
RIGHT SHOULDER CLOSED
ROAD CLOSED
ROAD CLOSED XX MILES
ROAD (SLIPPERY, ICE, ETC.)
ROAD WORK
ROAD WORK (OR CONSTRUCTION) (TONIGHT, TODAY, TOMORROW, DATE)
ROAD WORK XX MILES
SHOULDER (SLIPPERY, ICE, SOFT, BLOCKED, ETC.)
NEW SIGNAL XX MILES
SLOW 1 (OR 2) - WAY TRAFFIC
SOFT SHOULDER
STALLED VEHICLES AHEAD
TRAFFIC BACKUP
TRAFFIC SLOWS
TRUCK CROSSING
TRUCKS ENTERING
TOW TRUCK AHEAD
UNEVEN LANES
WATER ON ROAD
WET PAINT
WORK ZONE XX MILES
WORKERS AHEAD

# SPECIAL NOTES FOR TRAFFIC SIGNAL PREFORMED LOOP REPLACEMENT

**I. DESCRIPTION.** Loop replacement shall be performed in accordance with the Department's Standard Specifications (current edition), applicable Standard Drawings, and applicable Special Provisions except as hereafter specified. Article references are to the Standard Specifications.

The Contractor shall furnish all materials, labor, and equipment for the replacement of traffic signal loop(s), and junction boxes (if the contract specifies quantities for this bid item elsewhere), and maintaining and controlling traffic, and all other work specified as part of this contract.

**II. MATERIALS.** See section 835 of the Standard Specifications.

All preformed loop wire shall be 16-gauge THWN stranded copper, single conductor in a 2-4-2 configuration for Quadrapole and 3 turns for a standard as shown on the Quadrapole and Standard Loop detail. The loop and home run shall be housed in a class A oil resistant heavy-duty reinforced rubber hose with a 250-PSI internal pressure rating. Hose for the loop and home run assembly shall be one continuous piece. The 3/8" I.D. (5/8" O.D.) hose shall be factory assembled. Preformed loops and home runs shall be pre-wired. The loop configurations and homerun lengths shall be assembled for the specific application.

Hose tee connections shall be high temperature synthetic rubber. The tee shall be of proper size to attach directly to the hose, minimizing the glue joints. The tee shall have the same flexible properties as the hose to insure that the whole assembly can conform to pavement movement and shifting without cracking or breaking.

**III. CONSTRUCTION**. See section 723 of the Standard Specifications.

The electrical contractor shall coordinate with the general contractor and inspector to ensure the loops are installed prior to any milling work being performed. The contractor shall be responsible for the removal of existing lead-in cable.

Preformed Quadrapole Loops, Preformed Loops and Preformed Loop Lead-In locations shall be coordinated with the Contractor and the Engineer prior to any work being performed. The Contractor shall be careful to avoid pavement sections where potholes, cracks, or any other roadway flaws exist.

Hose for the preformed loops and home run assembly shall be one continuous piece and shall be extended splice-free to the controller or junction box. Preformed loop cables shown as extended to junction boxes by means of preformed home run cables shall be spliced into loop lead-in cable at the boxes. Loop lead-in cable shall be extended splice-free from the junction box to controller.

The preformed loop dimension shall be 6' x 30' Quadrapole or 6' x 6', as specified. Center and mark each loop in the lane such that its sides are parallel and perpendicular to the direction of traffic.

Each Contractor submitting a bid for this work shall make a thorough inspection of the site prior to submitting his bid and shall thoroughly familiarize himself with existing conditions so that the work can be expeditiously performed after a Contract is awarded. Submission of a bid will be considered evidence of this inspection having been made. Any claims resulting from site conditions will not be honored by the Department.

Information provided in this proposal and the types and quantities of work listed are not to be taken as an accurate or complete evaluation of the material and conditions to be encountered during construction. The bidder must draw his own conclusion as to the conditions encountered. The Department does not give any guarantee as to the accuracy of the data and no claim will be considered for additional compensation if the conditions encountered are not in accordance with the information shown.

It is not anticipated that utility facilities will need to be relocated and/or adjusted; however, in the event that it is discovered that the work does require that utilities be relocated and/or adjusted, the utility companies will work concurrently with the Contractor while relocating their facilities.
Sow all disturbed earthen areas with Seed Mixture No. 1.

**Asphalt or Concrete(4 inches or less) Installation**

Starting at the tee joint, saw-cut a ¾" wide slot to a depth of 6" below the final surface of pavement for three sides of the loop leaving the center leg and the shortest and farthest leg from the home run tee joint for the last saw-cuts. After the three sides have been saw-cut, lay loop in slot to mark the center leg and the fourth side. Pull the loop out of the slot to saw-cut the center leg and the fourth side. Saw-cut a ¾" wide slot for the center leg and the fourth side. Clean any debris, water and loose particles from the slot with compressed air.

Make the saw-cut for the home run slot from each loop to the transition conduit ¾" wide and 6" deep. Clean any debris, water, and loose particles from the slot with compressed air.

Insert the preformed loop wire and home run lead-in into the bottom of the loop slot. Extend the preformed home run lead-in cable splice-free to the junction box or cabinet. No exceptions to this shall be considered.

There shall be a minimum of 6' between loops in adjacent lanes for 12' wide lanes. Once the preformed loop is installed in the roadway, hand place 1" backer rod in the saw slot to ensure preformed loop will not rise out of slot. Contractor shall then fill the saw slot with non-shrink grout until level with road surface. The non-shrink grout shall be incidental to the Loop Saw, Slot and Fill bid item. See Asphalt saw slot detail.

**Concrete(with more than 4 inches) Installation**

Lay the preformed loop wire and home run lead-in on the compacted aggregate prior to pouring the new concrete. There shall be a minimum of six feet between loops in adjacent lanes for 12 foot wide lanes.

**IV. MEASUREMENT.** See Section 723.04 in the Standard Specifications.

Bid notes not included in Section 723 in the Standard Specifications or that are contrary

**Loop saw slot and fill** shall include sawing, cleaning saw slot as well as furnishing and installing loop sealant, backer rod and non-shrink grout as shown on the details. The contractor shall saw according to the dimensions shown on the detail sheets and not cut out any sections of pavement by over-sawing any slot. The ¾" conduit referenced in the Loop Wire Transition details is incidental to this project and not a separate pay item.

**Preformed Quadrapole Loops, Preformed Loops and Preformed Loop Lead-In** shall include furnishing and installing preformed quadrapole loops, preformed loops and preformed loop lead-in. Items installed in saw slots shall be installed as shown on the Saw Slot detail. All connections and fittings required for a full and complete installation of the loops are incidental to this item.

**V. PAYMENT**. The Department will make payment for completed and accepted quantities under the following:

| Code | Pay Item | Pay Unit |
|---|---|---|
| 4792 | Conduit 1" | Linear Foot |
| 4793 | Conduit 1 ¼" | Linear Foot |
| 4795 | Conduit 2" | Linear Foot |
| 4811 | Junction Box Type B | Each |
| 4820 | Trenching and Backfilling | Linear Foot |
| 4850 | Cable-No. 14/1 Pair | Linear Foot |
| 4895 | Loop Saw Slot and Fill | Linear Foot |
| 4894 | Preformed Loop Lead-In | Linear Foot |
| 20453NS835 | Preformed Quadrapole Loops | Linear Foot |
| 20452NS835 | Preformed Loops | Linear Foot |

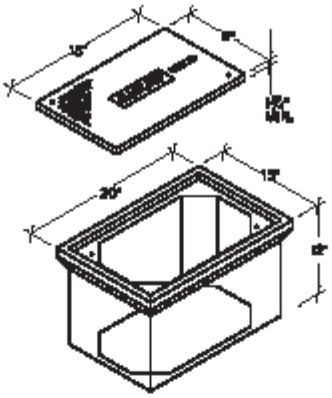

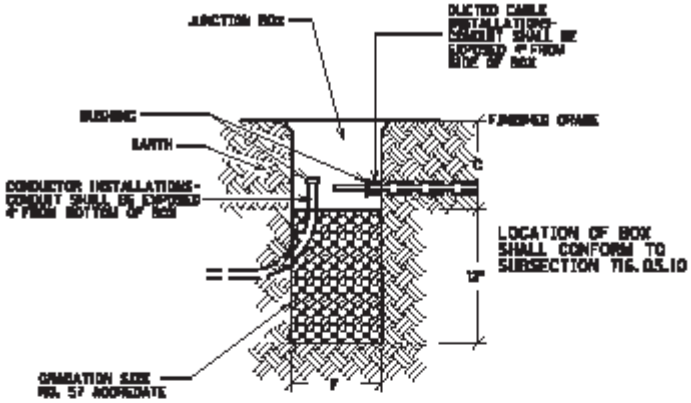


JUNCTION BOX

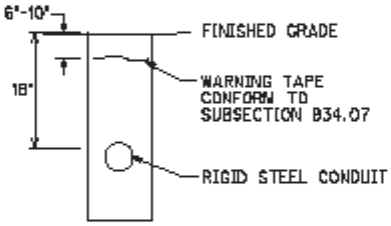


DEPTH OF CONDUIT

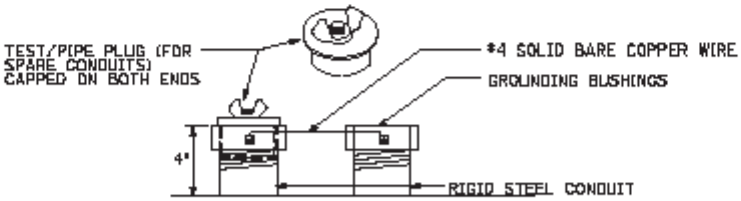


TYPICAL GROUNDING DETAIL

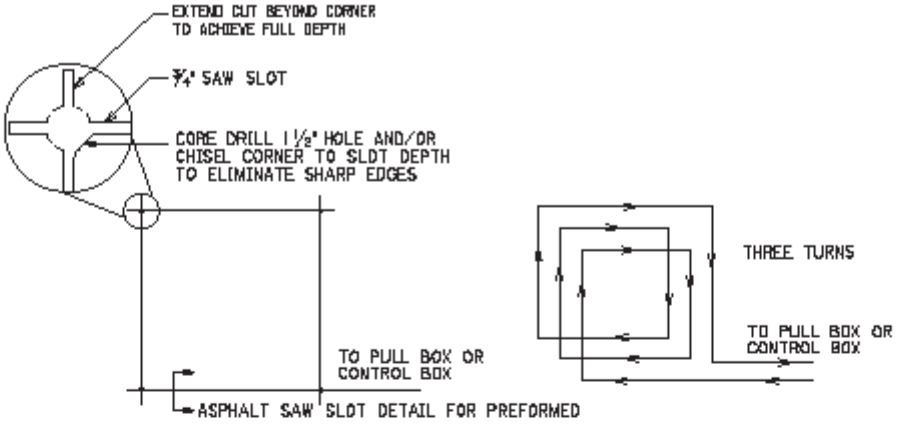


SAW CUT PLAN

WIRING PLAN

6'X6' LOOP

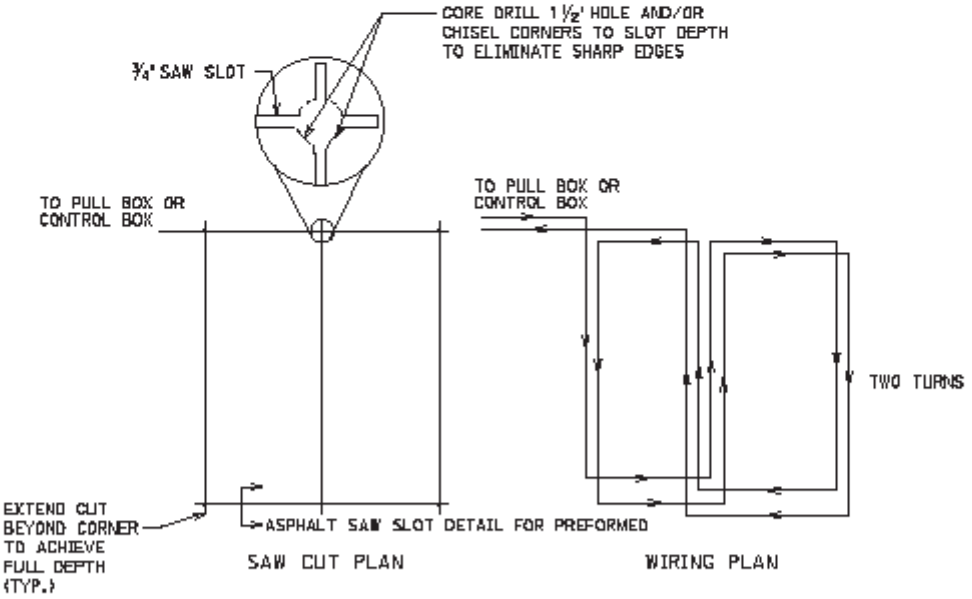


SAW CUT PLAN

WIRING PLAN

6'X30' QUADRAPOLE LOOP

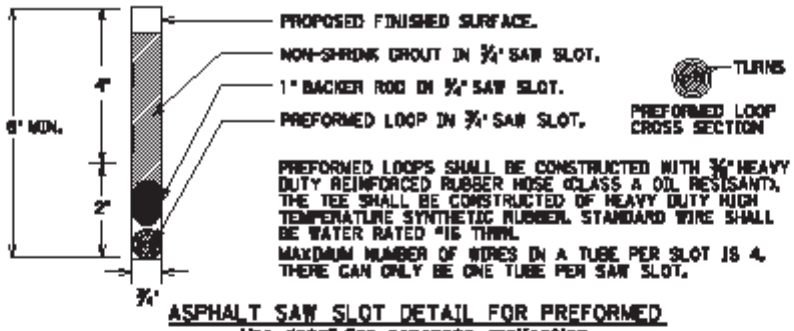


ASPHALT SAW SLOT DETAIL FOR PREFORMED

Use detail for concrete application if concrete is four inches or less

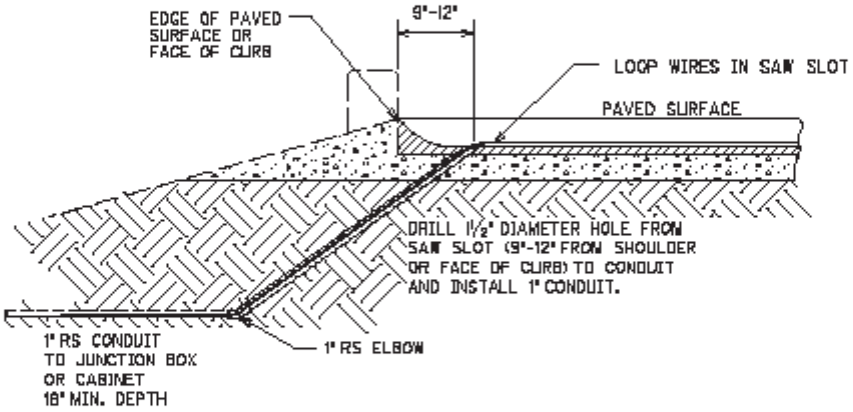


SAW SLOT EDGE OF PAVEMENT TRANSITION

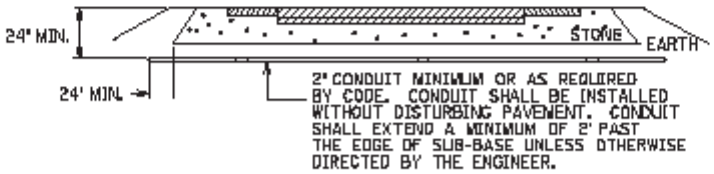


CONDUIT UNDER EXISTING PAVEMENT DETAIL

PREFORMED LOOP LEAD-IN SHALL BE TWISTED WITH THREE TO FIVE TURNS PER FOOT UNTIL TERMINATED AT FIELD CONNECTIONS IN THE CABINET OR CONNECTED TO SHIELDED CABLE.

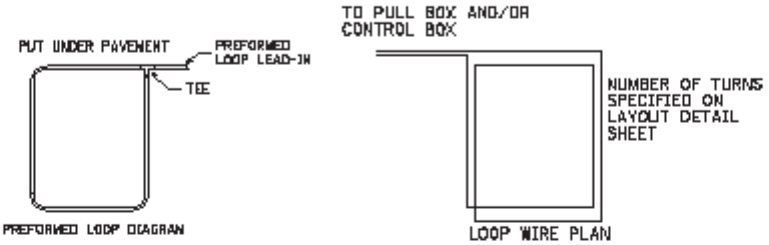


STANDARD PREFORMED LOOP

*ALL LOOPS THAT ARE NOT QUADRAPOLES SHALL BE STANDARD AND HAVE 3 TURNS

PREFORMED LOOP LEAD-IN SHALL BE TWISTED WITH THREE TO FIVE TURNS PER FOOT UNTIL TERMINATED AT FIELD CONNECTIONS IN THE CABINET OR CONNECTED TO SHIELDED CABLE.

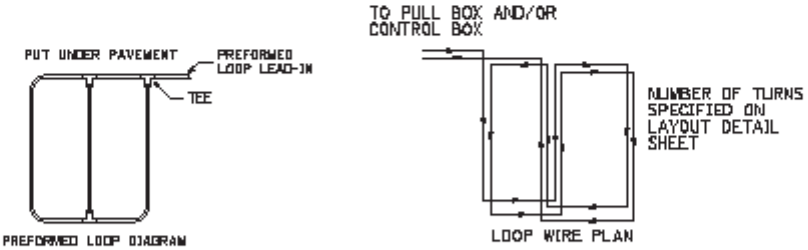


QUADRAPOLE PREFORMED LOOP

*ALL 6'x30' LOOPS SHALL BE QUADRAPOLE AND SHALL HAVE A 2-4-2 CONFIGURATION

# SPECIAL NOTE FOR EROSION CONTROL

## I. DESCRIPTION

Except as provided herein, perform all erosion and water pollution control work in accordance with the Department's Standard and Supplemental Specifications, and Standard and Sepia Drawings, current editions, and as directed by the Engineer. Section references are to the Standard Specifications. This work shall consist of:

(1) Developing and preparing a Best Management Practices Plan (BMP) tailored to suit the specific construction phasing for each site within the project; (2) Preparing the project site(s) for construction, including locating, furnishing, installing, and maintaining temporary and/or permanent erosion and water pollution control measures as required by the BMP prior to beginning any earth disturbing activity on the project site; (3) Clearing and grubbing and removal of all obstructions as required for construction; (4) Removing all erosion control devices when no longer needed; (5) Restoring all disturbed areas as nearly as possible to their original condition; (6) Preparing seedbeds and permanently seeding all disturbed areas; (7) Providing a Kentucky Erosion Prevention and Sediment Control Program (KEPSC) qualified inspector; and (8) Performing any other work to prevent erosion and/or water pollution as specified by this contract, required by the BMP, or as directed by the Engineer.

## II. MATERIALS

Except as provided herein, furnish all materials for erosion and water pollution control work in accordance with the Department's Standard and Supplemental Specifications, and Standard and Sepia Drawings, current editions, and as directed by the Engineer.

Provide for all materials to be sampled and tested in accordance with the Department's Sampling Manual. Unless directed otherwise by the Engineer, make the materials available for sampling a sufficient time in advance of the use of the materials to allow for the necessary time for testing.

## III. CONSTRUCTION

Except as provided herein, construct all erosion and water pollution control work in accordance with the Department's Standard and Supplemental Specifications, and Standard and Sepia Drawings, current editions, and as directed by the Engineer.

Be advised, these Erosion Control Plan Notes do not constitute a BMP plan for the project. Jointly with the Engineer, prepare a site specific BMP plan for each drainage area within the project in accordance with Section 213 and the supplemental specifications. Provide a unique BMP at each project site using good engineering practices taking into account existing site conditions, the type of work to be performed, and the construction phasing, methods and techniques to be utilized to complete the work. Be responsible for all erosion prevention, sediment control, and water pollution prevention measures required by the BMP for each site. Represent and warrant compliance with the Clean Water Act (33 USC Section 1251 et seq.), the 404 Permit, the 401 Water Quality Certification, and applicable state and local government agency laws, regulations, rules, specifications, and permits. Contrary to Section 105.05, in case of discrepancy between theses notes, the Standard Specifications, interim Supplemental Specifications, Special and Special Notes, Standard and Sepia Drawings, and such state and local government agency requirements, adhere to the most restrictive requirement.

Conduct operations in such a manner as to minimize the amount of disturbed ground during each phase of the construction and limit the haul roads to the minimum required to perform the work. Preserve existing vegetation not required to be removed by the work or the contract. Seed and/or mulch disturbed areas at the earliest opportunity. Use silt fence, silt traps, temporary ditches, brush barriers, erosion control blankets, sodding, channel lining, and other erosion control measures in a timely manner as required by the BMP and as directed or approved by the Engineer. Prevent sediment laden water from leaving the project, entering an existing drainage structure, or entering a steam.

Provide for erosion control measures to be in place and functioning prior to any earth disturbance within a drainage area. Compute the volume and size of silt control devices necessary to control sediment during each phase of construction. Remove sediment from silt traps before they become a maximum of ½ full. Maintain silt fence by removing accumulated trappings and/or replacing the geotextile fabric when it becomes clogged, damaged, or deteriorated, or when directed by the Engineer. Properly dispose of all materials trapped by erosion control devices at approved sites off the right of way obtained by the Contractor at no additional cost to the Department (See Special Note for Waste and Borrow).

As work progresses, add or remove erosion control measures as required by the BMP applicable to the Contractor's project phasing and construction methods and techniques. Update the volume calculations and modify the BMP as necessary throughout the duration of the project. Ensure that an updated BMP is kept on site and available for public inspection throughout the life of the project.

After all construction is complete, restore all disturbed areas in accordance with Section 212. Completely remove all temporary erosion control devices not required as part of the permanent erosion control from the construction site. Prior to removal, obtain the Engineer's concurrence of items to be removed. Grade the remaining exposed earth (both on and off the Right of-Way) as nearly as possible to its original condition, or as directed by the Engineer. Prepare the seed bed areas and sow all exposed earthen areas with the applicable seed mixture(s) according to Section 212.03.03.

## IV. MEASUREMENT

Contrary to Section 212.04 and 213.04, the Department will not measure Erosion Control items for separate payment, but shall be incidental to Pavement Removal, DGA, Leveling and Wedging, and JPC Pavement as applicable

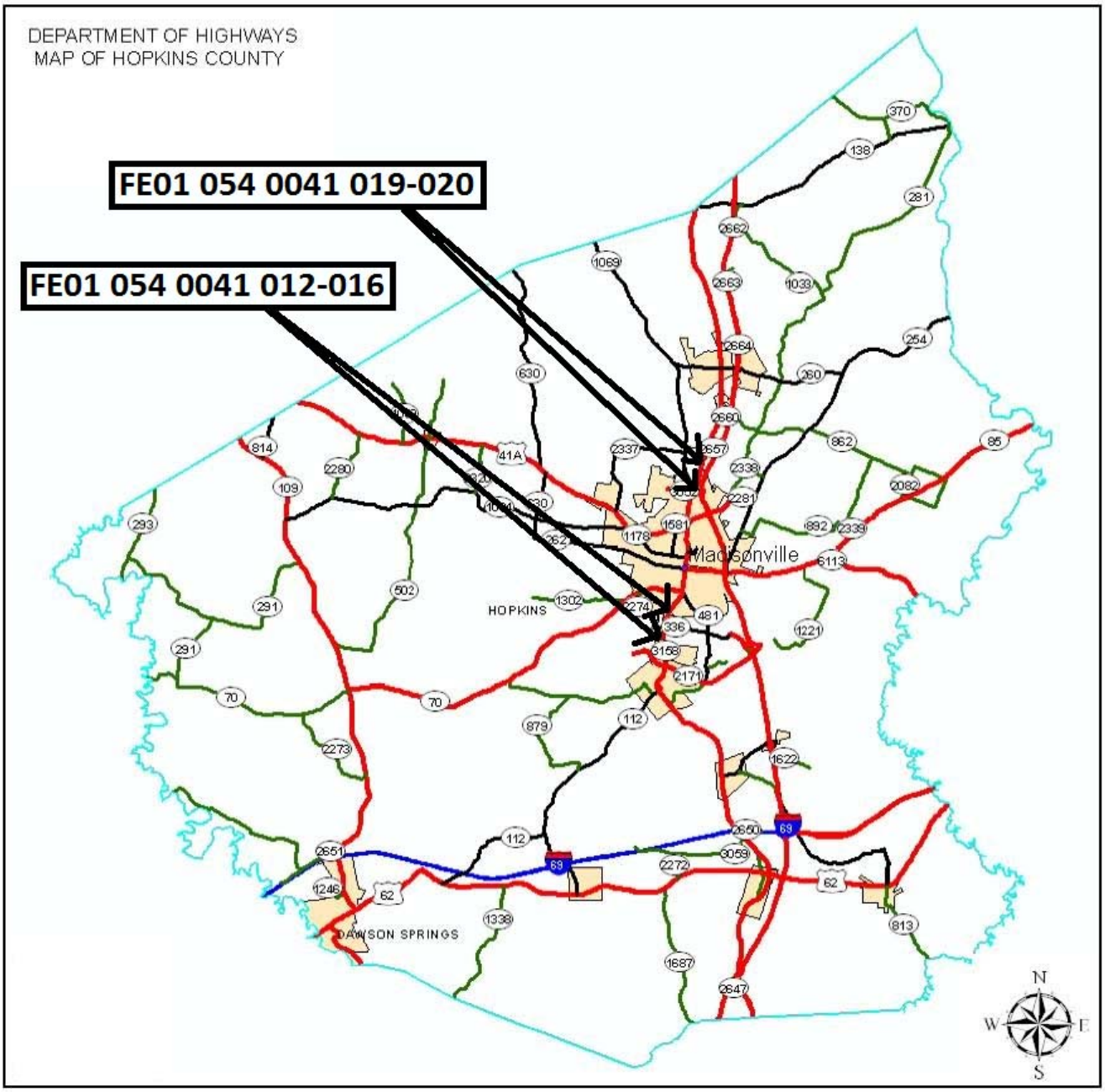
DEPARTMENT OF HIGHWAYS
MAP OF HOPKINS COUNTY
FE01 054 0041 019-020
FE01 054 0041 012-016
Madisonville
HOPKINS
DAWSON SPRINGS
N
W
E
S

# MATERIAL SUMMARY

**CONTRACT ID: 142268** **054GR14P065-FE01** **MP05400411401**

SOUTH MAIN STREET (US 41) FROM 300 FEET SOUTH OF NISBET STREET EXTENDING NORTH TO 40 FEET NORTH OF MCCOY AVENUE-WEST LAKE STREET JPC PAVEMENT REPAIRS, A DISTANCE OF 2.65 MILES.

| Project Line No | Bid Code | DESCRIPTION | Quantity | Unit |
|---|---|---|---|---|
| 0010 | 02014 | BARRICADE-TYPE III | 33.00 | EACH |
| 0020 | 02024 | JPC PAVEMENT-10 IN/24 | 2,355.00 | SQYD |
| 0030 | 02091 | REMOVE PAVEMENT | 2,355.00 | SQYD |
| 0040 | 02115 | SAW-CLEAN-RESEAL TVERSE JOINT | 16,765.00 | LF |
| 0050 | 02116 | SAW-CLEAN-RESEAL LONGIT JOINT | 83,825.00 | LF |
| 0060 | 02562 | TEMPORARY SIGNS | 670.00 | SQFT |
| 0070 | 02650 | MAINTAIN & CONTROL TRAFFIC - (MP 13.100-15.746) | 1.00 | LS |
| 0080 | 02671 | PORTABLE CHANGEABLE MESSAGE SIGN | 2.00 | EACH |
| 0090 | 02775 | ARROW PANEL | 2.00 | EACH |
| 0100 | 04793 | CONDUIT-1 1/4 IN | 280.00 | LF |
| 0110 | 04811 | ELECTRICAL JUNCTION BOX TYPE B | 5.00 | EACH |
| 0120 | 04850 | CABLE-NO. 14/1 PAIR | 250.00 | LF |
| 0130 | 04894 | PREFORMED LOOP/LEAD-IN | 200.00 | LF |
| 0140 | 06514 | PAVE STRIPING-PERM PAINT-4 IN | 45,540.00 | LF |
| 0150 | 06549 | PAVE STRIPING-TEMP REM TAPE-B - (6 INCH) | 300.00 | LF |
| 0160 | 06550 | PAVE STRIPING-TEMP REM TAPE-W - (4 INCH) | 36,432.00 | LF |
| 0170 | 06551 | PAVE STRIPING-TEMP REM TAPE-Y - (4 INCH) | 36,432.00 | LF |
| 0180 | 10020NS | FUEL ADJUSTMENT | 684.00 | DOLL |
| 0190 | 20453ES835 | PREFORMED QUADRAPOLE LOOPS | 2,040.00 | LF |
| 0200 | 02569 | DEMOBILIZATION | 1.00 | LS |

# MATERIAL SUMMARY

**CONTRACT ID: 142268** **054GR14P065-FE01** **MP05400411402**

NORTH MAIN STREET (US 41) FROM EASTBOUND 9004 RAMP EXTENDING NORTH TO 500 FEET NORTH OF KINGS WAY DRIVE-HICKORY DRIVE JPC PAVEMENT REPAIRS, A DISTANCE OF .34 MILES.

| Project Line No | Bid Code | DESCRIPTION | Quantity | Unit |
|---|---|---|---|---|
| 0010 | 02014 | BARRICADE-TYPE III | 56.00 | EACH |
| 0020 | 02024 | JPC PAVEMENT-10 IN/24 | 1,380.00 | SQYD |
| 0030 | 02091 | REMOVE PAVEMENT | 1,380.00 | SQYD |
| 0040 | 02115 | SAW-CLEAN-RESEAL TVERSE JOINT | 10,860.00 | LF |
| 0050 | 02116 | SAW-CLEAN-RESEAL LONGIT JOINT | 19,000.00 | LF |
| 0060 | 02562 | TEMPORARY SIGNS | 170.00 | SQFT |
| 0070 | 02650 | MAINTAIN & CONTROL TRAFFIC - (MP 19.057-19.400) | 1.00 | LS |
| 0080 | 02671 | PORTABLE CHANGEABLE MESSAGE SIGN | 2.00 | EACH |
| 0090 | 02775 | ARROW PANEL | 2.00 | EACH |
| 0100 | 06514 | PAVE STRIPING-PERM PAINT-4 IN | 25,186.00 | LF |
| 0110 | 06549 | PAVE STRIPING-TEMP REM TAPE-B - (6 INCH) | 600.00 | LF |
| 0120 | 06550 | PAVE STRIPING-TEMP REM TAPE-W - (4 INCH) | 39,283.00 | LF |
| 0130 | 06551 | PAVE STRIPING-TEMP REM TAPE-Y - (4 INCH) | 39,283.00 | LF |
| 0140 | 10020NS | FUEL ADJUSTMENT | 401.00 | DOLL |
| 0150 | 02569 | DEMOBILIZATION | 1.00 | LS |

# Hopkins County
# FE01 054 0041 012-016
# US 41 (South Main St) Concrete Patches

## Northbound Lanes

| Passing Lane | | | | |
|---|---|---|---|---|
| MP | Width | x | Length | SY |
| 13.159 | 24 | x | 12 | 32 |
| 13.373 | 12 | x | 40 | 53 |
| 14.158 | 12 | x | 12 | 16 |
| 14.187 | 24 | x | 30 | 80 |
| 14.206 | 12 | x | 12 | 16 |
| 14.32 | 12 | x | 15 | 20 |
| 14.41 | 24 | x | 30 | 80 |
| 14.471 | 24 | x | 60 | 160 |
| 14.761 | 12 | x | 30 | 40 |
| 14.764 | 12 | x | 15 | 20 |
| 15.38 | 24 | x | 8 | 21 |
| 15.39 | 12 | x | 12 | 16 |
| | | | TOTAL | 555 |

| Driving Lane | | | | |
|---|---|---|---|---|
| MP | Width | x | Length | SY |
| 13.159 | 12 | x | 12 | 16 |
| 13.436 | 12 | x | 12 | 16 |
| 14.187 | 12 | x | 15 | 20 |
| 14.206 | 24 | x | 45 | 120 |
| 14.208 | 12 | x | 15 | 20 |
| 14.273 | 12 | x | 12 | 16 |
| 14.283 | 12 | x | 15 | 20 |
| 14.692 | 12 | x | 24 | 32 |
| 14.761 | 12 | x | 12 | 16 |
| 14.764 | 12 | x | 24 | 32 |
| 15.115 | 12 | x | 10 | 13 |
| 15.137 | 24 | x | 55 | 147 |
| 15.37 | 12 | x | 15 | 20 |
| 15.418 | 24 | x | 45 | 120 |
| | | | TOTAL | 608 |

## Southbound Lanes

| Passing Lane | | | | |
|---|---|---|---|---|
| MP | Width | x | Length | SY |
| 15.746 | 24 | x | 12 | 32 |
| 15.641 | 12 | x | 15 | 20 |
| 15.521 | 12 | x | 60 | 80 |
| 15.452 | 12 | x | 12 | 16 |
| 15.398 | 12 | x | 8 | 11 |
| 14.721 | 12 | x | 12 | 16 |
| 14.705 | 24 | x | 15 | 40 |
| 14.702 | 12 | x | 15 | 20 |
| 14.598 | 12 | x | 12 | 16 |
| 14.513 | 12 | x | 15 | 20 |
| 14.418 | 12 | x | 25 | 33 |
| 14.3 | 12 | x | 12 | 16 |
| 14.085 | 12 | x | 12 | 16 |
| 14.065 | 12 | x | 15 | 20 |
| 14.42 | 12 | x | 12 | 16 |
| 14.03 | 12 | x | 15 | 20 |
| 13.347 | 12 | x | 12 | 16 |
| 13.645 | 12 | x | 24 | 32 |
| 13.623 | 12 | x | 8 | 11 |
| 13.1 | 12 | x | 12 | 16 |
| | | | TOTAL | 467 |

| Driving Lane | | | | |
|---|---|---|---|---|
| MP | Width | x | Length | SY |
| 15.679 | 12 | x | 60 | 80 |
| 15.661 | 12 | x | 25 | 33 |
| 15.632 | 12 | x | 12 | 16 |
| 15.452 | 12 | x | 12 | 16 |
| 15.398 | 12 | x | 8 | 11 |
| 14.705 | 12 | x | 12 | 16 |
| 14.702 | 12 | x | 15 | 20 |
| 14.604 | 12 | x | 8 | 11 |
| 14.496 | 12 | x | 12 | 16 |
| 14.489 | 24 | x | 50 | 133 |
| 14.422 | 12 | x | 12 | 16 |
| 14.419 | 12 | x | 100 | 133 |
| 14.151 | 12 | x | 30 | 40 |
| 14.094 | 24 | x | 15 | 40 |
| 14.076 | 12 | x | 15 | 20 |
| 14.043 | 12 | x | 12 | 16 |
| 14.03 | 12 | x | 24 | 32 |
| 13.725 | 12 | x | 15 | 20 |
| 13.645 | 12 | x | 30 | 40 |
| 13.1 | 12 | x | 12 | 16 |
| | | | TOTAL | 725 |

NOTE:Any DGA required to bring the subgrade up to the correct elevation after removal of the existing concrete pavement, will be incidental to the 8” JPC pavement bid item.

# Hopkins County
# FE01 054 0041 012-016
# US 41 (South Main Street)
# Traffic Loop Summary

| | Item Number | | | 20452ES835 | 20453ES835 | 4894 | 4895 | 4811 | 4793 | 4850 | 4820 |
|---|---|---|---|---|---|---|---|---|---|---|---|
| Road Name | # Extender 6x6 Loops | # Sidestreet Loops 6x30 | # Mainline Loops 6x30 | Preformed Extender Loops | Preformed Quadrapole Loops | Preformed Loop Lead-In | Loop Saw Slot and Fill | Junction Box Type B | Conduit 1 1/4" | Cable No. 14/1 Pair | Trenching and Backfilling |
| KY 70/KY 481 Intersection | | 2 | 6 | | 816 | 80 | | 2 | 120 | 100 | |
| Honeysuckle | | 2 | 6 | | 816 | 80 | | 2 | 120 | 100 | |
| KY 336 | | 1 | 3 | | 408 | 40 | | 1 | 40 | 50 | |
| | | | | | | | | | | | |
| | | | | | **2040** | **200** | | **5** | **280** | **250** | |

**Quantities included are only to be used if needed when concrete repairs are made.**

Hopkins County
FE01 054 0041 019-020
Concrete Repair Locations
Pennyrile Ramp 9004-711 and US 41

| Route | MP | Passing Lane | | | Drving Lane | | | |
|---|---|---|---|---|---|---|---|---|
| | | Length | | Width | Length | | Width | SY |
| EB 9004-711 | 0.194 | | | | 6 | x | 12 | 8 |
| EB 9004-711 | 0.204 | 6 | x | 12 | 6 | x | 12 | 16 |
| EB 9004-711 | 0.213 | | | | 6 | x | 12 | 8 |
| EB 9004-711 | 0.223 | 25 | x | 12 | 25 | x | 12 | 67 |
| EB 9004-711 | 0.309 | | | | 6 | x | 12 | 8 |
| EB 9004-711 | 0.463 | 6 | x | 12 | 6 | x | 12 | 16 |
| EB 9004-711 | 0.473 | 6 | x | 12 | 6 | x | 12 | 16 |
| EB 9004-711 | 0.482 | 6 | x | 12 | 6 | x | 12 | 16 |
| EB 9004-711 | 0.498 | 25 | x | 12 | 25 | x | 12 | 67 |
| EB 9004-711 | 0.532 | 30 | x | 12 | | | | 40 |
| EB 9004-711 | 0.550 | | | | | | | |
| EB 9004-711 | 0.609 | | | | | | | |
| EB 9004-711 | 0.636 | | | | 25 | x | 12 | 33 |
| EB 9004-711 | 0.646 | 6 | x | 12 | 6 | x | 12 | 16 |
| EB 9004-711 | 0.684 | | | | 6 | x | 12 | 8 |
| EB 9004-711 | 0.702 | | | | 6 | x | 12 | 8 |
| EB 9004-711 | 0.737 | | | | 20 | x | 12 | 27 |
| EB 9004-711 | 0.835 | | | | 6 | x | 12 | 8 |
| US 41 | 19.057 | 6 | x | 12 | 6 | x | 12 | 16 |
| US 41 | 19.067 | 6 | x | 12 | 6 | x | 12 | 16 |
| US 41 | 19.076 | 6 | x | 12 | | | | 8 |
| US 41 | 19.097 | 25 | x | 12 | 25 | x | 12 | 67 |
| US 41 | 19.114 | 25 | x | 12 | 25 | x | 12 | 67 |
| US 41 | 19.131 | | | | 6 | x | 12 | 8 |
| US 41 | 19.141 | 6 | x | 12 | | | | 8 |
| US 41 | 19.159 | | | | 25 | x | 12 | 33 |
| US 41 | 19.227 | 6 | x | 12 | | | | 8 |
| US 41 | 19.238 | 10 | x | 12 | | | | 13 |
| US 41 | 19.241 | 30 | x | 12 | 50 | x | 12 | 107 |
| US 41 | 19.275 | 6 | x | 12 | 6 | x | 12 | 16 |
| US 41 | 19.294 | | | | 6 | x | 12 | 8 |
| US 41 | 19.313 | 6 | x | 12 | 6 | x | 12 | 16 |
| US 41 | 19.323 | 6 | x | 12 | | | | 8 |
| US 41 | 19.333 | 6 | x | 12 | 6 | x | 12 | 16 |
| US 41 | 19.352 | 24 | x | 12 | 25 | x | 12 | 65 |
| US 41 | 19.361 | 6 | x | 12 | 6 | x | 12 | 16 |
| US 41 | 19.400 | 6 | x | 12 | 6 | x | 12 | 16 |
| | | | | | | | TOTAL | 612 |

NOTE:Any DGA required to bring the subgrade up to the correct elevation after removal of the existing concrete pavement, will be incidental to the 8” JPC pavement bid item.

Hopkins County
FE01 054 0041 019-020
Concrete Repair Locations
Pennyrile Ramp 9004-741

| MP | Passing Lane | | | Drving Lane | | | |
|---|---|---|---|---|---|---|---|
| | Length | | Width | Length | | Width | SY |
| 0.121 | | | | 6 | x | 12 | 8 |
| 0.150 | | | | 6 | x | 12 | 8 |
| 0.219 | | | | 6 | x | 12 | 8 |
| 0.236 | | | | 6 | x | 12 | 8 |
| 0.256 | 6 | x | 12 | 6 | x | 12 | 16 |
| 0.276 | 6 | x | 12 | 6 | x | 12 | 16 |
| 0.284 | 25 | x | 12 | 25 | x | 12 | 67 |
| 0.297 | 25 | x | 12 | | | | 33 |
| 0.304 | 25 | x | 12 | 25 | x | 12 | 67 |
| 0.324 | | | | 6 | x | 12 | 8 |
| 0.331 | 40 | x | 12 | 40 | x | 12 | 107 |
| 0.353 | 6 | x | 12 | 6 | x | 12 | 16 |
| 0.363 | 6 | x | 12 | | | | 8 |
| 0.382 | 25 | x | 12 | 25 | x | 12 | 67 |
| 0.392 | 6 | x | 12 | | | | 8 |
| 0.402 | 6 | x | 12 | | | | 8 |
| 0.411 | 6 | x | 12 | 6 | x | 12 | 16 |
| 0.421 | 6 | x | 12 | 6 | x | 12 | 16 |
| 0.430 | 25 | x | 12 | 25 | x | 12 | 67 |
| 0.446 | | | | 6 | x | 12 | 8 |
| 0.449 | 6 | x | 12 | | | | 8 |
| 0.460 | 6 | x | 12 | 6 | x | 12 | 16 |
| 0.479 | 6 | x | 12 | 6 | x | 12 | 16 |
| 0.508 | | | | 6 | x | 12 | 8 |
| 0.635 | | | | 6 | x | 12 | 8 |
| 0.655 | | | | 6 | x | 12 | 8 |
| 0.703 | 6 | x | 12 | 6 | x | 12 | 16 |
| 0.770 | 6 | x | 12 | 6 | x | 12 | 16 |
| 0.779 | | | | 6 | x | 12 | 8 |
| 0.895 | | | | 24 | x | 6 | 16 |
| 0.942 | | | | 20 | x | 40 | 89 |
| | | | | | | TOTAL | 768 |

NOTE:Any DGA required to bring the subgrade up to the correct elevation after removal of the existing concrete pavement, will be incidental to the 8” JPC pavement bid item.

# PART II

# SPECIFICATIONS AND STANDARD DRAWINGS

## SPECIFICATIONS REFERENCE

Any reference in the plans or proposal to previous editions of the *Standard Specifications for Road and Bridge Construction* and *Standard Drawings* are superseded by *Standard Specifications for Road and Bridge Construction, Edition of 2012* and *Standard Drawings, Edition of 2012 with the 2012 Revision.*

# Supplemental Specifications to the
# Standard Specifications for Road and Bridge Construction, 2012 Edition
# Effective with the January 24, 2014 Letting

| | |
|---|---|
| **Subsection:**<br>**Revision:** | 108.03 Preconstruction Conference.<br>Replace 8) Staking with the following:<br>8) Staking (designated by a Professional Engineer or Land Surveyor licensed in the Commonwealth of Kentucky. |
| **Subsection:**<br>**Revision:** | 109.07.02 Fuel.<br>Revise item Crushed Aggregate Used for Embankment Stabilization to the following:<br>Crushed Aggregate<br>Used for Stabilization of Unsuitable Materials<br>Used for Embankment Stabilization |
| **Subsection:**<br>**Revision:** | 110.02 Demobilization.<br>Replace the first part of the first sentence of the second paragraph with the following:<br>Perform all work and operations necessary to accomplish final clean-up as specified in the first paragraph of Subsection 105.12; |
| **Subsection:**<br>**Revision:** | 112.03.12 Project Traffic Coordinator (PTC).<br>Replace the last paragraph of this subsection with the following:<br>Ensure the designated PTC has sufficient skill and experience to properly perform the task assigned and has successfully completed the qualification courses. |
| **Subsection:**<br>**Revision:** | 112.04.18 Diversions (By-Pass Detours).<br>Insert the following sentence after the 2nd sentence of this subsection.<br>The Department will not measure temporary drainage structures for payment when the contract documents provide the required drainage opening that must be maintained with the diversion. The temporary drainage structures shall be incidental to the construction of the diversion. If the contract documents fail to provide the required drainage opening needed for the diversion, the cost of the temporary drainage structure will be handled as extra work in accordance with section 109.04. |
| **Subsection:**<br>**Revision:** | 201.03.01 Contractor Staking.<br>Replace the first paragraph with the following: Perform all necessary surveying under the general supervision of a Professional Engineer or Land Surveyor licensed in the Commonwealth of Kentucky. |
| **Subsection:**<br>**Revision:** | 201.04.01 Contractor Staking.<br>Replace the last sentence of the paragraph with the following: Complete the general layout of the project under the supervision of a Professional Engineer or Land Surveyor licensed in the Commonwealth of Kentucky. |
| **Subsection:**<br>**Revision:** | 206.04.01 Embankment-in-Place.<br>Replace the fourth paragraph with the following: The Department will not measure **suitable** excavation included in the original plans that is disposed of for payment and will consider it incidental to Embankment-in-Place. |
| **Subsection:**<br>**Revision:** | 208.02.01 Cement.<br>Replace paragraph with the following:<br>Select Type I or Type II cement conforming to Section 801. Use the same type cement throughout the work. |

Supplemental Specifications to the
Standard Specifications for Road and Bridge Construction, 2012 Edition
Effective with the January 24, 2014 Letting

| | |
|---|---|
| **Subsection:**<br>**Revision:** | 208.03.06 Curing and Protection.<br>Replace the fourth paragraph with the following:<br>Do not allow traffic or equipment on the finished surface until the stabilized subgrade has cured for a total of 7-days with an ambient air temperature above 40 degrees Fahrenheit. A curing day consists of a continuous 24-hour period in which the ambient air temperature does not fall below 40 degrees Fahrenheit. Curing days will not be calculated consecutively, but must total seven (7) , 24-hour days with the ambient air temperature remaining at or above 40 degrees Fahrenheit before traffic or equipment will be allowed to traverse the stabilized subgrade. The Department may allow a shortened curing period when the Contractor requests. The Contractor shall give the Department at least 3 day notice of the request for a shortened curing period. The Department will require a minimum of 3 curing days after final compaction. The Contractor shall furnish cores to the treated depth of the roadbed at 500 feet intervals for each lane when a shortened curing time is requested. The Department will test cores using an unconfined compression test. Roadbed cores must achieve a minimum strength requirement of 80 psi. |
| **Subsection:**<br>**Revision:** | 208.03.06 Curing and Protection.<br>Replace paragraph nine with the following:<br>At no expense to the Department, repair any damage to the subgrade caused by freezing. |
| **Subsection:**<br>**Part:**<br>**Revision:** | 212.03.03 Permanent Seeding and Protection.<br>A) Seed Mixtures for Permanent Seeding.<br>Revise **Seed Mix Type I** to the mixture shown below:<br>50% Kentucky 31 Tall Fescue (Festuca arundinacea)<br>35% Hard Fescue (Festuca (Festuca longifolia)<br>10% Ryegrass, Perennial (Lolium perenne)<br>5% White Dutch Clover (Trifolium repens) |
| **Subsection:**<br>**Part:**<br>**Number:**<br>**Revision:** | 212.03.03 Permanent Seeding and Protection.<br>A) Seed Mixtures for Permanent Seeding.<br>2)<br>Replace the paragraph with the following:<br>Permanent Seeding on Slopes Greater than 3:1 in Highway Districts 4, 5, 6, and 7. Apply seed mix Type II at a minimum application rate of 100 pounds per acre. If adjacent to a golf course replace the crown vetch with Kentucky 31 Tall Fescue. |
| **Subsection:**<br>**Part:**<br>**Number:**<br>**Revision:** | 212.03.03 Permanent Seeding and Protection.<br>A) Seed Mixtures for Permanent Seeding.<br>3)<br>Replace the paragraph with the following:<br>Permanent Seeding on Slopes Greater than 3:1 in Highway Districts 1, 2, 3, 8, 9, 10, 11, and 12. Apply seed mix Type III at a minimum application rate of 100 pounds per acre. If adjacent to crop land or golf course, replace the Sericea Lespedeza with Kentucky 31 Fescue. |
| **Subsection:**<br>**Part:**<br>**Revision:** | 212.03.03 Permanent Seeding and Protection.<br>B) Procedures for Permanent Seeding.<br>Delete the first sentence of the section. |

# Supplemental Specifications to the Standard Specifications for Road and Bridge Construction, 2012 Edition Effective with the January 24, 2014 Letting

| | |
|---|---|
| **Subsection:**<br>**Part:**<br>**Revision:** | 212.03.03 Permanent Seeding and Protection.<br>B) Procedures for Permanent Seeding.<br>Replace the second and third sentence of the section with the following:<br>Prepare a seedbed and apply an initial fertilizer that contains a minimum of 100 pounds of nitrogen, 100 pounds of phosphate, and 100 pounds of potash per acre. Apply agricultural limestone to the seedbed when the Engineer determines it is needed. When required, place agricultural limestone at a rate of 3 tons per acre. |
| **Subsection:**<br>**Part:**<br>**Revision:** | 212.03.03 Permanent Seeding and Protection.<br>D) Top Dressing.<br>Change the title of part to D) Fertilizer. |
| **Subsection:**<br>**Part:**<br>**Revision:** | 212.03.03 Permanent Seeding and Protection.<br>D) Fertilizer.<br>Replace the first paragraph with the following:<br>Apply fertilizer at the beginning of the seeding operation and after vegetation is established. Use fertilizer delivered to the project in bags or bulk. Apply initial fertilizer to all areas prior to the seeding or sodding operation at the application rate specified in 212.03.03 B). Apply 20-10-10 fertilizer to the areas after vegetation has been established at a rate of 11.5 pounds per 1,000 square feet. Obtain approval from the Engineer prior to the 2nd fertilizer application. Reapply fertilizer to any area that has a streaked appearance. The reapplication shall be at no additional cost to the Department. Re-establish any vegetation severely damaged or destroyed because of an excessive application of fertilizer at no cost to the Department. |
| **Subsection:**<br>**Part:**<br>**Revision:** | 212.03.03 Permanent Seeding and Protection.<br>D) Fertilizer.<br>Delete the second paragraph. |
| **Subsection:**<br>**Revision:** | 212.04.04 Agricultural Limestone.<br>Replace the entire section with the following:<br>The Department will measure the quantity of agricultural limestone in tons. |
| **Subsection:**<br>**Revision:** | 212.04.05 Fertilizer.<br>Replace the entire section with the following:<br>The Department will measure fertilizer used in the seeding or sodding operations for payment. The Department will measure the quantity by tons. |
| **Subsection:** | 212.05 PAYMENT. |
| **Revision:** | Delete the following item code:<br>Code — Pay Item — Pay Unit<br>05966 — Topdressing Fertilizer — Ton |
| **Subsection:**<br>**Revision:** | 212.05 PAYMENT.<br>Add the following pay items:<br>Code — Pay Item — Pay Unit<br>05963 — Initial Fertilizer — Ton<br>05964 — 20-10-10 Fertilizer — Ton<br>05992 — Agricultural Limestone — Ton |

Supplemental Specifications to the
Standard Specifications for Road and Bridge Construction, 2012 Edition
Effective with the January 24, 2014 Letting

| | |
|---|---|
| **Subsection:**<br>**Revision:** | 213.03.02 Progress Requirements.<br>Replace the last sentence of the third paragraph with the following:<br>Additionally, the Department will apply a penalty equal to the liquidated damages when all aspects of the work are not coordinated in an acceptable manner within 7 calendar days after written notification. |
| **Subsection:**<br>**Part:**<br>**Revision:** | 213.03.05 Temporary Control Measures.<br>E) Temporary Seeding and Protection.<br>Delete the second sentence of the first paragraph. |
| **Subsection:**<br>**Table:**<br>**Revision:** | 304.02.01 Physical Properties.<br>Required Geogrid Properties<br>Replace all references to Test Method "GRI-GG2-87" with ASTM D 7737. |
| **Subsection:**<br>**Part:**<br>**Revision:** | 402.03.02 Contractor Quality Control and Department Acceptance.<br>B) Sampling.<br>Replace the second sentence with the following:<br>The Department will determine when to obtain the quality control samples using the random-number feature of the mix design submittal and approval spreadsheet. The Department will randomly determine when to obtain the verification samples required in Subsections 402.03.03 and 402.03.04 using the Asphalt Mixture Sample Random Tonnage Generator. |
| **Subsection:**<br>**Part:**<br>**Number:**<br>**Revision:** | 402.03.02 Contractor Quality Control and Department Acceptance.<br>D) Testing Responsibilities.<br>3) VMA.<br>Add the following paragraph below Number 3) VMA:<br>Retain the AV/VMA specimens and one additional corresponding $G_{mm}$ sample for 5 working days for mixture verification testing by the Department. For Specialty Mixtures, retain a mixture sample for 5 working days for mixture verification testing by the Department. When the Department's test results do not verify that the Contractor's quality control test results are within the acceptable tolerances according to Subsection 402.03.03, retain the samples and specimens from the affected sublot(s) for the duration of the project. |
| **Subsection:**<br>**Part:**<br>**Number:**<br>**Revision:** | 402.03.02 Contractor Quality Control and Department Acceptance.<br>D) Testing Responsibilities.<br>4) Density.<br>Replace the second sentence of the Option A paragraph with the following:<br>Perform coring by the end of the following work day. |
| **Subsection:**<br>**Part:**<br>**Number:**<br>**Revision:** | 402.03.02 Contractor Quality Control and Department Acceptance.<br>D) Testing Responsibilities.<br>5) Gradation.<br>Delete the second paragraph. |
| **Subsection:**<br>**Part:**<br>**Number:**<br>**Revision:** | 402.03.02 Contractor Quality Control and Department Acceptance.<br>H) Unsatisfactory Work.<br>1) Based on Lab Data.<br>Replace the second paragraph with the following:<br>When the Engineer determines that safety concerns or other considerations prohibit an immediate shutdown, continue work and the Department will make an evaluation of acceptability according to Subsection 402.03.05. |

Supplemental Specifications to the
Standard Specifications for Road and Bridge Construction, 2012 Edition
Effective with the January 24, 2014 Letting

| | |
|---|---|
| **Subsection:**<br>**Revision:** | 402.03.03 Verification.<br>Replace the first paragraph with the following:<br>**402.03.03 Mixture Verification.** For volumetric properties, the Department will perform a minimum of one verification test for AC, AV, and VMA according to the corresponding procedures as given in Subsection 402.03.02. The Department will randomly determine when to obtain the verification sample using the Asphalt Mixture Sample Random Tonnage Generator. For specialty mixtures, the Department will perform one AC and one gradation determination per lot according to the corresponding procedures as given in Subsection 402.03.02. However, Department personnel will not perform AC determinations according to KM 64-405. The Contractor will obtain a quality control sample at the same time the Department obtains the mixture verification sample and perform testing according to the procedures given in Subsection 402.03.02. If the Contractor's quality control sample is verified by the Department's test results within the tolerances provided below, the Contractor's sample will serve as the quality control sample for the affected sublot. The Department may perform the mixture verification test on the Contractor's equipment or on the Department's equipment. |
| **Subsection:**<br>**Part:**<br>**Revision:** | 402.03.03 Verification.<br>A) Evaluation of Sublot(s) Verified by Department.<br>Replace the third sentence of the second paragraph with the following:<br>When the paired *t* -test indicates that the Contractor's data and Department's data are possibly not from the same population, the Department will investigate the cause for the difference according to Subsection 402.03.05 and implement corrective measures as the Engineer deems appropriate. |
| **Subsection:**<br>**Part:**<br>**Revision:** | 402.03.03 Verification.<br>B) Evaluation of Sublots Not Verified by Department.<br>Replace the third sentence of the first paragraph with the following:<br>When differences between test results are not within the tolerances listed below, the Department will resolve the discrepancy according to Subsection 402.03.05. |
| **Subsection:**<br>**Part:**<br>**Revision:** | 402.03.03 Verification.<br>B) Evaluation of Sublots Not Verified by Department.<br>Replace the third sentence of the second paragraph with the following:<br>When the *F* -test or *t* -test indicates that the Contractor's data and Department's data are possibly not from the same population, the Department will investigate the cause for the difference according to Subsection 402.03.05 and implement corrective measures as the Engineer deems appropriate. |
| **Subsection:**<br>**Part:**<br>**Revision:** | 402.03.03 Verification.<br>C) Test Data Patterns.<br>Replace the second sentence with the following:<br>When patterns indicate substantial differences between the verified and non-verified sublots, the Department will perform further comparative testing according to subsection 402.03.05. |

Supplemental Specifications to the
Standard Specifications for Road and Bridge Construction, 2012 Edition
Effective with the January 24, 2014 Letting

| | |
|---|---|
| **Subsection:**<br>**Revision:** | 402.03 CONSTRUCTION.<br>Add the following subsection: **402.03.04 Testing Equipment and Technician Verification.**<br>For mixtures with a minimum quantity of 20,000 tons and for every 20,000 tons thereafter, the Department will obtain an additional verification sample at random using the Asphalt Mixture Sample Random Tonnage Generator in order to verify the integrity of the Contractor's and Department's laboratory testing equipment and technicians. The Department will obtain a mixture sample of at least 150 lb at the asphalt mixing plant according to KM 64-425 and split it according to AASHTO R 47. The Department will retain one split portion of the sample and provide the other portion to the Contractor. At a later time convenient to both parties, the Department and Contractor will simultaneously reheat the sample to the specified compaction temperature and test the mixture for AV and VMA using separate laboratory equipment according to the corresponding procedures given in Subsection 402.03.02. The Department will evaluate the differences in test results between the two laboratories. When the difference between the results for AV or VMA is not within ± 2.0 percent, the Department will investigate and resolve the discrepancy according to Subsection 402.03.05. |
| **Subsection:**<br>**Revision:** | 402.03.04 Dispute Resolution.<br>Change the subsection number to 402.03.05. |
| **Subsection:**<br>**Part:**<br>**Table:**<br>**Revision:** | 402.05 PAYMENT.<br>Lot Pay Adjustment Schedule Compaction Option A Base and Binder Mixtures<br>AC<br>Replace the Deviation from JMF(%) that corresponds to a Pay Value of 0.95 to ±0.6. |
| **Subsection:**<br>**Revision:** | 403.02.10 Material Transfer Vehicle (MTV).<br>Replace the first sentence with the following:<br>In addition to the equipment specified above, provide a MTV with the following minimum characteristics: |
| **Subsection:**<br>**Revision:** | 412.02.09 Material Transfer Vehicle (MTV).<br>Replace the paragraph with the following:<br>Provide and utilize a MTV with the minimum characteristics outlined in section 403.02.10. |
| **Subsection:**<br>**Revision:** | 412.03.07 Placement and Compaction.<br>Replace the first paragraph with the following:<br>Use a MTV when placing SMA mixture in the driving lanes. The MTV is not required on ramps and/or shoulders unless specified in the contract. When the Engineer determines the use of the MTV is not practical for a portion of the project, the Engineer may waive its requirement for that portion of pavement by a letter documenting the waiver. |
| **Subsection:**<br>**Revision:** | 412.04 MEASUREMENT.<br>Add the following subsection:<br>412.04.03. Material Transfer Vehicle (MTV). The Department will not measure the MTV for payment and will consider its use incidental to the asphalt mixture. |

Supplemental Specifications to the
Standard Specifications for Road and Bridge Construction, 2012 Edition
Effective with the January 24, 2014 Letting

| | |
|---|---|
| **Subsection:**<br>**Part:**<br>**Revision:** | 501.03.19 Surface Tolerances and Testing Surface.<br>B) Ride Quality.<br>Add the following to the end of the first paragraph:<br>The Department will specify if the ride quality requirements are Category A or Category B when ride quality is specified in the Contract. Category B ride quality requirements shall apply when the Department fails to classify which ride quality requirement will apply to the Contract. |
| **Subsection:**<br>**Revision:** | 603.03.06 Cofferdams.<br>Replace the seventh sentence of paragraph one with the following:<br>Submit drawings that are stamped by a Professional Engineer licensed in the Commonwealth of Kentucky. |
| **Subsection:**<br>**Revision:** | 605.03.04 Tack Welding.<br>Insert the subsection and the following:<br>605.03.04 Tack Welding. The Department does not allow tack welding. |
| **Subsection:**<br>**Part:**<br>**Number:**<br>**Revision:** | 606.03.17 Special Requirements for Latex Concrete Overlays.<br>A) Existing Bridges and New Structures.<br>1) Prewetting and Grout-Bond Coat.<br>Add the following sentence to the last paragraph: Do not apply a grout-bond coat on bridge decks prepared by hydrodemolition. |
| **Subsection:**<br>**Revision:** | 609.03 Construction.<br>Replace Subsection 609.03.01 with the following:<br>609.03.01 A) Swinging the Spans. Before placing concrete slabs on steel spans or precast concrete release the temporary erection supports under the bridge and swing the span free on its supports.<br>609.03.01 B) Lift Loops. Cut all lift loops flush with the top of the precast beam once the beam is placed in the final location and prior to placing steel reinforcement. At locations where lift loops are cut, paint the top of the beam with galvanized or epoxy paint. |
| **Subsection:**<br>**Revision:** | 611.03.02 Precast Unit Construction.<br>Replace the first sentence of the subsection with the following:<br>Construct units according to ASTM C1577, **replacing Table 1 (Design Requirements for Precast Concrete Box Sections Under Earth, Dead and HL-93 Live Load Conditions) with KY Table 1 (Precast Culvert KYHL-93 Design Table)**, and Section 605 with the following exceptions and additions: |
| **Subsection:**<br>**Number:**<br>**Revision:** | 613.03.01 Design.<br>2)<br>Replace "AASHTO Standard Specifications for Highway Bridges" with "AASHTO LRFD Bridge Design Specifications" |
| **Subsection:**<br>**Revision:** | 615.06.02<br>Add the following sentence to the end of the subsection.<br>The ends of units shall be normal to walls and centerline except exposed edges shall be beveled ¾ inch. |
| **Subsection:**<br>**Revision:** | 615.06.03 Placement of Reinforcement in Precast 3-Sided Units.<br>Replace the reference of 6.6 in the section to 615.06.06. |

Supplemental Specifications to the
Standard Specifications for Road and Bridge Construction, 2012 Edition
Effective with the January 24, 2014 Letting

| | |
|---|---|
| **Subsection:**<br>**Revision:** | 615.06.04 Placement of Reinforcement for Precast Endwalls.<br>Replace the reference of 6.7 in the section to 615.06.07. |
| **Subsection:**<br>**Revision:** | 615.06.06 Laps, Welds, and Spacing for Precast 3-Sided Units.<br>Replace the subsection with the following:<br>Tension splices in the circumferential reinforcement shall be made by lapping. Laps may not be tack welded together for assembly purposes. For smooth welded wire fabric, the overlap shall meet the requirements of AASHTO 2012 Bridge Design Guide Section 5.11.2.5.2 and AASHTO 2012 Bridge Design Guide Section 5.11.6.3. For deformed welded wire fabric, the overlap shall meet the requirements of AASHTO 2012 Bridge Design Guide Section 5.11.2.5.1 and AASHTO 2012 Bridge Design Guide Section 5.11.6.2. The overlap of welded wire fabric shall be measured between the outer most longitudinal wires of each fabric sheet. For deformed billet-steel bars, the overlap shall meet the requirements of AASHTO 2012 Bridge Design Guide Section 5.11.2.1. For splices other than tension splices, the overlap shall be a minimum of 12" for welded wire fabric or deformed billet-steel bars. The spacing center to center of the circumferential wires in a wire fabric sheet shall be no less than 2 inches and no more than 4 inches. The spacing center to center of the longitudinal wires shall not be more than 8 inches. The spacing center to center of the longitudinal distribution steel for either line of reinforcing in the top slab shall be not more than 16 inches. |
| **Subsection:**<br>**Revision:** | 615.06.07 Laps, Welds, and Spacing for Precast Endwalls.<br>Replace the subsection with the following:<br>Splices in the reinforcement shall be made by lapping. Laps may not be tack welded together for assembly purposes. For smooth welded wire fabric, the overlap shall meet the requirements of AASHTO 2012 Bridge Design Guide Section 5.11.2.5.2 and AASHTO 2012 Bridge Design Guide Section 5.11.6.3. For deformed welded wire fabric, the overlap shall meet the requirements of AASHTO 2012 Bridge Design Guide Section 5.11.2.5.1 and AASHTO 2012 Bridge Design Guide Section 5.11.6.2. For deformed billet-steel bars, the overlap shall meet the requirements of AASHTO 2012 Bridge Design Guide Section 5.11.2.1. The spacing center-to-center of the wire fabric sheet shall not be less than 2 inches or more than 8 inches. |
| **Subsection:**<br>**Revision:** | 615.08.01 Type of Test Specimen.<br>Replace the subsection with the following:<br>Start-up slump, air content, unit weight, and temperature tests will be performed each day on the first batch of concrete. Acceptable start-up results are required for production of the first unit. After the first unit has been established, random acceptance testing is performed daily for each 50 $yd^3$ (or fraction thereof). In addition to the slump, air content, unit weight, and temperature tests, a minimum of one set of cylinders shall be required each time plastic property testing is performed. |
| **Subsection:**<br>**Revision:** | 615.08.02 Compression Testing.<br>Delete the second sentence. |
| **Subsection:** | 615.08.04 Acceptability of Core Tests.<br>Delete the entire subsection. |

# Supplemental Specifications to the Standard Specifications for Road and Bridge Construction, 2012 Edition Effective with the January 24, 2014 Letting

| | |
|---|---|
| **Subsection:**<br>**Revision:** | 615.12 Inspection.<br>Add the following sentences to the end of the subsection: Units will arrive at jobsite with the "Kentucky Oval" stamped on the unit which is an indication of acceptable inspection at the production facility. Units shall be inspected upon arrival for any evidence of damage resulting from transport to the jobsite. |
| **Subsection:**<br>**Revision:** | 716.02.02 Paint.<br>Replace sentence with the following: Conform to Section 821. |
| **Subsection:**<br>**Revision:** | 716.03 CONSTRUCTION.<br>Replace bullet 5) with the following: 5) AASHTO Standard Specifications for Structural Supports for Highway Signs, Luminaires, and Traffic Signals, 2013-6th Edition with current interims, |
| **Subsection:**<br>**Revision:** | 716.03.02 Lighting Standard Installation.<br>Replace the second sentence with the following:<br>Regardless of the station and offset noted, locate all poles/bases behind the guardrail a minimum of four feet from the front face of the guardrail to the front face of the pole base. |
| **Subsection:**<br>**Part:**<br>**Revision:** | 716.03.02 Lighting Standard Installation.<br>A) Conventional Installation.<br>Replace the third sentence with the following: Orient the transformer base so the door is positioned on the side away from on-coming traffic. |
| **Subsection:**<br>**Part:**<br>**Number:**<br>**Revision:** | 716.03.02 Lighting Standard Installation.<br>A) Conventional Installation.<br>1) Breakaway Installation and Requirements.<br>Replace the first sentence with the following: For breakaway supports, conform to Section 12 of the AASHTO Standard Specifications for Structural Supports for Highway Signs, Luminaires, and Traffic Signals, 2013-6th Edition with current interims. |
| **Subsection:**<br>**Part:**<br>**Revision:** | 716.03.02 Lighting Standard Installation.<br>B) High Mast Installation<br>Replace the first sentence with the following: Install each high mast pole as noted on plans. |
| **Subsection:**<br>**Part:**<br>**Number:**<br>**Revision:** | 716.03.02 Lighting Standard Installation.<br>B) High Mast Installation<br>2) Concrete Base Installation<br>Modification of Chart and succeeding paragraphs within this section: |

| Drilled Shaft Depth Data | | | | | | | |
|---|---|---|---|---|---|---|---|
| Level Ground | | 3:1 Ground Slope | | 2:1 Ground Slope | | 1.5:1 Ground Slope (2) | |
| Soil | Rock | Soil | Rock | Soil | Rock | Soil | Rock |
| 17 ft | 7 ft | 19 ft | 7 ft | 20 ft | 7 ft | (1) | 7 ft |

| Steel Requirements | | | |
|---|---|---|---|
| Vertical Bars | | Ties or Spiral | |
| Size | Total | Size | Spacing or Pitch |
| #10 | 16 | #4 | 12 inch |

| | |
|---|---|
| | (1): Shaft length is 22' for cohesive soil only. For cohesionless soil, contact geotechnical branch for design.<br>(2): Do not construct high mast drilled shafts on ground slopes steeper than 1.5:1 without the approval of the Division of Traffic.<br>If rock is encountered during drilling operations and confirmed by the engineer to be of sound quality, the shaft is only required to be further advanced into the rock by the length of rock socket shown in the table. The total length of the shaft need not be longer than that of soil alone. Both longitudinal rebar length and number of ties or spiral length shall be adjusted accordingly.<br>If a shorter depth is desired for the drilled shaft, the contractor shall provide, for the state's review and approval, a detailed column design with individual site specific soil and rock analysis performed and approved by a Professional Engineer licensed in the Commonwealth of Kentucky.<br>Spiral reinforcement may be substituted for ties. If spiral reinforcement is used, one and one-half closed coils shall be provided at the ends of each spiral unit. Subsurface conditions consisting of very soft clay or very loose saturated sand could result in soil parameters weaker than those assumed. Engineer shall consult with the geotechnical branch if such conditions are encountered.<br>The bottom of the drilled hole shall be firm and thoroughly cleaned so no loose or compressible materials are present at the time of the concrete placement. If the drilled hole contains standing water, the concrete shall be placed using a tremie to displace water. Continuous concrete flow will be required to insure full displacement of any water.<br>The reinforcement and anchor bolts shall be adequately supported in the proper positions so no movement occurs during concrete placement. Welding of anchor bolts to the reinforcing cage is unacceptable, templates shall be used.<br>Exposed portions of the foundation shall be formed to create a smooth finished surface. All forming shall be removed upon completion of foundation construction. |
| **Subsection:**<br>**Part:**<br>**Revision:** | 716.03.03 Trenching.<br>A) Trenching of Conduit for Highmast Ducted Cables.<br>Add the following after the first sentence: If depths greater than 24 inches are necessary, obtain the Engineer's approval and maintain the required conduit depths coming into the junction boxes. No payment for additional junction boxes for greater depths will be allowed. |
| **Subsection:**<br>**Part:**<br>**Revision:** | 716.03.03 Trenching.<br>B) Trenching of Conduit for Non-Highmast Cables.<br>Add the following after the second sentence: If depths greater than 24 inches are necessary for either situation listed previously, obtain the Engineer's approval and maintain the required conduit depths coming into the junction boxes. No payment for additional junction boxes for greater depths will be allowed. |
| **Subsection:**<br>**Revision:** | 716.03.10 Junction Boxes.<br>Replace subsection title with the following: Electrical Junction Box. |

Supplemental Specifications to the
Standard Specifications for Road and Bridge Construction, 2012 Edition
Effective with the January 24, 2014 Letting

| | |
|---|---|
| **Subsection:**<br>**Revision:** | 716.04.07 Pole with Secondary Control Equipment.<br>Replace the paragraph with the following:<br>The Department will measure the quantity as each individual unit furnished and installed. The Department will not measure mounting the cabinet to the pole, backfilling, restoration, any necessary hardware to anchor pole, or electrical inspection fees, and will consider them incidental to this item of work. The Department will also not measure furnishing and installing electrical service conductors, specified conduits, meter base, transformer, service panel, fused cutout, fuses, lighting arrestors, photoelectrical control, circuit breaker, contactor, manual switch, ground rods, and ground wires and will consider them incidental to this item of work. |
| **Subsection:**<br>**Revision:** | 716.04.08 Lighting Control Equipment.<br>Replace the paragraph with the following:<br>The Department will measure the quantity as each individual unit furnished and installed. The Department will not measure constructing the concrete base, excavation, backfilling, restoration, any necessary anchors, or electrical inspection fees, and will consider them incidental to this item of work. The Department will also not measure furnishing and installing electrical service conductors, specified conduits, meter base, transformer, service panel, fused cutout, fuses, lighting arrestors, photoelectrical control, circuit breakers, contactor, manual switch, ground rods, and ground wires and will consider them incidental to this item of work. |
| **Subsection:**<br>**Revision:** | 716.04.09 Luminaire.<br>Replace the first sentence with the following:<br>The Department will measure the quantity as each individual unit furnished and installed. |
| **Subsection:**<br>**Revision:** | 716.04.10 Fused Connector Kits.<br>Replace the first sentence with the following:<br>The Department will measure the quantity as each individual unit furnished and installed. |
| **Subsection:**<br>**Revision:** | 716.04.13 Junction Box.<br>Replace the subsection title with the following: Electrical Junction Box Type Various. |
| **Subsection:**<br>**Part:**<br>**Revision:** | 716.04.13 Junction Box.<br>A) Junction Electrical.<br>Rename A) Junction Electrical to the following: A) Electrical Junction Box. |
| **Subsection:**<br>**Revision:** | 716.04.14 Trenching and Backfilling.<br>Replace the second sentence with the following:<br>The Department will not measure excavation, backfilling, underground utility warning tape (if required), the restoration of disturbed areas to original condition, and will consider them incidental to this item of work. |
| **Subsection:**<br>**Revision:** | 716.04.18 Remove Lighting.<br>Replace the paragraph with the following:<br>The Department will measure the quantity as a lump sum for the removal of lighting equipment. The Department will not measure the disposal of all equipment and materials off the project by the contractor. The Department also will not measure the transportation of the materials and will consider them incidental to this item of work. |

Supplemental Specifications to the
Standard Specifications for Road and Bridge Construction, 2012 Edition
Effective with the January 24, 2014 Letting

| | |
|---|---|
| **Subsection:**<br>**Revision:** | 716.04.20 Bore and Jack Conduit.<br>Replace the paragraph with the following: The Department will measure the quantity in linear feet. This item shall include all work necessary for boring and installing conduit under an existing roadway. Construction methods shall be in accordance with Sections 706.03.02, paragraphs 1, 2, and 4. |
| **Subsection:**<br>**Revision:** | 716.05 PAYMENT.<br>Replace items 04810-04811, 20391NS835 and, 20392NS835 under Code, Pay Item, and Pay Unit with the following:<br><br>Code — Pay Item — Pay Unit<br>04810 — Electrical Junction Box — Each<br>04811 — Electrical Junction Box Type B — Each<br>20391NS835 — Electrical Junction Box Type A — Each<br>20392NS835 — Electrical Junction Box Type C — Each |
| **Subsection:**<br>**Revision:** | 723.03 CONSTRUCTION.<br>Replace bullet 5) with the following: 5) AASHTO Standard Specifications for Structural Supports for Highway Signs, Luminaires, and Traffic Signals, 2013-6th Edition with current interims, |
| **Subsection:**<br>**Revision:** | 723.02.02 Paint.<br>Replace sentence with the following: Conform to Section 821. |
| **Subsection:**<br>**Revision:** | 723.03.02 Poles and Bases Installation.<br>Replace the first sentence with the following:<br>Regardless of the station and offset noted, locate all poles/bases behind the guardrail a minimum of four feet from the front face of the guardrail to the front face of the pole base. |
| **Subsection:**<br>**Part:**<br>**Revision:** | 723.03.02 Poles and Bases Installation.<br>A) Steel Strain and Mastarm Poles Installation<br>Replace the second paragraph with the following: For concrete base installation, see Section 716.03.02, B), 2), Paragraphs 2-7. Drilled shaft depth shall be based on the soil conditions encountered during drilling and slope condition at the site. Refer to the design chart below: |
| **Subsection:**<br>**Part:**<br>**Revision:** | 723.03.02 Poles and Bases Installation.<br>B) Pedestal or Pedestal Post Installation.<br>Replace the fourth sentence of the paragraph with the following: For breakaway supports, conform to Section 12 of the AASHTO Standard Specifications for Structural Supports for Highway Signs, Luminaires, and Traffic Signals, 2013-6th Edition with current interims. |
| **Subsection:**<br>**Part:**<br>**Revision:** | 723.03.03 Trenching.<br>A) Under Roadway.<br>Add the following after the second sentence: If depths greater than 24 inches are necessary, obtain the Engineer's approval and maintain ether required conduit depths coming into the junction boxes. No payment for additional junction boxes for greater depths will be allowed. |
| **Subsection:**<br>**Revision:** | 723.03.11 Wiring Installation.<br>Add the following sentence between the fifth and sixth sentences: Provide an extra two feet of loop wire and lead-in past the installed conduit in poles, pedestals, and junction boxes. |

Supplemental Specifications to the
Standard Specifications for Road and Bridge Construction, 2012 Edition
Effective with the January 24, 2014 Letting

| | |
|---|---|
| **Subsection:**<br>**Revision:** | 723.03.12 Loop Installation.<br>Replace the fifth sentence with the following: Provide an extra two feet of loop wire and lead-in past the installed conduit in poles, pedestals, and junction boxes. |
| **Subsection:**<br>**Revision:** | 723.04.02 Junction Box.<br>Replace subsection title with the following: Electrical Junction Box Type. |
| **Subsection:**<br>**Revision:** | 723.04.03 Trenching and Backfilling.<br>Replace the second sentence with the following: The Department will not measure excavation, backfilling, underground utility warning tape (if required), the restoration of disturbed areas to original condition, and will consider them incidental to this item of work. |
| **Subsection:**<br>**Revision:** | 723.04.10 Signal Pedestal.<br>Replace the second sentence with the following: The Department will not measure excavation, concrete, reinforcing steel, specified conduits, fittings, ground rod, ground wire, backfilling, restoring disturbed areas, or other necessary hardware and will consider them incidental to this item of work. |
| **Subsection:**<br>**Revision:** | 723.04.15 Loop Saw Slot and Fill.<br>Replace the second sentence with the following: The Department will not measure sawing, cleaning and filling induction loop saw slot, loop sealant, backer rod, and grout and will consider them incidental to this item of work. |
| **Subsection:**<br>**Revision:** | 723.04.16 Pedestrian Detector.<br>Replace the paragraph with the following: The Department will measure the quantity as each individual unit furnished, installed and connected to pole/pedestal. The Department will not measure installing R10-3e (with arrow) sign, furnishing and installing mounting hardware for sign and will consider them incidental to this item of work. |
| **Subsection:**<br>**Revision:** | 723.04.18 Signal Controller- Type 170.<br>Replace the second sentence with the following: The Department will not measure constructing the concrete base or mounting the cabinet to the pole, connecting the signal and detectors, excavation, backfilling, restoration, any necessary pole mounting hardware, electric service, or electrical inspection fees and will consider them incidental to this item of work. The Department will also not measure furnishing and connecting the induction of loop amplifiers, pedestrian isolators, load switches, model 400 modem card; furnishing and installing electrical service conductors, specified conduits, anchors, meter base, fused cutout, fuses, ground rods, ground wires and will consider them incidental to this item of work. |
| **Subsection:**<br>**Revision:** | 723.04.20 Install Signal Controller - Type 170.<br>Replace the paragraph with the following: The Department will measure the quantity as each individual unit installed. The Department will not measure constructing the concrete base or mounting the cabinet to the pole, connecting the signal and detectors, and excavation, backfilling, restoration, any necessary pole mounting hardware, electric service, or electrical inspection fees and will consider them incidental to this item of work. The Department will also not measure connecting the induction loop amplifiers, pedestrian, isolators, load switches, model 400 modem card; furnishing and installing electrical service conductors, specified conduits, anchors, meter base, fused cutout, fuses, ground rods, ground wires and will consider them incidental to this item of work. |

Supplemental Specifications to the
Standard Specifications for Road and Bridge Construction, 2012 Edition
Effective with the January 24, 2014 Letting

| | |
|---|---|
| **Subsection:**<br>**Revision:** | 723.04.22 Remove Signal Equipment.<br>Replace the paragraph with the following: The Department will measure the quantity as a lump sum removal of signal equipment. The Department will not measure the return of control equipment and signal heads to the Department of Highways as directed by the District Traffic Engineer. The Department also will not measure the transportation of materials of the disposal of all other equipment and materials off the project by the contractor and will consider them incidental to this item of work. |
| **Subsection:**<br>**Revision:** | 723.04.28 Install Pedestrian Detector Audible.<br>Replace the second sentence with the following: The Department will not measure installing sign R10-3e (with arrow) and will consider it incidental to this item of work. |
| **Subsection:**<br>**Revision:** | 723.04.29 Audible Pedestrian Detector.<br>Replace the second sentence with the following: The Department will not measure furnishing and installing the sign R10-3e (with arrow) and will consider it incidental to this item of work. |
| **Subsection:**<br>**Revision:** | 723.04.30 Bore and Jack Conduit.<br>Replace the paragraph with the following: The Department will measure the quantity in linear feet. This item shall include all work necessary for boring and installing conduit under an existing roadway. Construction methods shall be in accordance with Sections 706.03.02, paragraphs 1, 2, and 4. |
| **Subsection:**<br>**Revision:** | 723.04.31 Install Pedestrian Detector.<br>Replace the paragraph with the following: The Department will measure the quantity as each individual unit installed and connected to pole/pedestal. The Department will not measure installing sign R 10-3e (with arrow) and will consider it incidental to this item of work. |
| **Subsection:**<br>**Revision:** | 723.04.32 Install Mast Arm Pole.<br>Replace the second sentence with the following: The Department will not measure arms, signal mounting brackets, anchor bolts, or any other necessary hardware and will consider them incidental to this item of work. |
| **Subsection:**<br>**Revision:** | 723.04.33 Pedestal Post.<br>Replace the second sentence with the following: The Department will not measure excavation, concrete, reinforcing steel, anchor bolts, conduit, fittings, ground rod, ground wire, backfilling, restoration, or any other necessary hardware and will consider them incidental to this item of work. |
| **Subsection:**<br>**Revision:** | 723.04.36 Traffic Signal Pole Base.<br>Replace the second sentence with the following: The Department will not measure excavation, reinforcing steel, anchor bolts, specified conduits, ground rods, ground wires, backfilling, or restoration and will consider them incidental to this item of work. |
| **Subsection:**<br>**Revision:** | 723.04.37 Install Signal Pedestal.<br>Replace the second sentence with the following: The Department will not measure excavation, concrete, reinforcing steel, anchor bolts, specified conduits, fittings, ground rod, ground wire, backfilling, restoration, or any other necessary hardware and will consider them incidental to this item of work. |

Supplemental Specifications to the
Standard Specifications for Road and Bridge Construction, 2012 Edition
Effective with the January 24, 2014 Letting

| | |
|---|---|
| **Subsection:**<br>**Revision:** | 723.04.38 Install Pedestal Post.<br>Replace the second sentence with the following: The Department will not measure excavation, concrete, reinforcing steel, anchor bolts, specified conduits, fittings, ground rod, ground wire, backfilling, restoration, or any other necessary hardware and will consider them incidental to this item of work. |
| **Subsection:**<br>**Revision:** | 723.05 PAYMENT.<br>Replace items 04810-04811, 20391NS835 and, 20392NS835 under Code, Pay Item, and Pay Unit with the following:<br><br>Code — Pay Item — Pay Unit<br>04810 — Electrical Junction Box — Each<br>04811 — Electrical Junction Box Type B — Each<br>20391NS835 — Electrical Junction Box Type A — Each<br>20392NS835 — Electrical Junction Box Type C — Each |
| **Subsection:**<br>**Revision:** | 813.04 Gray Iron Castings.<br>Replace the reference to "AASHTO M105" with "ASTM A48". |
| **Subsection:**<br>**Number:**<br>**Revision:** | 813.09.02 High Strength Steel Bolts, Nuts, and Washers.<br>A) Bolts.<br>Delete first paragraph and "Hardness Number" Table. Replace with the following:<br>A) Bolts. Conform to ASTM A325 (AASHTO M164) or ASTM A490 (AASHTO 253) as applicable. |
| **Subsection:**<br>**Revision:** | 814.04.02 Timber Guardrail Posts.<br>Third paragraph, replace the reference to "AWPA C14" with "AWPA U1, Section B, Paragraph 4.1". |
| **Subsection:**<br>**Revision:** | 814.04.02 Timber Guardrail Posts.<br>Replace the first sentence of the fourth paragraph with the following:<br>Use any of the species of wood for round or square posts covered under AWPA U1. |
| **Subsection:**<br>**Revision:** | 814.04.02 Timber Guardrail Posts.<br>Fourth paragraph, replace the reference to "AWPA C2" with "AWPA U1, Section B, Paragraph 4.1". |
| **Subsection:**<br>**Revision:** | 814.04.02 Timber Guardrail Posts.<br>Delete the second sentence of the fourth paragraph. |
| **Subsection:**<br>**Revision:** | 816.07.02 Wood Posts and Braces.<br>First paragraph, replace the reference to "AWPA C5" with "AWPA U1, Section B, Paragraph 4.1". |
| **Subsection:**<br>**Revision:** | 816.07.02 Wood Posts and Braces.<br>Delete the second sentence of the first paragraph. |
| **Subsection:**<br>**Revision:** | 818.07 Preservative Treatment.<br>First paragraph, replace all references to "AWPA C14" with "AWPA U1, Section A". |

Supplemental Specifications to the
Standard Specifications for Road and Bridge Construction, 2012 Edition
Effective with the January 24, 2014 Letting

| | |
|---|---|
| **Subsection:**<br>**Revision:** | 834.14 LIGHTING POLES.<br>Replace the first sentence with the following: Lighting pole design shall be in accordance with loading and allowable stress requirements of the AASHTO Standard Specifications for Structural Supports for Highway Signs, Luminaires, and Traffic Signals, 2013-6th Edition with current interims. |
| **Subsection:**<br>**Revision:** | 834.14.03 High Mast Poles.<br>*Remove the second and fourth sentence from the first paragraph.<br>*Replace the third paragraph with the following: Provide calculations and drawings that are stamped by a Professional Engineer licensed in the Commonwealth of Kentucky.<br>*Replace paragraph six with the following: Provide a pole section that conforms to ASTM A 595 grade A with a minimum yield strength of 55 KSI or ASTM A 572 with a minimum yield strength of 55 KSI. Use tubes that are round or 16 sided with a four inch corner radius, have a constant linear taper of .144 in/ft and contain only one longitudinal seam weld. Circumferential welded tube butt splices and laminated tubes are not permitted. Provide pole sections that are telescopically slip fit assembled in the field to facilitate inspection of interior surface welds and the protective coating. The minimum length of the telescopic slip splices shall be 1.5 times the inside diameter of the exposed end of the female section. Use longitudinal seam welds as commended in Section 5.15 of the AASHTO 2013 Specifications. The thickness of the opening of the handhole shall not be less than the diameter of the bottom tube of the pole but needs to be at least 15 inches. The handhole frame width shall be 0.4 times the diameter of the bottom tube. Provide products that are hot-dip galvanized to the requirements of either ASTM A123 (fabricated products) or ASTM A 153 (hardware items). |
| **Subsection:**<br>**Revision:** | 834.16 ANCHOR BOLTS.<br>Insert the following sentence at the beginning of the paragraph: The anchor bolt design shall follow the NCHRP Report 494 Section 2.4 and NCHRP 469 Appendix A Specifications. |
| **Subsection:**<br>**Revision:** | 834.17.01 Conventional.<br>Add the following sentence after the second sentence: Provide a waterproof sticker mounted on the bottom of the housing that is legible from the ground and indicates the wattage of the fixture by providing the fist to numbers of the wattage. |
| **Subsection:**<br>**Revision:** | 834.21.01 Waterproof Enclosures.<br>*Add the following sentence in the second paragraph in the thirteenth sentence: Provide a cabinet door with a louvered air vent, Filter-retaining brackets and an easy clean metal filter.<br>*Replace sentence sixteen with the following: Use a 120-volt fixture and utilize a compact fluorescent or L.E.D. bulb (equivalent to 60 watt minimum). |
| **Subsection:**<br>**Revision:** | 835.07 Traffic Poles.<br>Replace the first sentence of the first paragraph with the following: Pole diameter and wall thickness shall be calculated in accordance with the AASHTO Standard Specifications for Structural Supports for Highway Signs, Luminaires, and Traffic Signals, 2013-6th Edition with current interims. |

Supplemental Specifications to the
Standard Specifications for Road and Bridge Construction, 2012 Edition
Effective with the January 24, 2014 Letting

| | |
|---|---|
| **Subsection:**<br>**Revision:** | 835.07 Traffic Poles.<br>*Replace the first sentence of the fourth paragraph with the following: Ensure transverse plats have a thickness ≥ 2 inches.<br>*Add the following sentence to the end of the fourth paragraph: The bottom pole diameter shall not be less than 16.25 inches. |
| **Subsection:**<br>**Revision:** | 835.07 Traffic Poles.<br>Replace the second sentence of the fifth paragraph with the following: For anchor bolt design, pole forces shall be positioned in such a manner to maximize the force on any individual anchor bolt regardless of the actual anchor bolt orientation with the pole. |
| **Subsection:**<br>**Revision:** | 835.07 Traffic Poles.<br>Replace the first and second sentence of the sixth paragraph with the following: The pole handhole shall be 25 inches by 6.5 inches. The handhole cover shall be removable from the handhole frame. On the frame side opposite the hinge, provide a mechanism on the handhole cover/frame to place the Department's standard padlock as specified in Section 834.25. The handhole frame shall have two stainless studs installed opposite the hinge to secure the handhole cover to the frame which includes providing stainless steel wing nuts and washers. The handhole cover shall be manufactured from 0.25 inch thick galvanized steel (ASTM 153) and have a neoprene rubber gasket that is permanently secured to the handhole frame to insure weather-tight protection. The hinge shall be manufactured from 7 gauge stainless steel to provide adjustability to insure a weather-tight fit for the cover. The minimum clear distance between the transverse plate and the bottom opening of the handhole shall not be less than the diameter of the bottom tube but needs to be at least 12 inches. |
| **Subsection:**<br>**Revision:** | 835.07 Traffic Poles.<br>*Replace the first sentence of the last paragraph with the following: Provide calculations and drawings that are stamped by a Professional Engineer licensed in the Commonwealth of Kentucky.<br>*Replace the third sentence of the last paragraph with the following: All tables referenced in 835.07 are found in the AASHTO Standard Specifications for Structural Supports for Highway Signs, Luminaires, and Traffic Signals, 2013-6th Edition with current interims. |
| **Subsection:**<br>**Revision:** | 835.07.01 Steel Strain Poles.<br>Replace the second sentence of the second paragraph with the following:<br>The detailed analysis shall be certified by a Professional Engineer licensed in the Commonwealth of Kentucky. |
| **Subsection:**<br>**Revision:** | 835.07.01 Steel Strain Poles.<br>Replace number 7. after the second paragraph with the following: 7. Fatigue calculations should be shown for all fatigue related connections. Provide the corresponding detail, stress category and example from table 11.9.3.1-1. |
| **Subsection:**<br>**Revision:** | 835.07.02 Mast Arm Poles.<br>Replace the second sentence of the fourth paragraph with the following: The detailed analysis shall be certified by a Professional Engineer licensed in the Commonwealth of Kentucky. |

Supplemental Specifications to the
Standard Specifications for Road and Bridge Construction, 2012 Edition
Effective with the January 24, 2014 Letting

| | |
|---|---|
| **Subsection:**<br>**Revision:** | 835.07.02 Mast Arm Poles.<br>Replace number 7) after the fourth paragraph with the following: 7) Fatigue calculations should be shown for all fatigue related connections. Provide the corresponding detail, stress category and example from table 11.9.3.1-1. |
| **Subsection:**<br>**Revision:** | 835.07.03 ANCHORS.<br>Add the following to the end of the paragraph: There shall be two steel templates (one can be used for the headed part of the anchor bolt when designed in this manner) provided per pole. Templates shall be contained within a 26.5 inch diameter. All templates shall be fully galvanized (ASTM A 153). |
| **Subsection:**<br>**Revision:** | 835.16.05 Optical Units.<br>Replace the 3rd paragraph with the following:<br>The list of certified products can be found on the following website: http://www.intertek.com. |
| **Subsection:**<br>**Revision:** | 835.19.01 Pedestrian Detector Body.<br>Replace the first sentence with the following: Provide a four holed pole mounted aluminum rectangular housing that is a compatible with the pedestrian detector. |

1I

## SPECIAL NOTE FOR PORTABLE CHANGEABLE MESSAGE SIGNS

This Special Note will apply when indicated on the plans or in the proposal.

**1.0 DESCRIPTION.** Furnish, install, operate, and maintain variable message signs at the locations shown on the plans or designated by the Engineer. Remove and retain possession of variable message signs when they are no longer needed on the project.

**2.0 MATERIALS.**

**2.1 General.** Use LED Variable Message Signs Class I, II, or III, as appropriate, from the Department's List of Approved Materials.

Unclassified signs may be submitted for approval by the Engineer. The Engineer may require a daytime and nighttime demonstration. The Engineer will make a final decision within 30 days after all required information is received.

**2.2 Sign and Controls.** All signs must:

1) Provide 3-line messages with each line being 8 characters long and at least 18 inches tall. Each character comprises 35 pixels.
2) Provide at least 40 preprogrammed messages available for use at any time. Provide for quick and easy change of the displayed message; editing of the message; and additions of new messages.
3) Provide a controller consisting of:
   a) Keyboard or keypad.
   b) Readout that mimics the actual sign display. (When LCD or LCD type readout is used, include backlighting and heating or otherwise arrange for viewing in cold temperatures.)
   c) Non-volatile memory or suitable memory with battery backup for storing pre-programmed messages.
   d) Logic circuitry to control the sequence of messages and flash rate.
4) Provide a serial interface that is capable of supporting complete remote control ability through land line and cellular telephone operation. Include communication software capable of immediately updating the message, providing complete sign status, and allowing message library queries and updates.
5) Allow a single person easily to raise the sign to a satisfactory height above the pavement during use, and lower the sign during travel.
6) Be Highway Orange on all exterior surfaces of the trailer, supports, and controller cabinet.
7) Provide operation in ambient temperatures from -30 to + 120 degrees Fahrenheit during snow, rain and other inclement weather.
8) Provide the driver board as part of a module. All modules are interchangeable, and have plug and socket arrangements for disconnection and reconnection. Printed circuit boards associated with driver boards have a conformable coating to protect against moisture.
9) Provide a sign case sealed against rain, snow, dust, insects, etc. The lens is UV stabilized clear plastic (polycarbonate, acrylic, or other approved material) angled to prevent glare.
10) Provide a flat black UV protected coating on the sign hardware, character PCB, and appropriate lens areas.
11) Provide a photocell control to provide automatic dimming.

1I

12) Allow an on-off flashing sequence at an adjustable rate.
13) Provide a sight to aim the message.
14) Provide a LED display color of approximately 590 nm amber.
15) Provide a controller that is password protected.
16) Provide a security device that prevents unauthorized individuals from accessing the controller.
17) Provide the following 3-line messages preprogrammed and available for use when the sign unit begins operation:

/KEEP/RIGHT/⇒⇒⇒/
/KEEP/LEFT/⇐⇐⇐/
/LOOSE/GRAVEL/AHEAD/
/RD WORK/NEXT/**MILES/
/TWO WAY/TRAFFIC/AHEAD/
/PAINT/CREW/AHEAD/
/REDUCE/SPEED/**MPH/
/BRIDGE/WORK/***0 FT/
/MAX/SPEED/**MPH/
/SURVEY/PARTY/AHEAD/
/MIN/SPEED/**MPH/
/ICY/BRIDGE/AHEAD/ /ONE LANE/BRIDGE/AHEAD/
/ROUGH/ROAD/AHEAD/
/MERGING/TRAFFIC/AHEAD/
/NEXT/***/MILES/
/HEAVY/TRAFFIC/AHEAD/
/SPEED/LIMIT/**MPH/
/BUMP/AHEAD/
/TWO/WAY/TRAFFIC/

*Insert numerals as directed by the Engineer.
Add other messages during the project when required by the Engineer.

**2.3 Power.**

1) Design solar panels to yield 10 percent or greater additional charge than sign consumption. Provide direct wiring for operation of the sign or arrow board from an external power source to provide energy backup for 21 days without sunlight and an on-board system charger with the ability to recharge completely discharged batteries in 24 hours.

**3.0 CONSTRUCTION.** Furnish and operate the variable message signs as designated on the plans or by the Engineer. Ensure the bottom of the message panel is a minimum of 7 feet above the roadway in urban areas and 5 feet above in rural areas when operating. Use Class I, II, or III signs on roads with a speed limit less than 55 mph. Use Class I or II signs on roads with speed limits 55 mph or greater.

Maintain the sign in proper working order, including repair of any damage done by others, until completion of the project. When the sign becomes inoperative, immediately repair or replace the sign. Repetitive problems with the same unit will be cause for rejection and replacement.

Use only project related messages and messages directed by the Engineer, unnecessary messages lessen the impact of the sign. Ensure the message is displayed in either one or 2 phases with each phase having no more than 3 lines of text. When no message is needed, but it is necessary to know if the sign is operable, flash only a pixel.

When the sign is not needed, move it outside the clear zone or where the Engineer directs. Variable Message Signs are the property of the Contractor and shall be removed from the project when no longer needed. The Department will not assume ownership of these signs.

**4.0 MEASUREMENT.** The final quantity of Variable Message Sign will be

1I

the actual number of individual signs acceptably furnished and operated during the project. The Department will not measure signs replaced due to damage or rejection.

**5.0 PAYMENT.** The Department will pay for the Variable Message Signs at the unit price each. The Department will not pay for signs replaced due to damage or rejection. Payment is full compensation for furnishing all materials, labor, equipment, and service necessary to, operate, move, repair, and maintain or replace the variable message signs. The Department will make payment for the completed and accepted quantities under the following:

| Code | Pay Item | Pay Unit |
|---|---|---|
| 02671 | Portable Changeable Message Sign | Each |

Effective June 15, 2012

# 2012 STANDARD DRAWINGS THAT APPLY

TEMPORARY SILT FENCE ..... RDX-210-02
TEMPORARY SILT FENCE WITH WOVEN WIRE FENCE FABRIC ..... RDX-215
SILT TRAP - TYPE A ..... RDX-220-04
SILT TRAP - TYPE C ..... RDX-230
CURVE WIDENING AND SUPERELEVATION TRANSITIONS ..... RGS-001-06
SUPERELEVATION FOR MULTILANE PAVEMENTS ..... RGS-002-05
MISCELLANEOUS STANDARDS PART 1 ..... RGX-001-05
APPROACHES, ENTRANCES, AND MAIL BOX TURNOUT ..... RPM-110-06
NON-REINFORCED CONCRETE PAVEMENT FOR SHOULDERS AND MEDIANS ..... RPN-001-06
NON-REINFORCED CONCRETE PAVEMENT ..... RPN-015-04
CONCRETE PAVEMENT JOINTS - TYPES AND SPACING ..... RPN-020-03
CONCRETE PAVEMENT JOINT DETAILS ..... RPS-010-10
CONCRETE PAVEMENT JOINTS - TYPES AND SPACING ..... RPS-030-05
CONCRETE PAVEMENT JOINTS - TYPES AND SPACING ..... RPS-031-05
CONCRETE PAVEMENT JOINTS - TYPES AND SPACING ..... RPS-032-05
CONCRETE PAVEMENT JOINTS - TYPES AND SPACING ..... RPS-033-06
CONCRETE PAVEMENT JOINTS - TYPES AND SPACING ..... RPS-034-06
CONCRETE PAVEMENT JOINTS - TYPES AND SPACING ..... RPS-035-05
CONCRETE PAVEMENT JOINTS - TYPES AND SPACING ..... RPS-036-05
CONCRETE PAVEMENT JOINTS - TYPES AND SPACING ..... RPS-037-05
CONCRETE PAVEMENT JOINTS - TYPES AND SPACING ..... RPS-038-05
CONCRETE PAVEMENT JOINTS - TYPES AND SPACING ..... RPS-039-05
HOT POURED ELASTIC JOINT SEALS FOR CONCRETE PAVEMENT ..... RPX-015-03
SHOULDER CLOSURE ..... TTC-135-01
POST SPLICING DETAIL ..... TTD-110-01
PAVEMENT CONDITION WARNING SIGNS ..... TTD-125-01
MOBILE OPERATION FOR PAINT STRIPING CASE III ..... TTS-110-01
MOBILE OPERATION FOR PAINT STRIPING CASE IV ..... TTS-115-01

| COUNTY OF | ITEM NO. | SHEET NO. |
|---|---|---|
| | | |

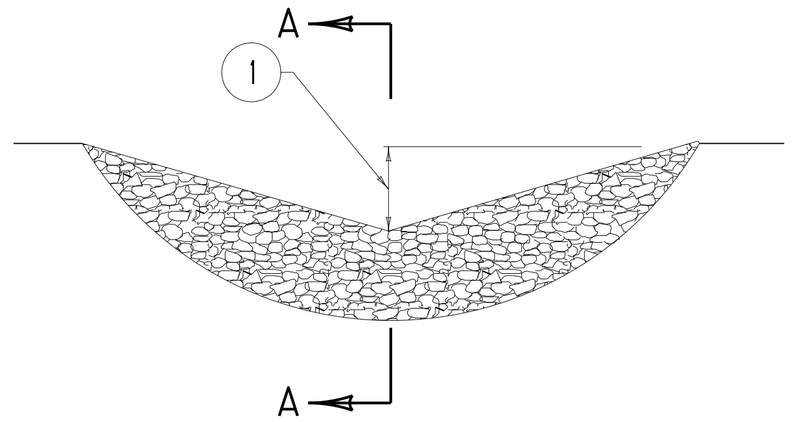


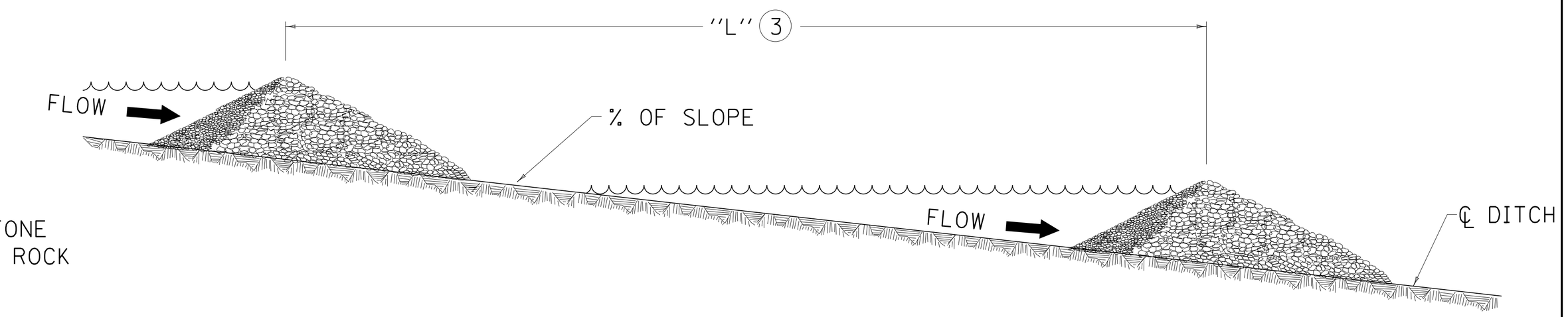


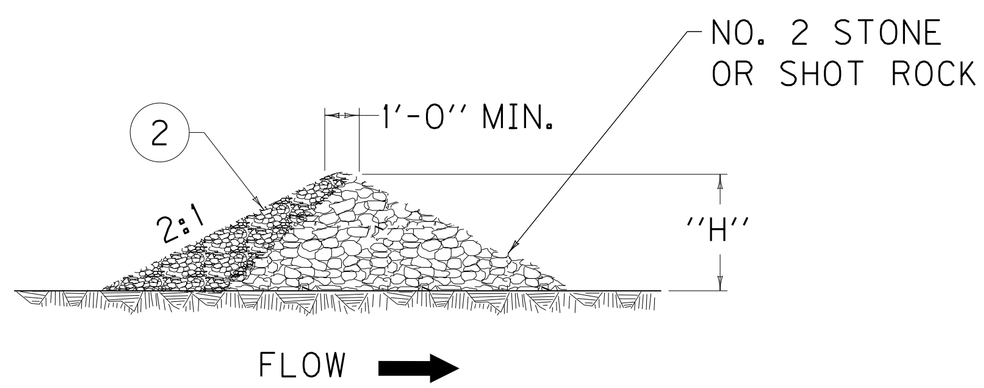


SECTION "A~A"

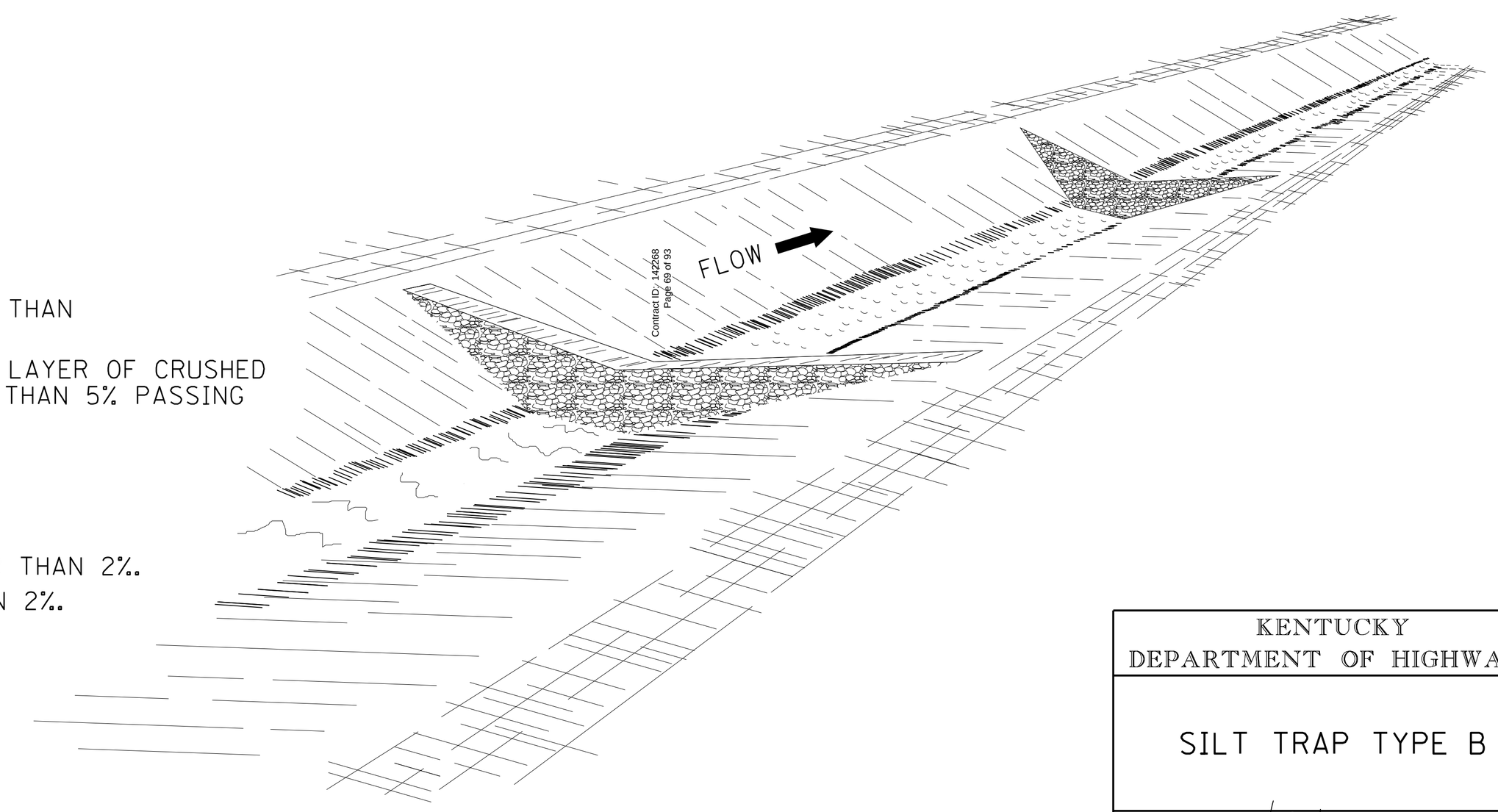


## ~NOTES~

BID ITEM AND UNIT TO BID:

| CODE | PAY ITEM | PAY UNIT |
|---|---|---|
| 2704 | SILT TRAP TYPE B | EACH |
| 2707 | CLEAN SILT TRAP TYPE B | EACH |

1. MIDDLE OF SILT TRAP SHALL BE A MINIMUM OF 1'-0" LOWER THAN SIDES SO FLOW WILL NOT BYPASS TRAP OR ERODE BANKS.
2. UPSTREAM FACE OF SILT TRAP SHALL BE A FOUR INCH MIN. LAYER OF CRUSHED AGGREGATE HAVING 100% PASSING A 3" SIEVE AND NO MORE THAN 5% PASSING A NO. 8 SIEVE (SEE SECTION "A-A").
3. $\text{"L"} = \dfrac{\text{"H"}}{\text{SLOPE OF DITCH}}$
4. SPACE SILT TRAPS AT LOCATIONS AS SHOWN ON THE PLANS OR AS DIRECTED BY THE ENGINEER.
5. SILT TRAP TYPE B SHALL BE USED ON ALL SLOPES GREATER THAN 2%.
6. SILT TRAP TYPE B MAY BE USED ON ALL SLOPES LESS THAN 2%.

KENTUCKY
DEPARTMENT OF HIGHWAYS

SILT TRAP TYPE B

SUBMITTED Jeff Napier 7-18-13
DATE

016

Contract ID : 142268
Page 69 of 93

HOPKINS COUNTY
054GR 4P065 FE01

FILE NAME: C:\PWWORK\JEFF.LAIL\D0512631\SEPIA 016.DGN
USER: Jeff.Lail
DATE PLOTTED: July 19, 2013
E-SHEET NAME:
MicroStation v8.11.7.180

# PART III

# EMPLOYMENT, WAGE AND RECORD REQUIREMENTS

# TRANSPORTATION CABINET
# DEPARTMENT OF HIGHWAYS

## LABOR AND WAGE REQUIREMENTS
## APPLICABLE TO OTHER THAN FEDERAL-AID SYSTEM PROJECTS

I. Application
II. Nondiscrimination of Employees (KRS 344)
III. Payment of Predetermined Minimum Wages
IV. Statements and Payrolls

### I. APPLICATION

1. These contract provisions shall apply to all work performed on the contract by the contractor with his own organization and with the assistance of workmen under his immediate superintendence and to all work performed on the contract by piecework, station work or by subcontract. The contractor's organization shall be construed to include only workmen employed and paid directly by the contractor and equipment owned or rented by him, with or without operators.

2. The contractor shall insert in each of his subcontracts all of the stipulations contained in these Required Provisions and such other stipulations as may be required.

3. A breach of any of the stipulations contained in these Required Provisions may be grounds for termination of the contract.

### II. NONDISCRIMINATION OF EMPLOYEES

AN ACT OF THE KENTUCKY
GENERAL ASSEMBLY TO PREVENT
DISCRIMINATION IN EMPLOYMENT
KRS CHAPTER 344
EFFECTIVE JUNE 16, 1972

The contract on this project, in accordance with KRS Chapter 344, provides that during the performance of this contract, the contractor agrees as follows:

1. The contractor shall not fail or refuse to hire, or shall not discharge any individual, or otherwise discriminate against an individual with respect to his compensation, terms, conditions, or privileges of employment, because of such individual's race, color, religion, national origin, sex, disability or age (between forty and seventy); or limit, segregate, or classify his employees in any way which would deprive or tend to deprive an individual of employment opportunities or otherwise adversely affect his status as an employee, because of such individual's race, color, religion, national origin, sex, disability or age (between forty and seventy). The contractor agrees to post in conspicuous places, available to employees and applicants for employment, notices to be provided setting forth the provisions of this nondiscrimination clause.

2. The contractor shall not print or publish or cause to be printed or published a notice or advertisement relating to employment by such an employer or membership in or any classification or referral for employment by the employment agency, indicating any preference, limitation, specification, or discrimination, based on race, color, religion, national origin, sex, disability or age (between forty and seventy), except that such notice or advertisement may indicate a preference, limitation, or specification based on religion, or national origin when religion, or national origin is a bona fide occupational qualification for employment.

3. If the contractor is in control of apprenticeship or other training or retraining, including on-the-job training programs, he shall not discriminate against an individual because of his race, color, religion, national origin, sex, disability or age (between forty and seventy), in admission to, or employment in any program established to provide apprenticeship or other training.

4. The contractor will send to each labor union or representative of workers with which he has a collective bargaining agreement or other contract or understanding, a notice to be provided advising the said labor union or workers' representative of the contractor's commitments under this section, and shall post copies of the notice in conspicuous places available to employees and applicants for employment. The contractor will take such action with respect to any subcontract or purchase order as the administrating agency may direct as a means of enforcing such provisions, including sanctions for non-compliance.

### III. PAYMENT OF PREDETERMINED MINIMUM WAGES

1. These special provisions are supplemented elsewhere in the contract by special provisions which set forth certain predetermined minimum wage rates. The contractor shall pay not less than those rates.

2. The minimum wage determination schedule shall be posted by the contractor, in a manner prescribed by the Department of Highways, at the site of the work in prominent places where it can be easily seen by the workers.

### IV. STATEMENTS AND PAYROLLS

1. All contractors and subcontractors affected by the terms of KRS 337.505 to 337.550 shall keep full and accurate payroll records covering all disbursements of wages to their employees to whom they are required to pay not less than the prevailing rate of wages. Payrolls and basic records relating thereto will be maintained during the course of the work and preserved for a period of one (1) year from the date of completion of this contract.

2. The payroll records shall contain the name, address and social security number of each employee, his correct classification, rate of pay, daily and weekly number of hours worked, itemized deductions made and actual wages paid.

3. The contractor shall make his daily records available at the project site for inspection by the State Department of Highways contracting office or his authorized representative.

Periodic investigations shall be conducted as required to assure compliance with the labor provisions of the contract. Interrogation of employees and officials of the contractor shall be permitted during working hours.

Aggrieved workers, Highway Managers, Assistant District Engineers, Resident Engineers and Project Engineers shall report all complaints and violations to the Division of Contract Procurement.

The contractor shall be notified in writing of apparent violations. The contractor may correct the reported violations and notify the Department of Highways of the action taken or may request an informal hearing. The request for hearing shall be in writing within ten (10) days after receipt of the notice of the reported violation. The contractor may submit

records and information which will aid in determining the true facts relating to the reported violations.

Any person or organization aggrieved by the action taken or the findings established as a result of an informal hearing by the Division of Contract Procurement may request a formal hearing.

4. The wages of labor shall be paid in legal tender of the United States, except that this condition will be considered satisfied if payment is made by a negotiable check, on a solvent bank, which may be cashed readily by the employee in the local community for the full amount, without discount or collection charges of any kind. Where checks are used for payments, the contractor shall make all necessary arrangements for them to be cashed and shall give information regarding such arrangements.

5. No fee of any kind shall be asked or accepted by the contractor or any of his agents from any person as a condition of employment on the project.

6. No laborers shall be charged for any tools used in performing their respective duties except for reasonably avoidable loss or damage thereto.

7. Every employee on the work covered by this contract shall be permitted to lodge, board, and trade where and with whom he elects and neither the contractor nor his agents, nor his employees shall directly or indirectly require as a condition of employment that an employee shall lodge, board or trade at a particular place or with a particular person.

8. Every employee on the project covered by this contract shall be an employee of either the prime contractor or an approved subcontractor.

9. No charge shall be made for any transportation furnished by the contractor or his agents to any person employed on the work.

10. No individual shall be employed as a laborer or mechanic on this contract except on a wage basis, but this shall not be construed to prohibit the rental of teams, trucks or other equipment from individuals.

No Covered employee may be employed on the work except in accordance with the classification set forth in the schedule mentioned above; provided, however, that in the event additional classifications are required, application shall be made by the contractor to the Department of Highways and (1) the Department shall request appropriate classifications and rates from the proper agency, or (2) if there is urgent need for additional classification to avoid undue delay in the work, the contractor may employ such workmen at rates deemed comparable to rates established for similar classifications provided he has made written application through the Department of Highways, addressed to the proper agency, for the supplemental rates. The contractor shall retroactively adjust, upon receipt of the supplemental rates schedule, the wages of any employee paid less than the established rate and may adjust the wages of any employee overpaid.

11. No contractor or subcontractor contracting for any part of the contract work which may require or involve the employment of laborers or mechanics shall require or permit any laborer or mechanic in any work-week in which he is employed on such work, to work in excess of eight hours in any calendar day or in excess of forty hours in such work-week unless such laborer or mechanic receives compensation at a rate not less than one and one half times his basic rate of pay for all hours worked in excess of eight hours in any calendar day or in excess of forty hours in such work-week. A laborer, workman or mechanic and an employer may enter into a written agreement or a collective bargaining agreement to work more than eight (8) hours a calendar day but not more than ten (10) hours a calendar day for the straight time hourly rate. This agreement shall be in writing and shall be executed prior to the employee working in excess of eight (8) hours, but not more than ten (10) hours, in any one (1) calendar day.

12. Payments to the contractor may be suspended or withheld due to failure of the contractor to pay any laborer or mechanic employed or working on the site of the work, all or part of the wages required under the terms of the contract. The Department may suspend or withhold payments only after the contractor has been given written notice of the alleged violation and the contractor has failed to comply with the wage determination of the Department of Highways.

13. Contractors and subcontractors shall comply with the sections of Kentucky Revised Statutes, Chapter 337 relating to contracts for Public Works.

Revised 2-16-95

# EXECUTIVE BRANCH CODE OF ETHICS

In the 1992 regular legislative session, the General Assembly passed and Governor Brereton Jones signed Senate Bill 63 (codified as KRS 11A), the Executive Branch Code of Ethics, which states, in part:

> KRS 11A.040 (6) provides:
>
> No present or former public servant shall, within six (6) months of following termination of his office or employment, accept employment, compensation or other economic benefit from any person or business that contracts or does business with the state in matters in which he was directly involved during his tenure. This provision shall not prohibit an individual from returning to the same business, firm, occupation, or profession in which he was involved prior to taking office or beginning his term of employment, provided that, for a period of six (6) months, he personally refrains from working on any matter in which he was directly involved in state government. This subsection shall not prohibit the performance of ministerial functions, including, but not limited to, filing tax returns, filing applications for permits or licenses, or filing incorporation papers.
>
> KRS 11A.040 (8) states:
>
> A former public servant shall not represent a person in a matter before a state agency in which the former public servant was directly involved, for a period of one (1) year after the latter of:
>
> a) The date of leaving office or termination of employment; or
> b) The date the term of office expires to which the public servant was elected.

This law is intended to promote public confidence in the integrity of state government and to declare as public policy the idea that state employees should view their work as a public trust and not as a way to obtain private benefits.

If you have worked for the executive branch of state government within the past six months, you may be subject to the law's prohibitions. The law's applicability may be different if you hold elected office or are contemplating representation of another before a state agency.

Also, if you are affiliated with a firm which does business with the state and which employs former state executive-branch employees, you should be aware that the law may apply to them.

In case of doubt, the law permits you to request an advisory opinion from the Executive Branch Ethics Commission, Room 136, Capitol Building, 700 Capitol Avenue, Frankfort, Kentucky 40601; telephone (502) 564-7954.

## Kentucky Equal Employment Opportunity Act of 1978

The requirements of the Kentucky Equal Employment Opportunity Act of 1978 (KRS 45.560-45.640) shall apply to this Contract. The apparent low Bidder will be required to submit EEO forms to the Division of Construction Procurement, which will then forward to the Finance and Administration Cabinet for review and approval. No award will become effective until all forms are submitted and EEO/CC has certified compliance. The required EEO forms are as follows:

- EEO-1: Employer Information Report
- Affidavit of Intent to Comply
- Employee Data Sheet
- Subcontractor Report

These forms are available on the Finance and Administration's web page under ***Vendor Information, Standard Attachments and General Terms*** at the following address: **https://www.eProcurement.ky.gov**.

Bidders currently certified as being in compliance by the Finance and Administration Cabinet may submit a copy of their approval letter in lieu of the referenced EEO forms.

For questions or assistance please contact the Finance and Administration Cabinet by email at **finance.contractcompliance@ky.gov** or by phone at 502-564-2874.

General Decision Number: KY140102 04/18/2014 KY102

Superseded General Decision Number: KY20130102

State: Kentucky

Construction Type: Highway

Counties: Allen, Ballard, Butler, Caldwell, Calloway, Carlisle, Christian, Crittenden, Daviess, Edmonson, Fulton, Graves, Hancock, Henderson, Hickman, Hopkins, Livingston, Logan, Lyon, Marshall, McCracken, McLean, Muhlenberg, Ohio, Simpson, Todd, Trigg, Union, Warren and Webster Counties in Kentucky.

HIGHWAY CONSTRUCTION PROJECTS (excluding tunnels, building structures in rest area projects & railroad construction; bascule, suspension & spandrel arch bridges designed for commercial navigation, bridges involving marine construction; and other major bridges).

| Modification Number | Publication Date |
|---|---|
| 0 | 01/03/2014 |
| 1 | 04/04/2014 |
| 2 | 04/18/2014 |

BRIN0004-002 06/01/2013

BALLARD, BUTLER, CALDWELL, CARLISLE, CRITTENDEN, DAVIESS, EDMONSON, FULTON, GRAVES, HANCOCK, HENDERSON, HICKMAN, HOPKINS, LIVINGSTON, LYON, MARSHALL, MCCRACKEN, MCLEAN, MUHLENBERG, OHIO, UNION, and WEBSTER COUNTIES

| | Rates | Fringes |
|---|---|---|
| BRICKLAYER | | |
| Ballard, Caldwell, Carlisle, Crittenden, Fulton, Graves, Hickman, Livingston, Lyon, Marshall, and McCracken Counties | $ 24.11 | 10.30 |
| Butler, Edmonson, Hopkins, Muhlenberg, and Ohio Counties | $ 24.61 | 10.22 |
| Daviess, Hancock, Henderson, McLean, Union, and Webster Counties | $ 28.68 | 13.72 |

---

BRTN0004-005 05/01/2009

ALLEN, CALLOWAY, CHRISTIAN, LOGAN, SIMPSON, TODD, TRIGG, and WARREN COUNTIES

| | Rates | Fringes |
|---|---|---|

BRICKLAYER.....$ 24.52 1.83

---

* CARP0357-002 04/01/2014

| | Rates | Fringes |
|---|---|---|
| CARPENTER | $ 27.50 | 14.92 |
| Diver | $ 41.63 | 14.92 |
| PILEDRIVERMAN | $ 27.75 | 14.92 |

---

ELEC0369-006 05/29/2013

BUTLER, EDMONSON, LOGAN, TODD & WARREN COUNTIES:

| | Rates | Fringes |
|---|---|---|
| ELECTRICIAN | $ 29.48 | 14.37 |

---

ELEC0429-001 02/01/2010

ALLEN & SIMPSON COUNTIES:

| | Rates | Fringes |
|---|---|---|
| ELECTRICIAN | $ 21.85 | 10.35 |

---

ELEC0816-002 06/01/2013

BALLARD, CALDWELL, CALLOWAY, CARLISLE, CHRISTIAN, CRITTENDEN, FULTON (Except a 5 mile radius of City Hall in Fulton), GRAVES, HICKMAN, LIVINGSTON, LYON, MARSHALL, MCCRACKEN & TRIGG COUNTIES:

| | Rates | Fringes |
|---|---|---|
| ELECTRICIAN | $ 30.40 | 25.5%+5.60 |

Cable spicers receive $.25 per hour additional.

---

ELEC1701-003 06/01/2013

DAVIESS, HANCOCK, HENDERSON, HOPKINS, MCLEAN, MUHLENBERG, OHIO, UNION & WEBSTER COUNTIES:

| | Rates | Fringes |
|---|---|---|
| ELECTRICIAN | $ 30.03 | 13.72 |

Cable spicers receive $.25 per hour additional.

---

ELEC1925-002 06/01/2012

FULTON COUNTY (Up to a 5 mile radius of City Hall in Fulton):

| | Rates | Fringes |
|---|---|---|
| CABLE SPLICER | $ 25.00 | 10.27 |
| ELECTRICIAN | $ 25.00 | 10.43 |

---

ENGI0181-017 07/01/2013

| | Rates | Fringes |
|---|---|---|
| Operating Engineer: | | |
| GROUP 1 | $ 28.00 | 13.90 |
| GROUP 2 | $ 25.45 | 13.90 |
| GROUP 3 | $ 25.85 | 13.90 |
| GROUP 4 | $ 25.17 | 13.90 |

OPERATING ENGINEER CLASSIFICATIONS

GROUP 1 - A-Frame Winch Truck; Auto Patrol; Backfiller; Batcher Plant; Bituminous Paver; Bituminous Transfer Machine; Boom Cat; Bulldozer; Mechanic; Cableway; Carry-All Scoop; Carry Deck Crane; Central Compressor Plant; Cherry Picker; Clamshell; Concrete Mixer (21 cu. ft. or Over); Concrete Paver; Truck-Mounted Concrete Pump; Core Drill; Crane; Crusher Plant; Derrick; Derrick Boat; Ditching & Trenching Machine; Dragline; Dredge Operator; Dredge Engineer; Elevating Grader & Loaders; Grade-All; Gurries; Heavy Equipment Robotics Operator/Mechanic; High Lift; Hoe-Type Machine; Hoist (Two or More Drums); Hoisting Engine (Two or More Drums); Horizontal Directional Drill Operator; Hydrocrane; Hyster; KeCal Loader; LeTourneau; Locomotive; Mechanic; Mechanically Operated Laser Screed; Mechanic Welder; Mucking Machine; Motor Scraper; Orangepeel Bucket; Overhead Crane; Piledriver; Power Blade; Pumpcrete; Push Dozer; Rock Spreader, attached to equipment; Rotary Drill; Roller (Bituminous); Rough Terrain Crane; Scarifier; Scoopmobile; Shovel; Side Boom; Subgrader; Tailboom; Telescoping Type Forklift; Tow or Push Boat; Tower Crane (French, German & other types); Tractor Shovel; Truck Crane; Tunnel Mining Machines, including Moles, Shields or similar types of Tunnel Mining Equipment

GROUP 2 - Air Compressor (Over 900 cu. ft. per min.); Bituminous Mixer; Boom Type Tamping Machine; Bull Float; Concrete Mixer (Under 21 cu. ft.); Dredge Engineer; Electric Vibrator; Compactor/Self-Propelled Compactor; Elevator (One Drum or Buck Hoist); Elevator (When used to Hoist Building Material); Finish Machine; Firemen & Hoist (One Drum); Flexplane; Forklift (Regardless of Lift Height); Form Grader; Joint Sealing Machine; Outboard Motor Boat; Power Sweeper (Riding Type); Roller (Rock); Ross Carrier; Skid Mounted or Trailer Mounted Conrete Pump; Skid Steer Machine with all Attachments; Switchman or Brakeman; Throttle Valve Person; Tractair & Road Widening Trencher; Tractor (50 H.P. or Over); Truck Crane Oiler; Tugger; Welding Machine; Well Points;& Whirley Oiler

GROUP 3 -All Off Road Material Handling Equipment, including Articulating Dump Trucks; Greaser on Grease Facilities servicing Heavy Equipment

GROUP 4 - Bituminous Distributor; Burlap & Curing Machine; Cement Gun; Concrete Saw; Conveyor; Deckhand Oiler; Grout Pump; Hydraulic Post Driver; Hydro Seeder; Mud Jack; Oiler; Paving Joint Machine; Power Form Handling Equipment; Pump; Roller (Earth); Steerman; Tamping Machine; Tractor (Under

50 H.P.); & Vibrator

CRANES - with booms 150 ft. & Over (Including JIB), and where the length of the boom in combination with the length of the piling equals or exceeds 150 ft. - $1.00 above Group 1 rate

EMPLOYEES ASSIGNED TO WORK BELOW GROUND LEVEL ARE TO BE PAID 10% ABOVE BASIC WAGE RATE. THIS DOES NOT APPLY TO OPEN CUT WORK.

---

IRON0070-005 06/01/2013

BUTLER COUNTY (Eastern eighth, including the Townships of Decker, Lee & Tilford);
EDMONSON COUNTY (Northern three-fourths, including the Townships of Asphalt, Bee Spring, Brownsville, Grassland, Huff, Kyrock, Lindseyville, Mammoth Cave, Ollie, Prosperity, Rhoda, Sunfish & Sweden)

| | Rates | Fringes |
|---|---|---|
| Ironworkers: | | |
| Structural; Ornamental; Reinforcing; Precast Concrete Erectors | $ 26.47 | 19.30 |

---

IRON0103-004 04/01/2013

DAVIESS, HANCOCK, HENDERSON, HOPKINS, MCLEAN, OHIO, UNION & WEBSTER COUNTIES
BUTLER COUNTY (Townships of Aberdeen, Bancock, Casey, Dexterville, Dunbar, Elfie, Gilstrap, Huntsville, Logansport, Monford, Morgantown, Provo, Rochester, South Hill & Welchs Creek);
CALDWELL COUNTY (Northeastern third, including the Township of Creswell);
CHRISTIAN COUNTY (Northern third, including the Townships of Apex, Crofton, Kelly, Mannington & Wynns);
CRITTENDEN COUNTY (Northeastern half, including the Townships of Grove, Mattoon, Repton, Shady Grove & Tribune);
MUHLENBERG COUNTY (Townships of Bavier, Beech Creek Junction, Benton, Brennen, Browder, Central City, Cleaton, Depoy, Drakesboro, Eunis, Graham, Hillside, Luzerne, Lynn City, Martwick, McNary, Millport, Moorman, Nelson, Paradise, Powderly, South Carrollton, Tarina & Weir)

| | Rates | Fringes |
|---|---|---|
| Ironworkers: | $ 27.82 | 16.555 |

---

IRON0492-003 05/01/2013

ALLEN, LOGAN, SIMPSON, TODD & WARREN COUNTIES
BUTLER COUNTY (Southern third, including the Townships of Boston, Berrys Lick, Dimple, Jetson, Quality, Sharer, Sugar Grove & Woodbury);

CHRISTIAN COUNTY (Eastern two-thirds, including the Townships of Bennettstown, Casky, Herndon, Hopkinsville, Howell, Masonville, Pembroke & Thompsonville);
EDMONSON COUNTY (Southern fourth, including the Townships of Chalybeate & Rocky Hill);
MUHLENBERG COUNTY (Southern eighth, including the Townships of Dunnior, Penrod & Rosewood)

| | Rates | Fringes |
|---|---|---|
| Ironworkers:..... | $ 23.84 | 10.96 |

---

IRON0782-006 05/01/2013

BALLARD, CALLOWAY, CARLISLE, FULTON, GRAVES, HICKMAN, LIVINGSTON, LYON, MARSHALL, MCCRACKEN & TRIGG COUNTIES
CALDWELL COUNTY (Southwestern two-thirds, including the Townships of Cedar Bluff, Cider, Claxton, Cobb, Crowtown, Dulaney, Farmersville, Fredonia, McGowan, Otter Pond & Princeton);
CHRISTIAN COUNTY (Western third, Excluding the Townships of Apex, Crofton, Kelly, Mannington, Wynns, Bennettstown, Casky, Herndon, Hopkinsville, Howell, Masonville, Pembroke & Thompsonville);
CRITTENDEN COUNTY (Southwestern half, including the Townships of Crayne, Dycusburg, Frances, Marion, Mexico, Midway, Sheridan & Told)

| | Rates | Fringes |
|---|---|---|
| Ironworkers: | | |
| Projects with a total contract cost of $20,000,000.00 or above..... | $ 26.46 | 19.91 |
| All Other Work..... | $ 24.95 | 18.65 |

---

LABO0189-005 07/01/2013

BALLARD, CALLOWAY, CARLISLE, FULTON, GRAVES, HICKMAN, LIVINGSTON, LYON, MARSHALL & MCCRACKEN COUNTIES

| | Rates | Fringes |
|---|---|---|
| Laborers: | | |
| GROUP 1..... | $ 20.95 | 12.01 |
| GROUP 2..... | $ 21.20 | 12.01 |
| GROUP 3..... | $ 21.25 | 12.01 |
| GROUP 4..... | $ 21.85 | 12.01 |

LABORER CLASSIFICATIONS

GROUP 1 - Aging & Curing of Concrete; Asbestos Abatement Worker; Asphalt Plant; Asphalt; Batch Truck Dump; Carpenter Tender; Cement Mason Tender; Cleaning of Machines; Concrete; Demolition; Dredging; Environmental - Nuclear, Radiation, Toxic & Hazardous Waste - Level D; Flagperson; Grade Checker; Hand Digging & Hand Back Filling; Highway

Marker Placer; Landscaping, Mesh Handler & Placer; Puddler; Railroad; Rip-rap & Grouter; Right-of-Way; Sign, Guard Rail & Fence Installer; Signal Person; Sound Barrier Installer; Storm & Sanitary Sewer; Swamper; Truck Spotter & Dumper; Wrecking of Concrete Forms; General Cleanup

GROUP 2 - Batter Board Man (Sanitary & Storm Sewer); Brickmason Tender; Mortar Mixer Operator; Scaffold Builder; Burner & Welder; Bushammer; Chain Saw Operator; Concrete Saw Operator; Deckhand Scow Man; Dry Cement Handler; Environmental - Nuclear, Radiation, Toxic & Hazardous Waste - Level C; Forklift Operator for Masonary; Form Setter; Green Concrete Cutting; Hand Operated Grouter & Grinder Machine Operator; Jackhammer; Pavement Breaker; Paving Joint Machine; Pipelayer; Plastic Pipe Fusion; Power Driven Georgia Buggy & Wheel Barrow; Power Post Hole Digger; Precast Manhole Setter; Walk-Behind Tamper; Walk-Behind Trencher; Sand Blaster; Concrete Chipper; Surface Grinder; Vibrator Operator; Wagon Driller

GROUP 3 - Asphalt Luteman & Raker; Gunnite Nozzleman; Gunnite Operator & Mixer; Grout Pump Operator; Blaster; Side Rail Setter; Rail Paved Ditches; Screw Operator; Tunnel (Free Air); Water Blaster

GROUP 4 - Caisson Worker (Free Air); Cement Finisher; Environmental - Nuclear, Radiation, Toxic & Hazardous Waste - Levels A & B; Miner & Driller (Free Air); Tunnel Blaster; & Tunnel Mucker (Free Air); Directional & Horizontal Boring; Air Track Drillers (All Types); Powdermen & Blasters; Troxler & Concrete Tester if Laborer is Utilized

---

LABO0189-006 07/01/2013

ALLEN, BUTLER, CALDWELL, CHRISTIAN, DAVIESS, EDMONSON, HANCOCK, HOPKINS, LOGAN, MCLEAN, MUHLENBERG, OHIO, SIMPSON, TODD, TRIGG & WARREN COUNTIES

| | Rates | Fringes |
|---|---|---|
| Laborers: | | |
| GROUP 1 | $ 21.96 | 11.00 |
| GROUP 2 | $ 22.21 | 11.00 |
| GROUP 3 | $ 22.26 | 11.00 |
| GROUP 4 | $ 22.86 | 11.00 |

LABORER CLASSIFICATIONS

GROUP 1 - Aging & Curing of Concrete; Asbestos Abatement Worker; Asphalt Plant; Asphalt; Batch Truck Dump; Carpenter Tender; Cement Mason Tender; Cleaning of Machines; Concrete; Demolition; Dredging; Environmental - Nuclear, Radiation, Toxic & Hazardous Waste - Level D; Flagperson; Grade Checker; Hand Digging & Hand Back Filling; Highway Marker Placer; Landscaping, Mesh Handler & Placer; Puddler; Railroad; Rip-rap & Grouter; Right-of-Way; Sign, Guard Rail & Fence Installer; Signal Person; Sound Barrier Installer; Storm & Sanitary Sewer; Swamper; Truck Spotter & Dumper;

Wrecking of Concrete Forms; General Cleanup

GROUP 2 - Batter Board Man (Sanitary & Storm Sewer); Brickmason Tender; Mortar Mixer Operator; Scaffold Builder; Burner & Welder; Bushammer; Chain Saw Operator; Concrete Saw Operator; Deckhand Scow Man; Dry Cement Handler; Environmental - Nuclear, Radiation, Toxic & Hazardous Waste - Level C; Forklift Operator for Masonary; Form Setter; Green Concrete Cutting; Hand Operated Grouter & Grinder Machine Operator; Jackhammer; Pavement Breaker; Paving Joint Machine; Pipelayer; Plastic Pipe Fusion; Power Driven Georgia Buggy & Wheel Barrow; Power Post Hole Digger; Precast Manhole Setter; Walk-Behind Tamper; Walk-Behind Trencher; Sand Blaster; Concrete Chipper; Surface Grinder; Vibrator Operator; Wagon Driller

GROUP 3 - Asphalt Luteman & Raker; Gunnite Nozzleman; Gunnite Operator & Mixer; Grout Pump Operator; Blaster; Side Rail Setter; Rail Paved Ditches; Screw Operator; Tunnel (Free Air); Water Blaster

GROUP 4 - Caisson Worker (Free Air); Cement Finisher; Environmental - Nuclear, Radiation, Toxic & Hazardous Waste - Levels A & B; Miner & Driller (Free Air); Tunnel Blaster; & Tunnel Mucker (Free Air); Directional & Horizontal Boring; Air Track Drillers (All Types); Powdermen & Blasters; Troxler & Concrete Tester if Laborer is Utilized

---

LABO0561-001 07/01/2013

CRITTENDEN, HENDERSON, UNION & WEBSTER COUNTIES

| | Rates | Fringes |
|---|---|---|
| Laborers: | | |
| GROUP 1 | $ 21.11 | 12.25 |
| GROUP 2 | $ 21.36 | 12.25 |
| GROUP 3 | $ 21.41 | 12.25 |
| GROUP 4 | $ 22.01 | 12.25 |

LABORER CLASSIFICATIONS

GROUP 1 - Aging & Curing of Concrete; Asbestos Abatement Worker; Asphalt Plant; Asphalt; Batch Truck Dump; Carpenter Tender; Cement Mason Tender; Cleaning of Machines; Concrete; Demolition; Dredging; Environmental - Nuclear, Radiation, Toxic & Hazardous Waste - Level D; Flagperson; Grade Checker; Hand Digging & Hand Back Filling; Highway Marker Placer; Landscaping, Mesh Handler & Placer; Puddler; Railroad; Rip-rap & Grouter; Right-of-Way; Sign, Guard Rail & Fence Installer; Signal Person; Sound Barrier Installer; Storm & Sanitary Sewer; Swamper; Truck Spotter & Dumper; Wrecking of Concrete Forms; General Cleanup

GROUP 2 - Batter Board Man (Sanitary & Storm Sewer); Brickmason Tender; Mortar Mixer Operator; Scaffold Builder; Burner & Welder; Bushammer; Chain Saw Operator; Concrete Saw Operator; Deckhand Scow Man; Dry Cement Handler; Environmental - Nuclear, Radiation, Toxic & Hazardous Waste

- Level C; Forklift Operator for Masonary; Form Setter; Green Concrete Cutting; Hand Operated Grouter & Grinder Machine Operator; Jackhammer; Pavement Breaker; Paving Joint Machine; Pipelayer; Plastic Pipe Fusion; Power Driven Georgia Buggy & Wheel Barrow; Power Post Hole Digger; Precast Manhole Setter; Walk-Behind Tamper; Walk-Behind Trencher; Sand Blaster; Concrete Chipper; Surface Grinder; Vibrator Operator; Wagon Driller

GROUP 3 - Asphalt Luteman & Raker; Gunnite Nozzleman; Gunnite Operator & Mixer; Grout Pump Operator; Blaster; Side Rail Setter; Rail Paved Ditches; Screw Operator; Tunnel (Free Air); Water Blaster

GROUP 4 - Caisson Worker (Free Air); Cement Finisher; Environmental - Nuclear, Radiation, Toxic & Hazardous Waste - Levels A & B; Miner & Driller (Free Air); Tunnel Blaster; & Tunnel Mucker (Free Air); Directional & Horizontal Boring; Air Track Drillers (All Types); Powdermen & Blasters; Troxler & Concrete Tester if Laborer is Utilized

---

PAIN0032-002 05/01/2013

BALLARD COUNTY

| | Rates | Fringes |
|---|---|---|
| Painters: | | |
| Bridges | $ 30.56 | 15.18 |
| All Other Work | $ 28.26 | 15.18 |

Spray, Blast, Steam, High & Hazardous (Including Lead Abatement) and All Epoxy - $1.00 Premium

---

PAIN0118-003 05/01/2010

EDMONSON COUNTY:

| | Rates | Fringes |
|---|---|---|
| Painters: | | |
| Brush & Roller | $ 18.50 | 10.30 |
| Spray, Sandblast, Power Tools, Waterblast & Steam Cleaning | $ 19.50 | 10.30 |

---

PAIN0156-006 04/01/2010

DAVIESS, HANCOCK, HENDERSON, MCLEAN, OHIO, UNION & WEBSTER COUNTIES

| | Rates | Fringes |
|---|---|---|
| Painters: | | |
| BRIDGES | | |
| GROUP 1 | $ 25.60 | 10.05 |
| GROUP 2 | $ 25.85 | 10.05 |

```
      GROUP 3....................$ 26.60            10.05
      GROUP 4....................$ 27.60            10.05
     ALL OTHER WORK:
      GROUP 1....................$ 25.60            11.30
      GROUP 2....................$ 25.85            11.30
      GROUP 3....................$ 26.60            11.30
      GROUP 4....................$ 27.60            11.30

PAINTER CLASSIFICATIONS

GROUP 1 - Brush & Roller

GROUP 2 - Plasterers

  GROUP 3 - Spray; Sandblast; Power Tools; Waterblast;
  Steamcleaning; Brush & Roller of Mastics, Creosotes, Kwinch
  Koate & Coal Tar Epoxy

  GROUP 4 - Spray of Mastics, Creosotes, Kwinch Koate & Coal
  Tar  Epoxy

-----------------------------------------------------------------
 PAIN0456-003 07/01/2011

ALLEN, BUTLER, LOGAN, MUHLENBERG, SIMPSON, TODD & WARREN
COUNTIES:


                                   Rates          Fringes

Painters:
     BRIDGES
      Brush & Roller.............$ 22.55             9.65
      Spray; Sandblast; Power
      Tools; Waterblast & Steam
      Cleaning...................$ 23.55             9.65
     ALL OTHER WORK
      Brush & Roller.............$ 17.55             9.65
      Spray; Sandblast; Power
      Tools; Waterblast & Steam
      Cleaning...................$ 18.55             9.65

ALL OTHER WORK - HIGH TIME PAY
Over 35 feet (up to 100 feet) - $1.00 above base wage
100 feet and over - $2.00 above base wage

  DURING SPRAY PAINTING AND SANDBLASTING OPERATIONS, POT
  TENDERS SHALL RECEIVE THE SAME WAGE RATES AS THE SPRAY
  PAINTER OR NOZZLE OPERATOR

-----------------------------------------------------------------
 PAIN0500-002 07/01/2013

CALDWELL, CALLOWAY, CARLISLE, CHRISTIAN, CRITTENDEN, FULTON,
GRAVES, HICKMAN, HOPKINS, LIVINGSTON, LYON, MARSHALL, MCCRACKEN
& TRIGG COUNTIES:


                                   Rates          Fringes
```

Painters:
Bridges.....$ 25.80 11.95
All Other Work.....$ 19.55 11.95

Waterblasting units with 3500 PSI and above - $.50 premium
Spraypainting and all abrasive blasting - $1.00 premium
Work 40 ft. and above ground level - $1.00 premium

---

PLUM0184-002 07/01/2013

BALLARD, CALDWELL, CALLOWAY, CARLISLE, CHRISTIAN, CRITTENDEN, FULTON, GRAVES, HICKMAN, LIVINGSTON, LYON, MARSHALL, MCCRACKEN and TRIGG COUNTIES

| | Rates | Fringes |
|---|---|---|
| Plumber; Steamfitter | $ 33.11 | 14.83 |

---

PLUM0502-004 08/01/2013

ALLEN, BUTLER, EDMONSON, SIMPSON & WARREN

| | Rates | Fringes |
|---|---|---|
| Plumber; Steamfitter | $ 32.00 | 17.17 |

---

PLUM0633-002 08/01/2013

DAVIESS, HANCOCK, HENDERSON, HOPKINS, LOGAN, MCLEAN, MUHLENBERG, OHIO, TODD, UNION & WEBSTER COUNTIES:

| | Rates | Fringes |
|---|---|---|
| PLUMBER/PIPEFITTER | $ 29.87 | 14.25 |

---

TEAM0089-003 03/30/2014

ALLEN, BUTLER, EDMONSON, LOGAN, SIMPSON & WARREN COUNTIES

| | Rates | Fringes |
|---|---|---|
| Truck drivers: | | |
| Zone 1: | | |
| Group 1 | $ 19.58 | 17.83 |
| Group 2 | $ 19.76 | 17.83 |
| Group 3 | $ 19.84 | 17.83 |
| Group 4 | $ 19.86 | 17.83 |

GROUP 1 - Greaser; Tire Changer

GROUP 2 - Truck Mechanic; Single Axle Dump; Flat Bed; All Terrain Vehicles when used to haul materials; Semi Trailer or Pole Trailer when used to pull building materials and equipment; Tandem Axle Dump; Driver of Distributors

GROUP 3 - Mixer All Types

GROUP 4 - Winch and A-Frame when used in transporting materials; Ross Carrier; Fork Lift when used to transport building materials; Driver on Pavement Breaker; Euclid and Other Heavy Earth Moving Equipment; Low Boy; Articulator Cat; Five Axle Vehicle

---

TEAM0215-003 03/31/2013

DAVIESS, HANCOCK, HENDERSON, HOPKINS, MCLEAN, MUHLENBERG, OHIO & WEBSTER COUNTIES

| | Rates | Fringes |
|---|---|---|
| TRUCK DRIVER | | |
| Group 1 | $ 20.93 | 16.85 |
| Group 2 | $ 21.16 | 16.85 |
| Group 3 | $ 21.23 | 16.85 |
| Group 4 | $ 21.24 | 16.85 |

GROUP 1: Greaser, Tire Changer

GROUP 2: Truck Mechanic

GROUP 3: Single Axle Dump; Flat Bed; All Terrain Vehicle when used to haul materials; Semi Trailer or Pole Trailer when used to pull building materials and equipment; Tandem Axle Dump; Driver of Distributors; Mixer All Types

GROUP 4: Euclid and other heavy earth moving equipment; Low Boy; Articulator Cat; 5 Axle Vehicle; Winch and A- Frame when used in transporting materials; Ross Carrier; Fork Lift when used to transport building materials; Driver on Pavement Breaker

---

TEAM0236-001 03/31/2013

BALLARD, CALDWELL, CALLOWAY, CARLISLE, CHRISTIAN, CRITTENDEN, FULTON, GRAVES, HICKMAN, LIVINGSTON, LYON, MARSHALL, MCCRACKEN,TODD & TRIGG COUNTIES

| | Rates | Fringes |
|---|---|---|
| TRUCK DRIVER | | |
| Group 1 | $ 19.38 | 16.85 |
| Group 2 | $ 19.56 | 16.85 |
| Group 3 | $ 19.56 | 16.85 |
| Group 4 | $ 19.66 | 16.85 |
| Group 5 | $ 19.64 | 16.85 |

GROUP 1: Greaser, Tire Changer

GROUP 2: Truck Mechanic

GROUP 3: Single Axle Dump; Flat Bed; All Terrain Vehicle when used to haul materials; Semi Trailer or Pole Trailer when used to pull building materials and equipment; Tandem Axle

Dump; Drivers of Distributors

GROUP 4: Euclid and other heavy earth moving equipment; Low Boy; Articulator Cat; Five Axle Vehicle; Winch and A-Frame when used in transporting materials; Ross Carrier

GROUP 5: Mixer All Types

---

WELDERS - Receive rate prescribed for craft performing operation to which welding is incidental.

==========

Unlisted classifications needed for work not included within the scope of the classifications listed may be added after award only as provided in the labor standards contract clauses (29CFR 5.5 (a) (1) (ii)).

---

The body of each wage determination lists the classification and wage rates that have been found to be prevailing for the cited type(s) of construction in the area covered by the wage determination. The classifications are listed in alphabetical order of "identifiers" that indicate whether the particular rate is union or non-union.

Union Identifiers

An identifier enclosed in dotted lines beginning with characters other than "SU" denotes that the union classification and rate have found to be prevailing for that classification. Example: PLUM0198-005 07/01/2011. The first four letters , PLUM, indicate the international union and the four-digit number, 0198, that follows indicates the local union number or district council number where applicable , i.e., Plumbers Local 0198. The next number, 005 in the example, is an internal number used in processing the wage determination. The date, 07/01/2011, following these characters is the effective date of the most current negotiated rate/collective bargaining agreement which would be July 1, 2011 in the above example.

Union prevailing wage rates will be updated to reflect any changes in the collective bargaining agreements governing the rates.

0000/9999: weighted union wage rates will be published annually each January.

Non-Union Identifiers

Classifications listed under an "SU" identifier were derived from survey data by computing average rates and are not union rates; however, the data used in computing these rates may include both union and non-union data. Example: SULA2004-007 5/13/2010. SU indicates the rates are not union majority rates, LA indicates the State of Louisiana; 2004 is the year of the survey; and 007 is an internal number used in producing the wage determination. A 1993 or later date, 5/13/2010, indicates the classifications and rates under that identifier were issued as a General Wage Determination on that date.

Survey wage rates will remain in effect and will not change until a new survey is conducted.

---

WAGE DETERMINATION APPEALS PROCESS

1.) Has there been an initial decision in the matter? This can be:

* an existing published wage determination
* a survey underlying a wage determination
* a Wage and Hour Division letter setting forth a position on a wage determination matter
* a conformance (additional classification and rate) ruling

On survey related matters, initial contact, including requests for summaries of surveys, should be with the Wage and Hour Regional Office for the area in which the survey was conducted because those Regional Offices have responsibility for the Davis-Bacon survey program. If the response from this initial contact is not satisfactory, then the process described in 2.) and 3.) should be followed.

With regard to any other matter not yet ripe for the formal process described here, initial contact should be with the Branch of Construction Wage Determinations. Write to:

Branch of Construction Wage Determinations
Wage and Hour Division
U.S. Department of Labor
200 Constitution Avenue, N.W.
Washington, DC 20210

2.) If the answer to the question in 1.) is yes, then an interested party (those affected by the action) can request review and reconsideration from the Wage and Hour Administrator (See 29 CFR Part 1.8 and 29 CFR Part 7). Write to:

Wage and Hour Administrator
U.S. Department of Labor
200 Constitution Avenue, N.W.
Washington, DC 20210

The request should be accompanied by a full statement of the interested party's position and by any information (wage payment data, project description, area practice material, etc.) that the requestor considers relevant to the issue.

3.) If the decision of the Administrator is not favorable, an interested party may appeal directly to the Administrative Review Board (formerly the Wage Appeals Board). Write to:

Administrative Review Board
U.S. Department of Labor
200 Constitution Avenue, N.W.
Washington, DC 20210

4.) All decisions by the Administrative Review Board are final.

==========

END OF GENERAL DECISION

Fringe benefit amounts are applicable for all hours worked except when otherwise noted.

These rates are listed pursuant to the Kentucky Determination No. CR-13-I-HWY dated April 15, 2013.

No laborer, workman or mechanic shall be paid at a rate less than that of a Journeyman except those classified as bona fide apprentices.

Apprentices or trainees shall be permitted to work as such subject to Administrative Regulations adopted by the Commissioner of Workplace Standards. Copies of these regulations will be furnished upon request from any interested person.

Before using apprentices on the job the contractor shall present to the Contracting Officer written evidence of registration of such employees in a program of a State apprenticeship and training agency approved and recognized by the U. S. Bureau of Apprenticeship and Training. In the absence of such a State agency, the contractor shall submit evidence of approval and registration by the U. S. Bureau of Apprenticeship and Training.

The contractor shall submit to the Contracting Officer, written evidence of the established apprenticeship-journeyman ratios and wage rates in the project area, which will be the basis for establishing such ratios and rates for the project under the applicable contract provisions.

**TO: EMPLOYERS/EMPLOYEES**

**PREVAILING WAGE SCHEDULE:**

**The wages indicated on this wage schedule are the least permitted to be paid for the occupations indicated. When an employee works in more than one classification, the employer must record the number of hours worked in each classification at the prescribed hourly base rate.**

**OVERTIME:**

**Overtime is to be paid after an employee works eight (8) hours a day or forty (40) hours a week, whichever gives the employee the greater wages. At least time and one-half the base rate is required for all overtime. A laborer, workman or mechanic and an employer may enter into a written agreement or a collective bargaining agreement to work more than eight (8) hours a calendar day but not more than ten (10) hours a calendar day for the straight time hourly rate. Wage violations or questions should be directed to the designated Engineer or the undersigned.**

Diana Castle Radcliffe, P.E.
Director, Division of Construction Procurement
Frankfort, Kentucky 40622

# PART IV

# INSURANCE

# INSURANCE

The Contractor shall procure and maintain the following insurance in addition to the insurance required by law:

1) Commercial General Liability-Occurrence form – not less than $2,000,000 General aggregate, $2,000,000 Products & Completed Aggregate, $1,000,000 Personal & Advertising, $1,000,000 each occurrence.

2) Automobile Liability- $1,000,000 per accident

3) Employers Liability:

   a) $100,000 Each Accident Bodily Injury
   b) $500,000 Policy limit Bodily Injury by Disease
   c) $100,000 Each Employee Bodily Injury by Disease

4) The insurance required above must be evidenced by a Certificate of Insurance and this Certificate of Insurance must contain one of the following statements:
   a) "policy contains no deductible clauses."
   b) "policy contains _____ (amount) deductible property damage clause but company will pay claim and collect the deductible from the insured."

5) KENTUCKY WORKMEN'S COMPENSATION INSURANCE. The contractor shall furnish evidence of coverage of all his employees or give evidence of self-insurance by submitting a copy of a certificate issued by the Workmen's Compensation Board.

The cost of insurance is incidental to all contract items. All subcontractors must meet the same minimum insurance requirements.

# PART V

# BID ITEMS

142268

# PROPOSAL BID ITEMS



**Report Date** 5/7/14

## Section: 0001 - PAVING

| LINE | BID CODE | ALT | DESCRIPTION | QUANTITY | UNIT | UNIT PRICE | FP | AMOUNT |
|---|---|---|---|---|---|---|---|---|
| 0010 | 02014 | | BARRICADE-TYPE III | 89.00 | EACH | | $ | |
| 0020 | 02024 | | JPC PAVEMENT-10 IN/24 | 3,735.00 | SQYD | | $ | |
| 0030 | 02091 | | REMOVE PAVEMENT | 3,735.00 | SQYD | | $ | |
| 0040 | 02115 | | SAW-CLEAN-RESEAL TVERSE JOINT | 27,625.00 | LF | | $ | |
| 0050 | 02116 | | SAW-CLEAN-RESEAL LONGIT JOINT | 102,825.00 | LF | | $ | |
| 0060 | 02562 | | TEMPORARY SIGNS | 840.00 | SQFT | | $ | |
| 0070 | 02650 | | MAINTAIN & CONTROL TRAFFIC (MP 13.100-15.746) | 1.00 | LS | | $ | |
| 0080 | 02650 | | MAINTAIN & CONTROL TRAFFIC (MP 19.057-19.400) | 1.00 | LS | | $ | |
| 0090 | 02671 | | PORTABLE CHANGEABLE MESSAGE SIGN | 4.00 | EACH | | $ | |
| 0100 | 02775 | | ARROW PANEL | 4.00 | EACH | | $ | |
| 0110 | 04793 | | CONDUIT-1 1/4 IN | 280.00 | LF | | $ | |
| 0120 | 04811 | | ELECTRICAL JUNCTION BOX TYPE B | 5.00 | EACH | | $ | |
| 0130 | 04850 | | CABLE-NO. 14/1 PAIR | 250.00 | LF | | $ | |
| 0140 | 04894 | | PREFORMED LOOP/LEAD-IN | 200.00 | LF | | $ | |
| 0150 | 06514 | | PAVE STRIPING-PERM PAINT-4 IN | 70,726.00 | LF | | $ | |
| 0160 | 06549 | | PAVE STRIPING-TEMP REM TAPE-B (6 INCH) | 900.00 | LF | | $ | |
| 0170 | 06550 | | PAVE STRIPING-TEMP REM TAPE-W (4 INCH) | 75,715.00 | LF | | $ | |
| 0180 | 06551 | | PAVE STRIPING-TEMP REM TAPE-Y (4 INCH) | 75,715.00 | LF | | $ | |
| 0190 | 10020NS | | FUEL ADJUSTMENT | 1,085.00 | DOLL | $1.00 | $ | $1,085.00 |
| 0200 | 20453ES835 | | PREFORMED QUADRAPOLE LOOPS | 2,040.00 | LF | | $ | |

## Section: 0002 - DEMOBILIZATION

| LINE | BID CODE | ALT | DESCRIPTION | QUANTITY | UNIT | UNIT PRICE | FP | AMOUNT |
|---|---|---|---|---|---|---|---|---|
| 0210 | 02569 | | DEMOBILIZATION | 1.00 | LS | | $ | |