CALL NO. 413

CONTRACT ID. 092931

CARROLL - GALLATIN COUNTIES

FED/STATE PROJECT NUMBER 121GR09M010

DESCRIPTION LOUISVILLE-COVINGTON ROAD (I-71)

WORK TYPE BRIDGE REPAIRS

PRIMARY COMPLETION DATE 7/15/2009

LETTING DATE: April 24, 2009

Sealed Bids will be received in the Division of Construction Procurement and/or the Auditorium located on the 1st floor of the Transportation Cabinet Office Building until 10:00 AM EASTERN DAYLIGHT TIME April 24, 2009. Bids will be publicly opened and read at 10:00 AM EASTERN DAYLIGHT TIME.

REQUIRED BID PROPOSAL GUARANTY: Not less than 5% of the total bid.

(Check guaranty submitted: Cashier's Check ☐ Certified Check ☐ Bid Bond ☐)

BID BONDS WHEN SUBMITTED WILL BE RETAINED WITH THE PROPOSAL

DBE General Plan Included ☐

BID ☐ PROPOSAL ISSUED TO: _____

SPECIMEN ☐ _____

Address City State Zip

TABLE OF CONTENTS

PART I SCOPE OF WORK
- PROJECT(S), COMPLETION DATE(S), & LIQUIDATED DAMAGES
- CONTRACT NOTES
- NATIONAL HIGHWAY
- SPECIAL NOTE(S) APPLICABLE TO PROJECT
- LIQUIDATED DAMAGES
- TRAFFIC CONTROL PLAN
- SKETCH MAP(S)
- MATERIAL SUMMARY
- BRIDGE DRAWINGS

PART II SPECIFICATIONS AND STANDARD DRAWINGS
- SPECIFICATIONS REFERENCE
- SUPPLEMENTAL SPECIFICATIONS
- STANDARD DRAWINGS THAT APPLY

PART III EMPLOYMENT, WAGE AND RECORD REQUIREMENTS
- LABOR AND WAGE REQUIREMENTS
- EXECUTIVE BRANCH CODE OF ETHICS
- KENTUCKY EQUAL EMPLOYMENT OPPORTUNITY ACT OF 1978
- PROJECT WAGE RATES

PART IV INSURANCE

PART V BID ITEMS

PART I

SCOPE OF WORK

CONTRACT ID - 092931 ADMINISTRATIVE DISTRICT - 06

PROJECT(S) IDENTIFICATION AND DESCRIPTION:

COUNTY - CARROLL, GALLATIN
121GR09M010 LOUISVILLE-COVINGTON ROAD (I-71)

COUNTY - CARROLL PES - MB02100710903
FE02 021 0071 B00042
LOUISVILLE-COVINGTON ROAD (I-71) BRIDGE OVER KENTUCKY RIVER (MP 44.003). BRIDGE REPAIRS.
GEOGRAPHIC COORDINATES LATITUDE 38^38'35" LONGITUDE 85^07'29"

COUNTY - GALLATIN PES - MB03900710902
FE02 039 0071 B00025
LOUISVILLE-COVINGTON ROAD (I-71) BRIDGE OVER BIG SUGAR ROAD (MP 63.544). BRIDGE REPAIRS.
GEOGRAPHIC COORDINATES LATITUDE 38^45'17" LONGITUDE 84^48'27"

COMPLETION DATE(S):

COMPLETION DATE - July 15, 2009
APPLIES TO ENTIRE PROPOSAL

10 CALENDAR DAYS
APPLIES TO 039B00025L

10 CALENDAR DAYS
APPLIES TO 021B00042L

CONTRACT NOTES

PROPOSAL ADDENDA

All addenda to this proposal must be applied when calculating bid and certified in the bid packet submitted to the Kentucky Department of Highways. Failure to use the correct and most recent addenda may result in the bid being rejected.

BID SUBMITTAL

Bidder must use the Department's Expedite Bidding Program available on the Internet web site of the Department of Highways, Division of Construction Procurement. (www.transportation.ky.gov/contract)

The Bidder must download the bid file located on the web site to prepare a bid packet for submission to the Department. The bidder must include the completed bid packet printed from the Program along with the disk created by said program.

JOINT VENTURE BIDDING

Joint Venture bidding is permissible. However, both companies MUST purchase a bidding proposal. Either proposal may be submitted but must contain the company names and signatures of both parties where required. A joint bid bond of 5% may be submitted for both companies or each company may submit a separate bond of 5%.

UNDERGROUND FACILITY DAMAGE PROTECTION

The contractor is advised that the Underground Facility Damage Protection Act of 1994, became law January 1, 1995. It is the contractor's responsibility to determine the impact of the act regarding this project, and take all steps necessary to be in compliance with the provision of the act.

01/01/2009

NATIONAL HIGHWAY

This project is on the NATIONAL HIGHWAY SYSTEM.

SPECIAL NOTE FOR BRIDGE CONCRETE AND HANDRAIL REPAIRS

I. DESCRIPTION.

Perform all work in accordance with the Kentucky Transportation Cabinet, Department of Highway's 2008 Standard Specifications for Road and Bridge Construction and applicable Supplemental Specifications, the Standard Drawings, this Note, and the attached detail drawing(s). Section references are to the Standard Specifications**.**

This work consists of the following: (1) Furnish all labor, materials, tools, and equipment; (2) Remove all damaged handrails and their components; (3) Remove damaged, spalled, or deteriorated concrete from the existing plinth, fascia, and curb (will consist of curb, plinth and fascia); (4) Clean concrete surfaces to be repaired; (5) Apply MG-KRETE or an approved equal repair areas according to manufactures specifications; (6) Reinstall handrail in accordance to standard drawing H115 (a copy of drawing is included); (7) Maintain and control traffic; and (8) Any other work specified as part of this contract.

II. MATERIALS.

A. MG-KRETE. See attached notes.

B. Aluminum Handrail. See attached notes and drawings.

III. CONSTRUCTION.

A. Remove Existing Materials. Remove damaged, spalled, or deteriorated concrete from plinth, fascia, and curb, with chipping hammers as directed by the Engineer. The interfaces of the new and old concrete shall be as nearly vertical and horizontal as possible. Extreme care shall be taken not to damage any reinforcing bar encountered.

B. Repair Concrete. Blast clean all areas of existing concrete and steel to come in contact with the MG-Krete until free of all laitance and deleterious substances immediately prior to the placement of the MG-Krete. The Contractor shall be responsible for having a representative from Imoc on site at least the first day that MG-Krete is used for repairs.

C. Bridge Handrail Repair. Remove damaged handrail from bridge. The Cabinet will provide used aluminum handrail, posts, and splices at the location noted at the end of this note. Reuse or reinstall posts. If post assemblies are too damaged to reuse, relocate attachment plus or minus 10 inches. Drill and dowel in 8 inch (7/8 diameter) stainless steel anchor dowels to attach posts to plinth at new location. Reinstall Rail into posts according to standard drawing H115.

D. On-Site Inspection. Each Contractor submitting a bid for this work shall make a thorough inspection of the site prior to submitting his bid and shall thoroughly familiarize himself with existing conditions so that the work can be expeditiously performed after a contract is awarded. Submission of a bid will be considered evidence of this inspection having been made. Any claims resulting from site conditions will not be honored by the Department.

IV. MEASUREMENT.

A. Concrete Repair. The Department will measure the quantity as "Lump Sum" for the concrete barrier, plinth, and curb.

B. Bridge Handrail Repair. The Department will measure the quantity in "Linear Feet".

PAYMENT.

A. Concrete Repair. Payment at the contract unit price of "Lump Sum" is full compensation for removing and disposing of specified existing materials, blast cleaning, applying MG-KRETE, and all incidental items necessary to complete the work as specified by this note and as shown on the attached detail drawing(s).

B. Bridge Handrail Repair. Payment at the contract unit price per "Linear Feet" is full compensation for removing and disposing of specified existing materials, transportation and delivery of used aluminum railing material from the address below, and Reinstalling Aluminum handrail, posts and *all* incidental items necessary to complete the work as specified by this note and as shown on the attached detail drawing(s).

ALUMINUM HANDRAIL

Used aluminum handrail, posts, and splices will be furnished by the Department. Some extra work may be needed to place handrail due to the fact it is used All additional pieces to install washers, nuts, anchor bolts, driving pins, and any other materials needed to install handrail will be provided by the Contractor at no additional expense to the Department. Payment at the contract unit price for HANDRAIL REPAIR shall include pick up and delivery of the handrails from the location listed below to the construction sites.

Inspection of handrail, posts, and splices can be done between 9:00am till 3:00pm.
Contact Mr. Frank Castle at 502-564-4556 to arrange a suitable time for inspection and to pick up needed aluminum handrails.

Location
Bailey Bridge Yard
123 Old Wilkerson Blvd
Frankfort Kentucky 40601
Phone 502-564-2956

Please note that the successful bidder shall take possession of the railing material needed for completion of the job by calling Mr. Castle to arrange a suitable day and time for pick up. Allow him a minimum of three days prior to the anticipated pick up day to minimize possible delays.

The Department will not consider any other items for payment other than the listed bid items, and considers payment as full compensation for all work required to complete the project.

MG-KRETE™ SPECIFICATIONS

I. GENERAL

The following is a typical specification for a MG-KRETE™ concrete repair. Each project will have special conditions and these should be identified and addressed in addition to this specification. If in doubt please inquire with an Imco® Technologies' technical representative.

II. QUALITY ASSURANCE

A. MG-KRETE™ may only be applied by a qualified, licensed or trained applicator. Please contact the local Manufacturer's representative.

B. A pre-installation conference to include at least the contractor, applicator, engineer and the Manufacturer's representative.

III. INSPECTION

Prior to commencement of work, a thorough inspection of the area to be repaired should be carried out to determine or confirm the following:

A. The age of the slab. In the case of new concrete it is preferable to wait the full cure period of 28 days before applying MG-KRETE™. If applied sooner could result in an inferior bond and subsequent failure.

B. The presence of moisture in the substrate.

C. The presence of frost in the substrate.

D. The presence of any surface coatings.

E. The presence of large irregularities such as cracks, voids, spalling and large gaps.

F. The air temperature and the temperature of the substrate.

IV. SITE PREPARATION

A. MG-KRETE™ should be installed on a clean, dry and structurally sound surface free of loose or foreign material, oil or grease and any other materials that would ultimately diminish the bonding capabilities of MG-KRETE™.

B. Power wash area to be repaired removing any loose material and light surface coatings. High pressure water blast will generally eliminate any delaminated surfaces.

C. If surface coatings, oil or grease stains exist you will have to remove by sandblasting, grinding or jack hammering depending on the severity. Wire brushes are excellent for light surface coatings.

D. Allow slab to dry until free of moisture. Using a tiger torch or wheat burner is a very effective way to dry substrate.

E. Remove frost from the substrate using a tiger torch or wheat burner

F. Where there are irregularities in the substrate such as cracks, voids, and uneven surfaces it is imperative to re-build these areas prior to doing a final skim coat.

G. If rusted re-bar exists the rust would need to be removed by either sand blasting or wire brushing depending on the severity. It is recommended

that a rust inhibitor such as Imco® 510A be painted on the re-bar prior to re-building the structure.

V. PRODUCT MIXTURE

A. MG-KRETE™ comes in a 50lb. bag of dry mix accompanied by a 1 gallon container of liquid activator.

B. MG-KRETE™ mixes extremely easy. Do not over mix. Once the liquid and dry mix meet they will begin to cure. 5.2 Smaller projects use a low RPM drill and paddle along with a five gallon pail.

C. Larger projects will require a mortar mixer. It is important to remember not to mix too long or MG-KRETE™ will begin to set up in the mixer. Larger projects like this will need one person mixing and two or more applying.

D. Always place the liquid into the pail first. This will ensure no dry clumps remain in the bottom. You can add High Temperature Retarder and any tinting material at this time **BUT NOT** Low Temperature Accelerator. Low Temp Accelerator must be added once mix is at the right consistency as it accelerates the cure.

E. MG-KRETE™ can be mixed as wet or as dry as desired. For drier mixes around ¾ gallon of activator should be used per bag.

F. MG-KRETE™ can be mixed to be wetter and looser, however no more than 1 ¼ gallons of activator should be used per bag.

G. When volume of MG-KRETE™ mix is larger it will be hotter and subsequently cure up more rapidly. **NEVER USE WATER WITH MG-KRETE™**

VI. PRODUCT MIXTURE WITH AGGREGATE

A. You can add aggregate to the mix. **DO NOT USE LIMESTONE**.

B. The volume of aggregate to MG-KRETE™ should not be more than 50% e.g. half a bag of aggregate to one bag of MG-KRETE™. This aggregate will reduce the heat, increase the product yield and make it easier to finish.

C. On deeper pours use aggregate no larger than ½ inch. A common aggregate used is pea gravel which is ¼ inch in size. For skim coating you would use a smaller stone and sil 9 – 1/8 inch has been very effective.

VII. PRODUCT MIXTURE IN COLD WEATHER

A. When substrate and air temperatures are below 50 degrees Fahrenheit you will need to add Low Temperature Accelerator to accelerate cure. See Manual for Low Temperature chart. Always put accelerator in last to avoid setting up too fast in pail.

B. Always do a test area to ensure you are using an appropriate amount of Low Temperature Accelerator.

C. MG-KRETE™ needs to cure to the touch in 20-30 minutes.

D. Never use more than (2) scoops of Low Temperature Accelerator per bag.

VIII. PRODUCT MIXTURE IN WARMER WEATHER

A. When substrate and air temperatures are warmer you can use High Temperature Retarder to slow the cure rate and increase your working time. See Manual for High Temperature Retarder chart.

B. If MG-KRETE™ begins to bubble during cure it is likely too hot and will require additional High Temperature Retarder.

C. ON JOB SITE - DO NOT KEEP DRY MIX OR LIQUID ACTIVATOR IN DIRECT SUNLIGHT.

D. Never use more than (2) scoops of High Temperature Retarder.

IX. PRODUCT APPLICATION

A. MG-KRETE™ applies similar to concrete however MG-KRETE™ is slightly more sticky primarily due to cure rate.

B. If applying MG-KRETE™ along two slabs it is important to replace the expansion joint to its' original width and depth. MG-KRETE™ expands and contracts at the same rate as concrete.

X. PRODUCT CURE

A. MG-KRETE™ cures up rapidly and can be walked on or driven on within 20 minutes depending on the thickness of pour and temperature. If opening to service is crucial the cure can be accelerated with Low Temperature Accelerator.

B. MG-KRETE™ will go down a brown color but will cure up to a concrete color.

C. Sunlight and rain will accelerate the MG-KRETE™ to change to a concrete color.

D. If the MG-KRETE™ cures up in an uneven color pattern power wash and this will resolve.

E. MG-KRETE™ gives off an ammonia smell during cure. A majority of the smell occurs shortly after application but can linger until fully cured in 28 days. It is not noticed in an outdoor application or in a larger area. **NOT FOR INDOOR RESIDENTIAL USE**

F. MG-KRETE™ is a non porous product - waterproof and resilient to gas, oils, salt and UV radiation

XI. CLEAN UP

A. Tools will clean off very easily with water. It is important to remember not to let MG-KRETE™ harden on your trowel. It will become impossible to remove.

B. If your trowel becomes sticky when using the MG-KRETE™ you will need to rinse off with water. It is very important to dry trowel off completely before using again.

XII. COATING MG-KRETE™

A. MG-KRETE™ can be coated with other products e.g. acrylic

B. Coatings can be applied in a minimum of two weeks to allow for off gassing. Contact Imco® Technologies for compatible coatings.

XIII. PRODUCT STORAGE

A. The 50lb. bag of dry mix has a substantial shelf life if stored in a dry environment and out of direct sunlight.

B. The liquid activator has a shelf life of approximately one year and should be kept out of direct sunlight.

C. It is recommended that material be rotated regularly to reduce outdated stock.

SPECIAL NOTE FOR CONTRACT COMPLETION DATE AND LIQUIDATED DAMAGES ON BRIDGE REPAIR CONTRACTS

I. COMPLETION DATE. The Contractor has the option of selecting the starting date for this Contract. Once selected, notify the Department in writing of the date selected at least two weeks prior to beginning work. All work is to be completed in the 2009 construction season by July 15, 2009. An allotted number of Calendar days are assigned to each structure in this contract as shown below.

STRUCTURE	NUMBER OF CALENDAR DAYS
021B00042L	10
039B00025L	10

Contrary to Section 108.07.02, the Engineer will begin charging calendar days for a structure on the day the Contractor starts work or sets up traffic control on that particular structure.

II. LIQUIDATED DAMAGES. Liquidated damages will be assessed the Contractor in accordance with the Transportation Cabinet, Department of Highway's 2008 Standard Specifications for Road and Bridge Construction, Section 108.09, when either the allotted number of calendar days or the July 15, 2009 date is exceeded.

Contrary to the Standard Specifications, liquidated damages will be assessed the Contractor during the months of December, January, February and March when the contract time has expired on any individual bridge or bridges. Contract time will be charged during these months.

All construction must be completed in accordance with the weather limitations specified in Section 606 and/or Section 601 as applicable. No extension of Contract time will be granted due to inclement weather or temperature limitations that occur due to starting work on the Contract or a structure late in the construction season.

TRAFFIC CONTROL PLAN

THIS PROJECT IS A FULLY CONTROLLED ACCESS HIGHWAY

TRAFFIC CONTROL GENERAL

Except as provided herein, maintain and control traffic in accordance with the 2008 Standard Specifications and the Standard Drawings, current editions. Except for the roadway and traffic control bid items listed, all items of work necessary to maintain and control traffic will be paid at the lump sum bid price to "Maintain and Control Traffic".

Contrary to Section 106.01, traffic control devices used on this project may be new, or used in like new condition, at the beginning of the work and maintained in like new condition until completion of the work.

The speed limit in immediate vicinity of the work zone will be reduced to 55 MPH and double fines for speeding violations will be established. Notify the Engineer a minimum of 12 hours prior to using the double fine signs. Erect dual mounted "WARNING FINE DOUBLED IN WORK ZONE" signs at the beginning of the work zone. At the end of the work zone, erect dual mounted "END DOUBLE FINE" signs. Remove or cover the double fine signs when the highway work zone does not have workers present for more than a 12 hour period of time. Remove or cover the 55 MPH signs and restore the 70 MPH signs during non working hours when there are no lane or shoulder closures in place. Payment for the signs shall be at the unit bid price for signs erected. Individual speed limit and double fine signs will only be measured once for payment; setting; resetting, removing, covering, and relocating of the signs will not be measured for payment but shall be incidental to Maintain and Control Traffic.

PROJECT PHASING & CONSTRUCTION PROCEDURES

Only nighttime work is allowed on this project. The method of lighting must be submitted to and approved by the Engineer prior to use. Lane closures will not be allowed on the following days and hours:

6:00 AM to 7:00 PM Everyday
Memorial Day Weekend (Friday-Monday)
Independence Day Weekend (Friday-Sunday)
Labor Day Weekend (Friday-Monday)
November 22, 2009 through November 25, 2009
December 22, 2009 through December 26, 2009
December 29, 2009 through January 2, 2010

At the discretion of the Engineer, additional days and hours may be specified when lane closures will not be allowed. Care must be taken to avoid lane closures on weekends with a major event scheduled in Louisville, or Northern Kentucky. The length of lane closures shall be only that needed for the actual operations and shall be left in place only during working hours and the time required for concrete curing. Lane closures shall not exceed 1/2 miles in length unless approved by the Engineer.

Conform to Standard Drawing TTC-115 for lane closures. Covering skip lines thru the length of taper and placing temporary edge lines are not required.

SIGNS

Additional traffic control signs in addition to normal lane closure signing detailed on the Standard Drawings will be required. Additional signs needed include, but are not limited to, dual mounted LEFT/RIGHT LANE CLOSED 1 MILE, LEFT/ RIGHT LANE CLOSED 2 MILES, LEFT/ RIGHT LANE CLOSED 3 MILES, SLOW/STOPPED TRAFFIC AHEAD. Signage for reduced speed limit, and double fine work zone shall be furnished, relocated and maintained by the Contractor. Contrary to section 112, only long term signs (signs intended to be continuously in place for more than 3 days) will be measured for payment. Individual signs will only be measured once for payment; setting; resetting, removing, covering, and relocating of long term signs will not be measured for payment but will be incidental to Maintain and Control Traffic. Short term signs (signs intended to be left in place for 3 days or less) will not be measured for payment but will be incidental to Maintain and Control Traffic.

BARRICADES

Barricades used in lieu of barrels and cones for channelization or delineation will be incidental to Maintain and Control Traffic according to Section 112.04.01. Temporary Concrete Barriers used to protect work area will be bid as Linear Feet. Barriers will be measured only once for payment and once for relocation, regardless of how many times they are set, reset, and relocated during this project. Temporary Concrete Barriers shall remain the Contractor’s property and shall be removed from the construction site upon completion of construction.

PORTABLE CHANGEABLE MESSAGE SIGN

Provide Portable Changeable Message Sign in advance of the project at locations to be determined by the Engineer. Use only messages approved or directed by the Engineer, to warn traveling public of Road Work Ahead, and possible delays. Relocation of Portable Changeable Message Sign, regardless of how many times, will not be measured for payment but shall be incidental to Maintain and Control Traffic. In the event of damage or mechanical failure, replace, or repair the Portable Changeable Message Sign within 24 hours. Portable Changeable Message Sign will remain the Contractor's property upon completion of construction.

TRUCK MOUNTED ATTENUATORS

Furnish and install Truck Mounted Attenuators (TMA) in advance of work areas when workers are present less than 10 feet from traffic. This is in addition to standard signing and ***arrow panel required*** in the Standard Drawings. The contractor shall have stockpiled of TMA's on the site one set of additional replacement cartridges, so that the TMA can be repaired immediately if damaged. The TMA's are to be used to protect the work area.

All details of the TMA installations are to be approved by the Engineer. TMA's & arrow panels will not be measured for payment, but shall be incidental to Maintain and Control Traffic. TMA's & arrow panels will remain the Contractor's property upon completion of construction.

TRAFFIC COORDINATOR

Designate an employee to be Traffic Coordinator. In addition to the requirements of Section 112.03.10, during any period when a lane closure is in place, the Traffic Coordinator shall arrange for personnel to be present on the project at all times to inspect the traffic control and to maintain the signing and devices. The project personnel shall have access on the project to a radio or telephone to be used in case of emergencies or accidents.

MEDIAN CROSS OVERS

Do *not* use median cross overs. Require Contractor's vehicles, material supplier's vehicles, and Contractor's employee's vehicles to change directions only at interchanges.

PROTECTION OF WATERWAY AND THE ROADWAY UNDERNEATH

No material should be allowed to drop into the waterway below bridge 021B00042L and the roadway below bridge 039B00025L.

The Department shall make payment at the contract unit price of one Lump Sum, and shall consider the payment full compensation for all labor and material needed to maintain a lane closure during allowable working hours to complete these projects.

BOONE
GRANT
039B00025L
WARSAW
GALLATIN
OWEN
021B00042L
HENRY
TRIMBLE
CARROLLTON
OHIO
RIVER
GENERAL BUTLER STATE RESORT PARK

MATERIAL SUMMARY CONTRACT ID: 092931

FE02 021 0071 B00042 PES NO: MB02100710903
LOUISVILLE-COVINGTON ROAD (I-71) BRIDGE OVER KENTUCKY RIVER (MP 44.003)

LINE NO	BID CODE	DESCRIPTION	QUANTITY	UNIT
0040	02003	RELOCATE TEMP CONC BARRIER	1,000.00	LF
0060	02650	MAINTAIN & CONTROL TRAFFIC	1.00	LS
		CARROLL COUNTY		
0050	02671	PORTABLE CHANGEABLE MESSAGE SIGN	1.00	EACH
0030	03171	CONCRETE BARRIER WALL TYPE 9T	1,000.00	LF
0010	20377EC	BRIDGE HANDRAIL REPAIR	77.00	LF
0020	23171EC	CONCRETE REPAIR	1.00	LS
0380	02569	DEMOBILIZATION	1.00	LS

FE02 039 0071 B00025 PES NO: MB03900710902
LOUISVILLE-COVINGTON ROAD (I-71) BRIDGE OVER BIG SUGAR ROAD (MP 63.544)

LINE NO	BID CODE	DESCRIPTION	QUANTITY	UNIT
0050	02003	RELOCATE TEMP CONC BARRIER	1,000.00	LF
0060	02650	MAINTAIN & CONTROL TRAFFIC	1.00	LS
		GALLATIN COUNTY		
0030	02775	ARROW PANEL	1.00	EACH
0040	03171	CONCRETE BARRIER WALL TYPE 9T	1,000.00	LF
0010	20377EC	BRIDGE HANDRAIL REPAIR	60.00	LF
0020	23171EC	CONCRETE REPAIR	1.00	LS
0380	02569	DEMOBILIZATION	1.00	LS

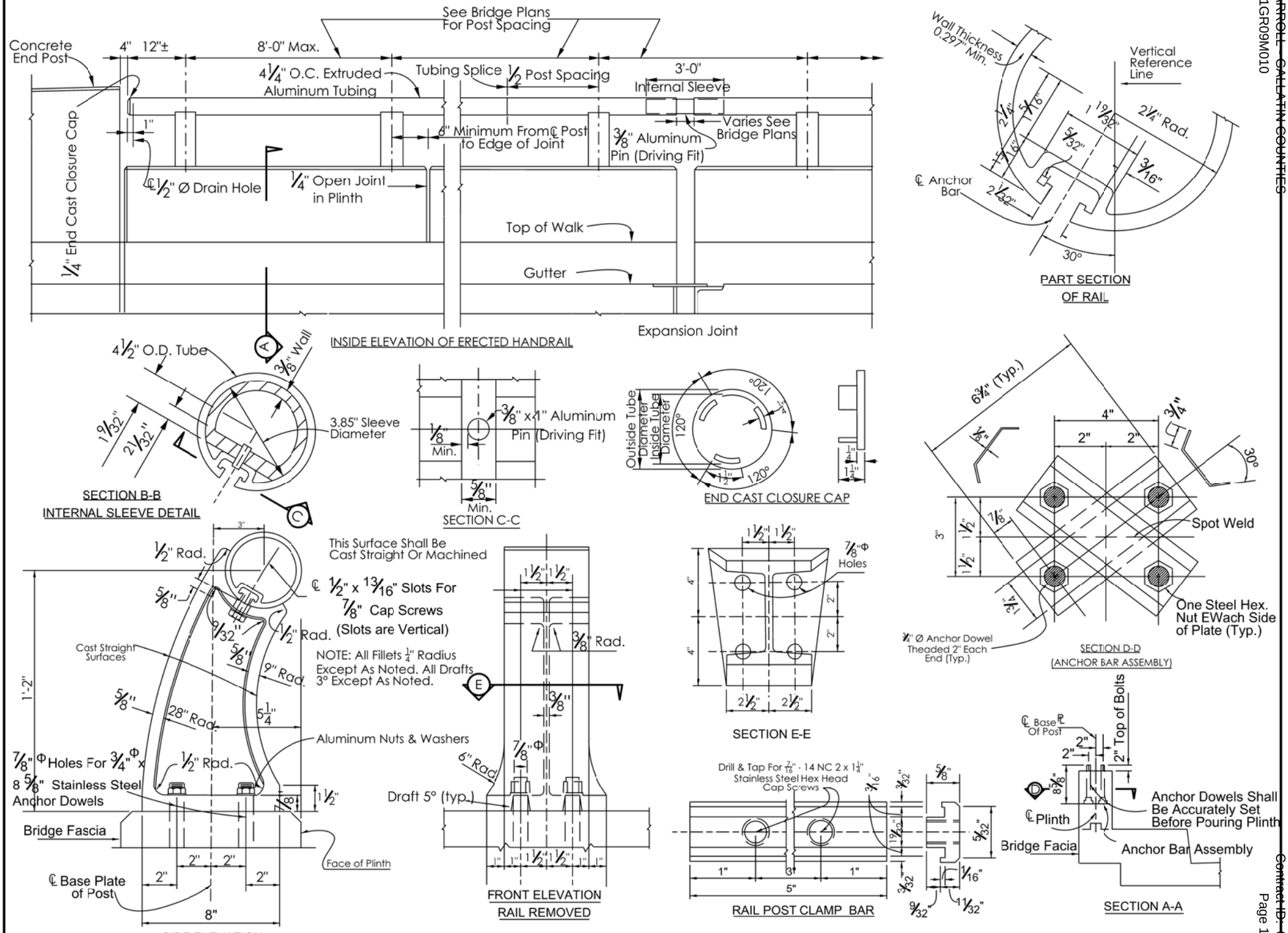

STANDARD HIGH STRENGTH ALUMINUM HANDRAIL P.1

GENERAL NOTES:

SPECIFICATIONS: Kentucky Department of Highways Standard Specifications for Road and Bridge Construction, Current Edition with Supplements shall apply to this project. ASTM and Aluminum Association Material Specifications, Current Editions, are also applicable as designated hereon.

DESIGN LOAD: As specified in the AASHTO Specifications, current edition with amendments, including the interim Specifications.

SCOPE: In general, this drawing in conjunction with the specifications and special provisions, as noted, covers the furnishing and erection of high strength aluminum handrails on highway bridge structures. The additional plans required for each bridge are the bridge plans fabricator's shop detail plans.

FABRICATION:

GENERAL: Post spacing is governed by the details shown on the bridge plans. The end result shall be a continuous rail; with each rail section being attached to a minimum of three posts with each joint being spliced as detailed hereon. Fabricator's shop detail plans, as required for each bridge, must be approved by the Kentucky Department of Highways, and the Contractor is responsible for furnishing these plans to the Department for approval prior to fabrication.

APPEARANCE: Pieces having surfaces so scored or marked as to cause an objectionable will be rejected.

CUTTING: All holes in casting shall be cored.

HOLES: All cuts are to be sawed and milled.

ERECTION MEASUREMENT AND PAYMENT:

ERECTION: Posts shall be set at right angles to the bridge fascia line and perpendicular to grade. The alignment of the railing shall be parallel to the fascia line. Special fabrication curvature will be required when fascia line are curved. Washer shims having a maximum thickness of 1/8" may be used under the posts to obtain desired alignment of post or rail. The void space under the posts shall be filled with alumilastic compound, or approved equal, so as to completely insulate the aluminum from concrete.

MEASUREMENT: The work actually completed and accepted in place shall be measured along the rail in linear feet.

PAYMENT: Payment will be made for the quantity measured as described above, at the contract unit price per linear feet and such payment shall be full compensation for all work necessary for completion.

MATERIAL:

TUBING AND CLAMPS: Shall meet the requirement of ASTM B221 alloy 6061-T6511 or alloy 6063-T6, using normal mill finish.

END CLOSURE CAP: Shall conform either to ASTM B26 alloy S5B-4 or Aluminum Association alloy A344-untreated.

POSTS: Cast aluminum posts shall be Aluminum Association alloy A344-T4 in accordance with the Special Provision for High Strength Cast ALuminum Bridge Railing Post.

WASHER: All nuts shall comply with American hexagon ASA Specification B18.2.

NUTS: Cast aluminum washers shall be Aluminum Association alloy A344-T4. All other washers shall be ASTM B209 alloy alclad 2024-T3.

CAP SCREWS: Aluminum nuts shall be ASTM B221 alloy 6061-T6511 or 6063-T6; American Standard finish hexagon, thick nuts, class 2B thread. Steel nuts in the anchor bar assembly shall be ASTM A 307. Stainless steel shall conform to ASTM A276 type 410.

DOWELS: Stainless steel anchor dowels shall conform to ASTM A276 type 340, except that their ultimate strength shall be 100,000 psi minimum. Threads shall be rolled.

ANCHOR CHANNEL BARS: Shall conform to ASTM A36.

MILL TEST REPORTS: Notarized mill test reports showing that the materials comply with the specifications.

STANDARD HIGH STRENGTH ALUMINUM HANDRAIL P.2

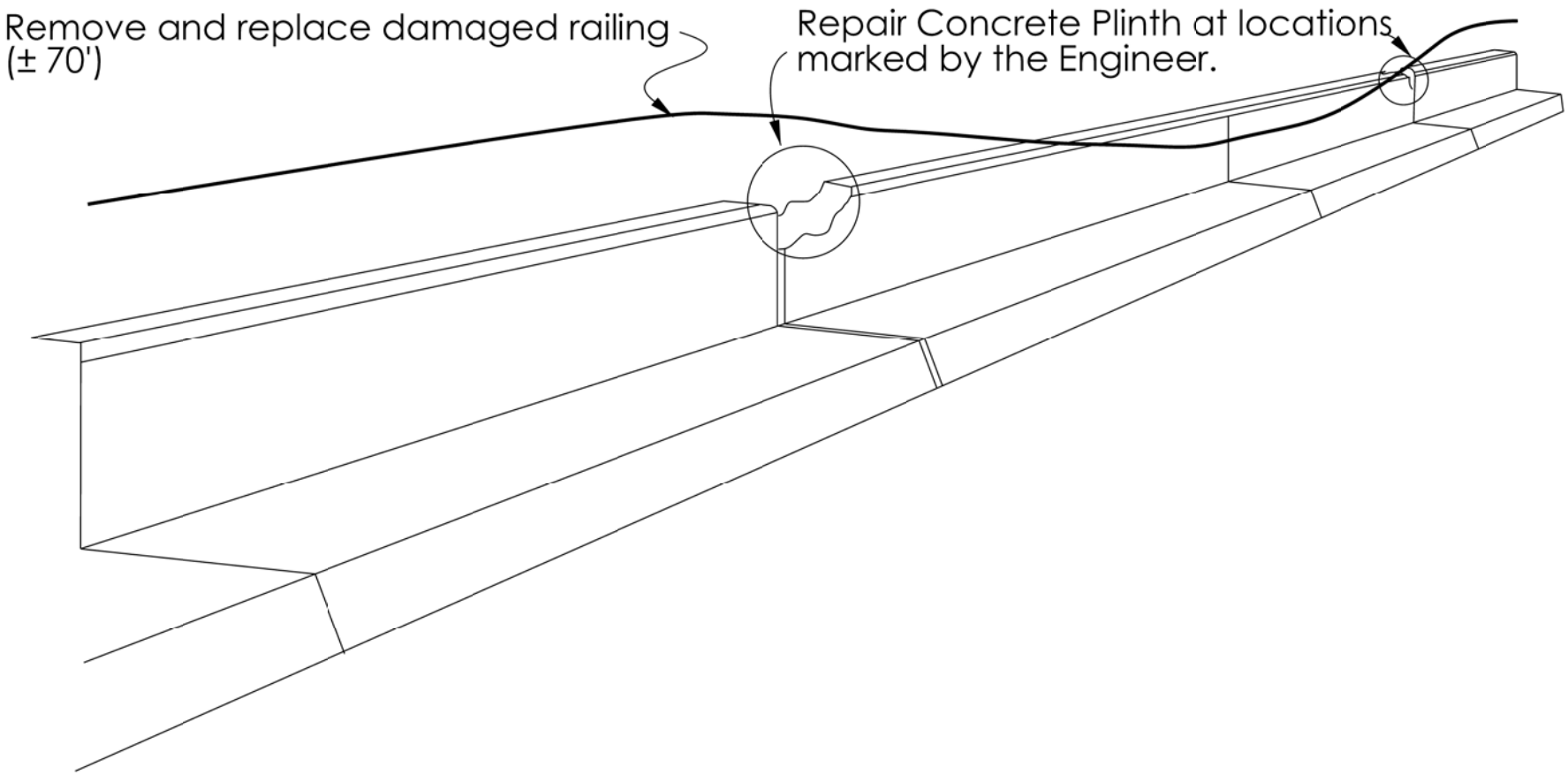

Commonwealth of Kentucky DEPARTMENT OF HIGHWAYS	
COUNTY CARROLL	
ROUTE I–71	CROSSING KENTUCKY RIVER
HANDRAIL & CONCRETE REPAIR	
PREPARED BY Division of Maintenance Bridge Preservation Branch	SHEET NO. 1 DRAWING NO.

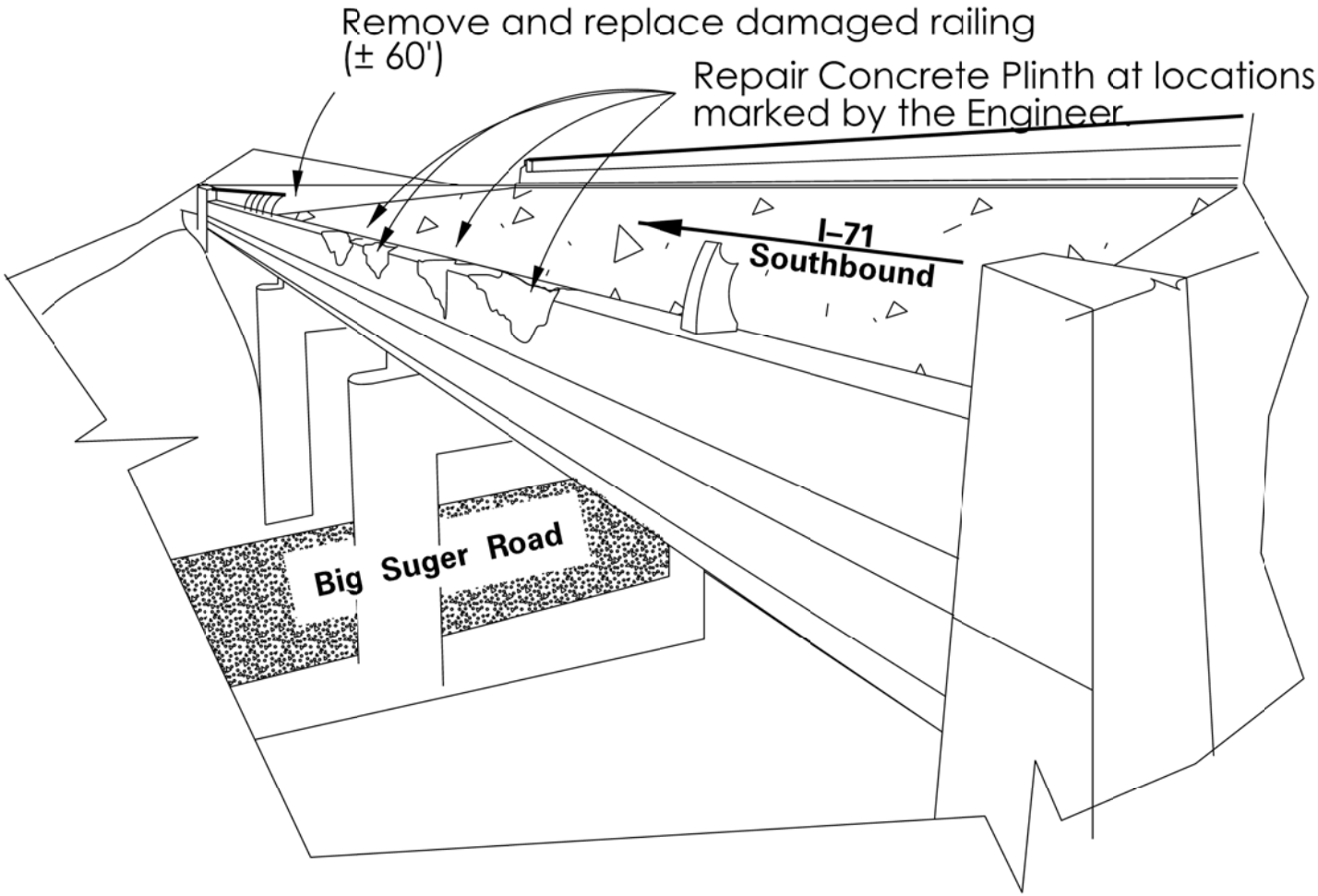

Commonwealth of Kentucky DEPARTMENT OF HIGHWAYS	
COUNTY GALLATIN	
ROUTE I–71	CROSSING BIG SUGER ROAD
HANDRAIL & CONCRETE REPAIR	
PREPARED BY Division of Maintenance *Bridge Preservation Branch*	SHEET NO. 1 DRAWING NO.

PART II

SPECIFICATIONS AND STANDARD DRAWINGS

SPECIFICATIONS REFERENCE

Any reference in the plans or proposal to the *Standard Specifications for Road and Bridge Construction, Edition of 2004,* and *Standard Drawings, Edition of 2000* are superseded by *Standard Specifications for Road and Bridge Construction, Edition of 2008* and *Standard Drawings, Edition of 2003 with the 2008 Revision.*

Supplemental Specifications to The Standard Specifications for Road and Bridge Construction, 2008 Edition

(Effective with the April 24, 2009 Letting)

SUBSECTION;	101.03 Definitions.
REVISION:	Replace the definition for Specifications – *Special Provisions* with the following: Additions and revisions to the Standard and Supplemental Specifications covering conditions peculiar to and individual project.
SUBSECTION:	102.07.01 General.
REVISION:	Replace the first sentence with the following: Submit the Bid Proposal on forms furnished on the Department internet website (http://transportation.ky.gov/contract/), including the Bid Packet and disk created from the Expedite Bidding Program.
SUBSECTION:	102.07.02 Computer Bidding.
REVISION:	Replace the first paragraph with the following: Subsequent to ordering a Bid Proposal for a specific project, use the Department's Expedite Bidding Program on the internet website of the Department of Highways, Division of Construction Procurement (http://transportation.ky.gov/contract/). Download the bid file from the Department's website to prepare a Bid Proposal for submission to the Department. Include the completed Bid Packet produced by the Expedite Bidding Program in the Bid Proposal and submit it along with the disk created by said program. Replace the second paragraph with the following: In case of a dispute, the printed Bid Proposal and bid item sheets created by the Expedite Bidding Program take precedence over any bid submittal.
SUBSECTION:	102.08 IRREGULAR BID PROPOSALS.
REVISION:	Replace point four of the first paragraph with the following: 4) fails to submit a disk created from the Expedite Bidding Program. Replace point one of the second paragraph with the following: 1) when the Bid Proposal is on a form other than that furnished by the Department or printed from other than the Expedite Bidding Program, or when the form is altered or any part is detached; or
SUBSECTION:	103.02 AWARD OF CONTRACT.
REVISION:	Replace the first sentence of the third paragraph with the following: The Department will normally award the Contract within 10 working days after the date of receiving Bid Proposals unless the Department deems it best to hold the Bid Proposals of any or all bidders for a period not to exceed 60 calendar days for final disposition of award.

Supplemental Specifications to The Standard Specifications for Road and Bridge Construction, 2008 Edition

(Effective with the April 24, 2009 Letting)

SUBSECTION:	105.12 FINAL INSPECTION AND ACCEPTANCE OF WORK.
REVISION:	Insert the following paragraphs after the first paragraph: Notify the Engineer when all electrical items are complete. A notice of the electrical work completion shall be made in writing to the Contractor. Electrical items will be inspected when the electrical work is complete and are not subject to waiting until the project as a whole has been completed. The Engineer will notify the Division of Traffic Operations within 3 days that all electrical items are complete and ready for a final inspection. A final inspection will be completed within 90 days after the Engineer notifies the Division of Traffic Operations of the electrical work completion. Energize all electrical items prior to notifying the Engineer that all electrical items are complete. Electrical items must remain operational until the Division of Traffic Operations has inspected and accepted the electrical portion of the project. Payment for the electrical service is the responsibility of the Contractor from the time the electrical items are energized until the Division of Traffic Operations has accepted the work. Complete all corrective work within 90 calendar days of receiving the original electrical inspection report. Notify the Engineer when all corrective work is complete. The Engineer will notify the Division of Traffic Operations that the corrective work has been completed and the project is ready for a follow-up inspection. Upon re-inspection, if additional corrective work is required, complete within the same 90 calendar day allowance. The Department will not include time between completion of the corrective work and the follow up electrical inspection(s). The 90 calendar day allowance is cumulative regardless of the number of follow-up electrical inspections required. The Department will assume responsibility for the electrical service on a project once the Division of Traffic Operations gives final acceptance of the electrical items on the project. The Department will also assume routine maintenance of those items. Any damage done to accepted electrical work items by other Contractors shall be the responsibility of the Prime Contractor. The Department will not be responsible for repairing damage done by other contractors during the construction of the remaining project. Failure to complete the electrical corrective work within the 90 calendar day allowance will result in penalties assessed to the project. Penalties will be assessed at ½ the rate of liquidated damages established for the contract. Delete the fifth paragraph from the section.
SUBSECTION:	105.13 CLAIM RESOLUTION PROCESS.
REVISION:	Delete the last paragraph from the section.
SUBSECTION:	106.10 FIELD WELDER CERTIFICATION REQUIREMENTS.
SUBSECTION:	112.03.11 Temporary Pavement Markings.
PART:	B) Placement and Removal of Temporary Striping.
REVISION:	Replace the 2nd sentence of the fist paragraph with the following: On interstates and parkways, and other roadways approved by the State Highway Engineer, install pavement striping that is 6 inches in width.
REVISION:	Insert the following sentence before the first sentence of the first paragraph: All field welding must be performed by a certified welder unless otherwise noted.
SUBSECTION:	112.03.12 Project Traffic Coordinator (PTC).
REVISION:	Add the following at the end of the subsection: After October 1, 2008 the Department will require the PTC to have successfully completed the applicable qualification courses. Personnel that have not successfully completed the applicable courses by that date will not be considered qualified. Prior to October 1, 2008, conform to Subsection 108.06 A) and ensure the designated PTC has sufficient skill and experience to properly perform the task.

Supplemental Specifications to The Standard Specifications for Road and Bridge Construction, 2008 Edition

(Effective with the April 24, 2009 Letting)

SUBSECTION:	206.03.02 Embankment
REVISION:	Replace the last paragraph with the following: When rock roadbed is specified, construct the upper 2 feet of the embankment according to Subsection 204.03.09 A).
SUBSECTION:	213.03.03 Inspection and Maintenance.
REVISION:	Insert the following paragraph after the second paragraph: When the Contractor is required to obtain the KPDES permit, it is their responsibility to ensure compliance with the inspection and maintenance requirements of the permit. The Engineer will perform verification inspections a minimum of once per month and within 7 days of a ½ inch or greater rainfall event. The Engineer will document these inspections using Form TC 63-61 A. The Engineer will provide copies of the inspection only when improvements to the BMP's are required. Verification inspections performed by the Engineer do not relieve the Contractor of any responsibility for compliance with the KPDES permit. Initiate corrective action within 24 hours of any noted deficiency and complete the work within 5 days.
SUBSECTION:	213.03.05 Temporary Control Measures.
PART:	F) Temporary Mulch.
REVISION:	Replace the last sentence with the following: Place temporary mulch to an approximate 2-inch loose depth (2 tons per acre) and anchor it into the soil by mechanically crimping it into the soil surface or applying tackifier to provide a protective cover. Regardless of the anchoring method used, ensure the protective cover holds until disturbance is required or permanent controls are in installed.
SUBSECTION:	303.05 PAYMENT.
REVISION:	Replace the second paragraph of the section with the following: The Department will make payment for Drainage Blanket-Type II (ATDB) according to the Lot Pay Adjustment Schedule for Specialty Mixtures in Section 402.
SUBSECTION:	401.02.04 Special Requirements for Dryer Drum Plants.
PART:	F) Production Quality Control.
REVISION:	Replace the first sentence with the following: Stop mixing operations immediately if, at any time, a failure of the automatic electronic weighing system of the aggregate feed, asphalt binder feed, or water injection system control occurs.
SUBSECTION:	401.02.04 Special Requirements for Dryer Drum Plants.
REVISION:	Add the following: Part G) **Water Injection System.** Provided each system has prior approval as specified in Subsection 402.01.01, the Department will allow the use of water injection systems for purposes of foaming the asphalt binder and lowering the mixture temperature for production of Warm Mix Asphalt (WMA). Ensure the equipment for water injection meets the following requirements: 1) Injection equipment computer controls are automatically coupled to the plants controls (manual operation is not permitted); 2) Injection equipment has variable controls that introduce water ratios based on production rates of mixtures; 3) Injects water into the flow of asphalt binder prior to contacting the aggregate; 4) Provides alarms on the water injection system that operate when the flow of water is interrupted or deviates from the prescribed water rate.
SUBSECTION:	401.03.01 Preparation of Mixtures.
REVISION:	Replace the last sentence of the second paragraph with the following: Do not use asphalt binder while it is foaming in a storage tank.

Supplemental Specifications to The Standard Specifications for Road and Bridge Construction, 2008 Edition

(Effective with the April 24, 2009 Letting)

SUBSECTION: 401.03.01 Preparation of Mixtures.

REVISION: Replace the third paragraph and Mixing and Laying Temperature table with the following:

Maintain the temperature of the component materials and asphalt mixture within the ranges listed in the following table:

MIXING AND LAYING TEMPERATURES (°F)

Material		Minimum	Maximum
Aggregates		240	330
Aggregates used with Recycled Asphalt Pavement (RAP)		240	—
Asphalt Binders	PG 64-22	230	330
	PG 76-22	285	350
Asphalt Mixtures at Plant (Measured in Truck)	PG 64-22 HMA	250	330
	PG 76-22 HMA	310	350
	PG 64-22 WMA	230	275
	PG 76-22 WMA	250	300
Asphalt Mixtures at Project (Measured in Truck When Discharging)	PG 64-22 HMA	230	330
	PG 76-22 HMA	300	350
	PG 64-22 WMA	210	275
	PG 76-22 WMA	240	300

SUBSECTION: 402.01 Description.

REVISION: Replace the paragraph with the following:

Provide the process control and acceptance testing of all classes and types of asphalt mixtures which may be furnished either as hot mix asphalt (HMA) or warm mix asphalt (WMA) produced with water injection systems.

SUBSECTION 402.01.01 Warm Mix Asphalt (WMA) Evaluation and Approval.

REVISION: Add the following subsection:

402.01.01 Warm Mix Asphalt (WMA) Evaluation and Approval.
The Department will evaluate trial production of WMA by use of a water injection system provided the system is installed according to the manufacturer's requirements and satisfies the requirements of Section 401. Evaluation will include production and placement of WMA to demonstrate adequate mixture quality including volumetric properties and density by Option A as specified in Subsection 402.03.02 D). Do not place WMA for evaluation on Department projects. Provided production and placement operations satisfy the applicable quality levels, the Department will approve WMA production on Department projects using the water injection system as installed on the specific asphalt mixing plant evaluated.

SUBSECTION: 402.05.02 Asphalt Mixtures and Mixtures With RAP.

REVISION: Replace Subsection Title as below:

402.05.02 Asphalt Mixtures, HMA and WMA, Including Mixtures With RAP.

Supplemental Specifications to The Standard Specifications for Road and Bridge Construction, 2008 Edition

(Effective with the April 24, 2009 Letting)

SUBSECTION:	402.05.02 Asphalt Mixtures, HMA and WMA, Including Mixtures With RAP.
REVISION:	Replace the paragraph with the following: The Department will pay for the mixture at the Contract unit bid price and apply a Lot Pay Adjustment for each lot placed based on the degree of compliance with the specified tolerances. Using the appropriate Lot Pay Adjustment Schedule, the Department will assign a pay value for the applicable properties within each sublot and average the sublot pay values to determine the pay value for a given property for each lot. The Department will apply the Lot Pay Adjustment for each lot to a defined unit price of $50.00 per ton. The Department will calculate the Lot Pay Adjustment using all possible incentives and disincentives but will not allow the overall pay value for a lot to exceed 1.00.
SUBSECTION:	402.05.02 Asphalt Mixtures, HMA and WMA, Including Mixtures With RAP.
PART:	C) Conventional and RAP Mixtures Placed on Shoulders.
REVISION:	Replace title with the following: **HMA, WMA, and RAP Mixtures Placed on Shoulders.**
SUBSECTION:	402.05.02 Asphalt Mixtures, HMA and WMA, Including Mixtures With RAP.
PART:	D) Conventional and RAP Mixtures Placed Monolithically as Asphalt Pavement Wedge.
REVISION:	Replace the title with the following: HMA, WMA, and RAP Mixtures Placed Monolithically as Asphalt Pavement Wedge.
SUBSECTION:	402.05.02 Asphalt Mixtures, HMA and WMA, Including Mixtures With RAP.
PART:	Lot Pay Adjustment Schedule, Compaction Option A, Base and Binder Mixtures
TABLES:	VMA
REVISION:	Replace the VMA table with the following:

VMA

Pay Value	Deviation From Minimum
1.00	≥ min. VMA
0.95	0.1-0.5 below min.
0.90	0.6-1.0 below min.
(1)	> 1.0 below min.

Supplemental Specifications to The Standard Specifications for Road and Bridge Construction, 2008 Edition

(Effective with the April 24, 2009 Letting)

SUBSECTION: 402.05.02 Asphalt Mixtures, HMA and WMA, Including Mixtures With RAP.

PART: Lot Pay Adjustment Schedule, Compaction Option A, Surface Mixtures

TABLES: VMA

REVISION: Replace the VMA table with the following:

VMA	
Pay Value	Deviation From Minimum
1.00	≥ min. VMA
0.95	0.1-0.5 below min.
0.90	0.6-1.0 below min.
(1)	> 1.0 below min.

SUBSECTION: 402.05.02 Asphalt Mixtures, HMA and WMA, Including Mixtures With RAP.

PART: Lot Pay Adjustment Schedule, Compaction Option B Mixtures

TABLE: VMA

REVISION: Replace the VMA table with the following:

VMA	
Pay Value	Deviation From Minimum
1.00	≥min. VMA
0.95	0.1-0.5 below min.
0.90	0.6-1.0 below min.
(2)	> 1.0 below min.

SUBSECTION: 403.03.03 Preparation of Mixture.

PART: C) Mix Design Criteria.

NUMBER: 1) Preliminary Mix Design.

REVISION: Replace the last two sentences of the paragraph and table with the following:

Complete the volumetric mix design at the appropriate number of gyrations as given in the table below for the number of 20-year ESAL's. The Department will define the relationship between ESAL classes, as given in the bid items for Superpave mixtures, and 20-year ESAL ranges as follows:

		Number of Gyrations		
Class	**ESAL's (millions)**	$N_{initial}$	N_{design}	N_{max}
2	< 3.0	6	50	75
3	3.0 to < 30.0	7	75	115
4	≥ 30.0	8	100	160

SUBSECTION: 403.03.09 Leveling and Wedging, and Scratch Course.

PART: A) Leveling and Wedging.

REVISION: Replace the first sentence of the first paragraph with the following:

Conform to the gradation requirements (control points) of AASHTO M 323 for base, binder, or surface as the Engineer directs.

Supplemental Specifications to The Standard Specifications for Road and Bridge Construction, 2008 Edition

(Effective with the April 24, 2009 Letting)

SUBSECTION:	403.03.09 Leveling and Wedging, and Scratch Course.
PART:	B) Scratch Course.
REVISION:	Replace the second sentence of the first paragraph with the following: Conform to the gradation requirements (control points) of AASHTO M 323 for base, binder, or surface as the Engineer directs.
SUBSECTION:	407.01 DESCRIPTION.
REVISION:	Replace the first sentence of the paragraph with the following: Construct a pavement wedge composed of a hot-mixed or warm-mixed asphalt mixture.
SUBSECTION:	409.01 DESCRIPTION.
REVISION:	Replace the first sentence of the paragraph with the following: Use reclaimed asphalt pavement (RAP) from Department projects or other approved sources in hot mix asphalt (HMA) or warm mix asphalt (WMA) provided mixture requirements are satisfied.
SUBSECTION:	410.01 DESCRIPTION.
REVISION:	Delete the second sentence of the paragraph.
SUBSECTION:	410.03.01 Corrective Work.
REVISION:	Replace the last sentence of the paragraph with the following: Provide a final surface comparable to the adjacent pavement that does not require corrective work in respect to texture, appearance, and skid resistance.
SUBSECTION:	410.03.02 Ride Quality.
PART:	B) Requirements.
NUMBER:	1) Category A.
REVISION:	Replace the last sentence of the first paragraph with the following: At the Department's discretion, a pay deduction of $1200 per 0.1-lane-mile section may be applied in lieu of corrective work.
SUBSECTION:	410.03.02 Ride Quality.
PART:	B) Requirements.
NUMBER:	2) Category B.
REVISION:	Replace the second and third sentence of the first paragraph with the following: When the IRI is greater than 90 for a 0.1-mile section, perform corrective work, or remove and replace the pavement to achieve the specified IRI. At the Department's discretion, a pay deduction of $750 per 0.1-lane-mile section may be applied in lieu of corrective work.
SUBSECTION:	410.05 PAYMENT.
REVISION:	Add the following sentence to the end of the first paragraph: The sum of the pay value adjustments for ride quality shall not exceed $0 for the project as a whole.
SUBSECTION:	413.05.02 CL3 SMA BASE 1.00D PG76-22.
REVISION:	Insert the following sentence between the first and second sentence of the first paragraph: The Department will calculate the Lot Pay Adjustment using all possible incentives and disincentives but will not allow the overall pay value for a lot to exceed 1.00.

Supplemental Specifications to The Standard Specifications for Road and Bridge Construction, 2008 Edition

(Effective with the April 24, 2009 Letting)

SUBSECTION: 413.05.02 CL3 SMA BASE 1.00D PG 76-22.

TABLE: JOINT DENSITY TABLE

REVISION: Replace the joint density table with the following:

LANE DENSITY	
Pay Value	Test Result (%)
1.05	95.0-96.5
1.00	93.0-94.9
0.95	92.0-92.9 or 96.6-97.0
0.90	91.0-91.9 or 97.1-97.5
(1)	< 91.0 or > 97.5

SUBSECTION: 413.05.03 CL3 SMA SURF 0.50A PG76-22 and CL3 SMA SURF 0.38A PG76-22.

REVISION: Insert the following sentence between the first and second sentence of the first paragraph:

The Department will calculate the Lot Pay Adjustment using all possible incentives and disincentives but will not allow the overall pay value for a lot to exceed 1.00.

SUBSECTION: 413.05.03 CL3 SMA SURF 0.50A PG76-22 and CL3 SMA SURF 0.38A PG76-22.

TABLE: JOINT DENSITY TABLE

REVISION: Replace the joint density table with the following:

DENSITY		
Pay Value	Lane Density Test Result (%)	Joint Density Test Result (%)
1.05	95.0-96.5	92.0-96.0
1.00	93.0-94.9	90.0-91.9
0.95	92.0-92.9 or 96.6-97.0	89.0-89.9 or 96.1-96.5
0.90	91.0-91.9 or 97.1-97.5	88.0-88.9 or 96.6-97.0
0.75	----	< 88.0 or > 97.0
(1)	< 91.0 or > 97.5	----

SUBSECTION: 501.05.02 Ride Quality.

REVISION: Remove the last sentence of the first paragraph.

Supplemental Specifications to The Standard Specifications for Road and Bridge Construction, 2008 Edition

(Effective with the April 24, 2009 Letting)

SUBSECTION: 501.05.02 Ride Quality.

TABLE: RIDE QUALITY ADJUSTMENT SCHEDULES.

REVISION: Replace the Ride Quality Adjustment Schedule table with the following:

RIDE QUALITY ADJUSTMENT SCHEDULES

CATEGORY A PROJECTS		CATEGORY B PROJECTS	
IRI	**Pay Value Adjustment**[1]	**IRI**	**Pay Value Adjustment**[1]
60 to 80	0	66 to 85	0
81	-$30	86	-$20
82	-$70	87	-$45
83	-$120	88	-$80
84	-$180	89	-$120
85	-$250	90	-$170
86	-$330	91	-$220
87	-$420	92	-$280
88	-$520	93	-$350
89	-$630	94	-$420
90	-$750	95	-$500
91 or higher	corrective work[2]	96 or higher	corrective work[3]

[1] *Contractor may correct areas to prevent a negative pay value adjustment.*
[2] *When it is in the best interest of the Department, a minimum pay value deduction of $1200 per 0.1-lane-mile section may be applied in lieu of corrective work.*
[3] *When it is in the best interest of the Department, a minimum pay value deduction of $750 per 0.1-lane-mile section may be applied in lieu of corrective work.*

SUBSECTION: 505.03.04 Detectable Warnings.

REVISION: Replace the first sentence with the following:

Install detectable warning pavers at all sidewalk ramps and on all commercial entrances according to the Standard Drawings.

SUBSECTION: 505.04.04 Detectable Warnings.

REVISION: Replace the paragraph with the following:

The Department will measure the quantity in square feet. All retrofit applications for maintenance projects will require the removal of existing sidewalks to meet the requirements of the standard drawings applicable to the project. The cost associated with the removal of the existing sidewalk will be incidental to the detectable warnings bid item or incidental to the bid item for the construction of the concrete sidewalk unless otherwise noted.

SUBSECTION: 505.05 PAYMENT.

REVISION: Add the following to the bid item table:

Code	Pay Item	Pay Unit
23158ES505	Detectable Warnings	Square Foot

SUBSECTION: 509.01 DESCRIPTION.

REVISION: Replace the second paragraph with the following:

The Department may allow the use of similar units that conform to the National Cooperative Highway Research Program (NCHRP) 350 Test Level 3 (TL-3) requirements and the typical features depicted by the Standard Drawings. Obtain the Engineers approval prior to use. Ensure the barrier wall shape, length, material, drain slot dimensions and locations typical features are met and the reported maximum deflection is 3 feet or less from the NCHRP 350 TL-3 for Test 3 – 11 (pickup truck impacting at 60 mph at a 25-degree angle.)

Supplemental Specifications to The Standard Specifications for Road and Bridge Construction, 2008 Edition

(Effective with the April 24, 2009 Letting)

SUBSECTION:	601.03.02 Concrete Producer Responsibilities.
REVISION:	Add the following to the first paragraph: If a concrete plant becomes unqualified during a project and there are no other qualified plants in the region, the Department will provide qualified personnel to witness and ensure the producer follows the required specifications. The Department will assess the Contractor a $100 per hour charge for this service.
SUBSECTION:	606.02.11 Coarse Aggregate.
REVISION:	Replace with the following: Conform to Section 805, size No. 8 or 9-M.
SUBSECTION:	609.04.06 Joint Sealing.
REVISION:	Replace Subsection 601.04 with the following: Subsection 606.04.08.
SUBSECTION:	609.05 Payment.
REVISION:	Replace the Pay Unit for Joint Sealing with the following: See Subsection 606.05.
SUBSECTION:	701.03.06 Initial Backfill.
REVISION:	Replace the first sentence of the last paragraph with the following: When the Contract specifies, perform quality control testing to verify compaction according to KM 64-512.

Supplemental Specifications to The Standard Specifications for Road and Bridge Construction, 2008 Edition

(Effective with the April 24, 2009 Letting)

SUBSECTION: 701.03.08 Testing of Pipe.

REVISION: Replace and rename the subsection with the following:

701.03.08 Inspection of Pipe. The engineer will visually inspect all pipe. The Department will require camera/video inspection on a minimum of 50 percent of the linear feet of all installed pipe structures. Conduct camera/video inspection according to KM 64-114. The pipe to be installed under pavement will be selected first. If the total linear feet of pipe under pavement is less than 50 percent of the linear feet of all pipe installed, the Engineer will randomly select installations from the remaining pipe structures on the project to provide for the minimum inspection requirement. The pipe will be selected in complete runs (junction-junction or headwall-headwall) until the total linear feet of pipe to be inspected is at least 50 percent of the total linear feet of all installed pipe on the project.

Unless the Engineer directs otherwise, schedule the inspections no sooner than 30 days after completing the installation and completion of earthwork to within 1 foot of the finished subgrade. When final surfacing conflicts with the 30-day minimum, conduct the inspections prior to placement of the final surface. The contractor must ensure that all pipe are free and clear of any debris so that a complete inspection is possible.

Notify the Engineer immediately if distresses or locations of improper installation are discovered. When camera testing shows distresses or improper installation in the installed pipe, the Engineer may require additional sections to be tested. Provide the video and report to the Engineer when testing is complete in accordance with KM 64-114.

Pipes that exhibit distress or signs of improper installation may necessitate repair or removal as the Engineer directs. These signs include, but are not limited to: deflection, cracking, joint separation, sagging or other interior damage. If corrugated metal or thermoplastic pipes exceed the deflection and installation thresholds indicated in the table below, provide the Department with an evaluation of each location conducted by a Professional Engineer addressing the severity of the deflection, structural integrity, environmental conditions, design service life, and an evaluation of the factor of safety using Section 12, "Buried Structures and Tunnel Liners," of the AASHTO LRFD Bridge Design Specifications. Based on the evaluation, the Department may allow the pipe to remain in place at a reduced unit price as shown in the table below. Provide 5 business days for the Department to review the evaluation. When the pipe shows deflection of 10 percent or greater, remove and replace the pipe. When the camera/video or laser inspection results are called into question, the Department may require direct measurements or mandrel testing.

The Cabinet may elect to conduct Quality Assurance verifications of any pipe inspections.

SUBSECTION: 701.04.07 Testing.

REVISION: Replace and rename the subsection with the following:

701.04.07 Pipeline Video Inspection. The Department will measure the quantity in linear feet along the pipe invert of the structure inspected. When inspection above the specified 50 percent is performed due to a disagreement or suspicion of additional distresses and the Department is found in error, the Department will measure the quantity as Extra Work according to Subsection 104.03. However, if additional distresses or non-conformance is found, the Department will not measure the additional inspection for payment.

SUBSECTION: 701.05 PAYMENT.

REVISION: Add the following pay item to the list of pay items:

Code	Pay Item	Pay Unit
23131ER701	Pipeline Video Inspection	Linear Foot

Supplemental Specifications to The Standard Specifications for Road and Bridge Construction, 2008 Edition

(Effective with the April 24, 2009 Letting)

SUBSECTION: 701.05 PAYMENT

TABLE: PIPE DEFLECTION DETERMINED BY CAMERA TESTING

REVISION: Replace this table with the following table and note:

PIPE DEFLECTION	
Amount of Deflection (%)	Payment
0.0 to 5.0	100% of the Unit Bid Price
5.1 to 9.9	50% of the Unit Bid Price [(1)]
10 or greater	Remove and Replace

[(1)] *Provide Structural Analysis as indicated above. Based on the structural analysis, pipe may be allowed to remain in place at the reduced unit price.*

SUBSECTION: 701.05 PAYMENT

TABLE: PIPE DEFLECTION DETERMINED BY MANDREL TESTING

REVISION: Delete this table.

SUBSECTION: 713.02.01 Paint.

REVISION: Replace with the following:

Conform to Section 842 and Section 846.

SUBSECTION: 713.03 CONSTRUCTION.

REVISION: Replace the first sentence of the second paragraph with the following:

On interstates and parkways, and other routes approved by the State Highway Engineer, install pavement striping that is 6 inches in width.

SUBSECTION: 713.03.03 Paint Application.

REVISION: Replace the second paragraph with the following table:

Material	Paint Application Rate	Glass Beads Application Rate
4 inch waterborne paint	Min. of 16.5 gallons/mile	Min. of 6 pounds/gallon
6 inch waterborne paint	Min. of 24.8 gallons/mile	Min. of 6 pounds/gallon
6 inch durable waterborne paint	Min. of 36 gallons/mile	Min. of 6 pounds/gallon

SUBSECTION: 713.03.04 Marking Removal.

REVISION: Replace the last sentence of the paragraph wit the following:

Vacuum all marking material and removal debris concurrently with the marking removal operation.

SUBSECTION: 713.05 PAYMENT.

REVISION: Insert the following codes and pay items below the Pavement Striping – Permanent Paint:

Code	Pay Item	Pay Unit
23159EN	Durable Waterborne Marking – 6 IN W	Linear Foot
23160EN	Durable Waterborne Marking – 6 IN Y	Linear Foot

SUBSECTION: 714.03 CONSTRUCTION.

REVISION: Insert the following paragraph at the end of the third paragraph:

Use Type I Tape for markings on bridge decks, JPC pavement and JPC intersections. Thermoplastic should only be used for markings on asphalt pavement

SUBSECTION: 714.03.07 Marking Removal.

REVISION: Replace the third sentence of the paragraph with the following:

Vacuum all marking material and removal debris concurrently with the marking removal operation.

Supplemental Specifications to The Standard Specifications for Road and Bridge Construction, 2008 Edition

(Effective with the April 24, 2009 Letting)

SUBSECTION:	716.01 DESCRIPTION.
REVISION:	Insert the following after the first sentence: Energize lighting as soon as it is fully functional and ready for inspection. Ensure that lighting remains operational until the Division of Traffic Operations has provided written acceptance of the electrical work.
SUBSECTION:	716.02.01 Roadway Lighting Materials.
REVISION:	Replace the third sentence of the paragraph with the following: Submit for material approval an electronic file of descriptive literature, drawings, and any requested design data.
SECTION:	717 – THERMOPLASTIC INTERSECTION MARKINGS.
REVISION:	Replace the section name with the following: INTERSECTION MARKINGS.
SUBSECTION:	717.01 DESCRIPTION:
REVISION:	Replace the paragraph with the following: Furnish and install thermoplastic or Type I tape intersection markings (Stop Bars, Crosswalks, Turn Arrows, etc.) Thermoplastic markings may be installed by either a machine applied, screed extrusion process or by applying preformed thermoplastic intersection marking material.
SUBSECTION:	717.02 MATERIALS AND EQUIPMENT.
REVISION:	Insert the following subsection: 717.02.06 Type I Tape. Conform to Section 836.
SUBSECTION:	717.03.03 Application.
REVISION:	Insert the following part to the subsection: B) Type I Tape Intersection Markings. Apply according to the manufacturer's recommendations. Cut all tape at pavement joints when applied to concrete surfaces.
SUBSECTION:	717.03.05 Proving Period.
PART:	A) Requirements.
REVISION:	Insert the following to this section: 2) Type I Tape. During the proving period, ensure that the pavement marking material shows no signs of failure due to blistering, excessive cracking, bleeding, staining, discoloration, oil content of the pavement materials, drippings, chipping, spalling, poor adhesion to the pavement, loss of retroreflectivity, vehicular damage, and normal wear. Type I Tape is manufactured off site and warranted by the manufacturer to meet certain retroreflective requirements. As long as the material is adequately bonded to the surface and shows no signs of failure due to the other items listed in Subsection 714.03.06 A) 1), retroreflectivity readings will not be required. In the absence of readings, the Department will accept tape based on a nighttime visual observation.
SUBSECTION:	717.03.06 Marking Removal.
REVISION:	Replace the third sentence of the paragraph with the following: Vacuum all marking material and removal debris concurrently with the marking removal operation.

Supplemental Specifications to The Standard Specifications for Road and Bridge Construction, 2008 Edition

(Effective with the April 24, 2009 Letting)

SUBSECTION: 717.05 PAYMENT.

REVISION: Insert the following bid item codes:

Code	Pay Unit	Pay Item
06563	Pave Marking – R/R X Bucks 16 IN	Linear Foot
20782NS714	Pave Marking Thermo – Bike	Each
23251ES717, 23264ES717	Pave Mark TY I Tape X-Walk, Size	Linear Foot
23252ES717, 23265ES717	Pave Mark TY I Tape Stop Bar, Size	Linear Foot
23253ES717	Pave Mark TY I Tape Cross Hatch	Square Foot
23254ES717	Pave Mark TY I Tape Dotted Lane Extension	Linear Foot
23255ES717	Pave Mark TY I Tape Arrow, Type	Each
23268ES717-23270ES717		
23256ES717	Pave Mark TY I Tape- ONLY	Each
23257ES717	Pave Mark TY I Tape- SCHOOL	Each
23266ES717	Pave Mark TY 1 Tape R/R X Bucks-16 IN	Linear Foot
23267ES717	Pave Mark TY 1 Tape-Bike	Each

SUBSECTION: 805.01 GENERAL.

REVISION: Replace the second paragraph with the following:

The Department's List of Approved Materials includes the Aggregate Source List, the list of Class A and Class B Polish-Resistant Aggregate Sources, and the Concrete Restriction List.

SUBSECTION: 805.04 CONCRETE.

REVISION: Replace the "AASHTO T 160" reference in first sentence of the third paragraph with "KM 64-629"

Supplemental Specifications to The Standard Specifications for Road and Bridge Construction, 2008 Edition

(Effective with the April 24, 2009 Letting)

SUBSECTION: 805.15 GRADATION ACCEPTANCE OF NON-SPECIFICATION COARSE AGGREGATE.
REVISION: Replace the "SIZES OF COARSE AGGREGATES" table in with the following:

SIZES OF COARSE AGGREGATES

	Sieve	AMOUNTS FINER THAN EACH LABORATORY SIEVE (SQUARE OPENINGS) PERCENTAGE BY WEIGHT															
Aggregate Size	Nominal (3) Maximum Aggregate Size	4 inch	3 1/2 inch	3 inch	2 1/2 inch	2 inch	1 1/2 inch	1 inch	3/4 inch	1/2 inch	3/8 inch	No. 4	No. 8	No. 16	No. 30	No. 100	No. 200
1	3 ½ inch	100	90-100		25-60		0-15		0-5								
2	2 ½ inch			100	90-100	35-70	0-15		0-5								
23	2 inch			100		40-90		0-15		0-5							
3	2 inch				100	90-100	35-70	0-15		0-5							
357	2 inch				100	95-100		35-70		10-30		0-5					
4	1 ½ inch					100	90-100	20-55	0-15		0-5						
467	1 ½ inch					100	95-100		35-70		10-30	0-5					
5	1 inch						100	90-100	20-55	0-10	0-5						
57	1 inch						100	95-100		25-60		0-10	0-5				
610	1 inch						100	85-100		40-75		15-40					
67	3/4 inch							100	90-100		20-55	0-10	0-5				
68	3/4 inch							100	90-100		30-65	5-25	0-10	0-5			
710	3/4 inch							100	80-100		30-75	0-30					
78	1/2 inch								100	90-100	40-75	5-25	0-10	0-5			
8	3/8 inch									100	85-100	10-30	0-10	0-5			
9-M	3/8 inch									100	75-100	0-25	0-5				
10(2)	No. 4										100	85-100				10-30	
11(2)	No. 4										100	40-90	10-40			0-5	
DENSE GRADED AGGREGATE (1)	3/4 inch							100	70-100		50-80	30-65			10-40		4-13
CRUSHED STONE BASE (1)	1 ½ inch				100		90-100		60-95		30-70	15-55			5-20		0-8

(1) *Gradation performed by wet sieve KM 64-620 or AASHTO T 11/T 27.*
(2) *Sizes shown for convenience and are not to be considered as coarse aggregates.*
(3) *Nominal Maximum Size is the largest sieve on the gradation table for an aggregate size on which any material may be retained.*

Note: The Department will allow blending of same source/same type aggregate when precise procedures are used such as cold feed, belt, or equivalent and combining of sizes or types of aggregate using the weigh hopper at concrete plants or controlled feed belts at the pugmill to obtain designated sizes.

Supplemental Specifications to The Standard Specifications for Road and Bridge Construction, 2008 Edition

(Effective with the April 24, 2009 Letting)

SECTION: DIVISION 800 MATERIAL DETAILS

REVISION: Add the following section in Division 800

SECTION 846 – DURABLE WATERBORNE PAINT

846.01 DESCRIPTION. This section covers quick-drying durable waterborne pavement striping paint for permanent applications. The paint shall be ready-mixed, one-component, 100% acrylic waterborne striping paint suitable for application on such traffic-bearing surfaces as Portland cement concrete, bituminous cement concrete, asphalt, tar, and previously painted areas of these surfaces.

846.02 Approval. Select materials that conform to the composition requirements below. Provide independent analysis data and certification for each formulation stating the total concentration of each heavy metal present, the test method used for each determination, and compliance to 40 CFR 261 for leachable heavy metals content. Submit initial samples for approval before beginning striping operations. The initial sample may be sent from the manufacture of the paint. The Department will randomly sample and evaluate the paint each week that the striping operations are in progress.

The non-volatile portion of the vehicle shall be composed of a 100% acrylic polymer as determined by infrared spectral analysis. The acrylic resin used shall be a 100% cross-linking acrylic as evidenced by infrared peaks at wavelengths 1568, 1624, and 1672 cm-1 with intensities equal to those produced by an acrylic resin known to be 100% cross-linking.

PAINT COMPOSITION		
Property and Test Method	Yellow	White
Daytime Color (CIELAB) Spectrophotometer using illuminant D65 at 45º illumination and 0º viewing with a 2º observer	L* 81.76 a* 19.79 b* 89.89 Maximum allowable variation 2.0ΔE*	L* 93.51 a* -1.01 b* 0.70 Maximum allowable variation 2.0ΔE*
Nighttime Color (CIELAB) Spectrophotometer using illuminant A at 45º illumination and 0º viewing with a 2º observer	L* 86.90 a* 24.80 b* 95.45 Maximum allowable variation 2.0ΔE*	L* 93.45 a* -0.79 b* 0.43 Maximum allowable variation 2.0ΔE*
Heavy Metals Content	Comply with 40 CFR 261	Comply with 40 CFR 261
Titanium Dioxide ASTM D 4764	NA	10% by weight of pigment min.
VOC ASTM D 2369 and D 4017	1.25 lb/gal max.	1.25 lb/gal max.
Contrast Ratio (at 15 mils wft)	0.97	0.99

846.02.01 Manufacturers Certification. Provide a certification of analysis for each lot of traffic paint produced stating conformance to the requirements of this section. Report the formulation identification, traffic paint trade name, color, date of manufacturer, total quantity of lot produced, actual quantity of traffic paint represented, sampling method utilized to obtain the samples, and data for each sample tested to represent each lot produced.

846.03 ACCEPTANCE PROCEDURES FOR NON-SPECIFICATION DURABLE WATERBORNE PAVEMENT STRIPING PAINT. When non-specification paint is inadvertently incorporated into the work the Department will accept the material with a reduction in pay. The percentage deduction is cumulative based on its compositional properties, but will not exceed 60 percent. The Department will calculate the payment reduction on the unit bid price for the routes where the non-specification paint was used.

Supplemental Specifications to The Standard Specifications for Road and Bridge Construction, 2008 Edition
(Effective with the April 24, 2009 Letting)

DURABLE WATERBORNE PAVEMENT STRIPING PAINT REDUCTION SCHEDULE						
Non-conforming Property	Resin	Color	Contrast	TiO_2	VOC	Heavy Metals Content
Reduction Rate	60%	10%	10%	10%	60%	60%

STANDARD DRAWINGS THAT APPLY

LANE CLOSURE MULTI-LANE HIGHWAY CASE I	TTC-115
POST SPLICING DETAIL	TTD-110
ARROW PANEL	TTD-115

PART III

EMPLOYMENT, WAGE AND RECORD REQUIREMENTS

TRANSPORTATION CABINET
DEPARTMENT OF HIGHWAYS

LABOR AND WAGE REQUIREMENTS
APPLICABLE TO OTHER THAN FEDERAL-AID SYSTEM PROJECTS

I. Application
II. Nondiscrimination of Employees (KRS 344)
III. Payment of Predetermined Minimum Wages
IV. Statements and Payrolls

I. APPLICATION

1. These contract provisions shall apply to all work performed on the contract by the contractor with his own organization and with the assistance of workmen under his immediate superintendence and to all work performed on the contract by piecework, station work or by subcontract. The contractor's organization shall be construed to include only workmen employed and paid directly by the contractor and equipment owned or rented by him, with or without operators.

2. The contractor shall insert in each of his subcontracts all of the stipulations contained in these Required Provisions and such other stipulations as may be required.

3. A breach of any of the stipulations contained in these Required Provisions may be grounds for termination of the contract.

II. NONDISCRIMINATION OF EMPLOYEES

AN ACT OF THE KENTUCKY
GENERAL ASSEMBLY TO PREVENT
DISCRIMINATION IN EMPLOYMENT
KRS CHAPTER 344
EFFECTIVE JUNE 16, 1972

The contract on this project, in accordance with KRS Chapter 344, provides that during the performance of this contract, the contractor agrees as follows:

1. The contractor shall not fail or refuse to hire, or shall not discharge any individual, or otherwise discriminate against an individual with respect to his compensation, terms, conditions, or privileges of employment, because of such individual's race, color, religion, national origin, sex, disability or age (between forty and seventy); or limit, segregate, or classify his employees in any way which would deprive or tend to deprive an individual of employment opportunities or otherwise adversely affect his status as an employee, because of such individual's race, color, religion, national origin, sex, disability or age (between forty and seventy). The contractor agrees to post in conspicuous places, available to employees and applicants for employment, notices to be provided setting forth the provisions of this nondiscrimination clause.

2. The contractor shall not print or publish or cause to be printed or published a notice or advertisement relating to employment by such an employer or membership in or any classification or referral for employment by the employment agency, indicating any preference, limitation, specification, or discrimination, based on race, color, religion, national origin, sex, disability or age (between forty and seventy), except that such notice or advertisement may indicate a preference, limitation, or specification based on religion, or national origin when religion, or national origin is a bona fide occupational qualification for employment.

3. If the contractor is in control of apprenticeship or other training or retraining, including on-the-job training programs, he shall not discriminate against an individual because of his race, color, religion, national origin, sex, disability or age (between forty and seventy), in admission to, or employment in any program established to provide apprenticeship or other training.

4. The contractor will send to each labor union or representative of workers with which he has a collective bargaining agreement or other contract or understanding, a notice to be provided advising the said labor union or workers' representative of the contractor's commitments under this section, and shall post copies of the notice in conspicuous places available to employees and applicants for employment. The contractor will take such action with respect to any subcontract or purchase order as the administrating agency may direct as a means of enforcing such provisions, including sanctions for non-compliance.

III. PAYMENT OF PREDETERMINED MINIMUM WAGES

1. These special provisions are supplemented elsewhere in the contract by special provisions which set forth certain predetermined minimum wage rates. The contractor shall pay not less than those rates.

2. The minimum wage determination schedule shall be posted by the contractor, in a manner prescribed by the Department of Highways, at the site of the work in prominent places where it can be easily seen by the workers.

IV. STATEMENTS AND PAYROLLS

1. All contractors and subcontractors affected by the terms of KRS 337.505 to 337.550 shall keep full and accurate payroll records covering all disbursements of wages to their employees to whom they are required to pay not less than the prevailing rate of wages. Payrolls and basic records relating thereto will be maintained during the course of the work and preserved for a period of one (1) year from the date of completion of this contract.

2. The payroll records shall contain the name, address and social security number of each employee, his correct classification, rate of pay, daily and weekly number of hours worked, itemized deductions made and actual wages paid.

3. The contractor shall make his daily records available at the project site for inspection by the State Department of Highways contracting office or his authorized representative.

Periodic investigations shall be conducted as required to assure compliance with the labor provisions of the contract. Interrogation of employees and officials of the contractor shall be permitted during working hours.

Aggrieved workers, Highway Managers, Assistant District Engineers, Resident Engineers and Project Engineers shall report all complaints and violations to the Division of Contract Procurement.

The contractor shall be notified in writing of apparent violations. The contractor may correct the reported violations and notify the Department of Highways of the action taken or may request an informal hearing. The request for hearing shall be in writing within ten (10) days after receipt of the notice of the reported violation. The contractor may submit

records and information which will aid in determining the true facts relating to the reported violations.

Any person or organization aggrieved by the action taken or the findings established as a result of an informal hearing by the Division of Contract Procurement may request a formal hearing.

4. The wages of labor shall be paid in legal tender of the United States, except that this condition will be considered satisfied if payment is made by a negotiable check, on a solvent bank, which may be cashed readily by the employee in the local community for the full amount, without discount or collection charges of any kind. Where checks are used for payments, the contractor shall make all necessary arrangements for them to be cashed and shall give information regarding such arrangements.

5. No fee of any kind shall be asked or accepted by the contractor or any of his agents from any person as a condition of employment on the project.

6. No laborers shall be charged for any tools used in performing their respective duties except for reasonably avoidable loss or damage thereto.

7. Every employee on the work covered by this contract shall be permitted to lodge, board, and trade where and with whom he elects and neither the contractor nor his agents, nor his employees shall directly or indirectly require as a condition of employment that an employee shall lodge, board or trade at a particular place or with a particular person.

8. Every employee on the project covered by this contract shall be an employee of either the prime contractor or an approved subcontractor.

9. No charge shall be made for any transportation furnished by the contractor or his agents to any person employed on the work.

10. No individual shall be employed as a laborer or mechanic on this contract except on a wage basis, but this shall not be construed to prohibit the rental of teams, trucks or other equipment from individuals.

No Covered employee may be employed on the work except in accordance with the classification set forth in the schedule mentioned above; provided, however, that in the event additional classifications are required, application shall be made by the contractor to the Department of Highways and (1) the Department shall request appropriate classifications and rates from the proper agency, or (2) if there is urgent need for additional classification to avoid undue delay in the work, the contractor may employ such workmen at rates deemed comparable to rates established for similar classifications provided he has made written application through the Department of Highways, addressed to the proper agency, for the supplemental rates. The contractor shall retroactively adjust, upon receipt of the supplemental rates schedule, the wages of any employee paid less than the established rate and may adjust the wages of any employee overpaid.

11. No contractor or subcontractor contracting for any part of the contract work which may require or involve the employment of laborers or mechanics shall require or permit any laborer or mechanic in any work-week in which he is employed on such work, to work in excess of eight hours in any calendar day or in excess of forty hours in such work-week unless such laborer or mechanic receives compensation at a rate not less than one and one half times his basic rate of pay for all hours worked in excess of eight hours in any calendar day or in excess of forty hours in such work-week. A laborer, workman or mechanic and an employer may enter into a written agreement or a collective bargaining agreement to work more than eight (8) hours a calendar day but not more than ten (10) hours a calendar day for the straight time hourly rate. This agreement shall be in writing and shall be executed prior to the employee working in excess of eight (8) hours, but not more than ten (10) hours, in any one (1) calendar day.

12. Payments to the contractor may be suspended or withheld due to failure of the contractor to pay any laborer or mechanic employed or working on the site of the work, all or part of the wages required under the terms of the contract. The Department may suspend or withhold payments only after the contractor has been given written notice of the alleged violation and the contractor has failed to comply with the wage determination of the Department of Highways.

13. Contractors and subcontractors shall comply with the sections of Kentucky Revised Statutes, Chapter 337 relating to contracts for Public Works.

Revised 2-16-95

EXECUTIVE BRANCH CODE OF ETHICS

In the 1992 regular legislative session, the General Assembly passed and Governor Brereton Jones signed Senate Bill 63 (codified as KRS 11A), the Executive Branch Code of Ethics, which states, in part:

KRS 11A.040 (6) provides:

No present or former public servant shall, within six (6) months of following termination of his office or employment, accept employment, compensation or other economic benefit from any person or business that contracts or does business with the state in matters in which he was directly involved during his tenure. This provision shall not prohibit an individual from returning to the same business, firm, occupation, or profession in which he was involved prior to taking office or beginning his term of employment, provided that, for a period of six (6) months, he personally refrains from working on any matter in which he was directly involved in state government. This subsection shall not prohibit the performance of ministerial functions, including, but not limited to, filing tax returns, filing applications for permits or licenses, or filing incorporation papers.

KRS 11A.040 (8) states:

A former public servant shall not represent a person in a matter before a state agency in which the former public servant was directly involved, for a period of one (1) year after the latter of:

a) The date of leaving office or termination of employment; or
b) The date the term of office expires to which the public servant was elected.

This law is intended to promote public confidence in the integrity of state government and to declare as public policy the idea that state employees should view their work as a public trust and not as a way to obtain private benefits.

If you have worked for the executive branch of state government within the past six months, you may be subject to the law's prohibitions. The law's applicability may be different if you hold elected office or are contemplating representation of another before a state agency.

Also, if you are affiliated with a firm which does business with the state and which employs former state executive-branch employees, you should be aware that the law may apply to them.

In case of doubt, the law permits you to request an advisory opinion from the Executive Branch Ethics Commission, Room 136, Capitol Building, 700 Capitol Avenue, Frankfort, Kentucky 40601; telephone (502) 564-7954.

Kentucky Equal Employment Opportunity Act of 1978

The requirements of the Kentucky Equal Employment Opportunity Act of 1978 (KRS 45.560-45.640) shall not apply to this Contract.

TRANSPORTATION CABINET
DIVISION OF CONSTRUCTION PROCUREMENT
COMPLIANCE SECTION
PROJECT WAGE RATES

WORKERS……..MINIMUM HOURLY RATE…..$6.55

Note: Parts III and IV of **"Labor and Wage Requirements Applicable to Other Than Federal-Aid System Projects"** do not apply to this project.

PART IV

INSURANCE

INSURANCE

The Contractor shall carry the following insurance in addition to the insurance required by law:

1. Contractor's Public Liability Insurance not less than $100,000.00 for damages arising out of bodily injuries to or death to one person. Not less than $300,000.00 for damages arising out of bodily injuries to or death to two or more persons.

2. Contractor's Property Damages Liability Insurance. Not less than $100,000.00 for all damages arising out of injury or destruction of property in any one accident. Not less than $300,000.00 for all damages during the policy period.

3. Contractor's Protective Public Liability and Property Damage Insurance. The contractor shall furnish evidence with respect to operations performed for him by subcontractors that he carries in his own behalf for the above stipulated amounts.

4. The insurance required above must be evidenced by a Certificate of Insurance and this Certificate of Insurance must contain one of the following statements:

   a. "policy contains no deductible clauses."

   b. "policy contains _____ (amount) deductible property damage clause but company will pay claim and collect the deductible from the insured."

5. WORKMEN'S COMPENSATION INSURANCE. The contractor shall furnish evidence of coverage of all his employees or give evidence of self-insurance by submitting a copy of a certificate issued by the Workmen's Compensation Board.

PART V

BID ITEMS

KENTUCKY TRANSPORTATION CABINET
DEPARTMENT OF HIGHWAYS
FRANKFORT, KY 40622

CONTRACT ID: 092931
COUNTY: CARROLL, GALLATIN
PROPOSAL: 121GR09M010

PAGE: 1
LETTING: 04/24/09
CALL NO: 413

LINE NO	ITEM	DESCRIPTION	APPROXIMATE UNIT QUANTITY	UNIT PRICE	AMOUNT
	SECTION 0001	BRIDGE			
0010	02003	RELOCATE TEMP CONC BARRIER	2,000.000 LF		
0020	02650	MAINTAIN & CONTROL TRAFFIC CARROLL COUNTY	(1.00) LS		
0030	02650	MAINTAIN & CONTROL TRAFFIC GALLATIN COUNTY	(1.00) LS		
0040	02671	PORTABLE CHANGEABLE MESSAGE SIGN	1.000 EACH		
0050	02775	ARROW PANEL	1.000 EACH		
0060	03171	CONCRETE BARRIER WALL TYPE 9T	2,000.000 LF		
0070	20377EC	BRIDGE HANDRAIL REPAIR	137.000 LF		
0080	23171EC	CONCRETE REPAIR	LUMP		
	SECTION 0002	DEMOBILIZATION			
0090	02569	DEMOBILIZATION	LUMP		
		TOTAL BID			