CALL NO. 409

CONTRACT ID. 143255

HANCOCK COUNTY

FED/STATE PROJECT NUMBER 046GR14R089-CB06

DESCRIPTION VARIOUS ROUTES IN HANCOCK COUNTY

WORK TYPE ASPHALT RESURFACING

PRIMARY COMPLETION DATE 6/30/2015

LETTING DATE: August 22,2014

Sealed Bids will be received electronically through the Bid Express bidding service until 10:00 AM EASTERN DAYLIGHT TIME August 22,2014. Bids will be publicly announced at 10:00 AM EASTERN DAYLIGHT TIME.

NO PLANS ASSOCIATED WITH THIS PROJECT.

REQUIRED BID PROPOSAL GUARANTY: Not less than 5% of the total bid.

TABLE OF CONTENTS

PART I SCOPE OF WORK

- PROJECT(S), COMPLETION DATE(S), & LIQUIDATED DAMAGES
- CONTRACT NOTES
- STATE CONTRACT NOTES
- ASPHALT MIXTURE
- DGA BASE FOR SHOULDERS
- INCIDENTAL SURFACING
- FUEL AND ASPHALT PAY ADJUSTMENT
- COMPACTION OPTION B
- SPECIAL NOTE(S) APPLICABLE TO PROJECT
- WASTE AND BORROW SITES
- SHOULDER FAILURE REPAIR
- SHOULDER PREPARATION
- EDGE KEY
- ASPHALT MILLING AND TEXTURING
- TRAFFIC CONTROL PLAN 2 LANE
- TRAFFIC SIGNAL LOOP DETECTORS
- SKETCH MAP(S)
- MATERIAL SUMMARY
- SUMMARY SHEET(S)
- TYPICAL SECTION(S)
- BRIDGE DETAIL FOR PAVING PROJECT

PART II SPECIFICATIONS AND STANDARD DRAWINGS

- SPECIFICATIONS REFERENCE
- SUPPLEMENTAL SPECIFICATION
- STANDARD DRAWINGS THAT APPLY
- LANE CLOSURE TWO-LANE HIGHWAY

PART III EMPLOYMENT, WAGE AND RECORD REQUIREMENTS

- LABOR AND WAGE REQUIREMENTS
- EXECUTIVE BRANCH CODE OF ETHICS
- KENTUCKY EQUAL EMPLOYMENT OPPORTUNITY ACT OF 1978 LOCALITY 1,2,3,4 / STATE (OVER 250,000)
- PROJECT WAGE RATES LOCALITY 1 / FEDERAL & STATE

PART IV INSURANCE

PART V BID ITEMS

PART I

SCOPE OF WORK

ADMINISTRATIVE DISTRICT - 02

CONTRACT ID - 143255

046GR14R089-CB06

COUNTY - HANCOCK

PCN - 0204606571401
CB06 046 0657 003-008

KY 657 (KY 657) (MP 3.572) FROM KY 1403 EXTENDING NORTH TO US 60 (MP 7.569), A DISTANCE OF 04.00 MILES.ASPHALT RESURFACING

GEOGRAPHIC COORDINATES LATITUDE 37:52:31.37 LONGITUDE 86:52:57.01

PCN - 0204617001401
CB06 046 1700 000-005

KY 1700 (KY 1700) (MP 0.000) FROM THE OHIO COUNTY LINE EXTENDING NORTHEAST TO 0.797 MILE NORTH OF LAMASTUS ROAD (MP 4.500), A DISTANCE OF 04.50 MILES.ASPHALT RESURFACING

GEOGRAPHIC COORDINATES LATITUDE 37:42:40.21 LONGITUDE 86:40:34.17

COMPLETION DATE(S):

COMPLETED BY 06/30/2015 APPLIES TO ENTIRE CONTRACT

CONTRACT NOTES

PROPOSAL ADDENDA

All addenda to this proposal must be applied when calculating bid and certified in the bid packet submitted to the Kentucky Department of Highways. Failure to use the correct and most recent addenda may result in the bid being rejected.

BID SUBMITTAL

Bidder must use the Department's Expedite Bidding Program available on the Internet web site of the Department of Highways, Division of Construction Procurement. (www.transportation.ky.gov/construction-procurement)

The Bidder must download the bid file located on the Bid Express website (www.bidx.com) to prepare a bid packet for submission to the Department. The bidder must submit electronically using Bid Express.

JOINT VENTURE BIDDING

Joint venture bidding is permissible. All companies in the joint venture must be prequalified in one of the work types in the Qualifications for Bidders for the project. The bidders must get a vendor ID for the joint venture from the Division of Construction Procurement and register the joint venture as a bidder on the project. Also, the joint venture must obtain a digital ID from Bid Express to submit a bid. A joint bid bond of 5% may be submitted for both companies or each company may submit a separate bond of 5%.

UNDERGROUND FACILITY DAMAGE PROTECTION

The contractor is advised that the Underground Facility Damage Protection Act of 1994, became law January 1, 1995. It is the contractor's responsibility to determine the impact of the act regarding this project, and take all steps necessary to be in compliance with the provision of the act.

SPECIAL NOTE FOR PIPE INSPECTION

Contrary to Section 701.03.08 of the 2012 Standard Specifications for Road and Bridge Construction and Kentucky Method 64-114, certification by the Kentucky Transportation Center for prequalified Contractors to perform laser/video inspection is not required on this contract. It will continue to be a requirement for the Contractor performing any laser/video pipe inspection to be prequalified for this specialized item with the Kentucky Transportation Cabinet-Division of Construction Procurement.

SPECIAL NOTE FOR COMPOSITE OFFSET BLOCKS

Contrary to the Standard Drawings (2012 edition) the Cabinet will allow 6" composite offset blocks in lieu of wooden offset blocks, except as specified on proprietary end treatments and crash cushions. The composite blocks shall be selected from the Cabinet's List of Approved Materials.

REGISTRATION WITH THE SECRETARY OF STATE BY A FOREIGN ENTITY

Pursuant to KRS 176.085(1)(b), an agency, department, office, or political subdivision of the Commonwealth of Kentucky shall not award a state contract to a person that is a foreign entity required by KRS 14A.9-010 to obtain a certificate of authority to transact business in the Commonwealth ("certificate") from the Secretary of State under KRS 14A.9-030 unless the person produces the certificate within fourteen (14) days of the bid or proposal opening. If the foreign entity is not required to obtain a certificate as provided in KRS 14A.9-010, the foreign entity should identify the applicable exception. Foreign entity is defined within KRS 14A.1-070.

For all foreign entities required to obtain a certificate of authority to transact business in the Commonwealth, if a copy of the certificate is not received by the contracting agency within the time frame identified above, the foreign entity's solicitation response shall be deemed non-responsive or the awarded contract shall be cancelled.

Businesses can register with the Secretary of State at https://secure.kentucky.gov/sos/ftbr/welcome.aspx .

SPECIAL NOTE FOR PROJECT QUESTIONS DURING ADVERTISEMENT

Questions about projects during the advertisement should be submitted in writing to the Division of Construction Procurement. This may be done by fax (502) 564-7299 or email to kytc.projectquestions@ky.gov. The Department will attempt to answer all submitted questions. The Department reserves the right not to answer if the question is not pertinent or does not aid in clarifying the project intent.

The deadline for posting answers will be 3:00 pm Eastern Daylight Time, the day preceding the Letting. Questions may be submitted until this deadline with the understanding that the later a question is submitted, the less likely an answer will be able to be provided.

The questions and answers will be posted for each Letting under the heading "Questions & Answers" on the Construction Procurement website (www.transportation.ky.gov/contract). The answers provided shall be considered part of

this Special Note and, in case of a discrepancy, will govern over all other bidding documents.

HARDWOOD REMOVAL RESTRICTIONS

The US Department of Agriculture has imposed a quarantine in Kentucky and several surrounding states, to prevent the spread of an invasive insect, the emerald ash borer. Hardwood cut in conjunction with the project may not be removed from the state. Chipping or burning on site is the preferred method of disposal.

INSTRUCTIONS FOR EXCESS MATERIAL SITES AND BORROW SITES

Identification of excess material sites and borrow sites shall be the responsibility of the Contractor. The Contractor shall be responsible for compliance with all applicable state and federal laws and may wish to consult with the US Fish and Wildlife Service to seek protection under Section 10 of the Endangered Species Act for these activities.

ACCESS TO RECORDS

The contractor, as defined in KRS 45A.030 (9) agrees that the contracting agency, the Finance and Administration Cabinet, the Auditor of Public Accounts, and the Legislative Research Commission, or their duly authorized representatives, shall have access to any books, documents, papers, records, or other evidence, which are directly pertinent to this contract for the purpose of financial audit or program review. Records and other prequalification information confidentially disclosed as part of the bid process shall not be deemed as directly pertinent to the contract and shall be exempt from disclosure as provided in KRS 61.878(1)(c). The contractor also recognizes that any books, documents, papers, records, or other evidence, received during a financial audit or program review shall be subject to the Kentucky Open Records Act, KRS 61.870 to 61.884.

In the event of a dispute between the contractor and the contracting agency, Attorney General, or the Auditor of Public Accounts over documents that are eligible for production and review, the Finance and Administration Cabinet shall review the dispute and issue a determination, in accordance with Secretary's Order 11-004. (See attachment)

10/29/12

Commonwealth of Kentucky
Finance and Administration Cabinet
OFFICE OF THE SECRETARY
Room 383, Capitol Annex
702 Capital Avenue
Frankfort, KY 40601-3462
(502) 564-4240
Fax (502) 564-6785

Steven L. Beshear
Governor

Lori H. Flanery
Secretary

SECRETARY'S ORDER 11-004

FINANCE AND ADMINISTRATION CABINET

Vendor Document Disclosure

WHEREAS, in order to promote accountability and transparency in governmental operations, the Finance and Administration Cabinet believes that a mechanism should be created which would provide for review and assistance to an Executive Branch agency if said agency cannot obtain access to documents that it deems necessary to conduct a review of the records of a private vendor that holds a contract to provide goods and/or services to the Commonwealth; and

WHEREAS, in order to promote accountability and transparency in governmental operations, the Finance and Administration Cabinet believes that a mechanism should be created which would provide for review and assistance to an Executive Branch agency if said agency cannot obtain access to documents that it deems necessary during the course of an audit, investigation or any other inquiry by an Executive Branch agency that involves the review of documents; and

WHEREAS, KRS 42.014 and KRS 12.270 authorizes the Secretary of the Finance and Administration Cabinet to establish the internal organization and assignment of functions which are not established by statute relating to the Finance and Administration Cabinet; further, KRS Chapter 45A.050 and 45A.230 authorizes the Secretary of the Finance and Administration Cabinet to procure, manage and control all supplies and services that are procured by the Commonwealth and to intervene in controversies among vendors and state agencies; and

NOW, THEREFORE, pursuant to the authority vested in me by KRS 42.014, KRS 12.270, KRS 45A.050, and 45A.230, I, Lori H. Flanery, Secretary of the Finance and Administration Cabinet, do hereby order and direct the following:

I. Upon the request of an Executive Branch agency, the Finance and Administration Cabinet ("FAC") shall formally review any dispute arising where the agency has requested documents from a private vendor that holds a state contract and the vendor has refused access to said documents under a claim that said documents are not directly pertinent or relevant to the agency's inquiry upon which the document request was predicated.

II. Upon the request of an Executive Branch agency, the FAC shall formally review any situation where the agency has requested documents that the agency deems necessary to

conduct audits, investigations or any other formal inquiry where a dispute has arisen as to what documents are necessary to conclude the inquiry.

III. Upon receipt of a request by a state agency pursuant to Sections I & II, the FAC shall consider the request from the Executive Branch agency and the position of the vendor or party opposing the disclosure of the documents, applying any and all relevant law to the facts and circumstances of the matter in controversy. After FAC's review is complete, FAC shall issue a Determination which sets out FAC's position as to what documents and/or records, if any, should be disclosed to the requesting agency. The Determination shall be issued within 30 days of receipt of the request from the agency. This time period may be extended for good cause.

IV. If the Determination concludes that documents are being wrongfully withheld by the private vendor or other party opposing the disclosure from the state agency, the private vendor shall immediately comply with the FAC's Determination. Should the private vendor or other party refuse to comply with FAC's Determination, then the FAC, in concert with the requesting agency, shall effectuate any and all options that it possesses to obtain the documents in question, including, but not limited to, jointly initiating an action in the appropriate court for relief.

V. Any provisions of any prior Order that conflicts with the provisions of this Order shall be deemed null and void.

SPECIAL NOTE FOR RECIPROCAL PREFERENCE

Reciprocal preference to be given by public agencies to resident bidders

By reference, KRS 45A.490 to 45A.494 are incorporated herein and in compliance regarding the bidders residency. Bidders who want to claim resident bidder status should complete the Affidavit for Claiming Resident Bidder Status along with their bid in the Expedite Bidding Program. Submittal of the Affidavit should be done along with the bid in Bid Express.

ASPHALT MIXTURE

Unless otherwise noted, the Department estimates the rate of application for all asphalt mixtures to be 110 lbs/sy per inch of depth.

DGA BASE FOR SHOULDERS

Unless otherwise noted, the Department estimates the rate of application for DGA Base for Shoulders to be 115 lbs/sy per inch of depth. The Department will not measure necessary grading and/or shaping of existing shoulders prior to placing of DGA Base, but shall be incidental to the Contract unit price per ton for DGA Base.

Accept payment at the Contract unit price per ton as full compensation for all labor, materials, equipment, and incidentals for grading and/or shaping of existing shoulders and furnishing, placing, and compacting the DGA Base.

INCIDENTAL SURFACING

The Department has included in the quantities of asphalt mixtures established in the proposal estimated quantities required for resurfacing or surfacing mailbox turnouts, farm field entrances, residential and commercial entrances, curve widening, ramp gores and tapers, and road and street approaches, as applicable. Pave these areas to the limits as shown on Standard Drawing RPM-110-06 or as directed by the Engineer. In the event signal detectors are present in the intersecting streets or roads, pave the crossroads to the right of way limit or back of the signal detector, whichever is the farthest back of the mainline. Surface or resurface these areas as directed by the Engineer. The Department will not measure placing and compacting for separate payment but shall be incidental to the Contract unit price for the asphalt mixtures.

FUEL AND ASPHALT PAY ADJUSTMENT

The Department has included the Contract items Asphalt Adjustment and Fuel Adjustment for possible future payments at an established Contract unit price of $1.00. The Department will calculate actual adjustment quantities after work is completed. If existing Contract amount is insufficient to pay all items on the contract with the adjustments, the Department will establish additional monies with a change order.

OPTION B

Be advised that the Department will control and accept compaction of asphalt mixtures furnished on this project under OPTION B in accordance with Sections 402 and 403.

SPECIAL NOTE - KY 657

Trenching as directed by the Engineer.

SPECIAL PROVISION FOR WASTE AND BORROW SITES – KY 657

Obtain U.S. Army Corps of Engineer's approval before utilizing a waste or borrow site that involves "Waters of the United States". The Corps of Engineers defines "Waters of the United States" as perennial or intermittent streams, ponds or wetlands. The Corps of Engineers also considers ephemeral streams, typically dry except during rainfall but having a defined drainage channel, to be jurisdictional waters. Direct questions concerning any potential impacts to "Waters of the United States" to the attention of the appropriate District Office for the Corps of Engineers for a determination prior to disturbance. Be responsible for any fees associated with obtaining approval for waste and borrow sites from the U.S. Army Corps of Engineer or other appropriate regulatory agencies.

1-296 Waste & Borrow Sites
01/02/2012

SPECIAL NOTES FOR SHOULDER FAILURE REPAIR- KY 657

Repair locations listed in the summary are approximate only. The Engineer will determine actual shoulder failure repair locations at the time of construction. Excavate to an approximate depth of .__7_ inches below the top of the existing shoulder pavement level. Remove and dispose of all materials. Use all possible care to avoid damaging existing culvert pipes and any existing underground utilities. Repair or restore any damaged items at no additional cost to the Department. Waste all removed materials off the Right of Way at sites obtained by the Contractor at no additional cost to the Department (see Special Note for Waste and Borrow)

Backfill the excavated area with _0_ inches of DGA and _6_ inches of Class _2_ Asphalt Base _.75 D PG64-22 up to the existing shoulder pavement surface. Compact the asphalt base to the proper compaction as required by the Section 403 and seal with Leveling and Wedging. Perform all shoulder failure repairs in such a manner that removal and replacement are completed on the same day. Do this work as one of the Contractor's first operations. Do not place new asphalt surface over repaired shoulder failures until a minimum of 7 days has elapsed after placement of the asphalt base. Prior to constructing new asphalt shoulder surfacing, level and wedge any settlement of the repair areas.

The bidder must draw his own conclusions as to the conditions encountered. The Department does not give any guarantee as to the accuracy of the data and no claim will be considered for additional compensation of the materials encountered that are not in accord with the classification shown.

Payment at the Contract unit prices per ton for asphalt and "Leveling and Wedging" shall be full compensation for all labor, materials, equipment, and incidentals for excavating and disposing of all materials, furnishing and placing DGA and asphalt base backfilling the trench up to the top pavement boundary, sealing the repaired area with Leveling and Wedging, and all other items necessary to complete the work to the satisfaction of the Engineer.

1-3240 Shoulder Failure
01/02/1/2012

SPECIAL NOTE FOR SHOULDER PREPARATION – KY 657

Grade, shape, and compact shoulder as shown on the typical section and as directed by the Engineer to provide proper template and foundation for the shoulder resurfacing. The Department will not measure grading, shaping, and compacting shoulders for separate payment, but shall be incidental to the asphalt base and/or surface placed on the shoulder.

1-3245 Shoulder Preparation Contractor
01/02/2012

SPECIAL NOTE FOR EDGE KEY

Construct Edge Keys at the beginning of project, end of project, at railroad crossings, and at ramps, as applicable. Unless specified in the Contract or directed by the Engineer, do not construct edge keys at intersecting streets, roads, alleys, or entrances. Cut out the existing asphalt surface to the required depth and width shown on the drawing and heel the new surface into the existing surface. The Department will make payment for this work at the Contract unit price per ton for Asphalt Pavement Milling and Texturing, which shall be full compensation for all labor, materials, equipment, and incidentals for removal and disposal of the existing asphalt surface required to construct the edge key.

EDGE KEY

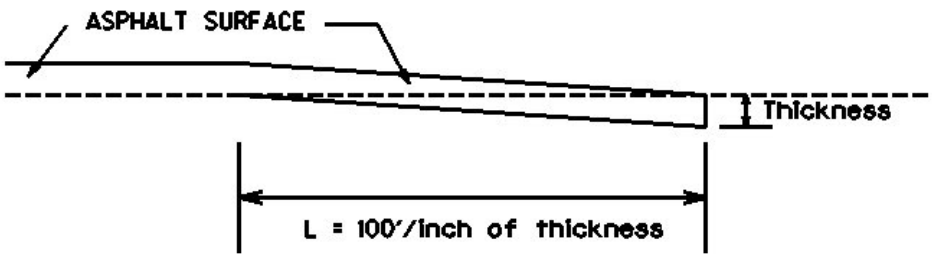

Thickness = <u>1</u> Inch

L = <u>SEE MILLING SUMMARY SHEETS</u>

L= Length of Edge Key

1-3309 Edge key by Ton
01/02//2012

SPECIAL NOTE FOR
ASPHALT MILLING AND TEXTURING

Begin paving operations within **48 hours** of commencement of the milling operation. Continue paving operations continuously until completed. If paving operations are not begun within this time period, the Department will assess liquidated damages at the rate prescribed by Section 108.09 until such time as paving operations are begun.

Take possession of the millings and recycle the millings or dispose of the millings off the Right-of-Way at sites obtained by the Contractor at no additional cost to the Department.

1-3520 48 hours Contractor keeps millings
01/2/2012

TRAFFIC CONTROL PLAN

TRAFFIC CONTROL GENERAL

Except as provided herein, maintain and control traffic in accordance with the Standard and Supplemental Specifications and the Standard and Sepia Drawings, current editions. Except for the roadway and traffic control bid items listed, all items of work necessary to maintain and control traffic will be paid at the lump sum bid price to "Maintain and Control Traffic".

Contrary to Section 106.01, furnish new, or used in like new condition, traffic control devices at the beginning of the work and maintain in like new condition until completion of the work.

PROJECT PHASING & CONSTRUCTION PROCEDURES

The Engineer may specify days and hours when lane closures will not be allowed.

Maintain alternating one way traffic during construction. Provide a minimum clear lane width of 12 feet; however, provide for passage of vehicles of up to 16 feet in width. If traffic should be stopped due to construction operations, and a school bus on an official run arrives on the scene, make provisions for the passage of the bus as quickly as possible.

LANE CLOSURES

Do not leave lane closures in place during non-working hours.

SIGNS

Contrary to section 112.04.02, only long term signs (signs intended to be continuously in place for more than 3 days) will be measured for payment; short term signs (signs intended to be left in place for 3 days or less) will not be measured for payment but will be incidental to Maintain and Control Traffic.

CHANGEABLE MESSAGE SIGNS

If deemed necessary by the Engineer, the Department will furnish, operate, and maintain Changeable Message Signs.

BARRICADES

The Department will not measure barricades used in lieu of barrels and cones for channelization or delineation, but shall be incidental to Maintain and Control Traffic according to Section 112.04.01.

The Department will measure barricades used to protect pavement removal areas in individual units Each. The Department will measure for payment the maximum number of barricades in concurrent use at the same time on a single day on all sections of the contract. The Department will measure individual barricades only once for payment, regardless of how many times they are set, reset, removed, and relocated during the duration of the project. The Department will not measure replacements for damaged barricades the Engineer directs to be replaced due to poor condition or reflectivity. Retain possession of the Barricades upon completion of construction.

PAVEMENT MARKINGS

If there is to be a deviation from the existing striping plan, the Engineer will furnish the Contractor a striping plan prior to placement of the final surface course.

Install Temporary Striping according to Section 112 with the following exception:

> If the Contractor's operations or phasing requires temporary markings that must subsequently be removed from the final surface course, use an approved removable lane tape; however, the Department will not measure removable lane tape for separate payment, but will measure and pay for removable lane tape as temporary striping.

PAVEMENT EDGE DROP-OFFS

Do not allow a pavement edge between opposing directions of traffic or lanes that traffic is expected to cross in a lane change situation with an elevation difference greater than 1½". Place Warning signs (MUTCD W8-11 or W8-9A) in advance of and at 1500' intervals throughout the drop-off area. Dual post the signs on both sides of the traveled way. Wedge all transverse transitions between resurfaced and unresurfaced areas which traffic may cross with asphalt mixture for leveling and wedging. Remove the wedges prior to placement of the final surface course.

Protect pavement edges that traffic is not expected to cross, except accidentally, as follows:

Less than 2" - No protection required.

2” to 4” - Place plastic drums, vertical panels, or barricades every 50 feet. During daylight working hours only, the Engineer will allow the Contractor to use cones in lieu of plastic drums, panels, and barricades. Wedge the drop-off with DGA or asphalt mixture for leveling and wedging with a 1:1 or flatter slope in daylight hours, or 3:1 or flatter slope during nighttime hours, when work is not active in the drop-off area.

Greater than 4’ - Protect drop-offs greater than 4 inches within 10 feet of traffic by placing drums, vertical panels, or barricades every 25 feet. The Engineer will not allow the use of cones in lieu of drums, vertical panels, or barricades for drop-offs greater than 4”. Place Type III Barricades directly in front of the drop-off facing on coming traffic in both directions of travel. Provide warning signs as shown on the Standard Drawings or as directed by the Engineer

Pedestrians & Bicycles - Protect pedestrian and bicycle traffic as directed by the engineer.

SPECIAL NOTE FOR TRAFFIC SIGNAL LOOP DETECTORS KY 657

I. DESCRIPTION.

Be advised there are existing traffic signal loop detectors within the construction limits of this project. Except as specified herein, perform traffic signal loop replacement in accordance with the Department's Standard and Supplemental Specifications and Standard and Sepia Drawings, current editions. Article references are to the Standard Specifications. Furnish all materials, labor, equipment, and incidentals for replacement of traffic signal loop installation(s) and all other work specified as part of this contract.

II. MATERIALS.

Except as specified herein, furnish materials in accordance with Section 723. Provide for materials to be sampled and tested in accordance with the Department's Sampling Manual. Make materials available for sampling a sufficient time in advance of the use of the materials to allow for the necessary time for testing, unless otherwise specified in these Notes.

A. Maintain and Control Traffic. See Traffic Control Plan.

B. Sand. Furnish natural sand meeting the requirements of 804.04.01.

C. Seeding. Use Seed Mix Type I.

D. Loop Saw Slot and Fill. Furnish loop sealant, backer rod, and non-shrink grout according to the Saw Slot Detail.

III. CONSTRUCTION METHODS.

Except as specified herein, install and test Traffic Signal Loop Detectors in accordance with Section 723 and the drawings.

A. Coordination. Notify the Engineer in writing, two (2) weeks prior to beginning any work. The Engineer will contact and maintain liaison with the District Traffic Engineer and the Central Office Division of Traffic Operations to coordinate the Department's operations with the Contractor's work.

B. Maintain and Control Traffic. See Traffic Control Plan.

C. Milling. On projects involving milling and texturing of the existing pavement, install loops in the existing pavement before performing the milling and texturing. If, after milling, the remnant contents of the existing saw slot (grout, loop wires, backer rod, and/or loop sealant) are not intact and flush with or below the top of the milled portion of the asphalt and with the saw slot completely filled with fines from the milling operation,

clear the saw slot of loose remnant contents and refill the saw slot with natural sand. Obtain the Engineer's approval of the stabilized saw slot prior to resurfacing.

D. Loop Saw Slot and Fill. The following is a typical step by step procedure for the installation of a loop.

- Carefully mark the slot to be cut, perpendicular to the flow of traffic and centered in the lane.
- Make each saw-cut 3/8-inch wide and at a depth such that the top of the backer rod is a minimum of 4 inches below the surface of asphalt pavement.
- Drill a 1½ inch core hole at each corner and use a chisel to smooth corners to prevent sharp bends in the wire.
- Clean ALL foreign and loose matter out of the slots and drilled cores and within 1 foot on all sides of the slots using a high pressure washer.
- Completely dry the slots and drilled cores and within 1 foot on all sides of the slots.
- Measure 9-12 inches from the edge of the paved surface (shoulder break or face of curb) and drill a 1½ inch hole on a 45º angle to the conduit adjacent to the roadway.
- Closely inspect all cuts, cores, and slots for jagged edges or protrusions prior to the placement of the wire. All jagged edges and protrusions shall be ground or re-cut and cleaned again.
- Place the loop wire splice-free from the termination point (cabinet or junction box) to the loop, continue around the loop for two turns (6’x30’ loop) or three turns (6’x6’ loop), and return to the termination point.
- Push the wire into the saw slot with a blunt object such as a wooden stick. Make sure that the loop wire is pushed fully to the bottom of the saw slot. Screwdrivers shall not be used.
- Install duct sealant to a minimum of 1” deep into the cored 1½ inch hole.
- Apply loop sealant from the bottom up and fully encapsulate the loop wires in the saw slot. The wire should not be able to move when the sealant has set.
- Cover the encapsulated loop wire with a continuous layer of backer rod along the entire loop and home run saw slots such that no voids are present between the loop sealant and backer rod.
- Finish filling the saw cut with non-shrinkable grout per manufacturer’s instructions. Alleviate all air pockets and refill low spaces. There shall be no concave portion to the grout in the saw slot. Any excess grout shall be cleaned from the roadway to alleviate tracking.
- Clean up the site and dispose of all waste off the project.
- Ensure that the grout has completely cured prior to subjecting the loop to traffic. Curing time varies with temperature and humidity.

E. Final Dressing, Clean Up, and Seeding. After all work is completed, clean work sites and all disturbed areas. Dispose of all waste and debris off the right of way at sites obtained by the Contractor at no additional cost to the Department. Sow all disturbed earthen areas with Seed Mix Type I.

F. Property Damage. Be responsible for all damage to public and/or private property resulting from the work. Upon completion of the work, restore all disturbed highway features and private property in like kind design and materials at no additional cost to the Department.

G. On-Site Inspection. Make a thorough inspection of the site prior to submitting bid and become thoroughly familiar with existing conditions so that the work can be expeditiously performed after a contract is awarded. The Department will consider submission of a bid as evidence of this inspection having been made. The Department will not honor any claims resulting from site conditions.

H. Right-of-Way Limits. The Department has not established exact limits of Right-of-Way. Limit work activities to obvious Right-of-Way and work areas secured by the Department through Consent and Release of the adjacent property owners. Be responsible for all encroachments onto private lands.

I. Utility Clearance. Work around and do not disturb existing utilities. The Department does not anticipate that existing utilities will require relocation; however, if utility relocation is required, the utility companies will work concurrently with the Contractor while relocating their facilities.

J. Caution. Consider the information in this proposal and shown on the plans and the type of work listed herein to be approximate. Do not take the information to be an accurate evaluation of the materials and conditions to be encountered during construction. The bidder must draw his own conclusions as to the conditions encountered. The Department does not give any guarantee as to the accuracy of the data and will not consider any claims for additional compensation if the conditions encountered are not in accordance with the information shown.

K. Control. Perform all work under under the absolute control of the Department of Highways. Obtain the Engineer's approval of all designs required to be furnished by the Contractor prior to incorporation into the work. The Department reserves the right to have other work performed by other contractors and its own forces and to permit public utility companies and others to do work during the construction within the limits of, or adjacent to, the project. Conduct operations and cooperate with such other parties so that interference with each other's work will be reduced to a minimum. By submitting bid, the Contractor agrees to make no claims against the Department for additional compensation due to delays or other conditions created by the operations of such other parties. Should a difference of opinion arise as to the rights of the Contractor and others working within the limits of, or adjacent to, the project, the Engineer will decide as to the respective rights of the various parties involved in order to assure the completion of the work in general harmony and in a satisfactory manner, and his decision shall be final and binding upon the Contractor.

IV. MEASUREMENT.

The Department will measure for payment only the bid items listed. All other items required to complete the construction shall be incidental to the bid items listed.

A. Maintain and Control Traffic. See Traffic Control Plan.

B. Traffic Signal Loop detectors. See Section 723.04.

C. Sand. The department will not measure natural sand used to fill existing loop slots after milling, but shall be incidental to Milling and Texturing

V. PAYMENT. The Department will make payment for the completed and accepted quantities of listed items according to Section 723.05. The Department will consider payment as full compensation for all work required under these notes and the Standard Specifications.

Traffic Signal Loop Detectors
Page 5 of 7

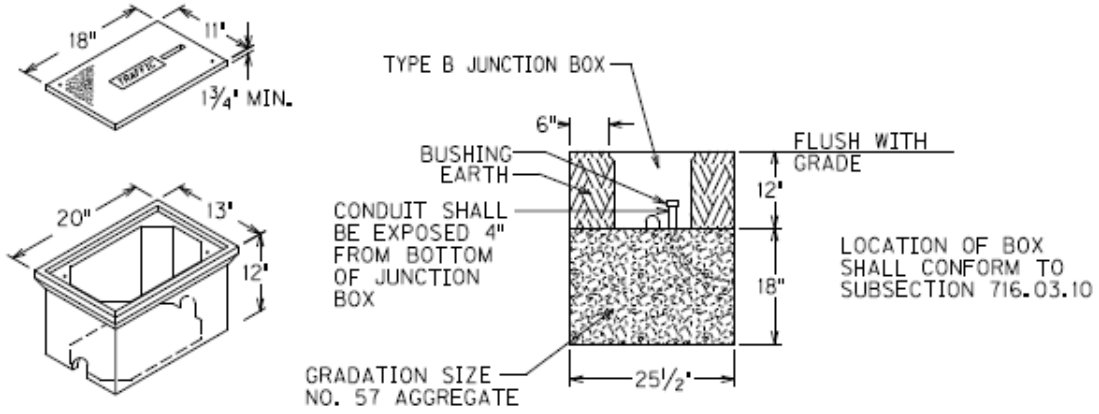

ELECTRICAL JUNCTION BOX TYPE B

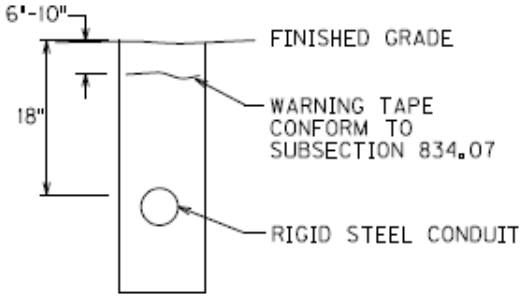

DEPTH OF CONDUIT

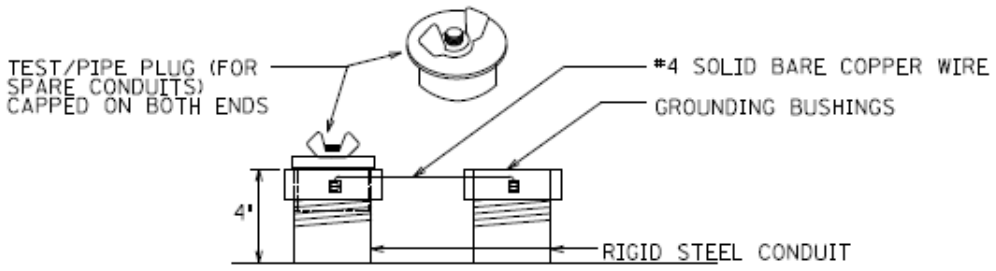

TYPICAL GROUNDING DETAIL

Traffic Signal Loop Detectors
Page 6 of 7

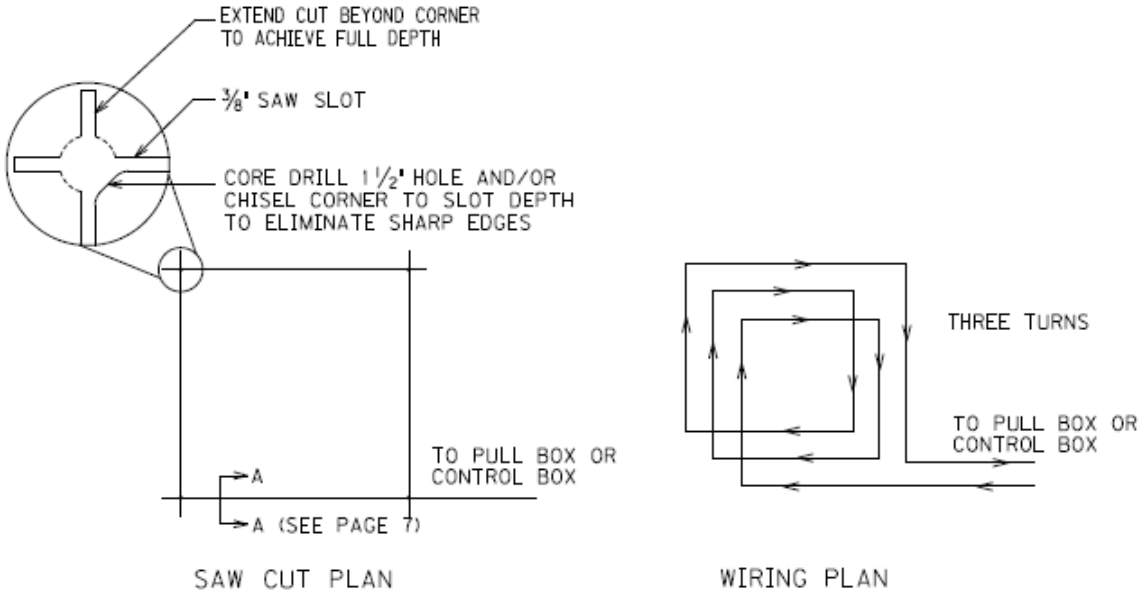

6'X6' LOOP

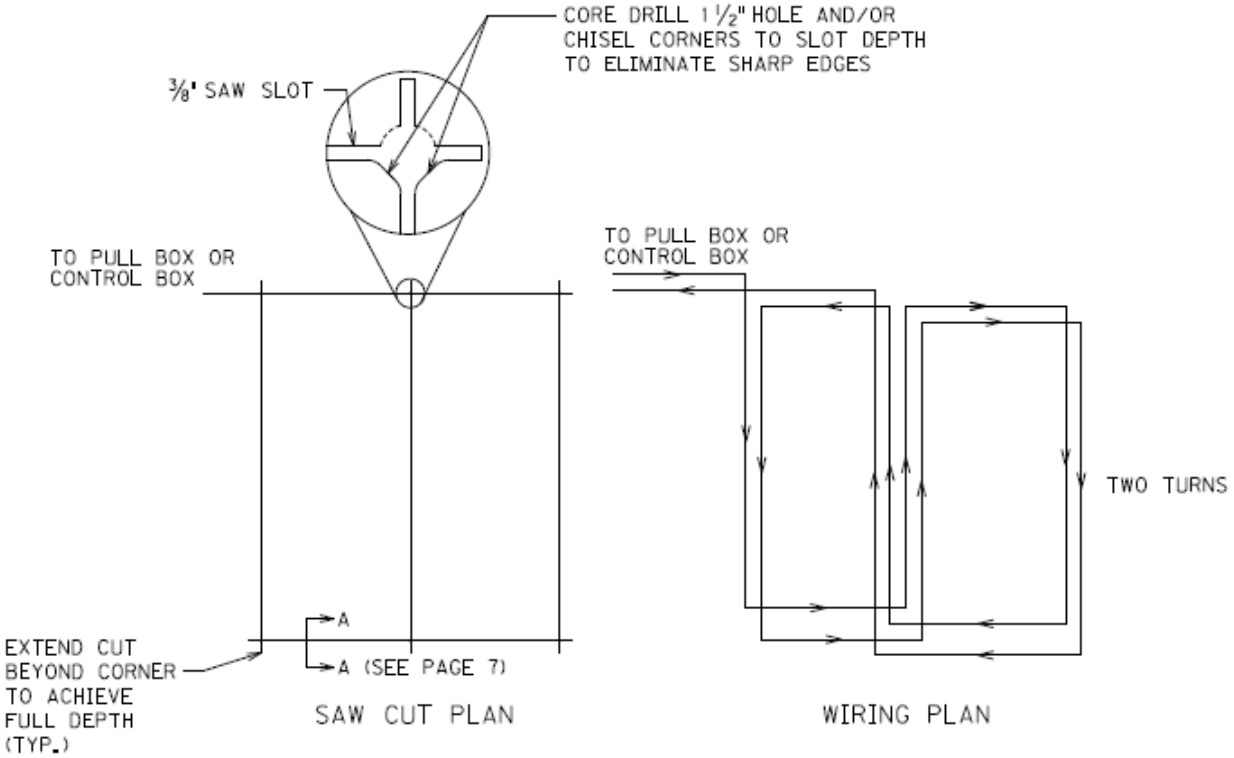

6'X30' QUADRAPOLE LOOP

Traffic Signal Loop Detectors
Page 7 of 7

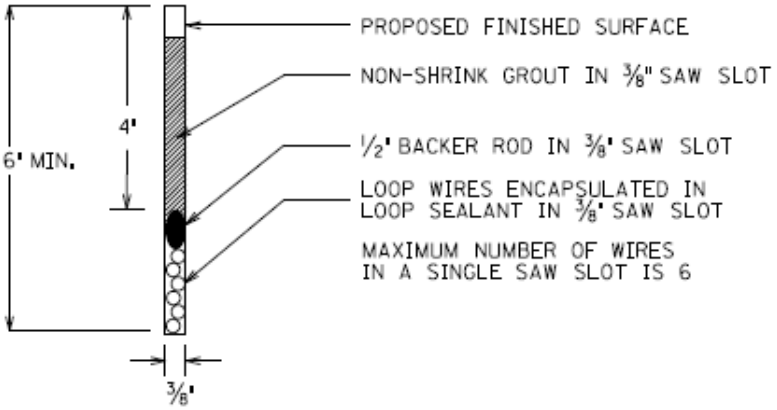

SECTION A-A (SAW SLOT DETAIL)

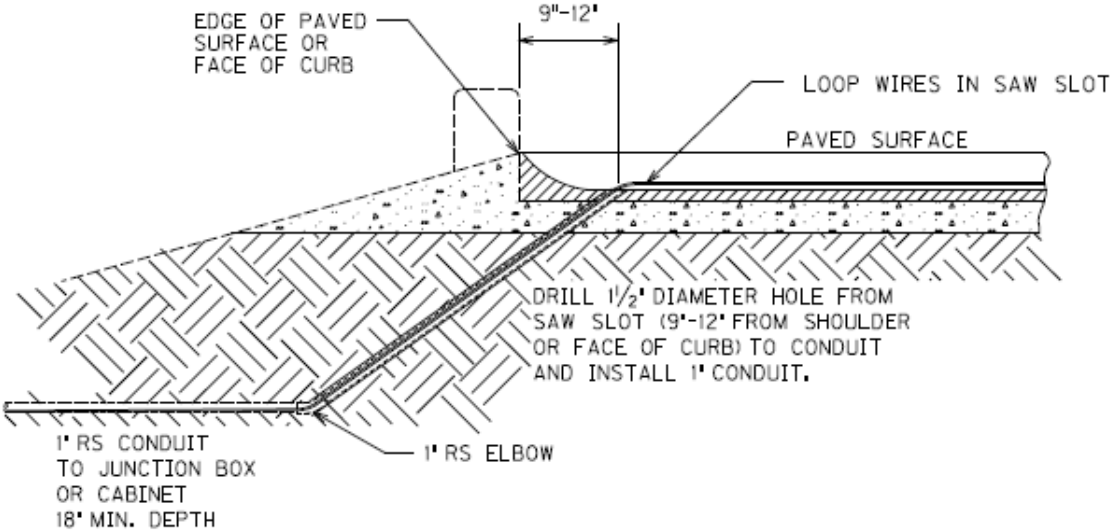

SAW SLOT EDGE OF PAVEMENT TRANSITION

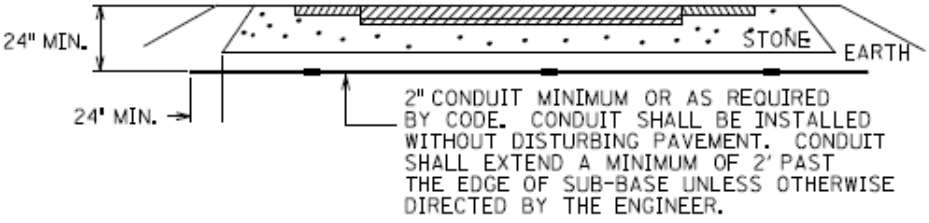

CONDUIT UNDER EXISTING PAVEMENT DETAIL

HANCOCK

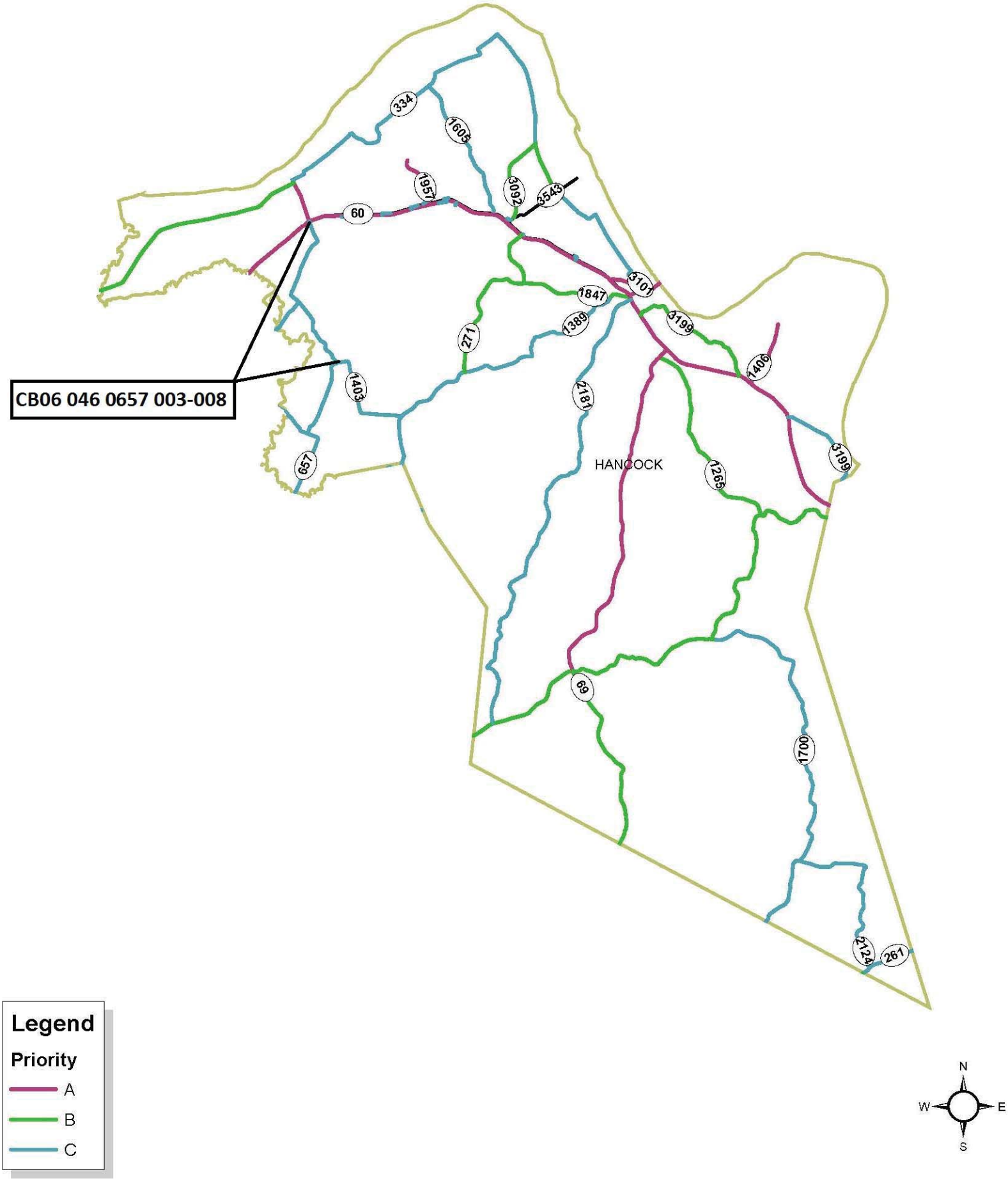
CB06 046 0657 003-008
334
1605
1957
3092
3543
60
3101
1847
1389
3199
271
1406
1403
2181
657
HANCOCK
1265
3199
69
1700
2124
261
Legend
Priority
A
B
C
N
W
E
S

HANCOCK

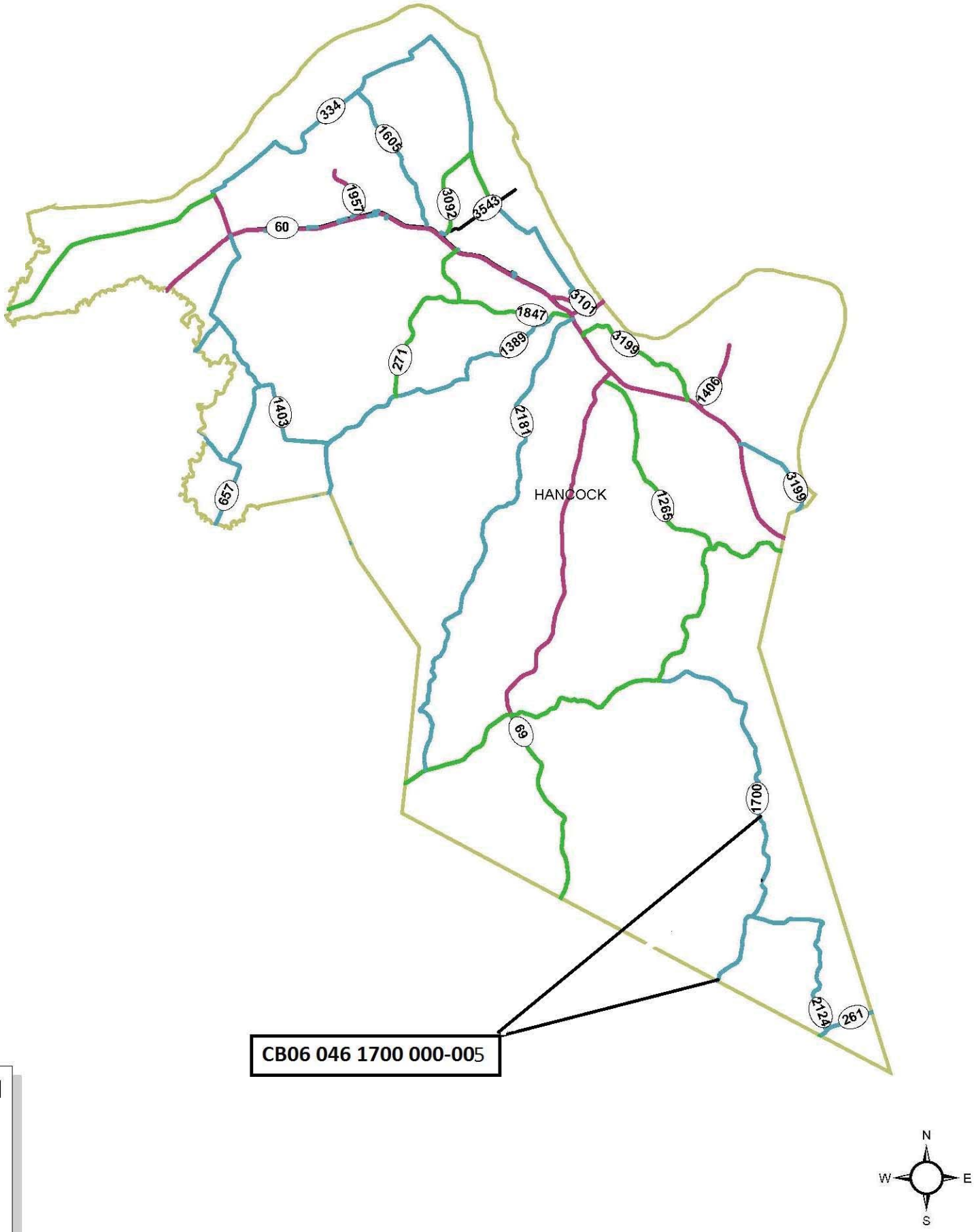
334
1605
1957
3092
3543
60
3101
1847
1389
3199
271
1406
1403
2181
657
HANCOCK
1265
3199
69
1700
2124
261
CB06 046 1700 000-005
Legend
Priority
A
B
C
N
W
E
S

MATERIAL SUMMARY

CONTRACT ID: 143255 **046GR14R089-CB06** **0204606571401**

KY 657 (KY 657) FROM KY 1403 EXTENDING NORTH TO US 60 ASPHALT RESURFACING, A DISTANCE OF 4 MILES.

Project Line No	Bid Code	DESCRIPTION	Quantity	Unit
0010	02562	TEMPORARY SIGNS	290.00	SQFT
0020	02650	MAINTAIN & CONTROL TRAFFIC - KY 657	1.00	LS
0030	00301	CL2 ASPH SURF 0.38D PG64-22	2,840.00	TON
0040	00001	DGA BASE	540.00	TON
0050	00190	LEVELING & WEDGING PG64-22	284.00	TON
0060	02676	MOBILIZATION FOR MILL & TEXT - KY 657	1.00	LS
0070	02677	ASPHALT PAVE MILLING & TEXTURING	95.00	TON
0080	06427	TRENCHING	145.00	LF
0090	00221	CL2 ASPH BASE 0.75D PG64-22	11.00	TON
0100	06514	PAVE STRIPING-PERM PAINT-4 IN	32,000.00	LF
0110	06510	PAVE STRIPING-TEMP PAINT-4 IN	16,000.00	LF
0120	10030NS	ASPHALT ADJUSTMENT	12,214.00	DOLL
0130	10020NS	FUEL ADJUSTMENT	4,863.00	DOLL
0140	02569	DEMOBILIZATION	1.00	LS
0150	06567	PAVE MARKING-THERMO STOP BAR-12IN	20.00	LF
0160	04830	LOOP WIRE	360.00	LF
0170	04895	LOOP SAW SLOT AND FILL	150.00	LF

CONTRACT ID: 143255 **046GR14R089-CB06** **0204617001401**

KY 1700 (KY 1700) FROM THE OHIO COUNTY LINE EXTENDING NORTHEAST TO 0.797 MILE NORTH OF LAMASTUS ROAD ASPHALT RESURFACING, A DISTANCE OF 4.5 MILES.

Project Line No	Bid Code	DESCRIPTION	Quantity	Unit
0180	02562	TEMPORARY SIGNS	310.00	SQFT
0190	02650	MAINTAIN & CONTROL TRAFFIC - KY 1700	1.00	LS
0200	00301	CL2 ASPH SURF 0.38D PG64-22	3,130.00	TON
0210	00001	DGA BASE	610.00	TON
0220	00190	LEVELING & WEDGING PG64-22	313.00	TON
0230	02676	MOBILIZATION FOR MILL & TEXT - KY 1700	1.00	LS
0240	02677	ASPHALT PAVE MILLING & TEXTURING	50.00	TON
0250	06514	PAVE STRIPING-PERM PAINT-4 IN	47,526.00	LF
0260	06510	PAVE STRIPING-TEMP PAINT-4 IN	23,763.00	LF
0270	10030NS	ASPHALT ADJUSTMENT	13,461.00	DOLL
0280	10020NS	FUEL ADJUSTMENT	5,359.00	DOLL
0290	02569	DEMOBILIZATION	1.00	LS

County
TRAFFIC LOOP SUMMARY
CB06 046 0657 003-008

MPT.	INTERSECTION	SAW, SLOT AND FILL LF	LOOP WIRE LF	CONDUIT 1 1/4 INCH LF	CABLE NO. 14 LF	FIBER OP. LF	JUNCTION TYPE B EA	10X8X4 EA			NOTES
7.569	US 60	150	360								
TOTAL		150	360	0	0	0	0	0			

NOTES:

County
THERMOPLASTIC INTERSECTION PAVEMENT MARKINGS SUMMARY
CB06 046 0657 003-008

MPT.	INTERSECTION	X-WALKS 6 INCH LF	STP BARS 12 INCH LF	ARROWS CURVE EA	ARROWS STR EA	ARROWS COMB EA	"ONLY" EA	CATRAXX 6 INCH LF	RAILROAD "R" 6 FOOT EA	RAILROAD CROSS BUCK 16" LF
7.569	US 60		20							
TOTAL		0	20	0	0	0	0	0	0	0

Milling
Summary
CB06 046 0657 003-008

				Total	60 *
Milepoint	**Comment**	**Length**	**Width**	**Avg Depth**	**Tons**
3.572		140	20	1	17.1111111
3.572		**100**	**20**	**0.5**	6.11111111
3.572		**60**	**50**	**1**	18.3333333
7.569		**100**	**30**	**0.5**	9.16666667
7.569		**90**	**15**	**1**	8.25
					0
					0
					0
					0
					0
					0
					0
					0
					0
					0
					0
					0
					0
					0
					0
					0
					0
					0
					0
					0

*SEE BRIDGE DETAIL SHEET FOR ADDITIONAL MILLING TONNAGE.

Milling
Summary
CB06 046 1700 000-005

				Total	15 *
Milepoint	**Comment**	**Length**	**Width**	**Avg Depth**	**Tons**
0		100	20	0.5	6.11111111
					0
					0
4.5		**100**	**20**	**0.5**	6.11111111
					0
					0
					0
					0
					0
					0
					0
					0
					0
					0
					0
					0
					0
					0
					0
					0
					0
					0
					0
					0
					0

*SEE BRIDGE DETAIL SHEET FOR ADDITIONAL MILLING TONNAGE.

HANCOCK COUNTY

CB06- 046 0657-003-008
TYPICAL SECTION
3.572-7.548

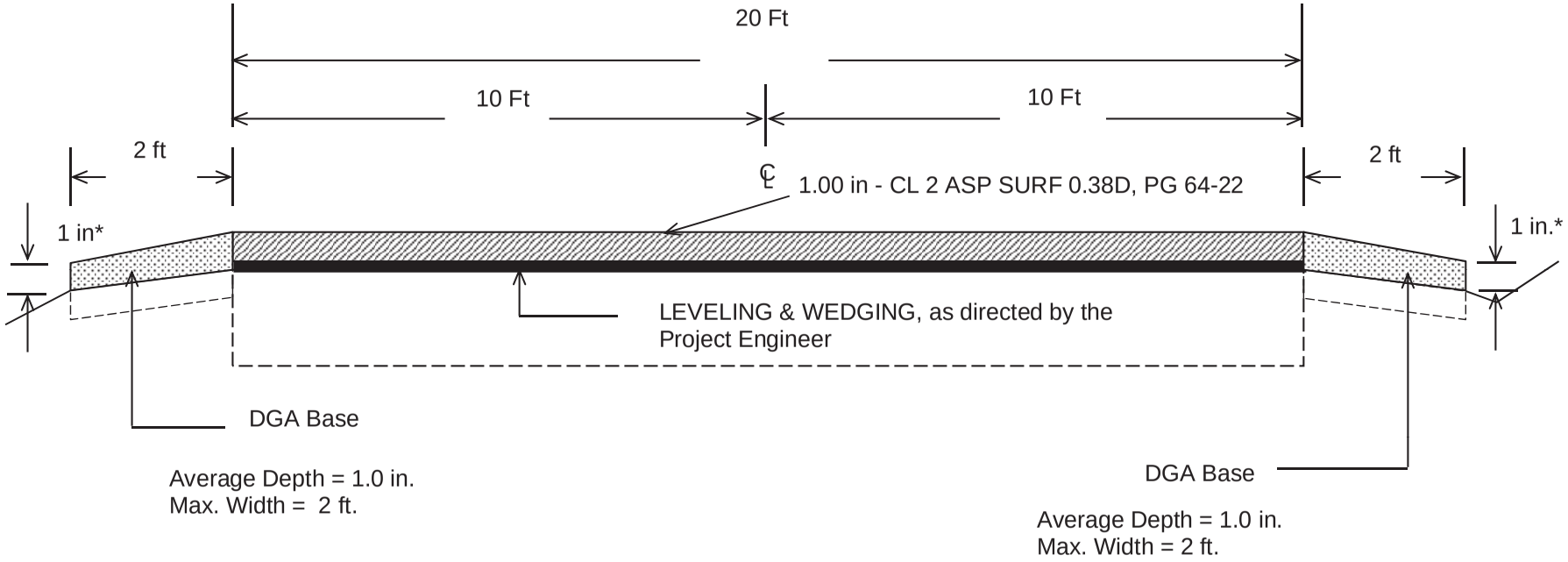

***Where Existing Site Conditions Permit**
Striping as directed by the Engineer.

TSPAVESURFACEshld
TS1AsphSurfShldr2lane

HANCOCK COUNTY

CB06- 046 0657-003-008
TYPICAL SECTION
7.549-7.569

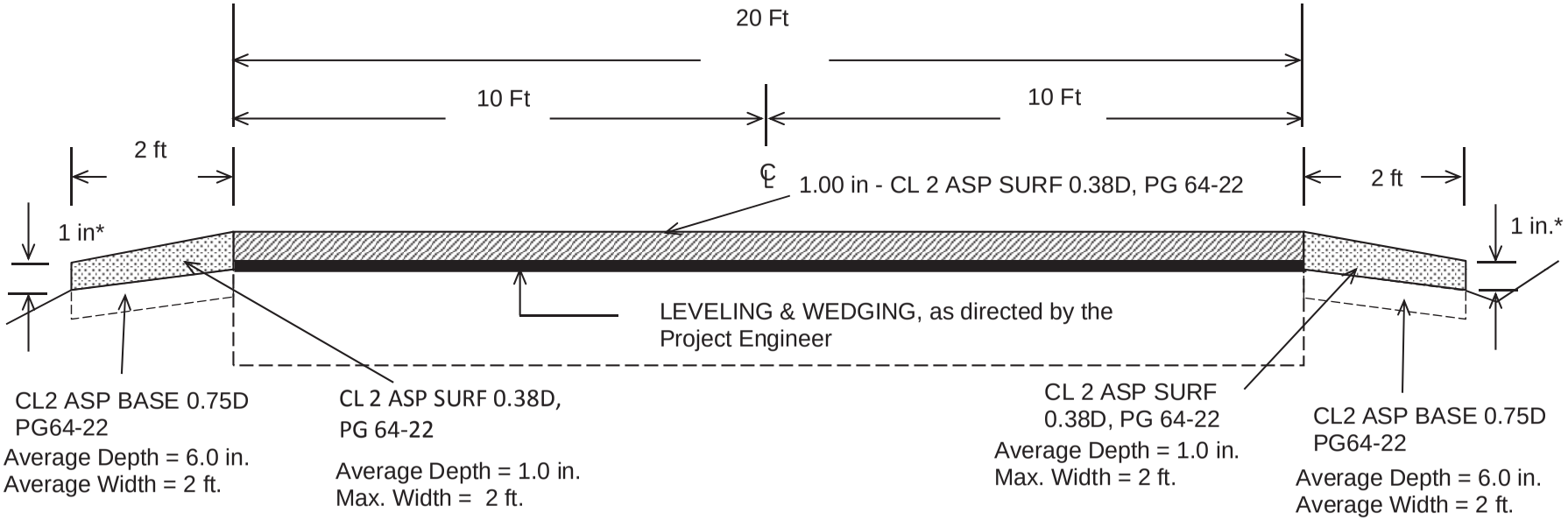

***Where Existing Site Conditions Permit**
Striping as directed by the Engineer.

TSPAVESURFACEshld
TS1AsphSurfShldr2lane2

HANCOCK COUNTY

CB06- 046 1700-000-005
TYPICAL SECTION
0.000-4.500

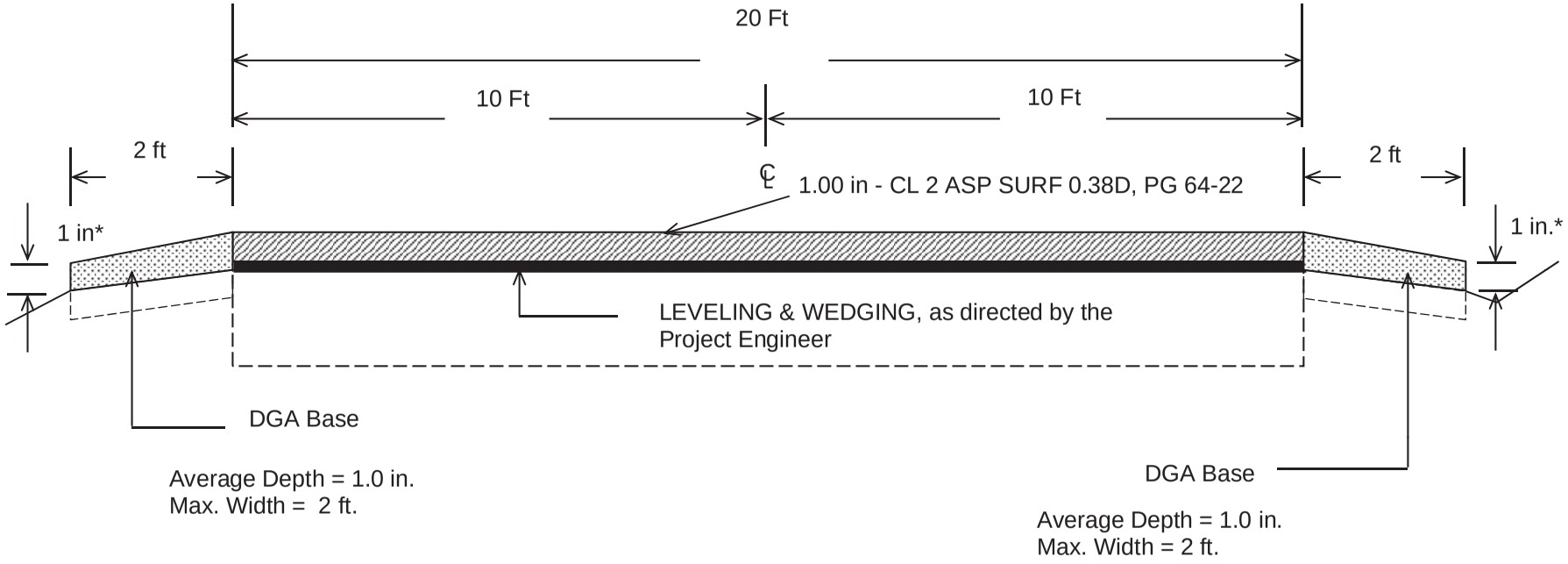

***Where Existing Site Conditions Permit**
Striping as directed by the Engineer.

TSPAVESURFACEshld
TS1AsphSurfShldr2lane

BRIDGE DETAIL FOR PAVING PROJECT

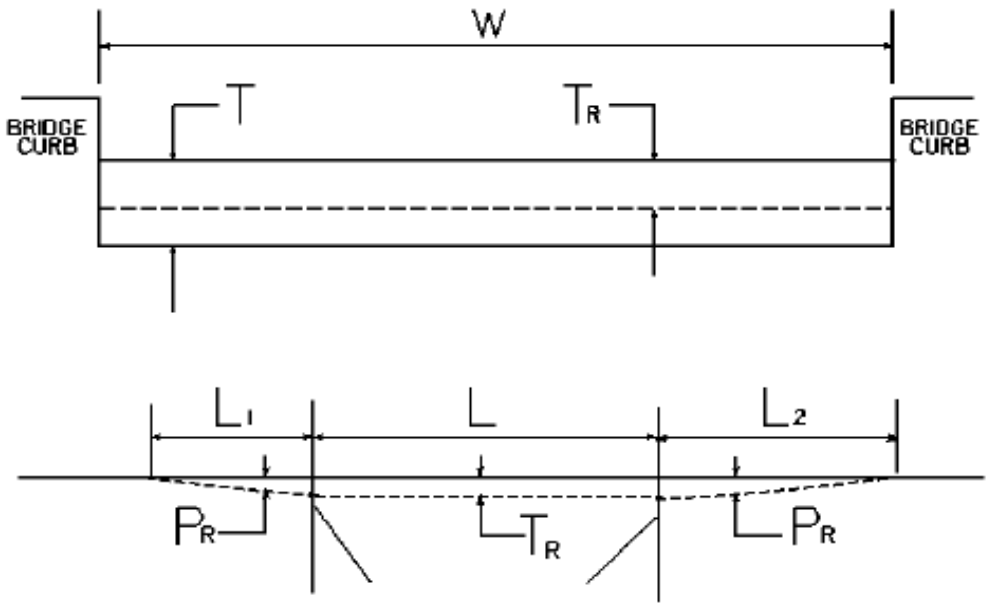

W = bridge width curb to curb
T = thickness of existing asphalt overlay
L = length of bridge
L_1 & L_2 = length of approach pavement to be removed
T_R = thickness to be removed and replaced on bridge
P_R = thickness to be removed and replaced on pavement
Note: L_1 & L_2 lengths shall be determined by using a transition rate of 100 ft/in of thickness

KY Route	Bridge No.	MP	W (ft)	T (in)	L_1 (ft)	L_2 (ft)	T_R (in)	L (ft)	P_R (in)
657	B00044N	4.313	20.00	2..00	100.00	100.00	1.00	25.00	1.00
657	B00019N	6.213	20.00	2.00	100.00	100.00	1.00	36.00	1.00
1700	B00023N	3.247	20.00	2.00	100.00	100.00	1.00	32.00	1.00
1700	B00028N	3.650	20.00	2.00	100.00	100.00	1.00	46.00	1.00

01/01/2009

PART II

SPECIFICATIONS AND STANDARD DRAWINGS

SPECIFICATIONS REFERENCE

Any reference in the plans or proposal to previous editions of the *Standard Specifications for Road and Bridge Construction* and *Standard Drawings* are superseded by *Standard Specifications for Road and Bridge Construction, Edition of 2012* and *Standard Drawings, Edition of 2012 with the 2012 Revision.*

Supplemental Specifications to the
Standard Specifications for Road and Bridge Construction, 2012 Edition
Effective with the August 22, 2014 Letting

Subsection: **Revision:**	102.15 Process Agent. Replace the 1st paragraph with the following: Every corporation doing business with the Department shall submit evidence of compliance with KRS Sections 14A.4-010, 271B.11-010, 271B.11-070, 271B.11-080, 271B.5-010 and 271B.16-220, and file with the Department the name and address of the process agent upon whom process may be served.
Subsection: **Revision:**	105.13 Claims Resolution Process. Delete all references to TC 63-34 and TC 63-44 from the subsection as these forms are no longer available through the forms library and are forms generated within the AASHTO SiteManager software.
Subsection: **Revision:**	108.03 Preconstruction Conference. Replace 8) Staking with the following: 8) Staking (designated by a Professional Engineer or Land Surveyor licensed in the Commonwealth of Kentucky.
Subsection: **Revision:**	109.07.02 Fuel. Revise item Crushed Aggregate Used for Embankment Stabilization to the following: Crushed Aggregate Used for Stabilization of Unsuitable Materials Used for Embankment Stabilization
	Delete the following item from the table. ~~Crushed Sandstone Base (Cement Treated)~~
Subsection: **Revision:**	110.02 Demobilization. Replace the first part of the first sentence of the second paragraph with the following: Perform all work and operations necessary to accomplish final clean-up as specified in the first paragraph of Subsection 105.12;
Subsection: **Revision:**	112.03.12 Project Traffic Coordinator (PTC). Replace the last paragraph of this subsection with the following: Ensure the designated PTC has sufficient skill and experience to properly perform the task assigned and has successfully completed the qualification courses.
Subsection: **Revision:**	112.04.18 Diversions (By-Pass Detours). Insert the following sentence after the 2nd sentence of this subsection. The Department will not measure temporary drainage structures for payment when the contract documents provide the required drainage opening that must be maintained with the diversion. The temporary drainage structures shall be incidental to the construction of the diversion. If the contract documents fail to provide the required drainage opening needed for the diversion, the cost of the temporary drainage structure will be handled as extra work in accordance with section 109.04.
Subsection: **Revision:**	201.03.01 Contractor Staking. Replace the first paragraph with the following: Perform all necessary surveying under the general supervision of a Professional Engineer or Land Surveyor licensed in the Commonwealth of Kentucky.

Supplemental Specifications to the
Standard Specifications for Road and Bridge Construction, 2012 Edition
Effective with the August 22, 2014 Letting

Subsection: **Revision:**	201.04.01 Contractor Staking. Replace the last sentence of the paragraph with the following: Complete the general layout of the project under the supervision of a Professional Engineer or Land Surveyor licensed in the Commonwealth of Kentucky.
Subsection: **Revision:**	206.04.01 Embankment-in-Place. Replace the fourth paragraph with the following: The Department will not measure **suitable** excavation included in the original plans that is disposed of for payment and will consider it incidental to Embankment-in-Place.
Subsection: **Revision:**	208.02.01 Cement. Replace paragraph with the following: Select Type I or Type II cement conforming to Section 801. Use the same type cement throughout the work.
Subsection: **Revision:**	208.03.06 Curing and Protection. Replace the fourth paragraph with the following: Do not allow traffic or equipment on the finished surface until the stabilized subgrade has cured for a total of 7-days with an ambient air temperature above 40 degrees Fahrenheit. A curing day consists of a continuous 24-hour period in which the ambient air temperature does not fall below 40 degrees Fahrenheit. Curing days will not be calculated consecutively, but must total seven (7) , 24-hour days with the ambient air temperature remaining at or above 40 degrees Fahrenheit before traffic or equipment will be allowed to traverse the stabilized subgrade. The Department may allow a shortened curing period when the Contractor requests. The Contractor shall give the Department at least 3 day notice of the request for a shortened curing period. The Department will require a minimum of 3 curing days after final compaction. The Contractor shall furnish cores to the treated depth of the roadbed at 500 feet intervals for each lane when a shortened curing time is requested. The Department will test cores using an unconfined compression test. Roadbed cores must achieve a minimum strength requirement of 80 psi.
Subsection: **Revision:**	208.03.06 Curing and Protection. Replace paragraph eight with the following: At no expense to the Department, repair any damage to the subgrade caused by freezing.
Subsection: **Part:** **Revision:**	212.03.03 Permanent Seeding and Protection. A) Seed Mixtures for Permanent Seeding. Revise **Seed Mix Type I** to the mixture shown below: 50% Kentucky 31 Tall Fescue (Festuca arundinacea) 35% Hard Fescue (Festuca (Festuca longifolia) 10% Ryegrass, Perennial (Lolium perenne) 5% White Dutch Clover (Trifolium repens)
Subsection: **Part:** **Number:** **Revision:**	212.03.03 Permanent Seeding and Protection. A) Seed Mixtures for Permanent Seeding. 2) Replace the paragraph with the following: Permanent Seeding on Slopes Greater than 3:1 in Highway Districts 4, 5, 6, and 7. Apply seed mix Type II at a minimum application rate of 100 pounds per acre. If adjacent to a golf course replace the crown vetch with Kentucky 31 Tall Fescue.

Supplemental Specifications to the
Standard Specifications for Road and Bridge Construction, 2012 Edition
Effective with the August 22, 2014 Letting

Subsection: **Part:** **Number:** **Revision:**	212.03.03 Permanent Seeding and Protection. A) Seed Mixtures for Permanent Seeding. 3) Replace the paragraph with the following: Permanent Seeding on Slopes Greater than 3:1 in Highway Districts 1, 2, 3, 8, 9, 10, 11, and 12. Apply seed mix Type III at a minimum application rate of 100 pounds per acre. If adjacent to crop land or golf course, replace the Sericea Lespedeza with Kentucky 31 Fescue.
Subsection: **Part:** **Revision:**	212.03.03 Permanent Seeding and Protection. B) Procedures for Permanent Seeding. Delete the first sentence of the section.
Subsection: **Part:** **Revision:**	212.03.03 Permanent Seeding and Protection. B) Procedures for Permanent Seeding. Replace the second and third sentence of the section with the following: Prepare a seedbed and apply an initial fertilizer that contains a minimum of 100 pounds of nitrogen, 100 pounds of phosphate, and 100 pounds of potash per acre. Apply agricultural limestone to the seedbed when the Engineer determines it is needed. When required, place agricultural limestone at a rate of 3 tons per acre.
Subsection: **Part:** **Revision:**	212.03.03 Permanent Seeding and Protection. D) Top Dressing. Change the title of part to D) Fertilizer.
Subsection: **Part:** **Revision:**	212.03.03 Permanent Seeding and Protection. D) Fertilizer. Replace the first paragraph with the following: Apply fertilizer at the beginning of the seeding operation and after vegetation is established. Use fertilizer delivered to the project in bags or bulk. Apply initial fertilizer to all areas prior to the seeding or sodding operation at the application rate specified in 212.03.03 B). Apply 20-10-10 fertilizer to the areas after vegetation has been established at a rate of 11.5 pounds per 1,000 square feet. Obtain approval from the Engineer prior to the 2nd fertilizer application. Reapply fertilizer to any area that has a streaked appearance. The reapplication shall be at no additional cost to the Department. Re-establish any vegetation severely damaged or destroyed because of an excessive application of fertilizer at no cost to the Department.
Subsection: **Part:** **Revision:**	212.03.03 Permanent Seeding and Protection. D) Fertilizer. Delete the second paragraph.
Subsection: **Revision:**	212.04.04 Agricultural Limestone. Replace the entire section with the following: The Department will measure the quantity of agricultural limestone in tons.
Subsection: **Revision:**	212.04.05 Fertilizer. Replace the entire section with the following: The Department will measure fertilizer used in the seeding or sodding operations for payment. The Department will measure the quantity by tons.

Supplemental Specifications to the
Standard Specifications for Road and Bridge Construction, 2012 Edition
Effective with the August 22, 2014 Letting

Subsection: **Revision:**	212.05 PAYMENT. Delete the following item code: Code — Pay Item — Pay Unit 05966 — Topdressing Fertilizer — Ton
Subsection: **Revision:**	212.05 PAYMENT. Add the following pay items: Code — Pay Item — Pay Unit 05963 — Initial Fertilizer — Ton 05964 — 20-10-10 Fertilizer — Ton 05992 — Agricultural Limestone — Ton
Subsection: **Revision:**	213.03.02 Progress Requirements. Replace the last sentence of the third paragraph with the following: Additionally, the Department will apply a penalty equal to the liquidated damages when all aspects of the work are not coordinated in an acceptable manner within 7 calendar days after written notification.
Subsection: **Part:** **Revision:**	213.03.05 Temporary Control Measures. E) Temporary Seeding and Protection. Delete the second sentence of the first paragraph.
Subsection: **Table:** **Revision:**	304.02.01 Physical Properties. Required Geogrid Properties Replace all references to Test Method "GRI-GG2-87" with ASTM D 7737.
Subsection: **Part:** **Revision:**	402.03.02 Contractor Quality Control and Department Acceptance. B) Sampling. Replace the second sentence with the following: The Department will determine when to obtain the quality control samples using the random-number feature of the mix design submittal and approval spreadsheet. The Department will randomly determine when to obtain the verification samples required in Subsections 402.03.03 and 402.03.04 using the Asphalt Mixture Sample Random Tonnage Generator.
Subsection: **Part:** **Number:** **Revision:**	402.03.02 Contractor Quality Control and Department Acceptance. D) Testing Responsibilities. 3) VMA. Add the following paragraph below Number 3) VMA: Retain the AV/VMA specimens and one additional corresponding G_{mm} sample for 5 working days for mixture verification testing by the Department. For Specialty Mixtures, retain a mixture sample for 5 working days for mixture verification testing by the Department. When the Department's test results do not verify that the Contractor's quality control test results are within the acceptable tolerances according to Subsection 402.03.03, retain the samples and specimens from the affected sublot(s) for the duration of the project.
Subsection: **Part:** **Number:** **Revision:**	402.03.02 Contractor Quality Control and Department Acceptance. D) Testing Responsibilities. 4) Density. Replace the second sentence of the Option A paragraph with the following: Perform coring by the end of the following work day.

Supplemental Specifications to the
Standard Specifications for Road and Bridge Construction, 2012 Edition
Effective with the August 22, 2014 Letting

Subsection: **Part:** **Number:** **Revision:**	402.03.02 Contractor Quality Control and Department Acceptance. D) Testing Responsibilities. 5) Gradation. Delete the second paragraph.
Subsection: **Part:** **Number:** **Revision:**	402.03.02 Contractor Quality Control and Department Acceptance. H) Unsatisfactory Work. 1) Based on Lab Data. Replace the second paragraph with the following: When the Engineer determines that safety concerns or other considerations prohibit an immediate shutdown, continue work and the Department will make an evaluation of acceptability according to Subsection 402.03.05.
Subsection: **Revision:**	402.03.03 Verification. Replace the first paragraph with the following: **402.03.03 Mixture Verification.** For volumetric properties, the Department will perform a minimum of one verification test for AC, AV, and VMA according to the corresponding procedures as given in Subsection 402.03.02. The Department will randomly determine when to obtain the verification sample using the Asphalt Mixture Sample Random Tonnage Generator. For specialty mixtures, the Department will perform one AC and one gradation determination per lot according to the corresponding procedures as given in Subsection 402.03.02. However, Department personnel will not perform AC determinations according to KM 64-405. The Contractor will obtain a quality control sample at the same time the Department obtains the mixture verification sample and perform testing according to the procedures given in Subsection 402.03.02. If the Contractor's quality control sample is verified by the Department's test results within the tolerances provided below, the Contractor's sample will serve as the quality control sample for the affected sublot. The Department may perform the mixture verification test on the Contractor's equipment or on the Department's equipment.
Subsection: **Part:** **Revision:**	402.03.03 Verification. A) Evaluation of Sublot(s) Verified by Department. Replace the third sentence of the second paragraph with the following: When the paired *t* -test indicates that the Contractor's data and Department's data are possibly not from the same population, the Department will investigate the cause for the difference according to Subsection 402.03.05 and implement corrective measures as the Engineer deems appropriate.
Subsection: **Part:** **Revision:**	402.03.03 Verification. B) Evaluation of Sublots Not Verified by Department. Replace the third sentence of the first paragraph with the following: When differences between test results are not within the tolerances listed below, the Department will resolve the discrepancy according to Subsection 402.03.05.

Supplemental Specifications to the
Standard Specifications for Road and Bridge Construction, 2012 Edition
Effective with the August 22, 2014 Letting

Subsection: **Part:** **Revision:**	402.03.03 Verification. B) Evaluation of Sublots Not Verified by Department. Replace the third sentence of the second paragraph with the following: When the *F* -test or *t* -test indicates that the Contractor's data and Department's data are possibly not from the same population, the Department will investigate the cause for the difference according to Subsection 402.03.05 and implement corrective measures as the Engineer deems appropriate.
Subsection: **Part:** **Revision:**	402.03.03 Verification. C) Test Data Patterns. Replace the second sentence with the following: When patterns indicate substantial differences between the verified and non-verified sublots, the Department will perform further comparative testing according to subsection 402.03.05.
Subsection: **Revision:**	402.03 CONSTRUCTION. Add the following subsection: **402.03.04 Testing Equipment and Technician Verification.** For mixtures with a minimum quantity of 20,000 tons and for every 20,000 tons thereafter, the Department will obtain an additional verification sample at random using the Asphalt Mixture Sample Random Tonnage Generator in order to verify the integrity of the Contractor's and Department's laboratory testing equipment and technicians. The Department will obtain a mixture sample of at least 150 lb at the asphalt mixing plant according to KM 64-425 and split it according to AASHTO R 47. The Department will retain one split portion of the sample and provide the other portion to the Contractor. At a later time convenient to both parties, the Department and Contractor will simultaneously reheat the sample to the specified compaction temperature and test the mixture for AV and VMA using separate laboratory equipment according to the corresponding procedures given in Subsection 402.03.02. The Department will evaluate the differences in test results between the two laboratories. When the difference between the results for AV or VMA is not within ± 2.0 percent, the Department will investigate and resolve the discrepancy according to Subsection 402.03.05.
Subsection: **Revision:**	402.03.04 Dispute Resolution. Change the subsection number to 402.03.05.
Subsection: **Part:** **Table:** **Revision:**	402.05 PAYMENT. Lot Pay Adjustment Schedule Compaction Option A Base and Binder Mixtures AC Replace the Deviation from JMF(%) that corresponds to a Pay Value of 0.95 to ±0.6.
Subsection: **Revision:**	403.02.10 Material Transfer Vehicle (MTV). Replace the first sentence with the following: In addition to the equipment specified above, provide a MTV with the following minimum characteristics:
Subsection: **Revision:**	412.02.09 Material Transfer Vehicle (MTV). Replace the paragraph with the following: Provide and utilize a MTV with the minimum characteristics outlined in section 403.02.10.

Supplemental Specifications to the
Standard Specifications for Road and Bridge Construction, 2012 Edition
Effective with the August 22, 2014 Letting

Subsection: **Revision:**	412.03.07 Placement and Compaction. Replace the first paragraph with the following: Use a MTV when placing SMA mixture in the driving lanes. The MTV is not required on ramps and/or shoulders unless specified in the contract. When the Engineer determines the use of the MTV is not practical for a portion of the project, the Engineer may waive its requirement for that portion of pavement by a letter documenting the waiver.
Subsection: **Revision:**	412.04 MEASUREMENT. Add the following subsection: 412.04.03. Material Transfer Vehicle (MTV). The Department will not measure the MTV for payment and will consider its use incidental to the asphalt mixture.
Subsection: **Part:** **Revision:**	501.03.19 Surface Tolerances and Testing Surface. B) Ride Quality. Add the following to the end of the first paragraph: The Department will specify if the ride quality requirements are Category A or Category B when ride quality is specified in the Contract. Category B ride quality requirements shall apply when the Department fails to classify which ride quality requirement will apply to the Contract.
Subsection: **Revision:**	603.03.06 Cofferdams. Replace the seventh sentence of paragraph one with the following: Submit drawings that are stamped by a Professional Engineer licensed in the Commonwealth of Kentucky.
Subsection: **Revision:**	605.03.04 Tack Welding. Insert the subsection and the following: 605.03.04 Tack Welding. The Department does not allow tack welding.
Subsection: **Part:** **Number:** **Revision:**	606.03.17 Special Requirements for Latex Concrete Overlays. A) Existing Bridges and New Structures. 1) Prewetting and Grout-Bond Coat. Add the following sentence to the last paragraph: Do not apply a grout-bond coat on bridge decks prepared by hydrodemolition.
Subsection: **Revision:**	609.03 Construction. Replace Subsection 609.03.01 with the following: 609.03.01 A) Swinging the Spans. Before placing concrete slabs on steel spans or precast concrete release the temporary erection supports under the bridge and swing the span free on its supports. 609.03.01 B) Lift Loops. Cut all lift loops flush with the top of the precast beam once the beam is placed in the final location and prior to placing steel reinforcement. At locations where lift loops are cut, paint the top of the beam with galvanized or epoxy paint.
Subsection: **Revision:**	611.03.02 Precast Unit Construction. Replace the first sentence of the subsection with the following: Construct units according to ASTM C1577, **replacing Table 1 (Design Requirements for Precast Concrete Box Sections Under Earth, Dead and HL-93 Live Load Conditions) with KY Table 1 (Precast Culvert KYHL-93 Design Table)**, and Section 605 with the following exceptions and additions:

Supplemental Specifications to the
Standard Specifications for Road and Bridge Construction, 2012 Edition
Effective with the August 22, 2014 Letting

Subsection: **Number:** **Revision:**	613.03.01 Design. 2) Replace "AASHTO Standard Specifications for Highway Bridges" with "AASHTO LRFD Bridge Design Specifications"
Subsection: **Revision:**	615.06.02 Add the following sentence to the end of the subsection. The ends of units shall be normal to walls and centerline except exposed edges shall be beveled ¾ inch.
Subsection: **Revision:**	615.06.03 Placement of Reinforcement in Precast 3-Sided Units. Replace the reference of 6.6 in the section to 615.06.06.
Subsection: **Revision:**	615.06.04 Placement of Reinforcement for Precast Endwalls. Replace the reference of 6.7 in the section to 615.06.07.
Subsection: **Revision:**	615.06.06 Laps, Welds, and Spacing for Precast 3-Sided Units. Replace the subsection with the following: Tension splices in the circumferential reinforcement shall be made by lapping. Laps may not be tack welded together for assembly purposes. For smooth welded wire fabric, the overlap shall meet the requirements of AASHTO 2012 Bridge Design Guide Section 5.11.2.5.2 and AASHTO 2012 Bridge Design Guide Section 5.11.6.3. For deformed welded wire fabric, the overlap shall meet the requirements of AASHTO 2012 Bridge Design Guide Section 5.11.2.5.1 and AASHTO 2012 Bridge Design Guide Section 5.11.6.2. The overlap of welded wire fabric shall be measured between the outer most longitudinal wires of each fabric sheet. For deformed billet-steel bars, the overlap shall meet the requirements of AASHTO 2012 Bridge Design Guide Section 5.11.2.1. For splices other than tension splices, the overlap shall be a minimum of 12" for welded wire fabric or deformed billet-steel bars. The spacing center to center of the circumferential wires in a wire fabric sheet shall be no less than 2 inches and no more than 4 inches. The spacing center to center of the longitudinal wires shall not be more than 8 inches. The spacing center to center of the longitudinal distribution steel for either line of reinforcing in the top slab shall be not more than 16 inches.
Subsection: **Revision:**	615.06.07 Laps, Welds, and Spacing for Precast Endwalls. Replace the subsection with the following: Splices in the reinforcement shall be made by lapping. Laps may not be tack welded together for assembly purposes. For smooth welded wire fabric, the overlap shall meet the requirements of AASHTO 2012 Bridge Design Guide Section 5.11.2.5.2 and AASHTO 2012 Bridge Design Guide Section 5.11.6.3. For deformed welded wire fabric, the overlap shall meet the requirements of AASHTO 2012 Bridge Design Guide Section 5.11.2.5.1 and AASHTO 2012 Bridge Design Guide Section 5.11.6.2. For deformed billet-steel bars, the overlap shall meet the requirements of AASHTO 2012 Bridge Design Guide Section 5.11.2.1. The spacing center-to-center of the wire fabric sheet shall not be less than 2 inches or more than 8 inches.

Supplemental Specifications to the
Standard Specifications for Road and Bridge Construction, 2012 Edition
Effective with the August 22, 2014 Letting

Subsection: **Revision:**	615.08.01 Type of Test Specimen. Replace the subsection with the following: Start-up slump, air content, unit weight, and temperature tests will be performed each day on the first batch of concrete. Acceptable start-up results are required for production of the first unit. After the first unit has been established, random acceptance testing is performed daily for each 50 yd^3 (or fraction thereof). In addition to the slump, air content, unit weight, and temperature tests, a minimum of one set of cylinders shall be required each time plastic property testing is performed.
Subsection: **Revision:**	615.08.02 Compression Testing. Delete the second sentence.
Subsection: **Revision:**	615.08.04 Acceptability of Core Tests. Delete the entire subsection.
Subsection: **Revision:**	615.12 Inspection. Add the following sentences to the end of the subsection: Units will arrive at jobsite with the "Kentucky Oval" stamped on the unit which is an indication of acceptable inspection at the production facility. Units shall be inspected upon arrival for any evidence of damage resulting from transport to the jobsite.
Subsection: **Revision:**	716.02.02 Paint. Replace sentence with the following: Conform to Section 821.
Subsection: **Revision:**	716.03 CONSTRUCTION. Replace bullet 5) with the following: 5) AASHTO Standard Specifications for Structural Supports for Highway Signs, Luminaires, and Traffic Signals, 2013-6th Edition with current interims,
Subsection: **Revision:**	716.03.02 Lighting Standard Installation. Replace the second sentence with the following: Regardless of the station and offset noted, locate all poles/bases behind the guardrail a minimum of four feet from the front face of the guardrail to the front face of the pole base.
Subsection: **Part:** **Revision:**	716.03.02 Lighting Standard Installation. A) Conventional Installation. Replace the third sentence with the following: Orient the transformer base so the door is positioned on the side away from on-coming traffic.
Subsection: **Part:** **Number:** **Revision:**	716.03.02 Lighting Standard Installation. A) Conventional Installation. 1) Breakaway Installation and Requirements. Replace the first sentence with the following: For breakaway supports, conform to Section 12 of the AASHTO Standard Specifications for Structural Supports for Highway Signs, Luminaires, and Traffic Signals, 2013-6th Edition with current interims.
Subsection: **Part:** **Revision:**	716.03.02 Lighting Standard Installation. B) High Mast Installation Replace the first sentence with the following: Install each high mast pole as noted on plans.
Subsection: **Part:** **Number:** **Revision:**	716.03.02 Lighting Standard Installation. B) High Mast Installation 2) Concrete Base Installation Modification of Chart and succeeding paragraphs within this section:

Supplemental Specifications to the
Standard Specifications for Road and Bridge Construction, 2012 Edition
Effective with the August 22, 2014 Letting

Drilled Shaft Depth Data							
Level Ground		3:1 Ground Slope		2:1 Ground Slope		1.5:1 Ground Slope (2)	
Soil	Rock	Soil	Rock	Soil	Rock	Soil	Rock
17 ft	7 ft	19 ft	7 ft	20 ft	7 ft	(1)	7 ft

Steel Requirements			
Vertical Bars		Ties or Spiral	
Size	Total	Size	Spacing or Pitch
#10	16	#4	12 inch

(1): Shaft length is 22' for cohesive soil only. For cohesionless soil, contact geotechnical branch for design.
(2): Do not construct high mast drilled shafts on ground slopes steeper than 1.5:1 without the approval of the Division of Traffic.

If rock is encountered during drilling operations and confirmed by the engineer to be of sound quality, the shaft is only required to be further advanced into the rock by the length of rock socket shown in the table. The total length of the shaft need not be longer than that of soil alone. Both longitudinal rebar length and number of ties or spiral length shall be adjusted accordingly.

If a shorter depth is desired for the drilled shaft, the contractor shall provide, for the state's review and approval, a detailed column design with individual site specific soil and rock analysis performed and approved by a Professional Engineer licensed in the Commonwealth of Kentucky.

Spiral reinforcement may be substituted for ties. If spiral reinforcement is used, one and one-half closed coils shall be provided at the ends of each spiral unit. Subsurface conditions consisting of very soft clay or very loose saturated sand could result in soil parameters weaker than those assumed. Engineer shall consult with the geotechnical branch if such conditions are encountered.

The bottom of the drilled hole shall be firm and thoroughly cleaned so no loose or compressible materials are present at the time of the concrete placement. If the drilled hole contains standing water, the concrete shall be placed using a tremie to displace water. Continuous concrete flow will be required to insure full displacement of any water.

The reinforcement and anchor bolts shall be adequately supported in the proper positions so no movement occurs during concrete placement. Welding of anchor bolts to the reinforcing cage is unacceptable, templates shall be used. Exposed portions of the foundation shall be formed to create a smooth finished surface. All forming shall be removed upon completion of foundation construction.

Subsection: 716.03.03 Trenching.
Part: A) Trenching of Conduit for Highmast Ducted Cables.
Revision: Add the following after the first sentence: If depths greater than 24 inches are necessary, obtain the Engineer's approval and maintain the required conduit depths coming into the junction boxes. No payment for additional junction boxes for greater depths will be allowed.

Supplemental Specifications to the
Standard Specifications for Road and Bridge Construction, 2012 Edition
Effective with the August 22, 2014 Letting

Subsection: **Part:** **Revision:**	716.03.03 Trenching. B) Trenching of Conduit for Non-Highmast Cables. Add the following after the second sentence: If depths greater than 24 inches are necessary for either situation listed previously, obtain the Engineer's approval and maintain the required conduit depths coming into the junction boxes. No payment for additional junction boxes for greater depths will be allowed.
Subsection: **Revision:**	716.03.10 Junction Boxes. Replace subsection title with the following: Electrical Junction Box.
Subsection: **Revision:**	716.04.07 Pole with Secondary Control Equipment. Replace the paragraph with the following: The Department will measure the quantity as each individual unit furnished and installed. The Department will not measure mounting the cabinet to the pole, backfilling, restoration, any necessary hardware to anchor pole, or electrical inspection fees, and will consider them incidental to this item of work. The Department will also not measure furnishing and installing electrical service conductors, specified conduits, meter base, transformer, service panel, fused cutout, fuses, lighting arrestors, photoelectrical control, circuit breaker, contactor, manual switch, ground rods, and ground wires and will consider them incidental to this item of work.
Subsection: **Revision:**	716.04.08 Lighting Control Equipment. Replace the paragraph with the following: The Department will measure the quantity as each individual unit furnished and installed. The Department will not measure constructing the concrete base, excavation, backfilling, restoration, any necessary anchors, or electrical inspection fees, and will consider them incidental to this item of work. The Department will also not measure furnishing and installing electrical service conductors, specified conduits, meter base, transformer, service panel, fused cutout, fuses, lighting arrestors, photoelectrical control, circuit breakers, contactor, manual switch, ground rods, and ground wires and will consider them incidental to this item of work.
Subsection: **Revision:**	716.04.09 Luminaire. Replace the first sentence with the following: The Department will measure the quantity as each individual unit furnished and installed.
Subsection: **Revision:**	716.04.10 Fused Connector Kits. Replace the first sentence with the following: The Department will measure the quantity as each individual unit furnished and installed.
Subsection: **Revision:**	716.04.13 Junction Box. Replace the subsection title with the following: Electrical Junction Box Type Various.
Subsection: **Part:** **Revision:**	716.04.13 Junction Box. A) Junction Electrical. Rename A) Junction Electrical to the following: A) Electrical Junction Box.
Subsection: **Revision:**	716.04.14 Trenching and Backfilling. Replace the second sentence with the following: The Department will not measure excavation, backfilling, underground utility warning tape (if required), the restoration of disturbed areas to original condition, and will consider them incidental to this item of work.

Supplemental Specifications to the
Standard Specifications for Road and Bridge Construction, 2012 Edition
Effective with the August 22, 2014 Letting

Subsection: **Revision:**	716.04.18 Remove Lighting. Replace the paragraph with the following: The Department will measure the quantity as a lump sum for the removal of lighting equipment. The Department will not measure the disposal of all equipment and materials off the project by the contractor. The Department also will not measure the transportation of the materials and will consider them incidental to this item of work.
Subsection: **Revision:**	716.04.20 Bore and Jack Conduit. Replace the paragraph with the following: The Department will measure the quantity in linear feet. This item shall include all work necessary for boring and installing conduit under an existing roadway. Construction methods shall be in accordance with Sections 706.03.02, paragraphs 1, 2, and 4.
Subsection: **Revision:**	716.05 PAYMENT. Replace items 04810-04811, 20391NS835 and, 20392NS835 under Code, Pay Item, and Pay Unit with the following: Code — Pay Item — Pay Unit 04810 — Electrical Junction Box — Each 04811 — Electrical Junction Box Type B — Each 20391NS835 — Electrical Junction Box Type A — Each 20392NS835 — Electrical Junction Box Type C — Each
Subsection: **Revision:**	723.02.02 Paint. Replace sentence with the following: Conform to Section 821.
Subsection: **Revision:**	723.03 CONSTRUCTION. Replace bullet 5) with the following: 5) AASHTO Standard Specifications for Structural Supports for Highway Signs, Luminaires, and Traffic Signals, 2013-6th Edition with current interims,
Subsection: **Revision:**	723.03.02 Poles and Bases Installation. Replace the first sentence with the following: Regardless of the station and offset noted, locate all poles/bases behind the guardrail a minimum of four feet from the front face of the guardrail to the front face of the pole base.
Subsection: **Part:** **Revision:**	723.03.02 Poles and Bases Installation. A) Steel Strain and Mastarm Poles Installation Replace the second paragraph with the following: For concrete base installation, see Section 716.03.02, B), 2), Paragraphs 2-7. Drilled shaft depth shall be based on the soil conditions encountered during drilling and slope condition at the site. Refer to the design chart below:
Subsection: **Part:** **Revision:**	723.03.02 Poles and Bases Installation. B) Pedestal or Pedestal Post Installation. Replace the fourth sentence of the paragraph with the following: For breakaway supports, conform to Section 12 of the AASHTO Standard Specifications for Structural Supports for Highway Signs, Luminaires, and Traffic Signals, 2013-6th Edition with current interims.

Supplemental Specifications to the
Standard Specifications for Road and Bridge Construction, 2012 Edition
Effective with the August 22, 2014 Letting

Subsection: **Part:** **Revision:**	723.03.03 Trenching. A) Under Roadway. Add the following after the second sentence: If depths greater than 24 inches are necessary, obtain the Engineer's approval and maintain ether required conduit depths coming into the junction boxes. No payment for additional junction boxes for greater depths will be allowed.
Subsection: **Revision:**	723.03.11 Wiring Installation. Add the following sentence between the fifth and sixth sentences: Provide an extra two feet of loop wire and lead-in past the installed conduit in poles, pedestals, and junction boxes.
Subsection: **Revision:**	723.03.12 Loop Installation. Replace the fourth sentence of the 2nd paragraph with the following: Provide an extra two feet of loop wire and lead-in past the installed conduit in poles, pedestals, and junction boxes.
Subsection: **Revision:**	723.04.02 Junction Box. Replace subsection title with the following: Electrical Junction Box Type Various.
Subsection: **Revision:**	723.04.03 Trenching and Backfilling. Replace the second sentence with the following: The Department will not measure excavation, backfilling, underground utility warning tape (if required), the restoration of disturbed areas to original condition, and will consider them incidental to this item of work.
Subsection: **Revision:**	723.04.10 Signal Pedestal. Replace the second sentence with the following: The Department will not measure excavation, concrete, reinforcing steel, specified conduits, fittings, ground rod, ground wire, backfilling, restoring disturbed areas, or other necessary hardware and will consider them incidental to this item of work.
Subsection: **Revision:**	723.04.15 Loop Saw Slot and Fill. Replace the second sentence with the following: The Department will not measure sawing, cleaning and filling induction loop saw slot, loop sealant, backer rod, and grout and will consider them incidental to this item of work.
Subsection: **Revision:**	723.04.16 Pedestrian Detector. Replace the paragraph with the following: The Department will measure the quantity as each individual unit furnished, installed and connected to pole/pedestal. The Department will not measure installing R10-3e (with arrow) sign, furnishing and installing mounting hardware for sign and will consider them incidental to this item of work.
Subsection: **Revision:**	723.04.18 Signal Controller- Type 170. Replace the second sentence with the following: The Department will not measure constructing the concrete base or mounting the cabinet to the pole, connecting the signal and detectors, excavation, backfilling, restoration, any necessary pole mounting hardware, electric service, or electrical inspection fees and will consider them incidental to this item of work. The Department will also not measure furnishing and connecting the induction of loop amplifiers, pedestrian isolators, load switches, model 400 modem card; furnishing and installing electrical service conductors, specified conduits, anchors, meter base, fused cutout, fuses, ground rods, ground wires and will consider them incidental to this item of work.

Supplemental Specifications to the
Standard Specifications for Road and Bridge Construction, 2012 Edition
Effective with the August 22, 2014 Letting

Subsection: **Revision:**	723.04.20 Install Signal Controller - Type 170. Replace the paragraph with the following: The Department will measure the quantity as each individual unit installed. The Department will not measure constructing the concrete base or mounting the cabinet to the pole, connecting the signal and detectors, and excavation, backfilling, restoration, any necessary pole mounting hardware, electric service, or electrical inspection fees and will consider them incidental to this item of work. The Department will also not measure connecting the induction loop amplifiers, pedestrian, isolators, load switches, model 400 modem card; furnishing and installing electrical service conductors, specified conduits, anchors, meter base, fused cutout, fuses, ground rods, ground wires and will consider them incidental to this item of work.
Subsection: **Revision:**	723.04.22 Remove Signal Equipment. Replace the paragraph with the following: The Department will measure the quantity as a lump sum removal of signal equipment. The Department will not measure the return of control equipment and signal heads to the Department of Highways as directed by the District Traffic Engineer. The Department also will not measure the transportation of materials of the disposal of all other equipment and materials off the project by the contractor and will consider them incidental to this item of work.
Subsection: **Revision:**	723.04.28 Install Pedestrian Detector Audible. Replace the second sentence with the following: The Department will not measure installing sign R10-3e (with arrow) and will consider it incidental to this item of work.
Subsection: **Revision:**	723.04.29 Audible Pedestrian Detector. Replace the second sentence with the following: The Department will not measure furnishing and installing the sign R10-3e (with arrow) and will consider it incidental to this item of work.
Subsection: **Revision:**	723.04.30 Bore and Jack Conduit. Replace the paragraph with the following: The Department will measure the quantity in linear feet. This item shall include all work necessary for boring and installing conduit under an existing roadway. Construction methods shall be in accordance with Sections 706.03.02, paragraphs 1, 2, and 4.
Subsection: **Revision:**	723.04.31 Install Pedestrian Detector. Replace the paragraph with the following: The Department will measure the quantity as each individual unit installed and connected to pole/pedestal. The Department will not measure installing sign R 10-3e (with arrow) and will consider it incidental to this item of work.
Subsection: **Revision:**	723.04.32 Install Mast Arm Pole. Replace the second sentence with the following: The Department will not measure arms, signal mounting brackets, anchor bolts, or any other necessary hardware and will consider them incidental to this item of work.
Subsection: **Revision:**	723.04.33 Pedestal Post. Replace the second sentence with the following: The Department will not measure excavation, concrete, reinforcing steel, anchor bolts, conduit, fittings, ground rod, ground wire, backfilling, restoration, or any other necessary hardware and will consider them incidental to this item of work.

Supplemental Specifications to the
Standard Specifications for Road and Bridge Construction, 2012 Edition
Effective with the August 22, 2014 Letting

Subsection: **Revision:**	723.04.36 Traffic Signal Pole Base. Replace the second sentence with the following: The Department will not measure excavation, reinforcing steel, anchor bolts, specified conduits, ground rods, ground wires, backfilling, or restoration and will consider them incidental to this item of work.
Subsection: **Revision:**	723.04.37 Install Signal Pedestal. Replace the second sentence with the following: The Department will not measure excavation, concrete, reinforcing steel, anchor bolts, specified conduits, fittings, ground rod, ground wire, backfilling, restoration, or any other necessary hardware and will consider them incidental to this item of work.
Subsection: **Revision:**	723.04.38 Install Pedestal Post. Replace the second sentence with the following: The Department will not measure excavation, concrete, reinforcing steel, anchor bolts, specified conduits, fittings, ground rod, ground wire, backfilling, restoration, or any other necessary hardware and will consider them incidental to this item of work.
Subsection: **Revision:**	723.05 PAYMENT. Replace items 04810-04811, 20391NS835 and, 20392NS835 under Code, Pay Item, and Pay Unit with the following: Code — Pay Item — Pay Unit 04810 — Electrical Junction Box — Each 04811 — Electrical Junction Box Type B — Each 20391NS835 — Electrical Junction Box Type A — Each 20392NS835 — Electrical Junction Box Type C — Each
Subsection: **Revision:**	804.01.02 Crushed Sand. Delete last sentence of the section.
Subsection: **Revision:**	804.01.06 Slag. Add subsection and following sentence. Provide blast furnace slag sand where permitted. The Department will allow steel slag sand only in asphalt surface applications.
Subsection: **Revision:**	804.04 Asphalt Mixtures. Replace the subsection with the following: Provide natural, crushed, conglomerate, or blast furnace slag sand, with the addition of filler as necessary, to meet gradation requirements. The Department will allow any combination of natural, crushed, conglomerate or blast furnace slag sand when the combination is achieved using cold feeds at the plant. The Engineer may allow other fine aggregates.
Subsection: **Revision:**	806.03.01 General Requirements. Replace the second sentence of the paragraph with the following: Additionally, the material must have a minimum solubility of 99.0 percent when tested according to AASHTO T 44 and PG 76-22 must exhibit a minimum recovery of 60 percent, with a J_{NR} (nonrecoverable creep compliance) between 0.1 and 0.5, when tested according to AASHTO TP 70.

Supplemental Specifications to the
Standard Specifications for Road and Bridge Construction, 2012 Edition
Effective with the August 22, 2014 Letting

Subsection: 806.03.01 General Requirements.
Table: PG Binder Requirements and Price Adjustment Schedule
Revision: Replace the Elastic Recovery, % [3] (AASHTO T301) and all corresponding values in the table with the following:

Test	Specification	100% Pay	90% Pay	80% Pay	70% Pay	50%Pay[1]
MSCR recovery, % [3] (AASHTO TP 70)	60 Min.	≥58	56	55	54	<53

Subsection: 806.03.01 General Requirements.
Table: PG Binder Requirements and Price Adjustment Schedule
Superscript: (3)
Revision: Replace [3] with the following:
Perform testing at 64°C.

Subsection: 813.04 Gray Iron Castings.
Revision: Replace the reference to "AASHTO M105" with "ASTM A48".

Subsection: 813.09.02 High Strength Steel Bolts, Nuts, and Washers.
Number: A) Bolts.
Revision: Delete first paragraph and "Hardness Number" Table. Replace with the following:
A) Bolts. Conform to ASTM A325 (AASHTO M164) or ASTM A490 (AASHTO 253) as applicable.

Subsection: 814.04.02 Timber Guardrail Posts.
Revision: Third paragraph, replace the reference to "AWPA C14" with "AWPA U1, Section B, Paragraph 4.1".

Subsection: 814.04.02 Timber Guardrail Posts.
Revision: Replace the first sentence of the fourth paragraph with the following:
Use any of the species of wood for round or square posts covered under AWPA U1.

Subsection: 814.04.02 Timber Guardrail Posts.
Revision: Fourth paragraph, replace the reference to "AWPA C2" with "AWPA U1, Section B, Paragraph 4.1".

Subsection: 814.04.02 Timber Guardrail Posts.
Revision: Delete the second sentence of the fourth paragraph.

Subsection: 814.05.02 Composite Plastic.
Revision: 1) Add the following to the beginning of the first paragraph: Select composite offset blocks conforming to this section and assure blocks are from a manufacturer included on the Department's List of Approved Materials.
2) Delete the last paragraph of the subsection.

Subsection: 816.07.02 Wood Posts and Braces.
Revision: First paragraph, replace the reference to "AWPA C5" with "AWPA U1, Section B, Paragraph 4.1".

Subsection: 816.07.02 Wood Posts and Braces.
Revision: Delete the second sentence of the first paragraph.

Subsection: 818.07 Preservative Treatment.
Revision: First paragraph, replace all references to "AWPA C14" with "AWPA U1, Section A".

Supplemental Specifications to the
Standard Specifications for Road and Bridge Construction, 2012 Edition
Effective with the August 22, 2014 Letting

Subsection: **Revision:**	834.14 Lighting Poles. Replace the first sentence with the following: Lighting pole design shall be in accordance with loading and allowable stress requirements of the AASHTO Standard Specifications for Structural Supports for Highway Signs, Luminaires, and Traffic Signals, 2013-6th Edition with current interims, with the exception of the following: The Cabinet will waive the requirement stated in the first sentence of Section 5.14.6.2 – Reinforced Holes and Cutouts for high mast poles (only). The minimum diameter at the base of the pole shall be 22 inches for high mast poles (only).
Subsection **Revision:**	834.14.03 High Mast Poles. Remove the second and fourth sentence from the first paragraph.
Subsection **Revision:**	834.14.03 High Mast Poles. Replace the third paragraph with the following: Provide calculations and drawings that are stamped by a Professional Engineer licensed in the Commonwealth of Kentucky.
Subsection: **Revision:**	834.14.03 High Mast Poles. Replace paragraph six with the following: Provide a pole section that conforms to ASTM A 595 grade A with a minimum yield strength of 55 KSI or ASTM A 572 with a minimum yield strength of 55 KSI. Use tubes that are round or 16 sided with a four inch corner radius, have a constant linear taper of .144 in/ft and contain only one longitudinal seam weld. Circumferential welded tube butt splices and laminated tubes are not permitted. Provide pole sections that are telescopically slip fit assembled in the field to facilitate inspection of interior surface welds and the protective coating. The minimum length of the telescopic slip splices shall be 1.5 times the inside diameter of the exposed end of the female section. Use longitudinal seam welds as commended in Section 5.15 of the AASHTO 2013 Specifications. The thickness of the transverse base shall not be less than 2 inches. Plates shall be integrally welded to the tubes with a telescopic welded joint or a full penetration groove weld with backup bar. The handhole cover shall be removable from the handhole frame. One the frame side opposite the hinge, provide a mechanism on the handhole cover/frame to place the Department's standard padlock as specified in Section 834.25. The handhole frame shall have two stainless studs installed opposite the hinge to secure the handhole cover to the frame which includes providing stainless steel wing nuts and washers. The handhole cover shall be manufactured from 0.25 inch thick galvanized steel (ASTM A 153) and have a neoprene rubber gasket that is permanently secured to the handhole frame to insure weather-tight protection. The hinge shall be manufactured from 7-guage stainless steel to provide adjustability to insure weather-tight fit for the cover. The minimum clear distance between the transverse plate and the bottom opening of the handhole shall not be less than the diameter of the bottom tube of the pole but needs to be at least 15 inches. Provide products that are hot-dip galvanized to the requirements of either ASTM A123 (fabricated products) or ASTM A 153 (hardware items).
Subsection: **Revision:**	834.16 ANCHOR BOLTS. Insert the following sentence at the beginning of the paragraph: The anchor bolt design shall follow the NCHRP Report 494 Section 2.4 and NCHRP 469 Appendix A Specifications.

Supplemental Specifications to the
Standard Specifications for Road and Bridge Construction, 2012 Edition
Effective with the August 22, 2014 Letting

Subsection: **Revision:**	834.17.01 Conventional. Add the following sentence after the second sentence: Provide a waterproof sticker mounted on the bottom of the housing that is legible from the ground and indicates the wattage of the fixture by providing the first two numbers of the wattage.
Subsection: **Revision:**	834.21.01 Waterproof Enclosures. Replace the last five sentences in the second paragraph with the following sentences: Provide a cabinet door with a louvered air vent, filter-retaining brackets and an easy to clean metal filter. Provide a cabinet door that is keyed with a factory installed standard no. 2 corbin traffic control key. Provide a light fixture with switch and bulb. Use a 120-volt fixture and utilize a L.E.D. bulb (equivalent to 60 watts minimum). Fixture shall be situated at or near the top of the cabinet and illuminate the contents of the cabinet. Provide a 120 VAC GFI duplex receptacle in the enclosure with a separate 20 amp breaker.
Subsection: **Revision:**	835.07 Traffic Poles. Replace the first sentence of the first paragraph with the following: Pole diameter and wall thickness shall be calculated in accordance with the AASHTO Standard Specifications for Structural Supports for Highway Signs, Luminaires, and Traffic Signals, 2013-6th Edition with current interims.
Subsection: **Revision:**	835.07 Traffic Poles. *Replace the first sentence of the fourth paragraph with the following: Ensure transverse plates have a thickness ≥ 2 inches. *Add the following sentence to the end of the fourth paragraph: The bottom pole diameter shall not be less than 16.25 inches.
Subsection: **Revision:**	835.07 Traffic Poles. Replace the third sentence of the fifth paragraph with the following: For anchor bolt design, pole forces shall be positioned in such a manner to maximize the force on any individual anchor bolt regardless of the actual anchor bolt orientation with the pole.
Subsection: **Revision:**	835.07 Traffic Poles. Replace the first and second sentence of the sixth paragraph with the following: The pole handhole shall be 25 inches by 6.5 inches. The handhole cover shall be removable from the handhole frame. On the frame side opposite the hinge, provide a mechanism on the handhole cover/frame to place the Department's standard padlock as specified in Section 834.25. The handhole frame shall have two stainless studs installed opposite the hinge to secure the handhole cover to the frame which includes providing stainless steel wing nuts and washers. The handhole cover shall be manufactured from 0.25 inch thick galvanized steel (ASTM 153) and have a neoprene rubber gasket that is permanently secured to the handhole frame to insure weather-tight protection. The hinge shall be manufactured from 7 gauge stainless steel to provide adjustability to insure a weather-tight fit for the cover. The minimum clear distance between the transverse plate and the bottom opening of the handhole shall not be less than the diameter of the bottom tube but needs to be at least 12 inches.

Supplemental Specifications to the
Standard Specifications for Road and Bridge Construction, 2012 Edition
Effective with the August 22, 2014 Letting

Subsection: **Revision:**	835.07 Traffic Poles. *Replace the first sentence of the last paragraph with the following: Provide calculations and drawings that are stamped by a Professional Engineer licensed in the Commonwealth of Kentucky. *Replace the third sentence of the last paragraph with the following: All tables referenced in 835.07 are found in the AASHTO Standard Specifications for Structural Supports for Highway Signs, Luminaires, and Traffic Signals, 2013-6th Edition with current interims.
Subsection: **Revision:**	835.07.01 Steel Strain Poles. Replace the second sentence of the second paragraph with the following: The detailed analysis shall be certified by a Professional Engineer licensed in the Commonwealth of Kentucky.
Subsection: **Revision:**	835.07.01 Steel Strain Poles. Replace number 7. after the second paragraph with the following: 7. Fatigue calculations should be shown for all fatigue related connections. Provide the corresponding detail, stress category and example from table 11.9.3.1-1.
Subsection: **Revision:**	835.07.02 Mast Arm Poles. Replace the second sentence of the fourth paragraph with the following: The detailed analysis shall be certified by a Professional Engineer licensed in the Commonwealth of Kentucky.
Subsection: **Revision:**	835.07.02 Mast Arm Poles. Replace number 7) after the fourth paragraph with the following: 7) Fatigue calculations should be shown for all fatigue related connections. Provide the corresponding detail, stress category and example from table 11.9.3.1-1.
Subsection: **Revision:**	835.07.03 Anchor Bolts. Add the following to the end of the paragraph: There shall be two steel templates (one can be used for the headed part of the anchor bolt when designed in this manner) provided per pole. Templates shall be contained within a 26.5 inch diameter. All templates shall be fully galvanized (ASTM A 153).
Subsection: **Revision:**	835.16.05 Optical Units. Replace the 3rd paragraph with the following: The list of certified products can be found on the following website: http://www.intertek.com.
Subsection: **Revision:**	835.19.01 Pedestrian Detector Body. Replace the first sentence with the following: Provide a four holed pole mounted aluminum rectangular housing that is compatible with the pedestrian detector.
Subsection: **Table:** **Revision:**	843.01.01 Geotextile Fabric. TYPE I FABRIC GEOTEXTILES FOR SLOPE PROTECTION AND CHANNEL LINING Add the following to the chart: Property — Minimum Value(1) — Test Method CBR Puncture (lbs) — 494 — ASTM D6241 Permittivity (1/s) — 0.7 — ASTM D4491

Supplemental Specifications to the
Standard Specifications for Road and Bridge Construction, 2012 Edition
Effective with the August 22, 2014 Letting

Subsection: 843.01.01 Geotextile Fabric.
Table: TYPE II FABRIC GEOTEXTILES FOR UNDERDRAINS
Revision: Add the following to the chart:

Property	Minimum Value[1]	Test Method
CBR Puncture (lbs)	210	ASTM D6241
Permittivity (1/s)	0.5	ASTM D4491

Subsection: 843.01.01 Geotextile Fabric.
Table: TYPE III FABRIC GEOTEXTILES FOR SUBGRADE OR EMBANKMENT STABILIZATION
Revision: Add the following to the chart:

Property	Minimum Value[1]	Test Method
CBR Puncture (lbs)	370	ASTM D6241
Permittivity (1/s)	0.05	ASTM D4491

Subsection: 843.01.01 Geotextile Fabric.
Table: TYPE IV FABRIC GEOTEXTILES FOR EMBANKMENT DRAINAGE BLANKETS AND PAVEMENT EDGE DRAINS
Revision: Add the following to the chart:

Property	Minimum Value[1]	Test Method
CBR Puncture (lbs)	309	ASTM D6241
Permittivity (1/s)	0.5	ASTM D4491

Subsection: 843.01.01 Geotextile Fabric.
Table: TYPE V HIGH STRENGTH GEOTEXTILE FABRIC
Revision: Make the following changes to the chart:

Property	Minimum Value[1]	Test Method
CBR Puncture (lbs)	618	ASTM D6241
Grab Strength (lbs)	700	ASTM D4632
Apparent Opening Size	U.S. #40[3]	ASTM D4751

[3] Maximum average roll value.

STANDARD DRAWINGS THAT APPLY

ROADWAY

~GENERAL~

MISCELLANEOUS STANDARDS

MISCELLANEOUS STANDARDS PART 1.....RGX-001-05

~PAVEMENT~

MEDIANS, CURBS, APPROACHES, ENTRANCES, ETC.

APPROACHES, ENTRANCES, AND MAIL BOX TURNOUT.....RPM-110-06

TRAFFIC

~TEMPORARY~

DEVICES

POST SPLICING DETAIL.....TTD-110-01

COUNTY OF	ITEM NO.	SHEET NO.

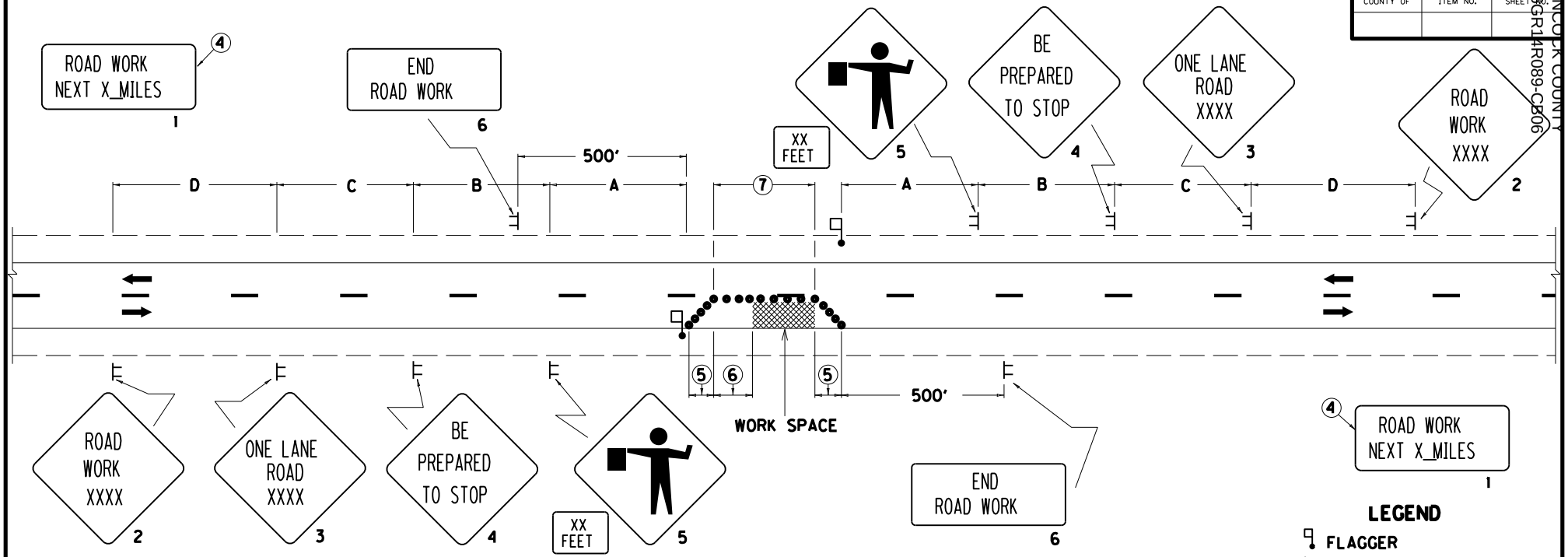

LEGEND

- FLAGGER
- SIGN
- CHANNELIZING DEVICES
  - CONES
  - DRUMS
  - TYPE II BARRICADES
  - TUBULAR MARKERS

1. THE SIZE OF SIGNS 2 THRU 5 SHALL BE 48" X 48" WITH 30" X 24" SUPPLEMENTAL PLAQUES FOR EXPRESSWAYS/FREEWAYS. THE MINIMUM SIZE OF SIGNS 2 THRU 5 SHALL BE 36" X 36" WITH 24" X 18" SUPPLEMENTAL PLAQUES FOR OTHER ROADWAYS. SIGN NOS. 1 AND 6 SHALL BE 48" X 24" FOR EXPRESSWAYS/FREEWAYS AND 36" X 18" FOR OTHER ROADWAYS. A FREEWAY SHALL BE DEFINED AS A DIVIDED HIGHWAY WITH FULL CONTROL OF ACCESS. AN EXPRESSWAY SHALL BE DEFINED AS A DIVIDED HIGHWAY WITH PARTIAL CONTROL OF ACCESS.
2. THE FLAGGERS SHALL BE IN SIGHT OF EACH OTHER OR IN DIRECT COMMUNICATION AT ALL TIMES. FLAGGER STATIONS SHALL BE LOCATED FAR ENOUGH IN ADVANCE OF THE ACTIVITY AREA SO THAT APPROACHING ROAD USERS WILL HAVE SUFFICIENT DISTANCE TO STOP BEFORE ENTERING THE WORK SPACE (REFER TO TABLE 6C-2 OF THE MUTCD). ILLUMINATION SHALL BE PROVIDED TO MARK FLAGGER STATIONS AT NIGHT.
3. DRUMS OR TYPE II BARRICADES SHALL BE USED IN LIEU OF CONES OR TUBULAR MARKERS IF CLOSURE EXTENDS INTO NIGHTTIME HOURS.
4. SIGN NO. 1 SHOULD BE INSTALLED AT THE LIMITS OF THE PROJECT WHEN THE CONSTRUCTION ZONE IS LONGER THAN TWO MILES IN LENGTH. THE DISTANCE SHOWN SHALL BE STATED TO THE NEAREST WHOLE MILE.
5. TAPERS SHALL BE 50' (MIN) TO 100' (MAX) IN LENGTH. SPACING OF CHANNELIZING DEVICES SHOULD BE 20' THRU THE TAPER AREAS.
6. BUFFER SPACE (OPTIONAL). IF USED, THE BUFFER SPACE SHOULD BE EXTENDED SO THAT THE TWO-WAY TRAFFIC TAPER IS PLACED BEFORE A HORIZONTAL OR CREST VERTICAL CURVE TO PROVIDE ADEQUATE SIGHT DISTANCE FOR THE FLAGGER AND A QUEUE OF STOPPED VEHICLES.
7. SPACING OF CHANNELIZING DEVICES THRU THE ACTIVITY AREA SHOULD BE 80'. ON ROADWAYS WITH WIDTHS LESS THAN 20 FEET, CHANNELIZING DEVICES MAY BE OMITTED THRU THE ACTIVITY AREA BASED ON ENGINEERING JUDGMENT.
8. WHEN NIGHTTIME WORK IS BEING PERFORMED, FLOODLIGHTS SHOULD BE USED TO ILLUMINATE THE WORK AREA.

DRAWING NOT TO SCALE

USE WITH CURRENT STD. DWG TTD-110

APPLICATION

THIS DRAWING APPLIES TO LANE CLOSURES ON TWO-LANE, TWO DIRECTION HIGHWAYS.

SIGNING AND SPACING TABLE				
ROAD TYPE	A	B	C	D
EXPRESSWAY/ FREEWAY	1000'	500'	1100'	2600'
SP. LT. ≥ 45 MPH•	500'	500'	500'	1100'
SP. LT. ≤ 40 MPH•	250'	250'	250'	250'

•NOTE: USE NORMAL POSTED SPEED LIMIT

KENTUCKY DEPARTMENT OF HIGHWAYS

LANE CLOSURE TWO-LANE HIGHWAY

SUBMITTED R. Jeffrey Wolfe 8-29-13 DATE

017

FILE NAME: C:\PWWORK\JEFF.LAIL\D0512631\SEP1A 017.DGN
USER: Jeff.Lail
DATE PLOTTED: August 29, 2013
E-SHEET NAME:
MicroStation v8.11.7.180

PART III

EMPLOYMENT, WAGE AND RECORD REQUIREMENTS

TRANSPORTATION CABINET
DEPARTMENT OF HIGHWAYS

LABOR AND WAGE REQUIREMENTS
APPLICABLE TO OTHER THAN FEDERAL-AID SYSTEM PROJECTS

I. Application
II. Nondiscrimination of Employees (KRS 344)
III. Payment of Predetermined Minimum Wages
IV. Statements and Payrolls

I. APPLICATION

1. These contract provisions shall apply to all work performed on the contract by the contractor with his own organization and with the assistance of workmen under his immediate superintendence and to all work performed on the contract by piecework, station work or by subcontract. The contractor's organization shall be construed to include only workmen employed and paid directly by the contractor and equipment owned or rented by him, with or without operators.

2. The contractor shall insert in each of his subcontracts all of the stipulations contained in these Required Provisions and such other stipulations as may be required.

3. A breach of any of the stipulations contained in these Required Provisions may be grounds for termination of the contract.

II. NONDISCRIMINATION OF EMPLOYEES

AN ACT OF THE KENTUCKY
GENERAL ASSEMBLY TO PREVENT
DISCRIMINATION IN EMPLOYMENT
KRS CHAPTER 344
EFFECTIVE JUNE 16, 1972

The contract on this project, in accordance with KRS Chapter 344, provides that during the performance of this contract, the contractor agrees as follows:

1. The contractor shall not fail or refuse to hire, or shall not discharge any individual, or otherwise discriminate against an individual with respect to his compensation, terms, conditions, or privileges of employment, because of such individual's race, color, religion, national origin, sex, disability or age (between forty and seventy); or limit, segregate, or classify his employees in any way which would deprive or tend to deprive an individual of employment opportunities or otherwise adversely affect his status as an employee, because of such individual's race, color, religion, national origin, sex, disability or age (between forty and seventy). The contractor agrees to post in conspicuous places, available to employees and applicants for employment, notices to be provided setting forth the provisions of this nondiscrimination clause.

2. The contractor shall not print or publish or cause to be printed or published a notice or advertisement relating to employment by such an employer or membership in or any classification or referral for employment by the employment agency, indicating any preference, limitation, specification, or discrimination, based on race, color, religion, national origin, sex, disability or age (between forty and seventy), except that such notice or advertisement may indicate a preference, limitation, or specification based on religion, or national origin when religion, or national origin is a bona fide occupational qualification for employment.

3. If the contractor is in control of apprenticeship or other training or retraining, including on-the-job training programs, he shall not discriminate against an individual because of his race, color, religion, national origin, sex, disability or age (between forty and seventy), in admission to, or employment in any program established to provide apprenticeship or other training.

4. The contractor will send to each labor union or representative of workers with which he has a collective bargaining agreement or other contract or understanding, a notice to be provided advising the said labor union or workers' representative of the contractor's commitments under this section, and shall post copies of the notice in conspicuous places available to employees and applicants for employment. The contractor will take such action with respect to any subcontract or purchase order as the administrating agency may direct as a means of enforcing such provisions, including sanctions for non-compliance.

III. PAYMENT OF PREDETERMINED MINIMUM WAGES

1. These special provisions are supplemented elsewhere in the contract by special provisions which set forth certain predetermined minimum wage rates. The contractor shall pay not less than those rates.

2. The minimum wage determination schedule shall be posted by the contractor, in a manner prescribed by the Department of Highways, at the site of the work in prominent places where it can be easily seen by the workers.

IV. STATEMENTS AND PAYROLLS

1. All contractors and subcontractors affected by the terms of KRS 337.505 to 337.550 shall keep full and accurate payroll records covering all disbursements of wages to their employees to whom they are required to pay not less than the prevailing rate of wages. Payrolls and basic records relating thereto will be maintained during the course of the work and preserved for a period of one (1) year from the date of completion of this contract.

2. The payroll records shall contain the name, address and social security number of each employee, his correct classification, rate of pay, daily and weekly number of hours worked, itemized deductions made and actual wages paid.

3. The contractor shall make his daily records available at the project site for inspection by the State Department of Highways contracting office or his authorized representative.

Periodic investigations shall be conducted as required to assure compliance with the labor provisions of the contract. Interrogation of employees and officials of the contractor shall be permitted during working hours.

Aggrieved workers, Highway Managers, Assistant District Engineers, Resident Engineers and Project Engineers shall report all complaints and violations to the Division of Contract Procurement.

The contractor shall be notified in writing of apparent violations. The contractor may correct the reported violations and notify the Department of Highways of the action taken or may request an informal hearing. The request for hearing shall be in writing within ten (10) days after receipt of the notice of the reported violation. The contractor may submit

records and information which will aid in determining the true facts relating to the reported violations.

Any person or organization aggrieved by the action taken or the findings established as a result of an informal hearing by the Division of Contract Procurement may request a formal hearing.

4. The wages of labor shall be paid in legal tender of the United States, except that this condition will be considered satisfied if payment is made by a negotiable check, on a solvent bank, which may be cashed readily by the employee in the local community for the full amount, without discount or collection charges of any kind. Where checks are used for payments, the contractor shall make all necessary arrangements for them to be cashed and shall give information regarding such arrangements.

5. No fee of any kind shall be asked or accepted by the contractor or any of his agents from any person as a condition of employment on the project.

6. No laborers shall be charged for any tools used in performing their respective duties except for reasonably avoidable loss or damage thereto.

7. Every employee on the work covered by this contract shall be permitted to lodge, board, and trade where and with whom he elects and neither the contractor nor his agents, nor his employees shall directly or indirectly require as a condition of employment that an employee shall lodge, board or trade at a particular place or with a particular person.

8. Every employee on the project covered by this contract shall be an employee of either the prime contractor or an approved subcontractor.

9. No charge shall be made for any transportation furnished by the contractor or his agents to any person employed on the work.

10. No individual shall be employed as a laborer or mechanic on this contract except on a wage basis, but this shall not be construed to prohibit the rental of teams, trucks or other equipment from individuals.

No Covered employee may be employed on the work except in accordance with the classification set forth in the schedule mentioned above; provided, however, that in the event additional classifications are required, application shall be made by the contractor to the Department of Highways and (1) the Department shall request appropriate classifications and rates from the proper agency, or (2) if there is urgent need for additional classification to avoid undue delay in the work, the contractor may employ such workmen at rates deemed comparable to rates established for similar classifications provided he has made written application through the Department of Highways, addressed to the proper agency, for the supplemental rates. The contractor shall retroactively adjust, upon receipt of the supplemental rates schedule, the wages of any employee paid less than the established rate and may adjust the wages of any employee overpaid.

11. No contractor or subcontractor contracting for any part of the contract work which may require or involve the employment of laborers or mechanics shall require or permit any laborer or mechanic in any work-week in which he is employed on such work, to work in excess of eight hours in any calendar day or in excess of forty hours in such work-week unless such laborer or mechanic receives compensation at a rate not less than one and one half times his basic rate of pay for all hours worked in excess of eight hours in any calendar day or in excess of forty hours in such work-week. A laborer, workman or mechanic and an employer may enter into a written agreement or a collective bargaining agreement to work more than eight (8) hours a calendar day but not more than ten (10) hours a calendar day for the straight time hourly rate. This agreement shall be in writing and shall be executed prior to the employee working in excess of eight (8) hours, but not more than ten (10) hours, in any one (1) calendar day.

12. Payments to the contractor may be suspended or withheld due to failure of the contractor to pay any laborer or mechanic employed or working on the site of the work, all or part of the wages required under the terms of the contract. The Department may suspend or withhold payments only after the contractor has been given written notice of the alleged violation and the contractor has failed to comply with the wage determination of the Department of Highways.

13. Contractors and subcontractors shall comply with the sections of Kentucky Revised Statutes, Chapter 337 relating to contracts for Public Works.

Revised 2-16-95

EXECUTIVE BRANCH CODE OF ETHICS

In the 1992 regular legislative session, the General Assembly passed and Governor Brereton Jones signed Senate Bill 63 (codified as KRS 11A), the Executive Branch Code of Ethics, which states, in part:

> KRS 11A.040 (6) provides:
>
> No present or former public servant shall, within six (6) months of following termination of his office or employment, accept employment, compensation or other economic benefit from any person or business that contracts or does business with the state in matters in which he was directly involved during his tenure. This provision shall not prohibit an individual from returning to the same business, firm, occupation, or profession in which he was involved prior to taking office or beginning his term of employment, provided that, for a period of six (6) months, he personally refrains from working on any matter in which he was directly involved in state government. This subsection shall not prohibit the performance of ministerial functions, including, but not limited to, filing tax returns, filing applications for permits or licenses, or filing incorporation papers.
>
> KRS 11A.040 (8) states:
>
> A former public servant shall not represent a person in a matter before a state agency in which the former public servant was directly involved, for a period of one (1) year after the latter of:
>
> a) The date of leaving office or termination of employment; or
> b) The date the term of office expires to which the public servant was elected.

This law is intended to promote public confidence in the integrity of state government and to declare as public policy the idea that state employees should view their work as a public trust and not as a way to obtain private benefits.

If you have worked for the executive branch of state government within the past six months, you may be subject to the law's prohibitions. The law's applicability may be different if you hold elected office or are contemplating representation of another before a state agency.

Also, if you are affiliated with a firm which does business with the state and which employs former state executive-branch employees, you should be aware that the law may apply to them.

In case of doubt, the law permits you to request an advisory opinion from the Executive Branch Ethics Commission, Room 136, Capitol Building, 700 Capitol Avenue, Frankfort, Kentucky 40601; telephone (502) 564-7954.

Kentucky Equal Employment Opportunity Act of 1978

The requirements of the Kentucky Equal Employment Opportunity Act of 1978 (KRS 45.560-45.640) shall apply to this Contract. The apparent low Bidder will be required to submit EEO forms to the Division of Construction Procurement, which will then forward to the Finance and Administration Cabinet for review and approval. No award will become effective until all forms are submitted and EEO/CC has certified compliance. The required EEO forms are as follows:

- EEO-1: Employer Information Report
- Affidavit of Intent to Comply
- Employee Data Sheet
- Subcontractor Report

These forms are available on the Finance and Administration's web page under ***Vendor Information, Standard Attachments and General Terms*** at the following address: **https://www.eProcurement.ky.gov**.

Bidders currently certified as being in compliance by the Finance and Administration Cabinet may submit a copy of their approval letter in lieu of the referenced EEO forms.

For questions or assistance please contact the Finance and Administration Cabinet by email at **finance.contractcompliance@ky.gov** or by phone at 502-564-2874.

General Decision Number: KY140102 08/01/2014 KY102

Superseded General Decision Number: KY20130102

State: Kentucky

Construction Type: Highway

Counties: Allen, Ballard, Butler, Caldwell, Calloway, Carlisle, Christian, Crittenden, Daviess, Edmonson, Fulton, Graves, Hancock, Henderson, Hickman, Hopkins, Livingston, Logan, Lyon, Marshall, McCracken, McLean, Muhlenberg, Ohio, Simpson, Todd, Trigg, Union, Warren and Webster Counties in Kentucky.

HIGHWAY CONSTRUCTION PROJECTS (excluding tunnels, building structures in rest area projects & railroad construction; bascule, suspension & spandrel arch bridges designed for commercial navigation, bridges involving marine construction; and other major bridges).

Modification Number	Publication Date
0	01/03/2014
1	04/04/2014
2	04/18/2014
3	05/16/2014
4	05/23/2014
5	06/06/2014
6	07/04/2014
7	07/18/2014
8	08/01/2014

BRIN0004-002 06/01/2013

BALLARD, BUTLER, CALDWELL, CARLISLE, CRITTENDEN, DAVIESS, EDMONSON, FULTON, GRAVES, HANCOCK, HENDERSON, HICKMAN, HOPKINS, LIVINGSTON, LYON, MARSHALL, MCCRACKEN, MCLEAN, MUHLENBERG, OHIO, UNION, and WEBSTER COUNTIES

	Rates	Fringes
BRICKLAYER		
Ballard, Caldwell, Carlisle, Crittenden, Fulton, Graves, Hickman, Livingston, Lyon, Marshall, and McCracken Counties	$ 24.11	10.30
Butler, Edmonson, Hopkins, Muhlenberg, and Ohio Counties	$ 24.61	10.22
Daviess, Hancock, Henderson, McLean, Union, and Webster Counties	$ 28.68	13.72

BRTN0004-005 05/01/2009

ALLEN, CALLOWAY, CHRISTIAN, LOGAN, SIMPSON, TODD, TRIGG, and
WARREN COUNTIES

	Rates	Fringes
BRICKLAYER	$ 24.52	1.83

CARP0357-002 04/01/2014

	Rates	Fringes
CARPENTER	$ 27.50	14.92
Diver	$ 41.63	14.92
PILEDRIVERMAN	$ 27.75	14.92

ELEC0369-006 05/29/2013

BUTLER, EDMONSON, LOGAN, TODD & WARREN COUNTIES:

	Rates	Fringes
ELECTRICIAN	$ 29.48	14.37

ELEC0429-001 02/01/2010

ALLEN & SIMPSON COUNTIES:

	Rates	Fringes
ELECTRICIAN	$ 21.85	10.35

ELEC0816-002 06/01/2014

BALLARD, CALDWELL, CALLOWAY, CARLISLE, CHRISTIAN, CRITTENDEN,
FULTON (Except a 5 mile radius of City Hall in Fulton), GRAVES,
HICKMAN, LIVINGSTON, LYON, MARSHALL, MCCRACKEN & TRIGG COUNTIES:

	Rates	Fringes
ELECTRICIAN	$ 30.82	25.5%+5.85

Cable spicers receive $.25 per hour additional.

ELEC1701-003 06/01/2013

DAVIESS, HANCOCK, HENDERSON, HOPKINS, MCLEAN, MUHLENBERG, OHIO,
UNION & WEBSTER COUNTIES:

	Rates	Fringes
ELECTRICIAN	$ 30.03	13.72

Cable spicers receive $.25 per hour additional.

ELEC1925-002 06/01/2014

FULTON COUNTY (Up to a 5 mile radius of City Hall in Fulton):

	Rates	Fringes
CABLE SPLICER	$ 25.00	10.27
ELECTRICIAN	$ 24.80	11.01

ENGI0181-017 07/01/2014

	Rates	Fringes
POWER EQUIPMENT OPERATOR		
GROUP 1	$ 28.85	14.15
GROUP 2	$ 26.24	14.15
GROUP 3	$ 26.65	14.15
GROUP 4	$ 25.95	14.15

OPERATING ENGINEER CLASSIFICATIONS

GROUP 1 - A-Frame Winch Truck; Auto Patrol; Backfiller; Batcher Plant; Bituminous Paver; Bituminous Transfer Machine; Boom Cat; Bulldozer; Mechanic; Cableway; Carry-All Scoop; Carry Deck Crane; Central Compressor Plant; Cherry Picker; Clamshell; Concrete Mixer (21 cu. ft. or Over); Concrete Paver; Truck-Mounted Concrete Pump; Core Drill; Crane; Crusher Plant; Derrick; Derrick Boat; Ditching & Trenching Machine; Dragline; Dredge Operator; Dredge Engineer; Elevating Grader & Loaders; Grade-All; Gurries; Heavy Equipment Robotics Operator/Mechanic; High Lift; Hoe-Type Machine; Hoist (Two or More Drums); Hoisting Engine (Two or More Drums); Horizontal Directional Drill Operator; Hydrocrane; Hyster; KeCal Loader; LeTourneau; Locomotive; Mechanic; Mechanically Operated Laser Screed; Mechanic Welder; Mucking Machine; Motor Scraper; Orangepeel Bucket; Overhead Crane; Piledriver; Power Blade; Pumpcrete; Push Dozer; Rock Spreader, attached to equipment; Rotary Drill; Roller (Bituminous); Rough Terrain Crane; Scarifier; Scoopmobile; Shovel; Side Boom; Subgrader; Tailboom; Telescoping Type Forklift; Tow or Push Boat; Tower Crane (French, German & other types); Tractor Shovel; Truck Crane; Tunnel Mining Machines, including Moles, Shields or similar types of Tunnel Mining Equipment

GROUP 2 - Air Compressor (Over 900 cu. ft. per min.); Bituminous Mixer; Boom Type Tamping Machine; Bull Float; Concrete Mixer (Under 21 cu. ft.); Dredge Engineer; Electric Vibrator; Compactor/Self-Propelled Compactor; Elevator (One Drum or Buck Hoist); Elevator (When used to Hoist Building Material); Finish Machine; Firemen & Hoist (One Drum); Flexplane; Forklift (Regardless of Lift Height); Form Grader; Joint Sealing Machine; Outboard Motor Boat; Power Sweeper (Riding Type); Roller (Rock); Ross Carrier; Skid Mounted or Trailer Mounted Conrete Pump; Skid Steer Machine with all Attachments; Switchman or Brakeman; Throttle Valve Person; Tractair & Road Widening Trencher; Tractor (50 H.P. or Over); Truck Crane Oiler; Tugger; Welding Machine; Well Points;& Whirley Oiler

GROUP 3 -All Off Road Material Handling Equipment, including Articulating Dump Trucks; Greaser on Grease Facilities servicing Heavy Equipment

GROUP 4 - Bituminous Distributor; Burlap & Curing Machine; Cement Gun; Concrete Saw; Conveyor; Deckhand Oiler; Grout Pump; Hydraulic Post Driver; Hydro Seeder; Mud Jack; Oiler; Paving Joint Machine; Power Form Handling Equipment; Pump; Roller (Earth); Steerman; Tamping Machine; Tractor (Under 50 H.P.); & Vibrator

CRANES - with booms 150 ft. & Over (Including JIB), and where the length of the boom in combination with the length of the piling equals or exceeds 150 ft. - $1.00 above Group 1 rate

EMPLOYEES ASSIGNED TO WORK BELOW GROUND LEVEL ARE TO BE PAID 10% ABOVE BASIC WAGE RATE. THIS DOES NOT APPLY TO OPEN CUT WORK.

IRON0070-005 06/01/2014

BUTLER COUNTY (Eastern eighth, including the Townships of Decker, Lee & Tilford);
EDMONSON COUNTY (Northern three-fourths, including the Townships of Asphalt, Bee Spring, Brownsville, Grassland, Huff, Kyrock, Lindseyville, Mammoth Cave, Ollie, Prosperity, Rhoda, Sunfish & Sweden)

	Rates	Fringes
IRONWORKER		
Structural; Ornamental; Reinforcing; Precast Concrete Erectors	$ 26.97	19.75

IRON0103-004 04/01/2013

DAVIESS, HANCOCK, HENDERSON, HOPKINS, MCLEAN, OHIO, UNION & WEBSTER COUNTIES
BUTLER COUNTY (Townships of Aberdeen, Bancock, Casey, Dexterville, Dunbar, Elfie, Gilstrap, Huntsville, Logansport, Monford, Morgantown, Provo, Rochester, South Hill & Welchs Creek);
CALDWELL COUNTY (Northeastern third, including the Township of Creswell);
CHRISTIAN COUNTY (Northern third, including the Townships of Apex, Crofton, Kelly, Mannington & Wynns);
CRITTENDEN COUNTY (Northeastern half, including the Townships of Grove, Mattoon, Repton, Shady Grove & Tribune);
MUHLENBERG COUNTY (Townships of Bavier, Beech Creek Junction, Benton, Brennen, Browder, Central City, Cleaton, Depoy, Drakesboro, Eunis, Graham, Hillside, Luzerne, Lynn City, Martwick, McNary, Millport, Moorman, Nelson, Paradise, Powderly, South Carrollton, Tarina & Weir)

	Rates	Fringes
Ironworkers:	$ 27.82	16.555

IRON0492-003 05/01/2013

ALLEN, LOGAN, SIMPSON, TODD & WARREN COUNTIES
BUTLER COUNTY (Southern third, including the Townships of Boston, Berrys Lick, Dimple, Jetson, Quality, Sharer, Sugar Grove & Woodbury);
CHRISTIAN COUNTY (Eastern two-thirds, including the Townships of Bennettstown, Casky, Herndon, Hopkinsville, Howell, Masonville, Pembroke & Thompsonville);
EDMONSON COUNTY (Southern fourth, including the Townships of Chalybeate & Rocky Hill);
MUHLENBERG COUNTY (Southern eighth, including the Townships of Dunnior, Penrod & Rosewood)

	Rates	Fringes
Ironworkers:	$ 23.84	10.96

---

* IRON0782-006 05/01/2014

BALLARD, CALLOWAY, CARLISLE, FULTON, GRAVES, HICKMAN, LIVINGSTON, LYON, MARSHALL, MCCRACKEN & TRIGG COUNTIES
CALDWELL COUNTY (Southwestern two-thirds, including the Townships of Cedar Bluff, Cider, Claxton, Cobb, Crowtown, Dulaney, Farmersville, Fredonia, McGowan, Otter Pond & Princeton);
CHRISTIAN COUNTY (Western third, Excluding the Townships of Apex, Crofton, Kelly, Mannington, Wynns, Bennettstown, Casky, Herndon, Hopkinsville, Howell, Masonville, Pembroke & Thompsonville);
CRITTENDEN COUNTY (Southwestern half, including the Townships of Crayne, Dycusburg, Frances, Marion, Mexico, Midway, Sheridan & Told)

	Rates	Fringes
Ironworkers:		
Projects with a total contract cost of $20,000,000.00 or above	$ 27.09	20.66
All Other Work	$ 25.50	19.02

LABO0189-005 07/01/2014

BALLARD, CALLOWAY, CARLISLE, FULTON, GRAVES, HICKMAN, LIVINGSTON, LYON, MARSHALL & MCCRACKEN COUNTIES

	Rates	Fringes
Laborers:		
GROUP 1	$ 21.50	12.26
GROUP 2	$ 21.75	12.26
GROUP 3	$ 21.80	12.26
GROUP 4	$ 22.40	12.26

LABORER CLASSIFICATIONS

GROUP 1 - Aging & Curing of Concrete; Asbestos Abatement Worker; Asphalt Plant; Asphalt; Batch Truck Dump; Carpenter Tender; Cement Mason Tender; Cleaning of Machines; Concrete; Demolition; Dredging; Environmental - Nuclear, Radiation, Toxic & Hazardous Waste - Level D; Flagperson; Grade Checker; Hand Digging & Hand Back Filling; Highway Marker Placer; Landscaping, Mesh Handler & Placer; Puddler; Railroad; Rip-rap & Grouter; Right-of-Way; Sign, Guard Rail & Fence Installer; Signal Person; Sound Barrier Installer; Storm & Sanitary Sewer; Swamper; Truck Spotter & Dumper; Wrecking of Concrete Forms; General Cleanup

GROUP 2 - Batter Board Man (Sanitary & Storm Sewer); Brickmason Tender; Mortar Mixer Operator; Scaffold Builder; Burner & Welder; Bushammer; Chain Saw Operator; Concrete Saw Operator; Deckhand Scow Man; Dry Cement Handler; Environmental - Nuclear, Radiation, Toxic & Hazardous Waste - Level C; Forklift Operator for Masonary; Form Setter; Green Concrete Cutting; Hand Operated Grouter & Grinder Machine Operator; Jackhammer; Pavement Breaker; Paving Joint Machine; Pipelayer; Plastic Pipe Fusion; Power Driven Georgia Buggy & Wheel Barrow; Power Post Hole Digger; Precast Manhole Setter; Walk-Behind Tamper; Walk-Behind Trencher; Sand Blaster; Concrete Chipper; Surface Grinder; Vibrator Operator; Wagon Driller

GROUP 3 - Asphalt Luteman & Raker; Gunnite Nozzleman; Gunnite Operator & Mixer; Grout Pump Operator; Blaster; Side Rail Setter; Rail Paved Ditches; Screw Operator; Tunnel (Free Air); Water Blaster

GROUP 4 - Caisson Worker (Free Air); Cement Finisher; Environmental - Nuclear, Radiation, Toxic & Hazardous Waste - Levels A & B; Miner & Driller (Free Air); Tunnel Blaster; & Tunnel Mucker (Free Air); Directional & Horizontal Boring; Air Track Drillers (All Types); Powdermen & Blasters; Troxler & Concrete Tester if Laborer is Utilized

---

LABO0189-006 07/01/2014

ALLEN, BUTLER, CALDWELL, CHRISTIAN, DAVIESS, EDMONSON, HANCOCK, HOPKINS, LOGAN, MCLEAN, MUHLENBERG, OHIO, SIMPSON, TODD, TRIGG & WARREN COUNTIES

	Rates	Fringes
Laborers:		
GROUP 1	$ 22.66	11.10
GROUP 2	$ 22.91	11.10
GROUP 3	$ 22.96	11.10
GROUP 4	$ 23.56	11.10

LABORER CLASSIFICATIONS

GROUP 1 - Aging & Curing of Concrete; Asbestos Abatement Worker; Asphalt Plant; Asphalt; Batch Truck Dump; Carpenter Tender; Cement Mason Tender; Cleaning of Machines; Concrete; Demolition; Dredging; Environmental - Nuclear,

Radiation, Toxic & Hazardous Waste - Level D; Flagperson; Grade Checker; Hand Digging & Hand Back Filling; Highway Marker Placer; Landscaping, Mesh Handler & Placer; Puddler; Railroad; Rip-rap & Grouter; Right-of-Way; Sign, Guard Rail & Fence Installer; Signal Person; Sound Barrier Installer; Storm & Sanitary Sewer; Swamper; Truck Spotter & Dumper; Wrecking of Concrete Forms; General Cleanup

GROUP 2 - Batter Board Man (Sanitary & Storm Sewer); Brickmason Tender; Mortar Mixer Operator; Scaffold Builder; Burner & Welder; Bushammer; Chain Saw Operator; Concrete Saw Operator; Deckhand Scow Man; Dry Cement Handler; Environmental - Nuclear, Radiation, Toxic & Hazardous Waste - Level C; Forklift Operator for Masonary; Form Setter; Green Concrete Cutting; Hand Operated Grouter & Grinder Machine Operator; Jackhammer; Pavement Breaker; Paving Joint Machine; Pipelayer; Plastic Pipe Fusion; Power Driven Georgia Buggy & Wheel Barrow; Power Post Hole Digger; Precast Manhole Setter; Walk-Behind Tamper; Walk-Behind Trencher; Sand Blaster; Concrete Chipper; Surface Grinder; Vibrator Operator; Wagon Driller

GROUP 3 - Asphalt Luteman & Raker; Gunnite Nozzleman; Gunnite Operator & Mixer; Grout Pump Operator; Blaster; Side Rail Setter; Rail Paved Ditches; Screw Operator; Tunnel (Free Air); Water Blaster

GROUP 4 - Caisson Worker (Free Air); Cement Finisher; Environmental - Nuclear, Radiation, Toxic & Hazardous Waste - Levels A & B; Miner & Driller (Free Air); Tunnel Blaster; & Tunnel Mucker (Free Air); Directional & Horizontal Boring; Air Track Drillers (All Types); Powdermen & Blasters; Troxler & Concrete Tester if Laborer is Utilized

---

LABO0561-001 07/01/2014

CRITTENDEN, HENDERSON, UNION & WEBSTER COUNTIES

	Rates	Fringes
Laborers:		
GROUP 1	$ 21.36	12.65
GROUP 2	$ 21.61	12.65
GROUP 3	$ 21.66	12.65
GROUP 4	$ 22.26	12.65

LABORER CLASSIFICATIONS

GROUP 1 - Aging & Curing of Concrete; Asbestos Abatement Worker; Asphalt Plant; Asphalt; Batch Truck Dump; Carpenter Tender; Cement Mason Tender; Cleaning of Machines; Concrete; Demolition; Dredging; Environmental - Nuclear, Radiation, Toxic & Hazardous Waste - Level D; Flagperson; Grade Checker; Hand Digging & Hand Back Filling; Highway Marker Placer; Landscaping, Mesh Handler & Placer; Puddler; Railroad; Rip-rap & Grouter; Right-of-Way; Sign, Guard Rail & Fence Installer; Signal Person; Sound Barrier Installer; Storm & Sanitary Sewer; Swamper; Truck Spotter & Dumper; Wrecking of Concrete Forms; General Cleanup

GROUP 2 - Batter Board Man (Sanitary & Storm Sewer); Brickmason Tender; Mortar Mixer Operator; Scaffold Builder; Burner & Welder; Bushammer; Chain Saw Operator; Concrete Saw Operator; Deckhand Scow Man; Dry Cement Handler; Environmental - Nuclear, Radiation, Toxic & Hazardous Waste - Level C; Forklift Operator for Masonary; Form Setter; Green Concrete Cutting; Hand Operated Grouter & Grinder Machine Operator; Jackhammer; Pavement Breaker; Paving Joint Machine; Pipelayer; Plastic Pipe Fusion; Power Driven Georgia Buggy & Wheel Barrow; Power Post Hole Digger; Precast Manhole Setter; Walk-Behind Tamper; Walk-Behind Trencher; Sand Blaster; Concrete Chipper; Surface Grinder; Vibrator Operator; Wagon Driller

GROUP 3 - Asphalt Luteman & Raker; Gunnite Nozzleman; Gunnite Operator & Mixer; Grout Pump Operator; Blaster; Side Rail Setter; Rail Paved Ditches; Screw Operator; Tunnel (Free Air); Water Blaster

GROUP 4 - Caisson Worker (Free Air); Cement Finisher; Environmental - Nuclear, Radiation, Toxic & Hazardous Waste - Levels A & B; Miner & Driller (Free Air); Tunnel Blaster; & Tunnel Mucker (Free Air); Directional & Horizontal Boring; Air Track Drillers (All Types); Powdermen & Blasters; Troxler & Concrete Tester if Laborer is Utilized

---

PAIN0032-002 05/01/2013

BALLARD COUNTY

	Rates	Fringes
Painters:		
Bridges	$ 30.56	15.18
All Other Work	$ 28.26	15.18

Spray, Blast, Steam, High & Hazardous (Including Lead Abatement) and All Epoxy - $1.00 Premium

---

PAIN0118-003 06/01/2014

EDMONSON COUNTY:

	Rates	Fringes
Painters:		
Brush & Roller	$ 18.50	12.02
Spray, Sandblast, Power Tools, Waterblast & Steam Cleaning	$ 19.00	12.02

PAIN0156-006 04/01/2014

DAVIESS, HANCOCK, HENDERSON, MCLEAN, OHIO, UNION & WEBSTER COUNTIES

	Rates	Fringes
Painters:		
BRIDGES		
GROUP 1	$ 27.20	12.51
GROUP 2	$ 27.45	12.51
GROUP 3	$ 28.20	12.51
GROUP 4	$ 29.20	12.51
ALL OTHER WORK:		
GROUP 1	$ 26.05	12.51
GROUP 2	$ 26.30	12.51
GROUP 3	$ 27.05	12.51
GROUP 4	$ 28.05	12.51

PAINTER CLASSIFICATIONS

GROUP 1 - Brush & Roller

GROUP 2 - Plasterers

GROUP 3 - Spray; Sandblast; Power Tools; Waterblast; Steamcleaning; Brush & Roller of Mastics, Creosotes, Kwinch Koate & Coal Tar Epoxy

GROUP 4 - Spray of Mastics, Creosotes, Kwinch Koate & Coal Tar Epoxy

---

PAIN0456-003 07/01/2011

ALLEN, BUTLER, LOGAN, MUHLENBERG, SIMPSON, TODD & WARREN COUNTIES:

	Rates	Fringes
Painters:		
BRIDGES		
Brush & Roller	$ 22.55	9.65
Spray; Sandblast; Power Tools; Waterblast & Steam Cleaning	$ 23.55	9.65
ALL OTHER WORK		
Brush & Roller	$ 17.55	9.65
Spray; Sandblast; Power Tools; Waterblast & Steam Cleaning	$ 18.55	9.65

ALL OTHER WORK - HIGH TIME PAY
Over 35 feet (up to 100 feet) - $1.00 above base wage
100 feet and over - $2.00 above base wage

DURING SPRAY PAINTING AND SANDBLASTING OPERATIONS, POT TENDERS SHALL RECEIVE THE SAME WAGE RATES AS THE SPRAY PAINTER OR NOZZLE OPERATOR

PAIN0500-002 06/01/2014

CALDWELL, CALLOWAY, CARLISLE, CHRISTIAN, CRITTENDEN, FULTON,

GRAVES, HICKMAN, HOPKINS, LIVINGSTON, LYON, MARSHALL, MCCRACKEN
& TRIGG COUNTIES:

	Rates	Fringes
Painters:		
Bridges	$ 26.45	12.05
All Other Work	$ 20.20	12.05

Waterblasting units with 3500 PSI and above - $.50 premium
Spraypainting and all abrasive blasting - $1.00 premium
Work 40 ft. and above ground level - $1.00 premium

PLUM0184-002 07/01/2013

BALLARD, CALDWELL, CALLOWAY, CARLISLE, CHRISTIAN, CRITTENDEN,
FULTON, GRAVES, HICKMAN, LIVINGSTON, LYON, MARSHALL, MCCRACKEN
and TRIGG COUNTIES

	Rates	Fringes
Plumber; Steamfitter	$ 33.11	14.83

PLUM0502-004 08/01/2013

ALLEN, BUTLER, EDMONSON, SIMPSON & WARREN

	Rates	Fringes
Plumber; Steamfitter	$ 32.00	17.17

PLUM0633-002 08/01/2013

DAVIESS, HANCOCK, HENDERSON, HOPKINS, LOGAN, MCLEAN,
MUHLENBERG, OHIO, TODD, UNION & WEBSTER COUNTIES:

	Rates	Fringes
PLUMBER/PIPEFITTER	$ 29.87	14.25

TEAM0089-003 03/30/2014

ALLEN, BUTLER, EDMONSON, LOGAN, SIMPSON & WARREN COUNTIES

	Rates	Fringes
Truck drivers:		
Zone 1:		
Group 1	$ 19.58	17.83
Group 2	$ 19.76	17.83
Group 3	$ 19.84	17.83
Group 4	$ 19.86	17.83

GROUP 1 - Greaser; Tire Changer

GROUP 2 - Truck Mechanic; Single Axle Dump; Flat Bed; All

Terrain Vehicles when used to haul materials; Semi Trailer or Pole Trailer when used to pull building materials and equipment; Tandem Axle Dump; Driver of Distributors

GROUP 3 - Mixer All Types

GROUP 4 - Winch and A-Frame when used in transporting materials; Ross Carrier; Fork Lift when used to transport building materials; Driver on Pavement Breaker; Euclid and Other Heavy Earth Moving Equipment; Low Boy; Articulator Cat; Five Axle Vehicle

---

TEAM0215-003 03/31/2013

DAVIESS, HANCOCK, HENDERSON, HOPKINS, MCLEAN, MUHLENBERG, OHIO & WEBSTER COUNTIES

	Rates	Fringes
TRUCK DRIVER		
Group 1	$ 20.93	16.85
Group 2	$ 21.16	16.85
Group 3	$ 21.23	16.85
Group 4	$ 21.24	16.85

GROUP 1: Greaser, Tire Changer

GROUP 2: Truck Mechanic

GROUP 3: Single Axle Dump; Flat Bed; All Terrain Vehicle when used to haul materials; Semi Trailer or Pole Trailer when used to pull building materials and equipment; Tandem Axle Dump; Driver of Distributors; Mixer All Types

GROUP 4: Euclid and other heavy earth moving equipment; Low Boy; Articulator Cat; 5 Axle Vehicle; Winch and A- Frame when used in transporting materials; Ross Carrier; Fork Lift when used to transport building materials; Driver on Pavement Breaker

---

TEAM0236-001 03/31/2013

BALLARD, CALDWELL, CALLOWAY, CARLISLE, CHRISTIAN, CRITTENDEN, FULTON, GRAVES, HICKMAN, LIVINGSTON, LYON, MARSHALL, MCCRACKEN,TODD & TRIGG COUNTIES

	Rates	Fringes
TRUCK DRIVER		
Group 1	$ 19.38	16.85
Group 2	$ 19.56	16.85
Group 3	$ 19.56	16.85
Group 4	$ 19.66	16.85
Group 5	$ 19.64	16.85

GROUP 1: Greaser, Tire Changer

GROUP 2: Truck Mechanic

GROUP 3: Single Axle Dump; Flat Bed; All Terrain Vehicle when used to haul materials; Semi Trailer or Pole Trailer when used to pull building materials and equipment; Tandem Axle Dump; Drivers of Distributors

GROUP 4: Euclid and other heavy earth moving equipment; Low Boy; Articulator Cat; Five Axle Vehicle; Winch and A-Frame when used in transporting materials; Ross Carrier

GROUP 5: Mixer All Types

WELDERS - Receive rate prescribed for craft performing operation to which welding is incidental.

==========

Unlisted classifications needed for work not included within the scope of the classifications listed may be added after award only as provided in the labor standards contract clauses (29CFR 5.5 (a) (1) (ii)).

The body of each wage determination lists the classification and wage rates that have been found to be prevailing for the cited type(s) of construction in the area covered by the wage determination. The classifications are listed in alphabetical order of "identifiers" that indicate whether the particular rate is union or non-union.

Union Identifiers

An identifier enclosed in dotted lines beginning with characters other than "SU" denotes that the union classification and rate have found to be prevailing for that classification. Example: PLUM0198-005 07/01/2011. The first four letters , PLUM, indicate the international union and the four-digit number, 0198, that follows indicates the local union number or district council number where applicable , i.e., Plumbers Local 0198. The next number, 005 in the example, is an internal number used in processing the wage determination. The date, 07/01/2011, following these characters is the effective date of the most current negotiated rate/collective bargaining agreement which would be July 1, 2011 in the above example.

Union prevailing wage rates will be updated to reflect any changes in the collective bargaining agreements governing the rates.

0000/9999: weighted union wage rates will be published annually

each January.

Non-Union Identifiers

Classifications listed under an "SU" identifier were derived from survey data by computing average rates and are not union rates; however, the data used in computing these rates may include both union and non-union data. Example: SULA2004-007 5/13/2010. SU indicates the rates are not union majority rates, LA indicates the State of Louisiana; 2004 is the year of the survey; and 007 is an internal number used in producing the wage determination. A 1993 or later date, 5/13/2010, indicates the classifications and rates under that identifier were issued as a General Wage Determination on that date.

Survey wage rates will remain in effect and will not change until a new survey is conducted.

WAGE DETERMINATION APPEALS PROCESS

1.) Has there been an initial decision in the matter? This can be:

* an existing published wage determination
* a survey underlying a wage determination
* a Wage and Hour Division letter setting forth a position on a wage determination matter
* a conformance (additional classification and rate) ruling

On survey related matters, initial contact, including requests for summaries of surveys, should be with the Wage and Hour Regional Office for the area in which the survey was conducted because those Regional Offices have responsibility for the Davis-Bacon survey program. If the response from this initial contact is not satisfactory, then the process described in 2.) and 3.) should be followed.

With regard to any other matter not yet ripe for the formal process described here, initial contact should be with the Branch of Construction Wage Determinations. Write to:

Branch of Construction Wage Determinations
Wage and Hour Division
U.S. Department of Labor
200 Constitution Avenue, N.W.
Washington, DC 20210

2.) If the answer to the question in 1.) is yes, then an interested party (those affected by the action) can request review and reconsideration from the Wage and Hour Administrator (See 29 CFR Part 1.8 and 29 CFR Part 7). Write to:

Wage and Hour Administrator
U.S. Department of Labor
200 Constitution Avenue, N.W.

Washington, DC 20210

The request should be accompanied by a full statement of the interested party's position and by any information (wage payment data, project description, area practice material, etc.) that the requestor considers relevant to the issue.

3.) If the decision of the Administrator is not favorable, an interested party may appeal directly to the Administrative Review Board (formerly the Wage Appeals Board). Write to:

Administrative Review Board
U.S. Department of Labor
200 Constitution Avenue, N.W.
Washington, DC 20210

4.) All decisions by the Administrative Review Board are final.

==========

END OF GENERAL DECISION

Fringe benefit amounts are applicable for all hours worked except when otherwise noted.

These rates are listed pursuant to the Kentucky Determination No. CR-14-I-HWY dated July 14, 2014.

No laborer, workman or mechanic shall be paid at a rate less than that of a Journeyman except those classified as bona fide apprentices.

Apprentices or trainees shall be permitted to work as such subject to Administrative Regulations adopted by the Commissioner of Workplace Standards. Copies of these regulations will be furnished upon request from any interested person.

Before using apprentices on the job the contractor shall present to the Contracting Officer written evidence of registration of such employees in a program of a State apprenticeship and training agency approved and recognized by the U. S. Bureau of Apprenticeship and Training. In the absence of such a State agency, the contractor shall submit evidence of approval and registration by the U. S. Bureau of Apprenticeship and Training.

The contractor shall submit to the Contracting Officer, written evidence of the established apprenticeship-journeyman ratios and wage rates in the project area, which will be the basis for establishing such ratios and rates for the project under the applicable contract provisions.

TO: EMPLOYERS/EMPLOYEES

PREVAILING WAGE SCHEDULE:

The wages indicated on this wage schedule are the least permitted to be paid for the occupations indicated. When an employee works in more than one classification, the employer must record the number of hours worked in each classification at the prescribed hourly base rate.

OVERTIME:

Overtime is to be paid after an employee works eight (8) hours a day or forty (40) hours a week, whichever gives the employee the greater wages. At least time and one-half the base rate is required for all overtime. A laborer, workman or mechanic and an employer may enter into a written agreement or a collective bargaining agreement to work more than eight (8) hours a calendar day but not more than ten (10) hours a calendar day for the straight time hourly rate. Wage violations or questions should be directed to the designated Engineer or the undersigned.

Diana Castle Radcliffe, P.E.
Director, Division of Construction Procurement
Frankfort, Kentucky 40622

PART IV

INSURANCE

INSURANCE

The Contractor shall procure and maintain the following insurance in addition to the insurance required by law:

1) Commercial General Liability-Occurrence form – not less than $2,000,000 General aggregate, $2,000,000 Products & Completed Aggregate, $1,000,000 Personal & Advertising, $1,000,000 each occurrence.

2) Automobile Liability- $1,000,000 per accident

3) Employers Liability:

   a) $100,000 Each Accident Bodily Injury
   b) $500,000 Policy limit Bodily Injury by Disease
   c) $100,000 Each Employee Bodily Injury by Disease

4) The insurance required above must be evidenced by a Certificate of Insurance and this Certificate of Insurance must contain one of the following statements:
   a) "policy contains no deductible clauses."
   b) "policy contains _____ (amount) deductible property damage clause but company will pay claim and collect the deductible from the insured."

5) KENTUCKY WORKMEN'S COMPENSATION INSURANCE. The contractor shall furnish evidence of coverage of all his employees or give evidence of self-insurance by submitting a copy of a certificate issued by the Workmen's Compensation Board.

The cost of insurance is incidental to all contract items. All subcontractors must meet the same minimum insurance requirements.

PART V

BID ITEMS

143255

PROPOSAL BID ITEMS

Report Date 8/1/14

Section: 0001 - PAVING

LINE	BID CODE	ALT	DESCRIPTION	QUANTITY	UNIT	UNIT PRICE	FP	AMOUNT
0010	00001		DGA BASE	1,150.00	TON		$	
0020	00190		LEVELING & WEDGING PG64-22	597.00	TON		$	
0030	00221		CL2 ASPH BASE 0.75D PG64-22	11.00	TON		$	
0040	00301		CL2 ASPH SURF 0.38D PG64-22	5,970.00	TON		$	
0050	02562		TEMPORARY SIGNS	600.00	SQFT		$	
0060	02650		MAINTAIN & CONTROL TRAFFIC KY 1700	1.00	LS		$	
0070	02650		MAINTAIN & CONTROL TRAFFIC KY 657	1.00	LS		$	
0080	02676		MOBILIZATION FOR MILL & TEXT KY 1700	1.00	LS		$	
0090	02676		MOBILIZATION FOR MILL & TEXT KY 657	1.00	LS		$	
0100	02677		ASPHALT PAVE MILLING & TEXTURING	145.00	TON		$	
0110	04830		LOOP WIRE	360.00	LF		$	
0120	04895		LOOP SAW SLOT AND FILL	150.00	LF		$	
0130	06427		TRENCHING	145.00	LF		$	
0140	06510		PAVE STRIPING-TEMP PAINT-4 IN	39,763.00	LF		$	
0150	06514		PAVE STRIPING-PERM PAINT-4 IN	79,526.00	LF		$	
0160	06567		PAVE MARKING-THERMO STOP BAR-12IN	20.00	LF		$	
0170	10020NS		FUEL ADJUSTMENT	10,222.00	DOLL	$1.00	$	$10,222.00
0180	10030NS		ASPHALT ADJUSTMENT	25,675.00	DOLL	$1.00	$	$25,675.00

Section: 0002 - DEMOBILIZATION

LINE	BID CODE	ALT	DESCRIPTION	QUANTITY	UNIT	UNIT PRICE	FP	AMOUNT
0190	02569		DEMOBILIZATION	1.00	LS		$	