CALL NO. 407

CONTRACT ID. 112170

HARRISON COUNTY

FED/STATE PROJECT NUMBER 049GR11P066-FD05

DESCRIPTION KY 1744 AND US 27 IN HARRISON COUNTY

WORK TYPE ASPHALT RESURFACING

PRIMARY COMPLETION DATE 7/31/2011

LETTING DATE: March 18, 2011

Sealed Bids will be received electronically through the Bid Express bidding service until 10:00 AM EASTERN DAYLIGHT TIME March 18, 2011. Bids will be publicly announced at 10:00 AM EASTERN DAYLIGHT TIME.

DEFERRED PAYMENT

REQUIRED BID PROPOSAL GUARANTY: Not less than 5% of the total bid.

TABLE OF CONTENTS

PART I SCOPE OF WORK

- PROJECT(S), COMPLETION DATE(S), & LIQUIDATED DAMAGES
- CONTRACT NOTES
- STATE CONTRACT NOTES
- 2011 DEFERRED PAYMENT
- SURFACING AREAS
- ASPHALT MIXTURE
- DGA BASE FOR SHOULDERS
- INCIDENTAL SURFACING
- FUEL AND ASPHALT PAY ADJUSTMENT
- OPTION A
- OPTION B
- SPECIAL NOTE(S) APPLICABLE TO PROJECT
- LIQUIDATED DAMAGES
- MANHOLE ADJUSTMENTS
- COORDINATION OF WORK WITH OTHER CONTRACTS
- ASPHALT MIXTURE FOR PAVEMENT WEDGE
- EDGE KEY
- ASPHALT MILLING AND TEXTURING
- TYPICAL SECTION DIMENSIONS
- TRAFFIC CONTROL PLAN
- TRAFFIC SIGNAL LOOP DETECTORS
- TRAFFIC SIGNAL LOOP REPLACEMENT
- SKETCH MAP(S)
- MATERIAL SUMMARY
- SUMMARY SHEET(S)
- TYPICAL SECTION(S)
- BRIDGE DETAIL FOR PAVING PROJECT

PART II SPECIFICATIONS AND STANDARD DRAWINGS

- SPECIFICATIONS REFERENCE
- SUPPLEMENTAL SPECIFICATIONS
- STANDARD DRAWINGS THAT APPLY
- CONCRETE ENTRANCE PAVEMENT AND SIDEWALK
- SIDEWALK RAMPS
- DETECTABLE WARNINGS

PART III EMPLOYMENT, WAGE AND RECORD REQUIREMENTS

- LABOR AND WAGE REQUIREMENTS
- EXECUTIVE BRANCH CODE OF ETHICS
- KENTUCKY EQUAL EMPLOYMENT OPPORTUNITY ACT OF 1978
- PROJECT WAGE RATES

PART IV INSURANCE

PART V BID ITEMS

PART I

SCOPE OF WORK

CONTRACT ID - 112170 ADMINISTRATIVE DISTRICT - 06

PROJECT(S) IDENTIFICATION AND DESCRIPTION:

COUNTY - HARRISON
049GR11P066-FD05 KY 1744 AND US 27 IN HARRISON COUNTY

COUNTY - HARRISON PES - MP04900271101
FD05 049 0027 005-007
MAIN STREET (US 27) FROM PIKE STREET (KY 32) (MP 5.820) EXTENDING NORTHERLY TO PEARL STREET (MP 6.100), A DISTANCE OF 0.28 MILES. ASPHALT RESURFACING.
GEOGRAPHIC COORDINATES LATITUDE 38^23'25" LONGITUDE 84^17'51"
AVERAGE DAILY TRAFFIC - 12000 AVERAGE MAINLINE WIDTH - 40.0 FEET

COUNTY - HARRISON PES - MP04900271102
FD05 049 0027 016-020
FALMOUTH ROAD (US 27) FROM KY 1284 (MP 16.681) EXTENDING NORTHERLY TO PENDLETON COUNTY LINE (MP 19.416), A DISTANCE OF 2.74 MILES. ASPHALT RESURFACING.
GEOGRAPHIC COORDINATES LATITUDE 38^33'18" LONGITUDE 84^17'23"
AVERAGE DAILY TRAFFIC - 2242 AVERAGE MAINLINE WIDTH - 30.4 FEET

COUNTY - HARRISON PES - MP04917441101
FD05 049 1744 000-003
BENSON PIKE (KY 1744) FROM KY 1032 (MP 0.00) EXTENDING EASTERLY TO US 27 (MP 2.253), A DISTANCE OF 2.25 MILES. ASPHALT RESURFACING.
GEOGRAPHIC COORDINATES LATITUDE 38^32'09" LONGITUDE 84^18'03"
AVERAGE DAILY TRAFFIC - 225 AVERAGE MAINLINE WIDTH - 16.0 FEET

COMPLETION DATE(S):

COMPLETION DATE - July 31, 2011
US 27 MILEPOINT 5.820-6.100

COMPLETION DATE - November 15, 2011
KY 1744 & US 27 MILEPOINT 16.681-19.416

CONTRACT NOTES

PROPOSAL ADDENDA

All addenda to this proposal must be applied when calculating bid and certified in the bid packet submitted to the Kentucky Department of Highways. Failure to use the correct and most recent addenda may result in the bid being rejected.

BID SUBMITTAL

Bidder must use the Department's Expedite Bidding Program available on the Internet web site of the Department of Highways, Division of Construction Procurement. (www.transportation.ky.gov/contract)

The Bidder must download the bid file located on the Bid Express website (www.bidx.com) to prepare a bid packet for submission to the Department. The bidder must submit electronically using Bid Express.

JOINT VENTURE BIDDING

Joint venture bidding is permissible. All companies in the joint venture must be prequalified in one of the work types in the Qualifications for Bidders for the project. The bidders must get a vendor ID for the joint venture from the Division of Construction Procurement and register the joint venture as a bidder on the project. Also, the joint venture must obtain a digital ID from Bid Express to submit a bid. A joint bid bond of 5% may be submitted for both companies or each company may submit a separate bond of 5%.

UNDERGROUND FACILITY DAMAGE PROTECTION

The contractor is advised that the Underground Facility Damage Protection Act of 1994, became law January 1, 1995. It is the contractor's responsibility to determine the impact of the act regarding this project, and take all steps necessary to be in compliance with the provision of the act.

07/01/2010

SPECIAL NOTE FOR RECIPROCAL PREFERENCE

Reciprocal preference to be given by public agencies to resident bidders

By reference, KRS 45A.490 to 45A.494 are incorporated herein and in compliance regarding the bidders residency. Bidders who want to claim resident bidder status should complete the Affidavit for Claiming Resident Bidder Status along with their bid in the Expedite Bidding Program. Submittal of the Affidavit should be done along with the bid in Bid Express.

DEFERRED PAYMENT: The successful bidder on this project may request a work order with an effective date prior to June 15, 2011. The request must be in writing to the Department. A work order issued at the request of the Contractor will be with the distinct understanding that payment for any work performed estimates may be delayed until July 15, 2011. A work order will be issued June 15, 2011, for this project unless the bidder requests an earlier work date.

SURFACING AREAS (KY 1744)

Mainline surfacing width is estimated to be 16 feet.
Total mainline area to be surfaced is estimated to be 23,263 square yards.
Shoulder width is estimated to be 1 foot on each side.
Total shoulder area to be surfaced with DGA is estimated to be 2,644 square yards.
SURFACING AREAS (US 27 MP 005-007)
Mainline surfacing width is estimated to vary 38-52 feet.
Total mainline area to be surfaced is estimated to be 6,900 square yards.
Shoulder width is estimated to be 0 feet on each side. Section is Curb & Gutter.
Total shoulder area to be surfaced is estimated to be 0 square yards.
SURFACING AREAS (US 27 MP 016-020)
Mainline surfacing width is estimated to vary 22-33 feet.
Total mainline area to be surfaced is estimated to be 54,232 square yards.
Shoulder width is estimated to vary 2-10 foot on each side.
Total shoulder area to be surfaced is estimated to be 16,321 square yards.

ASPHALT MIXTURE

The rate of application for all asphalt mixtures shall be estimated at 110 lbs/sy per inch of depth, unless otherwise noted.

DGA BASE FOR SHOULDERS (KY 1744)

The rate of application shall be estimated at 115 lbs/sy per inch of depth. Payment for necessary grading and/or shaping of existing shoulders prior to placing of Dense Graded Aggregate Base shall be included in the unit price bid per ton for Dense Graded Aggregate Base.

INCIDENTAL SURFACING

The quantities established in the proposal include estimated quantities required for resurfacing or surfacing mailbox turnouts, farm field entrances, residential and commercial entrances, and road and street approaches. These items are to be paved to the limits as shown on Standard Drawing RPM 110 or to the limits as directed by the Engineer. In the event signal detectors are present in the intersecting streets or roads, the paving of the crossroads shall be to the right of way limit or back of the signal detector, whichever is the farthest back of the mainline. These areas are to be surfaced or resurfaced as directed by the Engineer and no direct payment will be allowed for placing and compacting.

FUEL AND ASPHALT PAY ADJUSTMENT

The following contract items: Asphalt Adjustment and Fuel Adjustment, are for possible future payments. Additional monies may need to be setup with an additional change order if existing contract amount is insufficient to pay all items on the contract. Unit price is $1.00. Quantity will be actual adjustment after work is completed.

OPTION A (US 27 MP 005-007)

The Contractor is advised that the compaction of asphalt mixtures furnished for driving lanes and ramps, at 25mm (1 inch) or greater, on this project will be accepted according to OPTION A in accordance with Section 402 and Section 403 of the current Standard

Specification. Joint cores as described in subsection 402.03.02 are required for surface mixtures only. The compaction of all other asphalt mixtures will be accepted by OPTION B.

OPTION B (KY 1744 & US 27 MP 016-020)

The Contractor is advised that the compaction of asphalt mixtures furnished to this project will be accepted by OPTION B in accordance with Section 402 and Section 403 of the current Standard Specification.

SPECIAL NOTES FOR CENTERLINE RUMBLE STRIPES
FD05 049-0027-016-020

Construct Centerline Rumble Stripes between milepoints 16.681 – 19.416. The milepoints listed are approximate only; the Engineer will determine exact milepoints at the time of construction. Contrary to Section 713, the existing striping pattern may change on the project. See attached drawings for Centerline Rumble Stripe Installation Details. Unless directed otherwise by the Engineer, DO NOT install Centerline Rumble Stripes where the posted speed limit is 45 MPH or less. If questions arise regarding changes in striping patterns or termini of the Centerline Rumble Stripes, obtain guidance from the District Traffic Engineer.

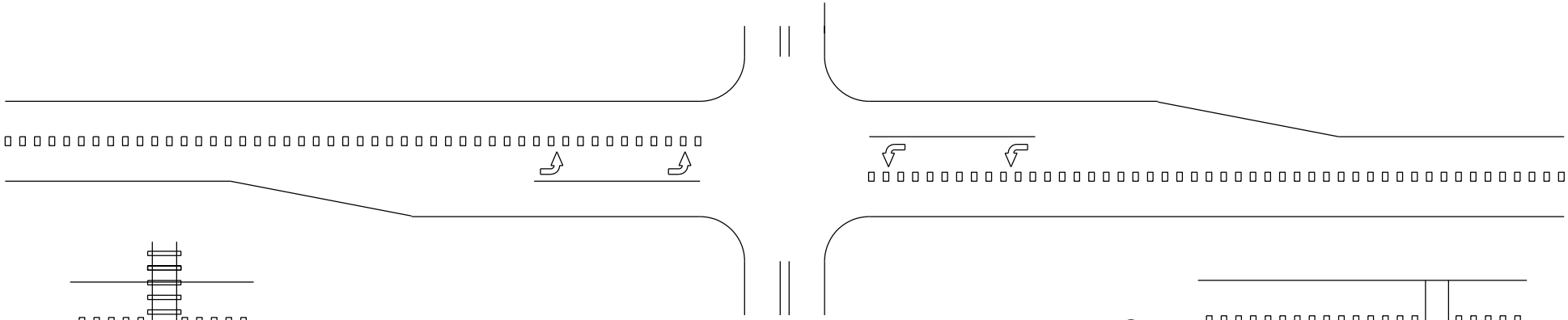

MAJOR INTERSECTION WITH LEFT-TURN LANES ①

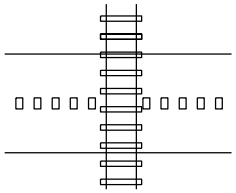

HIGHWAY-RAIL GRADE CROSSING ②

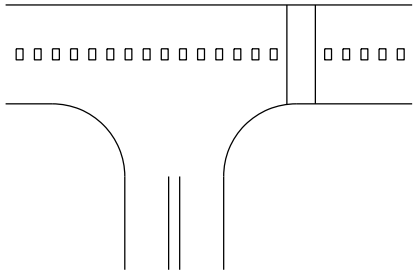

MARKED CROSSWALK ③

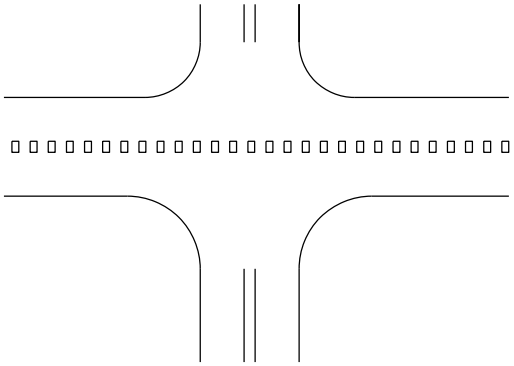

MINOR INTERSECTION ⑤

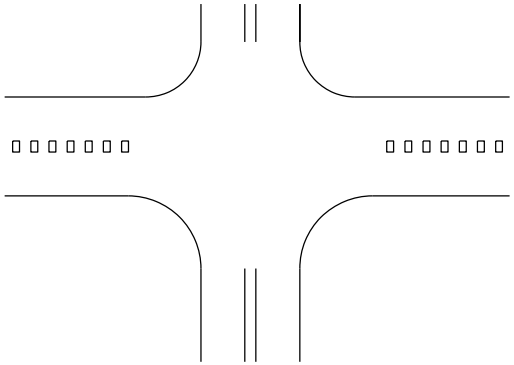

MAJOR INTERSECTION WITHOUT LEFT-TURN LANES ①

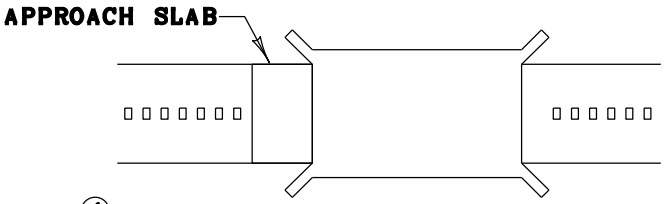

BRIDGE DECK/APPROACH SLAB ④

DRAWING NOT TO SCALE

GENERAL NOTES

① CENTERLINE RUMBLE STRIPS SHALL BE OMITTED THROUGH MAJOR INTERSECTIONS WITH OR WITHOUT LEFT-TURN LANES. RUMBLE STRIPS SHALL BE OMITTED IN THE AREA WHERE CENTERLINE PAVEMENT MARKINGS HAVE BEEN OMITTED (NORMALLY WHERE SIDE STREET RADIUS INTERSECTS MAINLINE). RUMBLE STRIPS SHALL BE OMITTED WHERE THE POSTED SPEED LIMIT IS 45 MPH OR LESS.

② CENTERLINE RUMBLE STRIPS SHALL NOT BE INSTALLED ACROSS HIGHWAY-RAIL GRADE CROSSINGS.

③ CENTERLINE RUMBLE STRIPS SHALL NOT BE INSTALLED THROUGH MARKED CROSSWALKS.

④ CENTERLINE RUMBLE STRIPS SHALL NOT BE INSTALLED ON BRIDGE DECKS OR APPROACH SLABS.

⑤ CENTERLINE RUMBLE STRIPS SHALL BE INSTALLED THROUGH MINOR INTERSECTIONS/ENTRANCES.

CENTERLINE RUMBLE STRIPS

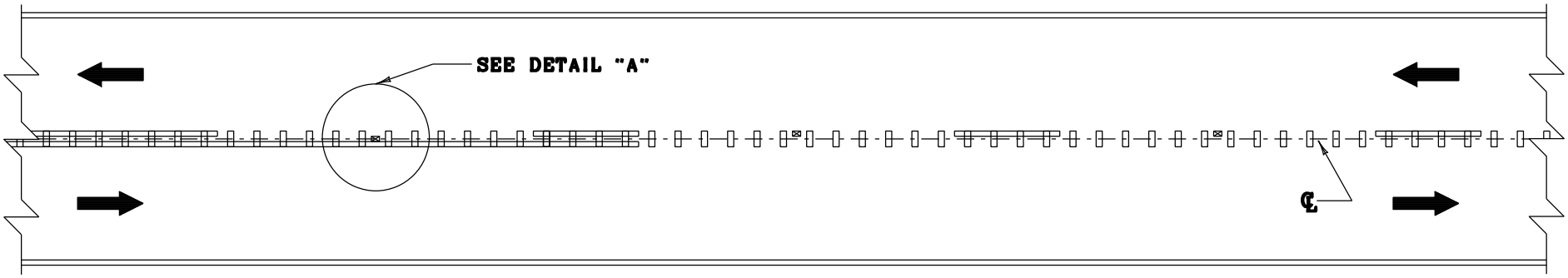

PLAN VIEW

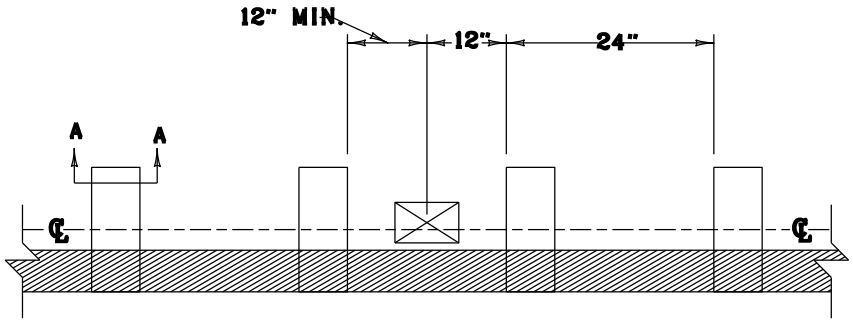

DETAIL "A"

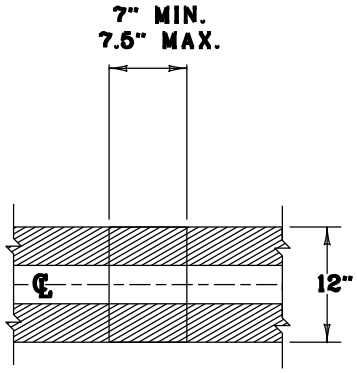

RUMBLE STRIPE DETAIL

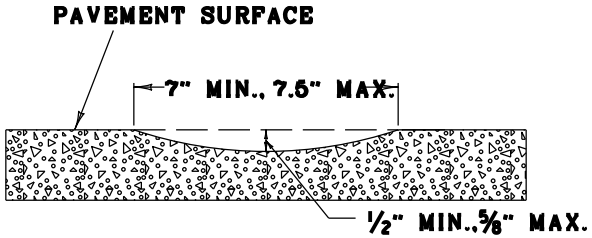

SECTION A-A

DRAWING NOT TO SCALE

GENERAL NOTES

1. DISTANCES SHOWN ARE APPROXIMATE. MAINTAIN RUMBLE STRIP DIMENSIONS AND SPACING AS MUCH AS POSSIBLE.
2. RUMBLE STRIPS SHALL BE INSTALLED IN LINE WITH THE CENTER OF THE ROADWAY AS MUCH AS POSSIBLE.
3. DISCONTINUE RUMBLE STRIPS AT LEAST 12" BEFORE AND AFTER THE CENTER OF EACH RAISED PAVEMENT MARKER. INSTALL AS MANY RUMBLE STRIPS AS POSSIBLE BETWEEN ADJACENT PAVEMENT MARKERS WHILE MAINTAINING THE 24" CYCLE.
4. DO NOT INSTALL CENTERLINE RUMBLE STRIPS IN AREAS INDICATED ON "CENTERLINE RUMBLE STRIPS" DRAWING.
5. RUMBLE STRIPS SHALL BE OMITTED WHERE THE POSTED SPEED LIMIT IS 45 MPH OR LESS.

CENTERLINE RUMBLE STRIPES 4 INCH STRIPING

SPECIAL NOTE FOR SAWED SHOULDER RUMBLE STRIPS
FD05 049-0027-016-020

Contrary to section 403.03.08, construct 16 inch sawed shoulder rumble strips according to this detail:

Place one foot out from the mainline pavement

SPECIAL NOTE FOR LIQUIDATED DAMAGES
FD05 049-0027-005-007

In addition to the requirements of Section 108.09, the Engineer will assess additional Liquidated Damages for this section of the contract in the amount of $3,000 per day for each day the final surface course on this section remains uncompleted for more than 1 calendar day day after completion of the final surface course on the adjacent bridge replacement project (see Special Note for Coordination of Work with Other Contracts).

The estimated completion date for the bridge replacement project is July 30,2011. The specified completion date for this section of the Contract is July 31, 2011. The Engineer will grant an extension of contract time on a calendar day for calendar day basis for each calendar day the Contractor's work on this section of the Contract is delayed by the Bridge Contractor's operations.

The Engineer will apply all assessed Liquidated Damages accumulatively.

Except as provided herein, conform to all other applicable portions of Section 108.

SPECIAL NOTE FOR MANHOLE ADJUSTMENTS

Manhole adjustments are the responsibility of the City of CYNTHIANA. Notify the Engineer a minimum of 30 calendar days prior to beginning any work on the project. Unless directed otherwise by the Engineer, do not begin resurfacing until the manhole adjustments are completed by the City. The Engineer will coordinate the work between the Contractor and City.

1-3181 manholeadjustbycity
01/01/2009

COORDINATION OF WORK WITH OTHER CONTRACTS
(US 27 MP 005-007)
FD05 049 0027 005-007

The resurfacing of US 27 from mile point 5.820 to 6.100 connects to the current US 27 bridge replacement project construction limits. The contractor is advised that the bridge project may be finishing at the time that the resurfacing project occurs. Communication with the Section Office assigned to the resurfacing project must be maintained in order to best work in conjunction with the bridge construction project. Paving on the bridge project and resurfacing project shall take place in the same time frame to allow for the least interruption to local traffic. In the event that the same contractor will perform the work for both projects, perform all paving of the final surface course on both projects at the same time. See Special Note for Liquidated Damages.

SPECIAL NOTE FOR PAVEMENT WEDGE AND SHOULDER

1.0 MATERIALS. Provide an Asphalt Mixture for Pavement Wedge conforming to Section 407 of the Standard Specifications or an Asphalt Surface Mixture conforming to Section 403 of the Standard Specifications, as applicable to the project, for the pavement wedge.

2.0 CONSTRUCTION. Place the Asphalt Mixture for Pavement Wedge or Asphalt Surface Mixture as a separate operation from the driving lane. Prime the existing shoulder with tack material as the Engineer directs before placing the wedge. Construct according to Section 407.03 and 403.03 of the Standard Specifications, as applicable.

When the Engineer deems it appropriate to pave both the driving lane and the adjoining wedge monolithically, equip the paver with a modified screed. Provide a screed that extends the full width of the wedge being placed and is tapered to produce a wedge.

The wedge may vary in thickness at the edge of the driving lanes. Limit the outside edge thickness of the new paving limits on the wedge to one inch where existing site conditions permit. If an Asphalt Surface Mixture is furnished for the pavement wedge, texture according to Section 403.03.08.

The following sketch is primarily for the computation of quantities; however, the wedge will result in a similar cross-section where sufficient width exists. Do not construct a shoulder for placing the wedge unless specified elsewhere in the Contract.

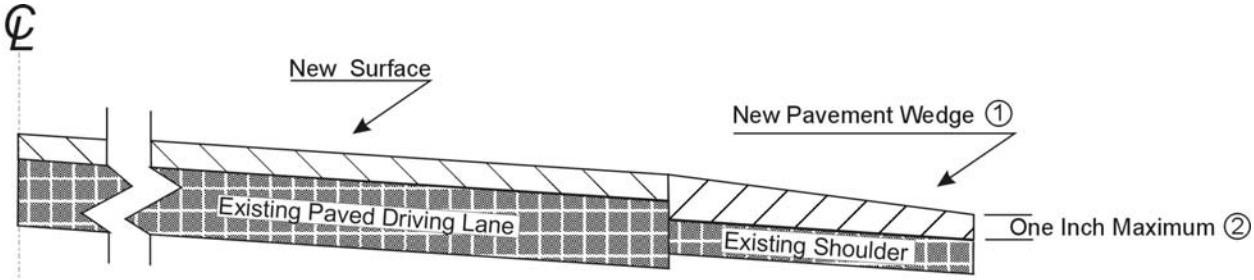

① Slope varies, but is down from the driving lanes except on outside of some curves where superelevation controls.

② Where existing site conditions permit.

3.0 MEASUREMENT. The Department will measure Asphalt Mixture for Pavement Wedge or Asphalt Surface Mixture placed as the pavement wedge according to Section 407.

4.0 PAYMENT. The Department will make payment for the completed and accepted quantities of Asphalt Surface Mixtures on pavement wedges according to Section 402 of the Standard Specifications. The Department will make payment for the completed and accepted quantities of Asphalt Mixture for Pavement Wedge according to Section 407 of the Standard Specifications.

01/01/2009

SPECIAL NOTE FOR EDGE KEY
(KY 1744 & US 27 MP 016-020)

Construct Edge Keys at the beginning of project, end of project, at railroad crossings, and at ramps, as applicable. Cut out the existing asphalt surface to the required depth and width shown on the drawing. Heel new surface into the existing surface. The Department will pay for this work at the contract unit price per ton for "Asphalt Pavement Milling and Texturing", which shall be full compensation for all labor, materials, equipment, and incidentals for removal and disposal of the existing asphalt surface required to construct the edge key.

EDGE KEY

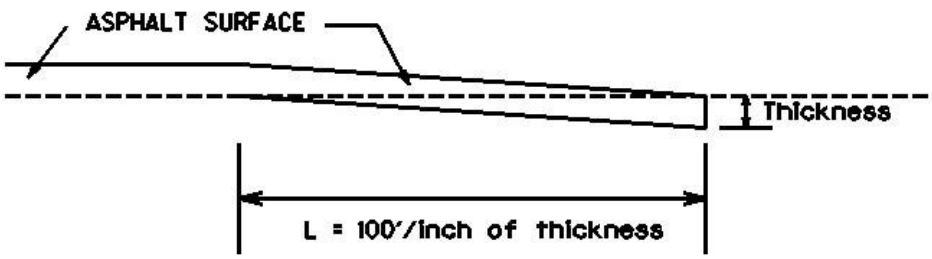

Thickness = 1.00 Inches

L = 100 LF

L= Length of Edge Key

1-3315 edgekeypaidbyton
01/01/2009

SPECIAL NOTE FOR
ASPHALT MILLING AND TEXTURING

Begin paving operations no later than **48 hours** after the commencement of the asphalt milling operation. Continue paving operations continuously until completed. If paving operations are not begun within this time period, liquidated damages will be assessed at the rate prescribed by Section 108.09 of the current Standard Specifications until such time as paving operations are begun.

Contrary to Section 408 of the current Standard Specifications, the material obtained from the milling operations shall become the property of the Department. Deliver this material to the State Maintenance facility in HARRISON County.

Notice to Contractor

Transfer of millings to the state maintenance facility is considered a part of the construction project, therefore truck operators are subject to receiving prevailing wages.

3/22/2010 4:17 PM
1-353048hrstategetsmillingnooption.doc

SPECIAL NOTE FOR TYPICAL SECTION DIMENSIONS

The dimensions shown on the typical sections for pavement and shoulder widths and thickness' are nominal or typical dimensions. The actual dimensions to be constructed may be varied to fit existing conditions as directed or approved by the Engineer. It is not intended that existing pavement or shoulders be widened unless specified elsewhere in the Proposal.

1-3725 typical section
01/01/2009

TRAFFIC CONTROL PLAN
FD05 049-0027-005-007

TRAFFIC CONTROL GENERAL

Except as provided herein, maintain and control traffic in accordance with the 2008 Standard and Supplemental Specifications and the Standard and Sepia Drawings, current editions. Except for the roadway and traffic control bid items listed, all items of work necessary to maintain and control traffic will be paid at the lump sum bid price to "Maintain and Control Traffic".

Contrary to Section 106.01, traffic control devices used on this project may be new, or used in like new condition, at the beginning of the work and maintained in like new condition until completion of the work.

PROJECT PHASING & CONSTRUCTION PROCEDURES

At the discretion of the Engineer, days and hours may be specified when lane closures will not be allowed.

In areas with 3 or more lanes, maintain one lane of traffic in each direction at all times during construction. In areas with 2 lanes, maintain alternating one way traffic during construction. Provide a minimum clear lane width of 10 feet. If traffic should be stopped due to construction operations, and a school bus on an official run arrives on the scene, make provisions for the passage of the bus as quickly as possible.

LANE CLOSURES

Two weeks prior to beginning work, provide for the Engineer's approval a proposed schedule of lane closures. Notify the Engineer immediately and obtain prior permission for any proposed deviations from the approved schedule. The Department will provide public notification.

Do not leave lane closures in place during non-working hours.

SIGNS

Contrary to section 112.04.02, only long term signs (signs intended to be continuously in place for more than 3 days) will be measured for payment; short term signs (signs intended to be left in place for 3 days or less) will not be measured for payment but will be incidental to Maintain and Control Traffic.

BARRICADES

Barricades used in lieu of barrels and cones for channelization or delineation will be incidental to Maintain and Control Traffic according to Section 112.04.01. Barricades used to protect pavement removal areas will be bid as each according to Section 112.04.04.

CHANGEABLE MESSAGE SIGNS

If deemed necessary by the Engineer, changeable message signs will be furnished, operated, and maintained by the Department. The Engineer will determine the messeages to be displayed.

PAVEMENT STRIPING

Coordinate the installation of all temporary and permanent striping with the Engineer. If there is a deviation from the existing striping plan, the Engineer will furnish a striping plan to the Contractor prior to the installation of any temporary or permanent markings.

Place temporary and permanent striping according to Sections 112 and 748, except that:

1. Place either temporary or permanent striping before opening a lane to traffic; and
2. If the Contractor’s operations or phasing requires temporary markings that must be subsequently removed from the final surface course or bridge deck, use an approved removable lane tape. The Department will not measure removable lane tape for separate payment, but if used, will measure and pay removable lane tape as temporary striping

TRAFFIC LOOP INSTALLATION

All items required for lane closures related to this item of work shall be considered incidental to bid item "Maintain and Control Traffic". Install Traffic signal loops after area has been milled and prior to the asphalt paving. The Contractor shall coordinate the placement of the traffic loops with the Traffic Engineer.

THERMOPLASTIC INTERSECTION PAVEMENT MARKINGS

Locate, document, and furnish the Engineer a log of the existing thermoplastic pavement markings prior to milling, leveling and wedging, or placement of the final asphalt surface course. After resurfacing, replace the previously existing thermoplastic markings at their approximate existing locations and/or as directed by the engineer.

All items required for lane closures related to this item of work shall be considered incidental to bid item "Maintain and Control Traffic".

PAVEMENT EDGE DROP-OFFS

A pavement edge between opposing directions of traffic or lanes that traffic is expected to cross in a lane change situation shall not have an elevation difference greater than 1½". Warning signs (MUTCD W8-9 or W8-9A, or W8-11) shall be placed in advance of and at 1500 feet intervals throughout the drop-off area. Dual posting on both sides of the traveled way shall be required. All transverse transitions between newly surfaced pavement and the existing pavement areas that traffic may cross shall be wedged with asphalt mixture for leveling and wedging. Remove wedges prior to placement of the final surface course.

Pavement edges that traffic is not expected to cross, except accidentally, shall be treated as follows:

Less than 2" - No protection required.

2" to 4" - Place plastic drums, vertical panels, or barricades every 50 feet. Cones may be used in place of plastic drums, panels, and barricades during daylight working hours. Wedge with asphalt mixture for leveling and wedging with a 1:1 or flatter slope in daylight hours, or 3:1 or flatter slope during nighttime hours, when work is not active in the drop-off area.

TRAFFIC CONTROL PLAN
FD05 049-0027-016-020

TRAFFIC CONTROL GENERAL

Except as provided herein, maintain and control traffic in accordance with the 2008 Standard and Supplemental Specifications and the Standard and Sepia Drawings, current editions. Except for the roadway and traffic control bid items listed, all items of work necessary to maintain and control traffic will be paid at the lump sum bid price to "Maintain and Control Traffic".

Contrary to Section 106.01, traffic control devices used on this project may be new, or used in like new condition, at the beginning of the work and maintained in like new condition until completion of the work.

PROJECT PHASING & CONSTRUCTION PROCEDURES

At the discretion of the Engineer, days and hours may be specified when lane closures will not be allowed.

In areas with 3 or more lanes, maintain one lane of traffic in each direction at all times during construction. In areas with 2 lanes, maintain alternating one way traffic during construction. Provide a minimum clear lane width of 10 feet. If traffic should be stopped due to construction operations, and a school bus on an official run arrives on the scene, make provisions for the passage of the bus as quickly as possible.

LANE CLOSURES

Two weeks prior to beginning work, provide for the Engineer's approval a proposed schedule of lane closures. Notify the Engineer immediately and obtain prior permission for any proposed deviations from the approved schedule. The Department will provide public notification.

Do not leave lane closures in place during non-working hours.

SIGNS

Contrary to section 112.04.02, only long term signs (signs intended to be continuously in place for more than 3 days) will be measured for payment; short term signs (signs intended to be left in place for 3 days or less) will not be measured for payment but will be incidental to Maintain and Control Traffic.

BARRICADES

Barricades used in lieu of barrels and cones for channelization or delineation will be incidental to Maintain and Control Traffic according to Section 112.04.01. Barricades used to protect pavement removal areas will be bid as each according to Section 112.04.04.

CHANGEABLE MESSAGE SIGNS

If deemed necessary by the Engineer, changeable message signs will be furnished, operated, and maintained by the Department. The Engineer will determine the messeages to be displayed.

ARROW PANELS

Use arrow panels as shown on the Standard Drawings or as directed by the Engineer. The Department will measure for payment the maximum number of arrow panels in concurrent use at the same time on a single day on all sections of the contract. Individual arrow panels will be measured only once for payment, regardless of how many times they are set, reset, removed, and relocated during the duration of the project. Replacements for damaged arrow panels directed by the Engineer to be replaced due to poor condition or readability will not be measured for payment. Retain possession of the arrow panels upon completion of the work.

PAVEMENT MARKINGS

Coordinate the installation of all temporary and permanent striping with the Engineer. If there is a deviation from the existing striping plan, the Engineer will furnish a striping plan to the Contractor prior to the installation of any temporary or permanent markings.

Place temporary and permanent striping according to Sections 112 and 748, except that:

1. Include edge lines in temporary striping; and
2. Place either temporary or permanent striping before opening a lane to traffic; and
3. If the Contractor's operations or phasing requires temporary markings that must be subsequently removed from the final surface course or bridge deck, use an approved removable lane tape. The Department will not measure removable lane tape for separate payment, but if used, will measure and pay removable lane tape as temporary striping

PAVEMENT EDGE DROP-OFFS

A pavement edge between opposing directions of traffic or lanes that traffic is expected to cross in a lane change situation shall not have an elevation difference greater than 1½". Warning signs (MUTCD W8-9 or W8-9A, or W8-11) shall be placed in advance of and at 1500 feet intervals throughout the drop-off area. Dual posting on both sides of the traveled way shall be required. All transverse transitions between newly surfaced pavement and the existing pavement areas that traffic may cross shall be wedged with asphalt mixture for leveling and wedging. Remove wedges prior to placement of the final surface course.

Pavement edges that traffic is not expected to cross, except accidentally, shall be treated as follows:

Less than 2" - No protection required.

2" to 4" - Place plastic drums, vertical panels, or barricades every 50 feet. Cones may be used in place of plastic drums, panels, and barricades during daylight working hours. Wedge with asphalt mixture for leveling and wedging with a 1:1 or flatter slope in daylight hours, or 3:1 or flatter slope during nighttime hours, when work is not active in the drop-off area.

TRAFFIC CONTROL PLAN
FD05 049-1744-000-003

TRAFFIC CONTROL GENERAL

Except as provided herein, maintain and control traffic in accordance with the 2008 Standard and Supplemental Specifications and the Standard and Sepia Drawings, current editions. Except for the roadway and traffic control bid items listed, all items of work necessary to maintain and control traffic will be paid at the lump sum bid price to "Maintain and Control Traffic".

Contrary to Section 106.01, traffic control devices used on this project may be new, or used in like new condition, at the beginning of the work and maintained in like new condition until completion of the work.

PROJECT PHASING & CONSTRUCTION PROCEDURES

At the discretion of the Engineer, days and hours may be specified when lane closures will not be allowed.

At the US 27 Intersection, maintain at least one lane of traffic in each direction on US 27 at all times, with a minimum clear lane width of 10 feet. On KY 1744, maintain alternating one way traffic during construction. Provide a minimum clear lane width of 7 feet. If traffic should be stopped due to construction operations, and a school bus on an official run arrives on the scene, make provisions for the passage of the bus as quickly as possible.

LANE CLOSURES

Do not leave lane closures in place during non-working hours.

SIGNS

Contrary to section 112.04.02, only long term signs (signs intended to be continuously in place for more than 3 days) will be measured for payment; short term signs (signs intended to be left in place for 3 days or less) will not be measured for payment but will be incidental to Maintain and Control Traffic.

CHANGEABLE MESSAGE SIGNS

If deemed necessary by the Engineer, changeable message signs will be furnished, operated, and maintained by the Department. The Engineer will determine the messeages to be displayed.

BARRICADES

Barricades used in lieu of barrels and cones for channelization or delineation will be incidental to Maintain and Control Traffic according to Section 112.04.01. Barricades used to protect pavement removal areas will be bid as each according to Section 112.04.04.

ARROW PANELS

Use arrow panels as shown on the Standard Drawings or as directed by the Engineer. The Department will measure for payment the maximum number of arrow panels in concurrent use at the same time on a single day on all sections of the contract. Individual arrow panels will be measured only once for payment, regardless of how many times they are set, reset, removed, and relocated during the duration of the project. Replacements for damaged arrow panels directed by the Engineer to be replaced due to poor condition or readability will not be measured for payment. Retain possession of the arrow panels upon completion of the work.

PAVEMENT EDGE DROP-OFFS

A pavement edge between opposing directions of traffic or lanes that traffic is expected to cross in a lane change situation shall not have an elevation difference greater than 1½". Warning signs (MUTCD W8-9 or W8-9A, or W8-11) shall be placed in advance of and at 1500 feet intervals throughout the drop-off area. Dual posting on both sides of the traveled way shall be required. All transverse transitions between newly surfaced pavement and the existing pavement areas that traffic may cross shall be wedged with asphalt mixture for leveling and wedging. Remove wedges prior to placement of the final surface course.

Pavement edges that traffic is not expected to cross, except accidentally, shall be treated as follows:

Less than 2" - No protection required.

2" to 4" - Place plastic drums, vertical panels, or barricades every 50 feet. Cones may be used in place of plastic drums, panels, and barricades during daylight working hours. Wedge with asphalt mixture for leveling and wedging with a 1:1 or flatter slope in daylight hours, or 3:1 or flatter slope during nighttime hours, when work is not active in the drop-off area.

SPECIAL NOTES FOR TRAFFIC SIGNAL LOOP DETECTORS
(US 27 MP 005-007)

The Contractor is advised there are existing traffic signal loop detectors within the construction limits of the subject project. Notify the Engineer in writing, (2) weeks prior to beginning any work on the project.

The Engineer will contact and maintain liaison with the District Traffic Engineer to coordinate any necessary work.

1-3892 trafficsignalloops
01/01/2009

SPECIAL NOTES FOR TRAFFIC SIGNAL LOOP REPLACEMENT

I. DESCRIPTION. Loop replacement shall be performed in accordance with the Department's Standard Specifications (current edition), applicable Standard Drawings, and applicable Special Provisions except as hereafter specified. Article references are to the Standard Specifications.

The Contractor shall furnish all materials, labor, and equipment for the replacement of traffic signal loop(s), and junction boxes (if the contract specifies quantities for this bid item elsewhere), and maintaining and controlling traffic, and all other work specified as part of this contract.

II. MATERIALS. All wire and cable shall be plainly marked in accordance with the provisions of the national electrical code.

Conduit shall be rigid steel. All rigid steel conduit shall be galvanized inside and out and shall conform to the Underwriters' Laboratories requirements for rigid metallic conduit.

Loop wire shall be #14 AWG IMSA Spec 51-7.

Loop lead-in cable shall be #14 AWG stranded, paired conductors, electrically shielded and conforming to IMSA 19-2-1984.

III. CONSTRUCTION. The electrical contractor shall coordinate with the general contractor and inspector to ensure the loops are installed prior to any milling work being performed.

All wiring shall conform to the provisions of the National Electrical Code unless otherwise shown on the details. Where more than one circuit is installed within the same conduit, permanent circuit identification numbers shall be affixed to the wires. All wires shall be permanently labeled within 6 inches of the input file.

Rigid steel conduit encasement shall be provided for all conductors except for overhead installations, where conductors are run inside poles or cabinets and induction loop conductors sealed within pavements. All conduit installations shall conform to the provisions of the National Electrical Code except where directed otherwise. Bonded slip joints will be permitted for joining rigid conduit to junction boxes. Where a standard coupling cannot be used, an approved threaded union coupling shall be used.

All conduit ends shall be reamed to remove burrs and sharp edges. Damaged portions of the galvanized surfaces and untreated threads resulting from field cuts shall be painted with a rust inhibitive paint. Conduit bends shall have a radius of not less than 12 times the nominal diameter of the conduit, unless otherwise shown on the plans. See Typical Grounding Detail.

Conduit which will not be subjected to regular pressure from traffic shall be laid to a depth of not less than 18 inches. At crossings under roadway surfaces and shoulders, the conduit shall be placed at a depth of not less than 24 inches below grade. The contractor will not be permitted to cut any pavement in carrying out conduit installations. After the conduit has been installed and prior to backfilling, the conduit installation shall be inspected and approved by the Engineer.

Contractor shall install underground utility warning tape above the circuit cables as shown on the detail sheets. The tapes shall conform to the APWA-ULCC national color code with black lettering on a red background. The tape shall continuously read "Caution: Electric Line Buried Below" alternating with a 'No Digging' symbol.

The tape shall be durable and colorfast to withstand years of underground burial and easily direct buried. The tape shall be 6" wide and 7 mils (nominal) thick. The tape shall have a minimum tensile strength of 600 lbs./6" width. It shall be color code impregnated with alkali and acid stable, lead-free, organic pigments for direct burial. It shall be ultraviolet colorfast. The tape shall be nondistorting with no elongation.

When backfilling trenches, the backfill material shall be placed and compacted in lifts of 9 inches or less. Any area disturbed as a result of the contractor's operations shall be restored to the satisfaction of the Engineer.

Loop lead-in wire, exclusive of shielded cable, shall be twisted with three to five turns per foot before placement in saw slot, conduit or junction box. Unshielded loop wiring to field terminal connections in cabinet and unshielded loop wiring in loop amplifier connector harness shall also be twisted three to five turns per foot.

Except for the connection of the loop wires to the loop lead-in wires, loops shall be extended splice-free to the controller. Loop wires shown as extended to poles or junction boxes shall be spliced into loop lead-in cable at the poles or boxes. Loop lead-in cable shall be extended splice-free from pole or junction box to controller. Each loop shall have a separate lead-in cable installed. Multiple loops on the same lead-in cable will not be accepted. Splices shall be placed to minimize possibility of water intrusion. The electrical contractor shall coordinate the installation of traffic loops with the paving contractor and the Engineer prior to milling.

Junction boxes shall conform to ANSI/SCTE 77 "Specifications for Underground Enclosure Integrity" for Tier 15. Covers shall have a minimum coefficient of friction of 0.05 in accordance with ASTM C1028, shall be marked "TRAFFIC" and be attached with 3/8 " stainless hex bolts. Junction boxes shall be installed flush with finished grade. See Junction Box Type B detail.

All splices shall be made with butt splices. Butt splices shall be copper and of the correct wire range. Butt splices shall be covered with a 3M Mastic Pad or approved equal and then taped with a 3M brand #33 electrical tape. Mastic pad must cover at least 3 inches past each end of butt splice. Underground splices include splices in junction boxes and

pole bases. Each conductor shall be encased in a separate splice kit. Cost of the splices shall be incidental to the cost of wire or cable. The splicing specification listed here takes precedence over any other splicing specifications listed in the Standard Specifications for Road and Bridge Construction.

Induction loop conductors shall test free of shorts and unauthorized grounds and shall have an insulating resistance of at least 100 megohms when tested with a 500 volt direct current potential in a reasonably dry atmosphere between conductors and ground.

Each Contractor submitting a bid for this work shall make a thorough inspection of the site prior to submitting his bid and shall thoroughly familiarize himself with existing conditions so that the work can be expeditiously performed after a Contract is awarded. Submission of a bid will be considered evidence of this inspection having been made. Any claims resulting from site conditions will not be honored by the Department.

Information provided in this proposal and the types and quantities of work listed are not to be taken as an accurate or complete evaluation of the material and conditions to be encountered during construction. The bidder must draw his own conclusion as to the conditions encountered. The Department does not give any guarantee as to the accuracy of the data and no claim will be considered for additional compensation if the conditions encountered are not in accordance with the information shown.

It is not anticipated that utility facilities will need to be relocated and/or adjusted; however, in the event that it is discovered that the work does require that utilities be relocated and/or adjusted, the utility companies will work concurrently with the Contractor while relocating their facilities.

The Contractor will be responsible for all damage to public and/or private property resulting from his work. Upon completion of the work, restore all disturbed highway features in like kind design and materials. Clean the site and dispose of all waste and debris off the right-of-way at sites obtained by the Contractor at no additional cost to the Department. Sow all disturbed earthen areas with Seed Mixture No. 1.

IV. MEASUREMENT.

Conduit shall include furnishing and installing specified conduit in accordance with specifications. This item includes conduit fittings, expansion joints, clamps, and weatherheads.

Junction box shall include furnishing and installing specified junction box in accordance with the specifications and shown on the Junction Box Type B detail. This item includes #57 aggregate, backfilling, and the restoration of disturbed areas to the satisfaction of the Engineer.

Trenching and backfilling shall include excavation, backfilling, and the restoration of disturbed areas to the satisfaction of the Engineer. Incidental to this item shall be

furnishing and installing underground utility warning tape as shown on the Depth of Conduit detail.

Wire or **cable** shall include furnishing and installing specified wire or cable within conduit, saw slot, or overhead as required. Incidental to this item shall be furnishing and installing splice boots, cable rings or other hardware required for installing cable. Wire installed in saw slots shall be installed as shown on the Saw Slot detail. The contractor shall install all cable runs splice-free from the controller to each loop wire the cable is feeding. Exceptions to this must be approved by the Engineer. The removal of existing lead-in cable shall be incidental to this item. The removal of existing lead-in cable shall be incidental to this item.

Loop saw slot and fill shall include sawing, cleaning saw slot as well as furnishing and installing loop sealant, backer rod and non-shrink grout as shown on the details. The contractor shall saw according to the dimensions shown on the detail sheets and not cut out any sections of pavement by over-sawing any slot. The ¾" conduit referenced in the Loop Wire Transition details is incidental to this project and not a separate pay item.

V. PAYMENT. The Department will make payment for completed and accepted quantities under the following:

Code	Pay Item	Pay Unit
4793	Conduit 1 ¼"	Linear Foot
4795	Conduit 2"	Linear Foot
4811	Junction Box Type B	Each
4820	Trenching and Backfilling	Linear Foot
4830	Loop Wire	Linear Foot
4850	Cable-No. 14/1 Pair	Linear Foot
4895	Loop Saw Slot and Fill	Linear Foot

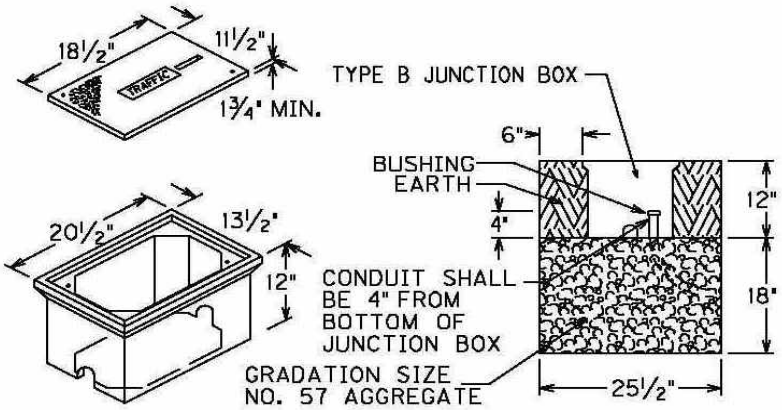

JUNCTION BOXES SHALL CONFORM TO ANSI/SCTE 77 "SPECIFICATIONS FOR UNDERGROUND ENCLOSURE INTEGRITY" FOR TIER 15. COVERS SHALL HAVE A MINIMUM COEFFICIENT OF FRICTION OF 0.05 IN ACCORDANCE WITH ASTM C1028. SHALL BE MARKED "TRAFFIC" AND BE ATTACHED WITH ⅜" STAINLESS HEX BOLTS. JUNCTION BOXES SHALL BE INSTALLED FLUSH WITH FINISHED GRADE.

JUNCTION BOX TYPE B

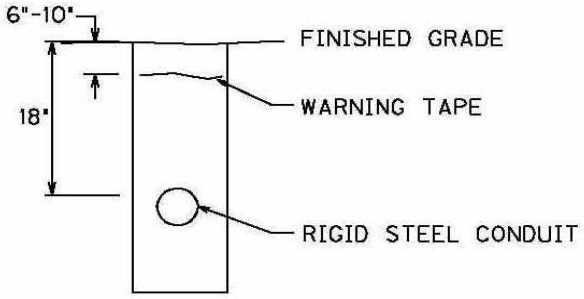

DEPTH OF CONDUIT

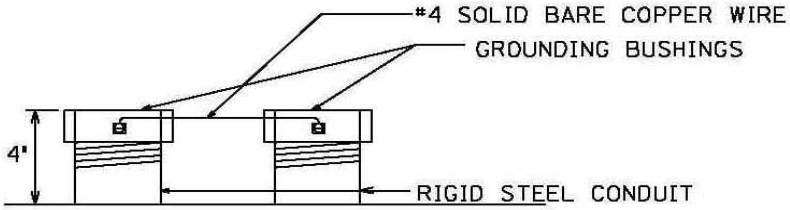

TYPICAL GROUNDING DETAIL

LOOP WIRES SHALL BE ENCAPSULATED WITH LOOP SEALANT PER MANUFACTURER'S INSTRUCTIONS. ALL LOOP SEALANT SHALL BE COVERED WITH A CONTINUOUS LAYER OF BACKER ROD. BACKER ROD SHALL BE INSTALLED SUCH THAT NO VOIDS ARE PRESENT BETWEEN LOOP SEALANT AND BACKER ROD. FILL REMAINING SAW SLOT WITH NON-SHRINK GROUT PER MANUFACTURER'S INSTRUCTIONS. IF LOOP IS INSTALLED AFTER FINAL SURFACE HAS BEEN APPLIED, INSTALL 1/2" OF LOOP SEALANT ON TOP OF NON-SHRINK GROUT. LOOP SEALANT SHALL BE STOPPED 1/8" BELOW FINISHED SURFACE.

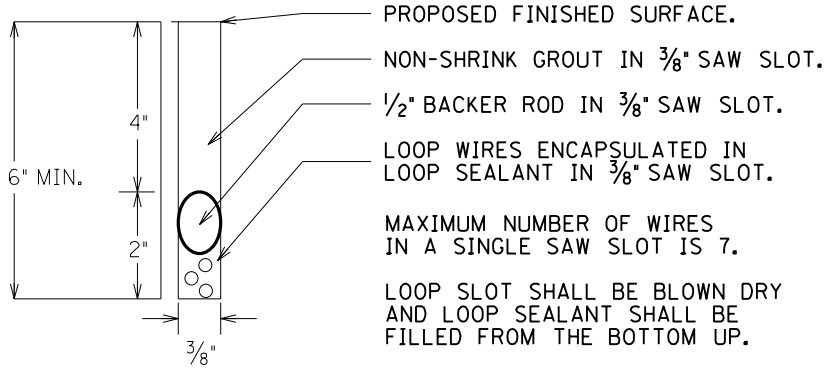

SAW SLOT DETAIL FOR NON PREFORMED

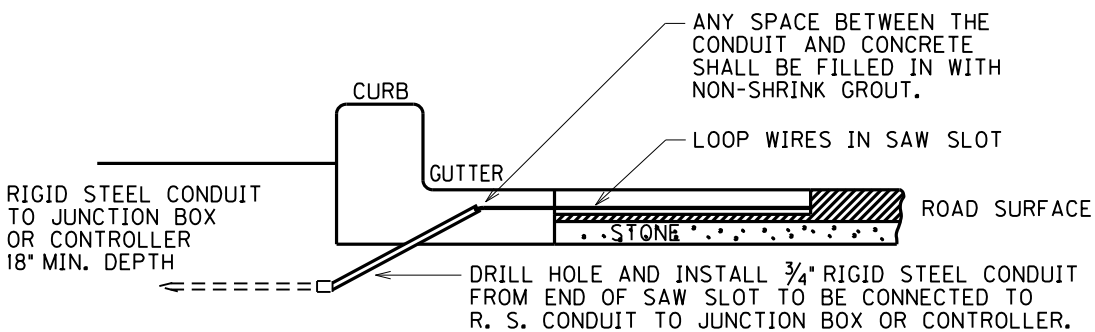

LOOP WIRE TRANSITION - CONCRETE CURB

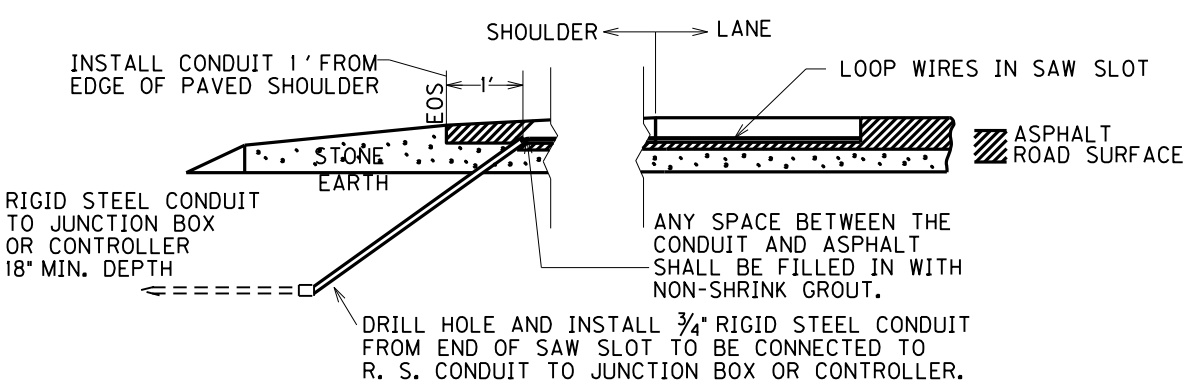

LOOP WIRE TRANSITION - FLAT SHOULDER

10/2010

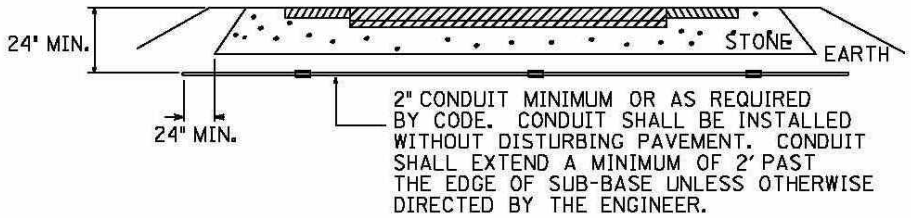

CONDUIT UNDER EXISTING PAVEMENT DETAIL

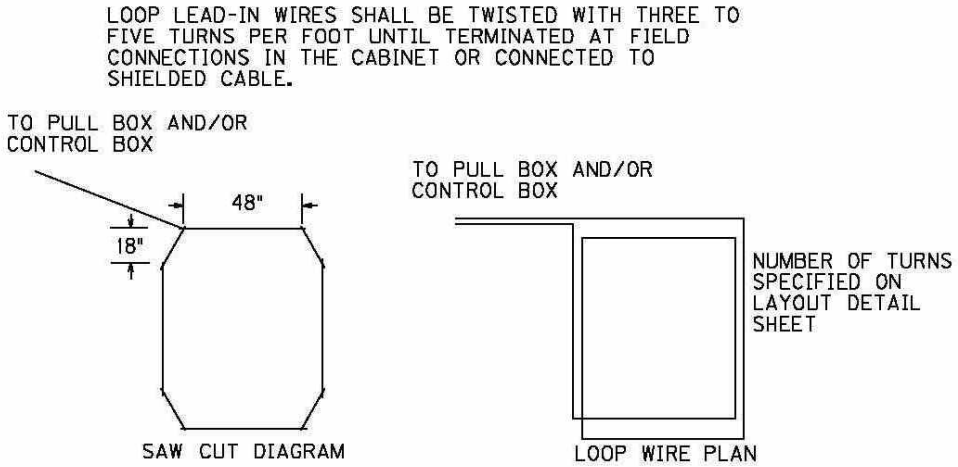

STANDARD LOOP

*ALL 6'x6' LOOPS SHALL BE STANDARD

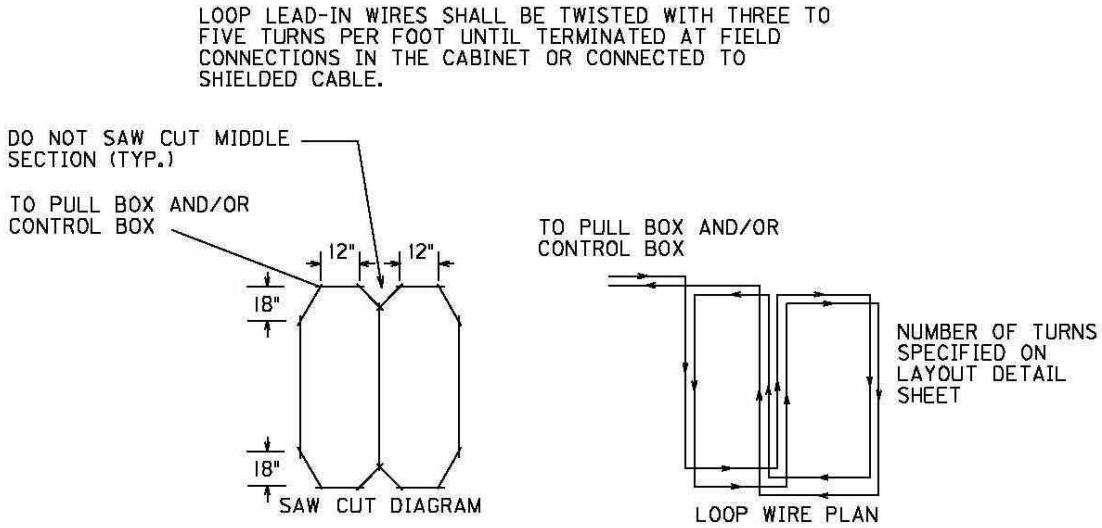

QUADRAPOLE LOOP

*ALL 6'x30' LOOPS SHALL BE QUADRAPOLE

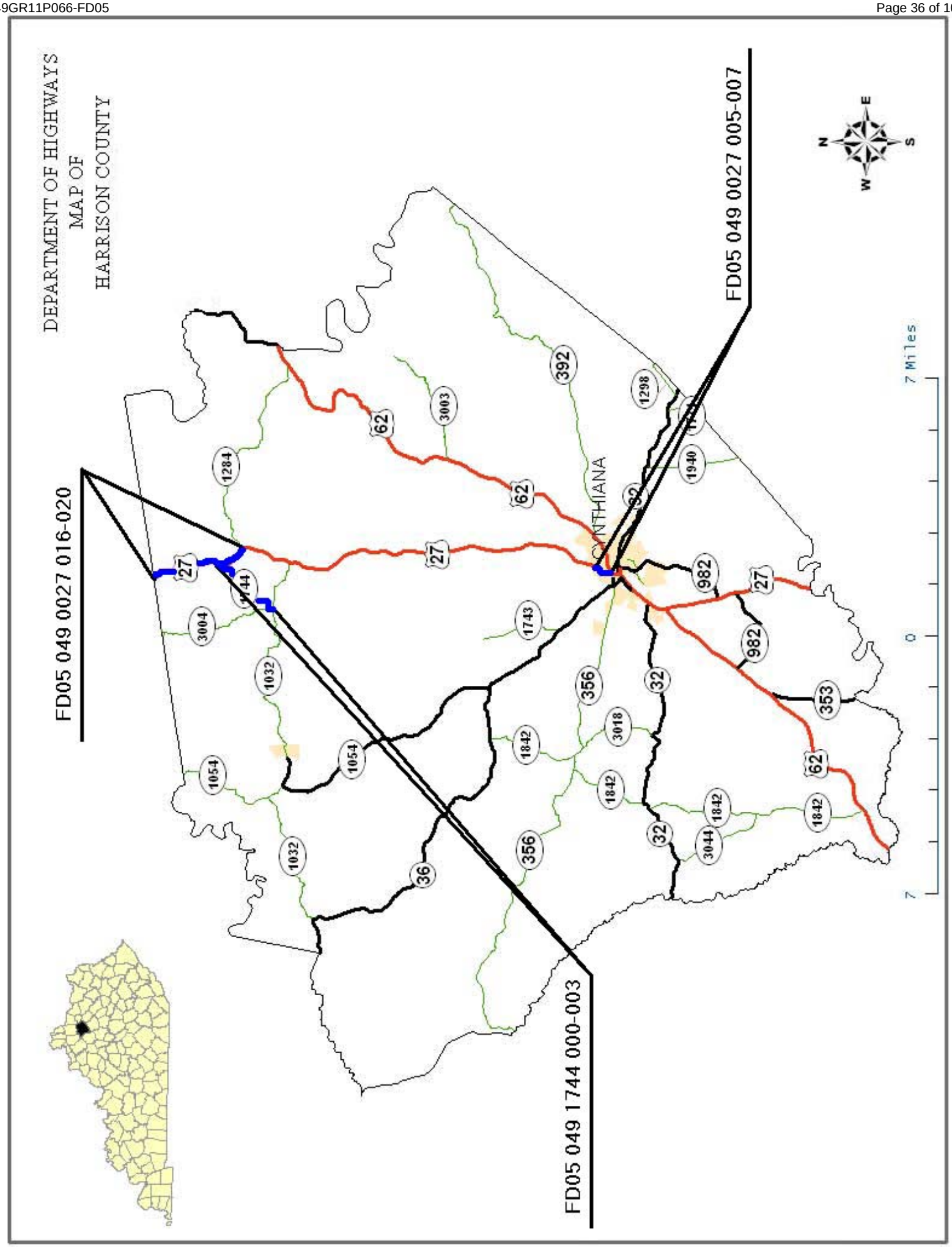
DEPARTMENT OF HIGHWAYS
MAP OF
HARRISON COUNTY
FD05 049 0027 016-020
FD05 049 0027 005-007
FD05 049 1744 000-003
CYNTHIANA
N
E
S
W
7 Miles
0
7
27
62
392
1298
3003
1284
1940
982
3004
1744
1743
1032
356
32
353
1054
1842
3018
3044
36

MATERIAL SUMMARY CONTRACT ID: 112170

FD05 049 0027 005-007 PES NO: MP04900271101
MAIN STREET (US 27) FROM PIKE STREET (KY 32) (MP 5.820) EXTENDING NORTHERLY TO PEARL STREET (MP 6.100), A DISTANCE OF 0.280000 MILES.

LINE NO	BID CODE	DESCRIPTION	QUANTITY	UNIT
0010	00190	LEVELING & WEDGING PG64-22	14.00	TON
0020	00388	CL3 ASPH SURF 0.38B PG64-22	475.00	TON
0030	02562	SIGNS	310.00	SQFT
0040	02650	MAINTAIN & CONTROL TRAFFIC US 27 005-007	1.00	LS
0050	02676	MOBILIZATION FOR MILL & TEXT US 27 005-007	1.00	LS
0060	02677	ASPHALT PAVE MILLING & TEXTURING	475.00	TON
0070	04830	LOOP WIRE	305.00	LF
0080	04895	LOOP SAW SLOT AND FILL	202.00	LF
0090	06510	PAVE STRIPING-TEMP PAINT-4 IN	3,800.00	LF
0100	06514	PAVE STRIPING-PERM PAINT-4 IN	3,170.00	LF
0110	06565	PAVE MARKING-THERMO X-WALK-6 IN	468.00	LF
0120	06568	PAVE MARKING-THERMO STOP BAR-24IN	102.00	LF
0130	06573	PAVE MARKING-THERMO STR ARROW	2.00	EACH
0140	06574	PAVE MARKING-THERMO CURV ARROW	2.00	EACH
0150	06576	PAVE MARKING-THERMO ONLY	1.00	EACH
0160	10020NS	FUEL ADJUSTMENT	669.00	DOLL
0170	10030NS	ASPHALT ADJUSTMENT	1,178.00	DOLL
0180	02569	DEMOBILIZATION	1.00	LS

FD05 049 0027 016-020 PES NO: MP04900271102
FALMOUTH ROAD (US 27) FROM KY 1284 (MP 16.681) EXTENDING NORTHERLY TO PENDLETON COUNTY LINE (MP 19.416), A DISTANCE OF 2.740000 MILES.

LINE NO	BID CODE	DESCRIPTION	QUANTITY	UNIT
0010	00190	LEVELING & WEDGING PG64-22	270.00	TON
0020	00301	CL2 ASPH SURF 0.38D PG64-22	3,885.00	TON
0030	02562	SIGNS	270.00	SQFT
0040	02650	MAINTAIN & CONTROL TRAFFIC US 27 016-020	1.00	LS
0050	02676	MOBILIZATION FOR MILL & TEXT US 27 016-020	1.00	LS
0060	02677	ASPHALT PAVE MILLING & TEXTURING	20.00	TON
0070	02696	SHOULDER RUMBLE STRIPS-SAWED	28,882.00	LF
0080	02775	ARROW PANEL	1.00	EACH
0090	06510	PAVE STRIPING-TEMP PAINT-4 IN	12,000.00	LF
0100	06514	PAVE STRIPING-PERM PAINT-4 IN	60,404.00	LF
0110	06600	REMOVE PAVEMENT MARKER TYPE V	489.00	EACH
0120	10020NS	FUEL ADJUSTMENT	5,592.00	DOLL
0130	10030NS	ASPHALT ADJUSTMENT	9,853.00	DOLL
0140	23821EC	CENTERLINE RUMBLE STRIPS-12 IN	14,441.00	LF
0150	02569	DEMOBILIZATION	1.00	LS

MATERIAL SUMMARY CONTRACT ID: 112170

FD05 049 1744 000-003 PES NO: MP04917441101
BENSON PIKE (KY 1744) FROM KY 1032 (MP 0.00) EXTENDING EASTERLY TO US 27 (MP 2.253),
A DISTANCE OF 2.250000 MILES.

LINE NO	BID CODE	DESCRIPTION	QUANTITY	UNIT
0010	00001	DGA BASE	230.00	TON
0020	00190	LEVELING & WEDGING PG64-22	44.00	TON
0030	00301	CL2 ASPH SURF 0.38D PG64-22	1,279.00	TON
0040	02562	SIGNS	100.00	SQFT
0050	02650	MAINTAIN & CONTROL TRAFFIC KY 1744	1.00	LS
0060	02676	MOBILIZATION FOR MILL & TEXT KY 1744	1.00	LS
0070	02677	ASPHALT PAVE MILLING & TEXTURING	22.00	TON
0080	02775	ARROW PANEL	1.00	EACH
0090	10020NS	FUEL ADJUSTMENT	1,749.00	DOLL
0100	10030NS	ASPHALT ADJUSTMENT	3,081.00	DOLL
0110	02569	DEMOBILIZATION	1.00	LS

Harrison County
TRAFFIC LOOP SUMMARY
FD05-049-0027-005-007

MPT.	INTERSECTION	SAW, SLOT AND FILL LF	LOOP WIRE LF	CONDUIT 1 1/4 INCH LF	CABLE NO. 14 LF	FIBER OP. LF	JUNCTION TYPE B EA	10X8X4 EA			NOTES
5.82	US 27 S/Pike Street	202	305								
TOTAL		202	305	0	0	0	0	0			

NOTES:

Harrison County
THERMOPLASTIC INTERSECTION PAVEMENT MARKINGS SUMMARY
FD05-049-0027-005-007

MPT.	INTERSECTION	X-WALKS	STP BARS	ARROWS			"ONLY"	CATRAXX	RAILROAD		NOTES
		6 INCH	24 INCH	CURVE	STR	COMB		6 INCH	"R" 6 FOOT	CROSS BUCK 16"	
		LF	LF	EA	EA	EA	EA	LF	EA	LF	
5.82	Pike St (KY 32)	150	24	2	2		1				
5.86	Renaker Aly	52									
5.911	E. Pleasant St (KY 36)	114	38								
5.996	W. Mill St (US 62)	152	40								
TOTAL		468	102	2	2	0	1	0	0	0	

HARRISON COUNTY
KY 1744
TYPICAL SECTION
FD05 049 1744 000-003
MILEPOINTS 0.000 - 2.253

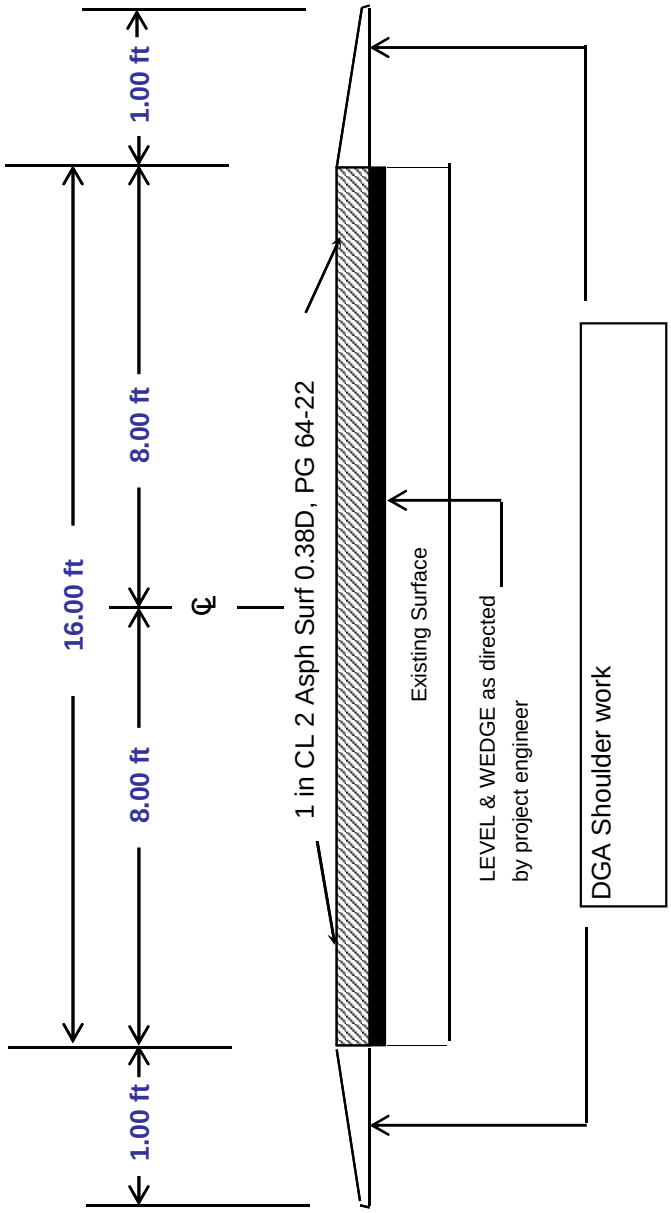

HARRISON COUNTY
US 27
TYPICAL SECTION
FD05 049 0027 005-007
MILEPOINTS 5.820 - 5.860

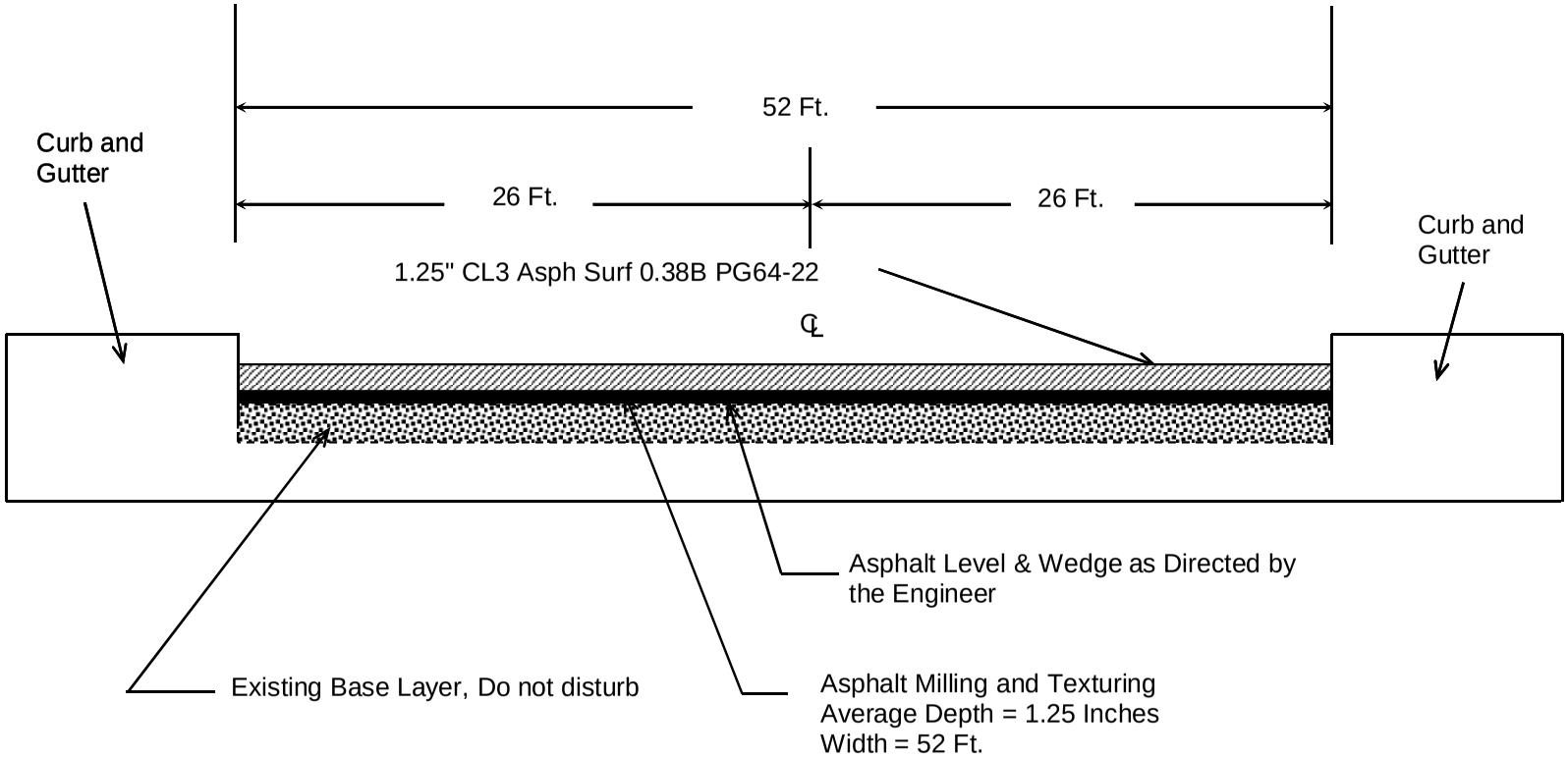

HARRISON COUNTY
US 27
TYPICAL SECTION
FD05 049 0027 005-007
MILEPOINTS 5.860 - 6.100

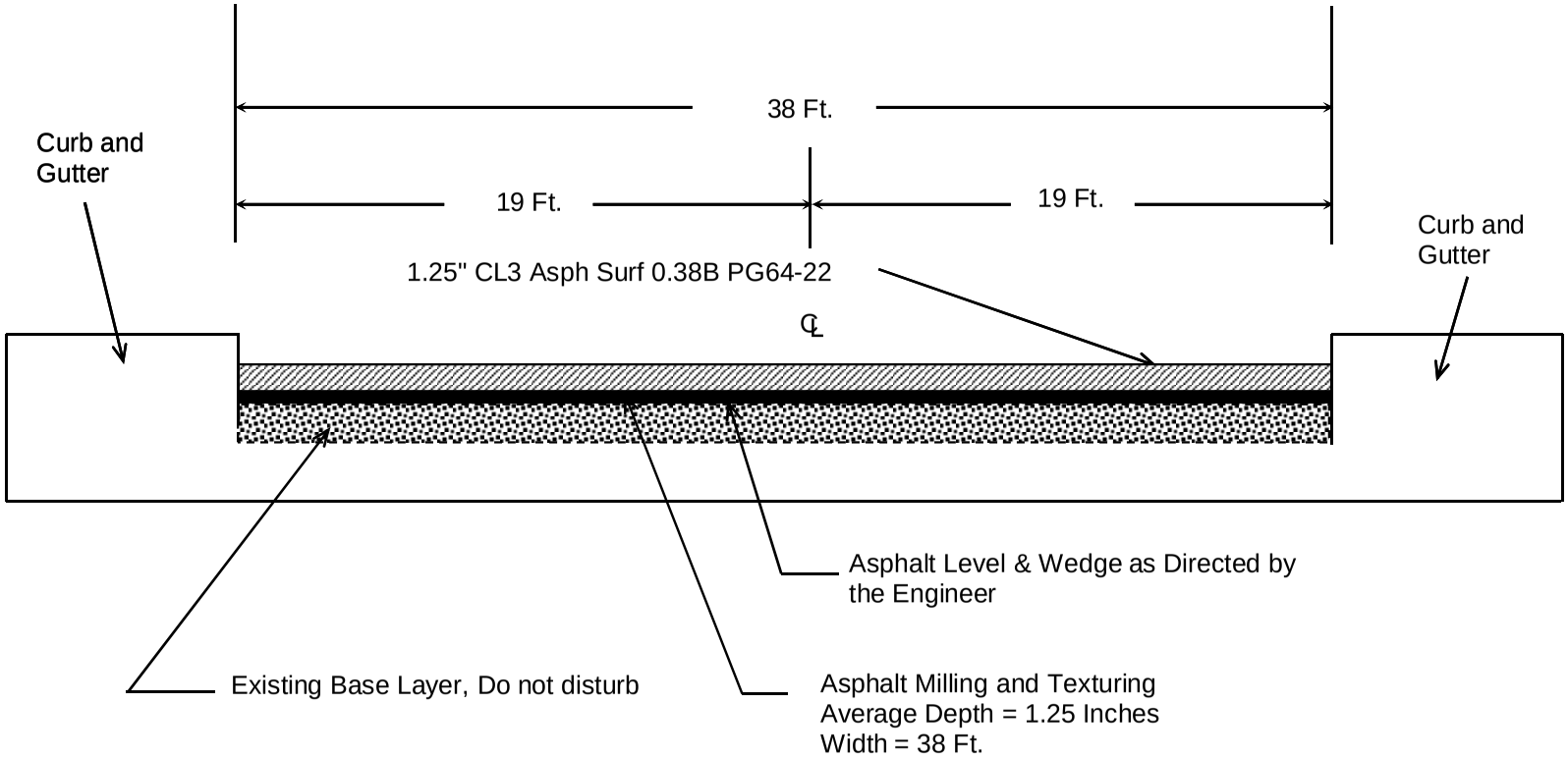

HARRISON COUNTY
US 27
TYPICAL SECTION
FD05 049 0027 016-020
MILEPOINTS 16.681 - 16.900
MILEPOINTS 17.806 - 17.943

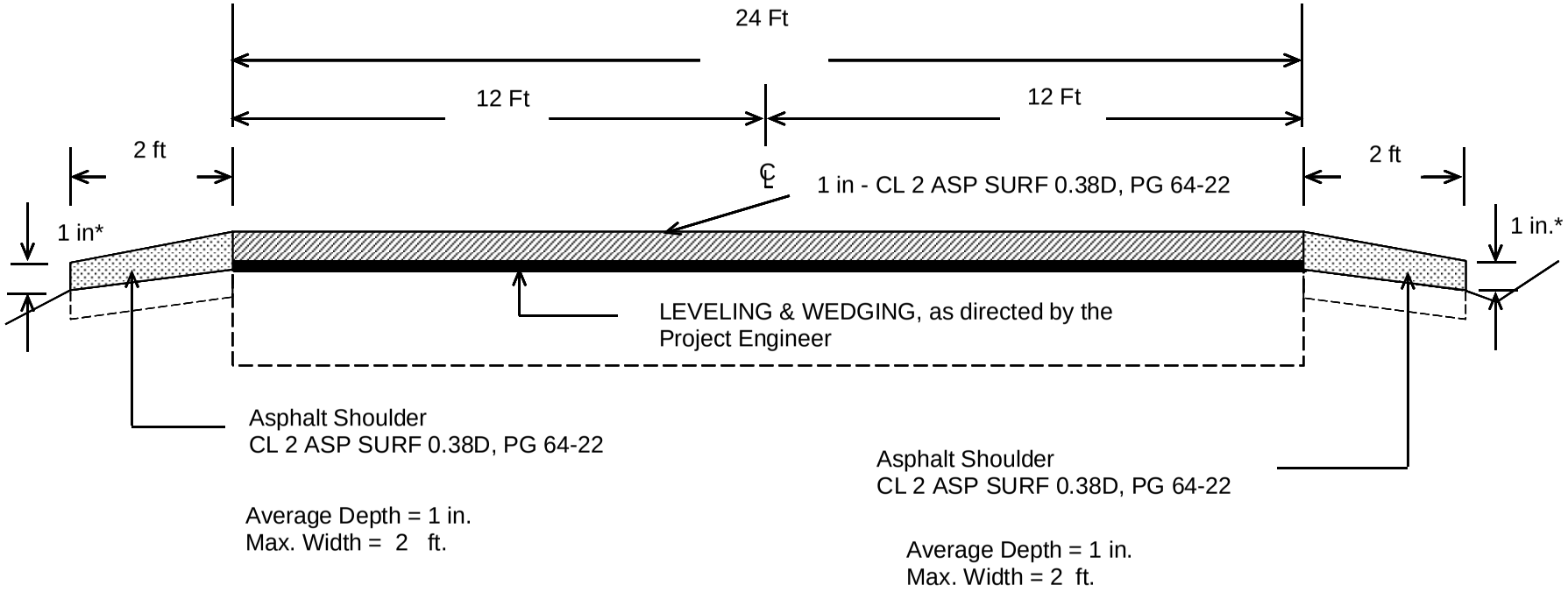

***1" Maximum Drop-Off**
Where Existing Site Conditions Permit

HARRISON COUNTY
US 27
TYPICAL SECTION
FD05 049 0027 016-020
MILEPOINTS 16.900 - 17.806

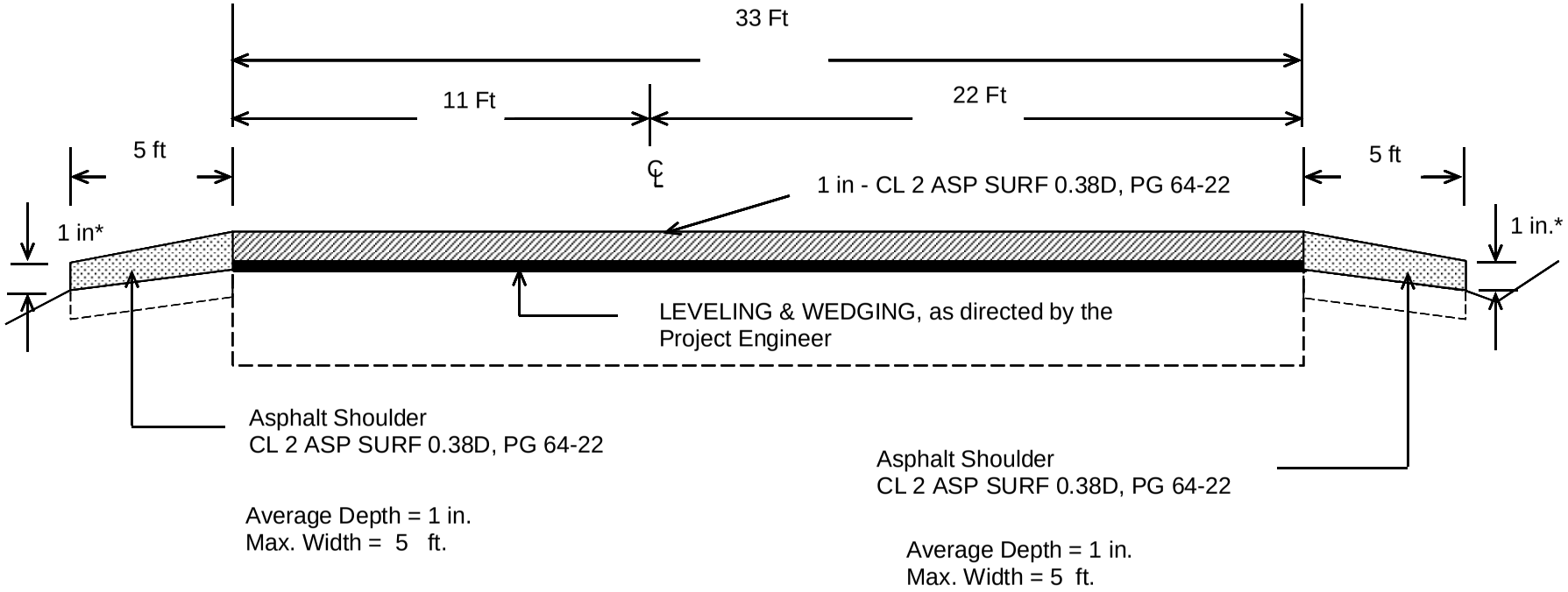

***1" Maximum Drop-Off**
Where Existing Site Conditions Permit

HARRISON COUNTY
US 27
TYPICAL SECTION
FD05 049 0027 016-020
MILEPOINTS 17.943 - 19.050

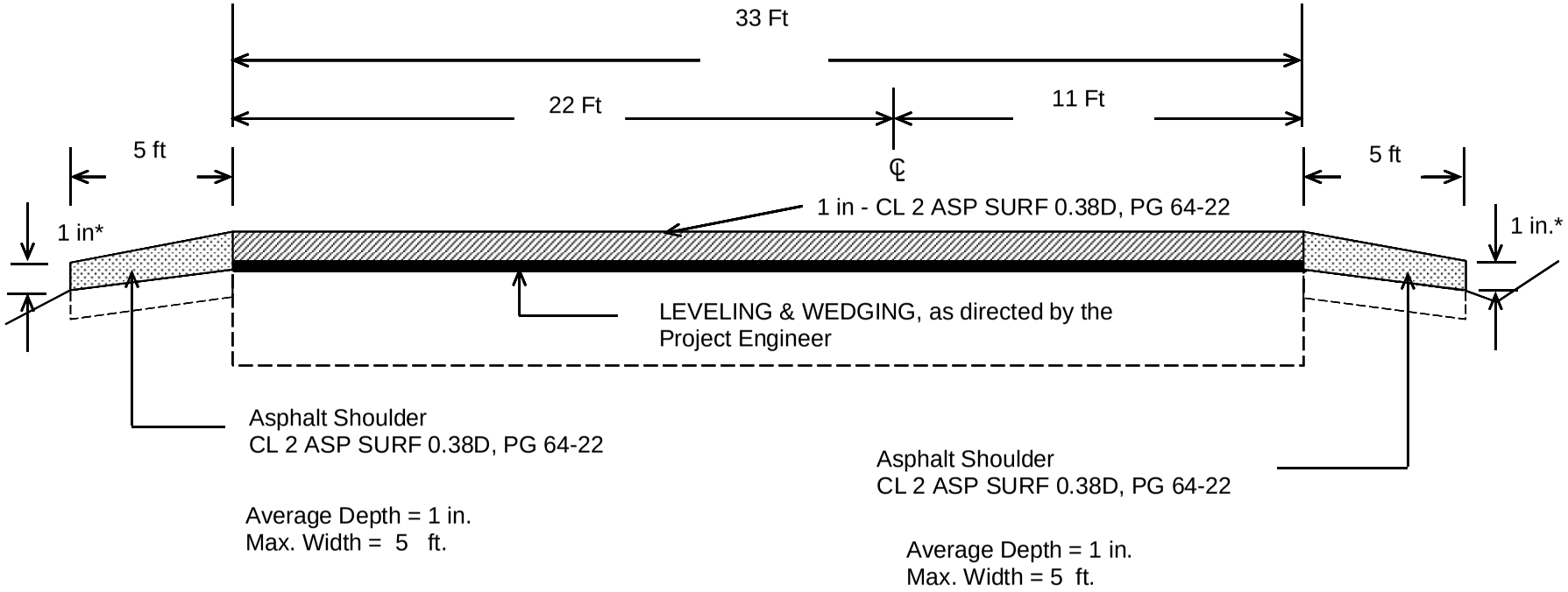

***1" Maximum Drop-Off**
Where Existing Site Conditions Permit

HARRISON COUNTY
US 27
TYPICAL SECTION
FD05- 049 0027-016-020
MILEPOINTS 19.050 - 19.300

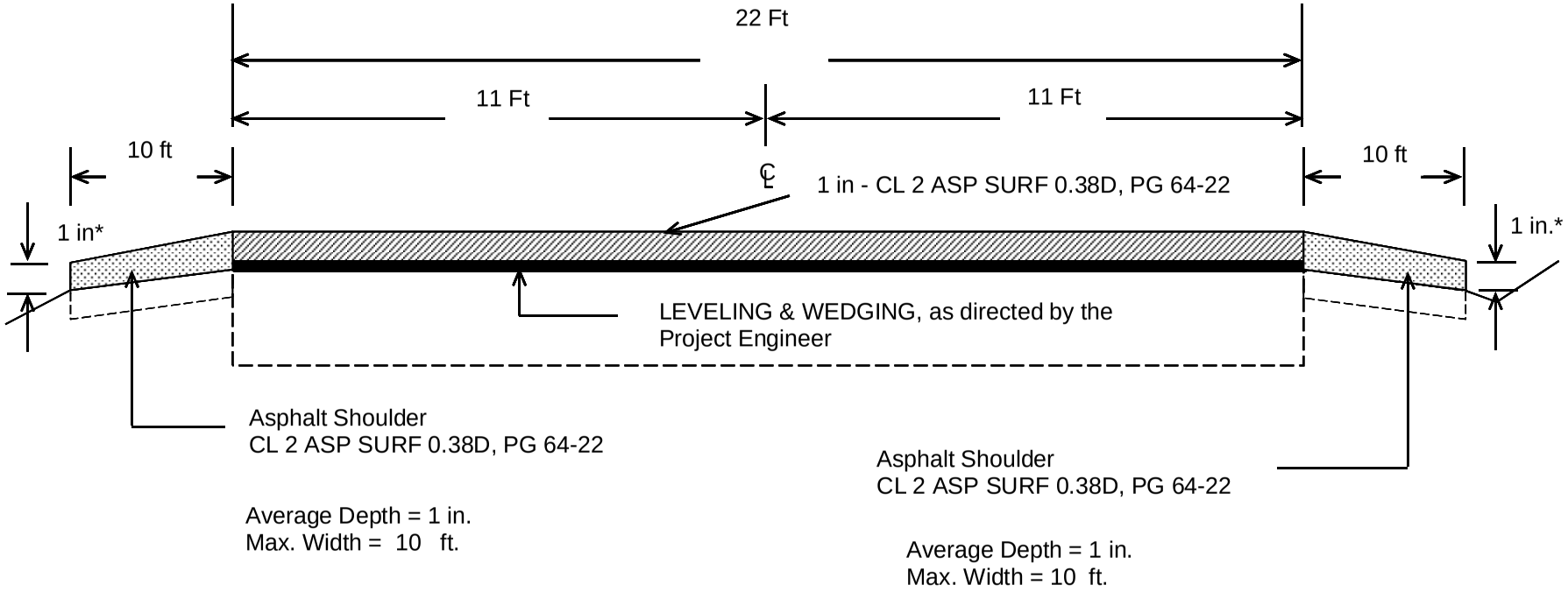

***1" Maximum Drop-Off**
Where Existing Site Conditions Permit

HARRISON COUNTY
US 27
TYPICAL SECTION
FD05- 049 0027-016-020
MILEPOINTS 19.300 - 19.416

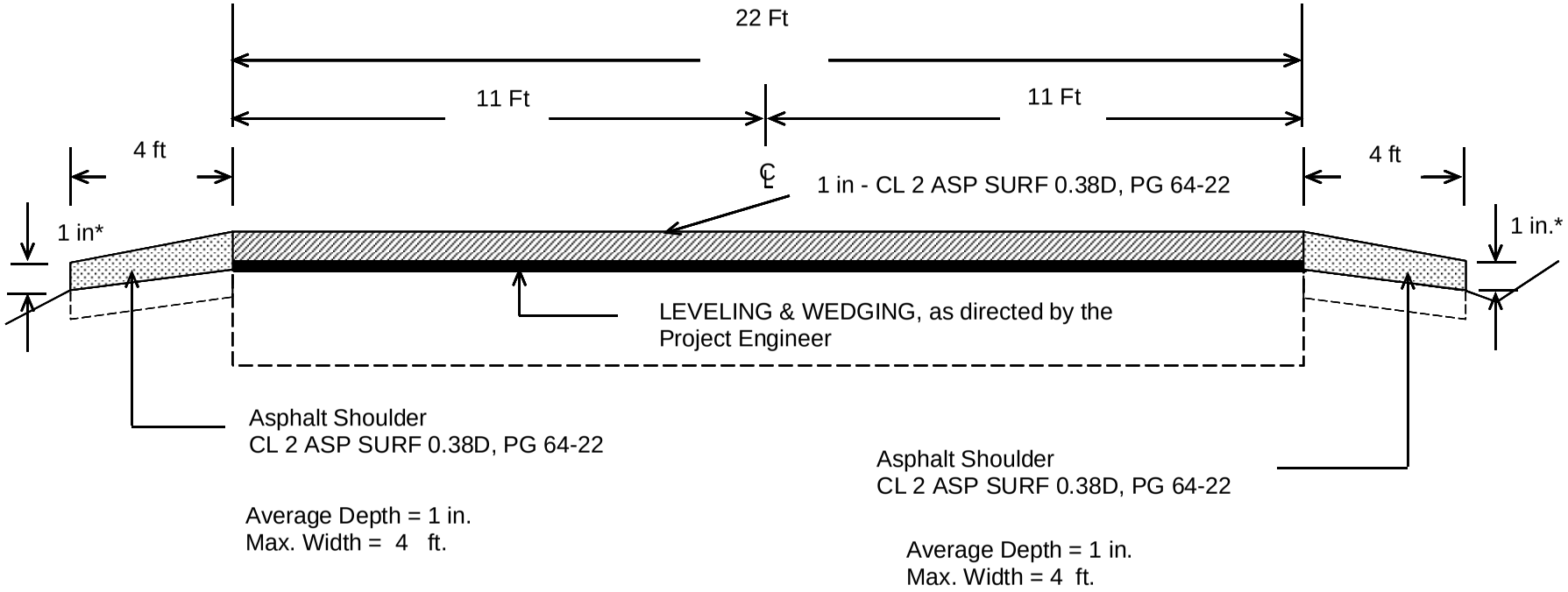

***1" Maximum Drop-Off**
Where Existing Site Conditions Permit

BRIDGE DETAIL FOR PAVING PROJECT
(US 27 MP 016-020)

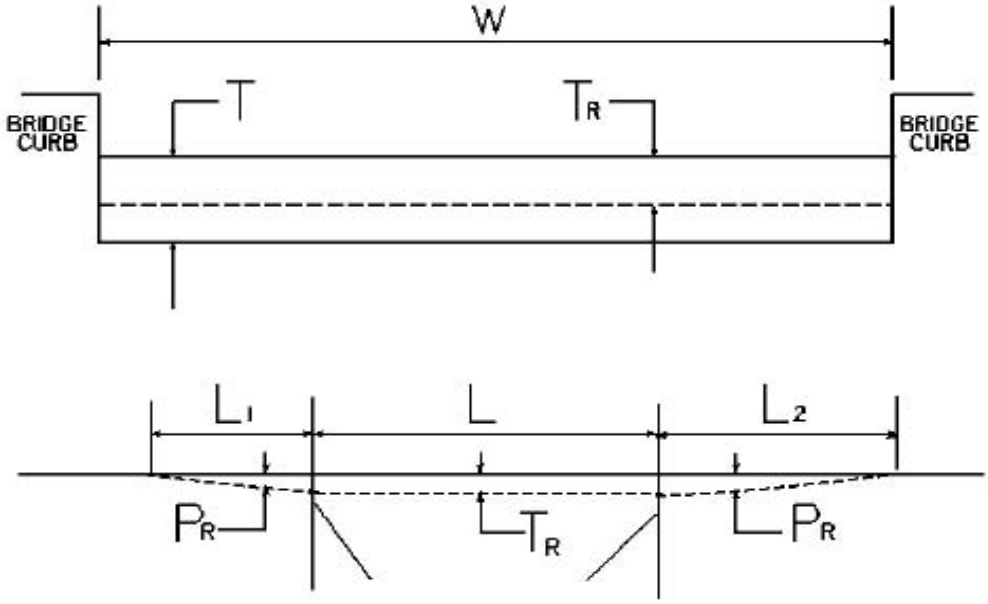

W = bridge width curb to curb
T = thickness of existing asphalt overlay
L = length of bridge
L_1 & L_2 = length of approach pavement to be removed
T_R = thickness to be removed and replaced on bridge
P_R = thickness to be removed and replaced on pavement
Note: L_1 & L_2 lengths shall be determined by using a transition rate of 100 ft/in of thickness

Route	Bridge No.	MP	W (ft)	T (in)	L_1 (ft)	L_2 (ft)	T_R (in)	L (ft)	P_R (in)
US 27	B00069	19.162	40.35	0.00	100.00	100.00	0.00	102.00	1.00

01/01/2009

PART II

SPECIFICATIONS AND STANDARD DRAWINGS

SPECIFICATIONS REFERENCE

Any reference in the plans or proposal to the *Standard Specifications for Road and Bridge Construction, Edition of 2004,* and *Standard Drawings, Edition of 2000* are superseded by *Standard Specifications for Road and Bridge Construction, Edition of 2008* and *Standard Drawings, Edition of 2003 with the 2008 Revision.*

Supplemental Specifications to The Standard Specifications for Road and Bridge Construction, 2008 Edition

(Effective with the March 18, 2011 Letting)

SUBSECTION: **REVISION:**	101.02 Abbreviations. Insert the following abbreviation and text into the section: KEPSC Kentucky Erosion Prevention and Sediment Control
SUBSECTION: **REVISION:**	101.03 Definitions. Replace the definition for Specifications – *Special Provisions* with the following: Additions and revisions to the Standard and Supplemental Specifications covering conditions peculiar to an individual project.
SUBSECTION: **REVISION:**	102.03 Contents of the Bid Proposal Form. Replace the first sentence of the first paragraph with the following: The Bid Proposal form will be available on the Department internet website (http://transportation.ky.gov/contract/). Delete the second paragraph. Delete the last paragraph.
SUBSECTION: **REVISION:**	102.04 Issuance of Bid Proposal Form. Replace Heading with the following: 102.04 Bidder Registration. Replace the first sentence of the first paragraph with the following: The Department reserves the right to disqualify or refuse to place a bidder on the eligible bidder's list for a project for any of the following reasons: Replace the last sentence of the subsection with the following: The Department will resume placing the bidder on the eligible bidder's list for projects after the bidder improves his operations to the satisfaction of the State Highway Engineer.
SUBSECTION: **REVISION:**	102.06 Examination of Plans, Specifications, Special Provisions, Special Notes, and Site of Work. Replace the first paragraph with the following: Examine the site of the proposed work, the Bid Proposal, Plans, specifications, contract forms, and bulletins and addendums posted to the Department's website and the Bid Express Bidding Service Website before submitting the Bid Proposal. The Department considers the submission of a Bid Proposal prima facie evidence that the bidder has made such examination and is satisfied as to the conditions to be encountered in performing the work and as to the requirements of the Contract.
SUBSECTION: **REVISION:**	102.07.01 General. Replace the first sentence with the following: Submit the Bid Proposal on forms furnished on the Bid Express Bidding Service website (www.bidx.com). Replace the first sentence of the third paragraph with the following: Bid proposals submitted shall use an eligible Digital ID issued by Bid Express.

Supplemental Specifications to The Standard Specifications for Road and Bridge Construction, 2008 Edition

(Effective with the March 18, 2011 Letting)

SUBSECTION: **REVISION:**	102.07.02 Computer Bidding. Replace the first paragraph with the following: Subsequent to registering for a specific project, use the Department's Expedite Bidding Program on the internet website of the Department of Highways, Division of Construction Procurement (http://transportation.ky.gov/contract/). Download the bid file from the Bid Express Bidding Service Website to prepare a Bid Proposal for submission to the Department. Submit Bid Proposal electronically through Bid Express Bidding Service. Delete the second and third paragraph.
SUBSECTION: **REVISION:**	102.08 Irregular Bid Proposals. Delete the following from the first paragraph: 4) fails to submit a disk created from the Highway Bid Program. Replace the second paragraph with the following: The Department will consider Bid Proposals irregular and may reject them for the following reasons: 1) when there are unauthorized additions, conditional or alternate bids, or irregularities of any kind which may tend to make the Bid Proposal incomplete, indefinite, or ambiguous as to its meaning; or 2) when the bidder adds any provisions reserving the right to accept or reject an award, or to enter into a Contract pursuant to an award; or 3) any failure to comply with the provisions of Subsection 102.07; or 4) Bid Proposals in which the Department determines that the prices are unbalanced; or when the sum of the total amount of the Bid Proposal under consideration exceeds the bidder's Current Capacity Rating.
SUBSECTION: **REVISION:**	102.09 Bid Proposal Guaranty. Insert the following after the first sentence: Bid Proposals must have a bid proposal guaranty in the amount indicated in the bid proposal form accompany the submittal. A guaranty in the form of a paper bid bond, cashier's check, or certified check in an amount no less than the amount indicated on the submitted electronic bid is required when the electronic bid bond was not utilized with the Bid Express Bidding Service. Paper bid bonds must be delivered to the Division of Construction Procurement prior to the time of the letting.
SUBSECTION: **REVISION:**	102.10 Delivery of Bid Proposals. Replace paragraph with the following: Submit all Bid Proposals prior to the time specified in the Notice to Contractors. All bids shall be submitted electronically using Bid Express Bidding Services. Electronically submitted bids must be done in accordance with the requirements of the Bid Express Bidding Service.
SUBSECTION: **REVISION:**	102.11 Withdrawal or Revision of Bid Proposals. Replace the paragraph with the following: Bid Proposals can be withdrawn in accordance the requirements of the Bid Express Bidding Service prior to the time of the Letting.

Supplemental Specifications to The Standard Specifications for Road and Bridge Construction, 2008 Edition

(Effective with the March 18, 2011 Letting)

SUBSECTION: **REVISION:**	102.13 Public Opening of Bid Proposals. Replace Heading with the following: 102.13 Public Announcement of Bid Proposals. Replace the paragraph with the following: The Department will publicly announce all Bid Proposals at the time indicated in the Notice to Contractors.
SUBSECTION: **REVISION:**	103.02 Award of Contract. Replace the first sentence of the third paragraph with the following: The Department will normally award the Contract within 10 working days after the date of receiving Bid Proposals unless the Department deems it best to hold the Bid Proposals of any or all bidders for a period not to exceed 60 calendar days for final disposition of award.
SUBSECTION: **REVISION:**	105.02 Plans and Working Drawings. Insert the following after the fourth paragraph: Submit electrical shop drawings, design data, and descriptive literature for materials in electronic format to the Division of Traffic Operations for approval. Drawings and literature shall be submitted for lighting and signal components. Notify the Engineer when submitting information to the Division of Traffic Operations. Do not begin work until shop drawings are approved. Submit shop drawings for traffic counting equipment and materials in electronic format to the Engineer or the Division of Planning. Notify the Engineer when submitting information directly to the Division of Planning. Do not begin work until shop drawings are reviewed and approved.
SUBSECTION: **REVISION:**	105.03 Record Plans. Replace the section with the following: Record Plans are those reproductions of the original Plans on which the accepted Bid Proposal was based and, and signed by a duly authorized representative of the Department. The Department will make these plans available for inspection in the Central Office at least 24 hours prior to the time of opening bids and up to the time of letting of a project or projects. The quantities appearing on the Record Plans are the same as those on which Bid Proposals are received. The Department will use these Record Plans as the controlling plans in the prosecution of the Contract. The Department will not make any changes on Record Plans subsequent to their issue unless done so by an approved contract modification. The Department will make 2 sets of Record Plans for each project, and will maintain one on file in the Central Office and one of file in the District Office. The Department will furnish the Contractor with the following: 1 full size, 2 half size and an electronic file copy of the Record Plans at the Pre-Construction conference.

Supplemental Specifications to The Standard Specifications for Road and Bridge Construction, 2008 Edition

(Effective with the March 18, 2011 Letting)

SUBSECTION: **REVISION:**	105.12 Final Inspection and Acceptance of Work. Insert the following paragraphs after the first paragraph: Notify the Engineer when all electrical items are complete. A notice of the electrical work completion shall be made in writing to the Contractor. Electrical items will be inspected when the electrical work is complete and are not subject to waiting until the project as a whole has been completed. The Engineer will notify the Division of Traffic Operations within 3 days that all electrical items are complete and ready for a final inspection. A final inspection will be completed within 90 days after the Engineer notifies the Division of Traffic Operations of the electrical work completion. Energize all electrical items prior to notifying the Engineer that all electrical items are complete. Electrical items must remain operational until the Division of Traffic Operations has inspected and accepted the electrical portion of the project. Payment for the electrical service is the responsibility of the Contractor from the time the electrical items are energized until the Division of Traffic Operations has accepted the work. Complete all corrective work within 90 calendar days of receiving the original electrical inspection report. Notify the Engineer when all corrective work is complete. The Engineer will notify the Division of Traffic Operations that the corrective work has been completed and the project is ready for a follow-up inspection. Upon re-inspection, if additional corrective work is required, complete within the same 90 calendar day allowance. The Department will not include time between completion of the corrective work and the follow up electrical inspection(s). The 90 calendar day allowance is cumulative regardless of the number of follow-up electrical inspections required. The Department will assume responsibility for the electrical service on a project once the Division of Traffic Operations gives final acceptance of the electrical items on the project. The Department will also assume routine maintenance of those items. Any damage done to accepted electrical work items by other Contractors shall be the responsibility of the Prime Contractor. The Department will not be responsible for repairing damage done by other contractors during the construction of the remaining project. Failure to complete the electrical corrective work within the 90 calendar day allowance will result in penalties assessed to the project. Penalties will be assessed at ½ the rate of liquidated damages established for the contract. Replace the following in the second sentence of the second paragraph: Replace Section 213 with Section 212. Delete the fifth paragraph from the section.
SUBSECTION: **REVISION:**	105.13 Claim Resolution Process. Replace the last sentence of the 3. Bullet with the following: If the Contractor did not submit an as-bid schedule at the Pre-Construction Meeting or a written narrative in accordance with Subsection 108.02, the Cabinet will not consider the claim for delay. Delete the last paragraph from the section.

Supplemental Specifications to The Standard Specifications for Road and Bridge Construction, 2008 Edition

(Effective with the March 18, 2011 Letting)

SUBSECTION: **REVISION:**	106.04 Buy America Requirement. Replace the section with the following: **106.04 Buy America Requirement.** Follow the "Buy America" provisions as required by Title 23 Code of Federal Regulations § 635.410. Except as expressly provided herein all manufacturing processes of steel or iron materials including but not limited to structural steel, guardrail materials, corrugated steel, culvert pipe, structural plate, prestressing strands, and steel reinforcing bars shall occur in the United States of America, including the application of: • Coating, • Galvanizing, • Painting, and • Other coating that protects or enhances the value of steel or iron products. The following are exempt, unless processed or refined to include substantial amounts of steel or iron material, and may be used regardless of source in the domestic manufacturing process for steel or iron material: • Pig iron, • Processed, pelletized, and reduced iron ore material, or • Processed alloys. The Contractor shall submit a certification stating that all manufacturing processes involved with the production of steel or iron materials occurred in the United States. Produce, mill, fabricate, and manufacture in the United States of America all aluminum components of bridges, tunnels, and large sign support systems, for which either shop fabrication, shop inspection, or certified mill test reports are required as the basis of acceptance by the Department. Use foreign materials only under the following conditions: 1) When the materials are not permanently incorporated into the project; or 2) When the delivered cost of such materials used does not exceed 0.1 percent of the total Contract amount or $2,500.00, whichever is greater. The Contractor shall submit to the Engineer the origin and value of any foreign material used.
SUBSECTION: **REVISION:**	106.10 Field Welder Certification Requirements. Insert the following sentence before the first sentence of the first paragraph: All field welding must be performed by a certified welder unless otherwise noted.
SUBSECTION: **REVISION:**	108.02 Progress Schedule. Insert the following prior to the first paragraph: Specification 108.02 applies to all Cabinet projects except the following project types: • Right of Way Mowing and/or Litter Removal • Waterborne Paint Striping • Projects that contain Special Provision 82 • Projects that contain the Special Note for CPM Scheduling Insert the following paragraph after paragraph two: Working without the submittal of a Written Narrative is violation of this specification and additionally voids the Contractor's right to delay claims. Insert the following paragraph after paragraph six: The submittal of bar chart or Critical Path Method schedule does not relieve the Contractor's requirement to submit a Written Narrative schedule.

Supplemental Specifications to The Standard Specifications for Road and Bridge Construction, 2008 Edition

(Effective with the March 18, 2011 Letting)

	Insert the following at the beginning of the first paragraph of A) Written Narrative.: Submit the Written Narrative Schedule using form TC 63-50 available at the Division of Construction's website (http://www.transportation.ky.gov/construction/ResCenter/ResCenter.htm). Replace Part A) Written Narrative 1. And 2. with the following: 1. Provide a description that includes how the Contractor will sequence and stage the work, how the Contractor plans to maintain and control traffic being specific and detailed, and what equipment and crew sizes are planned to execute the work. 2. Provide a list of project milestones including, if applicable, winter shut-downs, holidays, or special events. The Contractor shall describe how these milestones and other dates effect the prosecution of the work. Also, include start date and completion date milestones for the contract, each project if the contract entails multiple projects, each phase of work, site of work, or segment of work as divided in the project plans, proposal, or as subdivided by the Contractor.
SUBSECTION: **REVISION:**	109.07.01 Liquid Asphalt. Add the following to the Adjustable Contract Items: • Stone Matrix Asphalt for Base • Stone Matrix Asphalt for Surface
SUBSECTION: **REVISION:**	110.01 Mobilization. Replace paragraph three with the following: Do not bid an amount for Mobilization that exceeds 5 percent of the sum of the total amounts bid for all items in the Bid Proposal, excluding Mobilization, Demobilization, and contingent amounts established for adjustments and incentives. The Department will automatically adjust any Bid Proposals that are in excess of this amount down to 5 percent to compare Bid Proposals and award the Contract. The Department will award a Contract for the actual amount bid when the amount bid for Mobilization is less than 5 percent, or the Department will award the Contract for the adjusted bid amount of 5 percent when the amount bid for Mobilization is greater than 5 percent. If any errors in unit bid prices for other Contract items in a Contractor's Bid Proposal are discovered after bid opening and such errors reduce the total amount bid for all other items, excluding Mobilization, Demobilization, and contingent amounts established for adjustments and incentives, so that the percent bid for Mobilization is larger than 5 percent, the Department will adjust the amount bid for Mobilization to 5 percent of the sum of the corrected total bid amounts.
SUBSECTION: **REVISION:**	110.02 Demobilization. Replace the third paragraph with the following: Bid an amount for Demobilization that is a minimum of $1,000 or 1.5 percent of the sum of the total amounts bid for all other items in the Bid Proposal, excluding Mobilization, Demobilization, and contingent amounts established for adjustments and incentives. The Department will automatically adjust any Bid Proposal that is less than this amount up to $1,000 or 1.5 percent to compare Bid Proposals and award the Contract. The Department will award a Contract for the actual amount bid when the amount bid for demobilization exceeds 1.5 percent, or the Department will award the Contract for the adjusted bid amount when the amount bid for demobilization is less than the minimum of $1,000 or less than 1.5 percent of the sum of the total amounts bid for all other items in the Bid Proposal, excluding Mobilization, Demobilization, and contingent amounts established for adjustments and incentives.
SUBSECTION: **REVISION:**	110.04 Payment. Insert the following paragraph following the demobilization payment schedule (4th paragraph): The Department will withhold an amount equal to $1,000 for demobilization, regardless of the schedule listed above. The $1,000 withheld for demobilization will be paid when the final estimate is paid.

Supplemental Specifications to The Standard Specifications for Road and Bridge Construction, 2008 Edition

(Effective with the March 18, 2011 Letting)

SUBSECTION: **REVISION:**	112.03.01 General Traffic Control. Replace paragraph three with the following: All flaggers shall be trained in current MUTCD flagging procedures. Proof of training must be available for review at the Department's request. Flagging credentials must be current within the last 5 years.
SUBSECTION: **PART:** **REVISION:**	112.03.11 Temporary Pavement Markings. B) Placement and Removal of Temporary Striping. Replace the 2nd sentence of the first paragraph with the following: On interstates and parkways, and other roadways approved by the State Highway Engineer, install pavement striping that is 6 inches in width.
SUBSECTION: **REVISION:**	112.03.12 Project Traffic Coordinator (PTC). Add the following at the end of the subsection: After October 1, 2008 the Department will require the PTC to have successfully completed the applicable qualification courses. Personnel that have not successfully completed the applicable courses by that date will not be considered qualified. Prior to October 1, 2008, conform to Subsection 108.06 A) and ensure the designated PTC has sufficient skill and experience to properly perform the task.
SUBSECTION: **REVISION:**	112.03.15 Non-Compliance of Maintain and Control of Traffic. Add the following section: **112.03.15 Non-Compliance of Maintain and Control of Traffic.** It is the Contractor's responsibility to conform to the traffic control requirements in the TCP, Proposal, plan sheets, specifications, and the Manual on Uniform Traffic Control Devices. Unless specified elsewhere in the contract, a penalty will be assessed in the event of non-compliance with Maintain and Control of Traffic requirements. These penalties will be assessed when the Contractor fails to correct a situation or condition of non-compliance with the contract traffic control requirements after being notified by the Engineer. The calculation of accrued penalties for non-compliance will be based upon the date/time of notification by the Engineer. The amount of the penalty assessed for non-compliance will be determined based upon the work zone duration, as defined by the MUTCD, and will be the greatest of the different calculation methods indicated below: A) Long-term stationary work that occupies a location more than 3 days. Correct the non-compliant issue within 24 hours from initial notification by the Engineer. If the issue is not corrected within 24 hours from the initial notification, a penalty for non-compliance will be assessed on a daily basis beginning from the initial notification of non-compliance. The Contractor will be assessed a $1,000 daily penalty or the amount equal to the contract liquidated damages in Section 108.09, whichever of the 2 is greater. The penalty for non-compliance will escalate as follows for continued non-compliance after the initial notification. 3 Days after Notification $1,500 daily penalty or 1.5 times the contract liquidated damages daily charge rate in Section 108.09, whichever is greater. 7 Days after Notification $2,000 daily penalty or double the contract liquidated damages daily charge rate in Section 108.09, whichever is greater.

Supplemental Specifications to The Standard Specifications for Road and Bridge Construction, 2008 Edition
(Effective with the March 18, 2011 Letting)

	B) Intermediate-term stationary work that occupies a location more than one daylight period up to 3 days, or nighttime work lasting more than 1 hour. Correct the non-compliant issue within 4 hours from initial notification by the Engineer. If the issue is not corrected within 4 hours from notification, a penalty for non-compliance will be assessed on an hourly basis beginning from the initial notification of non-compliance. The penalty for non-compliance will be assessed at $200 per hour. C) Short-term stationary is daytime work that occupies a location for more than 1 hour within a single daylight period. Correct the non-compliant issue within 1 hour from initial notification by the Engineer. If the issue is not corrected within 1 hour from notification, a penalty for non-compliance will be assessed on an hourly basis beginning from the initial notification of non-compliance. The penalty for non-compliance will be assessed at $200 per hour. If the Contractor remains in violation of the Maintain and Control of Traffic requirements, or if the Department determines it to be in the public's interest, work will be suspended in accordance with Section 108.08 until the deficiencies are corrected. The Department reserves the right to correct deficiencies by any means available and charge the Contractor for labor, equipment, and material costs incurred in emergency situations.
SUBSECTION: **REVISION:**	206.03.02 Embankment Replace the last paragraph with the following: When rock roadbed is specified, construct the upper 2 feet of the embankment according to Subsection 204.03.09 A).
SUBSECTION: **REVISION:**	213.03.03 Inspection and Maintenance. Replace the last sentence of the second paragraph with the following: Initiate corrective action within 24 hours of any noted deficiency and complete the work within 7 calendar days of receipt of the report. The Contractor shall make a concentrated effort to complete any corrective action required prior to the next predicted rainfall event. Insert the following paragraph after the second paragraph: When the Contractor is required to obtain the KPDES permit, it is their responsibility to ensure compliance with the inspection and maintenance requirements of the permit. The Engineer will perform verification inspections a minimum of once per month and within 7 days of a ½ inch or greater rainfall event. The Engineer will document these inspections using Form TC 63-61 A. The Engineer will provide copies of the inspection only when improvements to the BMP's are required. Verification inspections performed by the Engineer do not relieve the Contractor of any responsibility for compliance with the KPDES permit. Initiate corrective action within 24 hours of any noted deficiency and complete the work within 7calendar days of receipt of the report. The Contractor shall make a concentrated effort to complete any corrective action required prior to the next predicted rainfall event.

Supplemental Specifications to The Standard Specifications for Road and Bridge Construction, 2008 Edition

(Effective with the March 18, 2011 Letting)

SUBSECTION: **PART:** **REVISION:**	213.03.05 Temporary Control Measures. E) Temporary Seeding and Protection. Replace the first paragraph with the following: Apply an Annual Rye seed mix at a rate of 100 pounds per acre during the months of March through August. In addition to the Annual Rye, add 10 pounds of German Foxtail-Millet (Setaria italica), when performing temporary seeding during the months of June through August. During the months of September through February, apply Winter Wheat or Rye Grain at a rate of 100 pounds per acre. Obtain the Engineer's approval prior to the application of the seed mixture.
SUBSECTION: **PART:** **REVISION:**	213.03.05 Temporary Control Measures. F) Temporary Mulch. Replace the last sentence with the following: Place temporary mulch to an approximate 2-inch loose depth (2 tons per acre) and anchor it into the soil by mechanically crimping it into the soil surface or applying tackifier to provide a protective cover. Regardless of the anchoring method used, ensure the protective cover holds until disturbance is required or permanent controls are in installed.
SUBSECTION: **REVISION:**	303.05 Payment. Replace the second paragraph of the section with the following: The Department will make payment for Drainage Blanket-Type II (ATDB) according to the Lot Pay Adjustment Schedule for Specialty Mixtures in Section 402.
SUBSECTION: **PART:** **REVISION:**	401.02.04 Special Requirements for Dryer Drum Plants. F) Production Quality Control. Replace the first sentence with the following: Stop mixing operations immediately if, at any time, a failure of the automatic electronic weighing system of the aggregate feed, asphalt binder feed, or water injection system control occurs.
SUBSECTION: **REVISION:**	401.02.04 Special Requirements for Dryer Drum Plants. Add the following: Part G) **Water Injection System.** Provided each system has prior approval as specified in Subsection 402.01.01, the Department will allow the use of water injection systems for purposes of foaming the asphalt binder and lowering the mixture temperature for production of Warm Mix Asphalt (WMA). Ensure the equipment for water injection meets the following requirements: 1) Injection equipment computer controls are automatically coupled to the plants controls (manual operation is not permitted); 2) Injection equipment has variable controls that introduce water ratios based on production rates of mixtures; 3) Injects water into the flow of asphalt binder prior to contacting the aggregate; 4) Provides alarms on the water injection system that operate when the flow of water is interrupted or deviates from the prescribed water rate.
SUBSECTION: **REVISION:**	401.03.01 Preparation of Mixtures. Replace the last sentence of the second paragraph with the following: Do not use asphalt binder while it is foaming in a storage tank.

Supplemental Specifications to The Standard Specifications for Road and Bridge Construction, 2008 Edition

(Effective with the March 18, 2011 Letting)

SUBSECTION: 401.03.01 Preparation of Mixtures.
REVISION: Replace the third paragraph and Mixing and Laying Temperature table with the following:

Maintain the temperature of the component materials and asphalt mixture within the ranges listed in the following table:

MIXING AND LAYING TEMPERATURES (°F)			
Material		Minimum	Maximum
Aggregates		240	330
Aggregates used with Recycled Asphalt Pavement (RAP)		240	—
Asphalt Binders	PG 64-22	230	330
	PG 76-22	285	350
Asphalt Mixtures at Plant (Measured in Truck)	PG 64-22 HMA	250	330
	PG 76-22 HMA	310	350
	PG 64-22 WMA	230	275
	PG 76-22 WMA	250	300
Asphalt Mixtures at Project (Measured in Truck When Discharging)	PG 64-22 HMA	230	330
	PG 76-22 HMA	300	350
	PG 64-22 WMA	210	275
	PG 76-22 WMA	240	300

SUBSECTION: 402.01 Description.
REVISION: Replace the paragraph with the following:

Provide the process control and acceptance testing of all classes and types of asphalt mixtures which may be furnished either as hot mix asphalt (HMA) or warm mix asphalt (WMA) produced with water injection systems.

SUBSECTION 402.01.01 Warm Mix Asphalt (WMA) Evaluation and Approval.
REVISION: Add the following subsection:

402.01.01 Warm Mix Asphalt (WMA) Evaluation and Approval.
The Department will evaluate trial production of WMA by use of a water injection system provided the system is installed according to the manufacturer's requirements and satisfies the requirements of Section 401. Evaluation will include production and placement of WMA to demonstrate adequate mixture quality including volumetric properties and density by Option A as specified in Subsection 402.03.02 D). Do not place WMA for evaluation on Department projects. Provided production and placement operations satisfy the applicable quality levels, the Department will approve WMA production on Department projects using the water injection system as installed on the specific asphalt mixing plant evaluated.

SUBSECTION: 402.05.02 Asphalt Mixtures and Mixtures With RAP.
REVISION: Replace Subsection Title as below:

402.05.02 Asphalt Mixtures, HMA and WMA, Including Mixtures With RAP.

SUBSECTION: 402.05.02 Asphalt Mixtures, HMA and WMA, Including Mixtures With RAP.
REVISION: Replace the paragraph with the following:

The Department will pay for the mixture at the Contract unit bid price and apply a Lot Pay Adjustment for each lot placed based on the degree of compliance with the specified tolerances. Using the appropriate Lot Pay Adjustment Schedule, the Department will assign a pay value for the applicable properties within each sublot and average the sublot pay values to determine the pay value for a given property for each lot. The Department will apply the Lot Pay Adjustment for each lot to a defined unit price of $50.00 per ton. The Department will calculate the Lot Pay Adjustment using all possible incentives and disincentives but will not allow the overall pay value for a lot to exceed 1.00.

Supplemental Specifications to The Standard Specifications for Road and Bridge Construction, 2008 Edition

(Effective with the March 18, 2011 Letting)

SUBSECTION: 402.05.02 Asphalt Mixtures, HMA and WMA, Including Mixtures With RAP.
PART: C) Conventional and RAP Mixtures Placed on Shoulders.
REVISION: Replace Title and Text with the following:

C) HMA, WMA and RAP Mixtures Placed on Shoulders or Placed as Asphalt Pavement Wedge.

1) Placed monolithically with the Mainline – Width of 4 feet or less. The Department will pay as mainline mixture.
2) Placed monolithically with the Mainline – Width of greater than 4 feet. The Department will pay as mainline mixture but use 1.00 for the Lane and Joint Density Pay Value for shoulder or Asphalt Pavement Wedge quantities.
3) Placed Separately. The Department will use 1.00 for the Lane and Joint Density Pay Value.

SUBSECTION: 402.05.02 Asphalt Mixtures, HMA and WMA, Including Mixtures With RAP.
PART: D) Conventional and RAP Mixtures Placed Monolithically as Asphalt Pavement Wedge.
REVISION: Replace the title with the following:
D) HMA, WMA, and RAP Mixtures Placed Monolithically as Asphalt Pavement Wedge.

Delete the following:
D) HMA, WMA, and RAP Mixtures Placed Monolithically as Asphalt Pavement Wedge. The Department will pay as mainline mixture but use a 1.00 pay value for all properties.

SUBSECTION: 402.05.02 Asphalt Mixtures for Temporary Pavement.
PART: E) Asphalt Mixtures for Temporary Pavement.
REVISION: Replace E) Asphalt Mixtures for Temporary Pavement with the following:

D) Asphalt Mixtures for Temporary Pavement.

SUBSECTION: 402.05.02 Asphalt Mixtures, HMA and WMA, Including Mixtures With RAP.
PART: Lot Pay Adjustment Schedule, Compaction Option A, Base and Binder Mixtures
TABLES: VMA
REVISION: Replace the VMA table with the following:

VMA	
Pay Value	Deviation From Minimum
1.00	≥ min. VMA
0.95	0.1-0.5 below min.
0.90	0.6-1□0 below min.
(1)	> 1.0 below min.

SUBSECTION: 402.05.02 Asphalt Mixtures, HMA and WMA, Including Mixtures With RAP.
PART: Lot Pay Adjustment Schedule, Compaction Option A, Surface Mixtures
TABLES: VMA
REVISION: Replace the VMA table with the following:

VMA	
Pay Value	Deviation From Minimum
1.00	≥ min. VMA
0.95	0.1-0.5 below min.
0.90	0.6-1.0 below min.
(1)	>□1.0 below min.

Supplemental Specifications to The Standard Specifications for Road and Bridge Construction, 2008 Edition

(Effective with the March 18, 2011 Letting)

SUBSECTION: 402.05.02 Asphalt Mixtures, HMA and WMA, Including Mixtures With RAP.
PART: Lot Pay Adjustment Schedule, Compaction Option B Mixtures
TABLE: VMA
REVISION: Replace the VMA table with the following:

VMA	
Pay Value	Deviation From Minimum
1.00	≥min. VMA
0.95	0□1-0.5 bel□w min.
0.9	0.6-1.0 below min.
(2)	> 1.0 below min.

SUBSECTION: 403.03.03 Preparation of Mixture.
PART: C) Mix Design Criteria.
NUMBER: 1) Preliminary Mix Design.
REVISION: Replace the last two sentences of the paragraph and table with the following:

Complete the volumetric mix design at the appropriate number of gyrations as given in the table below for the number of 20-year ESAL's. The Department will define the relationship between ESAL classes, as given in the bid items for Superpave mixtures, and 20-year ESAL ranges as follows:

		Number of Gyrations		
Class	**ESAL's (millions)**	$N_{initial}$	N_{design}	N_{max}
2	< 3.0	6	50	75
3	3.0 to < 30.0	7	75	115
4	≥ 30.0	8	100	160

SUBSECTION: 403.03.09 Leveling and Wedging, and Scratch Course.
PART: A) Leveling and Wedging.
REVISION: Replace the first sentence of the first paragraph with the following:

Conform to the gradation requirements (control points) of AASHTO M 323 for base, binder, or surface as the Engineer directs.

SUBSECTION: 403.03.09 Leveling and Wedging, and Scratch Course.
PART: B) Scratch Course.
REVISION: Replace the second sentence of the first paragraph with the following:

Conform to the gradation requirements (control points) of AASHTO M 323 for base, binder, or surface as the Engineer directs.

SUBSECTION: 407.01 DESCRIPTION.
REVISION: Replace the first sentence of the paragraph with the following:

Construct a pavement wedge composed of a hot-mixed or warm-mixed asphalt mixture.

SUBSECTION: 409.01 DESCRIPTION.
REVISION: Replace the first sentence of the paragraph with the following:

Use reclaimed asphalt pavement (RAP) from Department projects or other approved sources in hot mix asphalt (HMA) or warm mix asphalt (WMA) provided mixture requirements are satisfied.

SUBSECTION: 410.01 DESCRIPTION.
REVISION: Delete the second sentence of the paragraph.

Supplemental Specifications to The Standard Specifications for Road and Bridge Construction, 2008 Edition

(Effective with the March 18, 2011 Letting)

SUBSECTION: 410.03.01 Corrective Work.
REVISION: Replace the last sentence of the paragraph with the following:

Provide a final surface comparable to the adjacent pavement that does not require corrective work in respect to texture, appearance, and skid resistance.

SUBSECTION: 410.03.02 Ride Quality.
PART: B) Requirements.
NUMBER: 1) Category A.
REVISION: Replace the last sentence of the first paragraph with the following:

At the Department's discretion, a pay deduction of $1200 per 0.1-lane-mile section may be applied in lieu of corrective work.

SUBSECTION: 410.03.02 Ride Quality.
PART: B) Requirements.
NUMBER: 2) Category B.
REVISION: Replace the second and third sentence of the first paragraph with the following:

When the IRI is greater than 90 for a 0.1-mile section, perform corrective work, or remove and replace the pavement to achieve the specified IRI. At the Department's discretion, a pay deduction of $750 per 0.1-lane-mile section may be applied in lieu of corrective work.

SUBSECTION: 410.05 PAYMENT.
REVISION: Add the following sentence to the end of the first paragraph:

The sum of the pay value adjustments for ride quality shall not exceed $0 for the project as a whole.

SUBSECTION: 413.05.02 CL3 SMA BASE 1.00D PG76-22.
REVISION: Insert the following sentence between the first and second sentence of the first paragraph:

The Department will calculate the Lot Pay Adjustment using all possible incentives and disincentives but will not allow the overall pay value for a lot to exceed 1.00.

SUBSECTION: 413.05.02 CL3 SMA BASE 1.00D PG 76-22.
TABLE: JOINT DENSITY TABLE
REVISION: Replace the joint density table with the following:

LANE DENSITY	
Pay Value	Test Result (%)
1.05	95.0-96.5
1.00	93.0-94.9
0.95	92.0-92.9 or 96.6-97.0
0.90	91.0-91.9 or 97.1-97.5
(1)	< 91.0 or > 97.5

SUBSECTION: 413.05.03 CL3 SMA SURF 0.50A PG76-22 and CL3 SMA SURF 0.38A PG76-22.
REVISION: Insert the following sentence between the first and second sentence of the first paragraph:

The Department will calculate the Lot Pay Adjustment using all possible incentives and disincentives but will not allow the overall pay value for a lot to exceed 1.00.

Supplemental Specifications to The Standard Specifications for Road and Bridge Construction, 2008 Edition

(Effective with the March 18, 2011 Letting)

SUBSECTION: 413.05.03 CL3 SMA SURF 0.50A PG76-22 and CL3 SMA SURF 0.38A PG76-22.
TABLE: JOINT DENSITY TABLE
REVISION: Replace the joint density table with the following:

DENSITY		
Pay Value	Lane Density Test Result (%)	Joint Density Test Result (%)
1.05	95.0-96.5	92.0-96.0
1.00	93.0-94.9	90.0-91.9
0.95	92.0-92.9 or 96.6-97.0	89.0-89.9 or 96.1-96.5
0.90	91.0-91.9 or 97.1-97.5	88.0-88.9 or 96.6-97.0
0.75	----	< 88.0 or > 97.0
(1)	< 91.0 or > 97.5	----

SUBSECTION: 501.05.02 Ride Quality.
REVISION: Add the following sentence to the end of the first paragraph:

The sum of the pay value adjustments for the ride quality shall not exceed $0 for the project as a whole.

SUBSECTION: 505.03.04 Detectable Warnings.
REVISION: Replace the first sentence with the following:

Install detectable warning pavers at all sidewalk ramps and on all commercial entrances according to the Standard Drawings.

SUBSECTION: 505.04.04 Detectable Warnings.
REVISION: Replace the paragraph with the following:

The Department will measure the quantity in square feet. All retrofit applications for maintenance projects will require the removal of existing sidewalks to meet the requirements of the standard drawings applicable to the project. The cost associated with the removal of the existing sidewalk will be incidental to the detectable warnings bid item or incidental to the bid item for the construction of the concrete sidewalk unless otherwise noted.

SUBSECTION: 505.05 PAYMENT.
REVISION: Add the following to the bid item table:

Code	Pay Item	Pay Unit
23158ES505	Detectable Warnings	Square Foot

SUBSECTION: 509.01 DESCRIPTION.
REVISION: Replace the second paragraph with the following:

The Department may allow the use of similar units that conform to the National Cooperative Highway Research Program (NCHRP) 350 Test Level 3 (TL-3) requirements and the typical features depicted by the Standard Drawings. Obtain the Engineers approval prior to use. Ensure the barrier wall shape, length, material, drain slot dimensions and locations typical features are met and the reported maximum deflection is 3 feet or less from the NCHRP 350 TL-3 for Test 3 – 11 (pickup truck impacting at 60 mph at a 25-degree angle.)

Supplemental Specifications to The Standard Specifications for Road and Bridge Construction, 2008 Edition

(Effective with the March 18, 2011 Letting)

SUBSECTION: **REVISION:**	601.03.02 Concrete Producer Responsibilities. Replace the first sentence with the following: Obtain the concrete from producers that are in compliance with KM 64-323 and on the Department's List of Approved Materials. Add the following to the first paragraph: If a concrete plant becomes unqualified during a project and there are no other qualified plants in the region, the Department will provide qualified personnel to witness and ensure the producer follows the required specifications. The Department will assess the Contractor a $100 per hour charge for this service.
SUBSECTION: **PART:** **REVISION:**	601.03.02 Concrete Producer Responsibilities. B) Certified Personnel. Replace the second sentence with the following: Ensure that the concrete technicians are certified as ACI Level I (Level I) and KRMCA Level II (Level II).
SUBSECTION: **PART:** **REVISION:**	601.03.02 Concrete Producer Responsibilities. C) Quality Control. Replace the second sentence with the following: Ensure that the Level II concrete technician is present when work is in progress and is responsible for inspecting trucks, batch weight calculations, monitoring batching, making mixture adjustments, reviewing the slump, air content, unit weight, temperature, and aggregate tests, all to provide conforming concrete to the project.
SUBSECTION: **PART:** **REVISION:**	601.03.02 Concrete Producer Responsibilities. D) Producer Testing. Replace with the following: When producing for state work, have a Qualified Concrete Aggregate Technician or KYTC Qualified Aggregate Technician perform, at a minimum, weekly gradations and minus 200 wash tests and daily moisture contents of coarse and fine aggregate (Fine aggregates will not require a minus 200 wash test). Using the daily moisture contents, adjust the approved mix design accordingly prior to production. Ensure that the Level II concrete technician is present when work is in progress and is responsible for inspecting trucks, batch weight calculations, monitoring batching, making mixture adjustments, reviewing the slump, air content, unit weight, temperature, and aggregate tests, all to provide conforming concrete to the project.
SUBSECTION: **PART:** **REVISION:**	601.03.02 Concrete Producer Responsibilities. E) Trip Tickets. Replace the second sentence with the following: Include on the trip ticket the Sample ID for the approved mix design and a statement certifying that the data on the ticket is correct and that the mixture conforms to the mix design.
SUBSECTION: **PART:** **NUMBER:** **REVISION:**	601.03.03 Proportioning and Requirements. C) Mixtures Using Type IP, IS, and I(SM) Cement or Mineral Admixtures 2) Mineral Admixtures. Replace the second sentence with the following: Reduction of the total cement content by a combination of mineral admixtures will be allowed, up to a maximum of 40 percent.

Supplemental Specifications to The Standard Specifications for Road and Bridge Construction, 2008 Edition

(Effective with the March 18, 2011 Letting)

SUBSECTION: **PART:** **NUMBER:** **LETTER:** **REVISION:**	601.03.03 Proportioning and Requirements. C) Mixtures Using Type IP, IS, and I(SM) Cement or Mineral Admixtures 2) Mineral Admixtures. a) Fly Ash. Delete the last sentence of the third paragraph.
SUBSECTION: **PART:** **NUMBER:** **LETTER:** **REVISION:**	601.03.03 Proportioning and Requirements. C) Mixtures Using Type IP, IS, and I(SM) Cement or Mineral Admixtures 2) Mineral Admixtures. b) Ground Granulated Blast Furnace Slag (GGBF Slag). Delete the second sentence of the third paragraph.
SUBSECTION: **PART:** **REVISION:**	601.03.03 Proportioning and Requirements. E) Measuring. Add the following sentence: Conform to the individual ingredient material batching tolerances in Appendix A.
SUBSECTION: **PART:** **REVISION:**	601.03.09 Placing Concrete. A) General. Replace the last sentence of the fourth paragraph with the following: Do not use aluminum or aluminum alloy troughs, pipes, or chutes that have surface damage or for lengths greater than 20 feet. Replace the second sentence of the fifth paragraph with the following: When pumping, equip the delivery pipe with a nozzle, having a minimum of 2 right angles, at the discharge end. Alternate nozzles or restriction devices may be allowed with prior approval by the Engineer.
SUBSECTION: **REVISION:**	605.02.05 Forms. Delete the last sentence.
SUBSECTION: **REVISION:**	605.03.04 Tack Welding. Replace with the following: The Department does not allow tack welding.
SUBSECTION: **REVISION:**	606.02.11 Coarse Aggregate. Replace with the following: Conform to Section 805, size No. 8 or 9-M.
SUBSECTION: **PART:** **REVISION:**	609.03.04 Expansion and Fixed Joints. D) Preformed Neoprene Joint Seals. Replace the last sentence of paragraph seven with the following: Field splices will not be allowed during partial width construction. It is Contractor's responsibility to determine and install the length of seal required for the joint to barrier wall as per the standard drawing.
SUBSECTION: **REVISION:**	609.03.09 Finish with Burlap Drag. Delete the entire section.
SUBSECTION: **REVISION:**	609.04.06 Joint Sealing. Replace Subsection 601.04 with the following: Subsection 606.04.08.

Supplemental Specifications to The Standard Specifications for Road and Bridge Construction, 2008 Edition

(Effective with the March 18, 2011 Letting)

SUBSECTION: **REVISION:**	609.05 Payment. Replace the Pay Unit for Joint Sealing with the following: See Subsection 606.05.
SUBSECTION: **REVISION:**	701.03.06 Initial Backfill. Replace the first sentence of the last paragraph with the following: When the Contract specifies, perform quality control testing to verify compaction according to KM 64-512.
SUBSECTION: **REVISION:**	701.03.08 Testing of Pipe. Replace and rename the subsection with the following: **701.03.08 Inspection of Pipe.** The engineer will visually inspect all pipe. The Department will require camera/video inspection on a minimum of 50 percent of the linear feet of all installed pipe structures. Conduct camera/video inspection according to KM 64-114. The pipe to be installed under pavement will be selected first. If the total linear feet of pipe under pavement is less than 50 percent of the linear feet of all pipe installed, the Engineer will randomly select installations from the remaining pipe structures on the project to provide for the minimum inspection requirement. The pipe will be selected in complete runs (junction-junction or headwall-headwall) until the total linear feet of pipe to be inspected is at least 50 percent of the total linear feet of all installed pipe on the project. Unless the Engineer directs otherwise, schedule the inspections no sooner than 30 days after completing the installation and completion of earthwork to within 1 foot of the finished subgrade. When final surfacing conflicts with the 30-day minimum, conduct the inspections prior to placement of the final surface. The contractor must ensure that all pipe are free and clear of any debris so that a complete inspection is possible. Notify the Engineer immediately if distresses or locations of improper installation are discovered. When camera testing shows distresses or improper installation in the installed pipe, the Engineer may require additional sections to be tested. Provide the video and report to the Engineer when testing is complete in accordance with KM 64-114. Pipes that exhibit distress or signs of improper installation may necessitate repair or removal as the Engineer directs. These signs include, but are not limited to: deflection, cracking, joint separation, sagging or other interior damage. If corrugated metal or thermoplastic pipes exceed the deflection and installation thresholds indicated in the table below, provide the Department with an evaluation of each location conducted by a Professional Engineer addressing the severity of the deflection, structural integrity, environmental conditions, design service life, and an evaluation of the factor of safety using Section 12, "Buried Structures and Tunnel Liners," of the AASHTO LRFD Bridge Design Specifications. Based on the evaluation, the Department may allow the pipe to remain in place at a reduced unit price as shown in the table below. Provide 5 business days for the Department to review the evaluation. When the pipe shows deflection of 10 percent or greater, remove and replace the pipe. When the camera/video or laser inspection results are called into question, the Department may require direct measurements or mandrel testing. The Cabinet may elect to conduct Quality Assurance verifications of any pipe inspections.
SUBSECTION: **REVISION:**	701.04.07 Testing. Replace and rename the subsection with the following: **701.04.07 Pipeline Video Inspection.** The Department will measure the quantity in linear feet along the pipe invert of the structure inspected. When inspection above the specified 50 percent is performed due to a disagreement or suspicion of additional distresses and the Department is found in error, the Department will measure the quantity as Extra Work according to Subsection 104.03. However, if additional distresses or non-conformance is found, the Department will not measure the additional inspection for payment.

Supplemental Specifications to The Standard Specifications for Road and Bridge Construction, 2008 Edition

(Effective with the March 18, 2011 Letting)

SUBSECTION: 701.05 PAYMENT.
REVISION: Add the following pay item to the list of pay items:

Code	Pay Item	Pay Unit
23131ER701	Pipeline Video Inspection	Linear Foot

SUBSECTION: 701.05 PAYMENT
TABLE: PIPE DEFLECTION DETERMINED BY CAMERA TESTING
REVISION: Replace this table with the following table and note:

PIPE DEFLECTION	
Amount of Deflection (%)	Payment
0.0 to 5.0	100% of the Unit Bid Price
5.1 to 9.9	50% of the Unit Bid Price (1)
10 or greater	Remove and Replace

(1) Provide Structural Analysis as indicated above. Based on the structural analysis, pipe may be allowed to remain in place at the reduced unit price.

SUBSECTION: 701.05 PAYMENT
TABLE: PIPE DEFLECTION DETERMINED BY MANDREL TESTING
REVISION: Delete this table.

SUBSECTION: 713.02.01 Paint.
REVISION: Replace with the following:

Conform to Section 842 and Section 846.

SUBSECTION: 713.03 CONSTRUCTION.
REVISION: Replace the first sentence of the second paragraph with the following:

On interstates and parkways, and other routes approved by the State Highway Engineer, install pavement striping that is 6 inches in width.

SUBSECTION: 713.03.03 Paint Application.
REVISION: Replace the second paragraph with the following table:

Material	Paint Application Rate	Glass Beads Application Rate
4 inch waterborne paint	Min. of 16.5 gallons/mile	Min. of 6 pounds/gallon
6 inch waterborne paint	Min. of 24.8 gallons/mile	Min. of 6 pounds/gallon
6 inch durable waterborne paint	Min. of 36 gallons/mile	Min. of 6 pounds/gallon

SUBSECTION: 713.03.04 Marking Removal.
REVISION: Replace the last sentence of the paragraph with the following:

Vacuum all marking material and removal debris concurrently with the marking removal operation.

SUBSECTION: 713.05 PAYMENT.
REVISION: Insert the following codes and pay items below the Pavement Striping – Permanent Paint:

Code	Pay Item	Pay Unit
23159EN	Durable Waterborne Marking – 6 IN W	Linear Foot
23160EN	Durable Waterborne Marking – 6 IN Y	Linear Foot

Supplemental Specifications to The Standard Specifications for Road and Bridge Construction, 2008 Edition

(Effective with the March 18, 2011 Letting)

SUBSECTION: **REVISION:**	714.03 CONSTRUCTION. Insert the following paragraph at the end of the third paragraph: Use Type I Tape for markings on bridge decks, JPC pavement and JPC intersections. Thermoplastic should only be used for markings on asphalt pavement.
SUBSECTION: **REVISION:**	714.03.07 Marking Removal. Replace the third sentence of the paragraph with the following: Vacuum all marking material and removal debris concurrently with the marking removal operation.
SUBSECTION: **REVISION:**	716.01 DESCRIPTION. Insert the following after the first sentence: Energize lighting as soon as it is fully functional and ready for inspection. Ensure that lighting remains operational until the Division of Traffic Operations has provided written acceptance of the electrical work.
SUBSECTION: **REVISION:**	716.02.01 Roadway Lighting Materials. Replace the last two sentences of the paragraph with the following: Submit for material approval an electronic file of descriptive literature, drawings, and any requested design data to the Division of Traffic Operations. Do not begin work until shop drawings are approved. Notify the Engineer when submitting any information to the Division of Traffic Operations. Do not make substitutions for approved materials without written permission as described above.
SECTION: **REVISION:**	717 – THERMOPLASTIC INTERSECTION MARKINGS. Replace the section name with the following: INTERSECTION MARKINGS.
SUBSECTION: **REVISION:**	717.01 DESCRIPTION: Replace the paragraph with the following: Furnish and install thermoplastic or Type I tape intersection markings (Stop Bars, Crosswalks, Turn Arrows, etc.) Thermoplastic markings may be installed by either a machine applied, screed extrusion process or by applying preformed thermoplastic intersection marking material.
SUBSECTION: **REVISION:**	717.02 MATERIALS AND EQUIPMENT. Insert the following subsection: 717.02.06 Type I Tape. Conform to Section 836.
SUBSECTION: **REVISION:**	717.03.03 Application. Insert the following part to the subsection: B) Type I Tape Intersection Markings. Apply according to the manufacturer's recommendations. Cut all tape at pavement joints when applied to concrete surfaces.

Supplemental Specifications to The Standard Specifications for Road and Bridge Construction, 2008 Edition

(Effective with the March 18, 2011 Letting)

SUBSECTION: 717.03.05 Proving Period.
PART: A) Requirements.
REVISION: Insert the following to this section:

2) Type I Tape. During the proving period, ensure that the pavement marking material shows no signs of failure due to blistering, excessive cracking, bleeding, staining, discoloration, oil content of the pavement materials, drippings, chipping, spalling, poor adhesion to the pavement, loss of retroreflectivity, vehicular damage, and normal wear. Type I Tape is manufactured off site and warranted by the manufacturer to meet certain retroreflective requirements. As long as the material is adequately bonded to the surface and shows no signs of failure due to the other items listed in Subsection 714.03.06 A) 1), retroreflectivity readings will not be required. In the absence of readings, the Department will accept tape based on a nighttime visual observation.

SUBSECTION: 717.03.06 Marking Removal.
REVISION: Replace the third sentence of the paragraph with the following:

Vacuum all marking material and removal debris concurrently with the marking removal operation.

SUBSECTION: 717.05 PAYMENT.
REVISION: Insert the following bid item codes:

Code	Pay Unit	Pay Item
06563	Pave Marking – R/R X Bucks 16 IN	Linear Foot
20782NS714	Pave Marking Thermo – Bike	Each
23251ES717, 23264ES717	Pave Mark TY I Tape X-Walk, Size	Linear Foot
23252ES717, 23265ES717	Pave Mark TY I Tape Stop Bar, Size	Linear Foot
23253ES717	Pave Mark TY I Tape Cross Hatch	Square Foot
23254ES717	Pave Mark TY I Tape Dotted Lane Extension	Linear Foot
23255ES717	Pave Mark TY I Tape Arrow, Type	Each
23268ES717-23270ES717		
23256ES717	Pave Mark TY I Tape- ONLY	Each
23257ES717	Pave Mark TY I Tape- SCHOOL	Each
23266ES717	Pave Mark TY 1 Tape R/R X Bucks-16 IN	Linear Foot
23267ES717	Pave Mark TY 1 Tape-Bike	Each

SUBSECTION: 725.02.02 Type VI Class C & CT.
REVISION: Replace bullet 2) with the following:

2) The SCI100GM System as developed by SCI Products, Inc. of St. Charles, Illinois. For all miscellaneous metal work conform to ASTM A 36 and galvanize according to ASTM A 123. For the SCI100GM fender panels conform to AASHTO 180. Galvanize the SCI100GM fender panels and SCI100GM -beam connectors after fabrication according to ASTM A 123.

SUBSECTION: 725.02.04 Type VII Class C.
REVISION: Replace bullet 2) with the following:

2) The SCI100GM System as developed by SCI Products, Inc. of St. Charles, Illinois. For all miscellaneous metal work conform to ASTM A 36 and galvanize according to ASTM A 123. For the SCI100GM fender panels conform to AASHTO 180. Galvanize the SCI100GM fender panels and SCI100GM-beam connectors after fabrication according to ASTM A 123.

SUBSECTION: 801.01 REQUIREMENTS.
REVISION: Delete the fourth sentence of the first paragraph and add the following to the second paragraph.

When supplying cement with a SO_3 content above the value in table I of ASTM C 150, include supportive ASTM C 1038 14-day expansion test data for the supplied SO_3 content on the certification.

Supplemental Specifications to The Standard Specifications for Road and Bridge Construction, 2008 Edition

(Effective with the March 18, 2011 Letting)

SUBSECTION: **REVISION:**	805.01 GENERAL. Replace the second paragraph with the following: The Department's List of Approved Materials includes the Aggregate Source List, the list of Class A and Class B Polish-Resistant Aggregate Sources, and the Concrete Restriction List.
SUBSECTION: **REVISION:**	805.04 CONCRETE. Replace the "AASHTO T 160" reference in first sentence of the third paragraph with "KM 64-629"
SUBSECTION: **TABLE:** **PART:** **REVISION:**	805.15 GRADATION ACCEPTANCE OF NON-SPECIFICATION COARSE AGGREGATE. AGGREGATE SIZE USE Cement Concrete Structures and Incidental Construction Replace "9-M for Waterproofing Overlays" with "8 or 9-M for Waterproofing Overlays"

Supplemental Specifications to The Standard Specifications for Road and Bridge Construction, 2008 Edition

(Effective with the March 18, 2011 Letting)

SUBSECTION: 805.15 GRADATION ACCEPTANCE OF NON-SPECIFICATION COARSE AGGREGATE.
REVISION: Replace the "SIZES OF COARSE AGGREGATES" table in with the following:

SIZES OF COARSE AGGREGATES

	Sieve	AMOUNTS FINER THAN EACH LABORATORY SIEVE (SQUARE OPENINGS) PERCENTAGE BY WEIGHT															
Aggregate Size	Nominal [3] Maximum Aggregate Size	4 inch	3 1/2 inch	3 inch	2 1/2 inch	2 inch	1 1/2 inch	1 inch	3/4 inch	1/2 inch	3/8 inch	No. 4	No. 8	No. 16	No. 30	No. 100	No. 200
1	3 ½ inch	100	90-100		25-60		0-15		0-5								
2	2 ½ inch			100	90-100	35-70	0-15		0-5								
23	2 inch			100		40-90		0-15		0-5							
3	2 inch				100	90-100	35-70	0-15		0-5							
357	2 inch				100	95-100		35-70		10-30		0-5					
4	1 ½ inch					100	90-100	20-55	0-15		0-5						
467	1 ½ inch					100	95-100		35-70		10-30	0-5					
5	1 inch						100	90-100	20-55	0-10	0-5						
57	1 inch						100	95-100		25-60		0-10	0-5				
610	1 inch						100	85-100		40-75		15-40					
67	3/4 inch							100	90-100		20-55	0-10	0-5				
68	3/4 inch							100	90-100		30-65	5-25	0-10	0-5			
710	3/4 inch							100	80-100		30-75	0-30					
78	1/2 inch								100	90-100	40-75	5-25	0-10	0-5			
8	3/8 inch									100	85-100	10-30	0-10	0-5			
9-M	3/8 inch									100	75-100	0-25	0-5				
10[2]	No. 4										100	85-100				10-30	
11[2]	No. 4										100	40-90	10-40			0-5	
DENSE GRADED AGGREGATE [1]	3/4 inch							100	70-100		50-80	30-65			10-40		4-13
CRUSHED STONE BASE [1]	1 ½ inch				100		90-100		60-95		30-70	15-55			5-20		0-8

[1] *Gradation performed by wet sieve KM 64-620 or AASHTO T 11/T 27.*
[2] *Sizes shown for convenience and are not to be considered as coarse aggregates.*
[3] *Nominal Maximum Size is the largest sieve on the gradation table for an aggregate size on which any material may be retained.*

Note: The Department will allow blending of same source/same type aggregate when precise procedures are used such as cold feed, belt, or equivalent and combining of sizes or types of aggregate using the weigh hopper at concrete plants or controlled feed belts at the pugmill to obtain designated sizes.

Supplemental Specifications to The Standard Specifications for Road and Bridge Construction, 2008 Edition

(Effective with the March 18, 2011 Letting)

SUBSECTION: 805.16 SAMPLING AND TESTING.
REVISION: Replace the "AASHTO T 160" method with the "KM 64-629" method for the Concrete Beam Expansion Test.

Replace the "ASTM D 3042" method with the "KM 64-625" method for Insoluble Residue.

SUBSECTION: 810.04.01 Coating Requirements.
REVISION: Replace the "Subsection 806.07" references with "Subsection 806.06"

SUBSECTION: 810.06.01 Polyvinyl Chloride (PVC) Pipe.
PART: B) Culvert and Entrance Pipe.
REVISION: Replace the title with the following:

B) Culvert Pipe, Storm Sewer, and Entrance Pipe.

SUBSECTION: 823.02 LIQUID MEMBRANE FORMING COMPOUNDS.
REVISION: Add the following:

Effective July 1, 2011, to remain on or be added to the Department's approved list, products must have completed testing or been submitted for testing through the National Transportation Product Evaluation Program (NTPEP) for Concrete Curing Compounds.

SUBSECTION: 837.03 APPROVAL.
REVISION: Replace the last sentence with the following:

The Department will sample and evaluate for approval each lot of thermoplastic material delivered for use per contract prior to installation of the thermoplastic material. Do not allow the installation of thermoplastic material until it has been approved by the Division of Materials. Allow the Department a minimum of 10 working days to evaluate and approve thermoplastic material.

SUBSECTION: 837.03.01 Composition.
REVISION: COMPOSITION Table:

Replace

Lead Chromate	0.0 max.	4.0 min.

with

Heavy Metals Content	Comply with 40 CFR 261

SUBSECTION: 842.02 APPROVAL.
TABLE: PAINT COMPOSITION
REVISION: Revise the following in the table:

Replace the 2.0ΔE* values in the table with 4.0ΔE* for both Yellow and White Paint on both the Daytime and Nighttime Color Spectrophotometer.

SECTION: DIVISION 800 MATERIAL DETAILS
REVISION: Add the following section in Division 800

SECTION 846 – DURABLE WATERBORNE PAINT

846.01 DESCRIPTION. This section covers quick-drying durable waterborne pavement striping paint for permanent applications. The paint shall be ready-mixed, one-component, 100% acrylic waterborne striping paint suitable for application on such traffic-bearing surfaces as Portland cement concrete, bituminous cement concrete, asphalt, tar, and previously painted areas of these surfaces.

846.02 Approval. Select materials that conform to the composition requirements below. Provide independent analysis data and certification for each formulation stating the total concentration of each heavy metal present, the test method used for each determination, and compliance to 40 CFR 261 for leachable heavy metals content. Submit initial samples for approval before beginning striping

Supplemental Specifications to The Standard Specifications for Road and Bridge Construction, 2008 Edition
(Effective with the March 18, 2011 Letting)

operations. The initial sample may be sent from the manufacture of the paint. The Department will randomly sample and evaluate the paint each week that the striping operations are in progress.

The non-volatile portion of the vehicle shall be composed of a 100% acrylic polymer as determined by infrared spectral analysis. The acrylic resin used shall be a 100% cross-linking acrylic as evidenced by infrared peaks at wavelengths 1568, 1624, and 1672 cm-1 with intensities equal to those produced by an acrylic resin known to be 100% cross-linking.

PAINT COMPOSITION		
Property and Test Method	Yellow	White
Daytime Color (CIELAB) Spectrophotometer using illuminant D65 at 45º illumination and 0º viewing with a 2º observer	L* 81.76 a* 19.79 b* 89.89 Maximum allowa□le variation 4.0ΔE*	L* 93.51 a* -1.01 b* 0.70 Maximum allowable variation 4.0ΔE*
Nighttime Color (CIELAB) Spectrophotometer using illuminant A at 45º illumination and 0º viewing with a 2º observer	L* 86.90 a* 24.80 b* 95.45 Maximum allowable variation 4.0ΔE*	L* 93.45 a* -0.79 b* 0.43 Maximum allowable variation 4.0ΔE*
Heavy Metals Content	Comply with 40 CFR 261	Comply with 40 CFR 261
Titanium Dioxide ASTM D 4764	NA	10% by weight of pigment min.
VOC ASTM D 2369□and D 4017	1.25 lb/gal max.	1.25 l□/gal ma□.
Contrast Ratio (at 15 mils wft)	0.97	0.99

846.02.01 Manufacturers Certification. Provide a certification of analysis for each lot of traffic paint produced stating conformance to the requirements of this section. Report the formulation identification, traffic paint trade name, color, date of manufacturer, total quantity of lot produced, actual quantity of traffic paint represented, sampling method utilized to obtain the samples, and data for each sample tested to represent each lot produced.

846.03 ACCEPTANCE PROCEDURES FOR NON-SPECIFICATION DURABLE WATERBORNE PAVEMENT STRIPING PAINT. When non-specification paint is inadvertently incorporated into the work the Department will accept the material with a reduction in pay. The percentage deduction is cumulative based on its compositional properties, but will not exceed 60 percent. The Department will calculate the payment reduction on the unit bid price for the routes where the non-specification paint was used.

DURABLE WATERBORNE PAVEMENT STRIPING PAINT REDUCTION SCHEDULE						
Non-conforming Property	Resin	Color	Contrast	TiO_2	VOC	Heavy Metals Content
Reduction Rate	60%	10%	10%	10%	60%	60%

Supplemental Specifications to The Standard Specifications for Road and Bridge Construction, 2008 Edition

(Effective with the March 18, 2011 Letting)

APPENDIX A:	TABLUATION OF CONSTRUCTION TOLERANCES.
PART:	601.03.03
REVISION:	Replace with the following:
	Concrete accuracy of individual ingredient material for each batch. ± 2.0% for aggregates ± 1.0% for water ± 1.0% for cement in batches of 4 cubic yards or greater ± 1.0% for total cementitious materials in batches of 4 cubic yards or greater 0.0% to + 4.0% for cement in batches less than 4 cubic yards 0.0% to + 4.0% for total cementitious materials in batches less than 4 cubic yards ± 3.0% for admixtures
APPENDIX A:	TABLUATION OF CONSTRUCTION TOLERANCES.
PART:	601.03.03 C) 2)
REVISION:	Delete

STANDARD DRAWINGS THAT APPLY

CURVE WIDENING AND SUPERELEVATION TRANSITIONS RGS-001-06
MISCELLANEOUS STANDARDS PART 1 ..... RGX-001-05
APPROACHES, ENTRANCES, AND MAIL BOX TURNOUT RPM-110-05
TYPICAL INSTALLATIONS FOR SIDEWALK RAMPS RPM-160-03
LANE CLOSURE TWO-LANE HIGHWAY CASE I TTC-100-01
LANE CLOSURE TWO-LANE HIGHWAY CASE II TTC-105-01
SHOULDER CLOSURE TTC-135-01
POST SPLICING DETAIL TTD-110-01
PAVEMENT CONDITION WARNING SIGNS TTD-125
MOBILE OPERATION FOR PAINT STRIPING CASE I TTS-100-01
MOBILE OPERATION FOR PAINT STRIPING CASE II TTS-105-01

COUNTY OF	ITEM NO.	SHEET NO.

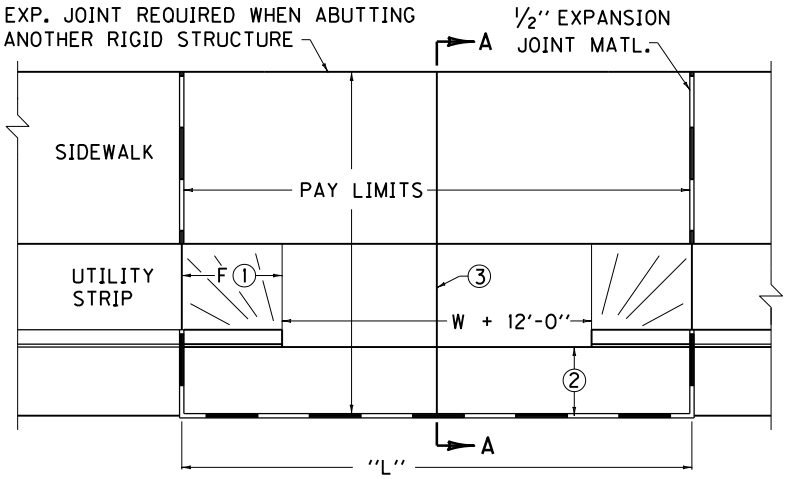

PLAN VIEW

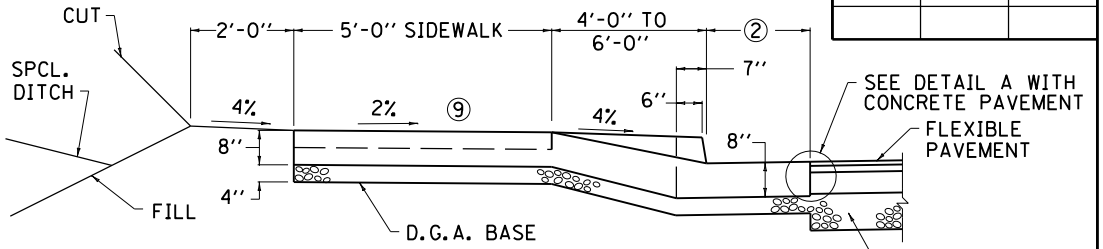

SECTION A-A CONDITION NO. 1

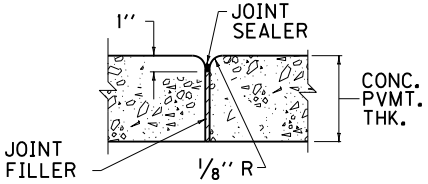

DETAIL A

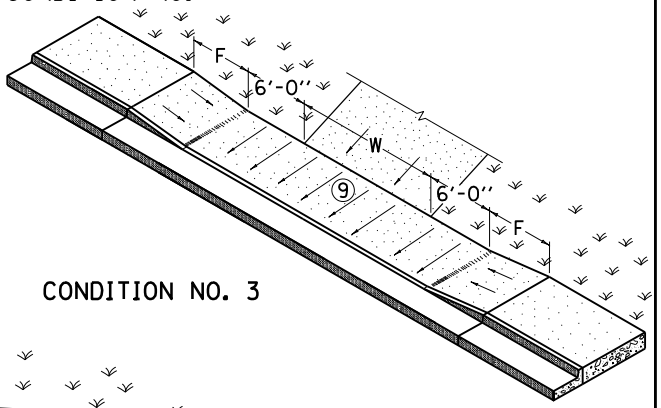

CONDITION NO. 3

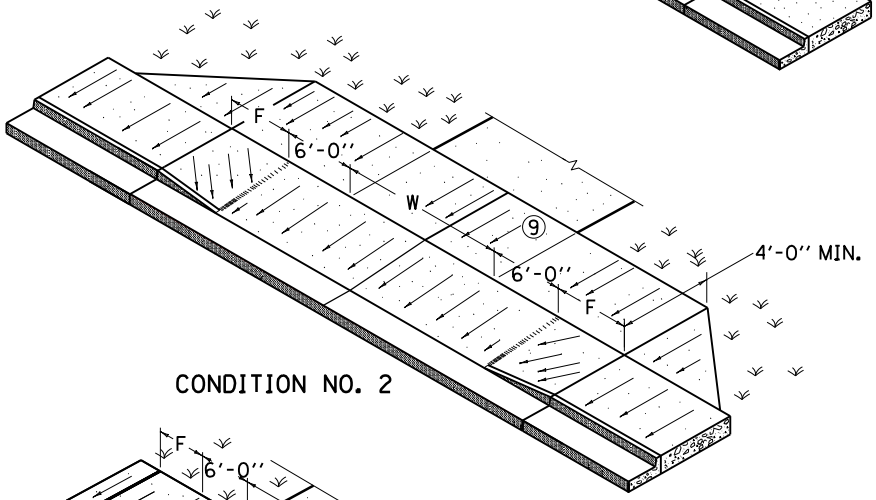

CONDITION NO. 2

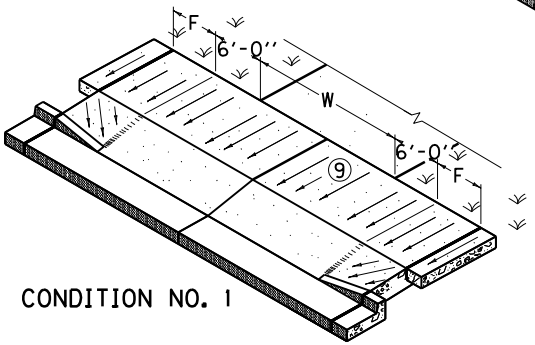

CONDITION NO. 1

~ NOTES ~

① FOR WIDTH W AND F:
RESIDENTIAL - MINIMUM W = 12'-0", MAXIMUM W = 24'-0"; MINIMUM F = 2'-6", MAXIMUM F = 10'-0"
COMMERCIAL - MINIMUM W = 24'-0", MAXIMUM W = 36'-0"; F = 10'-0"
WHEN MORE THAN 2 LANES ARE REQUIRED, 36'-0" WIDTH MAY BE INCREASED TO RELIEVE INTERFERENCE BETWEEN ENTERING AND EXITING TRAFFIC. AT THE ENGINEER'S DISCRETION RADIAL RETURNS MAY BE USED ON ENTRANCES. SOME APPLICABLE CASES ARE THE FOLLOWING:

a. ON ENTRANCES EXPECTED TO CARRY HIGH VOLUMES OF TRAFFIC.
b. WHEN ENTRANCE WIDTH IS GREATER THAN 36'.
c. WHEN THE HIGHWAY HAS A POSTED OR OPERATING SPEED OVER 40 MPH.
d. ON A RURAL SECTION WHERE A FLUSH SHOULDER EXISTS.
e. WHERE AN EXCLUSIVE RIGHT TURN LANE IS USED.

② 1'-0" OR 2'-0" WITH CONCRETE PAVEMENT, 2'-0" WITH FLEXIBLE PAVEMENT

③ WHEN "L" DIMENSION IS GREATER THAN 15'-0" A SAWED AND SEALED JOINT, 1½" DEEP AND ¼" WIDE SHALL BE PLACED AT THE CENTER OF THE "L" DIMENSION. WIDE ENTRANCES REQUIRE ADDITIONAL JOINTS, SPACING SHALL NOT EXCEED 15'-0" O.C.

4. CLASS "A" CONCRETE OR JOINTED PLAIN CONCRETE PAVEMENT SHALL BE USED IN THE ENTRANCE PAVEMENT.

5. THE ENTRANCE PAVEMENT SHALL RECEIVE A BROOM FINISH AND SHALL BE CURED THE SAME AS THE MAINLINE PAVEMENT AND/OR SIDEWALK.

6. THE CONTRACT UNIT PRICE BID PER SQUARE YARD FOR "CONC. ENT. PAVEMENT-8 INCH (CODE NO. 2101)" SHALL INCLUDE CLASS "A" CONCRETE AND ALL INCIDENTALS NECESSARY TO COMPLETE THE WORK. D.G.A. AND DETECTABLE WARNINGS SHALL BE SEPARATE BID ITEMS.

7. USE CONDITION NO. 2 OR NO. 3 WHEN LITTLE OR NO UTILITY STRIP IS PROVIDED, AND INCORPORATE FEATURES OF OTHER DESIGNS SHOWN WHERE NOT IN CONFLICT.

8. PROVIDED THAT ADA GUIDELINES SHOWN IN NOTES ⑨ AND 10 ARE FOLLOWED, THE ENGINEER MAY MODIFY THE DESIGN TO BETTER FIT EXISTING CONDITIONS.

⑨ 2% CROSS SLOPE MAXIMUM ON SIDEWALK. IF CONDITIONS WARRANT, SIDEWALK MAY BE SLOPED 2% AWAY FROM ROADWAY.

10. SIDEWALKS SHOULD BE DESIGNED WITH A MAX. GRADE OF 5% . WHERE A SIDEWALK RUNS ALONG A STEEP ROADWAY, THE SIDEWALK GRADE MAY EXCEED 5% IF IT FOLLOWS THE GRADE OF THE ROADWAY.

11. COMMERCIAL DRIVEWAYS WITH TRAFFIC CONTROL DEVICES REQUIRE ADA SIDEWALK TREATMENTS WITH DETECTABLE WARNINGS.

USE WITH CUR. STD. DWG. RGX-040

KENTUCKY
DEPARTMENT OF HIGHWAYS

CONCRETE ENTRANCE PAVEMENT AND SIDEWALK

APPROVED [signature] 03-13-09
TRM DIVISION OF HIGHWAY DESIGN DATE

012

COUNTY OF	ITEM NO.	SHEET NO.

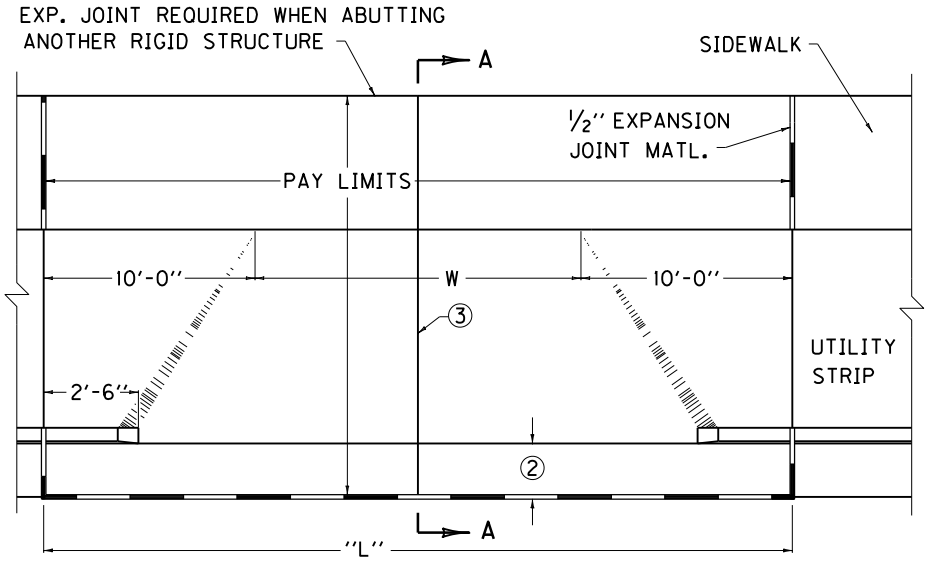

PLAN VIEW

~ NOTES ~

① FOR WIDTH W:
COMMERCIAL - MINIMUM W = 24'-0", MAXIMUM W = 36'-0"
WHEN MORE THAN 2 LANES ARE REQUIRED, 36'-0" WIDTH MAY BE INCREASED TO RELIEVE INTERFERENCE BETWEEN ENTERING AND EXITING TRAFFIC. AT THE ENGINEER'S DISCRETION RADIAL RETURNS MAY BE USED ON ENTRANCES. SOME APPLICABLE CASES ARE THE FOLLOWING:

a. ON ENTRANCES EXPECTED TO CARRY HIGH VOLUMES OF TRAFFIC.
b. WHEN ENTRANCE WIDTH IS GREATER THAN 36'.
c. WHEN THE HIGHWAY HAS A POSTED OR OPERATING SPEED OVER 40 MPH.
d. ON A RURAL SECTION WHERE A FLUSH SHOULDER EXISTS.
e. WHERE AN EXCLUSIVE RIGHT TURN LANE IS USED.

② 1'-0" OR 2'-0" WITH CONCRETE PAVEMENT, 2'-0" WITH FLEXIBLE PAVEMENT.

③ WHEN "L" DIMENSION IS GREATER THAN 15'-0" A SAWED AND SEALED JOINT, 1 1/2" DEEP AND 1/4" WIDE SHALL BE PLACED AT THE CENTER OF THE "L" DIMENSION. WIDE ENTRANCES REQUIRE ADDITIONAL JOINTS, SPACING SHALL NOT EXCEED 15'-0" O.C.

4. CLASS "A" CONCRETE OR JOINTED PLAIN CONCRETE PAVEMENT SHALL BE USED IN THE ENTRANCE PAVEMENT.

5. THE ENTRANCE PAVEMENT SHALL RECEIVE A BROOM FINISH AND SHALL BE CURED THE SAME AS THE MAINLINE PAVEMENT AND/OR SIDEWALK.

6. THE CONTRACT UNIT PRICE BID PER SQUARE YARD FOR "CONC. ENT. PAVEMENT-8 INCH (CODE NO. 2101)" SHALL INCLUDE CLASS "A" CONCRETE AND ALL INCIDENTALS NECESSARY TO COMPLETE THE WORK. D.G.A. AND DETECTABLE WARNINGS SHALL BE SEPARATE BID ITEMS.

7. PROVIDING THAT ADA GUIDELINES SHOWN IN NOTE ⑧ AND 9 ARE FOLLOWED, THE ENGINEER MAY MODIFY THE DESIGN TO BETTER FIT EXISTING CONDITIONS.

⑧ 2% CROSS SLOPE MAXIMUM ON SIDEWALK.

9. SIDEWALKS SHOULD BE DESIGNED WITH A MAX. GRADE OF FIVE PERCENT. WHERE A SIDEWALK RUNS ALONG A STEEP ROADWAY, THE SIDEWALK GRADE MAY EXCEED FIVE PERCENT IF IT FOLLOWS THE GRADE OF THE ROADWAY.

⑩ COMMERCIAL DRIVEWAYS WITH TRAFFIC CONTROL DEVICES REQUIRE ADA SIDEWALK TREATMENTS WITH DETECTABLE WARNINGS.

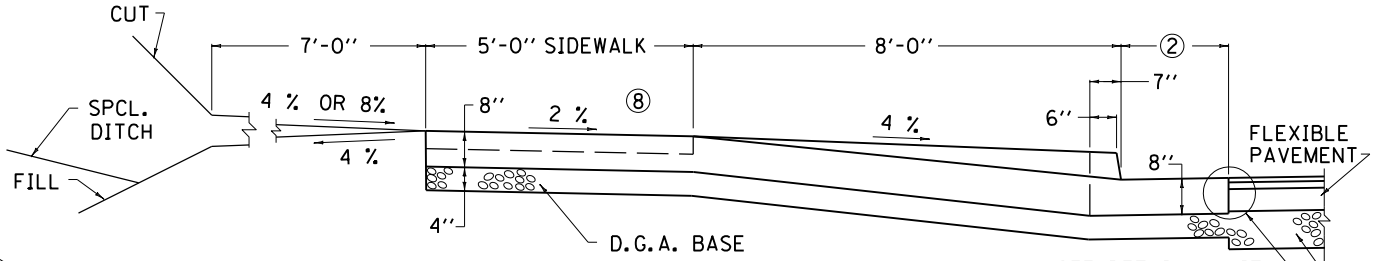

SECTION A-A

USE WITH CUR. STD. DWG. RGX-040

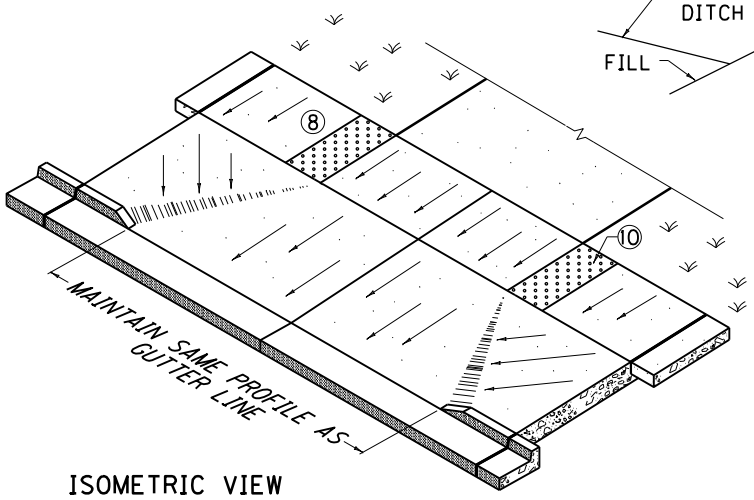

ISOMETRIC VIEW

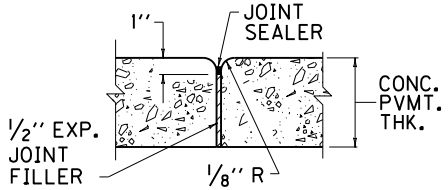

DETAIL A

KENTUCKY
DEPARTMENT OF HIGHWAYS

CONCRETE ENTRANCE PAVEMENT AND SIDEWALK

APPROVED [signature] TEAM DIVISION OF HIGHWAY DESIGN — DATE 03-13-09

COUNTY OF	ITEM NO.	SHEET NO.

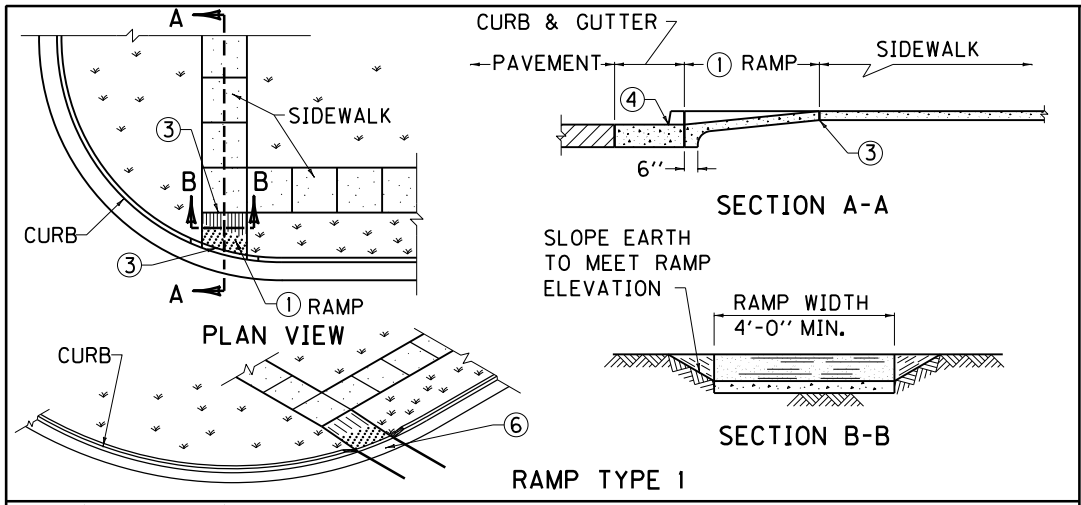

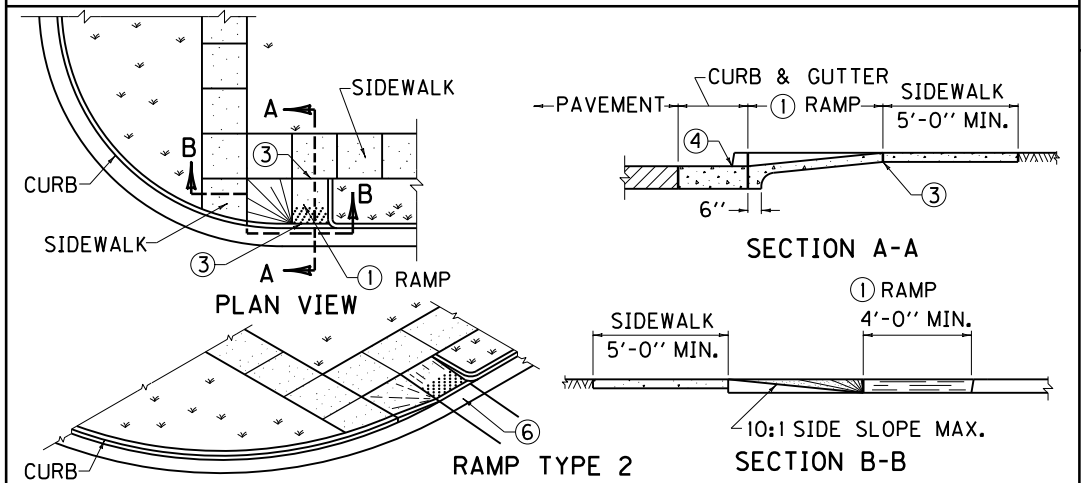

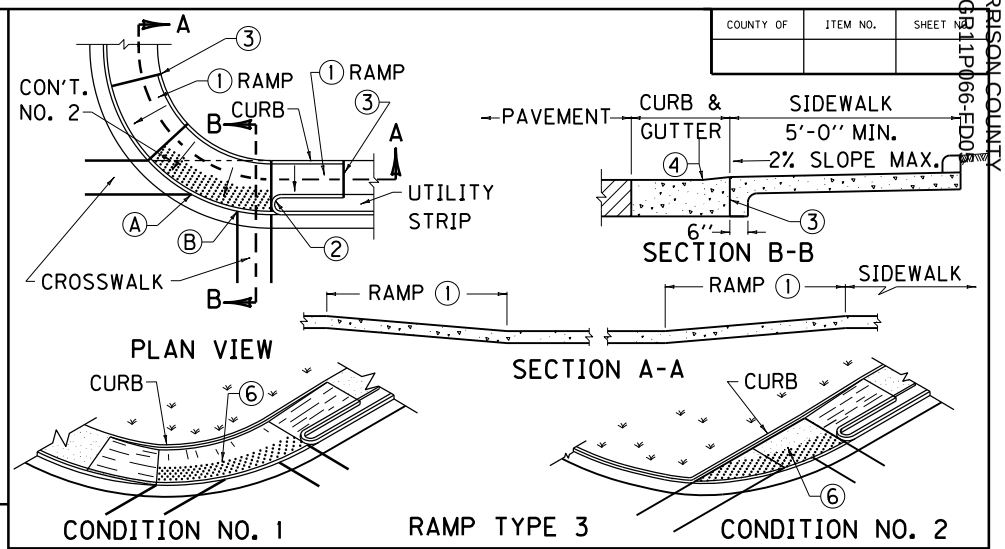

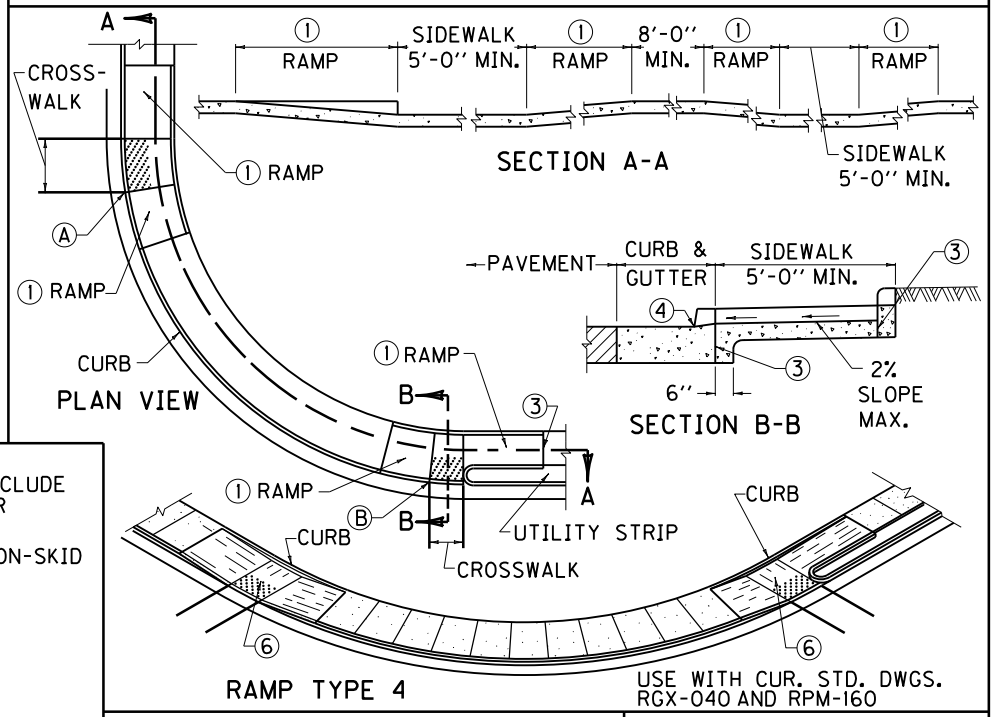

USE WITH CUR. STD. DWGS.
RGX-040 AND RPM-160

NOTES

RAMPS SHALL BE PAID PER SQ. YARD OF 4'' CONC. SIDEWALK AND THE UNIT PRICE SHALL INCLUDE ALL MATERIALS, FORMS, CURB BEHIND RAMP AND LANDING, AND INCIDENTALS NECESSARY FOR CONSTRUCTION.

THE RAMP SHALL BE CONSTRUCTED OF CLASS "A" CONCRETE. A BROOM FINISH OR EQUAL NON-SKID FINISH IS REQUIRED. DETECTABLE WARNINGS SHALL BE A SEPARATE BID ITEM.

THE NORMAL GUTTER LINE SHALL BE MAINTAINED THROUGH THE AREA OF THE RAMP.

RAMPS SHOULD BE LOCATED WITHIN MARKED LIMITS OF CROSSWALKS.

USE RAMP TYPE 3 WHEN POINT A TO B IS LESS THAN 20 FEET.

USE RAMP TYPE 4 WHEN POINT A TO B IS 20 FEET OR MORE.

① CURB RAMP GRADE SHALL NOT EXCEED 12:1, CROSS SLOPE SHALL NOT EXCEED 2%.
ON RETROFIT CURB RAMPS, GRADES OF 12.5% for 2'-0'' OR 10% FOR 5'-0'' ARE PERMISSABLE.

② CURB RETURN REQUIRED WHEN UTILITY STRIP IS 4 FEET OR GREATER. FOR UTILITY STRIPS LESS THAN 4 FEET, THE AREA IS TO BE SURFACED WITH SIDEWALK WITHIN THE RAMP.

③ ½'' EXPANSION JOINT AT BACK OF CURB LINE AND AT SIDEWALK LINE.

④ NO BUMP PERMITTED. SAME SLOPE AS RAMP AND NOT TO EXCEED 1'' IN HEIGHT. RAMPS SHALL BE CONSTRUCTED SO THAT WATER WILL NOT ACCUMULATE ON WALKING SURFACES.

5. ALL SIDEWALK RAMPS REQUIRE DETECTABLE WARNINGS.

⑥ LANDINGS WILL PROVIDE A LEVEL AREA (LESS THAN 2% GRADE OR CROSS SLOPE) AT APPROXIMATE STREET ELEVATION. A 4 FOOT SQUARE LEVEL LANDING IS THE REQUIRED MINIMUM.

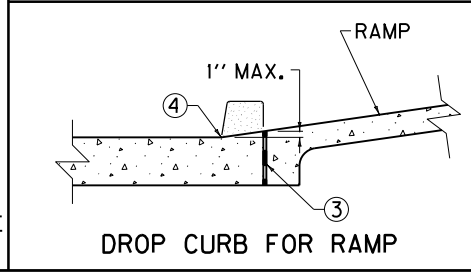

KENTUCKY
DEPARTMENT OF HIGHWAYS

SIDEWALK
RAMPS

APPROVED [signature] 12-16-08
TRANS DIVISION OF HIGHWAY DESIGN DATE

COUNTY OF	ITEM NO.	SHEET NO.

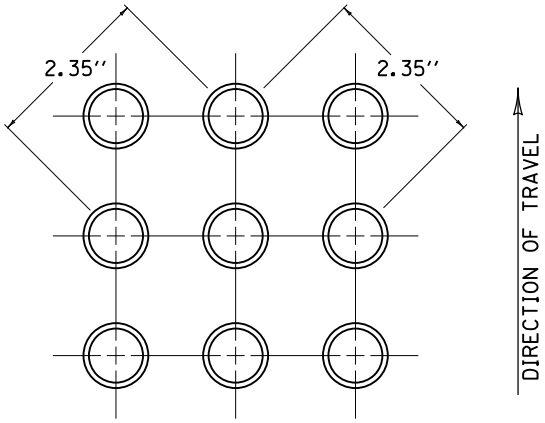

SQUARE PATTERN (PARALLEL ALIGNMENT)

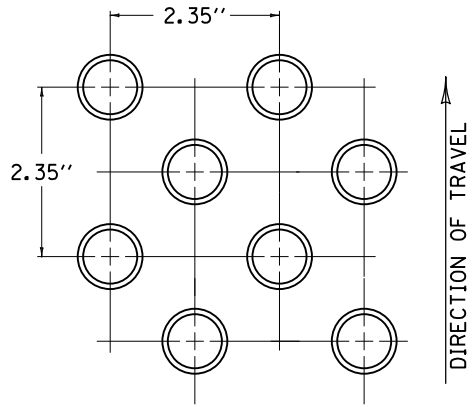

SQUARE PATTERN (DIAGONAL ALIGNMENT)

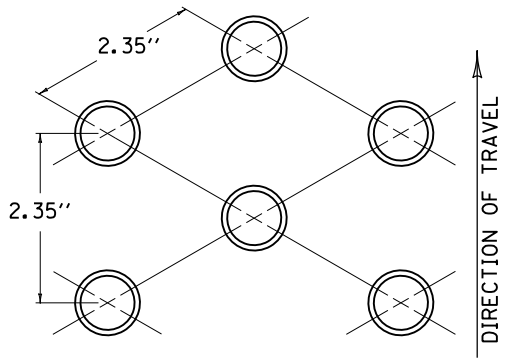

TRIANGULAR PATTERN

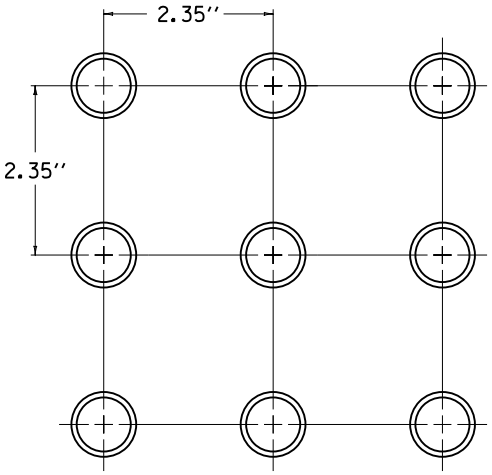

SQUARE PATTERN

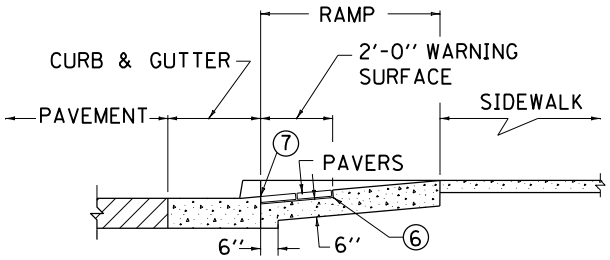

TYPICAL DETECTABLE WARNING INSTALLATION

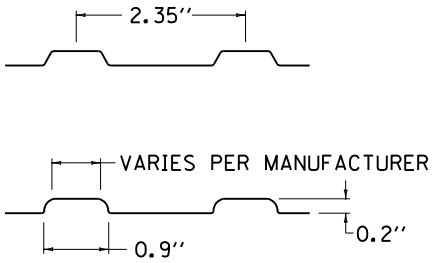

DETECTABLE WARNINGS PROFILE

NOTES

BID ITEM AND UNIT TO BID.
DETECTABLE WARNINGS - SQ. FT.

1. LANDINGS WILL PROVIDE A LEVEL AREA (LESS THAN 2% GRADE OR CROSS SLOPE) AT APPROXIMATE STREET ELEVATION. A 4 FOOT SQUARE LEVEL LANDING IS THE REQUIRED MINIMUM.
2. ALL SIDEWALK RAMPS REQUIRE DETECTABLE WARNINGS.
3. COMMERCIAL DRIVEWAYS WITH TRAFFIC CONTROL DEVICES REQUIRE ADA SIDEWALK TREATMENTS WITH DETECTABLE WARNINGS.
4. PAVERS SHALL BE CONCRETE WITH A MINIMUM THICKNESS OF 2''.
5. PAVERS SHALL BE A COLOR HOMOGENOUS THROUGHOUT THE PAVER, THAT COLOR SHALL CONTRAST VISUALLY WITH THE ADJOINING SURFACES, EITHER LIGHT-ON-DARK OR DARK-ON-LIGHT. THE DEPARTMENT WILL ALLOW EITHER YELLOW OR RED AS COLORS.

(6) PAVERS TO BE SET IN MORTAR.
(7) DETECTABLE WARNING SURFACE BEGINS AT BACK OF CURB.

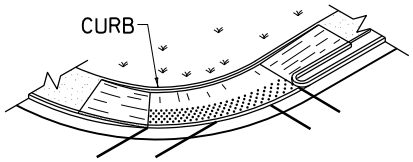

TYPICAL PLACEMENT PARALLEL CURB RAMPS

USE WITH CUR. STD. DWGS. RPM-160 AND RPM-170

KENTUCKY DEPARTMENT OF HIGHWAYS

DETECTABLE WARNINGS

APPROVED _____ TRANS. DIVISION OF HIGHWAY DESIGN — DATE 03-13-08

PART III

EMPLOYMENT, WAGE AND RECORD REQUIREMENTS

TRANSPORTATION CABINET
DEPARTMENT OF HIGHWAYS

LABOR AND WAGE REQUIREMENTS
APPLICABLE TO OTHER THAN FEDERAL-AID SYSTEM PROJECTS

I. Application
II. Nondiscrimination of Employees (KRS 344)
III. Payment of Predetermined Minimum Wages
IV. Statements and Payrolls

I. APPLICATION

1. These contract provisions shall apply to all work performed on the contract by the contractor with his own organization and with the assistance of workmen under his immediate superintendence and to all work performed on the contract by piecework, station work or by subcontract. The contractor's organization shall be construed to include only workmen employed and paid directly by the contractor and equipment owned or rented by him, with or without operators.

2. The contractor shall insert in each of his subcontracts all of the stipulations contained in these Required Provisions and such other stipulations as may be required.

3. A breach of any of the stipulations contained in these Required Provisions may be grounds for termination of the contract.

II. NONDISCRIMINATION OF EMPLOYEES

AN ACT OF THE KENTUCKY
GENERAL ASSEMBLY TO PREVENT
DISCRIMINATION IN EMPLOYMENT
KRS CHAPTER 344
EFFECTIVE JUNE 16, 1972

The contract on this project, in accordance with KRS Chapter 344, provides that during the performance of this contract, the contractor agrees as follows:

1. The contractor shall not fail or refuse to hire, or shall not discharge any individual, or otherwise discriminate against an individual with respect to his compensation, terms, conditions, or privileges of employment, because of such individual's race, color, religion, national origin, sex, disability or age (between forty and seventy); or limit, segregate, or classify his employees in any way which would deprive or tend to deprive an individual of employment opportunities or otherwise adversely affect his status as an employee, because of such individual's race, color, religion, national origin, sex, disability or age (between forty and seventy). The contractor agrees to post in conspicuous places, available to employees and applicants for employment, notices to be provided setting forth the provisions of this nondiscrimination clause.

2. The contractor shall not print or publish or cause to be printed or published a notice or advertisement relating to employment by such an employer or membership in or any classification or referral for employment by the employment agency, indicating any preference, limitation, specification, or discrimination, based on race, color, religion, national origin, sex, disability or age (between forty and seventy), except that such notice or advertisement may indicate a preference, limitation, or specification based on religion, or national origin when religion, or national origin is a bona fide occupational qualification for employment.

3. If the contractor is in control of apprenticeship or other training or retraining, including on-the-job training programs, he shall not discriminate against an individual because of his race, color, religion, national origin, sex, disability or age (between forty and seventy), in admission to, or employment in any program established to provide apprenticeship or other training.

4. The contractor will send to each labor union or representative of workers with which he has a collective bargaining agreement or other contract or understanding, a notice to be provided advising the said labor union or workers' representative of the contractor's commitments under this section, and shall post copies of the notice in conspicuous places available to employees and applicants for employment. The contractor will take such action with respect to any subcontract or purchase order as the administrating agency may direct as a means of enforcing such provisions, including sanctions for non-compliance.

III. PAYMENT OF PREDETERMINED MINIMUM WAGES

1. These special provisions are supplemented elsewhere in the contract by special provisions which set forth certain predetermined minimum wage rates. The contractor shall pay not less than those rates.

2. The minimum wage determination schedule shall be posted by the contractor, in a manner prescribed by the Department of Highways, at the site of the work in prominent places where it can be easily seen by the workers.

IV. STATEMENTS AND PAYROLLS

1. All contractors and subcontractors affected by the terms of KRS 337.505 to 337.550 shall keep full and accurate payroll records covering all disbursements of wages to their employees to whom they are required to pay not less than the prevailing rate of wages. Payrolls and basic records relating thereto will be maintained during the course of the work and preserved for a period of one (1) year from the date of completion of this contract.

2. The payroll records shall contain the name, address and social security number of each employee, his correct classification, rate of pay, daily and weekly number of hours worked, itemized deductions made and actual wages paid.

3. The contractor shall make his daily records available at the project site for inspection by the State Department of Highways contracting office or his authorized representative.

Periodic investigations shall be conducted as required to assure compliance with the labor provisions of the contract. Interrogation of employees and officials of the contractor shall be permitted during working hours.

Aggrieved workers, Highway Managers, Assistant District Engineers, Resident Engineers and Project Engineers shall report all complaints and violations to the Division of Contract Procurement.

The contractor shall be notified in writing of apparent violations. The contractor may correct the reported violations and notify the Department of Highways of the action taken or may request an informal hearing. The request for hearing shall be in writing within ten (10) days after receipt of the notice of the reported violation. The contractor may submit

records and information which will aid in determining the true facts relating to the reported violations.

Any person or organization aggrieved by the action taken or the findings established as a result of an informal hearing by the Division of Contract Procurement may request a formal hearing.

4. The wages of labor shall be paid in legal tender of the United States, except that this condition will be considered satisfied if payment is made by a negotiable check, on a solvent bank, which may be cashed readily by the employee in the local community for the full amount, without discount or collection charges of any kind. Where checks are used for payments, the contractor shall make all necessary arrangements for them to be cashed and shall give information regarding such arrangements.

5. No fee of any kind shall be asked or accepted by the contractor or any of his agents from any person as a condition of employment on the project.

6. No laborers shall be charged for any tools used in performing their respective duties except for reasonably avoidable loss or damage thereto.

7. Every employee on the work covered by this contract shall be permitted to lodge, board, and trade where and with whom he elects and neither the contractor nor his agents, nor his employees shall directly or indirectly require as a condition of employment that an employee shall lodge, board or trade at a particular place or with a particular person.

8. Every employee on the project covered by this contract shall be an employee of either the prime contractor or an approved subcontractor.

9. No charge shall be made for any transportation furnished by the contractor or his agents to any person employed on the work.

10. No individual shall be employed as a laborer or mechanic on this contract except on a wage basis, but this shall not be construed to prohibit the rental of teams, trucks or other equipment from individuals.

No Covered employee may be employed on the work except in accordance with the classification set forth in the schedule mentioned above; provided, however, that in the event additional classifications are required, application shall be made by the contractor to the Department of Highways and (1) the Department shall request appropriate classifications and rates from the proper agency, or (2) if there is urgent need for additional classification to avoid undue delay in the work, the contractor may employ such workmen at rates deemed comparable to rates established for similar classifications provided he has made written application through the Department of Highways, addressed to the proper agency, for the supplemental rates. The contractor shall retroactively adjust, upon receipt of the supplemental rates schedule, the wages of any employee paid less than the established rate and may adjust the wages of any employee overpaid.

11. No contractor or subcontractor contracting for any part of the contract work which may require or involve the employment of laborers or mechanics shall require or permit any laborer or mechanic in any work-week in which he is employed on such work, to work in excess of eight hours in any calendar day or in excess of forty hours in such work-week unless such laborer or mechanic receives compensation at a rate not less than one and one half times his basic rate of pay for all hours worked in excess of eight hours in any calendar day or in excess of forty hours in such work-week. A laborer, workman or mechanic and an employer may enter into a written agreement or a collective bargaining agreement to work more than eight (8) hours a calendar day but not more than ten (10) hours a calendar day for the straight time hourly rate. This agreement shall be in writing and shall be executed prior to the employee working in excess of eight (8) hours, but not more than ten (10) hours, in any one (1) calendar day.

12. Payments to the contractor may be suspended or withheld due to failure of the contractor to pay any laborer or mechanic employed or working on the site of the work, all or part of the wages required under the terms of the contract. The Department may suspend or withhold payments only after the contractor has been given written notice of the alleged violation and the contractor has failed to comply with the wage determination of the Department of Highways.

13. Contractors and subcontractors shall comply with the sections of Kentucky Revised Statutes, Chapter 337 relating to contracts for Public Works.

Revised 2-16-95

EXECUTIVE BRANCH CODE OF ETHICS

In the 1992 regular legislative session, the General Assembly passed and Governor Brereton Jones signed Senate Bill 63 (codified as KRS 11A), the Executive Branch Code of Ethics, which states, in part:

> KRS 11A.040 (6) provides:
>
> No present or former public servant shall, within six (6) months of following termination of his office or employment, accept employment, compensation or other economic benefit from any person or business that contracts or does business with the state in matters in which he was directly involved during his tenure. This provision shall not prohibit an individual from returning to the same business, firm, occupation, or profession in which he was involved prior to taking office or beginning his term of employment, provided that, for a period of six (6) months, he personally refrains from working on any matter in which he was directly involved in state government. This subsection shall not prohibit the performance of ministerial functions, including, but not limited to, filing tax returns, filing applications for permits or licenses, or filing incorporation papers.
>
> KRS 11A.040 (8) states:
>
> A former public servant shall not represent a person in a matter before a state agency in which the former public servant was directly involved, for a period of one (1) year after the latter of:
>
> a) The date of leaving office or termination of employment; or
> b) The date the term of office expires to which the public servant was elected.

This law is intended to promote public confidence in the integrity of state government and to declare as public policy the idea that state employees should view their work as a public trust and not as a way to obtain private benefits.

If you have worked for the executive branch of state government within the past six months, you may be subject to the law's prohibitions. The law's applicability may be different if you hold elected office or are contemplating representation of another before a state agency.

Also, if you are affiliated with a firm which does business with the state and which employs former state executive-branch employees, you should be aware that the law may apply to them.

In case of doubt, the law permits you to request an advisory opinion from the Executive Branch Ethics Commission, Room 136, Capitol Building, 700 Capitol Avenue, Frankfort, Kentucky 40601; telephone (502) 564-7954.

Kentucky Equal Employment Opportunity Act of 1978

The requirements of the Kentucky Equal Employment Opportunity Act of 1978 (KRS 45.560-45.640) shall apply to this Contract. The apparent low Bidder will be required to submit EEO forms to the Division of Construction Procurement, which will then forward to the Finance and Administration Cabinet for review and approval. No award will become effective until all forms are submitted and EEO/CC has certified compliance. The required EEO forms are as follows:

- EEO-1: Employer Information Report
- Affidavit of Intent to Comply
- Employee Data Sheet
- Subcontractor Report

These forms are available on the Finance and Administration's web page under ***Vendor Information, Standard Attachments and General Terms*** at the following address: **https://www.eProcurement.ky.gov**.

Bidders currently certified as being in compliance by the Finance and Administration Cabinet may submit a copy of their approval letter in lieu of the referenced EEO forms.

For questions or assistance please contact the Finance and Administration Cabinet by email at **finance.contractcompliance@ky.gov** or by phone at 502-564-2874.

General Decision Number: KY100211 01/28/2011 KY211

State: Kentucky

Construction Type: Highway

Counties: Anderson, Bath, Bourbon, Boyd, Boyle, Bracken, Breckinridge, Bullitt, Carroll, Carter, Clark, Elliott, Fayette, Fleming, Franklin, Gallatin, Grant, Grayson, Greenup, Hardin, Harrison, Henry, Jefferson, Jessamine, Larue, Lewis, Madison, Marion, Mason, Meade, Mercer, Montgomery, Nelson, Nicholas, Oldham, Owen, Robertson, Rowan, Scott, Shelby, Spencer, Trimble, Washington and Woodford Counties in Kentucky.

HIGHWAY CONSTRUCTION PROJECTS (excluding tunnels, building structures in rest area projects & railroad construction; bascule, suspension & spandrel arch bridges designed for commercial navigation, bridges involving marine construction; and other major bridges).

Modification Number	Publication Date
0	10/22/2010
1	11/05/2010
2	12/03/2010
3	12/17/2010
4	12/31/2010
5	01/28/2011

BRIN0004-003 04/01/2010

BRECKENRIDGE COUNTY

	Rates	Fringes
BRICKLAYER	$ 27.47	12.53

BRKY0001-005 06/01/2009

BULLITT, CARROLL, GRAYSON, HARDIN, HENRY, JEFFERSON, LARUE, MARION, MEADE, NELSON, OLDHAM, SHELBY, SPENCER, & TRIMBLE COUNTIES:

	Rates	Fringes
BRICKLAYER	$ 24.11	9.97

BRKY0002-006 06/01/2009

BRACKEN, GALLATIN, GRANT, MASON & ROBERTSON COUNTIES:

	Rates	Fringes
BRICKLAYER	$ 26.12	9.73

BRKY0007-004 06/01/2009

BOYD, CARTER, ELLIOT, FLEMING, GREENUP, LEWIS & ROWAN COUNTIES:

	Rates	Fringes
BRICKLAYER	$ 26.82	15.30

BRKY0017-004 06/01/2009

ANDERSON, BATH, BOURBON, BOYLE, CLARK, FAYETTE, FRANKLIN, HARRISON, JESSAMINE, MADISON, MERCER, MONTGOMERY, NICHOLAS, OWEN, SCOTT, WASHINGTON & WOODFORD COUNTIES:

	Rates	Fringes
BRICKLAYER	$ 24.11	9.97

CARP0064-001 07/01/2010

	Rates	Fringes
CARPENTER	$ 25.45	12.21
Diver	$ 37.64	10.23
PILEDRIVERMAN	$ 25.09	10.23

ELEC0212-008 05/31/2010

BRACKEN, GALLATIN and GRANT COUNTIES

	Rates	Fringes
ELECTRICIAN	$ 26.11	14.34

ELEC0212-014 01/01/2006

BRACKEN, GALLATIN & GRANT COUNTIES:

	Rates	Fringes
Sound & Communication Technician	$ 20.45	6.95

ELEC0317-012 06/01/2010

BOYD, CARTER, ELLIOT & ROWAN COUNTIES:

	Rates	Fringes
Electricians:		
Cable Splicer	$ 32.68	18.13
Electrician	$ 31.87	19.58

ELEC0369-007 05/26/2010

ANDERSON, BATH, BOURBON, BOYLE, BRECKINRIDGE, BULLITT, CARROLL, CLARK, FAYETTE, FRAONKLIN, GRAYSON, HARDIN, HARRISON, HENRY, JEFFERSON, JESSAMINE, LARUE, MADISON, MARION, MEADE, MERCER, MONTGOMERY, NELSON, NICHOLAS, OLDHAM, OWEN, ROBERTSON, SCOTT, SHELBY, SPENCER, TRIMBLE, WASHINGTON, & WOODFORD COUNTIES:

	Rates	Fringes
ELECTRICIAN	$ 29.27	13.08

ELEC0575-002 12/01/2009

FLEMING, GREENUP, LEWIS & MASON COUNTIES:

	Rates	Fringes
ELECTRICIAN	$ 30.79	11.88

ENGI0181-018 07/01/2010

	Rates	Fringes
Operating Engineer:		
GROUP 1	$ 25.35	13.00
GROUP 2	$ 22.93	13.00
GROUP 3	$ 23.31	13.00
GROUP 4	$ 22.67	13.00

OPERATING ENGINEER CLASSIFICATIONS

GROUP 1 - A-Frame Winch Truck; Auto Patrol; Backfiller; Batcher Plant; Bituminous Paver; Bituminous Transfer Machine; Boom Cat; Bulldozer; Mechanic; Cableway; Carry-All Scoop; Carry Deck Crane; Central Compressor Plant; Cherry Picker; Clamshell; Concrete Mixer (21 cu. ft. or Over); Concrete Paver; Truck-Mounted Concrete Pump; Core Drill; Crane; Crusher Plant; Derrick; Derrick Boat; Ditching & Trenching Machine; Dragline; Dredge Operator; Dredge Engineer; Elevating Grader & Loaders; Grade-All; Gurries; Heavy Equipment Robotics Operator/Mechanic; High Lift; Hoe-Type Machine; Hoist (Two or More Drums); Hoisting Engine (Two or More Drums); Horizontal Directional Drill Operator; Hydrocrane; Hyster; KeCal Loader; LeTourneau; Locomotive; Mechanic; Mechanically Operated Laser Screed; Mechanic Welder; Mucking Machine; Motor Scraper; Orangepeel Bucket; Overhead Crane; Piledriver; Power Blade; Pumpcrete; Push Dozer; Rock Spreader, attached to equipment; Rotary Drill; Roller (Bituminous); Rough Terrain Crane; Scarifier; Scoopmobile; Shovel; Side Boom; Subgrader; Tailboom; Telescoping Type Forklift; Tow or Push Boat; Tower Crane (French, German & other types); Tractor Shovel; Truck Crane; Tunnel Mining Machines, including Moles, Shields or similar types of Tunnel Mining Equipment

GROUP 2 - Air Compressor (Over 900 cu. ft. per min.); Bituminous Mixer; Boom Type Tamping Machine; Bull Float; Concrete Mixer (Under 21 cu. ft.); Dredge Engineer; Electric Vibrator; Compactor/Self-Propelled Compactor; Elevator (One Drum or Buck Hoist); Elevator (When used to Hoist Building Material); Finish Machine; Firemen & Hoist (One Drum); Flexplane; Forklift (Regardless of Lift Height); Form Grader; Joint Sealing Machine; Outboard Motor Boat; Power Sweeper (Riding Type); Roller (Rock); Ross Carrier; Skid Mounted or Trailer Mounted Conrete Pump; Skid Steer Machine with all Attachments; Switchman or Brakeman; Throttle Valve Person; Tractair & Road Widening Trencher;

Tractor (50 H.P. or Over); Truck Crane Oiler; Tugger; Welding Machine; Well Points; & Whirley Oiler

GROUP 3 - All Off Road Material Handling Equipment, including Articulating Dump Trucks; Greaser on Grease Facilities servicing Heavy Equipment

GROUP 4 - Bituminous Distributor; Burlap & Curing Machine; Cement Gun; Concrete Saw; Conveyor; Deckhand Oiler; Grout Pump; Hydraulic Post Driver; Hydro Seeder; Mud Jack; Oiler; Paving Joint Machine; Power Form Handling Equipment; Pump; Roller (Earth); Steerman; Tamping Machine; Tractor (Under 50 H.P.); & Vibrator

CRANES - with booms 150 ft. & Over (Including JIB), and where the length of the boom in combination with the length of the piling leads equals or exceeds 150 ft. - $1.00 over Group 1 rate

EMPLOYEES ASSIGNED TO WORK BELOW GROUND LEVEL ARE TO BE PAID 10%
ABOVE BASIC WAGE RATE. THIS DOES NOT APPLY TO OPEN CUT WORK.

IRON0044-009 06/01/2009

BRACKEN, GALLATIN, GRANT, HARRISON, ROBERTSON,
BOURBON (Northern third, including Townships of Jackson, Millersburg, Ruddel Mills & Shawhan);
CARROLL (Eastern third, including the Township of Ghent);
FLEMING (Western part, excluding Townships of Beechburg, Colfax, Elizaville, Flemingsburg, Flemingsburg Junction, Foxport, Grange City, Hillsboro, Hilltop, Mount Carmel, Muses Mills, Nepton, Pecksridge, Plummers Landing, Plummers Mill, Poplar Plains, Ringos Mills, Tilton & Wallingford);
MASON (Western two-thirds, including Townships of Dover, Lewisburg, Mays Lick, Maysville, Minerva, Moranburg, Murphysville, Ripley, Sardis, Shannon, South Ripley & Washington);
NICHOLAS (Townships of Barefoot, Barterville, Carlisle, Ellisville, Headquarters, Henryville, Morningglory, Myers & Oakland Mills);
OWEN (Townships of Beechwood, Bromley, Fairbanks, Holbrook, Jonesville, Long Ridge, Lusby's Mill, New, New Columbus, New Liberty, Owenton, Poplar Grove, Rockdale, Sanders, Teresita & Wheatley);
SCOTT (Northern two-thirds, including Townships of Biddle, Davis, Delaplain, Elmville, Longlick, Muddy Ford, Oxford, Rogers Gap, Sadieville, Skinnersburg & Stonewall)

	Rates	Fringes
IRONWORKER		
Fence Erector	$ 23.55	16.72
Structural	$ 26.17	16.72

IRON0070-006 06/01/2010

ANDERSON, BOYLE, BRECKINRIDGE, BULLITT, FAYETTE, FRANKLIN, GRAYSON, HARDIN, HENRY, JEFFERSON, JESSAMINE, LARUE, MADISON,

MARION, MEADE, MERCER, NELSON, OLDHAM, SHELBY, SPENCER,
TRIMBLE, WASHINGTON & WOODFORD
BOURBON (Southern two-thirds, including Townships of Austerlity,
Centerville, Clintonville, Elizabeth, Hutchison, Littlerock,
North Middletown & Paris);
CARROLL (Western two-thirds, including Townships of Carrollton,
Easterday, English, Locust, Louis, Prestonville & Worthville);
CLARK (Western two-thirds, including Townships of Becknerville,
Flanagan, Ford, Pine Grove, Winchester & Wyandotte);
OWEN (Eastern eighth, including Townships of Glenmary, Gratz,
Monterey, Perry Park & Tacketts Mill);
SCOTT (Southern third, including Townships of Georgetown, Great
Crossing, Newtown, Stampling Ground & Woodlake);

	Rates	Fringes
IRONWORKER.....	$ 24.99	17.98

---

* IRON0372-006 06/01/2010

BRACKEN, GALLATIN, GRANT, HARRISON and ROBERTSON
BOURBON (Northern third, including Townships of Jackson,
Millersburg, Ruddel Mills & Shawhan);
CARROLL (Eastern third, including the Township of Ghent);
FLEMING (Western part, Excluding Townships of Beechburg, Colfax,
Elizaville, Flemingsburg, Flemingsburg Junction, Foxport,
Grange City, Hillsboro, Hilltop, Mount Carmel, Muses Mills,
Nepton, Pecksridge, Plummers Landing, Plummers Mill, Poplar
Plains,
Ringos Mills, Tilton & Wallingford);
MASON (Western two-thirds, including Townships of Dover,
Lewisburg, Mays Lick, Maysville, Minerva, Moranburg,
Murphysville, Ripley, Sardis, Shannon, South Ripley &
Washington);
NICHOLAS (Townships of Barefoot, Barterville, Carlisle,
Ellisville, Headquarters, Henryville, Morningglory, Myers &
Oakland Mills);
OWEN (Townships of Beechwood, Bromley, Fairbanks, Holbrook,
Jonesville, Long Ridge, Lusby's Mill, New, New Columbus, New
Liberty, Owenton, Poplar Grove, Rockdale, Sanders, Teresita &
Wheatley);
SCOTT (Northern two-thirds, including Townships of Biddle,
Davis,Delaplain, Elmville, Longlick, Muddy Ford, Oxford, Rogers
Gap, Sadieville, Skinnersburg & Stonewall) COUNTIES

	Rates	Fringes
IRONWORKER, REINFORCING		
Beyond 30-mile radius of Hamilton County, Ohio Courthouse.....	$ 26.55	17.10
Up to & including 30-mile radius of Hamilton County, Ohio Courthouse.....	$ 26.30	17.10

IRON0769-007 06/01/2010

BATH, BOYD, CARTER, ELLIOTT, GREENUP, LEWIS, MONTGOMERY & ROWAN

CLARK (Eastern third, including townships of Bloomingdale, Hunt, Indian Fields, Kiddville, Loglick, Rightangele & Thomson);
FLEMING (Townships of Beechburg, Colfax, Elizaville, Flemingsburg, Flemingsburg Junction, Foxport, Grange City, Hillsboro, Hilltop, Mount Carmel, Muses Mills, Nepton, Pecksridge, Plummers Landing, Plummers Mill, Poplar Plains, Ringos Mills, Tilton & Wallingford);
MASON (Eastern third, including Townships of Helena, Marshall, Orangeburg, Plumville & Springdale);
NICHOLAS (Eastern eighth, including the Township of Moorefield Sprout)

	Rates	Fringes
IRONWORKER		
ZONE 1	$ 29.59	17.77
ZONE 2	$ 29.99	17.77
ZONE 3	$ 31.59	17.77

ZONE 1 - Up to 10 mi. radius of union hall, Ashland, Ky., 1643 Greenup Avenue
ZONE 2 - 10 to 50 mi. radius of union hall;
ZONE 3 - 50 mi. radius and beyond

LABO0189-003 07/01/2010

BATH, BOURBON, BOYD, BOYLE, BRACKEN, CARTER, CLARK, ELLIOTT, FAYETTE, FLEMING, FRANKLIN, GALLATIN, GRANT, GREENUP, HARRISON, JESSAMINE, LEWIS, MADISON, MASON, MERCER, MONTGOMERY, NICHOLAS, OWEN, ROBERTSON, ROWAN, SCOTT, & WOOLFORD COUNTIES

	Rates	Fringes
Laborers:		
GROUP 1	$ 20.61	10.00
GROUP 2	$ 20.86	10.00
GROUP 3	$ 20.91	10.00
GROUP 4	$ 21.51	10.00

LABORERS CLASSIFICATIONS

GROUP 1 - Aging & Curing of Concrete; Asbestos Abatement Worker; Asphalt Plant; Asphalt; Batch Truck Dump; Carpenter Tender; Cement Mason Tender; Cleaning of Machines; Concrete; Demolition; Dredging; Environmental - Nuclear, Radiation, Toxic & Hazardous Waste - Level D; Flagperson; Grade Checker; Hand Digging & Hand Back Filling; Highway Marker Placer; Landscaping, Mesh Handler & Placer; Puddler; Railroad; Rip-rap & Grouter; Right-of-Way; Sign, Guard Rail & Fence Installer; Signal Person; Sound Barrier Installer; Storm & Sanitary Sewer; Swamper; Truck Spotter & Dumper; Wrecking of Concrete Forms; General Cleanup

GROUP 2 - Batter Board Man (Sanitary & Storm Sewer); Brickmason Tender; Mortar Mixer Operator; Scaffold Builder; Burner & Welder; Bushammer; Chain Saw Operator; Concrete Saw Operator; Deckhand Scow Man; Dry Cement Handler; Environmental - Nuclear, Radiation, Toxic & Hazardous Waste

- Level C; Forklift Operator for Masonary; Form Setter; Green Concrete Cutting; Hand Operated Grouter & Grinder Machine Operator; Jackhammer; Pavement Breaker; Paving Joint Machine; Pipelayer; Plastic Pipe Fusion; Power Driven Georgia Buggy & Wheel Barrow; Power Post Hole Digger; Precast Manhole Setter; Walk-Behind Tamper; Walk-Behind Trencher; Sand Blaster; Concrete Chipper; Surface Grinder; Vibrator Operator; Wagon Driller

GROUP 3 - Asphalt Luteman & Raker; Gunnite Nozzleman; Gunnite Operator & Mixer; Grout Pump Operator; Side Rail Setter; Rail Paved Ditches; Screw Operator; Tunnel (Free Air); Water Blaster

GROUP 4 - Caisson Worker (Free Air); Cement Finisher; Environmental - Nuclear, Radiation, Toxic & Hazardous Waste - Levels A & B; Miner & Driller (Free Air); Tunnel Blaster; & Tunnel Mucker (Free Air); Directional & Horizontal Boring; Air Track Drillers (All Types); Powdermen & Blasters; Troxler & Concrete Tester if Laborer is Utilized

---

LABO0189-008 07/01/2010

ANDERSON, BULLITT, CARROLL, HARDIN, HENRY, JEFFERSON, LARUE, MARION, MEADE, NELSON, OLDHAM, SHELBY, SPENCER, TRIMBLE & WASHINGTON COUNTIES

	Rates	Fringes
Laborers:		
GROUP 1	$ 20.61	10.00
GROUP 2	$ 20.86	10.00
GROUP 3	$ 20.91	10.00
GROUP 4	$ 21.51	10.00

LABORERS CLASSIFICATIONS

GROUP 1 - Aging & Curing of Concrete; Asbestos Abatement Worker; Asphalt Plant; Asphalt; Batch Truck Dump; Carpenter Tender; Cement Mason Tender; Cleaning of Machines; Concrete; Demolition; Dredging; Environmental - Nuclear, Radiation, Toxic & Hazardous Waste - Level D; Flagperson; Grade Checker; Hand Digging & Hand Back Filling; Highway Marker Placer; Landscaping, Mesh Handler & Placer; Puddler; Railroad; Rip-rap & Grouter; Right-of-Way; Sign, Guard Rail & Fence Installer; Signal Person; Sound Barrier Installer; Storm & Sanitary Sewer; Swamper; Truck Spotter & Dumper; Wrecking of Concrete Forms; General Cleanup

GROUP 2 - Batter Board Man (Sanitary & Storm Sewer); Brickmason Tender; Mortar Mixer Operator; Scaffold Builder; Burner & Welder; Bushammer; Chain Saw Operator; Concrete Saw Operator; Deckhand Scow Man; Dry Cement Handler; Environmental - Nuclear, Radiation, Toxic & Hazardous Waste - Level C; Forklift Operator for Masonary; Form Setter; Green Concrete Cutting; Hand Operated Grouter & Grinder Machine Operator; Jackhammer; Pavement Breaker; Paving Joint Machine; Pipelayer; Plastic Pipe Fusion; Power Driven Georgia Buggy & Wheel Barrow; Power Post Hole Digger;

Precast Manhole Setter; Walk-Behind Tamper; Walk-Behind Trencher; Sand Blaster; Concrete Chipper; Surface Grinder; Vibrator Operator; Wagon Driller

GROUP 3 - Asphalt Luteman & Raker; Gunnite Nozzleman; Gunnite Operator & Mixer; Grout Pump Operator; Side Rail Setter; Rail Paved Ditches; Screw Operator; Tunnel (Free Air); Water Blaster

GROUP 4 - Caisson Worker (Free Air); Cement Finisher; Environmental - Nuclear, Radiation, Toxic & Hazardous Waste - Levels A & B; Miner & Driller (Free Air); Tunnel Blaster; & Tunnel Mucker (Free Air); Directional & Horizontal Boring; Air Track Drillers (All Types); Powdermen & Blasters; Troxler & Concrete Tester if Laborer is Utilized

---

LABO0189-009 07/01/2010

BRECKINRIDGE & GRAYSON COUNTIES

	Rates	Fringes
Laborers:		
GROUP 1	$ 20.61	10.00
GROUP 2	$ 20.86	10.00
GROUP 3	$ 20.91	10.00
GROUP 4	$ 21.51	10.00

LABORERS CLASSIFICATIONS

GROUP 1 - Aging & Curing of Concrete; Asbestos Abatement Worker; Asphalt Plant; Asphalt; Batch Truck Dump; Carpenter Tender; Cement Mason Tender; Cleaning of Machines; Concrete; Demolition; Dredging; Environmental - Nuclear, Radiation, Toxic & Hazardous Waste - Level D; Flagperson; Grade Checker; Hand Digging & Hand Back Filling; Highway Marker Placer; Landscaping, Mesh Handler & Placer; Puddler; Railroad; Rip-rap & Grouter; Right-of-Way; Sign, Guard Rail & Fence Installer; Signal Person; Sound Barrier Installer; Storm & Sanitary Sewer; Swamper; Truck Spotter & Dumper; Wrecking of Concrete Forms; General Cleanup

GROUP 2 - Batter Board Man (Sanitary & Storm Sewer); Brickmason Tender; Mortar Mixer Operator; Scaffold Builder; Burner & Welder; Bushammer; Chain Saw Operator; Concrete Saw Operator; Deckhand Scow Man; Dry Cement Handler; Environmental - Nuclear, Radiation, Toxic & Hazardous Waste - Level C; Forklift Operator for Masonary; Form Setter; Green Concrete Cutting; Hand Operated Grouter & Grinder Machine Operator; Jackhammer; Pavement Breaker; Paving Joint Machine; Pipelayer; Plastic Pipe Fusion; Power Driven Georgia Buggy & Wheel Barrow; Power Post Hole Digger; Precast Manhole Setter; Walk-Behind Tamper; Walk-Behind Trencher; Sand Blaster; Concrete Chipper; Surface Grinder; Vibrator Operator; Wagon Driller

GROUP 3 - Asphalt Luteman & Raker; Gunnite Nozzleman; Gunnite Operator & Mixer; Grout Pump Operator; Side Rail Setter; Rail Paved Ditches; Screw Operator; Tunnel (Free Air); Water Blaster

GROUP 4 - Caisson Worker (Free Air); Cement Finisher; Environmental - Nuclear, Radiation, Toxic & Hazardous Waste - Levels A & B; Miner & Driller (Free Air); Tunnel Blaster; & Tunnel Mucker (Free Air); Directional & Horizontal Boring; Air Track Drillers (All Types); Powdermen & Blasters; Troxler & Concrete Tester if Laborer is Utilized

---

PAIN0012-005 06/11/2005

BATH, BOURBON, BOYLE, CLARK, FAYETTE, FLEMING, FRANKLIN, HARRISON, JESSAMINE, MADISON, MERCER, MONTGOMERY, NICHOLAS, ROBERTSON, SCOTT & WOODFORD COUNTIES:

	Rates	Fringes
PAINTER		
Bridge/Equipment Tender and/or Containment Builder	$ 18.90	5.90
Brush & Roller	$ 21.30	5.90
Elevated Tanks; Steeplejack Work; Bridge & Lead Abatement	$ 22.30	5.90
Sandblasting & Waterblasting	$ 22.05	5.90
Spray	$ 21.80	5.90

PAIN0012-017 06/01/2010

BRACKEN, GALLATIN, GRANT, MASON & OWEN COUNTIES:

	Rates	Fringes
PAINTER (Heavy & Highway Bridges - Guardrails - Lightpoles - Striping)		
Bridge Equipment Tender and Containment Builder	$ 20.27	8.10
Brush & Roller	$ 22.85	8.10
Elevated Tanks; Steeplejack Work; Bridge & Lead Abatement	$ 23.85	8.10
Sandblasting & Water Blasting	$ 23.60	8.10
Spray	$ 23.35	8.10

PAIN0118-004 05/01/2010

ANDERSON, BRECKINRIDGE, BULLITT, CARROLL, GRAYSON, HARDIN, HENRY, JEFFERSON, LARUE, MARION, MEADE, NELSON, OLDHAM, SHELBY, SPENCER, TRIMBLE & WASHINGTON COUNTIES:

	Rates	Fringes
PAINTER		
Brush & Roller	$ 18.50	10.30
Spray, Sandblast, Power Tools, Waterblast & Steam		

```
     Cleaning....................$ 19.50            10.30
-----------------------------------------------------------------
 PAIN1072-003 12/01/2010

BOYD, CARTER, ELLIOTT, GREENUP, LEWIS and ROWAN COUNTIES

                                    Rates          Fringes

Painters:
     Bridges; Locks; Dams;
     Tension Towers & Energized
     Substations.................$ 29.03            11.90
     Power Generating Facilities.$ 25.79            11.90
-----------------------------------------------------------------
 PLUM0248-003 06/01/2010

BOYD, CARTER, ELLIOTT, GREENUP, LEWIS & ROWAN COUNTIES:

                                    Rates          Fringes

Plumber and Steamfitter..........$ 31.37            15.23
-----------------------------------------------------------------
 PLUM0392-007 06/01/2008

BRACKEN, CARROLL (Eastern Half), GALLATIN, GRANT, MASON, OWEN &
ROBERTSON COUNTIES:


                                    Rates          Fringes

Plumbers and Pipefitters.........$ 28.39            14.30
-----------------------------------------------------------------
 PLUM0502-003 08/01/2010

BRECKINRIDGE, BULLITT, CARROLL (Western Half), FRANKLIN
(Western three-fourths), GRAYSON, HARDIN, HENRY, JEFFERSON,
LARUE, MARION, MEADE, NELSON, OLDHAM, SHELBY, SPENCER, TRIMBLE &
 WASHINGTON COUNTIES


                                    Rates          Fringes

PLUMBER..........................$ 30.50            15.13
-----------------------------------------------------------------
  SUKY2010-160 10/08/2001

                                    Rates          Fringes

Truck drivers:
     GROUP 1.....................$ 16.57             7.34
     GROUP 2.....................$ 16.68             7.34
     GROUP 3.....................$ 16.86             7.34
     GROUP 4.....................$ 16.96             7.34

TRUCK DRIVER CLASSIFICATIONS

 GROUP 1 - Mobile Batch Truck Tender

 GROUP 2 - Greaser; Tire Changer; & Mechanic Tender
```

GROUP 3 - Single Axle Dump; Flatbed; Semi-trailer or Pole Trailer when used to pull building materials and equipment; Tandem Axle Dump; Distributor; Mixer; & Truck Mechanic

GROUP 4 - Euclid & Other Heavy Earthmoving Equipment & Lowboy; Articulator Cat; 5-Axle Vehicle; Winch & A-Frame when used in transporting materials; Ross Carrier; Forklift when used to transport building materials; & Pavement Breaker

---

WELDERS - Receive rate prescribed for craft performing operation to which welding is incidental.

==========

Unlisted classifications needed for work not included within the scope of the classifications listed may be added after award only as provided in the labor standards contract clauses (29 CFR 5.5(a)(1)(ii)).

In the listing above, the "SU" designation means that rates listed under the identifier do not reflect collectively bargained wage and fringe benefit rates. Other designations indicate unions whose rates have been determined to be prevailing.

WAGE DETERMINATION APPEALS PROCESS

1.) Has there been an initial decision in the matter? This can be:

* an existing published wage determination
* a survey underlying a wage determination
* a Wage and Hour Division letter setting forth a position on a wage determination matter
* a conformance (additional classification and rate) ruling

On survey related matters, initial contact, including requests for summaries of surveys, should be with the Wage and Hour Regional Office for the area in which the survey was conducted because those Regional Offices have responsibility for the Davis-Bacon survey program. If the response from this initial contact is not satisfactory, then the process described in 2.) and

3.) should be followed.

With regard to any other matter not yet ripe for the formal process
described here, initial contact should be with the Branch of Construction
Wage Determinations. Write to:

Branch of Construction Wage Determinations
Wage and Hour Division
U.S. Department of Labor
200 Constitution Avenue, N.W.
Washington, DC 20210

2.) If the answer to the question in 1.) is yes, then an interested party
(those affected by the action) can request review and reconsideration from
the Wage and Hour Administrator (See 29 CFR Part 1.8 and 29 CFR Part 7).
Write to:

Wage and Hour Administrator
U.S. Department of Labor
200 Constitution Avenue, N.W.
Washington, DC 20210

The request should be accompanied by a full statement of the interested
party's position and by any information (wage payment data, project
description, area practice material, etc.) that the requestor considers
relevant to the issue.

3.) If the decision of the Administrator is not favorable, an interested
party may appeal directly to the Administrative Review Board (formerly the
Wage Appeals Board). Write to:

Administrative Review Board
U.S. Department of Labor
200 Constitution Avenue, N.W.
Washington, DC 20210

4.) All decisions by the Administrative Review Board are final.

END OF GENERAL DECISION

Fringe benefit amounts are applicable for all hours worked except when otherwise noted.

These rates are listed pursuant to the Kentucky Determination No. CR-10-III- HWY dated July 12, 2010.

No laborer, workman or mechanic shall be paid at a rate less than that of a Journeyman except those classified as bona fide apprentices.

Apprentices or trainees shall be permitted to work as such subject to Administrative Regulations adopted by the Commissioner of Workplace Standards. Copies of these regulations will be furnished upon request from any interested person.

Before using apprentices on the job the contractor shall present to the Contracting Officer written evidence of registration of such employees in a program of a State apprenticeship and training agency approved and recognized by the U. S. Bureau of Apprenticeship and Training. In the absence of such a State agency, the contractor shall submit evidence of approval and registration by the U. S. Bureau of Apprenticeship and Training.

The contractor shall submit to the Contracting Officer, written evidence of the established apprenticeship-journeyman ratios and wage rates in the project area, which will be the basis for establishing such ratios and rates for the project under the applicable contract provisions.

TO: EMPLOYERS/EMPLOYEES

PREVAILING WAGE SCHEDULE:

The wages indicated on this wage schedule are the least permitted to be paid for the occupations indicated. When an employee works in more than one classification, the employer must record the number of hours worked in each classification at the prescribed hourly base rate.

OVERTIME:

Overtime is to be paid after an employee works eight (8) hours a day or forty (40) hours a week, whichever gives the employee the greater wages. At least time and one-half the base rate is required for all overtime. A laborer, workman or mechanic and an employer may enter into a written agreement or a collective bargaining agreement to work more than eight (8) hours a calendar day but not more than ten (10) hours a calendar day for the straight time hourly rate. Wage violations or questions should be directed to the designated Engineer or the undersigned.

Ryan Griffith, Director
Division of Construction Procurement
Frankfort, Kentucky 40622

PART IV

INSURANCE

INSURANCE

The Contractor shall procure and maintain the following insurance in addition to the insurance required by law:

1) Commercial General Liability-Occurrence form – not less than $2,000,000 General aggregate, $2,000,000 Products & Completed Aggregate, $1,000,000 Personal & Advertising, $1,000,000 each occurrence.

2) Automobile Liability- $1,000,000 per accident

3) Employers Liability:

   a) $100,000 Each Accident Bodily Injury
   b) $500,000 Policy limit Bodily Injury by Disease
   c) $100,000 Each Employee Bodily Injury by Disease

4) The insurance required above must be evidenced by a Certificate of Insurance and this Certificate of Insurance must contain one of the following statements:
   a) "policy contains no deductible clauses."
   b) "policy contains _____ (amount) deductible property damage clause but company will pay claim and collect the deductible from the insured."

5) KENTUCKY WORKMEN'S COMPENSATION INSURANCE. The contractor shall furnish evidence of coverage of all his employees or give evidence of self-insurance by submitting a copy of a certificate issued by the Workmen's Compensation Board.

The cost of insurance is incidental to all contract items. All subcontractors must meet the same minimum insurance requirements.

PART V

BID ITEMS

CONTRACT ID: 112170
COUNTY: HARRISON
PROPOSAL: 049GR11P066-FD05

PAGE: 1
LETTING: 03/18/11
CALL NO: 407

LINE NO	ITEM	DESCRIPTION	APPROXIMATE UNIT QUANTITY	UNIT PRICE	AMOUNT
	SECTION 0001	ROADWAY			
0010	00001	DGA BASE	230.000 TON		
0020	00190	LEVELING & WEDGING PG64-22	328.000 TON		
0030	00301	CL2 ASPH SURF 0.38D PG64-22	5,164.000 TON		
0040	00388	CL3 ASPH SURF 0.38B PG64-22	475.000 TON		
0050	02562	SIGNS	680.000 SQFT		
0060	02650	MAINTAIN & CONTROL TRAFFIC KY 1744	(1.00) LS		
0070	02650	MAINTAIN & CONTROL TRAFFIC US 27 005-007	(1.00) LS		
0080	02650	MAINTAIN & CONTROL TRAFFIC US 27 016-020	(1.00) LS		
0090	02676	MOBILIZATION FOR MILL & TEXT KY 1744	(1.00) LS		
0100	02676	MOBILIZATION FOR MILL & TEXT US 27 005-007	(1.00) LS		
0110	02676	MOBILIZATION FOR MILL & TEXT US 27 016-020	(1.00) LS		
0120	02677	ASPHALT PAVE MILLING & TEXTURING	517.000 TON		
0130	02696	SHOULDER RUMBLE STRIPS-SAWED	28,882.000 LF		
0140	02775	ARROW PANEL	2.000 EACH		
0150	04830	LOOP WIRE	305.000 LF		
0160	04895	LOOP SAW SLOT AND FILL	202.000 LF		
0170	06510	PAVE STRIPING-TEMP PAINT-4 IN	15,800.000 LF		
0180	06514	PAVE STRIPING-PERM PAINT-4 IN	63,574.000 LF		
0190	06565	PAVE MARKING-THERMO X-WALK-6 IN	468.000 LF		
0200	06568	PAVE MARKING-THERMO STOP BAR-24IN	102.000 LF		

KENTUCKY TRANSPORTATION CABINET
DEPARTMENT OF HIGHWAYS
FRANKFORT, KY 40622

CONTRACT ID: 112170 PAGE: 2
COUNTY: HARRISON LETTING: 03/18/11
PROPOSAL: 049GR11P066-FD05 CALL NO: 407

LINE NO	ITEM	DESCRIPTION	APPROXIMATE UNIT QUANTITY	UNIT PRICE	AMOUNT
0210	06573	PAVE MARKING-THERMO STR ARROW	2.000 EACH		
0220	06574	PAVE MARKING-THERMO CURV ARROW	2.000 EACH		
0230	06576	PAVE MARKING-THERMO ONLY	1.000 EACH		
0240	06600	REMOVE PAVEMENT MARKER TYPE V	489.000 EACH		
0250	10020NS	FUEL ADJUSTMENT	8,010.000 DOLL	1.00	8,010.00
0260	10030NS	ASPHALT ADJUSTMENT	14,112.000 DOLL	1.00	14,112.00
0270	23821EC	CENTERLINE RUMBLE STRIPS-12 IN	14,441.000 LF		
	SECTION 0002	DEMOBILIZATION			
0280	02569	DEMOBILIZATION (AT LEAST 1.5%)	LUMP		
		TOTAL BID			