CALL NO. 402

CONTRACT ID. 102931

FRANKLIN COUNTY

FED/STATE PROJECT NUMBER 037GR10M054

DESCRIPTION LOUISVILLE-LEXINGTON ROAD (I-64)

WORK TYPE BRIDGE REPAIRS

PRIMARY COMPLETION DATE 11/15/2010

LETTING DATE: May 28, 2010

Sealed Bids will be received in the Division of Construction Procurement and/or the 1st floor of the Transportation Cabinet Office Building until 10:00 AM EASTERN DAYLIGHT TIME May 28, 2010. Bids will be publicly opened and read at 10:00 AM EASTERN DAYLIGHT TIME.

REQUIRED BID PROPOSAL GUARANTY: Not less than 5% of the total bid.

(Check guaranty submitted: Cashier's Check ☐ Certified Check ☐ Bid Bond ☐)

BID BONDS WHEN SUBMITTED WILL BE RETAINED WITH THE PROPOSAL

DBE General Plan Included ☐

BID ☐ PROPOSAL ISSUED TO: _____

SPECIMEN ☐ _____

Address City State Zip

TABLE OF CONTENTS

PART I SCOPE OF WORK

- PROJECT(S), COMPLETION DATE(S), & LIQUIDATED DAMAGES
- CONTRACT NOTES
- SPECIAL NOTE(S) APPLICABLE TO PROJECT
- LIQUIDATED DAMAGES
- TRAFFIC CONTROL PLAN
- SKETCH MAP(S)
- MATERIAL SUMMARY
- BRIDGE DRAWINGS

PART II SPECIFICATIONS AND STANDARD DRAWINGS

- SPECIFICATIONS REFERENCE
- SUPPLEMENTAL SPECIFICATIONS

PART III EMPLOYMENT, WAGE AND RECORD REQUIREMENTS

- LABOR AND WAGE REQUIREMENTS
- EXECUTIVE BRANCH CODE OF ETHICS
- KENTUCKY EQUAL EMPLOYMENT OPPORTUNITY ACT OF 1978
- PROJECT WAGE RATES

PART IV INSURANCE

PART V BID ITEMS

PART I

SCOPE OF WORK

CONTRACT ID - 102931 ADMINISTRATIVE DISTRICT - 05

PROJECT(S) IDENTIFICATION AND DESCRIPTION:

COUNTY - FRANKLIN
037GR10M054 LOUISVILLE-LEXINGTON ROAD (I-64)

COUNTY - FRANKLIN PES - MB03700641003
FE02 037 0064 B00057
LOUISVILLE-LEXINGTON ROAD (I-64) TWIN BRIDGES OVER CARDWELL LANE (MP 51.552). BRIDGE REPAIRS.
GEOGRAPHIC COORDINATES LATITUDE 38^09'23" LONGITUDE 84^55'21"

COUNTY - FRANKLIN PES - MB03700641004
FE02 037 0064 B00055
LOUISVILLE-LEXINGTON ROAD (I-64) TWIN BRIDGES OVER KY 151 (MP 47.775). BRIDGE REPAIRS.
GEOGRAPHIC COORDINATES LATITUDE 38^08'40" LONGITUDE 84^59'23"

COMPLETION DATE(S):

COMPLETION DATE - November 15, 2010
APPLIES TO ENTIRE CONTRACT

10 CALENDAR DAYS
APPLIES TO B00055R

10 CALENDAR DAYS
APPLIES TO B00055L

10 CALENDAR DAYS
APPLIES TO B00057R

10 CALENDAR DAYS
APPLIES TO B00057L

CONTRACT NOTES

PROPOSAL ADDENDA

All addenda to this proposal must be applied when calculating bid and certified in the bid packet submitted to the Kentucky Department of Highways. Failure to use the correct and most recent addenda may result in the bid being rejected.

BID SUBMITTAL

Bidder must use the Department's Expedite Bidding Program available on the Internet web site of the Department of Highways, Division of Construction Procurement. (www.transportation.ky.gov/contract)

The Bidder must download the bid file located on the web site to prepare a bid packet for submission to the Department. The bidder must include the completed bid packet printed from the Program along with the disk created by said program or submit electronically using Bid Express.

JOINT VENTURE BIDDING

Joint Venture bidding is permissible. However, both companies MUST purchase a bidding proposal. Either proposal may be submitted but must contain the company names and signatures of both parties where required. A joint bid bond of 5% may be submitted for both companies or each company may submit a separate bond of 5%.

UNDERGROUND FACILITY DAMAGE PROTECTION

The contractor is advised that the Underground Facility Damage Protection Act of 1994, became law January 1, 1995. It is the contractor's responsibility to determine the impact of the act regarding this project, and take all steps necessary to be in compliance with the provision of the act.

01/01/2009

SPECIAL NOTES FOR BRIDGE PIER & PIER CAP CONCRETE PATCHING

These Notes or designated portions thereof, apply where so indicated on the plans, proposals or bidding instruction.

I. DESCRIPTION. Perform all work in accordance with the Department's 2008 Standard Specifications, and applicable Supplemental Specifications, the attached sketches, and these Notes. Section references are to the Standard Specifications.

This work consists of: (1) Furnish all labor, materials, tools, and equipment; (2) Remove existing spalled/delaminated concrete; (3) Prepare the existing surface for concrete patching; (4) Place hook fasteners and welded wire fabric over surfaces to be repaired (where applicable); (5) Apply concrete patching as specified by this note and as shown on the attached detail drawings; (6) Finish and cure the new Concrete Patches; (7) Maintain & control traffic; and, (8) Any other work specified as part of this contract.

II. MATERIALS.

A. Concrete. Approved Concrete Product for Vertical and Overhead Repair Patch.

B. Steel Reinforcement. Use Grade 60. See Section 602

C. Welded Steel Wire Fabric (WWF). Conform to Section 811

D. Hook Fasteners. Use commercial grade galvanized hook fasteners. Minimum 3/16" diameter.

III. CONSTRUCTION.

A. Concrete Removal and Preparation. The Contractor, as directed by the Engineer shall locate and remove all loose, spalled, deteriorated and delaminated concrete. Sounding shall be used to locate delaminated areas. Care shall be exercised not to damage areas of sound concrete or reinforcing steel during concrete removal operations. Unless specifically *directed by the Engineer*, depth of removal shall not exceed 6 inches. Concrete removal shall be in accordance with a sequence approved by the Engineer.

Concrete removal shall be accomplished by chipping with hand picks, chisels or light duty pneumatic or electric chipping hammers (not to exceed 15 lbs.). If sound concrete is encountered before existing reinforcing steel is exposed, the surface shall be prepared and repaired without further removal of the concrete. When corroded reinforcing steel is exposed, concrete removal shall continue until there is a minimum ¾ inch clearance around the exposed, corroded reinforcing bar. Care shall be taken to not damage bond to adjacent non-exposed reinforcing steel during concrete removal processes.

The perimeter of all areas where concrete is removed shall be tapered at an approximately 45° angle, except that the outer edges of all chipped areas shall be saw cut to minimum depth of ¾ inch to prevent featheredging unless otherwise approved by the Engineer.

After all deteriorated concrete has been removed; the repair surface to receive concrete patching shall be prepared by abrasive blast cleaning. Abrasive blast cleaning shall remove all fractured surface concrete and all traces of any unsound

material or contaminants such as oil, grease, dirt, slurry, or any materials which could interfere with the bond of freshly placed concrete.

The Contractor shall dispose all removed material off State Right Of Way in an approved site.

B. **Steel Reinforcement.** All corroded reinforcing steel exposed during concrete removal shall have corrosion products removed by abrasive grit blasting or wire brush whichever is more appropriate. Furnish for replacement, as directed by the Engineer, 400 linear feet of steel reinforcing bars ½" diameter by 20-foot lengths. Place these bars in areas deemed by the Engineer to require additional reinforcement. Field cutting and bending is permitted. Deliver unused bars to Franklin County Maintenance Facility. Payment will be made in accordance with Section 602.

Reinforcing steel displaying deep pitting or loss of more than 20 percent of cross-sectional area shall be removed and replaced. Such bars shall be placed in accordance with the recommendations of ACI 506R, Sections 5.4 and 5.5. In particular, bars shall not be bundled in lapped splices, but shall be placed such that the minimum spacing around each bar is three times the maximum aggregate size to allow for proper encapsulation with concrete patching.

Intersecting reinforcing bars shall be tightly secured to each other using tie wire and adequately supported to minimize movement during concrete placement.

Welded wire fabric (WWF) shall be provided as shown on the attached sketches and at each repair area larger than 1 square foot if the depth of the repair exceeds 3 inches from the original dimension of the repaired member. Sheets of adjoining WWF shall be lapped by at least one and one-half spaces at all intersections, in both directions, and be securely fastened. WWF fabric shall be supported no closer than ½ inch to the prepared concrete surface and shall have a minimum concrete cover of 1-½ inches.

WWF shall be fastened to preset anchors on a grid not more than 12 inches square. Large knots of tie wire which could result in sand pockets and voids during patching shall be avoided.

C. **Hook Fasteners.** Hook fasteners shall be positioned at the spacing as stated above or as directed by the Engineer. Any given area shall have a minimum of four anchors. The WWF shall not move or deform excessively during concrete patching. Maximum hook fastener spacing shall not exceed 2 feet on a grid pattern over the entire repair area.

Hook fasteners shall be of commercial grade galvanized steel with a minimum diameter of 3/16". They may be mechanically set or grouted, as approved by the Engineer.

The Department will randomly select hook fasteners to be tested to verify pullout force is sufficient. If any anchors fail to meet the minimum acceptable pullout value, corrective measures shall be taken by the Contractor and further testing will be conducted.

D. **Concrete Patching.** Place and finish the new concrete for the patching area in accordance with the manufacturer's recommendations, or as directed by the Engineer. The Engineer shall approve the Contractor's method of placing and consolidating the concrete prior to the beginning of this operation.

E. **Curing.** On completion of finishing operation, patching concrete shall immediately be prevented from drying out and cracking by fogging, wetting, and/or any appropriate method approved by the Engineer. Curing shall continue for duration recommended by the product manufacturer.

Each Contractor submitting a bid for this work shall make a thorough inspection of the site prior to submitting his bid and shall thoroughly familiarize himself with existing conditions so that the work can be expeditiously performed after a contract is awarded. Submission of a bid will be considered evidence of this inspection having been made. Any claims resulting from site conditions will not be honored by the Department.

Quantities given are approximate. The quantity for "Concrete Patching Repair" shall be bid with the contingency that quantities may be increased, decreased, or eliminated by the Engineer. Dispose of all removed material entirely away from the job site as approved by the Engineer. This work is incidental to the contract unit price for "Concrete Patching Repair".

IV. MEASUREMENT

A. **Concrete Patching.** The Department will measure the quantity per square feet of each area restored.

B. **Steel Reinforcement.** See Section 602.

C. **Welded Wire Fabric & Hook Fasteners.** Welded Wire Fabric and Hook Fasteners will not be measured for payment, but shall be considered incidental to "Concrete Patching Repair".

V. PAYMENT

A. **Concrete Patching Repair.** Payment at the contract unit price per square feet is full compensation for the following: (1) Furnish all labor, materials, tools, equipment; (2) preparation of specified bents including removing and disposing of specified existing materials; (3) place, finish and cure new concrete patches; and (4) all incidentals necessary to complete the work as specified by this note and as shown on the attached detail drawings.

B. **Steel Reinforcement.** See Section 602.

The Department will consider payment as full compensation for all work required by these notes and detail drawings.

SPECIAL NOTE FOR CONTRACT COMPLETION DATE AND LIQUIDATED DAMAGES ON BRIDGE REPAIR CONTRACTS

I. COMPLETION DATE. The Contractor has the option of selecting the starting date for this Contract. Once selected, notify the Department in writing of the date selected at least two weeks prior to beginning work. All work is to be completed in the 2010 construction season by November 15, 2010. An allotted number of Calendar days are assigned to each structure in this contract as shown below.

STRUCTURE	NUMBER OF CALENDAR DAYS
B00055R	10
B00055L	10
B00057R	10
B00057L	10

Contrary to Section 108.07.02, the Engineer will begin charging calendar days for a structure on the day the Contractor starts work or sets up traffic control on that particular structure.

II. LIQUIDATED DAMAGES. Liquidated damages will be assessed the Contractor in accordance with the Transportation Cabinet, Department of Highway's 2008 Standard Specifications for Road and Bridge Construction, Section 108.09, when either the allotted number of calendar days or the November 15, 2010 date is exceeded.

Contrary to the Standard Specifications, liquidated damages will be assessed the Contractor during the months of December, January, February and March when the contract time has expired on any individual bridge or bridges. Contract time will be charged during these months.

All construction must be completed in accordance with the weather limitations specified in Section 606 and/or Section 601 as applicable. No extension of Contract time will be granted due to inclement weather or temperature limitations that occur due to starting work on the Contract or a structure late in the construction season.

SPECIAL NOTE FOR TRAFFIC CONTROL ON BRIDGE REPAIR CONTRACTS

I. TRAFFIC CONTROL GENERAL

Except as provided herein, traffic shall be maintained in accordance with the 2008 Standard Specifications, Section 112. Except for the roadway and traffic control bid items listed, all items of work necessary to maintain and control traffic will be paid at the lump sum bid price to "Maintain and Control Traffic".

Contrary to Section 106.01, traffic control devices used on this project may be new or used in new condition, at the beginning of the work and maintained in like new condition until completion of the work.

II. TRAFFIC COORDINATOR

Furnish a Traffic Coordinator as per Section 112. The Traffic Coordinator shall inspect the project maintenance of traffic, at least three times daily, or as directed by the Engineer, during the Contractor's operations and at any time a lane closure is in place. The personnel shall have access on the project to a radio or telephone to be used in case of emergencies or accidents.

The Traffic Coordinator shall report all incidents throughout the work zone to the Engineer on this project. The Contractor shall furnish the name and telephone number where the Traffic Coordinator can be contacted at all times.

III. SIGNS

Contrary to Section 112.04.02, only long term signs (sign intended to be continuously in place for more than 3 days) will be measured for payment; short term signs (signs intended to be left in place for 3 days or less) will not be measured for payment but will be incidental to Maintain and Control Traffic.

IV. PROJECT PHASING & CONSTRUCTION PROCEDURES

For bridges over KY 151, the contractor may occupy shoulders and the area behind the guardrail. However, if there is a need to have a lane closed temporary, flaggers shall be used to maintain one lane of traffic during construction in accordance with Standard Drawing No. TTC-100 for lane closures. The minimum clear lane width required is 12'-0".
For bridges over Cardwell Lane flaggers shall be used to maintain one lane of traffic during construction in accordance with Standard Drawing No. TTC-100 for lane closures. The minimum clear lane width required is 12'-0".
Lane closures will only be permitted during working hours on this project. All equipments, tools, materials shall be cleared off the roadway and shoulders during non-working hours (Work have to be stopped for that day and no flaggers are present). Occasional lane closures will not be measured for payment and will be considered incidental to bid item "Maintain and Control of Traffic".

V. VARIABLE MESSAGE SIGNS

If deemed necessary by the Engineer, variable message signs will be installed, operated, and maintained by the Department.

FRANKLIN COUNTY

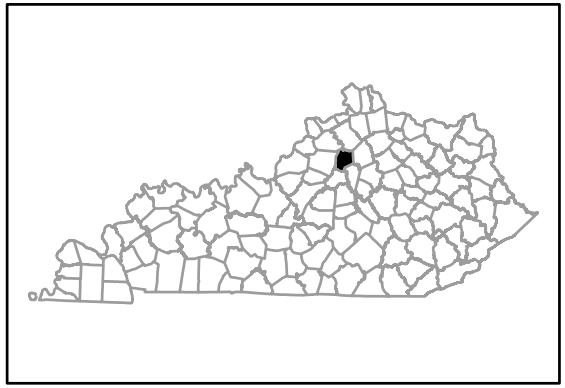

03700055R & L On I-64

LAT 38.14461161
LONG -84.98981507

03700057R & L On I-64

LAT 38.15672427
LONG -84.92241049

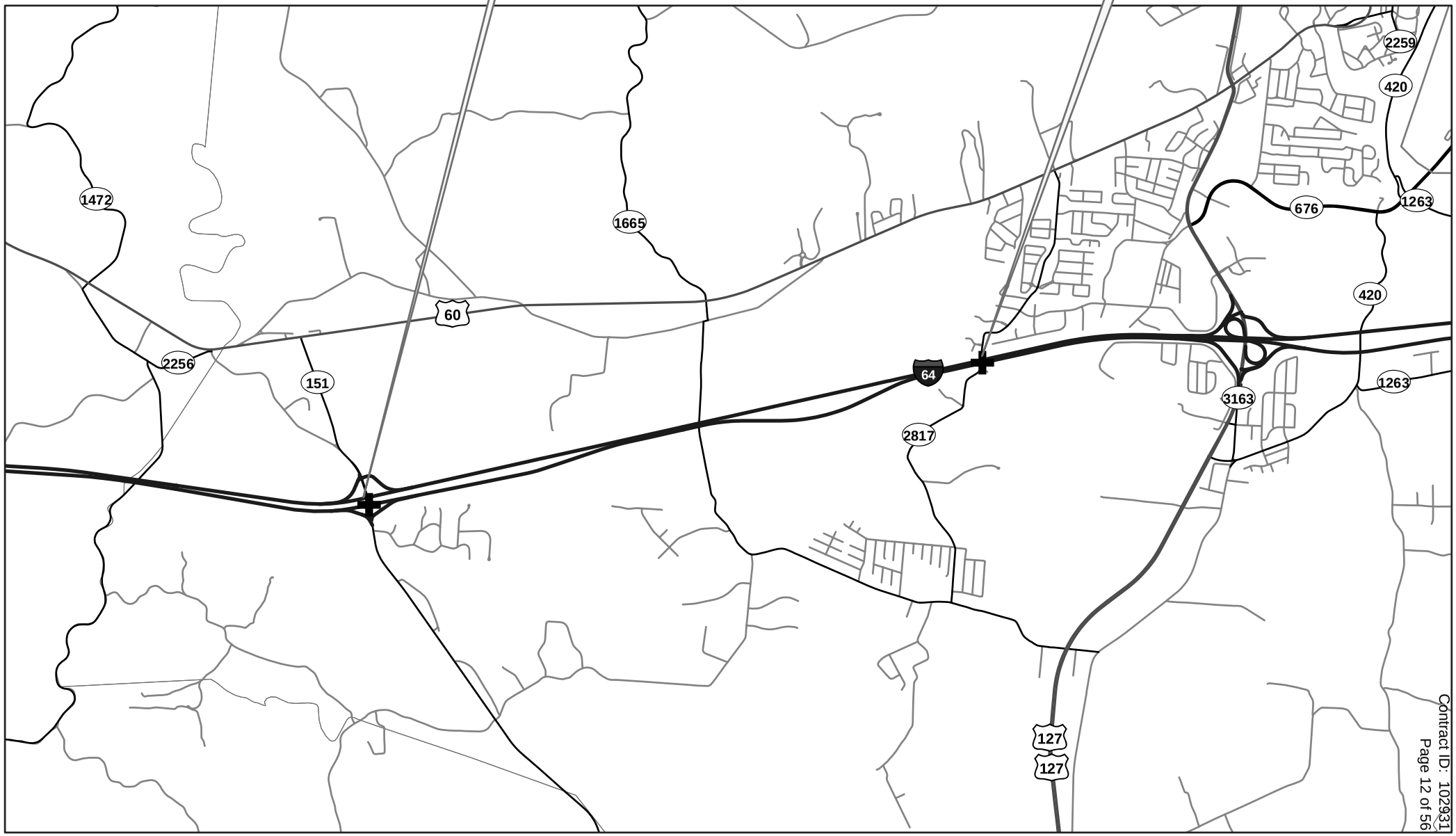

MATERIAL SUMMARY CONTRACT ID: 102931

FE02 037 0064 B00057 PES NO: MB03700641003
LOUISVILLE-LEXINGTON ROAD (I-64) TWIN BRIDGES OVER CARDWELL LANE (MP 51.552)

LINE NO	BID CODE	DESCRIPTION	QUANTITY	UNIT
0100	02562	SIGNS	75.00	SQFT
0130	02650	MAINTAIN & CONTROL TRAFFIC WESTBOUND-B57	1.00	LS
0120	08150	STEEL REINFORCEMENT	133.40	LB
0110	22146EN	CONCRETE PATCHING REPAIR	106.00	SQFT
0140	02569	DEMOBILIZATION	1.00	LS
0200	02562	SIGNS	75.00	SQFT
0220	02650	MAINTAIN & CONTROL TRAFFIC EASTBOUND-B57	1.00	LS
0210	22146EN	CONCRETE PATCHING REPAIR	170.00	SQFT
0230	02569	DEMOBILIZATION	1.00	LS

FE02 037 0064 B00055 PES NO: MB03700641004
LOUISVILLE-LEXINGTON ROAD (I-64) TWIN BRIDGES OVER KY 151 (MP 47.775)

LINE NO	BID CODE	DESCRIPTION	QUANTITY	UNIT
0100	02562	SIGNS	32.00	SQFT
0130	02650	MAINTAIN & CONTROL TRAFFIC WESTBOUND-B55	1.00	LS
0120	08150	STEEL REINFORCEMENT	133.40	LB
0110	22146EN	CONCRETE PATCHING REPAIR	310.00	SQFT
0140	02569	DEMOBILIZATION	1.00	LS
0200	02562	SIGNS	32.00	SQFT
0220	02650	MAINTAIN & CONTROL TRAFFIC EASTBOUND-B55	1.00	LS
0210	22146EN	CONCRETE PATCHING REPAIR	48.00	SQFT
0230	02569	DEMOBILIZATION	1.00	LS

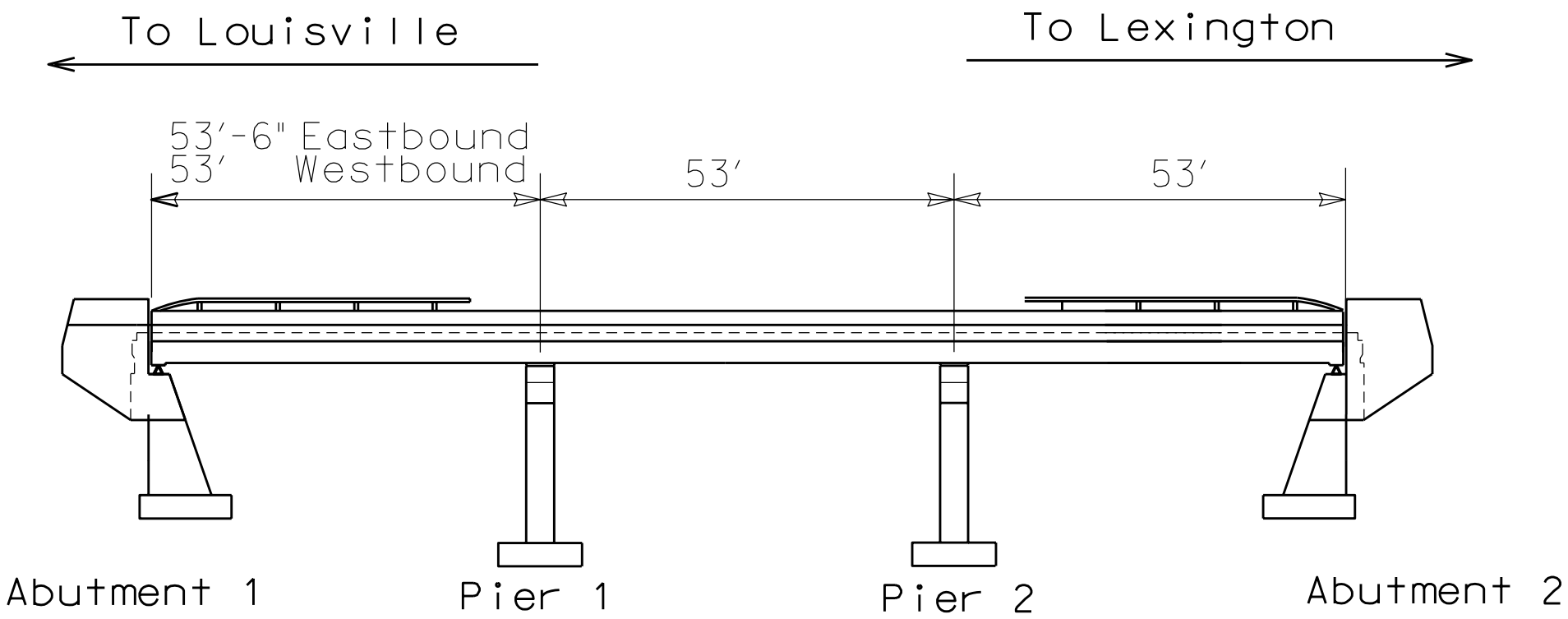

ELEVATION

Commonwealth of Kentucky DEPARTMENT OF HIGHWAYS	
COUNTY **FRANKLIN**	
ROUTE I 64	CROSSING KY 151
ELEVATION	
PREPARED BY Division of Maintenance *Bridge Preservation Branch*	SHEET NO. 1 DRAWING NO. _____

Pier 1

Looking East

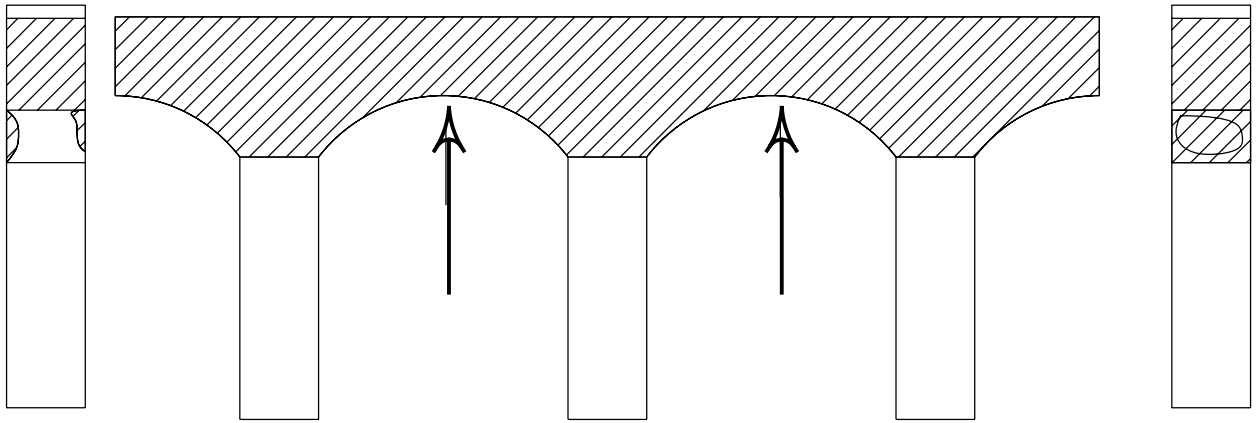

Looking West

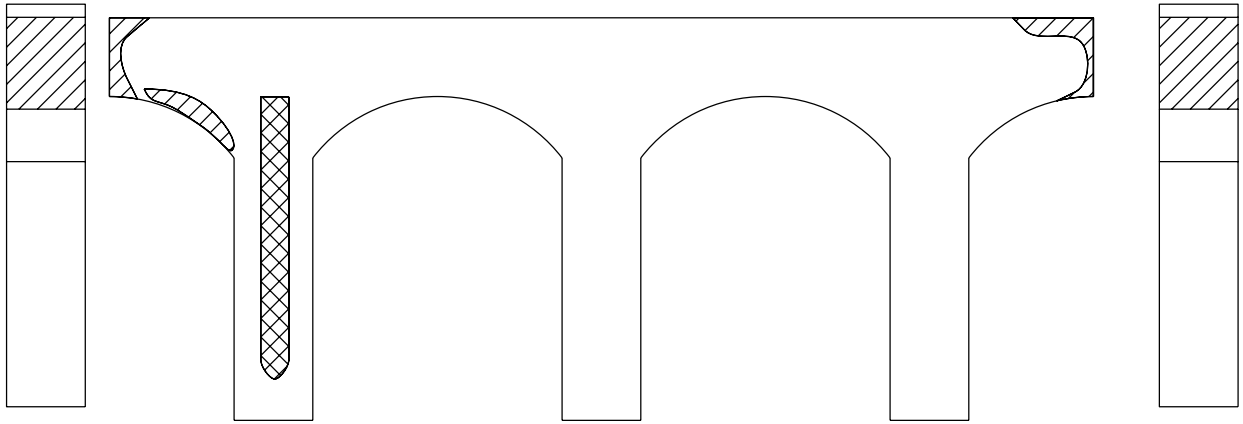

Spalling

Delamination

037B00055R

Approximately 225 Sq. Ft.

Commonwealth of Kentucky DEPARTMENT OF HIGHWAYS	
COUNTY **FRANKLIN**	
ROUTE I 64	CROSSING KY 151
WESTBOUND – PIER 1	
PREPARED BY Division of Maintenance *Bridge Preservation Branch*	SHEET NO. 2 DRAWING NO. _____

NOT TO SCALE

Pier 2

Looking East

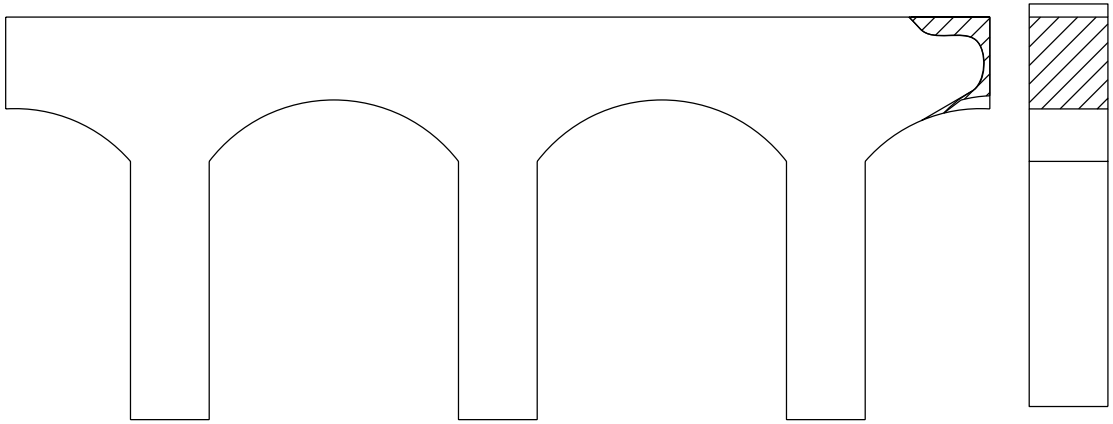

Approximately 85 Sq. Ft.

Looking West

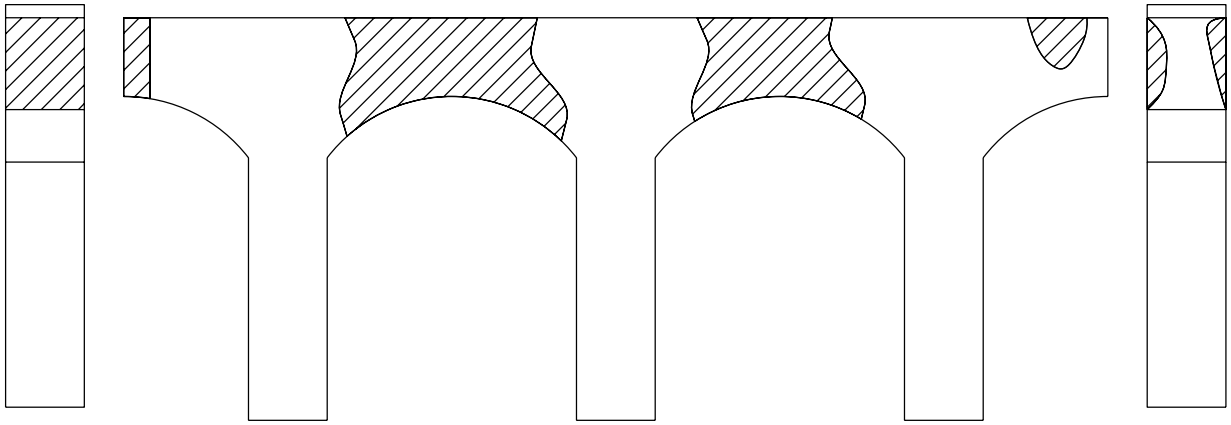

Spalling

Delamination

037B00055R

Commonwealth of Kentucky
DEPARTMENT OF HIGHWAYS

COUNTY
FRANKLIN

ROUTE	CROSSING
I 64	KY 151

WESTBOUND – PIER 2

PREPARED BY
Division of Maintenance
Bridge Preservation Branch

SHEET NO. 3

DRAWING NO. _____

NOT TO SCALE

Pier 1

Looking East

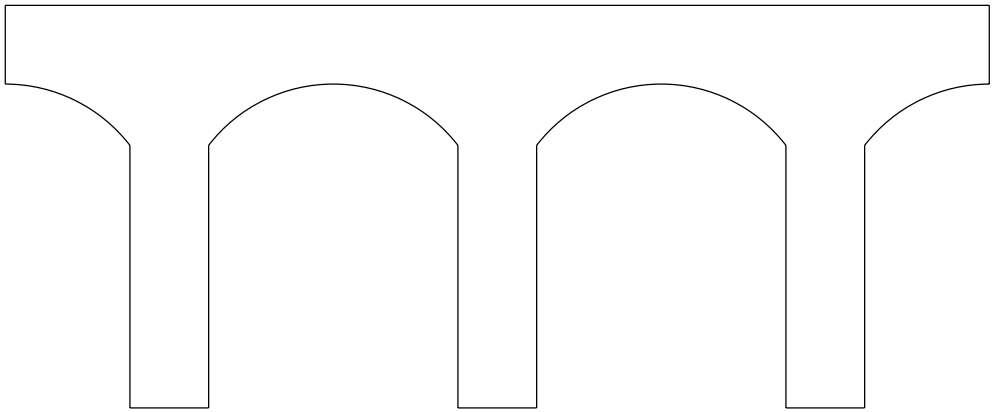

Looking West

Approximately 18 sq. ft.

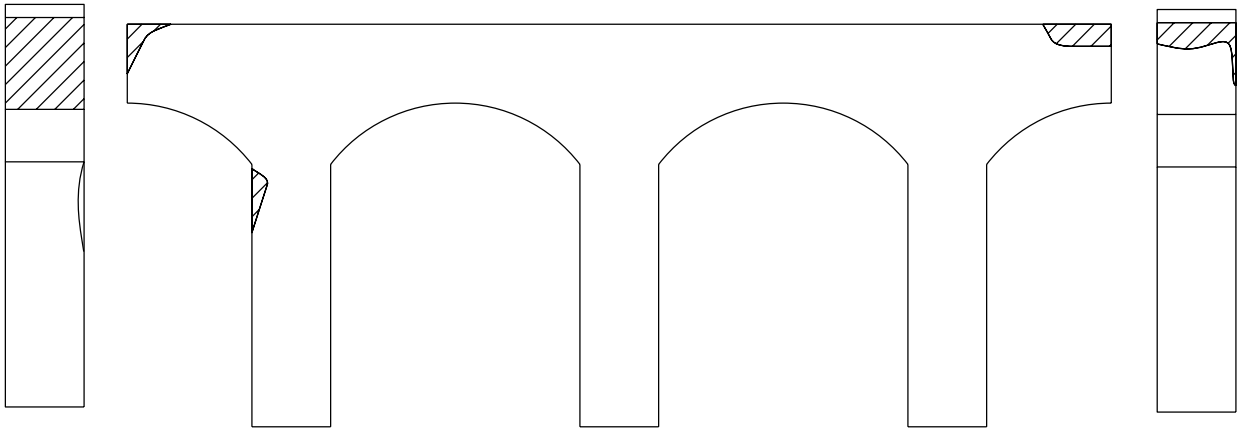

Spalling

Delamination

037B00055L

Commonwealth of Kentucky
DEPARTMENT OF HIGHWAYS

COUNTY
FRANKLIN

ROUTE	CROSSING
I 64	KY 151

EASTBOUND – PIER 1

PREPARED BY
Division of Maintenance
Bridge Preservation Branch

SHEET NO. 4

DRAWING NO.

Pier 2

Looking East

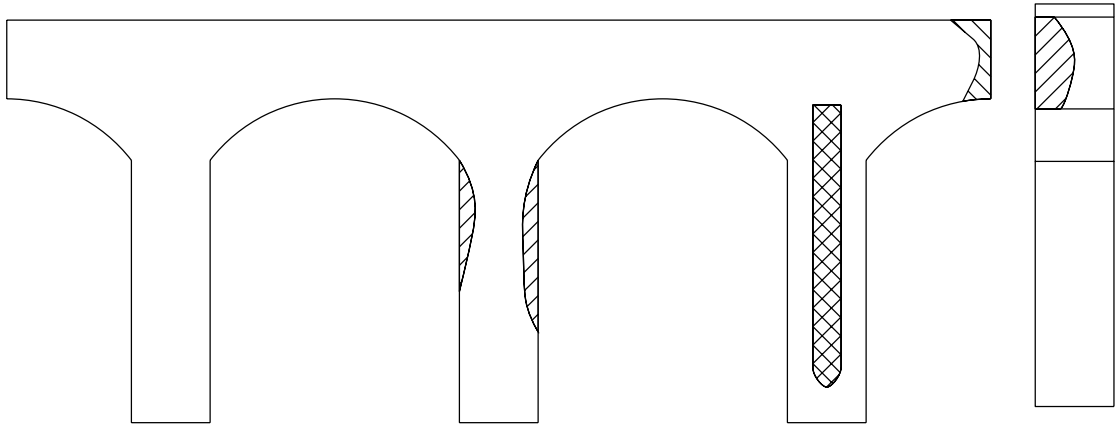

Looking West

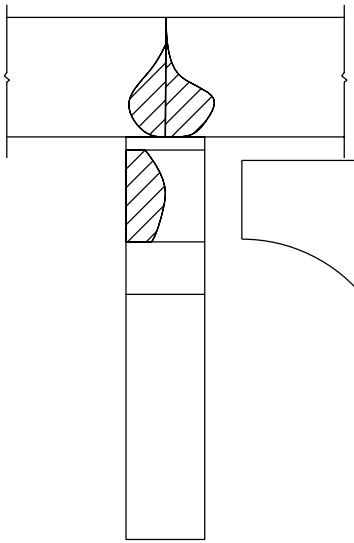

Approximately 30 sq. ft.

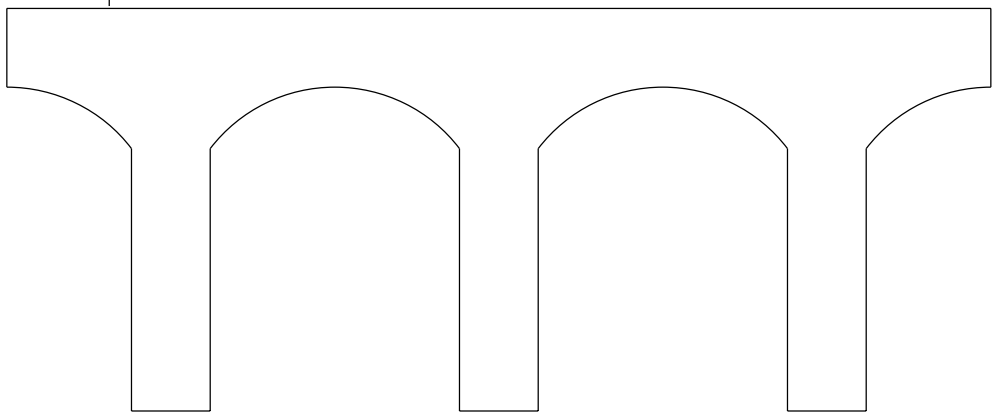

Spalling

Delamination

037B00055L

Commonwealth of Kentucky DEPARTMENT OF HIGHWAYS	
COUNTY **FRANKLIN**	
ROUTE I 64	CROSSING KY 151
EASTBOUND – PIER 2	
PREPARED BY Division of Maintenance *Bridge Preservation Branch*	SHEET NO. 5 DRAWING NO. _____

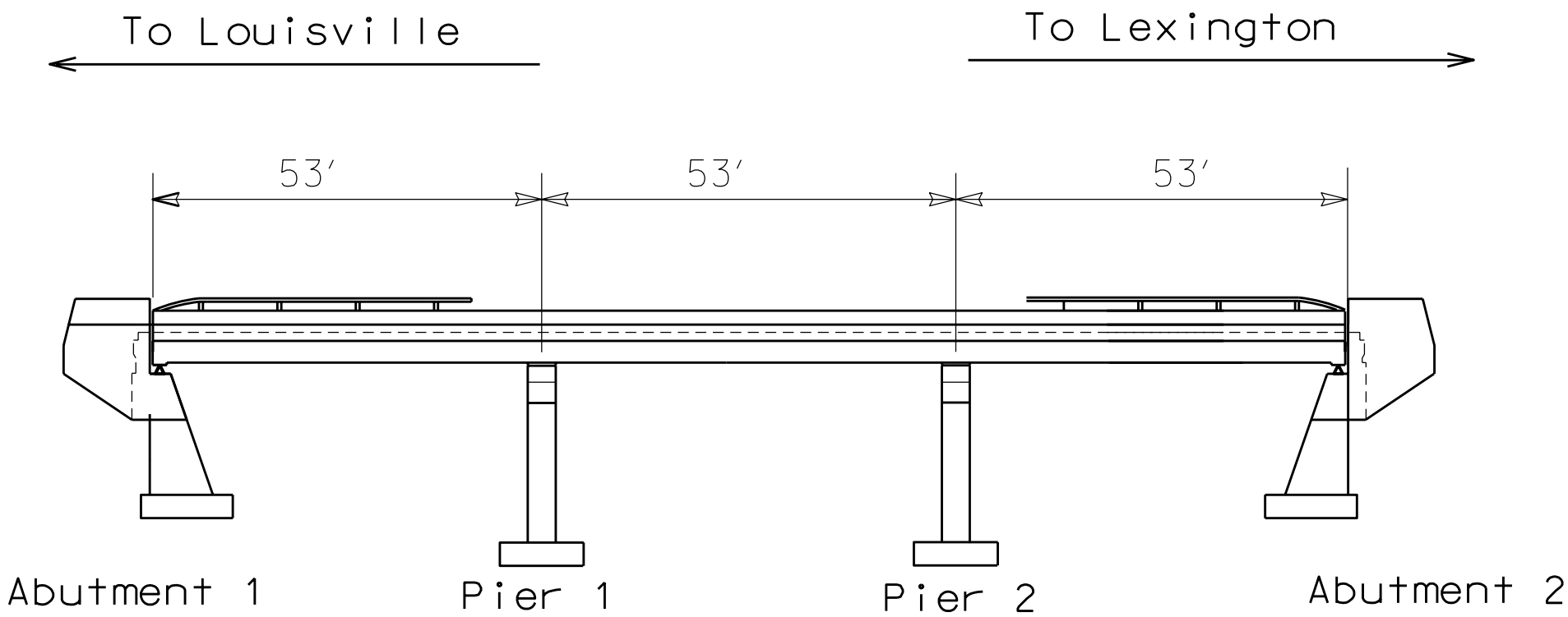

ELEVATION

50'-50'-50' 3-simple span
14° skew (not shown)

NOT TO SCALE

Commonwealth of Kentucky DEPARTMENT OF HIGHWAYS	
COUNTY **FRANKLIN**	
ROUTE **I 64**	CROSSING **CARDWELL LANE**
ELEVATION	
PREPARED BY **Division of Maintenance** ***Bridge Preservation Branch***	SHEET NO. 6 DRAWING NO. _____

Pier 1

Looking East

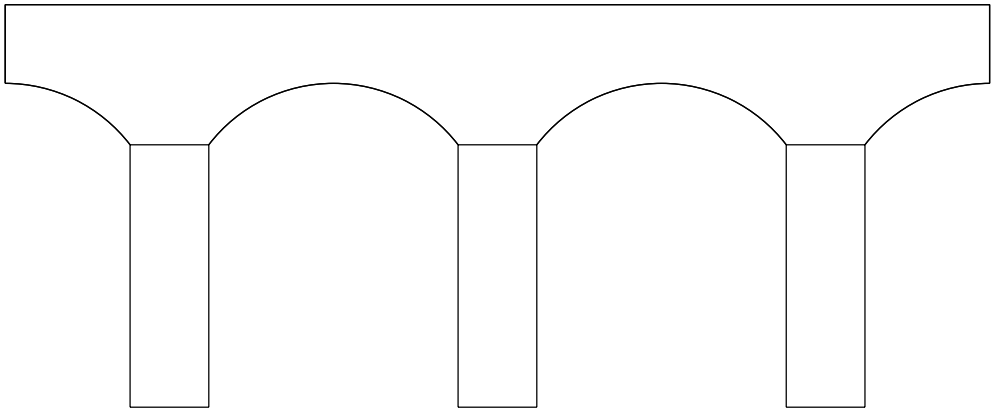

Spalling

Delamination

Looking West

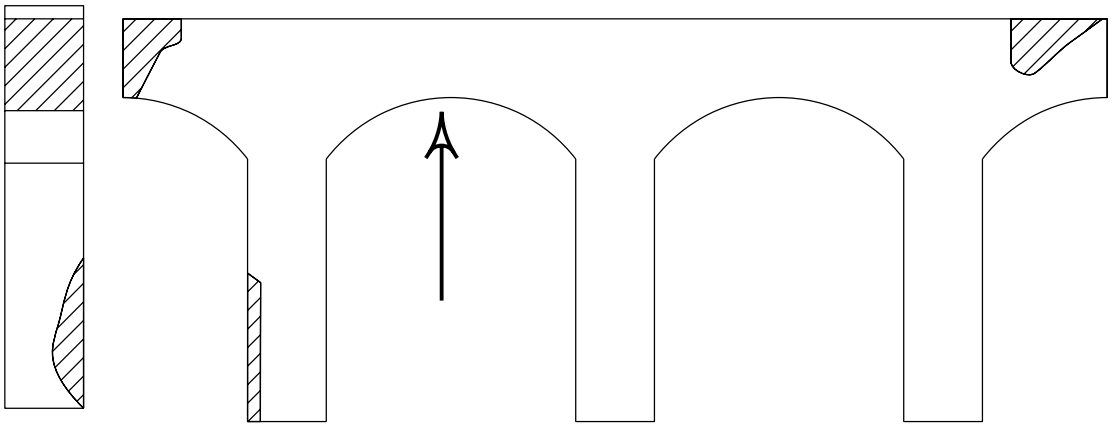

Approximately 27 Sq. Ft.

NOT TO SCALE

B00057R

Commonwealth of Kentucky DEPARTMENT OF HIGHWAYS	
COUNTY FRANKLIN	
ROUTE I 64	CROSSING CARDWELL LANE
WESTBOUND – PIER 1	
PREPARED BY Division of Maintenance *Bridge Preservation Branch*	SHEET NO. 7 DRAWING NO.

Pier 2

Looking East

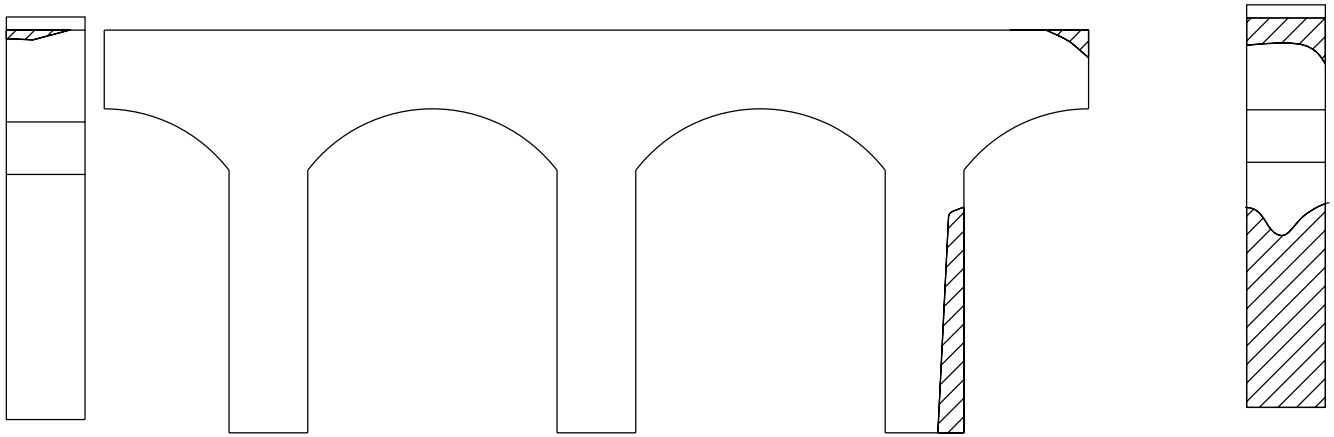

Looking West

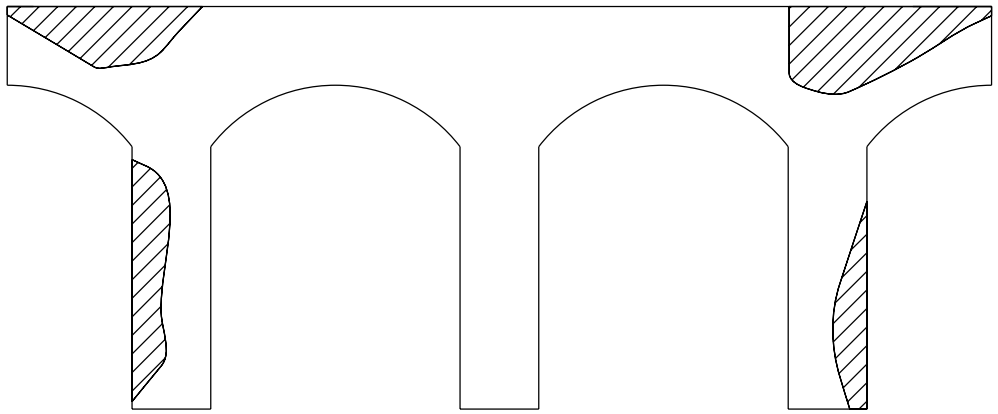

Approximately 79 Sq. Ft.

Spalling

Delamination

NOT TO SCALE

B00057R

Commonwealth of Kentucky DEPARTMENT OF HIGHWAYS	
COUNTY FRANKLIN	
ROUTE I 64	CROSSING CARDWELL LANE
WESTBOUND – PIER 2	
PREPARED BY Division of Maintenance *Bridge Preservation Branch*	SHEET NO. 8 DRAWING NO. _____

Pier 1

Looking East

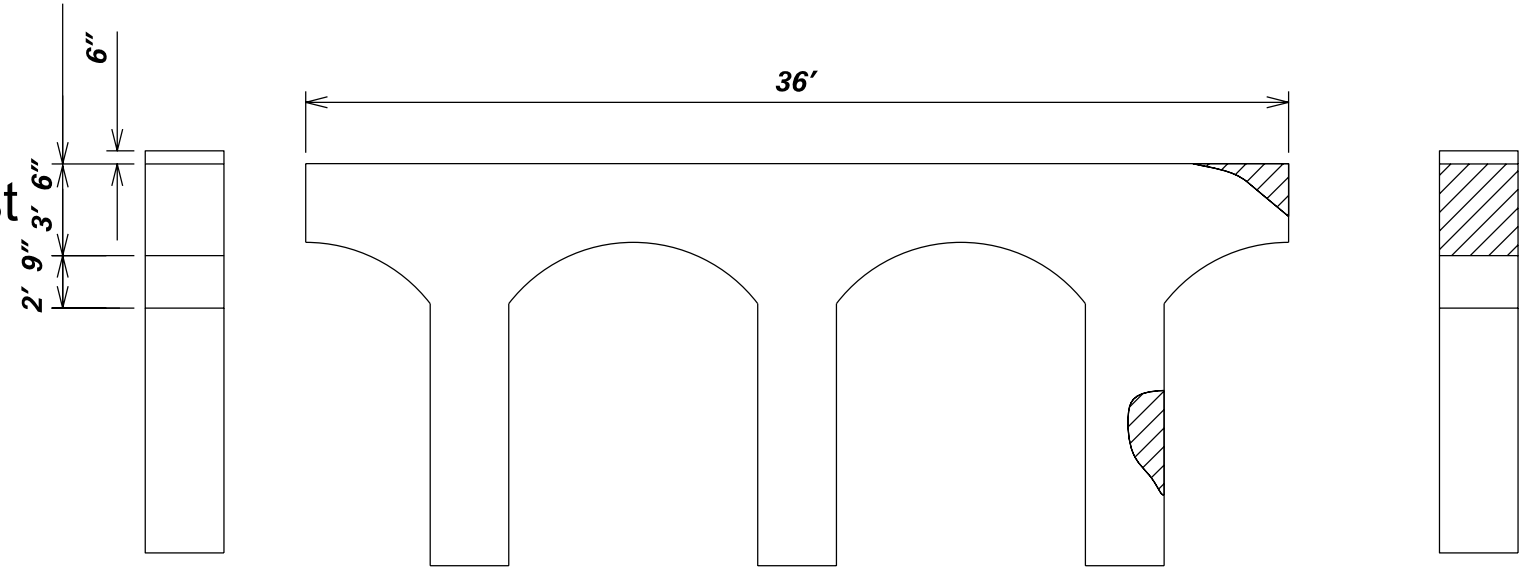

Looking West

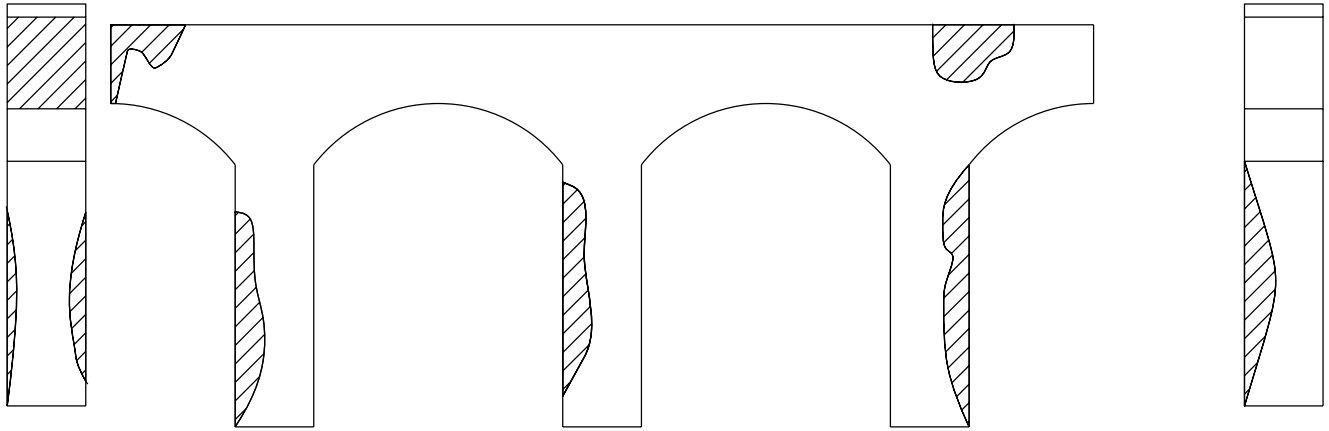

B00057L

Approximately 80 Sq. Ft.

Spalling

Delamination

NOT TO SCALE

Commonwealth of Kentucky DEPARTMENT OF HIGHWAYS	
COUNTY FRANKLIN	
ROUTE I 64	CROSSING CARDWELL LANE
EASTBOUND – PIER 1	
PREPARED BY Division of Maintenance Bridge Preservation Branch	SHEET NO. 9 DRAWING NO. _____

Pier 2

Looking East

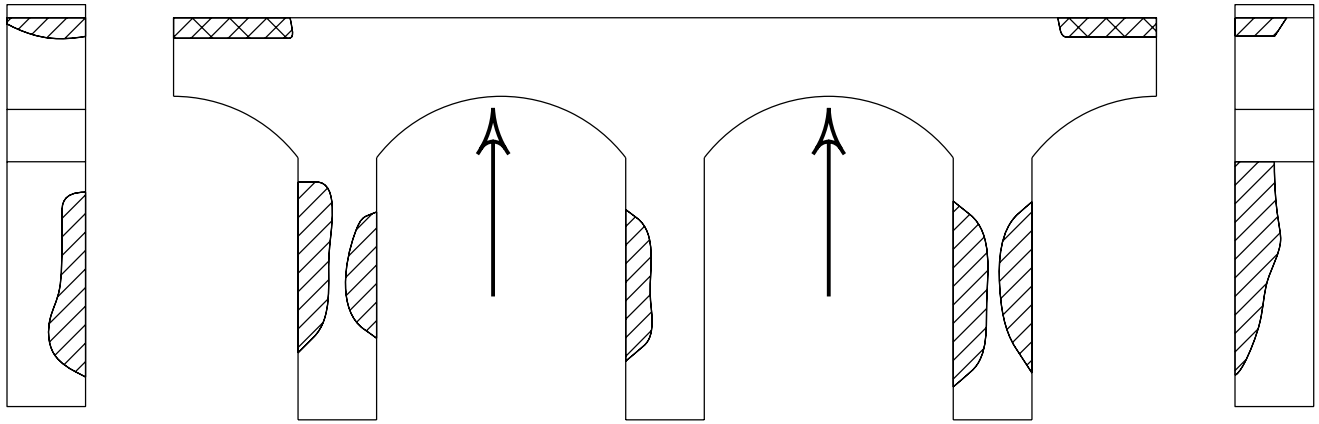

Looking West

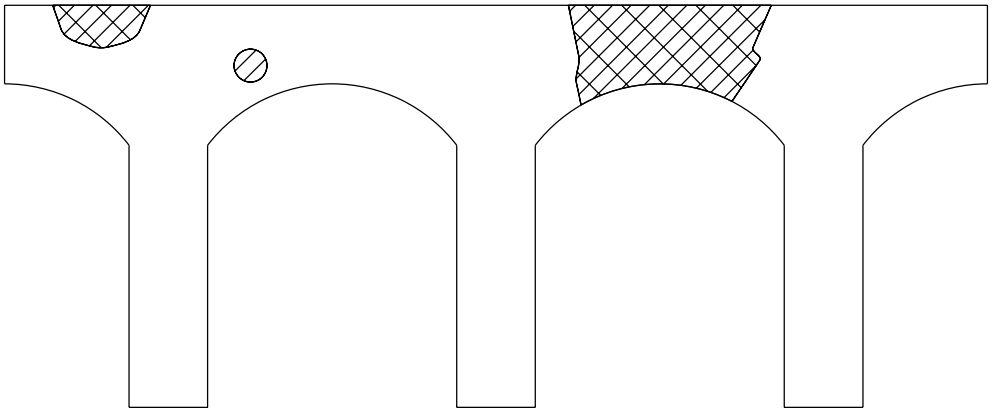

B00057L

Approximately 90 Sq. Ft.

Spalling

Delamination

NOT TO SCALE

Commonwealth of Kentucky DEPARTMENT OF HIGHWAYS	
COUNTY FRANKLIN	
ROUTE I 64	CROSSING CARDWELL LANE
EASTBOUND – PIER 2	
PREPARED BY Division of Maintenance *Bridge Preservation Branch*	SHEET NO. 10 DRAWING NO. _____

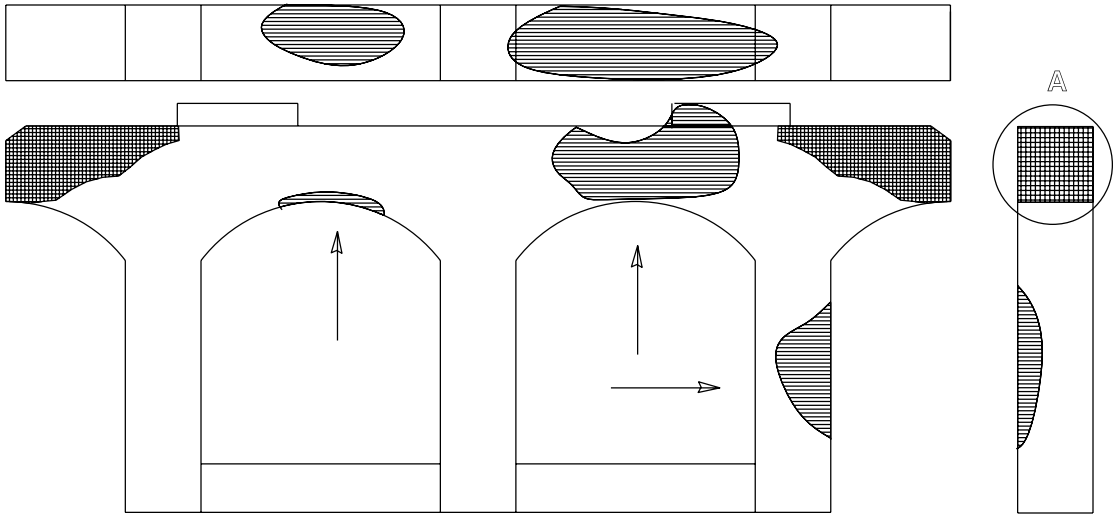

Spalled Area

Delaminated Area

Remove all loose, spalled, deteriorated and delaminated concrete. Use Sounding to locate delaminated areas. Repair areas shown on the drawings are approximate and based on visual inspection only.

Do not damage sound concrete or any reinforcing steel.

After all deteriorated concrete has been removed, prepared the surface by abrasive blast cleaning. Abrasive blast cleaning shall remove all fractured surface concrete and all traces of any unsound material or contaminants such as oil, grease, dirt, slurry, or any materials which could interfere with the bond of freshly placed concrete.

Provide Welded Wire Fabric (WWF) at each repair area larger than 1 square foot if the depth of the repair exceeds 3 inches from the original dimension of the repaired member. Sheets of adjoining WWF shall be lapped by at least one and one-half spaces at all inter sections, in both directions, and be securely fastened. WWF shall be supported no closer than 1½ inches to the prepared concrete surface and shall have a minimum concrete cover of 1½ inches.

WWF shall be fastened to preset anchors on a grid not more than 12 inches square. Large knots of tie wire which could result in sand pockets and voids during surfacing shall be avoided.

WWF and Hook Fastenes are not required for patches with less than 2″ thick.

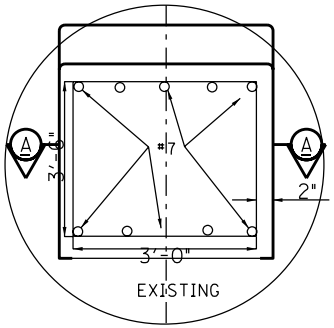

A

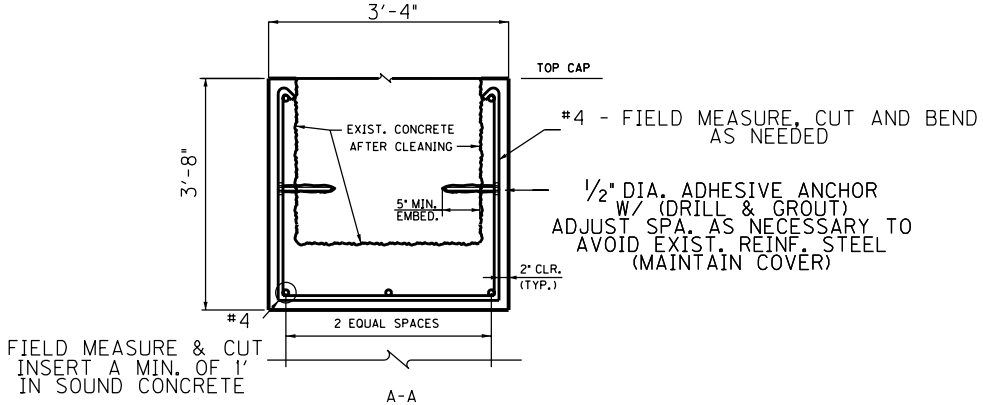

A-A

NOT TO SCALE

Commonwealth of Kentucky DEPARTMENT OF HIGHWAYS	
COUNTY **FRANKLIN**	
ROUTE I 64	CROSSING KY 151
CONCRETE PATCHING	
PREPARED BY Division of Maintenance *Bridge Preservation Branch*	SHEET NO. 11 DRAWING NO. _____

PART II

SPECIFICATIONS AND STANDARD DRAWINGS

SPECIFICATIONS REFERENCE

Any reference in the plans or proposal to the *Standard Specifications for Road and Bridge Construction, Edition of 2004,* and *Standard Drawings, Edition of 2000* are superseded by *Standard Specifications for Road and Bridge Construction, Edition of 2008* and *Standard Drawings, Edition of 2003 with the 2008 Revision.*

Supplemental Specifications to The Standard Specifications for Road and Bridge Construction, 2008 Edition

(Effective with the April 23, 2010 Letting)

SUBSECTION: **REVISION:**	101.02 Abbreviations. Insert the following abbreviation and text into the section: KEPSC Kentucky Erosion Prevention and Sediment Control
SUBSECTION: **REVISION:**	101.03 Definitions. Replace the definition for Specifications – *Special Provisions* with the following: Additions and revisions to the Standard and Supplemental Specifications covering conditions peculiar to and individual project.
SUBSECTION: **REVISION:**	102.03 Replace the first sentence of the first paragraph with the following: Submit the Bid Proposal on forms furnished on the Department internet website (http://transportation.ky.gov/contract/), including the Bid Packet and disk created from the Expedite Bidding Program. Delete the last paragraph.
SUBSECTION: **REVISION:**	102.04 Issuance of Bid Proposal Form. Replace Heading with the following: 102.04 Bidder Registration. Replace the first sentence of the first paragraph with the following: The Department reserves the right to disqualify or refuse to place a bidder on the eligible bidder's list for a project for any of the following reasons: Replace the last sentence of the subsection with the following: The Department will resume placing the bidder on the eligible bidder's list for projects after the bidder improves his operations to the satisfaction of the State Highway Engineer.
SUBSECTION: **REVISION:**	102.06 Examination of Plans, Specifications, Special Provisions, Special Notes, and Site of Work. Replace the first paragraph with the following: Examine the site of the proposed work, the Bid Proposal, Plans, specifications, contract forms, and bulletins and addendums posted to the Department's website and the Bid Express Bidding Service Website before submitting the Bid Proposal. The Department considers the submission of a Bid Proposal prima facie evidence that the bidder has made such examination and is satisfied as to the conditions to be encountered in performing the work and as to the requirements of the Contract.
SUBSECTION: **REVISION:**	102.07.01 General. Replace the first sentence with the following: Submit the Bid Proposal on forms furnished on the Department internet website (http://transportation.ky.gov/contract/), including the Bid Packet and disk created from the Expedite Bidding Program. Insert the following after the first sentence of the third paragraph: Bid proposals submitted electronically shall use an eligible Digital ID issued by Bid Express.

Supplemental Specifications to The Standard Specifications for Road and Bridge Construction, 2008 Edition

(Effective with the April 23, 2010 Letting)

SUBSECTION: **REVISION:**	102.07.02 Computer Bidding. Replace the first paragraph with the following: Subsequent to registering for a specific project, use the Department's Expedite Bidding Program on the internet website of the Department of Highways, Division of Construction Procurement (http://transportation.ky.gov/contract/). Download the bid file from the Bid Express Bidding Service Website to prepare a Bid Proposal for submission to the Department. Include the completed Bid Packet produced by the Expedite Bidding Program and submit it along with the disk created by said program or submit electronically through Bid Express Bidding Service. Replace the second paragraph with the following: In case of a dispute, the printed Bid Proposal and bid item sheets created by the Expedite Bidding Program take precedence over any bid submittal.
SUBSECTION: **REVISION:**	102.08 Irregular Bid Proposals. Replace point four of the first paragraph with the following: 4) fails to submit a disk created from the Expedite Bidding Program, unless the bid proposal is submitted electronically through the Bid Express Bidding Service. Replace point one of the second paragraph with the following: 1) when the Bid Proposal is on a form other than that furnished by the Department or printed from other than the Expedite Bidding Program, or when the form is altered or any part is detached; or
SUBSECTION: **REVISION:**	102.09 Bid Proposal Guaranty. Insert the following after the first sentence: Bid proposals submitted electronically through Bid Express Bidding Service where a bid bond was not used must have a guaranty in the form of a cashier's check or certified check in an amount no less than the amount indicated on the submitted electronic bid.
SUBSECTION: **REVISION:**	102.10 Delivery of Bid Proposals. Replace paragraph with the following: Return Bid Proposal in an envelope that is clearly marked indicating the contents. When sent by mail, address the sealed Bid Proposal to the Department at the address and in care of the office and official receiving the Bid Proposals. Submit all Bid Proposals prior to the time and at the place specified in the Notice to Contractors. The Department will time-stamp and return to the bidder unopened Bid Proposals received after the time for opening of bids. Bids submitted electronically shall be done using Bid Express Bidding Services. All bids submitted electronically must be done in accordance with the requirements of the Bid Express Bidding Service.
SUBSECTION: **REVISION:**	102.11 Withdrawal or Revision of Bid Proposals. Replace the paragraph with the following: A bidder may withdraw or revise a Bid Proposal after depositing the Bid Proposal with the Department, provided the Department receives the request for such withdrawal or revision in writing before the time set for opening Bid Proposals. Bid Proposals submitted electronically can be withdrawn in accordance the requirements of the Bid Express Bidding Service.

Supplemental Specifications to The Standard Specifications for Road and Bridge Construction, 2008 Edition

(Effective with the April 23, 2010 Letting)

SUBSECTION: **REVISION:**	103.02 Award of Contract. Replace the first sentence of the third paragraph with the following: The Department will normally award the Contract within 10 working days after the date of receiving Bid Proposals unless the Department deems it best to hold the Bid Proposals of any or all bidders for a period not to exceed 60 calendar days for final disposition of award.
SUBSECTION: **REVISION:**	105.03 Record Plans. Replace the section with the following: Record Plans are those reproductions of the original Plans on which the accepted Bid Proposal was based and, and signed by a duly authorized representative of the Department. The Department will make these plans available for inspection in the Central Office at least 24 hours prior to the time of opening bids and up to the time of letting of a project or projects. The quantities appearing on the Record Plans are the same as those on which Bid Proposals are received. The Department will use these Record Plans as the controlling plans in the prosecution of the Contract. The Department will not make any changes on Record Plans subsequent to their issue unless done so by an approved contract modification. The Department will make 2 sets of Record Plans for each project, and will maintain one on file in the Central Office and one of file in the District Office. The Department will furnish the Contractor with the following: 1 full size, 2 half size and an electronic file copy of the Record Plans at the Pre-Construction conference.
SUBSECTION: **REVISION:**	105.12 Final Inspection and Acceptance of Work. Insert the following paragraphs after the first paragraph: Notify the Engineer when all electrical items are complete. A notice of the electrical work completion shall be made in writing to the Contractor. Electrical items will be inspected when the electrical work is complete and are not subject to waiting until the project as a whole has been completed. The Engineer will notify the Division of Traffic Operations within 3 days that all electrical items are complete and ready for a final inspection. A final inspection will be completed within 90 days after the Engineer notifies the Division of Traffic Operations of the electrical work completion. Energize all electrical items prior to notifying the Engineer that all electrical items are complete. Electrical items must remain operational until the Division of Traffic Operations has inspected and accepted the electrical portion of the project. Payment for the electrical service is the responsibility of the Contractor from the time the electrical items are energized until the Division of Traffic Operations has accepted the work. Complete all corrective work within 90 calendar days of receiving the original electrical inspection report. Notify the Engineer when all corrective work is complete. The Engineer will notify the Division of Traffic Operations that the corrective work has been completed and the project is ready for a follow-up inspection. Upon re-inspection, if additional corrective work is required, complete within the same 90 calendar day allowance. The Department will not include time between completion of the corrective work and the follow up electrical inspection(s). The 90 calendar day allowance is cumulative regardless of the number of follow-up electrical inspections required. The Department will assume responsibility for the electrical service on a project once the Division of Traffic Operations gives final acceptance of the electrical items on the project. The Department will also assume routine maintenance of those items. Any damage done to accepted electrical work items by other Contractors shall be the responsibility of the Prime Contractor. The Department will not be responsible for repairing damage done by other contractors during the construction of the remaining project. Failure to complete the electrical corrective work within the 90 calendar day allowance will result in penalties assessed to the project. Penalties will be assessed at ½ the rate of liquidated damages established for the contract. Replace the following in the second sentence of the second paragraph: Replace Section 213 with Section 212. Delete the fifth paragraph from the section.

Supplemental Specifications to The Standard Specifications for Road and Bridge Construction, 2008 Edition

(Effective with the April 23, 2010 Letting)

SUBSECTION: **REVISION:**	105.13 Claim Resolution Process. Replace the last sentence of the 3. Bullet with the following: If the Contractor did not submit an as-bid schedule at the Pre-Construction Meeting or a written narrative in accordance with Subsection 108.02, the Cabinet will not consider the claim for delay. Delete the last paragraph from the section.
SUBSECTION: **REVISION:**	106.10 Field Welder Certification Requirements. Insert the following sentence before the first sentence of the first paragraph: All field welding must be performed by a certified welder unless otherwise noted.
SUBSECTION: **REVISION:**	108.02 Progress Schedule. Insert the following prior to the first paragraph: Specification 108.02 applies to all Cabinet projects except the following project types: • Right of Way Mowing and/or Litter Removal • Waterborne Paint Striping • Projects that contain Special Provision 82 • Projects that contain the Special Note for CPM Scheduling Insert the following paragraph after paragraph two: Working without the submittal of a Written Narrative is violation of this specification and additionally voids the Contractor's right to delay claims. Insert the following paragraph after paragraph six: The submittal of bar chart or Critical Path Method schedule does not relieve the Contractor's requirement to submit a Written Narrative schedule. Insert the following at the beginning of the first paragraph of A) Written Narrative.: Submit the Written Narrative Schedule using form TC 63-50 available at the Division of Construction's website (http://www.transportation.ky.gov/construction/ResCenter/ResCenter.htm). Replace Part A) Written Narrative 1. And 2. with the following: 1. Provide a description that includes how the Contractor will sequence and stage the work, how the Contractor plans to maintain and control traffic being specific and detailed, and what equipment and crew sizes are planned to execute the work. 2. Provide a list of project milestones including, if applicable, winter shut-downs, holidays, or special events. The Contractor shall describe how these milestones and other dates effect the prosecution of the work. Also, include start date and completion date milestones for the contract, each project if the contract entails multiple projects, each phase of work, site of work, or segment of work as divided in the project plans, proposal, or as subdivided by the Contractor.

Supplemental Specifications to The Standard Specifications for Road and Bridge Construction, 2008 Edition

(Effective with the April 23, 2010 Letting)

SUBSECTION: **REVISION:**	110.01 Mobilization. Replace paragraph three with the following: Do not bid an amount for Mobilization that exceeds 5 percent of the sum of the total amounts bid for all items in the Bid Proposal, excluding Mobilization, Demobilization, and contingent amounts established for adjustments and incentives. The Department will automatically adjust any Bid Proposals that are in excess of this amount down to 5 percent to compare Bid Proposals and award the Contract. The Department will award a Contract for the actual amount bid when the amount bid for Mobilization is less than 5 percent, or the Department will award the Contract for the adjusted bid amount of 5 percent when the amount bid for Mobilization is greater than 5 percent. If any errors in unit bid prices for other Contract items in a Contractor's Bid Proposal are discovered after bid opening and such errors reduce the total amount bid for all other items, excluding Mobilization, Demobilization, and contingent amounts established for adjustments and incentives, so that the percent bid for Mobilization is larger than 5 percent, the Department will adjust the amount bid for Mobilization to 5 percent of the sum of the corrected total bid amounts.
SUBSECTION: **REVISION:**	110.02 Demobilization. Replace the third paragraph with the following: Bid an amount for Demobilization that is a minimum of $1,000 or 1.5 percent of the sum of the total amounts bid for all other items in the Bid Proposal, excluding Mobilization, Demobilization, and contingent amounts established for adjustments and incentives. The Department will automatically adjust any Bid Proposal that is less than this amount up to $1,000 or 1.5 percent to compare Bid Proposals and award the Contract. The Department will award a Contract for the actual amount bid when the amount bid for demobilization exceeds 1.5 percent, or the Department will award the Contract for the adjusted bid amount when the amount bid for demobilization is less than the minimum of $1,000 or less than 1.5 percent of the sum of the total amounts bid for all other items in the Bid Proposal, excluding Mobilization, Demobilization, and contingent amounts established for adjustments and incentives.
SUBSECTION: **REVISION:**	110.04 Payment. Insert the following paragraph following the demobilization payment schedule (4th paragraph): The Department will withhold an amount equal to $1,000 for demobilization, regardless of the schedule listed above. The $1,000 withheld for demobilization will be paid when the final estimate is paid.
SUBSECTION: **REVISION:**	112.03.01 General Traffic Control. Replace paragraph three with the following: All flaggers shall be trained in current MUTCD flagging procedures. Proof of training must be available for review at the Department's request. Flagging credentials must be current within the last 5 years.
SUBSECTION: **PART:** **REVISION:**	112.03.11 Temporary Pavement Markings. B) Placement and Removal of Temporary Striping. Replace the 2nd sentence of the first paragraph with the following: On interstates and parkways, and other roadways approved by the State Highway Engineer, install pavement striping that is 6 inches in width.
SUBSECTION: **REVISION:**	112.03.12 Project Traffic Coordinator (PTC). Add the following at the end of the subsection: After October 1, 2008 the Department will require the PTC to have successfully completed the applicable qualification courses. Personnel that have not successfully completed the applicable courses by that date will not be considered qualified. Prior to October 1, 2008, conform to Subsection 108.06 A) and ensure the designated PTC has sufficient skill and experience to properly perform the task.

Supplemental Specifications to The Standard Specifications for Road and Bridge Construction, 2008 Edition

(Effective with the April 23, 2010 Letting)

SUBSECTION: 112.03.15 Non-Compliance of Maintain and Control of Traffic.
REVISION: Add the following section:

112.03.15 Non-Compliance of Maintain and Control of Traffic. It is the Contractor's responsibility to conform to the traffic control requirements in the TCP, Proposal, plan sheets, specifications, and the Manual on Uniform Traffic Control Devices.

Unless specified elsewhere in the contract, a penalty will be assessed in the event of non-compliance with Maintain and Control of Traffic requirements. These penalties will be assessed when the Contractor fails to correct a situation or condition of non-compliance with the contract traffic control requirements after being notified by the Engineer. The calculation of accrued penalties for non-compliance will be based upon the date/time of notification by the Engineer.

The amount of the penalty assessed for non-compliance will be determined based upon the work zone duration, as defined by the MUTCD, and will be the greatest of the different calculation methods indicated below:

A) Long-term stationary work that occupies a location more than 3 days.

Correct the non-compliant issue within 24 hours from initial notification by the Engineer. If the issue is not corrected within 24 hours from the initial notification, a penalty for non-compliance will be assessed on a daily basis beginning from the initial notification of non-compliance. The Contractor will be assessed a $1,000 daily penalty or the amount equal to the contract liquidated damages in Section 108.09, whichever of the 2 is greater. The penalty for non-compliance will escalate as follows for continued non-compliance after the initial notification.

3 Days after Notification
$1,500 daily penalty or 1.5 times the contract liquidated damages daily charge rate in Section 108.09, whichever is greater.

7 Days after Notification
$2,000 daily penalty or double the contract liquidated damages daily charge rate in Section 108.09, whichever is greater.

B) Intermediate-term stationary work that occupies a location more than one daylight period up to 3 days, or nighttime work lasting more than 1 hour.

Correct the non-compliant issue within 4 hours from initial notification by the Engineer. If the issue is not corrected within 4 hours from notification, a penalty for non-compliance will be assessed on an hourly basis beginning from the initial notification of non-compliance. The penalty for non-compliance will be assessed at $200 per hour.

C) Short-term stationary is daytime work that occupies a location for more than 1 hour within a single daylight period.

Correct the non-compliant issue within 1 hour from initial notification by the Engineer. If the issue is not corrected within 1 hour from notification, a penalty for non-compliance will be assessed on an hourly basis beginning from the initial notification of non-compliance. The penalty for non-compliance will be assessed at $200 per hour.

If the Contractor remains in violation of the Maintain and Control of Traffic requirements, or if the Department determines it to be in the public's interest, work will be suspended in accordance with Section 108.08 until the deficiencies are corrected. The Department reserves the right to correct deficiencies by any means available and charge the Contractor for labor, equipment, and material costs incurred in emergency situations.

Supplemental Specifications to The Standard Specifications for Road and Bridge Construction, 2008 Edition

(Effective with the April 23, 2010 Letting)

SUBSECTION: **REVISION:**	206.03.02 Embankment Replace the last paragraph with the following: When rock roadbed is specified, construct the upper 2 feet of the embankment according to Subsection 204.03.09 A).
SUBSECTION: **REVISION:**	213.03.03 Inspection and Maintenance. Insert the following paragraph after the second paragraph: When the Contractor is required to obtain the KPDES permit, it is their responsibility to ensure compliance with the inspection and maintenance requirements of the permit. The Engineer will perform verification inspections a minimum of once per month and within 7 days of a ½ inch or greater rainfall event. The Engineer will document these inspections using Form TC 63-61 A. The Engineer will provide copies of the inspection only when improvements to the BMP's are required. Verification inspections performed by the Engineer do not relieve the Contractor of any responsibility for compliance with the KPDES permit. Initiate corrective action within 24 hours of any noted deficiency and complete the work within 5 days.
SUBSECTION: **PART:** **REVISION:**	213.03.05 Temporary Control Measures. E) Temporary Seeding and Protection. Replace the first paragraph with the following: Apply an Annual Rye seed mix at a rate of 100 pounds per acre during the months of March through August. In addition to the Annual Rye, add 10 pounds of German Foxtail-Millet (Setaria italica), when performing temporary seeding during the months of June through August. During the months of September through February, apply Winter Wheat or Rye Grain at a rate of 100 pounds per acre. Obtain the Engineer's approval prior to the application of the seed mixture.
SUBSECTION: **PART:** **REVISION:**	213.03.05 Temporary Control Measures. F) Temporary Mulch. Replace the last sentence with the following: Place temporary mulch to an approximate 2-inch loose depth (2 tons per acre) and anchor it into the soil by mechanically crimping it into the soil surface or applying tackifier to provide a protective cover. Regardless of the anchoring method used, ensure the protective cover holds until disturbance is required or permanent controls are in installed.
SUBSECTION: **REVISION:**	303.05 Payment. Replace the second paragraph of the section with the following: The Department will make payment for Drainage Blanket-Type II (ATDB) according to the Lot Pay Adjustment Schedule for Specialty Mixtures in Section 402.
SUBSECTION: **PART:** **REVISION:**	401.02.04 Special Requirements for Dryer Drum Plants. F) Production Quality Control. Replace the first sentence with the following: Stop mixing operations immediately if, at any time, a failure of the automatic electronic weighing system of the aggregate feed, asphalt binder feed, or water injection system control occurs.

Supplemental Specifications to The Standard Specifications for Road and Bridge Construction, 2008 Edition

(Effective with the April 23, 2010 Letting)

SUBSECTION: 401.02.04 Special Requirements for Dryer Drum Plants.
REVISION: Add the following:

Part G) **Water Injection System.** Provided each system has prior approval as specified in Subsection 402.01.01, the Department will allow the use of water injection systems for purposes of foaming the asphalt binder and lowering the mixture temperature for production of Warm Mix Asphalt (WMA).

Ensure the equipment for water injection meets the following requirements:

1) Injection equipment computer controls are automatically coupled to the plants controls (manual operation is not permitted);
2) Injection equipment has variable controls that introduce water ratios based on production rates of mixtures;
3) Injects water into the flow of asphalt binder prior to contacting the aggregate;
4) Provides alarms on the water injection system that operate when the flow of water is interrupted or deviates from the prescribed water rate.

SUBSECTION: 401.03.01 Preparation of Mixtures.
REVISION: Replace the last sentence of the second paragraph with the following:

Do not use asphalt binder while it is foaming in a storage tank.

SUBSECTION: 401.03.01 Preparation of Mixtures.
REVISION: Replace the third paragraph and Mixing and Laying Temperature table with the following:

Maintain the temperature of the component materials and asphalt mixture within the ranges listed in the following table:

MIXING AND LAYING TEMPERATURES (°F)

Material		Minimum	Maximum
Aggregates		240	330
Aggregates used with Recycled Asphalt Pavement (RAP)		240	—
Asphalt Binders	PG 64-22	230	330
	PG 76-22	285	350
Asphalt Mixtures at Plant (Measured in Truck)	PG 64-22 HMA	250	330
	PG 76-22 HMA	310	350
	PG 64-22 WMA	230	275
	PG 76-22 WMA	250	300
Asphalt Mixtures at Project (Measured in Truck When Discharging)	PG 64-22 HMA	230	330
	PG 76-22 HMA	300	350
	PG 64-22 WMA	210	275
	PG 76-22 WMA	240	300

SUBSECTION: 402.01 Description.
REVISION: Replace the paragraph with the following:

Provide the process control and acceptance testing of all classes and types of asphalt mixtures which may be furnished either as hot mix asphalt (HMA) or warm mix asphalt (WMA) produced with water injection systems.

Supplemental Specifications to The Standard Specifications for Road and Bridge Construction, 2008 Edition

(Effective with the April 23, 2010 Letting)

SUBSECTION REVISION:

402.01.01 Warm Mix Asphalt (WMA) Evaluation and Approval.
Add the following subsection:

402.01.01 Warm Mix Asphalt (WMA) Evaluation and Approval.
The Department will evaluate trial production of WMA by use of a water injection system provided the system is installed according to the manufacturer's requirements and satisfies the requirements of Section 401. Evaluation will include production and placement of WMA to demonstrate adequate mixture quality including volumetric properties and density by Option A as specified in Subsection 402.03.02 D). Do not place WMA for evaluation on Department projects. Provided production and placement operations satisfy the applicable quality levels, the Department will approve WMA production on Department projects using the water injection system as installed on the specific asphalt mixing plant evaluated.

SUBSECTION: REVISION:

402.05.02 Asphalt Mixtures and Mixtures With RAP.
Replace Subsection Title as below:

402.05.02 Asphalt Mixtures, HMA and WMA, Including Mixtures With RAP.

SUBSECTION: REVISION:

402.05.02 Asphalt Mixtures, HMA and WMA, Including Mixtures With RAP.
Replace the paragraph with the following:

The Department will pay for the mixture at the Contract unit bid price and apply a Lot Pay Adjustment for each lot placed based on the degree of compliance with the specified tolerances. Using the appropriate Lot Pay Adjustment Schedule, the Department will assign a pay value for the applicable properties within each sublot and average the sublot pay values to determine the pay value for a given property for each lot. The Department will apply the Lot Pay Adjustment for each lot to a defined unit price of $50.00 per ton. The Department will calculate the Lot Pay Adjustment using all possible incentives and disincentives but will not allow the overall pay value for a lot to exceed 1.00.

SUBSECTION: PART: REVISION:

402.05.02 Asphalt Mixtures, HMA and WMA, Including Mixtures With RAP.
C) Conventional and RAP Mixtures Placed on Shoulders.
Replace title with the following:

HMA, WMA, and RAP Mixtures Placed on Shoulders.

SUBSECTION: PART: REVISION:

402.05.02 Asphalt Mixtures, HMA and WMA, Including Mixtures With RAP.
D) Conventional and RAP Mixtures Placed Monolithically as Asphalt Pavement Wedge.
Replace the title with the following:

HMA, WMA, and RAP Mixtures Placed Monolithically as Asphalt Pavement Wedge.

SUBSECTION: PART: TABLES: REVISION:

402.05.02 Asphalt Mixtures, HMA and WMA, Including Mixtures With RAP.
Lot Pay Adjustment Schedule, Compaction Option A, Base and Binder Mixtures
VMA
Replace the VMA table with the following:

VMA

Pay Value	Deviation From Minimum
1.00	• min. VMA
0.95	0.1-0.5 below min.
0.90	0.6-1.0 below min.
(1)	> 1.0 below min.

Supplemental Specifications to The Standard Specifications for Road and Bridge Construction, 2008 Edition

(Effective with the April 23, 2010 Letting)

SUBSECTION: 402.05.02 Asphalt Mixtures, HMA and WMA, Including Mixtures With RAP.
PART: Lot Pay Adjustment Schedule, Compaction Option A, Surface Mixtures
TABLES: VMA
REVISION: Replace the VMA table with the following:

VMA	
Pay Value	Deviation From Minimum
1.00	• min. VMA
0.95	0.1-0.5 below min.
0.90	0.6-1.0 below min.
(1)	> 1.0 below min.

SUBSECTION: 402.05.02 Asphalt Mixtures, HMA and WMA, Including Mixtures With RAP.
PART: Lot Pay Adjustment Schedule, Compaction Option B Mixtures
TABLE: VMA
REVISION: Replace the VMA table with the following:

VMA	
Pay Value	Deviation From Minimum
1.00	• min. VMA
0.95	0.1-0.5 below min.
0.90	0.6-1.0 below min.
(2)	> 1.0 below min.

SUBSECTION: 403.03.03 Preparation of Mixture.
PART: C) Mix Design Criteria.
NUMBER: 1) Preliminary Mix Design.
REVISION: Replace the last two sentences of the paragraph and table with the following:

Complete the volumetric mix design at the appropriate number of gyrations as given in the table below for the number of 20-year ESAL's. The Department will define the relationship between ESAL classes, as given in the bid items for Superpave mixtures, and 20-year ESAL ranges as follows:

		Number of Gyrations		
Class	**ESAL's (millions)**	$N_{initial}$	N_{design}	N_{max}
2	< 3.0	6	50	75
3	3.0 to < 30.0	7	75	115
4	≥ 30.0	8	100	160

SUBSECTION: 403.03.09 Leveling and Wedging, and Scratch Course.
PART: A) Leveling and Wedging.
REVISION: Replace the first sentence of the first paragraph with the following:

Conform to the gradation requirements (control points) of AASHTO M 323 for base, binder, or surface as the Engineer directs.

SUBSECTION: 403.03.09 Leveling and Wedging, and Scratch Course.
PART: B) Scratch Course.
REVISION: Replace the second sentence of the first paragraph with the following:

Conform to the gradation requirements (control points) of AASHTO M 323 for base, binder, or surface as the Engineer directs.

Supplemental Specifications to The Standard Specifications for Road and Bridge Construction, 2008 Edition

(Effective with the April 23, 2010 Letting)

SUBSECTION: **REVISION:**	407.01 DESCRIPTION. Replace the first sentence of the paragraph with the following: Construct a pavement wedge composed of a hot-mixed or warm-mixed asphalt mixture.
SUBSECTION: **REVISION:**	409.01 DESCRIPTION. Replace the first sentence of the paragraph with the following: Use reclaimed asphalt pavement (RAP) from Department projects or other approved sources in hot mix asphalt (HMA) or warm mix asphalt (WMA) provided mixture requirements are satisfied.
SUBSECTION: **REVISION:**	410.01 DESCRIPTION. Delete the second sentence of the paragraph.
SUBSECTION: **REVISION:**	410.03.01 Corrective Work. Replace the last sentence of the paragraph with the following: Provide a final surface comparable to the adjacent pavement that does not require corrective work in respect to texture, appearance, and skid resistance.
SUBSECTION: **PART:** **NUMBER:** **REVISION:**	410.03.02 Ride Quality. B) Requirements. 1) Category A. Replace the last sentence of the first paragraph with the following: At the Department's discretion, a pay deduction of $1200 per 0.1-lane-mile section may be applied in lieu of corrective work.
SUBSECTION: **PART:** **NUMBER:** **REVISION:**	410.03.02 Ride Quality. B) Requirements. 2) Category B. Replace the second and third sentence of the first paragraph with the following: When the IRI is greater than 90 for a 0.1-mile section, perform corrective work, or remove and replace the pavement to achieve the specified IRI. At the Department's discretion, a pay deduction of $750 per 0.1-lane-mile section may be applied in lieu of corrective work.
SUBSECTION: **REVISION:**	410.05 PAYMENT. Add the following sentence to the end of the first paragraph: The sum of the pay value adjustments for ride quality shall not exceed $0 for the project as a whole.
SUBSECTION: **REVISION:**	413.05.02 CL3 SMA BASE 1.00D PG76-22. Insert the following sentence between the first and second sentence of the first paragraph: The Department will calculate the Lot Pay Adjustment using all possible incentives and disincentives but will not allow the overall pay value for a lot to exceed 1.00.

Supplemental Specifications to The Standard Specifications for Road and Bridge Construction, 2008 Edition

(Effective with the April 23, 2010 Letting)

SUBSECTION: 413.05.02 CL3 SMA BASE 1.00D PG 76-22.
TABLE: JOINT DENSITY TABLE
REVISION: Replace the joint density table with the following:

LANE DENSITY	
Pay Value	Test Result (%)
1.05	95.0-96.5
1.00	93.0-94.9
0.95	92.0-92.9 or 96.6-97.0
0.90	91.0-91.9 or 97.1-97.5
(1)	< 91.0 or > 97.5

SUBSECTION: 413.05.03 CL3 SMA SURF 0.50A PG76-22 and CL3 SMA SURF 0.38A PG76-22.
REVISION: Insert the following sentence between the first and second sentence of the first paragraph:

The Department will calculate the Lot Pay Adjustment using all possible incentives and disincentives but will not allow the overall pay value for a lot to exceed 1.00.

SUBSECTION: 413.05.03 CL3 SMA SURF 0.50A PG76-22 and CL3 SMA SURF 0.38A PG76-22.
TABLE: JOINT DENSITY TABLE
REVISION: Replace the joint density table with the following:

DENSITY		
Pay Value	Lane Density Test Result (%)	Joint Density Test Result (%)
1.05	95.0-96.5	92.0-96.0
1.00	93.0-94.9	90.0-91.9
0.95	92.0-92.9 or 96.6-97.0	89.0-89.9 or 96.1-96.5
0.90	91.0-91.9 or 97.1-97.5	88.0-88.9 or 96.6-97.0
0.75	----	< 88.0 or > 97.0
(1)	< 91.0 or > 97.5	----

SUBSECTION: 501.05.02 Ride Quality.
REVISION: Add the following sentence to the end of the first paragraph:

The sum of the pay value adjustments for the ride quality shall not exceed $0 for the project as a whole.

SUBSECTION: 505.03.04 Detectable Warnings.
REVISION: Replace the first sentence with the following:

Install detectable warning pavers at all sidewalk ramps and on all commercial entrances according to the Standard Drawings.

Supplemental Specifications to The Standard Specifications for Road and Bridge Construction, 2008 Edition

(Effective with the April 23, 2010 Letting)

SUBSECTION: **REVISION:**	505.04.04 Detectable Warnings. Replace the paragraph with the following: The Department will measure the quantity in square feet. All retrofit applications for maintenance projects will require the removal of existing sidewalks to meet the requirements of the standard drawings applicable to the project. The cost associated with the removal of the existing sidewalk will be incidental to the detectable warnings bid item or incidental to the bid item for the construction of the concrete sidewalk unless otherwise noted.
SUBSECTION: **REVISION:**	505.05 PAYMENT. Add the following to the bid item table: Code — Pay Item — Pay Unit 23158ES505 — Detectable Warnings — Square Foot
SUBSECTION: **REVISION:**	509.01 DESCRIPTION. Replace the second paragraph with the following: The Department may allow the use of similar units that conform to the National Cooperative Highway Research Program (NCHRP) 350 Test Level 3 (TL-3) requirements and the typical features depicted by the Standard Drawings. Obtain the Engineers approval prior to use. Ensure the barrier wall shape, length, material, drain slot dimensions and locations typical features are met and the reported maximum deflection is 3 feet or less from the NCHRP 350 TL-3 for Test 3 – 11 (pickup truck impacting at 60 mph at a 25-degree angle.)
SUBSECTION: **REVISION:**	601.03.02 Concrete Producer Responsibilities. Add the following to the first paragraph: If a concrete plant becomes unqualified during a project and there are no other qualified plants in the region, the Department will provide qualified personnel to witness and ensure the producer follows the required specifications. The Department will assess the Contractor a $100 per hour charge for this service.
SUBSECTION: **REVISION:**	606.02.11 Coarse Aggregate. Replace with the following: Conform to Section 805, size No. 8 or 9-M.
SUBSECTION: **REVISION:**	609.04.06 Joint Sealing. Replace Subsection 601.04 with the following: Subsection 606.04.08.
SUBSECTION: **REVISION:**	609.05 Payment. Replace the Pay Unit for Joint Sealing with the following: See Subsection 606.05.
SUBSECTION: **REVISION:**	701.03.06 Initial Backfill. Replace the first sentence of the last paragraph with the following: When the Contract specifies, perform quality control testing to verify compaction according to KM 64-512.

Supplemental Specifications to The Standard Specifications for Road and Bridge Construction, 2008 Edition

(Effective with the April 23, 2010 Letting)

SUBSECTION: 701.03.08 Testing of Pipe.
REVISION: Replace and rename the subsection with the following:

701.03.08 Inspection of Pipe. The engineer will visually inspect all pipe. The Department will require camera/video inspection on a minimum of 50 percent of the linear feet of all installed pipe structures. Conduct camera/video inspection according to KM 64-114. The pipe to be installed under pavement will be selected first. If the total linear feet of pipe under pavement is less than 50 percent of the linear feet of all pipe installed, the Engineer will randomly select installations from the remaining pipe structures on the project to provide for the minimum inspection requirement. The pipe will be selected in complete runs (junction-junction or headwall-headwall) until the total linear feet of pipe to be inspected is at least 50 percent of the total linear feet of all installed pipe on the project.

Unless the Engineer directs otherwise, schedule the inspections no sooner than 30 days after completing the installation and completion of earthwork to within 1 foot of the finished subgrade. When final surfacing conflicts with the 30-day minimum, conduct the inspections prior to placement of the final surface. The contractor must ensure that all pipe are free and clear of any debris so that a complete inspection is possible.

Notify the Engineer immediately if distresses or locations of improper installation are discovered. When camera testing shows distresses or improper installation in the installed pipe, the Engineer may require additional sections to be tested. Provide the video and report to the Engineer when testing is complete in accordance with KM 64-114.

Pipes that exhibit distress or signs of improper installation may necessitate repair or removal as the Engineer directs. These signs include, but are not limited to: deflection, cracking, joint separation, sagging or other interior damage. If corrugated metal or thermoplastic pipes exceed the deflection and installation thresholds indicated in the table below, provide the Department with an evaluation of each location conducted by a Professional Engineer addressing the severity of the deflection, structural integrity, environmental conditions, design service life, and an evaluation of the factor of safety using Section 12, "Buried Structures and Tunnel Liners," of the AASHTO LRFD Bridge Design Specifications. Based on the evaluation, the Department may allow the pipe to remain in place at a reduced unit price as shown in the table below. Provide 5 business days for the Department to review the evaluation. When the pipe shows deflection of 10 percent or greater, remove and replace the pipe. When the camera/video or laser inspection results are called into question, the Department may require direct measurements or mandrel testing.

The Cabinet may elect to conduct Quality Assurance verifications of any pipe inspections.

SUBSECTION: 701.04.07 Testing.
REVISION: Replace and rename the subsection with the following:

701.04.07 Pipeline Video Inspection. The Department will measure the quantity in linear feet along the pipe invert of the structure inspected. When inspection above the specified 50 percent is performed due to a disagreement or suspicion of additional distresses and the Department is found in error, the Department will measure the quantity as Extra Work according to Subsection 104.03. However, if additional distresses or non-conformance is found, the Department will not measure the additional inspection for payment.

SUBSECTION: 701.05 PAYMENT.
REVISION: Add the following pay item to the list of pay items:

Code	Pay Item	Pay Unit
23131ER701	Pipeline Video Inspection	Linear Foot

Supplemental Specifications to The Standard Specifications for Road and Bridge Construction, 2008 Edition

(Effective with the April 23, 2010 Letting)

SUBSECTION: 701.05 PAYMENT
TABLE: PIPE DEFLECTION DETERMINED BY CAMERA TESTING
REVISION: Replace this table with the following table and note:

PIPE DEFLECTION	
Amount of Deflection (%)	Payment
0.0 to 5.0	100% of the Unit Bid Price
5.1 to 9.9	50% of the Unit Bid Price [(1)]
10 or greater	Remove and Replace

[(1)] *Provide Structural Analysis as indicated above. Based on the structural analysis, pipe may be allowed to remain in place at the reduced unit price.*

SUBSECTION: 701.05 PAYMENT
TABLE: PIPE DEFLECTION DETERMINED BY MANDREL TESTING
REVISION: Delete this table.

SUBSECTION: 713.02.01 Paint.
REVISION: Replace with the following:

Conform to Section 842 and Section 846.

SUBSECTION: 713.03 CONSTRUCTION.
REVISION: Replace the first sentence of the second paragraph with the following:

On interstates and parkways, and other routes approved by the State Highway Engineer, install pavement striping that is 6 inches in width.

SUBSECTION: 713.03.03 Paint Application.
REVISION: Replace the second paragraph with the following table:

Material	Paint Application Rate	Glass Beads Application Rate
4 inch waterborne paint	Min. of 16.5 gallons/mile	Min. of 6 pounds/gallon
6 inch waterborne paint	Min. of 24.8 gallons/mile	Min. of 6 pounds/gallon
6 inch durable waterborne paint	Min. of 36 gallons/mile	Min. of 6 pounds/gallon

SUBSECTION: 713.03.04 Marking Removal.
REVISION: Replace the last sentence of the paragraph with the following:

Vacuum all marking material and removal debris concurrently with the marking removal operation.

SUBSECTION: 713.05 PAYMENT.
REVISION: Insert the following codes and pay items below the Pavement Striping – Permanent Paint:

Code	Pay Item	Pay Unit
23159EN	Durable Waterborne Marking – 6 IN W	Linear Foot
23160EN	Durable Waterborne Marking – 6 IN Y	Linear Foot

SUBSECTION: 714.03 CONSTRUCTION.
REVISION: Insert the following paragraph at the end of the third paragraph:

Use Type I Tape for markings on bridge decks, JPC pavement and JPC intersections. Thermoplastic should only be used for markings on asphalt pavement.

Supplemental Specifications to The Standard Specifications for Road and Bridge Construction, 2008 Edition

(Effective with the April 23, 2010 Letting)

SUBSECTION: **REVISION:**	714.03.07 Marking Removal. Replace the third sentence of the paragraph with the following: Vacuum all marking material and removal debris concurrently with the marking removal operation.
SUBSECTION: **REVISION:**	716.01 DESCRIPTION. Insert the following after the first sentence: Energize lighting as soon as it is fully functional and ready for inspection. Ensure that lighting remains operational until the Division of Traffic Operations has provided written acceptance of the electrical work.
SUBSECTION: **REVISION:**	716.02.01 Roadway Lighting Materials. Replace the third sentence of the paragraph with the following: Submit for material approval an electronic file of descriptive literature, drawings, and any requested design data.
SECTION: **REVISION:**	717 – THERMOPLASTIC INTERSECTION MARKINGS. Replace the section name with the following: INTERSECTION MARKINGS.
SUBSECTION: **REVISION:**	717.01 DESCRIPTION: Replace the paragraph with the following: Furnish and install thermoplastic or Type I tape intersection markings (Stop Bars, Crosswalks, Turn Arrows, etc.) Thermoplastic markings may be installed by either a machine applied, screed extrusion process or by applying preformed thermoplastic intersection marking material.
SUBSECTION: **REVISION:**	717.02 MATERIALS AND EQUIPMENT. Insert the following subsection: 717.02.06 Type I Tape. Conform to Section 836.
SUBSECTION: **REVISION:**	717.03.03 Application. Insert the following part to the subsection: B) Type I Tape Intersection Markings. Apply according to the manufacturer's recommendations. Cut all tape at pavement joints when applied to concrete surfaces.
SUBSECTION: **PART:** **REVISION:**	717.03.05 Proving Period. A) Requirements. Insert the following to this section: 2) Type I Tape. During the proving period, ensure that the pavement marking material shows no signs of failure due to blistering, excessive cracking, bleeding, staining, discoloration, oil content of the pavement materials, drippings, chipping, spalling, poor adhesion to the pavement, loss of retroreflectivity, vehicular damage, and normal wear. Type I Tape is manufactured off site and warranted by the manufacturer to meet certain retroreflective requirements. As long as the material is adequately bonded to the surface and shows no signs of failure due to the other items listed in Subsection 714.03.06 A) 1), retroreflectivity readings will not be required. In the absence of readings, the Department will accept tape based on a nighttime visual observation.

Supplemental Specifications to The Standard Specifications for Road and Bridge Construction, 2008 Edition

(Effective with the April 23, 2010 Letting)

SUBSECTION: 717.03.06 Marking Removal.
REVISION: Replace the third sentence of the paragraph with the following:

Vacuum all marking material and removal debris concurrently with the marking removal operation.

SUBSECTION: 717.05 PAYMENT.
REVISION: Insert the following bid item codes:

Code	Pay Unit	Pay Item
06563	Pave Marking – R/R X Bucks 16 IN	Linear Foot
20782NS714	Pave Marking Thermo – Bike	Each
23251ES717, 23264ES717	Pave Mark TY I Tape X-Walk, Size	Linear Foot
23252ES717, 23265ES717	Pave Mark TY I Tape Stop Bar, Size	Linear Foot
23253ES717	Pave Mark TY I Tape Cross Hatch	Square Foot
23254ES717	Pave Mark TY I Tape Dotted Lane Extension	Linear Foot
23255ES717	Pave Mark TY I Tape Arrow, Type	Each
23268ES717-23270ES717		
23256ES717	Pave Mark TY I Tape- ONLY	Each
23257ES717	Pave Mark TY I Tape- SCHOOL	Each
23266ES717	Pave Mark TY 1 Tape R/R X Bucks-16 IN	Linear Foot
23267ES717	Pave Mark TY 1 Tape-Bike	Each

SUBSECTION: 805.01 GENERAL.
REVISION: Replace the second paragraph with the following:

The Department's List of Approved Materials includes the Aggregate Source List, the list of Class A and Class B Polish-Resistant Aggregate Sources, and the Concrete Restriction List.

SUBSECTION: 805.04 CONCRETE.
REVISION: Replace the "AASHTO T 160" reference in first sentence of the third paragraph with "KM 64-629"

SUBSECTION: 805.15 GRADATION ACCEPTANCE OF NON-SPECIFICATION COARSE AGGREGATE.
TABLE: AGGREGATE SIZE USE
PART: Cement Concrete Structures and Incidental Construction
REVISION: Replace "9-M for Waterproofing Overlays" with "8 or 9-M for Waterproofing Overlays"

Supplemental Specifications to The Standard Specifications for Road and Bridge Construction, 2008 Edition

(Effective with the April 23, 2010 Letting)

SUBSECTION: 805.15 GRADATION ACCEPTANCE OF NON-SPECIFICATION COARSE AGGREGATE.
REVISION: Replace the "SIZES OF COARSE AGGREGATES" table in with the following:

SIZES OF COARSE AGGREGATES

	Sieve	AMOUNTS FINER THAN EACH LABORATORY SIEVE (SQUARE OPENINGS) PERCENTAGE BY WEIGHT															
Aggregate Size	Nominal (3) Maximum Aggregate Size	4 inch	3 1/2 inch	3 inch	2 1/2 inch	2 inch	1 1/2 inch	1 inch	3/4 inch	1/2 inch	3/8 inch	No. 4	No. 8	No. 16	No. 30	No. 100	No. 200
1	3 ½ inch	100	90-100		25-60		0-15		0-5								
2	2 ½ inch			100	90-100	35-70	0-15		0-5								
23	2 inch			100		40-90		0-15		0-5							
3	2 inch				100	90-100	35-70	0-15		0-5							
357	2 inch				100	95-100		35-70		10-30		0-5					
4	1 ½ inch					100	90-100	20-55	0-15		0-5						
467	1 ½ inch					100	95-100		35-70		10-30	0-5					
5	1 inch						100	90-100	20-55	0-10	0-5						
57	1 inch						100	95-100		25-60		0-10	0-5				
610	1 inch						100	85-100		40-75		15-40					
67	3/4 inch							100	90-100		20-55	0-10	0-5				
68	3/4 inch							100	90-100		30-65	5-25	0-10	0-5			
710	3/4 inch							100	80-100		30-75	0-30					
78	1/2 inch								100	90-100	40-75	5-25	0-10	0-5			
8	3/8 inch									100	85-100	10-30	0-10	0-5			
9-M	3/8 inch									100	75-100	0-25	0-5				
10(2)	No. 4										100	85-100				10-30	
11(2)	No. 4										100	40-90	10-40			0-5	
DENSE GRADED AGGREGATE (1)	3/4 inch							100	70-100		50-80	30-65			10-40		4-13
CRUSHED STONE BASE (1)	1 ½ inch				100		90-100		60-95		30-70	15-55			5-20		0-8

(1) *Gradation performed by wet sieve KM 64-620 or AASHTO T 11/T 27.*
(2) *Sizes shown for convenience and are not to be considered as coarse aggregates.*
(3) *Nominal Maximum Size is the largest sieve on the gradation table for an aggregate size on which any material may be retained.*

Note: The Department will allow blending of same source/same type aggregate when precise procedures are used such as cold feed, belt, or equivalent and combining of sizes or types of aggregate using the weigh hopper at concrete plants or controlled feed belts at the pugmill to obtain designated sizes.

Supplemental Specifications to The Standard Specifications for Road and Bridge Construction, 2008 Edition

(Effective with the April 23, 2010 Letting)

SUBSECTION: 805.16 SAMPLING AND TESTING.
REVISION: Replace the "AASHTO T 160" method with the "KM 64-629" method for the Concrete Beam Expansion Test.

Replace the "ASTM D 3042" method with the "KM 64-625" method for Insoluble Residue.

SUBSECTION: 810.04.01 Coating Requirements.
REVISION: Replace the "Subsection 806.07" references with "Subsection 806.06"

SUBSECTION: 810.06.01 Polyvinyl Chloride (PVC) Pipe.
PART: B) Culvert and Entrance Pipe.
REVISION: Replace the title with the following:

B) Culvert Pipe, Storm Sewer, and Entrance Pipe.

SUBSECTION: 837.03 APPROVAL.
REVISION: Replace the last sentence with the following:

The Department will sample and evaluate for approval each lot of thermoplastic material delivered for use per contract prior to installation of the thermoplastic material. Do not allow the installation of thermoplastic material until it has been approved by the Division of Materials. Allow the Department a minimum of 10 working days to evaluate and approve thermoplastic material.

SUBSECTION: 837.03.01 Composition.
REVISION: COMPOSITION Table:

Replace

Lead Chromate	0.0 max.	4.0 min.

with

Heavy Metals Content	Comply with 40 CFR 261

SECTION: DIVISION 800 MATERIAL DETAILS
REVISION: Add the following section in Division 800

SECTION 846 – DURABLE WATERBORNE PAINT

846.01 DESCRIPTION. This section covers quick-drying durable waterborne pavement striping paint for permanent applications. The paint shall be ready-mixed, one-component, 100% acrylic waterborne striping paint suitable for application on such traffic-bearing surfaces as Portland cement concrete, bituminous cement concrete, asphalt, tar, and previously painted areas of these surfaces.

846.02 Approval. Select materials that conform to the composition requirements below. Provide independent analysis data and certification for each formulation stating the total concentration of each heavy metal present, the test method used for each determination, and compliance to 40 CFR 261 for leachable heavy metals content. Submit initial samples for approval before beginning striping operations. The initial sample may be sent from the manufacture of the paint. The Department will randomly sample and evaluate the paint each week that the striping operations are in progress.

The non-volatile portion of the vehicle shall be composed of a 100% acrylic polymer as determined by infrared spectral analysis. The acrylic resin used shall be a 100% cross-linking acrylic as evidenced by infrared peaks at wavelengths 1568, 1624, and 1672 cm-1 with intensities equal to those produced by an acrylic resin known to be 100% cross-linking.

Supplemental Specifications to The Standard Specifications for Road and Bridge Construction, 2008 Edition

(Effective with the April 23, 2010 Letting)

PAINT COMPOSITION		
Property and Test Method	Yellow	White
Daytime Color (CIELAB) Spectrophotometer using illuminant D65 at 45º illumination and 0º viewing with a 2º observer	L* 81.76 a* 19.79 b* 89.89 Maximum allowable variation 2.0• E*	L* 93.51 a* -1.01 b* 0.70 Maximum allowable variation 2.0• E*
Nighttime Color (CIELAB) Spectrophotometer using illuminant A at 45º illumination and 0º viewing with a 2º observer	L* 86.90 a* 24.80 b* 95.45 Maximum allowable variation 2.0• E*	L* 93.45 a* -0.79 b* 0.43 Maximum allowable variation 2.0• E*
Heavy Metals Content	Comply with 40 CFR 261	Comply with 40 CFR 261
Titanium Dioxide ASTM D 4764	NA	10% by weight of pigment min.
VOC ASTM D 2369 and D 4017	1.25 lb/gal max.	1.25 lb/gal max.
Contrast Ratio (at 15 mils wft)	0.97	0.99

846.02.01 Manufacturers Certification. Provide a certification of analysis for each lot of traffic paint produced stating conformance to the requirements of this section. Report the formulation identification, traffic paint trade name, color, date of manufacturer, total quantity of lot produced, actual quantity of traffic paint represented, sampling method utilized to obtain the samples, and data for each sample tested to represent each lot produced.

846.03 ACCEPTANCE PROCEDURES FOR NON-SPECIFICATION DURABLE WATERBORNE PAVEMENT STRIPING PAINT. When non-specification paint is inadvertently incorporated into the work the Department will accept the material with a reduction in pay. The percentage deduction is cumulative based on its compositional properties, but will not exceed 60 percent. The Department will calculate the payment reduction on the unit bid price for the routes where the non-specification paint was used.

DURABLE WATERBORNE PAVEMENT STRIPING PAINT REDUCTION SCHEDULE						
Non-conforming Property	Resin	Color	Contrast	TiO_2	VOC	Heavy Metals Content
Reduction Rate	60%	10%	10%	10%	60%	60%

PART III

EMPLOYMENT, WAGE AND RECORD REQUIREMENTS

TRANSPORTATION CABINET
DEPARTMENT OF HIGHWAYS

LABOR AND WAGE REQUIREMENTS
APPLICABLE TO OTHER THAN FEDERAL-AID SYSTEM PROJECTS

I. Application
II. Nondiscrimination of Employees (KRS 344)
III. Payment of Predetermined Minimum Wages
IV. Statements and Payrolls

I. APPLICATION

1. These contract provisions shall apply to all work performed on the contract by the contractor with his own organization and with the assistance of workmen under his immediate superintendence and to all work performed on the contract by piecework, station work or by subcontract. The contractor's organization shall be construed to include only workmen employed and paid directly by the contractor and equipment owned or rented by him, with or without operators.

2. The contractor shall insert in each of his subcontracts all of the stipulations contained in these Required Provisions and such other stipulations as may be required.

3. A breach of any of the stipulations contained in these Required Provisions may be grounds for termination of the contract.

II. NONDISCRIMINATION OF EMPLOYEES

AN ACT OF THE KENTUCKY
GENERAL ASSEMBLY TO PREVENT
DISCRIMINATION IN EMPLOYMENT
KRS CHAPTER 344
EFFECTIVE JUNE 16, 1972

The contract on this project, in accordance with KRS Chapter 344, provides that during the performance of this contract, the contractor agrees as follows:

1. The contractor shall not fail or refuse to hire, or shall not discharge any individual, or otherwise discriminate against an individual with respect to his compensation, terms, conditions, or privileges of employment, because of such individual's race, color, religion, national origin, sex, disability or age (between forty and seventy); or limit, segregate, or classify his employees in any way which would deprive or tend to deprive an individual of employment opportunities or otherwise adversely affect his status as an employee, because of such individual's race, color, religion, national origin, sex, disability or age (between forty and seventy). The contractor agrees to post in conspicuous places, available to employees and applicants for employment, notices to be provided setting forth the provisions of this nondiscrimination clause.

2. The contractor shall not print or publish or cause to be printed or published a notice or advertisement relating to employment by such an employer or membership in or any classification or referral for employment by the employment agency, indicating any preference, limitation, specification, or discrimination, based on race, color, religion, national origin, sex, disability or age (between forty and seventy), except that such notice or advertisement may indicate a preference, limitation, or specification based on religion, or national origin when religion, or national origin is a bona fide occupational qualification for employment.

3. If the contractor is in control of apprenticeship or other training or retraining, including on-the-job training programs, he shall not discriminate against an individual because of his race, color, religion, national origin, sex, disability or age (between forty and seventy), in admission to, or employment in any program established to provide apprenticeship or other training.

4. The contractor will send to each labor union or representative of workers with which he has a collective bargaining agreement or other contract or understanding, a notice to be provided advising the said labor union or workers' representative of the contractor's commitments under this section, and shall post copies of the notice in conspicuous places available to employees and applicants for employment. The contractor will take such action with respect to any subcontract or purchase order as the administrating agency may direct as a means of enforcing such provisions, including sanctions for non-compliance.

III. PAYMENT OF PREDETERMINED MINIMUM WAGES

1. These special provisions are supplemented elsewhere in the contract by special provisions which set forth certain predetermined minimum wage rates. The contractor shall pay not less than those rates.

2. The minimum wage determination schedule shall be posted by the contractor, in a manner prescribed by the Department of Highways, at the site of the work in prominent places where it can be easily seen by the workers.

IV. STATEMENTS AND PAYROLLS

1. All contractors and subcontractors affected by the terms of KRS 337.505 to 337.550 shall keep full and accurate payroll records covering all disbursements of wages to their employees to whom they are required to pay not less than the prevailing rate of wages. Payrolls and basic records relating thereto will be maintained during the course of the work and preserved for a period of one (1) year from the date of completion of this contract.

2. The payroll records shall contain the name, address and social security number of each employee, his correct classification, rate of pay, daily and weekly number of hours worked, itemized deductions made and actual wages paid.

3. The contractor shall make his daily records available at the project site for inspection by the State Department of Highways contracting office or his authorized representative.

Periodic investigations shall be conducted as required to assure compliance with the labor provisions of the contract. Interrogation of employees and officials of the contractor shall be permitted during working hours.

Aggrieved workers, Highway Managers, Assistant District Engineers, Resident Engineers and Project Engineers shall report all complaints and violations to the Division of Contract Procurement.

The contractor shall be notified in writing of apparent violations. The contractor may correct the reported violations and notify the Department of Highways of the action taken or may request an informal hearing. The request for hearing shall be in writing within ten (10) days after receipt of the notice of the reported violation. The contractor may submit

records and information which will aid in determining the true facts relating to the reported violations.

Any person or organization aggrieved by the action taken or the findings established as a result of an informal hearing by the Division of Contract Procurement may request a formal hearing.

4. The wages of labor shall be paid in legal tender of the United States, except that this condition will be considered satisfied if payment is made by a negotiable check, on a solvent bank, which may be cashed readily by the employee in the local community for the full amount, without discount or collection charges of any kind. Where checks are used for payments, the contractor shall make all necessary arrangements for them to be cashed and shall give information regarding such arrangements.

5. No fee of any kind shall be asked or accepted by the contractor or any of his agents from any person as a condition of employment on the project.

6. No laborers shall be charged for any tools used in performing their respective duties except for reasonably avoidable loss or damage thereto.

7. Every employee on the work covered by this contract shall be permitted to lodge, board, and trade where and with whom he elects and neither the contractor nor his agents, nor his employees shall directly or indirectly require as a condition of employment that an employee shall lodge, board or trade at a particular place or with a particular person.

8. Every employee on the project covered by this contract shall be an employee of either the prime contractor or an approved subcontractor.

9. No charge shall be made for any transportation furnished by the contractor or his agents to any person employed on the work.

10. No individual shall be employed as a laborer or mechanic on this contract except on a wage basis, but this shall not be construed to prohibit the rental of teams, trucks or other equipment from individuals.

No Covered employee may be employed on the work except in accordance with the classification set forth in the schedule mentioned above; provided, however, that in the event additional classifications are required, application shall be made by the contractor to the Department of Highways and (1) the Department shall request appropriate classifications and rates from the proper agency, or (2) if there is urgent need for additional classification to avoid undue delay in the work, the contractor may employ such workmen at rates deemed comparable to rates established for similar classifications provided he has made written application through the Department of Highways, addressed to the proper agency, for the supplemental rates. The contractor shall retroactively adjust, upon receipt of the supplemental rates schedule, the wages of any employee paid less than the established rate and may adjust the wages of any employee overpaid.

11. No contractor or subcontractor contracting for any part of the contract work which may require or involve the employment of laborers or mechanics shall require or permit any laborer or mechanic in any work-week in which he is employed on such work, to work in excess of eight hours in any calendar day or in excess of forty hours in such work-week unless such laborer or mechanic receives compensation at a rate not less than one and one half times his basic rate of pay for all hours worked in excess of eight hours in any calendar day or in excess of forty hours in such work-week. A laborer, workman or mechanic and an employer may enter into a written agreement or a collective bargaining agreement to work more than eight (8) hours a calendar day but not more than ten (10) hours a calendar day for the straight time hourly rate. This agreement shall be in writing and shall be executed prior to the employee working in excess of eight (8) hours, but not more than ten (10) hours, in any one (1) calendar day.

12. Payments to the contractor may be suspended or withheld due to failure of the contractor to pay any laborer or mechanic employed or working on the site of the work, all or part of the wages required under the terms of the contract. The Department may suspend or withhold payments only after the contractor has been given written notice of the alleged violation and the contractor has failed to comply with the wage determination of the Department of Highways.

13. Contractors and subcontractors shall comply with the sections of Kentucky Revised Statutes, Chapter 337 relating to contracts for Public Works.

Revised 2-16-95

EXECUTIVE BRANCH CODE OF ETHICS

In the 1992 regular legislative session, the General Assembly passed and Governor Brereton Jones signed Senate Bill 63 (codified as KRS 11A), the Executive Branch Code of Ethics, which states, in part:

> KRS 11A.040 (6) provides:
>
> No present or former public servant shall, within six (6) months of following termination of his office or employment, accept employment, compensation or other economic benefit from any person or business that contracts or does business with the state in matters in which he was directly involved during his tenure. This provision shall not prohibit an individual from returning to the same business, firm, occupation, or profession in which he was involved prior to taking office or beginning his term of employment, provided that, for a period of six (6) months, he personally refrains from working on any matter in which he was directly involved in state government. This subsection shall not prohibit the performance of ministerial functions, including, but not limited to, filing tax returns, filing applications for permits or licenses, or filing incorporation papers.
>
> KRS 11A.040 (8) states:
>
> A former public servant shall not represent a person in a matter before a state agency in which the former public servant was directly involved, for a period of one (1) year after the latter of:
>
> a) The date of leaving office or termination of employment; or
> b) The date the term of office expires to which the public servant was elected.

This law is intended to promote public confidence in the integrity of state government and to declare as public policy the idea that state employees should view their work as a public trust and not as a way to obtain private benefits.

If you have worked for the executive branch of state government within the past six months, you may be subject to the law's prohibitions. The law's applicability may be different if you hold elected office or are contemplating representation of another before a state agency.

Also, if you are affiliated with a firm which does business with the state and which employs former state executive-branch employees, you should be aware that the law may apply to them.

In case of doubt, the law permits you to request an advisory opinion from the Executive Branch Ethics Commission, Room 136, Capitol Building, 700 Capitol Avenue, Frankfort, Kentucky 40601; telephone (502) 564-7954.

Kentucky Equal Employment Opportunity Act of 1978

The requirements of the Kentucky Equal Employment Opportunity Act of 1978 (KRS 45.560-45.640) shall not apply to this Contract.

TRANSPORTATION CABINET
DIVISION OF CONSTRUCTION PROCUREMENT
COMPLIANCE SECTION
PROJECT WAGE RATES

WORKERS……..MINIMUM HOURLY RATE…..$7.25

Note: Parts III and IV of **"Labor and Wage Requirements Applicable to Other Than Federal-Aid System Projects"** do not apply to this project.

PART IV

INSURANCE

INSURANCE

The Contractor shall carry the following insurance in addition to the insurance required by law:

1. Contractor's Public Liability Insurance not less than $100,000.00 for damages arising out of bodily injuries to or death to one person. Not less than $300,000.00 for damages arising out of bodily injuries to or death to two or more persons.

2. Contractor's Property Damages Liability Insurance. Not less than $100,000.00 for all damages arising out of injury or destruction of property in any one accident. Not less than $300,000.00 for all damages during the policy period.

3. Contractor's Protective Public Liability and Property Damage Insurance. The contractor shall furnish evidence with respect to operations performed for him by subcontractors that he carries in his own behalf for the above stipulated amounts.

4. The insurance required above must be evidenced by a Certificate of Insurance and this Certificate of Insurance must contain one of the following statements:

   a. "policy contains no deductible clauses."

   b. "policy contains _____ (amount) deductible property damage clause but company will pay claim and collect the deductible from the insured."

5. WORKMEN'S COMPENSATION INSURANCE. The contractor shall furnish evidence of coverage of all his employees or give evidence of self-insurance by submitting a copy of a certificate issued by the Workmen's Compensation Board.

PART V

BID ITEMS

CONTRACT ID: 102931
COUNTY: FRANKLIN
PROPOSAL: 037GR10M054

PAGE: 1
LETTING: 05/28/10
CALL NO: 402

LINE NO	ITEM	DESCRIPTION	APPROXIMATE UNIT QUANTITY	UNIT PRICE	AMOUNT
	SECTION 0001	BRIDGE			
0010	02562	SIGNS	214.000 SQFT		
0020	02650	MAINTAIN & CONTROL TRAFFIC EASTBOUND-B55	(1.00) LS		
0030	02650	MAINTAIN & CONTROL TRAFFIC EASTBOUND-B57	(1.00) LS		
0040	02650	MAINTAIN & CONTROL TRAFFIC WESTBOUND-B55	(1.00) LS		
0050	02650	MAINTAIN & CONTROL TRAFFIC WESTBOUND-B57	(1.00) LS		
0060	08150	STEEL REINFORCEMENT	266.800 LB		
0070	22146EN	CONCRETE PATCHING REPAIR	634.000 SQFT		
	SECTION 0002	DEMOBILIZATION			
0080	02569	DEMOBILIZATION (AT LEAST 1.5%)	LUMP		
		TOTAL BID			