CALL NO. **355**

CONTRACT ID. **102307**

HENDERSON COUNTY

FED/STATE PROJECT NUMBER **FE01 051 0041 016-017**

DESCRIPTION **HENDERSON-EVANSVILLE ROAD (US 41)**

WORK TYPE **ASPHALT SURFACE WITH GRADE & DRAIN**

PRIMARY COMPLETION DATE **6/30/2011**

LETTING DATE: **August 27, 2010**

Sealed Bids will be received electronically through the Bid Express bidding service until 10:00 AM EASTERN DAYLIGHT TIME August 27, 2010. Bids will be publicly announced at 10:00 AM EASTERN DAYLIGHT TIME.

REQUIRED BID PROPOSAL GUARANTY: Not less than 5% of the total bid.

TABLE OF CONTENTS

PART I SCOPE OF WORK

- PROJECT(S), COMPLETION DATE(S), & LIQUIDATED DAMAGES
- CONTRACT NOTES
- NATIONAL HIGHWAY
- DGA BASE
- OPTION B
- SPECIAL NOTE(S) APPLICABLE TO PROJECT
- LIQUIDATED DAMAGES
- WASTE AND BORROWED SITES
- ASPHALT MILLING AND TEXTURING
- TYPICAL SECTION DIMENSIONS
- TRAFFIC CONTROL PLAN
- INSTALLATION OF TRAFFIC COUNTING INDUCTANCE LOOPS
- DATA COLLECTION STATION NOTES
- AUTOMATIC TRAFFIC RECORDER INDUCTANCE LOOPS
- SKETCH MAP(S)
- TYPICAL SECTION(S)
- DETAIL SHEET(S)
- DATA COLLECTION STATION DETAILS

PART II SPECIFICATIONS AND STANDARD DRAWINGS

- SPECIFICATIONS REFERENCE
- SUPPLEMENTAL SPECIFICATIONS
- [SN-1I] PORTABLE CHANGEABLE SIGNS
- STANDARD DRAWINGS THAT APPLY
- CULVERT, ENTRANCE & STORM SEWER PIPE TYPES & COVER HEIGHTS

PART III EMPLOYMENT, WAGE AND RECORD REQUIREMENTS

- LABOR AND WAGE REQUIREMENTS
- EXECUTIVE BRANCH CODE OF ETHICS
- KENTUCKY EQUAL EMPLOYMENT OPPORTUNITY ACT OF 1978
- PROJECT WAGE RATES

PART IV INSURANCE

PART V BID ITEMS

PART I

SCOPE OF WORK

CONTRACT ID - 102307 ADMINISTRATIVE DISTRICT - 02

PROJECT(S) IDENTIFICATION AND DESCRIPTION:

COUNTY - HENDERSON PCN - MP051004110R2
FE01 051 0041 016-017
HENDERSON-EVANSVILLE ROAD (US 41) FROM END OF HENDERSON BYPASS (MP 16.385) TO 610 FT
BEYOND START (MP 16.500), A DISTANCE OF 0.12 MILES. ASPHALT SURFACE WITH GRADE & DRAIN.
GEOGRAPHIC COORDINATES LATITUDE 37^45'00" LONGITUDE 87^35'00"
AVERAGE DAILY TRAFFIC - 38380 AVERAGE MAINLINE WIDTH - 26.0 FEET

COMPLETION DATE(S):
COMPLETION DATE - June 30, 2011
APPLIES TO ENTIRE CONTRACT

CONTRACT NOTES

PROPOSAL ADDENDA

All addenda to this proposal must be applied when calculating bid and certified in the bid packet submitted to the Kentucky Department of Highways. Failure to use the correct and most recent addenda may result in the bid being rejected.

BID SUBMITTAL

Bidder must use the Department's Expedite Bidding Program available on the Internet web site of the Department of Highways, Division of Construction Procurement. (www.transportation.ky.gov/contract)

The Bidder must download the bid file located on the Bid Express website (www.bidx.com) to prepare a bid packet for submission to the Department. The bidder must submit electronically using Bid Express.

JOINT VENTURE BIDDING

Joint venture bidding is permissible. All companies in the joint venture must be prequalified in one of the work types in the Qualifications for Bidders for the project. The bidders must get a vendor ID for the joint venture from the Division of Construction Procurement and register the joint venture as a bidder on the project. Also, the joint venture must obtain a digital ID from Bid Express to submit a bid. A joint bid bond of 5% may be submitted for both companies or each company may submit a separate bond of 5%.

UNDERGROUND FACILITY DAMAGE PROTECTION

The contractor is advised that the Underground Facility Damage Protection Act of 1994, became law January 1, 1995. It is the contractor's responsibility to determine the impact of the act regarding this project, and take all steps necessary to be in compliance with the provision of the act.

07/01/2010

NATIONAL HIGHWAY

This project is on the NATIONAL HIGHWAY SYSTEM.

DGA BASE

The rate of application for DGA Base shall be estimated at 115 lbs/sy per inch of depth.

OPTION B

The Contractor is advised that the compaction of asphalt mixtures furnished to this project will be accepted by OPTION B in accordance with Section 402 and Section 403 of the current Standard Specification.

SPECIAL NOTES FOR CONSTRUCTION

Except as provided herein, perform all work in accordance with the Department's 2008 Standard Specifications, interim Supplemental Specifications, Standard and Sepia Drawings, and Special Notes and Special Provisions, current editions. Article references are to the Standard Specifications. This project shall consist of furnishing all labor, equipment, materials, and incidentals for the following:

(1) Maintaining and Controlling Traffic; (2) Excavation, base and surface; (3) Constructing drainage; (4) and any other work as specified by this contract.

II. MATERIALS

Provide for sampling and testing of all materials in accordance with the Department's Sampling Manual. Make materials available for sampling a sufficient time in advance of the use of the materials to allow for the necessary time for testing unless otherwise specified in these notes.

A. Maintain and Control Traffic. See Traffic Control Plan.

B. Dense Graded Aggregate. Use DGA; do not substitute Crushed Stone Base in lieu of DGA.

C. Pavement. Use Class 3 Asphalt Base 1.50D PG64-22 and Class 3 Asphalt Surface 0.50A PG64-22.

III. CONSTRUCTION METHODS

A. Maintain and Control Traffic. See Traffic Control Plan.

B. Site Preparation. Be responsible for all site preparation including, but not limited, to staking, clearing and grubbing; erosion control; cleaning pipe culverts and ditches; and disposal of waste and debris. Perform all site preparation only as approved or directed by the Engineer.

Immediately prior to completion, clean all existing and new pipes and clean ditches and swales. Provide positive drainage of pavement, shoulders, median, slopes, and ditches at all times during and upon completion of construction.

C. US 41 Reconstruction and Drainage Improvements. Be responsible for all excavation, pavement and shoulder removal construction as shown on the drawings and as directed by the Engineer. Prior to pavement removal and excavation, saw cut pavement to a neat edge. Provide positive drainage of pavement, shoulders, slopes, and ditches at all times during and upon completion of construction.
Without regard to the materials encountered, be aware that any reference to rock, earth, or any

other material on the drawings, whether in numbers or words, letters, or lines, is solely for the Department's information and is not to be taken as an indication of classified excavation or the quantity of either rock, earth, or any other material involved. The bidder must draw his own conclusions as to the conditions to be encountered. The Department does not give any guarantee as to the accuracy of the data and no claim for money or time extension will be considered if the materials encountered are not in accord with the classification shown.

The drop box that is the furthest south of the work limits is 4' deep and drains north. The drop box furthest north of the working limits is 3' deep and drains south. A drop box is to be installed in the middle of the existing drop boxes. Cleaning of the drain between the two drop boxes is incidental to the installation of the drop box. Three core holes will need to be constructed in the newly installed drop, to allow for the drains that will cross the northbound lanes- these three holes are incidental to the drop box installation. The existing boxes will also need to be cored to accommodate the pipes across the southbound turning lanes. These core holes will be paid for as each.

Construct all perforated pipe according to the standard specifications. The cost of the pipe, fabric, and backfill material is incidental to the linear foot perforated pipe bid item. The remainder of the trench will be filled and compacted with asphalt. The trenches should be no wider than needed for construction.

Construct DGA, and asphalt base as shown on the drawings. Compact each course of asphalt base and surface to the proper compaction as required by the Section 403. Allow each course to cool naturally to a temperature approved by the Engineer (No watering allowed). Once excavation for base widening begins, work continuously to construct DGA Base course on the same day the trench is excavated. If for any reason traffic must be maintained less than 10 feet from the drop off, wedge with DGA with 3:1 or flatter slope when work is not actively in progress in the drop-off area. The Engineer will not allow or permit drop-offs greater than 4 inches within 10 feet of traffic during non-working hours. See Traffic Control Plan and Special Note for Completion Date and Liquidated Damages.

D. Barrett Boulevard Drainage Improvements. On the southern corner modify the existing drop box by constructing a road worthy grate over the clean out. Plans must be submitted to the Engineer for approval prior to constructing the grate. Replace standard and rolled curb as shown on the drawings or as directed by the Engineer. An expansion joint is required between the back of the rolled curb and the edges of the drop box.

E. Gabion Wall Drainage. Construct a 6" perforated pipe in accordance with the Standard Specifications to drain excess water behind the gabion wall. One 6" core hole is set-up to be cored into the back of the drop box. The cost of the pipe, fabric, and backfill material is incidental to the linear foot perforated pipe bid item.

Install a 12" slotted drain in the curb and gutter along US 41. The limits of the existing curb and gutter is to be removed where the slotted drain is to be replaced. Removal of curb and gutter and replace of curb and gutter are both pay items. The slotted drain needs to be installed in accordance with the Standard Specifications. The connection from the

slotted drain to the storm drain pipe is incidental to the payment of the slotted drain.

F. US 41 Pavement Milling and Repaving. Mill US 41 as shown on the typical or as directed by the Engineer. Mill and repave concurrently. All milled areas need to be cleaned and paved before opening to traffic.

G. Final Dressing, Clean Up, Seeding and Protection, and Restoration. See Special Note for Erosion Control.

H. Property Damage. Be responsible for all damage to public and/or private property resulting from the work. Repair or replace damaged roadway features in like kind materials and design as directed by the Engineer at no additional cost to the Department. Repair or replace damaged private property in like kind materials and design to the satisfaction of the owner and the Engineer at no additional cost to the Department.

I. Disposal of Waste. Dispose of all removed concrete, pipe, pavement, debris, excess and unsuitable excavation, and all other waste at approved sites off the right of way obtained by the Contractor at no additional cost to the Department (see Special Note for Waste and Borrow

J. On-Site Inspection. Before submitting a bid for the work, make a thorough inspection of the site and determine existing conditions so that the work can be expeditiously performed after a contract is awarded. The Department will consider submission of a bid to be evidence of this inspection having been made. The Department will not honor any claims for money or time extension resulting from site conditions.

K. Right-of-Way Limits. All work is located within the existing right of way. Limit work activities to the Right-of-Way and work and staging areas secured by the Contractor at no additional cost to the Department. Be responsible for all encroachments onto private lands.

L. Caution. The information in this proposal and shown on the plans and the type of work listed herein are approximate only and are not to be taken as an accurate evaluation of the materials and conditions to be encountered during construction; the bidder must draw his own conclusions. The Department does not give any guarantee as to the accuracy of the data and no claim for money or time extension will be considered if the conditions encountered are not in accordance with the information shown.

M. Control. Perform all work under the absolute control of the Department of Highways. Obtain the Engineer's approval of all designs required to be furnished by the Contractor prior to incorporation into the work. The Department reserves the right to have other work performed by other contractors and its own forces and to permit public utility companies and others to do work during the construction within the limits of, or adjacent to, the project. Conduct operations and cooperate with such other parties so that interference with such other work will be reduced to a minimum. The Department will not honor any claims for money or time extension created by the operations of such other parties.

Should a difference of opinion arise as to the rights of the Contractor and others working

within the limits of, or adjacent to, the project, the Engineer will decide as to the respective rights of the various parties involved in order to assure the completion of the Department's work in general harmony and in a satisfactory manner, and his decision shall be final and binding upon the Contractor.

IV. METHOD OF MEASUREMENT

A. Maintain and Control Traffic. See Traffic Control Plan.

B. Site Preparation. Other than the bid items listed, the Department will not measure Site Preparation for payment.

C. Perforated Pipe – 4 in. The Department will measure perforated pipe – 4 in. in linear feet.

D. Perforated Pipe – 6 in. The Department will measure perforated pipe – 6 in. in linear feet.

V. BASIS OF PAYMENT

A. Maintain and Control Traffic. See Traffic Control Plan.

B. Site Preparation. Other than the bid items listed, the Department will not measure Site Preparation for payment.

C. Perforated Pipe – 4 in. Payment at the Contract unit price per linear foot shall be full compensation for furnishing all labor, materials, equipment and incidentals for furnishing and installing new perforated pipe, including pipe, fabric, and backfill material.

D. Perforated Pipe – 6 in. Payment at the Contract unit price per linear foot shall be full compensation for furnishing all labor, materials, equipment and incidentals for furnishing and installing new perforated pipe, including pipe, fabric, and backfill material.

SPECIAL NOTE FOR CONTRACT COMPLETION DATE AND LIQUIDATED DAMAGES

Notify the Engineer in writing at least 7 calendar days prior to beginning work. Complete all work prior to June 30, 2011, whichever occurs first. Complete all work in accordance with weather limitations specified in the Standard Specifications. The Department will not consider claims for money or grant an extension of Contract time due to inclement weather or temperature limitations.

Liquidated Damages will be assessed according to Section 108.09 when the specified completion date is exceeded.

US 41 Reconstruction and Gabion Wall Drainage
In addition to the liquidated damages specified in Section 108.09, additional Liquidated Damages in the amount of $5,000 per calendar day will be assessed for each calendar day or part of a day a lane closure remains in place during prohibited days or hours specified in the Traffic Control Plan.

US 41 Milling and Resurfacing
In addition to the liquidated damages specified in Section 108.09, additional Liquidated Damages in the amount of $2,500 per hour will be assessed for each hour or part of an hour a lane closure remains in place during prohibited hours specified in the Traffic Control Plan.

All liquidated damages will be applied accumulatively.

Contrary to Section 108.09, liquidated damages will be assessed during the months of December through March.

All other applicable portions of Section 108 apply.

SPECIAL PROVISION FOR WASTE AND BORROW SITES

The contractor is advised that it is their responsibility to gain U.S. Army Corp of Engineer's approval before utilizing a waste or borrow site that involves "Waters of the United States". "Waters of the United States" are defined as perennial or intermittent streams, ponds or wetlands. Ephemeral streams are also considered jurisdictional waters, and are typically dry except during rainfall, but have a defined drainage channel. Questions concerning any potential impacts to "Waters…" should be brought to the attention of the appropriate District Office for the Corps of Engineers for a determination, prior to disturbance. Any fees associated with obtaining approval from the U.S. Army Corp of Engineer or other appropriate regulatory agencies for waste and borrow sites is the responsibility of the contractor.

01/01/2009

SPECIAL NOTE FOR
ASPHALT MILLING AND TEXTURING

Begin paving operations **immediately** after the commencement of the asphalt milling operation. All milled areas needs to be cleaned and paved over before opening to traffic. Continue paving operations continuously until completed. If paving operations are not begun within this time period, liquidated damages will be assessed at the rate prescribed by Section 108.09 of the current Standard Specifications until such time as paving operations are begun.

Contrary to Section 408 of the current Standard Specifications, the material obtained from the milling operations shall become the property of the Department. Deliver this material to the State Maintenance facility in Henderson County.

Notice to Contractor

Transfer of millings to the state maintenance facility is considered a part of the construction project, therefore truck operators are subject to receiving prevailing wages.

SPECIAL NOTE FOR TYPICAL SECTION DIMENSIONS

The dimensions shown on the typical sections for pavement and shoulder widths and thickness' are nominal or typical dimensions. The actual dimensions to be constructed may be varied to fit existing conditions as directed or approved by the Engineer. It is not intended that existing pavement or shoulders be widened unless specified elsewhere in the Proposal.

1-3725 typical section
01/01/2009

TRAFFIC CONTROL PLAN

TRAFFIC CONTROL GENERAL

Except as provided herein, traffic shall be maintained in accordance with the current Standard Specifications and the Standard Drawings, current editions. Except for the roadway and traffic control bid items listed, all items of work necessary to maintain and control traffic will be paid at the lump sum bid price to "Maintain and Control Traffic".

Contrary to Section 106.01, traffic control devices used on this project may be new, or used in like new condition, at the beginning of the work and maintained in like new condition until completion of the work.

PROJECT PHASING & CONSTRUCTION PROCEDURES

No lane closures will be allowed on the following days or nights:

September 4, 2010 – September 6, 2010 Labor Day Weekend

For **US 41 Milling and repaving** all lanes shall be open to traffic and no work will be allowed between the hours of 5:00 A.M. and 7:00P.M. Monday through Friday. **US 41 Reconstruction and Gabion Wall Drainage** will allow 24 hour work. **Night work will be required on the project.** Lighting must be approved by the Engineer. Minor operations that do not require a lane closure and cause little disruption to traffic may be allowed between the hours of 9:00 A.M. to 3:00 P.M. with written permission from the engineer. The Contractor is advised to take these restrictions into account in his bid. No additional payment will be allowed for any delays to the contractor as a result of these restrictions.

At the discretion of the Engineer, other days and hours may be specified when lane closures will not be allowed.

Maintain a minimum of one traffic lane (mainline) in each direction at all times during construction. The clear lane width shall be 11 Feet, where possible. If traffic should be stopped due to construction operations, and a school bus on an official run arrives on the scene, the Contractor shall make provisions for the passage of the bus as quickly as possible.

Do not leave lane closures in place during non-working hours.

US 41 Reconstruction
The full depth reconstruction of US 41 between milepoint 16.38 to 16.5 shall be completed in 5 consecutive days per lane. This includes removal of pavement, removal of earth, and replacement of all roadway structures. Below is an example,

1st 5 consecutive days – Remove and rebuild Southbound driving lanes

2nd consecutive 5 days – Remove and rebuild Southbound passing lanes
3rd consecutive 5 days – Trench work, drop box in Southbound lane and Northbound trenching work

Gabion Wall Drainage
The contractor has 5 consecutive calendar days for lane closures to complete gabion wall drainage work.

SIGNS

Contrary to section 112.04.02, only long term signs (signs intended to be continuously in place for more than 3 days) will be measured for payment. Short term signs (signs intended to be left in place for 3 days or less) will not be measured for payment but will be incidental to Maintain and Control Traffic.

TEMPORARY ENTRANCES/ACCESS TO PROPERTY

The Contractor will not be required to provide continuous access to farms, single family, duplex, or triplex residential properties during working hours; however, provide reasonable egress and ingress to each such property when actual operations are not in progress at that location. The time during which a farm or residential entrance is blocked shall be the minimum length of time required for actual operations, shall not be extended for the Contractor's convenience, and in no case shall exceed six (6) hours. Notify all residents twenty-four hours in advance of any driveway or entrance closings and make any accommodations necessary to meet the access needs of disabled residents.

Except as allowed by the Phasing as specified above, maintain direct access to all side streets and roads, schools, churches, commercial properties and apartments or apartment complexes of four or more units at all times.

Payment will be allowed at the unit price bid for all asphalt materials required to construct and maintain any temporary entrances which may be necessary to provide temporary access; however, no direct payment will be allowed for aggregates, excavation and/or embankment needed. The Engineer will determine the type of surfacing material, asphalt or aggregate, to be used at each entrance.

BARRICADES

Barricades used in lieu of barrels and cones for channelization or delineation will be incidental to Maintain and Control Traffic according to Section 112.04.01. Barricades used to protect pavement removal areas will be bid as each according to Section 112.04.04.

TRAFFIC COORDINATOR

Furnish a Traffic Coordinator as per Section 112 for unclassified project.

PLANNING LOOP INSTALLATION

All items required for lane closures related to this item of work shall be considered incidental to bid item "Maintain and Control Traffic". Install planning loops as per special notes.

CHANGEABLE MESSAGE SIGNS

Provide changeable message signs in advance of and within the project at locations to be determined by the Engineer. If work is in progress concurrently in both directions or if more than one lane closure is in place in the same direction of travel, provide additional changeable message signs as directed by the Engineer. Place changeable message signs one mile in advance of the anticipated queue at each lane closure. As the actual queue lengthens and/or shortens relocate or provide additional changeable message signs so that traffic has warning of slowed or stopped traffic at least one mile but not more than two miles before reaching the end of the actual queue. The locations designated may vary as the work progresses. The messages required to be provided shall be designated by the Engineer. In the event of damage or mechanical/electrical failure, the Contractor shall repair or replace the Changeable Message Sign within 24 hours. The Department will measure for payment the maximum number of changeable message signs in concurrent use at the same time on a single day on all sections of the contract. Individual changeable message signs will be measured only once for payment, regardless of how many times they are set, reset, removed, and relocated during the duration of the project. Replacements for damaged changeable message signs directed by the Engineer to be replaced due to poor condition or readability will not be measured for payment.

ARROW PANEL

Use arrow panels as shown on the Standard Drawings or as directed by the Engineer. The Department will measure for payment the maximum number of arrow panels in concurrent use at the same time on a single day on all sections of the contract. Individual arrow panels will be measured only once for payment, regardless of how many times they are set, reset, removed, and relocated during the duration of the project. Replacements for damaged arrow panels directed by the Engineer to be replaced due to poor condition or readability will not be measured for payment. Arrow panels will remain the property of the Contractor after construction is complete.

PAVEMENT MARKINGS

Coordinate the installation of all temporary and permanent striping with the Engineer. If there is a deviation from the existing striping plan, a striping plan for the pavement shall be provided to the Contractor prior to the installation of any temporary or permanent markings.

Do not install temporary pavement striping, permanent pavement striping, and/or thermoplastic or Durable Pavement markings without written permission from the Engineer.

Temporary Striping will be installed as per Section 112 with the following exceptions:

Temporary striping shall include striping of the edgelines.

Temporary or Permanent striping shall be in place before a lane is opened to traffic

If the Contractor's operations or phasing requires temporary markings that must be subsequently removed from the final surface course, an approved "Removable Lane Tape" shall be used. This removable lane tape will not be measured separately. The "removable lane tape", if used, will be measured and paid as temporary striping.

PAVEMENT EDGE DROP-OFFS

A pavement edge between opposing directions of traffic or lanes that traffic is expected to cross in a lane change situation shall not have an elevation difference greater than 1½". Warning signs (MUTCD W8-9 or W8-9A, or W8-11) shall be placed in advance of and at 1500' intervals throughout the drop-off area. Dual posting on both sides of the traveled way shall be required. All transverse transitions between the newly surfaced area and the existing surface areas that traffic may cross shall be wedged with asphalt mixture for leveling and wedging. The wedges shall be removed prior to placement of the final surface course.

Pavement edges that traffic is not expected to cross, except accidentally, shall be treated as follows:

Less than 2" - No protection required.

2" to 4" - Place plastic drums, vertical panels, or barricades every 50 feet. Cones may be used in place of plastic drums, panels, and barricades during daylight working hours only. Wedge with asphalt mixture for leveling and wedging with a 1:1 or flatter slope in daylight hours, or 3:1 or flatter slope during nighttime hours, when work is not active in the drop-off area.

Greater than 4 inches - Drop-offs exceeding 4 inches will be allowed only during active operations during the interval between removal of shoulder/traffic islands/medians and the placement of the asphalt base courses in these areas. Place plastic drums, vertical panels or barricades every 40 feet. Drop-offs less than eight feet behind a lane or shoulder closure shall be protected by a asphalt wedge with 3:1 or flatter slope; the

wedge shall be removed and the base course placed in the drop-off area as soon as possible.

In lieu of a wedge, drop-offs at lateral trenches may be covered by a 1" thick steel plate when work is not actively in progress at the pavement removal area; the plate shall be anchored to the pavement by any method approved by the Engineer that will prevent it being dislodged by accidental impact. If for any reason, it is necessary to excavate small areas, any holes adjacent to traffic where there exists a possibility that a vehicle may drop a wheel into the holes shall be filled with asphalt or plated. No direct payment will be made for the wedge or steel plates, but shall be incidental to other items of work.

USE AND PLACEMENT OF CHANGEABLE MESSAGE SIGNS

The following policy is based upon current Changeable Message Signs (CMS) standards and practice from many sources, including the Federal Highway Administration (FHWA), other State Departments of Transportation, and Traffic Safety Associations. It is understood that each CMS installation or use requires individual consideration due to the specific location or purpose. However, there will be elements that are constant in nearly all applications. Accordingly these recommended guidelines bring a level of uniformity, while still being open to regional experience and engineering judgment.

Application

The primary purpose of CMS is to advise the driver of unexpected traffic and routing situations. Examples of applications where CMS can be effective include:

- Closures (road, lane, bridge, ramp, shoulder, interstate)
- Changes in alignment or surface conditions
- Significant delays, congestion
- Construction/maintenance activities (delays, future activities)
- Detours/alternative routes
- Special events with traffic and safety implications
- Crash/incidents
- Vehicle restrictions (width, height, weight, flammable)
- Advance notice of new traffic control devices
- Real-time traffic conditions (must be kept up to date)
- Weather /driving conditions, environmental conditions, Roadway Weather Information Systems
- Emergency Situations
- Referral to Highway Advisory Radio (if available)
- Messages as approved by the County Engineer's Office

CMS should not be used for:

- Replacement of static signs (e.g. road work ahead), regulatory signage (e.g. speed limits), pavement markings, standard traffic control devices, conventional warning or guide signs.
- Replacement of lighted arrow board
- Advertising (Don't advertise the event unless clarifying "action" to be taken by driver – e.g. Speedway traffic next exit)
- Generic messages
- Test messages (portable signs only)
- Describe recurrent congestion (e.g. rush hour)
- Public service announcements (not traffic related

Messages

Basic principles that are important to providing proper messages and insuring the proper operation of a CMS are:

- Visible for at least ½ mile under ideal daytime and nighttime conditions
- Legible from all lanes a minimum of 650 feet
- Entire message readable twice while traveling at the posted speed

- Nor more than two message panels should be used (three panels may be used on roadways where vehicles are traveling less than 45 mph). A panel is the message that fits on the face of the sign without flipping or scrolling.
- Each panel should convey a single thought; short and concise
- Do not use two unrelated panels on a sign
- Do not use the sign for two unrelated messages
- Should not scroll text horizontally or vertically
- Should not contain both the words left and right
- Use standardized abbreviations and messages
- Should be accurate and timely
- Avoid filler/unnecessary words and periods (hazardous, a, an, the)
- Avoid use of speed limits
- Use words (not numbers) for dates

Placement

Placement of the CMS is important to insure that the signs is visible to the driver and provides ample time to take any necessary action. Some of the following principles may only be applicable to controlled access roadways. The basic principles of placement for a CMS are:

- When 2 signs are needed, place on same side of roadway and at least 1,000 feet apart
- Place behind semi-rigid/rigid protection (guardrail, barrier) or outside of the clear zone
- Place 1,000 feet in advance of work zone; at least one mile ahead of decision point
- Normally place on right side of roadway; but should be placed closest to the affected lane so that either side is acceptable
- Signs should not be dual mounted (one on each side of roadway facing same direction)
- Point trailer hitch downstream
- Secure to immovable object to prevent thief (if necessary)
- Do not place in sags or just beyond crest
- Check for reflection of sun to prevent the blinding of motorist
- Should be turned ~3 degrees outward from perpendicular to the edge of pavement
- Bottom of sign should be 7 feet above the elevation of edge of roadway
- Should be removed when not in use

Standard Abbreviations

The following is a list of standard abbreviations to be used on CMS.

Word	Abbrev.	Example
Access	ACCS	ACCIDENT AHEAD/USE ACCS RD NEXT RIGHT
Alternate	ALT	ACCIDENT AHEAD/USE ALT RTE NEXT RIGHT
Avenue	AVE	FIFTH AVE CLOSED/DETOUR NEXT LEFT
Blocked	BLKD	FIFTH AVE BLKD/MERGE LEFT
Boulevard	BLVD	MAIN BLVD CLOSED/USE ALT RTE
Bridge	BRDG	SMITH BRDG CLOSED/USE ALT RTE
Cardinal Directions	N, S, E, W	N I75 CLOSED/ DETOUR EXIT 30
Center	CNTR	CNTR LANE CLOSED/MERGE LEFT

Commercial	COMM	OVRSZ COMM VEH/USE I275
Condition	COND	ICY COND POSSIBLE
Congested	CONG	HVY CONG NEXT 3 MI
Construction	CONST	CONST WORK AHEAD/EXPECT DELAYS
Downtown	DWNTN	DWNTN TRAF USE EX 40
Eastbound	E-BND	E-BND I64 CLOSED/DETOUR EXIT 20
Emergency	EMER	EMER VEH AHEAD/PREPARE TO STOP
Entrance, Enter	EX, EXT	DWNTN TRAF USE EX 40
Expressway	EXPWY	WTRSN EXPWY CLOSED/DETOUR EXIT 10
Freeway	FRWY, FWY	GN SYNDR FWY CLOSED/DETOUR EXIT 15
Hazardous Materials	HAZMAT	HAZMAT IN ROADWAY/ALL TRAF EXIT 25
Highway	HWY	ACCIDENT ON AA HWY/EXPECT DELAYS
Hour	HR	ACCIDENT ON AA HWY/2 HR DELAY
Information	INFO	TRAF INFO TUNE TO 1240 AM
Interstate	I	E-BND I64 CLOSED/DETOUR EXIT 20
Lane	LN	LN CLOSED/MERGE LEFT
Left	LFT	LANE CLOSED/MERGE LFT
Local	LOC	LOC TRAF USE ALT RTE
Maintenance	MAINT	MAINT WRK ON BRDG/SLOW
Major	MAJ	MAJ DELWAYS I75/USE ALT RTE
Mile	MI	ACCIDENT 3 MI AHEAD/ USE ALT RTE
Minor	MNR	ACCIDENT 3 MI MNR DELAY
Minutes	MIN	ACCIDENT 3 MI/30 MIN DELAY
Northbound	N-BND	N-BND I75 CLOSED/ DETOUR EXIT 50
Oversized	OVRSZ	OVRSZ COMM VEH/USE I275 NEXT RIGHT
Parking	PKING	EVENT PKING NEXT RGT
Parkway	PKWY	CUM PKWAY TRAF/DETOUR EXIT 60
Prepare	PREP	ACCIDENT 3 MIL/PREP TO STOP
Right	RGT	EVENT PKING NEXT RGT
Road	RD	HAZMAT IN RD/ALL TRAF EXIT 25
Roadwork	RDWK	RDWK NEXT 4 MI/POSSIBLE DELAYS
Route	RTE	MAJ DELAYS I75/USE ALT RTE
Shoulder	SHLDR	SHLDR CLOSED NEXT 5 MI
Slippery	SLIP	SLIP COND POSSIBLE/ SLOW SPD
Southbound	S-BND	S-BND I75 CLOSED/DETOUR EXIT 50
Speed	SPD	SLIP COND POSSIBLE/ SLOW SPD
Street	ST	MAIN ST CLOSED/USE ALT RTE
Traffic	TRAF	CUM PKWAY TRAF/DETOUR EXIT 60
Vehicle	VEH	OVRSZ COMM VEH/USE I275 NEXT RIGHT
Westbound	W-BND	W-BND I64 CLOSED/DETOUR EXIT 50
Work	WRK	CONST WRK 2MI/ POSSIBLE DELAYS

Certain abbreviations are prone to inviting confusion because another word is abbreviated or could be abbreviated in the same way. DO NO USE THESE ABBREVIATIONS.

Abbrev.	**Intended Word**	**Word Erroneously Given**
ACC	Accident	Access (Road)
CLRS	Clears	Colors
DLY	Delay	Daily
FDR	Feeder	Federal
L	Left	Lane (merge)

LOC	Local	Location
LT	Light (traffic)	Left
PARK	Parking	Park
POLL	Pollution (index)	Poll
RED	Reduce	Red
STAD	Stadium	Standard
TEMP	Temporary	Temperature
WRNG	Warning	Wrong

TYPICAL MESSAGES

The following is a list of typical messages used on CMS. The list consists of the reason or problem that you want the driver to be aware of and the action that you want the driver to take.

Reason/Problem	Action
ACCIDENT	ALL TRAFFIC EXIT RT
ACCIDENT/XX MILES	AVOID DELAY USE XX
XX ROAD CLOSED	CONSIDER ALT ROUTE
XX EXIT CLOSED	DETOUR
BRIDGE CLOSED	DETOUR XX MILES
BRIDGE/(SLIPPERY, ICE, ETC.)	DO NOT PASS
CENTER/LANE/CLOSED	EXPECT DELAYS
DELAY(S), MAJOR/DELAYS	FOLLOW ALT ROUTE
DEBRIS AHEAD	KEEP LEFT
DENSE FOG	KEEP RIGHT
DISABLED/VEHICLE	MERGE XX MILES
EMER/VEHICLES/ONLY	MERGE LEFT
EVENT PARKING	MERGE RIGHT
EXIT XX CLOSED	ONE-WAY TRAFFIC
FLAGGER XX MILES	PASS TO LEFT
FOG XX MILES	PASS TO RIGHT
FREEWAY CLOSED	PREPARE TO STOP
FRESH OIL	REDUCE SPEED
HAZMAT SPILL	SLOW
ICE	SLOW DOWN
INCIDENT AHEAD	STAY IN LANE
LANES (NARROW, SHIFT, MERGE, ETC.)	STOP AHEAD
LEFT LANE CLOSED	STOP XX MILES
LEFT LANE NARROWS	TUNE RADIO 1610 AM
LEFT 2 LANES CLOSED	USE NN ROAD
LEFT SHOULDER CLOSED	USE CENTER LANE
LOOSE GRAVEL	USE DETOUR ROUTE
MEDIAN WORK XX MILES	USE LEFT TURN LANE
MOVING WORK ZONE, WORKERS IN ROADWAY	USE NEXT EXIT
NEXT EXIT CLOSED	USE RIGHT LANE
NO OVERSIZED LOADS	WATCH FOR FLAGGER
NO PASSING	

NO SHOULDER
ONE LANE BRIDGE
PEOPLE CROSSING
RAMP CLOSED
RAMP (SLIPPERY, ICE, ETC.)
RIGHT LANE CLOSED
RIGHT LANE NARROWS
RIGHT SHOULDER CLOSED
ROAD CLOSED
ROAD CLOSED XX MILES
ROAD (SLIPPERY, ICE, ETC.)
ROAD WORK
ROAD WORK (OR CONSTRUCTION) (TONIGHT, TODAY, TOMORROW, DATE)
ROAD WORK XX MILES
SHOULDER (SLIPPERY, ICE, SOFT, BLOCKED, ETC.)
NEW SIGNAL XX MILES
SLOW 1 (OR 2) - WAY TRAFFIC
SOFT SHOULDER
STALLED VEHICLES AHEAD
TRAFFIC BACKUP
TRAFFIC SLOWS
TRUCK CROSSING
TRUCKS ENTERING
TOW TRUCK AHEAD
UNEVEN LANES
WATER ON ROAD
WET PAINT
WORK ZONE XX MILES
WORKERS AHEAD

1/16/10

use and placement of changeable message signs.docx

Rev.03/10

DIVISION OF PLANNING

SPECIAL NOTES FOR INSTALLATION OF TRAFFIC COUNTING INDUCTANCE LOOPS AND AXLE SENSORS

I. DESCRIPTION

Except as specified in these notes, perform all work according to the Department's Current Edition Standard Specifications, applicable Special Provisions and Special Notes, Sepia and Standard Drawings, and the drawings elsewhere in this proposal. Article references are to the Standard Specifications.

Furnish all materials, labor, equipment, and incidentals for the following work: (1) Maintain and control traffic; (2) install inductive loops; and (3) all other work required by the Specifications, Standard Drawings, Special Notes and the drawings in the proposal. The details of the project will be supplied in addition to these Special Notes.

II. MATERIALS

The Department will sample and test all materials according to Department's Sampling Manual. Have all materials available for sampling a sufficient time in advance of the use of the materials to allow for the necessary time for testing, unless otherwise specified in these notes. All materials shall be approved prior to being utilized. The Contractor shall submit for approval five (5) copies of descriptive literature, drawings, and any requested design data for the materials he proposes to use. No substitutions for approved materials will be made without the written approval of the Engineer.

A. Maintain and Control Traffic. See Traffic Control Plan.

B. Junction Box Type 6 in. x 6 in. x 4 in. The junction box shall have minimum inside dimensions of at least 6 inches high by 6 inches wide by 4 inches deep, made of a UV stabilized nonmetallic material (plastic) or non-rusting metal, and be weatherproof (NEMA 4X enclosure). It shall have a removable replaceable door with a continuous durable weatherproof gasket between the body and overhanging door to ensure a watertight seal. The door shall be hinged with stainless steel screws, hinge(s) and pin(s). The door shall also have a stainless steel padlockable latch on the side opposite the hinge(s). An approved enclosure is the Hubbell-Wiegmann model VJ606HWPL1.

C. Junction Box Type 10 in. x 8 in. x 4 in. The junction box shall have minimum inside dimensions of at least 10 inches high by 8 inches wide by 4.6 inches deep, made of a UV stabilized nonmetallic material (plastic) or non-rusting metal, and be weatherproof (NEMA 4X enclosure). It shall have a removable replaceable door with a continuous durable weatherproof gasket between the body and overhanging door to ensure a watertight seal. The door shall be hinged with stainless steel screws, hinge(s) and pin(s). The door shall also

have a stainless steel padlockable latch on the side opposite the hinge(s). An approved enclosure is the Hubbell-Wiegmann model VJ1008HWPL1.

D. Junction Box Type A. The junction box Type A shall be constructed of a fiberglass reinforced polymer concrete, ANSI/SCTE 77-2002 Tier 15 Style, or approved equal. It shall have nominal inside dimensions of 13 inches wide by 24 inches long by 18 inches deep with an open bottom. The removable cover shall be attached with a minimum of two 3/8-inch stainless steel hex bolts and washers.

E. Junction Box Type B. The junction box Type B shall be constructed of a fiberglass reinforced polymer concrete, ANSI/SCTE 77-2002 Tier 15 Style, or approved equal. It shall have nominal inside dimensions of 11 inches wide by 18 inches long by 12 inches deep with an open bottom. The removable cover shall be attached with a minimum of two 3/8-inch stainless steel hex bolts and washers.

F. Junction Box Type C. The junction box Type C shall be constructed of a fiberglass reinforced polymer concrete, ANSI/SCTE 77-2002 Tier 15 Style, or approved equal. It shall have nominal inside dimensions of 24 inches wide by 36 inches long by 30 inches deep with an open bottom. The removable cover shall be attached with a minimum of two 3/8-inch stainless steel hex bolts and washers.

G. Cabinet Type G. A controller cabinet Type G shall be constructed of type 5052-H32 sheet aluminum with a minimum thickness of 0.125 inches. The cabinet shall meet or exceed the industry standards set forth by the UL 50 and the National Electrical Manufacturer's Association (NEMA) 3R. The cabinet shall have a dimension of 41 inches high by 25 inches wide by 16 inches deep. The cabinet shall include kits for a back panel and two shelves. The cabinet shall be designed with a sloped top to prevent the accumulation of water on its top surface. The single door opening shall be double flanged on all four sides, hinged on the right side, equipped with a three-point latching mechanism, and include a door restraint. The door shall be equipped with a Corbin tumbler #2 lock. The cabinet shall be equipped with two adjustable "C" mounting channels on both side and back walls to allow for versatile positioning of shelves. Manufacturer's shop drawings shall be submitted demonstrating details of equipment housing and installation. If electrical service is specified, a 120-volt GFCI AC duplex receptacle shall be provided in the cabinet.

An approved source is provided below. Other approved equal cabinets may be furnished if approved by a representative of the Central Office, Division of Planning. To be considered approved equal, the cabinet shall meet the above requirements and match the specified detailed dimensions.

Econolite Control Products.
P.O. Box 6150
3360 E. La Palma
Anaheim, California 92806-2856

H. Galvanized Steel Cabinet. The cabinet shall be a hinged cover NEMA Type 3R medium enclosure, constructed of 16 or 14 gauge galvanized steel, and have inside dimensions of 20 inches high by 20 inches wide by 8 inches deep. This shall be the standard size that contractors shall place their bids on. The cabinet shall meet the industry standards set forth by the Underwriters Laboratories Inc. (UL) 50 and the National Electrical Manufacturers Association (NEMA). The finish shall consist of an American National Standards Institute (ANSI) 61 gray polyester powder finish inside and out over the galvanized steel. The cabinet shall have the following features:

- Drip shield top and seam-free sides, front, and back, to provide protection in outdoor installations against rain, sleet, and snow.
- 16 gauge galvanized steel continuous stainless steel pin.
- Cover fastened securely with captive plated steel screws.
- Hasp and staple provided for padlocking.
- No gaskets or knockouts.
- Back plate mounted inside the cabinet for terminal strip installation.

An approved source is provided below. Other approved equal cabinets may be furnished if approved by a representative of the Central Office, Division of Planning. To be considered approved equal, the cabinet shall meet the above requirements and match the specified detailed dimensions.

Hoffman Engineering Co.
World Headquarters
900 Ehlen Drive
Anoka, Minnesota 55303-7504

I. Wood Post. The wood post shall be 4 inches by 4 inches by 8 feet long, and is pretreated to conform to the American Wood Preservers' Association (AWPA) C-14. All wood posts shall be sawed on all four sides, having both ends square, and conform to the dimensions specified. The wood post is described in detail in Section 820.01 of the Kentucky Transportation Cabinet, Department of Highways, Standard Specifications for Road and Bridge Construction, Current Edition.

J. Conduit. Conduit shall be rigid steel waterproofed conduit unless otherwise specified. All conduits shall be galvanized inside and out and shall conform to the Underwriters' Laboratories (UL) requirements for rigid metallic conduit. IMC will not be accepted. Furnish all conduit fittings, bodies, boxes, joints, couplings and mounting hardware.

K. Loop Wire. All loop wire shall be plainly marked in accordance with the provisions of the current editions of the National Electric Code (NEC). The wire shall be 14-gauge single conductor, insulated in polyethylene (PE) with a 0.004-inch thick nylon coating, and enclosed in a 0.030-inch thick PE tube jacket. The wire shall meet the requirements of the International Municipal Signal Association (IMSA) Specification No. 51-7- latest edition. Any other wire shall be of appropriate size and type per the NEC and Section

834.01 Wiring of the Kentucky Transportation Cabinet, Department of Highways, Standard Specifications for Road and Bridge Construction, Current Edition.

L. Cable No. 14/1 Pair. Cable No. 14/1 pair or loop lead-in cable shall be 14 AWG, stranded, paired conductors, electrically shielded and shall conform to IMSA 19-2. All cable shall be plainly marked in accordance with the provisions of the National Electric Code.

M. Traffic Loop Encapsulant. The traffic loop encapsulant shall consist of a one-part polyurethane as described in Section 835.06 of the Kentucky Transportation Cabinet, Department of Highways Standard Specifications for Road and Bridge Construction, Current Edition.

N. Non-Shrinkable Grout. The grout used shall be non-shrinkable and meet the Department of Highways Standard Specifications for Road and Bridge Construction, Current Edition.

O. Backer Rod. Use backer rod of 1/2" diameter that meets the Department of Highways Standard Specifications for Road and Bridge Construction, Current Edition.

P. Seeding and Protection. Use seed mixture No. I per Section 212-Erosion Control of the Department's Current Edition Standard Specifications for Road and Bridge Construction book.

Q. Electrical Service. The contractor shall initiate a work order for the installation of electrical service to the power site. A representative from the Division of Planning and the local utility company shall be consulted prior to choosing an exact location for the pole. The contractor shall be responsible for clearing the right-of-way for the electrical service drop. The electrical service shall be a minimum 60-ampere, which is capable of supplying 120 volts or 240 volts to the electronics. The installation and materials specified in the construction notes below, shall be made incidental to the bid item established for electrical service. A 120-volt GFCI AC duplex receptacle shall be provided in the cabinet. Contractor is responsible for correct size and type of wire. Contractor is responsible for obtaining any and all electrical inspections, memberships, meter base and any other requirements by the utilities serving the installation and pays all fees required.

R. Piezoelectric Sensors. The sensor shall consist of a metal strip 0.260" wide x 0.063" thick; ±0.005" and be furnished in the specified lengths. The sensor shall include a 100-foot electrical coax-cable connected to one end. The coax-cable shall be RG 58 type with an underground/direct burial rated outer jacket. The OD of the cable is 0.187". The nominal capacitance of the cable is 27 pF/ft. Piezo lead-in cables are to be run splice free to their cabinets. Many installations exceed the 100-foot length so the piezo should be ordered with a lead-in of appropriate length. Standard lead-ins can be ordered from 100 to 500 feet in 50-foot increments. The manufacturer should be contacted regarding longer distances.

1. **Piezoelectric Sensor: Roadtrax BL Class I or Approved Equal**. Furnish Class I Piezoelectric Sensor to be used to collect truck weigh-in-motion data. Class I sensors are typically furnished in 6- or 11-foot lengths. See Notes and Estimate of Quantities for sensor type and length. One installation bracket for every 6 inches of sensor length shall also be supplied.

The vendors listed below are known distributors of the Roadtrax BL Class I sensors. Other approved equal sensors may be furnished if approved by a representative of the Central Office, Division of Planning. To be considered approved equal, the sensors shall meet the above requirements and match the specified detailed dimensions.

DIA-L Associates
P. 3302 Aquia Drive
Stafford, VA 22554

Measurement Specialties, Inc.
80 Little Falls Road
Fairfield, NJ 07004

International Road Dynamics, Inc.
702 43rd Street East
Saskatoon, Saskatchewan
Canada, S7K3T9

Grout material shall display fast cure times; tack free in 10 minutes and open to traffic in 40 minutes with full cure within an hour. Material shall have excellent adhesion to concrete and asphalt. It should display excellent chemical resistance, water insensitivity, and thermal stability at high and low temperatures. Ample encapsulation material shall be supplied for each sensor for its proper installation. Approved encapsulation material by the piezo manufacturer includes AS475 Axle Sensor Grout or approved equal. This is a durable two-part resin-based grout suitable for asphalt and concrete applications having the following typical physical properties:

Compressive Strength (psi)	ASTM D638	5000 min.
Water Absorbtion	ASTM D570	0.3% max
Wear Resistance	ASTM D4060	CS10 wheel, 1000 gm load 1000 cycles, 186 mg loss

The vendors listed below are known distributors of the approved grout.

DIA-L Associates
P. 3302 Aquia Drive
Stafford, VA 22554
(540) 659-2264

Measurement Specialties, Inc.
80 Little Falls Road
Fairfield, NJ 07004

PAT Traffic Control Corporation
1665 Orchard Drive
Chambersburg, PA 17201

International Road Dynamics, Inc.
702 43rd Street East
Saskatoon, Saskatchewan
Canada, S7K3T9

III. CONSTRUCTION METHODS

The plans indicate the extent and general arrangement of the installation and are for general guidance. When the contractor deems any modifications of the plans or specifications necessary, details of such changes and the reasons shall be submitted in writing to the Resident Engineer for written approval prior to begin the modified work.

Once the project has been let and awarded, the Division of Construction shall notify the Division of Planning of the scheduled date for a Pre-Construction meeting so that prior arrangements can be made to attend. This will allow the Division of Planning an opportunity to address their concerns and answer any questions that the contractor may have before beginning the work. Planning shall also be notified two weeks before work pertaining to these specifications begins to ensure their personnel are present during sensor installation and once the work has been completed so that their representative can perform a final inspection. The Division of Construction then reviews Planning's final inspection report and determine whether the work is in compliance with the specifications before awarding payment to the contractor.

A. Maintain and Control Traffic. See Traffic Control Plan.

B. Junction Box Type 6" x 6" x 4" or 10" x 8" x 4" (as noted). The contractor shall stub the rigid steel conduit to the junction box so the bottom of the box is approximately 18" above the ground. The junction box shall be located at or beyond the shoulder and mounted on the side of a post approximately 3 feet beyond the guardrail post using banding material or other appropriate mounting hardware with the hinge side up. See Figures 2a and 2b for additional details. Leave approximately 18" of slack lead-in wire coiled inside the junction box. Permanent identification numbers shall be affixed to all wires in each junction box and cabinet in order to distinguish between the loops and/or sensors. See Location Drawing for sensor numbers to be placed on all lead-ins.

C. Junction Box Type A (or B or C). Install the Junction Box Type A near the edge of pavement and flush with the ground level (see Figure 3). Place roughly 18 inches of No. 57 aggregate underneath the junction box Type B to allow drainage. Extend the loop lead-in wires splice-free to the cabinet. Run the wire from the junction box Type A through the conduit at a minimum depth of 6 inches. Stub the conduit up into the junction box Type A from its base to accommodate the lead-in wires. Leave at least 2 feet of slack lead-in wire coiled inside the junction box Type A. The conduit fittings, backfilling, and aggregate shall be incidental to the junction box Type A. Permanent identification numbers shall be affixed to all wires in each junction box and cabinet in order to distinguish between the loops and/or sensors. See Location Drawing for sensor numbers to be placed on all lead-ins.

D. Cabinet Type G. Locate the cabinet sufficiently beyond the roadside by determining the minimum clear zones in accordance with the "Roadside Design Guide". Place a concrete foundation of appropriate size for mounting the cabinet. The cabinet shall be mounted on the concrete base such that the bottom of the cabinet is 27" above the ground. The door of the cabinet shall open away from traffic. Fasten the cabinet to the foundation

using anchor rods and caulk the gap between the cabinet and the base. Stub rigid conduit up into the cabinet from its base. Install an extra 1 ¼" conduit to be stubbed out in the bottom of the cabinet and run out 2 feet from the concrete base and plugged with duct seal or taped shut with electrical tape toward the roadway for future use. An 8' copper clad ground rod shall be driven into the soil and bonded to the rigid conduit via #4 solid copper wire and ran through the concrete and up into the cabinet. A ¾" rigid steel conduit shall be stubbed up into the cabinet and run 2 feet up the electrical service pole and terminated to a ¾" weatherhead. This conduit shall be run in the same ditch as the electrical service. If electrical service is not provided as an item in the contract, the ¾" rigid steel conduit shall be run out 2 feet from the concrete base and plugged with plumbers putty or taped shut with electrical tape. The location of the plugged end shall be marked with a wooden stake and labeled "¾ in. conduit end" (see Figure 8). A 120-volt, 20-amp GFCI AC duplex receptacle shall be provided in the cabinet.

Leave at least 5 feet of slack lead-in wire in the cabinet. Include the following major items as incidental to the cost of the cabinet: concrete foundation, anchor rods, ground rod, #4 solid copper wire, bonding clamps, and caulking. The Division of Planning will supply additional harnesses and do final connections inside the cabinet. Permanent identification numbers shall be affixed to all wires in each junction box and cabinet in order to distinguish between the loops and/or sensors. See Location Drawing for sensor numbers to be placed on all lead-ins.

E. Install Base Mount Enclosure. Locate the cabinet sufficiently beyond the roadside by determining the minimum clear zones in accordance with the "Roadside Design Guide". For this project, a base mount Model 170 Controller Cabinet, without anchor bolts, will be State-furnished. The contractor shall construct each cabinet foundation as shown on the plans per the attached Figures 9a and 9b, "Base Mounted 170 Cabinet Detail", (including furnishing and installing anchor bolts). Contractor shall install the cabinet on the concrete base such that the doors of the cabinet open away from traffic (hinges are away from traffic), and shall make all field wiring connections to the sensors, electrical and telephone services (as applicable). Fasten the cabinet to the foundation using anchor rods and caulk the gap between the cabinet and the base. Stub rigid conduit up into the cabinet from its base. Install an extra 1 ¼" conduit to be stubbed out in the bottom of the cabinet and run out 2 feet from the concrete base and plugged with duct seal or taped shut with electrical tape toward the roadway for future use. An 8' copper clad ground rod shall be driven into the soil and bonded to the rigid conduit via #4 solid copper wire and ran through the concrete and up into the cabinet. Two 1" rigid steel conduits shall be stubbed up into the cabinet, one for electrical service and one for telephone service (whether installed at this time or in the future). They shall be run a minimum of 2 feet up the electrical service pole and/or telephone source and terminated to 1" weatherheads. These conduits shall be run in the same ditch if possible. If electrical service is not provided as an item in the contract, the 1" rigid steel conduit shall be run out 2 feet from the concrete base and plugged with plumbers putty or taped shut with electrical tape. The location of the plugged end shall be marked with a wooden stake and labeled "1 in. conduit end". A 120-volt, 20-amp GFCI AC duplex receptacle shall be provided in the cabinet.

Leave at least 6 feet of slack sensor lead-in wire in the cabinet. Include the following major items as incidental to the cost of this bid item: concrete foundation, anchor rods and associated hardware, ground rod, #4 solid copper wire, bonding clamps, caulking, electrical material and connections (if applicable). The Division of Planning will supply the cabinet, additional harnesses and do final sensor connections inside the cabinet. Permanent identification numbers shall be affixed to all wires in each junction box and cabinet in order to distinguish between the loops and/or other sensors. See Location Drawing for sensor numbers to be placed on all lead-ins.

F. Galvanized Steel Cabinet. The contractor shall determine the amount of clearance required from the road to the cabinet for each specific station location. The "Roadside Design Guide", developed by the American Association of State Highway Officials (AASHTO), shall be used as a tool to determine roadside safety based on design and speed limit. The contractor and Planning shall discuss and resolve any conflicts in the Pre-Construction meeting that might arise from following the station descriptions of the Location Table.

Use terminal strips on the back plate with a minimum of eight terminals each and 7/16-inch spacing (center to center) to mount inside the cabinet in order to connect the lead-in wires to the cable assemblies. Use screw type terminal strips to accommodate wire with spade-tongue ends. Allow for at least 20 inches of slack lead-in wire in the cabinet before connecting them to the terminal strip. Wires connected to the terminal strips shall have insulated, solderless, spade tongue terminals of correct wire and stud size. Wires shall be labeled correctly. See Location Drawing and Wiring Table.

Permanent identification numbers shall be affixed to all wires in each junction box and cabinet in order to distinguish between the loops and/or sensors. See Location Drawing for sensor numbers to be placed on all lead-ins.

G. Wood Post. Set the treated-wood post 3 feet below the ground and place the backfill material in the hole, compacting until flush with the existing earth. Mount the cabinet to the post using ¼" x 2 ½" galvanized lag bolts at the top and bottom of the cabinet. The base of the cabinet shall be 4 feet above ground level. Stub the rigid steel conduit up into the base of the cabinet. Affix the conduit to the post using two conduit straps, a maximum of 18" on-center, and ¼" x 2 ½" galvanized lag bolts. Cabinet door shall open facing away from traffic (see Figure 7).

H. Conduit. Rigid steel waterproofed conduit encasement shall be provided for all conductors where conductors run to a junction box or cabinet. All conduit installations shall conform to the provisions of the NEC, except where directed otherwise. Bonded slip joints will be permitted for joining rigid conduit to the junction box or cabinet. Where a standard coupling cannot be used, an approved threaded union coupling shall be used.

All conduit ends shall be reamed to remove burrs and sharp edges. Damaged portions of the galvanized surfaces and untreated threads resulting from field cuts shall be painted with a rust inhibitive paint. Conduit bends shall have a radius of no less than 12 times the nominal diameter of the conduit, unless otherwise shown on the plans.

Conduit that will be subject to regular pressure from traffic shall be laid to a minimum depth of 24 inches below grade. Conduit that will not be subject to regular pressure from traffic shall be laid to a minimum depth of 6 inches below grade. All conduit openings shall be waterproofed with a flexible, removable sealant, including those ending in junction boxes and cabinets. This shall be accomplished using duct seal, or plumber's putty, by working it around the wires and then extending it 1 inch into the end of the conduit. After the conduit has been installed and before the backfilling is started, the conduit installation shall be inspected and approved by the Engineer. In backfilling trenches, the backfill material shall be placed and compacted in lifts of 9 inches or less. Any area disturbed as a result of the contractor's operations shall be restored to the satisfaction of the Engineer.

I. Wiring. All wiring shall conform to the provisions of the NEC unless otherwise shown on the plans. Permanent identification numbers shall be affixed to all wires in each junction box and cabinet in order to distinguish between the loops and/or sensors. See Location Drawing Figure 1 for sensor numbers to be placed on all lead-ins. All wiring shall be taken to a cabinet or junction box. Leave at least 2 feet of "slack" lead-in wire inside each Type B junction box and steel cabinet, a minimum of 4 feet of wire inside the Type G cabinet and a minimum of 6 feet of wire inside the base mounted Type 170 cabinet.

J. Splicing. Sensor lead-in cable lengths for each sensor shall allow sufficient but not excessive slack for splicing connections. All splices shall conform to the provisions of the NEC unless otherwise shown on the plans. Loop lead-in wire splices to shielded pair cables shall be twisted and soldered. Other splices shall be twisted and soldered or made with mechanical connectors of a type approved by the Engineer. Splices for loop wire shall be protected by either heat shrink tubing or a double spiral wrapping of vinyl electrical tape. For splicing home-run coax cable to the sensor's lead-in cable, the same coax cable, supplied by the manufacturer, shall be used. For coax-cable splices, the contractor shall provide kits (3M Scotchcast 3832 Buried Service Wire Encapsulation Kit or equal) to protect them. All splices are to be made in junction boxes unless approved by a representative of the Division of Planning.

K. Loops. A location table is furnished in the Supplemental Notes, along with an estimate of quantities, to display the approximate location for loop installation in the existing pavement. The contractor and a representative of Planning will verify the precise location on site. The contractor shall be careful to avoid expansion joints and pavement sections where potholes, cracks, or any other roadway flaws exist. This will not only facilitate installation of the equipment, but also will increase the accuracy and service life span of the sensors.

There shall be a minimum of 6 feet between loops in adjacent lanes for 12-foot wide lanes. Unless indicated otherwise, loops in the same lane shall be spaced 16 feet from leading edge to leading edge (see Figure 6). All loop dimensions shall be 6 feet by 6 feet square unless otherwise indicated by the Location Drawing. Center and mark each loop in the lane such that its sides are parallel and perpendicular to the direction of traffic. Make the saw-cut for the loop 3/8-inch wide and at a depth such that the top of the backer rod is a minimum of 1 inch below the surface of rigid (PCC/Concrete) pavement or 3 inches below the surface of asphalt pavement (see Figure 5). Drill a 1.5" hole at all four corners of the loop to prevent sharp bends in the wire (see Figure 4).

Make the saw-cut for the home run slot 3/8 inch wide. Since it may contain several lead-in wires, the depth should be such that the top of the backer rod is a minimum of 1 inch below the surface of rigid (concrete) pavement or 3 inches below the surface of bituminous (asphalt) pavement. Depending on the number of road sensors at a particular site, the home run slot will gradually need to be cut deeper as you approach the shoulder in order to maintain the minimum depth for the top lead-in wire and directly enter the buried conduit (10 inch depth).

Clean the mud, debris, water, and loose particles from the slot, roadway and surrounding areas. A high-pressure washer shall be used to wash the area followed by clean (oil free) compressed air.

Measure out the appropriate length of loop lead-in wire to allow slack in the final cabinet or junction box. Insert the loop wire into the loop slot for four rotations (see Figure 5). Push the wire in with a wooden stick, such as a paint stir stick or other blunt wooden object. If the wire insulation is broken, apply heat shrink tubing or a double wrapping of vinyl electrical tape to protect from corrosion. Extend the loop lead-in wire splice-free to the junction box or cabinet. Exceptions to this shall be considered on a case-by-case basis and must be approved by the Engineer. If splices cannot be avoided, every effort shall be made to locate them in a junction box. If loop lead-in cable (Cable No. 14/1 Pair) is specified, loop wires shall be twisted and run to the nearest type Junction Box and the wires twisted and soldered to the lead-in cable. The lead-in cable shall then be run splice free to the cabinet ensuring that extra cable is left in each subsequent junction box that it may be run through as well as the cabinet. All wires and cables shall be labeled in each junction box and cabinet.

Twist each pair of loop lead-in wires, exclusive of shielded coax-cable, with three to five turns per foot before placement into the conduit, junction box, and cabinet. Do not twist different pairs of loop wire together. Once the loop wire is installed in the roadway, apply enough loop encapsulant to just cover the loop wires in the saw slot. Once this is done, cover the encapsulated loop wire with backer rod throughout the entire loop and tail saw slots. Finish filling the saw cut with a mixture of non-shrinkable grout and water. Every attempt should be made to alleviate air pockets and low spaces should be refilled. Any excess grout shall be cleaned from the roadway via squeegee, etc. to help alleviate tracking. The loop encapsulant, backer rod and non-shrinkable grout shall be

incidental to the bid item "Loop Saw Slot and Fill".

Loops shall be cut just before the final surface course is laid in asphalt unless no pavement rehab or resurfacing is taking place. They shall be cut in the surface course for concrete whether there is pavement rehab/resurfacing or not. Final judgment is made by the Central Office, Division of Planning Equipment Branch.

All loop inductance readings shall be between 100 and 300 microhenries. The loop inductance between two loops in the same lane shall be within 20 microhenries of each other. Inductance loop conductors shall test free of shorts and unauthorized grounds. Upon completion of the project, all loops must pass an insulation resistance test of at least 100 million ohms to ground when tested with a 500 Volt direct current potential in a reasonably dry atmosphere between conductors and ground.

L. Electrical Service. A treated-wood service pole, per Section 820 of the Department's Current Edition Standard Specifications, with a 20-foot minimum length and a 6- to 12-inch diameter, or approved equal, is to be furnished by the Contractor. Install the electrical service pole adjacent to the cabinet at a depth of at least 4 feet while maintaining a 12-foot minimum clearance for the electrical service drop. Compact the backfill material to support the electrical service drop without leaning. Install an appropriate pole support guy wire and anchor if necessary. Install rigid conduit up the length of the pole with three separate insulated conductors (No. 4 copper wire) in the conduit and a weatherhead at the top.

Space the conduit straps 30 inches apart and leave 24 inches of cable for the drip loop. Install a meter-base and a disconnect panel with a 20-ampere circuit breaker inside. A 120-volt, 20-amp GFCI AC duplex receptacle shall be provided in the cabinet. A manufactured weatherproof hub connector is required to connect the meter-base to the disconnect panel. Do not use service entrance cable inside the conduit. The conduit from the disconnect panel is required to be at a depth of 6 inches below grade. Install a 5/8-inch by 8-foot ground rod below the finished grade. Extend the ground wire through a separate hole in the disconnect panel and clamp to the ground rod. Install a 1" rigid conduit to 2 feet above ground level and install a weatherhead at the top opening. This conduit shall be run to and stubbed up into the Cabinet. The conduit shall be attached to the pole at a minimum of 2" from ground level and 2" from the weatherhead.

M. Piezoelectric Sensor, Roadtrax BL Class I or Approved Equal. Determine where on the roadway the piezoelectric sensor will be installed. Roadway ruts shall not be in excess of 1/2 inch under a 4-foot straight edge. Install the piezoelectric sensor perpendicular to traffic. Locate the sensor in the lane as shown on the site detail sheet. Eleven-feet length sensors should be centered in the lane. The following is a typical step by step procedure for the installation of a piezoelectric sensor. Refer specifically to the manufacturer's current instructions provided with the sensor prior to installation. Piezoelectric sensors are always installed at the final surface of the pavement.

1. Carefully mark the slot to be cut, perpendicular to the flow of traffic. Ensure that the sensors are properly positioned in the lane.
2. It is strongly recommended that a ¾" wide diamond blade be used for cutting the slot, or that blades be ganged together to get a single ¾ inch wide cut. The slot shall be wet cut to minimize damage to the road.
3. Cut a slot ¾ inch wide (±1/16") by 1" minimum deep. The slot should be 8" longer than the sensor (including the lead attachment). Drop the saw blade an extra ½" down on both ends of the sensor. The lead out should be centered on the slot.
4. Cut the home-run slot for the coax-cable ¼-inch wide and at a depth so that the cable is a minimum of 1 inch below the road surface in rigid pavement (concrete) or 3 inches below the road surface in bituminous (asphalt) pavement.
5. Sweep and wash out all debris left in the slot and ensure it is clean and dry.
6. Use high pressure water, or water and oil-free compressed air to clean ALL foreign and loose matter out of the slot and within 1 foot on all sides of the slot.
7. Totally remove excess water and debris from roadway and shoulder area. Debris should be disposed of properly.
8. Carefully dry the slot, and within 1 foot on all sides of the slot, using oil-free forced air, torpedo heaters, electric heaters, or natural evaporation, depending on weather conditions. Be very careful not to burn the asphalt if heat is used.
9. Place a strip of duct tape on the pavement along the length of both sides of the sensor slot. Place the 2-4" wide duct tape 1/8" away from the slot.
10. Remove BL sensor from the box. Visually inspect each sensor to ensure it is straight without any twists or curls. Check lead attachment and passive cable for cuts, gaps, cracks and/or bare wire. Verify the correct sensor (type and length) is being installed by checking the data sheet. Verify there is sufficient cable to reach the cabinet.
11. Test the sensor for Capacitance, Dissipation Factor and Resistance, according to the directions enclosed with the sensor. Capacitance and dissipation should be within ±20% of the enclosed data sheet. Resistance (using the 20M setting) should be infinite. Record the sensor serial number and the test results. This information should be stored in the counter cabinet and/or returned to KYTC Planning personnel.
12. Lay the sensor on the tape next to the slot. Ensure that the sensor is straight and flat. Ensure that you are wearing clean protective latex (or equivalent) gloves at all times when handling sensors.
13. Clean sensor with steel wool or emery pad. Wipe down with alcohol and clean lint-free cloth.
14. Place the installation bracket clips on the sensor, about every 6" for the length of the sensor.
15. Bend the end of the sensor downward at a 30° angle. Bend the lead attachment end down at a 15° angle and then 15° back up until level (forming a lazy Z)
16. Place the sensor in the slot, with the brass element 3/8" below the road surface along the entire length. The end of the sensor should be at least 2" from the end of the slot and the tip should not touch the bottom of the slot. The top of the plastic installation bracket clips should be 1/8" below the surface of the road. The lead attachment should also not touch the bottom or sides of the slot. Ensure the ends of the sensors are pushed down sufficiently per the manufacturer's instructions.

17. Visually inspect the length of the sensor to ensure it is at uniform depth along its length and it is level (not twisted, canted or bent).
18. Block off the ends of the slot using plumbers putty. Ensure that there are adequate "dams" at both ends so that the encapsulation material does not flow out. On the passive cable end, the dam should be about 3-5" past the end of the lead attachment area.
19. The encapsulation material should be placed full depth, overfilled, and allowed to cure 10 minutes before shaving level with the surface. Ensure it fills around and underneath the sensor completely and there is not a trough on top.
20. Remove the tape on the sides of the sensor as soon as the adhesive starts to cure.
21. Carefully remove all the plumbers putty from ends of the sensor.
22. Route the lead in cable through the slot cut for it, and cover with approved loop sealant.
23. After the encapsulant has hardened, grind the top of the installation using an angle grinder. The profile should be flush with the road surface or with a slight, 1/16" mound. There shall be no concave portion to the mound.
24. Clean up the site. Sealant curing time varies with temperature and humidity. Contractor shall ensure that the complete curing of the encapsulation material has taken place prior to subjecting the sensors to traffic.

After the installation is complete, the minimum output voltages of each piezoelectric sensor shall meet the following: 1.5 Volts (peak) for a 10,000 pound axle and 200 millivolts (peak) for a car axle. The piezoelectric sensor lead-in cable is part of the sensor and can be ordered in different lengths (100' standard). Piezoelectric sensor lead-in cable shall not be spliced.

N. Cleanup and Restoration. The contractor will be responsible for all damage to public and/or private property resulting from his work. Upon completion of the work, restore all disturbed highway features in like kind design and materials. This includes any filling of ruts and leveling ground appropriately. Clean the site and dispose of all waste and debris off the right-of-way at sites obtained by the contractor at no additional cost to the Department. Sow all disturbed earthen areas with Seed Mixture No. I per Section 212.03.03 Permanent Seeding and Protection of the Kentucky Transportation Cabinet, Department of Highways, Standard Specifications for Road and Bridge Construction, Current Edition. Seeding, silt fence and other erosion control items will be considered incidental to other bid items.

O. On-Site Inspection. Each contractor submitting a bid for this work shall make a thorough inspection of the site prior to submitting his bid and shall thoroughly familiarize themselves with existing conditions so that the work can be expeditiously performed after a contract is awarded. Submission of a bid will be considered evidence of this inspection having been made. The Department will not honor any claims resulting from site conditions.

P. Property Damage. The contractor will be responsible for all damage to public and/or private property resulting from his work.

Q. Caution. Information shown on the plans and in this proposal and the types and quantities of work listed are not to be taken as an accurate or complete evaluation of the material and conditions to be encountered during construction. The bidder must draw his own conclusion as to the conditions encountered. The Department does not give any guarantee as to the accuracy of the data and no claim will be considered for additional compensation if the conditions encountered are not in accordance with the information shown.

R. Utility Clearance. It is not anticipated that utility facilities will need to be relocated and/or adjusted; however, in the event that it is discovered that the work does require that utilities be relocated and/or adjusted, the utility companies will work concurrently with the contractor while relocating their facilities.

S. Site Inspections. All sensors are to be tested by a member of the Central Office Division of Planning equipment staff after the installation is complete to verify that the station is operating properly. Tests shall demonstrate that the system operates in accordance with the plans and specifications. Inductance loop conductors shall test free of shorts and unauthorized grounds and shall have an insulating resistance of at least 100 megaohms when tested with a 500 volt direct current potential in a reasonably dry atmosphere between conductors and ground. If the sensors do not meet the specifications and/or KYTC's traffic recording equipment does not perform properly because of an improperly functioning sensor, the contractor shall be responsible for the replacement of the faulty sensor(s), as soon as practicable at their total cost.

IV. BID NOTES AND METHOD OF MEASUREMENT FOR PAYMENT

Only the bid items listed will be measured for payment. All other items required to complete the vehicle detection installation shall be incidental to the other items of work. Payment at the contract unit price shall be full compensation for all materials, labor, equipment and incidentals to furnish and install these items.

A. Maintain and Control Traffic. See Traffic Control Plan.

B. Junction Box Type 6" x 6" x 4" (or Type 10" x 8" x 4" if noted). Each type junction box shall include furnishing and installing specified junction box in accordance with the specifications. This item includes connectors, splice sleeves, conduit fittings, mounting materials and any other items required to complete this part of the installation. Incidental to this item is furnishing and installing any specified post (wood, channel, metal, etc.) as required for the installation.

C. Junction Box Type A (B or C). Each type junction box shall include furnishing and installing specified junction box in accordance with the specifications. This item includes concrete (if required), #57 aggregate, conduit fittings and backfilling around the unit.

D. Cabinet Type G (NEMA-3R). Cabinet (each) shall include furnishing and installing a Type G cabinet as specified. This item shall include constructing the concrete base or mounting cabinet to pole, installation of duplex receptacle and connection of all detectors (where applicable). Incidental to this item shall be furnishing, installing electrical service conductors, conduits, fused cutout, ground rods, all internal shelving, brackets, any necessary pole mounting hardware and electrical inspection fees.

E. Install Base Mount Enclosure. Install base mount enclosure (each) shall include installing a State-furnished cabinet or enclosure as specified. This item shall include all materials and labor for constructing the concrete base (or, if specified, mounting cabinet to pole), installation of the cabinet, duplex receptacle and connection of all detectors (where applicable). Incidental to this item shall be furnishing, installing electrical service conductors, conduits, fused cutout, ground rods, telephone service conduits from the cabinet to the telephone company disconnect box, all internal shelving, brackets, anchor bolts, any necessary pole mounting hardware and electrical inspection fees if applicable.

F. Galvanized Steel Cabinet. Cabinet (each) shall include furnishing and installing a galvanized steel cabinet and post(s) as specified on the drawing. This item shall include mounting the cabinet to post and the connection of all detectors. Incidental to this item shall be furnishing and installing conductors, conduit, ground rods, any necessary pole mounting hardware and any electrical inspection fees.

G. Wood Post. Wood post (each) shall include furnishing and installing a wood post as specified. This item includes excavation, concrete (if required), and backfilling around the unit.

H. Conduit. Conduit shall include furnishing and installing specified conduit in accordance with specifications. This item includes conduit fittings, bodies, boxes, expansion joints, couplings, duct seal, bonding straps and any other necessary hardware. Conduit will be measured in linear feet.

I. Wire (or Cable). Wire or cable shall include furnishing and installing specified wire or cable within conduit, saw slot, or overhead as indicated on the detail sheets. This can include, but is not limited to: loop wire, Cable No. 14/1 Pair, etc. Incidental to this item shall be the labeling of all wires and cables in each junction box, cabinet and splice box; furnishing and installing of splice boots, cable rings or other hardware required for installing cable. Loop wire and cable will be measured in linear feet.

J. Loop Saw Slot and Fill. Loop saw slot and fill shall include sawing, cleaning and filling saw slots for induction loops, lead-in wires, etc. with loop sealant or specified approved material. Sawing and filling slot for wire will be measured in linear feet.

K. Trenching and Backfilling. Trenching and backfilling shall include excavation, backfilling, temporary erosion control, seeding, protection and restoration of disturbed areas to original condition. This item includes concrete, asphalt or approved replacement material for sidewalks, curbs, roadways, etc. (if required). Trenching and backfilling will be measured in linear feet.

L. Electrical Service. Electrical services shall include all related work, labor, materials (e.g. meter, straps, conduit, fittings, wire, etc.) and fees towards furnishing and installing an electrical service, which has passed all required inspections. This will be measured in individual units each.

M. Telephone Service. Telephone services shall include all related work, labor, materials (e.g. meter, straps, conduit, fittings, wire, etc.) and fees towards furnishing and installing a telephone service, which has passed all required inspections. This will be measured in individual units each.

N. Piezoelectric Sensor or Approved Equal. Piezoelectric sensor (each) shall include furnishing and installing a Class I Piezoelectric Sensor in accordance with the specifications. Lead-in wire, splice kits, encapsulation material, grout, testing, and accessories shall be incidental to this bid item.

REFERENCES

1. Kentucky Transportation Cabinet, Department of Highways Standard Specifications for Road and Bridge Construction, Current Edition, and Supplemental Specifications.

2. National Electrical Code (NEC), latest edition.

3. International Municipal Signal Association (IMSA) Specification No. 51-7- latest edition.

4. FHWA Manual of Uniform Traffic Control Devices, latest edition.

5. "Roadside Design Guide", developed in 1996 by the American Association of State Highway and Transportation Officials (AASHTO).

6. Kentucky Department of Highways Standard Drawings, current editions, as applicable:

TTC-115	Lane Closure Case I
TTC-135	Shoulder Closure
TTD-110	Post Splicing Detail

Updated: March 31, 2010

LOCATION TABLE
HENDERSON COUNTY – US 41
TRAFFIC STATION B22 – MP 16.42

STATION	DESCRIPTION	MP BEGIN	LOCATION	MP END	LANES	PIEZOS	LOOPS	PROJECT MP LIMITS
B22	2loop/lane	16.041	16.42	16.807	3 (SB)	0	6	

TRAFFIC STATION B22 is located on US 41 at approximately the 16.42 mile-point (MP) with the final location confirmed by appropriate Division of Planning staff. This station has five (5) lanes of traffic, three (3) southbound lanes (loops#5-10), and two (2) northbound lanes (loops#1-4). **ONLY THE THREE SOUTHBOUND LANES WILL NEED TO BE REPLACED IN THIS PROJECT (LOOPS#5-10).** Each lane will have a loop-loop combination of sensors installed as depicted in Figure 1. The contractor shall install the sensors in each lane and run their lead-ins splice-free through a newly installed junction box Type-A and into the existing 20”x20” galvanized steel cabinet as depicted in Figure 1. All new materials shall be utilized in the reconstruction except for the galvanized steel cabinet.

ESTIMATE OF QUANTITIES

CODE	DESCRIPTION	UNIT	QUANTITY
4795	Conduit 2 inch	LINEAR FEET	30
20391ES835	Junction Box Type A	EACH	1
4820	Trenching and Backfilling	LINEAR FEET	25
4830	Loop wire	LINEAR FEET	1644
4895	Loop saw slot and fill	LINEAR FEET	288

Contractor is responsible for the above materials listing. Specifications on materials and installation instructions for loops are found in the Special Notes for Installation of Traffic Counting Inductance Loops and Axle Sensors.

GENERAL NOTE
HENDERSON COUNTY – US 41
TRAFFIC STATION B22 – MP 16.42

The Division of Planning needs to re-establish a data collection station within a section of the resurfacing project in Henderson County on US 41. Planning is requesting to have service replaced at a site with an approximate mile-point of 16.42, with the installation of traffic loop sensors once the new surfacing project is deemed completed. Exact location will be determined in the field.

Contractor shall install two (2) loop sensors in each lane at the same proximity as that of the old site. Only the southbound lanes will be affected by this resurfacing project so the loops on the southbound side will be the only loops to be reinstalled.

Therefore, the contractor will install a total of six (6) loop sensors in the roadway and run their lead-ins splice-free through the new junction box and into the cabinet as indicated. All loops will run through two inch conduit from edge of pavement to junction box and then again through two inch conduit from junction box to cabinet. Installation shall be coordinated with and approved by appropriate Division of Planning staff. Reference “Special Notes for Installation of Traffic Counting Inductance Loops” for materials, construction and installation details. Also see the Standard Details for Installation of Traffic Counting Inductance Loops and Axle Sensors, Location Drawings, Location Table and Estimate of Quantities, in regard to this specific project.

NOTE:

The Special Notes for Traffic Counting Inductance Loops and Axle Sensors are generic.
Only the sections that pertain to the specified location and the bid items listed in this summary are applicable.

SPECIAL NOTES:

The location listed in the proposal is approximate only. The Engineer, in coordination with the Central Office Division of Planning, will designate the exact location at the time of construction.

Notify the Central Office Division of Planning (502-564-7183, Equipment Management Team) a minimum of 14 days prior to beginning work in order for them to have the option to be present during sensor installation. The Engineer will contact and maintain liaison with the District Planning Engineer and the Central Office Division of Planning in order to coordinate the work.

SPECIAL NOTE FOR AUTOMATIC TRAFFIC RECORDER INDUCTANCE LOOPS

Existing traffic counting inductance loops are within the construction limits of this project. Notify the Engineer in writing, a minimum of 14 days prior to beginning any work. Install and test the new loops after milling and leveling and wedging, if applicable, and prior to resurfacing.

The Engineer will contact and maintain liaison with the District Planning Engineer and the Division of Planning in order to coordinate any necessary work.

1-3891 atrplanningloops
01/01/2009

Kentucky
UNBRIDLED SPIRIT

DEPARTMENT OF HIGHWAYS
MAP OF
HENDERSON COUNTY
SHOWING
STATE MAINTAINED SYSTEM

FE01 051 0041 016-017

414 41 811 1574 1078 60 3344 268 2183 2243 1539 1078 136 351 136 AUDUBON PARKWAY 41A 1078 425 812 2260 60 2249 351 1299 41 EDWARD BREATHITT PARKWAY 2247 416 41A 1217 520 266 2248 416 443 1078 1557 145 1299 283 136 2253

HENDERSON
41 351 41A 1539 35 812 136 EB 285 41 AU

LEGEND
PRIORITY A
PRIORITY B
PRIORITY C

N W E S

TYPICAL SECTION
FE01-051-0041-016-017
HENDERSON COUNTY

MP 17.2 TO MP 18.3
NORTHBOUND

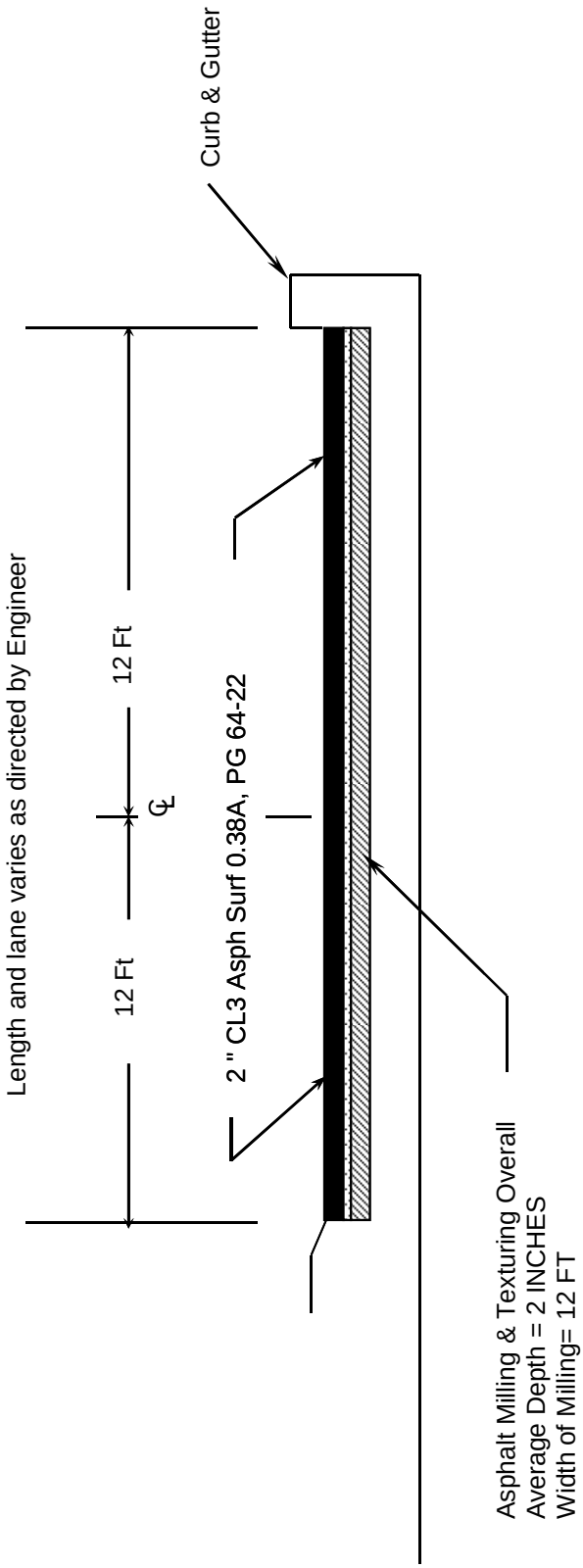

TYPICAL SECTION

FE01-051-0041-016-017
HENDERSON COUNTY
MP 16.38 TO MP 16.5

EXISTING

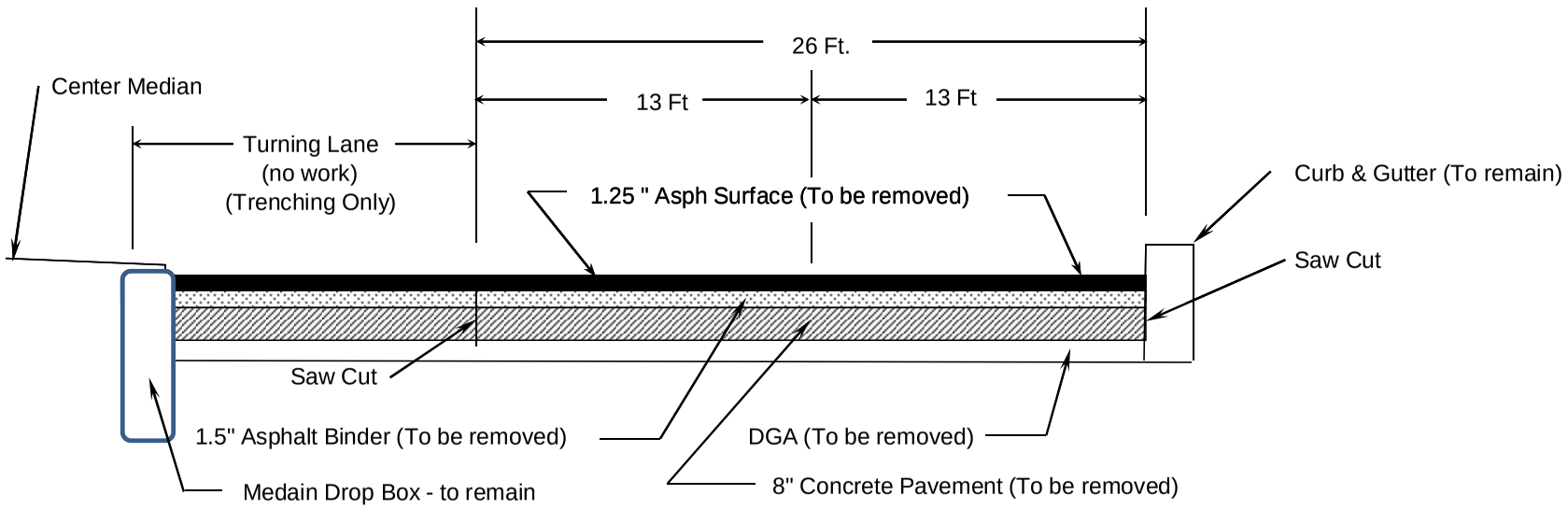

Pavement Removal
US 41 typ

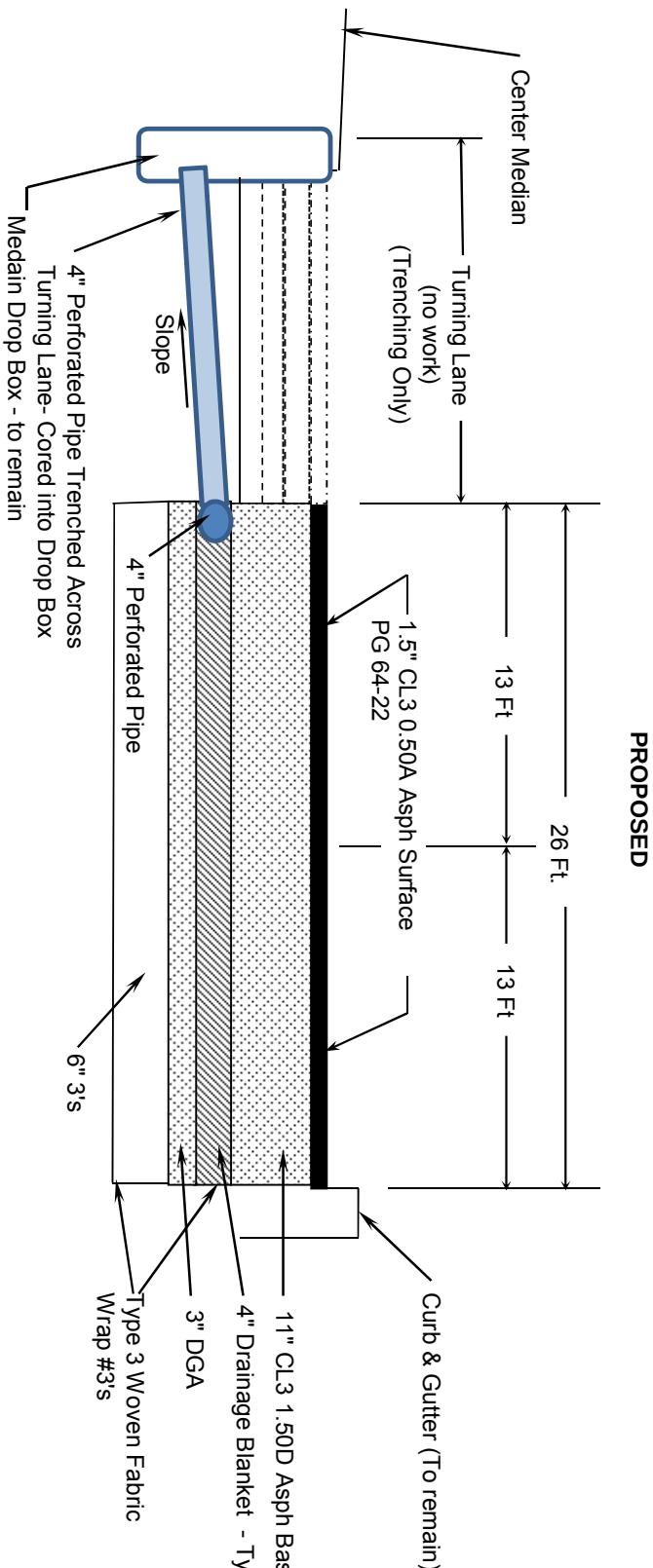
PROPOSED
26 Ft.
13 Ft
13 Ft
Center Median
Turning Lane
(no work)
(Trenching Only)
1.5" CL3 0.50A Asph Surface
PG 64-22
Curb & Gutter (To remain)
11" CL3 1.50D Asph Base PG 64-22
4" Drainage Blanket - Type II - ASPH
3" DGA
Type 3 Woven Fabric
Wrap #3's
6" 3's
4" Perforated Pipe
Slope
4" Perforated Pipe Trenched Across
Turning Lane- Cored into Drop Box
Medain Drop Box - to remain

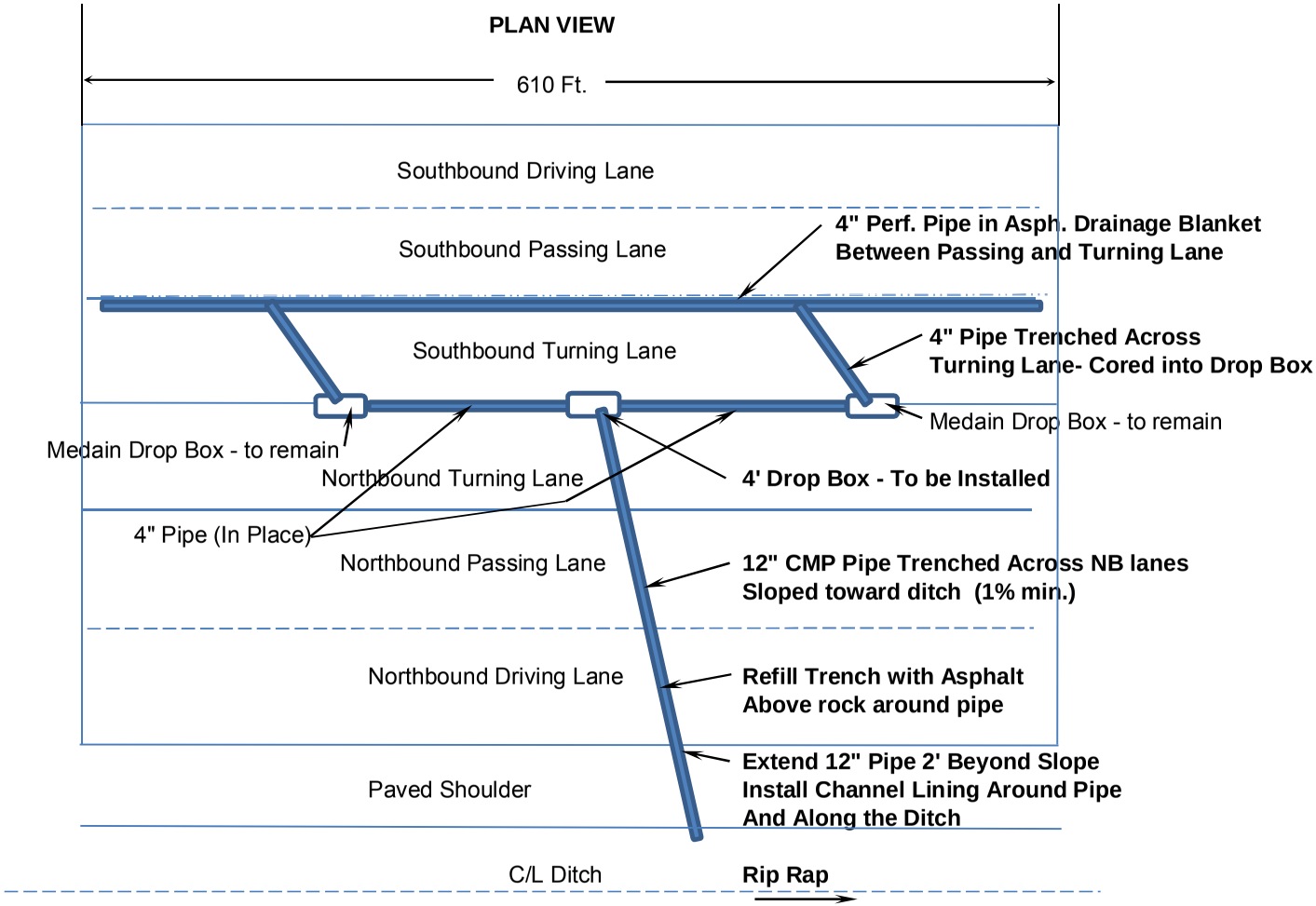
PLAN VIEW
610 Ft.
Southbound Driving Lane
Southbound Passing Lane
4" Perf. Pipe in Asph. Drainage Blanket
Between Passing and Turning Lane
Southbound Turning Lane
4" Pipe Trenched Across
Turning Lane- Cored into Drop Box
Medain Drop Box - to remain
Medain Drop Box - to remain
Northbound Turning Lane
4' Drop Box - To be Installed
4" Pipe (In Place)
Northbound Passing Lane
12" CMP Pipe Trenched Across NB lanes
Sloped toward ditch (1% min.)
Northbound Driving Lane
Refill Trench with Asphalt
Above rock around pipe
Extend 12" Pipe 2' Beyond Slope
Install Channel Lining Around Pipe
And Along the Ditch
Paved Shoulder
C/L Ditch
Rip Rap

TYPICAL

FE01-051-0041-015-020
HENDERSON COUNTY
Barrett BLVD

EXISTING

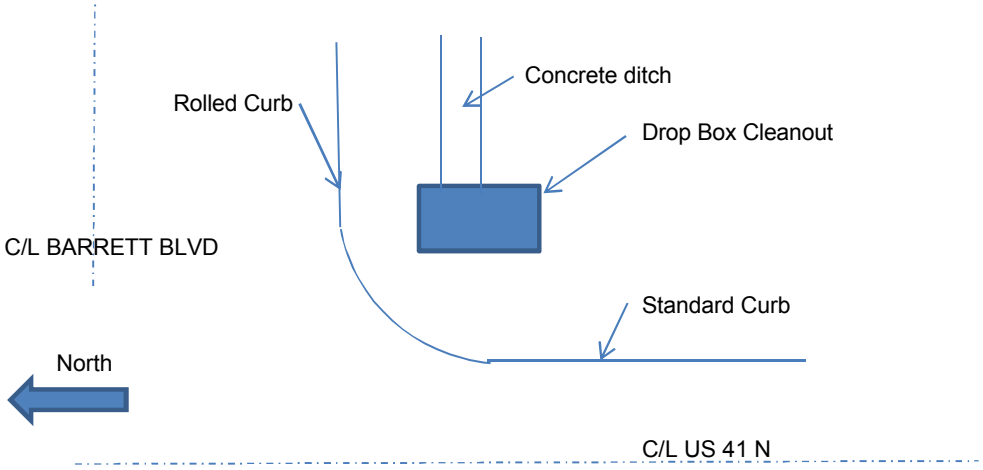

PROPOSED

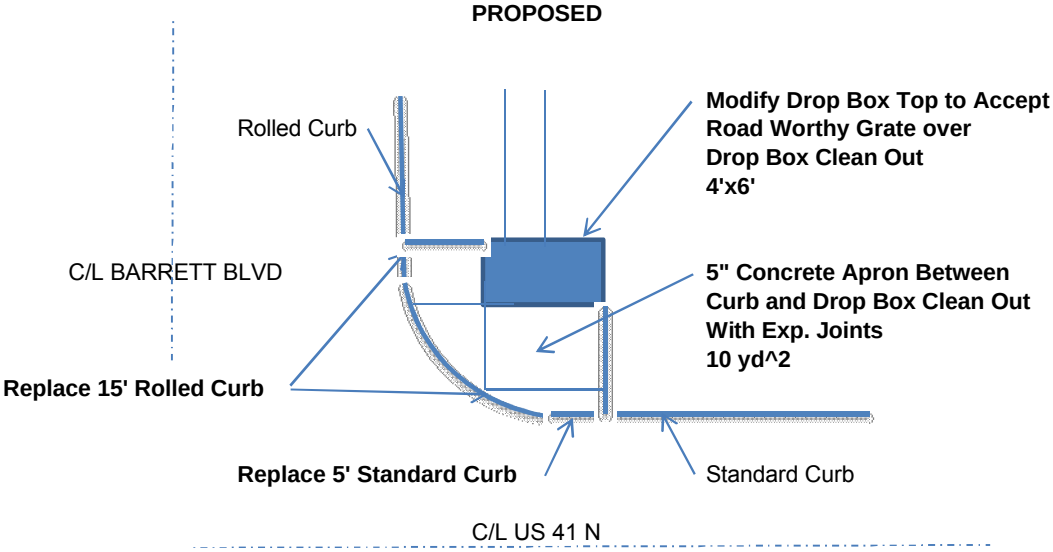

TYPICAL
FE01-051-0041-015-020
HENDERSON COUNTY
GABION BASKET WALL

Elevation View

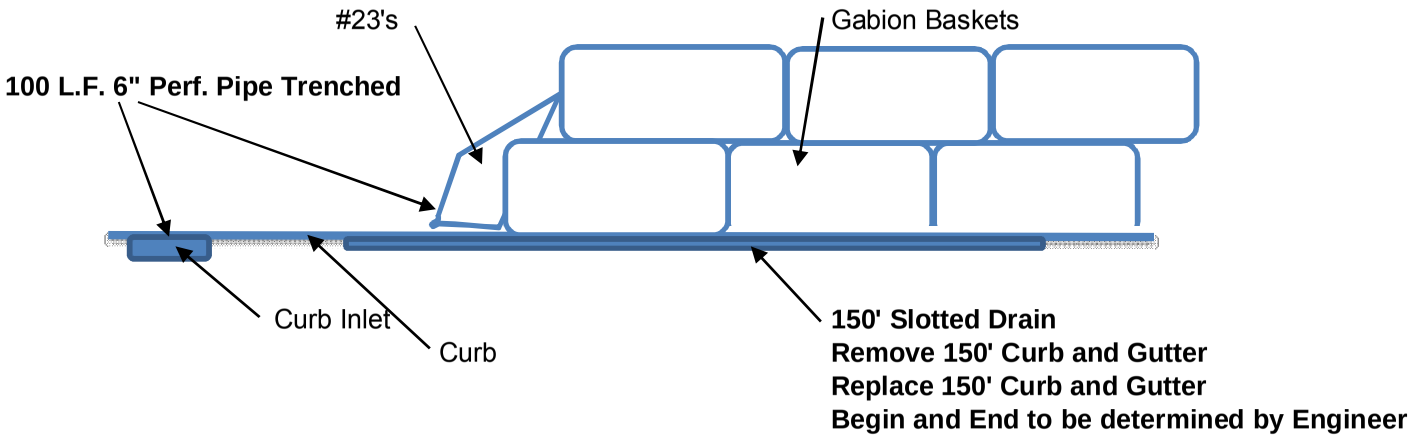

Plan View

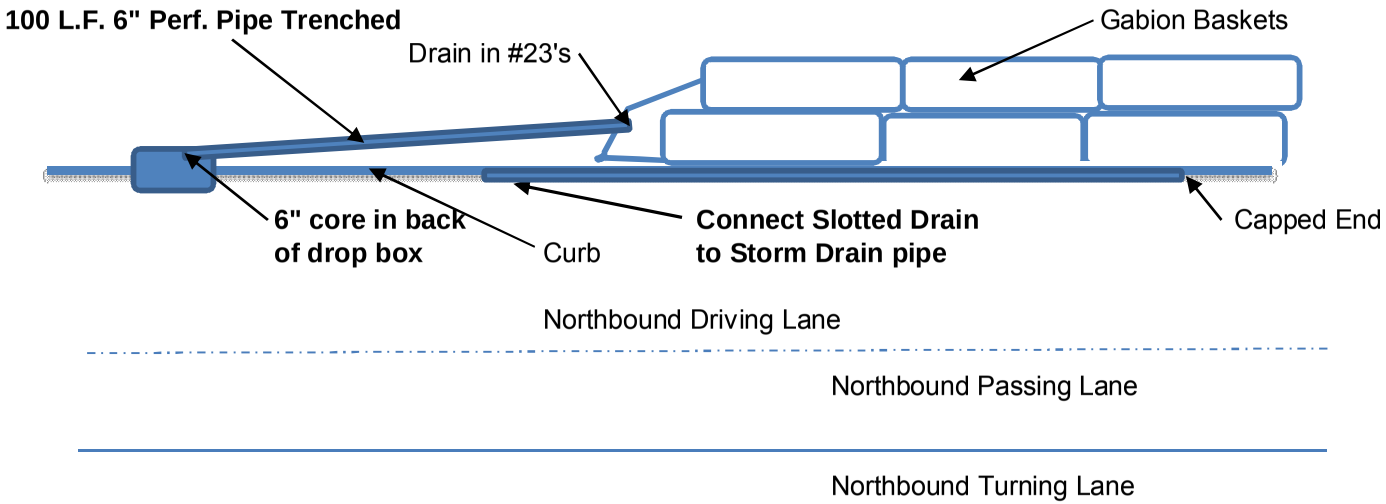

BARRETT BOULEVARD

BARRETT BOULEVARD
THORNTON'S
ICE

BARRETT BOULEVARD

Site Drawing
Henderson Co., US 41, STA. B22, (MP 16.42)
Figure 1

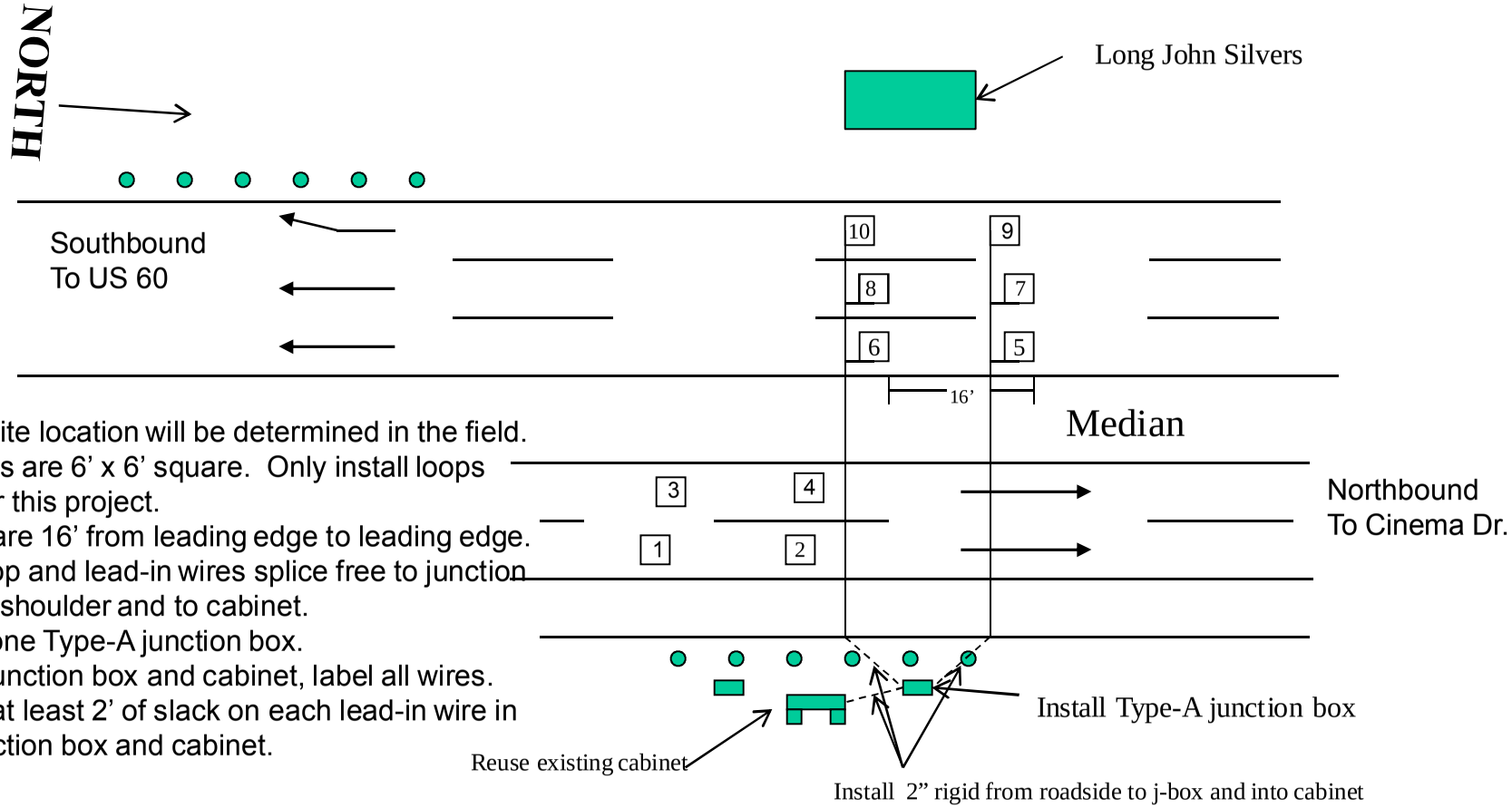

Exact site location will be determined in the field.
All loops are 6' x 6' square. Only install loops 5-10 for this project.
Loops are 16' from leading edge to leading edge.
Run loop and lead-in wires splice free to junction box on shoulder and to cabinet.
Install one Type-A junction box.
In the junction box and cabinet, label all wires.
Leave at least 2' of slack on each lead-in wire in the junction box and cabinet.

DRAWING NOT TO SCALE

1/4/2007

DIVISION OF PLANNING

STANDARD DETAILS FOR INSTALLATION OF TRAFFIC COUNTING INDUCTANCE LOOPS AND AXLE SENSORS

DRAWINGS ARE NOT TO SCALE

4/2/2010

Rev. 3/10

Junction Box Type 6"x 6"x 4" Detail

Figure 2a

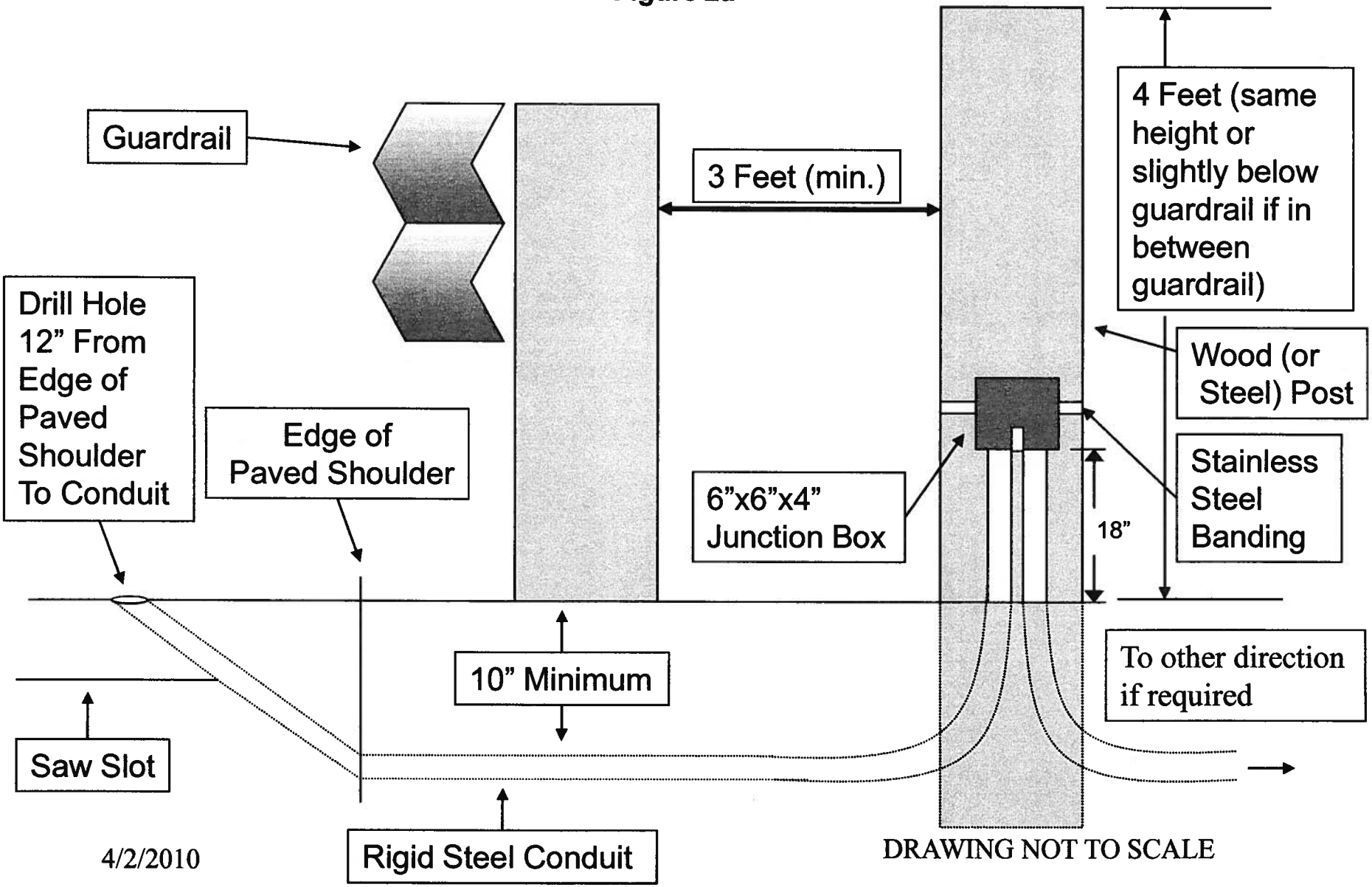

4/2/2010

DRAWING NOT TO SCALE

Junction Box Type 10"x 8"x 4" Detail

Figure 2b

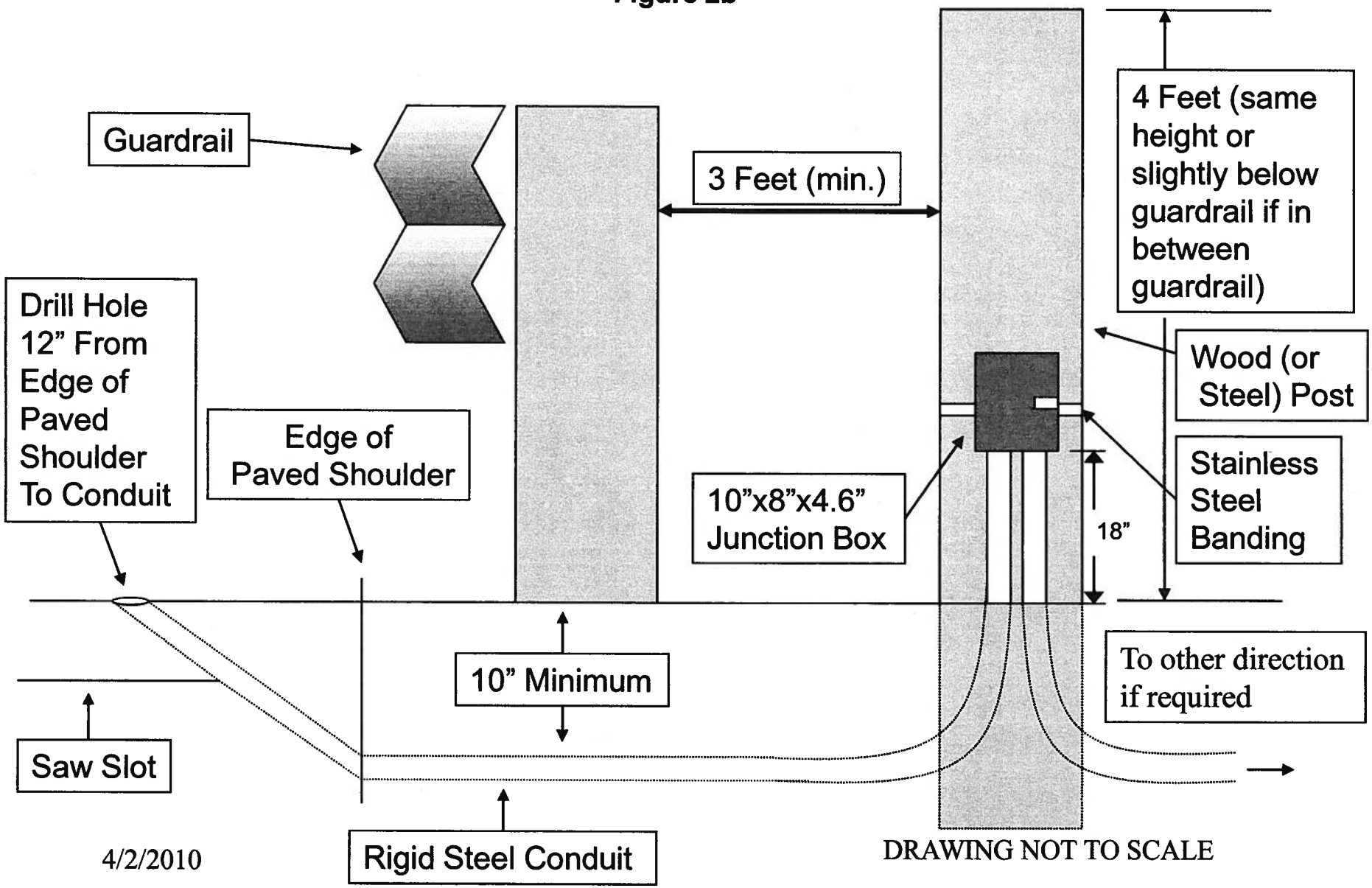

4/2/2010

DRAWING NOT TO SCALE

Junction Box Type 10"x 8"x 4" Detail

Figure 2c

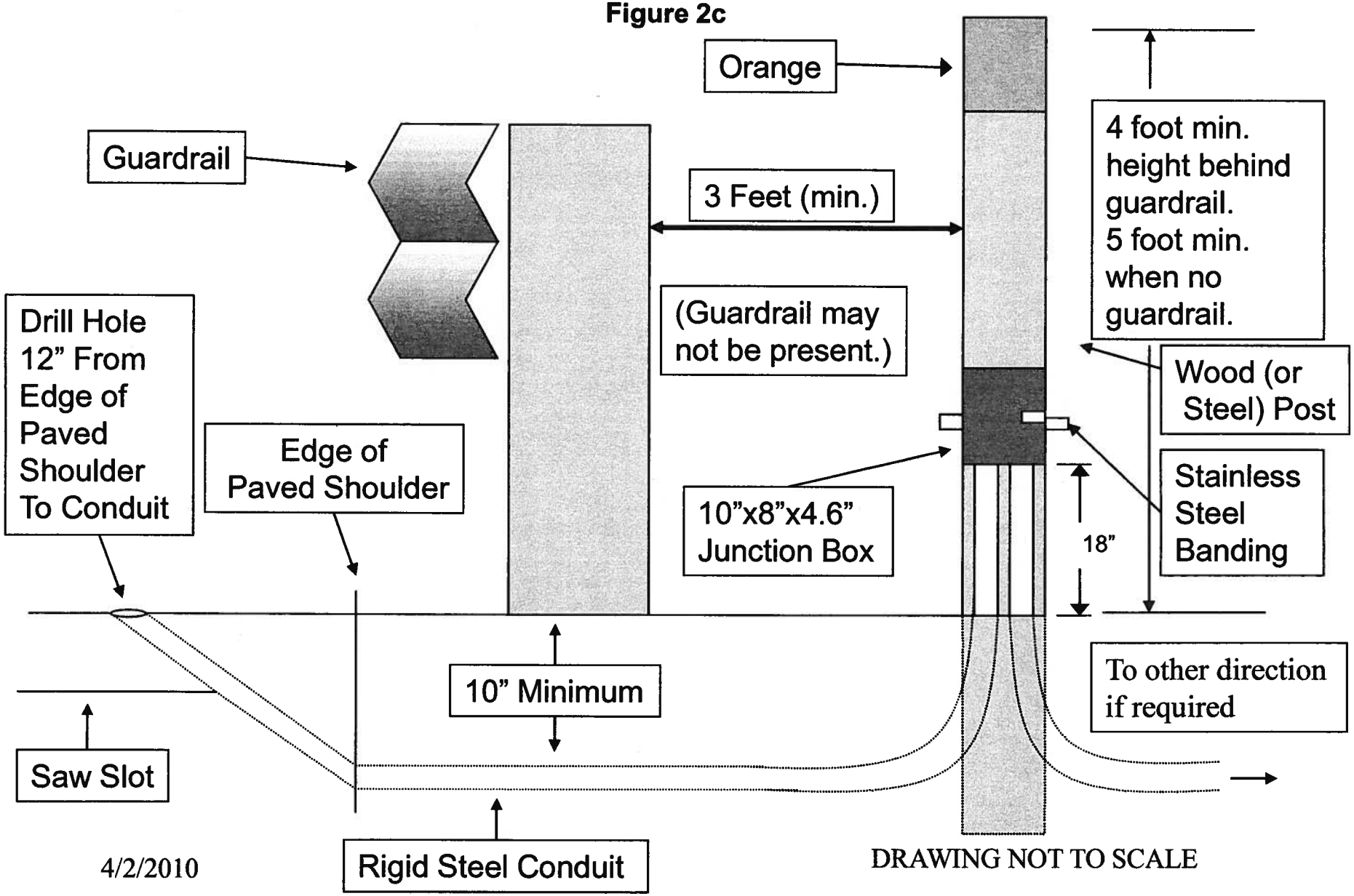

4/2/2010

Junction Box Type A Installation

Figure 3a

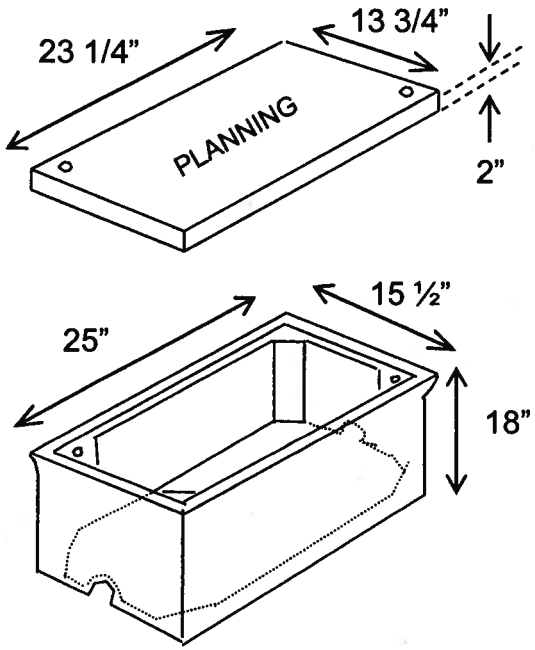

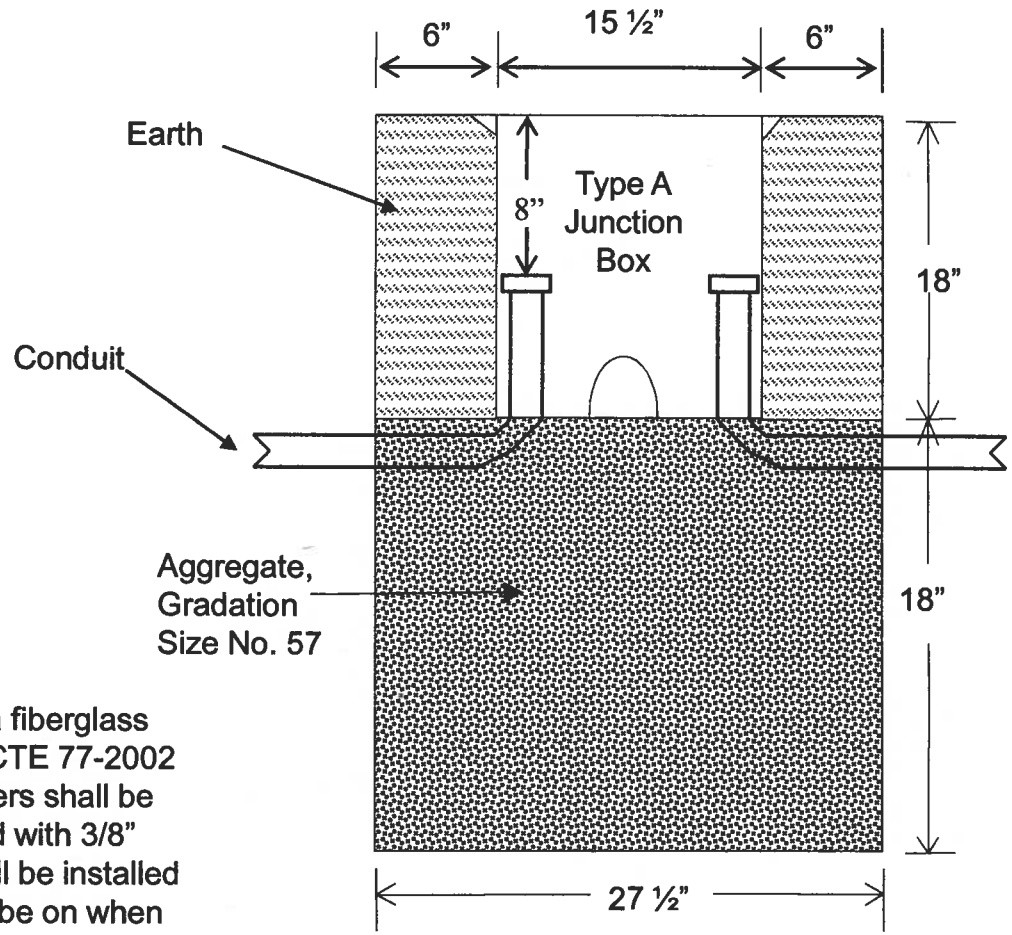

Junction box shall be constructed of a fiberglass reinforced polymer concrete, ANSI/SCTE 77-2002 Tier 15 style or approved equal. Covers shall be marked "PLANNING" and be attached with 3/8" stainless hex bolts. Junction box shall be installed flush with ground line. Covers should be on when filling in around the box.

4/2/2010

DRAWING NOT TO SCALE

Junction Box Type B Installation

Figure 3b

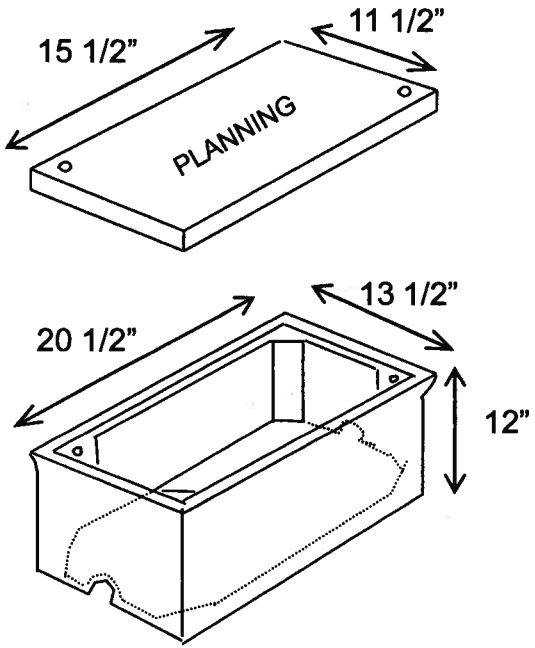

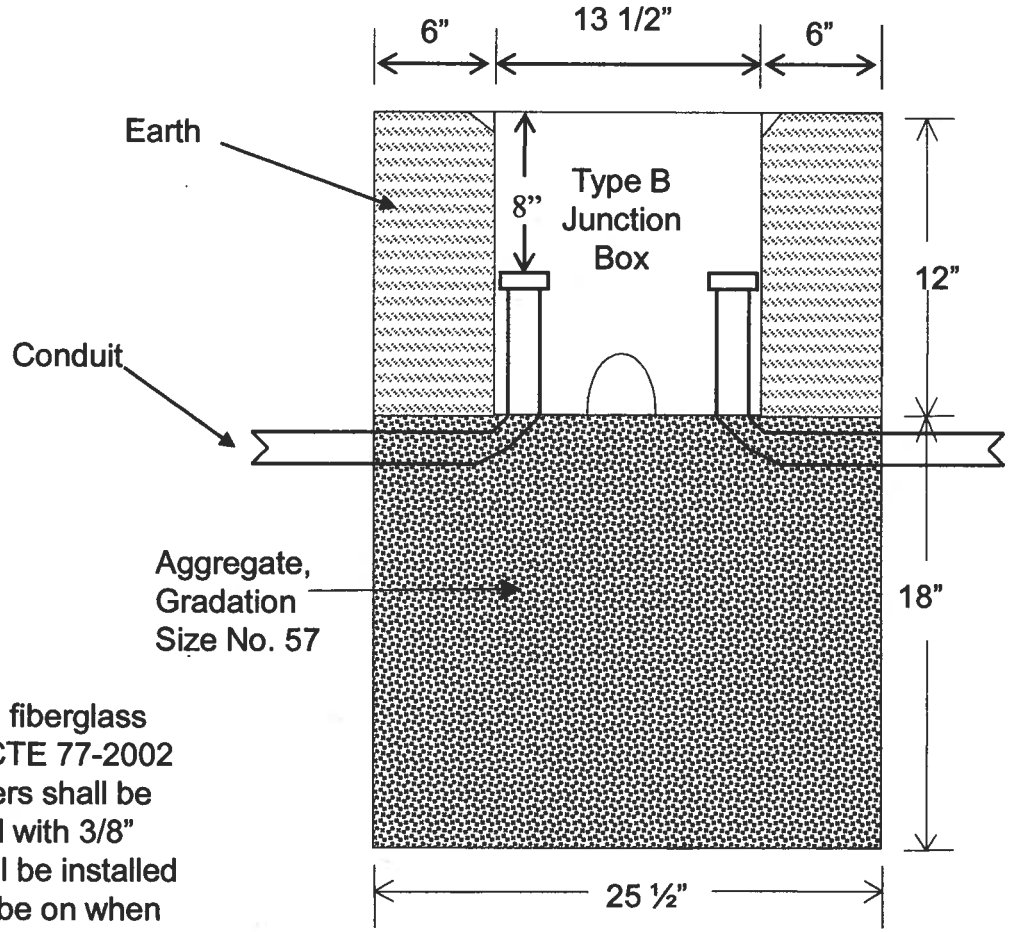

Junction box shall be constructed of a fiberglass reinforced polymer concrete, ANSI/SCTE 77-2002 Tier 15 style or approved equal. Covers shall be marked "PLANNING" and be attached with 3/8" stainless hex bolts. Junction box shall be installed flush with ground line. Covers should be on when filling in around the box.

4/2/2010

DRAWING NOT TO SCALE

Junction Box Type C Installation

Figure 3c

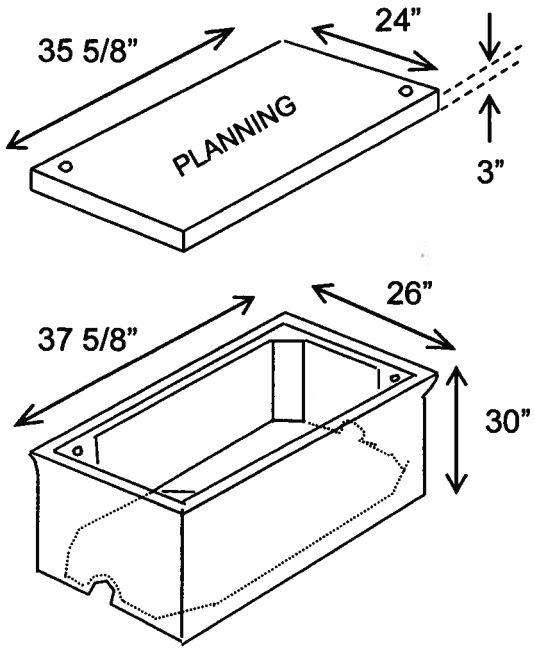

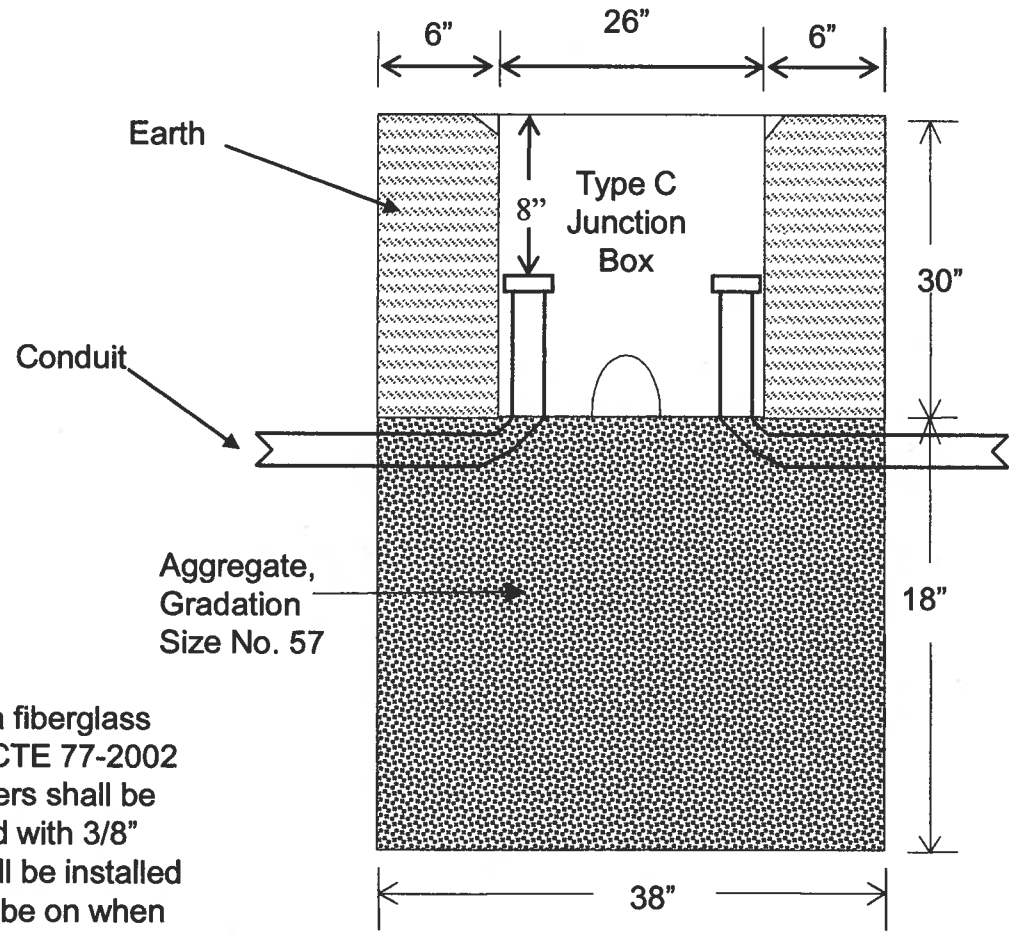

Junction box shall be constructed of a fiberglass reinforced polymer concrete, ANSI/SCTE 77-2002 Tier 15 style or approved equal. Covers shall be marked "PLANNING" and be attached with 3/8" stainless hex bolts. Junction box shall be installed flush with ground line. Covers should be on when filling in around the box.

4/2/2010

DRAWING NOT TO SCALE

Loop Installation Instructions

Loop Installation in Existing Roadways

Figure 4

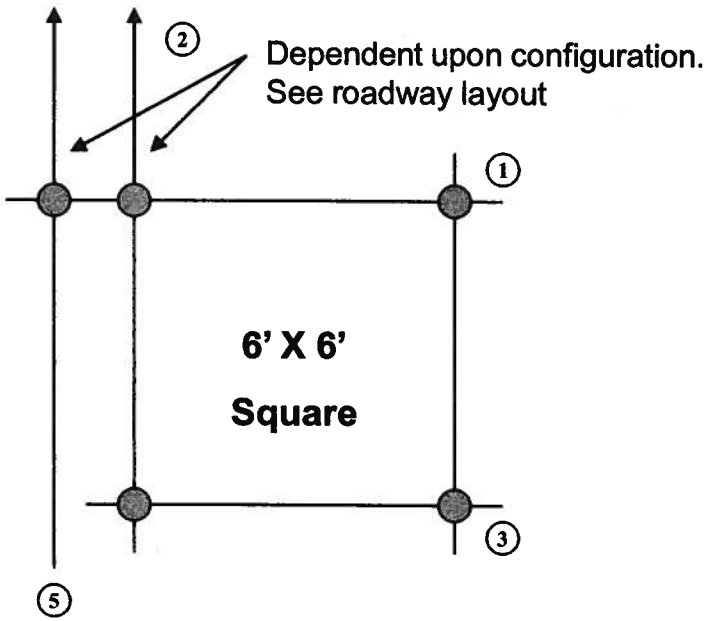

Saw Slot Plan

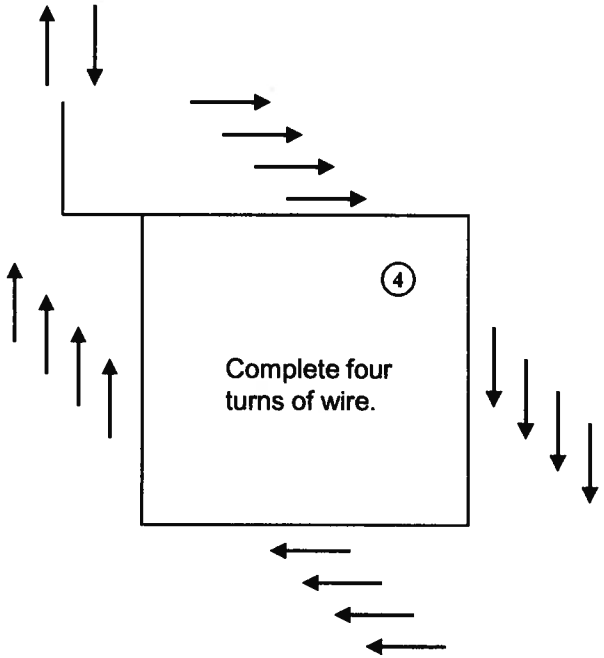

Loop Wiring Plan

Notes:

1. Overlap cuts so that slots are full depth at corners.
2. Configuration is dependent upon loop layout.
3. Drill 1.5" hole in each corner to prevent sharp bends in the wire.
4. Unless denoted otherwise, all loops are 6' x 6' square, positioned in center of lane with 4 turns of 14 AWG loop wire.
5. The distance between adjacent loops is 6' for 12' lanes, 5.5' for 11' lanes, etc. It cannot be less than the loop is wide.

4/2/2010

Loop Installation in Roadway

Figure 5

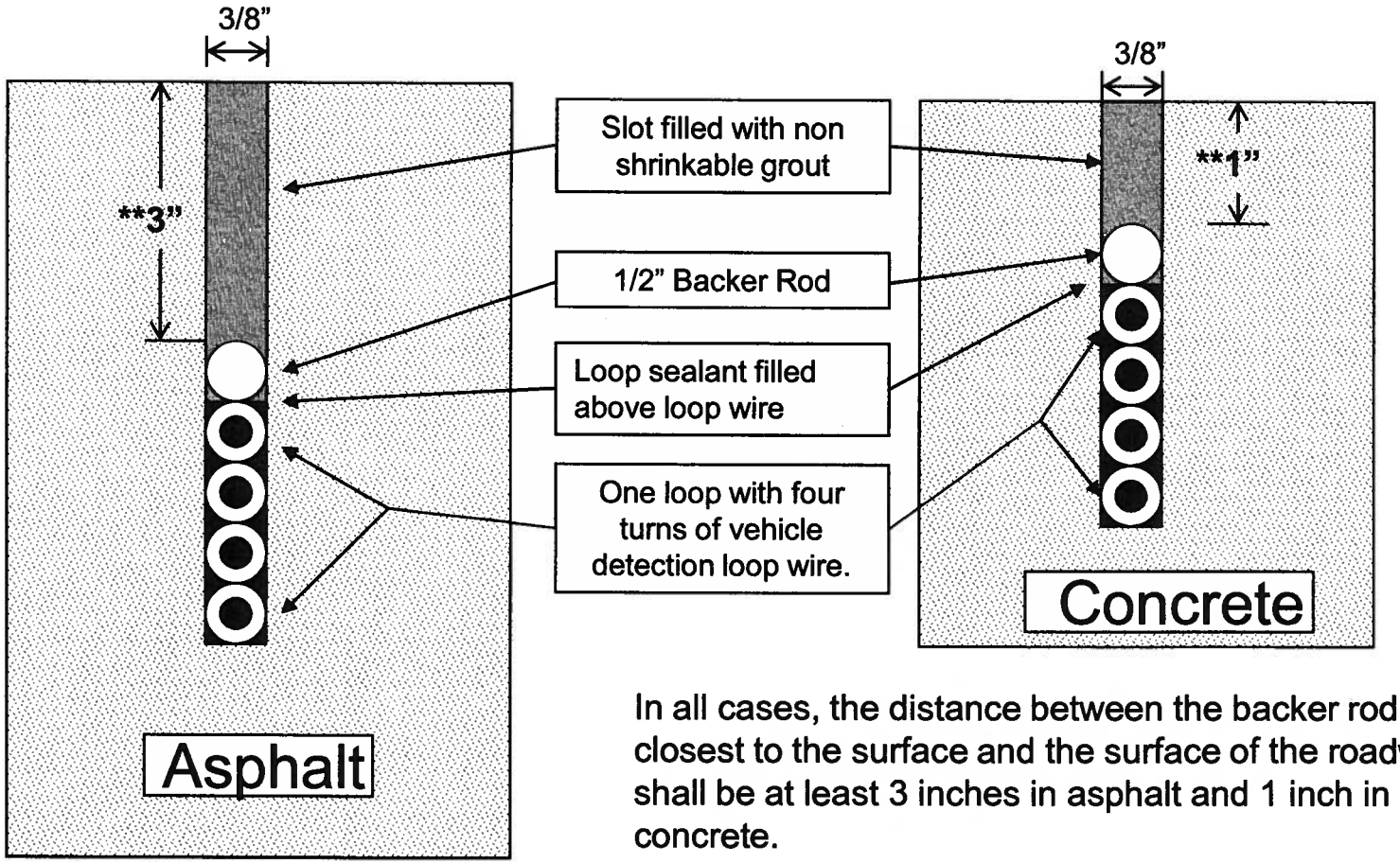

In all cases, the distance between the backer rod closest to the surface and the surface of the roadway shall be at least 3 inches in asphalt and 1 inch in concrete.

**Saw slot level shall be lowered at edge of roadway to meet the conduit level.

4/2/2010

DRAWING NOT TO SCALE

Loop Characteristics

Figure 6

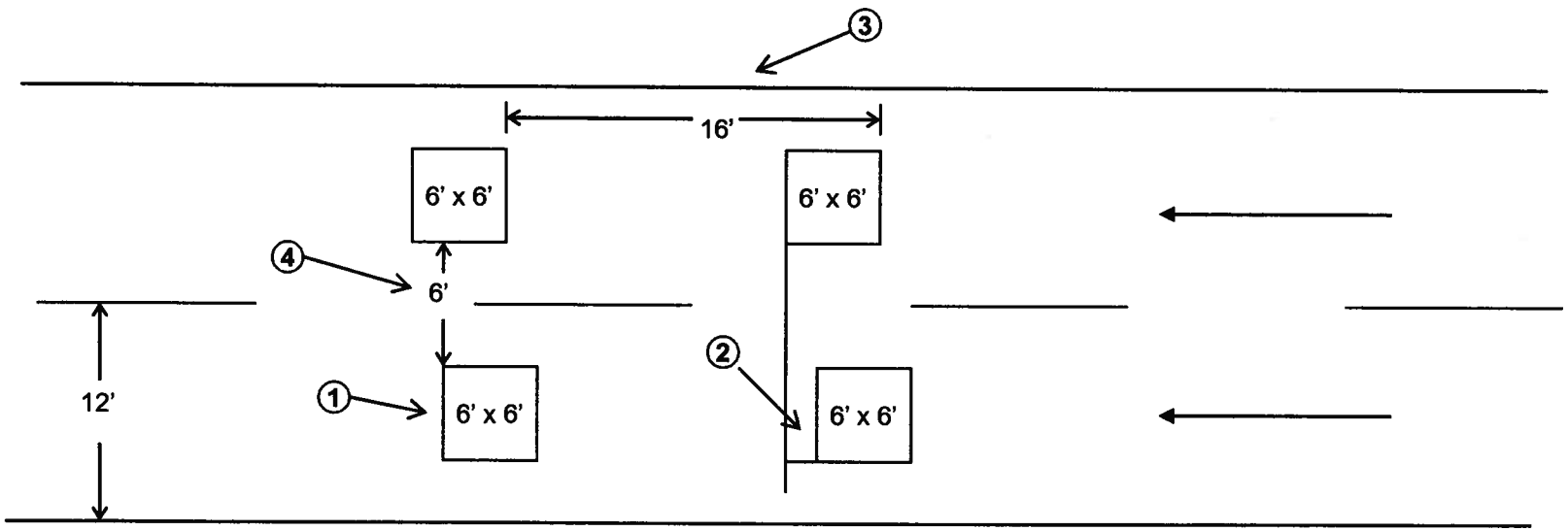

1. Unless denoted otherwise, all loops are 6' x 6' square, positioned in center of lane with 4 turns of 14 AWG loop wire.
2. Minimum 12" between loop and lead-ins. Lead-ins should be on the trailing edge of the loop.
3. If two loops are installed in a lane, space loops 16' from leading edge to leading edge unless denoted otherwise.
4. This distance is typically 6' for 12' lanes, 5.5' for 11' lanes, etc. It cannot be less than the loop is wide.

4/2/2010

Galvanized Steel Cabinet and Post Installation

Figure 7a

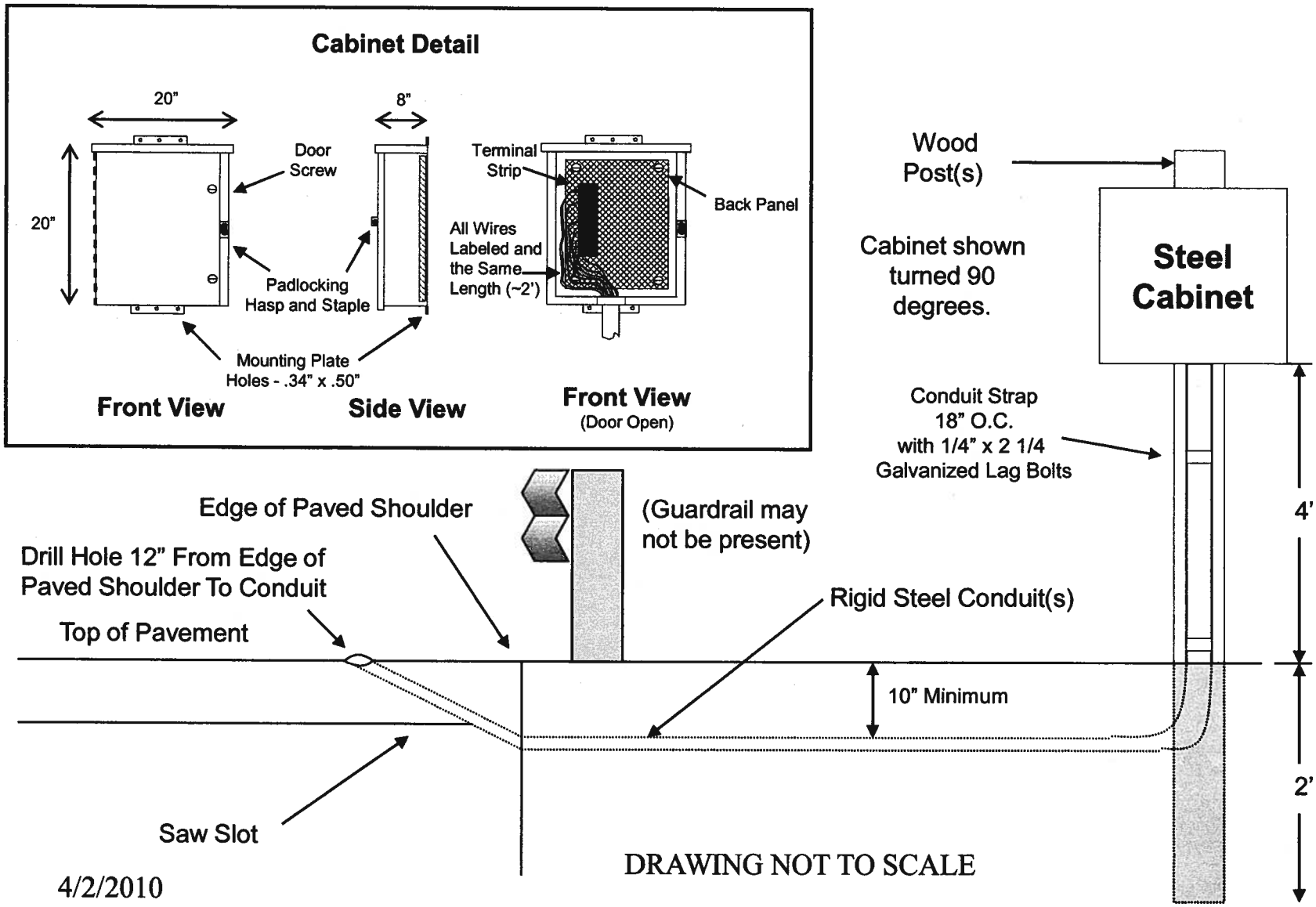

Galvanized Steel Cabinet and Post Installation

Figure 7b

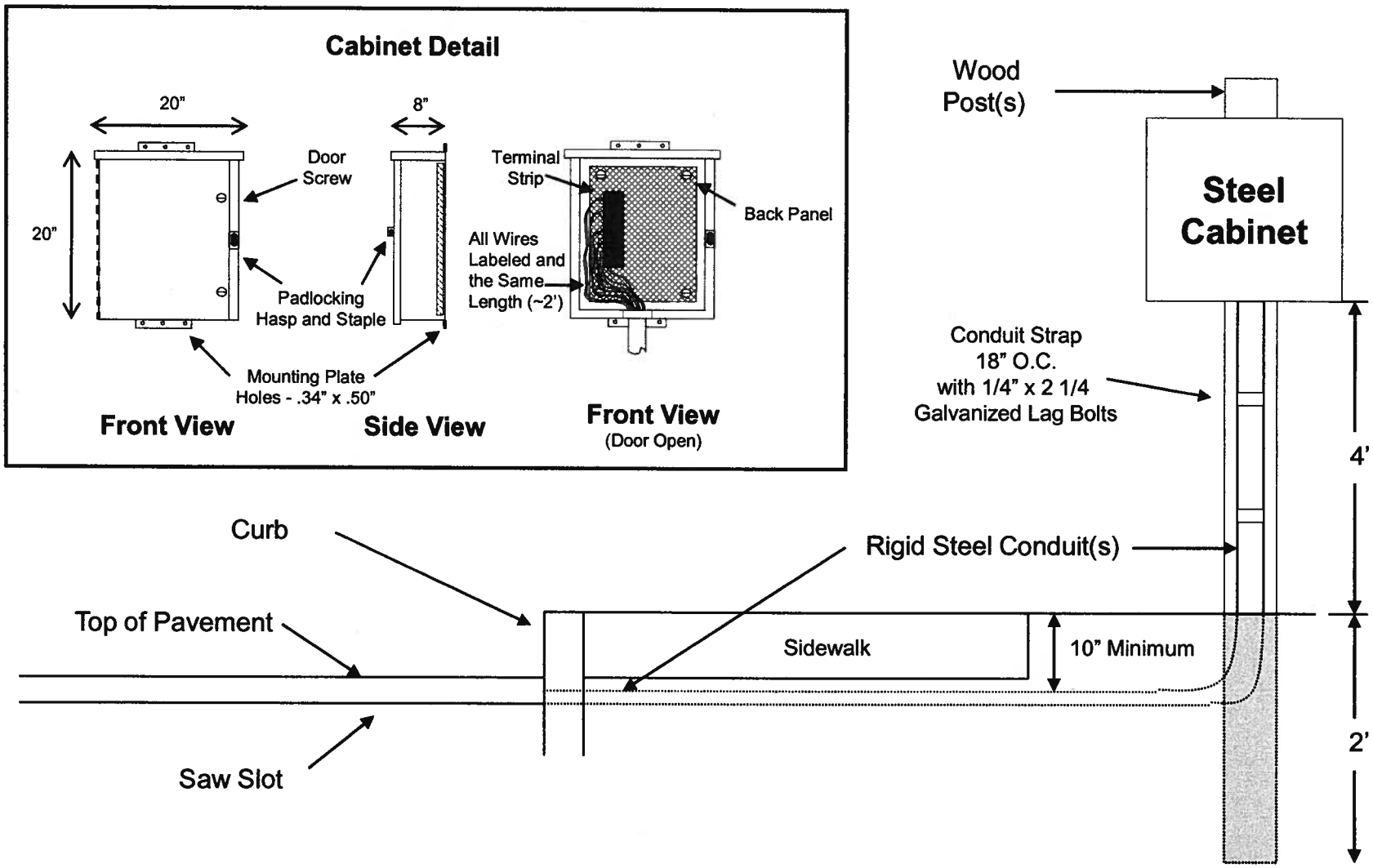

DRAWING NOT TO SCALE

4/2/2010

Galvanized Steel Cabinet and Post Installation

Figure 7c

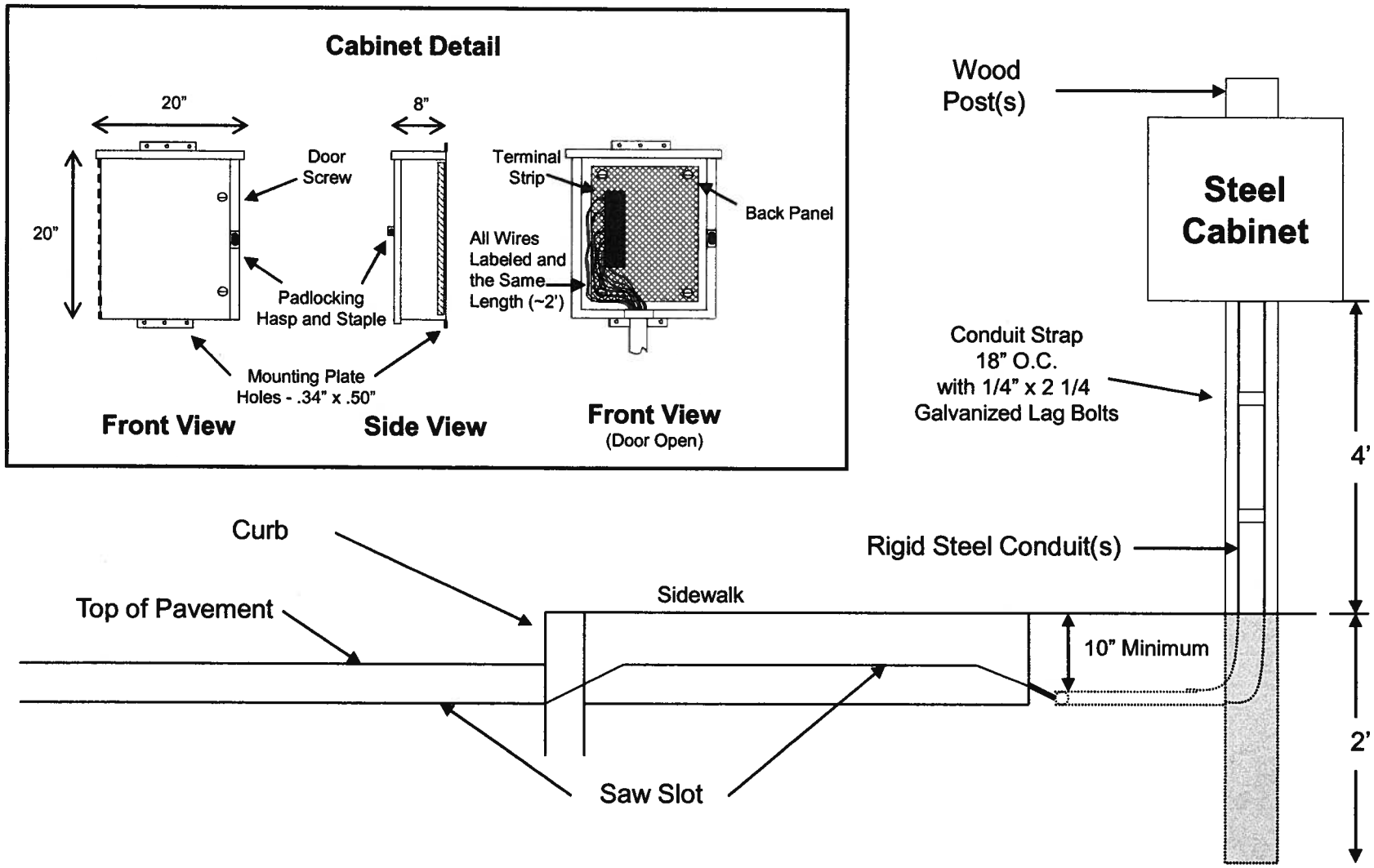

DRAWING NOT TO SCALE

4/2/2010

Cabinet Type G

Figure 8

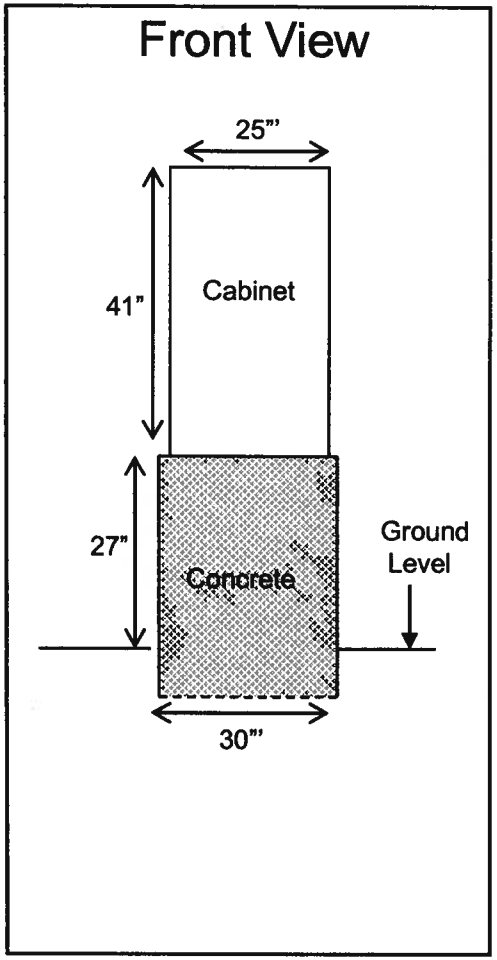

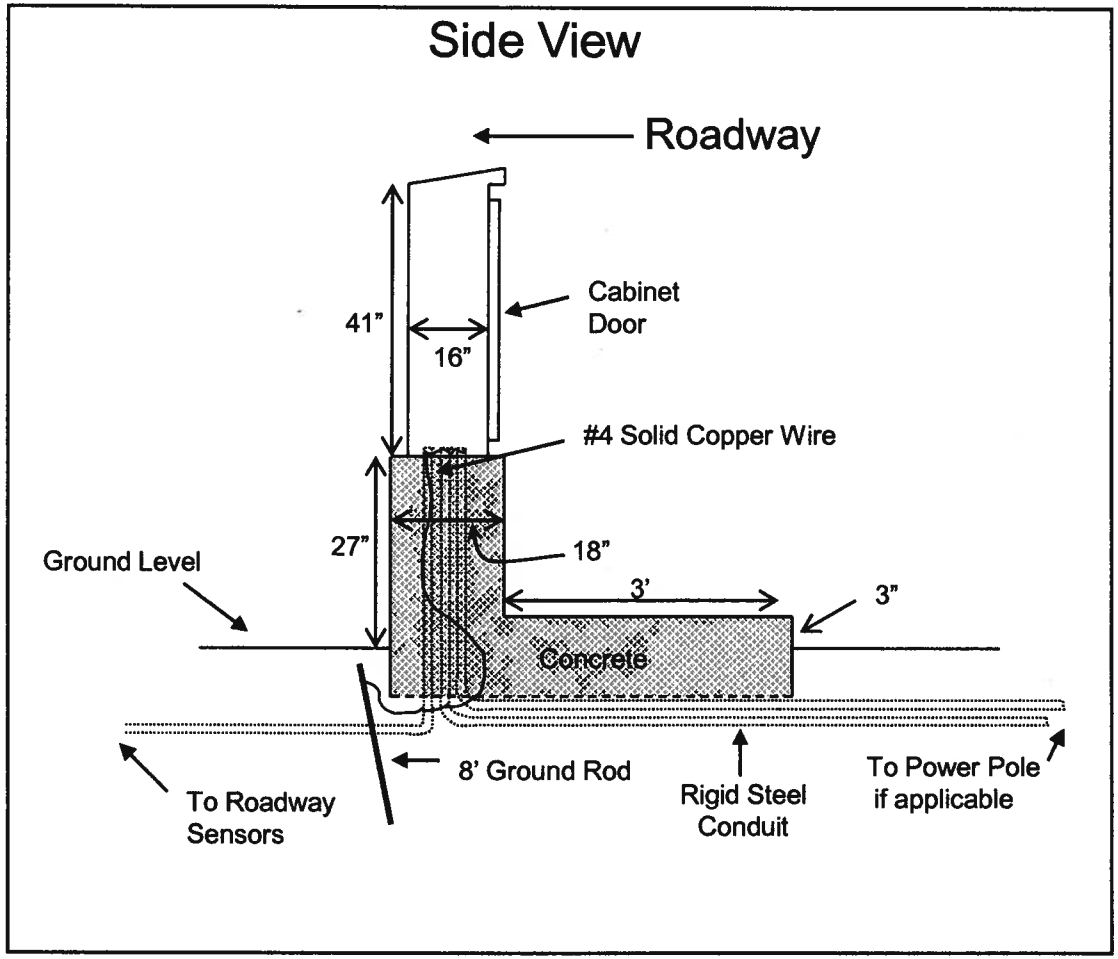

DRAWING NOT TO SCALE

4/2/2010

Base Mounted 170 Cabinet Detail

Figure 9a

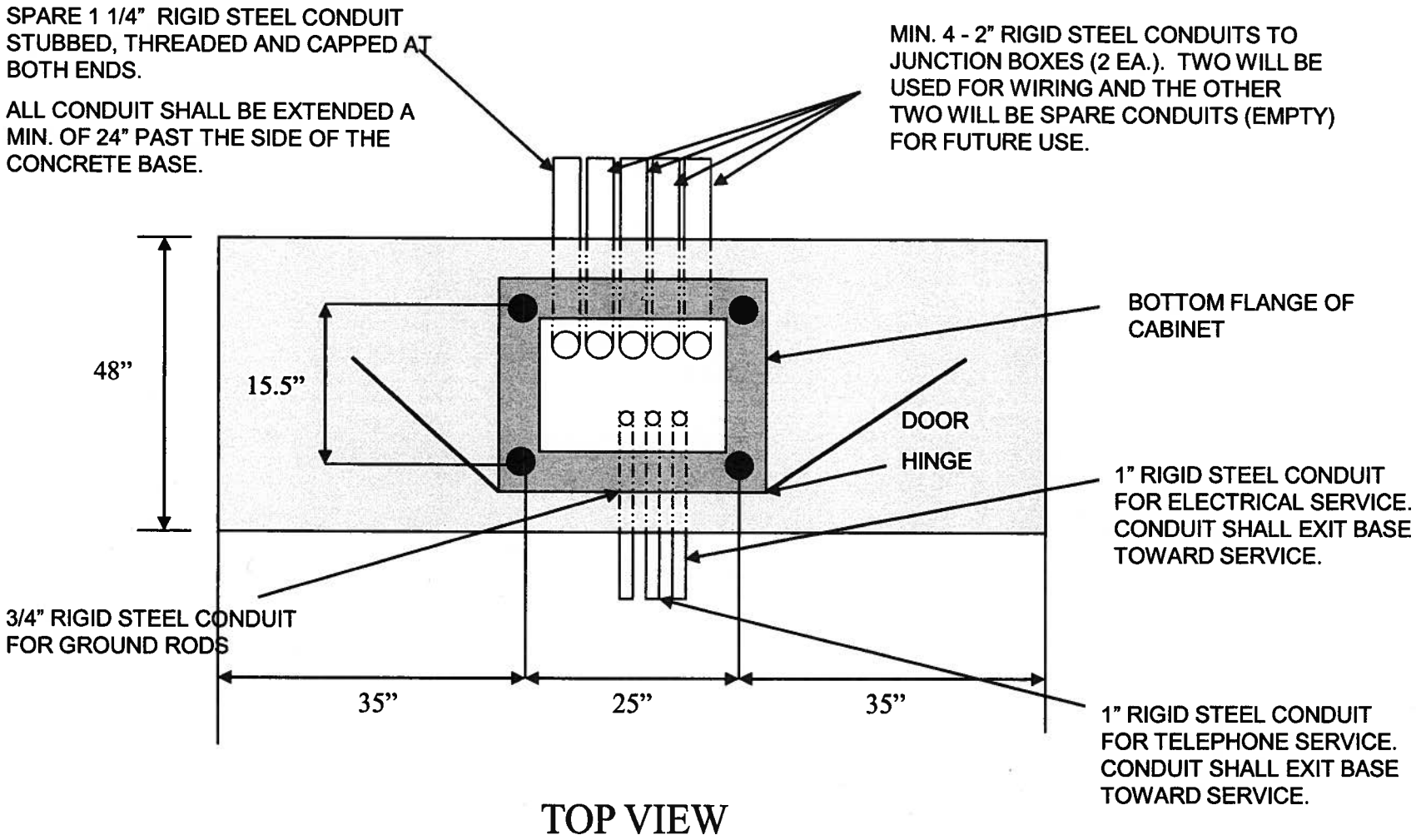

TOP VIEW

4/2/2010

DRAWING NOT TO SCALE

Base Mounted 170 Cabinet Detail

Figure 9b

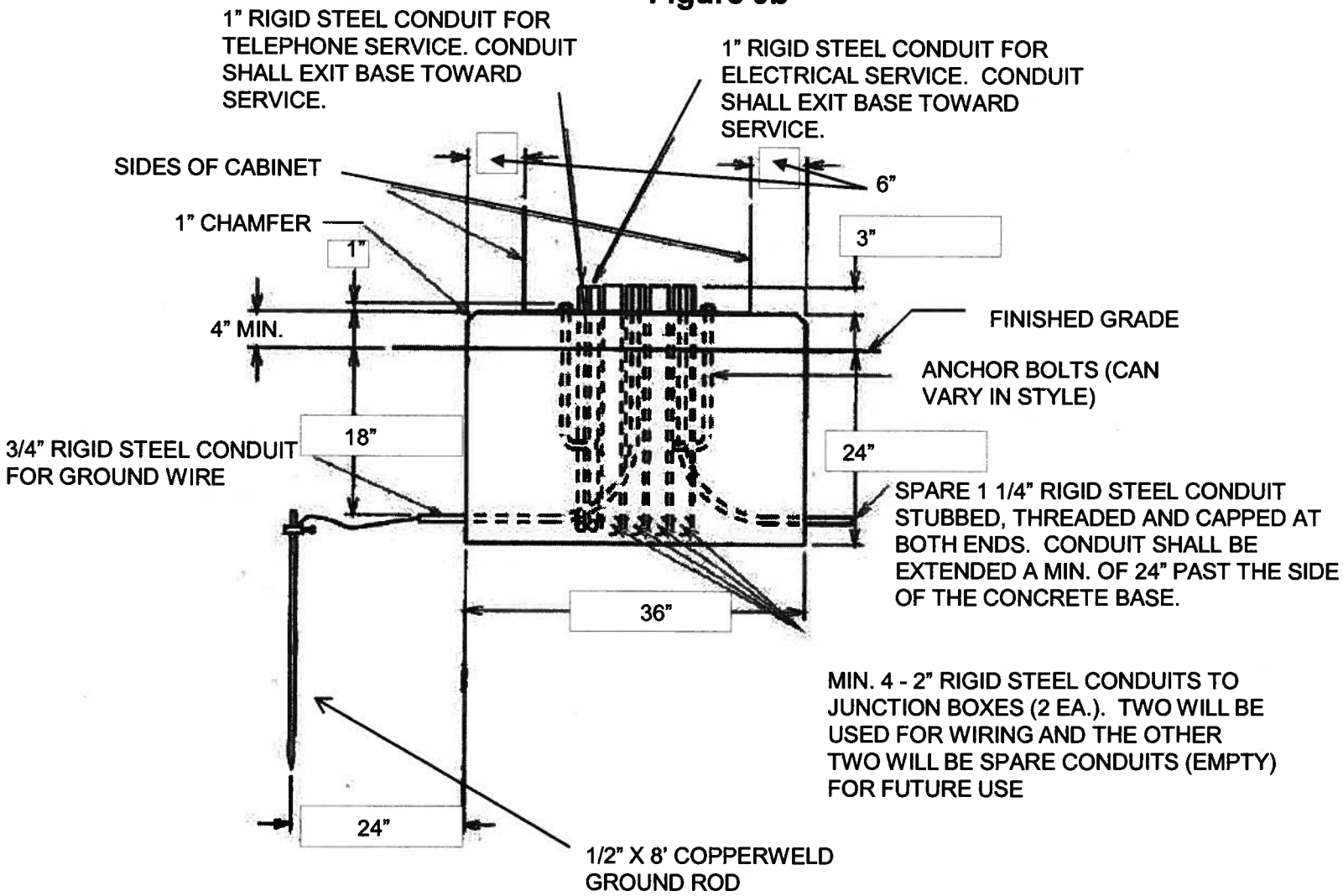

SIDE VIEW

4/2/2010

DRAWING NOT TO SCALE

PART II

SPECIFICATIONS AND STANDARD DRAWINGS

SPECIFICATIONS REFERENCE

Any reference in the plans or proposal to the *Standard Specifications for Road and Bridge Construction, Edition of 2004,* and *Standard Drawings, Edition of 2000* are superseded by *Standard Specifications for Road and Bridge Construction, Edition of 2008* and *Standard Drawings, Edition of 2003 with the 2008 Revision.*

Supplemental Specifications to The Standard Specifications for Road and Bridge Construction, 2008 Edition

(Effective with the August 27, 2010 Letting)

SUBSECTION: **REVISION:**	101.02 Abbreviations. Insert the following abbreviation and text into the section: KEPSC Kentucky Erosion Prevention and Sediment Control
SUBSECTION: **REVISION:**	101.03 Definitions. Replace the definition for Specifications – *Special Provisions* with the following: Additions and revisions to the Standard and Supplemental Specifications covering conditions peculiar to and individual project.
SUBSECTION: **REVISION:**	102.03 Contents of the Bid Proposal Form. Replace the first sentence of the first paragraph with the following: The Bid Proposal form will be available on the Department internet website (http://transportation.ky.gov/contract/). Delete the second paragraph. Delete the last paragraph.
SUBSECTION: **REVISION:**	102.04 Issuance of Bid Proposal Form. Replace Heading with the following: 102.04 Bidder Registration. Replace the first sentence of the first paragraph with the following: The Department reserves the right to disqualify or refuse to place a bidder on the eligible bidder's list for a project for any of the following reasons: Replace the last sentence of the subsection with the following: The Department will resume placing the bidder on the eligible bidder's list for projects after the bidder improves his operations to the satisfaction of the State Highway Engineer.
SUBSECTION: **REVISION:**	102.06 Examination of Plans, Specifications, Special Provisions, Special Notes, and Site of Work. Replace the first paragraph with the following: Examine the site of the proposed work, the Bid Proposal, Plans, specifications, contract forms, and bulletins and addendums posted to the Department's website and the Bid Express Bidding Service Website before submitting the Bid Proposal. The Department considers the submission of a Bid Proposal prima facie evidence that the bidder has made such examination and is satisfied as to the conditions to be encountered in performing the work and as to the requirements of the Contract.
SUBSECTION: **REVISION:**	102.07.01 General. Replace the first sentence with the following: Submit the Bid Proposal on forms furnished on the Bid Express Bidding Service website (www.bidx.com). Replace the first sentence of the third paragraph with the following: Bid proposals submitted shall use an eligible Digital ID issued by Bid Express.

Supplemental Specifications to The Standard Specifications for Road and Bridge Construction, 2008 Edition

(Effective with the August 27, 2010 Letting)

SUBSECTION: **REVISION:**	102.07.02 Computer Bidding. Replace the first paragraph with the following: Subsequent to registering for a specific project, use the Department's Expedite Bidding Program on the internet website of the Department of Highways, Division of Construction Procurement (http://transportation.ky.gov/contract/). Download the bid file from the Bid Express Bidding Service Website to prepare a Bid Proposal for submission to the Department. Submit Bid Proposal electronically through Bid Express Bidding Service. Delete the second and third paragraph.
SUBSECTION: **REVISION:**	102.08 Irregular Bid Proposals. Delete the following from the first paragraph: 4) fails to submit a disk created from the Highway Bid Program. Replace the second paragraph with the following: The Department will consider Bid Proposals irregular and may reject them for the following reasons: 1) when there are unauthorized additions, conditional or alternate bids, or irregularities of any kind which may tend to make the Bid Proposal incomplete, indefinite, or ambiguous as to its meaning; or 2) when the bidder adds any provisions reserving the right to accept or reject an award, or to enter into a Contract pursuant to an award; or 3) any failure to comply with the provisions of Subsection 102.07; or 4) Bid Proposals in which the Department determines that the prices are unbalanced; or when the sum of the total amount of the Bid Proposal under consideration exceeds the bidder's Current Capacity Rating.
SUBSECTION: **REVISION:**	102.09 Bid Proposal Guaranty. Insert the following after the first sentence: Bid Proposals must have a bid proposal guaranty in the amount indicated in the bid proposal form accompany the submittal. A guaranty in the form of a paper bid bond, cashier's check, or certified check in an amount no less than the amount indicated on the submitted electronic bid is required when the electronic bid bond was not utilized with the Bid Express Bidding Service. Paper bid bonds must be delivered to the Division of Construction Procurement prior to the time of the letting.
SUBSECTION: **REVISION:**	102.10 Delivery of Bid Proposals. Replace paragraph with the following: Submit all Bid Proposals prior to the time specified in the Notice to Contractors. All bids shall be submitted electronically using Bid Express Bidding Services. Electronically submitted bids must be done in accordance with the requirements of the Bid Express Bidding Service.
SUBSECTION: **REVISION:**	102.11 Withdrawal or Revision of Bid Proposals. Replace the paragraph with the following: Bid Proposals can be withdrawn in accordance the requirements of the Bid Express Bidding Service prior to the time of the Letting.
SUBSECTION: **REVISION:**	102.13 Public Opening of Bid Proposals. Replace Heading with the following: 102.13 Public Announcement of Bid Proposals. Replace the paragraph with the following: The Department will publicly announce all Bid Proposals at the time indicated in the Notice to Contractors.

Supplemental Specifications to The Standard Specifications for Road and Bridge Construction, 2008 Edition

(Effective with the August 27, 2010 Letting)

SUBSECTION: **REVISION:**	103.02 Award of Contract. Replace the first sentence of the third paragraph with the following: The Department will normally award the Contract within 10 working days after the date of receiving Bid Proposals unless the Department deems it best to hold the Bid Proposals of any or all bidders for a period not to exceed 60 calendar days for final disposition of award.
SUBSECTION: **REVISION:**	105.03 Record Plans. Replace the section with the following: Record Plans are those reproductions of the original Plans on which the accepted Bid Proposal was based and, and signed by a duly authorized representative of the Department. The Department will make these plans available for inspection in the Central Office at least 24 hours prior to the time of opening bids and up to the time of letting of a project or projects. The quantities appearing on the Record Plans are the same as those on which Bid Proposals are received. The Department will use these Record Plans as the controlling plans in the prosecution of the Contract. The Department will not make any changes on Record Plans subsequent to their issue unless done so by an approved contract modification. The Department will make 2 sets of Record Plans for each project, and will maintain one on file in the Central Office and one of file in the District Office. The Department will furnish the Contractor with the following: 1 full size, 2 half size and an electronic file copy of the Record Plans at the Pre-Construction conference.
SUBSECTION: **REVISION:**	105.12 Final Inspection and Acceptance of Work. Insert the following paragraphs after the first paragraph: Notify the Engineer when all electrical items are complete. A notice of the electrical work completion shall be made in writing to the Contractor. Electrical items will be inspected when the electrical work is complete and are not subject to waiting until the project as a whole has been completed. The Engineer will notify the Division of Traffic Operations within 3 days that all electrical items are complete and ready for a final inspection. A final inspection will be completed within 90 days after the Engineer notifies the Division of Traffic Operations of the electrical work completion. Energize all electrical items prior to notifying the Engineer that all electrical items are complete. Electrical items must remain operational until the Division of Traffic Operations has inspected and accepted the electrical portion of the project. Payment for the electrical service is the responsibility of the Contractor from the time the electrical items are energized until the Division of Traffic Operations has accepted the work. Complete all corrective work within 90 calendar days of receiving the original electrical inspection report. Notify the Engineer when all corrective work is complete. The Engineer will notify the Division of Traffic Operations that the corrective work has been completed and the project is ready for a follow-up inspection. Upon re-inspection, if additional corrective work is required, complete within the same 90 calendar day allowance. The Department will not include time between completion of the corrective work and the follow up electrical inspection(s). The 90 calendar day allowance is cumulative regardless of the number of follow-up electrical inspections required. The Department will assume responsibility for the electrical service on a project once the Division of Traffic Operations gives final acceptance of the electrical items on the project. The Department will also assume routine maintenance of those items. Any damage done to accepted electrical work items by other Contractors shall be the responsibility of the Prime Contractor. The Department will not be responsible for repairing damage done by other contractors during the construction of the remaining project. Failure to complete the electrical corrective work within the 90 calendar day allowance will result in penalties assessed to the project. Penalties will be assessed at ½ the rate of liquidated damages established for the contract. Replace the following in the second sentence of the second paragraph: Replace Section 213 with Section 212. Delete the fifth paragraph from the section.

Supplemental Specifications to The Standard Specifications for Road and Bridge Construction, 2008 Edition

(Effective with the August 27, 2010 Letting)

SUBSECTION: **REVISION:**	105.13 Claim Resolution Process. Replace the last sentence of the 3. Bullet with the following: If the Contractor did not submit an as-bid schedule at the Pre-Construction Meeting or a written narrative in accordance with Subsection 108.02, the Cabinet will not consider the claim for delay. Delete the last paragraph from the section.
SUBSECTION: **REVISION:**	106.04 Buy America Requirement. Replace the section with the following: **106.04 Buy America Requirement.** Follow the "Buy America" provisions as required by Title 23 Code of Federal Regulations § 635.410. Except as expressly provided herein all manufacturing processes of steel or iron materials including but not limited to structural steel, guardrail materials, corrugated steel, culvert pipe, structural plate, prestressing strands, and steel reinforcing bars shall occur in the United States of America, including the application of: • Coating, • Galvanizing, • Painting, and • Other coating that protects or enhances the value of steel or iron products. The following are exempt, unless processed or refined to include substantial amounts of steel or iron material, and may be used regardless of source in the domestic manufacturing process for steel or iron material: • Pig iron, • Processed, pelletized, and reduced iron ore material, or • Processed alloys. The Contractor shall submit a certification stating that all manufacturing processes involved with the production of steel or iron materials occurred in the United States. Produce, mill, fabricate, and manufacture in the United States of America all aluminum components of bridges, tunnels, and large sign support systems, for which either shop fabrication, shop inspection, or certified mill test reports are required as the basis of acceptance by the Department. Use foreign materials only under the following conditions: 1) When the materials are not permanently incorporated into the project; or 2) When the delivered cost of such materials used does not exceed 0.1 percent of the total Contract amount or $2,500.00, whichever is greater. The Contractor shall submit to the Engineer the origin and value of any foreign material used.

Supplemental Specifications to The Standard Specifications for Road and Bridge Construction, 2008 Edition

(Effective with the August 27, 2010 Letting)

SUBSECTION: **REVISION:**	106.10 Field Welder Certification Requirements. Insert the following sentence before the first sentence of the first paragraph: All field welding must be performed by a certified welder unless otherwise noted.
SUBSECTION: **REVISION:**	108.02 Progress Schedule. Insert the following prior to the first paragraph: Specification 108.02 applies to all Cabinet projects except the following project types: • Right of Way Mowing and/or Litter Removal • Waterborne Paint Striping • Projects that contain Special Provision 82 • Projects that contain the Special Note for CPM Scheduling Insert the following paragraph after paragraph two: Working without the submittal of a Written Narrative is violation of this specification and additionally voids the Contractor's right to delay claims. Insert the following paragraph after paragraph six: The submittal of bar chart or Critical Path Method schedule does not relieve the Contractor's requirement to submit a Written Narrative schedule. Insert the following at the beginning of the first paragraph of A) Written Narrative.: Submit the Written Narrative Schedule using form TC 63-50 available at the Division of Construction's website (http://www.transportation.ky.gov/construction/ResCenter/ResCenter.htm). Replace Part A) Written Narrative 1. And 2. with the following: 1. Provide a description that includes how the Contractor will sequence and stage the work, how the Contractor plans to maintain and control traffic being specific and detailed, and what equipment and crew sizes are planned to execute the work. 2. Provide a list of project milestones including, if applicable, winter shut-downs, holidays, or special events. The Contractor shall describe how these milestones and other dates effect the prosecution of the work. Also, include start date and completion date milestones for the contract, each project if the contract entails multiple projects, each phase of work, site of work, or segment of work as divided in the project plans, proposal, or as subdivided by the Contractor.

Supplemental Specifications to The Standard Specifications for Road and Bridge Construction, 2008 Edition

(Effective with the August 27, 2010 Letting)

SUBSECTION: **REVISION:**	110.01 Mobilization. Replace paragraph three with the following: Do not bid an amount for Mobilization that exceeds 5 percent of the sum of the total amounts bid for all items in the Bid Proposal, excluding Mobilization, Demobilization, and contingent amounts established for adjustments and incentives. The Department will automatically adjust any Bid Proposals that are in excess of this amount down to 5 percent to compare Bid Proposals and award the Contract. The Department will award a Contract for the actual amount bid when the amount bid for Mobilization is less than 5 percent, or the Department will award the Contract for the adjusted bid amount of 5 percent when the amount bid for Mobilization is greater than 5 percent. If any errors in unit bid prices for other Contract items in a Contractor's Bid Proposal are discovered after bid opening and such errors reduce the total amount bid for all other items, excluding Mobilization, Demobilization, and contingent amounts established for adjustments and incentives, so that the percent bid for Mobilization is larger than 5 percent, the Department will adjust the amount bid for Mobilization to 5 percent of the sum of the corrected total bid amounts.
SUBSECTION: **REVISION:**	110.02 Demobilization. Replace the third paragraph with the following: Bid an amount for Demobilization that is a minimum of $1,000 or 1.5 percent of the sum of the total amounts bid for all other items in the Bid Proposal, excluding Mobilization, Demobilization, and contingent amounts established for adjustments and incentives. The Department will automatically adjust any Bid Proposal that is less than this amount up to $1,000 or 1.5 percent to compare Bid Proposals and award the Contract. The Department will award a Contract for the actual amount bid when the amount bid for demobilization exceeds 1.5 percent, or the Department will award the Contract for the adjusted bid amount when the amount bid for demobilization is less than the minimum of $1,000 or less than 1.5 percent of the sum of the total amounts bid for all other items in the Bid Proposal, excluding Mobilization, Demobilization, and contingent amounts established for adjustments and incentives.
SUBSECTION: **REVISION:**	110.04 Payment. Insert the following paragraph following the demobilization payment schedule (4th paragraph): The Department will withhold an amount equal to $1,000 for demobilization, regardless of the schedule listed above. The $1,000 withheld for demobilization will be paid when the final estimate is paid.
SUBSECTION: **REVISION:**	112.03.01 General Traffic Control. Replace paragraph three with the following: All flaggers shall be trained in current MUTCD flagging procedures. Proof of training must be available for review at the Department's request. Flagging credentials must be current within the last 5 years.
SUBSECTION: **PART:** **REVISION:**	112.03.11 Temporary Pavement Markings. B) Placement and Removal of Temporary Striping. Replace the 2nd sentence of the first paragraph with the following: On interstates and parkways, and other roadways approved by the State Highway Engineer, install pavement striping that is 6 inches in width.
SUBSECTION: **REVISION:**	112.03.12 Project Traffic Coordinator (PTC). Add the following at the end of the subsection: After October 1, 2008 the Department will require the PTC to have successfully completed the applicable qualification courses. Personnel that have not successfully completed the applicable courses by that date will not be considered qualified. Prior to October 1, 2008, conform to Subsection 108.06 A) and ensure the designated PTC has sufficient skill and experience to properly perform the task.

Supplemental Specifications to The Standard Specifications for Road and Bridge Construction, 2008 Edition

(Effective with the August 27, 2010 Letting)

SUBSECTION: 112.03.15 Non-Compliance of Maintain and Control of Traffic.
REVISION: Add the following section:

112.03.15 Non-Compliance of Maintain and Control of Traffic. It is the Contractor's responsibility to conform to the traffic control requirements in the TCP, Proposal, plan sheets, specifications, and the Manual on Uniform Traffic Control Devices.

Unless specified elsewhere in the contract, a penalty will be assessed in the event of non-compliance with Maintain and Control of Traffic requirements. These penalties will be assessed when the Contractor fails to correct a situation or condition of non-compliance with the contract traffic control requirements after being notified by the Engineer. The calculation of accrued penalties for non-compliance will be based upon the date/time of notification by the Engineer.

The amount of the penalty assessed for non-compliance will be determined based upon the work zone duration, as defined by the MUTCD, and will be the greatest of the different calculation methods indicated below:

A) Long-term stationary work that occupies a location more than 3 days.

Correct the non-compliant issue within 24 hours from initial notification by the Engineer. If the issue is not corrected within 24 hours from the initial notification, a penalty for non-compliance will be assessed on a daily basis beginning from the initial notification of non-compliance. The Contractor will be assessed a $1,000 daily penalty or the amount equal to the contract liquidated damages in Section 108.09, whichever of the 2 is greater. The penalty for non-compliance will escalate as follows for continued non-compliance after the initial notification.

3 Days after Notification
$1,500 daily penalty or 1.5 times the contract liquidated damages daily charge rate in Section 108.09, whichever is greater.

7 Days after Notification
$2,000 daily penalty or double the contract liquidated damages daily charge rate in Section 108.09, whichever is greater.

B) Intermediate-term stationary work that occupies a location more than one daylight period up to 3 days, or nighttime work lasting more than 1 hour.

Correct the non-compliant issue within 4 hours from initial notification by the Engineer. If the issue is not corrected within 4 hours from notification, a penalty for non-compliance will be assessed on an hourly basis beginning from the initial notification of non-compliance. The penalty for non-compliance will be assessed at $200 per hour.

C) Short-term stationary is daytime work that occupies a location for more than 1 hour within a single daylight period.

Correct the non-compliant issue within 1 hour from initial notification by the Engineer. If the issue is not corrected within 1 hour from notification, a penalty for non-compliance will be assessed on an hourly basis beginning from the initial notification of non-compliance. The penalty for non-compliance will be assessed at $200 per hour.

If the Contractor remains in violation of the Maintain and Control of Traffic requirements, or if the Department determines it to be in the public's interest, work will be suspended in accordance with Section 108.08 until the deficiencies are corrected. The Department reserves the right to correct deficiencies by any means available and charge the Contractor for labor, equipment, and material costs incurred in emergency situations.

Supplemental Specifications to The Standard Specifications for Road and Bridge Construction, 2008 Edition

(Effective with the August 27, 2010 Letting)

SUBSECTION: **REVISION:**	206.03.02 Embankment Replace the last paragraph with the following: When rock roadbed is specified, construct the upper 2 feet of the embankment according to Subsection 204.03.09 A).
SUBSECTION: **REVISION:**	213.03.03 Inspection and Maintenance. Insert the following paragraph after the second paragraph: When the Contractor is required to obtain the KPDES permit, it is their responsibility to ensure compliance with the inspection and maintenance requirements of the permit. The Engineer will perform verification inspections a minimum of once per month and within 7 days of a ½ inch or greater rainfall event. The Engineer will document these inspections using Form TC 63-61 A. The Engineer will provide copies of the inspection only when improvements to the BMP's are required. Verification inspections performed by the Engineer do not relieve the Contractor of any responsibility for compliance with the KPDES permit. Initiate corrective action within 24 hours of any noted deficiency and complete the work within 5 days.
SUBSECTION: **PART:** **REVISION:**	213.03.05 Temporary Control Measures. E) Temporary Seeding and Protection. Replace the first paragraph with the following: Apply an Annual Rye seed mix at a rate of 100 pounds per acre during the months of March through August. In addition to the Annual Rye, add 10 pounds of German Foxtail-Millet (Setaria italica), when performing temporary seeding during the months of June through August. During the months of September through February, apply Winter Wheat or Rye Grain at a rate of 100 pounds per acre. Obtain the Engineer's approval prior to the application of the seed mixture.
SUBSECTION: **PART:** **REVISION:**	213.03.05 Temporary Control Measures. F) Temporary Mulch. Replace the last sentence with the following: Place temporary mulch to an approximate 2-inch loose depth (2 tons per acre) and anchor it into the soil by mechanically crimping it into the soil surface or applying tackifier to provide a protective cover. Regardless of the anchoring method used, ensure the protective cover holds until disturbance is required or permanent controls are in installed.
SUBSECTION: **REVISION:**	303.05 Payment. Replace the second paragraph of the section with the following: The Department will make payment for Drainage Blanket-Type II (ATDB) according to the Lot Pay Adjustment Schedule for Specialty Mixtures in Section 402.
SUBSECTION: **PART:** **REVISION:**	401.02.04 Special Requirements for Dryer Drum Plants. F) Production Quality Control. Replace the first sentence with the following: Stop mixing operations immediately if, at any time, a failure of the automatic electronic weighing system of the aggregate feed, asphalt binder feed, or water injection system control occurs.

Supplemental Specifications to The Standard Specifications for Road and Bridge Construction, 2008 Edition

(Effective with the August 27, 2010 Letting)

SUBSECTION: 401.02.04 Special Requirements for Dryer Drum Plants.
REVISION: Add the following:

Part G) **Water Injection System.** Provided each system has prior approval as specified in Subsection 402.01.01, the Department will allow the use of water injection systems for purposes of foaming the asphalt binder and lowering the mixture temperature for production of Warm Mix Asphalt (WMA).

Ensure the equipment for water injection meets the following requirements:

1) Injection equipment computer controls are automatically coupled to the plants controls (manual operation is not permitted);
2) Injection equipment has variable controls that introduce water ratios based on production rates of mixtures;
3) Injects water into the flow of asphalt binder prior to contacting the aggregate;
4) Provides alarms on the water injection system that operate when the flow of water is interrupted or deviates from the prescribed water rate.

SUBSECTION: 401.03.01 Preparation of Mixtures.
REVISION: Replace the last sentence of the second paragraph with the following:

Do not use asphalt binder while it is foaming in a storage tank.

SUBSECTION: 401.03.01 Preparation of Mixtures.
REVISION: Replace the third paragraph and Mixing and Laying Temperature table with the following:

Maintain the temperature of the component materials and asphalt mixture within the ranges listed in the following table:

MIXING AND LAYING TEMPERATURES (°F)

Material		Minimum	Maximum
Aggregates		240	330
Aggregates used with Recycled Asphalt Pavement (RAP)		240	—
Asphalt Binders	PG 64-22	230	330
	PG 76-22	285	350
Asphalt Mixtures at Plant (Measured in Truck)	PG 64-22 HMA	250	330
	PG 76-22 HMA	310	350
	PG 64-22 WMA	230	275
	PG 76-22 WMA	250	300
Asphalt Mixtures at Project (Measured in Truck When Discharging)	PG 64-22 HMA	230	330
	PG 76-22 HMA	300	350
	PG 64-22 WMA	210	275
	PG 76-22 WMA	240	300

SUBSECTION: 402.01 Description.
REVISION: Replace the paragraph with the following:

Provide the process control and acceptance testing of all classes and types of asphalt mixtures which may be furnished either as hot mix asphalt (HMA) or warm mix asphalt (WMA) produced with water injection systems.

Supplemental Specifications to The Standard Specifications for Road and Bridge Construction, 2008 Edition

(Effective with the August 27, 2010 Letting)

SUBSECTION REVISION:

402.01.01 Warm Mix Asphalt (WMA) Evaluation and Approval.
Add the following subsection:

402.01.01 Warm Mix Asphalt (WMA) Evaluation and Approval.
The Department will evaluate trial production of WMA by use of a water injection system provided the system is installed according to the manufacturer's requirements and satisfies the requirements of Section 401. Evaluation will include production and placement of WMA to demonstrate adequate mixture quality including volumetric properties and density by Option A as specified in Subsection 402.03.02 D). Do not place WMA for evaluation on Department projects. Provided production and placement operations satisfy the applicable quality levels, the Department will approve WMA production on Department projects using the water injection system as installed on the specific asphalt mixing plant evaluated.

SUBSECTION: REVISION:

402.05.02 Asphalt Mixtures and Mixtures With RAP.
Replace Subsection Title as below:

402.05.02 Asphalt Mixtures, HMA and WMA, Including Mixtures With RAP.

SUBSECTION: REVISION:

402.05.02 Asphalt Mixtures, HMA and WMA, Including Mixtures With RAP.
Replace the paragraph with the following:

The Department will pay for the mixture at the Contract unit bid price and apply a Lot Pay Adjustment for each lot placed based on the degree of compliance with the specified tolerances. Using the appropriate Lot Pay Adjustment Schedule, the Department will assign a pay value for the applicable properties within each sublot and average the sublot pay values to determine the pay value for a given property for each lot. The Department will apply the Lot Pay Adjustment for each lot to a defined unit price of $50.00 per ton. The Department will calculate the Lot Pay Adjustment using all possible incentives and disincentives but will not allow the overall pay value for a lot to exceed 1.00.

SUBSECTION: PART: REVISION:

402.05.02 Asphalt Mixtures, HMA and WMA, Including Mixtures With RAP.
C) Conventional and RAP Mixtures Placed on Shoulders.
Replace title with the following:

HMA, WMA, and RAP Mixtures Placed on Shoulders.

SUBSECTION: PART: REVISION:

402.05.02 Asphalt Mixtures, HMA and WMA, Including Mixtures With RAP.
D) Conventional and RAP Mixtures Placed Monolithically as Asphalt Pavement Wedge.
Replace the title with the following:

HMA, WMA, and RAP Mixtures Placed Monolithically as Asphalt Pavement Wedge.

SUBSECTION: PART: TABLES: REVISION:

402.05.02 Asphalt Mixtures, HMA and WMA, Including Mixtures With RAP.
Lot Pay Adjustment Schedule, Compaction Option A, Base and Binder Mixtures
VMA
Replace the VMA table with the following:

VMA

Pay Value	Deviation From Minimum
1.00	≥ min. VMA
0.95	0.1-0.5 below min.
0.90	0.6-1.0 below min.
(1)	> 1.0 below min.

Supplemental Specifications to The Standard Specifications for Road and Bridge Construction, 2008 Edition

(Effective with the August 27, 2010 Letting)

SUBSECTION: 402.05.02 Asphalt Mixtures, HMA and WMA, Including Mixtures With RAP.
PART: Lot Pay Adjustment Schedule, Compaction Option A, Surface Mixtures
TABLES: VMA
REVISION: Replace the VMA table with the following:

VMA	
Pay Value	Deviation From Minimum
1.00	≥ min. VMA
0.95	0.1-0.5 below min.
0.90	0.6-1.0 below min.
(1)	> 1.0 below min.

SUBSECTION: 402.05.02 Asphalt Mixtures, HMA and WMA, Including Mixtures With RAP.
PART: Lot Pay Adjustment Schedule, Compaction Option B Mixtures
TABLE: VMA
REVISION: Replace the VMA table with the following:

VMA	
Pay Value	Deviation From Minimum
1.00	≥min. VMA
0.95	0.1-0.5 below min.
0.90	0.6-1.0 below min.
(2)	> 1.0 below min.

SUBSECTION: 403.03.03 Preparation of Mixture.
PART: C) Mix Design Criteria.
NUMBER: 1) Preliminary Mix Design.
REVISION: Replace the last two sentences of the paragraph and table with the following:

Complete the volumetric mix design at the appropriate number of gyrations as given in the table below for the number of 20-year ESAL's. The Department will define the relationship between ESAL classes, as given in the bid items for Superpave mixtures, and 20-year ESAL ranges as follows:

		Number of Gyrations		
Class	**ESAL's (millions)**	$N_{initial}$	N_{design}	N_{max}
2	< 3.0	6	50	75
3	3.0 to < 30.0	7	75	115
4	≥ 30.0	8	100	160

SUBSECTION: 403.03.09 Leveling and Wedging, and Scratch Course.
PART: A) Leveling and Wedging.
REVISION: Replace the first sentence of the first paragraph with the following:

Conform to the gradation requirements (control points) of AASHTO M 323 for base, binder, or surface as the Engineer directs.

SUBSECTION: 403.03.09 Leveling and Wedging, and Scratch Course.
PART: B) Scratch Course.
REVISION: Replace the second sentence of the first paragraph with the following:

Conform to the gradation requirements (control points) of AASHTO M 323 for base, binder, or surface as the Engineer directs.

Supplemental Specifications to The Standard Specifications for Road and Bridge Construction, 2008 Edition

(Effective with the August 27, 2010 Letting)

SUBSECTION: **REVISION:**	407.01 DESCRIPTION. Replace the first sentence of the paragraph with the following: Construct a pavement wedge composed of a hot-mixed or warm-mixed asphalt mixture.
SUBSECTION: **REVISION:**	409.01 DESCRIPTION. Replace the first sentence of the paragraph with the following: Use reclaimed asphalt pavement (RAP) from Department projects or other approved sources in hot mix asphalt (HMA) or warm mix asphalt (WMA) provided mixture requirements are satisfied.
SUBSECTION: **REVISION:**	410.01 DESCRIPTION. Delete the second sentence of the paragraph.
SUBSECTION: **REVISION:**	410.03.01 Corrective Work. Replace the last sentence of the paragraph with the following: Provide a final surface comparable to the adjacent pavement that does not require corrective work in respect to texture, appearance, and skid resistance.
SUBSECTION: **PART:** **NUMBER:** **REVISION:**	410.03.02 Ride Quality. B) Requirements. 1) Category A. Replace the last sentence of the first paragraph with the following: At the Department's discretion, a pay deduction of $1200 per 0.1-lane-mile section may be applied in lieu of corrective work.
SUBSECTION: **PART:** **NUMBER:** **REVISION:**	410.03.02 Ride Quality. B) Requirements. 2) Category B. Replace the second and third sentence of the first paragraph with the following: When the IRI is greater than 90 for a 0.1-mile section, perform corrective work, or remove and replace the pavement to achieve the specified IRI. At the Department's discretion, a pay deduction of $750 per 0.1-lane-mile section may be applied in lieu of corrective work.
SUBSECTION: **REVISION:**	410.05 PAYMENT. Add the following sentence to the end of the first paragraph: The sum of the pay value adjustments for ride quality shall not exceed $0 for the project as a whole.
SUBSECTION: **REVISION:**	413.05.02 CL3 SMA BASE 1.00D PG76-22. Insert the following sentence between the first and second sentence of the first paragraph: The Department will calculate the Lot Pay Adjustment using all possible incentives and disincentives but will not allow the overall pay value for a lot to exceed 1.00.

Supplemental Specifications to The Standard Specifications for Road and Bridge Construction, 2008 Edition

(Effective with the August 27, 2010 Letting)

SUBSECTION: 413.05.02 CL3 SMA BASE 1.00D PG 76-22.
TABLE: JOINT DENSITY TABLE
REVISION: Replace the joint density table with the following:

LANE DENSITY	
Pay Value	Test Result (%)
1.05	95.0-96.5
1.00	93.0-94.9
0.95	92.0-92.9 or 96.6-97.0
0.90	91.0-91.9 or 97.1-97.5
(1)	< 91.0 or > 97.5

SUBSECTION: 413.05.03 CL3 SMA SURF 0.50A PG76-22 and CL3 SMA SURF 0.38A PG76-22.
REVISION: Insert the following sentence between the first and second sentence of the first paragraph:

The Department will calculate the Lot Pay Adjustment using all possible incentives and disincentives but will not allow the overall pay value for a lot to exceed 1.00.

SUBSECTION: 413.05.03 CL3 SMA SURF 0.50A PG76-22 and CL3 SMA SURF 0.38A PG76-22.
TABLE: JOINT DENSITY TABLE
REVISION: Replace the joint density table with the following:

DENSITY		
Pay Value	Lane Density Test Result (%)	Joint Density Test Result (%)
1.05	95.0-96.5	92.0-96.0
1.00	93.0-94.9	90.0-91.9
0.95	92.0-92.9 or 96.6-97.0	89.0-89.9 or 96.1-96.5
0.90	91.0-91.9 or 97.1-97.5	88.0-88.9 or 96.6-97.0
0.75	----	< 88.0 or > 97.0
(1)	< 91.0 or > 97.5	----

SUBSECTION: 501.05.02 Ride Quality.
REVISION: Add the following sentence to the end of the first paragraph:

The sum of the pay value adjustments for the ride quality shall not exceed $0 for the project as a whole.

SUBSECTION: 505.03.04 Detectable Warnings.
REVISION: Replace the first sentence with the following:

Install detectable warning pavers at all sidewalk ramps and on all commercial entrances according to the Standard Drawings.

Supplemental Specifications to The Standard Specifications for Road and Bridge Construction, 2008 Edition

(Effective with the August 27, 2010 Letting)

SUBSECTION: **REVISION:**	505.04.04 Detectable Warnings. Replace the paragraph with the following: The Department will measure the quantity in square feet. All retrofit applications for maintenance projects will require the removal of existing sidewalks to meet the requirements of the standard drawings applicable to the project. The cost associated with the removal of the existing sidewalk will be incidental to the detectable warnings bid item or incidental to the bid item for the construction of the concrete sidewalk unless otherwise noted.
SUBSECTION: **REVISION:**	505.05 PAYMENT. Add the following to the bid item table: Code — Pay Item — Pay Unit 23158ES505 — Detectable Warnings — Square Foot
SUBSECTION: **REVISION:**	509.01 DESCRIPTION. Replace the second paragraph with the following: The Department may allow the use of similar units that conform to the National Cooperative Highway Research Program (NCHRP) 350 Test Level 3 (TL-3) requirements and the typical features depicted by the Standard Drawings. Obtain the Engineers approval prior to use. Ensure the barrier wall shape, length, material, drain slot dimensions and locations typical features are met and the reported maximum deflection is 3 feet or less from the NCHRP 350 TL-3 for Test 3 – 11 (pickup truck impacting at 60 mph at a 25-degree angle.)
SUBSECTION: **REVISION:**	601.03.02 Concrete Producer Responsibilities. Add the following to the first paragraph: If a concrete plant becomes unqualified during a project and there are no other qualified plants in the region, the Department will provide qualified personnel to witness and ensure the producer follows the required specifications. The Department will assess the Contractor a $100 per hour charge for this service.
SUBSECTION: **REVISION:**	606.02.11 Coarse Aggregate. Replace with the following: Conform to Section 805, size No. 8 or 9-M.
SUBSECTION: **REVISION:**	609.04.06 Joint Sealing. Replace Subsection 601.04 with the following: Subsection 606.04.08.
SUBSECTION: **REVISION:**	609.05 Payment. Replace the Pay Unit for Joint Sealing with the following: See Subsection 606.05.
SUBSECTION: **REVISION:**	701.03.06 Initial Backfill. Replace the first sentence of the last paragraph with the following: When the Contract specifies, perform quality control testing to verify compaction according to KM 64-512.

Supplemental Specifications to The Standard Specifications for Road and Bridge Construction, 2008 Edition

(Effective with the August 27, 2010 Letting)

SUBSECTION: 701.03.08 Testing of Pipe.
REVISION: Replace and rename the subsection with the following:

701.03.08 Inspection of Pipe. The engineer will visually inspect all pipe. The Department will require camera/video inspection on a minimum of 50 percent of the linear feet of all installed pipe structures. Conduct camera/video inspection according to KM 64-114. The pipe to be installed under pavement will be selected first. If the total linear feet of pipe under pavement is less than 50 percent of the linear feet of all pipe installed, the Engineer will randomly select installations from the remaining pipe structures on the project to provide for the minimum inspection requirement. The pipe will be selected in complete runs (junction-junction or headwall-headwall) until the total linear feet of pipe to be inspected is at least 50 percent of the total linear feet of all installed pipe on the project.

Unless the Engineer directs otherwise, schedule the inspections no sooner than 30 days after completing the installation and completion of earthwork to within 1 foot of the finished subgrade. When final surfacing conflicts with the 30-day minimum, conduct the inspections prior to placement of the final surface. The contractor must ensure that all pipe are free and clear of any debris so that a complete inspection is possible.

Notify the Engineer immediately if distresses or locations of improper installation are discovered. When camera testing shows distresses or improper installation in the installed pipe, the Engineer may require additional sections to be tested. Provide the video and report to the Engineer when testing is complete in accordance with KM 64-114.

Pipes that exhibit distress or signs of improper installation may necessitate repair or removal as the Engineer directs. These signs include, but are not limited to: deflection, cracking, joint separation, sagging or other interior damage. If corrugated metal or thermoplastic pipes exceed the deflection and installation thresholds indicated in the table below, provide the Department with an evaluation of each location conducted by a Professional Engineer addressing the severity of the deflection, structural integrity, environmental conditions, design service life, and an evaluation of the factor of safety using Section 12, "Buried Structures and Tunnel Liners," of the AASHTO LRFD Bridge Design Specifications. Based on the evaluation, the Department may allow the pipe to remain in place at a reduced unit price as shown in the table below. Provide 5 business days for the Department to review the evaluation. When the pipe shows deflection of 10 percent or greater, remove and replace the pipe. When the camera/video or laser inspection results are called into question, the Department may require direct measurements or mandrel testing.

The Cabinet may elect to conduct Quality Assurance verifications of any pipe inspections.

SUBSECTION: 701.04.07 Testing.
REVISION: Replace and rename the subsection with the following:

701.04.07 Pipeline Video Inspection. The Department will measure the quantity in linear feet along the pipe invert of the structure inspected. When inspection above the specified 50 percent is performed due to a disagreement or suspicion of additional distresses and the Department is found in error, the Department will measure the quantity as Extra Work according to Subsection 104.03. However, if additional distresses or non-conformance is found, the Department will not measure the additional inspection for payment.

SUBSECTION: 701.05 PAYMENT.
REVISION: Add the following pay item to the list of pay items:

Code	Pay Item	Pay Unit
23131ER701	Pipeline Video Inspection	Linear Foot

Supplemental Specifications to The Standard Specifications for Road and Bridge Construction, 2008 Edition

(Effective with the August 27, 2010 Letting)

SUBSECTION: 701.05 PAYMENT
TABLE: PIPE DEFLECTION DETERMINED BY CAMERA TESTING
REVISION: Replace this table with the following table and note:

PIPE DEFLECTION	
Amount of Deflection (%)	Payment
0.0 to 5.0	100% of the Unit Bid Price
5.1 to 9.9	50% of the Unit Bid Price (1)
10 or greater	Remove and Replace

(1) *Provide Structural Analysis as indicated above. Based on the structural analysis, pipe may be allowed to remain in place at the reduced unit price.*

SUBSECTION: 701.05 PAYMENT
TABLE: PIPE DEFLECTION DETERMINED BY MANDREL TESTING
REVISION: Delete this table.

SUBSECTION: 713.02.01 Paint.
REVISION: Replace with the following:

Conform to Section 842 and Section 846.

SUBSECTION: 713.03 CONSTRUCTION.
REVISION: Replace the first sentence of the second paragraph with the following:

On interstates and parkways, and other routes approved by the State Highway Engineer, install pavement striping that is 6 inches in width.

SUBSECTION: 713.03.03 Paint Application.
REVISION: Replace the second paragraph with the following table:

Material	Paint Application Rate	Glass Beads Application Rate
4 inch waterborne paint	Min. of 16.5 gallons/mile	Min. of 6 pounds/gallon
6 inch waterborne paint	Min. of 24.8 gallons/mile	Min. of 6 pounds/gallon
6 inch durable waterborne paint	Min. of 36 gallons/mile	Min. of 6 pounds/gallon

SUBSECTION: 713.03.04 Marking Removal.
REVISION: Replace the last sentence of the paragraph with the following:

Vacuum all marking material and removal debris concurrently with the marking removal operation.

SUBSECTION: 713.05 PAYMENT.
REVISION: Insert the following codes and pay items below the Pavement Striping – Permanent Paint:

Code	Pay Item	Pay Unit
23159EN	Durable Waterborne Marking – 6 IN W	Linear Foot
23160EN	Durable Waterborne Marking – 6 IN Y	Linear Foot

SUBSECTION: 714.03 CONSTRUCTION.
REVISION: Insert the following paragraph at the end of the third paragraph:

Use Type I Tape for markings on bridge decks, JPC pavement and JPC intersections. Thermoplastic should only be used for markings on asphalt pavement.

Supplemental Specifications to The Standard Specifications for Road and Bridge Construction, 2008 Edition

(Effective with the August 27, 2010 Letting)

SUBSECTION: **REVISION:**	714.03.07 Marking Removal. Replace the third sentence of the paragraph with the following: Vacuum all marking material and removal debris concurrently with the marking removal operation.
SUBSECTION: **REVISION:**	716.01 DESCRIPTION. Insert the following after the first sentence: Energize lighting as soon as it is fully functional and ready for inspection. Ensure that lighting remains operational until the Division of Traffic Operations has provided written acceptance of the electrical work.
SUBSECTION: **REVISION:**	716.02.01 Roadway Lighting Materials. Replace the third sentence of the paragraph with the following: Submit for material approval an electronic file of descriptive literature, drawings, and any requested design data.
SECTION: **REVISION:**	717 – THERMOPLASTIC INTERSECTION MARKINGS. Replace the section name with the following: INTERSECTION MARKINGS.
SUBSECTION: **REVISION:**	717.01 DESCRIPTION: Replace the paragraph with the following: Furnish and install thermoplastic or Type I tape intersection markings (Stop Bars, Crosswalks, Turn Arrows, etc.) Thermoplastic markings may be installed by either a machine applied, screed extrusion process or by applying preformed thermoplastic intersection marking material.
SUBSECTION: **REVISION:**	717.02 MATERIALS AND EQUIPMENT. Insert the following subsection: 717.02.06 Type I Tape. Conform to Section 836.
SUBSECTION: **REVISION:**	717.03.03 Application. Insert the following part to the subsection: B) Type I Tape Intersection Markings. Apply according to the manufacturer's recommendations. Cut all tape at pavement joints when applied to concrete surfaces.
SUBSECTION: **PART:** **REVISION:**	717.03.05 Proving Period. A) Requirements. Insert the following to this section: 2) Type I Tape. During the proving period, ensure that the pavement marking material shows no signs of failure due to blistering, excessive cracking, bleeding, staining, discoloration, oil content of the pavement materials, drippings, chipping, spalling, poor adhesion to the pavement, loss of retroreflectivity, vehicular damage, and normal wear. Type I Tape is manufactured off site and warranted by the manufacturer to meet certain retroreflective requirements. As long as the material is adequately bonded to the surface and shows no signs of failure due to the other items listed in Subsection 714.03.06 A) 1), retroreflectivity readings will not be required. In the absence of readings, the Department will accept tape based on a nighttime visual observation.

Supplemental Specifications to The Standard Specifications for Road and Bridge Construction, 2008 Edition

(Effective with the August 27, 2010 Letting)

SUBSECTION: 717.03.06 Marking Removal.
REVISION: Replace the third sentence of the paragraph with the following:

Vacuum all marking material and removal debris concurrently with the marking removal operation.

SUBSECTION: 717.05 PAYMENT.
REVISION: Insert the following bid item codes:

Code	Pay Unit	Pay Item
06563	Pave Marking – R/R X Bucks 16 IN	Linear Foot
20782NS714	Pave Marking Thermo – Bike	Each
23251ES717, 23264ES717	Pave Mark TY I Tape X-Walk, Size	Linear Foot
23252ES717, 23265ES717	Pave Mark TY I Tape Stop Bar, Size	Linear Foot
23253ES717	Pave Mark TY I Tape Cross Hatch	Square Foot
23254ES717	Pave Mark TY I Tape Dotted Lane Extension	Linear Foot
23255ES717	Pave Mark TY I Tape Arrow, Type	Each
23268ES717-23270ES717		
23256ES717	Pave Mark TY I Tape- ONLY	Each
23257ES717	Pave Mark TY I Tape- SCHOOL	Each
23266ES717	Pave Mark TY 1 Tape R/R X Bucks-16 IN	Linear Foot
23267ES717	Pave Mark TY 1 Tape-Bike	Each

SUBSECTION: 725.02.02 Type VI Class C & CT.
REVISION: Replace bullet 2) with the following:

2) The SCI100GM System as developed by SCI Products, Inc. of St. Charles, Illinois. For all miscellaneous metal work conform to ASTM A 36 and galvanize according to ASTM A 123. For the SCI100GM fender panels conform to AASHTO 180. Galvanize the SCI100GM fender panels and SCI100GM -beam connectors after fabrication according to ASTM A 123.

SUBSECTION: 725.02.04 Type VII Class C.
REVISION: Replace bullet 2) with the following:

2) The SCI100GM System as developed by SCI Products, Inc. of St. Charles, Illinois. For all miscellaneous metal work conform to ASTM A 36 and galvanize according to ASTM A 123. For the SCI100GM fender panels conform to AASHTO 180. Galvanize the SCI100GM fender panels and SCI100GM-beam connectors after fabrication according to ASTM A 123.

SUBSECTION: 805.01 GENERAL.
REVISION: Replace the second paragraph with the following:

The Department's List of Approved Materials includes the Aggregate Source List, the list of Class A and Class B Polish-Resistant Aggregate Sources, and the Concrete Restriction List.

SUBSECTION: 805.04 CONCRETE.
REVISION: Replace the "AASHTO T 160" reference in first sentence of the third paragraph with "KM 64-629"

SUBSECTION: 805.15 GRADATION ACCEPTANCE OF NON-SPECIFICATION COARSE AGGREGATE.
TABLE: AGGREGATE SIZE USE
PART: Cement Concrete Structures and Incidental Construction
REVISION: Replace "9-M for Waterproofing Overlays" with "8 or 9-M for Waterproofing Overlays"

Supplemental Specifications to The Standard Specifications for Road and Bridge Construction, 2008 Edition

(Effective with the August 27, 2010 Letting)

SUBSECTION: 805.15 GRADATION ACCEPTANCE OF NON-SPECIFICATION COARSE AGGREGATE.
REVISION: Replace the "SIZES OF COARSE AGGREGATES" table in with the following:

SIZES OF COARSE AGGREGATES

	Sieve	AMOUNTS FINER THAN EACH LABORATORY SIEVE (SQUARE OPENINGS) PERCENTAGE BY WEIGHT															
Aggregate Size	Nominal [3] Maximum Aggregate Size	4 inch	3 1/2 inch	3 inch	2 1/2 inch	2 inch	1 1/2 inch	1 inch	3/4 inch	1/2 inch	3/8 inch	No. 4	No. 8	No. 16	No. 30	No. 100	No. 200
1	3 ½ inch	100	90-100		25-60		0-15		0-5								
2	2 ½ inch			100	90-100	35-70	0-15		0-5								
23	2 inch			100		40-90		0-15		0-5							
3	2 inch				100	90-100	35-70	0-15		0-5							
357	2 inch				100	95-100		35-70		10-30		0-5					
4	1 ½ inch					100	90-100	20-55	0-15		0-5						
467	1 ½ inch					100	95-100		35-70		10-30	0-5					
5	1 inch						100	90-100	20-55	0-10	0-5						
57	1 inch						100	95-100		25-60		0-10	0-5				
610	1 inch						100	85-100		40-75		15-40					
67	3/4 inch							100	90-100		20-55	0-10	0-5				
68	3/4 inch							100	90-100		30-65	5-25	0-10	0-5			
710	3/4 inch							100	80-100		30-75	0-30					
78	1/2 inch								100	90-100	40-75	5-25	0-10	0-5			
8	3/8 inch									100	85-100	10-30	0-10	0-5			
9-M	3/8 inch									100	75-100	0-25	0-5				
10[2]	No. 4										100	85-100				10-30	
11[2]	No. 4										100	40-90	10-40			0-5	
DENSE GRADED AGGREGATE [1]	3/4 inch							100	70-100		50-80	30-65			10-40		4-13
CRUSHED STONE BASE [1]	1 ½ inch				100		90-100		60-95		30-70	15-55			5-20		0-8

(1) *Gradation performed by wet sieve KM 64-620 or AASHTO T 11/T 27.*
(2) *Sizes shown for convenience and are not to be considered as coarse aggregates.*
(3) *Nominal Maximum Size is the largest sieve on the gradation table for an aggregate size on which any material may be retained.*

Note: The Department will allow blending of same source/same type aggregate when precise procedures are used such as cold feed, belt, or equivalent and combining of sizes or types of aggregate using the weigh hopper at concrete plants or controlled feed belts at the pugmill to obtain designated sizes.

Supplemental Specifications to The Standard Specifications for Road and Bridge Construction, 2008 Edition

(Effective with the August 27, 2010 Letting)

SUBSECTION: 805.16 SAMPLING AND TESTING.
REVISION: Replace the "AASHTO T 160" method with the "KM 64-629" method for the Concrete Beam Expansion Test.

Replace the "ASTM D 3042" method with the "KM 64-625" method for Insoluble Residue.

SUBSECTION: 810.04.01 Coating Requirements.
REVISION: Replace the "Subsection 806.07" references with "Subsection 806.06"

SUBSECTION: 810.06.01 Polyvinyl Chloride (PVC) Pipe.
PART: B) Culvert and Entrance Pipe.
REVISION: Replace the title with the following:

B) Culvert Pipe, Storm Sewer, and Entrance Pipe.

SUBSECTION: 837.03 APPROVAL.
REVISION: Replace the last sentence with the following:

The Department will sample and evaluate for approval each lot of thermoplastic material delivered for use per contract prior to installation of the thermoplastic material. Do not allow the installation of thermoplastic material until it has been approved by the Division of Materials. Allow the Department a minimum of 10 working days to evaluate and approve thermoplastic material.

SUBSECTION: 837.03.01 Composition.
REVISION: COMPOSITION Table:

Replace

Lead Chromate	0.0 max.	4.0 min.

with

Heavy Metals Content	Comply with 40 CFR 261

SECTION: DIVISION 800 MATERIAL DETAILS
REVISION: Add the following section in Division 800

SECTION 846 – DURABLE WATERBORNE PAINT

846.01 DESCRIPTION. This section covers quick-drying durable waterborne pavement striping paint for permanent applications. The paint shall be ready-mixed, one-component, 100% acrylic waterborne striping paint suitable for application on such traffic-bearing surfaces as Portland cement concrete, bituminous cement concrete, asphalt, tar, and previously painted areas of these surfaces.

846.02 Approval. Select materials that conform to the composition requirements below. Provide independent analysis data and certification for each formulation stating the total concentration of each heavy metal present, the test method used for each determination, and compliance to 40 CFR 261 for leachable heavy metals content. Submit initial samples for approval before beginning striping operations. The initial sample may be sent from the manufacture of the paint. The Department will randomly sample and evaluate the paint each week that the striping operations are in progress.

The non-volatile portion of the vehicle shall be composed of a 100% acrylic polymer as determined by infrared spectral analysis. The acrylic resin used shall be a 100% cross-linking acrylic as evidenced by infrared peaks at wavelengths 1568, 1624, and 1672 cm-1 with intensities equal to those produced by an acrylic resin known to be 100% cross-linking.

Supplemental Specifications to The Standard Specifications for Road and Bridge Construction, 2008 Edition
(Effective with the August 27, 2010 Letting)

PAINT COMPOSITION		
Property and Test Method	Yellow	White
Daytime Color (CIELAB) Spectrophotometer using illuminant D65 at 45º illumination and 0º viewing with a 2º observer	L* 81.76 a* 19.79 b* 89.89 Maximum allowable variation 2.0ΔE*	L* 93.51 a* -1.01 b* 0.70 Maximum allowable variation 2.0ΔE*
Nighttime Color (CIELAB) Spectrophotometer using illuminant A at 45º illumination and 0º viewing with a 2º observer	L* 86.90 a* 24.80 b* 95.45 Maximum allowable variation 2.0ΔE*	L* 93.45 a* -0.79 b* 0.43 Maximum allowable variation 2.0ΔE*
Heavy Metals Content	Comply with 40 CFR 261	Comply with 40 CFR 261
Titanium Dioxide ASTM D 4764	NA	10% by weight of pigment min.
VOC ASTM D 2369 and D 4017	1.25 lb/gal max.	1.25 lb/gal max.
Contrast Ratio (at 15 mils wft)	0.97	0.99

846.02.01 Manufacturers Certification. Provide a certification of analysis for each lot of traffic paint produced stating conformance to the requirements of this section. Report the formulation identification, traffic paint trade name, color, date of manufacturer, total quantity of lot produced, actual quantity of traffic paint represented, sampling method utilized to obtain the samples, and data for each sample tested to represent each lot produced.

846.03 ACCEPTANCE PROCEDURES FOR NON-SPECIFICATION DURABLE WATERBORNE PAVEMENT STRIPING PAINT. When non-specification paint is inadvertently incorporated into the work the Department will accept the material with a reduction in pay. The percentage deduction is cumulative based on its compositional properties, but will not exceed 60 percent. The Department will calculate the payment reduction on the unit bid price for the routes where the non-specification paint was used.

DURABLE WATERBORNE PAVEMENT STRIPING PAINT REDUCTION SCHEDULE						
Non-conforming Property	Resin	Color	Contrast	TiO_2	VOC	Heavy Metals Content
Reduction Rate	60%	10%	10%	10%	60%	60%

1I

SPECIAL NOTE FOR PORTABLE CHANGEABLE MESSAGE SIGNS

This Special Note will apply when indicated on the plans or in the proposal.

1.0 DESCRIPTION. Furnish, install, operate, and maintain variable message signs at the locations shown on the plans or designated by the Engineer. Remove and retain possession of variable message signs when they are no longer needed on the project.

2.0 MATERIALS.

2.1 General. Use LED or flip disk/LED Variable Message Signs Class I, II, or III, as appropriate, from the Department's List of Approved Materials.

Unclassified signs may be submitted for approval by the Engineer. The Engineer may require a daytime and nighttime demonstration. The Engineer will make a final decision within 30 days after all required information is received.

2.2 Sign and Controls. All signs must:

1) Provide 3-line messages with each line being 8 characters long and at least 18 inches tall. Each character comprises 35 pixels.
2) Provide at least 40 preprogrammed messages available for use at any time. Provide for quick and easy change of the displayed message; editing of the message; and additions of new messages.
3) Provide a controller consisting of:
   a) Keyboard or keypad.
   b) Readout that mimics the actual sign display. (When LCD or LCD type readout is used, include backlighting and heating or otherwise arrange for viewing in cold temperatures.)
   c) Non-volatile memory or suitable memory with battery backup for storing pre-programmed messages.
   d) Logic circuitry to control the sequence of messages and flash rate.
4) Provide a serial interface that is capable of supporting complete remote control ability through land line and cellular telephone operation. Include communication software capable of immediately updating the message, providing complete sign status, and allowing message library queries and updates.
5) Allow a single person easily to raise the sign to a satisfactory height above the pavement during use, and lower the sign during travel.
6) Allow direct wiring for operation of the sign or arrow board from an external power source when desired.
7) Be Highway Orange on all exterior surfaces of the trailer, supports, and controller cabinet.
8) Provide operation in ambient temperatures from -30 to + 120 degrees Fahrenheit during snow, rain and other inclement weather.
9) Provide the driver board as part of a module. All modules are interchangeable, and have plug and socket arrangements for disconnection and reconnection. Printed circuit boards associated with driver boards have a conformable coating to protect against moisture.
10) Provide a sign case sealed against rain, snow, dust, insects, etc. The lens is UV stabilized clear plastic (polycarbonate, acrylic, or other approved material) angled to prevent glare.

1I

11) Provide a flat black UV protected coating on the sign hardware, character PCB, and appropriate lens areas.
12) Provide a photocell control to provide automatic dimming.
13) Allow an on-off flashing sequence at an adjustable rate.
14) Provide a sight to aim the message.
15) Provide a LED display color of approximately 590 nm amber.
16) Provide a controller that is password protected.
17) Provide a security device that prevents unauthorized individuals from accessing the controller.
18) Provide the following 3-line messages preprogrammed and available for use when the sign unit begins operation:

/KEEP/RIGHT/⇒⇒⇒/
/KEEP/LEFT/⇐⇐⇐/
/LOOSE/GRAVEL/AHEAD/
/RD WORK/NEXT/**MILES/
/TWO WAY/TRAFFIC/AHEAD/
/PAINT/CREW/AHEAD/
/REDUCE/SPEED/**MPH/
/BRIDGE/WORK/***0 FT/
/MAX/SPEED/**MPH/
/SURVEY/PARTY/AHEAD/
/MIN/SPEED/**MPH/
/ICY/BRIDGE/AHEAD/ /ONE LANE/BRIDGE/AHEAD/
/ROUGH/ROAD/AHEAD/
/MERGING/TRAFFIC/AHEAD/
/NEXT/***/MILES/
/HEAVY/TRAFFIC/AHEAD/
/SPEED/LIMIT/**MPH/
/BUMP/AHEAD/
/TWO/WAY/TRAFFIC/

*Insert numerals as directed by the Engineer.
Add other messages during the project when required by the Engineer.

2.3 Requirements for Flip-Disc Type Signs. Flip-disc type signs will have the following additional requirements:

1) Disc faces are fluorescent yellow on one side, and flat black on the reverse.
2) Discs are at least 3.5 square inches with a minimum character size of 5 discs horizontally by 7 discs vertically.
3) Discs are designed to operate without lubrication for at least 200 million operations.
4) Line change speed of 600 milliseconds or less.
5) When power is lost, the sign automatically becomes blank or displays a preprogrammed default message.

2.4 Power.

1) Design solar panels to yield 10 percent or greater additional charge than sign consumption. Provide energy backup for 21 days without sunlight and an on-board system charger with the ability to recharge completely discharged batteries in 24 hours.
2) Diesel Power Source. Ensure the following is provided for:

   a) At least 24 spare bulbs available on the project for quick replacement of burned out bulbs.
   b) Black light at both top and bottom of each line to illuminate discs for visibility at night or under adverse weather conditions, for flip disk signs.

1I

c) Diesel generator and electric start assembly, including batteries and a fuel capacity adequate to provide at least 72 hours continuous operation without refueling.
d) Fuel gage.
e) Provide all other specific features, such as bulb size, protection from sun glare, and shock protection for electronics and bulbs, to the satisfaction of the Engineer.

3.0 CONSTRUCTION. Furnish and operate the variable message signs as designated on the plans or by the Engineer. Ensure the bottom of the message panel is a minimum of 7 feet above the roadway in urban areas and 5 feet above in rural areas when operating. Use Class I, II, or III signs on roads with a speed limit less than 55 mph. Use Class I or II signs on roads with speed limits 55 mph or greater. Unless the Contract specifies flip-disk signs, use Class I signs on interstates and parkways.

Maintain the sign in proper working order, including repair of any damage done by others, until completion of the project. When the sign becomes inoperative, immediately repair or replace the sign. Repetitive problems with the same unit will be cause for rejection and replacement.

Use only project related messages and messages directed by the Engineer, unnecessary messages lessen the impact of the sign. Ensure the message is displayed in either one or 2 phases with each phase having no more than 3 lines of text. When no message is needed, but it is necessary to know if the sign is operable, flash only a pixel or disk.

When the sign is not needed, move it outside the clear zone or where the Engineer directs. Variable Message Signs are the property of the Contractor and shall be removed from the project when no longer needed. The Department will not assume ownership of these signs.

4.0 MEASUREMENT. The final quantity of Variable Message Sign will be the actual number of individual signs acceptably furnished and operated during the project. The Department will not measure signs replaced due to damage or rejection.

5.0 PAYMENT. The Department will pay for the Variable Message Signs at the unit price each. The Department will not pay for signs replaced due to damage or rejection. Payment is full compensation for furnishing all materials, labor, equipment, and service necessary to, operate, move, repair, and maintain or replace the variable message signs. The Department will make payment for the completed and accepted quantities under the following:

Code	Pay Item	Pay Unit
02671	Portable Changeable Message Sign	Each

January 5, 2010

STANDARD DRAWINGS THAT APPLY

DROP BOX INLET TYPE 13 (DETAIL SHEET) RDB-013-06
DROP BOX INLET TYPE 13 AND TYPE 16 (FRAME & GRATE DETAILS) RDB-014-05
DROP BOX INLET TYPE 13 (DETAIL & BAR CHART FOR LID) RDB-015-03
DROP BOX INLET TYPE 13 (PIPE CHAMBER - GRADE CONDITION) RDB-016-02
DROP BOX INLET TYPE 13 (PIPE CHAMBER - SAG CONDITION) RDB-017-02
DROP BOX INLET TYPE 13 (ADDITIONAL STEEL - RISER) RDB-018-03
DROP BOX INLET TYPE 13 (ADDITIONAL STEEL - CHAMBER) RDB-019-03
CHANNEL LINING CLASS II AND III RDD-040-04
PIPE BEDDING FOR CULVERTS, ENTRANCE AND STORM SEWER PIPE RDI-020-08
PIPE BEDDING FOR CULVERTS, ENTRANCE AND STORM SEWER REINFORCED CONC. PIPE RDI-021
PIPE BEDDING, TRENCH CONDITION RDI-025-04
PIPE BEDDING, TRENCH CONDITION REINFORCED CONC. PIPE RDI-026
PERFORATED PIPE TYPES AND COVER HEIGHTS RDP-001-05
PERFORATED PIPE FOR SUBGRADE DRAINAGE ON TWO-LANE (CLASS 2)
AND MULTI-LANE ROADS RDP-005-04
PERFORATED PIPE UNDERDRAINS (LONGITUDINAL AND TRANSVERSE) RDP-006-03
PERFORATED PIPE DETAILS (SOLID ROCK) RDP-007-03
SILT TRAP - TYPE B RDX-225
SILT TRAP - TYPE C RDX-230
CURVE WIDENING AND SUPERELEVATION TRANSITIONS RGS-001-06
SUPERELEVATION FOR MULTILANE PAVEMENTS RGS-002-05
MISCELLANEOUS STANDARDS PART 1 ..... RGX-001-05
CURB AND GUTTER, CURBS AND VALLEY GUTTER RPM-100-09
NETTING RRE-002-04
LANE CLOSURE TWO-LANE HIGHWAY CASE I TTC-100-01
LANE CLOSURE TWO-LANE HIGHWAY CASE II TTC-105-01
LANE CLOSURE MULTI-LANE HIGHWAY CASE I TTC-115-01
LANE CLOSURE MULTI-LANE HIGHWAY CASE II TTC-120-01
SHOULDER CLOSURE TTC-135-01
POST SPLICING DETAIL TTD-110-01
WORK ZONE SPEED LIMIT AND DOUBLE FINE SIGNS TTD-120
MOBILE OPERATION FOR PAINT STRIPING CASE I TTS-100-01
MOBILE OPERATION FOR PAINT STRIPING CASE II TTS-105-01
MOBILE OPERATION FOR PAINT STRIPING CASE III TTS-110-01
MOBILE OPERATION FOR PAINT STRIPING CASE IV TTS-115-01

COUNTY OF	ITEM NO.	SHEET NO.

PIPE DIA. (IN)	PIPE TYPE	CIRCULAR PIPE COVER HEIGHTS IN FEET					
		2-5	5-10	10-15	15-20	20-25	25-30
12 & 15	2⅔"×½" CSPHS (1)	16 GA.					
	2⅔"×½" CSPLS (1)	16 GA.					
	2⅔"×½" CAPHS	16 GA.					
	PVC	SMOOTH WALL (SOLID WALL)					
	HDPE					FF	
	RCP (11)						
18	2⅔"×½" CSPHS (1)	16 GA.					
	2⅔"×½" CSPLS (1)	16 GA.					
	2⅔"×½" CAPHS	16 GA.					
	SRS (1)	16 GA.					
	SRA	16 GA.					
	PVC	RIBBED (PROFILE WALL)					
	HDPE					FF	
	RCP (11)						
		2-5	5-10	10-15	15-20	20-25	25-30

PIPE DIA. (IN)	PIPE TYPE	CIRCULAR PIPE COVER HEIGHTS IN FEET											
		2-5	5-10	10-15	15-20	20-25	25-30	30-35	35-40	40-45	45-50	50-55	55-60	60-65
21	2⅔"×½" CSPHS (1)	16 GA.												
	2⅔"×½" CSPLS (1)	16 GA.					10 GA.							
	2⅔"×½" CAPHS	16 GA.												
	SRS (1)	16 GA.												
	SRA	16 GA.				14 GA.								
	PVC	RIBBED (PROFILE WALL)												
	HDPE					FF								
	RCP (11)													
24 (6)	2⅔"×½" CSPHS (1)	16 GA.											14 GA.	
	2⅔"×½" CSPLS (1)	16 GA.					10 GA.							
	2⅔"×½" CAPHS	16 GA.								14 GA.		12 GA.		
	SRS (1)	16 GA.							14 GA.			12 GA.		
	SRA	16 GA.				14 GA.		12 GA.			10 GA.			
	PVC	RIBBED (PROFILE WALL)												
	HDPE					FF								
	RCP (11)													
		2-5	5-10	10-15	15-20	20-25	25-30	30-35	35-40	40-45	45-50	50-55	55-60	60-65

NOTES

(1) GAGES FOR CORRUGATED STEEL PIPE ITEMS SHOWN ARE BASED ON ALUMINUM-COATED TYPE 2 STEEL AS PER AASHTO M-274. ALUMINUM COATED TYPE 2 STEEL IS ONLY PERMITTED IN Ph RANGES OF 5 TO 9

2. WHEN CORRUGATED STEEL PIPE IS ZINC COATED (GALVANIZED) THE GAGE SHALL BE ONE GAGE HEAVIER THAN SHOWN IN THE TABLES.
3. CSP, CAP, SRS AND SRA ARE SHOWN IN GAGE.
4. MAXIMUM COVER HEIGHT MEASURED FROM TOP OF PIPE TO SUBGRADE ELEVATION SHALL GOVERN GAGE OF PIPE TO BE USED FOR ENTIRE LENGTH OF PIPE INSTALLATION.
5. MINIMUM COVER HEIGHTS FOR PIPE SHALL BE 2 FEET. GAGE OF PIPE FOR COVER HEIGHTS LESS THAN 2 FEET SHALL BE THAT SHOWN FOR COVER HEIGHTS OF 30 FEET (SEE STD. SPECIFICATIONS FOR BACKFILL). HDPE AND PVC SHALL NOT BE PERMITTED FOR COVER HEIGHTS LESS THAN 2 FEET.

(6) 24" DIA. PIPE IS MINIMUM SIZE FOR COVER HEIGHTS FROM 30 FEET TO 65 FEET.

7. MINIMUM COVER HEIGHT FOR ENTRANCE PIPE SHALL BE 0.5 FEET.
8. GAGE OF ENTRANCE PIPE FOR COVER HEIGHTS LESS THAN 2 FEET SHALL MEET THE FOLLOWING REQUIREMENTS:
   a. GAGE OF CSP SHALL BE THAT SHOWN FOR HEIGHTS OF 30 FEET.
   b. GAGE OF CAP SHALL BE ONE GAGE HEAVIER THAN SHOWN IN THE TABLE.
9. ALL CIRCULAR STRUCTURAL PLATE SHALL BE 5% VERTICALLY ELONGATED.
10. SEE CURRENT STANDARD DRAWING RDI-035 FOR COATINGS, LININGS AND PAVINGS FOR NON-STRUCTURAL PIPE.

(11) SEE DETAIL SHEET "PIPE BEDDING FOR CULVERTS, ENTRANCE, AND STORM SEWER REINFORCED CONC. PIPE" AND DETAIL SHEET "PIPE BEDDING TRENCH CONDITION REINFORCED CONC. PIPE" FOR RCP COVER HEIGHT AND BEDDING REQUIREMENTS.

LEGEND

CSPHS: CORRUGATED STEEL PIPE WITH HELICAL LOCK SEAM OR HELICAL WELDED SEAM (HELICAL CORR.)
CSPLS: CORRUGATED STEEL PIPE WITH LONGITUDINAL RIVETED OR SPOT WELDED SEAM (ANNULAR CORR.)
CAPHS: CORRUGATED ALUMINUM ALLOY PIPE WITH HELICAL LOCK SEAM (HELICAL CORR.)
HDPE: HIGH DENSITY POLYETHYLENE PIPE
PVC: POLYVINYL CHLORIDE
SRS: SPIRAL RIB STEEL
SRA: SPIRAL RIB ALUMINUM
RCP: CIRCULAR REINFORCED CONCRETE PIPE
FF: FLOWABLE FILL REQUIRED

12" PIPE - 24" PIPE

KENTUCKY
DEPARTMENT OF HIGHWAYS

CULVERT, ENTRANCE & STORM SEWER PIPE TYPES & COVER HEIGHTS

APPROVED [signature] TEBM DIVISION OF DESIGN 04-25-08 DATE

SHEET 1 OF 8

COUNTY OF	ITEM NO.	SHEET NO.

CIRCULAR PIPE COVER HEIGHTS IN FEET (3)

PIPE DIA. (IN)	PIPE TYPE	2-5	5-10	10-15	15-20	20-25	25-30	30-35	35-40	40-45	45-50	50-55	55-60	60-65
27 & 30 (8)	2⅔"×½" CSPHS (1)	16 GA.								14 GA.			12 GA.	
	2⅔"×½" CSPLS (1)	16 GA.				12 GA.								
	2⅔"×½" CAPHS	14 GA.								12 GA.			10 GA.	
	SRS (1)	16 GA.						14 GA.		12 GA.				
	SRA	16 GA.			14 GA.		12 GA.		10 GA.					
	PVC	RIBBED (PROFILE WALL)												
	HDPE					FF								
	RCP (10)													
36	2⅔"×½" CSPHS (1)	14 GA.									12 GA.			10 GA.
	2⅔"×½" CSPLS (1)	14 GA.			12 GA.		10 GA.							
	2⅔"×½" CAPHS	14 GA.						12 GA.			10 GA.			8 GA.
	SRS (1)	14 GA.							12 GA.					
	SRA	14 GA.				12 GA.		10 GA.						
	PVC	RIBBED (PROFILE WALL)												
	HDPE					FF								
	RCP (10)													
42	2⅔"×½" CSPHS (1)	14 GA.								12 GA.			10 GA.	
	2⅔"×½" CSPLS (1)	14 GA.					12 GA.		10 GA.					
	2⅔"×½" CAPHS	12 GA.								10 GA.		8 GA.		
	SRS (1)	14 GA.						12 GA.						
	SRA	12 GA.					10 GA.							
	PVC	RIBBED (PROFILE WALL)												
	HDPE													
	RCP (10)													
		2-5	5-10	10-15	15-20	20-25	25-30	30-35	35-40	40-45	45-50	50-55	55-60	60-65

LEGEND

CSPHS: CORRUGATED STEEL PIPE WITH HELICAL LOCK SEAM OR HELICAL WELDED SEAM (HELICAL CORR.)

CSPLS: CORRUGATED STEEL PIPE WITH LONGITUDINAL RIVETED OR SPOT WELDED SEAM (ANNULAR CORR.)

CAPHS: CORRUGATED ALUMINUM ALLOY PIPE WITH HELICAL LOCK SEAM (HELICAL CORR.)

HDPE: HIGH DENSITY POLYETHYLENE PIPE

PVC: POLYVINYL CHLORIDE

SRS: SPIRAL RIB STEEL

SRA: SPIRAL RIB ALUMINUM

RCP: CIRCULAR REINFORCED CONCRETE PIPE

FF: FLOWABLE FILL REQUIRED

NOTES CONTINUED

(10) SEE DETAIL SHEET "PIPE BEDDING FOR CULVERTS, ENTRANCE, AND STORM SEWER REINFORCED CONC. PIPE" AND DETAIL SHEET "PIPE BEDDING TRENCH CONDITION REINFORCED CONC. PIPE" FOR RCP COVER HEIGHT AND BEDDING REQUIREMENTS.

NOTES

(1) GAGES FOR CORRUGATED STEEL PIPE ITEMS SHOWN ARE BASED ON ALUMINUM-COATED TYPE 2 STEEL AS PER AASHTO M-274. ALUMINUM COATED TYPE 2 STEEL IS ONLY PERMITTED IN Ph RANGES OF 5 TO 9.

2. WHEN CORRUGATED STEEL PIPE IS ZINC COATED (GALVANIZED) THE GAGE SHALL BE ONE GAGE HEAVIER THAN SHOWN IN THE TABLES.

(3) SEE CURRENT STANDARD DRAWING RDI-001 FOR EXPLANATION OF COVER HEIGHTS LESS THAN 2 FEET.

4. CSP, CAP, SRS AND SRA ARE SHOWN IN GAGE.

5. MAXIMUM COVER HEIGHT MEASURED FROM TOP OF PIPE TO SUB GRADE ELEVATION SHALL GOVERN GAGE OF PIPE TO BE USED FOR ENTIRE LENGTH OF PIPE INSTALLATION.

6. MINIMUM COVER HEIGHT FOR ENTRANCE PIPE SHALL BE 0.5 FEET.

7. ALL CIRCULAR STRUCTURAL PLATE SHALL BE 5% VERTICALLY ELONGATED.

(8) ENTRANCE PIPE GREATER THAN 30" DIA. SHALL BE CULVERT PIPE.

9. SEE CURRENT STANDARD DRAWING RDI-035 FOR COATINGS, LININGS AND PAVINGS FOR NON-STRUCTURAL PIPE.

SHEET 2 OF 8

27" PIPE - 42" PIPE

KENTUCKY DEPARTMENT OF HIGHWAYS

CULVERT, ENTRANCE & STORM SEWER PIPE TYPES & COVER HEIGHTS

APPROVED [signature] TBM DIVISION OF DESIGN 04-25-08 DATE

HENDERSON COUNTY
FE01-051 0041 016-017
Contract ID: 102307
Page 100 of 125

COUNTY OF	ITEM NO.	SHEET NO.

CIRCULAR PIPE COVER HEIGHTS IN FEET (3)

PIPE DIA. (IN)	PIPE TYPE	2-5	5-10	10-15	15-20	20-25	25-30	30-35	35-40	40-45	45-50	50-55	55-60	60-65	65-70	70-75	75-80	80-85	85-90	90-95	95-100	100-105	105-110	110-115	115-120
48	2⅔"x½" CSPHS (1)	14 GA.							12 GA.		10 GA.														
	2⅔"x½" CSPLS (1)	14 GA.				12 GA.																			
	2⅔"x½" CAPHS	12 GA.							10 GA.		8 GA.														
	SRS (1)	14 GA.					12 GA.																		
	SRA	12 GA.					10 GA.																		
	PVC	RIBBED (PROFILE WALL)																							
	HDPE																								
	RCP (9)																								
54 (7)	2⅔"x½" CSPHS (1)	14 GA.						12 GA.			10 GA.														
	2⅔"x½" CSPLS (1)	14 GA.				12 GA.																			
	3"x1" CSPHS (1)	14 GA.							12 GA.		10 GA.														
	3"x1" CSPLS (1)	14 GA.			12 GA.			10 GA.			8 GA.														
	5"x1" CSPHS (1)	14 GA.						12 GA.			10 GA.														
	2⅔"x½" CAPHS	12 GA.					10 GA.		8 GA.																
	3"x1" CAPHS	14 GA.					12 GA.		10 GA.		8 GA.														
	SRS (1)	14 GA.				12 GA.																			
	SRA	12 GA.				10 GA.																			
	RCP (9)																								
		2-5	5-10	10-15	15-20	20-25	25-30	30-35	35-40	40-45	45-50	50-55	55-60	60-65	65-70	70-75	75-80	80-85	85-90	90-95	95-100	100-105	105-110	110-115	115-120

NOTES

(1) GAGES FOR CORRUGATED STEEL PIPE ITEMS SHOWN ARE BASED ON ALUMINUM-COATED TYPE 2 STEEL AS PER AASHTO M-274. ALUMINUM COATED TYPE 2 STEEL IS ONLY PERMITTED IN Ph RANGES OF 5 TO 9.

2. WHEN CORRUGATED STEEL PIPE IS ZINC COATED (GALVANIZED) THE GAGE SHALL BE ONE GAGE HEAVIER THAN SHOWN IN THE TABLES.

(3) SEE CURRENT STANDARD DRAWING RDI-001 FOR EXPLANATION OF COVER HEIGHTS LESS THAN 2 FEET.

4. CSP, CAP, SRS AND SRA ARE SHOWN IN GAGE.

5. MAXIMUM COVER HEIGHT MEASURED FROM TOP OF PIPE TO SUBGRADE ELEVATION SHALL GOVERN GAGE OF PIPE TO BE USED FOR ENTIRE LENGTH OF PIPE INSTALLATION.

6. ALL CIRCULAR STRUCTURAL PLATE SHALL BE 5% VERTICALLY ELONGATED.

(7) 54" DIA. PIPE IS MINIMUM SIZE FOR COVER HEIGHTS GREATER THAN 65 FEET.

8. SEE CURRENT STANDARD DRAWING RDI-035 FOR COATINGS, LININGS AND PAVINGS FOR NON-STRUCTURAL PIPE.

(9) SEE DETAIL SHEET "PIPE BEDDING FOR CULVERTS, ENTRANCE, AND STORM SEWER REINFORCED CONC. PIPE" AND DETAIL SHEET "PIPE BEDDING TRENCH CONDITION REINFORCED CONC. PIPE" FOR RCP COVER HEIGHT AND BEDDING REQUIREMENTS.

LEGEND

CSPHS: CORRUGATED STEEL PIPE WITH HELICAL LOCK SEAM OR HELICAL WELDED SEAM (HELICAL CORR.)

CSPLS: CORRUGATED STEEL PIPE WITH LONGITUDINAL RIVETED OR SPOT WELDED SEAM (ANNULAR CORR.)

CAPHS: CORRUGATED ALUMINUM ALLOY PIPE WITH HELICAL LOCK SEAM (HELICAL CORR.)

HDPE: HIGH DENSITY POLYETHYLENE PIPE

PVC: POLYVINYL CHLORIDE

SRS: SPIRAL RIB STEEL

SRA: SPIRAL RIB ALUMINUM

RCP: CIRCULAR REINFORCED CONCRETE PIPE

48" PIPE - 54" PIPE

KENTUCKY
DEPARTMENT OF HIGHWAYS

CULVERT & STORM SEWER PIPE TYPES & COVER HEIGHTS

APPROVED [signature] TEBM DIVISION OF DESIGN 04-25-08 DATE

SHEET 3 OF 8

PART III

EMPLOYMENT, WAGE AND RECORD REQUIREMENTS

TRANSPORTATION CABINET
DEPARTMENT OF HIGHWAYS

LABOR AND WAGE REQUIREMENTS
APPLICABLE TO OTHER THAN FEDERAL-AID SYSTEM PROJECTS

I. Application
II. Nondiscrimination of Employees (KRS 344)
III. Payment of Predetermined Minimum Wages
IV. Statements and Payrolls

I. APPLICATION

1. These contract provisions shall apply to all work performed on the contract by the contractor with his own organization and with the assistance of workmen under his immediate superintendence and to all work performed on the contract by piecework, station work or by subcontract. The contractor's organization shall be construed to include only workmen employed and paid directly by the contractor and equipment owned or rented by him, with or without operators.

2. The contractor shall insert in each of his subcontracts all of the stipulations contained in these Required Provisions and such other stipulations as may be required.

3. A breach of any of the stipulations contained in these Required Provisions may be grounds for termination of the contract.

II. NONDISCRIMINATION OF EMPLOYEES

AN ACT OF THE KENTUCKY
GENERAL ASSEMBLY TO PREVENT
DISCRIMINATION IN EMPLOYMENT
KRS CHAPTER 344
EFFECTIVE JUNE 16, 1972

The contract on this project, in accordance with KRS Chapter 344, provides that during the performance of this contract, the contractor agrees as follows:

1. The contractor shall not fail or refuse to hire, or shall not discharge any individual, or otherwise discriminate against an individual with respect to his compensation, terms, conditions, or privileges of employment, because of such individual's race, color, religion, national origin, sex, disability or age (between forty and seventy); or limit, segregate, or classify his employees in any way which would deprive or tend to deprive an individual of employment opportunities or otherwise adversely affect his status as an employee, because of such individual's race, color, religion, national origin, sex, disability or age (between forty and seventy). The contractor agrees to post in conspicuous places, available to employees and applicants for employment, notices to be provided setting forth the provisions of this nondiscrimination clause.

2. The contractor shall not print or publish or cause to be printed or published a notice or advertisement relating to employment by such an employer or membership in or any classification or referral for employment by the employment agency, indicating any preference, limitation, specification, or discrimination, based on race, color, religion, national origin, sex, disability or age (between forty and seventy), except that such notice or advertisement may indicate a preference, limitation, or specification based on religion, or national origin when religion, or national origin is a bona fide occupational qualification for employment.

3. If the contractor is in control of apprenticeship or other training or retraining, including on-the-job training programs, he shall not discriminate against an individual because of his race, color, religion, national origin, sex, disability or age (between forty and seventy), in admission to, or employment in any program established to provide apprenticeship or other training.

4. The contractor will send to each labor union or representative of workers with which he has a collective bargaining agreement or other contract or understanding, a notice to be provided advising the said labor union or workers' representative of the contractor's commitments under this section, and shall post copies of the notice in conspicuous places available to employees and applicants for employment. The contractor will take such action with respect to any subcontract or purchase order as the administrating agency may direct as a means of enforcing such provisions, including sanctions for non-compliance.

III. PAYMENT OF PREDETERMINED MINIMUM WAGES

1. These special provisions are supplemented elsewhere in the contract by special provisions which set forth certain predetermined minimum wage rates. The contractor shall pay not less than those rates.

2. The minimum wage determination schedule shall be posted by the contractor, in a manner prescribed by the Department of Highways, at the site of the work in prominent places where it can be easily seen by the workers.

IV. STATEMENTS AND PAYROLLS

1. All contractors and subcontractors affected by the terms of KRS 337.505 to 337.550 shall keep full and accurate payroll records covering all disbursements of wages to their employees to whom they are required to pay not less than the prevailing rate of wages. Payrolls and basic records relating thereto will be maintained during the course of the work and preserved for a period of one (1) year from the date of completion of this contract.

2. The payroll records shall contain the name, address and social security number of each employee, his correct classification, rate of pay, daily and weekly number of hours worked, itemized deductions made and actual wages paid.

3. The contractor shall make his daily records available at the project site for inspection by the State Department of Highways contracting office or his authorized representative.

Periodic investigations shall be conducted as required to assure compliance with the labor provisions of the contract. Interrogation of employees and officials of the contractor shall be permitted during working hours.

Aggrieved workers, Highway Managers, Assistant District Engineers, Resident Engineers and Project Engineers shall report all complaints and violations to the Division of Contract Procurement.

The contractor shall be notified in writing of apparent violations. The contractor may correct the reported violations and notify the Department of Highways of the action taken or may request an informal hearing. The request for hearing shall be in writing within ten (10) days after receipt of the notice of the reported violation. The contractor may submit

records and information which will aid in determining the true facts relating to the reported violations.

Any person or organization aggrieved by the action taken or the findings established as a result of an informal hearing by the Division of Contract Procurement may request a formal hearing.

4. The wages of labor shall be paid in legal tender of the United States, except that this condition will be considered satisfied if payment is made by a negotiable check, on a solvent bank, which may be cashed readily by the employee in the local community for the full amount, without discount or collection charges of any kind. Where checks are used for payments, the contractor shall make all necessary arrangements for them to be cashed and shall give information regarding such arrangements.

5. No fee of any kind shall be asked or accepted by the contractor or any of his agents from any person as a condition of employment on the project.

6. No laborers shall be charged for any tools used in performing their respective duties except for reasonably avoidable loss or damage thereto.

7. Every employee on the work covered by this contract shall be permitted to lodge, board, and trade where and with whom he elects and neither the contractor nor his agents, nor his employees shall directly or indirectly require as a condition of employment that an employee shall lodge, board or trade at a particular place or with a particular person.

8. Every employee on the project covered by this contract shall be an employee of either the prime contractor or an approved subcontractor.

9. No charge shall be made for any transportation furnished by the contractor or his agents to any person employed on the work.

10. No individual shall be employed as a laborer or mechanic on this contract except on a wage basis, but this shall not be construed to prohibit the rental of teams, trucks or other equipment from individuals.

No Covered employee may be employed on the work except in accordance with the classification set forth in the schedule mentioned above; provided, however, that in the event additional classifications are required, application shall be made by the contractor to the Department of Highways and (1) the Department shall request appropriate classifications and rates from the proper agency, or (2) if there is urgent need for additional classification to avoid undue delay in the work, the contractor may employ such workmen at rates deemed comparable to rates established for similar classifications provided he has made written application through the Department of Highways, addressed to the proper agency, for the supplemental rates. The contractor shall retroactively adjust, upon receipt of the supplemental rates schedule, the wages of any employee paid less than the established rate and may adjust the wages of any employee overpaid.

11. No contractor or subcontractor contracting for any part of the contract work which may require or involve the employment of laborers or mechanics shall require or permit any laborer or mechanic in any work-week in which he is employed on such work, to work in excess of eight hours in any calendar day or in excess of forty hours in such work-week unless such laborer or mechanic receives compensation at a rate not less than one and one half times his basic rate of pay for all hours worked in excess of eight hours in any calendar day or in excess of forty hours in such work-week. A laborer, workman or mechanic and an employer may enter into a written agreement or a collective bargaining agreement to work more than eight (8) hours a calendar day but not more than ten (10) hours a calendar day for the straight time hourly rate. This agreement shall be in writing and shall be executed prior to the employee working in excess of eight (8) hours, but not more than ten (10) hours, in any one (1) calendar day.

12. Payments to the contractor may be suspended or withheld due to failure of the contractor to pay any laborer or mechanic employed or working on the site of the work, all or part of the wages required under the terms of the contract. The Department may suspend or withhold payments only after the contractor has been given written notice of the alleged violation and the contractor has failed to comply with the wage determination of the Department of Highways.

13. Contractors and subcontractors shall comply with the sections of Kentucky Revised Statutes, Chapter 337 relating to contracts for Public Works.

Revised 2-16-95

EXECUTIVE BRANCH CODE OF ETHICS

In the 1992 regular legislative session, the General Assembly passed and Governor Brereton Jones signed Senate Bill 63 (codified as KRS 11A), the Executive Branch Code of Ethics, which states, in part:

> KRS 11A.040 (6) provides:
>
> No present or former public servant shall, within six (6) months of following termination of his office or employment, accept employment, compensation or other economic benefit from any person or business that contracts or does business with the state in matters in which he was directly involved during his tenure. This provision shall not prohibit an individual from returning to the same business, firm, occupation, or profession in which he was involved prior to taking office or beginning his term of employment, provided that, for a period of six (6) months, he personally refrains from working on any matter in which he was directly involved in state government. This subsection shall not prohibit the performance of ministerial functions, including, but not limited to, filing tax returns, filing applications for permits or licenses, or filing incorporation papers.
>
> KRS 11A.040 (8) states:
>
> A former public servant shall not represent a person in a matter before a state agency in which the former public servant was directly involved, for a period of one (1) year after the latter of:
>
> a) The date of leaving office or termination of employment; or
> b) The date the term of office expires to which the public servant was elected.

This law is intended to promote public confidence in the integrity of state government and to declare as public policy the idea that state employees should view their work as a public trust and not as a way to obtain private benefits.

If you have worked for the executive branch of state government within the past six months, you may be subject to the law's prohibitions. The law's applicability may be different if you hold elected office or are contemplating representation of another before a state agency.

Also, if you are affiliated with a firm which does business with the state and which employs former state executive-branch employees, you should be aware that the law may apply to them.

In case of doubt, the law permits you to request an advisory opinion from the Executive Branch Ethics Commission, Room 136, Capitol Building, 700 Capitol Avenue, Frankfort, Kentucky 40601; telephone (502) 564-7954.

Kentucky Equal Employment Opportunity Act of 1978

The requirements of the Kentucky Equal Employment Opportunity Act of 1978 (KRS 45.560-45.640) shall apply to this Contract. The apparent low Bidder will be required to submit EEO forms to the Division of Construction Procurement, which will then forward to the Finance and Administration Cabinet for review and approval. No award will become effective until all forms are submitted and EEO/CC has certified compliance. The required EEO forms are as follows:

- EEO-1: Employer Information Report
- Affidavit of Intent to Comply
- Employee Data Sheet
- Subcontractor Report

These forms are available on the Finance and Administration's web page under ***Vendor Information, Standard Attachments and General Terms*** at the following address: **https://www.eProcurement.ky.gov**.

Bidders currently certified as being in compliance by the Finance and Administration Cabinet may submit a copy of their approval letter in lieu of the referenced EEO forms.

For questions or assistance please contact the Finance and Administration Cabinet by email at **finance.contractcompliance@ky.gov** or by phone at 502-564-2874.

General Decision Number: KY100025 08/13/2010 KY25

Superseded General Decision Number: KY20080025

State: Kentucky

Construction Type: Heavy

Counties: Allen, Ballard, Butler, Caldwell, Calloway, Carlisle, Christian, Crittenden, Daviess, Edmonson, Fulton, Graves, Hancock, Henderson, Hickman, Hopkins, Livingston, Logan, Lyon, Marshall, McCracken, McLean, Muhlenberg, Ohio, Simpson, Todd, Trigg, Union, Warren and Webster Counties in Kentucky.

HEAVY CONSTRUCTION PROJECTS

Modification Number	Publication Date
0	03/12/2010
1	03/19/2010
2	04/02/2010
3	05/07/2010
4	05/28/2010
5	06/04/2010
6	06/11/2010
7	07/09/2010
8	07/16/2010
9	08/06/2010
10	08/13/2010

BRIN0004-002 04/01/2010

BALLARD, BUTLER, CALDWELL, CARLISLE, CRITTENDEN, DAVIESS, EDMONSON, FULTON, GRAVES, HANCOCK, HENDERSON, HICKMAN, HOPKINS, LIVINGSTON, LYON, MARSHALL, MCCRACKEN, MCLEAN, MUHLENBERG, OHIO, UNION, and WEBSTER COUNTIES

	Rates	Fringes
BRICKLAYER	$ 27.47	12.53

BRTN0004-005 05/01/2009

ALLEN, CALLOWAY, CHRISTIAN, LOGAN, SIMPSON, TODD, TRIGG, and WARREN COUNTIES

	Rates	Fringes
BRICKLAYER	$ 24.52	1.83

CARP0357-002 07/01/2008

	Rates	Fringes
CARPENTER	$ 24.84	10.23
Diver	$ 37.64	10.23
PILEDRIVERMAN	$ 25.09	10.23

CARP1031-007 06/01/2009

ALLEN, BUTLER, EDMONSON, LOGAN, SIMPSON & WARREN COUNTIES:

	Rates	Fringes
MILLWRIGHT	$ 24.18	15.64

CARP1080-005 06/01/2009

BALLARD, CALDWELL, CALLOWAY, CARLISLE, CHRISTIAN, CRITTENDEN, FULTON, GRAVES, HICKMAN, HOPKINS, LIVINGSTON, LYON, MARSHALL, MCCRACKEN, TODD & TRIGG COUNTIES:

	Rates	Fringes
MILLWRIGHT	$ 23.48	15.06

CARP1080-007 06/01/2009

DAVIESS, HANCOCK, HENDERSON, MCLEAN, MUHLENBERG, OHIO, UNION & WEBSTER COUNTIES:

	Rates	Fringes
MILLWRIGHT	$ 23.38	14.61

ELEC0369-006 05/26/2010

BUTLER, EDMONSON, LOGAN, TODD & WARREN COUNTIES:

	Rates	Fringes
ELECTRICIAN	$ 29.27	13.08

ELEC0429-001 02/01/2010

ALLEN & SIMPSON COUNTIES:

	Rates	Fringes
ELECTRICIAN	$ 21.85	10.35

ELEC0816-002 01/01/2010

BALLARD, CALDWELL, CALLOWAY, CARLISLE, CHRISTIAN, CRITTENDEN, FULTON (Except a 5 mile radius of City Hall in Fulton), GRAVES, HICKMAN, LIVINGSTON, LYON, MARSHALL, MCCRACKEN & TRIGG COUNTIES:

	Rates	Fringes
ELECTRICIAN	$ 28.27	25.5%+5.25

Cable spicers receive $.25 per hour additional.

ELEC1701-003 06/01/2010

DAVIESS, HANCOCK, HENDERSON, HOPKINS, MCLEAN, MUHLENBERG, OHIO, UNION & WEBSTER COUNTIES:

	Rates	Fringes
ELECTRICIAN		
Electrician	$ 29.01	27.85%+5.34
Heilarc Welding; Cable Splicing	$ 29.26	27.85%+5.34

ELEC1925-002 06/01/2009

FULTON COUNTY (Up to a 5 mile radius of City Hall in Fulton):

	Rates	Fringes
CABLE SPLICER	$ 25.00	10.27
ELECTRICIAN	$ 24.50	10.26

ENGI0181-017 07/01/2010

	Rates	Fringes
Operating Engineer:		
GROUP 1	$ 25.35	13.00
GROUP 2	$ 22.93	13.00
GROUP 3	$ 23.31	13.00
GROUP 4	$ 22.67	13.00

OPERATING ENGINEER CLASSIFICATIONS

GROUP 1 - A-Frame Winch Truck; Auto Patrol; Backfiller; Batcher Plant; Bituminous Paver; Bituminous Transfer Machine; Boom Cat; Bulldozer; Mechanic; Cableway; Carry-All Scoop; Carry Deck Crane; Central Compressor Plant; Cherry Picker; Clamshell; Concrete Mixer (21 cu. ft. or Over); Concrete Paver; Truck-Mounted Concrete Pump; Core Drill; Crane; Crusher Plant; Derrick; Derrick Boat; Ditching & Trenching Machine; Dragline; Dredge Operator; Dredge Engineer; Elevating Grader & Loaders; Grade-All; Gurries; Heavy Equipment Robotics Operator/Mechanic; High Lift; Hoe-Type Machine; Hoist (Two or More Drums); Hoisting Engine (Two or More Drums); Horizontal Directional Drill Operator; Hydrocrane; Hyster; KeCal Loader; LeTourneau; Locomotive; Mechanic; Mechanically Operated Laser Screed; Mechanic Welder; Mucking Machine; Motor Scraper; Orangepeel Bucket; Overhead Crane; Piledriver; Power Blade; Pumpcrete; Push Dozer; Rock Spreader, attached to equipment; Rotary Drill; Roller (Bituminous); Rough Terrain Crane; Scarifier; Scoopmobile; Shovel; Side Boom; Subgrader; Tailboom; Telescoping Type Forklift; Tow or Push Boat; Tower Crane (French, German & other types); Tractor Shovel; Truck Crane; Tunnel Mining Machines, including Moles, Shields or similar types of Tunnel Mining Equipment

GROUP 2 - Air Compressor (Over 900 cu. ft. per min.); Bituminous Mixer; Boom Type Tamping Machine; Bull Float; Concrete Mixer (Under 21 cu. ft.); Dredge Engineer;

Electric Vibrator; Compactor/Self-Propelled Compactor; Elevator (One Drum or Buck Hoist); Elevator (When used to Hoist Building Material); Finish Machine; Firemen & Hoist (One Drum); Flexplane; Forklift (Regardless of Lift Height); Form Grader; Joint Sealing Machine; Outboard Motor Boat; Power Sweeper (Riding Type); Roller (Rock); Ross Carrier; Skid Mounted or Trailer Mounted Conrete Pump; Skid Steer Machine with all Attachments; Switchman or Brakeman; Throttle Valve Person; Tractair & Road Widening Trencher; Tractor (50 H.P. or Over); Truck Crane Oiler; Tugger; Welding Machine; Well Points;& Whirley Oiler

GROUP 3 - All Off Road Material Handling Equipment, including Articulating Dump Trucks; Greaser on Grease Facilities servicing Heavy Equipment

GROUP 4 - Bituminous Distributor; Burlap & Curing Machine; Cement Gun; Concrete Saw; Conveyor; Deckhand Oiler; Grout Pump; Hydraulic Post Driver; Hydro Seeder; Mud Jack; Oiler; Paving Joint Machine; Power Form Handling Equipment; Pump; Roller (Earth); Steerman; Tamping Machine; Tractor (Under 50 H.P.); & Vibrator

CRANES - with booms 150 ft. & Over (Including JIB), and where the length of the boom in combination with the length of the piling equals or exceeds 150 ft. - $1.00 above Group 1 rate

EMPLOYEES ASSIGNED TO WORK BELOW GROUND LEVEL ARE TO BE PAID 10% ABOVE BASIC WAGE RATE. THIS DOES NOT APPLY TO OPEN CUT WORK.

IRON0070-005 06/01/2010

BUTLER COUNTY (Eastern eighth, including the Townships of Decker, Lee & Tilford);

EDMONSON COUNTY (Northern three-fourths, including the Townships of Asphalt, Bee Spring, Brownsville, Grassland, Huff, Kyrock, Lindseyville, Mammoth Cave, Ollie, Prosperity, Rhoda, Sunfish & Sweden):

	Rates	Fringes
Ironworkers:		
Structural; Ornamental; Reinforcing; Precast Concrete Erectors	$ 24.99	17.98

IRON0103-004 04/01/2010

BUTLER COUNTY (Townships of Aberdeen, Bancock, Casey, Dexterville, Dunbar, Elfie, Gilstrap, Huntsville, Logansport, Monford, Morgantown, Provo, Rochester, South Hill & Welchs Creek);

CALDWELL COUNTY (Northeastern third, including the Township of Creswell);

CHRISTIAN COUNTY (Northern third, including the Townships of Apex, Crofton, Kelly, Mannington & Wynns);

CRITTENDEN COUNTY (Northeastern half, including the Townships of Grove, Mattoon, Repton, Shady Grove & Tribune);

MUHLENBERG COUNTY (Townships of Bavier, Beech Creek Junction, Benton, Brennen, Browder, Central City, Cleaton, Depoy, Drakesboro, Eunis, Graham, Hillside, Luzerne, Lynn City, Martwick, McNary, Millport, Moorman, Nelson, Paradise, Powderly, South Carrollton, Tarina & Weir);

DAVIESS, HANCOCK, HENDERSON, HOPKINS, MCLEAN, OHIO, UNION & WEBSTER COUNTIES:

	Rates	Fringes
Ironworkers:.....	$ 27.00	14.475

IRON0492-003 05/01/2009

BUTLER COUNTY (Southern third, including the Townships of Boston, Berrys Lick, Dimple, Jetson, Quality, Sharer, Sugar Grove & Woodbury);

CHRISTIAN COUNTY (Eastern two-thirds, including the Townships of Bennettstown, Casky, Herndon, Hopkinsville, Howell, Masonville, Pembroke & Thompsonville);

EDMONSON COUNTY (Southern fourth, including the Townships of Chalybeate & Rocky Hill);

MUHLENBERG COUNTY (Southern eighth, including the Townships of Dunnior, Penrod & Rosewood);

ALLEN, LOGAN, SIMPSON, TODD & WARREN COUNTIES:

	Rates	Fringes
Ironworkers:.....	$ 22.50	9.60

IRON0782-006 05/05/2010

CALDWELL COUNTY (Southwestern two-thirds, including the Townships of Cedar Bluff, Cider, Claxton, Cobb, Crowtown, Dulaney, Farmersville, Fredonia, McGowan, Otter Pond & Princeton);

CHRISTIAN COUNTY (Western third, Excluding the Townships of Apex, Crofton, Kelly, Mannington, Wynns, Bennettstown, Casky, Herndon, Hopkinsville, Howell, Masonville, Pembroke & Thompsonville);

CRITTENDEN COUNTY (Southwestern half, including the Townships of Crayne, Dycusburg, Frances, Marion, Mexico, Midway, Sheridan & Told);

BALLARD, CALLOWAY, CARLISLE, FULTON, GRAVES, HICKMAN,

LIVINGSTON, LYON, MARSHALL, MCCRACKEN & TRIGG COUNTIES:

	Rates	Fringes
Ironworkers:		
Projects with a total contract cost of $20,000,000.00 or above.....	$ 26.00	16.04
All Other Work.....	$ 24.66	14.96

LABO0189-005 07/01/2010

BALLARD, CALLOWAY, CARLISLE, FULTON, GRAVES, HICKMAN, LIVINGSTON, LYON, MARSHALL & MCCRACKEN COUNTIES

	Rates	Fringes
Laborers:		
GROUP 1.....	$ 20.61	10.00
GROUP 2.....	$ 20.86	10.00
GROUP 3.....	$ 20.91	10.00
GROUP 4.....	$ 21.51	10.00

LABORER CLASSIFICATIONS

GROUP 1 - Aging & Curing of Concrete; Asbestos Abatement Worker; Asphalt Plant; Asphalt; Batch Truck Dump; Carpenter Tender; Cement Mason Tender; Cleaning of Machines; Concrete; Demolition; Dredging; Environmental - Nuclear, Radiation, Toxic & Hazardous Waste - Level D; Flagperson; Grade Checker; Hand Digging & Hand Back Filling; Highway Marker Placer; Landscaping, Mesh Handler & Placer; Puddler; Railroad; Rip-rap & Grouter; Right-of-Way; Sign, Guard Rail & Fence Installer; Signal Person; Sound Barrier Installer; Storm & Sanitary Sewer; Swamper; Truck Spotter & Dumper; Wrecking of Concrete Forms; General Cleanup

GROUP 2 - Batter Board Man (Sanitary & Storm Sewer); Brickmason Tender; Mortar Mixer Operator; Scaffold Builder; Burner & Welder; Bushammer; Chain Saw Operator; Concrete Saw Operator; Deckhand Scow Man; Dry Cement Handler; Environmental - Nuclear, Radiation, Toxic & Hazardous Waste - Level C; Forklift Operator for Masonary; Form Setter; Green Concrete Cutting; Hand Operated Grouter & Grinder Machine Operator; Jackhammer; Pavement Breaker; Paving Joint Machine; Pipelayer; Plastic Pipe Fusion; Power Driven Georgia Buggy & Wheel Barrow; Power Post Hole Digger; Precast Manhole Setter; Walk-Behind Tamper; Walk-Behind Trencher; Sand Blaster; Concrete Chipper; Surface Grinder; Vibrator Operator; Wagon Driller

GROUP 3 - Asphalt Luteman & Raker; Gunnite Nozzleman; Gunnite Operator & Mixer; Grout Pump Operator; Blaster; Side Rail Setter; Rail Paved Ditches; Screw Operator; Tunnel (Free Air); Water Blaster

GROUP 4 - Caisson Worker (Free Air); Cement Finisher; Environmental - Nuclear, Radiation, Toxic & Hazardous Waste

- Levels A & B; Miner & Driller (Free Air); Tunnel Blaster; & Tunnel Mucker (Free Air); Directional & Horizontal Boring; Air Track Drillers (All Types); Powdermen & Blasters; Troxler & Concrete Tester if Laborer is Utilized

---

LABO0189-006 07/01/2010

ALLEN, BUTLER, CALDWELL, CHRISTIAN, DAVIESS, EDMONSON, HANCOCK, HOPKINS, LOGAN, MCLEAN, MUHLENBERG, OHIO, SIMPSON, TODD, TRIGG & WARREN COUNTIES

	Rates	Fringes
Laborers:		
GROUP 1	$ 20.61	10.00
GROUP 2	$ 20.86	10.00
GROUP 3	$ 20.91	10.00
GROUP 4	$ 21.51	10.00

LABORER CLASSIFICATIONS

GROUP 1 - Aging & Curing of Concrete; Asbestos Abatement Worker; Asphalt Plant; Asphalt; Batch Truck Dump; Carpenter Tender; Cement Mason Tender; Cleaning of Machines; Concrete; Demolition; Dredging; Environmental - Nuclear, Radiation, Toxic & Hazardous Waste - Level D; Flagperson; Grade Checker; Hand Digging & Hand Back Filling; Highway Marker Placer; Landscaping, Mesh Handler & Placer; Puddler; Railroad; Rip-rap & Grouter; Right-of-Way; Sign, Guard Rail & Fence Installer; Signal Person; Sound Barrier Installer; Storm & Sanitary Sewer; Swamper; Truck Spotter & Dumper; Wrecking of Concrete Forms; General Cleanup

GROUP 2 - Batter Board Man (Sanitary & Storm Sewer); Brickmason Tender; Mortar Mixer Operator; Scaffold Builder; Burner & Welder; Bushammer; Chain Saw Operator; Concrete Saw Operator; Deckhand Scow Man; Dry Cement Handler; Environmental - Nuclear, Radiation, Toxic & Hazardous Waste - Level C; Forklift Operator for Masonary; Form Setter; Green Concrete Cutting; Hand Operated Grouter & Grinder Machine Operator; Jackhammer; Pavement Breaker; Paving Joint Machine; Pipelayer; Plastic Pipe Fusion; Power Driven Georgia Buggy & Wheel Barrow; Power Post Hole Digger; Precast Manhole Setter; Walk-Behind Tamper; Walk-Behind Trencher; Sand Blaster; Concrete Chipper; Surface Grinder; Vibrator Operator; Wagon Driller

GROUP 3 - Asphalt Luteman & Raker; Gunnite Nozzleman; Gunnite Operator & Mixer; Grout Pump Operator; Blaster; Side Rail Setter; Rail Paved Ditches; Screw Operator; Tunnel (Free Air); Water Blaster

GROUP 4 - Caisson Worker (Free Air); Cement Finisher; Environmental - Nuclear, Radiation, Toxic & Hazardous Waste - Levels A & B; Miner & Driller (Free Air); Tunnel Blaster; & Tunnel Mucker (Free Air); Directional & Horizontal Boring; Air Track Drillers (All Types); Powdermen & Blasters; Troxler & Concrete Tester if Laborer is Utilized

---

LABO0189-007 07/01/2010

CRITTENDEN, HENDERSON, UNION & WEBSTER COUNTIES

	Rates	Fringes
Laborers:		
GROUP 1	$ 20.61	10.00
GROUP 2	$ 20.86	10.00
GROUP 3	$ 20.91	10.00
GROUP 4	$ 21.51	10.00

LABORER CLASSIFICATIONS

GROUP 1 - Aging & Curing of Concrete; Asbestos Abatement Worker; Asphalt Plant; Asphalt; Batch Truck Dump; Carpenter Tender; Cement Mason Tender; Cleaning of Machines; Concrete; Demolition; Dredging; Environmental - Nuclear, Radiation, Toxic & Hazardous Waste - Level D; Flagperson; Grade Checker; Hand Digging & Hand Back Filling; Highway Marker Placer; Landscaping, Mesh Handler & Placer; Puddler; Railroad; Rip-rap & Grouter; Right-of-Way; Sign, Guard Rail & Fence Installer; Signal Person; Sound Barrier Installer; Storm & Sanitary Sewer; Swamper; Truck Spotter & Dumper; Wrecking of Concrete Forms; General Cleanup

GROUP 2 - Batter Board Man (Sanitary & Storm Sewer); Brickmason Tender; Mortar Mixer Operator; Scaffold Builder; Burner & Welder; Bushammer; Chain Saw Operator; Concrete Saw Operator; Deckhand Scow Man; Dry Cement Handler; Environmental - Nuclear, Radiation, Toxic & Hazardous Waste - Level C; Forklift Operator for Masonary; Form Setter; Green Concrete Cutting; Hand Operated Grouter & Grinder Machine Operator; Jackhammer; Pavement Breaker; Paving Joint Machine; Pipelayer; Plastic Pipe Fusion; Power Driven Georgia Buggy & Wheel Barrow; Power Post Hole Digger; Precast Manhole Setter; Walk-Behind Tamper; Walk-Behind Trencher; Sand Blaster; Concrete Chipper; Surface Grinder; Vibrator Operator; Wagon Driller

GROUP 3 - Asphalt Luteman & Raker; Gunnite Nozzleman; Gunnite Operator & Mixer; Grout Pump Operator; Blaster; Side Rail Setter; Rail Paved Ditches; Screw Operator; Tunnel (Free Air); Water Blaster

GROUP 4 - Caisson Worker (Free Air); Cement Finisher; Environmental - Nuclear, Radiation, Toxic & Hazardous Waste - Levels A & B; Miner & Driller (Free Air); Tunnel Blaster; & Tunnel Mucker (Free Air); Directional & Horizontal Boring; Air Track Drillers (All Types); Powdermen & Blasters; Troxler & Concrete Tester if Laborer is Utilized

---

PAIN0032-002 05/01/2010

BALLARD COUNTY:

	Rates	Fringes
Painters:		
Bridges & Dams	$ 30.56	13.58

All Other Work.....$ 28.26 13.58

Spray, Blast, Steam, High & Hazardous (Including Lead Abatement) and All Epoxy - $1.00 Premium

---

PAIN0118-003 05/01/2010

EDMONSON COUNTY:

	Rates	Fringes
Painters:		
Brush & Roller	$ 18.50	10.30
Spray, Sandblast, Power Tools, Waterblast & Steam Cleaning	$ 19.50	10.30

PAIN0156-006 04/01/2008

DAVIESS, HANCOCK, HENDERSON, MCLEAN, OHIO, UNION & WEBSTER COUNTIES

	Rates	Fringes
Painters:		
BRIDGES, LOCKS & DAMS:		
GROUP 1	$ 25.60	10.05
GROUP 2	$ 25.85	10.05
GROUP 3	$ 26.60	10.05
GROUP 4	$ 27.60	10.05
ALL OTHER WORK:		
GROUP 1	$ 24.45	10.05
GROUP 2	$ 24.70	10.05
GROUP 3	$ 25.45	10.05
GROUP 4	$ 26.45	10.05

PAINTER CLASSIFICATIONS

GROUP 1 - Brush & Roller

GROUP 2 - Plasterers

GROUP 3 - Spray; Sandblast; Power Tools; Waterblast; Steamcleaning; Brush & Roller of Mastics, Creosotes, Kwinch Koate & Coal Tar Epoxy

GROUP 4 - Spray of Mastics, Creosotes, Kwinch Koate & Coal Tar Epoxy

---

PAIN0456-003 07/01/2009

ALLEN, BUTLER, LOGAN, MUHLENBERG, SIMPSON, TODD & WARREN COUNTIES:

	Rates	Fringes
Painters:		
BRIDGES, LOCKS & DAMS		

Brush & Roller.....$ 22.05 8.65
BRIDGES, LOCKS & DAMS

Spray; Sandblast; Power
Tools; Waterblast & Steam
Cleaning.....$ 23.05 8.65
ALL OTHER WORK

Brush & Roller.....$ 17.05 8.65
ALL OTHER WORK

Spray; Sandblast; Power
Tools; Waterblast & Steam
Cleaning.....$ 18.05 8.65

ALL OTHER WORK - HIGH TIME PAY
Over 35 feet (up to 100 feet) - $1.00 above base wage
100 feet and over - $2.00 above base wage

DURING SPRAY PAINTING AND SANDBLASTING OPERATIONS, POT TENDERS SHALL RECEIVE THE SAME WAGE RATES AS THE SPRAY PAINTER OR NOZZLE OPERATOR

PAIN0500-002 07/01/2009

CALDWELL, CALLOWAY, CARLISLE, CHRISTIAN, CRITTENDEN, FULTON, GRAVES, HICKMAN, HOPKINS, LIVINGSTON, LYON, MARSHALL, MCCRACKEN & TRIGG COUNTIES:

	Rates	Fringes
Painters:		
Bridges & Dams	$ 24.75	10.55
All Other Work	$ 18.50	10.55

Waterblasting units with 3500 PSI and above - $.50 premium
Spraypainting and all abrasive blasting - $1.00 premium
Work 40 ft. and above ground level - $1.00 premium

PLUM0184-002 07/01/2010

BALLARD, CALDWELL, CALLOWAY, CARLISLE, CHRISTIAN, CRITTENDEN, FULTON, GRAVES, HICKMAN, LIVINGSTON, LYON, MARSHALL, MCCRACKEN & TRIGG COUNTIES:

	Rates	Fringes
Plumber; Steamfitter	$ 31.03	13.25

PLUM0502-004 08/01/2009

ALLEN, BUTLER, EDMONSON, SIMPSON & WARREN

	Rates	Fringes
Plumber; Steamfitter	$ 30.00	14.17

```
* PLUM0633-002 07/01/2010

DAVIESS, HANCOCK, HENDERSON, HOPKINS, LOGAN, MCLEAN,
MUHLENBERG,  OHIO, TODD, UNION & WEBSTER COUNTIES:


                                  Rates          Fringes

PLUMBER/PIPEFITTER...............$ 27.37            12.75
----------------------------------------------------------------
 TEAM0089-003 03/31/2008

                                  Rates          Fringes

Truck drivers:
     ALLEN, BUTLER, EDMONSON,
     LOGAN, SIMPSON & WARREN
     COUNTIES:
      Group 1...................$ 19.04            12.02
      Group 2...................$ 19.37            12.02
      Group 3...................$ 19.44            12.02
      Group 4...................$ 19.45            12.02
      Group 5...................$ 19.50            12.02
     BALLARD, CALLOWAY,
     CALDWELL, CARLISLE,
     CHRISTIAN, CRITTENDEN,
     FULTON, GRAVES, HICKMAN,
     LIVINGSTON, LYON,
     MARSHALL, MCCRACKEN, TODD
     & TRIGG COUNTIES:
      Group 1...................$ 23.89             4.15
      Group 2...................$ 24.12             4.15
      Group 3...................$ 24.19             4.15
      Group 4...................$ 24.20             4.15
     DAVIESS, HANCOCK,
     HENDERSON, HOPKINS,
     MCLEAN, MUHLENBERG, OHIO,
     UNION & WEBSTER COUNTIES:
      Group 1...................$ 19.23             9.20
      Group 2...................$ 19.46             9.20
      Group 3...................$ 19.53             9.20
      Group 4...................$ 19.54             9.20

  TRUCK DRIVER CLASSIFICATIONS FOR ALLEN, BUTLER, EDMONSON,
  LOGAN, SIMPSON & WARREN COUNTIES

GROUP 1 - Greaser, Tire Changer

GROUP 2 - Truck Mechanic

  GROUP 3 - Single Axle Dump; Flat Bed; all Terrain vehicles
  when used to haul materials; Semi Trailer or Pole Trailer
  when used to pull building materials and equipment; Tandem
  Axle Dump; Driver of Distributors; Mixer All Types

  GROUP 4 - Winch and A-Frame when used in transporting
  materials; Ross Carrier; Fork Lift when used to transport
  building materials; Driver on Pavement Breaker

  GROUP 5 - Euclid and Other Heavy Earth Moving Equipment; Low
```

Boy; Articulator Cat; Five Axle Vehicle

TRUCK DRIVER CLASSIFICATIONS FOR BALLARD, CALLOWAY, CALDWELL, CARLISLE, CHRISTIAN, CRITTENDEN, FULTON, GRAVES, HICKMAN, LIVINGSTON, LYON, MARSHALL, MCCRACKEN, TODD & TRIGG COUNTIES

GROUP 1 - Greaser; Tire Changer

GROUP 2 - Truck Mechanic

GROUP 3 - Single Axle Dump; Flat Bed; all Terrain Vehicles when used to haul materials; Semi Trailer or Pole Trailer when used to pull building materials and equipment; Tandem Axle Dump; Driver of Distributors; Mixer All Types

GROUP 4 - Euclid and Other Heavy Earth Moving Equipment; Low Boy; Articulator Cat; Five Axle Vehicle; Winch and A-Frame when used in transporting materials; Ross Carrier

TRUCK DRIVER CLASSIFICATIONS FOR DAVIESS, HANCOCK, HENDERSON, HOPKINS, MCLEAN, MUHLENBERG, OHIO, UNION & WEBSTER COUNTIES

GROUP 1 - Greaser, Tire Changer

GROUP 2 - Truck Mechanic

GROUP 3 - Single Axle Dump; Flat Bed; all Terrain Vehicle when used to haul materials; Semi Trailer or Pole Trailer when used to pull building materials and equipment; Tandem Axle Dump; Driver of Distributors; Mixer All Types

GROUP 4 - Euclid and Other Heavy Earth moving Equipment; Lowboy; Articulator Cat; 5 Axle Vehicle; Winch and A-Frame when used in transporting materials; Ross Carrier; Fork Lift when used to transport building materials; Driver on Pavement Breaker

---

WELDERS - Receive rate prescribed for craft performing operation to which welding is incidental.

==========

Unlisted classifications needed for work not included within the scope of the classifications listed may be added after award only as provided in the labor standards contract clauses (29CFR 5.5 (a) (1) (ii)).

In the listing above, the "SU" designation means that rates listed under the identifier do not reflect collectively bargained wage and fringe benefit rates. Other designations indicate unions whose rates have been determined to be prevailing.

WAGE DETERMINATION APPEALS PROCESS

1.) Has there been an initial decision in the matter? This can

be:

* an existing published wage determination
* a survey underlying a wage determination
* a Wage and Hour Division letter setting forth a position on a wage determination matter
* a conformance (additional classification and rate) ruling

On survey related matters, initial contact, including requests for summaries of surveys, should be with the Wage and Hour Regional Office for the area in which the survey was conducted because those Regional Offices have responsibility for the Davis-Bacon survey program. If the response from this initial contact is not satisfactory, then the process described in 2.) and 3.) should be followed.

With regard to any other matter not yet ripe for the formal process described here, initial contact should be with the Branch of Construction Wage Determinations. Write to:

Branch of Construction Wage Determinations
Wage and Hour Division
U.S. Department of Labor
200 Constitution Avenue, N.W.
Washington, DC 20210

2.) If the answer to the question in 1.) is yes, then an interested party (those affected by the action) can request review and reconsideration from the Wage and Hour Administrator (See 29 CFR Part 1.8 and 29 CFR Part 7). Write to:

Wage and Hour Administrator
U.S. Department of Labor
200 Constitution Avenue, N.W.
Washington, DC 20210

The request should be accompanied by a full statement of the interested party's position and by any information (wage payment data, project description, area practice material, etc.) that the requestor considers relevant to the issue.

3.) If the decision of the Administrator is not favorable, an interested party may appeal directly to the Administrative Review Board (formerly the Wage Appeals Board). Write to:

Administrative Review Board
U.S. Department of Labor
200 Constitution Avenue, N.W.
Washington, DC 20210

4.) All decisions by the Administrative Review Board are final.

==========

END OF GENERAL DECISION

Fringe benefit amounts are applicable for all hours worked except when otherwise noted.

These rates are listed pursuant to the Kentucky Determination No. CR-10-I-HWY dated July 16, 2010.

No laborer, workman or mechanic shall be paid at a rate less than that of a Journeyman except those classified as bona fide apprentices.

Apprentices or trainees shall be permitted to work as such subject to Administrative Regulations adopted by the Commissioner of Workplace Standards. Copies of these regulations will be furnished upon request from any interested person.

Before using apprentices on the job the contractor shall present to the Contracting Officer written evidence of registration of such employees in a program of a State apprenticeship and training agency approved and recognized by the U. S. Bureau of Apprenticeship and Training. In the absence of such a State agency, the contractor shall submit evidence of approval and registration by the U. S. Bureau of Apprenticeship and Training.

The contractor shall submit to the Contracting Officer, written evidence of the established apprenticeship-journeyman ratios and wage rates in the project area, which will be the basis for establishing such ratios and rates for the project under the applicable contract provisions.

TO: EMPLOYERS/EMPLOYEES

PREVAILING WAGE SCHEDULE:

The wages indicated on this wage schedule are the least permitted to be paid for the occupations indicated. When an employee works in more than one classification, the employer must record the number of hours worked in each classification at the prescribed hourly base rate.

OVERTIME:

Overtime is to be paid after an employee works eight (8) hours a day or forty (40) hours a week, whichever gives the employee the greater wages. At least time and one-half the base rate is required for all overtime. A laborer, workman or mechanic and an employer may enter into a written agreement or a collective bargaining agreement to work more than eight (8) hours a calendar day but not more than ten (10) hours a calendar day for the straight time hourly rate. Wage violations or questions should be directed to the designated Engineer or the undersigned.

Ryan Griffith, Director
Division of Construction Procurement
Frankfort, Kentucky 40622

PART IV

INSURANCE

INSURANCE

The Contractor shall carry the following insurance in addition to the insurance required by law:

1. Contractor's Public Liability Insurance not less than $100,000.00 for damages arising out of bodily injuries to or death to one person. Not less than $300,000.00 for damages arising out of bodily injuries to or death to two or more persons.

2. Contractor's Property Damages Liability Insurance. Not less than $100,000.00 for all damages arising out of injury or destruction of property in any one accident. Not less than $300,000.00 for all damages during the policy period.

3. Contractor's Protective Public Liability and Property Damage Insurance. The contractor shall furnish evidence with respect to operations performed for him by subcontractors that he carries in his own behalf for the above stipulated amounts.

4. The insurance required above must be evidenced by a Certificate of Insurance and this Certificate of Insurance must contain one of the following statements:

   a. "policy contains no deductible clauses."

   b. "policy contains _____ (amount) deductible property damage clause but company will pay claim and collect the deductible from the insured."

5. WORKMEN'S COMPENSATION INSURANCE. The contractor shall furnish evidence of coverage of all his employees or give evidence of self-insurance by submitting a copy of a certificate issued by the Workmen's Compensation Board.

PART V

BID ITEMS

CONTRACT ID: 102307
COUNTY: HENDERSON
PROPOSAL: FE01 051 0041 016-017

PAGE: 1
LETTING: 08/27/10
CALL NO: 355

LINE NO	ITEM	DESCRIPTION	APPROXIMATE UNIT QUANTITY	UNIT PRICE	AMOUNT
	SECTION 0001	ROADWAY			
0010	00001	DGA BASE	240.000 TON		
0020	00018	DRAINAGE BLANKET-TYPE II-ASPH	365.000 TON		
0030	00069	CRUSHED AGGREGATE SIZE NO 3	470.000 TON		
0040	00205	CL3 ASPH BASE 1.50D PG64-22	1,140.000 TON		
0050	00330	CL3 ASPH SURF 0.50A PG64-22	720.000 TON		
0060	00520	STORM SEWER PIPE-12 IN	55.000 LF		
0070	00980	SLOTTED DRAIN PIPE-12 IN	150.000 LF		
0080	01000	PERFORATED PIPE-4 IN	620.000 LF		
0090	01001	PERFORATED PIPE-6 IN	100.000 LF		
0100	01010	NON-PERFORATED PIPE-4 IN	35.000 LF		
0110	01568	DROP BOX INLET TYPE 13S	1.000 EACH		
0120	01740	CORED HOLE DRAINAGE BOX CON-4 IN	2.000 EACH		
0130	01741	CORED HOLE DRAINAGE BOX CON-6 IN	1.000 EACH		
0140	01810	STANDARD CURB AND GUTTER	155.000 LF		
0150	01812	REMOVE CURB AND GUTTER	150.000 LF		
0160	02091	REMOVE PAVEMENT	1,780.000 SQYD		
0170	02483	CHANNEL LINING CLASS II	10.000 TON		
0180	02562	SIGNS	210.000 SQFT		
0190	02650	MAINTAIN & CONTROL TRAFFIC	(1.00) LS		
0200	02671	PORTABLE CHANGEABLE MESSAGE SIGN	2.000 EACH		

KENTUCKY TRANSPORTATION CABINET
DEPARTMENT OF HIGHWAYS
FRANKFORT, KY 40622

CONTRACT ID: 102307 PAGE: 2
COUNTY: HENDERSON LETTING: 08/27/10
PROPOSAL: FE01 051 0041 016-017 CALL NO: 355

LINE NO	ITEM	DESCRIPTION	APPROXIMATE UNIT QUANTITY	UNIT PRICE	AMOUNT
0210	02676	MOBILIZATION FOR MILL & TEXT	(1.00) LS		
0220	02677	ASPHALT PAVE MILLING & TEXTURING	580.000 TON		
0230	02775	ARROW PANEL	2.000 EACH		
0240	04795	CONDUIT-2 IN	30.000 LF		
0250	04820	TRENCHING AND BACKFILLING	25.000 LF		
0260	04830	LOOP WIRE	1,644.000 LF		
0270	04895	LOOP SAW SLOT AND FILL	288.000 LF		
0280	06510	PAVE STRIPING-TEMP PAINT-4 IN	5,000.000 LF		
0290	06514	PAVE STRIPING-PERM PAINT-4 IN	5,000.000 LF		
0300	06593	PAVEMENT MARKER TYPE V-B Y/R	40.000 EACH		
0310	06600	REMOVE PAVEMENT MARKER TYPE V	40.000 EACH		
0320	20391NS835	JUNCTION BOX TYPE A	1.000 EACH		
0330	20550ND	SAWCUT PAVEMENT	1,300.000 LF		
0340	20914ED	ROLLED CURB AND GUTTER	10.000 LF		
0350	21554EN	EXCAVATION	700.000 CUYD		
0360	22415EN	CONCRETE CLASS A FOR PAD	10.000 SQYD		
0370	22628NN	DROP BOX INLET-MOD	1.000 EACH		
	SECTION 0002	DEMOBILIZATION			
0380	02569	DEMOBILIZATION (AT LEAST 1.5%)	LUMP		
		TOTAL BID			