CALL NO. 339

CONTRACT ID. 072924

FULTON COUNTY

FED/STATE PROJECT NUMBER FE02 038 0051 B00078

LETTING DATE: May 25, 2007

Sealed Bids will be received in the Division of Construction Procurement and/or the Auditorium located on the 1st floor of the Transportation Cabinet Office Building until 10:00 AM EASTERN DAYLIGHT TIME May 25, 2007. Bids will be publicly opened and read at 10:00 AM EASTERN DAYLIGHT TIME.

REQUIRED BID PROPOSAL GUARANTY: Not less than 5% of the total bid.

(Check guaranty submitted: Cashier's Check ☐ Certified Check ☐ Bid Bond ☐)

BID BONDS WHEN SUBMITTED WILL BE RETAINED WITH THE PROPOSAL

DBE General Plan Included ☐

BID ☐ PROPOSAL ISSUED TO: _____

SPECIMEN ☐ _____

Address City State Zip

TABLE OF CONTENTS

PART I SCOPE OF WORK
- PROJECT(S), COMPLETION DATE(S), & LIQUIDATED DAMAGES
- CONTRACT NOTES
- PROJECT IDENTIFICATION SIGN
- WASTE AND BORROWED SITES
- TRAFFIC CONTROL PLAN
- REPLACING EXPANSION DAMS AND/OR INSTALLING ARMORED EDGES
- CONTRACT COMPLETION DATE AND LIQUIDATED DAMAGES
- SKETCH MAP(S)
- ELEVATION AND TYPICAL SECTION OF BRIDGE
- EXPANSION DAM DETAIL - 2"
- CURB SECTION - 2" JOINT

PART II SPECIFICATIONS AND STANDARD DRAWINGS
- SUPPLEMENTAL SPECIFICATIONS
- 2004 STANDARD DRAWINGS THAT APPLY

PART III EMPLOYMENT, WAGE AND RECORD REQUIREMENTS
- LABOR AND WAGE REQUIREMENTS
- EXECUTIVE BRANCH CODE OF ETHICS
- KENTUCKY EQUAL EMPLOYMENT OPPORTUNITY ACT OF 1978
- PROJECT WAGE RATES

PART IV INSURANCE

PART V STATEMENT OF INCOMPLETED WORK

PART VI BID ITEMS

PART VII CERTIFICATION
- PROVISIONS RELATED TO SENATE BILL 258 (1994)
- NON-COLLUSION CERTIFICATION
- CERTIFICATION OF BID PROPOSAL

PART I

SCOPE OF WORK

CONTRACT ID - 072924 ADMINISTRATIVE DISTRICT - 01

PROJECT(S) IDENTIFICATION AND DESCRIPTION:

COUNTY - FULTON PCN - MB03800510701
FE02 038 0051 B00078
FULTON-CLINTON ROAD (US 51) OVER IC RAILROAD (MP 2.73). BRIDGE DECK RESTORATION & WATERPROOFING.
GEOGRAPHIC COORDINATES LATITUDE 36^32'54" LONGITUDE 88^54'31"
AVERAGE DAILY TRAFFIC - 3700 AVERAGE MAINLINE WIDTH - 40.0 FEET

COMPLETION DATE(S) AND LIQUIDATED DAMAGES ESTABLISHED:

COMPLETION DATE - November 15, 2007
APPLIES TO ENTIRE CONTRACT
SEE SPECIAL NOTES FOR LIQUIDATED DAMAGES

20 WORKING DAYS
APPLIES TO B00038N
SEE SPECIAL NOTES FOR LIQUIDATED DAMAGES

CONTRACT NOTES

PROPOSAL ADDENDA

All addenda to this proposal must be incorporated into the proposal when the bid is submitted to the Kentucky Department of Highways. Failure to use the correct and most recent bid sheet(s) may result in the bid being rejected.

BID SUBMITTAL

Bidder must use the Department's Highway Bid Program available on the Internet web site of the Department of Highways, Division of Construction Procurement. (www.transportation.ky.gov/contract)

The Bidder must download the bid items created from the web site to prepare a bid proposal for submission to the Department. The bidder must insert the completed bid item sheets printed from the Program into the bidder's proposal and submit with the disk created by said program.

JOINT VENTURE BIDDING

Joint Venture bidding is permissible. However, both companies MUST purchase a bidding proposal. Either proposal may be submitted but must contain the company names and signatures of both parties where required. A joint bid bond of 5% may be submitted for both companies or each company may submit a separate bond of 5%.

UNDERGROUND FACILITY DAMAGE PROTECTION

The contractor is advised that the Underground Facility Damage Protection Act of 1994, became law January 1, 1995. It is the contractor's responsibility to determine the impact of the act regarding this project, and take all steps necessary to be in compliance with the provision of the act.

SPECIAL NOTE FOR PROJECT IDENTIFICATION SIGNS

When directed by the Engineer, install Project Identification Signs furnished by the Department at each end of the project. The signs furnished by the Department will be approximately 44" X 72" or 72” X 120”aluminum sign blanks with standard color reflective sheeting with the applicable county and project names affixed. The Engineer will determine the size and location of the signs, if any, to be used on the project(s) at the time of construction.

Pick up the signs to be furnished by the Department at the District Traffic Operations Facility. Furnish posts and hardware for mounting the signs. Install the signs at locations determined by the Engineer. Maintain the signs during the duration of the project. Upon completion of the work, remove the signs and return them to District Traffic Operations Facility. Retain possession of the posts and hardware.

The Department will measure installation of the Project Identification Signs in individual units, Each. Payment at the contract unit price Each shall be full compensation for all labor, materials, equipment, and incidentals required for picking up, installing, maintaining, and returning the project identification signs furnished by the Department.

Code	Pay Item	Pay Unit
20588NC	Install Project Identification Signs	Each

SPECIAL PROVISION FOR WASTE AND BORROW SITES

The contractor is advised that it is their responsibility to gain U.S. Army Corp of Engineer's approval before utilizing a waste or borrow site that involves "Waters of the United States". "Waters of the United States" are defined as perennial or intermittent streams, ponds or wetlands. Ephemeral streams are also considered jurisdictional waters, and are typically dry except during rainfall, but have a defined drainage channel. Questions concerning any potential impacts to "Waters…" should be brought to the attention of the appropriate District Office for the Corps of Engineers for a determination, prior to disturbance. Any fees associated with obtaining approval from the U.S. Army Corp of Engineer or other appropriate regulatory agencies for waste and borrow sites is the responsibility of the contractor.

SPECIAL NOTE FOR TRAFFIC CONTROL ON BRIDGE REPAIR CONTRACTS

TRAFFIC CONTROL GENERAL

Except as provided herein, traffic shall be maintained in accordance with the 2004 Standard Specifications, Section 112. Except for the roadway and traffic control bid items listed, all items of work necessary to maintain and control traffic will be paid at the lump sum bid price to "Maintain and Control Traffic".

Contrary to Section 106.01, traffic control devices used on this project may be new, or used in like new condition, at the beginning of the work and maintained in like new condition until completion of the work.

SIGNS

Contrary to Section 112.04.02, only long term signs (signs intended to be continuously in place for more than 3 days) will be measured for payment; short term signs (signs intended to be left in place for 3 days or less) will not be measured for payment but will be incidental to "Maintain and Control Traffic". In addition to signage required by Standard Drawing TTC-110, additional signs for side roads in the construction zone shall be field located by the Engineer.

TEMPORARY PAVEMENT STRIPING

Skip lines through the length of the tapers for lane closures and other striping as directed by the Engineer shall be temporarily covered with 6" black removable tape. Temporary pavement striping shall be paid only once per closure in accordance with Section 112.04.08. The Contractor shall replace any temporary striping that becomes damaged or fails to adhere to the pavement before dark on the day of notification. Liquidated damages shall be assessed the Contractor at a rate of $500 per day for failing to replace temporary striping within this time limit.

LANE CLOSURE

Standard Drawing TTC-110, "Lane Closure Using Traffic Signals" shall be used for traffic control on the project unless otherwise noted.
Lane closures will not be permitted on these days:

Memorial Day Weekend (Friday-Monday)
Independence Day, when July 4th
Labor Day Weekend (Friday-Monday)
Thanksgiving Day Weekend (Thursday-Sunday)
Christmas/New Years (December 24-January 2)

PROJECT PHASING & CONSTRUCTION PROCEDURES

Maintain, as a minimum one lane of traffic at all times in accordance with Standard Drawing No. TTC-110 and the attached detail drawings. The clear lane width required is:

Structure	Clear Lane Width
FE02 038 0051 B00078N	14 feet

SPECIAL NOTE FOR REPLACING EXPANSION DAMS AND/OR

INSTALLING ARMORED EDGES FOR CONCRETE ON BRIDGES

I. DESCRIPTION. Perform all work in accordance with the Kentucky Transportation Cabinet, Department of Highway's 2004 Standard Specifications for Road and Bridge Construction and applicable Supplemental Specifications, the Standard Drawings, this Note, and the attached detail drawings. Section references are to the Standard Specifications.

This work consists of the following: (1) Furnish all labor, materials, tools, and equipment; (2) Remove existing concrete and expansion device(s) and/or bridge ends; (3) Install armored edges and new concrete as specified and in accordance with the attached detail drawings; (4) Install new joint seals (where required); (5) Maintain and control traffic; and (6) Any other work specified as part of this contract.

II. MATERIALS.

A. Class "M" Concrete. Use either "M1" or "M2". See Section 601.

B. Structural Steel. Use new, commercial grade steel suitable for welding. The Engineer will base acceptance on visual inspection. See Standard Drawing BJE-001, current edition.

C. Stud Anchors. The armored edge stud anchors are ¾" x 6" embedded stud shear connectors conforming to ASTM A108, Grade 1015 (Nelson Studs or equal).

D. Steel Reinforcement. Use Grade 60. See Section 602.

E. Epoxy Bond Coat. See Section 511.

F. Neoprene Joint Sealers (Compression Seals). See Section 807.

III. CONSTRUCTION.

A. Remove Existing Materials. Remove the existing expansion dam/bridge end and specified areas of concrete as shown on the attached sketches. Exterme care must be taken when removing debris and/or expansion joint fillers as directed by the Engineer, to make certain not to drop any debris onto the railroad. Dispose of all removed material entirely away from the job site. This work is incidental to the contract unit price for "Expansion Joint Replacement" or "Armored Edge for Concrete".

Clean and leave all existing steel reinforcement encountered in place.

B. Place New Concrete and Armored Edges. After all specified existing materials have been removed; place new armored edges to match the original grade (See attached detail drawings). Place the new Class "M" concrete to the original grade and finish with broom strokes drawn transversely from curb to curb.

All new structural steel shall be cleaned and painted with two coats of commercial primer paint red orange in color, except that surfaces to come in contact with concrete are not to be painted.

Blast clean all areas of existing concrete and structural steel to come in contact with new concrete until free of all laitance and deleterious substances immediately prior to the placement of the Class "M" Concrete. The surface areas of existing concrete to come in contact with the new Class "M" Concrete are to be coated with an epoxy bond coat immediately prior to placing new concrete in accordance with Section 511. The interfaces of the new and old concrete shall be as nearly vertical and horizontal as possible.

C. Additional Steel Reinforcement. Furnish for replacement, as directed by the Engineer, 400 linear feet of steel reinforcing bars ½" diameter by 20' lengths. Place these bars in areas deemed by the Engineer to require additional reinforcement. Field cutting and bending is permitted. Do not place any additional steel reinforcement above the height of the top row of Nelson Studs on the armored edges. Ensure that all exposed steel reinforcement is tied in accordance with Section 602.03.04 prior to pouring the new Class "M" concrete. Deliver unused bars to the Local County Maintenance Barn. Payment will be made in accordance with Section 602.

D. Stage Construction. Installation of concrete and armored edges in two (or more if specified) stages is necessary. Join the armored edges at or near the centerline of the roadway or lane line, field weld and grind smooth.

E. Preformed Neoprene Joint Seal. Place the preformed joint seal in one continuous, unbroken length. Place neoprene compression seals as recommended by the manufacturer and in accordance with Section 609.03.04 (D).

F. Shop Plans. Shop plans will <u>not</u> be required. The Contractor is responsible for obtaining field measurements and supplying properly sized materials to complete the work.

IV MEASUREMENT.

A. Expansion Joint Replacement -2". The Department will measure the quantity in linear feet from gutterline to gutterline along the centerline of the joint.

B. Armored Edge for Concrete. The Department will measure the quantity in linear feet from gutterline to gutterline along the face of the bridge end.

C. Steel Reinforcement. See Section 602.

V. PAYMENT.

A. Expansion Joint Replacement - 2". Payment at the contract unit price per linear foot is full compensation for removing specified existing materials, furnishing and installing the new armored edges, concrete, neoprene joint seal, and all incidental items necessary to complete the work within the specified pay limits as specified by this note and as shown on the attached detail drawings.

B. Armored Edge for Concrete. Payment at the contract unit price per linear foot is full compensation for removing specified existing materials, furnishing and installing the new armored edges, concrete and all incidental items necessary to complete the work (except the overlay material) within the

specified pay limits as specified by this note and as shown on the attached detail drawings.

C. Steel Reinforcement. See Section 602.

The Department will consider payment as full compensation for all work required by this note and the attached detail drawings.

SPECIAL NOTE FOR CONTRACT COMPLETION DATE AND LIQUIDATED DAMAGES ON BRIDGE REPAIR CONTRACTS

I. COMPLETION DATE. The Contractor has the option of selecting the starting date for this Contract. Once selected, notify the Department in writing of the date selected at least two weeks prior to beginning work. All work is to be completed in the 2007 construction season by November 15, 2007. An allotted number of working days are assigned to each structure in this contract as shown below.

STRUCTURE	NUMBER OF WORKING DAYS
FE02 038 0051 B00078N	20

Contrary to Section 108.07.02, the Engineer will begin charging working days for a structure on the day the Contractor starts work or sets up traffic control on that particular structure.

II. LIQUIDATED DAMAGES. Liquidated damages will be assessed the Contractor in accordance with the Transportation Cabinet, Department of Highway's 2004 Standard Specifications for Road and Bridge Construction, Section 108.09, when either the allotted number of working days or the November 15, 2007 date is exceeded.

Contrary to the Standard Specifications, liquidated damages will be assessed the Contractor during the months of December, January, February and March when the contract time has expired on any individual bridge or bridges. Contract time will be charged during these months.

All construction must be completed in accordance with the weather limitations specified in Section 606 and/or Section 601 as applicable. No extension of Contract time will be granted due to inclement weather or temperature limitations that occur due to starting work on the Contract or a structure late in the construction season.

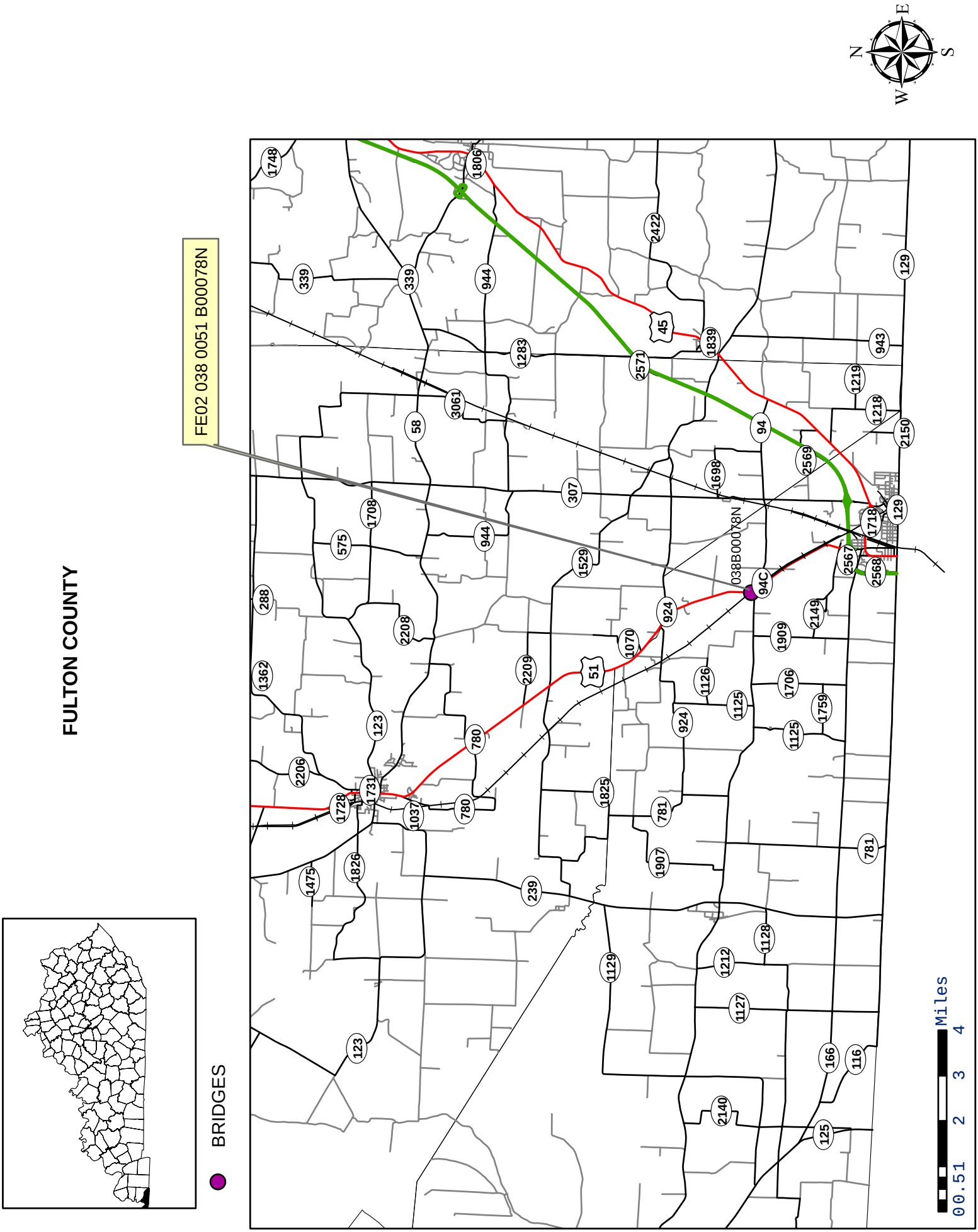
FULTON COUNTY
FE02 038 0051 B00078N
038B00078N
94C
BRIDGES
Miles
0 0.5 1 2 3 4
N
E
S
W

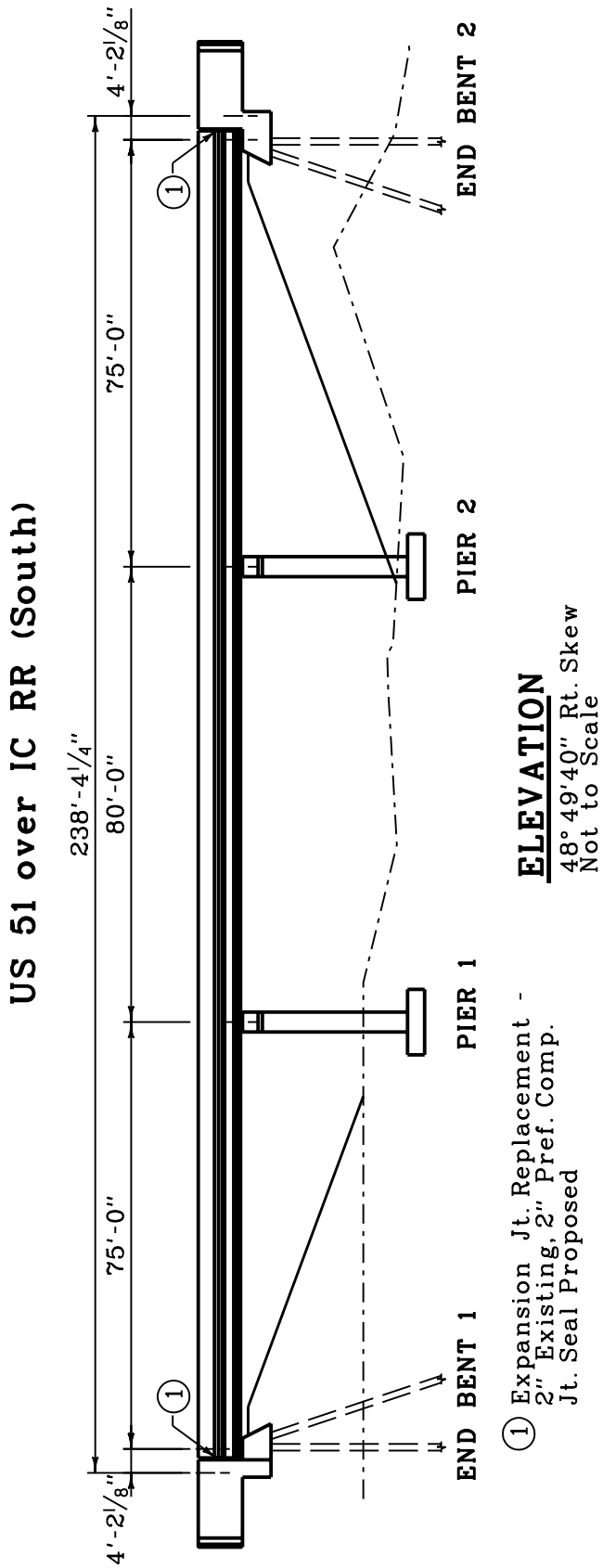

ELEVATION
48° 49'40" Rt. Skew
Not to Scale

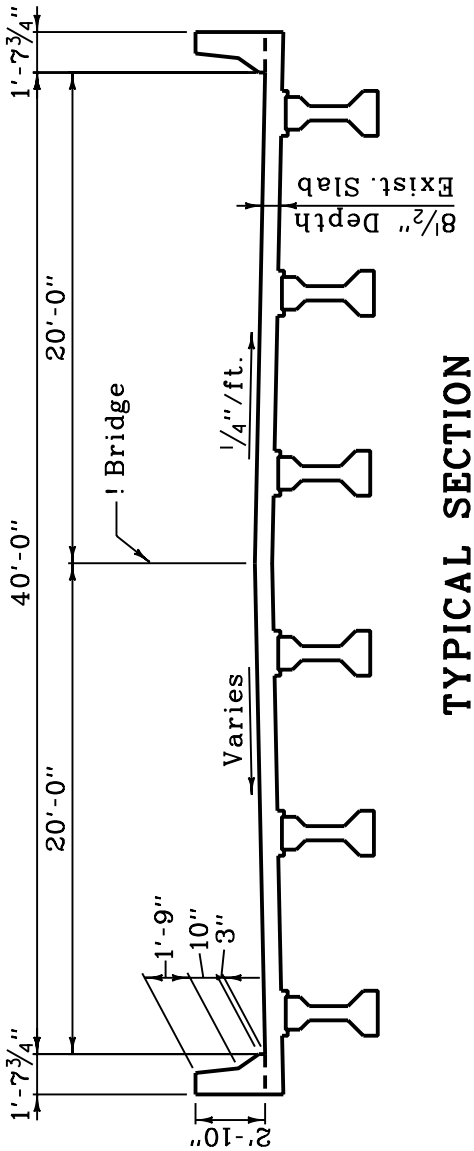

TYPICAL SECTION

EXPANSION DAM DETAIL

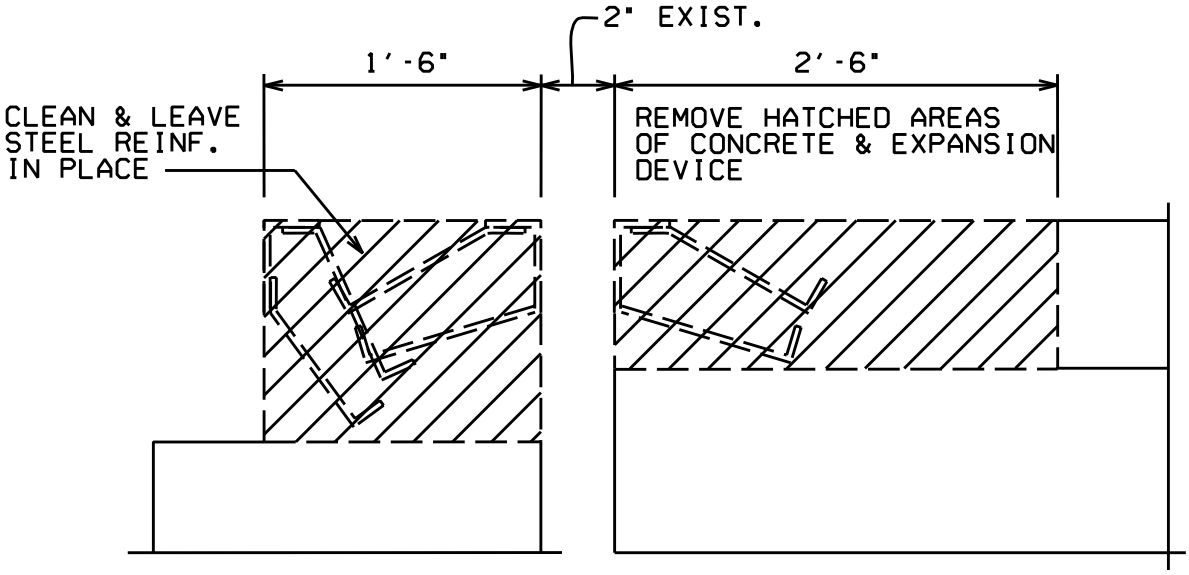

EXISTING SECTION

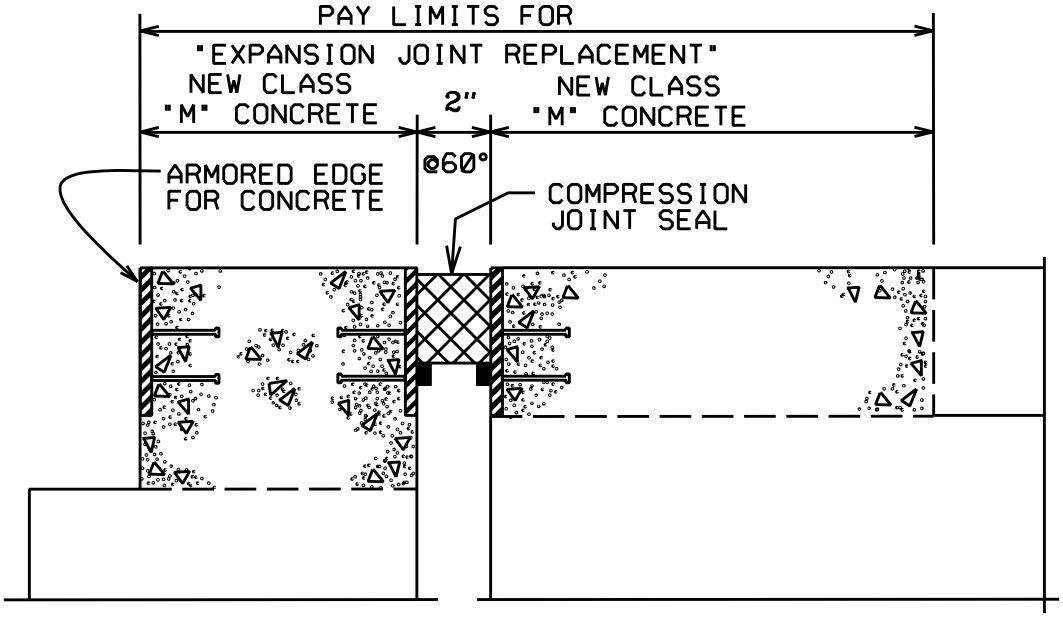

PROPOSED SECTION

CURB SECTION

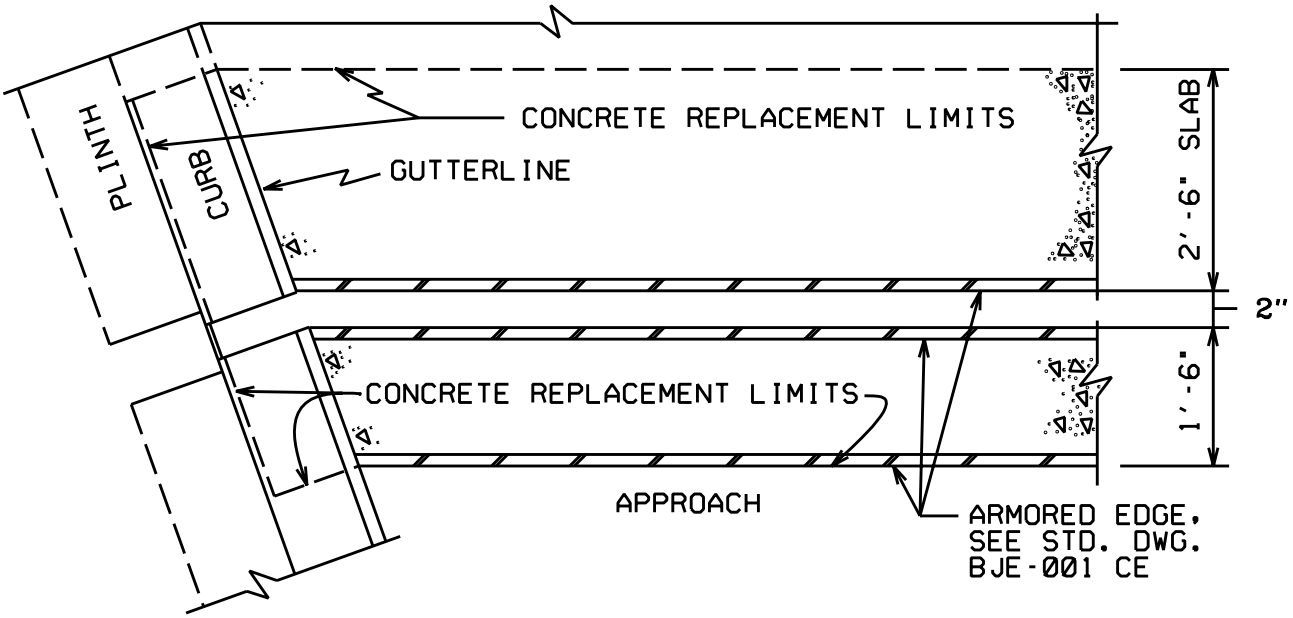

PLAN VIEW @ CURB

"EXPANSION JOINT REPLACEMENT"

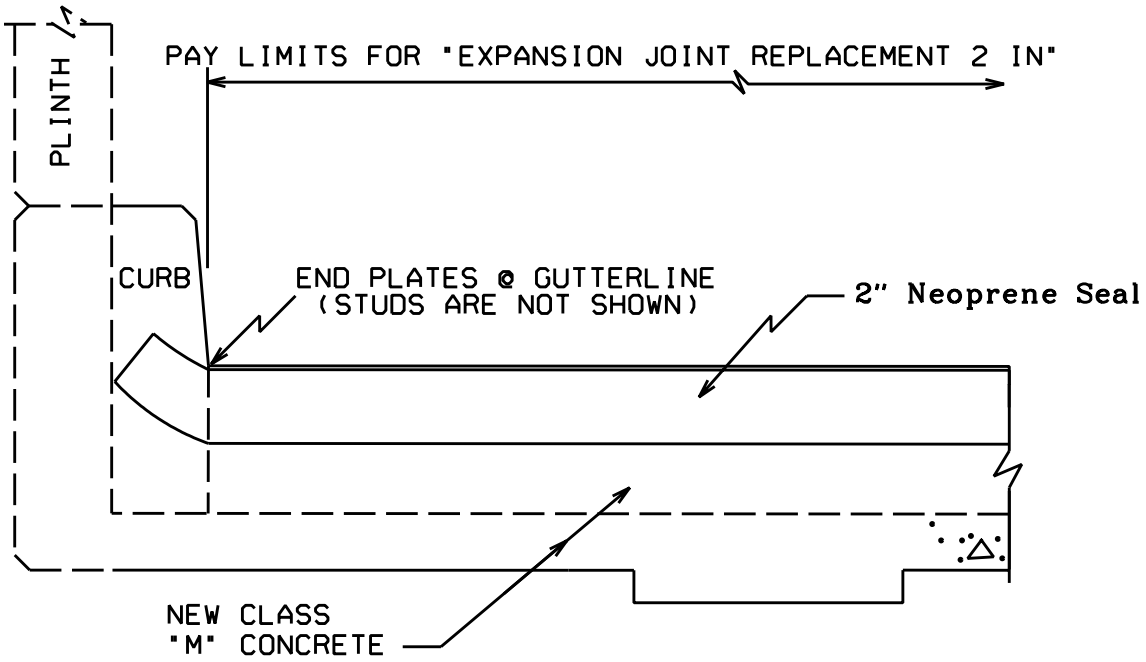

PROPOSED SECTION @ CURB

PART II

SPECIFICATIONS AND STANDARD DRAWINGS

Supplemental Specifications to The Standard Specifications for Road and Bridge Construction, 2004 Edition

(Effective with the May 25, 2007 Letting)

SUBSECTION: 105.07 COOPERATION WITH UTILITIES.
REVISION: In the last paragraph, replace "KRS 367 Sections 1 through 10" with "KRS 367.4901 through 367.4917"

SUBSECTION: 108.01 SUBCONTRACTING OF CONTRACT.
REVISION: Replace the second and third sentence of the first paragraph with the following:

When the Engineer gives such consent, the Engineer will allow the Contractor to subcontract a portion, but the Contractor must perform with his own organization work amounting to no less than 30 percent of the total Contract cost. The Department will not allow any subcontractor to exceed the percentage to be performed by the Contractor and will require the Contractor to maintain a supervisory role over the entire project.

SUBSECTION: 109.07 PRICE ADJUSTMENT.
REVISION: Replace the section with the following:

109.07 PRICE ADJUSTMENTS. Due to the fluctuating costs of petroleum products, the Department will adjust the compensation of specified liquid asphalt items and diesel fuel in contracts when contract quantity thresholds are met.

109.07.01 Liquid Asphalt. The Department will compare the Kentucky Average Price Index (KAPI), for the month that the Contract is let, to the index for the month that the Contractor places the material on the project to determine the percent change. When the original contract quantity for asphalt items is equal to or greater than 3,000 tons and when the average price of the liquid asphalt products increases or decreases more than 5 percent, the Department will adjust the Contractor's compensation. The KAPI is calculated monthly using the average price, per ton at the terminal, from the active suppliers of liquid asphalt.

Adjustable Contract Items**:**

- Asphalt Curing Seal
- Asphalt Material for Prime
- Asphalt Base, All Classes
- Asphalt Binder
- Asphalt Surface, All Classes
- Sand Asphalt Surface
- Asphalt Open-Graded Surface
- Asphalt Seal Coat
- Asphalt Mixture for Leveling and Wedging
- Drainage Blanket - Type II - Asphalt

The Department will determine the price adjustment using the following formulas:

When PC is greater than PL
Asphalt Price Adjustment = (Q x A)/100 x PL x [(PC-PL)/PL - 0.05]

When PC is less than PL
Asphalt Price Adjustment = (Q x A)/100 x PL x [(PC-PL)/PL + 0.05]

Where:
Q = Tons of material or mixture placed each month.
A = Percent of material or mixture that is asphalt.
PL = KAPI for the month that the Contract is let.
PC = KAPI for the month that the Contractor places the material or mixture.

The job-mix formula for asphalt base, binder, and surface mixtures determines "A", which is the percent of asphalt. For recycled mixtures, the Department will determine the adjustment for the new asphalt cement only. The Department will consider materials for prime and seal as 100 percent asphalt.

Supplemental Specifications to The Standard Specifications for Road and Bridge Construction, 2004 Edition

(Effective with the May 25, 2007 Letting)

Revision Continued

109.07.02 Fuel. The Department will adjust the Contractor's compensation when the average price of diesel fuel increases or decreases more than 5 percent and the original Contract quantity for the item on which the fuel is consumed is equal to or greater than the threshold quantities listed in the following table.

Item	Threshold Quantity	Fuel/Work
Roadway Excavation	10,000 cubic yards	0.25
Embankment-in-Place	10,000 cubic yards	0.25
Borrow Excavation	10,000 cubic yards	0.25
DGA Base or Crushed Stone Base	5,000 tons	0.52
Stabilized Aggregate Base	5,000 tons	0.52
Drainage Blanket, Cement Treated or Untreated	5,000 tons	0.52
Drainage Blanket, Asphalt Treated	5,000 tons	3.00
Crushed Sandstone Base (Cement Treated)	5,000 tons	0.52
Hot-Mixed Asphalt Mixtures for Pavements or Shoulders	3,000 tons [(1)]	3.00
PCC Pavement, Base, or Shoulders	2,000 square yards [(2)]	0.14

[(1)] *Total of all hot mixed asphalt Contract items.*
[(2)] *Total of all JPC pavement, JPC shoulder, and PCC base, Contract items.*

The Department will determine the price adjustment using the following formulas:

When PC is greater than PL
Fuel Price Adjustment = Q x F x PL x [(PC-PL)/PL - 0.05]

When PC is less than PL
Fuel Price Adjustment = Q x F x PL x [(PC-PL)/PL + 0.05]

Where:

Q = Quantity for applicable item placed or performed that month.
F = The fuel to work unit ratio for each applicable item.
PL = Average reseller price of diesel fuel, excluding taxes, discounts, and superfund line items, in the Kentucky region for the month that the Contract is let.
PC = Average reseller price of diesel fuel, excluding taxes, discounts, and superfund line items, in the Kentucky region for the month that the Contractor uses the fuel on the project.

109.07.03 Payments and Deductions. When thresholds are met, the Department will adjust the Contractor's compensation for each eligible pay item, paid or deducted, monthly.

If later price decreases indicate that the Department made an overpayment, the Department will withhold the overpayment from succeeding pay estimates on the project, or the Contractor shall immediately refund the over payment to the Department.

When the Contractor places materials during any month after the month that the Contract time (including all approved time extensions) expires, the Department will use the average price for the month that the Contractor places the material or the average price for the last month of the Contract time; whichever is least.

The Department will not grant a time extension for any overrun in the Contract amount due to payments made according to this section. The Department will not make any additional compensation due to adjustments made according to this section.

The Department will adjust the Contractor's compensation on the following months pay estimate and on the final pay estimate. The Department will make the final adjustment of the Contractor's compensation on the final estimate for the project.

Supplemental Specifications to The Standard Specifications for Road and Bridge Construction, 2004 Edition

(Effective with the May 25, 2007 Letting)

SUBSECTION: 110.01 MOBILIZATION.
REVISION: Replace the third paragraph with the following:

Do not bid an amount for Mobilization that exceeds 5 percent of the sum of the total amounts bid for all items in the Bid Proposal, excluding Mobilization, Demobilization, and contingent amounts established for adjustments and incentives. The Department will automatically adjust any bids in excess of this amount to 5 percent for bid comparisons. The Department will base the award on the maximum allowable bid of 5 percent. If any errors in unit bid prices for other Contract items in a Contractor's Bid Proposal are discovered after bid opening and such errors reduce the total amount bid for all other items, excluding Mobilization, Demobilization, and contingent amounts established for adjustments and incentives, so that the percent bid for Mobilization is larger than 5 percent, the Department will adjust the amount bid for Mobilization to 5 percent of the sum of the corrected total bid amounts.

SUBSECTION: 110.02 DEMOBILIZATION.
REVISION: Replace the first sentence of the third paragraph with the following:

Do not bid an amount for Demobilization that is less than 1.5 percent of the sum of the total amounts bid for all other items in the Bid Proposal, excluding Mobilization, Demobilization, and contingent amounts established for adjustments and incentives.

SUBSECTION: 206.03.03 Compaction.
REVISION: Replace "KM 64-412" with "KM 64-002"

SUBSECTION: 206.04.01 Embankment-in-Place.
REVISION: Replace the first sentence of the sixth paragraph with the following:

When payment is made for Embankment-in-Place, the Department will make payment for all embankment constructed on the project, including roadway embankment, refill in cuts, and embankment placed in embankment benches.

SUBSECTION: 212.03.03 Permanent Seeding and Protection.
PART: Delete Part C) and replace Parts A) and B) with the following:
REVISION: A) Seed Mixtures for Permanent Seeding.

Seed Mix Type I:	30% Kentucky 31 Tall Fescue (Festuca arundinacea) 20% Creeping Red Fescue (Festuca rubra) 35% Hard Fescue (Festuca (Festuca longifolia) 10% Ryegrass, Pernnial (Lolium perenne) 5% White Dutch Clover (Trifolium repens)
Seed Mix Type II:	55% Kentucky 31 Tall Fescue (Festuca arundinacea) 15% Ryegrass, Perennial (Lolium perenne) 15% (based on pure live seed, PLS) Little Bluestem (Schizachyrium scoparium) 15% Crown Vetch (coronilla varia)
Seed Mix Type III:	40% Kentucky 31 Tall Fescue (Festuca arundinacea) 15% Perennial Ryegrass Lolium perenne) 20% Sericea Lespedeza (Lespedeza cuneata) 25% (based on pure live seed, PLS) Little Bluestem (Schizachyrium scoparium)

1) Permanent Seeding on Slopes 3:1 or Less. Apply seed mix Type I at a minimum application rate of 100 pounds per acre.
2) Permanent Seeding on Slopes Greater than 3:1 in Highway Districts 4, 5, 6, and 7. Apply seed mix Type II at a minimum application rate of 100 pounds per acre plus a nurse crop of either Cereal Rye or German Foxtail-Millet based on the time of year. During the months of June through August, apply 10 pounds of German Foxtail-Millet (Setaria italica). During the months of September through May, apply 56 pounds of Cereal Rye (Secale cereale). If adjacent to golf courses replace the crown vetch with Kentucky 31 Tall Fescue

Supplemental Specifications to The Standard Specifications for Road and Bridge Construction, 2004 Edition

(Effective with the May 25, 2007 Letting)

revision continued	3) Permanent Seeding on Slopes Greater than 3:1 in Highway Districts 1, 2, 3, 8, 9, 10, 11, and 12. Apply seed mix Type III at a minimum application rate of 100 pounds per acre plus a nurse crop of either Cereal Rye or German Foxtail-Millet based on the time of year. During the months of June through August, apply 10 pounds of German Foxtail-Millet (Setaria italica). During the months of September through May, apply 56 pounds of Cereal Rye (Secale cereale). If adjacent to crop land or golf course replace the Sericea Lespedeza with Kentucky 31 Tall Fescue. B) Procedures for Permanent Seeding. Include a seeding plan in the Best Management Practices plan (BMP) according to Section 213. Prepare a seedbed and incorporate fertilizer and agricultural limestone as needed. Do not apply dry agricultural Limestone when it may generate a traffic hazard. Remove all rock and dirt clods over 4 inches in diameter from the surface of the seedbed. Unless the Engineer directs otherwise, track all slopes 3:1 or greater. Ensure that tracking is performed up and down and not across. Native Grass seed should be calculated figuring seed on a pure live seed basis (PLS), using the least amount of inert matter available. Seed and mulch to produce a uniform vegetation cover using the seeding rates as indicated to each application. Mulch with clean, weed free straw. Place straw to an approximate 2-inch loose depth (2 tons per acre) and anchor it into the soil by mechanically crimping it into the soil surface or applying tackifier to provide a protective cover. For the periods of March 1 through May 15 and from September 1 through November 1, the Department will allow the option of using hydromulch at minimum rate of 1,500 pounds per acre in place of straw with tackifier. Regardless of materials used, ensure the protective cover holds until seeding is acceptably established according to part G) of this subsection.
SUBSECTION: **REVISION:**	213.03.01 Best Management Practices (BMP). Replace the third sentence of the first paragraph with the following: Ensure that the BMP provides storage for 3,600 cubic feet of water per surface acre disturbed.
SUBSECTION: **REVISION:**	213.03.02 Progress Requirements. Add the following after the first sentence of the third paragraph: Seed and mulch areas at final grade within 14 days. Temporary mulch areas not at final grade if work stops for longer than 21 days. Temporary mulch soil stock piles within 14 days of the last construction activity in that area.
SUBSECTION: **REVISION:**	213.03.03 Inspection and Maintenance Replace both “0.1-inch” references with “0.5-inch”. Add the following sentence to the end of the second paragraph: Initiate corrective action within 24 hours of any reported deficiency.
SUBSECTION: **PART:** **REVISION:**	213.03.05 Temporary Control Measures. B) Silt Checks. B) Silt Checks. Use one of the following types: 1) Silt Check Type II - Crushed stone such as cyclopean stone riprap, quarry run stone, or other size material approved by the Engineer, dumped in place and shaped to the configuration required. 2) Silt Check Type III - Blasted or broken rock dumped in place and shaped to the configuration required. Remove and properly dispose of sediment deposited at silt checks as necessary. When no longer needed, remove the silt checks and dispose of surplus materials as excavated materials according to Section 204. Seed and protect the entire area disturbed, as directed. Do not leave silt checks in place after completion of the project unless allowed by the Engineer or specified in the Plans.

Supplemental Specifications to The Standard Specifications for Road and Bridge Construction, 2004 Edition

(Effective with the May 25, 2007 Letting)

SUBSECTION:	213.03.05 Temporary Control Measures.
PART:	F) Temporary Seeding and Protection.
REVISION:	Replace the first sentence with the following: Apply seed mix Type I at a minimum application rate of 100 pounds per acre plus a nurse crop of either Cereal Rye or German Foxtail-Millet based on the time of year. During the months of June through August, apply 10 pounds of German Foxtail-Millet (Setaria italica). During the months of September through May, apply 56 pounds of Cereal Rye (Secale cereale). Obtain the Engineer's approval for the seed before use.
SUBSECTION:	213.03.05 Temporary Control Measures.
PART:	G) Temporary Mulch.
REVISION:	Replace the last sentence with the following: Place temporary mulch to an approximate 2-inch loose depth (2 tons per acre) and apply tackifier.
SUBSECTION:	213.04.15 Temporary Silt Ditch.
REVISION:	Replace with the following: The Department will measure the quantity in linear feet.
SUBSECTION:	213.04 MEASUREMENT.
REVISION:	Add the following Subsection: 213.04.24 Clean Temporary Silt Ditch. The Department will measure the quantity in linear feet along the ditch line.
SUBSECTION:	213.05 PAYMENT.
REVISION:	Add the following lines: 20594 Temporary Silt Ditch Linear Foot 20601 Clean Temporary Silt Ditch Linear Foot
SUBSECTION:	303.03.01 Mixture
PART:	C) Cement Treated Mixture.
REVISION:	Delete the "For asphalt pavements" from the second paragraph.
SUBSECTION:	303.03.01 Mixture
PART:	C) Cement Treated Mixture.
REVISION:	Delete requirement "2".
SUBSECTION:	402.03.02 Acceptance.
PART:	D) Testing Responsibilities.
NUMBER:	4) Density.
REVISION:	Replace the first sentence of the third paragraph with the following: For surface mixtures placed on driving lanes and ramps, furnish 2 cores per sublot to the nearest laboratory facility (Contractor or Department lab) for density determination by the Engineer.
SUBSECTION:	402.03.02 Acceptance.
PART:	H) Unsatisfactory Work.
NUMBER:	1) Based on Lab Data.
REVISION:	Replace the "AASHTO MP2" references in the second paragraph with "AASHTO M 323".
SUBSECTION:	402.04 MEASUREMENT.
REVISION:	Replace the last sentence with the following: The Department will not measure construction of rolled rumble strips or pavement wedge texturing for payment and will consider them incidental to the asphalt mixture.
SUBSECTION:	402.04.01 Weight.
REVISION:	Replace first sentence of the second paragraph with the following: The Department will determine the bulk, oven-dry specific gravity for the fine and coarse aggregates according to KM64-605 and AASHTO T 85, respectively.

Supplemental Specifications to The Standard Specifications for Road and Bridge Construction, 2004 Edition

(Effective with the May 25, 2007 Letting)

SUBSECTION: 402.04.02 Thickness on New Construction.
REVISION: Delete the third paragraph and add the following at the end of the subsection:

The Department will not measure initial thickness check coring or coring of corrective work for payment and will consider it incidental to the asphalt mixture.

SUBSECTION: 402.05.02
PARTS: Lot Pay Adjustment Schedule, Compaction Option A, Base and Binder Mixtures
Lot Pay Adjustment Schedule, Compaction Option A, Surface Mixtures
Lot Pay Adjustment Schedule, Compaction Option B Mixtures
REVISION: Replace the VMA table with the following:

VMA	
Pay Value	Deviation From Minimum
1.00	≤ 0.5 below min. VMA
0.95	0.6-1.0 below min.
0.90(2)	1.1-1.5 below min.
(1) (2)	> 1.5 below min.

SUBSECTION: 403.03.03 Preparation of Mixture.
PART: A) Mixture Composition.
REVISION: Replace the "AASHTO MP2" reference in the first paragraph with "AASHTO M 323".

From the aggregate requirements list, delete 3) Type C.

SUBSECTION: 403.03.03 Preparation of Mixture.
PART: C) Mix Design Criteria.
REVISION: Replace the "AASHTO MP2" references with "AASHTO M 323".

Replace the "AASHTO PP28" references in the second paragraph with "AASHTO R 35".

SUBSECTION: 403.03.03 Preparation of Mixture.
PART: C) Mix Design Criteria.
NUMBER 1) Preliminary Mix Design.
REVISION: Add the following footnote to the table and associate it with the ESAL's field "<0.3":

* For CL1 ASPH SURF 0.38D PG64-22 only.

SUBSECTION: 403.03.06 Thickness Tolerances.
PART: B) New Construction.
REVISION: Replace the first paragraph with the following:

Under the Engineer's supervision, perform coring for thickness checks according to KM 64-420, as soon as practical after completion of all, or a major portion, of the asphalt base. The Engineer will measure the cores. Fill all core holes either with compacted asphalt mixture or non-shrink grout. Complete all remedial overlay work before placing the final course.

Supplemental Specifications to The Standard Specifications for Road and Bridge Construction, 2004 Edition

(Effective with the May 25, 2007 Letting)

SUBSECTION: 403.03.08 Rumble Strips.
REVISION: Replace with the following:

403.03.08 Should1er Rumble Strips and Pavement Wedge Texturing.

A) Shoulder Rumble Strips.

1) Interstates and Parkways. Construct sawed rumble strips on all mainline shoulders to the dimensions shown below. Do not place rumble strips on ramps.

2) Other Roads. Construct rolled rumble strips on shoulders of facilities with posted speed limits greater than 45 MPH. Unless specified in the plans or directed by the Engineer, do not construct rumble strips on facilities with posted speed limits of 45 MPH or less.

Construct rolled rumble strips on mainline shoulders to the dimensions shown below. On shoulders less than 3 feet wide, shorten the width and distance of the strips as the Engineer directs. Time the rolling operation so indentations are at the specified size and depth without causing unacceptable displacement of the asphalt mat. Correct unacceptable rolled rumble strips by sawing.

B) Pavement Wedge Texturing. Perform texturing on all pavement wedges constructed monolithically with the mainline or constructed using a surface mixture. When furnishing Asphalt Mixture for Pavement Wedge, binder, or a base mixture for the wedge, the Department will not require texturing.

Texture to the dimensions shown below. On wedges less than 3 feet, shorten the length and distance of the texturing as the Engineer directs. Time the rolling operation so indentations are at the specified size and depth without causing unacceptable displacement of the asphalt mat.

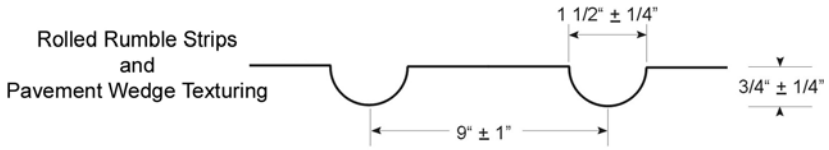

Place one foot out from the mainline pavement and to a width of 2 feet.

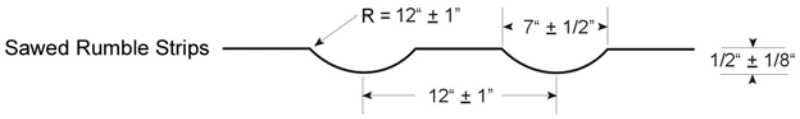

Place one foot out from the mainline pavement and to a width of 16 inches.

SUBSECTION: 403.04.03 Asphalt Mixtures.
REVISION: Replace the second sentence with the following:

The Department will not measure rolled rumble strips or pavement wedge texturing for payment and will consider them incidental to this bid item.

SUBSECTION: 403.04.07 Sawed Rumble Strips.
REVISION: Add the following subsection:

403.04.07 Sawed Rumble Strips. The Department will measure the quantity in linear feet. When rolled in rumble strips are specified, the Department will not measure sawed rumble strips for payment and will consider them incidental to the asphalt mixture.

Supplemental Specifications to The Standard Specifications for Road and Bridge Construction, 2004 Edition

(Effective with the May 25, 2007 Letting)

SUBSECTION: 403.05 PAYMENT
REVISION: Add the following bid item:

Code	Pay Item	Pay Unit
20362	Shoulder Rumble Strips – Sawed	Linear Foot

SUBSECTION: 501.03.20 Opening to Public Traffic.
REVISION: Delete the last sentence of the first paragraph.

SUBSECTION: 501.03.21 Tolerance in Pavement Thickness.
REVISION: Add the following:

Core the pavement as the Engineer directs.

SUBSECTION: 501.04.06 Thickness.
REVISION: Add the following:

The Department will not measure coring for payment and will consider it incidental to the concrete pay items.

SUBSECTION: 502.03 CONSTRUCTION.
PART: C) Curing and Protecting Pavement.
NUMBER: 3)
REVISION: Replace the last sentence with the following:

The Department will allow permanent removal of the cover when the concrete attains the required opening strength of 3,000 psi.

SUBSECTION: 502.03 CONSTRUCTION.
PART: D) Strength Testing and Opening to Traffic.
NUMBER: 2) Testing.
REVISION: Replace the second paragraph with the following:

When the average compressive strength is 3,000 psi, the Department will allow the pavement to be opened to traffic and will test the remaining sets of cylinders at the required age. When the average compressive strength is less than 3,000 psi at the required age, do not open the pavement to traffic until the pavement has been in place for 7 days. The Engineer may accept the pavement based on additional testing.

SUBSECTION: 503.03.09 Ride Quality.
REVISION: Replace parts 5) and 6) with the following:

5) Perform corrective work to achieve the required IRI by regrinding the entire width of the traffic lane at areas having a high IRI. The Engineer may exclude pavement areas where grinding alone will not correct deficiency.
6) The Department will create a strip chart when the test results show that the IRI is greater than 60 or upon request for lower IRI values.

SUBSECTION: 601.03.02 Concrete Producer Responsibilities.
REVISION: Replace the first sentence with the following:

Use a concrete producer from the List of Approved Materials when the quantity of concrete delivered to the project in a plastic condition is 250 cubic yards or more.

Ensure that the concrete producer complies with the following requirements:

Supplemental Specifications to The Standard Specifications for Road and Bridge Construction, 2004 Edition

(Effective with the May 25, 2007 Letting)

SUBSECTION:	601.03.02 Concrete Producer Responsibilities.
PART:	C) Quality Control.
REVISION:	Replace the first paragraph with the following: Take full responsibility for the batch weight calculations and quality control of concrete mixtures at the plant. Ensure that the Level II concrete technician is present when work is in progress and is responsible for inspecting trucks, batch weight calculations, monitoring batching, making mixture adjustments, reviewing the slump, air content and unit weight tests, and monitoring the concrete temperature, all to provide concrete to the project conforming to specifications. A Level I concrete technician is responsible for testing production material for slump, entrained air, unit weight and temperature of the mixture. Ensure the technician performs all sampling and testing according to the appropriate Kentucky Methods. Delete the third paragraph.
SUBSECTION:	601.03.02 Concrete Producer Responsibilities.
PART:	F) Records.
REVISION:	Retain all concrete technician records, test results and batch tickets pertaining to concrete produced for a Department project for at least 3 years after formal acceptance of the project. Make all records available to the Engineer and the Contractor on the project for review upon request.
SUBSECTION:	601.03.02 Concrete Producer Responsibilities.
PART:	G) Mix Designs.
REVISION:	Replace the last sentence of the first paragraph with the following: Before producing any concrete for the project, submit a proposed mixture design to the Engineer and obtain the District Materials engineer's or the Central Office Material's approval.
SUBSECTION:	601.03.02 Concrete Producer Responsibilities.
PART:	G) Mix Designs.
NUMBER:	1) New Mixture Designs.
REVISION:	Replace the first sentence with the following: Base the proposed mix design on standard Department methods unless the District Materials Engineer, or Central Office Materials approves otherwise.
SUBSECTION:	601.03.02 Concrete Producer Responsibilities.
PART:	G) Mix Designs.
NUMBER:	1) Changes in Approved Mix Designs.
REVISION:	Replace the second sentence with the following: The District Materials Engineer or Central Office Materials will provide an average value of the specific gravity aggregate absorption.
SUBSECTION:	601.03.02 Concrete Producer Responsibilities.
PART:	G) Mix Designs.
NUMBER:	3) Changes in Approved Mix Designs.
LETTER:	g)
REVISION:	Replace the fourth and fifth sentence with the following: Central Office Materials will observe all phases of the trial batches. Have the producer submit a report containing mix proportions and test results for slump, air content, water/cement ratio, unit weight, and compressive strength for each trial batch to the Engineer for Central Office Materials review and approval.
SUBSECTION:	601.03.02 Concrete Producer Responsibilities.
PART:	G) Mix Designs.
NUMBER:	2) Approval.
REVISION:	Replace the first sentence with the following: The District Materials Engineer or Central Office Materials will base approval of the mixture design on the following criteria:

Supplemental Specifications to The Standard Specifications for Road and Bridge Construction, 2004 Edition

(Effective with the May 25, 2007 Letting)

SUBSECTION:	601.03.02 Concrete Producer Responsibilities.
PART:	G) Mix Designs.
NUMBER:	3) Changes in Approved Mix Designs.
REVISION:	Replace the first sentence with the following: Do not change the source of supply of the mixture ingredients without the District Materials Engineer's or Central Office Materials written permission. Replace the third sentence with the following: Upon the District Materials Engineer's or Central Office Materials written approval, the Department will allow the use of aggregate from the new source.
SUBSECTION:	601.03.03 Proportioning and Requirements.
PART:	A) Concrete.
TABLE:	INGREDIENT PROPORTIONS AND REQUIREMENTS FOR VARIOUS CLASSSES OF CONCRETE
REVISION:	Under Class of Concrete replace "AAA(9)" with "AAA(8)"
SUBSECTION:	601.03.03 Proportioning and Requirements.
PART:	A) Concrete.
FOOTNOTE:	(6)
REVISION:	Add the following after the first sentence of the first paragraph: For products with voids, the slump may be increased to 7 inches. Replace the "0.3" requirement for Spring and Fall mix designs with "0.37".
SUBSECTION:	601.03.03 Proportioning and Requirements.
PART:	A) Concrete.
FOOTNOTE:	(7)
REVISION:	Replace with the following: The precast fabricator may increase the slump of Class A concrete to a maximum of 7 inches provided the fabricator uses a high range water reducer (Type F and G) and maximum water/cement ratio of 0.46.
SUBSECTION:	601.03.03 Proportioning and Requirements.
PART:	E) Measuring.
NUMBER:	3) Water.
REVISION:	Delete the last sentence of the second paragraph.
SUBSECTION:	601.03.03 Proportioning and Requirements.
PART:	E) Measuring.
NUMBER:	4) Measuring Admixtures.
REVISION:	Replace with the following: 4) Measuring Admixtures. Introduce liquid admixtures into the concrete batch along with, or as part of, the mixing water. Keep air-entraining admixtures completely separate from all other admixtures until introduction into the batch. Maintain and equip dispensing equipment to ensure no chlorides are introduced into any Department mix. Use approved dispensing equipment with a meter, gauge, or scale that can accurately be pre-set for the needed amount of admixture and can consistently deliver quantities of admixture to successive batches at any setting with satisfactory accuracy. The dispensing equipment must be visible to the batch operator if the actual dispensed amounts are not recorded on the computer batch ticket. Ensure admixture dispensers are inspected, calibrated and certified every 6 months. The Department may allow admixtures to be added, to the truck, at the project site provided the Engineer's approval is obtained first.

Supplemental Specifications to The Standard Specifications for Road and Bridge Construction, 2004 Edition

(Effective with the May 25, 2007 Letting)

SUBSECTION:	601.03.04 Classes and Primary Uses.
REVISION:	Add the following part: R) Dry Cast. Precast units.
SUBSECTION:	601.03.05 Admixtures.
REVISION:	Replace the last sentence of the fourth paragraph with the following: Store admixtures where the liquid temperatures can be maintained between 32 and 110 °F.
SUBSECTION:	601.03.09 Placing Concrete.
PART:	D) Weather Limitations and Protection.
REVISION:	Delete the last sentence of paragraph two.
SUBSECTION:	605.03 CONSTRUCTION.
REVISION:	Insert the following sentence after the first sentence: Ensure all non-composite box beam concrete contains an approved corrosion inhibitor from the List of Approved Materials.
SUBSECTION:	605.03.03 Casting.
REVISION:	Delete the first sentence in the first paragraph. Add the following after the first sentence of the third paragraph: Do not vibrate Self-Consolidating Concrete (SCC).
SUBSECTION:	605.03.04 Tack welding.
REVISION:	Replace the first sentence with the following: When tack welding steel reinforcement, use ASTM A 706 steel and conform to the following conditions.
SUBSECTION:	605.03.04 Tack Welding.
NUMBER:	3)
REVISION:	Replace the first sentence with the following: Tack weld only at intersections of bars except do not tack weld in any bend or within 2 bar diameters of a bend.
SUBSECTION:	605.03.04 Tack Welding.
NUMBER:	5)
REVISION:	Replace the last sentence with the following: Each sample must meet the minimum requirement for elongation, ductility, tensile and yield strength of the bar stock.
SUBSECTION:	605.03.04 Tack Welding.
NUMBER:	6)
REVISION:	Delete the last sentence.
SUBSECTION:	605.03.04 Tack Welding.
REVISION:	Change footnote “(4) (d)” to “(5)”
SUBSECTION:	605.03.07 Removal of Forms and Surface Finish.
REVISION:	Add the following sentence before the last sentence of the paragraph: Finish dry cast products according to the Precast/Prestressed Concrete Manual.
SUBSECTION:	611.02.01 Concrete.
REVISION:	Replace with the following: Conform to Subsections 601.02 and 601.03 and the Precast/Prestress Concrete Manual.
SUBSECTION:	611.03.02 Precast Unit Construction.
REVISION:	Replace “AASHTO C 1433” with “ASTM C 1433”

Supplemental Specifications to The Standard Specifications for Road and Bridge Construction, 2004 Edition

(Effective with the May 25, 2007 Letting)

SUBSECTION: 611.03.02 Precast Unit Construction.
NUMBER: 2)
REVISION: Replace with the paragraph with the following:

Mark all box culverts sections with the following information on the inside top of each section with letters no less than 2 inches high:

a) Span, rise, maximum and minimum design earth cover, and KY Table 3.
b) Date of manufacture.
c) Name and trademark of the manufacturer.

For entrance and exit box sections, indent the required information. Mark interior sections by indenting or with waterproof paint.

SUBSECTION: 701.02.05 Backfill Materials.
PART: A) Granular Backfill.
NUMBER: 1)
REVISION: Remove "A2" from the list of acceptable materials.

SUBSECTION: 701.03.03 Pipe Bedding.
REVISION: Replace with the following:

701.03.03 Pipe Bedding.

A) Reinforced Concrete Pipe. Construct bedding according to the Standard Drawings and this section.

1) Type 1 Installation. When working on a rock foundation, place bedding to a depth of 6 inches or equal to Bc/12, the pipe diameter in inches divided by 12, whichever is greater. For all other foundations, place a minimum of 4 inches of bedding. Shape the bedding to conform to the invert shape throughout the entire width and length of the proposed structure. Compact the bedding, but leave the center third of the pipe diameter (Bc/3) uncompacted. Place and compact additional bedding material in lifts 6 inches or less to an elevation of 0.30 the culvert diameter.
2) Type 4 Installation. When working on a rock foundation, place bedding to a depth of 6 inches or equal to Bc/12, the pipe diameter in inches divided by 12, whichever is greater. For all other foundations, place a minimum of 4 inches of bedding.

B) Corrugated Metal, Thermoplastic, and Structural Plate Pipe. Place and compact bedding to provide 4 inches of bedding below the outside invert of the pipe after shaping. Shape the bedding to conform to the invert shape throughout the entire width and length of the proposed structure. Place and compact additional bedding material in lifts 6 inches or less to an elevation of 0.30 the culvert diameter.

SUBSECTION: 701.03.06 Initial Backfill.
PART: A) Reinforced Concrete
REVISION: Replace with the following:

A) Reinforced Concrete Pipe.

1) Type 1 Installation. When the top of the pipe is not within one pipe diameter of the subgrade, backfill with granular backfill, additional bedding material, or flowable fill from the top of the bedding to an elevation equal to 1/2 the pipe diameter, and either granular backfill, flowable fill, or embankment material in 6-inch lifts to an elevation of one-foot above the pipe.
2) Type 4 Installation. Backfill from the top of the bedding with granular backfill, flowable fill, or embankment material in 6-inch lifts to an elevation of one-foot above the pipe. The Department will allow Type 4 installations for median drains and pipe installations located 35 feet or more from the edge of shoulder, back of curb, or any paved surface.

Supplemental Specifications to The Standard Specifications for Road and Bridge Construction, 2004 Edition

(Effective with the May 25, 2007 Letting)

SUBSECTION:	701.05 PAYMENT.
REVISION:	Replace bid item "2599 Fabric-Geotextile, Type IV Square Yard" with "21433ES214 Fabric-Geotextile, Type IV for Pipe Square Yard[(2)]" Replace foot note "** The unit bid price is $2.00 per square yard for Geotextile Fabric, Type III" with "[(2)]The unit price is $2.00 per square yard for Fabric-Geotextile, Type IV for Pipe"
SUBSECTION:	710.02.15 Plastic Adjusting Rings.
REVISION:	Replace this section with: 710.02.15 Plastic or Rubber Adjusting Rings. Provide plastic or rubber adjusting rings that are on the Department's List of Approved Materials.
SUBSECTION:	710.03.03 Adjusted Small Drainage Structures.
REVISION:	Replace the last sentence of the first paragraph: For plastic or rubber adjusting rings, install and seal according to the manufacturer's recommendations.
SUBSECTION:	711.02 MATERIALS.
REVISION:	Replace with the following: Conform to the Contract requirements.
SUBSECTION:	713.03 CONSTRUCTION.
REVISION:	Add the following after the third paragraph: Offset longitudinal lines at least 2 inches from longitudinal pavement construction joints. Offset longitudinal lane lines on multi-lane highways 2 inches towards the median.
SUBSECTION:	714.03.06 Proving Period for Durable Markings.
PART:	B) Failure.
REVISION:	Replace the first sentence with the following: During the proving period, the Department will consider markings defective when the retroreflectivity falls below the minimum required or the material fails to meet the other requirements of A) above. Additionally, when more than 10 percent of any one-mile section or individual gore area is defective, the Department will consider the entire section defective.
SUBSECTION:	716.03.08 Testing.
REVISION:	Replace "10 megohms" with "100 megohms"
SUBSECTION:	721.03 CONSTRUCTION.
REVISION:	Replace the third paragraph with the following: Install fence 18 inches inside the right-of-way line or in other locations specifically indicated.
SUBSECTION:	723.03 CONSTRUCTION.
REVISION:	Replace the first sentence of the fourth paragraph with the following: Set right-of-way markers within 12 inches of the right-of-way line.
SUBSECTION:	724.02.01 Plants.
REVISION:	Replace the reference "American Association of Nurserymen" with "American Nursery and Landscape Association".
SUBSECTION:	801.01 REQUIREMENTS.
REVISION:	Add the following sentence after the third sentence of the first paragraph: Mills must request and be approved by the Department to supply cement with an SO_3 content above the value in Table 1 of ASTM C 150.
SUBSECTION:	804.01.03 Conglomerate Sand.
REVISION:	Replace second sentence of the paragraph with the following: Conglomerate sand may include some material which has been produced by crushing larger pieces of the parent material.

Supplemental Specifications to The Standard Specifications for Road and Bridge Construction, 2004 Edition

(Effective with the May 25, 2007 Letting)

SUBSECTION:	804.02 Approval.
REVISION:	Replace first sentence of the second paragraph with the following: The Department will consider a source for inclusion on the Aggregate Source List when the aggregate producer complies with KM 64-608 and provides the following:
SUBSECTION:	804.03 Concrete.
REVISION:	Second sentence in first paragraph should be a separate paragraph immediately following the first and should read as follows: Provide natural, crushed, or conglomerate sand. The Department will allow any combination of natural, crushed, or conglomerate sand when the combination is achieved in the concrete plant weigh hopper. The Engineer may allow other sands. Use natural or conglomerate sands as fine aggregates in concrete intended as a wearing surface for traffic. Conform to the following:
SUBSECTION:	804.04.03 Polish-Resistant Aggregate.
REVISION:	Add the following paragraph: Provide a signed certification from the aggregate producer for the manufactured polish-resistant fine aggregate stating that the aggregate is supplied from the approved parent material as found on the Department's List of Approved Materials, Polish-Resistant Aggregate Source List and Guidelines on the Division of Materials' webpage.
SUBSECTION:	804.04.04 Requirements for Combined Aggregates.
PART:	D) Absorption.
REVISION:	Delete the first sentence and replace the second sentence with the following: Provide total combined fine aggregates having a water absorption of no more than 4.0 percent.
SUBSECTION:	804.11 Sampling and Testing.
REVISION:	For Absorption (Fine Aggregate), replace method "AASHTO T 84" with "KM 64-605"
SUBSECTION:	805.02 Approval.
REVISION:	Replace first sentence of the second paragraph with the following: The Department will consider a source for inclusion on the Aggregate Source List when the aggregate producer complies with KM 64-608 and provides the following:
SUBSECTION:	805.04.01 JPC Base, JPC Pavement, JPC Shoulders, and Concrete for Bridge Decks.
REVISION:	Replace the subsection heading and first sentence with the following: 805.04.01 JPC Base, JPC Pavement, JPC Shoulders, Concrete for Bridge Decks, and Precast Products. Add the following paragraph: Provide a signed certification from the aggregate producer for the approved freeze-thaw coarse aggregate stating that the aggregate is supplied from the approved parent material as found on the Department's List of Approved Materials and Concrete Aggregate Restriction List.
SUBSECTION:	805.04.01 JPC Base, JPC Shoulders, and Concrete for Bridge Decks.
PART:	3)
REVISION:	Replace the "tests" with "test" in the last sentence.
SUBSECTION:	805.05.05 Polish-Resistant Aggregate.
REVISION:	Add the following paragraph: Provide a signed certification from the aggregate producer for the manufactured polish-resistant coarse aggregate stating that the aggregate is supplied from the approved parent material as found on the Department's List of Approved Materials, Polish-Resistant Aggregate Source List and Guidelines on the Division of Materials' webpage.

Supplemental Specifications to The Standard Specifications for Road and Bridge Construction, 2004 Edition

(Effective with the May 25, 2007 Letting)

SUBSECTION:	805.13.01 Cyclopean Stone Riprap and Channel Lining Class III.
REVISION:	Replace the subsection with the following: 805.13.01 Cyclopean Stone Riprap and/or Channel Lining Class III. Provide material meeting the general requirements of Section 805. Ensure that 100 percent passes through a square opening of 16 inches by 16 inches, and no more than 20 percent passes through square openings of 8 inches by 8 inches. The Department may allow stones of smaller sizes for filling voids in the upper surface and dressing to the proper slope.
SUBSECTION:	806.03.01 General Requirements.
TEST:	Dynamic Shear
REVISION:	Replace the 100% pay range “5,000-5,500” with “0-5,500”
SUBSECTION:	806.03.03 Modification.
REVISION:	Replace the first sentence with the following: Use only styrene-butadiene (SB) or styrene-butadiene-styrene (SBS) modifiers.
SUBSECTION:	810.02 APPROVAL.
REVISION:	Replace reference “KM 114” with “KM 115”.
SUBSECTION:	810.03.06 Identification and Markings.
REVISION:	Delete the following text from the first paragraph: “When the manufacturer has more than one plant, include the plant letter assigned by the Division of Materials after the date of manufacture as follows: L-Louisville N-London” Delete the following paragraph: “The Department will not require the certification on the shipment approval form to be notarized. The Department will not require the information under “Pipe Data” on the approval form when the manufacture’s shipment ticket is attached and contains the necessary information.”
SUBSECTION:	811.02.01 Requirements.
REVISION:	Replace the subsection with the following: Furnish bar reinforcement for bridges, cast-in-place culverts, and cast-in-place retaining walls that conforms to ASTM A 615 (billet) or ASTM A 996 (rail). ASTM A 706 steel is acceptable with prior approval of the Division of Materials. Do not weld any steel bar reinforcement unless it is ASTM A 706 rebar. The Engineer will accept rail steel bar reinforcement in straight lengths only. Do not use rail steel reinforcement where field bending is allowed or required.
SUBSECTION:	811.09.02 Dowel Bars.
REVISION:	Replace the reference to “ASTM A 616” with “ASTM A 996” Insert the following sentence between the third and fourth sentence of the first paragraph: Broken or sheared ends are acceptable with prior approval of the Division of Materials.
SUBSECTION:	811.06 BAR MATS.
REVISION:	Replace the subsection with the following: Conform to ASTM A 184 and fabricate by welding deformed Grade 60 weldable bars.
SUBSECTION:	811.09.02 Dowel Bars.
REVISION:	Replace the first paragraph with the following: Furnish dowel bars that are plain round bars conforming to ASTM A 706, A 615, A 996, or A 617 with respect to mechanical properties only. Provide either Grade 40, 50 or 60 steel. Saw cut the free ends of the dowels and ensure that they are free of burrs or projections. Broken or sheared ends are acceptable with prior approval of the Division of Materials. Coat dowel bars according to AASHTO M 254 with the following exceptions for Type B coatings:

Supplemental Specifications to The Standard Specifications for Road and Bridge Construction, 2004 Edition

(Effective with the May 25, 2007 Letting)

SUBSECTION: 811.10.02 Epoxy Coating Material.
REVISION: Replace both the reference to "ASTM D 3963 Annex" and "ASTM D 3963" with "AASHTO M 284".

SUBSECTION: 812.01.02 Hot-Rolled Carbon Steel Sheets and Strip of Structural Quality, Grade 33 (Corrugated Steel Plank for Bridge Floors).
REVISION: Replace the reference to "ASTM A 570" with "ASTM A 1011"

SUBSECTION: 827.04 SEED.
REVISION: Replace with the following:

827.04 SEED. Conform to the requirements outlined in the "Kentucky Seed Law and Provisions for Seed Certification in Kentucky" and the "Regulations under the Kentucky Seed Law", with following exceptions:

1) Obtain seed only through registered dealers that are permitted for labeling of seed.
2) Ensure all deliveries and shipments of premixed seed are accompanied with a master blend sheet.
3) Ensure all bags and containers have an acceptable seed tag attached.
4) The Department may sample the seed at the job site at any time.

Do not use seed (grasses, native grasses, and legumes) if the weed seed is over one percent, total germination (including hard seed) is less than 80 percent, if the seed test date is over 9 months old exclusive of the month tested, or if the limits of noxious weed seed is exceeded.

Ensure that noxious weed seeds contained in any seed or seed mixture does not exceed the maximum permitted rate of occurrence per pound.

Name of Kind	Max. No. Seeds (per pound)*
Balloon Vine (Cardiospermum halicacabum)	0
Purple Moonflower (Ipomoea turbinata)	0
Canada Thistle (Cirsium Arvense)	0
Johnsongrass (Sorghum halepense and Sorghum almum and perennial rhizomatous derivatives of these species)	0
Quackgrass (Elytrigia Repens)	0
Annual Bluegrass (Poa annua)	120
Buckhorn Plantain (Plantago lanceolata)	120
Corncockle (Agrostemma githago)	18
Dodder (Cuscuta spp.)	18
Giant Foxtail (Setaria faberii)	18
Oxeye Daisy (Chrysanthemum leucanthemum)	120
Sorrel (Rumex acetosella)	120
Wild Onion and Wild Garlic (Allium spp.)	18

* Seed or seed mixtures that contain in excess of 120 total noxious seeds per pound is prohibited

Wildflower seed shall not be planted until approved by the MCL.

Supplemental Specifications to The Standard Specifications for Road and Bridge Construction, 2004 Edition

(Effective with the May 25, 2007 Letting)

REQUIREMENTS FOR SEEDS			
	Purity (Min. %)	Germination (Min. %) Including Hard Seed and Dormant Seed	Hard Seed (Max. %) Allowed in Germination
Grasses			
Bentgrass (Argrostic palustris)	98	85	-
Bermudagrass, common (Cynodon dactylon)	97	85	-
Bluegrass, Kentucky (Poa pratensis)	98	85	-
Brome, smooth (Bromus inermis)	95	80	-
Canarygrass, reed (Phalaris arundinacea)	95	80	-
Fescue, chewings (Festuca rubra var. commutata)	97	85	-
Fescue, hard (Festuca trachyphlla)	97	85	-
Fescue, meadow (Festuca elatior)	97	85	-
Fescue, red (Festuca rubra)	97	85	-
Fescue, tall (Festuca arundinacca)	97	85	-
Orchardgrass (Dactylis glomerata)	97	85	-
Redtop (Agrostic alba)	95	80	-
Ryegrass, annual, common or Italian (Lotium multiflorum)	97	85	-
Ryegrass, perennial (Lolium perenne)	97	85	-
Lovegrass, Weeping (Eragrostic curvula)	96	80	-
Oat (Avena Sativa)	98	85	-
Rye (Secale cereale)	98	85	-
Timothy (Phleum pratense)	98	85	-
Wheat, common (Triticum aestivum)	98	85	-
Legumes			
Alfalfa (Medicago sativa)	98	85	25
Clover, alsike (Trifolium hybridum)	97	85	25
Clover, ladino (Trifolium repens)	98	85	25
Clover, white (Trifolium repens)	98	85	25
Crownvetch (Coronilla varia)	97	85	25
Lespedeza, Korean (Lespedeza stipulacea)	97	85	20
Lespedeza, Sericea (Lespedeza cuneata)	97	85	20
Sweetclover, white (Melilotus alba)	98	85	25
Sweetclover, yellow (Melilotus officinalis)	98	85	25
Trefoil, birdsfoot (Lotus corniculatus)	97	85	25
Native Grasses			
Little Bluestem (Schizachyrium scoparium)	85	80	-
Big Blustem (Andropogon gerardii)	85	80	-
Indian Grass (Sorghastrum nutans)	85	80	-
Switchgrass (Panicum virgatum)	85	80	-

Supplemental Specifications to The Standard Specifications for Road and Bridge Construction, 2004 Edition

(Effective with the May 25, 2007 Letting)

SUBSECTION: 827.07 EROSION CONTROL BLANKET.
REVISION: Replace the subsection with the following:

827.07 EROSION CONTROL BLANKET. Use a blanket from the Department's List of Approved Materials. Blankets must be machine constructed with two-sided netting filled with curled wood fiber mat, straw, or a straw and coconut fiber combination. Ensure the blanket is smolder resistant without the use of chemical additives.

A) Dimensions. Furnish in strips either 4 or 8 feet wide and at least 50 feet long.
B) Weight.

1) Curled Wood Fiber. Ensure a minimum mass per unit area of 7.25 ounce per square yard according to ASTM D 6475.
2) Straw. Ensure a minimum mass per unit area of 7.5 ounce per square yard according to ASTM D 6475.
3) Straw/Coconut Fiber. Ensure a minimum mass per unit area of 6.75 pounds per square yard according to ASTM D 6475.

C) Fill. Ensure the fill is evenly distributed throughout the blanket.

1) Curled Wood Fiber. Use curled wood fiber of consistent thickness with at least 80 percent of its fibers 6 inches or longer in length.
2) Straw. Use only weed free agricultural straw.
2) Straw/Coconut Fiber. Conform to the straw requirements above and ensure the coconut fiber is evenly distributed throughout the blanket and accounts for 30% or more of the fill.

D) Netting. Use photodegradable extruded plastic mesh or netting, with a maximum spacing width of one inch square, on both sides of the blanket. Secure the netting by stitching or other method to ensure the blanket retains its integrity.
E) Staples. Use steel wire U-shaped staples with a minimum diameter of 0.09 inches (11 gauge), a minimum width of one inch, and a minimum length of 6 inches. Use a heavier gauge when working in rocky or clay soils and longer lengths in sandy soils. Provide staples with colored tops when requested by the Engineer.
F) Performance.

1) C-Factor. Ensure the ratio of soil loss from protected slope to ratio of soil loss from unprotected is ≤ 0.15 for a slope of 3:1 when tested according to ECTC method 2.
2) Shear Stress. Ensure the blanket can sustain a minimum shear stress of 1.75 pounds per square foot without physical damage or excess erosion (> 0.5 inches soil loss) when tested according to ECTC Method 3.

SUBSECTION: 828.02 APPROVAL.
REVISION: Add the following:

The Department will continue to include the masonry coatings on the list contingent upon receiving an annual certification containing the following information:

1) A statement that the masonry coating to be furnished during the particular calendar year is of the same composition as that previously approved for inclusion on the approved list.
2) A statement that the masonry coating conforms to the appropriate requirements of the Kentucky Standard Specifications for Road and Bridge Construction.
3) A statement that notification will be made to the Division of Materials of any changes in composition for review and approval before furnishing the material to projects.

SUBSECTION: 843.01.02 Acceptance Procedures for Non-Specification Fabric.
TABLE: GRAB STRENGTH PAYMENT REDUCTION
REVISION: Add the following note:

The Department will use the lowest value of MACHINE and CROSS for the reduction calculation.

Supplemental Specifications to The Standard Specifications for Road and Bridge Construction, 2004 Edition

(Effective with the May 25, 2007 Letting)

SUBSECTION:	844.02.01 Fly Ash.
PART:	1)
REVISION:	Delete the last sentence.
SUBSECTION:	844.02.01 Fly Ash.
REVISION:	Replace the subsection with the following: 844.02.01 Fly Ash. Select from the Department's List of Approved Materials for fly ash sources. To be placed on the list, furnish samples and ASTM C 618 test data developed over the previous 3 months, and confirm to the requirements in KM 64-325.

STANDARD DRAWINGS THAT APPLY

ROADWAY

TRAFFIC
~ *TEMPORARY* ~

TRAFFIC CONTROL

LANE CLOSURE USING TRAFFIC SIGNALS	TTC-110

DEVICES

MISCELLANEOUS TRAFFIC CONTROL DEVICES	TTD-100
MISCELLANEOUS TRAFFIC CONTROL DEVICES	TTD-105
POST SPLICING DETAIL	TTD-110

BRIDGES

MISCELLANEOUS STANDARDS

BRIDGE RESTORATION AND WATERPROOFING WITH CONCRETE OVERLAYS	BGX-009-04

JOINTS

NEOPRENE EXPANSION DAMS AND ARMORED EDGES	BJE-001-11

PART III

EMPLOYMENT, WAGE AND RECORD REQUIREMENTS

TRANSPORTATION CABINET
DEPARTMENT OF HIGHWAYS

LABOR AND WAGE REQUIREMENTS
APPLICABLE TO OTHER THAN FEDERAL-AID SYSTEM PROJECTS

I. Application
II. Nondiscrimination of Employees (KRS 344)
III. Payment of Predetermined Minimum Wages
IV. Statements and Payrolls

I. APPLICATION

1. These contract provisions shall apply to all work performed on the contract by the contractor with his own organization and with the assistance of workmen under his immediate superintendence and to all work performed on the contract by piecework, station work or by subcontract. The contractor's organization shall be construed to include only workmen employed and paid directly by the contractor and equipment owned or rented by him, with or without operators.

2. The contractor shall insert in each of his subcontracts all of the stipulations contained in these Required Provisions and such other stipulations as may be required.

3. A breach of any of the stipulations contained in these Required Provisions may be grounds for termination of the contract.

II. NONDISCRIMINATION OF EMPLOYEES

AN ACT OF THE KENTUCKY
GENERAL ASSEMBLY TO PREVENT
DISCRIMINATION IN EMPLOYMENT
KRS CHAPTER 344
EFFECTIVE JUNE 16, 1972

The contract on this project, in accordance with KRS Chapter 344, provides that during the performance of this contract, the contractor agrees as follows:

1. The contractor shall not fail or refuse to hire, or shall not discharge any individual, or otherwise discriminate against an individual with respect to his compensation, terms, conditions, or privileges of employment, because of such individual's race, color, religion, national origin, sex, disability or age (between forty and seventy); or limit, segregate, or classify his employees in any way which would deprive or tend to deprive an individual of employment opportunities or otherwise adversely affect his status as an employee, because of such individual's race, color, religion, national origin, sex, disability or age (between forty and seventy). The contractor agrees to post in conspicuous places, available to employees and applicants for employment, notices to be provided setting forth the provisions of this nondiscrimination clause.

2. The contractor shall not print or publish or cause to be printed or published a notice or advertisement relating to employment by such an employer or membership in or any classification or referral for employment by the employment agency, indicating any preference, limitation, specification, or discrimination, based on race, color, religion, national origin, sex, disability or age (between forty and seventy), except that such notice or advertisement may indicate a preference, limitation, or specification based on religion, or national origin when religion, or national origin is a bona fide occupational qualification for employment.

3. If the contractor is in control of apprenticeship or other training or retraining, including on-the-job training programs, he shall not discriminate against an individual because of his race, color, religion, national origin, sex, disability or age (between forty and seventy), in admission to, or employment in any program established to provide apprenticeship or other training.

4. The contractor will send to each labor union or representative of workers with which he has a collective bargaining agreement or other contract or understanding, a notice to be provided advising the said labor union or workers' representative of the contractor's commitments under this section, and shall post copies of the notice in conspicuous places available to employees and applicants for employment. The contractor will take such action with respect to any subcontract or purchase order as the administrating agency may direct as a means of enforcing such provisions, including sanctions for non-compliance.

III. PAYMENT OF PREDETERMINED MINIMUM WAGES

1. These special provisions are supplemented elsewhere in the contract by special provisions which set forth certain predetermined minimum wage rates. The contractor shall pay not less than those rates.

2. The minimum wage determination schedule shall be posted by the contractor, in a manner prescribed by the Department of Highways, at the site of the work in prominent places where it can be easily seen by the workers.

IV. STATEMENTS AND PAYROLLS

1. All contractors and subcontractors affected by the terms of KRS 337.505 to 337.550 shall keep full and accurate payroll records covering all disbursements of wages to their employees to whom they are required to pay not less than the prevailing rate of wages. Payrolls and basic records relating thereto will be maintained during the course of the work and preserved for a period of one (1) year from the date of completion of this contract.

2. The payroll records shall contain the name, address and social security number of each employee, his correct classification, rate of pay, daily and weekly number of hours worked, itemized deductions made and actual wages paid.

3. The contractor shall make his daily records available at the project site for inspection by the State Department of Highways contracting office or his authorized representative.

Periodic investigations shall be conducted as required to assure compliance with the labor provisions of the contract. Interrogation of employees and officials of the contractor shall be permitted during working hours.

Aggrieved workers, Highway Managers, Assistant District Engineers, Resident Engineers and Project Engineers shall report all complaints and violations to the Division of Contract Procurement.

The contractor shall be notified in writing of apparent violations. The contractor may correct the reported violations and notify the Department of Highways of the action taken or may request an informal hearing. The request for hearing shall be in writing within ten (10) days after receipt of the notice of the reported violation. The contractor may submit

records and information which will aid in determining the true facts relating to the reported violations.

Any person or organization aggrieved by the action taken or the findings established as a result of an informal hearing by the Division of Contract Procurement may request a formal hearing.

4. The wages of labor shall be paid in legal tender of the United States, except that this condition will be considered satisfied if payment is made by a negotiable check, on a solvent bank, which may be cashed readily by the employee in the local community for the full amount, without discount or collection charges of any kind. Where checks are used for payments, the contractor shall make all necessary arrangements for them to be cashed and shall give information regarding such arrangements.

5. No fee of any kind shall be asked or accepted by the contractor or any of his agents from any person as a condition of employment on the project.

6. No laborers shall be charged for any tools used in performing their respective duties except for reasonably avoidable loss or damage thereto.

7. Every employee on the work covered by this contract shall be permitted to lodge, board, and trade where and with whom he elects and neither the contractor nor his agents, nor his employees shall directly or indirectly require as a condition of employment that an employee shall lodge, board or trade at a particular place or with a particular person.

8. Every employee on the project covered by this contract shall be an employee of either the prime contractor or an approved subcontractor.

9. No charge shall be made for any transportation furnished by the contractor or his agents to any person employed on the work.

10. No individual shall be employed as a laborer or mechanic on this contract except on a wage basis, but this shall not be construed to prohibit the rental of teams, trucks or other equipment from individuals.

No Covered employee may be employed on the work except in accordance with the classification set forth in the schedule mentioned above; provided, however, that in the event additional classifications are required, application shall be made by the contractor to the Department of Highways and (1) the Department shall request appropriate classifications and rates from the proper agency, or (2) if there is urgent need for additional classification to avoid undue delay in the work, the contractor may employ such workmen at rates deemed comparable to rates established for similar classifications provided he has made written application through the Department of Highways, addressed to the proper agency, for the supplemental rates. The contractor shall retroactively adjust, upon receipt of the supplemental rates schedule, the wages of any employee paid less than the established rate and may adjust the wages of any employee overpaid.

11. No contractor or subcontractor contracting for any part of the contract work which may require or involve the employment of laborers or mechanics shall require or permit any laborer or mechanic in any work-week in which he is employed on such work, to work in excess of eight hours in any calendar day or in excess of forty hours in such work-week unless such laborer or mechanic receives compensation at a rate not less than one and one half times his basic rate of pay for all hours worked in excess of eight hours in any calendar day or in excess of forty hours in such work-week. A laborer, workman or mechanic and an employer may enter into a written agreement or a collective bargaining agreement to work more than eight (8) hours a calendar day but not more than ten (10) hours a calendar day for the straight time hourly rate. This agreement shall be in writing and shall be executed prior to the employee working in excess of eight (8) hours, but not more than ten (10) hours, in any one (1) calendar day.

12. Payments to the contractor may be suspended or withheld due to failure of the contractor to pay any laborer or mechanic employed or working on the site of the work, all or part of the wages required under the terms of the contract. The Department may suspend or withhold payments only after the contractor has been given written notice of the alleged violation and the contractor has failed to comply with the wage determination of the Department of Highways.

13. Contractors and subcontractors shall comply with the sections of Kentucky Revised Statutes, Chapter 337 relating to contracts for Public Works.

Revised 2-16-95

EXECUTIVE BRANCH CODE OF ETHICS

In the 1992 regular legislative session, the General Assembly passed and Governor Brereton Jones signed Senate Bill 63 (codified as KRS 11A), the Executive Branch Code of Ethics, which states, in part:

KRS 11A.040 (6) provides:

No present or former public servant shall, within six (6) months of following termination of his office or employment, accept employment, compensation or other economic benefit from any person or business that contracts or does business with the state in matters in which he was directly involved during his tenure. This provision shall not prohibit an individual from returning to the same business, firm, occupation, or profession in which he was involved prior to taking office or beginning his term of employment, provided that, for a period of six (6) months, he personally refrains from working on any matter in which he was directly involved in state government. This subsection shall not prohibit the performance of ministerial functions, including, but not limited to, filing tax returns, filing applications for permits or licenses, or filing incorporation papers.

KRS 11A.040 (8) states:

A former public servant shall not represent a person in a matter before a state agency in which the former public servant was directly involved, for a period of one (1) year after the latter of:

a) The date of leaving office or termination of employment; or
b) The date the term of office expires to which the public servant was elected.

This law is intended to promote public confidence in the integrity of state government and to declare as public policy the idea that state employees should view their work as a public trust and not as a way to obtain private benefits.

If you have worked for the executive branch of state government within the past six months, you may be subject to the law's prohibitions. The law's applicability may be different if you hold elected office or are contemplating representation of another before a state agency.

Also, if you are affiliated with a firm which does business with the state and which employs former state executive-branch employees, you should be aware that the law may apply to them.

In case of doubt, the law permits you to request an advisory opinion from the Executive Branch Ethics Commission, Room 136, Capitol Building, 700 Capitol Avenue, Frankfort, Kentucky 40601; telephone (502) 564-7954.

Kentucky Equal Employment Opportunity Act of 1978

The requirements of the Kentucky Equal Employment Opportunity Act of 1978 (KRS 45.560-45.640) shall not apply to this Contract.

TRANSPORTATION CABINET
DIVISION OF CONSTRUCTION PROCUREMENT
COMPLIANCE SECTION
PROJECT WAGE RATES

WORKERS……..MINIMUM HOURLY RATE…..$5.15

Note: Parts III and IV of **"Labor and Wage Requirements Applicable to Other Than Federal-Aid System Projects"** do not apply to this project.

PART IV

INSURANCE

INSURANCE

The Contractor shall carry the following insurance in addition to the insurance required by law:

1. Contractor's Public Liability Insurance not less than $100,000.00 for damages arising out of bodily injuries to or death to one person. Not less than $300,000.00 for damages arising out of bodily injuries to or death to two or more persons.

2. Contractor's Property Damages Liability Insurance. Not less than $100,000.00 for all damages arising out of injury or destruction of property in any one accident. Not less than $300,000.00 for all damages during the policy period.

3. Contractor's Protective Public Liability and Property Damage Insurance. The contractor shall furnish evidence with respect to operations performed for him by subcontractors that he carries in his own behalf for the above stipulated amounts.

4. The insurance required above must be evidenced by a Certificate of Insurance and this Certificate of Insurance must contain one of the following statements:

   a. "policy contains no deductible clauses."

   b. "policy contains _____ (amount) deductible property damage clause but company will pay claim and collect the deductible from the insured."

5. WORKMEN'S COMPENSATION INSURANCE. The contractor shall furnish evidence of coverage of all his employees or give evidence of self-insurance by submitting a copy of a certificate issued by the Workmen's Compensation Board.

PART V

STATEMENT OF INCOMPLETE WORK

STATEMENT OF INCOMPLETED WORK

All active prime contracts must be reported. This includes prime contracts with public and private owners and joint-ventured contracts. The names of the joint venturers must be shown when reporting these projects. A machine or typed listing reporting the status of each contract is acceptable when attached to this report; however, the total amounts on the itemized listing must be reported in the space provided below:

CONTRACT WITH	PROJECT IDENTIFICATION	PRIME CONTRACT AMOUNT	EARNINGS THROUGH LAST APPROVED ESTIMATE	TOTAL AMOUNT OF WORK REMAINING
TOTAL (Attach Summary if not itemized above)		$	$	$

PART VI

BID ITEMS

TRANSPORTATION CABINET

Sheet No: 1

Department of Highways

Contract ID: 07-2924

FRANKFORT, KY 40622

FULTON COUNTY

FE02 038 0051 B00078

Letting: 5/25/07

THE BIDDER MUST MAKE THE EXTENSIONS AND ADDITIONS
SHOWING TOTAL AMOUNT BID USING FIGURES ONLY

Item No.	Code No.	Item	Approximate Quantity	Unit	Unit Price Dollars	Amount Dollars
		BRIDGE			.	.
0010	02562	SIGNS	**230.00**	SQFT	.	.
0020	02650	MAINTAIN & CONTROL TRAFFIC	**1.00**	LS	.	.
0030	02653	LANE CLOSURE	**2.00**	EACH	.	.
0040	03295	EXPAN JOINT REPLACE 2 INCH	**121.50**	LF	.	.
0050	03299	ARMORED EDGE FOR CONCRETE	**121.50**	LF	.	.
0060	04933	TEMP SIGNAL 2 PHASE	**1.00**	EACH	.	.
0070	06549	PAVE STRIPING-TEMP REM TAPE-B 6"	**953.00**	LF	.	.
0080	06551	PAVE STRIPING-TEMP REM TAPE-Y	**1,000.00**	LF	.	.
0090	06554	PAVE STRIPING-DUR TY 1-4 IN W	**15.00**	LF	.	.
0100	06555	PAVE STRIPING-DUR TY 1-4 IN Y	**15.00**	LF	.	.
0110	08150	STEEL REINFORCEMENT	**270.00**	LB	.	.
0120	20588NC	INSTALL PROJECT IDENTIFICATION SIGNS	**2.00**	EACH	.	.
		DEMOBILIZATION			.	.
0130	02569	DEMOBILIZATION	**1.00**	LS	.	.
		TOTAL BID				$.

PART VII

CERTIFICATIONS

PROVISIONS RELATIVE TO SENATE BILL 258 (1994)

During the performance of the contract, the contractor agrees to comply with applicable provisions of:

1. KRS 136 Corporation and Utility Taxes
2. KRS 139 Sale and Use Taxes
3. KRS 141 Income Taxes
4. KRS 337 Wages and Hours
5. KRS 338 Occupational Safety and Health of Employees
6. KRS 341 Unemployment Compensation
7. KRS 342 Workers Compensation

Any final determinations of a violation by the contractor within the previous five (5) years pursuant to the applicable statutes above are revealed as follows:

_____

_____

_____

_____

_____

_____

_____

_____

NON-COLLUSION CERTIFICATION

COMMONWEALTH OF KENTUCKY

COUNTY _____

PROJECT NO. _____

I, _____, _____, under
(Name of officer signing certification) (Title)

penalty of perjury under the laws of the United States, do hereby certify that

_____,
(Insert name of Individual, Joint Venture, Co-partnership, or Corporation submitting bid)

its agent, officers or employees have not directly or indirectly entered into any agreement, participated in any collusion, or otherwise taken action in restraint of free competitive bidding in connection with this proposal.

_____
(Signature)

_____
(Title)

REVISED: 8-23-89

- - - -

CERTIFICATION OF BID PROPOSAL

We (I) propose to furnish all labor, equipment and materials necessary to construct and/or improve the subject project in accordance with the plans, the Transportation Cabinet's Standard Specifications for Road and Bridge Construction, current edition, special provisions, notes applicable to the project as indicated herein and all addenda issued on this project subsequent to purchase of proposal.

We (I) attach a bid proposal guaranty as provided in the special provisions in an amount not less than 5% of the total bid. We agree to execute a contract in accordance with this bid proposal within 15 calendar days after the receipt of the notice of award for the project.

We (I) have examined the site of proposed work, project plans, specifications, special provisions, and notes applicable to the project referred to herein. We understand that the quantities shown herein are estimated quantities subject to increase or decrease as provided in the specifications.

We (I) acknowledge receipt of all addendum(s) (if applicable) and have made the necessary revisions to the bid proposal. We have considered all addendum(s) in the calculation of the submitted bid and applied the updated bid items, which are included.

- No Addendum(s) have been posted

_____
Name of Contracting Firm

BY: _____ _____
Authorized Agent (Signature) Title

_____ _____ _____ _____
Address City State Zip Code

_____
Telephone Number

When two or more organizations bid as a joint venture, enter names of each organization and an authorized agent for each organization must sign above.