CALL NO. **331**

CONTRACT ID. **102169**

CHRISTIAN COUNTY

FED/STATE PROJECT NUMBER **FD05 024 0695 010-012**

DESCRIPTION **COX MILL ROAD (KY 695)**

WORK TYPE **ASPHALT RESURFACING**

PRIMARY COMPLETION DATE **11/15/2010**

LETTING DATE: **May 28, 2010**

Sealed Bids will be received in the Division of Construction Procurement and/or the 1st floor of the Transportation Cabinet Office Building until 10:00 AM EASTERN DAYLIGHT TIME May 28, 2010. Bids will be publicly opened and read at 10:00 AM EASTERN DAYLIGHT TIME.

DEFERRED PAYMENT

REQUIRED BID PROPOSAL GUARANTY: Not less than 5% of the total bid.

(Check guaranty submitted: Cashier's Check ☐ Certified Check ☐ Bid Bond ☐)

BID BONDS WHEN SUBMITTED WILL BE RETAINED WITH THE PROPOSAL

DBE General Plan Included ☐

BID ☐ PROPOSAL ISSUED TO: _____

SPECIMEN ☐ _____

Address City State Zip

TABLE OF CONTENTS

PART I SCOPE OF WORK

- PROJECT(S), COMPLETION DATE(S), & LIQUIDATED DAMAGES
- CONTRACT NOTES
- 2010 DEFERRED PAYMENT
- SURFACING AREAS
- ASPHALT MIXTURE
- AGGREGATE FOR MAILBOX TURNOUTS
- INCIDENTAL SURFACING
- FUEL AND ASPHALT PAY ADJUSTMENT
- OPTION B
- AWARD OF CONTRACT
- COORDINATION OF WORK WITH OTHER CONTRACTS
- ASPHALT MIXTURE FOR PAVEMENT WEDGE
- SHOULDERING BY STATE FORCES
- EDGE KEY
- ASPHALT MILLING AND TEXTURING
- TYPICAL SECTION DIMENSIONS
- TRAFFIC CONTROL PLAN
- TRAFFIC SIGNAL LOOP DETECTORS
- TRAFFIC SIGNAL LOOP REPLACEMENT
- SKETCH MAP(S)
- SUMMARY SHEET(S)
- TYPICAL SECTION(S)
- BRIDGE DETAIL FOR PAVING PROJECT

PART II SPECIFICATIONS AND STANDARD DRAWINGS

- SPECIFICATIONS REFERENCE
- SUPPLEMENTAL SPECIFICATIONS
- [SN-1I] PORTABLE CHANGEABLE SIGNS
- STANDARD DRAWINGS THAT APPLY

PART III EMPLOYMENT, WAGE AND RECORD REQUIREMENTS

- LABOR AND WAGE REQUIREMENTS
- EXECUTIVE BRANCH CODE OF ETHICS
- KENTUCKY EQUAL EMPLOYMENT OPPORTUNITY ACT OF 1978
- PROJECT WAGE RATES

PART IV INSURANCE

PART V BID ITEMS

PART I

SCOPE OF WORK

CONTRACT ID - 102169 ADMINISTRATIVE DISTRICT - 02

PROJECT(S) IDENTIFICATION AND DESCRIPTION:

COUNTY - CHRISTIAN PCN - MP02406951001
FD05 024 0695 010-012
COX MILL ROAD (KY 695) FROM US 68B (MP 10.066) EXTENDING EAST TO NEW PAVEMENT 0.062 MILE NORTH OF KY 380 (MP 11.517), A DISTANCE OF 1.45 MILES. ASPHALT RESURFACING.
GEOGRAPHIC COORDINATES LATITUDE 36^50'19" LONGITUDE 87^31'25"
AVERAGE DAILY TRAFFIC - 3500 AVERAGE MAINLINE WIDTH - 22.0 FEET

COMPLETION DATE(S):
COMPLETION DATE - November 15, 2010
APPLIES TO ENTIRE CONTRACT

CONTRACT NOTES

PROPOSAL ADDENDA

All addenda to this proposal must be applied when calculating bid and certified in the bid packet submitted to the Kentucky Department of Highways. Failure to use the correct and most recent addenda may result in the bid being rejected.

BID SUBMITTAL

Bidder must use the Department's Expedite Bidding Program available on the Internet web site of the Department of Highways, Division of Construction Procurement. (www.transportation.ky.gov/contract)

The Bidder must download the bid file located on the web site to prepare a bid packet for submission to the Department. The bidder must include the completed bid packet printed from the Program along with the disk created by said program or submit electronically using Bid Express.

JOINT VENTURE BIDDING

Joint Venture bidding is permissible. However, both companies MUST purchase a bidding proposal. Either proposal may be submitted but must contain the company names and signatures of both parties where required. A joint bid bond of 5% may be submitted for both companies or each company may submit a separate bond of 5%.

UNDERGROUND FACILITY DAMAGE PROTECTION

The contractor is advised that the Underground Facility Damage Protection Act of 1994, became law January 1, 1995. It is the contractor's responsibility to determine the impact of the act regarding this project, and take all steps necessary to be in compliance with the provision of the act.

01/01/2009

DEFERRED PAYMENT: The successful bidder on this project may request a work order with an effective date prior to June 15, 2010. The request must be in writing to the Department. A work order issued at the request of the Contractor will be with the distinct understanding that payment for any work performed estimates may be delayed until July 15, 2010. A work order will be issued June 15, 2010, for this project unless the bidder requests an earlier work date.

SURFACING AREAS

Mainline surfacing width is estimated to vary 22-42 feet.
Total mainline area to be surfaced is estimated to be 26,000 square yards.
Shoulder width is estimated to vary 0-6 feet on each side.
Total shoulder area to be surfaced is estimated to be 1,500 square yards.

ASPHALT MIXTURE

The rate of application for all asphalt mixtures shall be estimated at 110 lbs/sy per inch of depth, unless otherwise noted.

AGGREGATE FOR MAILBOX TURNOUTS

Contrary to Section 209.02, use DGA or Crushed Limestone Size No. 610; do not use Crushed Stone Base. The Department will not measure necessary grading and/or shaping of existing shoulders and mailbox turnouts prior to placing of aggregate for payment, but shall be incidental to Aggregate for Mail box Turnouts.
Compact Aggregate for Mailbox Turnouts as directed by the Engineer. The Department will not measure compacting Aggregate for Mailbox Turnouts for payment, but shall be incidental to Aggregate for Mail box Turnouts.

INCIDENTAL SURFACING

The quantities established in the proposal include estimated quantities required for resurfacing or surfacing mailbox turnouts, farm field entrances, residential and commercial entrances, and road and street approaches. These items are to be paved to the limits as shown on Standard Drawing RPM 110 or to the limits as directed by the Engineer. In the event signal detectors are present in the intersecting streets or roads, the paving of the crossroads shall be to the right of way limit or back of the signal detector, whichever is the farthest back of the mainline. These areas are to be surfaced or resurfaced as directed by the Engineer and no direct payment will be allowed for placing and compacting.

FUEL AND ASPHALT PAY ADJUSTMENT

The following contract items: Asphalt Adjustment and Fuel Adjustment, are for possible future payments. Additional monies may need to be setup with an additional change order if existing contract amount is insufficient to pay all items on the contract. Unit price is $1.00. Quantity will be actual adjustment after work is completed.

OPTION B

The Contractor is advised that the compaction of asphalt mixtures furnished to this project will be accepted by OPTION B in accordance with Section 402 and Section 403 of the current Standard Specification.

SPECIAL NOTE FOR AWARD OF CONTRACT

Contrary to Section 103.02, the Department may hold the Bid Proposals of any or all bidders for a period not to exceed 90 calendar days for final disposition of award. The Department may hold the Bid Proposal of the lowest bidder longer than 90 calendar days if the bidder concurs.

Contrary to Section 103.04, The Department will hold the Proposal Guaranty of the lowest bidder and the Proposal Guaranty of the second lowest bidder, as determined by the Commissioner, until the Department awards the Contract and executes and approves the Contract and bond of the successful bidder, or until the Department rejects all Bid Proposals. If the Department does not make an award within 90 calendar days, the Department will return all Proposal Guaranties.

Except as provided in this note or elsewhere in the proposal, all other applicable portions of Section 103 apply.

01/01/2009

COORDINATION OF WORK WITH OTHER CONTRACTS

Be advised there may be an active project(s) adjacent to or within this project, including projects under the control of the City of Hopkinsville. The Engineer will coordinate the work of the Contractors. See Section 105.06.

SPECIAL NOTE FOR PAVEMENT WEDGE AND SHOULDER

1.0 MATERIALS. Provide an Asphalt Mixture for Pavement Wedge conforming to Section 407 of the Standard Specifications or an Asphalt Surface Mixture conforming to Section 403 of the Standard Specifications, as applicable to the project, for the pavement wedge.

2.0 CONSTRUCTION. Place the Asphalt Mixture for Pavement Wedge or Asphalt Surface Mixture as a separate operation from the driving lane. Prime the existing shoulder with tack material as the Engineer directs before placing the wedge. Construct according to Section 407.03 and 403.03 of the Standard Specifications, as applicable.

When the Engineer deems it appropriate to pave both the driving lane and the adjoining wedge monolithically, equip the paver with a modified screed. Provide a screed that extends the full width of the wedge being placed and is tapered to produce a wedge.

The wedge may vary in thickness at the edge of the driving lanes. Limit the outside edge thickness of the new paving limits on the wedge to one inch where existing site conditions permit. If an Asphalt Surface Mixture is furnished for the pavement wedge, texture according to Section 403.03.08.

The following sketch is primarily for the computation of quantities; however, the wedge will result in a similar cross-section where sufficient width exists. Do not construct a shoulder for placing the wedge unless specified elsewhere in the Contract.

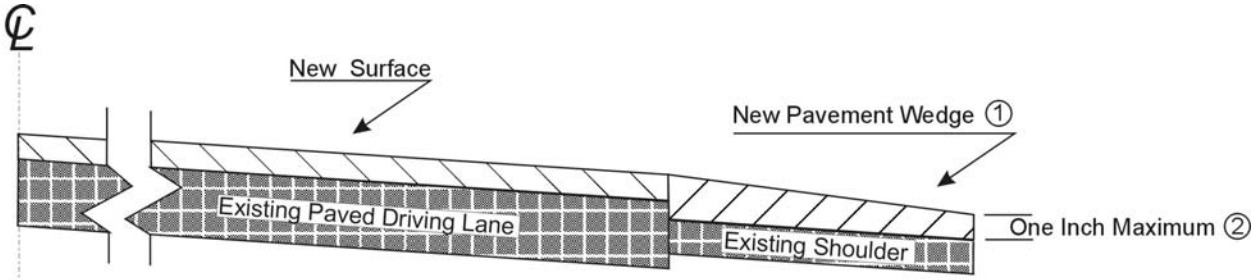

① Slope varies, but is down from the driving lanes except on outside of some curves where superelevation controls.

② Where existing site conditions permit.

3.0 MEASUREMENT. The Department will measure Asphalt Mixture for Pavement Wedge or Asphalt Surface Mixture placed as the pavement wedge according to Section 407.

4.0 PAYMENT. The Department will make payment for the completed and accepted quantities of Asphalt Surface Mixtures on pavement wedges according to Section 402 of the Standard Specifications. The Department will make payment for the completed and accepted quantities of Asphalt Mixture for Pavement Wedge according to Section 407 of the Standard Specifications.

01/01/2009

SPECIAL NOTE FOR SHOULDERING BY STATE FORCES

The Department will complete earth shoulders which will include regrading, reshaping, adding, and compacting of suitable materials on the existing shoulders to provide proper template or foundation.

Notify the Engineer a minimum of two (2) weeks in writing prior to beginning any work on the project. The Engineer will coordinate the shoulder work between the Contractor and State Forces.

SPECIAL NOTE FOR EDGE KEY

Construct Edge Keys at the beginning of project, end of project, at railroad crossings, and at ramps, as applicable. Cut out the existing asphalt surface to the required depth and width shown on the drawing. Heel new surface into the existing surface. The Department will pay for this work at the contract unit price per ton for "Asphalt Pavement Milling and Texturing", which shall be full compensation for all labor, materials, equipment, and incidentals for removal and disposal of the existing asphalt surface required to construct the edge key.

EDGE KEY

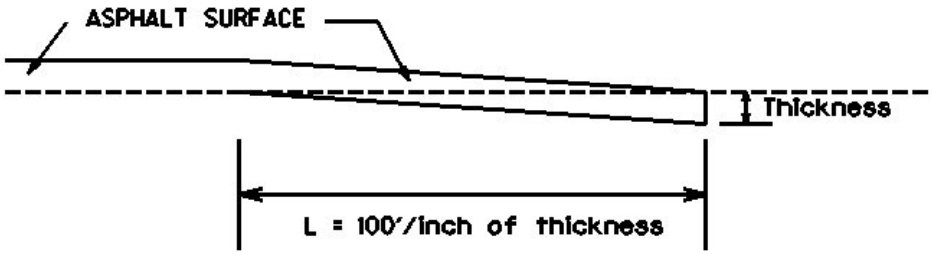

Thickness = 1 Inch

L = 100 LF

L= Length of Edge Key

1-3315 edgekeypaidbyton
01/01/2009

SPECIAL NOTE FOR
ASPHALT MILLING AND TEXTURING

Begin paving operations no later than **48 hours** after the commencement of the asphalt milling operation. Continue paving operations continuously until completed. If paving operations are not begun within this time period, liquidated damages will be assessed at the rate prescribed by Section 108.09 of the current Standard Specifications until such time as paving operations are begun.

Contrary to Section 408 of the current Standard Specifications, the material obtained from the milling operations shall become the property of the Department. Deliver this material to the State Maintenance facility in CHRISTIAN County.

Notice to Contractor

Transfer of millings to the state maintenance facility is considered a part of the construction project, therefore truck operators are subject to receiving prevailing wages.

SPECIAL NOTE FOR TYPICAL SECTION DIMENSIONS

The dimensions shown on the typical sections for pavement and shoulder widths and thickness' are nominal or typical dimensions. The actual dimensions to be constructed may be varied to fit existing conditions as directed or approved by the Engineer. It is not intended that existing pavement or shoulders be widened unless specified elsewhere in the Proposal.

1-3725 typical section
01/01/2009

TRAFFIC CONTROL PLAN

TRAFFIC CONTROL GENERAL

Except as provided herein, maintain and control traffic in accordance with the 2008 Standard and Supplemental Specifications, and Standard and Sepia Drawings and Special Provisions, current editions. Except for the roadway and traffic control bid items listed, all items of work necessary to maintain and control traffic will be paid at the lump sum bid price to "Maintain and Control Traffic".

Contrary to Section 106.01, traffic control devices used on this project may be new, or used in like new condition, at the beginning of the work and maintained in like new condition until completion of the work.

PROJECT PHASING & CONSTRUCTION PROCEDURES

Due not erect lane closures on Hopkinsville Bypass; Country Club Lane; and Cox Mill Road between the Hopkinsville Bypass and Pyle Lane nor between Windsor Drive and White Street during the following days and hours:

6:00 a.m. – 9:00 a.m.	Monday through Friday
3:00 p.m. – 6:00 p.m.	Monday through Friday

At the discretion of the Engineer, additional days and hours may be specified when lane closures will not be allowed.

At locations with three or more lanes, maintain one lane of traffic in each direction at all times during construction. At locations with two lanes, maintain alternating one way traffic during construction. Provide the following minimum clear lane widths at all times during construction:

Hopkinsville Bypass	12 Feet
Country Club Lane	11 Feet
Cox Mill Road	10 Feet
City Streets	9 Feet

However make provisions for passage of vehicles of up to 16 feet in width on the Hopkinsville Bypass. If traffic should be stopped due to construction operations, and a school bus on an official run arrives on the scene, the Contractor shall make provisions for the passage of the bus as quickly as possible.

LANE CLOSURES

Do not leave lane closures in place during non-working hours.

SIGNS

Contrary to section 112.04.02, only long term signs (signs intended to be continuously in place for more than 3 days) will be measured for payment; short term signs (signs intended to be left in place for 3 days or less) will not be measured for payment but will be incidental to Maintain and Control Traffic.

BARRICADES

Barricades used in lieu of barrels and cones for channelization or delineation will be incidental to Maintain and Control Traffic according to Section 112.04.01. Barricades used to protect pavement removal areas will be bid as each according to Section 112.04.04.

TRAFFIC LOOP INSTALLATION

All items required for lane closures related to this item of work shall be considered incidental to bid item "Maintain and Control Traffic". Install Traffic signal loops after area has been milled and prior to the asphalt paving. The Contractor shall coordinate the placement of the traffic loops with the Traffic Engineer.

THERMOPLASTIC INTERSECTION MARKING

All items required for lane closures related to this item of work shall be considered incidental to bid item "Maintain and Control Traffic". Locate, document, and replace the markings that are existing in the field prior to the completion of project or as directed by Engineer. Place temporary painted stop bars and temporary painted lane arrows on milled areas the same work day as milled, and on new pavement the same work day as laid if thermoplastic stop bars and thermoplastic arrows are not placed on the same work day as the new pavement is placed.

CHANGEABLE MESSAGE SIGNS

Provide changeable message signs in advance of and within the project at locations to be determined by the Engineer. If work is in progress concurrently in both directions or if more than one lane closure is in place in the same direction of travel, provide additional changeable message signs as directed by the Engineer. Place changeable message signs in advance of the anticipated queue at

each lane closure. As the actual queue lengthens and/or shortens relocate or provide additional changeable message signs so that traffic has warning of slowed or stopped traffic before reaching the end of the actual queue. The locations designated may vary as the work progresses. The Engineer will designate the messages required to be displayed. In the event of damage or mechanical/electrical failure, repair or replace the changeable message sign within 24 hours. The Department will measure for payment the maximum number of changeable message signs in concurrent use at the same time on a single day on all sections of the contract. The Department will measure individual changeable message signs only once for payment, regardless of how many times they are set, reset, removed, and relocated during the duration of the project. The Department will not measure replacements for damaged changeable message signs directed by the Engineer to be replaced due to poor condition or readability will not be measured for payment. Retain possession of the changeable message signs after construction is complete.

ARROW PANEL

Use arrow panels as shown on the Standard Drawings or as directed by the Engineer. The Department will measure for payment the maximum number of arrow panels in concurrent use at the same time on a single day on all sections of the contract. The Department will measure individual arrow panels only once for payment, regardless of how many times they are set, reset, removed, and relocated during the duration of the project. The Department will not measure replacements for damaged arrow panels directed by the Engineer to be replaced due to poor condition or readability. Retain possession of arrow panels after construction is complete.

PAVEMENT EDGE DROP-OFFS

A pavement edge between opposing directions of traffic or lanes that traffic is expected to cross in a lane change situation shall not have an elevation difference greater than 1½". Warning signs (MUTCD W8-9 or W8-9A, or W8-11) shall be placed in advance of and at 1500 feet intervals throughout the drop-off area. Dual posting on both sides of the traveled way shall be required. All transverse transitions between newly surfaced pavement and the existing pavement areas that traffic may cross shall be wedged with asphalt mixture for leveling and wedging. Remove wedges prior to placement of the final surface course.

Pavement edges that traffic is not expected to cross, except accidentally, shall be treated as follows:

Less than 2" - No protection required.

2" to 4" - Place plastic drums, vertical panels, or barricades every 50 feet. Cones may be used in place of plastic drums, panels, and barricades during daylight working hours. Wedge with asphalt mixture for leveling and wedging with a 1:1 or flatter slope in daylight hours, or 3:1 or flatter slope during nighttime hours, when work is not active in the drop-off area.

USE AND PLACEMENT OF CHANGEABLE MESSAGE SIGNS

The following policy is based upon current Changeable Message Signs (CMS) standards and practice from many sources, including the Federal Highway Administration (FHWA), other State Departments of Transportation, and Traffic Safety Associations. It is understood that each CMS installation or use requires individual consideration due to the specific location or purpose. However, there will be elements that are constant in nearly all applications. Accordingly these recommended guidelines bring a level of uniformity, while still being open to regional experience and engineering judgment.

Application

The primary purpose of CMS is to advise the driver of unexpected traffic and routing situations. Examples of applications where CMS can be effective include:

- Closures (road, lane, bridge, ramp, shoulder, interstate)
- Changes in alignment or surface conditions
- Significant delays, congestion
- Construction/maintenance activities (delays, future activities)
- Detours/alternative routes
- Special events with traffic and safety implications
- Crash/incidents
- Vehicle restrictions (width, height, weight, flammable)
- Advance notice of new traffic control devices
- Real-time traffic conditions (must be kept up to date)
- Weather /driving conditions, environmental conditions, Roadway Weather Information Systems
- Emergency Situations
- Referral to Highway Advisory Radio (if available)
- Messages as approved by the County Engineer's Office

CMS should not be used for:

- Replacement of static signs (e.g. road work ahead), regulatory signage (e.g. speed limits), pavement markings, standard traffic control devices, conventional warning or guide signs.
- Replacement of lighted arrow board
- Advertising (Don't advertise the event unless clarifying "action" to be taken by driver – e.g. Speedway traffic next exit)
- Generic messages
- Test messages (portable signs only)
- Describe recurrent congestion (e.g. rush hour)
- Public service announcements (not traffic related

Messages

Basic principles that are important to providing proper messages and insuring the proper operation of a CMS are:

- Visible for at least ½ mile under ideal daytime and nighttime conditions
- Legible from all lanes a minimum of 650 feet
- Entire message readable twice while traveling at the posted speed

- Nor more than two message panels should be used (three panels may be used on roadways where vehicles are traveling less than 45 mph). A panel is the message that fits on the face of the sign without flipping or scrolling.
- Each panel should convey a single thought; short and concise
- Do not use two unrelated panels on a sign
- Do not use the sign for two unrelated messages
- Should not scroll text horizontally or vertically
- Should not contain both the words left and right
- Use standardized abbreviations and messages
- Should be accurate and timely
- Avoid filler/unnecessary words and periods (hazardous, a, an, the)
- Avoid use of speed limits
- Use words (not numbers) for dates

Placement

Placement of the CMS is important to insure that the signs is visible to the driver and provides ample time to take any necessary action. Some of the following principles may only be applicable to controlled access roadways. The basic principles of placement for a CMS are:

- When 2 signs are needed, place on same side of roadway and at least 1,000 feet apart
- Place behind semi-rigid/rigid protection (guardrail, barrier) or outside of the clear zone
- Place 1,000 feet in advance of work zone; at least one mile ahead of decision point
- Normally place on right side of roadway; but should be placed closest to the affected lane so that either side is acceptable
- Signs should not be dual mounted (one on each side of roadway facing same direction)
- Point trailer hitch downstream
- Secure to immovable object to prevent thief (if necessary)
- Do not place in sags or just beyond crest
- Check for reflection of sun to prevent the blinding of motorist
- Should be turned ~3 degrees outward from perpendicular to the edge of pavement
- Bottom of sign should be 7 feet above the elevation of edge of roadway
- Should be removed when not in use

Standard Abbreviations

The following is a list of standard abbreviations to be used on CMS.

Word	Abbrev.	Example
Access	ACCS	ACCIDENT AHEAD/USE ACCS RD NEXT RIGHT
Alternate	ALT	ACCIDENT AHEAD/USE ALT RTE NEXT RIGHT
Avenue	AVE	FIFTH AVE CLOSED/DETOUR NEXT LEFT
Blocked	BLKD	FIFTH AVE BLKD/MERGE LEFT
Boulevard	BLVD	MAIN BLVD CLOSED/USE ALT RTE
Bridge	BRDG	SMITH BRDG CLOSED/USE ALT RTE
Cardinal Directions	N, S, E, W	N I75 CLOSED/ DETOUR EXIT 30
Center	CNTR	CNTR LANE CLOSED/MERGE LEFT

Commercial	COMM	OVRSZ COMM VEH/USE I275
Condition	COND	ICY COND POSSIBLE
Congested	CONG	HVY CONG NEXT 3 MI
Construction	CONST	CONST WORK AHEAD/EXPECT DELAYS
Downtown	DWNTN	DWNTN TRAF USE EX 40
Eastbound	E-BND	E-BND I64 CLOSED/DETOUR EXIT 20
Emergency	EMER	EMER VEH AHEAD/PREPARE TO STOP
Entrance, Enter	EX, EXT	DWNTN TRAF USE EX 40
Expressway	EXPWY	WTRSN EXPWY CLOSED/DETOUR EXIT 10
Freeway	FRWY, FWY	GN SYNDR FWY CLOSED/DETOUR EXIT 15
Hazardous Materials	HAZMAT	HAZMAT IN ROADWAY/ALL TRAF EXIT 25
Highway	HWY	ACCIDENT ON AA HWY/EXPECT DELAYS
Hour	HR	ACCIDENT ON AA HWY/2 HR DELAY
Information	INFO	TRAF INFO TUNE TO 1240 AM
Interstate	I	E-BND I64 CLOSED/DETOUR EXIT 20
Lane	LN	LN CLOSED/MERGE LEFT
Left	LFT	LANE CLOSED/MERGE LFT
Local	LOC	LOC TRAF USE ALT RTE
Maintenance	MAINT	MAINT WRK ON BRDG/SLOW
Major	MAJ	MAJ DELWAYS I75/USE ALT RTE
Mile	MI	ACCIDENT 3 MI AHEAD/ USE ALT RTE
Minor	MNR	ACCIDENT 3 MI MNR DELAY
Minutes	MIN	ACCIDENT 3 MI/30 MIN DELAY
Northbound	N-BND	N-BND I75 CLOSED/ DETOUR EXIT 50
Oversized	OVRSZ	OVRSZ COMM VEH/USE I275 NEXT RIGHT
Parking	PKING	EVENT PKING NEXT RGT
Parkway	PKWY	CUM PKWAY TRAF/DETOUR EXIT 60
Prepare	PREP	ACCIDENT 3 MIL/PREP TO STOP
Right	RGT	EVENT PKING NEXT RGT
Road	RD	HAZMAT IN RD/ALL TRAF EXIT 25
Roadwork	RDWK	RDWK NEXT 4 MI/POSSIBLE DELAYS
Route	RTE	MAJ DELAYS I75/USE ALT RTE
Shoulder	SHLDR	SHLDR CLOSED NEXT 5 MI
Slippery	SLIP	SLIP COND POSSIBLE/ SLOW SPD
Southbound	S-BND	S-BND I75 CLOSED/DETOUR EXIT 50
Speed	SPD	SLIP COND POSSIBLE/ SLOW SPD
Street	ST	MAIN ST CLOSED/USE ALT RTE
Traffic	TRAF	CUM PKWAY TRAF/DETOUR EXIT 60
Vehicle	VEH	OVRSZ COMM VEH/USE I275 NEXT RIGHT
Westbound	W-BND	W-BND I64 CLOSED/DETOUR EXIT 50
Work	WRK	CONST WRK 2MI/ POSSIBLE DELAYS

Certain abbreviations are prone to inviting confusion because another word is abbreviated or could be abbreviated in the same way. DO NO USE THESE ABBREVIATIONS.

Abbrev.	**Intended Word**	**Word Erroneously Given**
ACC	Accident	Access (Road)
CLRS	Clears	Colors
DLY	Delay	Daily
FDR	Feeder	Federal
L	Left	Lane (merge)

LOC	Local	Location
LT	Light (traffic)	Left
PARK	Parking	Park
POLL	Pollution (index)	Poll
RED	Reduce	Red
STAD	Stadium	Standard
TEMP	Temporary	Temperature
WRNG	Warning	Wrong

TYPICAL MESSAGES

The following is a list of typical messages used on CMS. The list consists of the reason or problem that you want the driver to be aware of and the action that you want the driver to take.

Reason/Problem	Action
ACCIDENT	ALL TRAFFIC EXIT RT
ACCIDENT/XX MILES	AVOID DELAY USE XX
XX ROAD CLOSED	CONSIDER ALT ROUTE
XX EXIT CLOSED	DETOUR
BRIDGE CLOSED	DETOUR XX MILES
BRIDGE/(SLIPPERY, ICE, ETC.)	DO NOT PASS
CENTER/LANE/CLOSED	EXPECT DELAYS
DELAY(S), MAJOR/DELAYS	FOLLOW ALT ROUTE
DEBRIS AHEAD	KEEP LEFT
DENSE FOG	KEEP RIGHT
DISABLED/VEHICLE	MERGE XX MILES
EMER/VEHICLES/ONLY	MERGE LEFT
EVENT PARKING	MERGE RIGHT
EXIT XX CLOSED	ONE-WAY TRAFFIC
FLAGGER XX MILES	PASS TO LEFT
FOG XX MILES	PASS TO RIGHT
FREEWAY CLOSED	PREPARE TO STOP
FRESH OIL	REDUCE SPEED
HAZMAT SPILL	SLOW
ICE	SLOW DOWN
INCIDENT AHEAD	STAY IN LANE
LANES (NARROW, SHIFT, MERGE, ETC.)	STOP AHEAD
LEFT LANE CLOSED	STOP XX MILES
LEFT LANE NARROWS	TUNE RADIO 1610 AM
LEFT 2 LANES CLOSED	USE NN ROAD
LEFT SHOULDER CLOSED	USE CENTER LANE
LOOSE GRAVEL	USE DETOUR ROUTE
MEDIAN WORK XX MILES	USE LEFT TURN LANE
MOVING WORK ZONE, WORKERS IN ROADWAY	USE NEXT EXIT
NEXT EXIT CLOSED	USE RIGHT LANE
NO OVERSIZED LOADS	WATCH FOR FLAGGER
NO PASSING	

NO SHOULDER
ONE LANE BRIDGE
PEOPLE CROSSING
RAMP CLOSED
RAMP (SLIPPERY, ICE, ETC.)
RIGHT LANE CLOSED
RIGHT LANE NARROWS
RIGHT SHOULDER CLOSED
ROAD CLOSED
ROAD CLOSED XX MILES
ROAD (SLIPPERY, ICE, ETC.)
ROAD WORK
ROAD WORK (OR CONSTRUCTION) (TONIGHT, TODAY, TOMORROW, DATE)
ROAD WORK XX MILES
SHOULDER (SLIPPERY, ICE, SOFT, BLOCKED, ETC.)
NEW SIGNAL XX MILES
SLOW 1 (OR 2) - WAY TRAFFIC
SOFT SHOULDER
STALLED VEHICLES AHEAD
TRAFFIC BACKUP
TRAFFIC SLOWS
TRUCK CROSSING
TRUCKS ENTERING
TOW TRUCK AHEAD
UNEVEN LANES
WATER ON ROAD
WET PAINT
WORK ZONE XX MILES
WORKERS AHEAD

1/16/10

use and placement of changeable message signs.docx

SPECIAL NOTES FOR TRAFFIC SIGNAL LOOP DETECTORS

The Contractor is advised there are existing traffic signal loop detectors within the construction limits of the subject project. Notify the Engineer in writing, (2) weeks prior to beginning any work on the project.

The Engineer will contact and maintain liaison with the District Traffic Engineer to coordinate any necessary work.

1-3892 trafficsignalloops
01/01/2009

SPECIAL NOTES FOR TRAFFIC SIGNAL LOOP REPLACEMENT

I. DESCRIPTION. Loop replacement shall be performed in accordance with the Department's Standard Specifications (current edition), applicable Standard Drawings, and applicable Special Provisions except as hereafter specified. Article references are to the Standard Specifications.

The Contractor shall furnish all materials, labor, and equipment for the replacement of traffic signal loop(s), and junction boxes (if the contract specifies quantities for this bid item elsewhere), and maintaining and controlling traffic, and all other work specified as part of this contract.

II. MATERIALS. All wire and cable shall be plainly marked in accordance with the provisions of the national electrical code.

Conduit shall be rigid steel. All rigid steel conduit shall be galvanized inside and out and shall conform to the Underwriters' Laboratories requirements for rigid metallic conduit.

Loop wire shall be #14 AWG IMSA Spec 51-7.

Loop lead-in cable shall be #14 AWG stranded, paired conductors, electrically shielded and conforming to IMSA 19-2-1984.

III. CONSTRUCTION. The electrical contractor shall coordinate with the general contractor and inspector to ensure the loops are installed prior to any milling work being performed.

All wiring shall conform to the provisions of the National Electrical Code unless otherwise shown on the details. Where more than one circuit is installed within the same conduit, permanent circuit identification numbers shall be affixed to the wires. All wires shall be permanently labeled within 6 inches of the input file.

Rigid steel conduit encasement shall be provided for all conductors except for overhead installations, where conductors are run inside poles or cabinets and induction loop conductors sealed within pavements. All conduit installations shall conform to the provisions of the National Electrical Code except where directed otherwise. Bonded slip joints will be permitted for joining rigid conduit to junction boxes. Where a standard coupling cannot be used, an approved threaded union coupling shall be used.

All conduit ends shall be reamed to remove burrs and sharp edges. Damaged portions of the galvanized surfaces and untreated threads resulting from field cuts shall be painted with a rust inhibitive paint. Conduit bends shall have a radius of not less than 12 times the nominal diameter of the conduit, unless otherwise shown on the plans. See Typical Grounding Detail.

Conduit which will not be subjected to regular pressure from traffic shall be laid to a depth of not less than 18 inches. At crossings under roadway surfaces and shoulders, the conduit shall be placed at a depth of not less than 24 inches below grade. The contractor will not be permitted to cut any pavement in carrying out conduit installations. After the conduit has been installed and prior to backfilling, the conduit installation shall be inspected and approved by the Engineer.

Contractor shall install underground utility warning tape above the circuit cables as shown on the detail sheets. The tapes shall conform to the APWA-ULCC national color code with black lettering on a red background. The tape shall continuously read "Caution: Electric Line Buried Below" alternating with a 'No Digging' symbol.

The tape shall be durable and colorfast to withstand years of underground burial and easily direct buried. The tape shall be 6" wide and 7 mils (nominal) thick. The tape shall have a minimum tensile strength of 600 lbs./6" width. It shall be color code impregnated with alkali and acid stable, lead-free, organic pigments for direct burial. It shall be ultraviolet colorfast. The tape shall be nondistorting with no elongation.

When backfilling trenches, the backfill material shall be placed and compacted in lifts of 9 inches or less. Any area disturbed as a result of the contractor's operations shall be restored to the satisfaction of the Engineer.

Loop lead-in wire, exclusive of shielded cable, shall be twisted with three to five turns per foot before placement in saw slot, conduit or junction box. Unshielded loop wiring to field terminal connections in cabinet and unshielded loop wiring in loop amplifier connector harness shall also be twisted three to five turns per foot.

Except for the connection of the loop wires to the loop lead-in wires, loops shall be extended splice-free to the controller. Loop wires shown as extended to poles or junction boxes shall be spliced into loop lead-in cable at the poles or boxes. Loop lead-in cable shall be extended splice-free from pole or junction box to controller. Each loop shall have a separate lead-in cable installed. Multiple loops on the same lead-in cable will not be accepted. Splices shall be placed to minimize possibility of water intrusion. The electrical contractor shall coordinate the installation of traffic loops with the paving contractor and the Engineer prior to milling.

Junction boxes shall conform to ANSI/SCTE 77 "Specifications for Underground Enclosure Integrity" for Tier 15. Covers shall have a minimum coefficient of friction of 0.05 in accordance with ASTM C1028, shall be marked "TRAFFIC" and be attached with 3/8 " stainless hex bolts. Junction boxes shall be installed flush with finished grade. See Junction Box Type B detail.

All splices shall be made with butt splices. Butt splices shall be copper and of the correct wire range. Butt splices shall be covered with a 3M Mastic Pad or approved equal and then taped with a 3M brand #33 electrical tape. Mastic pad must cover at least 3 inches past each end of butt splice. Underground splices include splices in junction boxes and

pole bases. Each conductor shall be encased in a separate splice kit. Cost of the splices shall be incidental to the cost of wire or cable. The splicing specification listed here takes precedence over any other splicing specifications listed in the Standard Specifications for Road and Bridge Construction.

Induction loop conductors shall test free of shorts and unauthorized grounds and shall have an insulating resistance of at least 100 megohms when tested with a 500 volt direct current potential in a reasonably dry atmosphere between conductors and ground.

Each Contractor submitting a bid for this work shall make a thorough inspection of the site prior to submitting his bid and shall thoroughly familiarize himself with existing conditions so that the work can be expeditiously performed after a Contract is awarded. Submission of a bid will be considered evidence of this inspection having been made. Any claims resulting from site conditions will not be honored by the Department.

Information provided in this proposal and the types and quantities of work listed are not to be taken as an accurate or complete evaluation of the material and conditions to be encountered during construction. The bidder must draw his own conclusion as to the conditions encountered. The Department does not give any guarantee as to the accuracy of the data and no claim will be considered for additional compensation if the conditions encountered are not in accordance with the information shown.

It is not anticipated that utility facilities will need to be relocated and/or adjusted; however, in the event that it is discovered that the work does require that utilities be relocated and/or adjusted, the utility companies will work concurrently with the Contractor while relocating their facilities.

The Contractor will be responsible for all damage to public and/or private property resulting from his work. Upon completion of the work, restore all disturbed highway features in like kind design and materials. Clean the site and dispose of all waste and debris off the right-of-way at sites obtained by the Contractor at no additional cost to the Department. Sow all disturbed earthen areas with Seed Mixture No. 1.

IV. MEASUREMENT.

Conduit shall include furnishing and installing specified conduit in accordance with specifications. This item includes conduit fittings, expansion joints, clamps, and weatherheads.

Junction box shall include furnishing and installing specified junction box in accordance with the specifications and shown on the Junction Box Type B detail. This item includes #57 aggregate, backfilling, and the restoration of disturbed areas to the satisfaction of the Engineer.

Trenching and backfilling shall include excavation, backfilling, and the restoration of disturbed areas to the satisfaction of the Engineer. Incidental to this item shall be

furnishing and installing underground utility warning tape as shown on the Depth of Conduit detail.

Wire or **cable** shall include furnishing and installing specified wire or cable within conduit, saw slot, or overhead as required. Incidental to this item shall be furnishing and installing splice boots, cable rings or other hardware required for installing cable. Wire installed in saw slots shall be installed as shown on the Saw Slot detail. The contractor shall install all cable runs splice-free from the controller to each loop wire the cable is feeding. Exceptions to this must be approved by the Engineer. The removal of existing lead-in cable shall be incidental to this item. The removal of existing lead-in cable shall be incidental to this item.

Loop saw slot and fill shall include sawing, cleaning saw slot as well as furnishing and installing loop sealant, backer rod and non-shrink grout as shown on the details. The contractor shall saw according to the dimensions shown on the detail sheets and not cut out any sections of pavement by over-sawing any slot. The ¾" conduit referenced in the Loop Wire Transition details is incidental to this project and not a separate pay item.

V. PAYMENT. The Department will make payment for completed and accepted quantities under the following:

Code	Pay Item	Pay Unit
4793	Conduit 1 ¼"	Linear Foot
4795	Conduit 2"	Linear Foot
4811	Junction Box Type B	Each
4820	Trenching and Backfilling	Linear Foot
4830	Loop Wire	Linear Foot
4850	Cable-No. 14/1 Pair	Linear Foot
4895	Loop Saw Slot and Fill	Linear Foot

01/01/2009

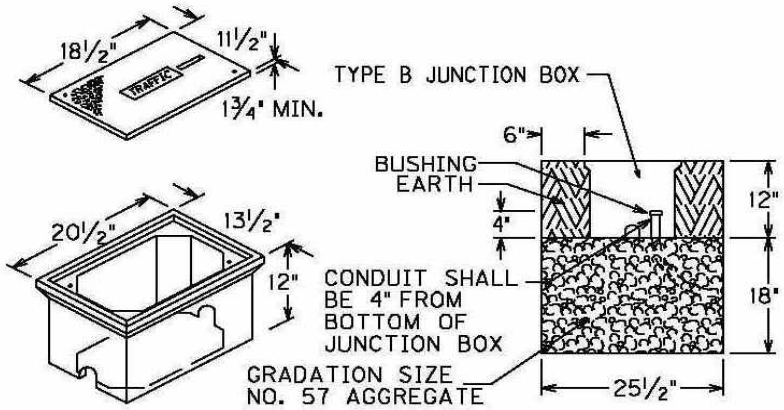

JUNCTION BOXES SHALL CONFORM TO ANSI/SCTE 77 "SPECIFICATIONS FOR UNDERGROUND ENCLOSURE INTEGRITY" FOR TIER 15. COVERS SHALL HAVE A MINIMUM COEFFICIENT OF FRICTION OF 0.05 IN ACCORDANCE WITH ASTM C1028. SHALL BE MARKED "TRAFFIC" AND BE ATTACHED WITH ⅜" STAINLESS HEX BOLTS. JUNCTION BOXES SHALL BE INSTALLED FLUSH WITH FINISHED GRADE.

JUNCTION BOX TYPE B

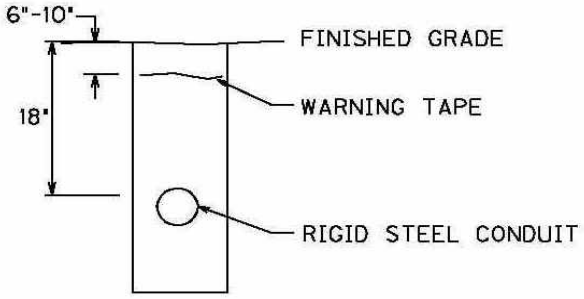

DEPTH OF CONDUIT

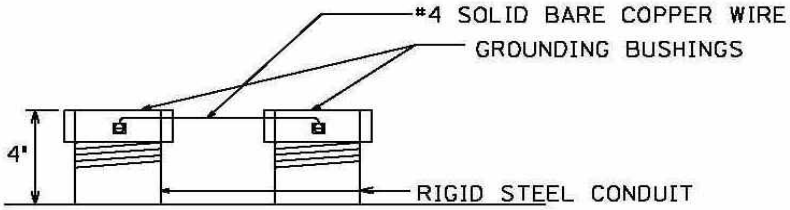

TYPICAL GROUNDING DETAIL

LOOP WIRES SHALL BE ENCAPSULATED WITH LOOP SEALANT PER MANUFACTURER'S INSTRUCTIONS. ALL LOOP SEALANT SHALL BE COVERED WITH A CONTINUOUS LAYER OF BACKER ROD. BACKER ROD SHALL BE INSTALLED SUCH THAT NO VOIDS ARE PRESENT BETWEEN LOOP SEALANT AND BACKER ROD. FILL REMAINING SAW SLOT WITH NON-SHRINK GROUT PER MANUFACTURER'S INSTRUCTIONS.

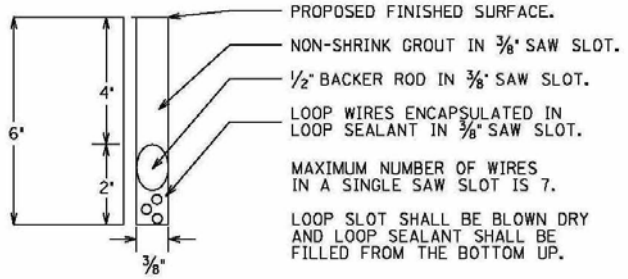

SAW SLOT DETAIL

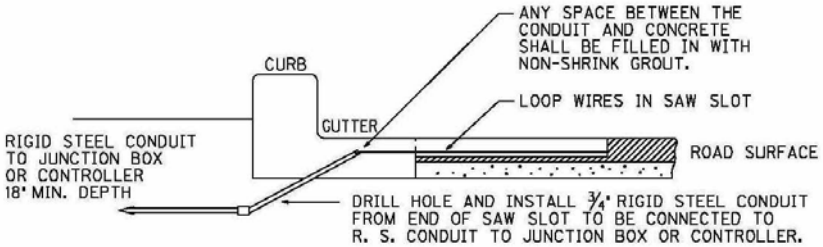

LOOP WIRE TRANSITION - CONCRETE CURB

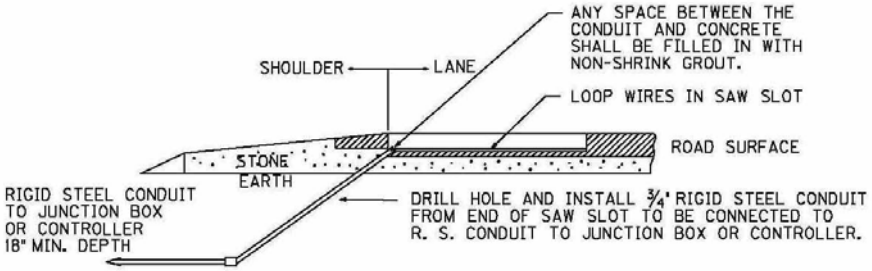

LOOP WIRE TRANSITION - FLAT SHOULDER

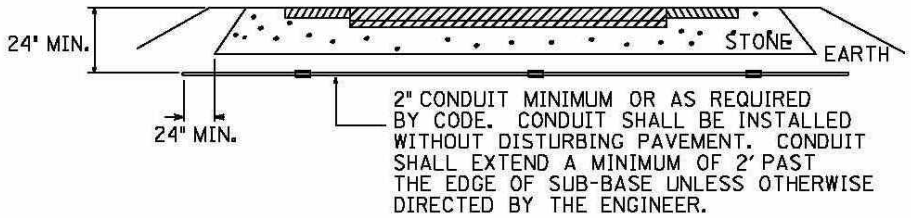

CONDUIT UNDER EXISTING PAVEMENT DETAIL

LOOP LEAD-IN WIRES SHALL BE TWISTED WITH THREE TO FIVE TURNS PER FOOT UNTIL TERMINATED AT FIELD CONNECTIONS IN THE CABINET OR CONNECTED TO SHIELDED CABLE.

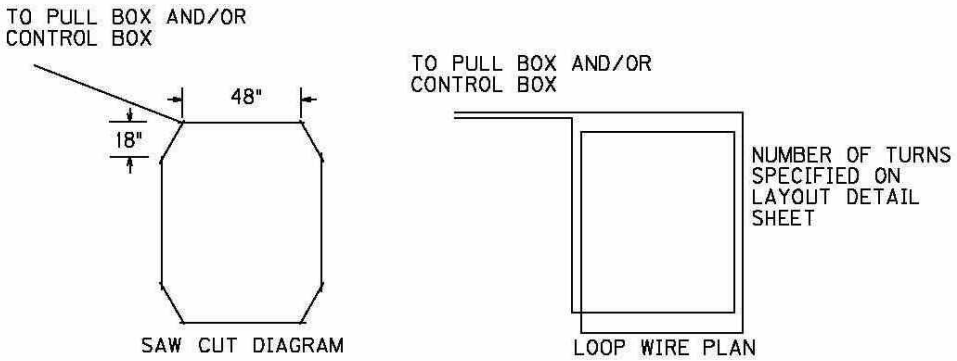

STANDARD LOOP

*ALL 6'x6' LOOPS SHALL BE STANDARD

LOOP LEAD-IN WIRES SHALL BE TWISTED WITH THREE TO FIVE TURNS PER FOOT UNTIL TERMINATED AT FIELD CONNECTIONS IN THE CABINET OR CONNECTED TO SHIELDED CABLE.

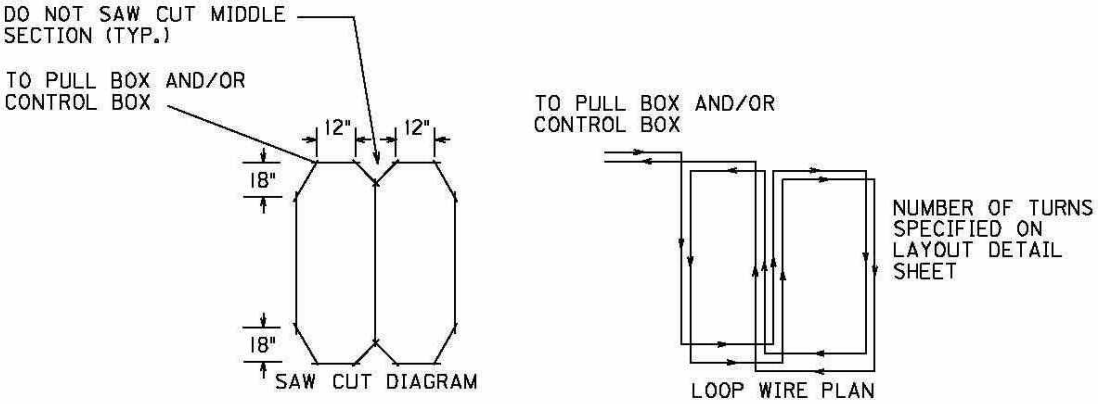

QUADRAPOLE LOOP

*ALL 6'x30' LOOPS SHALL BE QUADRAPOLE

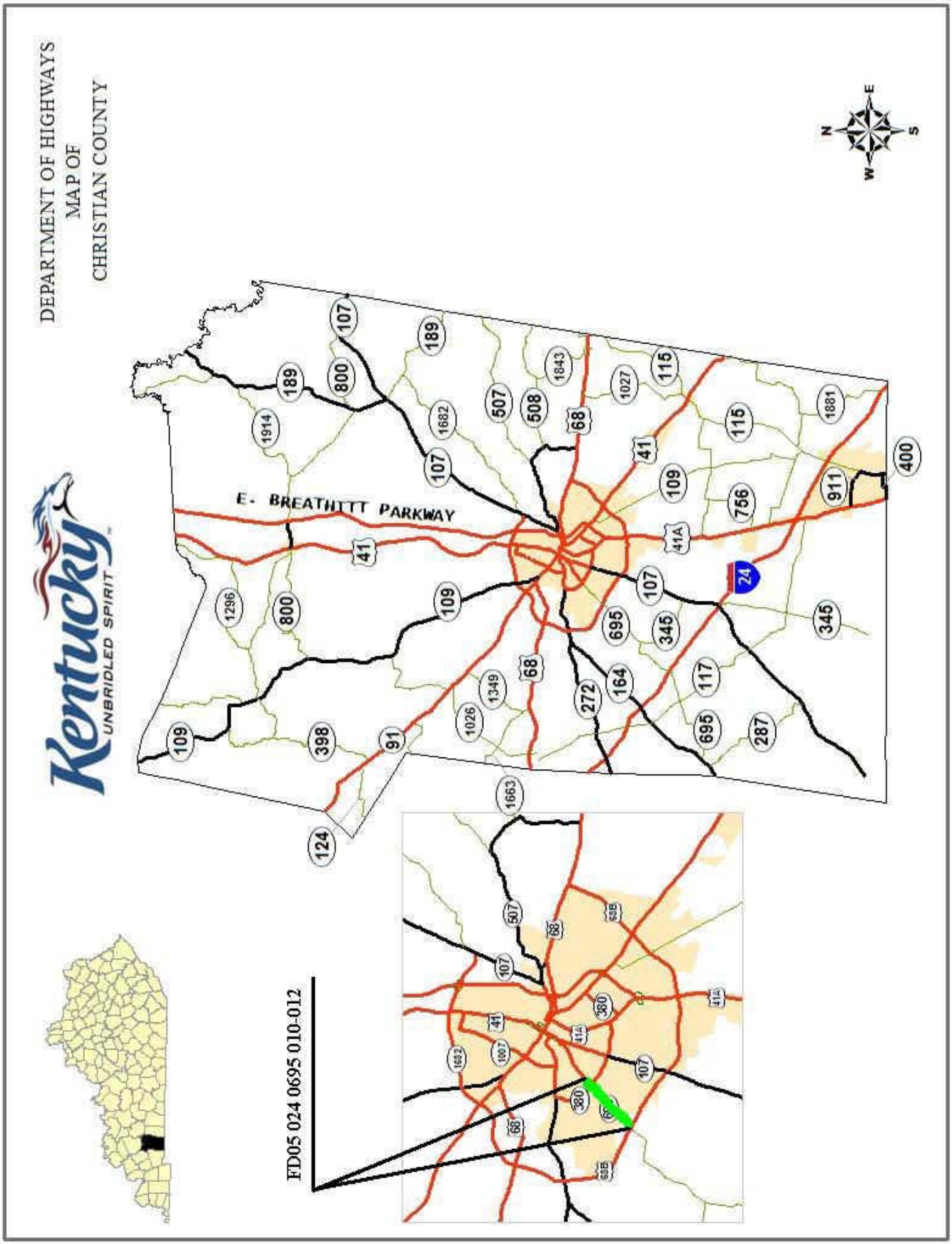
DEPARTMENT OF HIGHWAYS
MAP OF
CHRISTIAN COUNTY
Kentucky
UNBRIDLED SPIRIT
E. BREATHITT PARKWAY
FD05 024 0695 010-012
N
E
S
W

CHRISTIAN COUNTY
CITY OF HOPKINSVILLE

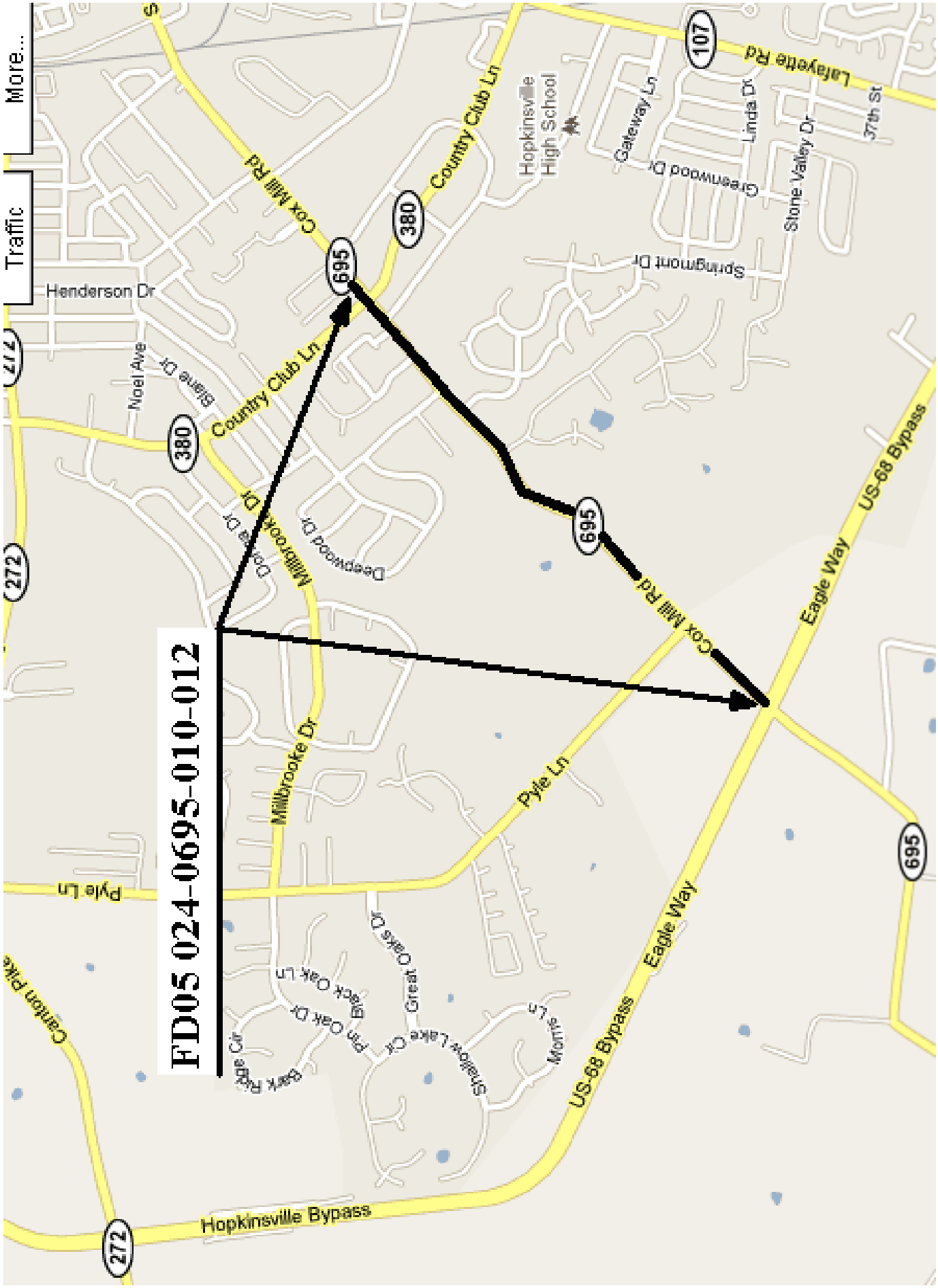

TRAFFIC SIGNAL LOOP SUMMARY

MILEPOINT	INTERSECTION	LOOP SAW AND FILL LF	LOOP WIRE LF	CONDUIT 1 1/4 INCH LF	CABLE NO. 14 LF	FIBER OPTIC LF	JUNCTION BOX		NOTES
							TYPE B EA	10X8X4 EA	
10.066	US 68B	300	1300						
TOTAL		300	1300	0	0	0	0	0	

NOTES:

THERMOPLASTIC PAVEMENT MARKINGS SUMMARY

MILEPOINT	INTERSECTION	X-WALKS	STOP BARS	ARROWS			"ONLY"	CROSS HATCH	RAILROAD		NOTES
		6 INCH LF	24 INCH LF	CURVE EA	STR EA	COMB EA	EA	12 INCH SF	"R" 6 FOOT EA	CROSS BUCK 16" LF	
10.066	US 68B		42	6				400			1,2
11.455	KY 380		48	4							2
TOTAL		0	90	10	0	0	0	400	0	0	

NOTES: 1. Island ~55'X80' - White
2. Paint Temp Stop Bars & Temp Arrows as directed by the Engineer.

TYPICAL SECTION

MILEPOINTS 10.066 - 10.280

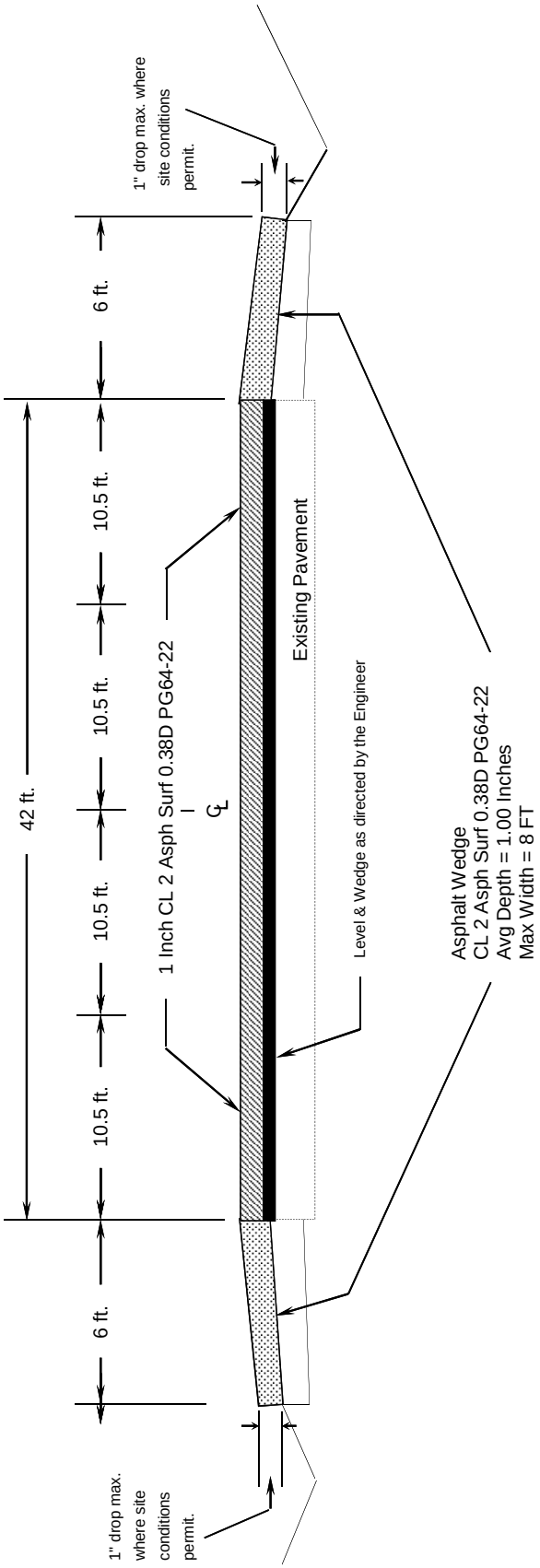

TYPICAL SECTION

MILEPOINTS 10.280 - 11.355

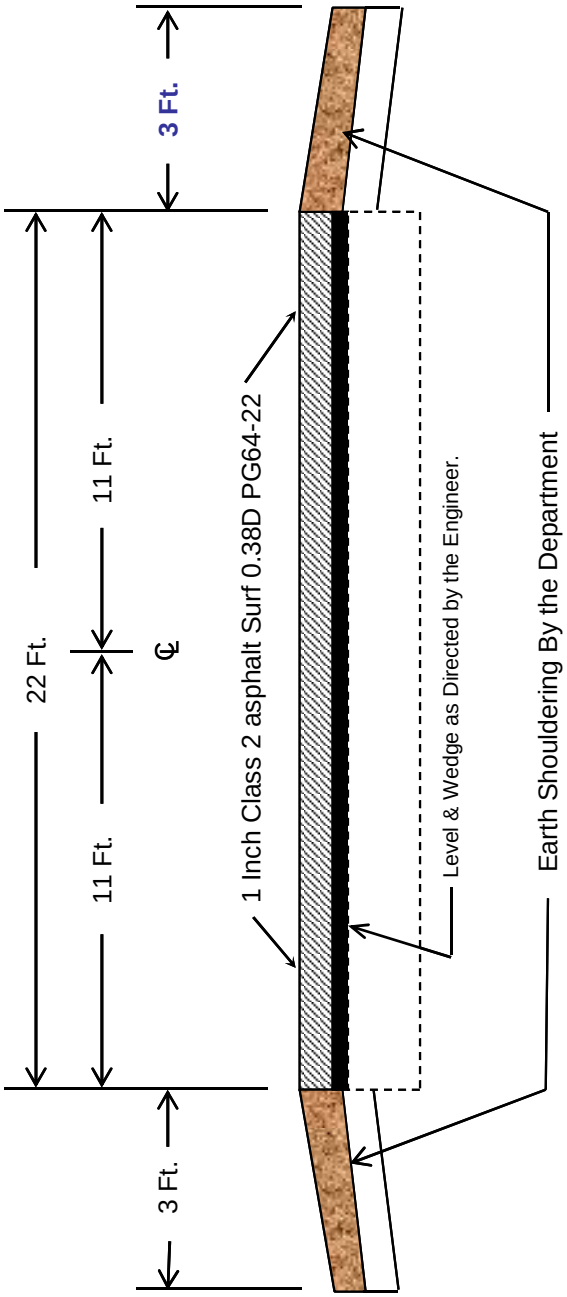

TYPICAL SECTION

MILEPOINTS 11.355 - 11.517

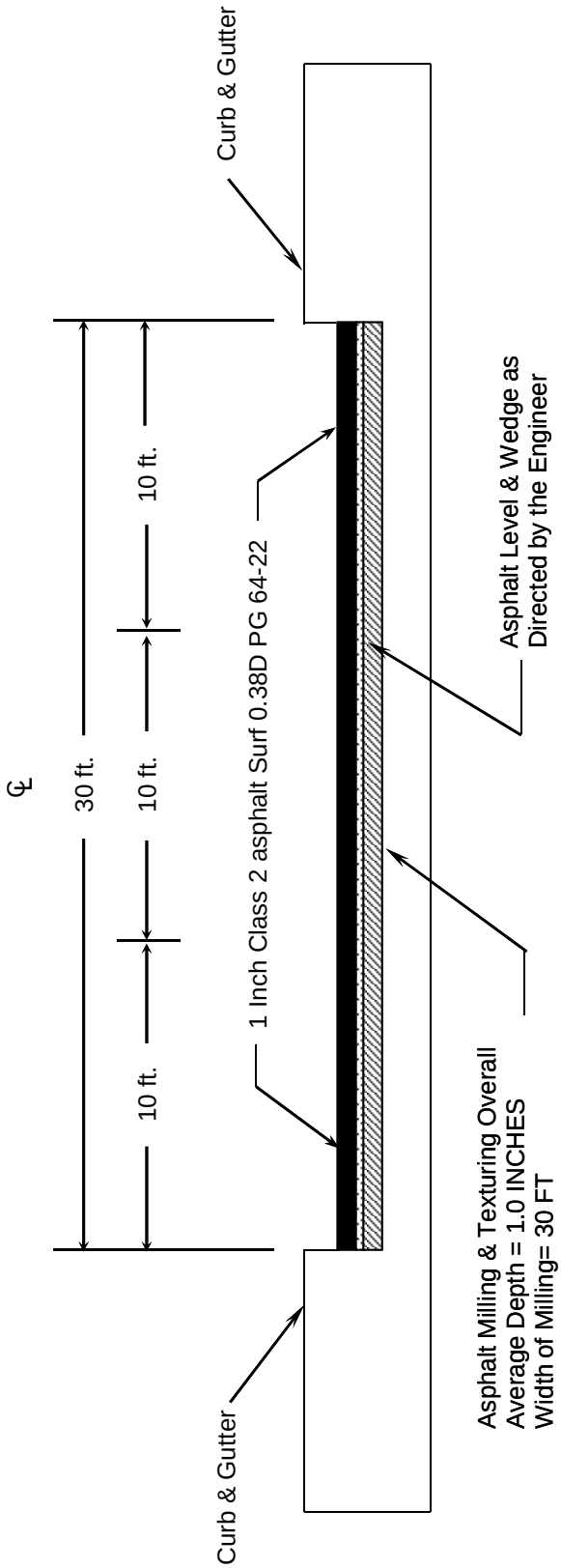

BRIDGE DETAIL FOR PAVING PROJECT

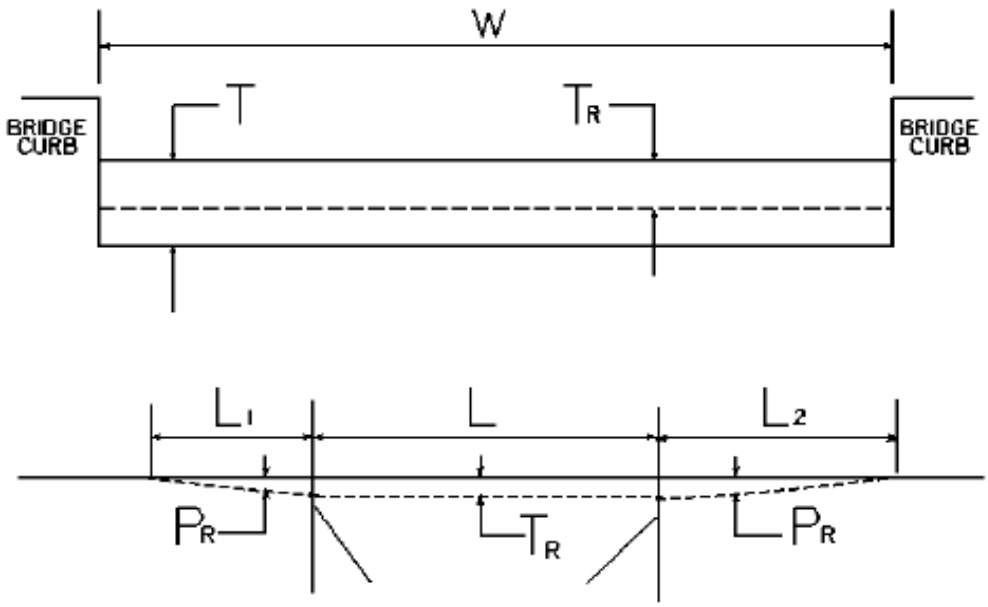

W = bridge width curb to curb
T = thickness of existing asphalt overlay
L = length of bridge
L_1 & L_2 = length of approach pavement to be removed
T_R = thickness to be removed and replaced on bridge
P_R = thickness to be removed and replaced on pavement
Note: L_1 & L_2 lengths shall be determined by using a transition rate of 100 ft/in of thickness

Route	Bridge No.	MP	W (ft)	T (in)	L_1 (ft)	L_2 (ft)	T_R (in)	L (ft)	P_R (in)
KY 695	B00082	10.910	24.00	0.00	100.00	100.00	0.00	153.00	1.00

01/01/2009

PART II

SPECIFICATIONS AND STANDARD DRAWINGS

SPECIFICATIONS REFERENCE

Any reference in the plans or proposal to the *Standard Specifications for Road and Bridge Construction, Edition of 2004,* and *Standard Drawings, Edition of 2000* are superseded by *Standard Specifications for Road and Bridge Construction, Edition of 2008* and *Standard Drawings, Edition of 2003 with the 2008 Revision.*

Supplemental Specifications to The Standard Specifications for Road and Bridge Construction, 2008 Edition

(Effective with the April 23, 2010 Letting)

SUBSECTION: **REVISION:**	101.02 Abbreviations. Insert the following abbreviation and text into the section: KEPSC Kentucky Erosion Prevention and Sediment Control
SUBSECTION: **REVISION:**	101.03 Definitions. Replace the definition for Specifications – *Special Provisions* with the following: Additions and revisions to the Standard and Supplemental Specifications covering conditions peculiar to and individual project.
SUBSECTION: **REVISION:**	102.03 Replace the first sentence of the first paragraph with the following: Submit the Bid Proposal on forms furnished on the Department internet website (http://transportation.ky.gov/contract/), including the Bid Packet and disk created from the Expedite Bidding Program. Delete the last paragraph.
SUBSECTION: **REVISION:**	102.04 Issuance of Bid Proposal Form. Replace Heading with the following: 102.04 Bidder Registration. Replace the first sentence of the first paragraph with the following: The Department reserves the right to disqualify or refuse to place a bidder on the eligible bidder's list for a project for any of the following reasons: Replace the last sentence of the subsection with the following: The Department will resume placing the bidder on the eligible bidder's list for projects after the bidder improves his operations to the satisfaction of the State Highway Engineer.
SUBSECTION: **REVISION:**	102.06 Examination of Plans, Specifications, Special Provisions, Special Notes, and Site of Work. Replace the first paragraph with the following: Examine the site of the proposed work, the Bid Proposal, Plans, specifications, contract forms, and bulletins and addendums posted to the Department's website and the Bid Express Bidding Service Website before submitting the Bid Proposal. The Department considers the submission of a Bid Proposal prima facie evidence that the bidder has made such examination and is satisfied as to the conditions to be encountered in performing the work and as to the requirements of the Contract.
SUBSECTION: **REVISION:**	102.07.01 General. Replace the first sentence with the following: Submit the Bid Proposal on forms furnished on the Department internet website (http://transportation.ky.gov/contract/), including the Bid Packet and disk created from the Expedite Bidding Program. Insert the following after the first sentence of the third paragraph: Bid proposals submitted electronically shall use an eligible Digital ID issued by Bid Express.

Supplemental Specifications to The Standard Specifications for Road and Bridge Construction, 2008 Edition

(Effective with the April 23, 2010 Letting)

SUBSECTION: **REVISION:**	102.07.02 Computer Bidding. Replace the first paragraph with the following: Subsequent to registering for a specific project, use the Department's Expedite Bidding Program on the internet website of the Department of Highways, Division of Construction Procurement (http://transportation.ky.gov/contract/). Download the bid file from the Bid Express Bidding Service Website to prepare a Bid Proposal for submission to the Department. Include the completed Bid Packet produced by the Expedite Bidding Program and submit it along with the disk created by said program or submit electronically through Bid Express Bidding Service. Replace the second paragraph with the following: In case of a dispute, the printed Bid Proposal and bid item sheets created by the Expedite Bidding Program take precedence over any bid submittal.
SUBSECTION: **REVISION:**	102.08 Irregular Bid Proposals. Replace point four of the first paragraph with the following: 4) fails to submit a disk created from the Expedite Bidding Program, unless the bid proposal is submitted electronically through the Bid Express Bidding Service. Replace point one of the second paragraph with the following: 1) when the Bid Proposal is on a form other than that furnished by the Department or printed from other than the Expedite Bidding Program, or when the form is altered or any part is detached; or
SUBSECTION: **REVISION:**	102.09 Bid Proposal Guaranty. Insert the following after the first sentence: Bid proposals submitted electronically through Bid Express Bidding Service where a bid bond was not used must have a guaranty in the form of a cashier's check or certified check in an amount no less than the amount indicated on the submitted electronic bid.
SUBSECTION: **REVISION:**	102.10 Delivery of Bid Proposals. Replace paragraph with the following: Return Bid Proposal in an envelope that is clearly marked indicating the contents. When sent by mail, address the sealed Bid Proposal to the Department at the address and in care of the office and official receiving the Bid Proposals. Submit all Bid Proposals prior to the time and at the place specified in the Notice to Contractors. The Department will time-stamp and return to the bidder unopened Bid Proposals received after the time for opening of bids. Bids submitted electronically shall be done using Bid Express Bidding Services. All bids submitted electronically must be done in accordance with the requirements of the Bid Express Bidding Service.
SUBSECTION: **REVISION:**	102.11 Withdrawal or Revision of Bid Proposals. Replace the paragraph with the following: A bidder may withdraw or revise a Bid Proposal after depositing the Bid Proposal with the Department, provided the Department receives the request for such withdrawal or revision in writing before the time set for opening Bid Proposals. Bid Proposals submitted electronically can be withdrawn in accordance the requirements of the Bid Express Bidding Service.

Supplemental Specifications to The Standard Specifications for Road and Bridge Construction, 2008 Edition

(Effective with the April 23, 2010 Letting)

SUBSECTION: **REVISION:**	103.02 Award of Contract. Replace the first sentence of the third paragraph with the following: The Department will normally award the Contract within 10 working days after the date of receiving Bid Proposals unless the Department deems it best to hold the Bid Proposals of any or all bidders for a period not to exceed 60 calendar days for final disposition of award.
SUBSECTION: **REVISION:**	105.03 Record Plans. Replace the section with the following: Record Plans are those reproductions of the original Plans on which the accepted Bid Proposal was based and, and signed by a duly authorized representative of the Department. The Department will make these plans available for inspection in the Central Office at least 24 hours prior to the time of opening bids and up to the time of letting of a project or projects. The quantities appearing on the Record Plans are the same as those on which Bid Proposals are received. The Department will use these Record Plans as the controlling plans in the prosecution of the Contract. The Department will not make any changes on Record Plans subsequent to their issue unless done so by an approved contract modification. The Department will make 2 sets of Record Plans for each project, and will maintain one on file in the Central Office and one of file in the District Office. The Department will furnish the Contractor with the following: 1 full size, 2 half size and an electronic file copy of the Record Plans at the Pre-Construction conference.
SUBSECTION: **REVISION:**	105.12 Final Inspection and Acceptance of Work. Insert the following paragraphs after the first paragraph: Notify the Engineer when all electrical items are complete. A notice of the electrical work completion shall be made in writing to the Contractor. Electrical items will be inspected when the electrical work is complete and are not subject to waiting until the project as a whole has been completed. The Engineer will notify the Division of Traffic Operations within 3 days that all electrical items are complete and ready for a final inspection. A final inspection will be completed within 90 days after the Engineer notifies the Division of Traffic Operations of the electrical work completion. Energize all electrical items prior to notifying the Engineer that all electrical items are complete. Electrical items must remain operational until the Division of Traffic Operations has inspected and accepted the electrical portion of the project. Payment for the electrical service is the responsibility of the Contractor from the time the electrical items are energized until the Division of Traffic Operations has accepted the work. Complete all corrective work within 90 calendar days of receiving the original electrical inspection report. Notify the Engineer when all corrective work is complete. The Engineer will notify the Division of Traffic Operations that the corrective work has been completed and the project is ready for a follow-up inspection. Upon re-inspection, if additional corrective work is required, complete within the same 90 calendar day allowance. The Department will not include time between completion of the corrective work and the follow up electrical inspection(s). The 90 calendar day allowance is cumulative regardless of the number of follow-up electrical inspections required. The Department will assume responsibility for the electrical service on a project once the Division of Traffic Operations gives final acceptance of the electrical items on the project. The Department will also assume routine maintenance of those items. Any damage done to accepted electrical work items by other Contractors shall be the responsibility of the Prime Contractor. The Department will not be responsible for repairing damage done by other contractors during the construction of the remaining project. Failure to complete the electrical corrective work within the 90 calendar day allowance will result in penalties assessed to the project. Penalties will be assessed at ½ the rate of liquidated damages established for the contract. Replace the following in the second sentence of the second paragraph: Replace Section 213 with Section 212. Delete the fifth paragraph from the section.

Supplemental Specifications to The Standard Specifications for Road and Bridge Construction, 2008 Edition

(Effective with the April 23, 2010 Letting)

SUBSECTION: **REVISION:**	105.13 Claim Resolution Process. Replace the last sentence of the 3. Bullet with the following: If the Contractor did not submit an as-bid schedule at the Pre-Construction Meeting or a written narrative in accordance with Subsection 108.02, the Cabinet will not consider the claim for delay. Delete the last paragraph from the section.
SUBSECTION: **REVISION:**	106.10 Field Welder Certification Requirements. Insert the following sentence before the first sentence of the first paragraph: All field welding must be performed by a certified welder unless otherwise noted.
SUBSECTION: **REVISION:**	108.02 Progress Schedule. Insert the following prior to the first paragraph: Specification 108.02 applies to all Cabinet projects except the following project types: • Right of Way Mowing and/or Litter Removal • Waterborne Paint Striping • Projects that contain Special Provision 82 • Projects that contain the Special Note for CPM Scheduling Insert the following paragraph after paragraph two: Working without the submittal of a Written Narrative is violation of this specification and additionally voids the Contractor's right to delay claims. Insert the following paragraph after paragraph six: The submittal of bar chart or Critical Path Method schedule does not relieve the Contractor's requirement to submit a Written Narrative schedule. Insert the following at the beginning of the first paragraph of A) Written Narrative.: Submit the Written Narrative Schedule using form TC 63-50 available at the Division of Construction's website (http://www.transportation.ky.gov/construction/ResCenter/ResCenter.htm). Replace Part A) Written Narrative 1. And 2. with the following: 1. Provide a description that includes how the Contractor will sequence and stage the work, how the Contractor plans to maintain and control traffic being specific and detailed, and what equipment and crew sizes are planned to execute the work. 2. Provide a list of project milestones including, if applicable, winter shut-downs, holidays, or special events. The Contractor shall describe how these milestones and other dates effect the prosecution of the work. Also, include start date and completion date milestones for the contract, each project if the contract entails multiple projects, each phase of work, site of work, or segment of work as divided in the project plans, proposal, or as subdivided by the Contractor.

Supplemental Specifications to The Standard Specifications for Road and Bridge Construction, 2008 Edition

(Effective with the April 23, 2010 Letting)

SUBSECTION: **REVISION:**	110.01 Mobilization. Replace paragraph three with the following: Do not bid an amount for Mobilization that exceeds 5 percent of the sum of the total amounts bid for all items in the Bid Proposal, excluding Mobilization, Demobilization, and contingent amounts established for adjustments and incentives. The Department will automatically adjust any Bid Proposals that are in excess of this amount down to 5 percent to compare Bid Proposals and award the Contract. The Department will award a Contract for the actual amount bid when the amount bid for Mobilization is less than 5 percent, or the Department will award the Contract for the adjusted bid amount of 5 percent when the amount bid for Mobilization is greater than 5 percent. If any errors in unit bid prices for other Contract items in a Contractor's Bid Proposal are discovered after bid opening and such errors reduce the total amount bid for all other items, excluding Mobilization, Demobilization, and contingent amounts established for adjustments and incentives, so that the percent bid for Mobilization is larger than 5 percent, the Department will adjust the amount bid for Mobilization to 5 percent of the sum of the corrected total bid amounts.
SUBSECTION: **REVISION:**	110.02 Demobilization. Replace the third paragraph with the following: Bid an amount for Demobilization that is a minimum of $1,000 or 1.5 percent of the sum of the total amounts bid for all other items in the Bid Proposal, excluding Mobilization, Demobilization, and contingent amounts established for adjustments and incentives. The Department will automatically adjust any Bid Proposal that is less than this amount up to $1,000 or 1.5 percent to compare Bid Proposals and award the Contract. The Department will award a Contract for the actual amount bid when the amount bid for demobilization exceeds 1.5 percent, or the Department will award the Contract for the adjusted bid amount when the amount bid for demobilization is less than the minimum of $1,000 or less than 1.5 percent of the sum of the total amounts bid for all other items in the Bid Proposal, excluding Mobilization, Demobilization, and contingent amounts established for adjustments and incentives.
SUBSECTION: **REVISION:**	110.04 Payment. Insert the following paragraph following the demobilization payment schedule (4th paragraph): The Department will withhold an amount equal to $1,000 for demobilization, regardless of the schedule listed above. The $1,000 withheld for demobilization will be paid when the final estimate is paid.
SUBSECTION: **REVISION:**	112.03.01 General Traffic Control. Replace paragraph three with the following: All flaggers shall be trained in current MUTCD flagging procedures. Proof of training must be available for review at the Department's request. Flagging credentials must be current within the last 5 years.
SUBSECTION: **PART:** **REVISION:**	112.03.11 Temporary Pavement Markings. B) Placement and Removal of Temporary Striping. Replace the 2nd sentence of the first paragraph with the following: On interstates and parkways, and other roadways approved by the State Highway Engineer, install pavement striping that is 6 inches in width.
SUBSECTION: **REVISION:**	112.03.12 Project Traffic Coordinator (PTC). Add the following at the end of the subsection: After October 1, 2008 the Department will require the PTC to have successfully completed the applicable qualification courses. Personnel that have not successfully completed the applicable courses by that date will not be considered qualified. Prior to October 1, 2008, conform to Subsection 108.06 A) and ensure the designated PTC has sufficient skill and experience to properly perform the task.

Supplemental Specifications to The Standard Specifications for Road and Bridge Construction, 2008 Edition

(Effective with the April 23, 2010 Letting)

SUBSECTION: 112.03.15 Non-Compliance of Maintain and Control of Traffic.
REVISION: Add the following section:

112.03.15 Non-Compliance of Maintain and Control of Traffic. It is the Contractor's responsibility to conform to the traffic control requirements in the TCP, Proposal, plan sheets, specifications, and the Manual on Uniform Traffic Control Devices.

Unless specified elsewhere in the contract, a penalty will be assessed in the event of non-compliance with Maintain and Control of Traffic requirements. These penalties will be assessed when the Contractor fails to correct a situation or condition of non-compliance with the contract traffic control requirements after being notified by the Engineer. The calculation of accrued penalties for non-compliance will be based upon the date/time of notification by the Engineer.

The amount of the penalty assessed for non-compliance will be determined based upon the work zone duration, as defined by the MUTCD, and will be the greatest of the different calculation methods indicated below:

A) Long-term stationary work that occupies a location more than 3 days.

Correct the non-compliant issue within 24 hours from initial notification by the Engineer. If the issue is not corrected within 24 hours from the initial notification, a penalty for non-compliance will be assessed on a daily basis beginning from the initial notification of non-compliance. The Contractor will be assessed a $1,000 daily penalty or the amount equal to the contract liquidated damages in Section 108.09, whichever of the 2 is greater. The penalty for non-compliance will escalate as follows for continued non-compliance after the initial notification.

3 Days after Notification
$1,500 daily penalty or 1.5 times the contract liquidated damages daily charge rate in Section 108.09, whichever is greater.

7 Days after Notification
$2,000 daily penalty or double the contract liquidated damages daily charge rate in Section 108.09, whichever is greater.

B) Intermediate-term stationary work that occupies a location more than one daylight period up to 3 days, or nighttime work lasting more than 1 hour.

Correct the non-compliant issue within 4 hours from initial notification by the Engineer. If the issue is not corrected within 4 hours from notification, a penalty for non-compliance will be assessed on an hourly basis beginning from the initial notification of non-compliance. The penalty for non-compliance will be assessed at $200 per hour.

C) Short-term stationary is daytime work that occupies a location for more than 1 hour within a single daylight period.

Correct the non-compliant issue within 1 hour from initial notification by the Engineer. If the issue is not corrected within 1 hour from notification, a penalty for non-compliance will be assessed on an hourly basis beginning from the initial notification of non-compliance. The penalty for non-compliance will be assessed at $200 per hour.

If the Contractor remains in violation of the Maintain and Control of Traffic requirements, or if the Department determines it to be in the public's interest, work will be suspended in accordance with Section 108.08 until the deficiencies are corrected. The Department reserves the right to correct deficiencies by any means available and charge the Contractor for labor, equipment, and material costs incurred in emergency situations.

Supplemental Specifications to The Standard Specifications for Road and Bridge Construction, 2008 Edition

(Effective with the April 23, 2010 Letting)

SUBSECTION: **REVISION:**	206.03.02 Embankment Replace the last paragraph with the following: When rock roadbed is specified, construct the upper 2 feet of the embankment according to Subsection 204.03.09 A).
SUBSECTION: **REVISION:**	213.03.03 Inspection and Maintenance. Insert the following paragraph after the second paragraph: When the Contractor is required to obtain the KPDES permit, it is their responsibility to ensure compliance with the inspection and maintenance requirements of the permit. The Engineer will perform verification inspections a minimum of once per month and within 7 days of a ½ inch or greater rainfall event. The Engineer will document these inspections using Form TC 63-61 A. The Engineer will provide copies of the inspection only when improvements to the BMP's are required. Verification inspections performed by the Engineer do not relieve the Contractor of any responsibility for compliance with the KPDES permit. Initiate corrective action within 24 hours of any noted deficiency and complete the work within 5 days.
SUBSECTION: **PART:** **REVISION:**	213.03.05 Temporary Control Measures. E) Temporary Seeding and Protection. Replace the first paragraph with the following: Apply an Annual Rye seed mix at a rate of 100 pounds per acre during the months of March through August. In addition to the Annual Rye, add 10 pounds of German Foxtail-Millet (Setaria italica), when performing temporary seeding during the months of June through August. During the months of September through February, apply Winter Wheat or Rye Grain at a rate of 100 pounds per acre. Obtain the Engineer's approval prior to the application of the seed mixture.
SUBSECTION: **PART:** **REVISION:**	213.03.05 Temporary Control Measures. F) Temporary Mulch. Replace the last sentence with the following: Place temporary mulch to an approximate 2-inch loose depth (2 tons per acre) and anchor it into the soil by mechanically crimping it into the soil surface or applying tackifier to provide a protective cover. Regardless of the anchoring method used, ensure the protective cover holds until disturbance is required or permanent controls are in installed.
SUBSECTION: **REVISION:**	303.05 Payment. Replace the second paragraph of the section with the following: The Department will make payment for Drainage Blanket-Type II (ATDB) according to the Lot Pay Adjustment Schedule for Specialty Mixtures in Section 402.
SUBSECTION: **PART:** **REVISION:**	401.02.04 Special Requirements for Dryer Drum Plants. F) Production Quality Control. Replace the first sentence with the following: Stop mixing operations immediately if, at any time, a failure of the automatic electronic weighing system of the aggregate feed, asphalt binder feed, or water injection system control occurs.

Supplemental Specifications to The Standard Specifications for Road and Bridge Construction, 2008 Edition

(Effective with the April 23, 2010 Letting)

SUBSECTION: 401.02.04 Special Requirements for Dryer Drum Plants.
REVISION: Add the following:

Part G) **Water Injection System.** Provided each system has prior approval as specified in Subsection 402.01.01, the Department will allow the use of water injection systems for purposes of foaming the asphalt binder and lowering the mixture temperature for production of Warm Mix Asphalt (WMA).

Ensure the equipment for water injection meets the following requirements:

1) Injection equipment computer controls are automatically coupled to the plants controls (manual operation is not permitted);
2) Injection equipment has variable controls that introduce water ratios based on production rates of mixtures;
3) Injects water into the flow of asphalt binder prior to contacting the aggregate;
4) Provides alarms on the water injection system that operate when the flow of water is interrupted or deviates from the prescribed water rate.

SUBSECTION: 401.03.01 Preparation of Mixtures.
REVISION: Replace the last sentence of the second paragraph with the following:

Do not use asphalt binder while it is foaming in a storage tank.

SUBSECTION: 401.03.01 Preparation of Mixtures.
REVISION: Replace the third paragraph and Mixing and Laying Temperature table with the following:

Maintain the temperature of the component materials and asphalt mixture within the ranges listed in the following table:

MIXING AND LAYING TEMPERATURES (°F)

Material		Minimum	Maximum
Aggregates		240	330
Aggregates used with Recycled Asphalt Pavement (RAP)		240	—
Asphalt Binders	PG 64-22	230	330
	PG 76-22	285	350
Asphalt Mixtures at Plant (Measured in Truck)	PG 64-22 HMA	250	330
	PG 76-22 HMA	310	350
	PG 64-22 WMA	230	275
	PG 76-22 WMA	250	300
Asphalt Mixtures at Project (Measured in Truck When Discharging)	PG 64-22 HMA	230	330
	PG 76-22 HMA	300	350
	PG 64-22 WMA	210	275
	PG 76-22 WMA	240	300

SUBSECTION: 402.01 Description.
REVISION: Replace the paragraph with the following:

Provide the process control and acceptance testing of all classes and types of asphalt mixtures which may be furnished either as hot mix asphalt (HMA) or warm mix asphalt (WMA) produced with water injection systems.

Supplemental Specifications to The Standard Specifications for Road and Bridge Construction, 2008 Edition

(Effective with the April 23, 2010 Letting)

SUBSECTION REVISION:
402.01.01 Warm Mix Asphalt (WMA) Evaluation and Approval.
Add the following subsection:

402.01.01 Warm Mix Asphalt (WMA) Evaluation and Approval.
The Department will evaluate trial production of WMA by use of a water injection system provided the system is installed according to the manufacturer's requirements and satisfies the requirements of Section 401. Evaluation will include production and placement of WMA to demonstrate adequate mixture quality including volumetric properties and density by Option A as specified in Subsection 402.03.02 D). Do not place WMA for evaluation on Department projects. Provided production and placement operations satisfy the applicable quality levels, the Department will approve WMA production on Department projects using the water injection system as installed on the specific asphalt mixing plant evaluated.

SUBSECTION:
REVISION:
402.05.02 Asphalt Mixtures and Mixtures With RAP.
Replace Subsection Title as below:

402.05.02 Asphalt Mixtures, HMA and WMA, Including Mixtures With RAP.

SUBSECTION:
REVISION:
402.05.02 Asphalt Mixtures, HMA and WMA, Including Mixtures With RAP.
Replace the paragraph with the following:

The Department will pay for the mixture at the Contract unit bid price and apply a Lot Pay Adjustment for each lot placed based on the degree of compliance with the specified tolerances. Using the appropriate Lot Pay Adjustment Schedule, the Department will assign a pay value for the applicable properties within each sublot and average the sublot pay values to determine the pay value for a given property for each lot. The Department will apply the Lot Pay Adjustment for each lot to a defined unit price of $50.00 per ton. The Department will calculate the Lot Pay Adjustment using all possible incentives and disincentives but will not allow the overall pay value for a lot to exceed 1.00.

SUBSECTION:
PART:
REVISION:
402.05.02 Asphalt Mixtures, HMA and WMA, Including Mixtures With RAP.
C) Conventional and RAP Mixtures Placed on Shoulders.
Replace title with the following:

HMA, WMA, and RAP Mixtures Placed on Shoulders.

SUBSECTION:
PART:
REVISION:
402.05.02 Asphalt Mixtures, HMA and WMA, Including Mixtures With RAP.
D) Conventional and RAP Mixtures Placed Monolithically as Asphalt Pavement Wedge.
Replace the title with the following:

HMA, WMA, and RAP Mixtures Placed Monolithically as Asphalt Pavement Wedge.

SUBSECTION:
PART:
TABLES:
REVISION:
402.05.02 Asphalt Mixtures, HMA and WMA, Including Mixtures With RAP.
Lot Pay Adjustment Schedule, Compaction Option A, Base and Binder Mixtures
VMA
Replace the VMA table with the following:

VMA

Pay Value	Deviation From Minimum
1.00	• min. VMA
0.95	0.1-0.5 below min.
0.90	0.6-1.0 below min.
(1)	> 1.0 below min.

Supplemental Specifications to The Standard Specifications for Road and Bridge Construction, 2008 Edition

(Effective with the April 23, 2010 Letting)

SUBSECTION: 402.05.02 Asphalt Mixtures, HMA and WMA, Including Mixtures With RAP.
PART: Lot Pay Adjustment Schedule, Compaction Option A, Surface Mixtures
TABLES: VMA
REVISION: Replace the VMA table with the following:

VMA	
Pay Value	Deviation From Minimum
1.00	• min. VMA
0.95	0.1-0.5 below min.
0.90	0.6-1.0 below min.
(1)	> 1.0 below min.

SUBSECTION: 402.05.02 Asphalt Mixtures, HMA and WMA, Including Mixtures With RAP.
PART: Lot Pay Adjustment Schedule, Compaction Option B Mixtures
TABLE: VMA
REVISION: Replace the VMA table with the following:

VMA	
Pay Value	Deviation From Minimum
1.00	• min. VMA
0.95	0.1-0.5 below min.
0.90	0.6-1.0 below min.
(2)	> 1.0 below min.

SUBSECTION: 403.03.03 Preparation of Mixture.
PART: C) Mix Design Criteria.
NUMBER: 1) Preliminary Mix Design.
REVISION: Replace the last two sentences of the paragraph and table with the following:

Complete the volumetric mix design at the appropriate number of gyrations as given in the table below for the number of 20-year ESAL's. The Department will define the relationship between ESAL classes, as given in the bid items for Superpave mixtures, and 20-year ESAL ranges as follows:

		Number of Gyrations		
Class	**ESAL's (millions)**	$N_{initial}$	N_{design}	N_{max}
2	< 3.0	6	50	75
3	3.0 to < 30.0	7	75	115
4	≥ 30.0	8	100	160

SUBSECTION: 403.03.09 Leveling and Wedging, and Scratch Course.
PART: A) Leveling and Wedging.
REVISION: Replace the first sentence of the first paragraph with the following:

Conform to the gradation requirements (control points) of AASHTO M 323 for base, binder, or surface as the Engineer directs.

SUBSECTION: 403.03.09 Leveling and Wedging, and Scratch Course.
PART: B) Scratch Course.
REVISION: Replace the second sentence of the first paragraph with the following:

Conform to the gradation requirements (control points) of AASHTO M 323 for base, binder, or surface as the Engineer directs.

Supplemental Specifications to The Standard Specifications for Road and Bridge Construction, 2008 Edition

(Effective with the April 23, 2010 Letting)

SUBSECTION: **REVISION:**	407.01 DESCRIPTION. Replace the first sentence of the paragraph with the following: Construct a pavement wedge composed of a hot-mixed or warm-mixed asphalt mixture.
SUBSECTION: **REVISION:**	409.01 DESCRIPTION. Replace the first sentence of the paragraph with the following: Use reclaimed asphalt pavement (RAP) from Department projects or other approved sources in hot mix asphalt (HMA) or warm mix asphalt (WMA) provided mixture requirements are satisfied.
SUBSECTION: **REVISION:**	410.01 DESCRIPTION. Delete the second sentence of the paragraph.
SUBSECTION: **REVISION:**	410.03.01 Corrective Work. Replace the last sentence of the paragraph with the following: Provide a final surface comparable to the adjacent pavement that does not require corrective work in respect to texture, appearance, and skid resistance.
SUBSECTION: **PART:** **NUMBER:** **REVISION:**	410.03.02 Ride Quality. B) Requirements. 1) Category A. Replace the last sentence of the first paragraph with the following: At the Department's discretion, a pay deduction of $1200 per 0.1-lane-mile section may be applied in lieu of corrective work.
SUBSECTION: **PART:** **NUMBER:** **REVISION:**	410.03.02 Ride Quality. B) Requirements. 2) Category B. Replace the second and third sentence of the first paragraph with the following: When the IRI is greater than 90 for a 0.1-mile section, perform corrective work, or remove and replace the pavement to achieve the specified IRI. At the Department's discretion, a pay deduction of $750 per 0.1-lane-mile section may be applied in lieu of corrective work.
SUBSECTION: **REVISION:**	410.05 PAYMENT. Add the following sentence to the end of the first paragraph: The sum of the pay value adjustments for ride quality shall not exceed $0 for the project as a whole.
SUBSECTION: **REVISION:**	413.05.02 CL3 SMA BASE 1.00D PG76-22. Insert the following sentence between the first and second sentence of the first paragraph: The Department will calculate the Lot Pay Adjustment using all possible incentives and disincentives but will not allow the overall pay value for a lot to exceed 1.00.

Supplemental Specifications to The Standard Specifications for Road and Bridge Construction, 2008 Edition

(Effective with the April 23, 2010 Letting)

SUBSECTION: 413.05.02 CL3 SMA BASE 1.00D PG 76-22.
TABLE: JOINT DENSITY TABLE
REVISION: Replace the joint density table with the following:

LANE DENSITY	
Pay Value	Test Result (%)
1.05	95.0-96.5
1.00	93.0-94.9
0.95	92.0-92.9 or 96.6-97.0
0.90	91.0-91.9 or 97.1-97.5
(1)	< 91.0 or > 97.5

SUBSECTION: 413.05.03 CL3 SMA SURF 0.50A PG76-22 and CL3 SMA SURF 0.38A PG76-22.
REVISION: Insert the following sentence between the first and second sentence of the first paragraph:

The Department will calculate the Lot Pay Adjustment using all possible incentives and disincentives but will not allow the overall pay value for a lot to exceed 1.00.

SUBSECTION: 413.05.03 CL3 SMA SURF 0.50A PG76-22 and CL3 SMA SURF 0.38A PG76-22.
TABLE: JOINT DENSITY TABLE
REVISION: Replace the joint density table with the following:

DENSITY		
Pay Value	Lane Density Test Result (%)	Joint Density Test Result (%)
1.05	95.0-96.5	92.0-96.0
1.00	93.0-94.9	90.0-91.9
0.95	92.0-92.9 or 96.6-97.0	89.0-89.9 or 96.1-96.5
0.90	91.0-91.9 or 97.1-97.5	88.0-88.9 or 96.6-97.0
0.75	----	< 88.0 or > 97.0
(1)	< 91.0 or > 97.5	----

SUBSECTION: 501.05.02 Ride Quality.
REVISION: Add the following sentence to the end of the first paragraph:

The sum of the pay value adjustments for the ride quality shall not exceed $0 for the project as a whole.

SUBSECTION: 505.03.04 Detectable Warnings.
REVISION: Replace the first sentence with the following:

Install detectable warning pavers at all sidewalk ramps and on all commercial entrances according to the Standard Drawings.

Supplemental Specifications to The Standard Specifications for Road and Bridge Construction, 2008 Edition

(Effective with the April 23, 2010 Letting)

SUBSECTION: **REVISION:**	505.04.04 Detectable Warnings. Replace the paragraph with the following: The Department will measure the quantity in square feet. All retrofit applications for maintenance projects will require the removal of existing sidewalks to meet the requirements of the standard drawings applicable to the project. The cost associated with the removal of the existing sidewalk will be incidental to the detectable warnings bid item or incidental to the bid item for the construction of the concrete sidewalk unless otherwise noted.
SUBSECTION: **REVISION:**	505.05 PAYMENT. Add the following to the bid item table: Code — Pay Item — Pay Unit 23158ES505 — Detectable Warnings — Square Foot
SUBSECTION: **REVISION:**	509.01 DESCRIPTION. Replace the second paragraph with the following: The Department may allow the use of similar units that conform to the National Cooperative Highway Research Program (NCHRP) 350 Test Level 3 (TL-3) requirements and the typical features depicted by the Standard Drawings. Obtain the Engineers approval prior to use. Ensure the barrier wall shape, length, material, drain slot dimensions and locations typical features are met and the reported maximum deflection is 3 feet or less from the NCHRP 350 TL-3 for Test 3 – 11 (pickup truck impacting at 60 mph at a 25-degree angle.)
SUBSECTION: **REVISION:**	601.03.02 Concrete Producer Responsibilities. Add the following to the first paragraph: If a concrete plant becomes unqualified during a project and there are no other qualified plants in the region, the Department will provide qualified personnel to witness and ensure the producer follows the required specifications. The Department will assess the Contractor a $100 per hour charge for this service.
SUBSECTION: **REVISION:**	606.02.11 Coarse Aggregate. Replace with the following: Conform to Section 805, size No. 8 or 9-M.
SUBSECTION: **REVISION:**	609.04.06 Joint Sealing. Replace Subsection 601.04 with the following: Subsection 606.04.08.
SUBSECTION: **REVISION:**	609.05 Payment. Replace the Pay Unit for Joint Sealing with the following: See Subsection 606.05.
SUBSECTION: **REVISION:**	701.03.06 Initial Backfill. Replace the first sentence of the last paragraph with the following: When the Contract specifies, perform quality control testing to verify compaction according to KM 64-512.

Supplemental Specifications to The Standard Specifications for Road and Bridge Construction, 2008 Edition

(Effective with the April 23, 2010 Letting)

SUBSECTION: 701.03.08 Testing of Pipe.
REVISION: Replace and rename the subsection with the following:

701.03.08 Inspection of Pipe. The engineer will visually inspect all pipe. The Department will require camera/video inspection on a minimum of 50 percent of the linear feet of all installed pipe structures. Conduct camera/video inspection according to KM 64-114. The pipe to be installed under pavement will be selected first. If the total linear feet of pipe under pavement is less than 50 percent of the linear feet of all pipe installed, the Engineer will randomly select installations from the remaining pipe structures on the project to provide for the minimum inspection requirement. The pipe will be selected in complete runs (junction-junction or headwall-headwall) until the total linear feet of pipe to be inspected is at least 50 percent of the total linear feet of all installed pipe on the project.

Unless the Engineer directs otherwise, schedule the inspections no sooner than 30 days after completing the installation and completion of earthwork to within 1 foot of the finished subgrade. When final surfacing conflicts with the 30-day minimum, conduct the inspections prior to placement of the final surface. The contractor must ensure that all pipe are free and clear of any debris so that a complete inspection is possible.

Notify the Engineer immediately if distresses or locations of improper installation are discovered. When camera testing shows distresses or improper installation in the installed pipe, the Engineer may require additional sections to be tested. Provide the video and report to the Engineer when testing is complete in accordance with KM 64-114.

Pipes that exhibit distress or signs of improper installation may necessitate repair or removal as the Engineer directs. These signs include, but are not limited to: deflection, cracking, joint separation, sagging or other interior damage. If corrugated metal or thermoplastic pipes exceed the deflection and installation thresholds indicated in the table below, provide the Department with an evaluation of each location conducted by a Professional Engineer addressing the severity of the deflection, structural integrity, environmental conditions, design service life, and an evaluation of the factor of safety using Section 12, "Buried Structures and Tunnel Liners," of the AASHTO LRFD Bridge Design Specifications. Based on the evaluation, the Department may allow the pipe to remain in place at a reduced unit price as shown in the table below. Provide 5 business days for the Department to review the evaluation. When the pipe shows deflection of 10 percent or greater, remove and replace the pipe. When the camera/video or laser inspection results are called into question, the Department may require direct measurements or mandrel testing.

The Cabinet may elect to conduct Quality Assurance verifications of any pipe inspections.

SUBSECTION: 701.04.07 Testing.
REVISION: Replace and rename the subsection with the following:

701.04.07 Pipeline Video Inspection. The Department will measure the quantity in linear feet along the pipe invert of the structure inspected. When inspection above the specified 50 percent is performed due to a disagreement or suspicion of additional distresses and the Department is found in error, the Department will measure the quantity as Extra Work according to Subsection 104.03. However, if additional distresses or non-conformance is found, the Department will not measure the additional inspection for payment.

SUBSECTION: 701.05 PAYMENT.
REVISION: Add the following pay item to the list of pay items:

Code	Pay Item	Pay Unit
23131ER701	Pipeline Video Inspection	Linear Foot

Supplemental Specifications to The Standard Specifications for Road and Bridge Construction, 2008 Edition

(Effective with the April 23, 2010 Letting)

SUBSECTION: 701.05 PAYMENT
TABLE: PIPE DEFLECTION DETERMINED BY CAMERA TESTING
REVISION: Replace this table with the following table and note:

PIPE DEFLECTION	
Amount of Deflection (%)	Payment
0.0 to 5.0	100% of the Unit Bid Price
5.1 to 9.9	50% of the Unit Bid Price [(1)]
10 or greater	Remove and Replace

[(1)] *Provide Structural Analysis as indicated above. Based on the structural analysis, pipe may be allowed to remain in place at the reduced unit price.*

SUBSECTION: 701.05 PAYMENT
TABLE: PIPE DEFLECTION DETERMINED BY MANDREL TESTING
REVISION: Delete this table.

SUBSECTION: 713.02.01 Paint.
REVISION: Replace with the following:

Conform to Section 842 and Section 846.

SUBSECTION: 713.03 CONSTRUCTION.
REVISION: Replace the first sentence of the second paragraph with the following:

On interstates and parkways, and other routes approved by the State Highway Engineer, install pavement striping that is 6 inches in width.

SUBSECTION: 713.03.03 Paint Application.
REVISION: Replace the second paragraph with the following table:

Material	Paint Application Rate	Glass Beads Application Rate
4 inch waterborne paint	Min. of 16.5 gallons/mile	Min. of 6 pounds/gallon
6 inch waterborne paint	Min. of 24.8 gallons/mile	Min. of 6 pounds/gallon
6 inch durable waterborne paint	Min. of 36 gallons/mile	Min. of 6 pounds/gallon

SUBSECTION: 713.03.04 Marking Removal.
REVISION: Replace the last sentence of the paragraph with the following:

Vacuum all marking material and removal debris concurrently with the marking removal operation.

SUBSECTION: 713.05 PAYMENT.
REVISION: Insert the following codes and pay items below the Pavement Striping – Permanent Paint:

Code	Pay Item	Pay Unit
23159EN	Durable Waterborne Marking – 6 IN W	Linear Foot
23160EN	Durable Waterborne Marking – 6 IN Y	Linear Foot

SUBSECTION: 714.03 CONSTRUCTION.
REVISION: Insert the following paragraph at the end of the third paragraph:

Use Type I Tape for markings on bridge decks, JPC pavement and JPC intersections. Thermoplastic should only be used for markings on asphalt pavement.

Supplemental Specifications to The Standard Specifications for Road and Bridge Construction, 2008 Edition

(Effective with the April 23, 2010 Letting)

SUBSECTION: **REVISION:**	714.03.07 Marking Removal. Replace the third sentence of the paragraph with the following: Vacuum all marking material and removal debris concurrently with the marking removal operation.
SUBSECTION: **REVISION:**	716.01 DESCRIPTION. Insert the following after the first sentence: Energize lighting as soon as it is fully functional and ready for inspection. Ensure that lighting remains operational until the Division of Traffic Operations has provided written acceptance of the electrical work.
SUBSECTION: **REVISION:**	716.02.01 Roadway Lighting Materials. Replace the third sentence of the paragraph with the following: Submit for material approval an electronic file of descriptive literature, drawings, and any requested design data.
SECTION: **REVISION:**	717 – THERMOPLASTIC INTERSECTION MARKINGS. Replace the section name with the following: INTERSECTION MARKINGS.
SUBSECTION: **REVISION:**	717.01 DESCRIPTION: Replace the paragraph with the following: Furnish and install thermoplastic or Type I tape intersection markings (Stop Bars, Crosswalks, Turn Arrows, etc.) Thermoplastic markings may be installed by either a machine applied, screed extrusion process or by applying preformed thermoplastic intersection marking material.
SUBSECTION: **REVISION:**	717.02 MATERIALS AND EQUIPMENT. Insert the following subsection: 717.02.06 Type I Tape. Conform to Section 836.
SUBSECTION: **REVISION:**	717.03.03 Application. Insert the following part to the subsection: B) Type I Tape Intersection Markings. Apply according to the manufacturer's recommendations. Cut all tape at pavement joints when applied to concrete surfaces.
SUBSECTION: **PART:** **REVISION:**	717.03.05 Proving Period. A) Requirements. Insert the following to this section: 2) Type I Tape. During the proving period, ensure that the pavement marking material shows no signs of failure due to blistering, excessive cracking, bleeding, staining, discoloration, oil content of the pavement materials, drippings, chipping, spalling, poor adhesion to the pavement, loss of retroreflectivity, vehicular damage, and normal wear. Type I Tape is manufactured off site and warranted by the manufacturer to meet certain retroreflective requirements. As long as the material is adequately bonded to the surface and shows no signs of failure due to the other items listed in Subsection 714.03.06 A) 1), retroreflectivity readings will not be required. In the absence of readings, the Department will accept tape based on a nighttime visual observation.

Supplemental Specifications to The Standard Specifications for Road and Bridge Construction, 2008 Edition

(Effective with the April 23, 2010 Letting)

SUBSECTION: 717.03.06 Marking Removal.
REVISION: Replace the third sentence of the paragraph with the following:

Vacuum all marking material and removal debris concurrently with the marking removal operation.

SUBSECTION: 717.05 PAYMENT.
REVISION: Insert the following bid item codes:

Code	Pay Unit	Pay Item
06563	Pave Marking – R/R X Bucks 16 IN	Linear Foot
20782NS714	Pave Marking Thermo – Bike	Each
23251ES717, 23264ES717	Pave Mark TY I Tape X-Walk, Size	Linear Foot
23252ES717, 23265ES717	Pave Mark TY I Tape Stop Bar, Size	Linear Foot
23253ES717	Pave Mark TY I Tape Cross Hatch	Square Foot
23254ES717	Pave Mark TY I Tape Dotted Lane Extension	Linear Foot
23255ES717	Pave Mark TY I Tape Arrow, Type	Each
23268ES717-23270ES717		
23256ES717	Pave Mark TY I Tape- ONLY	Each
23257ES717	Pave Mark TY I Tape- SCHOOL	Each
23266ES717	Pave Mark TY 1 Tape R/R X Bucks-16 IN	Linear Foot
23267ES717	Pave Mark TY 1 Tape-Bike	Each

SUBSECTION: 805.01 GENERAL.
REVISION: Replace the second paragraph with the following:

The Department's List of Approved Materials includes the Aggregate Source List, the list of Class A and Class B Polish-Resistant Aggregate Sources, and the Concrete Restriction List.

SUBSECTION: 805.04 CONCRETE.
REVISION: Replace the "AASHTO T 160" reference in first sentence of the third paragraph with "KM 64-629"

SUBSECTION: 805.15 GRADATION ACCEPTANCE OF NON-SPECIFICATION COARSE AGGREGATE.
TABLE: AGGREGATE SIZE USE
PART: Cement Concrete Structures and Incidental Construction
REVISION: Replace "9-M for Waterproofing Overlays" with "8 or 9-M for Waterproofing Overlays"

Supplemental Specifications to The Standard Specifications for Road and Bridge Construction, 2008 Edition

(Effective with the April 23, 2010 Letting)

SUBSECTION: 805.15 GRADATION ACCEPTANCE OF NON-SPECIFICATION COARSE AGGREGATE.
REVISION: Replace the "SIZES OF COARSE AGGREGATES" table in with the following:

SIZES OF COARSE AGGREGATES

	Sieve	AMOUNTS FINER THAN EACH LABORATORY SIEVE (SQUARE OPENINGS) PERCENTAGE BY WEIGHT															
Aggregate Size	Nominal (3) Maximum Aggregate Size	4 inch	3 1/2 inch	3 inch	2 1/2 inch	2 inch	1 1/2 inch	1 inch	3/4 inch	1/2 inch	3/8 inch	No. 4	No. 8	No. 16	No. 30	No. 100	No. 200
1	3 ½ inch	100	90-100		25-60		0-15		0-5								
2	2 ½ inch			100	90-100	35-70	0-15		0-5								
23	2 inch			100		40-90		0-15		0-5							
3	2 inch				100	90-100	35-70	0-15		0-5							
357	2 inch				100	95-100		35-70		10-30		0-5					
4	1 ½ inch					100	90-100	20-55	0-15		0-5						
467	1 ½ inch					100	95-100		35-70		10-30	0-5					
5	1 inch						100	90-100	20-55	0-10	0-5						
57	1 inch						100	95-100		25-60		0-10	0-5				
610	1 inch						100	85-100		40-75		15-40					
67	3/4 inch							100	90-100		20-55	0-10	0-5				
68	3/4 inch							100	90-100		30-65	5-25	0-10	0-5			
710	3/4 inch							100	80-100		30-75	0-30					
78	1/2 inch								100	90-100	40-75	5-25	0-10	0-5			
8	3/8 inch									100	85-100	10-30	0-10	0-5			
9-M	3/8 inch									100	75-100	0-25	0-5				
10(2)	No. 4										100	85-100				10-30	
11(2)	No. 4										100	40-90	10-40			0-5	
DENSE GRADED AGGREGATE (1)	3/4 inch							100	70-100		50-80	30-65			10-40		4-13
CRUSHED STONE BASE (1)	1 ½ inch				100		90-100		60-95		30-70	15-55			5-20		0-8

(1) *Gradation performed by wet sieve KM 64-620 or AASHTO T 11/T 27.*
(2) *Sizes shown for convenience and are not to be considered as coarse aggregates.*
(3) *Nominal Maximum Size is the largest sieve on the gradation table for an aggregate size on which any material may be retained.*

Note: The Department will allow blending of same source/same type aggregate when precise procedures are used such as cold feed, belt, or equivalent and combining of sizes or types of aggregate using the weigh hopper at concrete plants or controlled feed belts at the pugmill to obtain designated sizes.

Supplemental Specifications to The Standard Specifications for Road and Bridge Construction, 2008 Edition

(Effective with the April 23, 2010 Letting)

SUBSECTION: 805.16 SAMPLING AND TESTING.
REVISION: Replace the "AASHTO T 160" method with the "KM 64-629" method for the Concrete Beam Expansion Test.

Replace the "ASTM D 3042" method with the "KM 64-625" method for Insoluble Residue.

SUBSECTION: 810.04.01 Coating Requirements.
REVISION: Replace the "Subsection 806.07" references with "Subsection 806.06"

SUBSECTION: 810.06.01 Polyvinyl Chloride (PVC) Pipe.
PART: B) Culvert and Entrance Pipe.
REVISION: Replace the title with the following:

B) Culvert Pipe, Storm Sewer, and Entrance Pipe.

SUBSECTION: 837.03 APPROVAL.
REVISION: Replace the last sentence with the following:

The Department will sample and evaluate for approval each lot of thermoplastic material delivered for use per contract prior to installation of the thermoplastic material. Do not allow the installation of thermoplastic material until it has been approved by the Division of Materials. Allow the Department a minimum of 10 working days to evaluate and approve thermoplastic material.

SUBSECTION: 837.03.01 Composition.
REVISION: COMPOSITION Table:

Replace

Lead Chromate	0.0 max.	4.0 min.

with

Heavy Metals Content	Comply with 40 CFR 261

SECTION: DIVISION 800 MATERIAL DETAILS
REVISION: Add the following section in Division 800

SECTION 846 – DURABLE WATERBORNE PAINT

846.01 DESCRIPTION. This section covers quick-drying durable waterborne pavement striping paint for permanent applications. The paint shall be ready-mixed, one-component, 100% acrylic waterborne striping paint suitable for application on such traffic-bearing surfaces as Portland cement concrete, bituminous cement concrete, asphalt, tar, and previously painted areas of these surfaces.

846.02 Approval. Select materials that conform to the composition requirements below. Provide independent analysis data and certification for each formulation stating the total concentration of each heavy metal present, the test method used for each determination, and compliance to 40 CFR 261 for leachable heavy metals content. Submit initial samples for approval before beginning striping operations. The initial sample may be sent from the manufacture of the paint. The Department will randomly sample and evaluate the paint each week that the striping operations are in progress.

The non-volatile portion of the vehicle shall be composed of a 100% acrylic polymer as determined by infrared spectral analysis. The acrylic resin used shall be a 100% cross-linking acrylic as evidenced by infrared peaks at wavelengths 1568, 1624, and 1672 cm-1 with intensities equal to those produced by an acrylic resin known to be 100% cross-linking.

Supplemental Specifications to The Standard Specifications for Road and Bridge Construction, 2008 Edition
(Effective with the April 23, 2010 Letting)

PAINT COMPOSITION		
Property and Test Method	Yellow	White
Daytime Color (CIELAB) Spectrophotometer using illuminant D65 at 45º illumination and 0º viewing with a 2º observer	L* 81.76 a* 19.79 b* 89.89 Maximum allowable variation 2.0• E*	L* 93.51 a* -1.01 b* 0.70 Maximum allowable variation 2.0• E*
Nighttime Color (CIELAB) Spectrophotometer using illuminant A at 45º illumination and 0º viewing with a 2º observer	L* 86.90 a* 24.80 b* 95.45 Maximum allowable variation 2.0• E*	L* 93.45 a* -0.79 b* 0.43 Maximum allowable variation 2.0• E*
Heavy Metals Content	Comply with 40 CFR 261	Comply with 40 CFR 261
Titanium Dioxide ASTM D 4764	NA	10% by weight of pigment min.
VOC ASTM D 2369 and D 4017	1.25 lb/gal max.	1.25 lb/gal max.
Contrast Ratio (at 15 mils wft)	0.97	0.99

846.02.01 Manufacturers Certification. Provide a certification of analysis for each lot of traffic paint produced stating conformance to the requirements of this section. Report the formulation identification, traffic paint trade name, color, date of manufacturer, total quantity of lot produced, actual quantity of traffic paint represented, sampling method utilized to obtain the samples, and data for each sample tested to represent each lot produced.

846.03 ACCEPTANCE PROCEDURES FOR NON-SPECIFICATION DURABLE WATERBORNE PAVEMENT STRIPING PAINT. When non-specification paint is inadvertently incorporated into the work the Department will accept the material with a reduction in pay. The percentage deduction is cumulative based on its compositional properties, but will not exceed 60 percent. The Department will calculate the payment reduction on the unit bid price for the routes where the non-specification paint was used.

DURABLE WATERBORNE PAVEMENT STRIPING PAINT REDUCTION SCHEDULE						
Non-conforming Property	Resin	Color	Contrast	TiO_2	VOC	Heavy Metals Content
Reduction Rate	60%	10%	10%	10%	60%	60%

1I

SPECIAL NOTE FOR PORTABLE CHANGEABLE MESSAGE SIGNS

This Special Note will apply when indicated on the plans or in the proposal.

1.0 DESCRIPTION. Furnish, install, operate, and maintain variable message signs at the locations shown on the plans or designated by the Engineer. Remove and retain possession of variable message signs when they are no longer needed on the project.

2.0 MATERIALS.

2.1 General. Use LED or flip disk/LED Variable Message Signs Class I, II, or III, as appropriate, from the Department's List of Approved Materials.

Unclassified signs may be submitted for approval by the Engineer. The Engineer may require a daytime and nighttime demonstration. The Engineer will make a final decision within 30 days after all required information is received.

2.2 Sign and Controls. All signs must:

1) Provide 3-line messages with each line being 8 characters long and at least 18 inches tall. Each character comprises 35 pixels.
2) Provide at least 40 preprogrammed messages available for use at any time. Provide for quick and easy change of the displayed message; editing of the message; and additions of new messages.
3) Provide a controller consisting of:
   a) Keyboard or keypad.
   b) Readout that mimics the actual sign display. (When LCD or LCD type readout is used, include backlighting and heating or otherwise arrange for viewing in cold temperatures.)
   c) Non-volatile memory or suitable memory with battery backup for storing pre-programmed messages.
   d) Logic circuitry to control the sequence of messages and flash rate.
4) Provide a serial interface that is capable of supporting complete remote control ability through land line and cellular telephone operation. Include communication software capable of immediately updating the message, providing complete sign status, and allowing message library queries and updates.
5) Allow a single person easily to raise the sign to a satisfactory height above the pavement during use, and lower the sign during travel.
6) Allow direct wiring for operation of the sign or arrow board from an external power source when desired.
7) Be Highway Orange on all exterior surfaces of the trailer, supports, and controller cabinet.
8) Provide operation in ambient temperatures from -30 to + 120 degrees Fahrenheit during snow, rain and other inclement weather.
9) Provide the driver board as part of a module. All modules are interchangeable, and have plug and socket arrangements for disconnection and reconnection. Printed circuit boards associated with driver boards have a conformable coating to protect against moisture.
10) Provide a sign case sealed against rain, snow, dust, insects, etc. The lens is UV stabilized clear plastic (polycarbonate, acrylic, or other approved material) angled to prevent glare.

1I

11) Provide a flat black UV protected coating on the sign hardware, character PCB, and appropriate lens areas.
12) Provide a photocell control to provide automatic dimming.
13) Allow an on-off flashing sequence at an adjustable rate.
14) Provide a sight to aim the message.
15) Provide a LED display color of approximately 590 nm amber.
16) Provide a controller that is password protected.
17) Provide a security device that prevents unauthorized individuals from accessing the controller.
18) Provide the following 3-line messages preprogrammed and available for use when the sign unit begins operation:

/KEEP/RIGHT/⇒⇒⇒/
/KEEP/LEFT/⇐⇐⇐/
/LOOSE/GRAVEL/AHEAD/
/RD WORK/NEXT/**MILES/
/TWO WAY/TRAFFIC/AHEAD/
/PAINT/CREW/AHEAD/
/REDUCE/SPEED/**MPH/
/BRIDGE/WORK/***0 FT/
/MAX/SPEED/**MPH/
/SURVEY/PARTY/AHEAD/
/MIN/SPEED/**MPH/
/ICY/BRIDGE/AHEAD/ /ONE LANE/BRIDGE/AHEAD/
/ROUGH/ROAD/AHEAD/
/MERGING/TRAFFIC/AHEAD/
/NEXT/***/MILES/
/HEAVY/TRAFFIC/AHEAD/
/SPEED/LIMIT/**MPH/
/BUMP/AHEAD/
/TWO/WAY/TRAFFIC/

*Insert numerals as directed by the Engineer.
Add other messages during the project when required by the Engineer.

2.3 Requirements for Flip-Disc Type Signs. Flip-disc type signs will have the following additional requirements:

1) Disc faces are fluorescent yellow on one side, and flat black on the reverse.
2) Discs are at least 3.5 square inches with a minimum character size of 5 discs horizontally by 7 discs vertically.
3) Discs are designed to operate without lubrication for at least 200 million operations.
4) Line change speed of 600 milliseconds or less.
5) When power is lost, the sign automatically becomes blank or displays a preprogrammed default message.

2.4 Power.

1) Design solar panels to yield 10 percent or greater additional charge than sign consumption. Provide energy backup for 21 days without sunlight and an on-board system charger with the ability to recharge completely discharged batteries in 24 hours.
2) Diesel Power Source. Ensure the following is provided for:

   a) At least 24 spare bulbs available on the project for quick replacement of burned out bulbs.
   b) Black light at both top and bottom of each line to illuminate discs for visibility at night or under adverse weather conditions, for flip disk signs.

1I

c) Diesel generator and electric start assembly, including batteries and a fuel capacity adequate to provide at least 72 hours continuous operation without refueling.
d) Fuel gage.
e) Provide all other specific features, such as bulb size, protection from sun glare, and shock protection for electronics and bulbs, to the satisfaction of the Engineer.

3.0 CONSTRUCTION. Furnish and operate the variable message signs as designated on the plans or by the Engineer. Ensure the bottom of the message panel is a minimum of 7 feet above the roadway in urban areas and 5 feet above in rural areas when operating. Use Class I, II, or III signs on roads with a speed limit less than 55 mph. Use Class I or II signs on roads with speed limits 55 mph or greater. Unless the Contract specifies flip-disk signs, use Class I signs on interstates and parkways.

Maintain the sign in proper working order, including repair of any damage done by others, until completion of the project. When the sign becomes inoperative, immediately repair or replace the sign. Repetitive problems with the same unit will be cause for rejection and replacement.

Use only project related messages and messages directed by the Engineer, unnecessary messages lessen the impact of the sign. Ensure the message is displayed in either one or 2 phases with each phase having no more than 3 lines of text. When no message is needed, but it is necessary to know if the sign is operable, flash only a pixel or disk.

When the sign is not needed, move it outside the clear zone or where the Engineer directs. Variable Message Signs are the property of the Contractor and shall be removed from the project when no longer needed. The Department will not assume ownership of these signs.

4.0 MEASUREMENT. The final quantity of Variable Message Sign will be the actual number of individual signs acceptably furnished and operated during the project. The Department will not measure signs replaced due to damage or rejection.

5.0 PAYMENT. The Department will pay for the Variable Message Signs at the unit price each. The Department will not pay for signs replaced due to damage or rejection. Payment is full compensation for furnishing all materials, labor, equipment, and service necessary to, operate, move, repair, and maintain or replace the variable message signs. The Department will make payment for the completed and accepted quantities under the following:

Code	Pay Item	Pay Unit
02671	Portable Changeable Message Sign	Each

January 5, 2010

STANDARD DRAWINGS THAT APPLY

CURVE WIDENING AND SUPERELEVATION TRANSITIONS RGS-001-06
SUPERELEVATION FOR MULTILANE PAVEMENTS RGS-002-05
MISCELLANEOUS STANDARDS PART 1 ..... RGX-001-05
APPROACHES, ENTRANCES, AND MAIL BOX TURNOUT RPM-110-05
LANE CLOSURE TWO-LANE HIGHWAY CASE I TTC-100-01
LANE CLOSURE TWO-LANE HIGHWAY CASE II TTC-105-01
LANE CLOSURE MULTI-LANE HIGHWAY CASE I TTC-115-01
SHOULDER CLOSURE TTC-135-01
POST SPLICING DETAIL TTD-110-01
PAVEMENT CONDITION WARNING SIGNS TTD-125
MOBILE OPERATION FOR PAINT STRIPING CASE I TTS-100-01
MOBILE OPERATION FOR PAINT STRIPING CASE II TTS-105-01
MOBILE OPERATION FOR PAINT STRIPING CASE III TTS-110-01
MOBILE OPERATION FOR PAINT STRIPING CASE IV TTS-115-01

PART III

EMPLOYMENT, WAGE AND RECORD REQUIREMENTS

TRANSPORTATION CABINET
DEPARTMENT OF HIGHWAYS

LABOR AND WAGE REQUIREMENTS
APPLICABLE TO OTHER THAN FEDERAL-AID SYSTEM PROJECTS

I. Application
II. Nondiscrimination of Employees (KRS 344)
III. Payment of Predetermined Minimum Wages
IV. Statements and Payrolls

I. APPLICATION

1. These contract provisions shall apply to all work performed on the contract by the contractor with his own organization and with the assistance of workmen under his immediate superintendence and to all work performed on the contract by piecework, station work or by subcontract. The contractor's organization shall be construed to include only workmen employed and paid directly by the contractor and equipment owned or rented by him, with or without operators.

2. The contractor shall insert in each of his subcontracts all of the stipulations contained in these Required Provisions and such other stipulations as may be required.

3. A breach of any of the stipulations contained in these Required Provisions may be grounds for termination of the contract.

II. NONDISCRIMINATION OF EMPLOYEES

AN ACT OF THE KENTUCKY
GENERAL ASSEMBLY TO PREVENT
DISCRIMINATION IN EMPLOYMENT
KRS CHAPTER 344
EFFECTIVE JUNE 16, 1972

The contract on this project, in accordance with KRS Chapter 344, provides that during the performance of this contract, the contractor agrees as follows:

1. The contractor shall not fail or refuse to hire, or shall not discharge any individual, or otherwise discriminate against an individual with respect to his compensation, terms, conditions, or privileges of employment, because of such individual's race, color, religion, national origin, sex, disability or age (between forty and seventy); or limit, segregate, or classify his employees in any way which would deprive or tend to deprive an individual of employment opportunities or otherwise adversely affect his status as an employee, because of such individual's race, color, religion, national origin, sex, disability or age (between forty and seventy). The contractor agrees to post in conspicuous places, available to employees and applicants for employment, notices to be provided setting forth the provisions of this nondiscrimination clause.

2. The contractor shall not print or publish or cause to be printed or published a notice or advertisement relating to employment by such an employer or membership in or any classification or referral for employment by the employment agency, indicating any preference, limitation, specification, or discrimination, based on race, color, religion, national origin, sex, disability or age (between forty and seventy), except that such notice or advertisement may indicate a preference, limitation, or specification based on religion, or national origin when religion, or national origin is a bona fide occupational qualification for employment.

3. If the contractor is in control of apprenticeship or other training or retraining, including on-the-job training programs, he shall not discriminate against an individual because of his race, color, religion, national origin, sex, disability or age (between forty and seventy), in admission to, or employment in any program established to provide apprenticeship or other training.

4. The contractor will send to each labor union or representative of workers with which he has a collective bargaining agreement or other contract or understanding, a notice to be provided advising the said labor union or workers' representative of the contractor's commitments under this section, and shall post copies of the notice in conspicuous places available to employees and applicants for employment. The contractor will take such action with respect to any subcontract or purchase order as the administrating agency may direct as a means of enforcing such provisions, including sanctions for non-compliance.

III. PAYMENT OF PREDETERMINED MINIMUM WAGES

1. These special provisions are supplemented elsewhere in the contract by special provisions which set forth certain predetermined minimum wage rates. The contractor shall pay not less than those rates.

2. The minimum wage determination schedule shall be posted by the contractor, in a manner prescribed by the Department of Highways, at the site of the work in prominent places where it can be easily seen by the workers.

IV. STATEMENTS AND PAYROLLS

1. All contractors and subcontractors affected by the terms of KRS 337.505 to 337.550 shall keep full and accurate payroll records covering all disbursements of wages to their employees to whom they are required to pay not less than the prevailing rate of wages. Payrolls and basic records relating thereto will be maintained during the course of the work and preserved for a period of one (1) year from the date of completion of this contract.

2. The payroll records shall contain the name, address and social security number of each employee, his correct classification, rate of pay, daily and weekly number of hours worked, itemized deductions made and actual wages paid.

3. The contractor shall make his daily records available at the project site for inspection by the State Department of Highways contracting office or his authorized representative.

Periodic investigations shall be conducted as required to assure compliance with the labor provisions of the contract. Interrogation of employees and officials of the contractor shall be permitted during working hours.

Aggrieved workers, Highway Managers, Assistant District Engineers, Resident Engineers and Project Engineers shall report all complaints and violations to the Division of Contract Procurement.

The contractor shall be notified in writing of apparent violations. The contractor may correct the reported violations and notify the Department of Highways of the action taken or may request an informal hearing. The request for hearing shall be in writing within ten (10) days after receipt of the notice of the reported violation. The contractor may submit

records and information which will aid in determining the true facts relating to the reported violations.

Any person or organization aggrieved by the action taken or the findings established as a result of an informal hearing by the Division of Contract Procurement may request a formal hearing.

4. The wages of labor shall be paid in legal tender of the United States, except that this condition will be considered satisfied if payment is made by a negotiable check, on a solvent bank, which may be cashed readily by the employee in the local community for the full amount, without discount or collection charges of any kind. Where checks are used for payments, the contractor shall make all necessary arrangements for them to be cashed and shall give information regarding such arrangements.

5. No fee of any kind shall be asked or accepted by the contractor or any of his agents from any person as a condition of employment on the project.

6. No laborers shall be charged for any tools used in performing their respective duties except for reasonably avoidable loss or damage thereto.

7. Every employee on the work covered by this contract shall be permitted to lodge, board, and trade where and with whom he elects and neither the contractor nor his agents, nor his employees shall directly or indirectly require as a condition of employment that an employee shall lodge, board or trade at a particular place or with a particular person.

8. Every employee on the project covered by this contract shall be an employee of either the prime contractor or an approved subcontractor.

9. No charge shall be made for any transportation furnished by the contractor or his agents to any person employed on the work.

10. No individual shall be employed as a laborer or mechanic on this contract except on a wage basis, but this shall not be construed to prohibit the rental of teams, trucks or other equipment from individuals.

No Covered employee may be employed on the work except in accordance with the classification set forth in the schedule mentioned above; provided, however, that in the event additional classifications are required, application shall be made by the contractor to the Department of Highways and (1) the Department shall request appropriate classifications and rates from the proper agency, or (2) if there is urgent need for additional classification to avoid undue delay in the work, the contractor may employ such workmen at rates deemed comparable to rates established for similar classifications provided he has made written application through the Department of Highways, addressed to the proper agency, for the supplemental rates. The contractor shall retroactively adjust, upon receipt of the supplemental rates schedule, the wages of any employee paid less than the established rate and may adjust the wages of any employee overpaid.

11. No contractor or subcontractor contracting for any part of the contract work which may require or involve the employment of laborers or mechanics shall require or permit any laborer or mechanic in any work-week in which he is employed on such work, to work in excess of eight hours in any calendar day or in excess of forty hours in such work-week unless such laborer or mechanic receives compensation at a rate not less than one and one half times his basic rate of pay for all hours worked in excess of eight hours in any calendar day or in excess of forty hours in such work-week. A laborer, workman or mechanic and an employer may enter into a written agreement or a collective bargaining agreement to work more than eight (8) hours a calendar day but not more than ten (10) hours a calendar day for the straight time hourly rate. This agreement shall be in writing and shall be executed prior to the employee working in excess of eight (8) hours, but not more than ten (10) hours, in any one (1) calendar day.

12. Payments to the contractor may be suspended or withheld due to failure of the contractor to pay any laborer or mechanic employed or working on the site of the work, all or part of the wages required under the terms of the contract. The Department may suspend or withhold payments only after the contractor has been given written notice of the alleged violation and the contractor has failed to comply with the wage determination of the Department of Highways.

13. Contractors and subcontractors shall comply with the sections of Kentucky Revised Statutes, Chapter 337 relating to contracts for Public Works.

Revised 2-16-95

EXECUTIVE BRANCH CODE OF ETHICS

In the 1992 regular legislative session, the General Assembly passed and Governor Brereton Jones signed Senate Bill 63 (codified as KRS 11A), the Executive Branch Code of Ethics, which states, in part:

> KRS 11A.040 (6) provides:
>
> No present or former public servant shall, within six (6) months of following termination of his office or employment, accept employment, compensation or other economic benefit from any person or business that contracts or does business with the state in matters in which he was directly involved during his tenure. This provision shall not prohibit an individual from returning to the same business, firm, occupation, or profession in which he was involved prior to taking office or beginning his term of employment, provided that, for a period of six (6) months, he personally refrains from working on any matter in which he was directly involved in state government. This subsection shall not prohibit the performance of ministerial functions, including, but not limited to, filing tax returns, filing applications for permits or licenses, or filing incorporation papers.
>
> KRS 11A.040 (8) states:
>
> A former public servant shall not represent a person in a matter before a state agency in which the former public servant was directly involved, for a period of one (1) year after the latter of:
>
> a) The date of leaving office or termination of employment; or
> b) The date the term of office expires to which the public servant was elected.

This law is intended to promote public confidence in the integrity of state government and to declare as public policy the idea that state employees should view their work as a public trust and not as a way to obtain private benefits.

If you have worked for the executive branch of state government within the past six months, you may be subject to the law's prohibitions. The law's applicability may be different if you hold elected office or are contemplating representation of another before a state agency.

Also, if you are affiliated with a firm which does business with the state and which employs former state executive-branch employees, you should be aware that the law may apply to them.

In case of doubt, the law permits you to request an advisory opinion from the Executive Branch Ethics Commission, Room 136, Capitol Building, 700 Capitol Avenue, Frankfort, Kentucky 40601; telephone (502) 564-7954.

Kentucky Equal Employment Opportunity Act of 1978

The requirements of the Kentucky Equal Employment Opportunity Act of 1978 (KRS 45.560-45.640) shall not apply to this Contract.

TRANSPORTATION CABINET
DIVISION OF CONSTRUCTION PROCUREMENT
COMPLIANCE SECTION
PROJECT WAGE RATES

WORKERS……..MINIMUM HOURLY RATE…..$7.25

Note: Parts III and IV of **"Labor and Wage Requirements Applicable to Other Than Federal-Aid System Projects"** do not apply to this project.

PART IV

INSURANCE

INSURANCE

The Contractor shall carry the following insurance in addition to the insurance required by law:

1. Contractor's Public Liability Insurance not less than $100,000.00 for damages arising out of bodily injuries to or death to one person. Not less than $300,000.00 for damages arising out of bodily injuries to or death to two or more persons.

2. Contractor's Property Damages Liability Insurance. Not less than $100,000.00 for all damages arising out of injury or destruction of property in any one accident. Not less than $300,000.00 for all damages during the policy period.

3. Contractor's Protective Public Liability and Property Damage Insurance. The contractor shall furnish evidence with respect to operations performed for him by subcontractors that he carries in his own behalf for the above stipulated amounts.

4. The insurance required above must be evidenced by a Certificate of Insurance and this Certificate of Insurance must contain one of the following statements:

   a. "policy contains no deductible clauses."

   b. "policy contains _____ (amount) deductible property damage clause but company will pay claim and collect the deductible from the insured."

5. WORKMEN'S COMPENSATION INSURANCE. The contractor shall furnish evidence of coverage of all his employees or give evidence of self-insurance by submitting a copy of a certificate issued by the Workmen's Compensation Board.

PART V

BID ITEMS

CONTRACT ID: 102169
COUNTY: CHRISTIAN
PROPOSAL: FD05 024 0695 010-012

PAGE: 1
LETTING: 05/28/10
CALL NO: 331

LINE NO	ITEM	DESCRIPTION	APPROXIMATE UNIT QUANTITY	UNIT PRICE	AMOUNT
	SECTION 0001	ROADWAY			
0010	00077	AGGREGATE FOR MAILBOX TURNOUTS DGA OR CRUSHED LIMESTONE SIZE NO.610	100.000 TON		
0020	00190	LEVELING & WEDGING PG64-22	325.000 TON		
0030	00301	CL2 ASPH SURF 0.38D PG64-22	1,515.000 TON		
0040	02562	SIGNS	400.000 SQFT		
0050	02650	MAINTAIN & CONTROL TRAFFIC	(1.00) LS		
0060	02671	PORTABLE CHANGEABLE MESSAGE SIGN	2.000 EACH		
0070	02676	MOBILIZATION FOR MILL & TEXT	(1.00) LS		
0080	02677	ASPHALT PAVE MILLING & TEXTURING	200.000 TON		
0090	02775	ARROW PANEL	1.000 EACH		
0100	04830	LOOP WIRE	1,300.000 LF		
0110	04895	LOOP SAW SLOT AND FILL	300.000 LF		
0120	06510	PAVE STRIPING-TEMP PAINT-4 IN	8,200.000 LF		
0130	06514	PAVE STRIPING-PERM PAINT-4 IN	16,400.000 LF		
0140	06568	PAVE MARKING-THERMO STOP BAR-24IN	90.000 LF		
0150	06569	PAVE MARKING-THERMO CROSS-HATCH 12 INCH WHITE	400.000 SQFT		
0160	06574	PAVE MARKING-THERMO CURV ARROW	10.000 EACH		
0170	06600	REMOVE PAVEMENT MARKER TYPE V	10.000 EACH		
0180	10020NS	FUEL ADJUSTMENT	2,500.000 DOLL	1.00	2,500.00
0190	10030NS	ASPHALT ADJUSTMENT	4,430.000 DOLL	1.00	4,430.00
0200	20100ES842	PAVE MARK TEMP PAINT LINE ARROW	18.000 EACH		

KENTUCKY TRANSPORTATION CABINET
DEPARTMENT OF HIGHWAYS
FRANKFORT, KY 40622

CONTRACT ID: 102169 PAGE: 2
COUNTY: CHRISTIAN LETTING: 05/28/10
PROPOSAL: FD05 024 0695 010-012 CALL NO: 331

LINE NO	ITEM	DESCRIPTION	APPROXIMATE UNIT QUANTITY	UNIT PRICE	AMOUNT
0210	23010EN	PAVE MARK TEMP PAINT STOP BAR-24 IN	180.000 LF		
	SECTION 0002	DEMOBILIZATION			
0220	02569	DEMOBILIZATION (AT LEAST 1.5%)	LUMP		
		TOTAL BID			