CALL NO. 319

CONTRACT ID. 141034

SCOTT COUNTY

FED/STATE PROJECT NUMBER FD04 SPP 105 0075 121-126

DESCRIPTION I-75

WORK TYPE ASPHALT RESURFACING

PRIMARY COMPLETION DATE 10/15/2014

LETTING DATE: June 27,2014

Sealed Bids will be received electronically through the Bid Express bidding service until 10:00 AM EASTERN DAYLIGHT TIME June 27,2014. Bids will be publicly announced at 10:00 AM EASTERN DAYLIGHT TIME.

NO PLANS ASSOCIATED WITH THIS PROJECT.

REQUIRED BID PROPOSAL GUARANTY: Not less than 5% of the total bid.

TABLE OF CONTENTS

PART I SCOPE OF WORK

- PROJECT(S), COMPLETION DATE(S), & LIQUIDATED DAMAGES
- CONTRACT NOTES
- STATE CONTRACT NOTES
- EXPEDITE WORK ORDER
- ASPHALT MIXTURE
- INCIDENTAL SURFACING
- FUEL AND ASPHALT PAY ADJUSTMENT
- SPECIAL NOTE(S) APPLICABLE TO PROJECT
- RIGHT OF WAY NOTES
- UTILITY CLEARANCE

PART II SPECIFICATIONS AND STANDARD DRAWINGS

- SPECIFICATIONS REFERENCE
- SUPPLEMENTAL SPECIFICATION

PART III EMPLOYMENT, WAGE AND RECORD REQUIREMENTS

- LABOR AND WAGE REQUIREMENTS
- EXECUTIVE BRANCH CODE OF ETHICS
- KENTUCKY EQUAL EMPLOYMENT OPPORTUNITY ACT OF 1978 LOCALITY 1,2,3,4 / STATE (OVER 250,000)
- PROJECT WAGE RATES LOCALITY 3 / FEDERAL & STATE

PART IV INSURANCE

PART V BID ITEMS

PART I

SCOPE OF WORK

ADMINISTRATIVE DISTRICT - 07

CONTRACT ID - 141034

FD04 SPP 105 0075 121-126

COUNTY - SCOTT

PCN - DE10500751434
FD04 SPP 105 0075 121-126

I-75 MILL AND THIN OVERLAY ON I-75 FROM MP 121.117 TO MP 125.528.ASPHALT RESURFACING SYP NO. 07-02040.00.

GEOGRAPHIC COORDINATES LATITUDE 38:18:00.00 LONGITUDE 84:35:00.00

COMPLETION DATE(S):

COMPLETED BY 10/15/2014 APPLIES TO ENTIRE CONTRACT

CONTRACT NOTES

PROPOSAL ADDENDA

All addenda to this proposal must be applied when calculating bid and certified in the bid packet submitted to the Kentucky Department of Highways. Failure to use the correct and most recent addenda may result in the bid being rejected.

BID SUBMITTAL

Bidder must use the Department's Expedite Bidding Program available on the Internet web site of the Department of Highways, Division of Construction Procurement. (www.transportation.ky.gov/construction-procurement)

The Bidder must download the bid file located on the Bid Express website (www.bidx.com) to prepare a bid packet for submission to the Department. The bidder must submit electronically using Bid Express.

JOINT VENTURE BIDDING

Joint venture bidding is permissible. All companies in the joint venture must be prequalified in one of the work types in the Qualifications for Bidders for the project. The bidders must get a vendor ID for the joint venture from the Division of Construction Procurement and register the joint venture as a bidder on the project. Also, the joint venture must obtain a digital ID from Bid Express to submit a bid. A joint bid bond of 5% may be submitted for both companies or each company may submit a separate bond of 5%.

UNDERGROUND FACILITY DAMAGE PROTECTION

The contractor is advised that the Underground Facility Damage Protection Act of 1994, became law January 1, 1995. It is the contractor's responsibility to determine the impact of the act regarding this project, and take all steps necessary to be in compliance with the provision of the act.

SPECIAL NOTE FOR PIPE INSPECTION

Contrary to Section 701.03.08 of the 2012 Standard Specifications for Road and Bridge Construction and Kentucky Method 64-114, certification by the Kentucky Transportation Center for prequalified Contractors to perform laser/video inspection is not required on this contract. It will continue to be a requirement for the Contractor performing any laser/video pipe inspection to be prequalified for this specialized item with the Kentucky Transportation Cabinet-Division of Construction Procurement.

SPECIAL NOTE FOR COMPOSITE OFFSET BLOCKS

Contrary to the Standard Drawings (2012 edition) the Cabinet will allow 6" composite offset blocks in lieu of wooden offset blocks, except as specified on proprietary end treatments and crash cushions. The composite blocks shall be selected from the Cabinet's List of Approved Materials.

REGISTRATION WITH THE SECRETARY OF STATE BY A FOREIGN ENTITY

Pursuant to KRS 176.085(1)(b), an agency, department, office, or political subdivision of the Commonwealth of Kentucky shall not award a state contract to a person that is a foreign entity required by KRS 14A.9-010 to obtain a certificate of authority to transact business in the Commonwealth ("certificate") from the Secretary of State under KRS 14A.9-030 unless the person produces the certificate within fourteen (14) days of the bid or proposal opening. If the foreign entity is not required to obtain a certificate as provided in KRS 14A.9-010, the foreign entity should identify the applicable exception. Foreign entity is defined within KRS 14A.1-070.

For all foreign entities required to obtain a certificate of authority to transact business in the Commonwealth, if a copy of the certificate is not received by the contracting agency within the time frame identified above, the foreign entity's solicitation response shall be deemed non-responsive or the awarded contract shall be cancelled.

Businesses can register with the Secretary of State at https://secure.kentucky.gov/sos/ftbr/welcome.aspx .

SPECIAL NOTE FOR PROJECT QUESTIONS DURING ADVERTISEMENT

Questions about projects during the advertisement should be submitted in writing to the Division of Construction Procurement. This may be done by fax (502) 564-7299 or email to kytc.projectquestions@ky.gov. The Department will attempt to answer all submitted questions. The Department reserves the right not to answer if the question is not pertinent or does not aid in clarifying the project intent.

The deadline for posting answers will be 3:00 pm Eastern Daylight Time, the day preceding the Letting. Questions may be submitted until this deadline with the understanding that the later a question is submitted, the less likely an answer will be able to be provided.

The questions and answers will be posted for each Letting under the heading "Questions & Answers" on the Construction Procurement website (www.transportation.ky.gov/contract). The answers provided shall be considered part of

this Special Note and, in case of a discrepancy, will govern over all other bidding documents.

HARDWOOD REMOVAL RESTRICTIONS

The US Department of Agriculture has imposed a quarantine in Kentucky and several surrounding states, to prevent the spread of an invasive insect, the emerald ash borer. Hardwood cut in conjunction with the project may not be removed from the state. Chipping or burning on site is the preferred method of disposal.

INSTRUCTIONS FOR EXCESS MATERIAL SITES AND BORROW SITES

Identification of excess material sites and borrow sites shall be the responsibility of the Contractor. The Contractor shall be responsible for compliance with all applicable state and federal laws and may wish to consult with the US Fish and Wildlife Service to seek protection under Section 10 of the Endangered Species Act for these activities.

ACCESS TO RECORDS

The contractor, as defined in KRS 45A.030 (9) agrees that the contracting agency, the Finance and Administration Cabinet, the Auditor of Public Accounts, and the Legislative Research Commission, or their duly authorized representatives, shall have access to any books, documents, papers, records, or other evidence, which are directly pertinent to this contract for the purpose of financial audit or program review. Records and other prequalification information confidentially disclosed as part of the bid process shall not be deemed as directly pertinent to the contract and shall be exempt from disclosure as provided in KRS 61.878(1)(c). The contractor also recognizes that any books, documents, papers, records, or other evidence, received during a financial audit or program review shall be subject to the Kentucky Open Records Act, KRS 61.870 to 61.884.

In the event of a dispute between the contractor and the contracting agency, Attorney General, or the Auditor of Public Accounts over documents that are eligible for production and review, the Finance and Administration Cabinet shall review the dispute and issue a determination, in accordance with Secretary's Order 11-004. (See attachment)

10/29/12

Commonwealth of Kentucky
Finance and Administration Cabinet
OFFICE OF THE SECRETARY
Room 383, Capitol Annex
702 Capital Avenue
Frankfort, KY 40601-3462
(502) 564-4240
Fax (502) 564-6785

Steven L. Beshear
Governor

Lori H. Flanery
Secretary

SECRETARY'S ORDER 11-004

FINANCE AND ADMINISTRATION CABINET

Vendor Document Disclosure

WHEREAS, in order to promote accountability and transparency in governmental operations, the Finance and Administration Cabinet believes that a mechanism should be created which would provide for review and assistance to an Executive Branch agency if said agency cannot obtain access to documents that it deems necessary to conduct a review of the records of a private vendor that holds a contract to provide goods and/or services to the Commonwealth; and

WHEREAS, in order to promote accountability and transparency in governmental operations, the Finance and Administration Cabinet believes that a mechanism should be created which would provide for review and assistance to an Executive Branch agency if said agency cannot obtain access to documents that it deems necessary during the course of an audit, investigation or any other inquiry by an Executive Branch agency that involves the review of documents; and

WHEREAS, KRS 42.014 and KRS 12.270 authorizes the Secretary of the Finance and Administration Cabinet to establish the internal organization and assignment of functions which are not established by statute relating to the Finance and Administration Cabinet; further, KRS Chapter 45A.050 and 45A.230 authorizes the Secretary of the Finance and Administration Cabinet to procure, manage and control all supplies and services that are procured by the Commonwealth and to intervene in controversies among vendors and state agencies; and

NOW, THEREFORE, pursuant to the authority vested in me by KRS 42.014, KRS 12.270, KRS 45A.050, and 45A.230, I, Lori H. Flanery, Secretary of the Finance and Administration Cabinet, do hereby order and direct the following:

I. Upon the request of an Executive Branch agency, the Finance and Administration Cabinet ("FAC") shall formally review any dispute arising where the agency has requested documents from a private vendor that holds a state contract and the vendor has refused access to said documents under a claim that said documents are not directly pertinent or relevant to the agency's inquiry upon which the document request was predicated.

II. Upon the request of an Executive Branch agency, the FAC shall formally review any situation where the agency has requested documents that the agency deems necessary to

conduct audits, investigations or any other formal inquiry where a dispute has arisen as to what documents are necessary to conclude the inquiry.

III. Upon receipt of a request by a state agency pursuant to Sections I & II, the FAC shall consider the request from the Executive Branch agency and the position of the vendor or party opposing the disclosure of the documents, applying any and all relevant law to the facts and circumstances of the matter in controversy. After FAC's review is complete, FAC shall issue a Determination which sets out FAC's position as to what documents and/or records, if any, should be disclosed to the requesting agency. The Determination shall be issued within 30 days of receipt of the request from the agency. This time period may be extended for good cause.

IV. If the Determination concludes that documents are being wrongfully withheld by the private vendor or other party opposing the disclosure from the state agency, the private vendor shall immediately comply with the FAC's Determination. Should the private vendor or other party refuse to comply with FAC's Determination, then the FAC, in concert with the requesting agency, shall effectuate any and all options that it possesses to obtain the documents in question, including, but not limited to, jointly initiating an action in the appropriate court for relief.

V. Any provisions of any prior Order that conflicts with the provisions of this Order shall be deemed null and void.

SPECIAL NOTE FOR RECIPROCAL PREFERENCE

Reciprocal preference to be given by public agencies to resident bidders

By reference, KRS 45A.490 to 45A.494 are incorporated herein and in compliance regarding the bidders residency. Bidders who want to claim resident bidder status should complete the Affidavit for Claiming Resident Bidder Status along with their bid in the Expedite Bidding Program. Submittal of the Affidavit should be done along with the bid in Bid Express.

EXPEDITE PROJECT WORK ORDER

The Contractor may request that the Department expedite the work order for this project to allow for maximization of time to complete the work. In order for the Department to accomplish this task, the Contractor may be required to "hand carry" all required project documentation to facilitate the process. Immediately UPON NOTIFICATION OF AWARD OF THE CONTRACT, deliver required project documentation to:

Division of Construction Procurement
200 Mero St.
Frankfort, KY 40602

ASPHALT MIXTURE

Unless otherwise noted, the Department estimates the rate of application for all asphalt mixtures to be 110 lbs/sy per inch of depth.

INCIDENTAL SURFACING

The Department has included in the quantities of asphalt mixtures established in the proposal estimated quantities required for resurfacing or surfacing mailbox turnouts, farm field entrances, residential and commercial entrances, curve widening, ramp gores and tapers, and road and street approaches, as applicable. Pave these areas to the limits as shown on Standard Drawing RPM-110-06 or as directed by the Engineer. In the event signal detectors are present in the intersecting streets or roads, pave the crossroads to the right of way limit or back of the signal detector, whichever is the farthest back of the mainline. Surface or resurface these areas as directed by the Engineer. The Department will not measure placing and compacting for separate payment but shall be incidental to the Contract unit price for the asphalt mixtures.

FUEL AND ASPHALT PAY ADJUSTMENT

The Department has included the Contract items Asphalt Adjustment and Fuel Adjustment for possible future payments at an established Contract unit price of $1.00. The Department will calculate actual adjustment quantities after work is completed. If existing Contract amount is insufficient to pay all items on the contract with the adjustments, the Department will establish additional monies with a change order.

Scott County
I75: MP 121.117 to 125.528
Item No. 7-2040

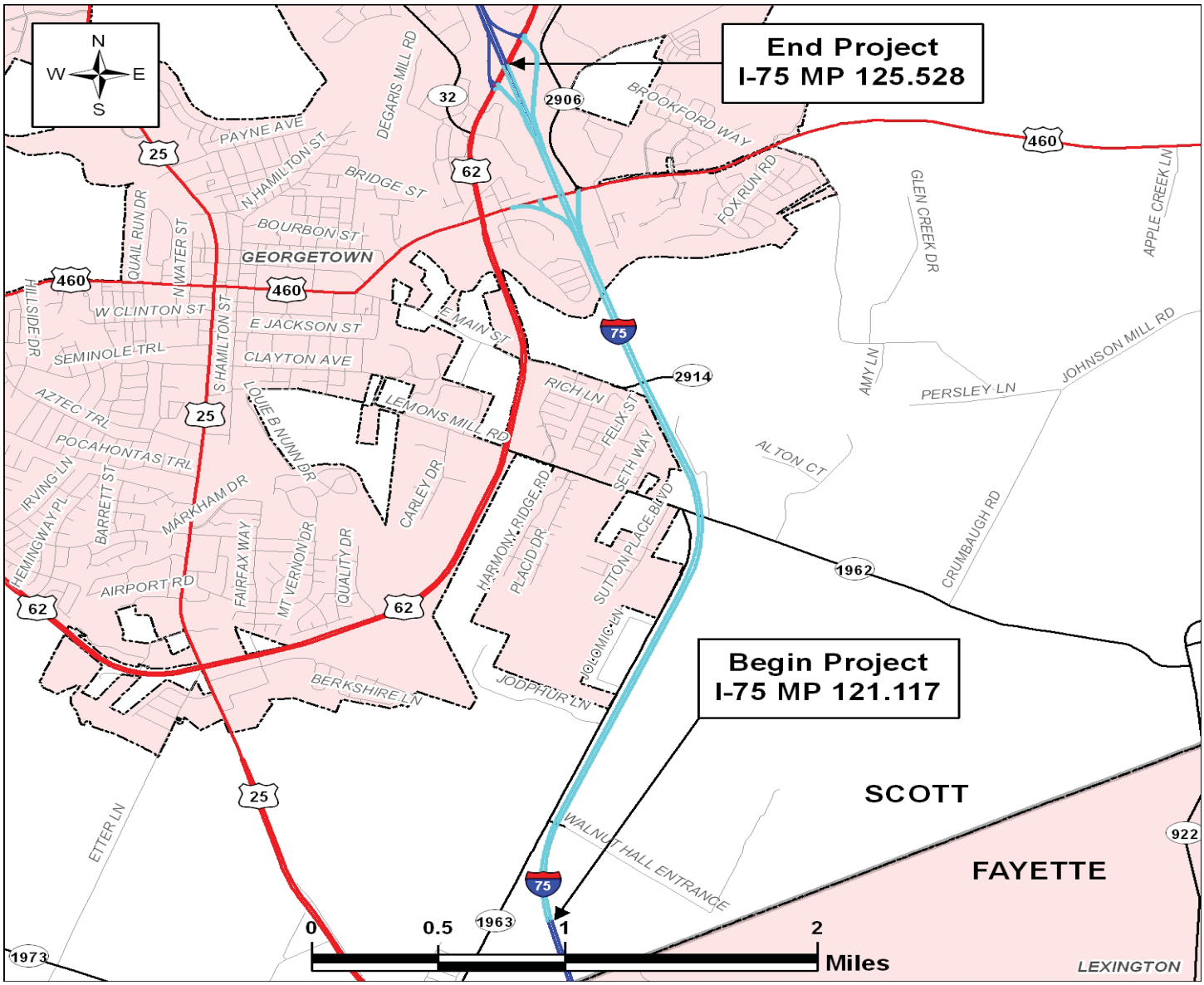

KENTUCKY
DEPARTMENT OF HIGHWAYS
COUNTY OF SCOTT

ITEM NO._____7-2040_____
PROJECT #:_FD04 SPP 105 0075 121-126
LETTING DATE_____

RECOMMENDED BY:_____DATE:_____
PROJECT MANAGER

PLAN APPROVED BY:_____DATE:_____
STATE HIGHWAY ENGINEER

FHWA APPROVED BY:_____DATE:_____

I75 Mainline 7-2040 (121.117-125.528)

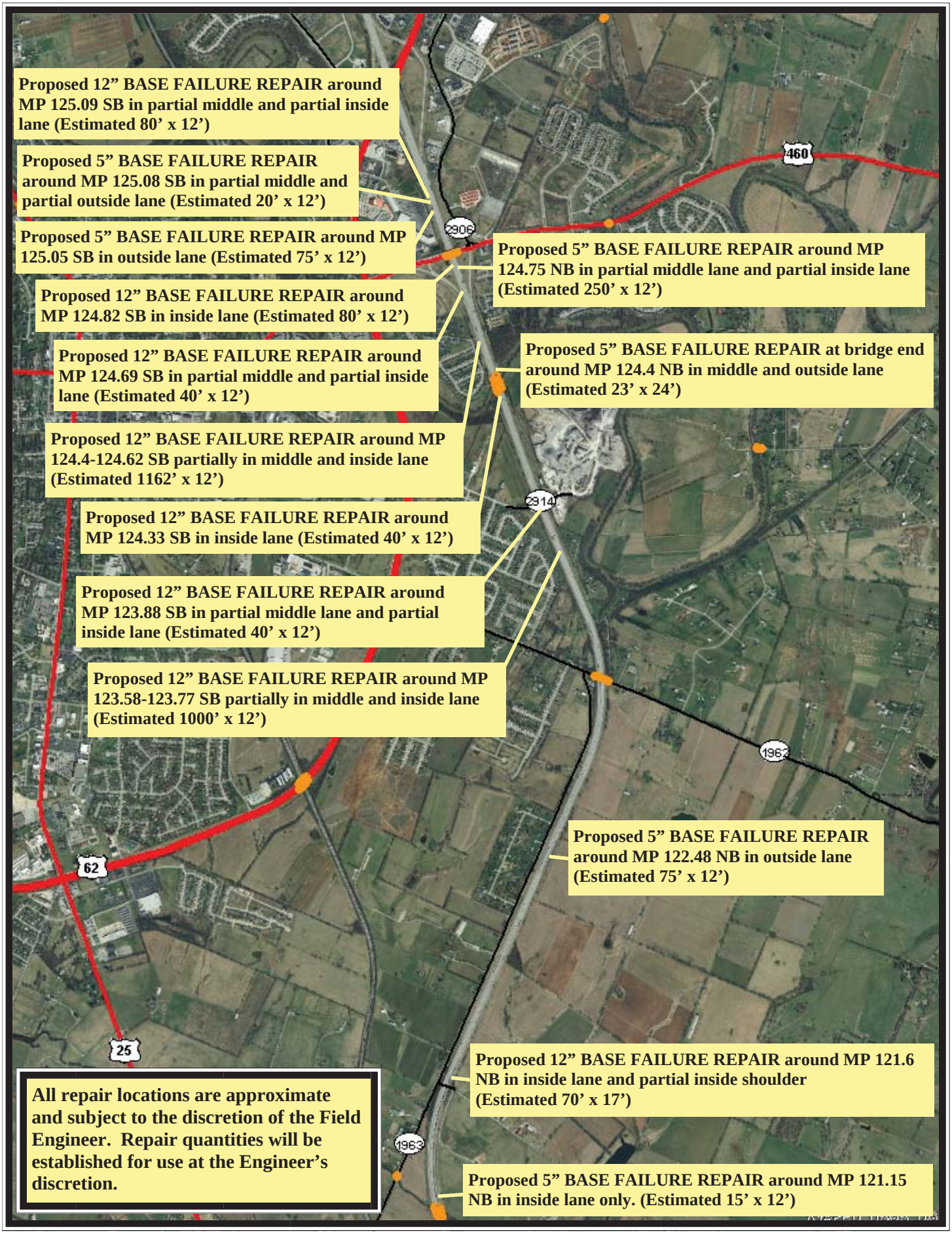

I75 RAMP @ US 460

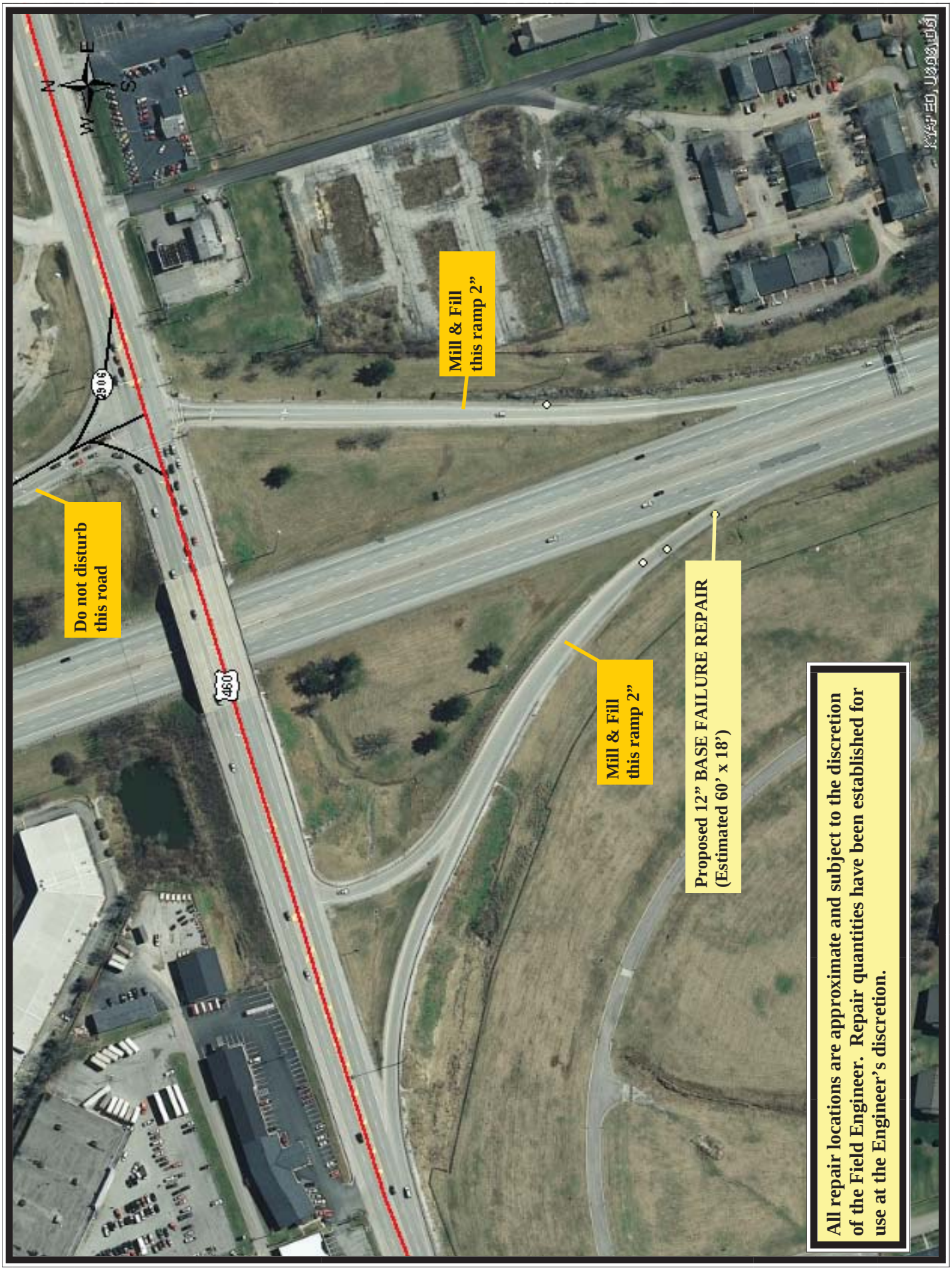

All repair locations are approximate and subject to the discretion of the Field Engineer. Repair quantities have been established for use at the Engineer’s discretion.

I75 RAMP @ US 62

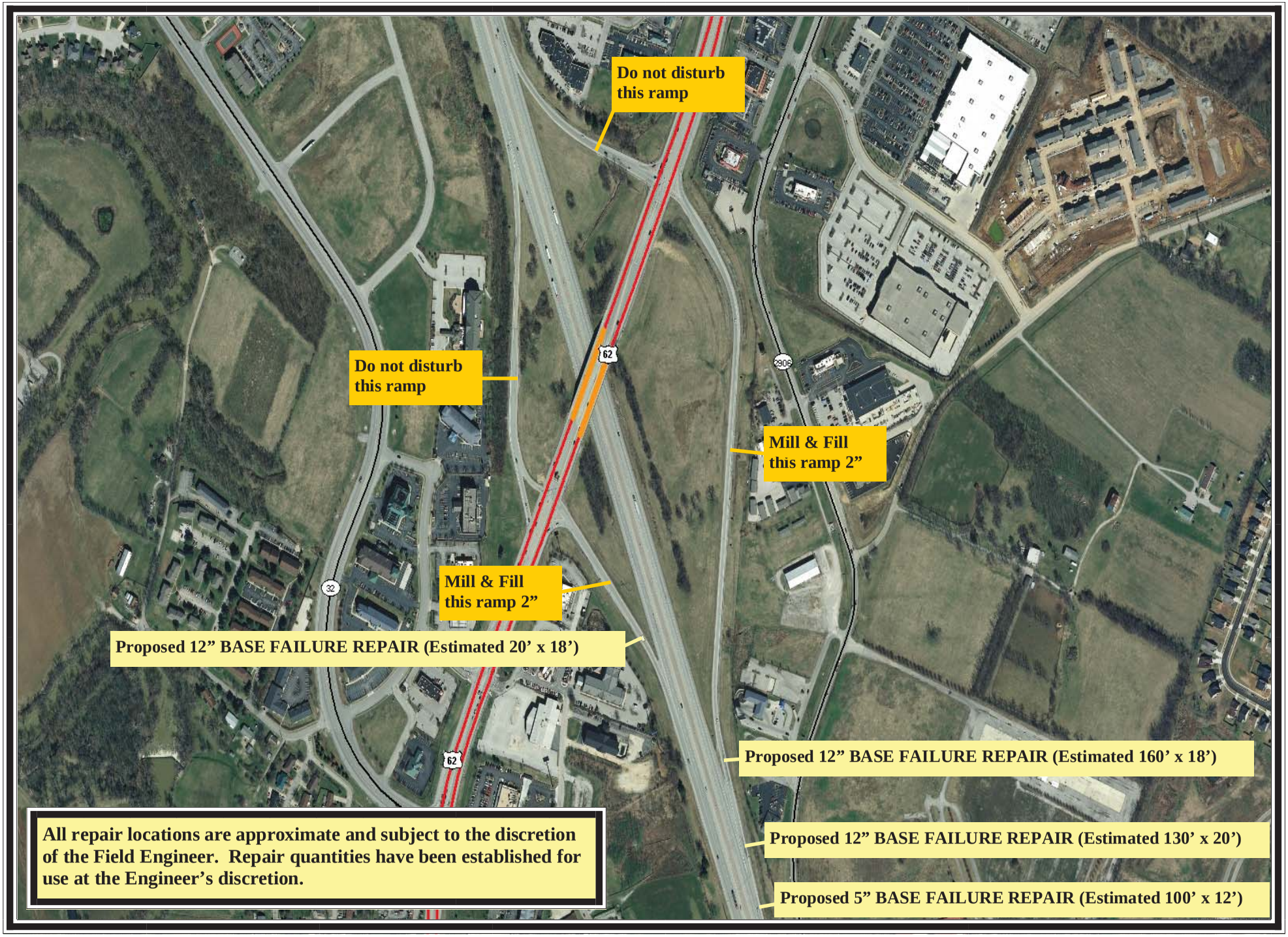

I75
TYPICAL SECTIONS

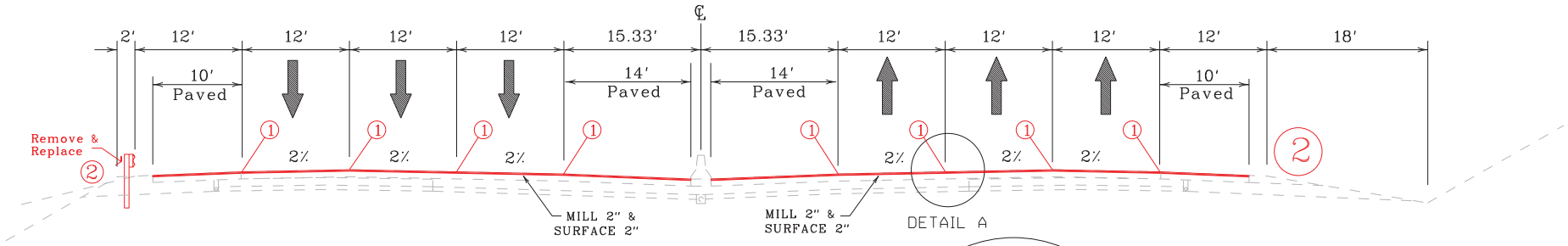

NORMAL SECTION

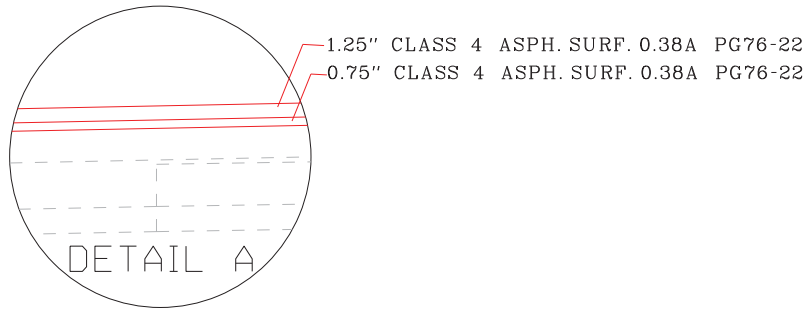

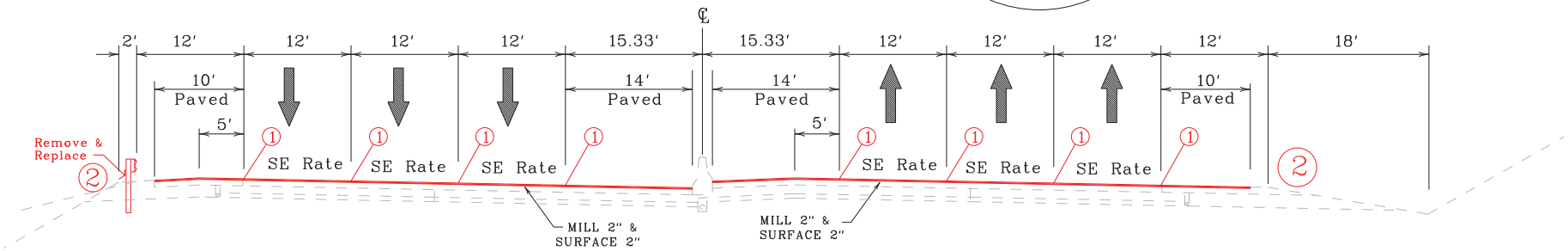

SUPERELEVATED SECTION

SURFACING SCHEDULE

MAINLINE TRAFFIC LANES

ASPH. PAVE MILLING & TEXTURING ..... 2.0" DEPTH
CLASS 4 ASPH. SURF. 0.38A PG76-22 ..... 0.75" DEPTH
CLASS 4 ASPH. SURF. 0.38A PG76-22 ..... 1.25" DEPTH

SHOULDERS

ASPH. PAVE MILLING & TEXTURING ..... 2.0" DEPTH
CLASS 3 ASPH. SURF. 0.38D PG64-22 ..... 0.75" DEPTH
CLASS 3 ASPH. SURF. 0.38D PG64-22 ..... 1.25" DEPTH

(1) Place Joint Adhesive between driving lanes and between mainline and shoulders.

Match existing cross slope

(2) Use Asphalt Millings from the project to fill in shoulder drop-off areas and place Asphalt Seal Coat (2.40 lbs/sq yd Item 103) in these areas as directed by the Engineer. The Contractor may, at no cost to the Department, substitute DGA in lieu of Asphalt Millings to fill in the shoulder drop-off areas.

*NOTE: REGARDLESS OF CROSS SLOPES SHOWN, ALL MILLING AND RESURFACING OPERATIONS SHALL MAINTAIN EXISTING CROSS SLOPES ENCOUNTERED DURING CONSTRUCTION.

NOT TO SCALE

TYPICAL SECTIONS
RAMPS

(The US 62 and US 460 Southern Ramps Only)

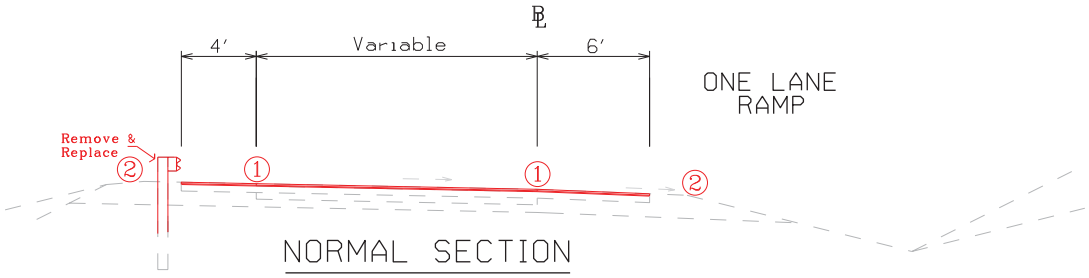

NORMAL SECTION

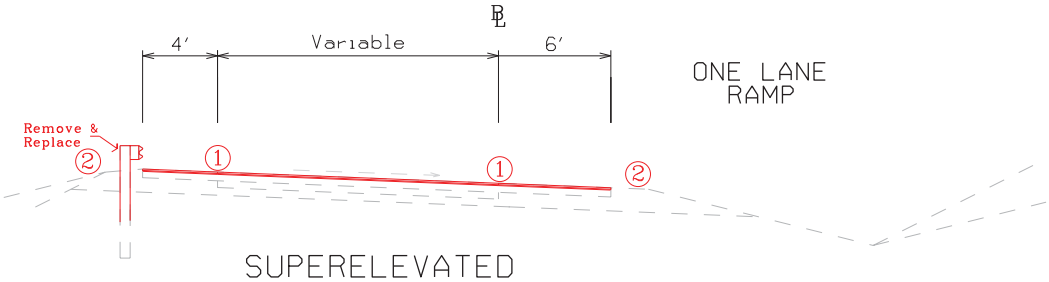

SUPERELEVATED

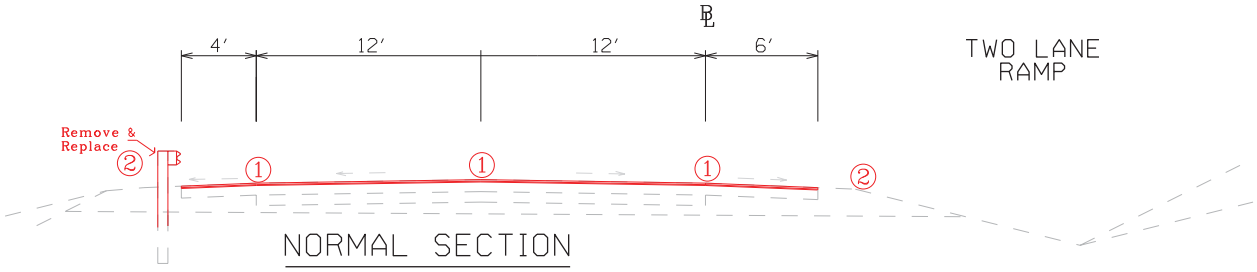

NORMAL SECTION

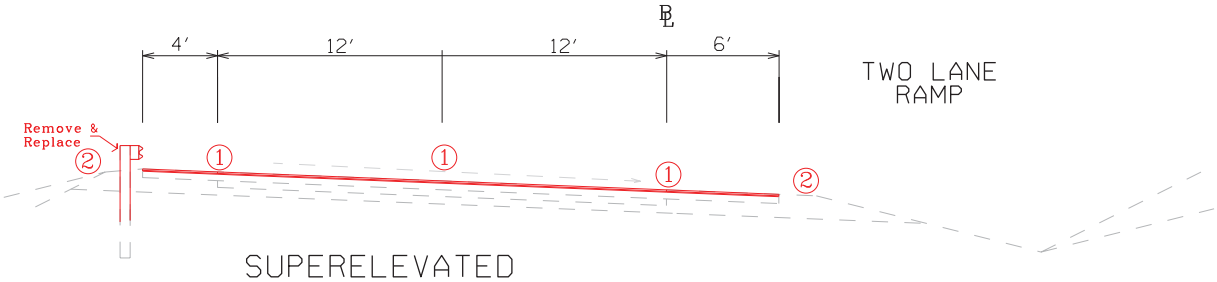

SUPERELEVATED

PAVEMENT REHABILITATION

DRIVING LANES ONLY

ASPH. PAVE MILLING & TEXTURING .... 2.0" DEPTH
CLASS 4 ASPH. SURF. 0.38A PG76-22 .. 0.75" DEPTH
CLASS 4 ASPH. SURF. 0.38A PG76-22 .. 1.25" DEPTH

SHOULDERS

ASPH. PAVE MILLING & TEXTURING .... 2.0" DEPTH
CLASS 4 ASPH. SURF. 0.38D PG64-22 .. 0.75" DEPTH
CLASS 4 ASPH. SURF. 0.38D PG64-22 .. 1.25" DEPTH

(1) Place Joint Adhesive between driving lanes and between mainline and shoulders.

Match existing cross slope

(2) Use Asphalt Millings from the project to fill in shoulder drop-off areas and place Asphalt Seal Coat (2.40 lbs/sq yd Item 103) in these areas as directed by the Engineer. The Contractor may, at no cost to the Department, substitute DGA in lieu of Asphalt Millings to fill in the shoulder drop-off areas.

NOTE: ALL RAMPS SHALL BE MILLED AND SURFACED TO THE EXISTING EDGE OF PAVEMENT OF THEIR RESPECTIVE CROSS ROAD.

*NOTE: REGARDLESS OF CROSS SLOPES SHOWN, ALL MILLING AND RESURFACING OPERATIONS SHALL MAINTAIN EXISTING CROSS SLOPES ENCOUNTERED DURING CONSTRUCTION.

NOT TO SCALE

I75
RAMP
TYPICAL SECTIONS

I75 - MP 121.117 - MP 125.528
SCOTT COUNTY
ITEM NUMBER: 7-2040
GENERAL SUMMARY

ITEM NUMBER	ITEM	QUANTITY	UNIT
	SCOTT COUNTY		
00190	LEVELING AND WEDGING PG64-22 (3)	1,000	TON
00103	ASPHALT SEAL COAT (1)	20	TON
2575	DITCHING AND SHOULDERING (1)	23,290	LIN FT
2562	SIGNS	2,000	SQ FT
2568	MOBILIZATION	1	LS
2569	DEMOBILIZATION	1	LS
2650	MAINTAIN AND CONTROL TRAFFIC	1	LS
2676	MOBILIZATION FOR MILLING &TEXTURING	1	LS
2677	ASPHALT PAVE MILLING & TEXTURING (1)	40,343	TON
2671	PORTABLE CHANGEABLE MESSAGE SIGN	4	EACH
6573	PAVE MARKING-THERMO STR ARROW	2	EACH
6574	PAVE MARKING-THERMO CURV ARROW	8	EACH
6568	PAVE MARKING-THERMO STOP BAR-24IN	55	LIN FT
24489EC	INLAID PAVEMENT MARKERS (2)	2,816	EACH
10020NS	FUEL ADJUSTMENT	57,732	DOLLAR
10030NS	ASPHALT ADJUSTMENT	145,007	DOLLAR
20071EC	JOINT ADHESIVE	200,806	LIN FT
24189ER	DURABLE WATERBORNE MARKING -6 IN W	76,265	LIN FT
24190ER	DURABLE WATERBORNE MARKING -6 IN Y	52,627	LIN FT
24191ER	DURABLE WATERBORNE MARKING -12 IN W	2,218	LIN FT
23143ED	KPDES PERMIT AND TEMP EROSION CONTROL	1	LS
2014	BARRICADE-TYPE III	4	EACH
2696	SHOULDER RUMBLE STRIPS-SAWED	99,207	LIN FT
3240	BASE FAILURE REPAIR (1)	1,000	SQ YD
219	CL4 ASPH BASE 1.00D PG76-22 (1)	3,252	TON
339	CL3 ASPH SURF 0.38D PG64-22	14,714	TON
342	CL4 ASPH SURF 0.38A PG76-22	22,376	TON
2726	STAKING	1	LS
6549	PAVE STRIPING - TEMP REM TAPE - B (1)	25,810	LIN FT
6550	PAVE STRIPING - TEMP REM TAPE - W (1)	181,396	LIN FT
6551	PAVE STRIPING - TEMP REM TAPE - Y (1)	49,940	LIN FT
4793	CONDUIT 1 1/4 INCH	80	LIN FT
4795	CONDUIT 2 INCH	60	LIN FT
4820	TRENCHING AND BACKFILLING	120	LIN FT
4829	PIEZOELECTRIC SENSOR	12	EACH
4830	LOOP WIRE	5,200	LIN FT
4895	LOOP SAW SLOT AND FILL	1,080	LIN FT
20359NN	GALV STEEL CABINET	4	EACH
20360ES818	WOOD POST	8	EACH
20391NS835	JUNCTION BOX TYPE A	4	EACH
6417	FLEXIBLE DELINEATOR POST-W	490	EACH
6418	FLEXIBLE DELINEATOR POST-Y	210	EACH
1982	DELINEATOR FOR GUARDRAIL-WHITE (1)	190	EACH
1983	DELINEATOR FOR GUARDRAIL-YELLOW (1)	20	EACH
21802EN	G/R STEEL W BEAM-S FACE (7 FT POST)	10,375	LIN FT
2381	REMOVE GUARDRAIL	10,850	LIN FT
2367	GUARDRAIL END TREATMENT TYPE 1	2	EACH
2369	GUARDRAIL END TREATMENT TYPE 2A	19	EACH
2373	GUARDRAIL END TREATMENT TYPE 3	3	EACH
2391	GUARDRAIL END TREATMENT TYPE 4A	10	EACH
2382	GUARDRAIL CONNECT-SHLD BRIDGE PIER TY A	2	EACH
2384	GUARDRAIL CONNECT SHLD BRIDGE PIER TY A1	2	EACH
2387	GUARDRAIL CONNECTOR TO BRIDGE END TY A-1	3	EACH
2363	GUARDRAIL CONNECTOR TO BRIDGE END TY A	6	EACH
1891	ISLAND HEADER CURB TYPE 2	225	LIN FT
20366NN	REPLACE GRATE	3	EACH
02483	CHANNEL LINING CLASS II	310	TON
03262	CLEAN PIPE STRUCTURE	1	EACH
23131ER701	PIPELINE VIDEO INSPECTION	100	LF
02625	REMOVE HEADWALL	25	EACH
01432	SLOPED BOX OUTLET TYPE 1 15 IN	17	EACH
00461	CULVERT PIPE-15 IN	340	LF
01450	S & F BOX INLET-OUTLET 18 IN	4	EACH
00462	CULVERT PIPE-18 IN	80	LF
01451	S & F BOX INLET-OUTLET 24 IN	1	EACH
00464	CULVERT PIPE-24 IN	20	LF
01453	S & F BOX INLET-OUTLET 36 IN	3	EACH
00468	CULVERT PIPE-36 IN	60	LF
02230	EMBANKMENT IN PLACE	10	CUYD
05950	EROSION CONTROL BLANKET	20	SQYD

(1) Extra Quantity Added To be used if needed as directed by the Engineer

(2) Existing pavement marker removal shall be incidental to ASPHALT PAVE MILLING & TEXTURING

(3) Quantity Set Up To be used if needed as directed by the Engineer

Note: Quantities from all summaries have been carried over and included in this General Summary.

I75
Item No. 7-2040
Scott County

PAVING SUMMARY

CODE	ITEM	NOTES	UNITS	PROJECT
00190	LEVELING AND WEDGING PG64-22 (3)	Use if needed as directed by the Engineer	TON	1,000
00103	ASPHALT SEAL COAT (1)	To be used in shoulder drop-off areas as directed by the Engineer	TON	20
342	CL4 ASPH SURF 0.38A PG76-22	Mainline and Ramps	TON	22,376
339	CL3 ASPH SURF 0.38D PG64-22	Mainline and Ramps	TON	14,714
219	CL4 ASPH BASE 1.00D PG76-22 (1)	For 5" Repair Areas	TON	3,252
2677	ASPHALT PAVE MILLING & TEXTURING (1)	Mainline, Ramps, 5" Repair Areas	TON	40,343
2696	SHOULDER RUMBLE STRIPS-SAWED	Mainline and Ramps	LIN FT	99,207
20071EC	JOINT ADHESIVE	Mainline and Ramps	LIN FT	200,806

(1) Extra Quantity Set Up To be used if needed as directed by the Engineer
(3) Quantity Set Up To be used if needed as directed by the Engineer

SCOTT COUNTY GUARDRAIL SUMMARY

Guardrail Milepoint to Milepoint			Steel "W" Beam Guardrail	Remove Exist. G.R.	Guardrail End Treatment				Bridge End Conn. TY. A	Sh to Bridge Pier Conn. TY A	Sh to Bridge Pier Conn. TY A-1	Bridge End Conn. TY. A-1	Delin-eator for GR MD W	Delin-eator for GR MD Y	Island Header Curb TY 2
		Item	SF		1	2A	3	4A							
		Units		L.F.	Each								EACH		L.F.
		Item Code Number	21802EN*	2381	2367	2369	2373	2391	2363	2382	2384	2387	1982	1983	1891
125.626	125.489	Lt	687.5	725.0		1		1					9		
124.933	124.848	Lt	412.5	450.0		1		1					6		
124.425	124.378	Lt	250.0	250.0			1		1				3		25.0
124.320	124.256	Lt	337.5	337.5		1						1	5		25.0
123.953	123.906	Lt	250.0	250.0			1		1				6		25.0
123.376	123.329	Lt	212.5	250.0		1		1					6		
123.271	123.226	Lt	200.0	237.5				1		1			6		
123.221	123.207	Lt	75.0	75.0		1					1		2		
121.710	121.464	Lt	1,262.5	1,300.0		1		1					29		
121.229	121.158	Lt	337.5	375.0				1	1				9		25.0
121.120	121.089	Lt	162.5	162.5		1						1	2		25.0
121.025	121.094	Rt	325.0	362.5				1	1				5		25.0
121.130	121.139	Rt	50.0	50.0		1						1	1		
121.475	121.655	Rt	912.5	950.0		1		1					21		
123.135	123.189	Rt	250.0	287.5				1		1			7		
123.195	123.200	Rt	25.0	25.0		1					1		1		25.0
123.310	123.367	Rt	300.0	300.0		2							7		
123.815	123.879	Rt	287.5	337.5	1.0				1				8		25.0
124.205	124.333	Rt	675.0	675.0		1			1				8		25.0
124.814	124.887	Rt	387.5	387.5		1	1						5		
125.487	125.620	Rt	700.0	700.0		2							8		
		Ramps													
0.000	0.185	460 - SB	1,050.0	1,100.0	1	1							24		
0.000	0.220	460 - SB	725.0	725.0		1								20	
0.165	0.266	NB - 62	500.0	537.5		1		1					12		
County Totals			**10,375.0**	**10,850.0**	**2.0**	**19.0**	**3.0**	**10.0**	**6.0**	**2.0**	**2.0**	**3.0**	**190.0**	**20.0**	**225.0**

PIPE DRAINAGE SUMMARY

MP	Type	Side	Skew	Size (IN)	DITCHING	REPLACE GRATE	CHANNEL LINING CLASS II	CLEAN PIPE STRUCTURE	PIPELINE VIDEO INSPECTION	REMOVE HEADWALL	SLOPED BOX OUTLET TYPE 1 15 IN	CULVERT PIPE-15 IN	S & F BOX INLET-OUTLET 18 IN	CULVERT PIPE-18 IN	S & F BOX INLET-OUTLET 24 IN	CULVERT PIPE-24 IN	S & F BOX INLET-OUTLET 36 IN	CULVERT PIPE-36 IN	EMBANKMENT IN PLACE	EROSION CONTROL BLANKET
						20366NN	02483	03262	23131ER701	02625	01432	00461	01450	00462	01451	00464	01453	00468	02230	05950
					LF	EACH	TON	EACH	LF	EACH	EACH	LF	EACH	LF	EACH	LF	EACH	LF	CUYD	SQYD
121.32	RCP	Lt	15	15	20		10			1	1	20								
121.96	RCP	Lt	0	18		1	10			1			1	20						
122.03	RCP	Lt	0	24				1												
122.35	RCP	Lt	15	15	20		10			1	1	20								
123.04	RCP	Lt	15	18			10			1			1	20						
124.69	RCP	Lt	15	15	20		10													
124.96	RCP	Lt	0	15	20		10			1	1	20								
125.37	RCP	Lt	0	15	20		10			1	1	20								
125.31	RCP	Rt	15	48															10	20
124.92	RCP	Rt	15	48	40		20													
124.69	RCP	Rt	0	18	10		10													
124.03	RCP	Rt	30	18			20			2			2	40						
123.79	RCP	Rt	0	15	20		10			1	1	20								
124.02	Clay	Rt	30	15			10			1	1	20								
123.79	Clay	Rt	0	15	25		10													
123.43	Clay	Rt	30	24			10		100	1					1	20				
123.04	Clay	Rt	30	15	35		20			2	2	40								
123.02	Clay	Rt	0	15	20		10			1	1	20								
122.92	Clay	Rt	0	15	20		10			1	1	20								
122.80	Clay	Rt	0	15	10		10			1	1	20								
122.64	Clay	Rt	30	36			20			2							2	40		
122.18	Clay	Rt	30	36			10			1							1	20		
122.12	Clay	Rt	0	15	20	1	10			1	1	20								
122.01	Clay	Rt	0	15	30		10			1	1	20								
121.94	Clay	Rt	0	15	20	1	10			1	1	20								
121.84	Clay	Rt	0	18	20		10													
121.75	Clay	Rt	0	15	35		10			1	1	20								
121.14	Clay	Rt	0	15	25		10			1	1	20								
120.96	Clay	Rt	0	15	10		10			1	1	20								
PROJECT TOTALS:					**440***	**3**	**310**	**1**	**100**	**25**	**17**	**340**	**4**	**80**	**1**	**20**	**3**	**60**	**10**	**20**

* - A quantity for "DITCHING AND SHOULDERING" has been setup for the entire job and will be used for this

5" REPAIR

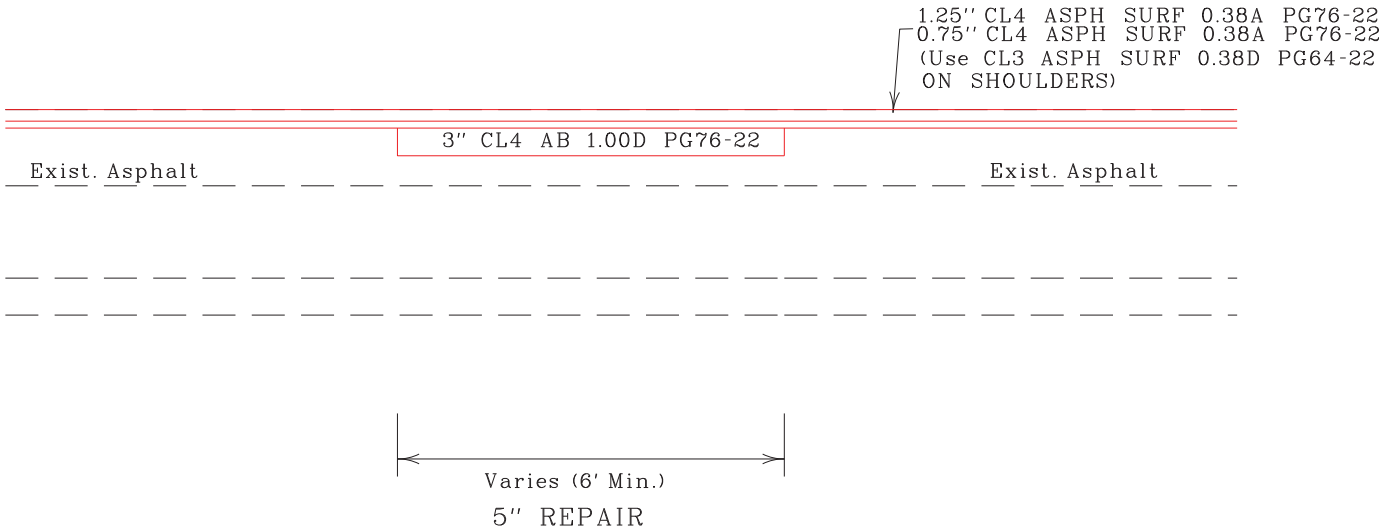

5" REPAIR

1 5" repair areas may be in either one driving lane, multiple driving lanes, the shoulder(s), or a combination of these at the discretion of the Engineer. The location and length of each 5" repair area shall be at the discretion of the Engineer. The location may be on the mainline, ramp, or combination. The asphalt base shall be paid by the ton as "CL 4 ASPHALT BASE 1.00D PG76-22" and the additional milling shall be paid by the ton as "ASPHALT PAVE MILLING & TEXTURING".

NOT TO SCALE

I75
5" BASE FAILURE REPAIR

12" REPAIR

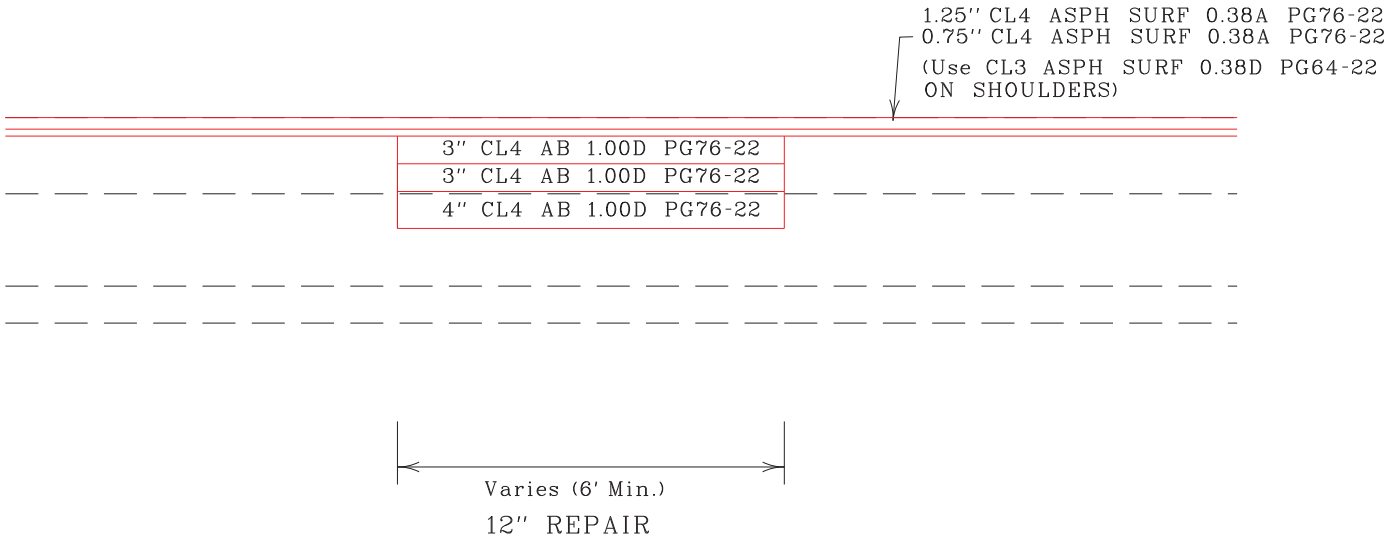

12" REPAIR

1 12" repair areas may be in either one driving lane, multiple driving lanes, the shoulder(s), or a combination of these at the discretion of the Engineer. The location and length of each 12" repair area shall be at the discretion of the Engineer. The location may be on the mainline, ramp, or combination. 12" Base failure repairs shall be bid as "BASE FAILURE REPAIR" in square yards and consists of all labor, equipment and materials necessary to complete repair.

NOT TO SCALE

I75
12" BASE FAILURE REPAIR

I75 SCOTT COUNTY
MP 121.117 TO MP 125.528
FD04 SPP 105 0075 121-126
ITEM NO. 7-2040

THIS PROJECT IS A FULLY CONTROLLED ACCESS HIGHWAY

I. DESCRIPTION

Perform all work in accordance with the Department's 2012 Standard Specifications, Supplemental Specifications, any applicable Special Provisions, and applicable Standard and Sepia Drawings, except as hereafter specified. Article references are to the Standard Specifications. Furnish all materials, labor, equipment, and incidentals for the following work:

(1) Maintain and Control Traffic; (2) Remove and Replace Guardrail and Guardrail End Treatments at the locations listed and/or directed by the Engineer; (3) Inlaid pavement markers; (4) Asphalt Pavement Milling and Texturing; (5) Asphalt Base and Surface at locations listed and/or directed by the Engineer; and (6) All other work specified as part of this contract.

II. MATERIALS

Except as specified in these notes or on the drawings, all materials will be according to the Standard Specifications and applicable Special Provisions and Special Notes. The Department will sample and test all materials according to the Department's Sampling Manual and the Contractor will have the materials available for sampling a sufficient time in advance of the use of the materials to allow for the necessary time for testing, unless otherwise specified in these notes.

A. Maintain and Control Traffic. See Traffic Control Plan.

B. Pavement Markings -6 inch Paint. Use Durable Waterborne Marking 6- inch for permanent striping (12 inch at entrance and exit ramp tapers).

III. CONSTRUCTION METHODS

A. Maintain and Control Traffic. See Traffic Control Plan.

B. Site Preparation. Be responsible for all site preparation. Do not disturb existing signs. This item will include, but is not limited to, incidental excavation and backfilling; removal of all obstructions or any other items; disposal of

materials; sweeping and removal of debris; shoulder preparation and restoration, temporary and permanent erosion and pollution control; and all incidentals. Site preparation will be only as approved or directed by the Engineer. Other than the bid items listed, no direct payment will be made for site preparation, but will be incidental to the other items of work.

C. Disposal of Waste. Dispose of all cuttings, debris, and other waste off the right-of-way at approved sites obtained by the Contractor at no additional cost to the Department. The contractor will be responsible for obtaining any necessary permits for this work. Temporary openings in the right of way fence for direct access to waste sites off the right of way or for access to other public roads will not be allowed. No separate payment will be made for the disposal of waste and debris from the project or obtaining the necessary permits, but will be incidental to the other items of the work.

D. Final Dressing, Clean Up, and Seeding and Protection. After all work is completed, completely remove all debris from the job site. Perform Class A Final Dressing on all disturbed areas. Sow disturbed earthen areas with Seed Mixture No. I. These items are incidental to the other items of the work.

E. Guardrail. Remove, replace and extend guardrail and guardrail End Treatments listed in the Guardrail Summary or as directed by the Engineer. Quantities are approximate only. Actual locations will be determined by the Engineer at the time of construction. Grade and reshape shoulders to proper template for new End Treatment. Remove any existing guardrail with a lane closure in place. Do not leave the area unprotected. After the guardrail is removed, a shoulder closure shall remain in place until the guardrail is replaced in that area. A maximum of seven calendar days will be allowed between the removal of a guardrail section and the installation of new guardrail at that same location unless otherwise approved by the Engineer.

F. Pavement Striping and Pavement Markers. Permanent striping will be in accordance with Section 112, except that:

(1) Striping will be 6” in width, except 12” in gore area;
(2) Permanent Striping will be in place before job is complete;
(3) Permanent striping will be 6” Durable Waterborne Marking &
(4) Existing pavement marker removal shall be incidental to ASPHALT PAVE MILLING & TEXTURING.

G. On-Site Inspection. Each Contractor submitting a bid for this work will make a thorough inspection of the site prior to submitting a bid and will thoroughly familiarize himself with existing conditions so that the work can be expeditiously performed after a contract is awarded. Submission of a bid will

be considered evidence of this inspection having been made. Any claims resulting from site conditions will not be honored by the Department.

H. Property Damage. The Contractor shall be responsible for all damage to public and/or private property resulting from the Contractor's work. Restore all disturbed features in like kind materials and design to the existing or proposed grades, as applicable, at no additional cost to the Department.

I. Caution. Information shown on the drawings and in this proposal and the types and quantities of work listed are not to be taken as an accurate or complete evaluation of the material and conditions to be encountered during construction. The bidder must draw his own conclusions as to the conditions encountered. The Department does not give any guarantee as to the accuracy of the data and no claim will be considered for additional compensation if the conditions encountered are not in accordance with the information shown.

J. Utility Clearance. It is not anticipated that utility facilities will need to be relocated and/or adjusted; however, in the event that it is discovered that the work does require that utilities be relocated and/or adjusted, the utility companies will work concurrently with the Contractor while relocating their facilities.

IV. METHOD OF MEASUREMENT

Except as specified in these notes, or elsewhere in the drawings or this proposal, the method of measurement will be in accordance with the Standard Specifications.

A. Maintain and Control Traffic. See Traffic Control Plan.

B. Site Preparation. Other than the bid items listed, site preparation will not be measured for payment but will be incidental to the other items of work.

C. Inlaid Pavement Markers and Permanent Striping. Permanent striping Durable Waterborne Marking (6" and 12") is measured per linear foot. See Traffic Control Plan. Inlaid Pavement Markers are measured as each. No direct payment will be made for the removal of the existing pavement markers prior to the milling operation and shall be considered incidental to milling and texturing.

D. Erosion Control. Erosion control items not listed as bid items will not be measured for payment, but will be considered incidental to the "lump sum" price for the bid item "KPDES Permit & Temporary Erosion Control".

E. Base Failure Repair. 12” Base failure repairs shall be bid as “BASE FAILURE REPAIR” in “square yards” and consists of all labor, equipment and materials necessary to complete the repairs as shown in the detail provided in the proposal. Additional quantities have been included for 5” repairs.

V. BASIS OF PAYMENT

Except as specified in these notes, or elsewhere in the drawings or this proposal, basis of payment will be in accordance with the Standard Specifications. No direct payment will be made other than for the bid items listed. All other items required to complete the construction will be incidental to the bid items listed. Existing signs damaged by the Contractor will be replaced by the Contractor at his expense.

A. Maintain and Control Traffic. See Traffic Control Plan.

B. Site Preparation. Other than the bid items listed, site preparation will not be measured for payment but will be incidental to the other items of work.

C. Inlaid Pavement Markers and Permanent Striping. See Traffic Control Plan.

NOTES APPLICABLE TO PROJECT
PAVEMENT REHABILITATION
SCOTT COUNTY
ITEM NO. 7-2040

THIS PROJECT IS A FULLY CONTROLLED ACCESS HIGHWAY

1. The dimensions and cross slopes shown on the typical section for pavement and shoulder widths and thickness are nominal or typical dimensions. The actual dimensions to be constructed may be varied to fit existing conditions as directed or approved by the Engineer. It is not intended that existing pavement or shoulders be widened or the cross slopes changed unless specified in the Proposal or directed by the Engineer.

2. Contractor shall mill mainline pavements a depth of 2 inches on the driving lanes and shoulders as shown on the Typical Sections except in repair areas. Payment for milling shall be per ton and paid as “ASPH PAVE MILLING & TEXTURING”. The I 75 mainline shall be paved with 2 inches of “CL4 ASPH SURF 0.38A PG76-22” on the driving lanes only as shown on the Typical Sections except in repair areas. The I 75 mainline shoulders shall be paved with 2 inches of “CL3 ASPH SURF 0.38D PG64-22” on the shoulders as shown on the Typical Sections except in repair areas.

3. The US 460 and US 62 Southern ramps shall be milled 2 inches and paved with 2 inches of “CL4 ASPH SURF 0.38A PG76-22” on the driving lanes only as shown on the Ramp Typical Sections except in repair areas. The US 460 and US 62 ramp shoulders shall be milled 2 inches and paved with 2 inches of “CL3 ASPH SURF 0.38D PG64-22” as shown on the Ramp Typical Sections except in repair areas.

4. 12” base failure repairs will be placed as shown in the Detail at locations directed by The Engineer and paid for as “BASE FAILURE REPAIR”. 5-inch Repairs will be placed as shown in the Detail at locations directed by The Engineer and paid for per ton with “ASPH PAVE MILLING & TEXTURING” and of “CL4 ASPH BASE 1.00D PG76-22”. The Contractor must wait at least two weeks after completion of the 12” Base Failure Repairs before beginning the milling part of the contract on the driving lanes only. Any shoulder 12” Base Failure Repairs are not required to wait the two weeks.

5. Any delineator posts, light poles or roadway signs that are damaged by the Contractor during construction are to be replaced at the contractor’s expense. Signs that appear to have no visible damage but that are leaning are to be reset as directed by the Engineer. It is the contractor’s responsibility to remove and replace signs as needed to complete the guardrail, shoulder work, etc.. Payment for this work will be considered incidental to the contract.

6. Asphalt Pavement Ride Quality requirements, in accordance with section 410 category “A” of the Standard Specifications, shall apply on this project.

7. INLAID PAVEMENT MARKERS (IPMs) will be used in lieu of Type 5 Pavement Markers on this job. Place two (2) IPMs per groove where Type 5 Pavement Markers would be located according to the Standard Drawings.

8. Portable Changeable Message Boards furnished by the contractor shall be retained by the contractor upon completion of the project.

9. There is a quantity of “LEVEL & WEDGING PG 64-22” set up to correct irregularities. The quantity for irregularities may or may not be necessary and will be placed at the discretion of the Engineer.

10. There is additional quantity of “ASPH PAVE MILLING & TEXTURING”, “CL4 ASPH BASE 1.00D PG76-22”, “DITCHING AND SHOULDERING”, etc. set up to be placed if needed as directed by the Engineer.

11. The speed limit on this project will be reduced to 55 mph while lane closures are in place. Any time work is suspended the speed limit will revert back to 70 mph. Also, double fine signs are set up in the project to be installed while workers are present in the work zone.

12. Asphalt Millings from the project that are not used to fix shoulder drop-offs shall become the property of the Contractor. The transfer to the Contractor shall all be incidental to “ASPH PAVE MILLING & TEXTURING”.

13. All perforated pipe headwalls will be cleaned. This work is incidental to “DITCHING AND SHOULDERING” per the Standard Specifications.

14. The Contractor shall deliver existing salvaged guardrail system materials to the Central Sign Shop and Recycle center at 1224 Wilkinson Blvd in Frankfort, KY. Contact Section Supervisor at (502) 564-8187 to schedule the delivery of material. Deliver the material between the hours of 8:00AM and 3:30PM, Monday through Friday. There is a guardrail delivery verification sheet which must be completed and signed by the Contractor, Engineer and a representative of the Central Sign Shop and Recycle Center.

15. The specified completion date for this project is October 15, 2014. Contrary to section 108, liquidated damages will be charged during the months of December 2014 through March 2015.

TRAFFIC CONTROL PLAN
SCOTT COUNTY
I75
FD04 SPP 105 0075 121 126
Item Nos. 7-2040

THIS PROJECT IS A FULLY CONTROLLED ACCESS HIGHWAY

TRAFFIC CONTROL GENERAL

Except as provided herein, “Maintain and Control Traffic” shall be in accordance with the 2012 Standard Specifications and the Standard Drawings, current editions. Except for the roadway and traffic control bid items listed, all items of work necessary to maintain and control traffic will be paid at the lump sum bid price to "Maintain and Control Traffic". All lane closures used on the Project will be in compliance with the appropriate Standard Drawings. Do NOT use cones for lane closures or shoulder closures.

Contrary to Section 106.01, traffic control devices used on this project may be new, or used in like new condition at the beginning of the work and maintained in like new condition until completion of the work. Traffic control devices will conform to current MUTCD.

Reduce the speed limit in work areas to 55 miles per hour (35 miles per hour for ramps) and establish double fines for work zone speeding violations. The extent of these areas within the project limits will be restricted to the proximity of actual work areas as determined by the Engineer. Notify the Engineer a minimum of 12 hours prior to using the double fine signs. At the beginning of the work zone, the “WARNING FINE DOUBLED IN WORK ZONE” signs will be dual mounted. At the end of the work zone, the “END DOUBLE FINE” signs will be dual mounted as well. Remove or cover the signs when the highway work zone does not have workers present for more than a two-hour period of time. Payment for the signs will be at the unit bid price for signs erected. Any relocation or covering of the signs will be incidental to “Maintain and Control Traffic,” lump sum.

Night work will be allowed on this project. Obtain approval from the Engineer for the method of lighting prior to its use.

PROJECT PHASING & CONSTRUCTION PROCEDURES

No lane closures are allowed on the following dates or times:

May 1-4, 2014
May 23-26, 2014
July 3-6, 2014
August 29-September 1,2014

The Engineer may specify additional days and hours when lane closures are not allowed. Traffic

may be reduced to two lanes in each direction at all other times. Traffic may be reduced to one lane in each direction if needed from 9 pm to 5 am.

The US 460 and US 62 southern ramps shall be paved on the weekend. One ramp can be closed at a time per weekend from Friday at 8pm through Monday at 5am to complete the work. The Contractor must notify the Engineer at least fourteen (14) days prior to a ramp closure.

Note that lane closures are required for the project. Stripe and taper according to the MUTCD and Standard Drawings.

During the days and hours when a lane closure is allowed, implement the following procedures: Maintain traffic as specified in the phasing notes and typical sections.

The contractor must notify the Engineer at least fourteen (14) days prior to the beginning of each construction phase in either direction.

During the days when a lane closure is allowed, maintain traffic as specified in the phasing notes and typical sections. Please refer to the “Special Note for Fixed Completion Date and Liquidated Damages” for damage rates per hour associated with failure to maintain the required number of lanes during a specific time period.

LANE CLOSURES

Limit the lengths of lane closures to only that needed for actual operations in accordance with the phasing specified herein, or as directed by the Engineer with a minimum of one mile between successive lane closures. Contrary to section 112, lane closures will **NOT** be measured for payment, but are considered incidental to “Maintain and Control Traffic,” lump sum.

SIGNS

Additional traffic control signs in addition to normal lane closure signing detailed on the Standard Drawings may be required by the Engineer. Additional signs needed for lane closures may include, but are not limited to, dual mounted TRUCKS USE LEFT/RIGHT LANE, LEFT/RIGHT LANE CLOSED 1 MILE, LEFT/RIGHT LANE CLOSED 2 MILE, LEFT/RIGHT LANE CLOSED 3 MILE, SLOWED/STOPPED TRAFFIC AHEAD. Signage for reduced speed limits and double fine work zones will be furnished, relocated, and maintained by the Contractor.

Contrary to section 112, Individual signs will be measured only once for payment, regardless of how many times they are set, reset, removed, and relocated during the duration of the project. Replacements for damaged signs or signs directed to be replaced by the Engineer due to poor legibility or reflectivity will not be measured for payment.

A quantity of signs has been included for lane shifts, “Roadwork Ahead” signs on entrance ramps, and extra double fine signs and speed limit signs between interchanges to be paid only

once no matter how many times they are moved or relocated.

FLASHING ARROWS

Flashing arrows will not be measured for payment, but are incidental to “Maintain and Control Traffic,” lump sum. The Department **WILL NOT** take possession of the flashing arrows upon completion of the work.

PORTABLE CHANGEABLE MESSAGE SIGNS

Provide portable changeable message signs (PCMS) in advance of and within the project at locations to be determined by the Engineer. If work is in progress concurrently in both directions, or if more than one lane closure is in place in the same direction of travel, provide additional PCMS. Place PCMS one mile in advance of the anticipated queue at each lane closure. As the actual queue lengthens and/or shortens relocate or provide additional PCMS so that traffic has warning of slowed or stopped traffic at least one mile but not more than two miles before reaching the end of the actual queue. The locations designated may vary as the work progresses. The messages required to be provided will be designated by the Engineer. The PCMS will be in operation at all times. In the event of damage or mechanical/electrical failure, the contractor will repair or replace the PCMS immediately. PCMS will be paid for once, no matter how many times they are moved or relocated. The Department **WILL NOT** take possession of the signs upon completion of the work.

TRUCK MOUNTED ATTENUATORS

Furnish and install MUTCD approved truck mounted attenuators (TMA) in advance of work areas when workers are present less than 12 feet from traffic. If there is less than 500 feet between work sites, only a single TMA will be required at a location directed by the Engineer. Locate the TMAs at the individual work sites and move them as the work zone moves within the project limits. All details of the TMA installations shall be approved by the Engineer. TMA will not be measured for payment, but are incidental to “Maintain and Control Traffic,” lump sum. The Department **WILL NOT** take possession of the TMAs upon completion of the work.

PAVEMENT MARKINGS

If lane closures are in place during nighttime hours, remove or cover the lenses of pavement markers that do not conform to the traffic control scheme in use, or as directed by the Engineer. Replace or uncover lenses before a closed lane is reopened to traffic. No direct payment will be made for removing and replacing or covering and uncovering the lenses, but will be incidental to "Maintain and Control Traffic," lump sum.

Place temporary and permanent striping in accordance with Section 112, except that:

1. Temporary and permanent striping will be 6" in width
2. If the contractor's operations or phasing requires temporary markings which must be

subsequently removed from the ultimate pavement, an approved removable lane tape will be used.

3. Edge lines will be required for temporary striping
4. Existing, temporary, or permanent striping will be in place before a lane is opened to traffic
5. Place permanent striping on bridge decks and pavement within the project limits.
6. Permanent striping will be Durable Waterborne Markings

Should the Contractor change the existing striping pattern, the Contractor is to restripe the roadway back to its original configuration after a certain period of time especially if no work is anticipated for a period of time (i.e. Winter shutdown).

PAVEMENT EDGE DROP-OFFS

Pavement edge drop-offs will be protected by a lane or shoulder closure. Lane closures will be protected with plastic drums, vertical panels, or barricades as shown on the Standard Drawings.

Pavement edges that traffic is not expected to cross, except accidentally, shall be treated as follows:

2” and less – Protect with a lane closure.

Greater than 4” – Pavement Repair areas – In areas where pavement is to be removed, work should proceed continuously so that traffic is exposed to a drop-off for the minimum amount of time necessary to bring the pavement back up to existing grade. Barrel spacing should be 20 feet and appropriate lighting should be utilized to illuminate the area during nighttime operations.

Approximate proposed full depth base failure repair locations are listed in the proposal. The Engineer will determine the exact location at the time of construction. Once removal of pavement at a particular repair location has begun, work continuously to complete the work and eliminate the “hole”.

TRAFFIC COORDINATOR

Designate an employee to be traffic coordinator. The designated Traffic Coordinator must be certified by the American Traffic Safety Services Association (ATSSA). The Traffic Coordinator will inspect the project maintenance of traffic once daily, including weekends, during the Contractor's operations and at any time a lane closure is in place. The Traffic Coordinator will report all incidents throughout the work zone to the Engineer on the project. The Contractor will furnish the name and telephone number where the Traffic Coordinator can be contacted at all times.

During any period when a lane closure is in place, the Traffic Coordinator will arrange for personnel

to be present on the project at all times to inspect the traffic control, maintain the signing and devices, and relocate portable changeable message boards as queue lengths change. The personnel will have access on the project to a radio or telephone to be used in case of emergencies or accidents.

COORDINATION OF WORK

The Contractor is advised that other projects may be in progress within or in the near vicinity of this project. The traffic control of those projects may affect this project and the traffic control of this project may affect those projects. The Contractor will coordinate the work on this project with the work of the other contractors. In case of conflict, the Engineer will determine the relative priority to give to work phasing on the various projects.

CONTRACTOR'S AND CONTRACTOR'S EMPLOYEES' VEHICLES

Do not use or allow employees to use median crossovers at any time except when inside lanes are closed for construction. In all other phases of construction, change vehicular direction of travel only at interchanges.

COUNTY OF	ITEM #
Scott	7-2044

I75
MAINTENANCE OF TRAFFIC
TYPICAL SECTIONS

NOTE: The middle lane in both directions shall be done at night from 9pm to 5am when traffic can be reduced to one lane in each direction. Base failure repairs can also be done at this time. The diagrams below assume the middle lane is milled 2" and the first lift of surface is placed in the middle lane before Phase II and the last lift of surface is placed in the middle lane prior to Phase III.

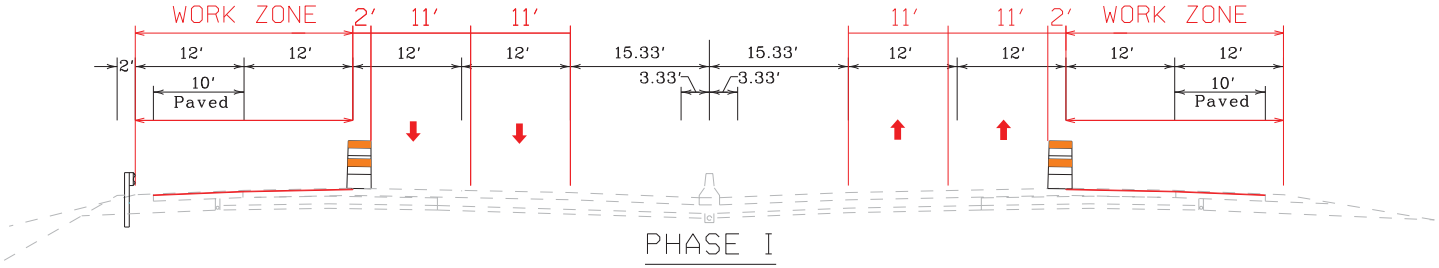

PHASE I

The outside lane and shoulder will be closed in both directions. Place any necessary full depth and 5" base failure repairs in the work zone as directed by the Engineer. Mill 2" and Pave the first lift of asphalt surface 0.75" in the work zone as shown in the typical sections. Place temporary striping in accordance with MUTCD and KYTC Standard Drawings.

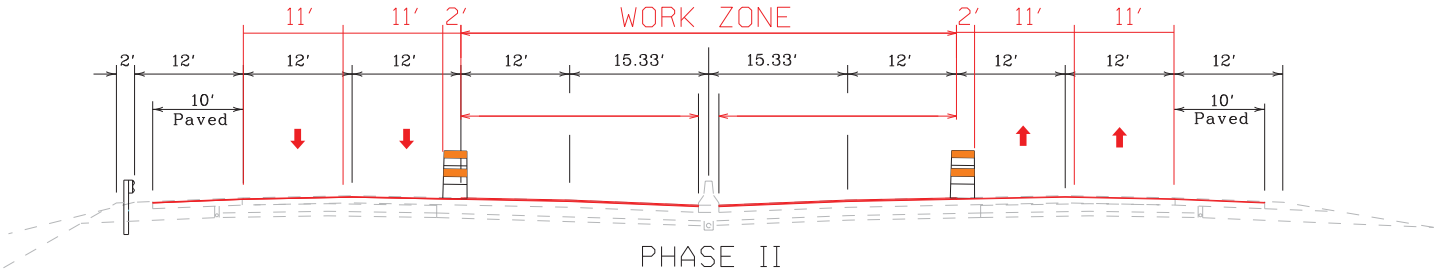

PHASE II

The inside lanes and shoulders will be closed in both directions. Place any necessary full depth and 5" base failure repairs in the work zone as directed by the Engineer. Mill and Pave the asphalt surface 2" in the work zone as shown in the typical sections. Place striping and inlaid pavement markers in accordance with MUTCD and KYTC Standard Drawings. Saw inside shoulder rumble strips and complete guardrail and median work.

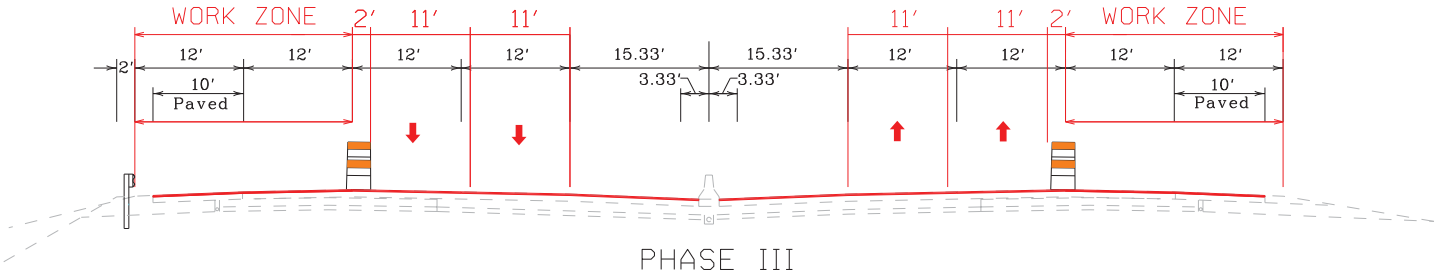

PHASE III

The outside lane and shoulder will be closed in both directions. Place the final lift of asphalt surface 1.25" in the work zone as shown in the typical sections. Place striping and inlaid pavement markers in accordance with MUTCD and KYTC Standard Drawings. Saw outside shoulder rumble strips and complete guardrail.

NOTE: The US 460 and US 62 southern ramps shall be paved on the weekend. One ramp can be closed at a time per weekend from Friday at 8pm through Monday at 5am to complete the work. Place Asphalt Millings and Seal Coat as directed by the Engineer to address shoulder drop-offs.

NOT TO SCALE

I75
MOT TYPICAL SECTIONS

REFERENCES

1. Kentucky Transportation Cabinet, Department of Highways, Standard Specifications for Road and Bridge Construction, Edition of 2012.

2. FHWA Manual on Uniform Traffic Control Devices (MUTCD), latest edition.

3*. Active Sepia List

Drawing No.	Drawing Name
001	Delineators at Narrow Shoulder Bridges
002	Delineators For Guardrail
007	Guardrail End Treatment Type 2A
008	Guardrail Components
011	Shoulder Rumble Strips
012	Steel Beam Guardrail (“W” Beam)
013	Guardrail Posts
014	Guardrail Connector to Bridge End Type A and A-1 Components
015	Guardrail Connector to Concrete Median Barrier End
018	Flexible Delineator Post Arrangements for Horizontal Curves
019	Flexible Delineator Post Arrangements for Interchange Ramps and Crossovers

4*. Kentucky Department of Highways Standard Drawings, current editions, as applicable:

RGS-002-05 Superelevation for Multilane Pavement
RGX-001-05 Miscellaneous Standards Part I
RGX-060 Breakaway Sign Support System For Type C Beam
RGX-061 Footing Details For Type C Beam
RGX-065 Type D Breakaway Sign Support
RGX-200 One Point Proctor Family of Curves
TPM-105-02 Pavement Marker Arrangements Multi-Lane Roadways (Use inlaid in lieu of Type 5 pavement markers)
TPM-125 Pavement Marker Arrangement Exit Gore and Off-Ramp (Use inlaid in lieu of Type 5 pavement markers)
TPM-130 Pavement Marker Arrangement On-Ramp with Tapered Acceleration Lane (Use inlaid in lieu of Type 5 pavement markers)
TPM-135 Pavement Marker Arrangement On-Ramp with Parallel Acceleration Lane (Use inlaid in lieu of Type 5 pavement markers)
TTC-115 Lane Closure Multi-Lane Highway Case I
TTD-110 Post Splicing Detail
TTD-120 Work Zone Speed Limit and Double Fine Signs
TTD-125 Pavement Condition Warning Signs
TTS-120 Mobile Operation for Durable Striping Case I
RBB-001-07 Guardrail and Bridge End Drainage For Single Structures
RBB-002-08 Guardrail and Bridge End Drainage For Twin Structures
RBB-003-02 Layout of Guardrail At Twin Structures (Depressed Median)
RBB-010-04 Guardrail Transition From Normal Shoulder To Narrow Bridge
RBC-001-10 Guardrail Connector to Bridge End Type A and A-1

RBC-002-02 Guardrail Connector to Bridge End Type A Components

RBI-001-10 Typical Guardrail Installations
RBI-002-06 Typical Guardrail Installations
RBI-004-04 Installation of Guardrail End Treatment Type 1
RBI-005-07 Guardrail Installation at Bridge Columns
RBR-010-05 Guardrail Terminal Sections

RBR-016-04 Guardrail Posts
RBR-020-04 Guardrail End Treatment Type 1
RBR-020-05 Guardrail End Treatment Type 1

RBR-030-04 Guardrail End Treatment Type 3

RDP-001-05 Perforated Pipe Types and Cover Heights
RDP-005-04 Perforated Pipe For Subgrade Drainage On Two-Lane (Class 2) and Multi-Lane Roads
RDP-006-03 Perforated Pipe Underdrains
RDP-007-03 Perforated Pipe Details (Solid Rock)
RDP-010-08 Perforated Pipe Headwalls
RGS-001-06 Curve Widening and Superelevation Transitions
RPM-001-03 Permanent U-Turn Median Opening
TTC-135-01 Shoulder Closure
TTC-155-01 Temporary Pavement Marker Arrangements For Construction Zones
TTC-160-01 Temporary Pavement Marker Arrangements For Lane Closures
TTS-100-01 Mobile Operation For Paint Striping Case I
TTS-105-01 Mobile Operation For Paint Striping Case II
TTS-110-01 Mobile Operation For Paint Striping Case III
TTS-115-01 Mobile Operation For Paint Striping Case IV
TTS-120-01 Mobile Operation For Durable Striping Case I
TTS-125-01 Mobile Operation For Durable Striping Case II
TTS-130-01 Mobile Operation For Durable Striping Case III
TTS-135-01 Mobile Operation For Durable Striping Case IV

5*. Kentucky Transportation Cabinet, Department of Highways, Standard Specifications for Road and Bridge Construction, Edition of 2012 - Supplemental Specifications, as applicable:

Special Note 1I Portable Changeable Message Signs (6/15/2012)
Special Note Typical Section Dimensions
Special Note Before You Dig
Special Provision For Waste and Borrow Sites
Special Note For Longitudinal Pavement Joint Adhesive
Special Note Fixed Completion Date and Liquidated Damages
Special Note For Asphalt Milling and Texturing
Special Note For Erosion Prevention and Sediment Control

*Note: This is a partial list that may be applicable to this project

SPECIAL NOTE FOR TYPICAL SECTION DIMENSIONS

I75

The dimensions shown on the typical sections for pavement and shoulder widths are nominal or typical dimensions. The actual dimensions to be constructed may be varied to fit existing conditions as directed or approved by the Engineer. It is not intended that existing pavement or shoulders be widened unless specified elsewhere in the Proposal.

1I

SPECIAL NOTE FOR PORTABLE CHANGEABLE MESSAGE SIGNS

This Special Note will apply when indicated on the plans or in the proposal.

1.0 DESCRIPTION. Furnish, install, operate, and maintain variable message signs at the locations shown on the plans or designated by the Engineer. Remove and retain possession of variable message signs when they are no longer needed on the project.

2.0 MATERIALS.

2.1 General. Use LED Variable Message Signs Class I, II, or III, as appropriate, from the Department's List of Approved Materials.

Unclassified signs may be submitted for approval by the Engineer. The Engineer may require a daytime and nighttime demonstration. The Engineer will make a final decision within 30 days after all required information is received.

2.2 Sign and Controls. All signs must:

1) Provide 3-line messages with each line being 8 characters long and at least 18 inches tall. Each character comprises 35 pixels.
2) Provide at least 40 preprogrammed messages available for use at any time. Provide for quick and easy change of the displayed message; editing of the message; and additions of new messages.
3) Provide a controller consisting of:
   a) Keyboard or keypad.
   b) Readout that mimics the actual sign display. (When LCD or LCD type readout is used, include backlighting and heating or otherwise arrange for viewing in cold temperatures.)
   c) Non-volatile memory or suitable memory with battery backup for storing pre-programmed messages.
   d) Logic circuitry to control the sequence of messages and flash rate.
4) Provide a serial interface that is capable of supporting complete remote control ability through land line and cellular telephone operation. Include communication software capable of immediately updating the message, providing complete sign status, and allowing message library queries and updates.
5) Allow a single person easily to raise the sign to a satisfactory height above the pavement during use, and lower the sign during travel.
6) Be Highway Orange on all exterior surfaces of the trailer, supports, and controller cabinet.
7) Provide operation in ambient temperatures from -30 to + 120 degrees Fahrenheit during snow, rain and other inclement weather.
8) Provide the driver board as part of a module. All modules are interchangeable, and have plug and socket arrangements for disconnection and reconnection. Printed circuit boards associated with driver boards have a conformable coating to protect against moisture.
9) Provide a sign case sealed against rain, snow, dust, insects, etc. The lens is UV stabilized clear plastic (polycarbonate, acrylic, or other approved material) angled to prevent glare.
10) Provide a flat black UV protected coating on the sign hardware, character PCB, and appropriate lens areas.

1I

11) Provide a photocell control to provide automatic dimming.
12) Allow an on-off flashing sequence at an adjustable rate.
13) Provide a sight to aim the message.
14) Provide a LED display color of approximately 590 nm amber.
15) Provide a controller that is password protected.
16) Provide a security device that prevents unauthorized individuals from accessing the controller.
17) Provide the following 3-line messages preprogrammed and available for use when the sign unit begins operation:

/KEEP/RIGHT/⇒⇒⇒/
/KEEP/LEFT/⇐⇐⇐/
/LOOSE/GRAVEL/AHEAD/
/RD WORK/NEXT/**MILES/
/TWO WAY/TRAFFIC/AHEAD/
/PAINT/CREW/AHEAD/
/REDUCE/SPEED/**MPH/
/BRIDGE/WORK/***0 FT/
/MAX/SPEED/**MPH/
/SURVEY/PARTY/AHEAD/
/MIN/SPEED/**MPH/
/ICY/BRIDGE/AHEAD/ /ONE LANE/BRIDGE/AHEAD/
/ROUGH/ROAD/AHEAD/
/MERGING/TRAFFIC/AHEAD/
/NEXT/***/MILES/
/HEAVY/TRAFFIC/AHEAD/
/SPEED/LIMIT/**MPH/
/BUMP/AHEAD/
/TWO/WAY/TRAFFIC/

*Insert numerals as directed by the Engineer.
Add other messages during the project when required by the Engineer.

2.3 Power.

1) Design solar panels to yield 10 percent or greater additional charge than sign consumption. Provide direct wiring for operation of the sign or arrow board from an external power source to provide energy backup for 21 days without sunlight and an on-board system charger with the ability to recharge completely discharged batteries in 24 hours.

3.0 CONSTRUCTION. Furnish and operate the variable message signs as designated on the plans or by the Engineer. Ensure the bottom of the message panel is a minimum of 7 feet above the roadway in urban areas and 5 feet above in rural areas when operating. Use Class I, II, or III signs on roads with a speed limit less than 55 mph. Use Class I or II signs on roads with speed limits 55 mph or greater.

Maintain the sign in proper working order, including repair of any damage done by others, until completion of the project. When the sign becomes inoperative, immediately repair or replace the sign. Repetitive problems with the same unit will be cause for rejection and replacement.

Use only project related messages and messages directed by the Engineer, unnecessary messages lessen the impact of the sign. Ensure the message is displayed in either one or 2 phases with each phase having no more than 3 lines of text. When no message is needed, but it is necessary to know if the sign is operable, flash only a pixel.

When the sign is not needed, move it outside the clear zone or where the Engineer directs. Variable Message Signs are the property of the Contractor and shall be removed from the project when no longer needed. The Department will not assume ownership of these signs.

1I

4.0 MEASUREMENT. The final quantity of Variable Message Sign will be the actual number of individual signs acceptably furnished and operated during the project. The Department will not measure signs replaced due to damage or rejection.

5.0 PAYMENT. The Department will pay for the Variable Message Signs at the unit price each. The Department will not pay for signs replaced due to damage or rejection. Payment is full compensation for furnishing all materials, labor, equipment, and service necessary to, operate, move, repair, and maintain or replace the variable message signs. The Department will make payment for the completed and accepted quantities under the following:

Code	Pay Item	Pay Unit
02671	Portable Changeable Message Sign	Each

Effective June 15, 2012

SPECIAL NOTE
UTILITIES

BEFORE YOU DIG

The contractor is instructed to call 1-800-752-6007 to reach KY 811, the one-call system for information on the location of existing underground utilities. The call is to be placed a minimum of two (2) and no more than ten (10) business days prior to excavation. The contractor should be aware that owners of underground facilities are not required to be members of the KY 811 one-call Before-U-Dig (BUD) service. The contractor must coordinate excavation with the utility owners, including those whom do not subscribe to KY 811. It may be necessary for the contractor to contact the County Court Clerk to determine what utility companies have facilities in the area.

COORDINATION WITH UTILITY FACILITY OWNERS

The Roadway Contractor will be responsible for contacting all utility facility owners on the subject project to have existing facilities located in the field. The Roadway Contractor will coordinate his activities with the utility facility owners to minimize and, where possible, avoid conflicts with utility facilities. Where conflicts with utility facilities are unavoidable the Roadway Contractor will coordinate any necessary relocation work with the facility owner.

PROTECTION OF UTILITY FACILITIES

The location of utilities provided in the contact document has been furnished by the facility owners and/or by reviewing record drawings and may not be accurate. It will be the Roadway Contractor's responsibility to locate the utilities before excavating by calling the various utility owners and by examining any supplemental information supplied by the Cabinet. If necessary, the Roadway Contractor shall determine the exact location and elevation of utilities by hand digging to expose utilities before excavating in the area of the utility. The cost for repair and any other associated costs for any damage to utilities caused by the Roadway Contractor's operation shall be borne by the Roadway Contractor.

SPECIAL PROVISION FOR WASTE AND BORROW SITES

The contractor is advised that it is their responsibility to gain U.S. Army Corp of Engineer's approval before utilizing a waste or borrow site that involves "Waters of the United States". "Waters of the United States" are defined as perennial or intermittent streams, ponds or wetlands. Ephemeral streams are also considered jurisdictional waters, and are typically dry except during rainfall, but have a defined drainage channel. Questions concerning any potential impacts to "Waters…" should be brought to the attention of the appropriate District Office for the Corps of Engineers for a determination, prior to disturbance. Any fees associated with obtaining approval from the U.S. Army Corp of Engineer or other appropriate regulatory agencies for waste and borrow sites is the responsibility of the contractor.

01/01/2009

Special Note for Fixed Completion Date and Liquidated Damages
Scott County
Item No. 7-2040

Contrary to Section 108.09, Liquidated Damages of $5,000 per calendar day will be assessed for each day work remains uncompleted beyond the Specified Completion Date. This project has a Fixed Completion Date of October 15, 2014.

In addition to the Liquidated Damages specified in Section 108.09, Liquidated Damages in the following amounts will be charged when a lane closure remains in place during the prohibited period outlined in the Traffic Control Plan:

$3,000 for the first hour or fraction thereof
$5,000 any additional hour or fraction thereof

Contrary to Section 108.09 of the Standard Specifications, **the disincentive fee will be charged during those periods when seasonal limitations of the Contract prohibit the Contractor from working on a controlling item or operation. This includes the months from December through March.**

All liquidated damages will be applied cumulatively.

All other applicable portions of Section 108 apply.

SPECIAL NOTE FOR LONGITUDINAL PAVEMENT JOINT ADHESIVE

1. DESCRIPTION. This specification covers the requirements and practices for applying an asphalt adhesive material to the longitudinal joint of the surface course of an asphalt pavement. Apply the adhesive to the face of longitudinal joint between driving lanes for the first lane paved. Then, place and compact the adjacent lane against the treated face to produce a strong, durable, waterproof longitudinal joint.

2. MATERIALS, EQUIPMENT, AND PERSONNEL.

2.1 Joint Adhesive. Provide material conforming to Subsection 2.1.1 or 2.1.2.

2.1.1 Provide an adhesive conforming to the following requirements:

Property	Specification	Test Procedure
Viscosity, 400 ° F (Pa·s)	4.0 – 10.0	ASTM D 3236
Cone Penetration, 77 ° F	60 – 100	ASTM D 5329
Flow, 140 ° F (mm)	5.0 max.	ASTM D 5329
Resilience, 77 ° F (%)	30 min.	ASTM D 5329
Ductility, 77 ° F (cm)	30.0 min.	ASTM D 113
Ductility, 39 ° F (cm)	30.0 min.	ASTM D 113
Tensile Adhesion, 77 ° F (%)	500 min.	ASTM D 5329
Softening Point, ° F	171 min.	AASHTO T 53
Asphalt Compatibility	Pass	ASTM D 5329

Ensure the temperature of the pavement joint adhesive is between 380 and 410 °F when the material is extruded in a 0.125-inch-thick band over the entire face of the longitudinal joint.

2.1.2 Provide an adhesive conforming to the following requirements:

Property	Specification	Test Procedure
Softening Point[1],° F	176 min.	AASHTO T 53
Cone Penetration[2], 77 ° F	20-60	ASTM D 5329
Flow[1], 140 ° F (mm)	5.0 max.	ASTM D 5329
Tensile Adhesion, 77 ° F (%)	500 min.	ASTM D 5329
Asphalt Compatibility	Pass	ASTM D 5329
Resilience[2], 77 ° F (%)	30 min.	ASTM D 5329
Slump Test[1], 300 ° F (mm)	2.0 max.	ASTM D 2202

[1]Cold sample forced into molds at 325 º F.
[2]Field sample extruded into mold at application temperature.

Ensure the temperature of the pavement joint adhesive is between 300 and 350 °F when the material is extruded in a 0.20 to 0.40-inch-thick band over the entire face of the longitudinal joint.

2.2. Equipment.

2.2.1 Melter Kettle. Provide an oil-jacketed, double-boiler, melter kettle equipped with any needed agitation and recirculating systems.

2.2.2 Applicator System. Provide a pressure-feed-wand applicator system with an applicator shoe attached.

2.3 Personnel. Ensure a technical representative from the manufacturer of the pavement joint adhesive is present during the initial construction activities and available upon the request of the Engineer.

3. CONSTRUCTION.

3.1 Surface Preparation. Prior to the application of the pavement joint adhesive, ensure the face of the longitudinal joint is thoroughly dry and free from dust or any other debris that would inhibit adhesion. Clean the joint face by the use of compressed air. Ensure this preparation process occurs shortly before application to prevent the return of debris on the joint face.

3.2 Pavement Joint Adhesive Application. Ensure the ambient temperature is a minimum of 40 ^{o} F during the application of the pavement joint adhesive. Prior to applying the adhesive, demonstrate competence in applying the adhesive according to this note to the satisfaction of the Engineer. Heat the adhesive in the melter kettle to the specified temperature range. Pump the adhesive from the melter kettle through the wand onto the vertical face of the cold joint. Apply the adhesive in a continuous band over the entire face of the longitudinal joint. Do not use excessive material in either thickness or location. Ensure the edge of the extruded adhesive material is flush with the surface of the pavement. Then, place and compact the adjacent lane against the joint face. Remove any excessive material extruded from the joint after compaction (a small line of material may remain).

3.3 Pavement Joint Adhesive Certification. Furnish the joint adhesive's certification to the Engineer stating the material conforms to all requirements herein prior to use.

3.4 Sampling and Testing. The Department will require a random sample of pavement joint adhesive from each manufacturer's lot of material. Extrude two 5 lb. samples of the heated material and forward the sample to the Division of Materials for testing. Reynolds oven bags, turkey size, placed inside small cardboard boxes or cement cylinder molds have been found suitable. Ensure the product temperature is 400°F or below at the time of sampling.

4. MEASUREMENT. The Department will measure the quantity of Pavement Joint Adhesive in linear feet. The Department will not measure for payment any extra

materials, labor, methods, equipment, or construction techniques used to satisfy the requirements of this note. The Department will not measure for payment any trial applications of Pavement Joint Adhesive, the cleaning of the joint face, or furnishing and placing the adhesive. The Department will consider all such items incidental to the Pavement Joint Adhesive.

5. PAYMENT. The Department will pay for the Pavement Joint Adhesive at the Contract unit bid price and apply an adjustment for each manufacturer's lot of material based on the degree of compliance as defined in the following schedule. When a sample fails on two or more tests, the Department may add the deductions, but the total deduction will not exceed 100 percent.

Pavement Joint Adhesive Price Adjustment Schedule						
Test	Specification	100% Pay	90% Pay	80% Pay	50% Pay	0% Pay
Joint Adhesive Referenced in Subsection 2.1.1						
Viscosity, 400 º F (Pa•s)			3.0-3.4	2.5-2.9	2.0-2.4	≤1.9
ASTM D 3236	4.0-10.0	3.5-10.5	10.6-11.0	11.1-11.5	11.6-12.0	≥ 12.1
Cone Penetration, 77 º F			54-56	51-53	48-50	≤ 47
ASTM D 5329	60-100	57-103	104-106	107-109	110-112	≥ 113
Flow, 140 º F (mm) ASTM D 5329	≤ 5.0	≤ 5.5	5.6-6.0	6.1-6.5	6.6-7.0	≥ 7.1
Resilience, 77 º F (%) ASTM D 5329	≥ 30	≥ 28	26-27	24-25	22-23	≤ 21
Tensile Adhesion, 77 º F (%) ASTM D 5329	≥ 500	≥ 490	480-489	470-479	460-469	≤ 459
Softening Point, º F AASHTO T 53	≥ 171	≥ 169	166-168	163-165	160-162	≤ 159
Ductility, 77 º F (cm) ASTM D 113	≥ 30.0	≥ 29.0	28.0-28.9	27.0-27.9	26.0-26.9	≤ 25.9
Ductility, 39 º F (cm) ASTM D 113	≥ 30.0	≥ 29.0	28.0-28.9	27.0-27.9	26.0-26.9	≤ 25.9
Joint Adhesive Referenced in Subsection 2.1.2						
Flow, 140 ° F (mm) ASTM D 5329	≤ 5	5.1-5.2	5.3-5.4	5.5-5.6	5.7-5.8	≥5.9
Resilience, 77 ° F (%) ASTM D 5329	≥ 30	29	28-27	26-25	24-23	≤ 22
Softening Point, º F AASHTO T 53	≥ 176	≥ 174	171-173	168-170	165-167	≤ 164
Cone Penetration, 77 ° F ASTM D 5329			16-17	14-15	12-13	≤ 11
	20-60	18-62	63-64	65-66	67-68	≥ 69
Tensile Adhesion, 77 º F (%) ASTM D 5329	≥ 500	≥ 490	480-489	470-479	460-469	≤ 459
Slump Test, 300 º F (mm) ASTM D 2202	≤ 2.0	≤ 2.5	2.6-3.0	3.1-3.5	3.6-4.0	≥ 4.1
Asphalt Compatibility, ASTM D 5329	Pass					

Code	Pay Item	Pay Unit
20071EC	Joint Adhesive	Linear Foot

June 8, 2004

SPECIAL NOTE FOR
ASPHALT MILLING AND TEXTURING

Asphalt Millings from the project are to be placed in shoulder drop-off areas as directed by the Engineer. The remaining Asphalt Millings from the project shall become the property of the Contractor.

SPECIAL NOTE FOR INLAID PAVEMENT MARKERS (EXPERIMENTAL)

I. DESCRIPTION.

Except as provided herein, perform all work in accordance with the Department's Standard and Supplemental Specifications and applicable Standard and Sepia Drawings, current editions. Article references are to the Standard Specifications. This work shall consist of:

(1) Maintain and Control Traffic; and (2) Furnish and install Inlaid Pavement Markers (IPMs) in recessed grooves; and (3) Any other work as specified by these notes and the Contract.

II. MATERIALS.

The Department will sample all materials in accordance with the Department's Sampling Manual. Make the materials available for sampling a sufficient time in advance of the use of the materials to allow for the necessary time for testing unless otherwise specified in these Notes.

A. Maintain and Control Traffic. See Traffic Control Plan.

B. Markers. Use Marker One Model R-100 or approved equal mono-directional white, bi-directional yellow, and mono-directional yellow type markers. Provide reflective lenses with depth control breakaway positioning tabs. Before furnishing the markers, provide to the Engineer the manufacturer’s current recommendations for adhesives and installation procedures. Use one brand and design throughout the project.

C. Adhesives. Use adhesives that conform to the manufacturer’s recommendations.

III. CONSTRUCTION

A. Experimental Evaluation. The University of Kentucky Transportation Center will be evaluating this experimental installation of IPMs. Notify the Engineer a minimum of 14 calendar days prior to beginning work. The Engineer will coordinate the University’s activities with the Contractor’s work.

B. Maintain and Control Traffic. See Traffic Control Plan.

C. Installation. Install IPMs in recessed grooves cut into the final course of asphalt pavement according to the manufacturer’s recommendations. Do not cut the grooves until the pavement has cured sufficiently to prevent tearing or raveling. Remove all dirt, grease, oil, loose or unsound layers, and any other material from the marker area which

would reduce the bond of the adhesive. Maintain pavement surfaces in a clean condition until placing markers.

Prepare the pavement surfaces, and install the markers in the recessed groove according to the manufacturer's recommendations. Ensure that the adhesive bed area is equal to the bottom area of the marker, and apply adhesive in sufficient quantity to force excess out around the entire perimeter of the marker. Use materials, equipment, and construction procedures that ensure proper adhesion of the markers to the pavement surface according to the manufacturer's recommendations. Remove all excess adhesive from in front of the reflective faces. If any adhesive or foreign matter cannot be removed from the reflective faces, or if any marker fails to properly adhere to the pavement surface, remove and replace the marker at no additional cost to the Department.

D. Location and Spacing. Install the markers in the pattern for High Reflectivity Option with two (2) IPMs per groove. Locate and space markers as shown on the drawing. Do not install markers on bridge decks. Do not install a marker on top of a pavement joint or crack. Offset the recessed groove a minimum of 2 inches from any longitudinal pavement joint or crack and at least one inch from the painted stripe, ensuring that the finished line of markers is straight with minimal lateral deviation. Give preference to maintaining the 2-inch offset between recessed groove and joint as opposed to keeping the line of markers straight.

Place inlaid markers as much in line with existing pavement striping as possible. Place markers installed along an edge line or channelizing line so that the near edge of the plastic housing is no more than one inch from the near edge of the line. Place markers installed along a lane line between and in line with the dashes. Do not place markers over the lines except where the lines deviate visibly from their correct alignment, and then only after obtaining the Engineer's prior approval of the location.

If conflicts between recessed groove placement in relation to pavement joint and striping cannot be resolved, obtain the Engineer's approval to eliminate the marker or revise the alignment.

E. Disposal of Waste. Dispose of all removed asphalt pavement, debris, and other waste at sites off the right of way obtained by the Contractor at no additional cost to the Department. See Special Note for waste and Borrow.

F. Restoration. Be responsible for all damage to public and/or private property resulting from the work. Restore all damaged features in like kind materials and design at no additional cost to the Department.

G. On-Site Inspection. Make a thorough inspection of the site prior to submitting a bid and be thoroughly familiar with existing conditions so that the work can be expeditiously performed after a contract is awarded. The Department will consider submission of a bid as evidence of this inspection having been made and will not honor any claims for money or grant Contract time extensions resulting from site conditions.

H. Caution. Do not take information shown on the drawings and in this proposal and the types and quantities of work listed as an accurate or complete evaluation of the material and conditions to be encountered during construction, but consider the types and quantities of work listed as approximate only. The bidder must draw his own conclusion as to the conditions encountered. The Department does not give any guarantee as to the accuracy of the data and no claim will be considered for additional compensation or extension of Contract time if the conditions encountered are not in accordance with the information shown.

IV. MEASUREMENT

A. Maintain and Control Traffic. See Traffic Control Plan.

B. Inlaid Pavement Markers. The Department will measure only the bid items listed. The Department will measure the quantity of IPMs of each type by individual marker, each. The Department will not measure grooving pavement, removal of asphalt cuttings and debris, preheating pavement to remove moisture, adhesives, or lenses, but shall be incidental to the Inlaid Pavement Markers.

V. PAYMENT

A. Maintain and Control Traffic. See Traffic Control Plan.

B. Inlaid Pavement Markers. The Department will make payment for the completed and accepted quantity of IPMs Markers at the Contract unit price, each. Accept payment as full compensation for all labor, equipment, materials, and incidentals to accomplish this work to the satisfaction of the Engineer. The all markers shall be paid as “INLAID PAVEMENT MARKER”. The bid item “INLAID PAVEMENT MARKER” shall be used regardless of the color and type of lenses required.

Special Note For:
Erosion Prevention and Sediment Control
I75; Scott County

The Contractor shall be responsible for filing the Kentucky Pollution Discharge Elimination System (KPDES) KYR10 permit Notice of Intent (NOI) with the Kentucky Division of Water (DOW) and any KPDES local Municipal Separate Storm Sewer System (MS4) program that has jurisdiction. The NOI shall name the contractor as the Facility Operator and include the KYTC Contract ID Number (CID) for reference.

The Contractor shall perform all temporary erosion/sediment control functions including: providing a Best Management Practice (BMP) Plan, conducting required inspections, modifying the BMP plan documents as construction progresses and documenting the installation and maintenance of BMPs in conformance with the KPDES KYR10 permit effective on August 1, 2009 or a permit re-issued to replace that KYR10 permit. This work shall be conducted in conformance with the requirements of Section 213 of KYTC 2008 Department of Highways, Standard Specifications for Road and Bridge Construction.

Contrary to Section 213.03.03, paragraph 2, the Engineer shall conduct inspections as needed to verify compliance with Section 213 of KYTC 2008 Department of Highways, Standard Specifications for Road and Bridge Construction. The Engineer's inspections shall be performed a minimum of once per month and within seven days after a storm of ½ inch or greater. Copies of the Engineer's inspections shall not be provided to the contractor unless improvements to the BMP's are required. The contractor shall initiate corrective action within 24 hours of any reported deficiency and complete the work within 5 days. The Engineer shall use Form TC 63-61 A for this report. Inspections performed by the Engineer do not relieve the Contractor of any responsibility for compliance with the KPDES permit.

Contrary to Section 213.05, bid items for temporary BMPs will not be listed and will be replaced with one lump sum item for the services. Payment will be pro-rated based on the Project Schedule as submitted by the Contractor and as agreed to by the Engineer.

The contractor shall be responsible for applying "good engineering practices" as required by the KPDES permit. The contractor may use any temporary BMPs with the approval of the KYTC Engineer.

The contractor shall provide the Engineer copies of all documents required by the KPDES permit at the time they are prepared.

The contractor shall be responsible for the examination of the soils to be encountered and make his own independent determination of the temporary BMPs that will be required to accomplish effective erosion prevention and sediment control.

The Contractor shall be responsible for filing the KPDES permit Notice of Termination (NOT) with the Kentucky DOW and any local MS4 program that has jurisdiction. The NOT shall be filed after the Engineer agrees that the project is stabilized or the project has been formally accepted.

Payment: Payment will by lump sum under the bid item "K.P.D.E.S. PERMIT & TEMPORARY EROSION CONTROL".

GUARDRAIL DELIVERY VERIFICATION SHEET

CONTRACT ID _____

DESCRIPTION	UNIT	QUANTITIES FIELD VERIFIED	QUANTITIES DELIVERED
GUARDRAIL STEEL W BEAM	LF		
GUARDRAIL STEEL THRIE BEAM	LF		
GUARDRAIL THRIE BEAM-W BEAM CONNECTOR	EA		
GUARDRAIL TERMINAL SECTION No. 1	EA		
GUARDRAIL TERMINAL SECTION No. 2	EA		
GUARDRAIL TERMINAL SECTION No. 3	EA		
GUARDRAIL THRIE BEAM TERMINAL SECTION	EA		
CRASH CUSHION TYPE VI	EA		
CRASH CUSHION TYPE VII	EA		
CRASH CUSHION TYPE IX/IX-A	EA		
GUARDRAIL END TREATMENT TYPE 1	EA		
GUARDRAIL END TREATMENT TYPE 2A	EA		
GUARDRAIL END TREATMENT TYPE 3	EA		
GUARDRAIL END TREATMENT TYPE 4A	EA		
GUARDRAIL END TREATMENT TYPE 7	EA		
GUARDRAIL CONNECTOR TO BRIDGE END TYPE A/A-1	EA		
GUARDRAIL CONNECTOR TO BRIDGE END TYPE E/E-1	EA		
GUARDRAIL CONNECTOR TO BRIDGE END TYPE C	EA		
GUARDRAIL CONNECTOR TO BRIDGE END TYPE D	EA		
GUARDRAIL CONNECTOR TO CONC MED PIER	EA		
GUARDRAIL CONNECTOR TO CONC SHLDR PIER	EA		
GUARDRAIL POSTS-STEEL	EA		
GUARDRAIL OFFSET BLOCK TYPE 4	EA		
GUARDRAIL OFFSET BLOCK STEEL	EA		
GUARDRAIL OFFSET BLOCK THRIE BEAM	EA		
GUARDRAIL BACK-UP PLATE W BEAM	EA		
GUARDRAIL BACK-UP PLATE THRIE BEAM	EA		
GUARDRAIL NUTS, BOLTS, & WASHERS	BAG		

NOTES:

1. Dispose of concrete foundations and timber posts off the Right-of-Way at sites obtained by the Contractor at no additional cost to the Department.
2. Salvage and deliver removed guardrail system components, other than concrete foundations and timber posts, according to Section 719.03.07.
3. Prior to removing the materials from the project site, obtain the Contractor's and Engineer's representativ's signatures.
4. Upon delivery, obtain the Bailey Bridge Lot's representative's signature and submit this completed form to the Engineer.
5. The Department will not measure removed guardrail components for payment without completed delivery verification sheet(s).

	PRINTED NAME	SIGNATURE	DATE
RESIDENT ENGINEER'S REPRESENTATIVE			
CONTRACTOR'S REPRESENTATIVE			
BAILEY BRIDGE LOT'S REPRESENTATIVE			

447 COMPACTION OF ASPHALT MIXTURES

WILL ACCEPT THE COMPACTION OF ASPHALT MIXTURES FURNISHED FOR DRIVING LANES AND RAMPS AT ONE INCH (25 MM) OR GREATER ON THIS PROJECT BY OPTION A ACCORDING TO SUBSECTIONS 402 AND 403 OF THE CURRENT STANDARD SPECIFICATIONS. USE JOINT CORES AS DESCRIBED IN SUBSECTION 402.03.02 FOR SURFACE MIXTURES ONLY. WILL ACCEPT THE COMPACTION OF ALL OTHER ASPHALT MIXTURES BY OPTION B.

SCOTT CO. I-75 m.p. 121.65
STATION 291

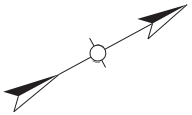

SENSOR LOCATIONS ARE SCHEMATIC ONLY AND SHALL BE DETERMINED IN THE FIELD AND APPROVED BY DIVISION OF PLANNING PERSONNEL PRIOR TO ANY CONSTRUCTION. SENSORS AND HOME RUNS SHALL BE INSTALLED SUCH THAT ALL SLOTS AVOID EXPANSION JOINTS.

ALL LOOPS SHALL BE 6'X6' SQUARE AND SHALL BE INSTALLED 16' FROM LEADING EDGE TO LEADING EDGE AS SHOWN. PIEZOELECTRIC SENSORS (PIEZOS) SHALL BE INSTALLED 5' FROM THE EDGE OF LOOPS WITH THE EDGE OF EACH PIEZO FLUSH WITH THE EDGE OF THE CORRESPONDING DRIVING LANE. LOOPS AND PIEZOS SHALL BE INSTALLED SPLICE-FREE TO THE CABINET AND A MINIMUM OF 2' OF WIRE FOR EACH SENSOR SHALL BE COILED AND LABELED INSIDE EACH JUNCTION BOX AND CABINET. DIVISION OF PLANNING PERSONNEL WILL CONNECT THE LOOPS AND PIEZOS INSIDE THE CABINETS.

INSTALL ONE (1) 1¼" CONDUIT FROM EACH SAW SLOT TO NEAREST JUNCTION BOX.

INSTALL TWO (2) TYPE A JUNCTION BOXES (JB A1 AND A2).

INSTALL TWO (2) 20"X20"X8" CABINET MOUNTED TO TWO (2) WOOD POSTS EACH.

REMOVE EX. EQUIPMENT NOT TO BE REUSED (6"x6"x4" CABINETS, JUNCTION BOX(ES), CONDUIT, ETC.) AND DISPOSE OF OFF THE PROJECT.

CODED NOTE:

(1) INSTALL ONE (1) 2" CONDUIT.

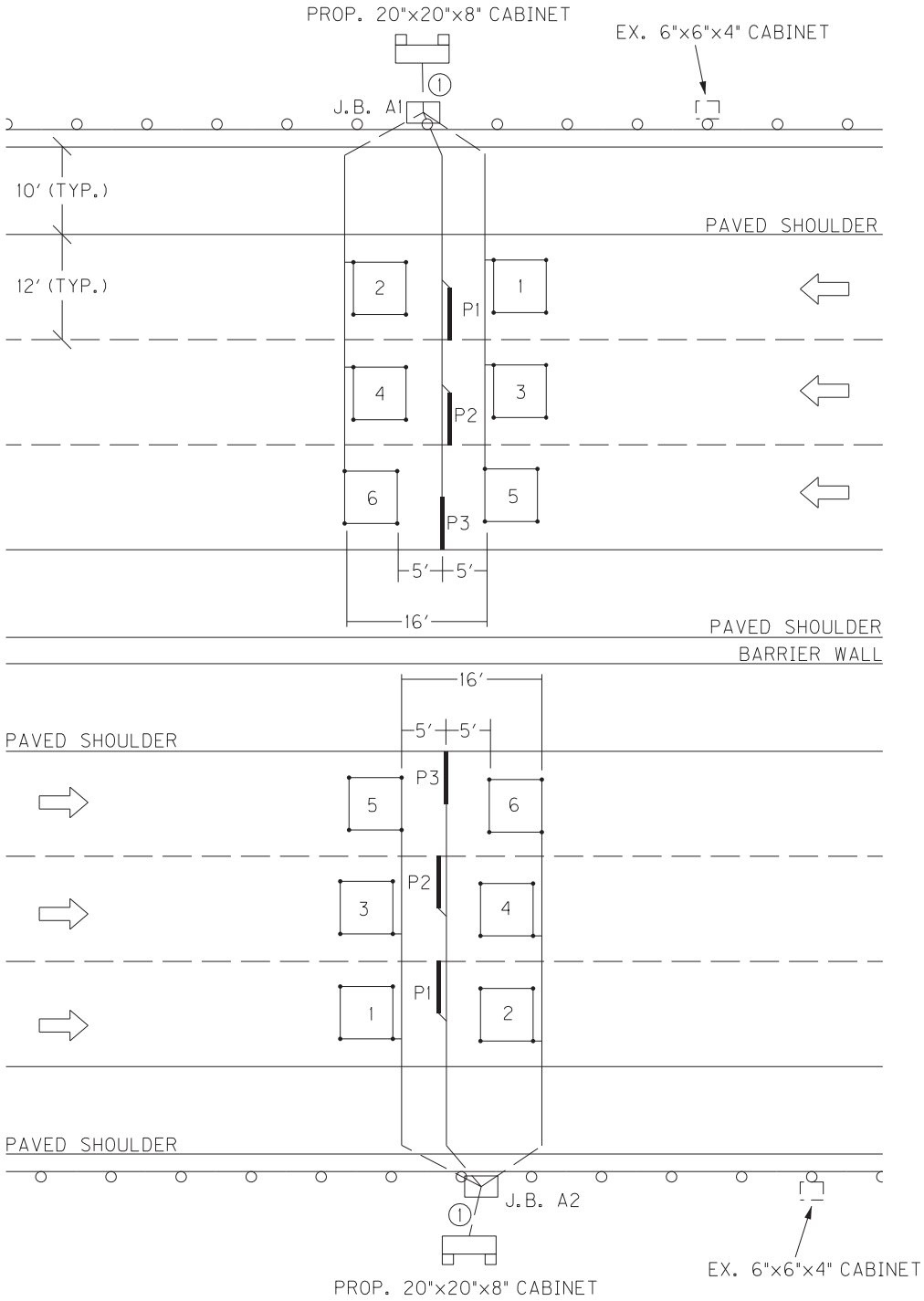

SCALE 1"=10'

SCOTT CO. I-75 m.p. 124.87
STATION 283

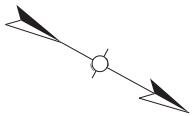

SENSOR LOCATIONS ARE SCHEMATIC ONLY AND SHALL BE DETERMINED IN THE FIELD AND APPROVED BY DIVISION OF PLANNING PERSONNEL PRIOR TO ANY CONSTRUCTION. SENSORS AND HOME RUNS SHALL BE INSTALLED SUCH THAT ALL SLOTS AVOID EXPANSION JOINTS.

ALL LOOPS SHALL BE 6'X6' SQUARE AND SHALL BE INSTALLED 16' FROM LEADING EDGE TO LEADING EDGE AS SHOWN. PIEZOELECTRIC SENSORS (PIEZOS) SHALL BE INSTALLED 5' FROM THE EDGE OF LOOPS WITH THE EDGE OF EACH PIEZO FLUSH WITH THE EDGE OF THE CORRESPONDING DRIVING LANE. LOOPS AND PIEZOS SHALL BE INSTALLED SPLICE-FREE TO THE CABINET AND A MINIMUM OF 2' OF WIRE FOR EACH SENSOR SHALL BE COILED AND LABELED INSIDE EACH JUNCTION BOX AND CABINET. DIVISION OF PLANNING PERSONNEL WILL CONNECT THE LOOPS AND PIEZOS INSIDE THE CABINETS.

INSTALL ONE (1) 1¼" CONDUIT FROM EACH SAW SLOT TO NEAREST JUNCTION BOX.

INSTALL TWO (2) TYPE A JUNCTION BOXES (JB A1 AND A2).

INSTALL TWO (2) 20"X20"X8" CABINET MOUNTED TO TWO (2) WOOD POSTS EACH.

REMOVE EX. EQUIPMENT NOT TO BE REUSED (20"x20"x8" CABINETS, JUNCTION BOX(ES), CONDUIT, ETC.) AND DISPOSE OF OFF THE PROJECT.

CODED NOTE:

(1) INSTALL ONE (1) 2" CONDUIT.

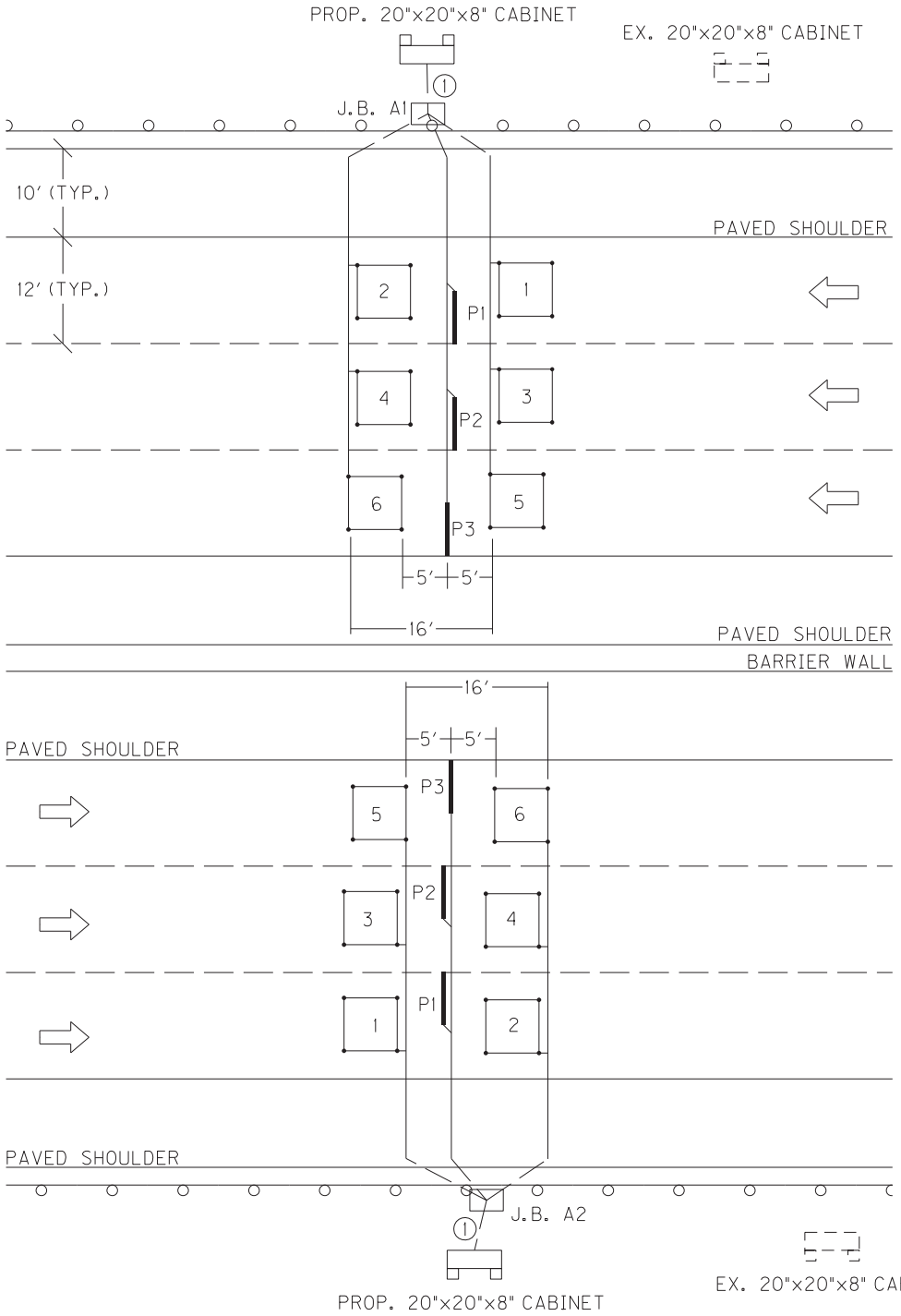

SCALE 1"=20'

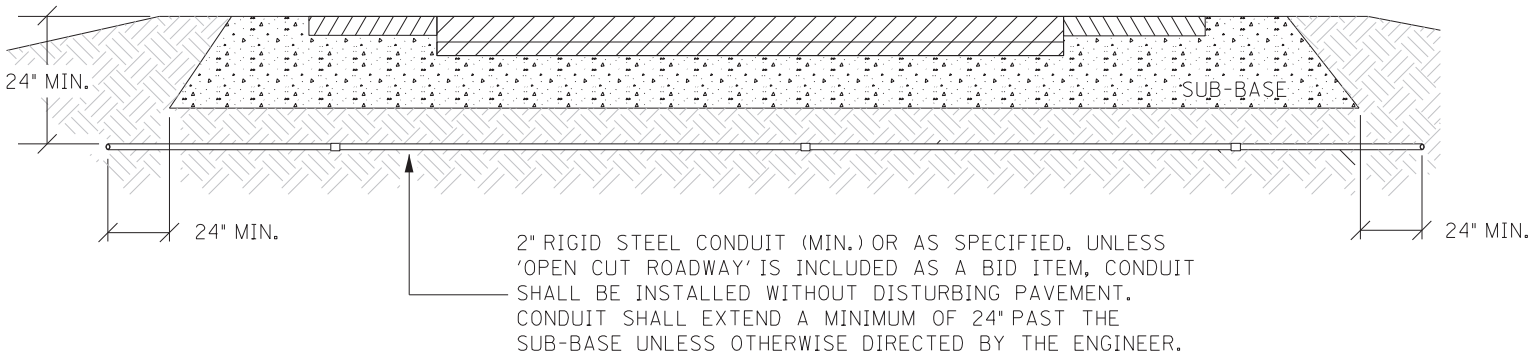

CONDUIT UNDER PAVEMENT

TOTAL TRENCH WIDTH SHALL BE 3" (NOM.) WIDER THAN THE SUM OF THE OUTSIDE DIAMETER(S) OF THE CONDUIT(S) INSTALLED. CONDUIT(S) SHALL BE CENTERED IN TRENCH.

CONTRACTOR SHALL PLACE BACKFILL IN LIFTS (9" MAX.) COMPACT BACKFILL, AND RESTORE DISTURBED AREA TO THE SATISFACTION OF THE ENGINEER

CONTRACTOR SHALL INSTALL UNDERGROUND UTILITY WARNING TAPE ABOVE CONDUIT AS SHOWN.

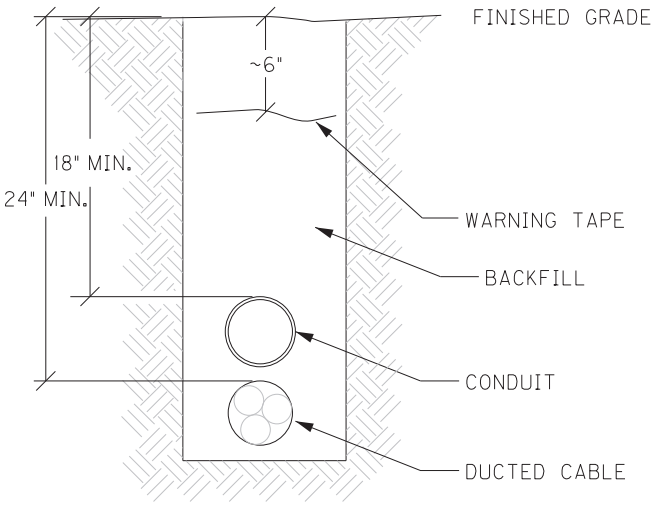

CONDUIT TRENCH

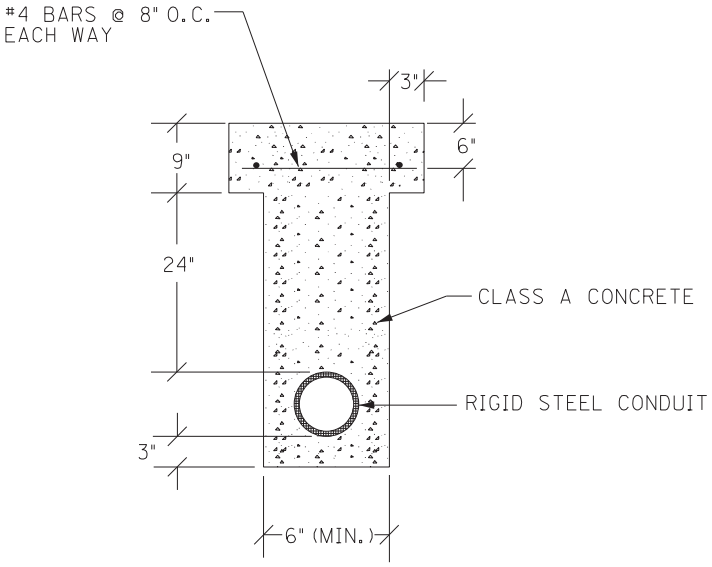

OPEN CUT PAVEMENT DETAIL

CONDUIT INSTALLATION

NOT TO SCALE

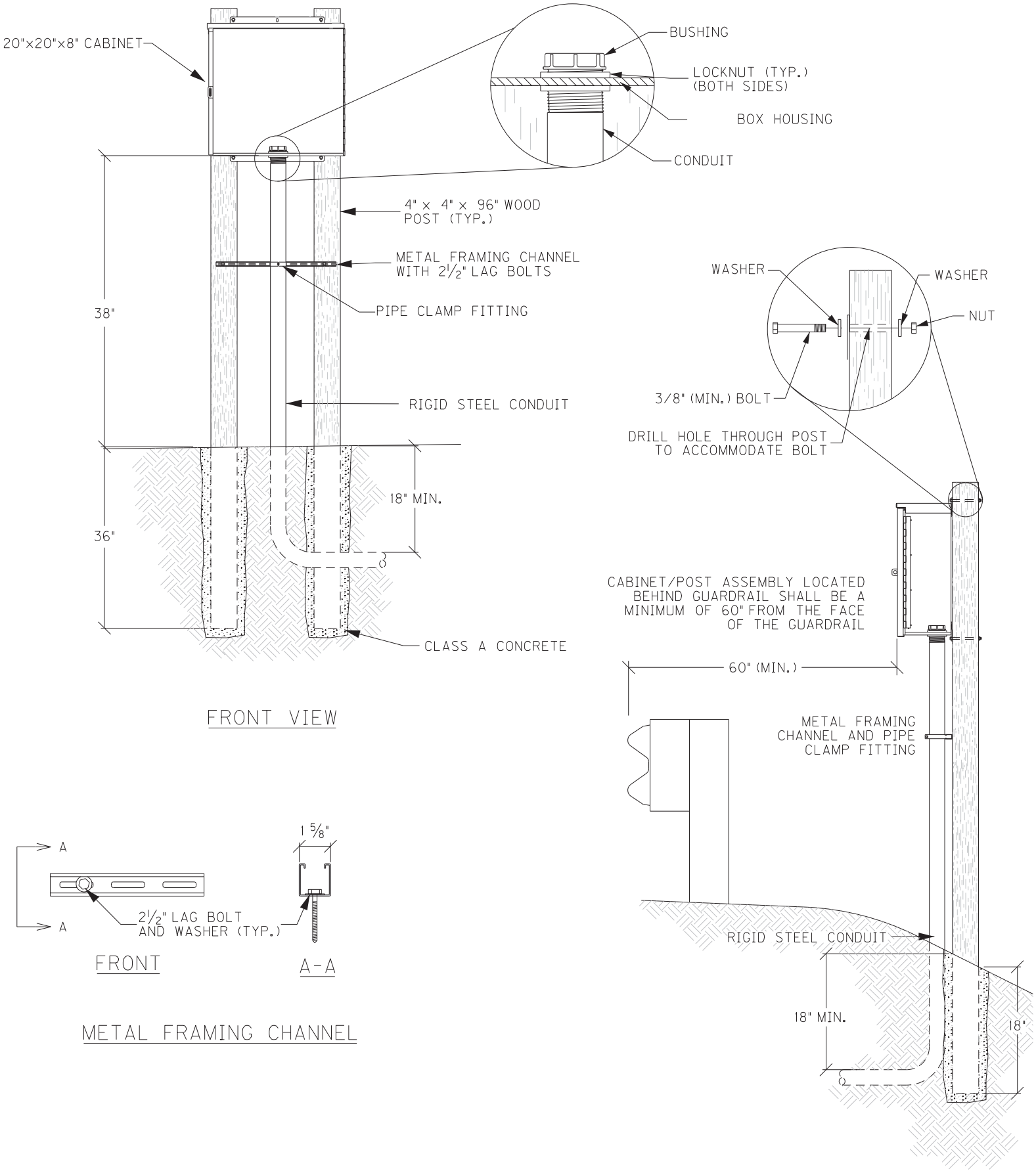

GALVANIZED STEEL CABINET DOUBLE POST ASSEMBLY

NOT TO SCALE

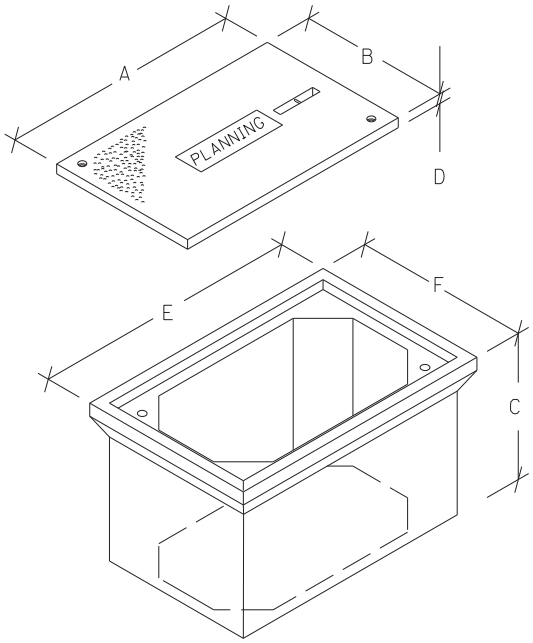

JUNCTION BOX DIMENSIONS (NOMINAL)						
	A	B	C	D*	E	F
TYPE A	23"	14"	18"	2"	25"	16"
TYPE B	18"	11"	12"	1¾"	20"	13"
TYPE C	36"	24"	30"	3"	38"	26"

* MINIMUM
STACKABLE BOXES ARE PERMITTED

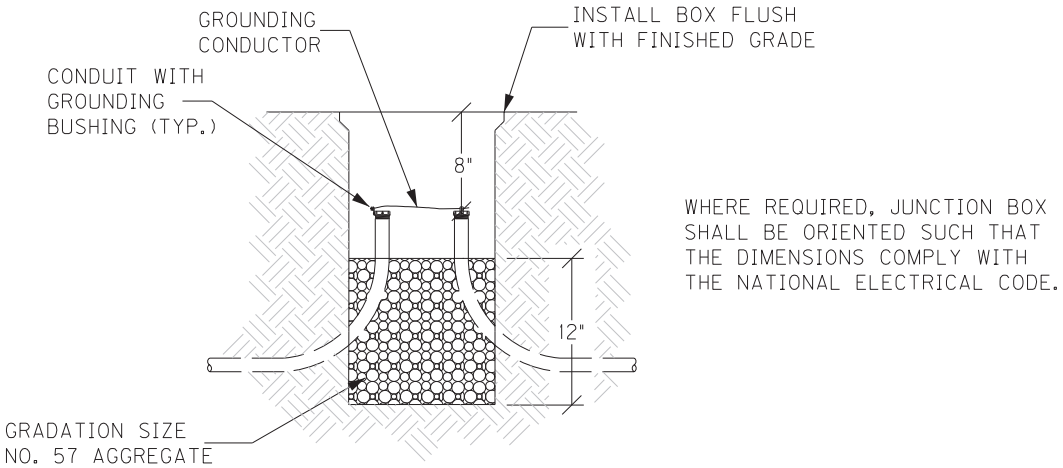

WHERE REQUIRED, JUNCTION BOX SHALL BE ORIENTED SUCH THAT THE DIMENSIONS COMPLY WITH THE NATIONAL ELECTRICAL CODE.

ELEVATION

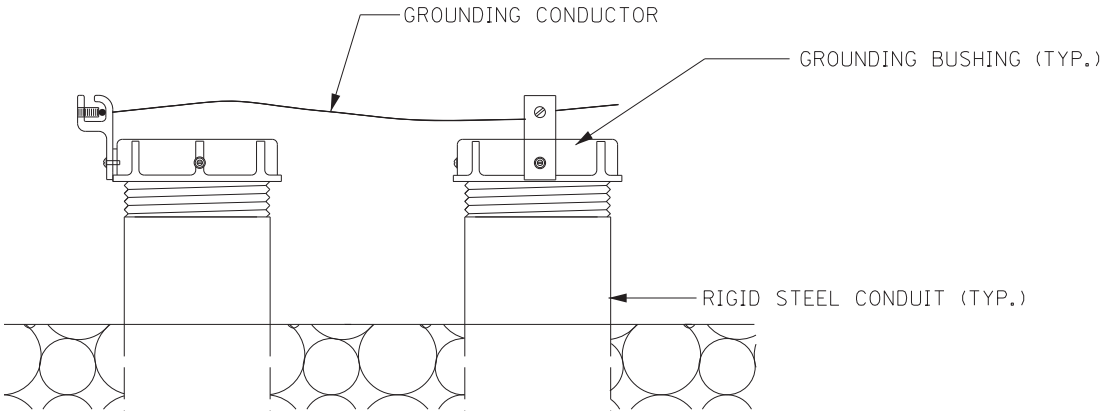

GROUNDING DETAIL

JUNCTION BOX - TYPE A, TYPE B, TYPE C

NOT TO SCALE

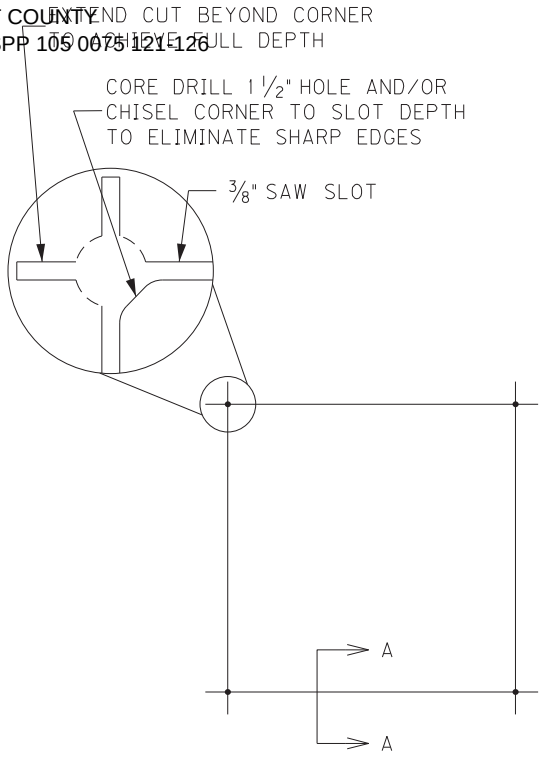

SAW CUT PLAN

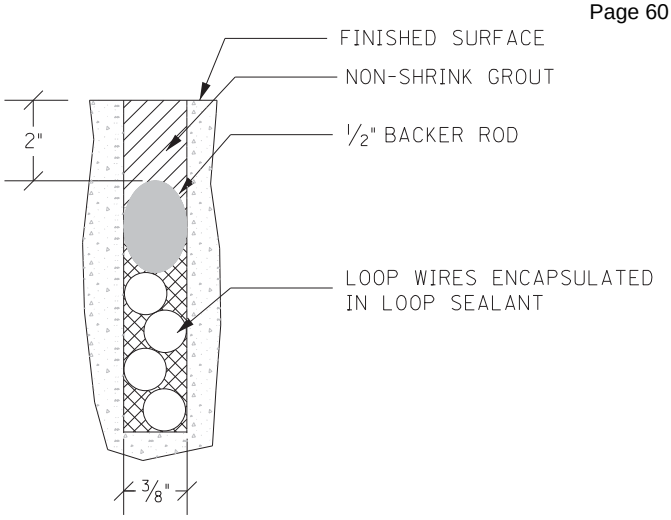

SECTION A-A (CONCRETE)

UNLESS SPECIFIED OTHERWISE, ALL LOOPS SHALL BE 6' x 6' SQUARE, CENTERED IN EACH LANE, WITH FOUR TURNS OF 14 AWG LOOP WIRE.

ADJACENT SAW SLOTS SHALL BE A MINIMUM OF 12" APART.

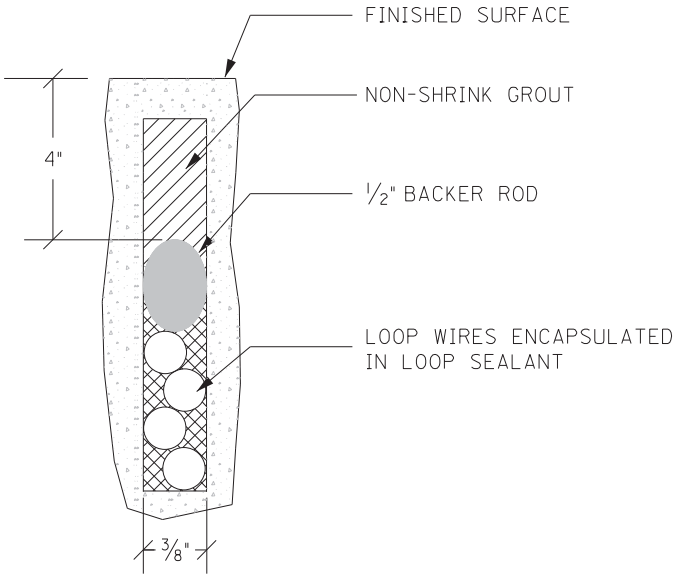

SECTION A-A (ASPHALT)

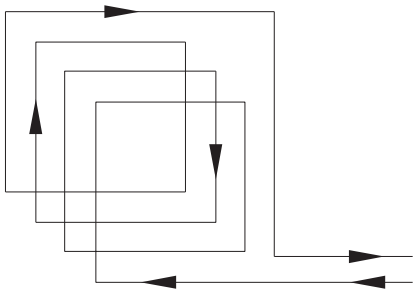

WIRING PLAN

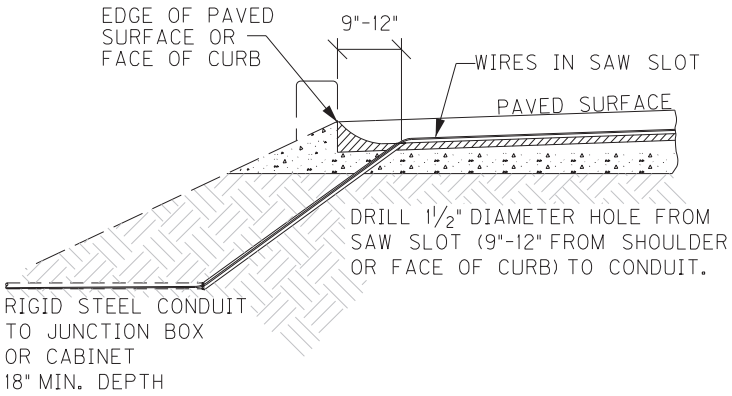

SAW SLOT EDGE OF PAVEMENT TRANSITION

INDUCTIVE LOOP DETECTOR

NOT TO SCALE

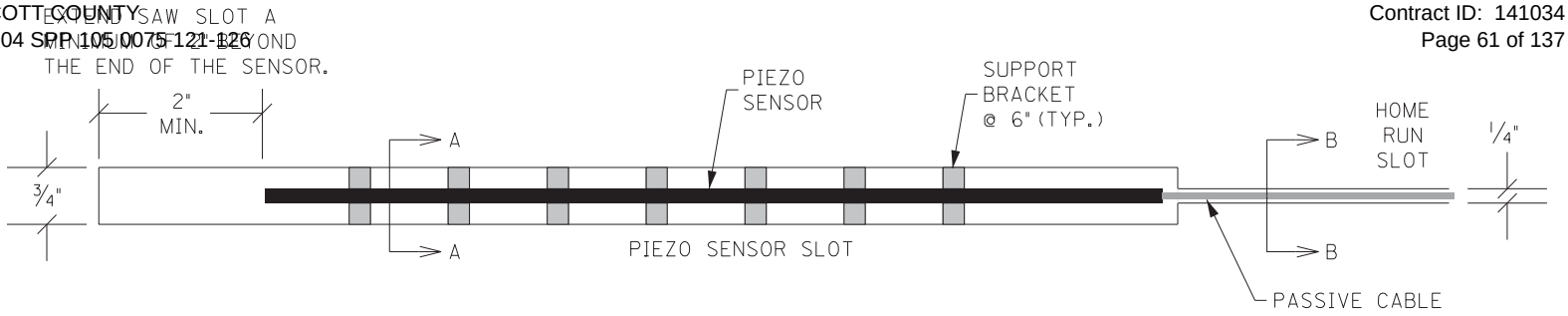

PLAN

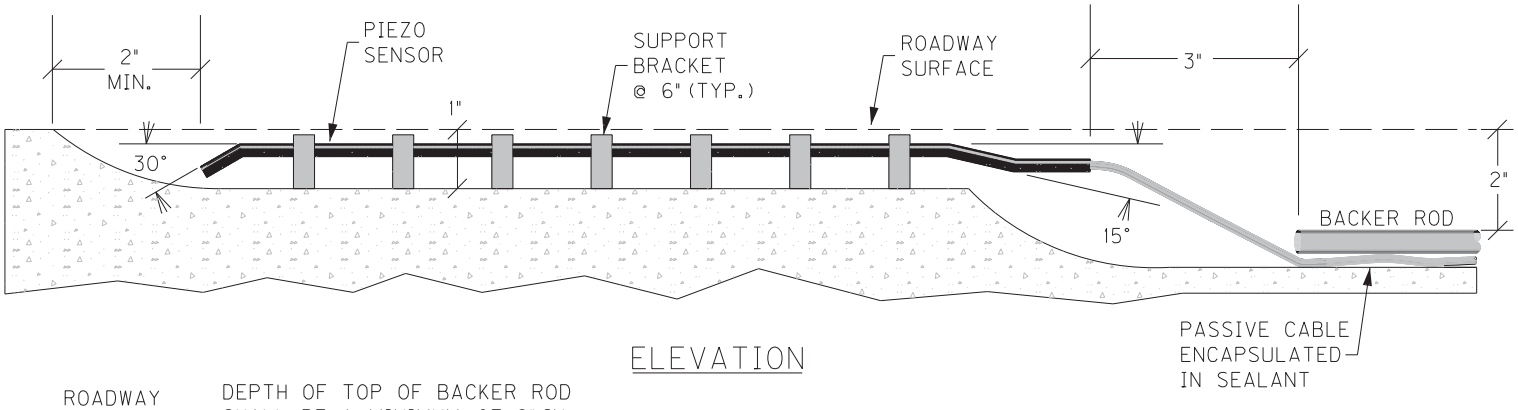

ELEVATION

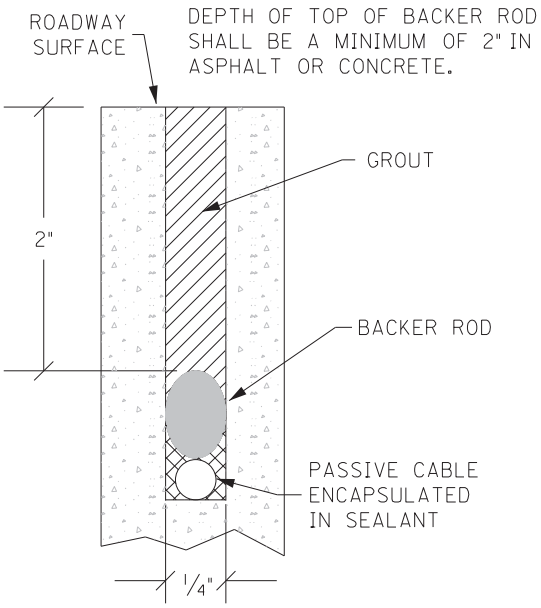

SECTION B-B

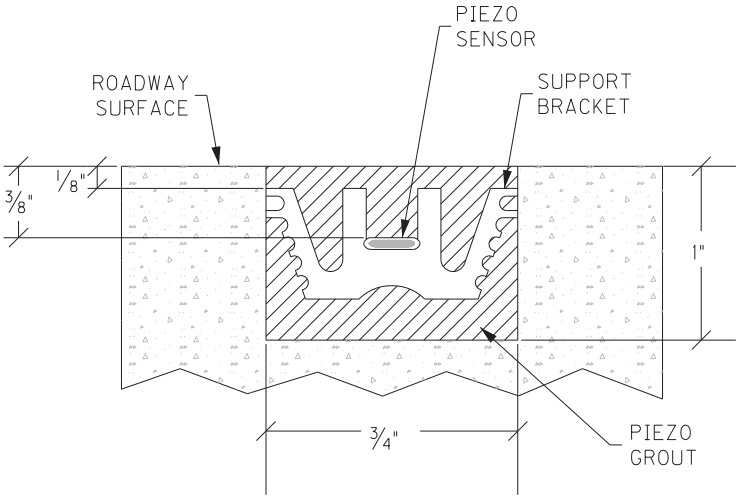

SECTION A-A

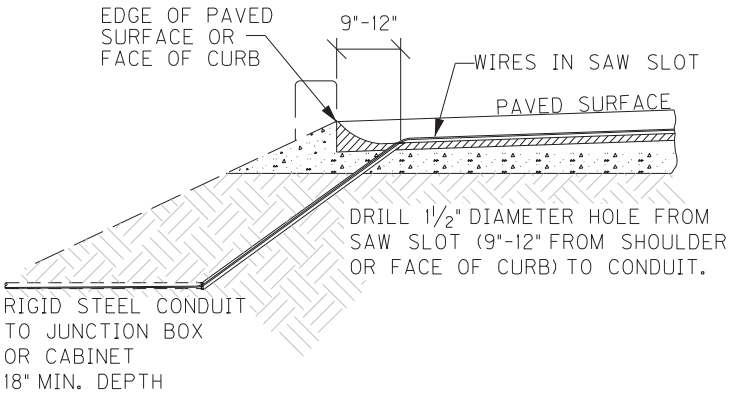

SAW SLOT EDGE OF PAVEMENT TRANSITION

PIEZOELECTRIC SENSOR INSTALLATION

NOT TO SCALE

PERMANENT TRAFFIC DATA ACQUISITION STATIONS
ESTIMATE OF QUANTITIES

Bid Item Code	Description	Unit	Quantity
2562	SIGNS	SQ FT	
2650	MAINTAIN AND CONTROL TRAFFIC	LP SUM	
2775	FLASHING ARROW	EACH	
4791	CONDUIT ¾ INCH	LIN FT	
4793	CONDUIT 1 ¼ INCH	LIN FT	80
4795	CONDUIT 2 INCH	LIN FT	60
4810	JUNCTION BOX	EACH	
4811	JUNCTION BOX TYPE B	EACH	
4820	TRENCHING AND BACKFILLING	LIN FT	120
4821	OPEN CUT ROADWAY	LIN FT	
4829	PIEZOELECTRIC SENSOR	EACH	12
4830	LOOP WIRE	LIN FT	5200
4850	CABLE NO. 14/1 PAIR	LIN FT	
4871	POLE – 35’ WOODEN	EACH	
4895	LOOP SAW SLOT AND FILL	LIN FT	1080
4899	ELECTRICAL SERVICE	EACH	
20213EC	INSTALL PAD MOUNT ENCLOSURE	EACH	
20359EC	GALV STEEL CABINET	EACH	4
20360ES818	WOOD POST	EACH	8
20391ES835	JUNCTION BOX TYPE A	EACH	4
20392ES835	JUNCTION BOX TYPE C	EACH	
20468EC	JUNCTION BOX 10x8x4	EACH	
21543EN	BORE AND JACK PIPE – 2 IN	LIN FT	
23206EC	INSTALL CONTROLLER CABINET	EACH	

MATERIAL, INSTALLATION, AND BID ITEM NOTES FOR PERMANENT TRAFFIC DATA ACQUISITION STATIONS

1. DESCRIPTION

Except as specified in these notes, all work shall consist of furnishing and installing all materials necessary for permanent data acquisition station equipment installation(s) and shall be performed in accordance with the current editions of:

- The Contract
- Division of Planning Standard Detail Sheets
- Kentucky Transportation Cabinet, Department of Highways, *Standard Specifications for Road and Bridge Construction*
- Kentucky Transportation Cabinet, Department of Highways, Standard Drawings
- National Fire Protection Association *(NFPA) 70: National Electrical Code*
- Institute of Electrical and Electronic Engineers (IEEE), *National Electrical Safety Code*
- Federal Highway Administration, *Manual on Uniform Traffic Control Devices*
- American Association of State Highway and Transportation Officials (AASHTO), *Roadside Design Guide*.
- Standards of the utility company serving the installation, if applicable

The permanent traffic data acquisition station layout(s) indicate the extent and general arrangement of the proposed installation and are for general guidance. Any omission or commission shown or implied shall not be cause for deviation from the intent of the plans and specifications. Information shown on the plans and in this proposal and the types and quantities of work listed are not to be taken as an accurate or complete evaluation of the material and conditions to be encountered during construction. The bidder must draw his own conclusion as to the conditions encountered. The Department of Highways (Department) does not give any guarantee as to the accuracy of the data and no claim will be considered for additional compensation if the conditions encountered are not in accordance with the information shown. If any modifications of the plans or specifications are considered necessary by the Contractor, details of such modifications and the reasons, therefore, shall be submitted in writing to the Engineer for written approval prior to beginning such modified work.

The Contractor shall contact all utility companies and the district utility agent prior to beginning construction to insure proper clearance and shielding from existing and proposed utilities. The Contractor shall use all possible care in excavating on this project so as not to disturb any existing utilities whether shown on the plans or not shown on the plans. Any utilities disturbed or damaged by the Contractor during construction shall be replaced or repaired to original condition by the Contractor at no cost to the department. If necessary, to avoid existing utilities, the Contractor shall hand dig areas where poles or conduit cross utilities.

The Contractor shall be responsible for all damage to public and/or private property resulting from his work.

The Contractor shall inspect the project site prior to submitting a bid and shall be thoroughly familiarized with existing conditions. Submission of a bid will be considered an affirmation of this inspection having been completed. The Department will not honor any claims resulting from site conditions.

2. MATERIALS

All proposed materials shall be approved prior to being utilized. The Contractor shall submit for material approval an electronic file of descriptive literature, drawings and any requested design data for the proposed materials. After approval, no substitutions of any approved materials may be made without the written approval of the Engineer.

Materials requiring sampling shall be made available a sufficient time in advance of their use to allow for necessary testing.

2.1. Anchoring

2.1.1. Anchor and Anchor Rod

Anchor, except rock anchor, shall be expanding type, with a minimum area of 135 square inches.

Anchor rod shall be galvanized steel, double-eye, have a minimum diameter of 5/8 inches, and a minimum length of 84 inches. Minimum holding capacity shall be 15,400 lbs.

Rock anchor shall be galvanized steel, triple-eye, expanding type, with a minimum diameter of ¾ inch, a minimum 53 inches long, and a minimum tensile strength of 23,000 lb.

2.1.2. Guy Wire and Guy Guard

Guy wire shall be Class A, Zinc-coated, 3/8 inch diameter, high strength grade steel (minimum 10,800 lb.) and galvanized per ASTM A475. Guy guard shall be 8’ long, fully-rounded, yellow, and able to be securely attached to the guy wire.

2.1.3. Strandvise for Guy Wire

Strandvise for guy wire shall be 3/8 inch and rated to hold a minimum of 90% of the rated breaking strength (RBS) of the strand used.

2.2. Asphalt

Asphalt shall be a minimum CL2 Asph Surf 0.38C PG64-22 and conform to the *Standard Specifications for Road and Bridge Construction.*

2.3. Backer Rod

Backer rod shall be ½ inch diameter, closed cell polyethylene foam and shall meet or exceed the following physical properties:

- Density (average): 2.0 lbs/cu.ft. (minimum): ASTM D 1622 test method
- Tensile Strength: 50 PSI (minimum): ASTM D 1623 test method
- Compression Recovery: 90% (minimum): ASTM D 5249 test method
- Water Absorption: 0.03 gm/cc (maximum): ASTM C 1016 test method

2.4. Cabinets

2.4.1. Galvanized Steel Cabinet

Galvanized Steel Cabinet shall be constructed of 16 or 14 gauge galvanized steel and shall meet or exceed the industry standards set forth by UL 50 and NEMA 3R. The finish shall be an ANSI 61 gray polyester powder finish inside and out over the galvanized steel. Cabinet shall have minimum inside dimensions of 20 inches high by 20 inches wide by 8 inches deep.

The cabinet shall be equipped with the following:

- Drip shield top
- Seam-free sides, front, and back, to provide protection in outdoor installations against rain, sleet, and snow
- Hinged cover with 16 gauge galvanized steel continuous stainless steel pin.
- Cover fastened with captive plated steel screws, knob or latch
- Hasp and staple for padlocking
- No gaskets or knockouts
- Back panel for terminal block installation
- Post mounting hardware
- Terminal Blocks

2.4.2. Anchor Bolt for Pad Mounted Cabinet

Anchor bolt for pad mounted cabinet shall be galvanized steel with minimum dimensions of 3/8 inch by 6 inches.

2.5. Concrete

Concrete shall be Class A and conform to the *Standard Specifications for Road and Bridge Construction.*

2.6. Conduit and Conduit Fittings

Conduit and conduit fittings shall be rigid steel unless otherwise specified.

Conduit shall be zinc galvanized inside and out and conform to the NEC, UL Standard 6, and ANSI C-80.1.

Rigid Steel Conduit Fittings shall be galvanized inside and out and conform to the NEC, UL Standard 514B, and ANSI C-80.4. Intermediate Metal Conduit (IMC) will not be approved as an acceptable alternative to rigid steel conduit.

2.7. Conduit sealant

Conduit sealant shall be weather-, mold-, and mildew-resistant and chemically resistant to gasoline, oil, dilute acids and bases. Conduit sealant shall be closed cell type and shall meet or exceed the following properties:

- Cure Time — 20 minutes max.
- Density — 64.4 kg/m3; 6 lbs/ft3
- Compressive Strength (ASTM 1691) — 13.8 MPa; 330 or 300 psi

- Tensile Strength (ASTM 1623) 15.9 MPa; 270 or 250 psi
- Flexural Strength (ASTM D790) 14.5 MPa; 460 or 450 psi
- Service Temperature -20 to 200 F

2.8. Electrical Service Meter Base

Electrical service meter base shall meet or exceed all requirements of the National Electrical Code and the local utility providing the electrical service.

2.9. Electrical Service Disconnect

Electrical service disconnect shall meet or exceed all requirements of the National Electrical Code and the local utility providing the electrical service.

2.10. Flashing Arrow

Flashing Arrow shall conform to the *Standard Specifications for Road and Bridge Construction.*

2.11. Ground Fault Circuit Interrupter (GFCI) Receptacle

Ground Fault Circuit Interrupter Receptacle shall be 2-pole, 3-wire, 20 Amp, 125 Volt, 60 Hz, NEMA 5-20R configuration and meet or exceed the following standards and certifications:

- NEMA WD-1 and WD-6
- UL 498 and 943
- NOM 057
- ANSI C-73

This item shall include a UL listed, 4 inch x4 inch x $2^1/_8$ inch box with ¾ inch side and end knockouts and a 1½ inches deep, single-receptacle cover to house the GFCI receptacle. Box and cover shall be hot rolled, galvanized steel with a minimum thickness of 0.62 inches.

2.12. Grounding

2.12.1. Ground Rod

Ground Rod shall be composite shaft consisting of a pure copper exterior (5 mil minimum) that has been inseparably molten welded to a steel core. Ground Rod shall have a minimum diameter of 5/8 inch, a minimum length of 8 feet and shall be manufactured for the sole purpose of providing electrical grounding.

2.12.2. Ground Rod Clamp

Ground rod shall be equipped with a one piece cast copper or bronze body with a non-ferrous hexagonal head set screw and designed to accommodate a 10 AWG solid through 2 AWG stranded grounding conductor.

2.13. Grout

2.13.1. Grout for Inductive Loop Installation

Grout for inductive loop installation shall be non-shrink, shall meet the requirements of the *Standard Specifications for Road and Bridge Construction*,

and shall be included on the KYTC Division of Materials, *List of Approved Materials*.

2.13.2. Grout for Piezoelectric Sensor Installation

Grout for piezoelectric sensor installation shall be per the piezoelectric sensor manufacturer's recommendation. Grout shall be suitable for installation in both asphalt and Portland cement pavements. Grout shall have a short curing time (tack free in ten minutes; open to traffic in forty minutes; and fully cured within sixty minutes) to prevent unnecessary lane closure time and should be of sufficient consistency to prevent running when applied on road surfaces with a drainage cross slope. Particulate matter within the grout shall not separate or settle and the grout shall not shrink during the curing process.

2.14. Hardware

Except where specified otherwise, all hardware such as nuts, bolts, washers, threaded ends of fastening devices, etc. with a diameter less than 5/8 inch shall be passivated stainless steel, alloy type 316 or type 304. Stainless steel hardware shall meet ASTM F593 and F594 for corrosion resistance. All other nuts and bolts shall meet ASTM A307 and shall be galvanized.

2.14.1. Conduit Strap

Conduit strap shall be double-hole, stainless steel, and sized to support specified conduit. Conduit strap shall attach to wood pole or post with two 2 ¼ inch wood screws.

2.14.2. Mounting Strap for Pole Mount Cabinet

Mounting strap for pole mount cabinet shall be ¾ inch x 0.03 inch stainless steel; equipped with clips or buckles to securely hold strap.

2.14.3. Metal Framing Channel and Fittings

Metal framing channel shall be 1 5/8 inches wide galvanized steel that conforms to ASTM A1011 and ASTM A653. One side of the channel shall have a continuous slot with in-turned edges to accommodate toothed fittings.

Fittings shall be punch pressed from steel plates and conform to ASTM A575 and the physical requirements of ASTM A1011.

2.15. Junction Box

2.15.1. Junction Box Type A, B, or C

Junction Box Type A, B, or C shall meet or exceed ANSI/SCTE 77-2007, Tier 15. Box shall have an open bottom. A removable, non-slip cover marked "PLANNING" shall be equipped with a lifting slot and attached with a minimum of two 3/8 inch stainless steel hex bolts and washers. Type A Box shall have nominal inside dimensions of 13 inches wide by 24 inches long by 18 inches deep. Type B Box shall have nominal inside dimensions of 11 inches wide by 18 inches long by 12

inches deep. Type C Box shall have nominal inside dimensions of 24 inches wide by 36 inches long by 30 inches deep.

2.15.2. Aggregate for Junction Box Type A, B, or C

Aggregate for junction box type A, B, or C shall be gradation size no. 57 and conform to the *Standard Specifications for Road and Bridge Construction.*

2.15.3. Junction Box 10x8x4

Junction Box Type 10x8x4 shall be constructed of a UV-stabilized, nonmetallic material or non-rusting metal and be weatherproof in accordance with NEMA 4X. Box shall be equipped with an overhanging door with a continuous durable weatherproof gasket between the body and door. Door shall be hinged with stainless steel screws, hinge(s) and pin(s) and shall be equipped with a stainless steel padlockable latch on the side opposite the hinge(s). Junction Box 10x8x4 shall have minimum inside dimensions of 10 inches high by 8 inches wide by 4 inches deep.

2.16. Maintain and Control Traffic

Materials for the bid item Maintain and Control Traffic shall conform to the *Standard Specifications for Road and Bridge Construction*, and the KYTC Department of Highways *Standard Drawings*.

2.17. Piezoelectric Sensor

Piezoelectric sensor (piezo) shall provide a consistent level voltage output signal when a vehicle axle passes over it, shall have a shielded transmission cable attached, and shall meet the following requirements:

- Dimensions: such that sensor will fit in a ¾ inch wide by 1 inch deep saw cut. Total length shall be 6 feet unless specified otherwise.
- Output uniformity: ± 7% (maximum)
- Typical output level range: 250mV (minimum) from a wheel load of 400 lbs.
- Working temperature range: -40° to 160° F.
- Sensor life: 30 million Equivalent Single Axle Loadings (minimum)

Shielded transmission cable shall be coaxial and shall meet the following requirements:

- RG 58C/U with a high density polyethylene outer jacket rated for direct burial
- Length shall be a minimum of 100 feet. Installations may exceed 100 feet so the piezo shall be supplied with a lead-in of appropriate length so that the cable can be installed splice-free from the piezo to the cabinet.
- Soldered, water resistant connection to the sensor.

One installation bracket for every 6 inches of sensor length shall also be supplied. Piezo shall be a RoadTrax BL Class I or approved equal.

2.18. Saw Slot Sealant

Saw Slot Sealant shall be non-shrink, non-stringing, moisture cure, polyurethane

encapsulant suitable for use in both asphalt and concrete pavements. It shall provide a void-free encapsulation for detector loop cables and adequate compressive yield strength and flexibility to withstand heavy vehicular traffic and normal pavement movement.

The cured encapsulant shall meet or exceed the following:

- Hardness (Indentation): 35-65 Shore A, ASTM D2240
- Tensile Strength: 150 psi minimum, ASTM D412
- Elongation: 125% minimum 2 inch/minute pull, ASTM D412
- Tack-free Drying Time: 24 hours maximum, ASTM C679
- Complete Drying Time: 30 hours maximum, KM 64-447
- Chemical Interactions (seven day cure at room temperature, 24-hour immersion, KM 64-446):
  - Motor Oil: No effect
  - Deicing Chemicals: No effect
  - Gasoline: Slight swell
  - Hydraulic Brake Fluid: No effect
  - Calcium Chloride (5%): No effect

2.19. Seeding and Protection

Material for Seeding and Protection shall be Seed Mixture Type I and conform to the *Standard Specifications for Road and Bridge Construction*.

2.20. Signs

Materials for signs shall conform to the *Standard Specifications for Road and Bridge Construction.*

2.21. Splicing Materials

2.21.1. Electrical Tape

Electrical tape shall be a premium grade, UL-listed, all-weather, vinyl-insulating tape with a minimum thickness of 7 mil. Tape shall be flame retardant and resistant to abrasion, moisture, alkalis, acids, corrosion, and weather (including ultraviolet exposure).

2.21.2. Splice Kit

Splice kit shall be inline resin-type and rated for a minimum of 600V. Resin shall be electrical insulating-type and shall provide complete moisture and insulation resistance.

2.22. Steel Reinforcing Bar

Steel reinforcing bar shall be #5 and shall conform to the *Standard Specifications for Road and Bridge Construction.*

2.23. Terminal Block

Terminal block shall be rated for a minimum of 300 V and have a minimum of six

terminal pairs with 9/16-inch nominal spacing (center to center) for connecting loop and piezoelectric sensor wires to cable assemblies. Terminal block shall have screw type terminal strips to accommodate wire with spade-tongue ends.

2.24. Warning Tape

Warning tape shall be acid and alkali resistant formulated for direct burial. Tape shall be a minimum of 3 inches wide by 4.0 mils (nominal) thick, and shall be permanently imprinted with a minimum 1 inch black legend on a red background warning of an electric line. Tape shall meet or exceed the following industry specifications:

- American Gas Association (AGA) 72-D-56
- American Petroleum Institute (API) RP 1109
- American Public Works Association (APWA) Uniform Color Code
- Department of Transportation (DOT) Office of Pipeline Safety USAS B31.8
- Federal Gas Safety Regulations S 192-321 (e)
- General Services Administration (GSA) Public Buildings Service Guide: PBS 4-1501, Amendment 2
- National Transportation Safety Board (NTSB) PSS 73-1
- Occupational Safety and Health Administration (OSHA) 1926.956 (c) (1)

2.25. Wire and Cable

All cable and wire shall be plainly marked in accordance with the National Electrical Code (NEC).

2.25.1. Loop Wire

Loop wire shall be 14 AWG, stranded, copper, single conductor, and shall conform to the International Municipal Signal Association (IMSA) Specification No. 51-7.

2.25.2. Cable No. 14/1 Pair

Cable No. 14/1 pair loop lead-in cable shall be 14 AWG, stranded, copper paired, electrically shielded conductors, and shall conform to IMSA 19-2.

2.25.3. Grounding conductor

Grounding conductor and bonding jumper shall be solid or stranded, 4 AWG bare copper.

2.25.4. Service Entrance Conductor

Service entrance conductor shall be stranded, copper, Type USE-2, sized as required to comply with the NEC.

2.25.5. Terminal for electrical wire or cable

Terminal for electrical wires or cables shall be insulated, solderless, spade tongue terminals of correct wire and stud size. Terminal for electrical wires or cables shall be incidental to the wire or cable (including piezoelectric sensor transmission cable) to be connected to terminal strips.

2.26. Wood Post

Wood post shall be Southern Pine pretreated to conform to the American Wood Preservers' Association (AWPA) C-14 and shall have minimum dimensions of 4 inches by 4 inches by 8 feet long (for Galvanized Steel Cabinet) or 4 feet long (for Junction Box 10x8x4), sawed on all four sides with both ends square.

2.27. Wooden Pole

Wooden pole shall be a Class IV wood pole of the length specified and shall conform to the *Standard Specifications for Road and Bridge Construction* except the pole shall be treated in accordance with AWPA P9 Type A.

3. CONSTRUCTION METHODS

The plans indicate the extent and general arrangement of the installation and are for guidance. When the Contractor deems any modifications to the plans or specifications necessary, details of such changes and the reasons shall be submitted in writing to the engineer for written approval prior to beginning the modified work.

After the project has been let and awarded, the Division of Construction shall notify the Division of Planning of the scheduled date for a Pre-Construction meeting so that prior arrangements can be made to attend. This will allow the Division of Planning an opportunity to address any concerns and answer any questions that the Contractor may have before beginning the work.

The Division of Planning Equipment Management Team (502-564-7183) shall be notified a minimum of seven days before any work pertaining to these specifications begins to allow their personnel the option to be present during installation.

Unless otherwise specified, installed materials shall be new.

Construction involving the installation of loops or piezoelectric sensors shall not be performed when the temperature of the pavement is less than 38ºF.

A final inspection will be performed by a member of the Central Office Division of Planning equipment staff after the installation is complete to verify that the installation is in compliance with the plans and specifications.

Any required corrective work shall be performed per the *Standard Specifications for Road and Bridge Construction.*

3.1. Anchoring

Furnish: Anchor, anchor rod, guy wire, strand vise, guy guard.

Anchor shall be installed in relatively dry and solid soil. Rock anchor shall be installed in solid rock. Excavate the hole at a 45° to 60° angle in line with the guy (hole size shall be slightly larger than the expanded anchor – see manufacturer's recommendation). Attach rod to anchor, install assembly into hole, and expand anchor. Backfill and tamp entire disturbed area. The effectiveness of the anchor is dependent upon the thoroughness of backfill tamping. Attach guy to strand vise on pole and anchor rod and tighten to required tension. Install guy guard on guy.

3.2. Bore and Jack Pipe – 2"

Furnish: Steel Encasement Pipe, 2"

Bore and jack pipe – 2" shall conform to the Section 706 of the *Standard Specifications for Road and Bridge Construction*.

3.3. Cleanup and Restoration

Furnish: Seed Mix Type 1 (as required); fertilizer (as required); agricultural limestone (as required); mulch or hydromulch (as required); tackifier (as required).

The Contractor shall be responsible for repairing any damage to public and/or private property resulting from his work. Upon completion of the work, restore all disturbed highway features in like kind design and materials. This shall include filling any ruts and leveling ground appropriately. Contractor shall dispose of all waste and debris off the project. Sow all disturbed earthen areas with Seed Mix Type 1 per Section 212 of the *Standard Specifications for Road and Bridge Construction*. All materials and labor necessary for cleanup and restoration shall be considered incidental to other bid items.

3.4. Conduit

Furnish: Conduit; conduit fittings; bushings (grounding where required); LB condulets (as required); weatherheads (as required); conduit straps; hardware; conduit sealant.

Conduit that may be subject to regular pressure from traffic shall be laid to a minimum depth of 24 inches below grade. Conduit that will not be subject to regular pressure from traffic shall be laid to a minimum depth of 18 inches below grade.

Conduit ends shall be reamed to remove burrs and sharp edges. Cuts shall be square and true so that the ends will butt together for the full circumference of the conduit. Tighten couplings until the ends of the conduit are brought together. Do not leave exposed threads. Damaged portions of the galvanized surfaces and untreated threads resulting from field cuts shall be painted with an Engineer-approved, rust inhibitive paint. Conduit bends shall have a radius of no less than 12 times the nominal diameter of the conduit, unless otherwise shown on the plans.

Contractor shall install a bushing (grounding bushing where required) on both ends of all conduits. Cap spare conduits on both ends with caps or conduit sealant.

Conduit openings in junction boxes and cabinets shall be waterproofed with a flexible, removable conduit sealant, working it around the wires, and extending it a minimum 1 inch into the end of the conduit.

After the conduit has been installed and prior to backfilling, the conduit installation shall be inspected and approved by the Engineer.

3.5. Electrical Service

Furnish: Meter base, service disconnect, wire, GFCI AC duplex receptacle with box and cover; conduit, conduit fittings, bushings (grounding where required); LB condulets (as required); weatherhead; conduit straps; hardware; conduit sealant; ground rod with clamp; grounding conductor.

Prior to any construction, the Contractor shall initiate a work order with the local power

company for the installation of electrical service to the site. A representative from the Division of Planning and the local power company shall be consulted prior to choosing an exact location for the pole. The Contractor shall clear the right-of-way for the electrical service drop.

Contractor shall obtain electrical inspections, memberships, meter base, service disconnect and any other requirements by the utility serving the installation and pay all fees as required.

Install meter-base and disconnect panel with a 30-ampere, fused, circuit breaker inside. Install a manufactured weatherproof hub connectors to connect the conduit to the top of the meter base and service disconnect.

Install a rigid ¾ inch conduit with three 8 AWG service conductors from the cabinet, through the service disconnect to the meter base and a 1¼" conduit with three 8 AWG service conductors from the meter base to a weatherhead two feet from the top of the electrical service pole. Install conduit straps 30 inches on center and provide a drip loop where the wire enters the weatherhead. Splice electric drop with service entrance conductors at the top of the pole.

The limit of conduit incidental to "Install Electrical Service" for a pad mounted cabinet is 24 inches beyond face of service pole.

Install a 120-volt, 20-amp GFCI AC duplex receptacle with box and cover in the automatic data recorder (ADR) cabinet.

Install a ground rod with clamp. Install a grounding conductor wire from the meter base, through the disconnect panel, to the ground rod clamp. Install grounding conductor in 1-¾" conduit from service disconnect to ground rod.

After completing the installation and before the electrical service is connected, obtain a certificate of compliance from the Kentucky Department of Housing, Buildings and Construction, Electrical Inspection Division.

3.6. Flashing Arrow

Furnish: Arrow Panel

Construction of Flashing Arrow shall conform to the *Standard Specifications for Road and Bridge Construction.*

3.7. Galvanized Steel Cabinet

Furnish: Cabinet; wood posts; concrete; conduit fittings; metal framing channel; pipe clamp; terminal block(s); spade tongue wire terminals; wire labels; hardware.

Where right-of-way allows, locate the cabinet such that it is outside the clear zone in accordance with the *Roadside Design Guide*. Install Cabinet such that the door of the

cabinet faces the roadway.

Excavate as required and install wood posts to a depth of 36 inches and place concrete around posts as shown on the standard detail sheets. Install metal framing channel with pipe clamp between posts.

Install Cabinet on wood posts 38 inches above the finished grade as shown on the standard detail sheets. Install a unistrut between posts when two posts are specified.

Install the required number of terminal blocks on the cabinet back plate. Install a spade tongue terminal on each loop and piezo sensor wire entering the cabinet and connect wires to terminal block(s). Wiring shall be neat and orderly. Label all wires and cables inside cabinet.

Install conduit from ground to cabinet and attach to pipe clamp. Install locknuts to attach conduit to cabinet and install a conduit bushing as shown on the standard detail sheets.

3.8. Grounding

Furnish: Ground rod with clamp; grounding conductor.

At sites with electrical or solar service, all conduits, poles, and cabinets shall be bonded to ground rods and the electrical system ground to form a complete grounded system.

Install such that top of ground rod is a minimum of 3 inches below finished grade.

Grounding systems shall have a maximum 25 ohms resistance to ground. If the resistance to ground is greater than 25 ohms, two or more ground rods connected in parallel shall be installed. Adjacent ground rods shall be separated by a minimum of 6 feet.

3.9. Install Pad Mount Enclosure

Furnish: Concrete; anchor bolts with washers and nuts; conduit; conduit fittings; conduit grounding bushings; ground rod with clamp; grounding conductor; conduit sealant; wooden stakes (where required); wire labels; hardware.

The Contractor shall be responsible for securing the enclosure from the Central Office Division of Planning Warehouse in Frankfort and transporting it to the installation site.

Where right-of-way allows, locate the enclosure such that it is outside the clear zone in accordance with the *Roadside Design Guide*.

Excavate as required, and place concrete to construct the enclosure foundation as specified on the standard detail sheets. Install enclosure on the concrete base such that the door(s) of the enclosure opens away from traffic (hinges away from traffic). Install anchor bolts, washers, and nuts to secure the enclosure to the foundation.

Install ground rod with clamp and install one ¾ inch rigid conduit from enclosure base to

ground rod. Install a grounding conductor from ground rod to enclosure base and bond to each conduit bushing in the base.

Install one ¾ inch rigid steel conduit for electrical service from the base of the enclosure to 24 inches beyond the concrete base. Make all field wiring connections to the electrical service, as applicable.

If electrical service is not provided as a bid item in the contract, plug conduit on both ends with a cap, conduit sealant, or electrical tape. Mark the location of the buried conduit end with a wooden stake labeled "3/4 in. conduit."

Install specified rigid steel conduit(s) into the base of the enclosure for sensor wire entry. Install one spare 2 inch conduit from the enclosure base to 2 feet beyond the concrete base. Plug spare conduit on both ends with a cap, conduit sealant or electrical tape.

The limit of all conduits incidental to "Install Pad Mount Enclosure" is 24 inches beyond the edge of the concrete base.

Wiring in enclosure shall be neat and orderly. Label all wires and cables inside enclosure. KYTC personnel will furnish and install terminal blocks and connect sensors to terminal blocks.

3.10. Install Controller Cabinet

Furnish: Mounting brackets; mounting straps; conduit; LB condulets; conduit fittings; conduit grounding bushings; ground rod with clamp; grounding conductor; cable staples; conduit sealant; wooden stakes (where required); wire labels; hardware.

The Contractor shall be responsible for securing the cabinet from the Central Office Division of Planning Warehouse in Frankfort and transporting it to the installation site. Any existing holes in the cabinet not to be reused shall be covered or plugged to meet NEC requirements.

Install mounting brackets and secure cabinet to pole with mounting straps.

Install a ground rod with clamp. Install grounding conductor in 1-¾" conduit form cabinet to ground rod.

Install one ¾ inch rigid steel conduit with two lb condulets from cabinet to electrical service disconnect box. Make all field wiring connections to the electrical service, as applicable.

If electrical service is not provided as a bid item in the contract, plug conduit on both ends with cap, plumbers putty, conduit sealant, or electrical tape. Mark the location of the buried conduit end with a wooden stake labeled "3/4 in. conduit".

Install specified rigid steel conduit(s) and type LB condulet(s) into the bottom of the

cabinet for sensor wire entry. The limit of conduits incidental to "Install Controller Cabinet" is 24 inches beyond the face of the pole.

Wiring in cabinet shall be neat and orderly. Label all wires and cables inside cabinet. KYTC personnel will furnish and install terminal blocks and connect sensors to terminal blocks.

3.11. Junction Box Type 10x8x4

Furnish: Junction box; wood post; conduit fittings; wire labels; hardware.

Where right-of-way allows, locate the junction box such that it is outside the clear zone in accordance with the Roadside Design Guide.

Excavate as required and install wood post(s) to a depth of 18 inches. Install junction box on wood post such that the bottom of the box is 18 inches above the finished grade as shown on the standard detail sheets. Box shall be installed with four (4) 2½ inch wood screws and washers.

Install locknuts to attach conduit to junction box and install a conduit bushing as shown on the standard detail sheets.

Wiring inside box shall be neat and orderly. Label all wires and cables inside box.

3.12. Junction Box Type A, B, or C

Furnish: Junction box, No. 57 aggregate; grounding conductor

Excavate as required and place approximately 12 inches of No. 57 aggregate beneath the proposed junction box to allow for drainage. Install specified junction box type A, B, or C near the edge of pavement, flush with finished grade per the detail sheets. Where required, orient the box so that the dimensions comply with the National Electrical Code. Stub conduits with grounding bushings into junction box at its base to accommodate wires and connect grounding conductor to all grounding bushings. Backfill to existing grade, and restore disturbed area to the satisfaction of the Engineer.

Wiring inside box shall be neat and orderly. Label all wires and cables inside box.

3.13. Loops - Proposed

Furnish: Wire; saw slot sealant; backer rod; grout; conduit sealant.

The plans and notes specify the approximate location for loop installations. Prior to sawing slots or drilling cores, the Contractor shall meet with a representative of the Division of Planning to verify the precise layout locations on site. Avoid expansion joints and pavement sections where potholes, cracks, or other roadway flaws exist.

Upon completion of this meeting, the Contractor shall measure out and mark the proposed loop locations with spray paint or chalk such that the saw slots will be parallel

and perpendicular to the direction of traffic. Marked lines shall be straight and exact to the locations determined and sized as shown on the plans. Unless indicated otherwise, loops shall be 6 feet by 6 feet square and loops in the same lane shall be spaced 16 feet from leading edge to leading edge.

On resurfacing, rehabilitation, and new construction projects that include new asphalt pavement, the Contractor shall install loops prior to laying the final surface course. On projects with milling and texturing, the Contractor may install the loops prior to or after the milling operation; however, if installed prior to milling, the Contractor shall be responsible for ensuring that the loops are installed at a depth such that the milling operation will not disturb the newly installed loops. The Contractor shall correct damage caused by the milling operations to newly installed loops prior to placement of the final surface course at no additional cost to the Cabinet.

For projects that include the installation of new asphalt and piezoelectric sensors, the Contractor shall mark or otherwise reference all loops installed prior to the final surface course such that the loops can be accurately located when the piezoelectric sensors are installed after placement of the final surface course.

For projects that do not have asphalt surfacing, the Contractor shall install the loops in the surface of the pavement.

The Prime Contractor shall coordinate the installation of loops with the electrical sub-Contractor and the Engineer to ensure correct operation of the completed installation.

The following is a typical step by step procedure for the installation of a loop.

- Carefully mark the slot to be cut, perpendicular to the flow of traffic and centered in the lane.
- Make each saw-cut 3/8-inch wide and at a depth such that the top of the backer rod is a minimum of 2 inches below the surface of rigid (PCC/Concrete) pavement or 4 inches below the surface of asphalt pavement.
- Drill a 1½ inch core hole at each corner and use a chisel to smooth corners to prevent sharp bends in the wire.
- Clean ALL foreign and loose matter out of the slots and drilled cores and within 1 foot on all sides of the slots using a high pressure washer.
- Completely dry the slots and drilled cores and within 1 foot on all sides of the slots using oil-free forced air, torpedo heaters, electric heaters, or natural evaporation, depending on weather conditions. Be very careful not to burn the asphalt if heat is used.
- Measure 9-12 inches from the edge of the paved surface (shoulder break or face of curb) and drill a 1½ inch hole on a 45º angle to the conduit adjacent to the roadway.
- Closely inspect all cuts, cores, and slots for jagged edges or protrusions prior to the placement of the wire. All jagged edges and protrusions shall be ground or re-cut and cleaned again.

- Place the loop wire splice-free from the termination point (cabinet or junction box) to the loop, continue around the loop for four turns, and return to the termination point.
- Push the wire into the saw slot with a blunt object such as a wooden stick. Make sure that the loop wire is pushed fully to the bottom of the saw slot.
- Install conduit sealant to a minimum of 1" deep into the cored 1½ inch hole.
- Apply loop sealant from the bottom up and fully encapsulate the loop wires in the saw slot. The wire should not be able to move when the sealant has set.
- Cover the encapsulated loop wire with a continuous layer of backer rod along the entire loop and home run saw slots such that no voids are present between the loop sealant and backer rod.
- Finish filling the saw cut with non-shrinkable grout per manufacturer's instructions. Alleviate all air pockets and refill low spaces. There shall be no concave portion to the grout in the saw slot. Any excess grout shall be cleaned from the roadway to alleviate tracking.
- Clean up the site and dispose of all waste off the project.
- Ensure that the grout has completely cured prior to subjecting the loop to traffic. Curing time varies with temperature and humidity.

Exceptions to installing loop wire splice-free to the junction box or cabinet may be considered on a case-by-case basis and must be pre-approved by the Engineer. If splices are allowed, they shall be located in a junction box and shall conform to the construction note for Splicing.

If loop lead-in cable (Cable No. 14/1 Pair) is specified, cable shall be installed splice free to the cabinet ensuring that extra cable is left in each junction box or cabinet. All wires and cables shall be labeled in each junction box and cabinet.

Loop inductance readings shall be between 100 and 300 microhenries. The difference of the loop inductance between two loops in the same lane shall be ±20 microhenries. Inductance loop conductors shall test free of shorts and grounds. Upon completion of the project, all loops must pass an insulation resistance test of at least 100 million ohms to ground when tested with a 500 Volt direct current potential in a reasonably dry atmosphere between conductors and ground.

3.14. Loops – Existing

When noted on a data collection station layout sheet that there are existing inductive loops within the limits of the project, notify the Engineer in writing, a minimum of 14 calendar days prior to beginning milling operations. After milling and prior to placing asphalt inlay, conduct an operating test on the existing inductance loops at the control cabinet in the presence of the Engineer to determine if the inductance loop conductors have an insulating resistance of a minimum of 100 megohms when tested with a 500 volt direct current potential in a reasonably dry atmosphere between conductors and ground. The Department may also conduct its own tests with its own equipment.

If the tests indicate the loop resistances are above the specified limit and the Engineer determines the system is operable, proceed with the asphalt inlay. If the test indicates the loop resistance is not within the specified limits or if the Engineer determines the system is otherwise not operable, prior to placing the asphalt inlay install and test new loop detectors according to the station layout, notes, and Detail Drawings.

The Engineer will contact and maintain liaison with the District Planning Engineer and the Division of Planning in order to coordinate any necessary work.

3.15. Maintain and Control Traffic

Furnish (all as required): Drums, traffic cones, barricades used for channelization purposes, delineators, and object markers.

Maintain and Control Traffic shall conform to the plans, the Standard Specifications for Road and Bridge Construction, and the KYTC Department of Highways Standard Drawings.

3.16. Open Cut Roadway

Furnish: Concrete, reinforcing bars.

Excavate trench by sawing and chipping away roadway to dimensions as indicated on the detail sheets. After placing conduit, install concrete and steel reinforcing bars per the *Standard Specifications for Road and Bridge Construction*. Restore any disturbed sidewalk to its original condition.

3.17. Piezoelectric Sensor

Furnish: Piezoelectric sensor and cable; sensor support brackets; saw slot sealant; backer rod; grout; conduit sealant.

The plans and notes specify the approximate location for piezoelectric sensor (piezo) installations. Prior to sawing slots or drilling cores, the Contractor shall meet with a representative of the Division of Planning to verify the final layout on site. Avoid expansion joints and pavement sections where potholes, cracks, or other roadway flaws exist. Roadway ruts at the proposed piezo location shall not be in excess of ½ inch under a 4-foot straight edge.

Install the piezo perpendicular to traffic in the final surface course of the pavement. Locate the sensor in the lane as shown on the site layout drawing. Eleven-foot length sensors shall be centered in the lane.

The following is a typical step by step procedure for the installation of a piezo. Refer specifically to the manufacturer's instructions provided with the sensor prior to installation.

- Carefully mark the slot to be cut, perpendicular to the flow of traffic and properly positioned in the lane.

- It is strongly recommended that a ¾ inch wide diamond blade be used for cutting the slot, or that blades be ganged together to provide a single ¾ inch wide cut. The slot shall be wet cut to minimize damage to the pavement.
- Cut a slot ¾ inch wide (±1/16 inch) by 1 inch minimum deep. The slot should be a minimum of 2 inches longer than the sensor (including the lead attachment). Drop the saw blade an extra ½ inch down on both ends of the sensor. The lead out of the passive cable should be centered on the slot.
- Cut the slot for the passive cable ¼ inch wide and at a depth so that the top of the backer rod is a minimum of 2 inches below the road surface.
- Clean ALL foreign and loose matter out of the slot and within 1 foot on all sides of the slot using a high pressure washer.
- Completely dry the slot and within 1 foot on all sides of the slot using oil-free forced air, torpedo heaters, electric heaters, or natural evaporation, depending on weather conditions. Be very careful not to burn the asphalt if heat is used.
- Measure 9-12 inches from the edge of the paved surface (shoulder break or face of curb) and drill a 1½ inch hole on a 45º angle to the conduit adjacent to the roadway.
- Place strips of 2-4 inch wide tape strips on the pavement along the lengths of both sides of the sensor slot, 1/8 inch away from the slot.
- Wear clean, protective latex (or equivalent) gloves at all times when handling sensors. Visually inspect sensor to ensure it is straight. Check lead attachment and passive cable for cuts, gaps, cracks and/or bare wire. Verify that the correct sensor type and length is being installed by checking the data sheet. Verify there is sufficient cable to reach the cabinet. Piezo lead-in cable shall not be spliced.
- Test the sensor for capacitance, dissipation factor and resistance, according to the directions enclosed with the sensor. Capacitance and dissipation should be within ±20% of the piezo data sheet. Resistance (using the 20M setting) should be infinite. Record the sensor serial number and the test results and label "pre-installation." This information should be stored in the counter cabinet and/or returned to Department Planning personnel.
- Lay the sensor next to the slot and ensure that it is straight and flat.
- Clean the sensor with steel wool or an emery pad and wipe with alcohol and a clean, lint-free cloth.
- Place the installation bracket clips every 6 inches along the length of the sensor.
- Bend the tip of the sensor downward at a 30° angle. Bend the lead attachment end down at a 15° angle and then 15° back up until level (forming a lazy Z).
- Place the sensor in the slot, with the brass element 3/8 inch below the road surface along the entire length. The tip of the sensor should be a minimum of 2 inches from the end of the slot and should not touch the bottom of the slot. The top of the plastic installation bracket clips should be 1/8 inch below the surface of the road. The lead attachment should not touch the bottom or sides of the slot. Ensure the sensor ends are pushed down per the manufacturer's instructions.
- Visually inspect the length of the sensor to ensure it is at uniform depth along its length and it is level (not twisted, canted or bent).

- On the passive cable end, block the end of the slot approximately 3-5 inches beyond the end of the lead attachment area creating an adequate "dam" so that the sensor grout does not flow out.
- Use one bucket of sensor grout per piezo installation. Overfill the slot with sensor grout and allow to cure for a minimum of 10 minutes before continuing with the installation. Ensure that sensor grout fills around and beneath the sensor completely and that there is not a trough on top.
- Remove the tape along the sides of the saw slot when the adhesive starts to cure.
- Carefully remove the dam from the end of the sensor.
- Route the lead-in cable through the saw slot
- Install conduit sealant to a minimum of 1" deep into the cored 1½ inch hole.
- Cover the lead-in cable with encapsulant, backer rod, and grout.
- If necessary, after the grout has hardened, grind with an angle grinder until the profile is a 1/16 inch mound. There shall be no concave portion to the mound.
- Clean up the site and dispose of all waste off the project.
- Ensure that the sensor grout has completely cured prior to subjecting the sensor to traffic. Curing time will vary with temperature and humidity.

Upon installation, test the sensor for capacitance, dissipation factor and resistance, according to the directions enclosed with the sensor. Capacitance and dissipation should be within +20% of the piezo data sheet. Resistance (using the 20M setting) should be infinite. Perform a functional test of the piezo with an oscilloscope to ensure that the sensor is generating a proper response to the passage of vehicles.

Record the sensor serial number and the test results and label "post-installation." This information should be stored in the counter cabinet and/or returned to Department Planning personnel.

3.18. Pole – Wooden

Furnish: Pole; anchoring equipment (as required); hardware (as required).

Excavate and install wood pole to a minimum depth of one-sixth the total pole height. Place backfill material in hole and compact until flush with existing grade. Install guy wire, guy guard, anchor, anchor rod, and strand vise, if necessary. Anchor shall be a minimum of one-third the pole height from the face of the pole. Provide temporary erosion control, seeding, protection and restoration of disturbed areas to the satisfaction of the Engineer.

3.19. Removal of Existing Equipment

The Contractor shall remove existing materials (including but not limited to: poles, anchors, cabinets, junction boxes, conduit and wire) not to be reused. Contractor shall dispose of all removed materials off the project. All materials and labor necessary for the removal of existing equipment shall be considered incidental to other bid items.

3.20. Signs

Furnish: Signs; sign standards; hardware.

Construction of **s**igns shall conform to the *Standard Specifications for Road and Bridge Construction.*

3.21. Splicing

Furnish: Splice kit; solder.

These notes describe the splicing process (if permitted) and are not intended to grant permission to splice. Permission to splice shall be determined by the Division of Planning and the locations shall be shown on the layout sheet. If splicing is needed but not shown on the layout sheet, the Contractor shall receive prior written approval from the Division of Planning.

All splices shall conform to the provisions of the NEC.

Splices for loop and loop lead-in wire shall be twisted and soldered. Abrade the outer jacket of both wires to promote good adhesion and prevent capillary leak paths. Seal the splice with an electrical sealing resin. Spliced loop conductors shall test free of shorts and unauthorized grounds and shall have an insulating resistance of at least 100 megohms when tested with a 500 volt direct current potential in a reasonably dry atmosphere between conductors and ground.

For piezos, the same type coax cable, supplied by the manufacturer, shall be used to splice to the sensor's lead-in cable. Cables shall be soldered. Abrade the outer jacket of both cables to promote good adhesion and prevent capillary leak paths. Seal the splice with an electrical sealing resin. Spliced piezo cables shall be tested and have a minimum resistance of 20 megohms, a maximum dissipation factor of 0.03, a capacitance within the manufacturer's recommended range based upon the length of additional cable. A functional test of the piezo shall be performed to ensure that the sensor is generating a proper response to the passage of vehicles.

3.22. Trenching and Backfilling

Furnish: Warning tape; seed mix type I; cereal rye or German foxtail-millet; mulch; concrete (as required); asphalt (as required).

Excavate trench and provide required cover as shown on the standard detail sheets. After placing conduit, backfill material shall be placed and compacted in lifts of 9 inches or less. Install warning tape as shown on the detail sheet. Provide temporary erosion control, seeding, protection and restoration of disturbed areas to the satisfaction of the Engineer. This item shall include concrete, asphalt or approved replacement material for sidewalks, curbs, roadways, etc. (if required).

3.23. Wiring

Furnish: Wire; wire labels; spade tongue wire terminals (as required).

Installation of all wiring shall conform to the NEC. Permanent identification numbers shall be affixed to all wires in all junction boxes and cabinets (see Layout(s) for loop and piezo numbers).

Additional lengths of each loop and piezo sensor wire shall be neatly coiled in all cabinets and junction boxes as follows:

Enclosure Type	Additional length of each wire
Galvanized Steel Cabinet	2’
Pad Mount Cabinet (332)	8’
Pole Mount Cabinet (336)	4’
Junction Box Type 10x8x4	2’
Junction Box Type A, B, or C	2’

3.24. Wood Post

Furnish: Wood post; concrete (as required); seed mix type I; cereal rye or German foxtail-millet; mulch.

Excavate hole to specified depth and place concrete, if required. Install post, backfill to existing grade, and tamp backfill. Provide temporary erosion control, seeding, protection and restoration of disturbed areas to the satisfaction of the Engineer.

4. BID ITEM NOTES AND METHOD OF MEASUREMENT FOR PAYMENT

Only the bid items listed will be measured for payment. All other items required to complete the vehicle detection installation shall be incidental to other items of work. Payment at the contract unit price shall be full compensation for all materials, labor, equipment and incidentals to furnish and install these items.

4.1. Bore and Jack Pipe – 2”

Bore and jack pipe – 2” shall be furnished, installed, and measured for payment per the *Standard Specifications for Road and Bridge Construction*.

4.2. Conduit

Conduit shall include furnishing and installing specified conduit in accordance with the specifications. This item shall include conduit fittings, bodies, boxes, weatherheads, expansion joints, couplings, caps, conduit sealant, electrical tape, clamps, bonding straps and any other necessary hardware. Conduit will be measured in linear feet.

4.3. Electrical Service

Electrical Service shall include furnishing and installing all necessary materials and payment of all fees toward the complete installation of an electrical service which has passed all required inspections. Incidental to this item shall be furnishing and installing:

- Meter-base per utility company’s specifications
- Service disconnect panel per utility company’s specifications
- Meter base and service disconnect entrance hubs, waterproof
- Service entrance conductors
- Rigid steel conduit
- Rigid steel conduit fittings
- Conduit straps
- Weatherhead
- Duplex GFCI receptacle, 120-volt, 20-amp
- Ground rod with clamp
- Grounding conductor

Also incidental to this item shall be any necessary clearing of right of way for the electrical service drop.

Electrical service will be measured in individual units each.

4.4. Flashing Arrow

Flashing Arrow shall be furnished, installed, and measured for payment per the *Standard Specifications for Road and Bridge Construction.*

4.5. Galvanized Steel Cabinet

Galvanized Steel Cabinet shall include furnishing and installing galvanized steel cabinet on post as specified. Incidental to this item shall be furnishing and installing grounding hardware, and any necessary post/pole mounting hardware. Also incidental to this item shall be furnishing and installing the required number of terminal blocks and connection of all

sensors to the terminal blocks. Galvanized Steel Cabinet will be measured in individual units each.

4.6. Install Pad Mount Enclosure

Install Pad Mount Enclosure shall include installing a Department-furnished enclosure as specified on the detail sheets.

This item shall include obtaining the enclosure from KYTC and transporting it to the installation site and furnishing and installing the following:

- Concrete foundation (including any excavation necessary)
- Anchor bolts, lock washers, and nuts
- Conduit
- Conduit fittings (including grounding bushings)
- Weatherhead
- Terminal Strip(s)
- Ground rod with clamp
- Grounding conductor

Install Pad Mount Enclosure will be measured in individual units each.

4.7. Install Controller Cabinet

Install Controller Cabinet shall include installing a Department-furnished cabinet as specified on the detail sheets.

This item shall include obtaining the cabinet from KYTC and transporting it to the installation site and furnishing and installing the following:

- Conduit
- Conduit Fittings
- Terminal Strip(s)
- Ground rod with clamp
- Grounding conductor

Install Controller Cabinet will be measured in individual units each.

4.8. Junction Box Type 10" x 8" x 4"

Junction Box Type 10”x8”x4” shall include furnishing and installing specified junction box in accordance with the specifications. This item shall include connectors, splice sleeves, conduit fittings, mounting materials and any other items required to complete the installation. Incidental to this item shall be furnishing and installing specified post (wood, channel, metal, etc.) as required for the installation. Junction Box Type 10”x8”x4” will be measured in individual units each.

4.9. Junction Box Type A, B, or C

Junction Box Type A, B, or C shall include furnishing and installing specified junction box in accordance with the specifications. This item shall include excavation, furnishing and installing #57 aggregate, backfilling around the box, and restoration of disturbed areas to the satisfaction of the Engineer. Incidental to this item shall be furnishing and installing a

grounding conductor bonding all conduit grounding bushings in the box. Junction Box Type A, B, or C will be measured in individual units each.

4.10. Loop Saw Slot and Fill

Loop Saw Slot and Fill shall include sawing and cleaning saw slots and furnishing and installing conduit sealant, loop sealant, backer rod, grout, or other specified material. Loop Saw Slot and Fill will be measured in linear feet of sawed slot.

4.11. Maintain and Control Traffic

Maintain and Control Traffic shall be measured for payment per the *Standard Specifications for Road and Bridge Construction.*

4.12. Open Cut Roadway

Open Cut Roadway shall include excavating trench (sawing and chipping roadway) to dimensions as indicated on the detail sheets and furnishing and placing concrete, steel reinforcing bars, and asphalt. This item also includes restoring any disturbed sidewalk to its original condition. Open Cut Roadway will be measured in linear feet.

4.13. Piezoelectric Sensor

Piezoelectric sensor (piezo) shall include sawing and cleaning saw slots and furnishing and installing piezo in accordance with the specifications. This item shall include furnishing and installing lead-in wire, conduit sealant, encapsulation material, backer rod, grout, testing, and accessories. Piezo will be measured in individual units each.

4.14. Pole – 35’ Wooden

Pole – 35’ Wooden shall include excavation, furnishing and installing specified wood pole, backfilling and restoring disturbed areas to the satisfaction of the Engineer. Incidental to this item shall be furnishing and installing guy wire, anchor and anchor rod, strand vise, and guy guard, if specified.

Pole – 35’ Wooden will be measured in individual units each.

4.15. Signs

Signs shall be furnished, installed, and measured for payment per the *Standard Specifications for Road and Bridge Construction.*

4.16. Trenching and Backfilling

Trenching and Backfilling shall include excavation, warning tape, backfilling, temporary erosion control, seeding, protection and restoration of disturbed areas to original condition. This item shall include concrete, asphalt or approved replacement material for sidewalks, curbs, roadways, etc. (if required). Trenching and backfilling will be measured in linear feet.

4.17. Wire or Cable

Wire or cable shall include furnishing and installing specified wire or cable within saw slot, conduit, junction box, cabinet, or overhead as indicated on the detail sheets. Incidental to this item shall be the labeling of all wires and cables in each junction box, cabinet and splice

Right-of-Way Certification Form

Revised 5/27/09

☐ **Federal Funded** ☒ **Original**

☒ **State Funded** ☐ **Re-Certification**

This form must be completed and submitted to FHWA with the PS&E package for federal-aid funded Interstate, Appalachia, and Mega projects. This form shall also be submitted to FHWA for **all** federal-aid projects that fall under conditions No. 2 & 3 outlined elsewhere in this form. For all other federal-aid projects, this form shall be completed and retained in the KYTC project file.

Date: **06/05/2014**

Project #: **FD04 SPP 105 0075 121-126**
Item #: **7-2040.00**
Letting Date: **June 27, 2014**

County: **SCOTT**
Federal #: **N/A**
Description of Project: Mill and Thin Asphalt Overlay on I-75 from Milepoint 121.117 to Milepoint 125.528.

Projects that require NO new or additional right-of-way acquisitions and/or relocations

☒ The proposed transportation improvement will be built within the existing rights-of -way and there are no properties to be acquired, individuals and families ("relocatees") to be relocated, or improvements to be removed as a part of this project.

Projects that require new or additional right-of –way acquisitions and/or relocations

☐ Per 23 CFR 635.309, the KYTC hereby certify that all relocatees have been relocated to decent, safe, and sanitary housing or that KYTC has made available to relocatees adequate replacement housing in accordance with the provisions of the current FHWA directive(s) covering the administration of the Highway Relocation Assistance Program **and** that at least one of the following three conditions has been met. **(Check those that apply.)**

☐ 1. All necessary rights-of-way, including control of access rights when applicable, have been acquired including legal and physical possession. Trial or appeal of cases may be pending in court but legal possession has been obtained. There may be some improvements remaining on the right-of-way, but all occupants have vacated the lands and improvements, and KYTC has physical possession and the rights to remove, salvage, or demolish these improvements and enter on all land. **Fair market value has been paid or deposited with the court.**

☐ 2. Although all necessary rights-of-way have not been fully acquired, the right to occupy and to use all rights-of-way required for the proper execution of the project has been acquired. Trial or appeal of some parcels may be pending in court and on other parcels full legal possession has not been obtained, but an Interlocutory Judgment has been granted, the occupants of all lands and improvements have vacated, and KYTC has physical possession and right to remove, salvage, or demolish these improvements. **Fair market value has been paid or deposited with the court for most parcels. Fair market value for all pending parcels will be paid or deposited with the court prior to start of construction. (See note.)**

Note: The KYTC shall re-submit a right-of-way re-certification form for this project prior to the start of construction **(Notice to Proceed)**, verifying that fair market value for all parcels has been paid or deposited with the court.

Right-of-Way Certification Form

☐ 3. The acquisition or right of occupancy and use of a **few** remaining parcels are not complete and/or some parcels still have occupants. However, all remaining occupants have had replacement housing made available to them in accordance with 49 CFR 24.204. The KYTC is hereby requesting authorization to advertise this project for bids and to proceed with physical construction even though the necessary rights-of-way will not be fully acquired, and/or some occupants will not be relocated, and/or the fair marked value will not be paid or deposited with the court for some parcels at the start of construction. KYTC will fully meet all the requirements outlined in 23 CFR 309(c) (3) and 49 CFR 102(j) and will expedite completion of all acquisitions, relocations, and full payments after construction starts. A full explanation and reason for this request, including identification of each such parcel and dates on which acquisitions, payments, and relocations will be completed, is attached to this certification form for FHWA consideration and approval. **(See note.)**

Note: The KYTC may request authorization on this basis only in unique and unusual circumstances. Proceeding to construction of projects on this basis shall be the exception and never become the rule. In all FHWA-approved cases, the KYTC shall make extraordinary efforts to expedite completion of the acquisition, payment for all affected parcels, and the relocation of all relocatees promptly 30 days after start of construction.

Approved: Robert W Wimley — Date 6/5/2014 District ROW Supervisor
Name

Approved: Dan Lay by MS — Date 6/6/2014 Director of ROW & Utilities or Designee
Name

Approved: _____ — Date _____ FHWA, Right-of-Way Officer
Name

Right-of-Way Certification Form

Date: _____

Project #: _____ County: _____
Item #: _____ Federal #: _____
Letting Date: _____

This project has _____ Total number of parcels acquired, and _____ Total number of individual or families relocated, as well as _____ Total number of businesses relocated.

_____ Parcels were acquired by a signed fee simple deed and fair market value has been paid **(Type 1)**

_____ Parcels have been acquired through condemnation and IOJ granted by the court and fair market value has been deposited with the court **(Type 1 certification)**

_____ Parcels have **not** been acquired at this time but can be Re-certified as acquired prior to Notice to Proceed for construction.(*explain below for each parcel*) **(Type 2 certification)**

_____ Parcels have been acquired or have a "right of Entry" but the fair market value has not been paid or has not been posted with the court, and they can not be re-certified prior to construction. (These parcels require an explanation below for each one as well as FHWA approval. **(Type 3 only)**

_____ Relocatees have not been relocated from parcels.
(explain below for each parcel)

Parcel #	Name	Explanation for delayed acquisition, delayed relocation, or delayed payment of fair market value	Proposed date of payment or of relocation

There are _____ billboards and/or _____ cemeteries involved on this project.
There are _____ water or monitoring wells on parcels.

SPECIAL NOTES FOR UTILITY CLEARANCE

IMPACT ON CONSTRUCTION

SCOTT COUNTY
MILL AND THIS ASPHALT OVERLAY ON I-75 FROM MILEPOINT 121.117 TO MILEPOINT 125.528
SYP Item No. 7-2040.00

GENERAL PROJECT NOTE ON UTILITY PROTECTION

It is in the opinion of the Cabinet that no utility relocations and/or adjustments will be required for the completion of the subject project. However, it is the contractor's responsibility to avoid any impacts to existing overhead utility facilities and to coordinate activities as necessary with applicable utility companies.

NOTE: DO NOT DISTURB THE FOLLOWING UTILITIES LOCATED WITHIN THE PROJECT DISTURB LIMITS

N/A

THE FOLLOWING COMPANIES ARE RELOCATING/ADJUSTING THEIR UTILITIES WITHIN THE PROJECT LIMITS AND WILL BE COMPLETE PRIOR TO CONSTRUCTION

N/A

THE FOLLOWING COMPANIES HAVE FACILITIES TO BE RELOCATED/ADJUSTED BY THE COMPANY OR THE COMPANY'S SUBCONTRACTOR AND IS TO BE COORDINATED WITH THE ROAD CONTRACT

N/A

THE FOLLOWING COMPANIES HAVE FACILITIES TO BE RELOCATED/ADJUSTED BY THE ROAD CONTRACTOR AS INCLUDED IN THIS CONTRACT

N/A

SPECIAL CAUTION NOTE – PROTECTION OF UTILITIES

The contractor will be responsible for contacting all utility facility owners on the subject project to coordinate his activities. The contractor will coordinate his activities to minimize and, where possible, avoid conflicts with utility facilities. Due to the nature of the work proposed, it is unlikely to conflict with the existing utilities beyond minor facility adjustments. Where conflicts with utility facilities are unavoidable, the contractor will coordinate any necessary relocation work with the facility owner and Resident Engineer. The Kentucky Transportation Cabinet maintains the right to remove or alter portions of this contract if a utility conflict occurs.

The utility facilities as noted in the previous section(s) have been determined using data garnered by varied means and with varying degrees of accuracy: from the facility owners, a result of S.U.E., field inspections, and/or reviews of record drawings. The facilities defined may not be inclusive of all utilities in the project scope and are not Level A quality, unless specified as such. It is the contractor's responsibility to verify all utilities and their respective locations before excavating.

SPECIAL NOTES FOR UTILITY CLEARANCE

IMPACT ON CONSTRUCTION

SCOTT COUNTY
MILL AND THIS ASPHALT OVERLAY ON I-75 FROM MILEPOINT 121.117 TO MILEPOINT 125.528
SYP Item No. 7-2040.00

BEFORE YOU DIG

The contractor is instructed to call 1-800-752-6007 to reach KY 811, the one-call system for information on the location of existing underground utilities. The call is to be placed a minimum of two (2) and no more than ten (10) business days prior to excavation. The contractor should be aware that owners of underground facilities are not required to be members of the KY 811 one-call Before-U-Dig (BUD) service. The contractor must coordinate excavation with the utility owners, including those whom do not subscribe to KY 811. It may be necessary for the contractor to contact the County Court Clerk to determine what utility companies have facilities in the area.

Please Note: The information presented in this Utility Note is informational in nature and the information contained herein is not guaranteed.

PART II

SPECIFICATIONS AND STANDARD DRAWINGS

SPECIFICATIONS REFERENCE

Any reference in the plans or proposal to previous editions of the *Standard Specifications for Road and Bridge Construction* and *Standard Drawings* are superseded by *Standard Specifications for Road and Bridge Construction, Edition of 2012* and *Standard Drawings, Edition of 2012 with the 2012 Revision.*

Supplemental Specifications to the Standard Specifications for Road and Bridge Construction, 2012 Edition Effective with the June 27, 2014 Letting

Subsection: **Revision:**	102.15 Process Agent. Replace the 1st paragraph with the following: Every corporation doing business with the Department shall submit evidence of compliance with KRS Sections 14A.4-010, 271B.11-010, 271B.11-070, 271B.11-080, 271B.5-010 and 271B.16-220, and file with the Department the name and address of the process agent upon whom process may be served.
Subsection: **Revision:**	105.13 Claims Resolution Process. Delete all references to TC 63-34 and TC 63-44 from the subsection as these forms are no longer available through the forms library and are forms generated within the AASHTO SiteManager software.
Subsection: **Revision:**	108.03 Preconstruction Conference. Replace 8) Staking with the following: 8) Staking (designated by a Professional Engineer or Land Surveyor licensed in the Commonwealth of Kentucky.
Subsection: **Revision:**	109.07.02 Fuel. Revise item Crushed Aggregate Used for Embankment Stabilization to the following: Crushed Aggregate Used for Stabilization of Unsuitable Materials Used for Embankment Stabilization
	Delete the following item from the table. ~~Crushed Sandstone Base (Cement Treated)~~
Subsection: **Revision:**	110.02 Demobilization. Replace the first part of the first sentence of the second paragraph with the following: Perform all work and operations necessary to accomplish final clean-up as specified in the first paragraph of Subsection 105.12;
Subsection: **Revision:**	112.03.12 Project Traffic Coordinator (PTC). Replace the last paragraph of this subsection with the following: Ensure the designated PTC has sufficient skill and experience to properly perform the task assigned and has successfully completed the qualification courses.
Subsection: **Revision:**	112.04.18 Diversions (By-Pass Detours). Insert the following sentence after the 2nd sentence of this subsection. The Department will not measure temporary drainage structures for payment when the contract documents provide the required drainage opening that must be maintained with the diversion. The temporary drainage structures shall be incidental to the construction of the diversion. If the contract documents fail to provide the required drainage opening needed for the diversion, the cost of the temporary drainage structure will be handled as extra work in accordance with section 109.04.
Subsection: **Revision:**	201.03.01 Contractor Staking. Replace the first paragraph with the following: Perform all necessary surveying under the general supervision of a Professional Engineer or Land Surveyor licensed in the Commonwealth of Kentucky.

Subsection: **Revision:**	201.04.01 Contractor Staking. Replace the last sentence of the paragraph with the following: Complete the general layout of the project under the supervision of a Professional Engineer or Land Surveyor licensed in the Commonwealth of Kentucky.
Subsection: **Revision:**	206.04.01 Embankment-in-Place. Replace the fourth paragraph with the following: The Department will not measure **suitable** excavation included in the original plans that is disposed of for payment and will consider it incidental to Embankment-in-Place.
Subsection: **Revision:**	208.02.01 Cement. Replace paragraph with the following: Select Type I or Type II cement conforming to Section 801. Use the same type cement throughout the work.
Subsection: **Revision:**	208.03.06 Curing and Protection. Replace the fourth paragraph with the following: Do not allow traffic or equipment on the finished surface until the stabilized subgrade has cured for a total of 7-days with an ambient air temperature above 40 degrees Fahrenheit. A curing day consists of a continuous 24-hour period in which the ambient air temperature does not fall below 40 degrees Fahrenheit. Curing days will not be calculated consecutively, but must total seven (7) , 24-hour days with the ambient air temperature remaining at or above 40 degrees Fahrenheit before traffic or equipment will be allowed to traverse the stabilized subgrade. The Department may allow a shortened curing period when the Contractor requests. The Contractor shall give the Department at least 3 day notice of the request for a shortened curing period. The Department will require a minimum of 3 curing days after final compaction. The Contractor shall furnish cores to the treated depth of the roadbed at 500 feet intervals for each lane when a shortened curing time is requested. The Department will test cores using an unconfined compression test. Roadbed cores must achieve a minimum strength requirement of 80 psi.
Subsection: **Revision:**	208.03.06 Curing and Protection. Replace paragraph nine with the following: At no expense to the Department, repair any damage to the subgrade caused by freezing.
Subsection: **Part:** **Revision:**	212.03.03 Permanent Seeding and Protection. A) Seed Mixtures for Permanent Seeding. Revise **Seed Mix Type I** to the mixture shown below: 50% Kentucky 31 Tall Fescue (Festuca arundinacea) 35% Hard Fescue (Festuca (Festuca longifolia) 10% Ryegrass, Perennial (Lolium perenne) 5% White Dutch Clover (Trifolium repens)
Subsection: **Part:** **Number:** **Revision:**	212.03.03 Permanent Seeding and Protection. A) Seed Mixtures for Permanent Seeding. 2) Replace the paragraph with the following: Permanent Seeding on Slopes Greater than 3:1 in Highway Districts 4, 5, 6, and 7. Apply seed mix Type II at a minimum application rate of 100 pounds per acre. If adjacent to a golf course replace the crown vetch with Kentucky 31 Tall Fescue.

Number: **Revision:**	3) Replace the paragraph with the following: Permanent Seeding on Slopes Greater than 3:1 in Highway Districts 1, 2, 3, 8, 9, 10, 11, and 12. Apply seed mix Type III at a minimum application rate of 100 pounds per acre. If adjacent to crop land or golf course, replace the Sericea Lespedeza with Kentucky 31 Fescue.
Subsection: **Part:** **Revision:**	212.03.03 Permanent Seeding and Protection. B) Procedures for Permanent Seeding. Delete the first sentence of the section.
Subsection: **Part:** **Revision:**	212.03.03 Permanent Seeding and Protection. B) Procedures for Permanent Seeding. Replace the second and third sentence of the section with the following: Prepare a seedbed and apply an initial fertilizer that contains a minimum of 100 pounds of nitrogen, 100 pounds of phosphate, and 100 pounds of potash per acre. Apply agricultural limestone to the seedbed when the Engineer determines it is needed. When required, place agricultural limestone at a rate of 3 tons per acre.
Subsection: **Part:** **Revision:**	212.03.03 Permanent Seeding and Protection. D) Top Dressing. Change the title of part to D) Fertilizer.
Subsection: **Part:** **Revision:**	212.03.03 Permanent Seeding and Protection. D) Fertilizer. Replace the first paragraph with the following: Apply fertilizer at the beginning of the seeding operation and after vegetation is established. Use fertilizer delivered to the project in bags or bulk. Apply initial fertilizer to all areas prior to the seeding or sodding operation at the application rate specified in 212.03.03 B). Apply 20-10-10 fertilizer to the areas after vegetation has been established at a rate of 11.5 pounds per 1,000 square feet. Obtain approval from the Engineer prior to the 2nd fertilizer application. Reapply fertilizer to any area that has a streaked appearance. The reapplication shall be at no additional cost to the Department. Re-establish any vegetation severely damaged or destroyed because of an excessive application of fertilizer at no cost to the Department.
Subsection: **Part:** **Revision:**	212.03.03 Permanent Seeding and Protection. D) Fertilizer. Delete the second paragraph.
Subsection: **Revision:**	212.04.04 Agricultural Limestone. Replace the entire section with the following: The Department will measure the quantity of agricultural limestone in tons.
Subsection: **Revision:**	212.04.05 Fertilizer. Replace the entire section with the following: The Department will measure fertilizer used in the seeding or sodding operations for payment. The Department will measure the quantity by tons.
Subsection: **Revision:**	212.05 PAYMENT. Delete the following item code: Code — Pay Item — Pay Unit 05966 — Topdressing Fertilizer — Ton

Subsection: **Revision:**	212.05 PAYMENT. Add the following pay items: Code Pay Item Pay Unit 05963 Initial Fertilizer Ton 05964 20-10-10 Fertilizer Ton 05992 Agricultural Limestone Ton
Subsection: **Revision:**	213.03.02 Progress Requirements. Replace the last sentence of the third paragraph with the following: Additionally, the Department will apply a penalty equal to the liquidated damages when all aspects of the work are not coordinated in an acceptable manner within 7 calendar days after written notification.
Subsection: **Part:** **Revision:**	213.03.05 Temporary Control Measures. E) Temporary Seeding and Protection. Delete the second sentence of the first paragraph.
Subsection: **Table:** **Revision:**	304.02.01 Physical Properties. Required Geogrid Properties Replace all references to Test Method "GRI-GG2-87" with ASTM D 7737.
Subsection: **Part:** **Revision:**	402.03.02 Contractor Quality Control and Department Acceptance. B) Sampling. Replace the second sentence with the following: The Department will determine when to obtain the quality control samples using the random-number feature of the mix design submittal and approval spreadsheet. The Department will randomly determine when to obtain the verification samples required in Subsections 402.03.03 and 402.03.04 using the Asphalt Mixture Sample Random Tonnage Generator.
Subsection: **Part:** **Number:** **Revision:**	402.03.02 Contractor Quality Control and Department Acceptance. D) Testing Responsibilities. 3) VMA. Add the following paragraph below Number 3) VMA: Retain the AV/VMA specimens and one additional corresponding G_{mm} sample for 5 working days for mixture verification testing by the Department. For Specialty Mixtures, retain a mixture sample for 5 working days for mixture verification testing by the Department. When the Department's test results do not verify that the Contractor's quality control test results are within the acceptable tolerances according to Subsection 402.03.03, retain the samples and specimens from the affected sublot(s) for the duration of the project.
Subsection: **Part:** **Number:** **Revision:**	402.03.02 Contractor Quality Control and Department Acceptance. D) Testing Responsibilities. 4) Density. Replace the second sentence of the Option A paragraph with the following: Perform coring by the end of the following work day.
Subsection: **Part:** **Number:** **Revision:**	402.03.02 Contractor Quality Control and Department Acceptance. D) Testing Responsibilities. 5) Gradation. Delete the second paragraph.

Subsection: **Part:** **Number:** **Revision:**	402.03.02 Contractor Quality Control and Department Acceptance. H) Unsatisfactory Work. 1) Based on Lab Data. Replace the second paragraph with the following: When the Engineer determines that safety concerns or other considerations prohibit an immediate shutdown, continue work and the Department will make an evaluation of acceptability according to Subsection 402.03.05.
Subsection: **Revision:**	402.03.03 Verification. Replace the first paragraph with the following: **402.03.03 Mixture Verification.** For volumetric properties, the Department will perform a minimum of one verification test for AC, AV, and VMA according to the corresponding procedures as given in Subsection 402.03.02. The Department will randomly determine when to obtain the verification sample using the Asphalt Mixture Sample Random Tonnage Generator. For specialty mixtures, the Department will perform one AC and one gradation determination per lot according to the corresponding procedures as given in Subsection 402.03.02. However, Department personnel will not perform AC determinations according to KM 64-405. The Contractor will obtain a quality control sample at the same time the Department obtains the mixture verification sample and perform testing according to the procedures given in Subsection 402.03.02. If the Contractor's quality control sample is verified by the Department's test results within the tolerances provided below, the Contractor's sample will serve as the quality control sample for the affected sublot. The Department may perform the mixture verification test on the Contractor's equipment or on the Department's equipment.
Subsection: **Part:** **Revision:**	402.03.03 Verification. A) Evaluation of Sublot(s) Verified by Department. Replace the third sentence of the second paragraph with the following: When the paired *t* -test indicates that the Contractor's data and Department's data are possibly not from the same population, the Department will investigate the cause for the difference according to Subsection 402.03.05 and implement corrective measures as the Engineer deems appropriate.
Subsection: **Part:** **Revision:**	402.03.03 Verification. B) Evaluation of Sublots Not Verified by Department. Replace the third sentence of the first paragraph with the following: When differences between test results are not within the tolerances listed below, the Department will resolve the discrepancy according to Subsection 402.03.05.
Subsection: **Part:** **Revision:**	402.03.03 Verification. B) Evaluation of Sublots Not Verified by Department. Replace the third sentence of the second paragraph with the following: When the *F* -test or *t* -test indicates that the Contractor's data and Department's data are possibly not from the same population, the Department will investigate the cause for the difference according to Subsection 402.03.05 and implement corrective measures as the Engineer deems appropriate.

Subsection: **Part:** **Revision:**	402.03.03 Verification. C) Test Data Patterns. Replace the second sentence with the following: When patterns indicate substantial differences between the verified and non-verified sublots, the Department will perform further comparative testing according to subsection 402.03.05.
Subsection: **Revision:**	402.03 CONSTRUCTION. Add the following subsection: **402.03.04 Testing Equipment and Technician Verification.** For mixtures with a minimum quantity of 20,000 tons and for every 20,000 tons thereafter, the Department will obtain an additional verification sample at random using the Asphalt Mixture Sample Random Tonnage Generator in order to verify the integrity of the Contractor's and Department's laboratory testing equipment and technicians. The Department will obtain a mixture sample of at least 150 lb at the asphalt mixing plant according to KM 64-425 and split it according to AASHTO R 47. The Department will retain one split portion of the sample and provide the other portion to the Contractor. At a later time convenient to both parties, the Department and Contractor will simultaneously reheat the sample to the specified compaction temperature and test the mixture for AV and VMA using separate laboratory equipment according to the corresponding procedures given in Subsection 402.03.02. The Department will evaluate the differences in test results between the two laboratories. When the difference between the results for AV or VMA is not within ± 2.0 percent, the Department will investigate
Subsection: **Revision:**	402.03.04 Dispute Resolution. Change the subsection number to 402.03.05.
Subsection: **Part:** **Table:** **Revision:**	402.05 PAYMENT. Lot Pay Adjustment Schedule Compaction Option A Base and Binder Mixtures AC Replace the Deviation from JMF(%) that corresponds to a Pay Value of 0.95 to ±0.6.
Subsection: **Revision:**	403.02.10 Material Transfer Vehicle (MTV). Replace the first sentence with the following: In addition to the equipment specified above, provide a MTV with the following minimum characteristics:
Subsection: **Revision:**	412.02.09 Material Transfer Vehicle (MTV). Replace the paragraph with the following: Provide and utilize a MTV with the minimum characteristics outlined in section 403.02.10.
Subsection: **Revision:**	412.03.07 Placement and Compaction. Replace the first paragraph with the following: Use a MTV when placing SMA mixture in the driving lanes. The MTV is not required on ramps and/or shoulders unless specified in the contract. When the Engineer determines the use of the MTV is not practical for a portion of the project, the Engineer may waive its requirement for that portion of pavement by a letter documenting the waiver.
Subsection: **Revision:**	412.04 MEASUREMENT. Add the following subsection: 412.04.03. Material Transfer Vehicle (MTV). The Department will not measure the MTV for payment and will consider its use incidental to the asphalt mixture.

Subsection: **Part:** **Revision:**	501.03.19 Surface Tolerances and Testing Surface. B) Ride Quality. Add the following to the end of the first paragraph: The Department will specify if the ride quality requirements are Category A or Category B when ride quality is specified in the Contract. Category B ride quality requirements shall apply when the Department fails to classify which ride quality requirement will apply to the Contract.
Subsection: **Revision:**	603.03.06 Cofferdams. Replace the seventh sentence of paragraph one with the following: Submit drawings that are stamped by a Professional Engineer licensed in the Commonwealth of Kentucky.
Subsection: **Revision:**	605.03.04 Tack Welding. Insert the subsection and the following: 605.03.04 Tack Welding. The Department does not allow tack welding.
Subsection: **Part:** **Number:** **Revision:**	606.03.17 Special Requirements for Latex Concrete Overlays. A) Existing Bridges and New Structures. 1) Prewetting and Grout-Bond Coat. Add the following sentence to the last paragraph: Do not apply a grout-bond coat on bridge decks prepared by hydrodemolition.
Subsection: **Revision:**	609.03 Construction. Replace Subsection 609.03.01 with the following: 609.03.01 A) Swinging the Spans. Before placing concrete slabs on steel spans or precast concrete release the temporary erection supports under the bridge and swing the span free on its supports. 609.03.01 B) Lift Loops. Cut all lift loops flush with the top of the precast beam once the beam is placed in the final location and prior to placing steel reinforcement. At locations where lift loops are cut, paint the top of the beam with galvanized or epoxy paint.
Subsection: **Revision:**	611.03.02 Precast Unit Construction. Replace the first sentence of the subsection with the following: Construct units according to ASTM C1577, **replacing Table 1 (Design Requirements for Precast Concrete Box Sections Under Earth, Dead and HL-93 Live Load Conditions) with KY Table 1 (Precast Culvert KYHL-93 Design Table)**, and Section 605 with the following exceptions and additions:
Subsection: **Number:** **Revision:**	613.03.01 Design. 2) Replace "AASHTO Standard Specifications for Highway Bridges" with "AASHTO LRFD Bridge Design Specifications"
Subsection: **Revision:**	615.06.02 Add the following sentence to the end of the subsection. The ends of units shall be normal to walls and centerline except exposed edges shall be beveled ¾ inch.
Subsection: **Revision:**	615.06.03 Placement of Reinforcement in Precast 3-Sided Units. Replace the reference of 6.6 in the section to 615.06.06.

Subsection: **Revision:**	615.06.04 Placement of Reinforcement for Precast Endwalls. Replace the reference of 6.7 in the section to 615.06.07.
Subsection: **Revision:**	615.06.06 Laps, Welds, and Spacing for Precast 3-Sided Units. Replace the subsection with the following: Tension splices in the circumferential reinforcement shall be made by lapping. Laps may not be tack welded together for assembly purposes. For smooth welded wire fabric, the overlap shall meet the requirements of AASHTO 2012 Bridge Design Guide Section 5.11.2.5.2 and AASHTO 2012 Bridge Design Guide Section 5.11.6.3. For deformed welded wire fabric, the overlap shall meet the requirements of AASHTO 2012 Bridge Design Guide Section 5.11.2.5.1 and AASHTO 2012 Bridge Design Guide Section 5.11.6.2. The overlap of welded wire fabric shall be measured between the outer most longitudinal wires of each fabric sheet. For deformed billet-steel bars, the overlap shall meet the requirements of AASHTO 2012 Bridge Design Guide Section 5.11.2.1. For splices other than tension splices, the overlap shall be a minimum of 12" for welded wire fabric or deformed billet-steel bars. The spacing center to center of the circumferential wires in a wire fabric sheet shall be no less than 2 inches and no more than 4 inches. The spacing center to center of the longitudinal wires shall not be more than 8 inches. The spacing center to center of the longitudinal distribution steel for either line of reinforcing in the top slab shall be not more than 16 inches.
Subsection: **Revision:**	615.06.07 Laps, Welds, and Spacing for Precast Endwalls. Replace the subsection with the following: Splices in the reinforcement shall be made by lapping. Laps may not be tack welded together for assembly purposes. For smooth welded wire fabric, the overlap shall meet the requirements of AASHTO 2012 Bridge Design Guide Section 5.11.2.5.2 and AASHTO 2012 Bridge Design Guide Section 5.11.6.3. For deformed welded wire fabric, the overlap shall meet the requirements of AASHTO 2012 Bridge Design Guide Section 5.11.2.5.1 and AASHTO 2012 Bridge Design Guide Section 5.11.6.2. For deformed billet-steel bars, the overlap shall meet the requirements of AASHTO 2012 Bridge Design Guide Section 5.11.2.1. The spacing center-to-center of the wire fabric sheet shall not be less than 2 inches or more than 8 inches.
Subsection: **Revision:**	615.08.01 Type of Test Specimen. Replace the subsection with the following: Start-up slump, air content, unit weight, and temperature tests will be performed each day on the first batch of concrete. Acceptable start-up results are required for production of the first unit. After the first unit has been established, random acceptance testing is performed daily for each 50 yd^3 (or fraction thereof). In addition to the slump, air content, unit weight, and temperature tests, a minimum of one set of cylinders shall be required each time plastic property testing is performed.
Subsection: **Revision:**	615.08.02 Compression Testing. Delete the second sentence.
Subsection: **Revision:**	615.08.04 Acceptability of Core Tests. Delete the entire subsection.

Subsection: 615.12 Inspection.
Revision: Add the following sentences to the end of the subsection: Units will arrive at jobsite with the "Kentucky Oval" stamped on the unit which is an indication of acceptable inspection at the production facility. Units shall be inspected upon arrival for any evidence of damage resulting from transport to the jobsite.

Subsection: 716.02.02 Paint.
Revision: Replace sentence with the following: Conform to Section 821.

Subsection: 716.03 CONSTRUCTION.
Revision: Replace bullet 5) with the following: 5) AASHTO Standard Specifications for Structural Supports for Highway Signs, Luminaires, and Traffic Signals, 2013-6th Edition with current interims,

Subsection: 716.03.02 Lighting Standard Installation.
Revision: Replace the second sentence with the following:
Regardless of the station and offset noted, locate all poles/bases behind the guardrail a minimum of four feet from the front face of the guardrail to the front face of the pole base.

Subsection: 716.03.02 Lighting Standard Installation.
Part: A) Conventional Installation.
Revision: Replace the third sentence with the following: Orient the transformer base so the door is positioned on the side away from on-coming traffic.

Subsection: 716.03.02 Lighting Standard Installation.
Part: A) Conventional Installation.
Number: 1) Breakaway Installation and Requirements.
Revision: Replace the first sentence with the following: For breakaway supports, conform to Section 12 of the AASHTO Standard Specifications for Structural Supports for Highway Signs, Luminaires, and Traffic Signals, 2013-6th Edition with current interims.

Subsection: 716.03.02 Lighting Standard Installation.
Part: B) High Mast Installation
Revision: Replace the first sentence with the following: Install each high mast pole as noted on plans.

Subsection: 716.03.02 Lighting Standard Installation.
Part: B) High Mast Installation
Number: 2) Concrete Base Installation
Revision: Modification of Chart and succeeding paragraphs within this section:

Drilled Shaft Depth Data							
Level Ground		3:1 Ground Slope		2:1 Ground Slope		1.5:1 Ground Slope (2)	
Soil	Rock	Soil	Rock	Soil	Rock	Soil	Rock
17 ft	7 ft	19 ft	7 ft	20 ft	7 ft	(1)	7 ft

Steel Requirements			
Vertical Bars		Ties or Spiral	
Size	Total	Size	Spacing or Pitch
#10	16	#4	12 inch

	(1): Shaft length is 22' for cohesive soil only. For cohesionless soil, contact geotechnical branch for design. (2): Do not construct high mast drilled shafts on ground slopes steeper than 1.5:1 without the approval of the Division of Traffic. If rock is encountered during drilling operations and confirmed by the engineer to be of sound quality, the shaft is only required to be further advanced into the rock by the length of rock socket shown in the table. The total length of the shaft need not be longer than that of soil alone. Both longitudinal rebar length and number of ties or spiral length shall be adjusted accordingly. If a shorter depth is desired for the drilled shaft, the contractor shall provide, for the state's review and approval, a detailed column design with individual site specific soil and rock analysis performed and approved by a Professional Engineer licensed in the Commonwealth of Kentucky. Spiral reinforcement may be substituted for ties. If spiral reinforcement is used, one and one-half closed coils shall be provided at the ends of each spiral unit. Subsurface conditions consisting of very soft clay or very loose saturated sand could result in soil parameters weaker than those assumed. Engineer shall consult with the geotechnical branch if such conditions are encountered. The bottom of the drilled hole shall be firm and thoroughly cleaned so no loose or compressible materials are present at the time of the concrete placement. If the drilled hole contains standing water, the concrete shall be placed using a tremie to displace water. Continuous concrete flow will be required to insure full displacement of any water. The reinforcement and anchor bolts shall be adequately supported in the proper positions so no movement occurs during concrete placement. Welding of anchor bolts to the reinforcing cage is unacceptable, templates shall be used. Exposed portions of the foundation shall be formed to create a smooth finished surface. All forming shall be removed upon completion of foundation construction.
Subsection: **Part:** **Revision:**	716.03.03 Trenching. A) Trenching of Conduit for Highmast Ducted Cables. Add the following after the first sentence: If depths greater than 24 inches are necessary, obtain the Engineer's approval and maintain the required conduit depths coming into the junction boxes. No payment for additional junction boxes for greater depths will be allowed.
Subsection: **Part:** **Revision:**	716.03.03 Trenching. B) Trenching of Conduit for Non-Highmast Cables. Add the following after the second sentence: If depths greater than 24 inches are necessary for either situation listed previously, obtain the Engineer's approval and maintain the required conduit depths coming into the junction boxes. No payment for additional junction boxes for greater depths will be allowed.
Subsection: **Revision:**	716.03.10 Junction Boxes. Replace subsection title with the following: Electrical Junction Box.

Subsection: **Revision:**	716.04.07 Pole with Secondary Control Equipment. Replace the paragraph with the following: The Department will measure the quantity as each individual unit furnished and installed. The Department will not measure mounting the cabinet to the pole, backfilling, restoration, any necessary hardware to anchor pole, or electrical inspection fees, and will consider them incidental to this item of work. The Department will also not measure furnishing and installing electrical service conductors, specified conduits, meter base, transformer, service panel, fused cutout, fuses, lighting arrestors, photoelectrical control, circuit breaker, contactor, manual switch, ground rods, and ground wires and will consider them incidental to this item of work.
Subsection: **Revision:**	716.04.08 Lighting Control Equipment. Replace the paragraph with the following: The Department will measure the quantity as each individual unit furnished and installed. The Department will not measure constructing the concrete base, excavation, backfilling, restoration, any necessary anchors, or electrical inspection fees, and will consider them incidental to this item of work. The Department will also not measure furnishing and installing electrical service conductors, specified conduits, meter base, transformer, service panel, fused cutout, fuses, lighting arrestors, photoelectrical control, circuit breakers, contactor, manual switch, ground rods, and ground wires and will consider them incidental to this item of work.
Subsection: **Revision:**	716.04.09 Luminaire. Replace the first sentence with the following: The Department will measure the quantity as each individual unit furnished and installed.
Subsection: **Revision:**	716.04.10 Fused Connector Kits. Replace the first sentence with the following: The Department will measure the quantity as each individual unit furnished and installed.
Subsection: **Revision:**	716.04.13 Junction Box. Replace the subsection title with the following: Electrical Junction Box Type Various.
Subsection: **Part:** **Revision:**	716.04.13 Junction Box. A) Junction Electrical. Rename A) Junction Electrical to the following: A) Electrical Junction Box.
Subsection: **Revision:**	716.04.14 Trenching and Backfilling. Replace the second sentence with the following: The Department will not measure excavation, backfilling, underground utility warning tape (if required), the restoration of disturbed areas to original condition, and will consider them incidental to this item of work.
Subsection: **Revision:**	716.04.18 Remove Lighting. Replace the paragraph with the following: The Department will measure the quantity as a lump sum for the removal of lighting equipment. The Department will not measure the disposal of all equipment and materials off the project by the contractor. The Department also will not measure the transportation of the materials and will consider them incidental to this item of work.

Subsection: **Revision:**	716.04.20 Bore and Jack Conduit. Replace the paragraph with the following: The Department will measure the quantity in linear feet. This item shall include all work necessary for boring and installing conduit under an existing roadway. Construction methods shall be in accordance with Sections 706.03.02, paragraphs 1, 2, and 4.
Subsection: **Revision:**	716.05 PAYMENT. Replace items 04810-04811, 20391NS835 and, 20392NS835 under Code, Pay Item, and Pay Unit with the following: Code — Pay Item — Pay Unit 04810 — Electrical Junction Box — Each 04811 — Electrical Junction Box Type B — Each 20391NS835 — Electrical Junction Box Type A — Each 20392NS835 — Electrical Junction Box Type C — Each
Subsection: **Revision:**	723.02.02 Paint. Replace sentence with the following: Conform to Section 821.
Subsection: **Revision:**	723.03 CONSTRUCTION. Replace bullet 5) with the following: 5) AASHTO Standard Specifications for Structural Supports for Highway Signs, Luminaires, and Traffic Signals, 2013-6th Edition with current interims,
Subsection: **Revision:**	723.03.02 Poles and Bases Installation. Replace the first sentence with the following: Regardless of the station and offset noted, locate all poles/bases behind the guardrail a minimum of four feet from the front face of the guardrail to the front face of the pole base.
Subsection: **Part:** **Revision:**	723.03.02 Poles and Bases Installation. A) Steel Strain and Mastarm Poles Installation Replace the second paragraph with the following: For concrete base installation, see Section 716.03.02, B), 2), Paragraphs 2-7. Drilled shaft depth shall be based on the soil conditions encountered during drilling and slope condition at the site. Refer to the design chart below:
Subsection: **Part:** **Revision:**	723.03.02 Poles and Bases Installation. B) Pedestal or Pedestal Post Installation. Replace the fourth sentence of the paragraph with the following: For breakaway supports, conform to Section 12 of the AASHTO Standard Specifications for Structural Supports for Highway Signs, Luminaires, and Traffic Signals, 2013-6th Edition with current interims.
Subsection: **Part:** **Revision:**	723.03.03 Trenching. A) Under Roadway. Add the following after the second sentence: If depths greater than 24 inches are necessary, obtain the Engineer's approval and maintain ether required conduit depths coming into the junction boxes. No payment for additional junction boxes for greater depths will be allowed.
Subsection: **Revision:**	723.03.11 Wiring Installation. Add the following sentence between the fifth and sixth sentences: Provide an extra two feet of loop wire and lead-in past the installed conduit in poles, pedestals, and junction boxes.

Subsection: **Revision:**	723.03.12 Loop Installation. Replace the fifth sentence with the following: Provide an extra two feet of loop wire and lead-in past the installed conduit in poles, pedestals, and junction boxes.
Subsection: **Revision:**	723.04.02 Junction Box. Replace subsection title with the following: Electrical Junction Box Type Various.
Subsection: **Revision:**	723.04.03 Trenching and Backfilling. Replace the second sentence with the following: The Department will not measure excavation, backfilling, underground utility warning tape (if required), the restoration of disturbed areas to original condition, and will consider them incidental to this item of work.
Subsection: **Revision:**	723.04.10 Signal Pedestal. Replace the second sentence with the following: The Department will not measure excavation, concrete, reinforcing steel, specified conduits, fittings, ground rod, ground wire, backfilling, restoring disturbed areas, or other necessary hardware and will consider them incidental to this item of work.
Subsection: **Revision:**	723.04.15 Loop Saw Slot and Fill. Replace the second sentence with the following: The Department will not measure sawing, cleaning and filling induction loop saw slot, loop sealant, backer rod, and grout and will consider them incidental to this item of work.
Subsection: **Revision:**	723.04.16 Pedestrian Detector. Replace the paragraph with the following: The Department will measure the quantity as each individual unit furnished, installed and connected to pole/pedestal. The Department will not measure installing R10-3e (with arrow) sign, furnishing and installing mounting hardware for sign and will consider them incidental to this item of work.
Subsection: **Revision:**	723.04.18 Signal Controller- Type 170. Replace the second sentence with the following: The Department will not measure constructing the concrete base or mounting the cabinet to the pole, connecting the signal and detectors, excavation, backfilling, restoration, any necessary pole mounting hardware, electric service, or electrical inspection fees and will consider them incidental to this item of work. The Department will also not measure furnishing and connecting the induction of loop amplifiers, pedestrian isolators, load switches, model 400 modem card; furnishing and installing electrical service conductors, specified conduits, anchors, meter base, fused cutout, fuses, ground rods, ground wires and will consider them incidental to this item of work.
Subsection: **Revision:**	723.04.20 Install Signal Controller - Type 170. Replace the paragraph with the following: The Department will measure the quantity as each individual unit installed. The Department will not measure constructing the concrete base or mounting the cabinet to the pole, connecting the signal and detectors, and excavation, backfilling, restoration, any necessary pole mounting hardware, electric service, or electrical inspection fees and will consider them incidental to this item of work. The Department will also not measure connecting the induction loop amplifiers, pedestrian, isolators, load switches, model 400 modem card; furnishing and installing electrical service conductors, specified conduits, anchors, meter base, fused cutout, fuses, ground rods, ground wires and will consider them incidental to this item of work.

Subsection: **Revision:**	723.04.22 Remove Signal Equipment. Replace the paragraph with the following: The Department will measure the quantity as a lump sum removal of signal equipment. The Department will not measure the return of control equipment and signal heads to the Department of Highways as directed by the District Traffic Engineer. The Department also will not measure the transportation of materials of the disposal of all other equipment and materials off the project by the contractor and will consider them incidental to this item of work.
Subsection: **Revision:**	723.04.28 Install Pedestrian Detector Audible. Replace the second sentence with the following: The Department will not measure installing sign R10-3e (with arrow) and will consider it incidental to this item of work.
Subsection: **Revision:**	723.04.29 Audible Pedestrian Detector. Replace the second sentence with the following: The Department will not measure furnishing and installing the sign R10-3e (with arrow) and will consider it incidental to this item of work.
Subsection: **Revision:**	723.04.30 Bore and Jack Conduit. Replace the paragraph with the following: The Department will measure the quantity in linear feet. This item shall include all work necessary for boring and installing conduit under an existing roadway. Construction methods shall be in accordance with Sections 706.03.02, paragraphs 1, 2, and 4.
Subsection: **Revision:**	723.04.31 Install Pedestrian Detector. Replace the paragraph with the following: The Department will measure the quantity as each individual unit installed and connected to pole/pedestal. The Department will not measure installing sign R 10-3e (with arrow) and will consider it incidental to this item of work.
Subsection: **Revision:**	723.04.32 Install Mast Arm Pole. Replace the second sentence with the following: The Department will not measure arms, signal mounting brackets, anchor bolts, or any other necessary hardware and will consider them incidental to this item of work.
Subsection: **Revision:**	723.04.33 Pedestal Post. Replace the second sentence with the following: The Department will not measure excavation, concrete, reinforcing steel, anchor bolts, conduit, fittings, ground rod, ground wire, backfilling, restoration, or any other necessary hardware and will consider them incidental to this item of work.
Subsection: **Revision:**	723.04.36 Traffic Signal Pole Base. Replace the second sentence with the following: The Department will not measure excavation, reinforcing steel, anchor bolts, specified conduits, ground rods, ground wires, backfilling, or restoration and will consider them incidental to this item of work.
Subsection: **Revision:**	723.04.37 Install Signal Pedestal. Replace the second sentence with the following: The Department will not measure excavation, concrete, reinforcing steel, anchor bolts, specified conduits, fittings, ground rod, ground wire, backfilling, restoration, or any other necessary hardware and will consider them incidental to this item of work.

Subsection: **Revision:**	723.04.38 Install Pedestal Post. Replace the second sentence with the following: The Department will not measure excavation, concrete, reinforcing steel, anchor bolts, specified conduits, fittings, ground rod, ground wire, backfilling, restoration, or any other necessary hardware and will consider them incidental to this item of work.
Subsection: **Revision:**	723.05 PAYMENT. Replace items 04810-04811, 20391NS835 and, 20392NS835 under Code, Pay Item, and Pay Unit with the following: Code — Pay Item — Pay Unit 04810 — Electrical Junction Box — Each 04811 — Electrical Junction Box Type B — Each 20391NS835 — Electrical Junction Box Type A — Each 20392NS835 — Electrical Junction Box Type C — Each
Subsection: **Revision:**	804.01.02 Crushed Sand. Delete last sentence of the section.
Subsection: **Revision:**	804.01.06 Slag. Add subsection and following sentence. Provide blast furnace slag sand where permitted. The Department will allow steel slag sand only in asphalt surface applications.
Subsection: **Revision:**	804.04 Asphalt Mixtures. Replace the subsection with the following: Provide natural, crushed, conglomerate, or blast furnace slag sand, with the addition of filler as necessary, to meet gradation requirements. The Department will allow any combination of natural, crushed, conglomerate or blast furnace slag sand when the combination is achieved using cold feeds at the plant. The Engineer may allow other fine aggregates.
Subsection: **Revision:**	813.04 Gray Iron Castings. Replace the reference to "AASHTO M105" with "ASTM A48".
Subsection: **Number:** **Revision:**	813.09.02 High Strength Steel Bolts, Nuts, and Washers. A) Bolts. Delete first paragraph and "Hardness Number" Table. Replace with the following: A) Bolts. Conform to ASTM A325 (AASHTO M164) or ASTM A490 (AASHTO 253) as applicable.
Subsection: **Revision:**	814.04.02 Timber Guardrail Posts. Third paragraph, replace the reference to "AWPA C14" with "AWPA U1, Section B, Paragraph 4.1".
Subsection: **Revision:**	814.04.02 Timber Guardrail Posts. Replace the first sentence of the fourth paragraph with the following: Use any of the species of wood for round or square posts covered under AWPA U1.
Subsection: **Revision:**	814.04.02 Timber Guardrail Posts. Fourth paragraph, replace the reference to "AWPA C2" with "AWPA U1, Section B, Paragraph 4.1".
Subsection: **Revision:**	814.04.02 Timber Guardrail Posts. Delete the second sentence of the fourth paragraph.

Subsection: **Revision:**	814.05.02 Composite Plastic. 1) Add the following to the beginning of the first paragraph: Select composite offset blocks conforming to this section and assure blocks are from a manufacturer included on the Department's List of Approved Materials. 2) Delete the last paragraph of the subsection.
Subsection: **Revision:**	816.07.02 Wood Posts and Braces. First paragraph, replace the reference to "AWPA C5" with "AWPA U1, Section B, Paragraph 4.1".
Subsection: **Revision:**	816.07.02 Wood Posts and Braces. Delete the second sentence of the first paragraph.
Subsection: **Revision:**	818.07 Preservative Treatment. First paragraph, replace all references to "AWPA C14" with "AWPA U1, Section A".
Subsection: **Revision:**	834.14 Lighting Poles. Replace the first sentence with the following: Lighting pole design shall be in accordance with loading and allowable stress requirements of the AASHTO Standard Specifications for Structural Supports for Highway Signs, Luminaires, and Traffic Signals, 2013-6th Edition with current interims, with the exception of the following: The Cabinet will waive the requirement stated in the first sentence of Section 5.14.6.2 – Reinforced Holes and Cutouts for high mast poles (only). The minimum diameter at the base of the pole shall be 22 inches for high mast poles (only).
Subsection: **Revision:**	834.14.03 High Mast Poles. *Remove the second and fourth sentence from the first paragraph. *Replace the third paragraph with the following: Provide calculations and drawings that are stamped by a Professional Engineer licensed in the Commonwealth of Kentucky. *Replace paragraph six with the following: Provide a pole section that conforms to ASTM A 595 grade A with a minimum yield strength of 55 KSI or ASTM A 572 with a minimum yield strength of 55 KSI. Use tubes that are round or 16 sided with a four inch corner radius, have a constant linear taper of .144 in/ft and contain only one longitudinal seam weld. Circumferential welded tube butt splices and laminated tubes are not permitted. Provide pole sections that are telescopically slip fit assembled in the field to facilitate inspection of interior surface welds and the protective coating. The minimum length of the telescopic slip splices shall be 1.5 times the inside diameter of the exposed end of the female section. Use longitudinal seam welds as commended in Section 5.15 of the AASHTO 2013 Specifications. The thickness of the opening of the handhole shall not be less than the diameter of the bottom tube of the pole but needs to be at least 15 inches. Provide products that are hot-dip galvanized to the requirements of either ASTM A123 (fabricated products) or ASTM A 153 (hardware items).
Subsection: **Revision:**	834.16 ANCHOR BOLTS. Insert the following sentence at the beginning of the paragraph: The anchor bolt design shall follow the NCHRP Report 494 Section 2.4 and NCHRP 469 Appendix A Specifications.
Subsection: **Revision:**	834.17.01 Conventional. Add the following sentence after the second sentence: Provide a waterproof sticker mounted on the bottom of the housing that is legible from the ground and indicates the wattage of the fixture by providing the first two numbers of the wattage.

Subsection: **Revision:**	834.21.01 Waterproof Enclosures. Replace the last five sentences in the second paragraph with the following sentences: Provide a cabinet door with a louvered air vent, filter-retaining brackets and an easy to clean metal filter. Provide a cabinet door that is keyed with a factory installed standard no. 2 corbin traffic control key. Provide a light fixture with switch and bulb. Use a 120-volt fixture and utilize a L.E.D. bulb (equivalent to 60 watts minimum). Fixture shall be situated at or near the top of the cabinet and illuminate the contents of the cabinet. Provide a 120 VAC GFI duplex receptacle in the enclosure with a separate 20 amp breaker.
Subsection: **Revision:**	835.07 Traffic Poles. Replace the first sentence of the first paragraph with the following: Pole diameter and wall thickness shall be calculated in accordance with the AASHTO Standard Specifications for Structural Supports for Highway Signs, Luminaires, and Traffic Signals, 2013-6th Edition with current interims.
Subsection: **Revision:**	835.07 Traffic Poles. *Replace the first sentence of the fourth paragraph with the following: Ensure transverse plates have a thickness ≥ 2 inches. *Add the following sentence to the end of the fourth paragraph: The bottom pole diameter shall not be less than 16.25 inches.
Subsection: **Revision:**	835.07 Traffic Poles. Replace the third sentence of the fifth paragraph with the following: For anchor bolt design, pole forces shall be positioned in such a manner to maximize the force on any individual anchor bolt regardless of the actual anchor bolt orientation with the pole.
Subsection: **Revision:**	835.07 Traffic Poles. Replace the first and second sentence of the sixth paragraph with the following: The pole handhole shall be 25 inches by 6.5 inches. The handhole cover shall be removable from the handhole frame. On the frame side opposite the hinge, provide a mechanism on the handhole cover/frame to place the Department's standard padlock as specified in Section 834.25. The handhole frame shall have two stainless studs installed opposite the hinge to secure the handhole cover to the frame which includes providing stainless steel wing nuts and washers. The handhole cover shall be manufactured from 0.25 inch thick galvanized steel (ASTM 153) and have a neoprene rubber gasket that is permanently secured to the handhole frame to insure weather-tight protection. The hinge shall be manufactured from 7 gauge stainless steel to provide adjustability to insure a weather-tight fit for the cover. The minimum clear distance between the transverse plate and the bottom opening of the handhole shall not be less than the diameter of the bottom tube but needs to be at least 12 inches.

Subsection: **Revision:**	835.07 Traffic Poles. *Replace the first sentence of the last paragraph with the following: Provide calculations and drawings that are stamped by a Professional Engineer licensed in the Commonwealth of Kentucky. *Replace the third sentence of the last paragraph with the following: All tables referenced in 835.07 are found in the AASHTO Standard Specifications for Structural Supports for Highway Signs, Luminaires, and Traffic Signals, 2013-6th Edition with current interims.
Subsection: **Revision:**	835.07.01 Steel Strain Poles. Replace the second sentence of the second paragraph with the following: The detailed analysis shall be certified by a Professional Engineer licensed in the Commonwealth of Kentucky.
Subsection: **Revision:**	835.07.01 Steel Strain Poles. Replace number 7. after the second paragraph with the following: 7. Fatigue calculations should be shown for all fatigue related connections. Provide the corresponding detail, stress category and example from table 11.9.3.1-1.
Subsection: **Revision:**	835.07.02 Mast Arm Poles. Replace the second sentence of the fourth paragraph with the following: The detailed analysis shall be certified by a Professional Engineer licensed in the Commonwealth of Kentucky.
Subsection: **Revision:**	835.07.02 Mast Arm Poles. Replace number 7) after the fourth paragraph with the following: 7) Fatigue calculations should be shown for all fatigue related connections. Provide the corresponding detail, stress category and example from table 11.9.3.1-1.
Subsection: **Revision:**	835.07.03 Anchor Bolts. Add the following to the end of the paragraph: There shall be two steel templates (one can be used for the headed part of the anchor bolt when designed in this manner) provided per pole. Templates shall be contained within a 26.5 inch diameter. All templates shall be fully galvanized (ASTM A 153).
Subsection: **Revision:**	835.16.05 Optical Units. Replace the 3rd paragraph with the following: The list of certified products can be found on the following website: http://www.intertek.com.
Subsection: **Revision:**	835.19.01 Pedestrian Detector Body. Replace the first sentence with the following: Provide a four holed pole mounted aluminum rectangular housing that is compatible with the pedestrian detector.
Subsection: **Table:** **Revision:**	843.01.01 Geotextile Fabric. TYPE I FABRIC GEOTEXTILES FOR SLOPE PROTECTION AND CHANNEL LINING Add the following to the chart: Property — Minimum Value(1) — Test Method CBR Puncture (lbs) — 494 — ASTM D6241 Permittivity (1/s) — 0.7 — ASTM D4491

Subsection: 843.01.01 Geotextile Fabric.
Table: TYPE II FABRIC GEOTEXTILES FOR UNDERDRAINS
Revision: Add the following to the chart:

Property	Minimum Value[1]	Test Method
CBR Puncture (lbs)	210	ASTM D6241
Permittivity (1/s)	0.5	ASTM D4491

Subsection: 843.01.01 Geotextile Fabric.
Table: TYPE III FABRIC GEOTEXTILES FOR SUBGRADE OR EMBANKMENT STABILIZATION
Revision: Add the following to the chart:

Property	Minimum Value[1]	Test Method
CBR Puncture (lbs)	370	ASTM D6241
Permittivity (1/s)	0.05	ASTM D4491

Subsection: 843.01.01 Geotextile Fabric.
Table: TYPE IV FABRIC GEOTEXTILES FOR EMBANKMENT DRAINAGE BLANKETS AND PAVEMENT EDGE DRAINS
Revision: Add the following to the chart:

Property	Minimum Value[1]	Test Method
CBR Puncture (lbs)	309	ASTM D6241
Permittivity (1/s)	0.5	ASTM D4491

Subsection: 843.01.01 Geotextile Fabric.
Table: TYPE V HIGH STRENGTH GEOTEXTILE FABRIC
Revision: Make the following changes to the chart:

Property	Minimum Value[1]	Test Method
CBR Puncture (lbs)	618	ASTM D6241
Grab Strength (lbs)	700	ASTM D4632
Apparent Opening Size	U.S. #40[3]	ASTM D4751

[3] Maximum average roll value.

PART III

EMPLOYMENT, WAGE AND RECORD REQUIREMENTS

TRANSPORTATION CABINET
DEPARTMENT OF HIGHWAYS

LABOR AND WAGE REQUIREMENTS
APPLICABLE TO OTHER THAN FEDERAL-AID SYSTEM PROJECTS

I. Application
II. Nondiscrimination of Employees (KRS 344)
III. Payment of Predetermined Minimum Wages
IV. Statements and Payrolls

I. APPLICATION

1. These contract provisions shall apply to all work performed on the contract by the contractor with his own organization and with the assistance of workmen under his immediate superintendence and to all work performed on the contract by piecework, station work or by subcontract. The contractor's organization shall be construed to include only workmen employed and paid directly by the contractor and equipment owned or rented by him, with or without operators.

2. The contractor shall insert in each of his subcontracts all of the stipulations contained in these Required Provisions and such other stipulations as may be required.

3. A breach of any of the stipulations contained in these Required Provisions may be grounds for termination of the contract.

II. NONDISCRIMINATION OF EMPLOYEES

AN ACT OF THE KENTUCKY
GENERAL ASSEMBLY TO PREVENT
DISCRIMINATION IN EMPLOYMENT
KRS CHAPTER 344
EFFECTIVE JUNE 16, 1972

The contract on this project, in accordance with KRS Chapter 344, provides that during the performance of this contract, the contractor agrees as follows:

1. The contractor shall not fail or refuse to hire, or shall not discharge any individual, or otherwise discriminate against an individual with respect to his compensation, terms, conditions, or privileges of employment, because of such individual's race, color, religion, national origin, sex, disability or age (between forty and seventy); or limit, segregate, or classify his employees in any way which would deprive or tend to deprive an individual of employment opportunities or otherwise adversely affect his status as an employee, because of such individual's race, color, religion, national origin, sex, disability or age (between forty and seventy). The contractor agrees to post in conspicuous places, available to employees and applicants for employment, notices to be provided setting forth the provisions of this nondiscrimination clause.

2. The contractor shall not print or publish or cause to be printed or published a notice or advertisement relating to employment by such an employer or membership in or any classification or referral for employment by the employment agency, indicating any preference, limitation, specification, or discrimination, based on race, color, religion, national origin, sex, disability or age (between forty and seventy), except that such notice or advertisement may indicate a preference, limitation, or specification based on religion, or national origin when religion, or national origin is a bona fide occupational qualification for employment.

3. If the contractor is in control of apprenticeship or other training or retraining, including on-the-job training programs, he shall not discriminate against an individual because of his race, color, religion, national origin, sex, disability or age (between forty and seventy), in admission to, or employment in any program established to provide apprenticeship or other training.

4. The contractor will send to each labor union or representative of workers with which he has a collective bargaining agreement or other contract or understanding, a notice to be provided advising the said labor union or workers' representative of the contractor's commitments under this section, and shall post copies of the notice in conspicuous places available to employees and applicants for employment. The contractor will take such action with respect to any subcontract or purchase order as the administrating agency may direct as a means of enforcing such provisions, including sanctions for non-compliance.

III. PAYMENT OF PREDETERMINED MINIMUM WAGES

1. These special provisions are supplemented elsewhere in the contract by special provisions which set forth certain predetermined minimum wage rates. The contractor shall pay not less than those rates.

2. The minimum wage determination schedule shall be posted by the contractor, in a manner prescribed by the Department of Highways, at the site of the work in prominent places where it can be easily seen by the workers.

IV. STATEMENTS AND PAYROLLS

1. All contractors and subcontractors affected by the terms of KRS 337.505 to 337.550 shall keep full and accurate payroll records covering all disbursements of wages to their employees to whom they are required to pay not less than the prevailing rate of wages. Payrolls and basic records relating thereto will be maintained during the course of the work and preserved for a period of one (1) year from the date of completion of this contract.

2. The payroll records shall contain the name, address and social security number of each employee, his correct classification, rate of pay, daily and weekly number of hours worked, itemized deductions made and actual wages paid.

3. The contractor shall make his daily records available at the project site for inspection by the State Department of Highways contracting office or his authorized representative.

Periodic investigations shall be conducted as required to assure compliance with the labor provisions of the contract. Interrogation of employees and officials of the contractor shall be permitted during working hours.

Aggrieved workers, Highway Managers, Assistant District Engineers, Resident Engineers and Project Engineers shall report all complaints and violations to the Division of Contract Procurement.

The contractor shall be notified in writing of apparent violations. The contractor may correct the reported violations and notify the Department of Highways of the action taken or may request an informal hearing. The request for hearing shall be in writing within ten (10) days after receipt of the notice of the reported violation. The contractor may submit

records and information which will aid in determining the true facts relating to the reported violations.

Any person or organization aggrieved by the action taken or the findings established as a result of an informal hearing by the Division of Contract Procurement may request a formal hearing.

4. The wages of labor shall be paid in legal tender of the United States, except that this condition will be considered satisfied if payment is made by a negotiable check, on a solvent bank, which may be cashed readily by the employee in the local community for the full amount, without discount or collection charges of any kind. Where checks are used for payments, the contractor shall make all necessary arrangements for them to be cashed and shall give information regarding such arrangements.

5. No fee of any kind shall be asked or accepted by the contractor or any of his agents from any person as a condition of employment on the project.

6. No laborers shall be charged for any tools used in performing their respective duties except for reasonably avoidable loss or damage thereto.

7. Every employee on the work covered by this contract shall be permitted to lodge, board, and trade where and with whom he elects and neither the contractor nor his agents, nor his employees shall directly or indirectly require as a condition of employment that an employee shall lodge, board or trade at a particular place or with a particular person.

8. Every employee on the project covered by this contract shall be an employee of either the prime contractor or an approved subcontractor.

9. No charge shall be made for any transportation furnished by the contractor or his agents to any person employed on the work.

10. No individual shall be employed as a laborer or mechanic on this contract except on a wage basis, but this shall not be construed to prohibit the rental of teams, trucks or other equipment from individuals.

No Covered employee may be employed on the work except in accordance with the classification set forth in the schedule mentioned above; provided, however, that in the event additional classifications are required, application shall be made by the contractor to the Department of Highways and (1) the Department shall request appropriate classifications and rates from the proper agency, or (2) if there is urgent need for additional classification to avoid undue delay in the work, the contractor may employ such workmen at rates deemed comparable to rates established for similar classifications provided he has made written application through the Department of Highways, addressed to the proper agency, for the supplemental rates. The contractor shall retroactively adjust, upon receipt of the supplemental rates schedule, the wages of any employee paid less than the established rate and may adjust the wages of any employee overpaid.

11. No contractor or subcontractor contracting for any part of the contract work which may require or involve the employment of laborers or mechanics shall require or permit any laborer or mechanic in any work-week in which he is employed on such work, to work in excess of eight hours in any calendar day or in excess of forty hours in such work-week unless such laborer or mechanic receives compensation at a rate not less than one and one half times his basic rate of pay for all hours worked in excess of eight hours in any calendar day or in excess of forty hours in such work-week. A laborer, workman or mechanic and an employer may enter into a written agreement or a collective bargaining agreement to work more than eight (8) hours a calendar day but not more than ten (10) hours a calendar day for the straight time hourly rate. This agreement shall be in writing and shall be executed prior to the employee working in excess of eight (8) hours, but not more than ten (10) hours, in any one (1) calendar day.

12. Payments to the contractor may be suspended or withheld due to failure of the contractor to pay any laborer or mechanic employed or working on the site of the work, all or part of the wages required under the terms of the contract. The Department may suspend or withhold payments only after the contractor has been given written notice of the alleged violation and the contractor has failed to comply with the wage determination of the Department of Highways.

13. Contractors and subcontractors shall comply with the sections of Kentucky Revised Statutes, Chapter 337 relating to contracts for Public Works.

Revised 2-16-95

EXECUTIVE BRANCH CODE OF ETHICS

In the 1992 regular legislative session, the General Assembly passed and Governor Brereton Jones signed Senate Bill 63 (codified as KRS 11A), the Executive Branch Code of Ethics, which states, in part:

KRS 11A.040 (6) provides:

No present or former public servant shall, within six (6) months of following termination of his office or employment, accept employment, compensation or other economic benefit from any person or business that contracts or does business with the state in matters in which he was directly involved during his tenure. This provision shall not prohibit an individual from returning to the same business, firm, occupation, or profession in which he was involved prior to taking office or beginning his term of employment, provided that, for a period of six (6) months, he personally refrains from working on any matter in which he was directly involved in state government. This subsection shall not prohibit the performance of ministerial functions, including, but not limited to, filing tax returns, filing applications for permits or licenses, or filing incorporation papers.

KRS 11A.040 (8) states:

A former public servant shall not represent a person in a matter before a state agency in which the former public servant was directly involved, for a period of one (1) year after the latter of:

a) The date of leaving office or termination of employment; or
b) The date the term of office expires to which the public servant was elected.

This law is intended to promote public confidence in the integrity of state government and to declare as public policy the idea that state employees should view their work as a public trust and not as a way to obtain private benefits.

If you have worked for the executive branch of state government within the past six months, you may be subject to the law's prohibitions. The law's applicability may be different if you hold elected office or are contemplating representation of another before a state agency.

Also, if you are affiliated with a firm which does business with the state and which employs former state executive-branch employees, you should be aware that the law may apply to them.

In case of doubt, the law permits you to request an advisory opinion from the Executive Branch Ethics Commission, Room 136, Capitol Building, 700 Capitol Avenue, Frankfort, Kentucky 40601; telephone (502) 564-7954.

Kentucky Equal Employment Opportunity Act of 1978

The requirements of the Kentucky Equal Employment Opportunity Act of 1978 (KRS 45.560-45.640) shall apply to this Contract. The apparent low Bidder will be required to submit EEO forms to the Division of Construction Procurement, which will then forward to the Finance and Administration Cabinet for review and approval. No award will become effective until all forms are submitted and EEO/CC has certified compliance. The required EEO forms are as follows:

- EEO-1: Employer Information Report
- Affidavit of Intent to Comply
- Employee Data Sheet
- Subcontractor Report

These forms are available on the Finance and Administration's web page under ***Vendor Information, Standard Attachments and General Terms*** at the following address: **https://www.eProcurement.ky.gov**.

Bidders currently certified as being in compliance by the Finance and Administration Cabinet may submit a copy of their approval letter in lieu of the referenced EEO forms.

For questions or assistance please contact the Finance and Administration Cabinet by email at **finance.contractcompliance@ky.gov** or by phone at 502-564-2874.

General Decision Number: KY140100 06/06/2014 KY100

Superseded General Decision Number: KY20130100

State: Kentucky

Construction Type: Highway

Counties: Anderson, Bath, Bourbon, Boyd, Boyle, Bracken, Breckinridge, Bullitt, Carroll, Carter, Clark, Elliott, Fayette, Fleming, Franklin, Gallatin, Grant, Grayson, Greenup, Hardin, Harrison, Henry, Jefferson, Jessamine, Larue, Lewis, Madison, Marion, Mason, Meade, Mercer, Montgomery, Nelson, Nicholas, Oldham, Owen, Robertson, Rowan, Scott, Shelby, Spencer, Trimble, Washington and Woodford Counties in Kentucky.

HIGHWAY CONSTRUCTION PROJECTS (excluding tunnels, building structures in rest area projects & railroad construction; bascule, suspension & spandrel arch bridges designed for commercial navigation, bridges involving marine construction; and other major bridges).

Modification Number	Publication Date
0	01/03/2014
1	02/14/2014
2	04/18/2014
3	05/09/2014
4	05/23/2014
5	06/06/2014

BRIN0004-003 06/01/2011

BRECKENRIDGE COUNTY

	Rates	Fringes
BRICKLAYER	$ 24.11	10.07

BRKY0001-005 06/01/2013

BULLITT, CARROLL, GRAYSON, HARDIN, HENRY, JEFFERSON, LARUE, MARION, MEADE, NELSON, OLDHAM, SHELBY, SPENCER, & TRIMBLE COUNTIES:

	Rates	Fringes
BRICKLAYER	$ 24.82	10.71

BRKY0002-006 06/01/2011

BRACKEN, GALLATIN, GRANT, MASON & ROBERTSON COUNTIES:

	Rates	Fringes
BRICKLAYER	$ 26.57	10.26

BRKY0007-004 06/01/2011

BOYD, CARTER, ELLIOT, FLEMING, GREENUP, LEWIS & ROWAN COUNTIES:

	Rates	Fringes
BRICKLAYER	$ 28.29	16.80

BRKY0017-004 06/01/2009

ANDERSON, BATH, BOURBON, BOYLE, CLARK, FAYETTE, FRANKLIN, HARRISON, JESSAMINE, MADISON, MERCER, MONTGOMERY, NICHOLAS, OWEN, SCOTT, WASHINGTON & WOODFORD COUNTIES:

	Rates	Fringes
BRICKLAYER	$ 24.11	9.97

CARP0064-001 04/01/2014

	Rates	Fringes
CARPENTER	$ 27.50	14.96
Diver	$ 41.63	14.96
PILEDRIVERMAN	$ 27.75	14.96

ELEC0212-008 06/03/2013

BRACKEN, GALLATIN and GRANT COUNTIES

	Rates	Fringes
ELECTRICIAN	$ 26.35	16.09

ELEC0212-014 07/01/2013

BRACKEN, GALLATIN & GRANT COUNTIES:

	Rates	Fringes
Sound & Communication Technician	$ 22.50	9.51

ELEC0317-012 05/29/2013

BOYD, CARTER, ELLIOT & ROWAN COUNTIES:

	Rates	Fringes
Electricians:		
Cable Splicer	$ 32.68	18.13
Electrician	$ 32.22	20.84

ELEC0369-007 05/29/2013

ANDERSON, BATH, BOURBON, BOYLE, BRECKINRIDGE, BULLITT, CARROLL, CLARK, FAYETTE, FRAONKLIN, GRAYSON, HARDIN, HARRISON, HENRY, JEFFERSON, JESSAMINE, LARUE, MADISON, MARION, MEADE, MERCER, MONTGOMERY, NELSON, NICHOLAS, OLDHAM, OWEN, ROBERTSON, SCOTT, SHELBY, SPENCER, TRIMBLE, WASHINGTON, & WOODFORD COUNTIES:

	Rates	Fringes
ELECTRICIAN	$ 29.48	14.37

ELEC0575-002 12/31/2012

FLEMING, GREENUP, LEWIS & MASON COUNTIES:

	Rates	Fringes
ELECTRICIAN	$ 31.20	13.55

ENGI0181-018 07/01/2013

	Rates	Fringes
POWER EQUIPMENT OPERATOR		
GROUP 1	$ 28.00	13.90
GROUP 2	$ 25.45	13.90
GROUP 3	$ 25.85	13.90
GROUP 4	$ 25.17	13.90

OPERATING ENGINEER CLASSIFICATIONS

GROUP 1 - A-Frame Winch Truck; Auto Patrol; Backfiller; Batcher Plant; Bituminous Paver; Bituminous Transfer Machine; Boom Cat; Bulldozer; Mechanic; Cableway; Carry-All Scoop; Carry Deck Crane; Central Compressor Plant; Cherry Picker; Clamshell; Concrete Mixer (21 cu. ft. or Over); Concrete Paver; Truck-Mounted Concrete Pump; Core Drill; Crane; Crusher Plant; Derrick; Derrick Boat; Ditching & Trenching Machine; Dragline; Dredge Operator; Dredge Engineer; Elevating Grader & Loaders; Grade-All; Gurries; Heavy Equipment Robotics Operator/Mechanic; High Lift; Hoe-Type Machine; Hoist (Two or More Drums); Hoisting Engine (Two or More Drums); Horizontal Directional Drill Operator; Hydrocrane; Hyster; KeCal Loader; LeTourneau; Locomotive; Mechanic; Mechanically Operated Laser Screed; Mechanic Welder; Mucking Machine; Motor Scraper; Orangepeel Bucket; Overhead Crane; Piledriver; Power Blade; Pumpcrete; Push Dozer; Rock Spreader, attached to equipment; Rotary Drill; Roller (Bituminous); Rough Terrain Crane; Scarifier; Scoopmobile; Shovel; Side Boom; Subgrader; Tailboom; Telescoping Type Forklift; Tow or Push Boat; Tower Crane (French, German & other types); Tractor Shovel; Truck Crane; Tunnel Mining Machines, including Moles, Shields or similar types of Tunnel Mining Equipment

GROUP 2 - Air Compressor (Over 900 cu. ft. per min.); Bituminous Mixer; Boom Type Tamping Machine; Bull Float; Concrete Mixer (Under 21 cu. ft.); Dredge Engineer; Electric Vibrator; Compactor/Self-Propelled Compactor; Elevator (One Drum or Buck Hoist); Elevator (When used to Hoist Building Material); Finish Machine; Firemen & Hoist (One Drum); Flexplane; Forklift (Regardless of Lift Height); Form Grader; Joint Sealing Machine; Outboard Motor Boat; Power Sweeper (Riding Type); Roller (Rock); Ross Carrier; Skid Mounted or Trailer Mounted Conrete Pump; Skid Steer Machine with all Attachments; Switchman or Brakeman; Throttle Valve Person; Tractair & Road Widening Trencher; Tractor (50 H.P. or Over); Truck Crane Oiler; Tugger; Welding Machine; Well Points; & Whirley Oiler

GROUP 3 - All Off Road Material Handling Equipment, including Articulating Dump Trucks; Greaser on Grease Facilities servicing Heavy Equipment

GROUP 4 - Bituminous Distributor; Burlap & Curing Machine; Cement Gun; Concrete Saw; Conveyor; Deckhand Oiler; Grout Pump; Hydraulic Post Driver; Hydro Seeder; Mud Jack; Oiler; Paving Joint Machine; Power Form Handling Equipment; Pump; Roller (Earth); Steerman; Tamping Machine; Tractor (Under 50 H.P.); & Vibrator

CRANES - with booms 150 ft. & Over (Including JIB), and where the length of the boom in combination with the length of the piling leads equals or exceeds 150 ft. - $1.00 over Group 1 rate

EMPLOYEES ASSIGNED TO WORK BELOW GROUND LEVEL ARE TO BE PAID 10%
ABOVE BASIC WAGE RATE. THIS DOES NOT APPLY TO OPEN CUT WORK.

IRON0044-009 06/01/2013

BRACKEN, GALLATIN, GRANT, HARRISON, ROBERTSON,
BOURBON (Northern third, including Townships of Jackson, Millersburg, Ruddel Mills & Shawhan);
CARROLL (Eastern third, including the Township of Ghent);
FLEMING (Western part, excluding Townships of Beechburg, Colfax, Elizaville, Flemingsburg, Flemingsburg Junction, Foxport, Grange City, Hillsboro, Hilltop, Mount Carmel, Muses Mills, Nepton, Pecksridge, Plummers Landing, Plummers Mill, Poplar Plains, Ringos Mills, Tilton & Wallingford);
MASON (Western two-thirds, including Townships of Dover, Lewisburg, Mays Lick, Maysville, Minerva, Moranburg, Murphysville, Ripley, Sardis, Shannon, South Ripley & Washington);
NICHOLAS (Townships of Barefoot, Barterville, Carlisle, Ellisville, Headquarters, Henryville, Morningglory, Myers & Oakland Mills);
OWEN (Townships of Beechwood, Bromley, Fairbanks, Holbrook, Jonesville, Long Ridge, Lusby's Mill, New, New Columbus, New Liberty, Owenton, Poplar Grove, Rockdale, Sanders, Teresita & Wheatley);
SCOTT (Northern two-thirds, including Townships of Biddle, Davis, Delaplain, Elmville, Longlick, Muddy Ford, Oxford, Rogers Gap, Sadieville, Skinnersburg & Stonewall)

	Rates	Fringes
IRONWORKER		
Fence Erector	$ 22.50	18.40
Structural	$ 24.80	18.40

---

* IRON0070-006 06/01/2014

ANDERSON, BOYLE, BRECKINRIDGE, BULLITT, FAYETTE, FRANKLIN, GRAYSON, HARDIN, HENRY, JEFFERSON, JESSAMINE, LARUE, MADISON, MARION, MEADE, MERCER, NELSON, OLDHAM, SHELBY, SPENCER, TRIMBLE, WASHINGTON & WOODFORD
BOURBON (Southern two-thirds, including Townships of Austerlity, Centerville, Clintonville, Elizabeth, Hutchison, Littlerock, North Middletown & Paris);
CARROLL (Western two-thirds, including Townships of Carrollton, Easterday, English, Locust, Louis, Prestonville & Worthville);
CLARK (Western two-thirds, including Townships of Becknerville, Flanagan, Ford, Pine Grove, Winchester & Wyandotte);

OWEN (Eastern eighth, including Townships of Glenmary, Gratz, Monterey, Perry Park & Tacketts Mill);
SCOTT (Southern third, including Townships of Georgetown, Great Crossing, Newtown, Stampling Ground & Woodlake);

	Rates	Fringes
IRONWORKER	$ 26.97	19.75

IRON0372-006 06/01/2013

BRACKEN, GALLATIN, GRANT, HARRISON and ROBERTSON
BOURBON (Northern third, including Townships of Jackson, Millersburg, Ruddel Mills & Shawhan);
CARROLL (Eastern third, including the Township of Ghent);
FLEMING (Western part, Excluding Townships of Beechburg, Colfax, Elizaville, Flemingsburg, Flemingsburg Junction, Foxport, Grange City, Hillsboro, Hilltop, Mount Carmel, Muses Mills, Nepton, Pecksridge, Plummers Landing, Plummers Mill, Poplar Plains,
Ringos Mills, Tilton & Wallingford);
MASON (Western two-thirds, including Townships of Dover, Lewisburg, Mays Lick, Maysville, Minerva, Moranburg, Murphysville, Ripley, Sardis, Shannon, South Ripley & Washington);
NICHOLAS (Townships of Barefoot, Barterville, Carlisle, Ellisville, Headquarters, Henryville, Morningglory, Myers & Oakland Mills);
OWEN (Townships of Beechwood, Bromley, Fairbanks, Holbrook, Jonesville, Long Ridge, Lusby's Mill, New, New Columbus, New Liberty, Owenton, Poplar Grove, Rockdale, Sanders, Teresita & Wheatley);
SCOTT (Northern two-thirds, including Townships of Biddle, Davis,Delaplain, Elmville, Longlick, Muddy Ford, Oxford, Rogers Gap, Sadieville, Skinnersburg & Stonewall) COUNTIES

	Rates	Fringes
IRONWORKER, REINFORCING	$ 26.47	19.30

IRON0769-007 12/01/2012

BATH, BOYD, CARTER, ELLIOTT, GREENUP, LEWIS, MONTGOMERY & ROWAN
CLARK (Eastern third, including townships of Bloomingdale, Hunt, Indian Fields, Kiddville, Loglick, Rightangele & Thomson);
FLEMING (Townships of Beechburg, Colfax, Elizaville, Flemingsburg, Flemingsburg Junction, Foxport, Grange City, Hillsboro, Hilltop, Mount Carmel, Muses Mills, Nepton, Pecksridge, Plummers Landing, Plummers Mill, Poplar Plains, Ringos Mills, Tilton & Wallingford);
MASON (Eastern third, including Townships of Helena, Marshall, Orangeburg, Plumville & Springdale);
NICHOLAS (Eastern eighth, including the Township of Moorefield Sprout)

	Rates	Fringes
IRONWORKER	$ 32.54	20.18

LABO0189-003 07/01/2013

BATH, BOURBON, BOYD, BOYLE, BRACKEN, CARTER, CLARK, ELLIOTT, FAYETTE, FLEMING, FRANKLIN, GALLATIN, GRANT, GREENUP, HARRISON, JESSAMINE, LEWIS, MADISON, MASON, MERCER, MONTGOMERY, NICHOLAS, OWEN, ROBERTSON, ROWAN, SCOTT, & WOOLFORD COUNTIES

	Rates	Fringes
Laborers:		
GROUP 1	$ 21.35	11.61
GROUP 2	$ 21.60	11.61
GROUP 3	$ 21.65	11.61
GROUP 4	$ 22.25	11.61

LABORERS CLASSIFICATIONS

GROUP 1 - Aging & Curing of Concrete; Asbestos Abatement Worker; Asphalt Plant; Asphalt; Batch Truck Dump; Carpenter Tender; Cement Mason Tender; Cleaning of Machines; Concrete; Demolition; Dredging; Environmental - Nuclear, Radiation, Toxic & Hazardous Waste - Level D; Flagperson; Grade Checker; Hand Digging & Hand Back Filling; Highway Marker Placer; Landscaping, Mesh Handler & Placer; Puddler; Railroad; Rip-rap & Grouter; Right-of-Way; Sign, Guard Rail & Fence Installer; Signal Person; Sound Barrier Installer; Storm & Sanitary Sewer; Swamper; Truck Spotter & Dumper; Wrecking of Concrete Forms; General Cleanup

GROUP 2 - Batter Board Man (Sanitary & Storm Sewer); Brickmason Tender; Mortar Mixer Operator; Scaffold Builder; Burner & Welder; Bushammer; Chain Saw Operator; Concrete Saw Operator; Deckhand Scow Man; Dry Cement Handler; Environmental - Nuclear, Radiation, Toxic & Hazardous Waste - Level C; Forklift Operator for Masonary; Form Setter; Green Concrete Cutting; Hand Operated Grouter & Grinder Machine Operator; Jackhammer; Pavement Breaker; Paving Joint Machine; Pipelayer; Plastic Pipe Fusion; Power Driven Georgia Buggy & Wheel Barrow; Power Post Hole Digger; Precast Manhole Setter; Walk-Behind Tamper; Walk-Behind Trencher; Sand Blaster; Concrete Chipper; Surface Grinder; Vibrator Operator; Wagon Driller

GROUP 3 - Asphalt Luteman & Raker; Gunnite Nozzleman; Gunnite Operator & Mixer; Grout Pump Operator; Side Rail Setter; Rail Paved Ditches; Screw Operator; Tunnel (Free Air); Water Blaster

GROUP 4 - Caisson Worker (Free Air); Cement Finisher; Environmental - Nuclear, Radiation, Toxic & Hazardous Waste - Levels A & B; Miner & Driller (Free Air); Tunnel Blaster; & Tunnel Mucker (Free Air); Directional & Horizontal Boring; Air Track Drillers (All Types); Powdermen & Blasters; Troxler & Concrete Tester if Laborer is Utilized

---

LABO0189-008 07/01/2013

ANDERSON, BULLITT, CARROLL, HARDIN, HENRY, JEFFERSON, LARUE, MARION, MEADE, NELSON, OLDHAM, SHELBY, SPENCER, TRIMBLE & WASHINGTON COUNTIES

	Rates	Fringes
Laborers:		
GROUP 1	$ 22.01	10.95
GROUP 2	$ 22.26	10.95
GROUP 3	$ 22.31	10.95
GROUP 4	$ 22.91	10.95

LABORERS CLASSIFICATIONS

GROUP 1 - Aging & Curing of Concrete; Asbestos Abatement Worker; Asphalt Plant; Asphalt; Batch Truck Dump; Carpenter Tender; Cement Mason Tender; Cleaning of Machines; Concrete; Demolition; Dredging; Environmental - Nuclear, Radiation, Toxic & Hazardous Waste - Level D; Flagperson; Grade Checker; Hand Digging & Hand Back Filling; Highway Marker Placer; Landscaping, Mesh Handler & Placer; Puddler; Railroad; Rip-rap & Grouter; Right-of-Way; Sign, Guard Rail & Fence Installer; Signal Person; Sound Barrier Installer; Storm & Sanitary Sewer; Swamper; Truck Spotter & Dumper; Wrecking of Concrete Forms; General Cleanup

GROUP 2 - Batter Board Man (Sanitary & Storm Sewer); Brickmason Tender; Mortar Mixer Operator; Scaffold Builder; Burner & Welder; Bushammer; Chain Saw Operator; Concrete Saw Operator; Deckhand Scow Man; Dry Cement Handler; Environmental - Nuclear, Radiation, Toxic & Hazardous Waste - Level C; Forklift Operator for Masonary; Form Setter; Green Concrete Cutting; Hand Operated Grouter & Grinder Machine Operator; Jackhammer; Pavement Breaker; Paving Joint Machine; Pipelayer; Plastic Pipe Fusion; Power Driven Georgia Buggy & Wheel Barrow; Power Post Hole Digger; Precast Manhole Setter; Walk-Behind Tamper; Walk-Behind Trencher; Sand Blaster; Concrete Chipper; Surface Grinder; Vibrator Operator; Wagon Driller

GROUP 3 - Asphalt Luteman & Raker; Gunnite Nozzleman; Gunnite Operator & Mixer; Grout Pump Operator; Side Rail Setter; Rail Paved Ditches; Screw Operator; Tunnel (Free Air); Water Blaster

GROUP 4 - Caisson Worker (Free Air); Cement Finisher; Environmental - Nuclear, Radiation, Toxic & Hazardous Waste - Levels A & B; Miner & Driller (Free Air); Tunnel Blaster; & Tunnel Mucker (Free Air); Directional & Horizontal Boring; Air Track Drillers (All Types); Powdermen & Blasters; Troxler & Concrete Tester if Laborer is Utilized

---

LABO0189-009 07/01/2013

BRECKINRIDGE & GRAYSON COUNTIES

	Rates	Fringes
Laborers:		
GROUP 1	$ 21.96	11.00
GROUP 2	$ 22.21	11.00
GROUP 3	$ 22.26	11.00
GROUP 4	$ 22.86	11.00

LABORERS CLASSIFICATIONS

GROUP 1 - Aging & Curing of Concrete; Asbestos Abatement Worker; Asphalt Plant; Asphalt; Batch Truck Dump; Carpenter Tender; Cement Mason Tender; Cleaning of Machines; Concrete; Demolition; Dredging; Environmental - Nuclear, Radiation, Toxic & Hazardous Waste - Level D; Flagperson; Grade Checker; Hand Digging & Hand Back Filling; Highway Marker Placer; Landscaping, Mesh Handler & Placer; Puddler; Railroad; Rip-rap & Grouter; Right-of-Way; Sign, Guard Rail & Fence Installer; Signal Person; Sound Barrier Installer; Storm & Sanitary Sewer; Swamper; Truck Spotter & Dumper; Wrecking of Concrete Forms; General Cleanup

GROUP 2 - Batter Board Man (Sanitary & Storm Sewer); Brickmason Tender; Mortar Mixer Operator; Scaffold Builder; Burner & Welder; Bushammer; Chain Saw Operator; Concrete Saw Operator; Deckhand Scow Man; Dry Cement Handler; Environmental - Nuclear, Radiation, Toxic & Hazardous Waste - Level C; Forklift Operator for Masonary; Form Setter; Green Concrete Cutting; Hand Operated Grouter & Grinder Machine Operator; Jackhammer; Pavement Breaker; Paving Joint Machine; Pipelayer; Plastic Pipe Fusion; Power Driven Georgia Buggy & Wheel Barrow; Power Post Hole Digger; Precast Manhole Setter; Walk-Behind Tamper; Walk-Behind Trencher; Sand Blaster; Concrete Chipper; Surface Grinder; Vibrator Operator; Wagon Driller

GROUP 3 - Asphalt Luteman & Raker; Gunnite Nozzleman; Gunnite Operator & Mixer; Grout Pump Operator; Side Rail Setter; Rail Paved Ditches; Screw Operator; Tunnel (Free Air); Water Blaster

GROUP 4 - Caisson Worker (Free Air); Cement Finisher; Environmental - Nuclear, Radiation, Toxic & Hazardous Waste - Levels A & B; Miner & Driller (Free Air); Tunnel Blaster; & Tunnel Mucker (Free Air); Directional & Horizontal Boring; Air Track Drillers (All Types); Powdermen & Blasters; Troxler & Concrete Tester if Laborer is Utilized

---

PAIN0012-005 06/11/2005

BATH, BOURBON, BOYLE, CLARK, FAYETTE, FLEMING, FRANKLIN, HARRISON, JESSAMINE, MADISON, MERCER, MONTGOMERY, NICHOLAS, ROBERTSON, SCOTT & WOODFORD COUNTIES:

	Rates	Fringes
PAINTER		
Bridge/Equipment Tender and/or Containment Builder	$ 18.90	5.90
Brush & Roller	$ 21.30	5.90
Elevated Tanks; Steeplejack Work; Bridge & Lead Abatement	$ 22.30	5.90
Sandblasting & Waterblasting	$ 22.05	5.90
Spray	$ 21.80	5.90

PAIN0012-017 05/01/2014

BRACKEN, GALLATIN, GRANT, MASON & OWEN COUNTIES:

	Rates	Fringes
PAINTER (Heavy & Highway Bridges - Guardrails - Lightpoles - Striping)		
Bridge Equipment Tender and Containment Builder	$ 20.73	8.71
Brush & Roller	$ 23.39	8.71
Elevated Tanks; Steeplejack Work; Bridge & Lead Abatement	$ 24.39	8.71
Sandblasting & Water Blasting	$ 24.14	8.71
Spray	$ 23.89	8.71

---

* PAIN0118-004 06/01/2014

ANDERSON, BRECKINRIDGE, BULLITT, CARROLL, GRAYSON, HARDIN, HENRY, JEFFERSON, LARUE, MARION, MEADE, NELSON, OLDHAM, SHELBY, SPENCER, TRIMBLE & WASHINGTON COUNTIES:

	Rates	Fringes
PAINTER		
Brush & Roller	$ 18.50	12.02
Spray, Sandblast, Power Tools, Waterblast & Steam Cleaning	$ 19.00	12.02

PAIN1072-003 12/01/2013

BOYD, CARTER, ELLIOTT, GREENUP, LEWIS and ROWAN COUNTIES

	Rates	Fringes
Painters:		
Bridges; Locks; Dams; Tension Towers & Energized Substations	$ 31.03	15.10
Power Generating Facilities	$ 27.79	15.10

---

* PLUM0248-003 06/01/2014

BOYD, CARTER, ELLIOTT, GREENUP, LEWIS & ROWAN COUNTIES:

	Rates	Fringes
Plumber and Steamfitter	$ 34.02	17.93

PLUM0392-007 06/01/2013

BRACKEN, CARROLL (Eastern Half), GALLATIN, GRANT, MASON, OWEN & ROBERTSON COUNTIES:

	Rates	Fringes
Plumbers and Pipefitters	$ 29.60	17.09

PLUM0502-003 08/01/2013

BRECKINRIDGE, BULLITT, CARROLL (Western Half), FRANKLIN

(Western three-fourths), GRAYSON, HARDIN, HENRY, JEFFERSON, LARUE, MARION, MEADE, NELSON, OLDHAM, SHELBY, SPENCER, TRIMBLE & WASHINGTON COUNTIES

	Rates	Fringes
PLUMBER	$ 32.00	17.17

SUKY2010-160 10/08/2001

	Rates	Fringes
Truck drivers:		
GROUP 1	$ 16.57	7.34
GROUP 2	$ 16.68	7.34
GROUP 3	$ 16.86	7.34
GROUP 4	$ 16.96	7.34

TRUCK DRIVER CLASSIFICATIONS

GROUP 1 - Mobile Batch Truck Tender

GROUP 2 - Greaser; Tire Changer; & Mechanic Tender

GROUP 3 - Single Axle Dump; Flatbed; Semi-trailer or Pole Trailer when used to pull building materials and equipment; Tandem Axle Dump; Distributor; Mixer; & Truck Mechanic

GROUP 4 - Euclid & Other Heavy Earthmoving Equipment & Lowboy; Articulator Cat; 5-Axle Vehicle; Winch & A-Frame when used in transporting materials; Ross Carrier; Forklift when used to transport building materials; & Pavement Breaker

---

WELDERS - Receive rate prescribed for craft performing operation to which welding is incidental.

==========

Unlisted classifications needed for work not included within the scope of the classifications listed may be added after award only as provided in the labor standards contract clauses (29CFR 5.5 (a) (1) (ii)).

The body of each wage determination lists the classification and wage rates that have been found to be prevailing for the cited type(s) of construction in the area covered by the wage determination. The classifications are listed in alphabetical order of "identifiers" that indicate whether the particular rate is union or non-union.

Union Identifiers

An identifier enclosed in dotted lines beginning with

characters other than "SU" denotes that the union classification and rate have found to be prevailing for that classification. Example: PLUM0198-005 07/01/2011. The first four letters , PLUM, indicate the international union and the four-digit number, 0198, that follows indicates the local union number or district council number where applicable , i.e., Plumbers Local 0198. The next number, 005 in the example, is an internal number used in processing the wage determination. The date, 07/01/2011, following these characters is the effective date of the most current negotiated rate/collective bargaining agreement which would be July 1, 2011 in the above example.

Union prevailing wage rates will be updated to reflect any changes in the collective bargaining agreements governing the rates.

0000/9999: weighted union wage rates will be published annually each January.

Non-Union Identifiers

Classifications listed under an "SU" identifier were derived from survey data by computing average rates and are not union rates; however, the data used in computing these rates may include both union and non-union data. Example: SULA2004-007 5/13/2010. SU indicates the rates are not union majority rates, LA indicates the State of Louisiana; 2004 is the year of the survey; and 007 is an internal number used in producing the wage determination. A 1993 or later date, 5/13/2010, indicates the classifications and rates under that identifier were issued as a General Wage Determination on that date.

Survey wage rates will remain in effect and will not change until a new survey is conducted.

WAGE DETERMINATION APPEALS PROCESS

1.) Has there been an initial decision in the matter? This can be:

* an existing published wage determination
* a survey underlying a wage determination
* a Wage and Hour Division letter setting forth a position on a wage determination matter
* a conformance (additional classification and rate) ruling

On survey related matters, initial contact, including requests for summaries of surveys, should be with the Wage and Hour Regional Office for the area in which the survey was conducted because those Regional Offices have responsibility for the Davis-Bacon survey program. If the response from this initial contact is not satisfactory, then the process described in 2.) and 3.) should be followed.

With regard to any other matter not yet ripe for the formal process described here, initial contact should be with the Branch of Construction Wage Determinations. Write to:

Branch of Construction Wage Determinations
Wage and Hour Division
U.S. Department of Labor
200 Constitution Avenue, N.W.
Washington, DC 20210

2.) If the answer to the question in 1.) is yes, then an interested party (those affected by the action) can request review and reconsideration from the Wage and Hour Administrator (See 29 CFR Part 1.8 and 29 CFR Part 7). Write to:

Wage and Hour Administrator
U.S. Department of Labor
200 Constitution Avenue, N.W.
Washington, DC 20210

The request should be accompanied by a full statement of the interested party's position and by any information (wage payment data, project description, area practice material, etc.) that the requestor considers relevant to the issue.

3.) If the decision of the Administrator is not favorable, an interested party may appeal directly to the Administrative Review Board (formerly the Wage Appeals Board). Write to:

Administrative Review Board
U.S. Department of Labor
200 Constitution Avenue, N.W.
Washington, DC 20210

4.) All decisions by the Administrative Review Board are final.

==========

END OF GENERAL DECISION

Fringe benefit amounts are applicable for all hours worked except when otherwise noted.

These rates are listed pursuant to the Kentucky Determination No. CR-13-III- HWY dated April 15, 2013.

No laborer, workman or mechanic shall be paid at a rate less than that of a Journeyman except those classified as bona fide apprentices.

Apprentices or trainees shall be permitted to work as such subject to Administrative Regulations adopted by the Commissioner of Workplace Standards. Copies of these regulations will be furnished upon request from any interested person.

Before using apprentices on the job the contractor shall present to the Contracting Officer written evidence of registration of such employees in a program of a State apprenticeship and training agency approved and recognized by the U. S. Bureau of Apprenticeship and Training. In the absence of such a State agency, the contractor shall submit evidence of approval and registration by the U. S. Bureau of Apprenticeship and Training.

The contractor shall submit to the Contracting Officer, written evidence of the established apprenticeship-journeyman ratios and wage rates in the project area, which will be the basis for establishing such ratios and rates for the project under the applicable contract provisions.

TO: EMPLOYERS/EMPLOYEES

PREVAILING WAGE SCHEDULE:

The wages indicated on this wage schedule are the least permitted to be paid for the occupations indicated. When an employee works in more than one classification, the employer must record the number of hours worked in each classification at the prescribed hourly base rate.

OVERTIME:

Overtime is to be paid after an employee works eight (8) hours a day or forty (40) hours a week, whichever gives the employee the greater wages. At least time and one-half the base rate is required for all overtime. A laborer, workman or mechanic and an employer may enter into a written agreement or a collective bargaining agreement to work more than eight (8) hours a calendar day but not more than ten (10) hours a calendar day for the straight time hourly rate. Wage violations or questions should be directed to the designated Engineer or the undersigned.

Diana Castle Radcliffe, P.E.
Director, Division of Construction Procurement
Frankfort, Kentucky 40622

PART IV

INSURANCE

INSURANCE

The Contractor shall procure and maintain the following insurance in addition to the insurance required by law:

1) Commercial General Liability-Occurrence form – not less than $2,000,000 General aggregate, $2,000,000 Products & Completed Aggregate, $1,000,000 Personal & Advertising, $1,000,000 each occurrence.

2) Automobile Liability- $1,000,000 per accident

3) Employers Liability:

   a) $100,000 Each Accident Bodily Injury
   b) $500,000 Policy limit Bodily Injury by Disease
   c) $100,000 Each Employee Bodily Injury by Disease

4) The insurance required above must be evidenced by a Certificate of Insurance and this Certificate of Insurance must contain one of the following statements:
   a) "policy contains no deductible clauses."
   b) "policy contains _____ (amount) deductible property damage clause but company will pay claim and collect the deductible from the insured."

5) KENTUCKY WORKMEN'S COMPENSATION INSURANCE. The contractor shall furnish evidence of coverage of all his employees or give evidence of self-insurance by submitting a copy of a certificate issued by the Workmen's Compensation Board.

The cost of insurance is incidental to all contract items. All subcontractors must meet the same minimum insurance requirements.

PART V

BID ITEMS

141034

PROPOSAL BID ITEMS

Report Date 6/12/14

Section: 0001 - PAVING

LINE	BID CODE	ALT	DESCRIPTION	QUANTITY	UNIT	UNIT PRICE	FP	AMOUNT
0010	00103		ASPHALT SEAL COAT	20.00	TON		$	
0020	00190		LEVELING & WEDGING PG64-22	1,000.00	TON		$	
0030	00217		CL4 ASPH BASE 1.00D PG64-22	3,252.00	TON		$	
0040	00339		CL3 ASPH SURF 0.38D PG64-22	14,714.00	TON		$	
0050	00342		CL4 ASPH SURF 0.38A PG76-22	22,376.00	TON		$	
0060	02677		ASPHALT PAVE MILLING & TEXTURING	40,343.00	TON		$	
0070	02696		SHOULDER RUMBLE STRIPS-SAWED	99,207.00	LF		$	

Section: 0002 - ROADWAY

LINE	BID CODE	ALT	DESCRIPTION	QUANTITY	UNIT	UNIT PRICE	FP	AMOUNT
0080	00461		CULVERT PIPE-15 IN	340.00	LF		$	
0090	00462		CULVERT PIPE-18 IN	80.00	LF		$	
0100	00464		CULVERT PIPE-24 IN	20.00	LF		$	
0110	00468		CULVERT PIPE-36 IN	60.00	LF		$	
0120	01432		SLOPED BOX OUTLET TYPE 1-15 IN	17.00	EACH		$	
0130	01450		S & F BOX INLET-OUTLET-18 IN	4.00	EACH		$	
0140	01451		S & F BOX INLET-OUTLET-24 IN	1.00	EACH		$	
0150	01453		S & F BOX INLET-OUTLET-36 IN	3.00	EACH		$	
0160	01891		ISLAND HEADER CURB TYPE 2	225.00	LF		$	
0170	01982		DELINEATOR FOR GUARDRAIL MONO DIRECTIONAL WHITE	190.00	EACH		$	
0180	01983		DELINEATOR FOR GUARDRAIL MONO DIRECTIONAL YELLOW	20.00	EACH		$	
0190	02014		BARRICADE-TYPE III	4.00	EACH		$	
0200	02230		EMBANKMENT IN PLACE	10.00	CUYD		$	
0210	02363		GUARDRAIL CONNECTOR TO BRIDGE END TY A	6.00	EACH		$	
0220	02367		GUARDRAIL END TREATMENT TYPE 1	2.00	EACH		$	
0230	02369		GUARDRAIL END TREATMENT TYPE 2A	19.00	EACH		$	
0240	02373		GUARDRAIL END TREATMENT TYPE 3	3.00	EACH		$	
0250	02381		REMOVE GUARDRAIL	10,850.00	LF		$	
0260	02382		GUARDRAIL CONNECT-SHLD BRIDGE PIER TY A	2.00	EACH		$	
0270	02384		GUARDRAIL CONNECT SHLD BRIDGE PIER TY A1	2.00	EACH		$	
0280	02387		GUARDRAIL CONNECTOR TO BRIDGE END TY A-1	3.00	EACH		$	
0290	02391		GUARDRAIL END TREATMENT TYPE 4A	10.00	EACH		$	
0300	02483		CHANNEL LINING CLASS II	310.00	TON		$	
0310	02562		TEMPORARY SIGNS	2,000.00	SQFT		$	
0320	02575		DITCHING AND SHOULDERING	23,290.00	LF		$	
0330	02625		REMOVE HEADWALL	25.00	EACH		$	
0340	02650		MAINTAIN & CONTROL TRAFFIC	1.00	LS		$	
0350	02671		PORTABLE CHANGEABLE MESSAGE SIGN	4.00	EACH		$	
0360	02676		MOBILIZATION FOR MILL & TEXT	1.00	LS		$	
0370	02726		STAKING	1.00	LS		$	
0380	03240		BASE FAILURE REPAIR	1,000.00	SQYD		$	

141034

PROPOSAL BID ITEMS

Report Date 6/12/14

LINE	BID CODE	ALT	DESCRIPTION	QUANTITY	UNIT	UNIT PRICE	FP	AMOUNT
0390	03262		CLEAN PIPE STRUCTURE	1.00	EACH		$	
0400	05950		EROSION CONTROL BLANKET	20.00	SQYD		$	
0410	06417		FLEXIBLE DELINEATOR POST-W	490.00	EACH		$	
0420	06418		FLEXIBLE DELINEATOR POST-Y	210.00	EACH		$	
0430	06549		PAVE STRIPING-TEMP REM TAPE-B	25,810.00	LF		$	
0440	06550		PAVE STRIPING-TEMP REM TAPE-W	181,396.00	LF		$	
0450	06551		PAVE STRIPING-TEMP REM TAPE-Y	49,940.00	LF		$	
0460	06568		PAVE MARKING-THERMO STOP BAR-24IN	55.00	LF		$	
0470	06573		PAVE MARKING-THERMO STR ARROW	2.00	EACH		$	
0480	06574		PAVE MARKING-THERMO CURV ARROW	8.00	EACH		$	
0490	10020NS		FUEL ADJUSTMENT	57,732.00	DOLL	$1.00	$	$57,732.00
0500	10030NS		ASPHALT ADJUSTMENT	145,007.00	DOLL	$1.00	$	$145,007.00
0510	20071EC		JOINT ADHESIVE	200,806.00	LF		$	
0520	20366NN		REPLACE GRATE	3.00	EACH		$	
0530	21802EN		G/R STEEL W BEAM-S FACE (7 FT POST)	10,375.00	LF		$	
0540	23131ER701		PIPELINE VIDEO INSPECTION	100.00	LF		$	
0550	23143ED		KPDES PERMIT AND TEMP EROSION CONTROL	1.00	LS		$	
0560	24189ER		DURABLE WATERBORNE MARKING-6 IN W	76,265.00	LF		$	
0570	24190ER		DURABLE WATERBORNE MARKING-6 IN Y	52,627.00	LF		$	
0580	24191ER		DURABLE WATERBORNE MARKING-12 IN W	2,218.00	LF		$	
0590	24489EC		INLAID PAVEMENT MARKER	2,816.00	EACH		$	

Section: 0003 - TRAFFIC LOOPS

LINE	BID CODE	ALT	DESCRIPTION	QUANTITY	UNIT	UNIT PRICE	FP	AMOUNT
0600	04793		CONDUIT-1 1/4 IN	80.00	LF		$	
0610	04795		CONDUIT-2 IN	60.00	LF		$	
0620	04820		TRENCHING AND BACKFILLING	120.00	LF		$	
0630	04829		PIEZOELECTRIC SENSOR	12.00	EACH		$	
0640	04830		LOOP WIRE	5,200.00	LF		$	
0650	04895		LOOP SAW SLOT AND FILL	1,080.00	LF		$	
0660	20359NN		GALVANIZED STEEL CABINET	4.00	EACH		$	
0670	20360ES818		WOOD POST	8.00	EACH		$	
0680	20391NS835		ELECTRICAL JUNCTION BOX TYPE A	4.00	EACH		$	

Section: 0004 - DEMOBILIZATION &/OR MOBILIZATION

LINE	BID CODE	ALT	DESCRIPTION	QUANTITY	UNIT	UNIT PRICE	FP	AMOUNT
0690	02568		MOBILIZATION	1.00	LS		$	
0700	02569		DEMOBILIZATION	1.00	LS		$	