**CALL NO. 319**

**CONTRACT ID. 121061**

**ROWAN COUNTY**

**FED/STATE PROJECT NUMBER FD04 SPP 103 0064 134-139**

**DESCRIPTION LEXINGTON-CATLETTSBURG ROAD(I-64)**

**WORK TYPE ASPHALT PAVEMENT & ROADWAY REHAB**

**PRIMARY COMPLETION DATE 7/31/2013**

**LETTING DATE: November 16,2012**

Sealed Bids will be received electronically through the Bid Express bidding service until 10:00 AM EASTERN STANDARD TIME November 16,2012. Bids will be publicly announced at 10:00 AM EASTERN STANDARD TIME.

**NO PLANS ASSOCIATED WITH THIS PROJECT.**

**REQUIRED BID PROPOSAL GUARANTY:** Not less than 5% of the total bid.

# TABLE OF CONTENTS

PART I SCOPE OF WORK

- PROJECT(S), COMPLETION DATE(S), & LIQUIDATED DAMAGES
- CONTRACT NOTES
- STATE CONTRACT NOTES
- ASPHALT MIXTURE
- DGA BASE
- DGA BASE FOR SHOULDERS
- INCIDENTAL SURFACING
- FUEL AND ASPHALT PAY ADJUSTMENT
- SPECIAL NOTE(S) APPLICABLE TO PROJECT
- RIGHT OF WAY NOTES
- UTILITY CLEARANCE

PART II SPECIFICATIONS AND STANDARD DRAWINGS

- SPECIFICATIONS REFERENCE
- SUPPLEMENTAL SPECIFICATION

PART III EMPLOYMENT, WAGE AND RECORD REQUIREMENTS

- LABOR AND WAGE REQUIREMENTS
- EXECUTIVE BRANCH CODE OF ETHICS
- KENTUCKY EQUAL EMPLOYMENT OPPORTUNITY ACT OF 1978 LOCALITY 1,2,3,4 / STATE (OVER 250,000)
- PROJECT WAGE RATES LOCALITY 3 / FEDERAL & STATE

PART IV INSURANCE

PART V BID ITEMS

# PART I

# SCOPE OF WORK

# ADMINISTRATIVE DISTRICT - 09

**CONTRACT ID - 121061**

**FD04 SPP 103 0064 134-139**

**COUNTY - ROWAN**

**PCN - DE10300641261**
**FD04 SPP 103 0064 134-139**

LEXINGTON-CATLETTSBURG ROAD (I-64) ASPHALT PAVEMENT REHAB ON I-64 FROM MP 134.750 TO MP 138.300.ASPHALT PAVEMENT & ROADWAY REHAB SYP NO. 09-02027.00.

GEOGRAPHIC COORDINATES LATITUDE 38:07:25.00 LONGITUDE 83:45:33.00

COMPLETION DATE(S):

COMPLETED BY 07/31/2013

APPLIES TO ENTIRE CONTRACT

# CONTRACT NOTES

## PROPOSAL ADDENDA

All addenda to this proposal must be applied when calculating bid and certified in the bid packet submitted to the Kentucky Department of Highways. Failure to use the correct and most recent addenda may result in the bid being rejected.

## BID SUBMITTAL

Bidder must use the Department's Expedite Bidding Program available on the Internet web site of the Department of Highways, Division of Construction Procurement. (www.transportation.ky.gov/contract)

The Bidder must download the bid file located on the Bid Express website (www.bidx.com) to prepare a bid packet for submission to the Department. The bidder must submit electronically using Bid Express.

## JOINT VENTURE BIDDING

Joint venture bidding is permissible. All companies in the joint venture must be prequalified in one of the work types in the Qualifications for Bidders for the project. The bidders must get a vendor ID for the joint venture from the Division of Construction Procurement and register the joint venture as a bidder on the project. Also, the joint venture must obtain a digital ID from Bid Express to submit a bid. A joint bid bond of 5% may be submitted for both companies or each company may submit a separate bond of 5%.

## UNDERGROUND FACILITY DAMAGE PROTECTION

The contractor is advised that the Underground Facility Damage Protection Act of 1994, became law January 1, 1995. It is the contractor's responsibility to determine the impact of the act regarding this project, and take all steps necessary to be in compliance with the provision of the act.

## SPECIAL NOTE FOR PIPE INSPECTION

Contrary to Section 701.03.08 of the 2012 Standard Specifications for Road and Bridge Construction and Kentucky Method 64-114, certification by the Kentucky Transportation Center for prequalified Contractors to perform laser/video inspection is not required on this contract. It will continue to be a requirement for the Contractor performing any laser/video pipe inspection to be prequalified for this specialized item with the Kentucky Transportation Cabinet-Division of Construction Procurement.

**REGISTRATION WITH THE SECRETARY OF STATE BY A FOREIGN ENTITY**

Pursuant to KRS 176.085(1)(b), an agency, department, office, or political subdivision of the Commonwealth of Kentucky shall not award a state contract to a person that is a foreign entity required by KRS 14A.9-010 to obtain a certificate of authority to transact business in the Commonwealth ("certificate") from the Secretary of State under KRS 14A.9-030 unless the person produces the certificate within fourteen (14) days of the bid or proposal opening. If the foreign entity is not required to obtain a certificate as provided in KRS 14A.9-010, the foreign entity should identify the applicable exception. Foreign entity is defined within KRS 14A.1-070.

**For all foreign entities required to obtain a certificate of authority to transact business in the Commonwealth, if a copy of the certificate is not received by the contracting agency within the time frame identified above, the foreign entity's solicitation response shall be deemed non-responsive or the awarded contract shall be cancelled.**

Businesses can register with the Secretary of State at https://secure.kentucky.gov/sos/ftbr/welcome.aspx .

**SPECIAL NOTE FOR PROJECT QUESTIONS DURING ADVERTISEMENT**

Questions about projects during the advertisement should be submitted in writing to the Division of Construction Procurement. This may be done by fax (502) 564-7299 or email to kytc.projectquestions@ky.gov. The Department will attempt to answer all submitted questions. The Department reserves the right not to answer if the question is not pertinent or does not aid in clarifying the project intent.

The deadline for posting answers will be 3:00 pm Eastern Daylight Time, the day preceding the Letting. Questions may be submitted until this deadline with the understanding that the later a question is submitted, the less likely an answer will be able to be provided.

The questions and answers will be posted for each Letting under the heading "Questions & Answers" on the Construction Procurement website (www.transportation.ky.gov/contract). The answers provided shall be considered part of this Special Note and, in case of a discrepancy, will govern over all other bidding documents.

**HARDWOOD REMOVAL RESTRICTIONS**

The Kentucky Division of Forestry has imposed a quarantine in Anderson, Boone, Bourbon, Boyd, Boyle, Bracken, Campbell, Carroll, Fayette, Franklin, Gallatin, Garrard,

Grant, Greenup, Hardin, Harrison, Henry, Jefferson, Jessamine, Kenton, Oldham, Owen, Pendleton, Scott, Shelby, Trimble, and Woodford Counties to prevent the spread of an invasive insect, the emerald ash borer. Hardwood cut in conjunction with the project may not be removed from the county of its origin. Chipping or burning on site is the preferred method of disposal.

**INSTRUCTIONS FOR EXCESS MATERIAL SITES AND BORROW SITES**

Identification of excess material sites and borrow sites shall be the responsibility of the Contractor. The Contractor shall be responsible for compliance with all applicable state and federal laws and may wish to consult with the US Fish and Wildlife Service to seek protection under Section 10 of the Endangered Species Act for these activities.

**ACCESS TO RECORDS**

The contractor, as defined in KRS 45A.030 (9) agrees that the contracting agency, the Finance and Administration Cabinet, the Auditor of Public Accounts, and the Legislative Research Commission, or their duly authorized representatives, shall have access to any books, documents, papers, records, or other evidence, which are directly pertinent to this contract for the purpose of financial audit or program review. Records and other prequalification information confidentially disclosed as part of the bid process shall not be deemed as directly pertinent to the contract and shall be exempt from disclosure as provided in KRS 61.878(1)(c). The contractor also recognizes that any books, documents, papers, records, or other evidence, received during a financial audit or program review shall be subject to the Kentucky Open Records Act, KRS 61.870 to 61.884.

In the event of a dispute between the contractor and the contracting agency, Attorney General, or the Auditor of Public Accounts over documents that are eligible for production and review, the Finance and Administration Cabinet shall review the dispute and issue a determination, in accordance with Secretary's Order 11-004. (See attachment)

09/26/2012

## SPECIAL NOTE FOR RECIPROCAL PREFERENCE

### Reciprocal preference to be given by public agencies to resident bidders

**By reference, KRS 45A.490 to 45A.494 are incorporated herein and in compliance regarding the bidders residency. Bidders who want to claim resident bidder status should complete the Affidavit for Claiming Resident Bidder Status along with their bid in the Expedite Bidding Program. Submittal of the Affidavit should be done along with the bid in Bid Express.**

**ASPHALT MIXTURE**

Unless otherwise noted, the Department estimates the rate of application for all asphalt mixtures to be 110 lbs/sy per inch of depth.

**DGA BASE**

Unless otherwise noted, the Department estimates the rate of application for DGA Base to be 115 lbs/sy per inch of depth.

**DGA BASE FOR SHOULDERS**

Unless otherwise noted, the Department estimates the rate of application for DGA Base for Shoulders to be 115 lbs/sy per inch of depth. The Department will not measure necessary grading and/or shaping of existing shoulders prior to placing of DGA Base, but shall be incidental to the Contract unit price per ton for DGA Base.

Accept payment at the Contract unit price per ton as full compensation for all labor, materials, equipment, and incidentals for grading and/or shaping of existing shoulders and furnishing, placing, and compacting the DGA Base.

**INCIDENTAL SURFACING**

The Department has included in the quantities of asphalt mixtures established in the proposal estimated quantities required for resurfacing or surfacing mailbox turnouts, farm field entrances, residential and commercial entrances, curve widening, ramp gores and tapers, and road and street approaches, as applicable. Pave these areas to the limits as shown on Standard Drawing RPM-110-06 or as directed by the Engineer. In the event signal detectors are present in the intersecting streets or roads, pave the crossroads to the right of way limit or back of the signal detector, whichever is the farthest back of the mainline. Surface or resurface these areas as directed by the Engineer. The Department will not measure placing and compacting for separate payment but shall be incidental to the Contract unit price for the asphalt mixtures.

**FUEL AND ASPHALT PAY ADJUSTMENT**

The Department has included the Contract items Asphalt Adjustment and Fuel Adjustment for possible future payments at an established Contract unit price of $1.00. The Department will calculate actual adjustment quantities after work is completed. If existing Contract amount is insufficient to pay all items on the contract with the adjustments, the Department will establish additional monies with a change order.

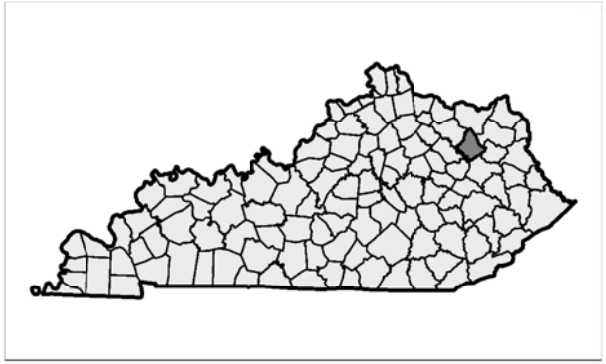

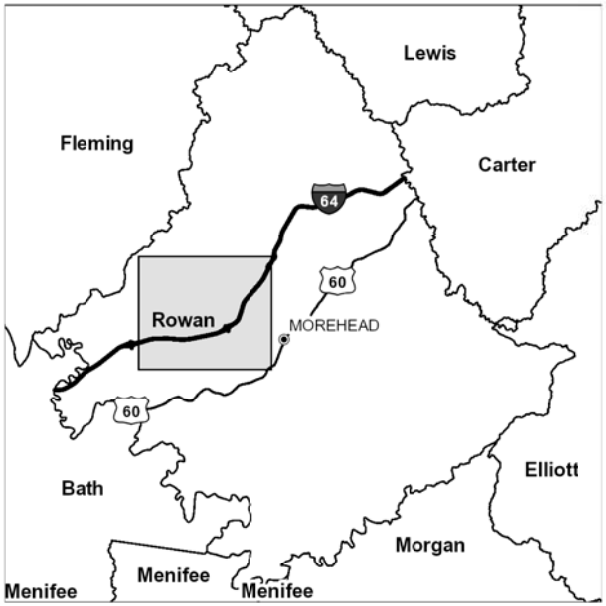


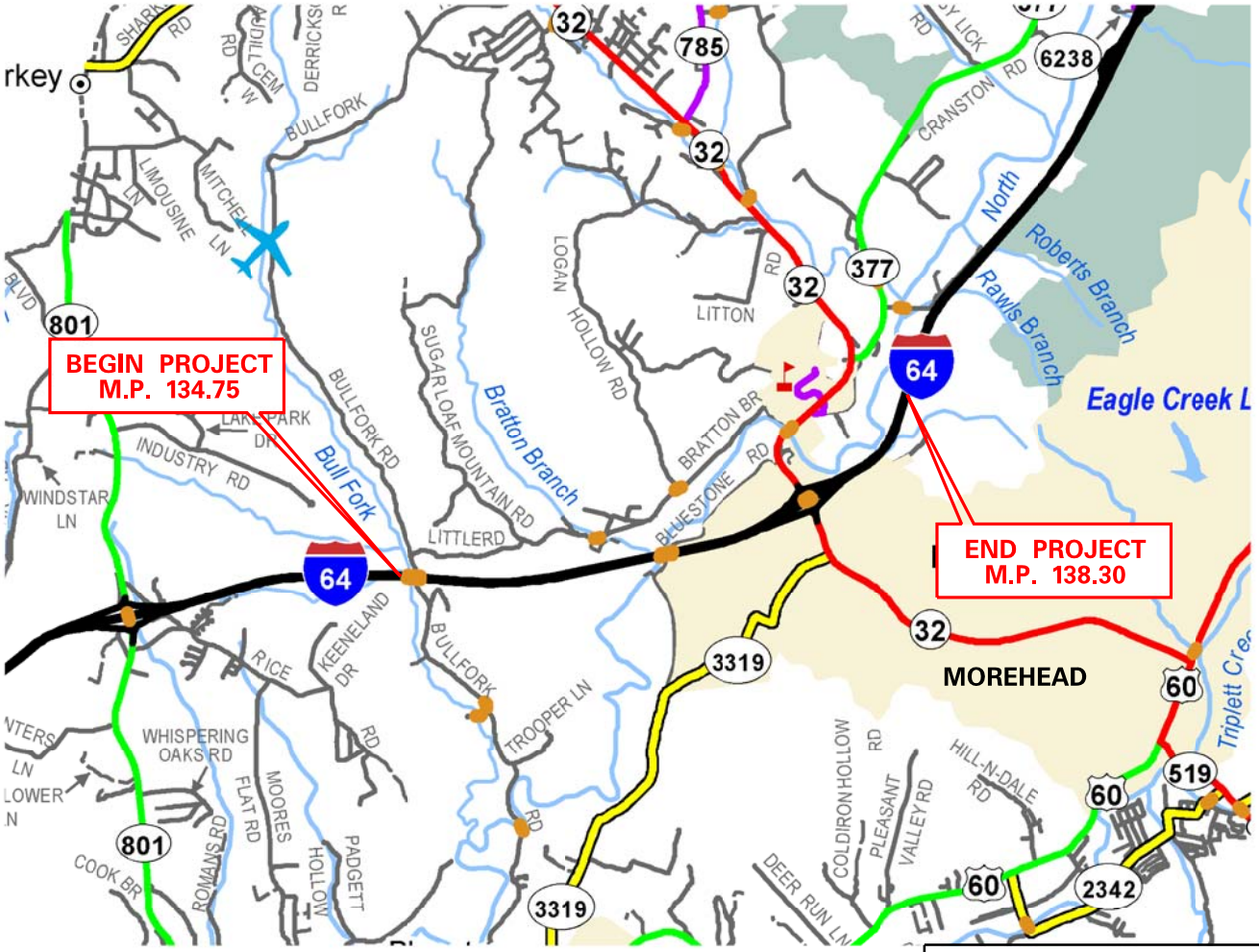


**CONSTRUCTION NUMBER:** FD04 SPP 103 0064 134–139

**ITEM NUMBER:** 9–2027.00 **LETTING DATE:** OCTOBER 19, 2012

**RECOMMENDED BY:** _____ **DATE:** _____
Project Manager

**PLAN APPROVED BY:** _____ **DATE:** _____
State Highway Engineer

**FHWA APPROVED BY:** _____ **DATE:** _____

| COUNTY OF | ITEM NO. | SHEET NO. |
|---|---|---|
| ROWAN | 9-2027.0 | |

# PROPOSED TYPICAL SECTIONS
# I–64
# MP 134.75 to MP 138.30

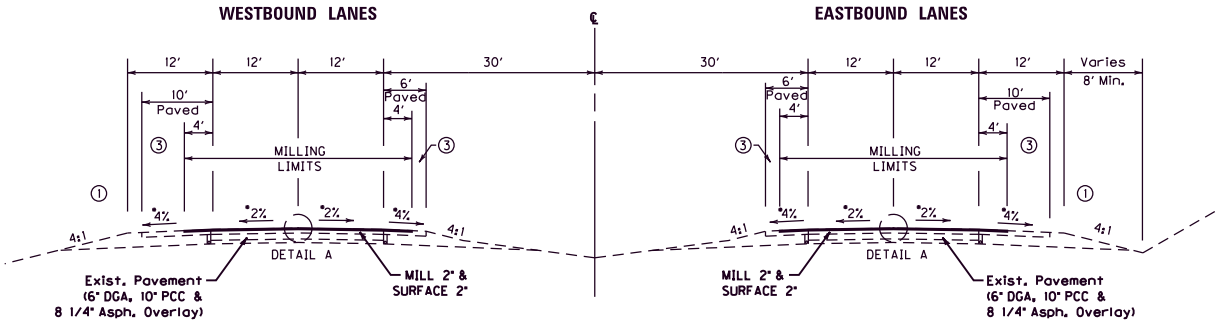


MAINLINE NORMAL SECTION

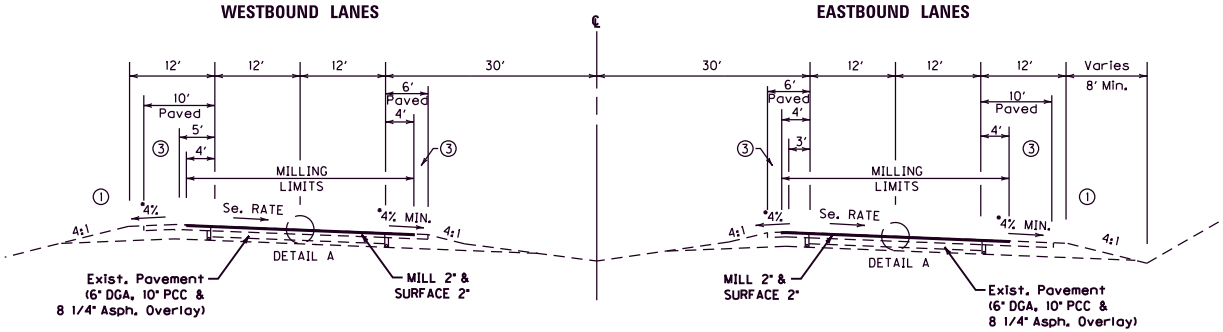


MAINLINE SUPERELEVATED SECTION

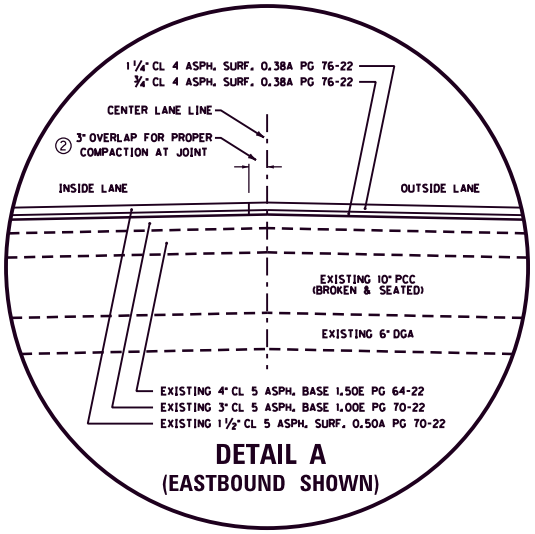


**DETAIL A**
**(EASTBOUND SHOWN)**

*NOTE: REGARDLESS OF CROSS SLOPES SHOWN, ALL MILLING AND RESURFACING OPERATIONS SHALL MAINTAIN EXISTING CROSS SLOPES ENCOUNTERED DURING CONSTRUCTION.

***SURFACING SCHEDULE***

*MAINLINE TRAFFIC LANES & SHOULDERS*

ASPH. PAVE MILLING & TEXTURING ..... 2" DEPTH
CLASS 4 ASPH. SURF. 0.38A PG76-22 ..... 2" DEPTH

① ASPHALT SEAL REQUIRED FROM OUTSIDE EDGE OF PAVED SHOULDER TO A POINT 2 FOOT DOWN THE DITCH OR FILL SLOPE.
TWO APPLICATIONS OF THE FOLLOWING :
ASPHALT SEAL COAT ..... 2.4 lbs. / S.Y.
ASPHALT SEAL AGGREGATE ..... 20 lbs. / S.Y.

② PHASE I CONSTRUCTION WILL INCLUDE MILLING AND SURFACING AN ADDITIONAL 3" INTO THE INSIDE DRIVING LANE. THIS MATERIAL WILL BE MILLED AND RESURFACED TO THE CENTER LANE JOINT DURING PHASE II CONSTRUCTION IN ORDER TO ACHIEVE PROPER COMPACTION AT THE CENTER LANE JOINT.

③ ASPHALT SEAL WILL BE REQUIRED ON ALL PAVED SHOULDERS THAT ARE NOT BEING MILLED AND RESURFACED.
TWO APPLICATIONS OF THE FOLLOWING :
ASPHALT SEAL COAT ..... 2.4 lbs. / S.Y.

NOT TO SCALE

**I–64 PROPOSED TYPICAL SECTIONS**

| COUNTY OF | ITEM NO. | SHEET NO. |
|---|---|---|
| ROWAN | 9-2027.0 | |

# TYPICAL SECTIONS
# RAMPS

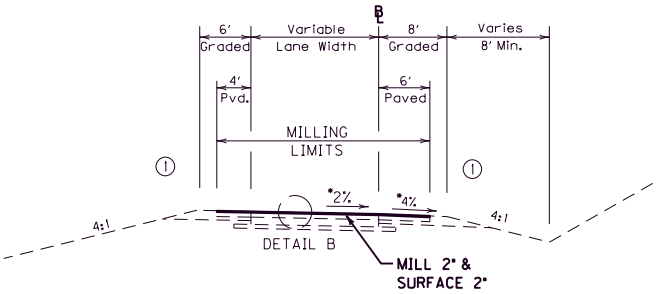


## NORMAL SECTION

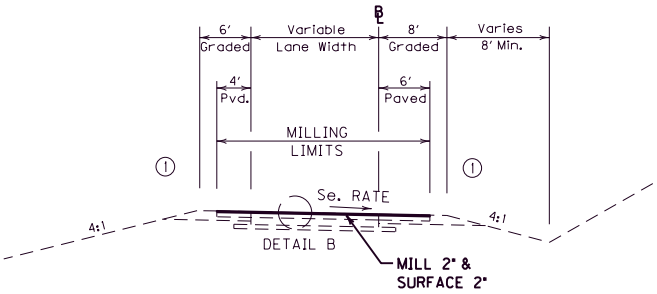


## SUPERELEVATED SECTION

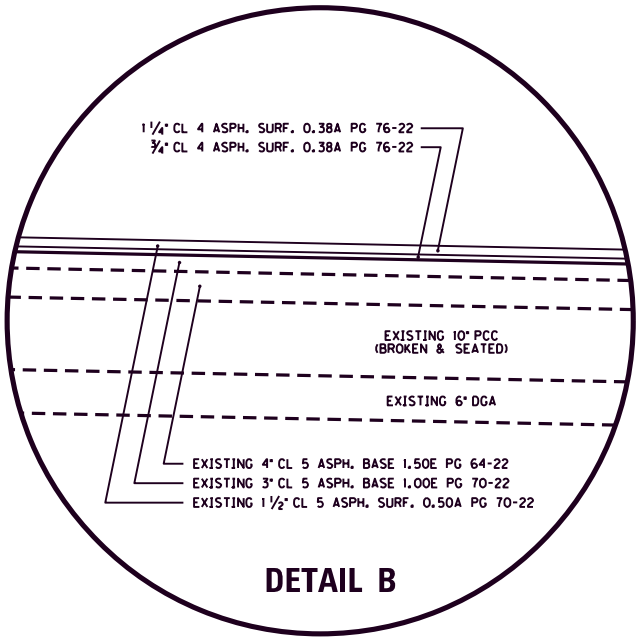


*NOTE: REGARDLESS OF CROSS SLOPES SHOWN, ALL MILLING AND RESURFACING OPERATIONS SHALL MAINTAIN EXISTING CROSS SLOPES ENCOUNTERED DURING CONSTRUCTION.

NOTE: ALL RAMPS SHALL BE MILLED AND SURFACED TO THE EXISTING EDGE OF PAVEMENT OF THEIR RESPECTIVE CROSS ROAD.

***SURFACING SCHEDULE***

*MAINLINE TRAFFIC LANES & SHOULDERS*

ASPH. PAVE MILLING & TEXTURING ..... 2" DEPTH
CLASS 4 ASPH. SURF. 0.38A PG76-22 ..... 2" DEPTH

(1) ASPHALT SEAL REQUIRED FROM OUTSIDE EDGE OF PAVED SHOULDER TO A POINT 2 FOOT DOWN THE DITCH OR FILL SLOPE.
TWO APPLICATIONS OF THE FOLLOWING :
ASPHALT SEAL COAT..... 2.4 lbs. / S.Y.
ASPHALT SEAL AGGREGATE ..... 20 lbs. / S.Y.

NOT TO SCALE

**RAMP TYPICAL SECTIONS**

MATCHLINE (SEE SHEET 2)
COUNTY OF
ROWAN
ITEM NO.
9-2027.00
135.50
135.40
135.30
135.20
135.10
135.00
134.90
134.80
134.70
134.60
MILE 135
MILE 135
BEGIN PROJECT
M.P. 134.75
SCALE : 1" = 500'
I-64
DETAIL SHEETS
(1 OF 4)

| COUNTY OF | ITEM NO. |
|---|---|
| ROWAN | 9-2027.00 |

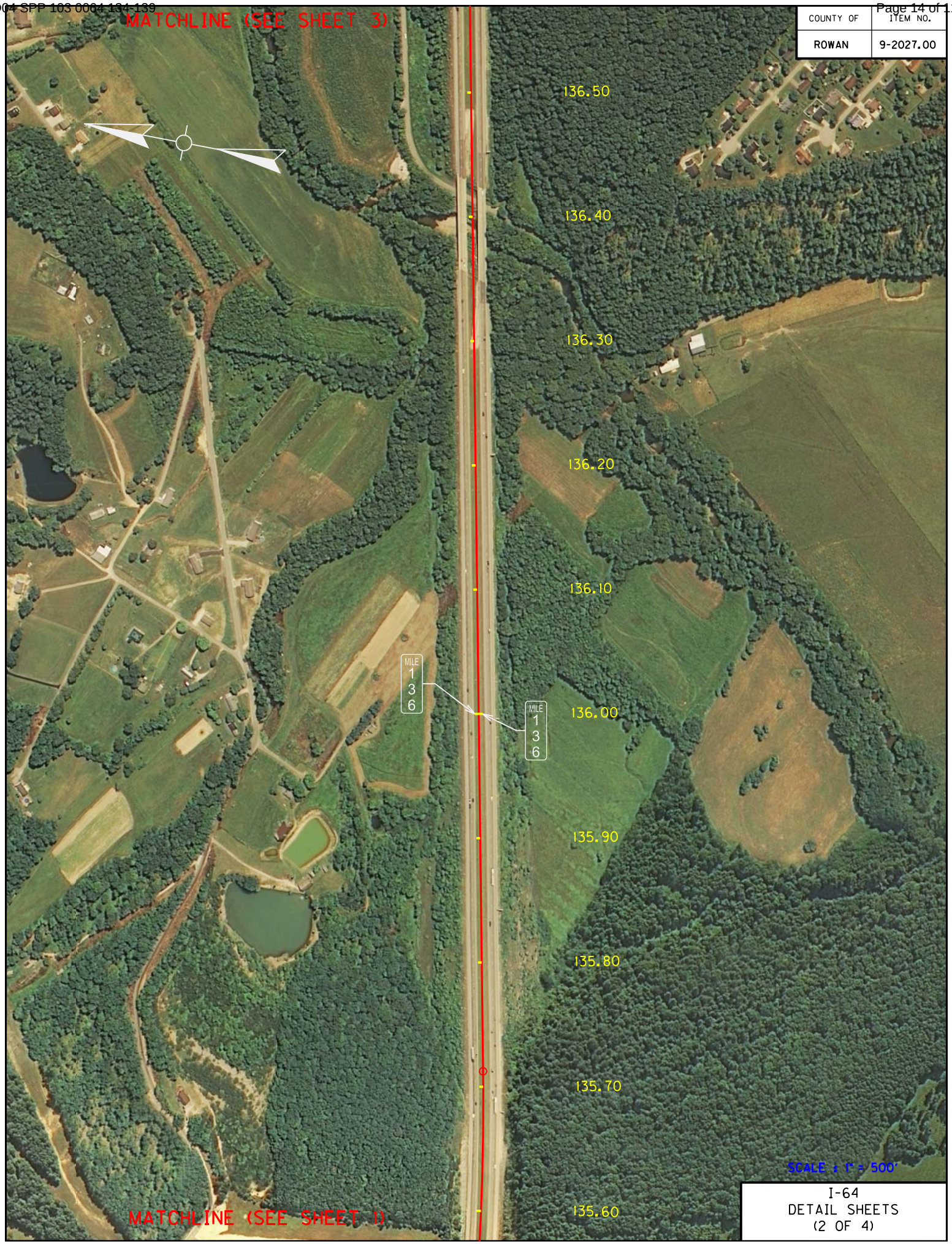


I-64
DETAIL SHEETS
(2 OF 4)

MATCHLINE (SEE SHEET 4)
COUNTY OF
ROWAN
ITEM NO.
9-2027.00
KY 32 M.P. 137.33
137.50
137.40
137.30
137.20
137.10
137.00
136.90
136.80
136.70
136.60
KY 32
KY 32
MILE
137
MILE
137
SCALE : 1" = 500'
MATCHLINE (SEE SHEET 2)
I-64
DETAIL SHEETS
(3 OF 4)

| COUNTY OF | ITEM NO. |
|---|---|
| ROWAN | 9-2027.00 |

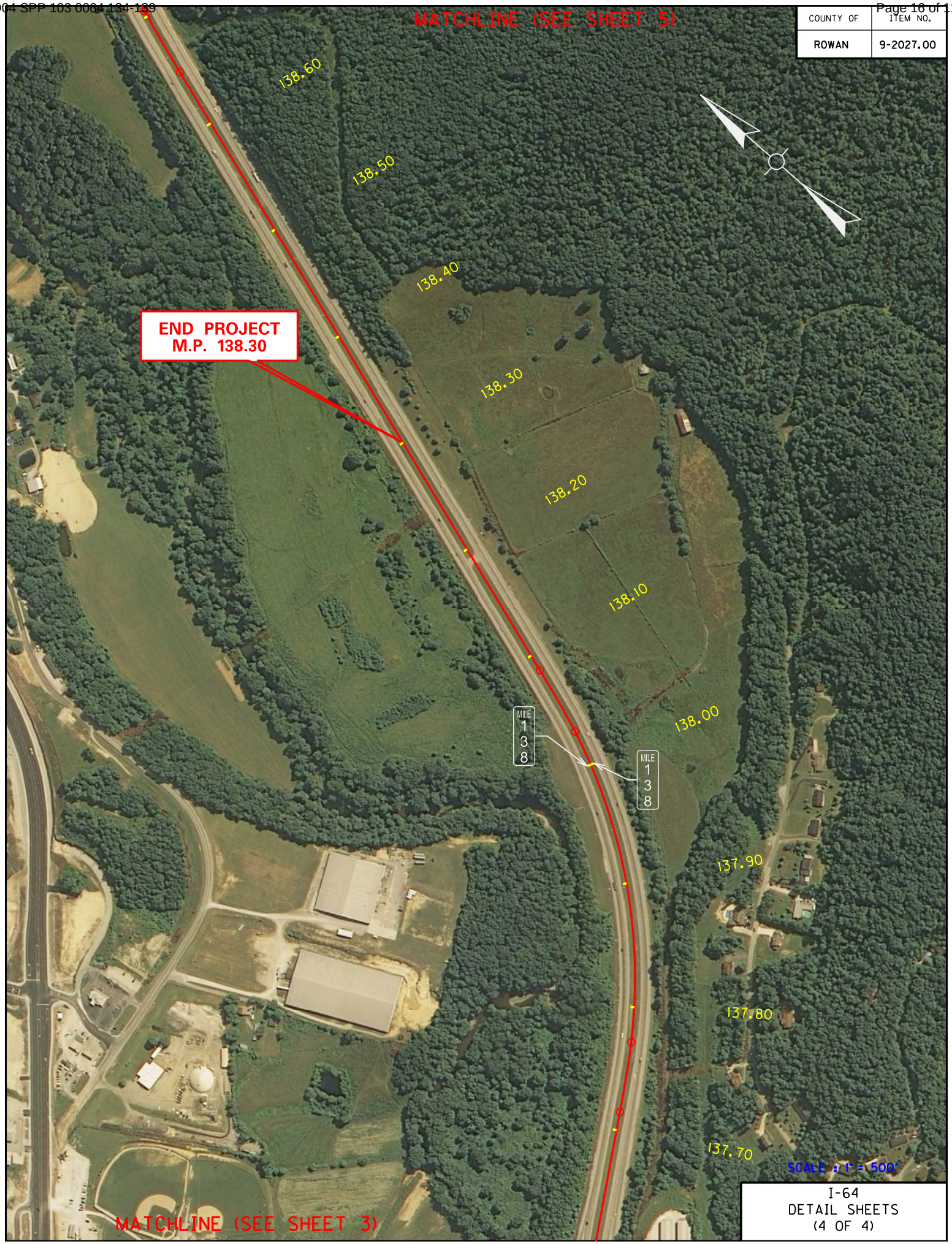


I-64
DETAIL SHEETS
(4 OF 4)

| COUNTY OF | ITEM NO. |
|---|---|
| ROWAN | 9-2027.00 |

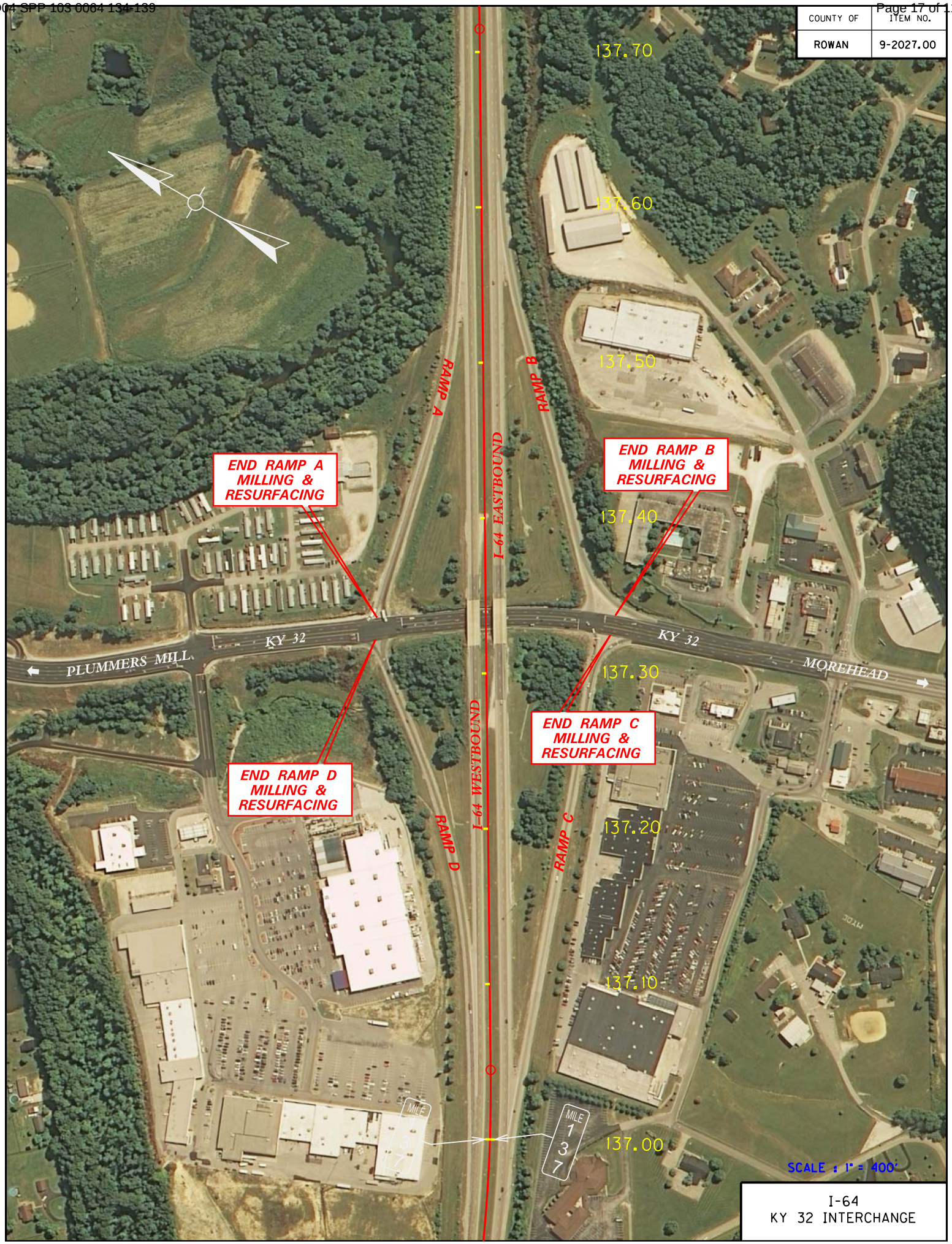


I-64
KY 32 INTERCHANGE

# I–64
# ROWAN COUNTY
# PAVEMENT REHABILITATION, MILEPOST 134.75 TO 138.30
# ITEM NO. 9–2027.00
# GENERAL SUMMARY

| ITEM NUMBER | ITEM | UNIT | QUANTITY |
|---|---|---|---|
| 2369 | GUARDRAIL END TREATMENT TYPE 2A | EACH | 7 |
| 21802EN | GUARDRAIL - STEEL W BEAM - S FACE (7' POST) | L.F. | 822.5 |
| 2381 | REMOVE GUARDRAIL | L.F. | 822.5 |
| 2365 | CRASH CUSHION TYPE IX-A | EACH | 1 |
| 23143ED | KPDES PERMIT & TEMPORARY EROSION CONTROL | L.S. | 1 |
| | | | |
| 5950 | EROSION CONTROL BLANKET | S.Y. | 15,000 |
| | | | |
| 1982 | DELINEATORS FOR GUARDRAIL (MW) | EACH | 250 |
| 1983 | DELINEATORS FOR GUARDRAIL (YW) | EACH | 20 |
| 1984 | DELINEATOR FOR BARRIER - WHITE | EACH | 20 |
| 6417 | FLEXIBLE DELINEATOR POST - W | EACH | 183 |
| 6418 | FLEXIBLE DELINEATOR POST - Y | EACH | 21 |
| 6592 | PAVEMENT MARKING TYPE V - BW/R | EACH | 131 |
| 6593 | PAVEMENT MARKING TYPE V - BY/R | EACH | 107 |
| 24489EC | INLAID PAVEMENT MARKERS | EACH | 918 |
| 2650 | MAINTAIN AND CONTROL TRAFFIC | L.S. | 1 |
| | | | |
| | | | |
| 78 | CRUSHED AGGREGATE SIZE NO. 2 ① | TON | 3,000 |
| 2483 | CLASS II CHANNEL LINING | TON | 1,105 |
| 2484 | CLASS III CHANNEL LINING | TON | 1,500 |
| 6412 | STEEL POST MILE MARKERS | EACH | 8 |
| 2562 | SIGNS | S.F. | 744 |
| 2575 | DITCHING & SHOULDERING | L.F. | 18,744 |
| 3383 | PVC - 4 IN | L.F. | 20 |
| 1028 | PERF PIPE HEADWALL TY 3-4 IN | EACH | 4 |
| | | | |
| | | | |
| | | | |
| 3240 | BASE FAILURE REPAIR ② | S.Y. | 2,812 |
| 2775 | ARROW PANEL | EACH | 2 |
| 2671 | PORTABLE CHANGEABLE MESSAGE SIGN | EACH | 6 |
| 2677 | ASPHALT PAVEMENT MILLING & TEXTURING ③ | TON | 16,812 |
| 2676 | MOBILIZATION FOR MILLING & TEXTURING | L.S. | 1 |
| | | | |
| | | | |
| | | | |

① TO BE USED, BUT NOT LIMITED TO, PIPE EROSION, WASHOUT REPAIR BEHIND GUARDRAIL, PERF. PIPE HDWL'S. AND OTHER LOCATIONS AS DIRECTED BY THE ENGINEER.

② INCLUDES 400 S.Y. TO BE USED AS DIRECTED BY THE ENGINEER.

③ CARRIED OVER FROM PAVING SUMMARY

④ INCLUDES 7.7 TONS OF ITEM 100 AND 0.92 OF ITEM 103 FROM FORESLOPE REPAIR DETAIL

# I–64
# ROWAN COUNTY
# PAVEMENT REHABILITATION, MILEPOST 134.75 TO 138.30
# ITEM NO. 9–2027.00
# GENERAL SUMMARY

| ITEM NUMBER | ITEM | UNIT | QUANTITY |
|---|---|---|---|
| 24191ER | DURABLE WATERBOURNE MARKING - 12" W | L.F. | 3,078 |
| 24189ER | DURABLE WATERBOURNE MARKING - 6" W | L.F. | 49,686 |
| 24190ER | DURABLE WATERBOURNE MARKING - 6" Y | L.F. | 40,620 |
| 6567 | PAVE STRIPING - THERMO STOP BAR - 12 IN | L.F. | 60 |
| 6511 | PAVEMENT STRIPING TEMPORARY PAINT - 6" | L.F. | 5,000 |
| | | | |
| 2268 | REMOVE & REPLACE FENCE (WOVEN WIRE TYPE 1) | L.F. | 39,300 |
| | | | |
| 1825 | ISLAND CURB AND GUTTER | L.F. | 5 |
| 2696 | SHOULDER RUMBLE STRIPS - SAWED ③ | L.F. | 76,021 |
| 20071EC | JOINT ADHESIVE | L.F. | 37,488 |
| 22664EN | WATER BLASTING EXISTING STRIPE | L.F. | 2,500 |
| | | | |
| | | | |
| | | | |
| 3171 | CONCRETE BARRIER WALL TYPE 9T | L.F. | 700 |
| 2003 | RELOCATE TEMPORARY CONCRETE BARRIER | L.F. | 700 |
| 23979EC | CRASH CUSHION TYPE VI CLASS C TL3 | EACH | 1 |
| 2898 | RELOCATE CRASH CUSHION | EACH | 1 |
| | | | |
| 24094EC | PARTIAL DEPTH PATCHING | C.Y. | 12 |
| 08504 | EPOXY SAND SLURRY | S.Y. | 117 |
| 08510 | REM. EPOXY BIT. FORIGN OVERLAY | S.Y. | 1523 |
| 08526 | CONC. CLASS "M" FULL DEPTH PATCH | C.Y. | 4 |
| 08534 | CONCRETE OVERLAY-LATEX | C.Y. | 63.4 |
| 08549 | BLAST CLEANING | S.Y. | 1660 |
| 02347 | WATER GATE TYPE 1 | EACH | 6 |
| | | | |
| 1 | DGA BASE ③ | TON | 2,048 |
| 342 | CLASS 4 ASPHALT SURFACE 0.38A PG76-22 ③ | TON | 16,812 |
| 100 | ASPHALT SEAL AGGREGATE ③ ④ | TON | 498 |
| 103 | ASPHALT SEAL COAT ③ ④ | TON | 124 |
| 217 | CLASS 4 ASPHALT BASE 1.0D PG64-22 ③ | TON | 133 |
| | | | |
| 10020NS | FUEL ADJUSTMENT | DOLLAR | 23,628 |
| 10030NS | ASPHALT ADJUSTMENT | DOLLAR | 41,637 |
| 2568 | MOBILIZATION | L.S. | 1 |
| 2569 | DEMOBILIZATION | L.S. | 1 |

① TO BE USED, BUT NOT LIMITED TO, PIPE EROSION, WASHOUT REPAIR BEHIND GUARDRAIL, PERF. PIPE HDWL'S. AND OTHER LOCATIONS AS DIRECTED BY THE ENGINEER.

② INCLUDES 400 S.Y. TO BE USED AS DIRECTED BY THE ENGINEER.

③ CARRIED OVER FROM PAVING SUMMARY

④ INCLUDES 12.8 TONS OF ITEM 100 AND 1.53 OF ITEM 103 FROM FORESLOPE REPAIR DETAIL

# I–64
# ROWAN COUNTY
# PAVEMENT REHABILITATION, MILEPOST 134.75 TO 138.30
# ITEM NO. 9–2027.00
# PAVING SUMMARY

| PAVING AREAS | | PAVING AREAS | |
|---|---|---|---|
| **ITEM** | **TOTAL** | **ITEM** | **TOTAL** |
| DRIVING LANES, INSIDE & OUTSIDE SHOULDERS | S.Y. | DRIVING LANES, INSIDE & OUTSIDE SHOULDERS | |
| I–64: | | KY 32 RAMPS: | |
| 2" CL4 ASPH SURF 0.38A PG76-22 | 135,993 | 2" CL4 ASPH SURF 0.38A PG76-22 | 16,831 |
| | | | |
| ASPHALT SEAL COAT (2 APPLICATIONS) | 92,834 | ASPHALT SEAL COAT (2 APPLICATIONS) | 18,248 |
| ASPHALT SEAL AGGREGATE (2 APPLICATIONS) | 92,834 | ASPHALT SEAL AGGREGATE (2 APPLICATIONS) | 18,248 |
| | | | |
| ASPHALT PAVE MILLING & TEXTURING | S.Y. | DGA WEDGE AT SHOULDER DROP-OFF | S.Y. |
| PROJECT LIMITS (2") | 152,824 | DGA (1" AVG DEPTH) | 35,636 |
| | | | |
| SHOULDER DIGOUTS FOR M.O.T. AT BRIDGE | S.Y. | | |
| 6" DGA | 267 | | |
| 6" CL4 ASPH BASE 1.0D PG64-22 | 267 | | |
| | | | |

## PAVING SUMMARY

| CODE | ITEM | UNITS | PROJECT TOTAL |
|---|---|---|---|
| 1 | DGA BASE | TON | 2,048 |
| | | | |
| 342 | CLASS 4 ASPHALT SURFACE 0.38A PG76-22 | TON | 16,812 |
| | | | |
| 217 | CLASS 4 ASPHALT BASE 1.0D PG64-22 | TON | 133 |
| | | | |
| 2677 | ASPHALT PAVE MILLING & TEXTURING | TON | 16,812 |
| | | | |
| 2696 | SHOULDER RUMBLE STRIPS - SAWED | LF | 76,021 |
| | | | |
| 100 | ASPHALT SEAL AGGREGATE (1) | TON | 485 |
| | | | |
| 103 | ASPHALT SEAL COAT (2) | TON | 122 |

ALL QUANTITIES HAVE BEEN CARRIED OVER AND INCLUDED IN THE GENERAL SUMMARY

(1) ESTIMATED AT 20 LBS/S.Y. FOR ENTIRE AREA (ONE APPLICATION)

(2) ESTIMATED AT 2.4 LBS/S.Y. FOR ENTIRE AREA (ONE APPLICATION)

# I–64
# ROWAN COUNTY
# PAVEMENT REHABILITATION, MILEPOST 134.75 TO 138.30
# ITEM NO. 9–2027.00
# GUARDRAIL SUMMARY

| SHOT NUMBER (1) | FROM MILEPOST | GUARDRAIL–STEEL W BEAM–S FACE (7 FT POST) (LF) | GUARDRAIL–STEEL W BEAM–D FACE (LF) | GUARDRAIL CONNECTOR TO BRIDGE END TY A (EACH) | GUARDRAIL END TREATMENT TYPE 1 (EACH) | GUARDRAIL END TREATMENT TYPE 2A (EACH) | GUARDRAIL END TREATMENT TYPE 4A (EACH) | REMOVE GUARDRAIL | CRASH CUSHION TYPE IX–A (EACH) | DESCRIPTION |
|---|---|---|---|---|---|---|---|---|---|---|
| ITEM NO. | | 21802EN | 2352 | 2363 | 2367 | 2369 | 2391 | 2381 | 2365 | |
| WESTBOUND | | | | | | | | | | |
| 109 | 134.88 | 25 | | | | | | 25 | | REPLACE DAMAGED SECTION |
| 117 | 134.95 | 50 | | | | 1 | | 50 | | REPLACE DAMAGED SECTION & END TREATMENT |
| 164 | 135.93 | 25 | | | | | | 25 | | REPLACE DAMAGED SECTION |
| 175 | 136.20 | 50 | | | | | | 50 | | REPLACE DAMAGED SECTION |
| 178 | 136.25 | 100 | | | | | | 100 | | REPLACE DAMAGED SECTION |
| 181 | 136.33 | 25 | | | | | | 25 | | REPLACE DAMAGED SECTION |
| | 137.30 | 12.5 | | | | | | 12.5 | | REMOVE AND CONSTRUCT NEW GR FOR SHOULDER REPAIR |
| | 137.31 | 12.5 | | | | | | 12.5 | | REMOVE AND CONSTRUCT NEW GR FOR SHOULDER REPAIR |
| | 137.55 | 12.5 | | | | | | 12.5 | | REMOVE AND CONSTRUCT NEW GR FOR SHOULDER REPAIR |
| 244-245 | 137.68 | 12.5 | | | | | | 12.5 | | REMOVE AND CONSTRUCT NEW GR FOR SHOULDER REPAIR |
| 249 | 137.81 | 25 | | | | | | 25 | | REPLACE DAMAGED SECTION |
| EASTBOUND | | | | | | | | | | |
| 640 | 135.40 | | | | | 1 | | | | REPLACE END TREATMENT |
| 657 | 135.64 | 210 | | | | 1 | | 210 | | REPLACE DAMAGED SECTION & END TREATMENT |
| 658 | 135.65 | 50 | | | | | | 50 | | REMOVE AND CONSTRUCT NEW GR FOR SHOULDER REPAIR |
| 669 | 135.73 | 12.5 | | | | | | 12.5 | | REPLACE DAMAGED SECTION |
| 675 | 135.75 | 25 | | | | | | 25 | | REMOVE AND CONSTRUCT NEW GR FOR SHOULDER REPAIR |
| 698 | 136.12 | 25 | | | | | | 25 | | REPLACE DAMAGED SECTION |
| 712 | 136.30 | | | | | | | | 1 | REPLACE CRASH CUSHION |
| 720 | 136.47 | 25 | | | | | | 25 | | REPLACE DAMAGED SECTION |
| 727 | 136.54 | 37.5 | | | | | | 37.5 | | REPLACE DAMAGED SECTION |
| 732 | 136.62 | 37.5 | | | | 1 | | 37.5 | | REPLACE DAMAGED SECTION & END TREATMENT |
| 737 | 136.70 | 50 | | | | 1 | | 50 | | REPLACE DAMAGED SECTION & END TREATMENT |
| 784 | 137.58 | | | | | 1 | | | | REPLACE END TREATMENT |
| 812 | 138.22 | | | | | 1 | | | | REPLACE END TREATMENT |
| | | | | | | | | | | |
| | | | | | | | | | | |
| PROJ. TOTAL | | 822.5 | | | | 7 | | 822.5 | 1 | |

(1) SHOT NUMBER REFERS TO SURVEY SHOT NUMBER, THESE SHOT NUMBERS HAVE BEEN MARKED IN THE FIELD WITH PAINT.

# I–64
# ROWAN COUNTY
# PAVEMENT REHABILITATION, MILEPOST 134.75 TO 138.30
# ITEM NO. 9–2027.00
# FENCING SUMMARY

| LOCATION | DIRECTION | M.P. BEGIN | M.P. END | LINEAR FEET |
|---|---|---|---|---|
| BULL FORK CREEK TO BLUESTONE RD. | EB | 134.86 | 136.36 | 8650 |
| BLUESTONE RD. TO KY 32 INTERCHANGE | EB | 136.41 | 137.31 | 5500 |
| KY 32 INTERCHANGE TO END OF PROJECT | EB | 137.35 | 138.30 | 5550 |
| | | | | |
| BULL FORK CREEK TO BLUESTONE RD. | WB | 134.85 | 136.39 | 8600 |
| BLUESTONE RD. TO KY 32 INTERCHANGE | WB | 136.44 | 137.31 | 5200 |
| KY 32 INTERCHANGE TO END OF PROJECT | WB | 137.34 | 138.30 | 5800 |
| **TOTAL** | | | | 39300 |

| COUNTY OF | ITEM NO. | SHEET NO. |
|---|---|---|
| ROWAN | 9-2027.0 | |

# I–64
# BASE FAILURE REPAIR

| M.P. / DIRECTION | | PT. # | S.Y. |
|---|---|---|---|
| 134.93 | WB | 112 | 202 |
| 135.13 – 135.17 | WB | 123, 125 | 332 |
| 135.20 | WB | 127 | 29 |
| 135.21 | WB | 128 | 58 |
| 135.25 | WB | 130 | 72 |
| 135.28 | WB | 131 | 29 |
| 135.39 – 135.40 | WB | 136,142 | 116 |
| 135.55 | WB | 146 | 29 |
| 135.57 | WB | 291, 292 | 29 |
| 135.63 | WB | 149 | 144 |
| 135.70 | WB | 153 | 87 |
| 135.73 | WB | 154 | 173 |
| 135.78 | WB | 156 | 289 |
| 135.85 | EB | 159 | 58 |
| 135.67 | EB | 665, 666 | 29 |
| 135.71 –135.76 | EB | 667, 674 | 404 |
| 135.85 | WB | 682 | 29 |
| 136.10 | WB | | 217 |
| 136.72 | WB | | 43 |
| 137.28 | WB | | 43 |
| *TOTAL* | | | 2,412 |

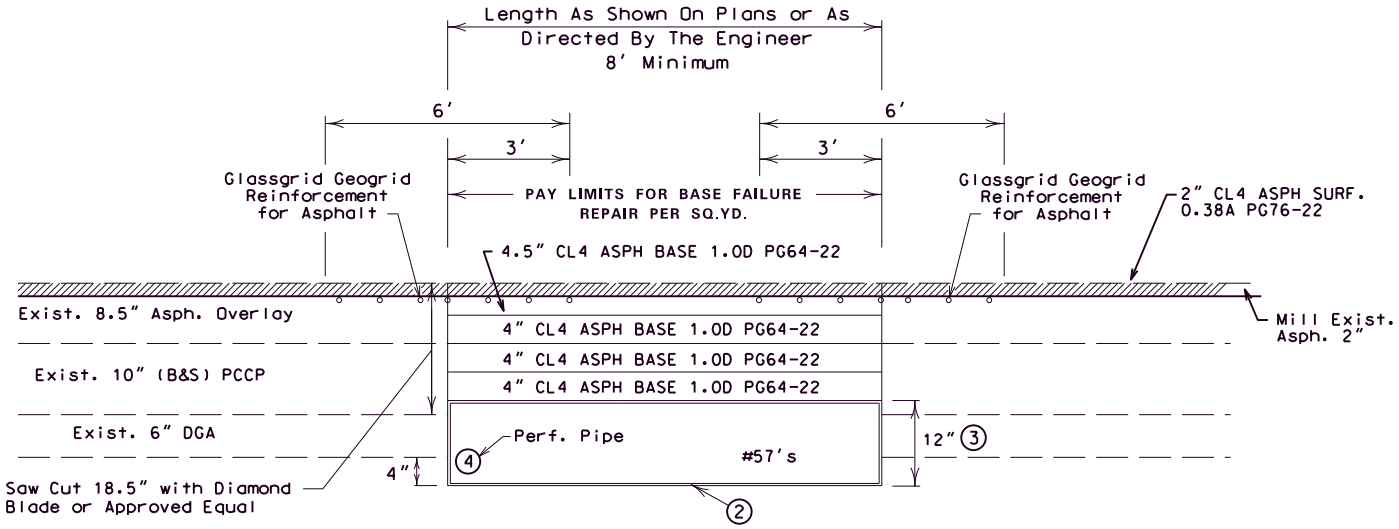


## BASE FAILURE REPAIR PROFILE DETAIL

## NOTE FOR BASE FAILURE REPAIR DETAIL

1. "BASE FAILURE" locations are shown above by Mile Point. The Engineer shall make the final determination as to the width and the exact location of the Base Failure.
Locations shown may be modified or eliminated by the Engineer.
Before removal of the existing material, saw cuts shall be made no closer than 4 feet to an existing joint. If existing adjacent joints are not apparent due to reflective cracking, the Engineer will determine the actual location of the sawed joint.

After all existing material has been removed to the dimensions shown, each course or backfill material shall be compacted to the proper density for the material being placed as required in the Standard Specifications. The 4" perforated pipe shall not be wrapped and only coarse aggregate shall be used.

The Contractor shall allow 2 weeks minimum between completion of the Base Failure Repair and the milling and paving operations to allow for settlement.

The contract unit bid price per SQ YD for "Base Failure Repair" shall include saw cutting through the asphalt and B&S PCC Pavement, removing pavement, roadway excavation, perforated pipe-4 inch, perforated pipe headwall, crushed aggregate size no. 57, CL4 asphalt base CL.3 1.00D PG 64-22, glassgrid geogrid reinforcement for asphalt, fabric-geotextile type IV, and all incidentals necessary to complete the installation as detailed.

2. Fabric-Geotextile Type IV required around coarse aggregate.

3. The repair shall extend 1FOOT beyond the edge of pavement or as directed by the Engineer.

4. Place the Perforated Pipe at the low point of the digout.

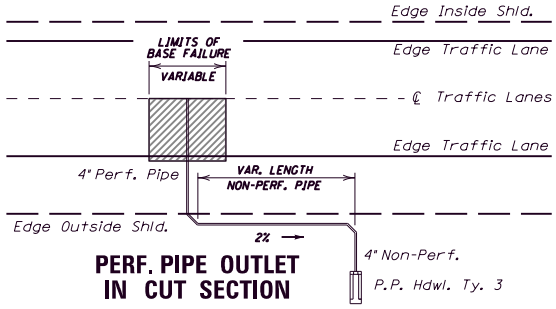


## PERF. PIPE OUTLET IN CUT SECTION

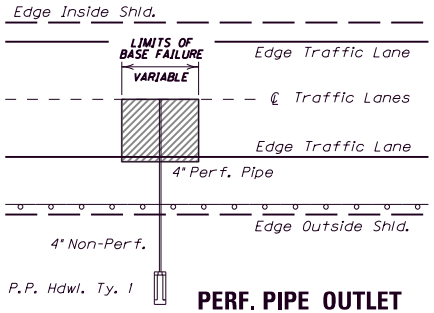


## PERF. PIPE OUTLET w/GUARDRAIL

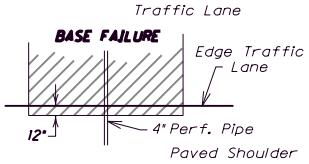


## BASE FAILURE DETAIL

NOT TO SCALE

I–64
BASE FAILURE REPAIR

| COUNTY OF | ITEM NO. | SHEET NO. |
|---|---|---|
| ROWAN | 9-2027.00 | |

# SHOULDER REPAIR DETAIL
# I–64

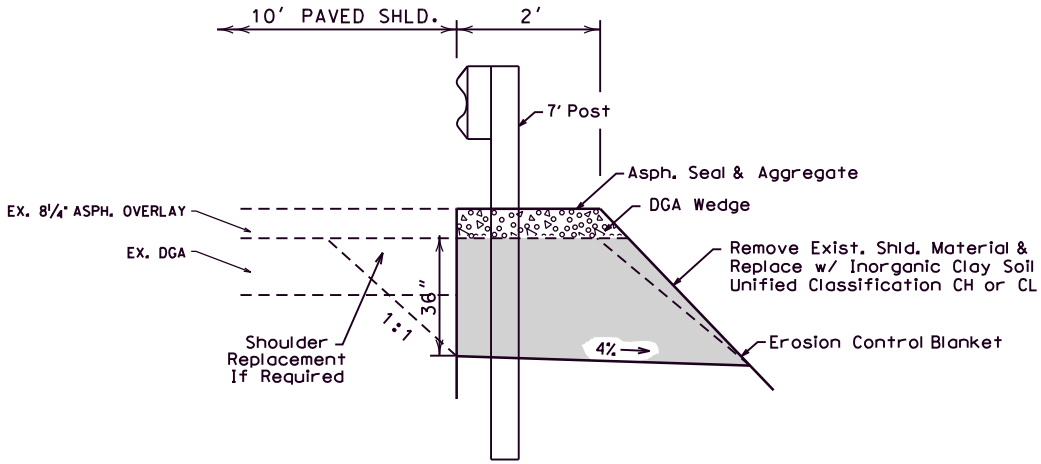


## SHOULDER REPAIR DETAIL

| SHOULDER REPAIR AREAS | | |
|---|---|---|
| *PT. NO.* | *LOCATION* | *L.F.* |
| | EASTBOUND | |
| 658 | MP 135.65 | 40 |
| 675 | MP 135.75 | 20 |
| | WESTBOUND | |
| | MP 137.30 | 10 |
| | MP 137.31 | 10 |
| | MP 137.55 | 10 |
| 244–245 | MP 137.68 | 10 |
| | | |
| | | |
| | *TOTAL* | 100 * |

** REMOVE 125' OF GUARDRAIL (CARRIED ON GURDRAIL SUMMARY)*

## SHOULDER REPAIR NOTE :

ITEMS SHOWN ARE INCLUDED IN THE BID ITEM "DITCHING AND SHOULDERING". SHOULDER REPAIR INCLUDES REMOVING THE EXISTING SHOULDER TO THE DEPTH SPECIFIED OR AS DIRECTED BY THE ENGINEER AND BACKFILLING WITH COMPACTED SOIL. COMPACT SOIL IN 6" LIFTS. EXCAVATED MATERIAL MAY BE WASTED WITHIN THE RIGHT OF WAY IN AREAS DESIGNATED BY THE ENGINEER.

* REMOVE EXISTING PAVED SHOULDER AS DIRECTED BY THE ENGINEER AND REPLACE w/ SOIL BACKFILL. 4" DGA BASE & 5" CL4 AB 1.0D PG64-22. PAYMENT WILL BE MADE PER UNIT BID PRICE FOR DGA AND ASPHALT BASE.

THE INTENT OF THE SHOULDER REPAIR CONSTRUCTION IS TO BE DONE JUST PRIOR TO THE MILLING AND ASPHALT OVERLAY CONSTRUCTION PHASE. IF PROPOSED GUARDRAIL CAN NOT BE COMPLETED IN ONE PERIOD FROM SUNDAY TO FRIDAY SHOULDER CLOSURES WITH BARRELS SHALL BE INSTALLED. TEMPORARY BARRIER WALLS OR TEMPORARY GUARDRAIL SHALL BE REQUIRED AFTER A TWO WEEK PERIOD OF SHOULDER CLOSURES WITH BARRELS.

NOT TO SCALE

**I–64**
**SHOULDER REPAIR DETAIL**

| COUNTY OF | ITEM NO. | SHEET NO. |
|---|---|---|
| ROWAN | 9-2027.0 | |

# FORESLOPE REPAIR DETAILS
# I–64

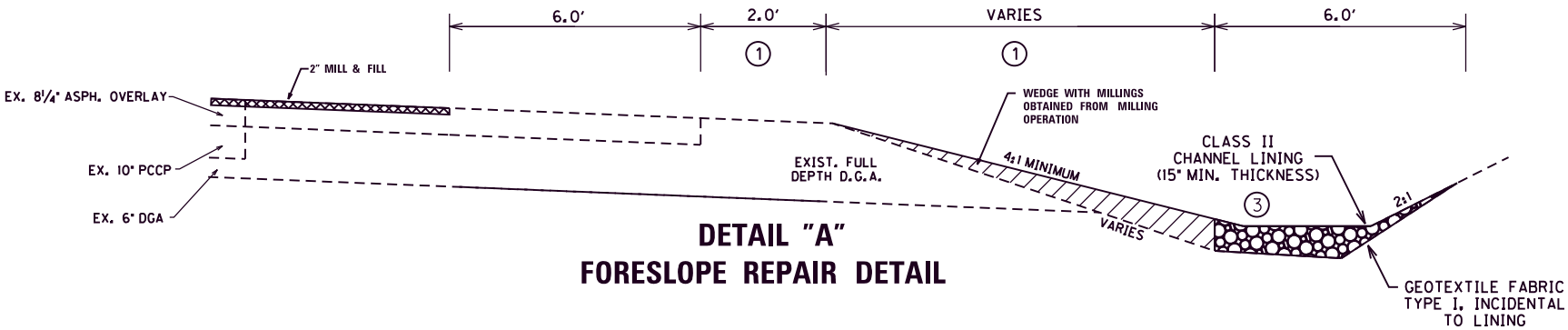


## DETAIL "A"
## FORESLOPE REPAIR DETAIL

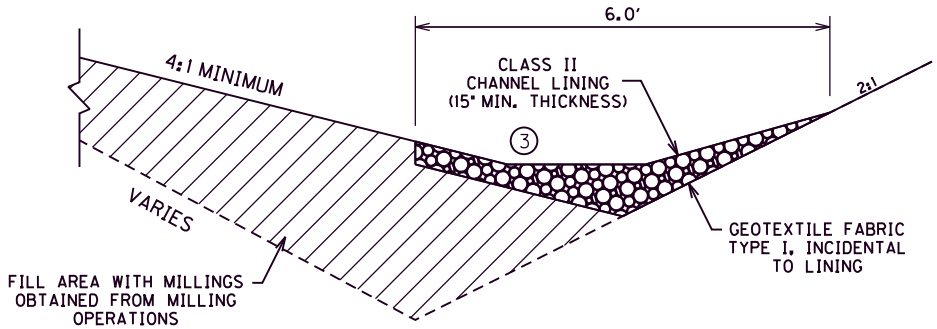


## DETAIL "B"
## FORESLOPE REPAIR DETAIL
## (OVER 15" EMB)

| FORESLOPE REPAIR AREA QUANTITIES* | | | | | |
|---|---|---|---|---|---|
| LOCATION | LENGTH (FT) | 4" PVC PIPE (FT) | PERF PIPE HDWL TY 3 | ASPH. SEAL AGGREGATE (TONS) | ASPH. SEAL COAT (TONS) |
| MP 135.45 – 135.67 WB | 1150 | 20 | 4 | 12.8 | 1.53 |
| | | | | | |
| TOTAL | 1,150 | 20 | 4 | 12.8 | 1.53 |

*ALL OTHER ITEMS INCLUDED UNDER BID ITEM "DITCHING AND SHOULDERING"

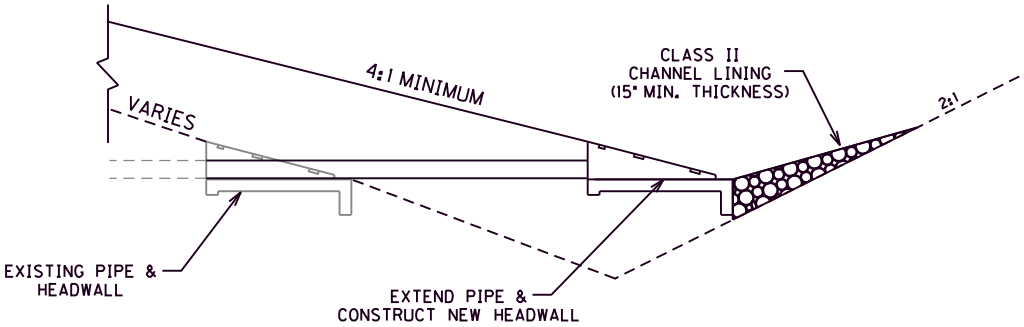


## DETAIL "C"
## FORESLOPE REPAIR
## WITH HEADWALL EXTENSION

(1) QUANTITIES BASED ON 10' WIDE ASPHALT SEAL

(2) IF EMBANKMENT DEPTH IS GREATER THAN 15" SEE DETAIL "B"

(3) WHEN FORESLOPE IS RAISED ABOVE EXISTING HEADWALL, REPLACE AND EXTEND TO GRADE SEE DETAIL "C"

(1) ASPHALT SEAL
2 APPLICATIONS:
ASPHALT SEAL AGGREGATE - 20 LB/SY
ASPHALT SEAL COAT - 2.4 LB/SY

NOT TO SCALE

I–64
FORESLOPE
REPAIR DETAILS

| COUNTY OF | ITEM NO. | SHEET NO. |
|---|---|---|
| ROWAN | 9-2027.0 | |

# REFERENCE LOCATION SIGN

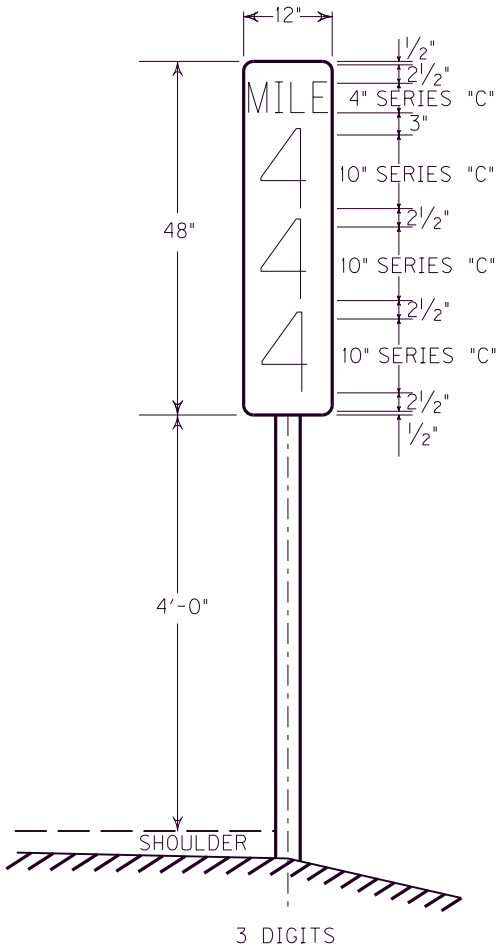


| MILE POINT RANGE FOR EASTBOUND DIRECTION | * NUMBER OF MILE POSTS |
|---|---|
| 135 TO 138 | 4 |

| MILE POINT RANGE FOR WESTBOUND DIRECTION | * NUMBER OF MILE POSTS |
|---|---|
| 138 TO 135 | 4 |

NOTES:

* MILE POSTS ARE TO BE PLACED AT 1.0 MILE INTERVAL.

** REMOVAL OF EXISTING REFERENCE MARKERS IS TO BE CONSIDERED INCIDENTAL TO THE CONTRACT.

## TYPICAL SIGN PANEL DIMENSIONS AND REFERENCE MARKER LOCATION

NOT TO SCALE

**MILE MARKER SIGNING POSITIONING DETAIL SHEET**

# I–64
# ROWAN COUNTY
# PAVEMENT REHABILITATION, MILEPOST 134.75 TO 138.30
# ITEM NO. 9–2027.0
# FLEXIBLE DELINEATOR POST SPACING DETAILS

SPACING FOR HIGHWAY DELINEATORS ON HORIZONTAL CURVES

(DISTANCE IN FEET ROUNDED TO THE NEAREST 5 FEET)

| RADIUS OF CURVE (IN FEET) | SPACING ON CURVE (IN FEET) | SPACING IN ADVANCE AND BEYOND CURVE (IN FEET) | | |
|---|---|---|---|---|
| | | 1ST | 2ND | 3RD |
| 50 | 20 | 40 | 65 | 125 |
| 150 | 30 | 60 | 90 | 180 |
| 200 | 35 | 70 | 110 | 215 |
| 250 | 40 | 85 | 125 | 250 |
| 300 | 50 | 95 | 145 | 290 |
| 400 | 55 | 110 | 170 | 300 |
| 500 | 65 | 125 | 190 | 300 |
| 600 | 70 | 140 | 210 | 300 |
| 700 | 75 | 150 | 230 | 300 |
| 800 | 80 | 165 | 245 | 300 |
| 900 | 85 | 175 | 260 | 300 |
| 1000 | 90 | 185 | 275 | 300 |

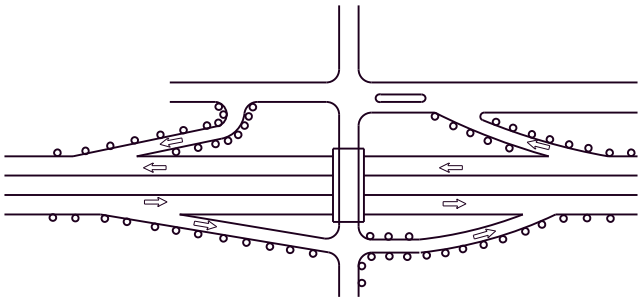

TYPICAL INTERCHANGES RAMP DELINEATION

SPACING FOR SPECIFIC RADII NOT SHOWN MAY BE INTERPOLATED FROM TABLE. THE MINIMUM SPACING SHOULD BE 20 FEET. THE SPACING ON CURVES SHOULD NOT EXCEED 300 FEET. IN ADVANCE OF OR BEYOND A CURVE, AND PROCEEDING AWAY FROM THE END OF THE CURVE, THE SPACING OF THE FIRST DELINEATOR IS 2S, THE SECOND 3S, AND THE THIRD 6S BUT NOT TO EXCEED 300 FEET. S REFERS TO THE DELINEATOR SPACING FOR SPECIFIC RADII COMPUTED FROM THE FORMULA $S=3\sqrt{R-50}$.

DELINEATION ON THE TANGENT SECTION OF THE MAINLINE WHERE RAISED PAVEMENT MARKERS ARE IN PLACE IS NOT REQUIRED. HOWEVER, DELINEATION IS REQUIRED ON ALL CURVES OF THE MAINLINE. THE SPACING SHALL BE COMPUTED FROM THE FORMULA $S=3\sqrt{R-50}$.

NOTE: CHANNELIZATION ON RAISED ISLANDS ON RAMPS AT RAMP TERMINI IS TO BE DELINEATED WITH A MINIMUM OF THREE DELINEATORS PER ISLAND. NO DELINEATION ON PAINTED ISLANDS.

FOR ADDITIONAL INFORMATION ON DELINEATION, SEE SECTION 3D OF THE MANUAL ON UNIFORM TRAFFIC CONTROL DEVICES.

I-64
FLEXIBLE DELINEATOR
POST SPACING DETAIL

Contract ID: 121061
Page 28 of 118

| COUNTY OF | ITEM NO. | SHEET NO. |
|---|---|---|
| ROWAN | 9-2027.0 | |

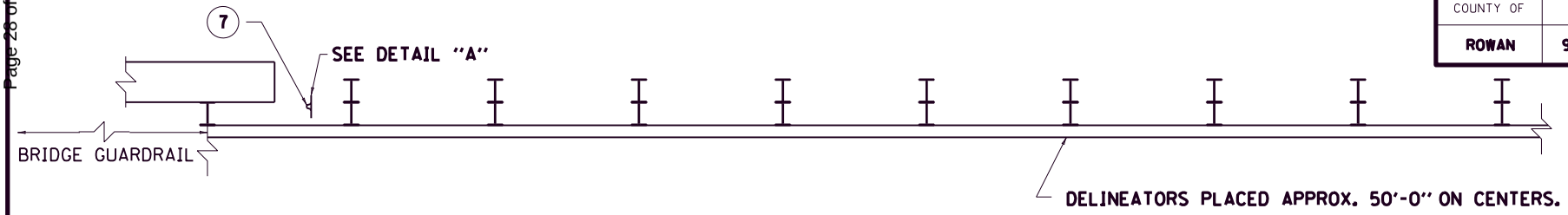


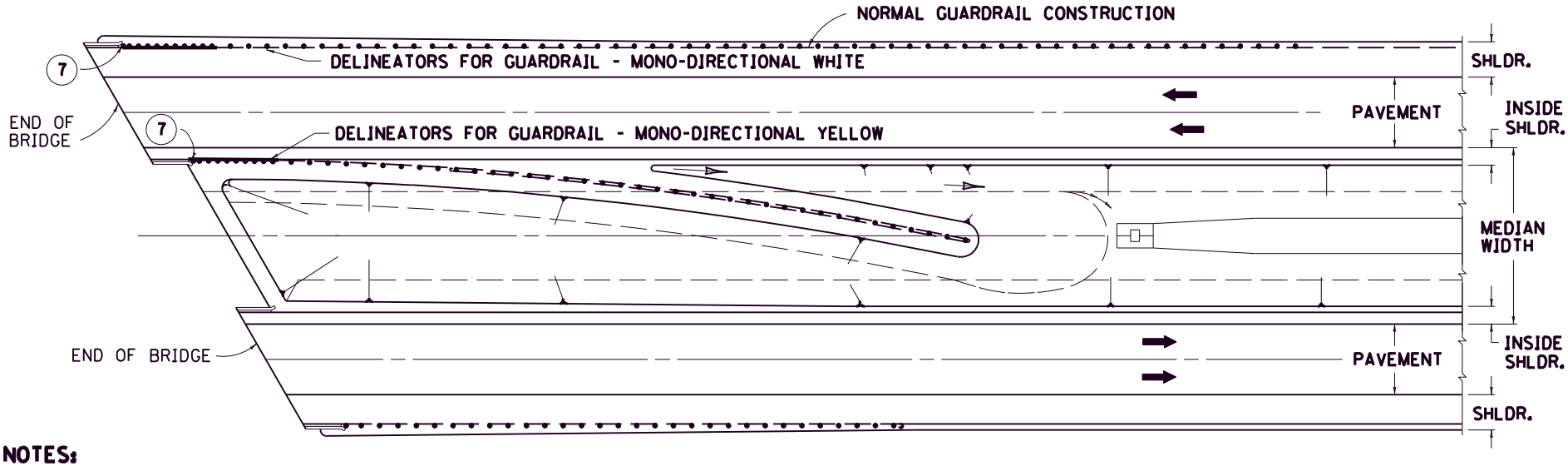


## NOTES:

1. DELINEATOR SHALL BE MEASURED AND PAID FOR AT THE CONTRACT UNIT PRICE EACH, AND SHALL INCLUDE ALL MATERIALS AND LABOR NECESSARY FOR ONE COMPLETE INSTALLATION.
2. 

| CODE | PAY ITEM | PAY UNIT |
|---|---|---|
| | DELINEATORS FOR CONCRETE BARRIERS | |
| 1984 | DELINEATOR FOR BARRIER WALL - MONO-DIRECTIONAL WHITE | EACH |
| 1985 | DELINEATOR FOR BARRIER WALL - MONO-DIRECTIONAL YELLOW | EACH |
| | DELINEATORS ON GUARDRAIL | |
| 1982 | DELINEATOR FOR GUARDRAIL - MONO-DIRECTIONAL WHITE | EACH |
| 1983 | DELINEATOR FOR GUARDRAIL - MONO-DIRECTIONAL YELLOW | EACH |

3. THE DELINEATORS SHALL BE YELLOW IN COLOR WHEN THE BARRIER IS PLACED IN THE MEDIAN AND/OR ON THE LEFT SIDE OF THE DRIVING LANE. THE DELINEATORS SHALL BE WHITE IN COLOR WHEN THE BARRIER IS PLACED ON THE RIGHT SIDE OF THE DRIVING LANE.
4. DELINEATORS SHALL BE APPLIED 300 FEET IN ADVANCE OF AND THROUGHOUT THE LENGTH OF ALL BRIDGES THAT DO NOT HAVE FULL WIDTH SHOULDERS. SPACING ON BRIDGES AND 300 FEET IN ADVANCE OF BRIDGES SHALL BE 50 FEET ON CENTERS. THE FIRST DELINEATOR ON THE GUARDRAIL SHALL BE PLACED 50 FEET FROM THE DELINEATOR AT THE END OF THE BRIDGE. DELINEATORS SHALL BE INSTALLED IN ACCORDANCE WITH THE MANUFACTURER'S RECOMMENDATIONS.
5. WHEN CONCRETE BARRIERS EXTEND ACROSS NARROW SHOULDER WIDTH STRUCTURES IN LIEU OF STEEL BEAM GUARDRAIL, DELINEATORS SHALL BE INSTALLED AT SAME VERTICAL ALIGNMENT AS ON THE GUARDRAIL AND DELINEATORS SHALL COMPLY WITH CURRENT SEPIA DRAWING 004.
6. GUARDRAIL DELINEATORS SHALL COMPLY WITH CURRENT SEPIA DRAWING 002.
7. SEE SECTION 718 OF THE CURRENT STANDARD SPECIFICATIONS FOR "OBJECT MARKER TYPE 2".

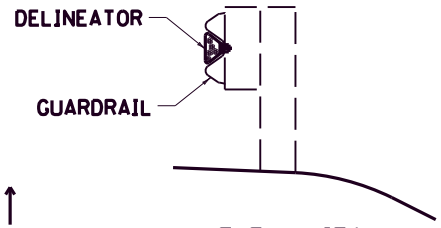


ELEV. VIEW

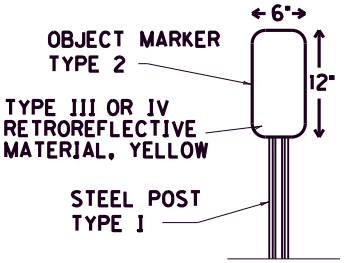


OBJECT MARKER TYPE 2
DETAIL "A" 7

PRIMARY USE:
(PAVEMENT REHABILITATION PROJECTS)

KENTUCKY
DEPARTMENT OF HIGHWAYS

**DELINEATORS AT NARROW SHOULDER BRIDGES**

SUBMITTED _____ DIRECTOR DIVISION OF DESIGN 6-15-2012 DATE

001

ROWAN COUNTY
FD04 SPP 103.0004.134-139

Contract ID: 121061
Page 29 of 118

| COUNTY OF | ITEM NO. | SHEET NO. |
|---|---|---|
| ROWAN | 9-2027.0 | |

## NOTES

1. THE DELINEATOR'S SHAPE AND DIMENSIONS ARE SHOWN FOR ILLUSTRATION PURPOSES ONLY. TYPES OF DELINEATORS PERMITTED SHALL BE FROM THE LIST OF APPROVED MATERIALS.
2. DELINEATOR SHALL BE MEASURED AND PAID FOR AT THE CONTRACT UNIT PRICE EACH AND SHALL INCLUDE ALL MATERIALS AND LABOR NECESSARY FOR ONE COMPLETE INSTALLATION.
3. 

| CODE | PAY ITEM | PAY UNIT |
|---|---|---|
| 1982 | DELINEATOR FOR GUARDRAIL - MONO DIRECTIONAL WHITE | EACH |
| 1983 | DELINEATOR FOR GUARDRAIL - MONO DIRECTIONAL YELLOW | EACH |
| 1987 | DELINEATOR FOR GUARDRAIL - BI-DIRECTIONAL WHITE | EACH |

4. GUARDRAIL DELINEATORS SHALL BE REQUIRED ON ALL GUARDRAIL.
5. DELINEATORS SHALL BE MANUFACTURED FROM 12 GA. GALVANIZED STEEL.
6. DIMENSIONS SHOWN ARE APPROXIMATE AND ARE SUBJECT TO MANUFACTURER'S TOLERANCES.
7. WHEN CONCRETE BARRIERS EXTEND ACROSS BRIDGE STRUCTURES IN LIEU OF STEEL BEAM GUARDRAIL, DELINEATORS SHALL BE INSTALLED AT SAME VERTICAL ALIGNMENT AS ON THE GUARDRAIL, AND DELINEATORS SHALL COMPLY WITH CURRENT SEPIA DRAWING 004.
8. DELINEATORS SHALL BE INSTALLED IN ACCORDANCE WITH MANUFACTURER'S RECOMMENDATIONS.

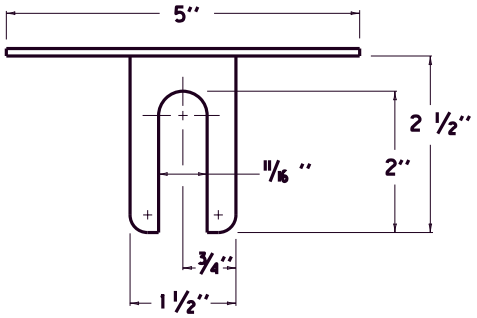


PLAN VIEW

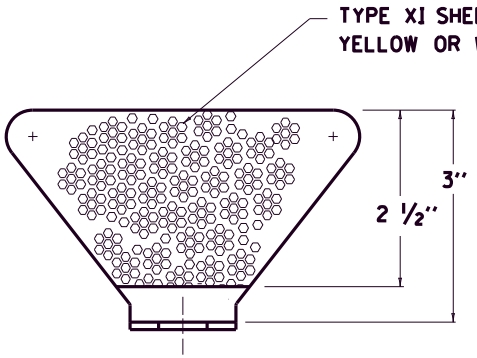


FRONT VIEW

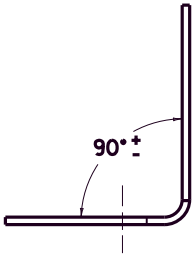


SIDE VIEW

NOTE: DIMENSIONS SHOWN ARE FOR ONE VERSION OF A WEB-MOUNTED GUARDRAIL DELINEATOR. DELINEATORS WITH ALTERNATE DIMENSIONS MAY BE CONSIDERED FOR INCLUSION ON THE APPROVED PRODUCTS LIST.

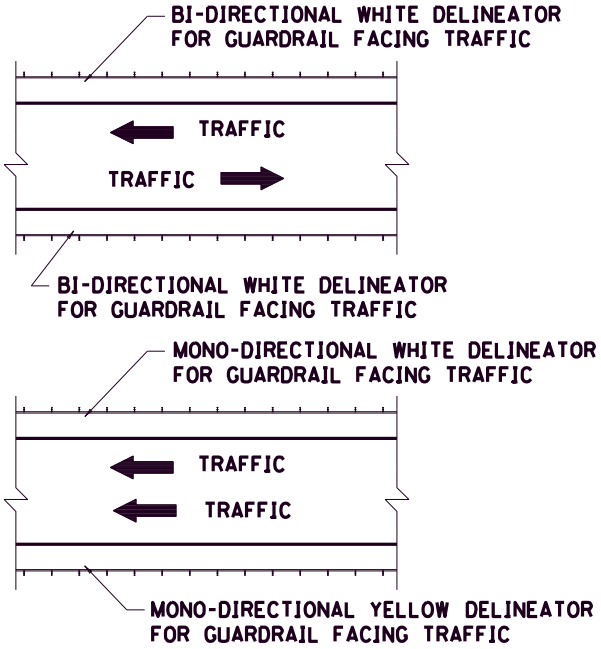


PLACEMENT OF DELINEATORS FOR GUARDRAIL

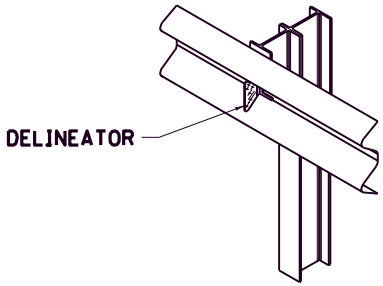


ISOMETRIC VIEW

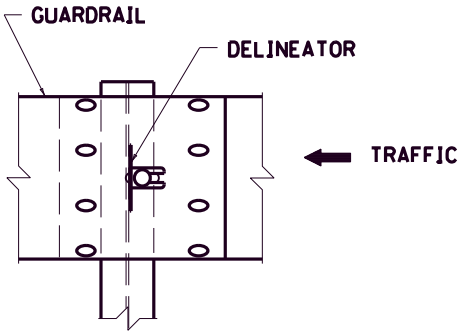


FRONT VIEW

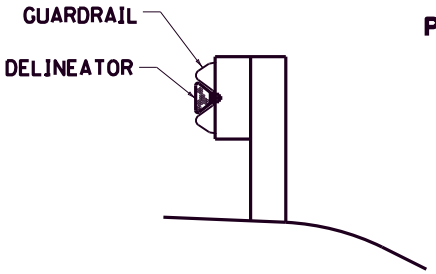


SIDE VIEW

| APPROXIMATE DELINEATOR SPACING | |
|---|---|
| TANGENT | 100' |
| CURVE | 50' |

SPACING SHOULD BE ADJUSTED IN CURVES SO THAT SEVERAL DELINEATORS ARE ALWAYS SIMULTANEOUSLY VISIBLE TO THE ROAD USER.

KENTUCKY
DEPARTMENT OF HIGHWAYS

DELINEATORS
FOR GUARDRAIL

SUBMITTED _____ DIRECTOR DIVISION OF DESIGN 6-15-2012 DATE

002

ROWAN COUNTY
FD04 SPP 103 0004 134-139

| COUNTY OF | ITEM NO. | SHEET NO. |
|---|---|---|
| ROWAN | 9-2027.00 | |

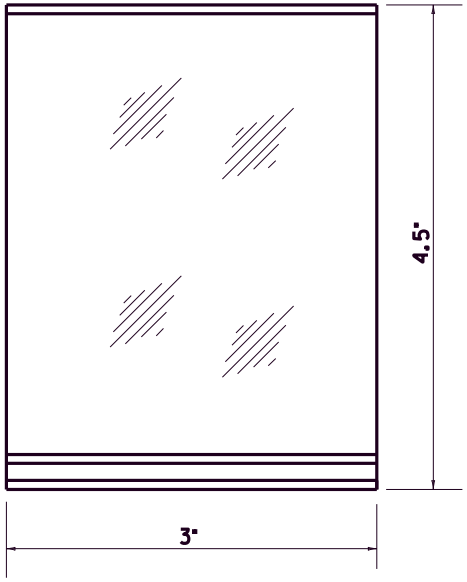


FRONT ELEVATION

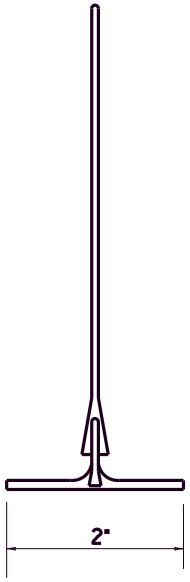


SIDE ELEVATION

## NOTES

1. BARRIER WALL DELINEATORS SHALL BE REQUIRED ON ALL BARRIER WALL.
2. DELINEATORS SHALL BE MEASURED AND PAID FOR AT THE CONTRACT UNIT PRICE EACH, AND SHALL INCLUDE ALL MATERIALS AND LABOR NECESSARY FOR ONE COMPLETE INSTALLATION.
3.

| CODE | PAY ITEM | PAY UNIT |
|---|---|---|
| 1984 | DELINEATOR FOR BARRIER WALL - MONO DIRECTIONAL WHITE | EACH |
| 1985 | DELINEATOR FOR BARRIER WALL - MONO DIRECTIONAL YELLOW | EACH |
| 1986 | DELINEATOR FOR BARRIER WALL - BI-DIRECTIONAL YELLOW | EACH |
| 1990 | DELINEATOR FOR BARRIER WALL - BI-DIRECTIONAL WHITE | EACH |

4. IN ACCORDANCE WITH THE MUTCD (CURRENT EDITION), THE COLOR OF DELINEATORS SHALL MATCH THE COLOR OF THE EDGE LINE THAT THEY SUPPLEMENT. IN GENERAL, DELINEATORS ON BARRIER WALL ALONG THE LEFT SIDE OF DRIVING LANES SHALL BE YELLOW, AND DELINEATORS ON BARRIER WALL ALONG THE RIGHT SIDE OF DRIVING LANES SHALL BE WHITE. DELINEATORS IN BOTH DIRECTIONS ON A TWO-LANE, TWO-WAY ROADWAY SHALL BE BI-DIRECTIONAL WHITE.
5. TYPES OF DELINEATORS PERMITTED SHALL BE FROM THE LIST OF APPROVED MATERIALS. THE DELINEATOR'S SHAPE AND DIMENSIONS ARE FOR ILLUSTRATION PURPOSES ONLY.
6. THE DELINEATOR UNIT SHALL HAVE THE REFLECTIVE SURFACE INSTALLED FACING TRAFFIC.
7. DELINEATORS SHALL BE INSTALLED IN ACCORDANCE WITH MANUFACTURER'S RECOMENDATION.
8. DELINEATORS SHALL BE ATTACHED TO CONCRETE MEDIAN BARRIER WITH AN APPROVED ADHESIVE.
9. DELINEATOR SHEETING SHALL BE TYPE XI, YELLOW OR WHITE.
10. DELINEATORS SHOULD BE MOUNTED AT A HEIGHT OF APPROXIMATELY 4' ABOVE PAVEMENT. WHEN CONCRETE BARRIERS EXTEND ACROSS BRIDGE STRUCTURES IN LIEU OF STEEL BEAM GUARDRAIL, DELINEATORS SHALL BE INSTALLED AT THE SAME VERTICAL ALIGNMENT AS ON THE GUARDRAIL.
11. FOR BARRIER WALLS 50" OR LESS IN HEIGHT, DELINEATORS MAY BE INSTALLED ON TOP OF THE BARRIER WALL. FOR MEDIAN BARRIER WALLS 50" OR LESS IN HEIGHT THAT SEPARATE TWO-WAY TRAFFIC, BI-DIRECTIONAL YELLOW DELINEATORS MAY BE INSTALLED ON THE TOP OF THE BARRIER WALL IN LIEU OF SIDE-MOUNTED MONO-DIRECTIONAL YELLOW DELINEATORS.

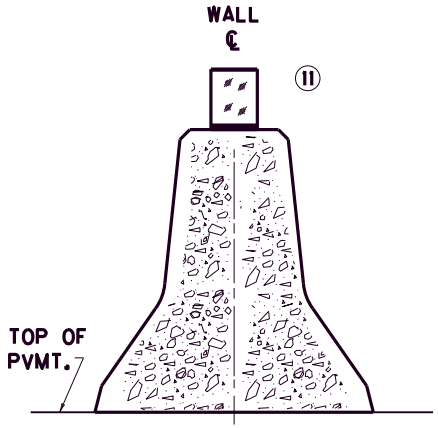


NORMAL (SOLID) WALL SECTION

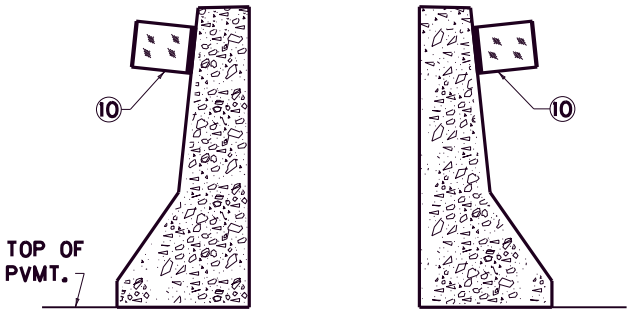


(SEPARATE SEGMENT) WALL SECTION

| APPROXIMATE DELINEATOR SPACING | |
|---|---|
| TANGENT | 100' |
| CURVE | 50' |

SPACING SHOULD BE ADJUSTED IN CURVES SO THAT SEVERAL DELINEATORS ARE ALWAYS SIMULTANEOUSLY VISIBLE TO THE ROAD USER.

KENTUCKY
DEPARTMENT OF HIGHWAYS

**DELINEATORS FOR CONCRETE BARRIERS**

SUBMITTED J. Napier 7-13-2012
DIRECTOR DIVISION OF HIGHWAY DESIGN DATE

004

| COUNTY OF | ITEM NO. | SHEET NO. |
|---|---|---|
| ROWAN | 9-2027.0 | |

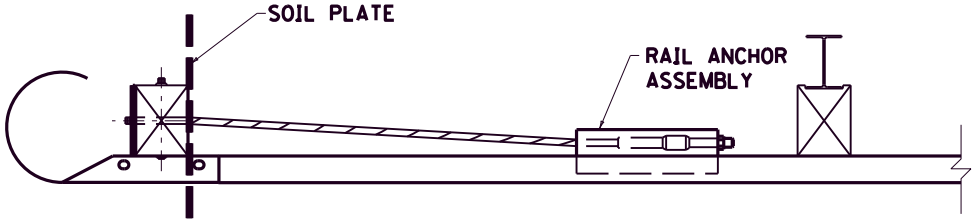


PLAN VIEW

## NOTES

1. GUARDRAIL END TREATMENT TYPE 2A SHALL BE TO THE PAY LIMITS AS DETAILED. THE CONTRACT UNIT BID IS EACH AND SHALL INCLUDE A TERMINAL SECTION NO. 1, RAIL ANCHOR ASSEMBLY, CABLE ANCHOR ASSEMBLY AND ALL OTHER INCIDENTALS NECESSARY FOR A COMPLETE INSTALLATION AS DETAILED.
2. IN THE EVENT SOLID ROCK IS ENCOUNTERED, THE SOIL TUBE MAY BE SHORTENED, PROVIDED IT EXTENDS INTO THE SOLID GROUND A MINIMUM OF 3 FEET.
3. INSTALL BEARING PLATE SO THAT THE "V" OPENING IS AT THE TOP.

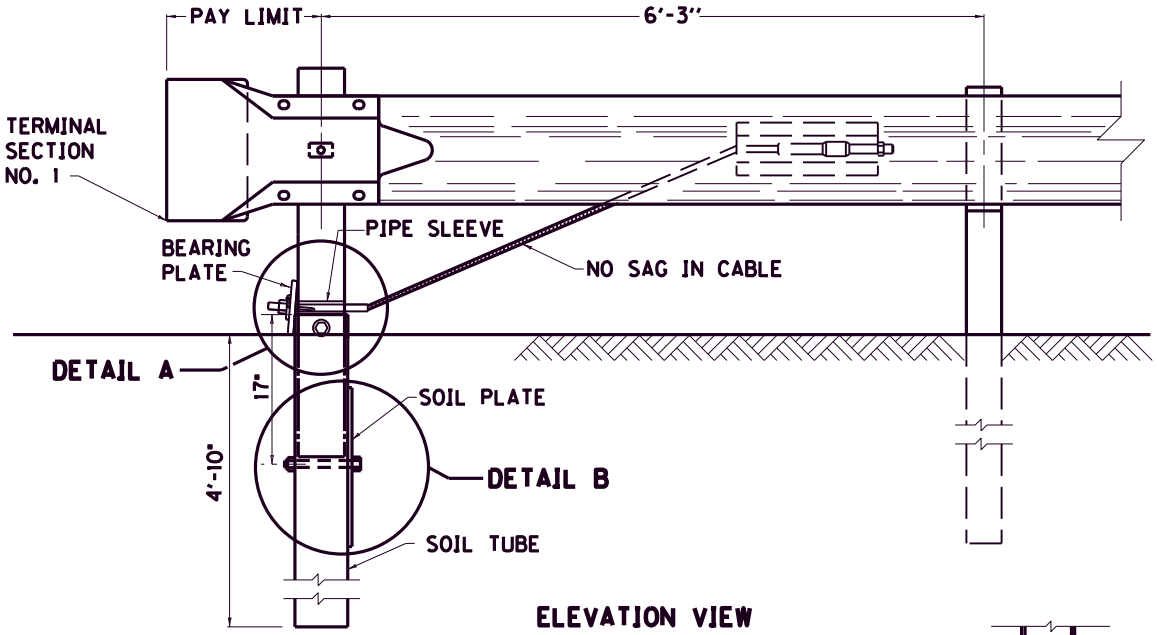


ELEVATION VIEW

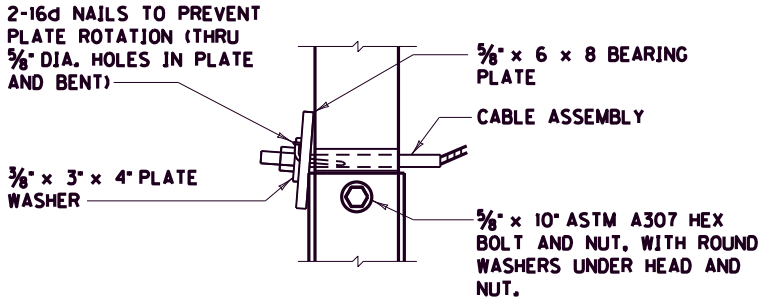


DETAIL A

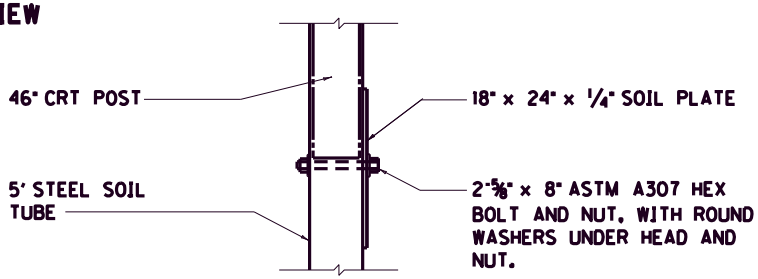


DETAIL B

USE WITH CUR. STD. DWGS.
RBR-010, RBI-001,
RBI-002, RBI-003

KENTUCKY
DEPARTMENT OF HIGHWAYS

GUARDRAIL
END TREATMENT
TYPE 2A

SUBMITTED J. Draper TEBM DIVISION OF DESIGN 6-15-2012 DATE

007

| COUNTY OF | ITEM NO. | SHEET NO. |
|---|---|---|
| ROWAN | 9-2027.0 | |

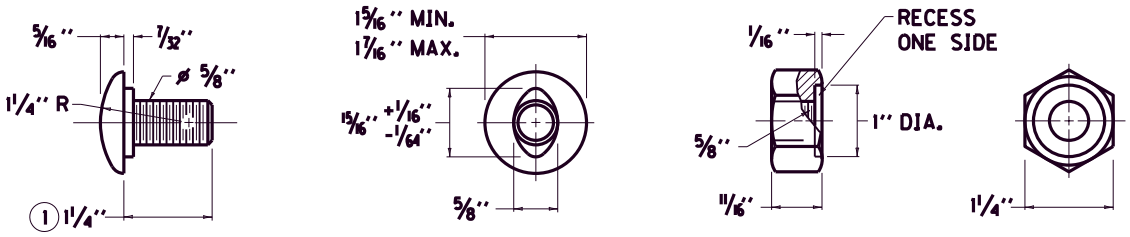


5/8" BUTTON HEAD BOLT AND RECESSED NUT

## NOTES

1. RAIL BOLT SIMILAR EXCEPT LENGTH.
2. THE THRIE BEAM TO "W" BEAM CONNECTOR SHALL COMPLY WITH AASHTO M-180 CLASS A, TYPE 2 EXCEPT WHERE IN CONFLICT WITH THIS DETAIL.

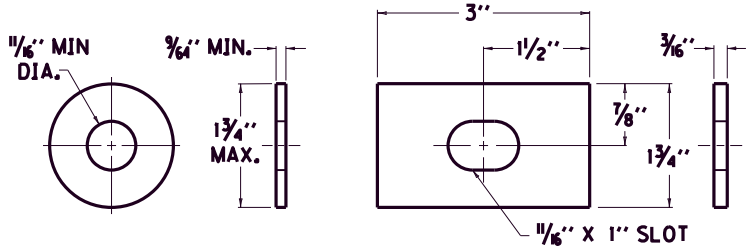


ROUND WASHER AND RECTANGULAR PLATE WASHER

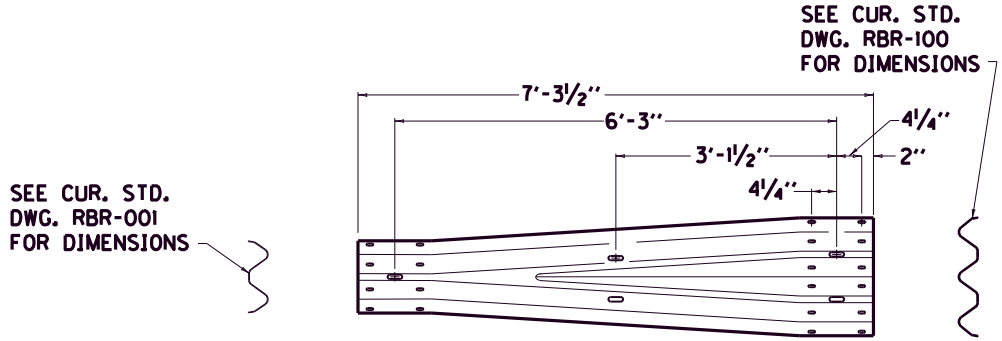


THRIE BEAM TO "W" BEAM CONNECTOR 2

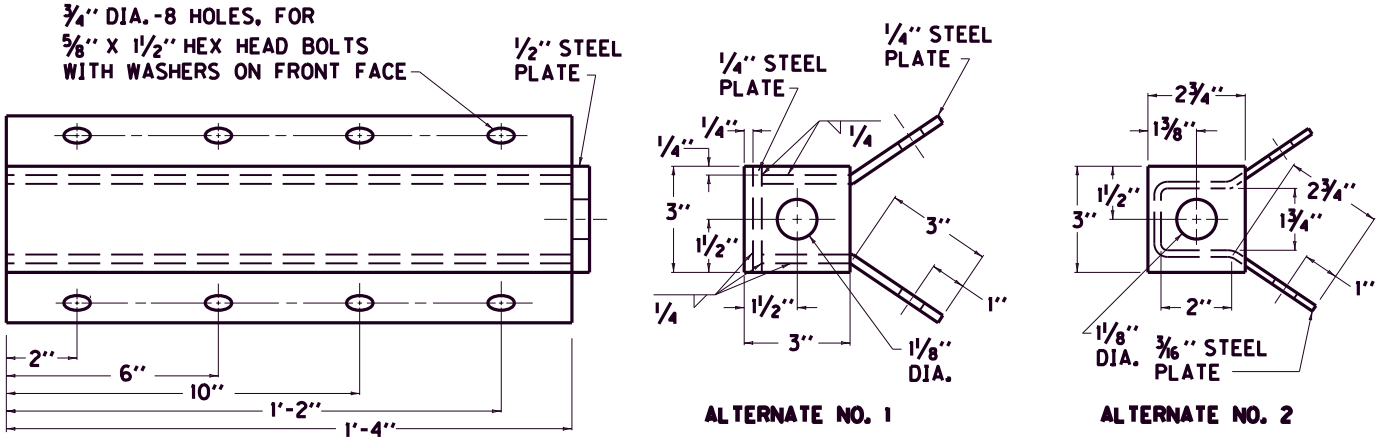


RAIL ANCHOR ASSEMBLY

ALTERNATE NO. 1

ALTERNATE NO. 2

KENTUCKY
DEPARTMENT OF HIGHWAYS

GUARDRAIL COMPONENTS

SUBMITTED J. Draper TEBM DIVISION OF DESIGN 6-15-2012 DATE

008

**I-64 ROWAN COUNTY**
**FD04 SPP 103 0064 134-139**
**Item No. 9-2027.00**

**THIS PROJECT IS A FULLY CONTROLLED ACCESS HIGHWAY**

## I. DESCRIPTION

Perform all work in accordance with the Department's 2012 Standard Specifications, Supplemental Specifications, Special Provision 76 and other applicable Special Provisions, and applicable Standard and Sepia Drawings, except as hereafter specified. Article references are to the Standard Specifications. Furnish all materials, labor, equipment, and incidentals for the following work:

(1) Maintain and Control Traffic; (2) Remove and replace Guardrail and Guardrail End treatments at the locations listed and/or as directed by the Engineer; (3) Pavement markers; (4) Asphalt Pavement Milling and Texturing; (5) Asphalt Surface; (6) Bridge Deck Restoration; and (7) All other work specified as part of this contract.

## II. MATERIALS

Except as specified in these notes or on the drawings, all materials will be according to the Standard Specifications and applicable Special Provisions and Special Notes. The Department will sample and test all materials according to Department's Sampling Manual and the Contractor will have the materials available for sampling a sufficient time in advance of the use of the materials to allow for the necessary time for testing, unless otherwise specified in these notes.

A. **Maintain and Control Traffic.** See Traffic Control Plan.

B. **Dense Graded Aggregate.** Contrary to Special Provision No. 76, Crushed Stone Base may not be furnished in lieu of DGA.

C. **Pavement Markings -6 inch Tape.** Use Durable Waterborne Markings for permanent striping (12 inch at entrance and exit ramp tapers).

D. **Crushed Aggregate Size No. 2.** Crushed Aggregate Size No. 2 will be limestone.

E. **Channel Lining Class II & III.** Channel lining will be limestone and is to be placed at pipe outlets with significant erosion and in ditch repair locations as directed by the Engineer.

F. **Erosion Control Blanket.** Erosion control blanket is to be placed in all ditching areas when ditching is complete, on slope stabilization areas, or as directed by the Engineer. Use Seed Mixture No. 1

## III. CONSTRUCTION METHODS

A. **Maintain and Control Traffic.** See Traffic Control Plan.

B. **Site Preparation.** Be responsible for all site preparation. Do not disturb existing signs. This item will include, but is not limited to, incidental excavation and backfilling; removal of all obstructions or any other items; disposal of materials; sweeping and removal of debris; shoulder preparation and restoration, temporary and permanent erosion and pollution control; and all incidentals. Site preparation will be only as approved or directed by the Engineer. Other than the bid items listed, no direct payment will be made for site preparation, but will be incidental to the other items of work.

C. **Disposal of Waste.** Dispose of all cuttings, debris, and other waste off the right-of-way at approved sites obtained by the Contractor at no additional cost to the Department. The contractor will be responsible for obtaining any necessary permits for this work. Temporary openings in the right of way fence for direct access to waste sites off the right of way or for access to other public roads will not be allowed. No separate payment will be made for the disposal of waste and debris from the project or obtaining the necessary permits, but will be incidental to the other items of the work.

D. **Final Dressing, Clean Up, and Seeding and Protection.** After all work is completed, completely remove all debris from the job site. Perform Class A Final Dressing on all disturbed areas. Sow disturbed earthen areas with Seed Mixture No. I. These items are incidental to other items in the contract.

E. **Guardrail.** Remove, replace and extend guardrail and guardrail End Treatments listed in the Guardrail Summary or as directed by the Engineer. Quantities are approximate only. Actual locations will be determined by the Engineer at the time of construction. Grade and reshape shoulders to proper template for new End Treatment. Utilize DGA for embankment when required for new end treatments. Remove any existing guardrail with a lane closure in place. Do not leave the area unprotected. After the guardrail is removed, a shoulder closure shall remain in place until the guardrail is replaced in that area. A maximum of seven calendar days will be allowed between the removal of a guardrail section and the installation of new guardrail at that same location unless otherwise approved by the Engineer.

F. **Pavement Striping and Pavement Markers.** Permanent striping will be in accordance with Section 112, except that:

(1). Striping will be 6" in width, except 12” in gore area;
(2). Permanent striping will be in place before a lane is opened to traffic; and
(3). Permanent striping will be Durable Waterborne Markings.
(4). Pavement Markers shall be installed per Standard Drawings TPM-105-02 (Arrangement C), TPM-125-02, TPM-130-02 and TPM-135-02.
(5). Inlaid Pavement Markers shall be used between I-64 driving lanes only. All others shall be Type V Pavement Markers.

G. **On-Site Inspection.** Each Contractor submitting a bid for this work will make a thorough inspection of the site prior to submitting a bid and will thoroughly familiarize himself with existing conditions so that the work can be expeditiously performed after a contract is awarded. Submission of a bid will be considered evidence of this inspection having been made. Any claims resulting from site conditions will not be honored by the Department.

H. **Caution:** Information shown on the drawings and in this proposal and the types and quantities of work listed are not to be taken as an accurate or complete evaluation of the material and conditions to be encountered during construction. The bidder must draw his own conclusions as to the conditions encountered. The Department does not give any guarantee as to the accuracy of the data and no claim will be considered for additional compensation if the conditions encountered are not in accordance with the information above.

I. **Utility Clearance.** It is not anticipated that utility facilities will need to be relocated and/or adjusted; however, in the event that it is discovered that the work does require that utilities be relocated and/or adjusted, the utility companies will work concurrently with the Contractor while relocating their facilities.

## IV. METHOD OF MEASUREMENT

A. **Maintain and Control Traffic.** See Traffic Control Plan.

B. **Site Preparation.** Other than the bid items listed, site preparation will not be measured for payment, but will be incidental to the other items of work.

C. **Crushed Aggregate Size No. 2.** Payment will be based on the tons used around perforated pipe outlet headwalls, erosion around pipe inlets and outlets, washouts behind guardrail and other areas as directed by the Engineer.

D. **Pavement Markers and Permanent Striping.** Permanent striping Durable Waterborne Markings (6" and 12") is measured per linear foot. See Traffic Control Plan. Inlaid Pavement Markers and Type V Pavement Markers are measured as each. No direct payment will be made for the removal of the existing

pavement markers prior to the milling operation and shall be considered incidental to milling and texturing.

E. **Erosion Control.** Erosion control items not listed as bid items will not be measured for payment, but will be considered incidental to the "lump sum" price for the bid item "KPDES Permit & Temporary Erosion Control".

F. **Erosion Control Blanket.** Erosion Control Blanket is measured by square yard and is to be used in ditching areas and slope stabilization areas as directed by the Engineer.

G. **Base Failure Repair.** Base failure repair shall be bid in "square yards" and consists of all labor, equipment and materials necessary to complete the repairs as shown in the detail provided in the proposal. Additional quantities have been included for base failure repairs.

H. **Shoulder and Foreslope Repair.** Shoulder repair areas are shown on the Shoulder Repair Detail and may be modified or additional areas repaired as directed by the Engineer. Existing roadside foreslopes are to be repaired in accordance with the "Foreslope Repair Detail". See Basis of Payment for "Ditching and Shouldering".

## V. BASIS OF PAYMENT

No direct payment will be made other than for the bid items listed. All other items required to complete the construction will be incidental to the bid items listed. Existing signs damaged by the Contractor will be replaced by the Contractor at his expense.

A. **Maintain and Control Traffic.** See Traffic Control Plan.

B. **Site Preparation.** Other than the bid items listed, no direct payment will be allowed for site preparation, but will be incidental to the other items of work.

C. **Dense Grade Aggregate.** See Section 302 of the Standard Specifications.

D. **Raised Pavement Markers and Permanent Striping.** See Traffic Control Plan.

E. **Lane Closures.** Contrary to the specifications Lane Closures in operation for more than three days shall not be a bid item and shall be considered incidental to the bid item "Maintain and Control Traffic". Arrow boards and signs shall be paid for one time regardless of how many times they are moved.

F. **Ditching and Shouldering.** In addition to Section 209 of the Standard Specifications, the bid item "Ditching and Shouldering" shall include repairing the shoulders and foreslopes as shown on the details provided in the proposal. Asphalt Base per ton used in the shoulder repair, additional milling

and removal and replacement of guardrail shall be paid separately.

G. **Milling and Texturing.** Milling and texturing will be paid for per section 408.05 of the 2012 Standard Specifications. No direct payment will be made for stockpiling, reloading and placing the milled material in areas specified in the proposal.

H. **Waterblasting Striping Removal.** Contrary to Section 713 of the Standard Specifications, the abrasive method for removing striping shall not be permitted on this project.

**NOTES APPLICABLE TO PROJECT**
**PAVEMENT REHABILITATION**
**I-64 ROWAN COUNTY**
**FD04 SPP 103 0064 134-139**
**Item No. 9-2027.00**

---

1. There is a summary of pavement repair locations. The Engineer will determine the ultimate locations that will be repaired based upon the condition of the pavement at the time the repairs are accomplished. The repair locations listed may be lengthened, shortened, or eliminated completely if the conditions are such that modification of the locations would be deemed desirable by the Engineer.

2. The dimensions shown on the typical section for pavement and shoulder widths and thickness are nominal or typical dimensions. The actual dimensions to be constructed may be varied to fit existing conditions as directed or approved by the Engineer. It is not intended that existing pavement or shoulders be widened unless otherwise specified in the Proposal.

3. The contractor is to be advised of the locations of overhead utility wires on the project. The following locations are approximate:

   I-64 M.P. 136.12
   I-64 M.P. 137.36
   I-64 M.P. 138.24

   **CAUTION:** Other overhead utility locations may exist. These and all other utilities should be avoided on this project. If any utility is impacted, it will be the contractor's responsibility to contact the affected utility and cover any costs associated with the impact.

4. The contractor is to be advised of the locations of underground utilities on the project. The following locations are approximate:

   I-64 M.P. 135.34 (Gas Main Crossing)
   I-64 M.P. 137.43 (Waterline Crossing)

   **CAUTION:** Other underground utility locations may exist. These and all other utilities should be avoided on this project. If any utility is impacted, it will be the contractor's responsibility to contact the affected utility and cover any costs associated with the impact.

5. All Milepost signs within the project limits are to be replaced in accordance to the following table:

| MILEPOST | NORTHING | EASTING |
|---|---|---|
| 135 | 3963017.4383 | 5562097.7666 |
| 136 | 3963449.6752 | 5567328.5837 |
| 137 | 3964731.0833 | 5572432.4455 |
| 138 | 3967725.3706 | 5576704.0482 |

**NOTE:** Northing and Easting values shown are representative of Mile Points projected to centerline. Replacement should be approved and/or directed by the Engineer. The contractor will be responsible for the replacement of milepost signs if damaged during construction. No direct payment shall be made for locating the proposed mile posts.

6. Areas throughout the project have foreslopes that have eroded significantly. These areas shall be dressed with millings obtained from milling operations as shown on the "Foreslope Repair Detail" or as directed by the Engineer. In areas where foreslope corrections are occurring, positive drainage must be maintained. Locations and quantities for extensions of headwalls, Class II Channel Lining, Asphalt Seal Coat and Asphalt Seal Aggregate are shown on the "Foreslope Repair Detail". Quantities are carried over and included in the General Summary. Geotextile Fabric Type 1 is incidental to Class II Channel Lining. Reshaping of the ditch foreslopes shall be in addition to Section 209 of the Standard Specification, "Ditching and Shouldering".

7. Areas throughout the project have shoulders that are eroding significantly. These areas shall be repaired in accordance with either the "Shoulder Repair Detail". The repair locations listed may be lengthened, shortened, or eliminated by the Engineer. Locations and quantities for Relocate Guardrail Systemshown on the "Shoulder Repair Detail". Quantities are carried over and included in the General Summary. Repairing the shoulders per detail shall be in addition to Section 209 of the Standard Specification, "Ditching and Shouldering".

8. A significant portion of the project length has a minimum 1" drop off at the edge of pavement. Therefore quantities of DGA, Asphalt Seal Coat, and Asphalt Seal Aggregate are included in the General Summary for a project wide DGA wedge repair. Quantities for DGA, Asphalt Seal Coat and Asphalt Seal Aggregate for end treatment replacements have also been included.

9. Any existing guardrail segments and end treatments that have sustained damage are to be replaced with this project. Locations for guardrail segments and end treatments known to be damaged are listed by milepoint in the included Guardrail Summary sheets. Specific segments to be replaced are to be approved by the Engineer during

construction. Extensions of guardrail and replacement of damaged guardrail are to begin one week after the general milling and filling paving operations are completed.

10. The Contractor shall deliver existing salvaged guardrail system materials to the Central Sign Shop and Recycle center at 1224 Wilkinson Blvd in Frankfort, KY. Contact Section Supervisor at (502) 564-8187 to schedule the delivery of material. Deliver the material between the hours of 8:00AM and 3:30PM, Monday through Friday. There is a guardrail delivery verification sheet which must be completed and signed by the Contractor, Engineer and a representative of the Central Sign Shop and Recycle Center.

11. Delineators shall meet the requirements of Section 830 and 838 of the Standard Specifications, and be placed in accordance with Section 3D of the M.U.T.C.D., current edition.

12. The existing edge drain system is to be preserved. Any part of the edge drain system damaged during construction will be replaced at the contractor's expense. The Contractor shall clean all existing perforated pipe headwalls on the project. The cleaning of these headwalls is incidental to the bid item for “Ditching and Shouldering”.

13. A quantity of Crushed Aggregate No. 2, Channel Lining Class II and Channel Lining Class III has been included to be used in eroded areas around pipe inlets or in ditches to be repaired as shown on the details. The actual limits of the channel lining shall be as directed and/or approved by the Engineer. Geotextile Fabric Type I, as outlined in Section 214 of the Standard Specifications, will not be measured for payment and will be considered incidental to channel lining.

14. Any roadway signs that are damaged during construction are to be replaced at the contractor's expense.

15. Any light poles that are damaged during construction are to be replaced at the contractor's expense.

16. The cleaning of existing pipe culvert inlets and outlets 36 inches or less in diameter are incidental to the bid item for "Ditching and Shouldering" in accordance with Section 209 of the 2012 Edition of the Standard Specifications for Road and Bridge Construction. This includes the cleaning of existing perforated pipe headwalls.

17. Areas where the Island Curb and Gutter replacement is required are listed below. The removal of the existing damaged curb shall be considered incidental to the bid item “Island Curb and Gutter”.

    I-64 M.P. 1137.30

18. The existing Right of Way fence is to be removed and replaced with this project. A summary has been included. The contractor shall reference the existing fence prior to its removal and shall construct the new fence in the same location. The contractor shall

preserve, to the maximum extent possible, the vegetative screen along the existing fence. Total clearing of all vegetation along the fence will not be permitted. Selective manual clearing shall be used to provide only the clearance necessary to permit the removal and replacement of the fence. Alternate clearing methods may be used if approval is granted from adjacent property owners. The cost of this clearing shall be incidental to the unit price bid for “Remove and Replace Fence”. In select locations where livestock may be present, temporary fencing may be required as directed by the Engineer. Temporary fencing will not be measured for payment and will be considered incidental to the bid item “Remove and Replace Fence”.

# TRAFFIC CONTROL PLAN
# ROWAN COUNTY
# I-64
# FD04 SPP 103 0064 134-139
# Item No. 9-2027.00

---

**THIS PROJECT IS A FULLY CONTROLLED ACCESS HIGHWAY**

## TRAFFIC CONTROL GENERAL

Except as provided herein, “Maintain and Control Traffic” shall be in accordance with the 2012 Standard Specifications and the Standard Drawings, current editions. Except for the roadway and traffic control bid items listed, all items of work necessary to maintain and control traffic will be paid at the lump sum bid price to "Maintain and Control Traffic". All lane closures used on the Project will be in compliance with the appropriate Standard Drawings. Do NOT use cones for lane closures or shoulder closures.

Contrary to Section 106.01, traffic control devices used on this project may be new, or used in like new condition at the beginning of the work and maintained in like new condition until completion of the work. Traffic control devices will conform to current MUTCD.

Reduce the speed limit in work areas to 55 miles per hour (35 miles per hour for ramps) and establish double fines for work zone speeding violations. The extent of these areas within the project limits will be restricted to the proximity of actual work areas as determined by the Engineer. Notify the Engineer a minimum of 12 hours prior to using the double fine signs. At the beginning of the work zone, the “WARNING FINE DOUBLED IN WORK ZONE” signs will be dual mounted. At the end of the work zone, the “END DOUBLE FINE” signs will be dual mounted as well. Remove or cover the signs when the highway work zone does not have workers present for more than a two-hour period of time. Payment for the signs will be at the unit bid price for signs erected. Any relocation or covering of the signs will be incidental to “Maintain and Control Traffic”, lump sum.

Night work will be allowed on this project. Obtain approval from the Engineer for the method of lighting prior to its use.

**PROJECT PHASING & CONSTRUCTION PROCEDURES**

No lane closures will be allowed during the following days and hours unless otherwise directed and/or approved by the Engineer:

| | |
|---|---|
| November 21-25, 2012 | Thanksgiving Weekend |
| December 22-26, 2012 | Christmas Weekend |
| December 31, 2012-January 2, 2013 | New Years Weekend |
| March 30-April 1, 2013 | Easter Weekend |
| April 30 - May 5, 2013 | Derby Week |
| May 29-June 3, 2013 | Memorial Day Weekend |
| July 4-7, 2013 | Independence Day Weekend |

Traffic may be reduced to one lane in each direction all other times.

The bridge deck overlay construction proposed for the westbound Bull Fork Creek bridge will require continuous lane closures for an approximate three week period. The total continuous lane closure period shall not exceed 22 days. A 12 day continuous lane closure will be allowed during Phase I construction to allow additional time to construct all of the shoulder digouts required. During Phase II construction a 10 day continuous lane closure will be allowed.

All wide load traffic heading west through the I-64 project area during bridge repair operations is to be rerouted along a detour using Changeable Message Signs. The detour route will follow US 68 and KY 9 (AA Highway). A schematic for the detour route has been included in the proposal.
Approximate pavement repair locations are listed in the proposal. The Engineer will determine the exact location at the time of construction. Once removal of pavement at a particular repair location has begun, the contractor shall work continuously to complete the work required to bring the pavement back to grade. Type III Barricades shall be placed immediately in front of pavement removal areas. Type III Barricades will not be measured for payment and will be considered incidental to “Maintain and Control Traffic”, Lump Sum.

Access to all ramps at all interchanges on the project shall be maintained at all times unless otherwise directed by the Engineer. All diversions to access ramps in areas of lane closures shall be approved by the Engineer prior to implementing each particular lane closure.

During the days and hours when a lane closure is allowed, maintain traffic as specified in the phasing notes and typical sections. Any other work not requiring traffic lane widths to be restricted due to barrels or equipment encroaching into the driving lanes can be done during the remaining hours when two lanes of traffic must be maintained. Please refer to the “Special Note for Fixed Completion Date and Liquidated Damages” for damage rates per hour associated with failure to maintain the required number of lanes during the specified time period. Liquidated Damages, at the rate specified per hour in the “Special Note for Fixed Completion Date and

Liquidated Damages", will be assessed for each hour two lanes of traffic is not maintained.

The contractor must notify the Engineer at least fourteen (14) days prior to the beginning of each construction phase in either direction.

**SHOULDER PREPARATION AND RESTORATION**

The clear lane width will be 12 feet; however, make provisions for the passage of wide loads up to 16' that can not otherwise use the wide load detour. Use a lane closure all times when work is performed in the lane or adjacent shoulder. Shoulders used as temporary roadways will be inspected by the Engineer and if deemed necessary by the Engineer, repaired with asphalt mixture for leveling & wedging as directed prior to opening to traffic. Perform any maintenance of the shoulder as deemed necessary by the Engineer in order to maintain traffic. Remove failed materials and perform additional patching as directed by the Engineer prior to using the shoulder as a travel lane. Patch and remove any foreign debris on the shoulders as directed by the Engineer. Remove existing striping by water blasting.

## Project Phasing:

**PHASE I (Bridge Repair)**

After installing a lane closure for the inside lane, construct the inside shoulder digouts on both the approach and departure ends of the bridge. Remove this lane closure and install a lane closure for the outside lane, directing traffic into the inside lane and shoulder. Install temporary barrier wall as shown on the Traffic Control Plan Sheets. While maintaining traffic on inside lane and shoulder, construct the outside portion of the bridge deck repair. In preparation of Phase II work, construct the outside shoulder digouts on both the approach and departure ends of the bridge.

**PHASE II (Bridge Repair)**

Shift traffic to the outside lane and shoulder and close the inside lane to traffic. Relocate the temporary barrier wall as shown on the Traffic Control Plan Sheets. Truck Mounted Attenuators shall be required while relocating the temporary barrier walls. While maintaining traffic on outside lane and shoulder, complete the bridge deck repairs.

**PHASE III**

Close the outside lanes to traffic. Construct Base Failure Repairs as shown on the Base Failure Repair Detail. After the required settlement period, mill 2 inches of existing surface pavement and place 2 inches of surface pavement for outside shoulders and driving lane. Perform all outside road work during Phase III. All ramp work will also be completed during this phase.

**PHASE IV**

Shift traffic to the outside lanes and close the inside lanes to traffic. Mill 2 inches and place 2 inches of surface pavement on inside shoulders inside driving lane. Perform any median work during this phase.

**NOTE on project phasing:** Phase III and Phase IV may not be reversed with this project.

**NOTE on Base Failure Repair operations:** Once the pavement has been removed, the contractor must work continuously until the pavement has been replaced. The Engineer may restrict the number of locations being repaired at the same time. Pavement repairs must be completed 2 weeks prior to any general milling & filling pavement operations on those specific repair locations.

**PHASE V – PERMANENT STRIPING**

After all other work is completed, place permanent striping. Mobile operations may be utilized. In addition to newly paved areas, place permanent striping on bridge decks within the project limits.

**LANE CLOSURES**

Limit the lengths of lane closures to only that needed for actual operations in accordance with the phasing specified herein, or as directed by the Engineer, up to a maximum of two miles long with a minimum of one mile between successive lane closures. Contrary to section 112, lane closures will **NOT** be measured for payment, but are considered incidental to "Maintain and Control Traffic," Lump Sum.

**SIGNS**

Additional traffic control signs in addition to normal lane closure signing detailed on the Standard Drawings may be required by the Engineer. Additional signs needed for lane closures may include, but are not limited to, dual mounted TRUCKS USE LEFT/RIGHT LANE, LEFT/RIGHT LANE CLOSED 1 MILE, LEFT/RIGHT LANE CLOSED 2 MILE, LEFT/RIGHT LANE CLOSED 3 MILE, SLOWED/STOPPED TRAFFIC AHEAD. Signage for reduced speed limits and double fine work zones will be furnished, relocated, and maintained by the Contractor.

Contrary to section 112, individual signs will be measured only once for payment, regardless of how many times they are set, reset, removed and relocated during the duration of the project. Replacements for damaged signs or signs directed to be replaced by the Engineer due to poor legibility or reflectivity will not be measured for payment.

A quantity of signs has been included for lane shifts, "Roadwork Ahead" signs on entrance ramps, extra double fine signs and speed limit signs between interchanges. These are to be paid for only once regardless of how many times they are moved or relocated.

## FLASHING ARROWS

Flashing arrows will be paid for once, regardless of how many times they are moved or relocated. The Department **WILL NOT** take possession of the flashing arrows upon completion of the work.

## TEMPORARY CONCRETE BARRIER WALL

The contractor shall furnish and install the temporary concrete barrier wall Type 9T required for the bridge repair operations. The Department **WILL NOT** take possession of the temporary concrete barrier wall Type 9T upon completion of the work.

## PORTABLE CHANGEABLE MESSAGE SIGNS

Provide portable changeable message signs (PCMS) in advance of and within the project at locations to be determined by the Engineer. If work is in progress concurrently in both directions, or if more than one lane closure is in place in the same direction of travel, provide additional PCMS. Place PCMS one mile in advance of the anticipated queue at each lane closure. As the actual queue lengthens and/or shortens relocate or provide additional PCMS so that traffic has warning of slowed or stopped traffic at least one mile but not more than two miles before reaching the end of the actual queue. The locations designated may vary as the work progresses. The messages required to be provided will be designated by the Engineer. The PCMS will be in operation at all times. In the event of damage or mechanical/electrical failure, the contractor will repair or replace the PCMS immediately. PCMS will be paid for once, no matter how many times they are moved or relocated. The Department **WILL NOT** take possession of the signs upon completion of the work.

## TRUCK MOUNTED ATTENUATORS

Furnish and install MUTCD approved truck mounted attenuators (TMA) in advance of work areas when workers are present less than 12 feet from traffic. If there is less than 500 feet between work sites, only a single TMA will be required at a location directed by the Engineer. Locate the TMAs at the individual work sites and move them as the work zone moves within the project limits. All details of the TMA installations shall be approved by the Engineer. TMA will not be measured for payment, but are incidental to “Maintain and Control Traffic,” Lump Sum. The Department **WILL NOT** take possession of the TMAs upon completion of the work.

## PAVEMENT MARKINGS

If lane closures are in place during nighttime hours, remove or cover the lenses of raised pavement markers that do not conform to the traffic control scheme in use, or as directed by the Engineer. Replace or uncover lenses before a closed lane is reopened to traffic. No direct payment will be made for removing and replacing or covering and uncovering the lenses, but will be incidental to "Maintain and Control Traffic," lump sum.

Place temporary and permanent striping in accordance with Section 112, except that:

1. Temporary and permanent striping will be 6" in width
2. If the contractor's operations or phasing requires temporary markings which must be subsequently removed from the ultimate pavement, an approved removable lane tape will be used; however removable tape will be measured and paid as Pavement Striping-Temporary Paint 6”
3. Edge lines will be required for temporary striping
4. Existing, temporary, or permanent striping will be in place before a lane is opened to traffic
5. Place permanent striping on bridge decks and pavement within the project limits.
6. Permanent striping will be Durable Waterborne Markings

Should the Contractor change the existing striping pattern, the Contractor is to restripe the roadway back to its original configuration if no work is anticipated for a period of time (i.e. Winter shutdown).

**PAVEMENT EDGE DROP-OFFS**

Pavement edge drop-offs will be protected by a lane or shoulder closure. Lane closures will be protected with plastic drums, vertical panels, or barricades as shown on the Standard Drawings.

Pavement edges that traffic is not expected to cross, except accidentally, shall be treated as follows:

Less than 2” – Protect with a lane closure.

2” to 4” – Protect with a lane closure. Place plastic drums, vertical panels, or barricades every 50 feet. Cones may not be used in place of plastic drums, panels, and barricades at any time. Construct a wedge with compacted cuttings from milling, trenching, or asphalt mixtures with a 3:1 or flatter slope, when work is not active in the drop-off area. Place Type III Barricades at the beginning of the lane closures, and place additional Type III Barricades spaced at 2,500 feet during the time the lane closure is in place.

Greater than 4” – Pavement Repair areas – In areas where pavement is to be removed, work should proceed continuously so that traffic is exposed to a drop-off for the minimum amount of time necessary to bring the pavement back up to existing grade. Barrel spacing should be 20 feet and appropriate lighting should be utilized to illuminate the area during nighttime operations.

## TRAFFIC COORDINATOR

Designate an employee to be traffic coordinator. The designated Traffic Coordinator must be certified by the American Traffic Safety Services Association (ATSSA). The Traffic Coordinator will inspect the project maintenance of traffic once every two hours during the Contractor's operations and at any time a lane closure is in place. The Traffic Coordinator will report all incidents throughout the work zone to the Engineer on the project. The Contractor will furnish the name and telephone number where the Traffic Coordinator can be contacted at all times.

During any period when a lane closure is in place, the Traffic Coordinator will arrange for personnel to be present on the project at all times to inspect the traffic control, maintain the signing and devices, and relocate portable changeable message boards as queue lengths change. The personnel will have access on the project to a radio or telephone to be used in case of emergencies or accidents.

## COORDINATION OF WORK

The Contractor is advised that other projects may be in progress within or in the near vicinity of this project. The traffic control of those projects may affect this project and the traffic control of this project may affect those projects. The Contractor will coordinate the work on this project with the work of the other contractors. In case of conflict, the Engineer will determine the relative priority to give to work phasing on the various projects.

## CONTRACTOR’S AND CONTRACTOR’S EMPLOYEES’ VEHICLES

Do not use or allow employees to use median crossovers at any time except when inside lanes are closed for construction. In all other phases of construction, change vehicular direction of travel only at interchanges.

| COUNTY OF | ITEM NO. |
|---|---|
| ROWAN | 9-2027.00 |

## PHASE I

1. INSTALL TEMPORARY LANE CLOSURE (Incidental to M.O.T.)
2. CONSTRUCT INSIDE SHOULDER DIGOUT AND PAVEMENT REPLACEMENT.
3. INSTALL LANE CLOSURE (REFER TO STANDARD DRAWING TTC–115–02).
4. INSTALL TEMPORARY CONCRETE BARRIER AND CRASH CUSHION.
5. CONSTRUCT OVERLAY ON OUTSIDE LANE.
6. CONSTRUCT OUTSIDE SHOULDER DIGOUT AND PAVEMENT REPLACEMENT.

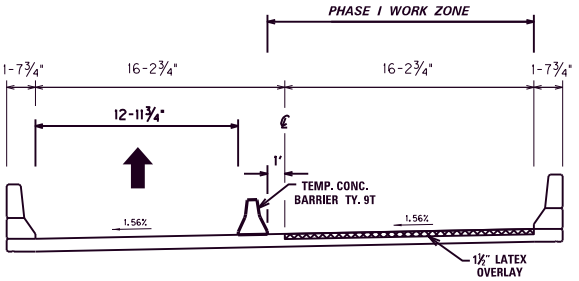


PHASE I BARRIER WALL LOCATION
WESTBOUND




SHOULDER DIGOUT

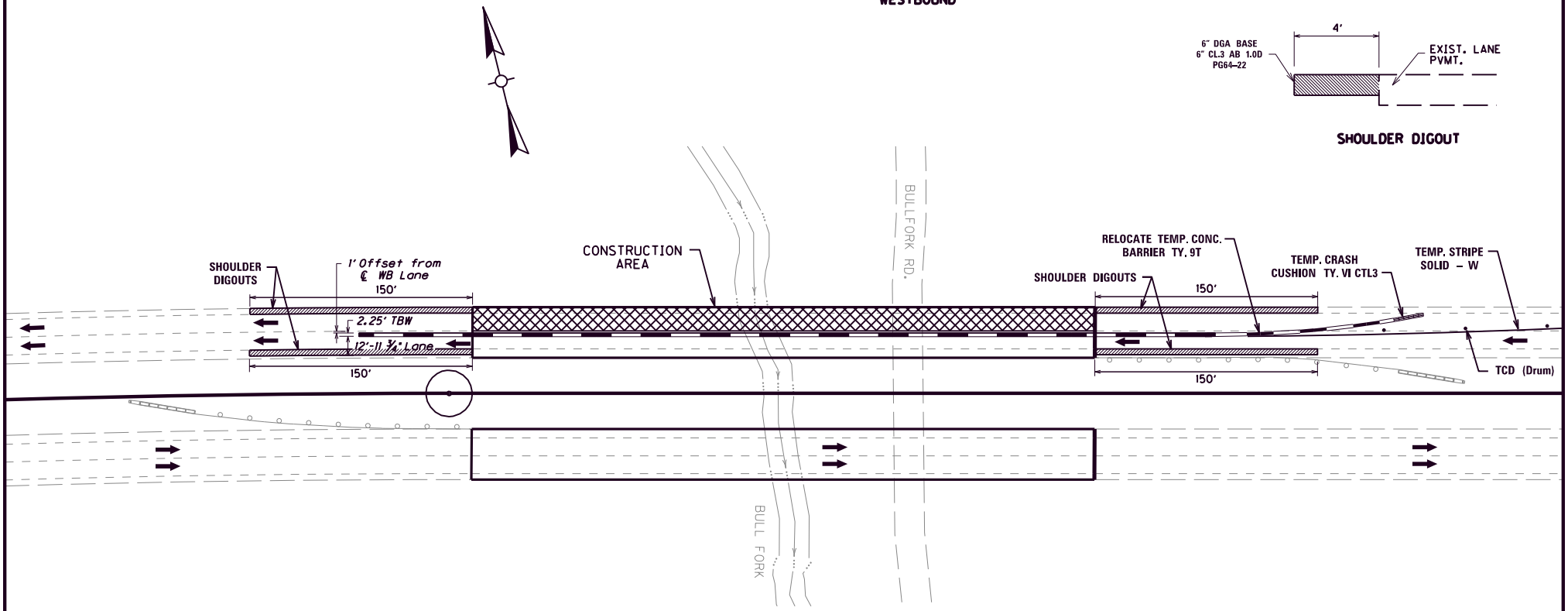


SCALE : 1" = 100'

MAINTINANCE OF TRAFFIC
I-64 MP 134.7 OVER
BULLFORK RD. PHASE I

| COUNTY OF | ITEM NO. |
|---|---|
| ROWAN | 9-2027.00 |

## PHASE II

1. INSTALL LANE CLOSURE (SEE STANDARD DRAWING TTC–115–02).
2. RELOCATE TEMPORARY CONCRETE BARRIER AND CRASH CUSHION.
3. CONSTRUCT OVERLAY ON INSIDE LANE.

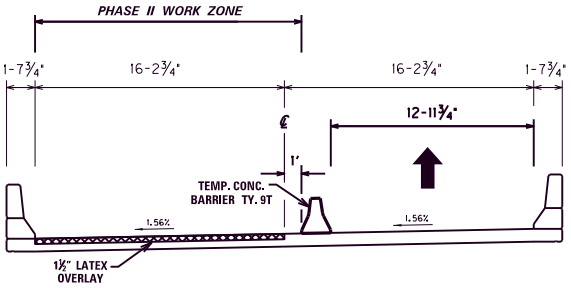


PHASE II BARRIER WALL LOCATION
WESTBOUND

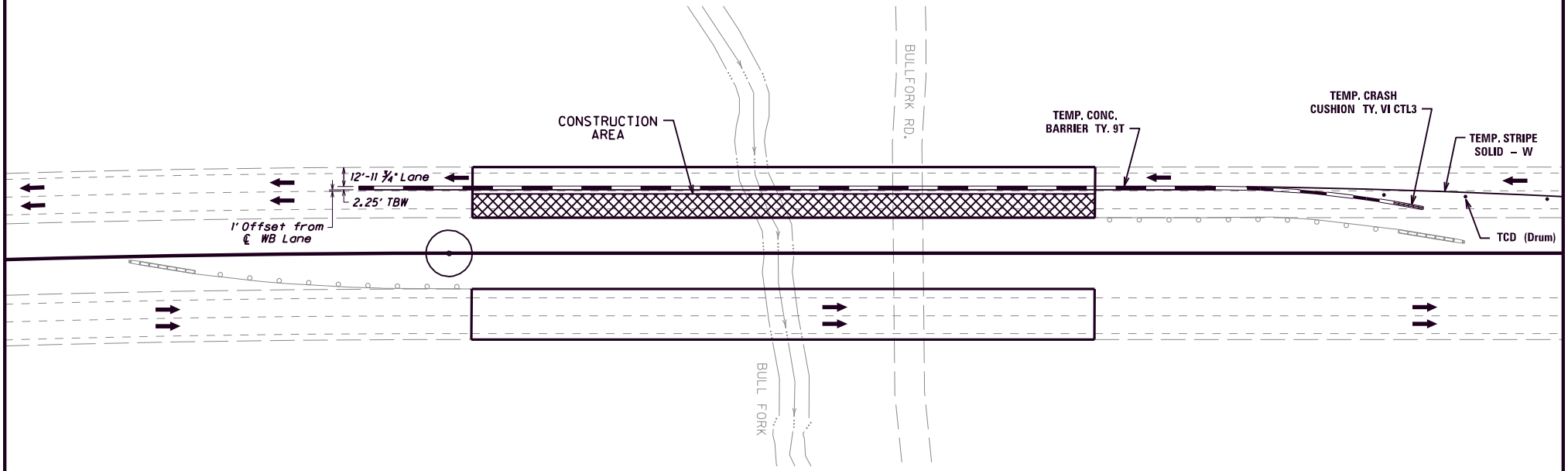


SCALE : 1" = 100'

MAINTINANCE OF TRAFFIC
I-64 MP 134.7 OVER
BULLFORK RD. PHASE II

| COUNTY OF | ITEM NO. | SHEET NO. |
|---|---|---|
| ROWAN | 9-2027.0 | |

# MAINTENANCE OF TRAFFIC
# TYPICAL SECTIONS
# I–64

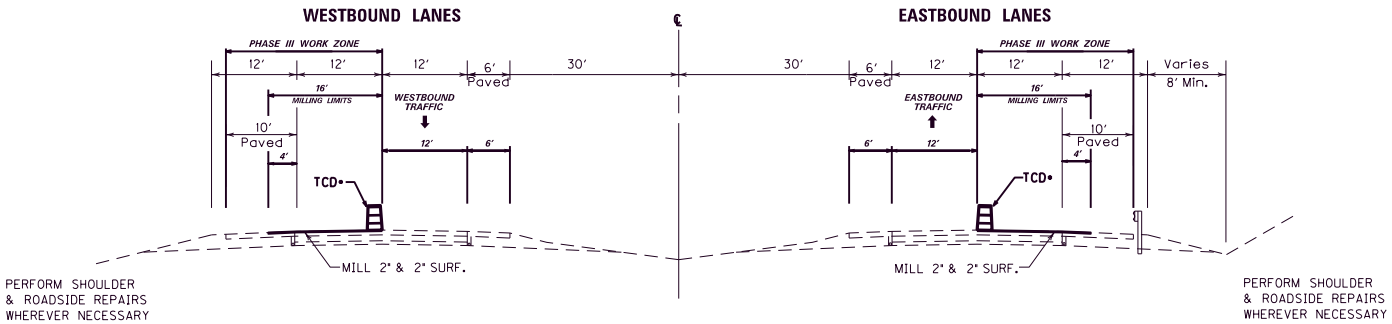


## PHASE III

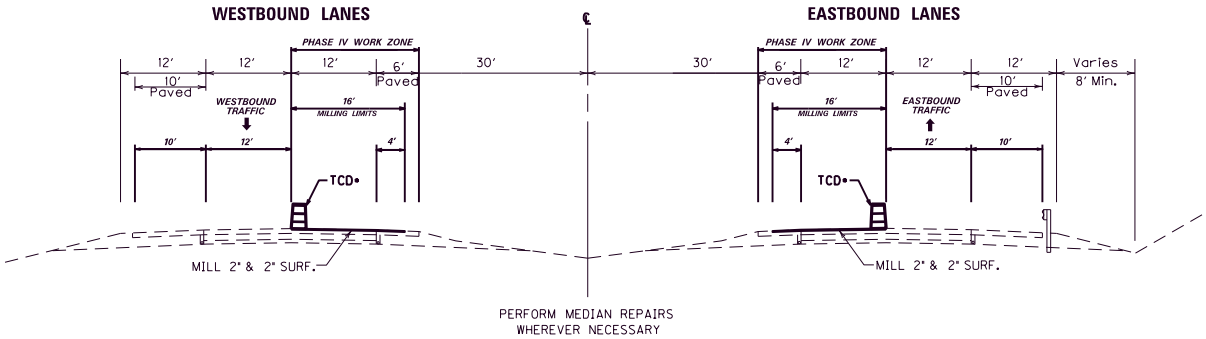


## PHASE IV

•BARRELS SHALL BE MOVED ALONG WITH THE MILLING & PAVING OPERATIONS TO MINIMIZE TRAFFIC ON SHOULDERS.

NOT TO SCALE

I–64
MAINTENANCE OF TRAFFIC
TYPICAL SECTIONS

| COUNTY OF | ITEM NO. | SHEET NO. |
|---|---|---|
| ROWAN | 9-2027.00 | |

I-64 MAINTENANCE OF TRAFFIC
WIDE LOAD DETOUR ROUTE

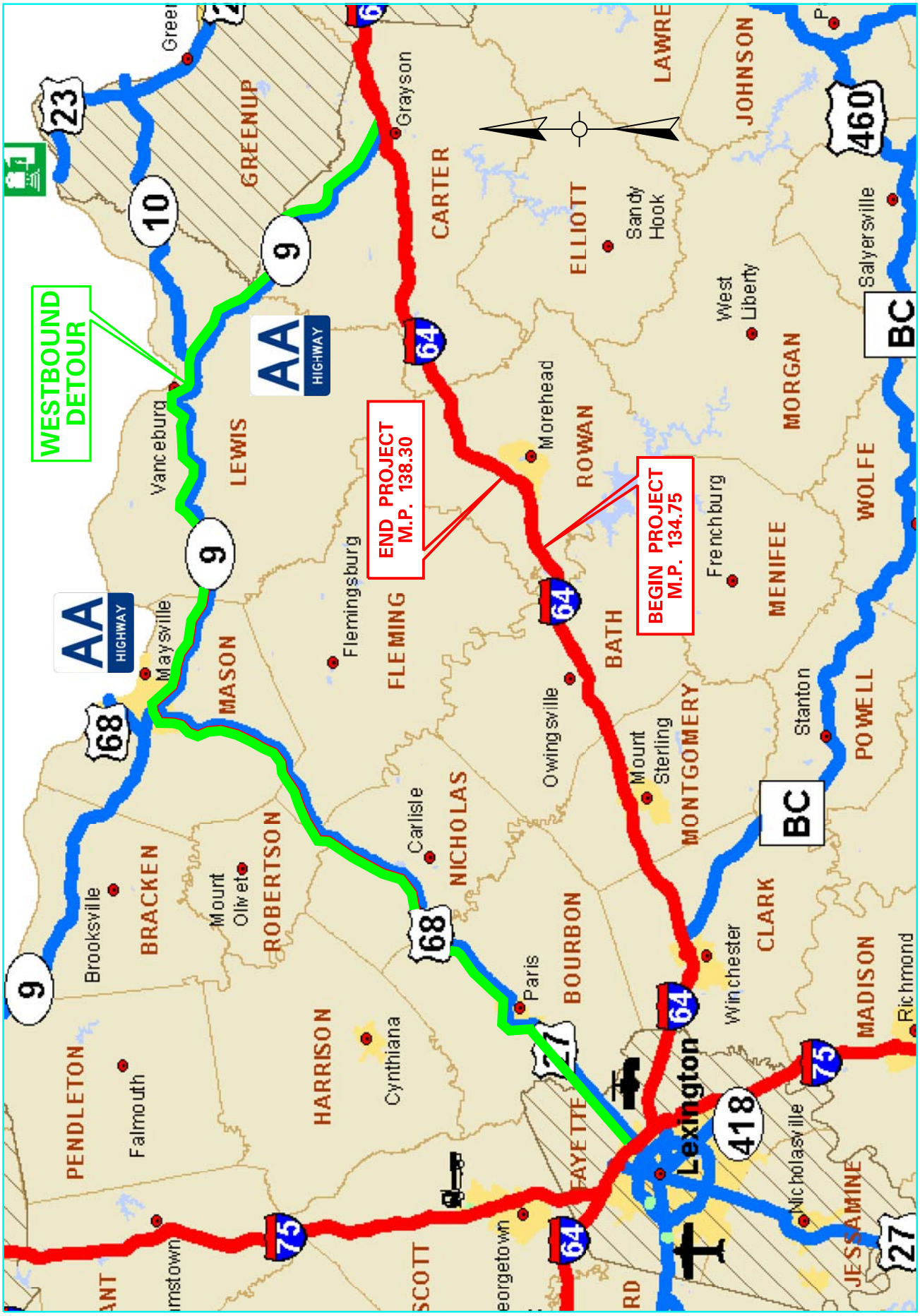

## REFERENCES

1. Kentucky Transportation Cabinet, Department of Highways, Standard Specifications for Road and Bridge Construction, Edition of 2012.

2. FHWA Manual on Uniform Traffic Control Devices – 2009 Edition.

3. Kentucky Department of Highways Standard Drawings, current editions, as applicable:

| | |
|---|---|
| RBB-002-08 | GUARDRAIL AND BRIDGE END DRAINAGE FOR TWIN STRUCTURES |
| RBB-003-02 | LAYOUT OF GUARDRAIL AT TWIN STRUCTURES-DEPRESSED MEDIAN |
| RBB-010-04 | GUARDRAIL TRANSITION FROM NORMAL SHOULDER TO NARROW BRIDGE |
| RBE-100-10 | CRASH CUSHION TYPE VI-BT & CT |
| RBE-205-04 | CRASH CUSHION TYPE IX-A |
| RBI-001-09 | TYPICAL GUARDRAIL INSTALLATIONS |
| RBI-002-06 | TYPICAL GUARDRAIL INSTALLATIONS |
| RBI-003-08 | TYPICAL INSTALLATION FOR GUARDRAIL END TREATMENT TYPE 2A |
| RBI-007-08 | CRASH CUSHION TYPE IX INSTALLATION AT MEDIAN PIERS (DEPRESSED MEDIAN) |
| RBM-020-09 | DELINEATORS FOR CONCRETE BARRIERS |
| RBR-001-11 | STEEL BEAM GUARDRAIL (W-BEAM) |
| RBR-005-10 | GUARDRAIL COMPONENTS |
| RBR-010-05 | GUARDRAIL TERMINAL SECTIONS |
| RBR-015-04 | GUARDRAIL POSTS |
| RBR-025-04 | GUARDRAIL END TREATMENT TYPE 2A |
| RBR-035-09 | GUARDRAIL END TREATMENT TYPE 4A |
| RDD-040-04 | CHANNEL LINING CLASS II AND III |
| RDI-020-08 | PIPE BEDDING FOR CULVERTS ENTRANCE AND STORM SEWER PIPE |
| RDI-021 | PIPE BEDDING FOR CULVERTS ENTRANCE AND STORM SEWER REINFORCED CONC. PIPE |
| RDI-025-04 | PIPE BEDDING TRENCH CONDITION |
| RDI-026 | PIPE BEDDING TRENCH CONDITION REINFORCED CONC. PIPE |
| RDP-001-05 | PERFORATED PIPE TYPES AND COVER HEIGHTS |
| RDP-005-04 | PERFORATED PIPE FOR SUBGRADE DRAINAGE ON TWO-LANE (CLASS 2) AND MULTI-LANE ROADS |
| RDP-010-08 | PERFORATED PIPE HEADWALLS |
| RDX-210 | TEMPORARY SILT FENCE |
| RDX-220-04 | SILT TRAP - TYPE A |
| RDX-225 | SILT TRAP - TYPE B |
| RDX-230 | SILT TRAP - TYPE C |
| RPM-100-09 | CURB AND GUTTER, CURBS AND VALLEY GUTTER |
| TPM-105-02 | PAVEMENT MARKER ARRANGEMENTS MULTI-LANE ROADWAYS |
| TPM-125-02 | PAVEMENT MARKER ARRANGEMENT EXIT-GORE AND OFF-RAMP |

| | |
|---|---|
| TPM-130-02 | PAVEMENT MARKER ARRANGEMENTS ON-RAMP WITH TAPERED ACCELERATION LANE |
| TPM-135-02 | PAVEMENT MARKER ARRANGEMENT ON-RAMP WITH PARALLEL ACCELERATION LANE |
| TTC-115-02 | LANE CLOSURE MULTI-LANE HIGHWAY CASE I |
| TTC-120-02 | LANE CLOSURE MULTI-LANE HIGHWAY CASE II |
| TTC-135-01 | SHOULDER CLOSURE |
| TTD-110-01 | POST SPLICING DETAIL |
| TTD-120 | WORK ZONE SPEED LIMIT AND DOUBLE FINE SIGNS |
| TTD-125 | PAVEMENT CONDITION WARNING SIGNS |
| TTS-110-01 | MOBILE OPERATION FOR PAINT STRIPING CASE III |
| TTS-115-01 | MOBILE OPERATION FOR PAINT STRIPING CASE IV |

4. Kentucky Transportation Cabinet, Department of Highways, Standard Specifications for Road and Bridge Construction, Edition of 2012, Appendix B - Supplemental Specifications, as applicable:

| | |
|---|---|
| Special Note 1I | Portable Changeable Message Signs *attached* |
| Special Note | Special Note for use of MTV *attached* |
| Special Note 10W | Waterblasting Striping Removal *attached* |
| Special Note | Typical Section Dimensions *attached* |
| Special Note | Before You Dig *attached* |
| Special Note | Guardrail Delivery Verification Sheet *attached* |
| Special Note | Fixed Completion Date and Liquidated Damages *attached* |
| Special Note | Erosion Prevention and Sediment Control *attached* |
| Special Note | Asphalt Milling and Texturing *attached* |
| Special Note | Inlaid Pavement Markers (Experimental) |
| Special Note | Longitudinal Pavement Joint Adhesive *attached* |
| Special Note | Bridge Repair Items *attached* |
| General Note 444 | Asphalt Pavement Ride Quality *attached* |
| General Note 447 | Compaction of Asphalt Mixtures *attached* |

# SPECIAL NOTE FOR PORTABLE CHANGEABLE MESSAGE SIGNS

**1.0 DESCRIPTION.** Furnish, install, operate, and maintain variable message signs at the locations shown on the plans or designated by the Engineer. Remove and retain possession of variable message signs when they are no longer needed on the project.

## 2.0 MATERIALS.

**2.1 General.** Use LED Variable Message Signs Class I, II, or III, as appropriate, from the Department's List of Approved Materials.
Unclassified signs may be submitted for approval by the Engineer. The Engineer may require a daytime and nighttime demonstration. The Engineer will make a final decision within 30 days after all required information is received.

**2.2 Sign and Controls.** All signs must:

1) Provide 3-line messages with each line being 8 characters long and at least 18 inches tall. Each character comprises 35 pixels.
2) Provide at least 40 preprogrammed messages available for use at any time. Provide for quick and easy change of the displayed message; editing of the message; and additions of new messages.
3) Provide a controller consisting of:
   a) Keyboard or keypad.
   b) Readout that mimics the actual sign display. (When LCD or LCD type readout is used, include backlighting and heating or otherwise arrange for viewing in cold temperatures.)
   c) Non-volatile memory or suitable memory with battery backup for storing pre-programmed messages.
   d) Logic circuitry to control the sequence of messages and flash rate.
4) Provide a serial interface that is capable of supporting complete remote control ability through land line and cellular telephone operation. Include communication software capable of immediately updating the message, providing complete sign status, and allowing message library queries and updates
5) Allow a single person easily to raise the sign to a satisfactory height above the pavement during use, and lower the sign during travel.
6) Be Highway Orange on all exterior surfaces of the trailer, supports, and controller cabinet.
7) Provide operation in ambient temperatures from -30 to + 120 degrees Fahrenheit during snow, rain and other inclement weather.
8) Provide the driver board as part of a module. All modules are interchangeable, and have plug and socket arrangements for disconnection and reconnection. Printed circuit boards associated with driver boards have a conformable coating to protect against moisture.
9) Provide a sign case sealed against rain, snow, dust, insects, etc. The lens is UV stabilized clear plastic (polycarbonate, acrylic, or other approved material) angled to prevent glare.

10) Provide a flat black UV protected coating on the sign hardware, character PCB, and appropriate lens areas.
11) Provide a photocell control to provide automatic dimming.
12) Allow an on-off flashing sequence at an adjustable rate.
13) Provide a sight to aim the message.
14) Provide a LED display color of approximately 590 nm amber.
15) Provide a controller that is password protected.
16) Provide a security device that prevents unauthorized individuals from accessing the controller.
17) Provide the following 3-line messages preprogrammed and available for use when the sign unit begins operation:

/KEEP/RIGHT/⇒⇒⇒/
/KEEP/LEFT/⇐⇐⇐/
/LOOSE/GRAVEL/AHEAD/
/RD WORK/NEXT/**MILES/
/TWO WAY/TRAFFIC/AHEAD/
/PAINT/CREW/AHEAD/
/REDUCE/SPEED/**MPH/
/BRIDGE/WORK/***0 FT/
/MAX/SPEED/**MPH/
/SURVEY/PARTY/AHEAD/
/MIN/SPEED/**MPH/
/ICY/BRIDGE/AHEAD/ /ONE LANE/BRIDGE/AHEAD/
/ROUGH/ROAD/AHEAD/
/MERGING/TRAFFIC/AHEAD/
/NEXT/***/MILES/
/HEAVY/TRAFFIC/AHEAD/
/SPEED/LIMIT/**MPH/
/BUMP/AHEAD/
/TWO/WAY/TRAFFIC/

*Insert numerals as directed by the Engineer.

Add other messages during the project when required by the Engineer.

**2.3 Power.**

1) Design solar panels to yield 10 percent or greater additional charge than sign consumption. Provide direct wiring for operation of the sign or arrow board from an external power source to provide energy backup for 21 days without sunlight and an on-board system charger with the ability to recharge completely discharged batteries in 24 hours.

**3.0 CONSTRUCTION.** Furnish and operate the variable message signs as designated on the plans or by the Engineer. Ensure the bottom of the message panel is a minimum of 7 feet above the roadway in urban areas and 5 feet above in rural areas when operating. Use Class I, II, or III signs on roads with a speed limit less than 55 mph. Use Class I or II signs on roads with speed limits 55 mph or greater.

Maintain the sign in proper working order, including repair of any damage done by others, until completion of the project. When the sign becomes inoperative, immediately repair or replace the sign. Repetitive problems with the same unit will be cause for rejection and replacement.

Use only project related messages and messages directed by the Engineer, unnecessary messages lessen the impact of the sign. Ensure the message is displayed in either one or 2 phases with each phase having no more than 3 lines of text. When no message is needed, but it is necessary to know if the sign is operable, flash only a pixel.

When the sign is not needed, move it outside the clear zone or where the Engineer directs. Variable Message Signs are the property of the Contractor and shall be removed from the project when no longer needed. The Department will not assume ownership of these signs.

**4.0 MEASUREMENT.** The final quantity of Variable Message Sign will be the actual number of individual signs acceptably furnished and operated during the project. The Department will not measure signs replaced due to damage or rejection.

**5.0 PAYMENT.** The Department will pay for the Variable Message Signs at the unit price each. The Department will not pay for signs replaced due to damage or rejection. Payment is full compensation for furnishing all materials, labor, equipment, and service necessary to, operate, move, repair, and maintain or replace the variable message signs. The Department will make payment for the completed and accepted quantities under the following:

| Code | Pay Item | Pay Unit |
|---|---|---|
| 02671 | Portable Changeable Message Sign | Each |

# SPECIAL NOTE FOR MATERIAL TRANSFER VEHICLE (MTV)

Provide and use a MTV in accordance with Sections 403.03.10 and 403.03.05.

## SPECIAL NOTE FOR WATERBLASTING STRIPING REMOVAL

This Special Note will apply where indicated on the plans or in the proposal. Section references herein are to the Department's 2012 Standard Specifications for Road and Bridge Construction.

**1.0 DESCRIPTION.** Remove pavement striping, temporary or permanent, from asphalt or concrete pavement using ultra-high pressure water.

**2.0 MATERIALS AND EQUIPMENT.**

**2.1 Truck Mounted Ultra-high Pressure Pump and Water Tank.** Use a truck having a separate hydrostatic transmission capable of speed increments of ±1 foot per minute at operator's discretion. Use a pump capable of delivering a minimum of 30,000 psi to a bumper mounted deck containing an operator controlled rotating manifold that is speed variable up to at least 3,000 rpm and accepts interchangeable waterjet nozzles. Provide all necessary waterjet nozzle setups and patterns to ensure clean sufficient removal. Ensure the deck's discharge directs the water and removal material in a manner that is not hazardous to vehicles or pedestrians.

**2.2 Water.** Conform to Section 803.

**3.0 CONSTRUCTION.** Before starting work, provide the Engineer with a contractor work history of 2 projects where striping removal was completed acceptably for a similar type of pavement. If no history is available, complete 1,000 linear feet of striping removal and obtain the Engineer's approval before continuing.

Conduct striping removal under lane closures meeting the conditions of the MUTCD and Kentucky Standard Drawings and Specifications. Waterblast to remove temporary or permanent striping completely as the Engineer directs. Do not damage the pavement in any way and protect all joint seals. If damage is observed, stop the removal process until the operator can make changes and demonstrate acceptable striping removal. Repair any damage to the pavement. Vacuum all marking material and removal debris concurrently with the blasting operation.

**4.0 MEASUREMENT.** The Department will measure the quantity in linear feet. When the removal area's width exceeds 8 inches and a second pass is required, the Department will measure the length of the additional pass for Payment. The Department will not measure for payment additional passes for widths of 8 inches or less or passes to further eradicate markings. The Department will not measure repair of damaged pavement for payment and will consider it incidental to this item of work.

**5.0 PAYMENT.** The Department will make payment for the completed and accepted quantities under the following:

| Code | Pay Item | Pay Unit |
|---|---|---|
| ---- | Waterblast Stripe Removal | Linear Foot |

The Department will consider payment as full compensation for all work required under this note.

January 1, 2008

# SPECIAL NOTE FOR TYPICAL SECTION DIMENSIONS
# I-64

The dimensions shown on the typical sections for pavement and shoulder widths are nominal or typical dimensions. The actual dimensions to be constructed may be varied to fit existing conditions as directed or approved by the Engineer. It is not intended that existing pavement or shoulders be widened unless specified elsewhere in the Proposal.

## SPECIAL NOTE FOR BEFORE YOU DIG

The contractor is instructed to call 1-800-752-6007 to reach KY 811, the one-call system for information on the location of existing underground utilities. The call is to be placed a minimum of two (2) and no more than ten (10) business days prior to excavation. The contractor should be aware that owners of underground facilities are not required to be members of the KY 811 one-call Before-U-Dig (BUD) service. The contractor must coordinate excavation with the utility owners, including those whom do not subscribe to KY 811. It may be necessary for the contractor to contact the County Court Clerk to determine what utility companies have facilities in the area.

## Guardrail Delivery Verification Sheet

**Item No. 9-2027.00**

| **Guardrail, End Treatment, Terminal Section or Post Type** | **Unit** | **Field Verified Amount** | **Delivered Amount** |
|---|---|---|---|
| Guardrail-Steel W Beam | LF | | |
| Temporary Guardrail | LF | | |
| Guardrail Terminal Section | Each | | |
| Guardrail Terminal Section | Each | | |
| Crash Cushion Type Ix-A | Each | | |
| Guardrail End Treatment Type 1 | Each | | |
| Guardrail End Treatment Type 2a | Each | | |
| Guardrail End Treatment Type 3 | Each | | |
| Guardrail End Treatment Type 4a | Each | | |
| Guardrail End Treatment Type 7 | Each | | |
| Guardrail Connector To Bridge End | Each | | |
| Guardrail Connector To Conc Med Barr | Each | | |
| Guardrail Connect-Shld Bridge Pier | Each | | |
| Steel Offset Blocks | Each | | |
| Steel Guardrail Post | Each | | |

Removed guardrail, end treatments, terminal sections, and posts shall be delivered to the Central Sign Shop and Recycle Center in Frankfort, KY (502-564-8187) between the hours of 8:00 AM and 3:30 PM Monday through Friday and shall be neatly stacked in accordance with section 719.03.07 of the standard specifications. Contractor, engineer, and Central Sign Shop and Recycle Center representative must all sign off on this sheet before payment may be made.

| | Printed Name | Signature | Date |
|---|---|---|---|
| Resident Engineer (or Representative) | | | |
| Contractor (or Representative) | | | |
| Central Sign Shop and Recycle Center Representative | | | |

# Special Note for Fixed Completion Date and Liquidated Damages
# I-64
# Rowan County
# FD04 SPP 103 0064 134-139
# Item No. 9-2027.00

Contrary to Section 108.09, Liquidated Damages of $5,000 per calendar day will be assessed for each day work remains uncompleted beyond the Specified Project Completion Date. This project has a Fixed Project Completion Date of July 31, 2013.

In addition to the Liquidated Damages specified in Section 108.09, Liquidated Damages of $10,000 per calendar day will be charged when a lane closure remains in place during the prohibited period outlined in the Traffic Control Plan. The $10,000 per calendar day Liquidated Damages shall also apply if a lane closure remains in place outside of the 22 day continuous lane closure period permitted for bridge deck overlay construction, as outlined in the Traffic Control Plan.

If work is delayed by inclement weather, the minimum work required to allow removal of the lane closure, as directed by the Engineer, shall be resumed immediately as soon as weather permits or the Department will begin to assess Liquidated Damages as specified herein.

Contrary to Section 108.09 of the Standard Specifications, **the disincentive fee will be charged during those periods when seasonal limitations of the Contract prohibit the Contractor from working on a controlling item or operation. This includes the months from December through March.**

All liquidated damages will be applied cumulatively.

All other applicable portions of Section 108 apply.

# Special Note for
# Erosion Prevention and Sediment Control
# Item 9-2027.00: I-64 Pavement Rehabilitation – Rowan Co.

The Contractor shall be responsible for filing the Kentucky Pollution Discharge Elimination System (KPDES) KYR10 permit Notice of Intent (NOI) with the Kentucky Division of Water (DOW) and any KPDES local Municipal Separate Storm Sewer System (MS4) program that has jurisdiction. The NOI shall name the contractor as the Facility Operator and include the KYTC Contract ID Number (CID) for reference.

The Contractor shall perform all temporary erosion/sediment control functions including: providing a Best Management Practice (BMP) Plan, conducting required inspections, modifying the BMP plan documents as construction progresses and documenting the installation and maintenance of BMPs in conformance with the KPDES KYR10 permit effective on _____or a permit re-issued to replace that KYR10 permit. This work shall be conducted in conformance with the requirements of Section 213 of KYTC 2012 Department of Highways, Standard Specifications for Road and Bridge Construction.

Contrary to Section 213.03.03, paragraph 2, the Engineer shall conduct inspections as needed to verify compliance with Section 213 of KYTC 2012 Department of Highways, Standard Specifications for Road and Bridge Construction. The Engineer's inspections shall be performed a minimum of once per month and within seven days after a storm of ½ inch or greater. Copies of the Engineer's inspections shall not be provided to the contractor unless improvements to the BMP's are required. The contractor shall initiate corrective action within 24 hours of any reported deficiency and complete the work within 5 days. The Engineer shall use Form TC 63-61 A for this report. Inspections performed by the Engineer do not relieve the Contractor of any responsibility for compliance with the KPDES permit.

Contrary to Section 213.05, bid items for temporary BMPs will not be listed and will be replaced with one lump sum item for the services. Payment will be pro-rated based on the Project Schedule as submitted by the Contractor and as agreed to by the Engineer.

The contractor shall be responsible for applying "good engineering practices" as required by the KPDES permit. The contractor may use any temporary BMPs with the approval of the KYTC Engineer.

The contractor shall provide the Engineer copies of all documents required by the KPDES permit at the time they are prepared.

The contractor shall be responsible for the examination of the soils to be encountered and make his own independent determination of the temporary BMPs that will be required to accomplish effective erosion prevention and sediment control.

The Contractor shall be responsible for filing the KPDES permit Notice of Termination (NOT) with the Kentucky DOW and any local MS4 program that has jurisdiction. The NOT shall be filed after the Engineer agrees that the project is stabilized or the project has been formally accepted.

**Payment:** Payment will be at the contract unit price for K.P.D.E.S Permit & Temporary Erosion Control: Lump Sum.

# Special Note for
# Asphalt Milling and Texturing

Begin paving operations immediately after the milling operation. Continue paving operations continuously until completed. Do not allow public traffic to drive on milled surfaces. If paving operations are not begun within this time period, liquidated damages will be assessed at the rate prescribed by Section 108.09 of the current Standard Specifications until such time as paving operations are begun.

Contrary to Section 408 of the current Standard Specifications, the material obtained from the milling operations shall become the property of the Department. Deliver this material to the following Maintenance Facilities:

Rowan County – 1700 Tons

Fleming County – 1700 Tons

Elliott County – 1250 Tons

The Contractor, at his option, may elect to keep this material at an agreed cost of $7.50 per ton. The cost to the Contractor for this material will be deducted from money due on the contract.

Notice to Contractor
Transfer of millings to the state maintenance facilities is considered a part of the construction project, therefore truck operators are subject to receiving prevailing wages.

# SPECIAL NOTE FOR INLAID PAVEMENT MARKERS (EXPERIMENTAL)
# FD04 SPP 103 0064 134-139
# Item 9-2027.00: I-64 Pavement Rehabilitation – Rowan Co.

---

## I. DESCRIPTION.

Except as provided herein, perform all work in accordance with the Department's Standard and Supplemental Specifications and applicable Standard and Sepia Drawings, current editions. Article references are to the Standard Specifications. This work shall consist of:

(1) Maintain and Control Traffic; and (2) Furnish and install Inlaid Pavement Markers (IPMs) in recessed grooves; and (3) Any other work as specified by these notes and the Contract.

## II. MATERIALS.

The Department will sample and all materials in accordance with the Department's Sampling Manual. Make the materials available for sampling a sufficient time in advance of the use of the materials to allow for the necessary time for testing unless otherwise specified in these Notes.

**A. Maintain and Control Traffic.** See Traffic Control Plan.

**B. Markers.** Use Marker One Model R-100 or approved equal, mono-directional white. Provide reflective lenses with depth control breakaway positioning tabs. Before furnishing the markers, provide to the Engineer the manufacturer's current recommendations for adhesives and installation procedures. Use one brand and design throughout the project.

**C. Adhesives.** Use adhesives that conform to the manufacturer's recommendations.

## III. CONSTRUCTION.

**A. Experimental Evaluation.** The University of Kentucky Transportation Center will be evaluating this experimental installation of IPMs. Notify the Engineer a minimum of 14 calendar days prior to beginning work. The Engineer will coordinate the University's activities with the Contractor's work.

**B. Maintain and Control Traffic.** See Traffic Control Plan.

**C. Installation.** Install IPMs in recessed grooves cut into the final course of asphalt pavement according to the manufacturer's recommendations. Do not cut the grooves until the pavement has cured sufficiently to prevent tearing or raveling. Remove all dirt, grease, oil, loose or unsound layers, and any other material from the marker area which would reduce the bond of the adhesive. Maintain pavement surfaces in a clean condition until placing markers.

Prepare the pavement surfaces, and install the markers in the recessed groove according to the manufacturer's recommendations. Ensure that the adhesive bed area is equal to the bottom area of the marker, and apply adhesive in sufficient quantity to force excess out around the entire perimeter of the marker. Use materials, equipment, and construction procedures that ensure proper adhesion of the markers to the pavement surface according to the manufacturer's recommendations. Remove all excess adhesive from in front of the reflective faces. If any adhesive or foreign matter cannot be removed from the reflective faces, or if any marker fails to properly adhere to the pavement surface, remove and replace the marker at no additional cost to the Department.

**D. Location and Spacing.** Install the markers in the pattern for High Reflectivity Option with two (2) IPMs per groove. Locate and space markers as shown on the drawing. Do not install markers on bridge decks. Do not install a marker on top of a pavement joint or crack. Offset the recessed groove a minimum of 2 inches from any longitudinal pavement joint or crack and at least one inch from the painted stripe, ensuring that the finished line of markers is straight with minimal lateral deviation. Give preference to maintaining the 2-inch offset between recessed groove and joint as opposed to keeping the line of markers straight.

Place inlaid markers as much in line with existing pavement striping as possible. Place markers installed along an edgeline or channelizing line so that the near edge of the plastic housing is no more than one inch from the near edge of the line. Place markers installed along a lane line between and in line with the dashes. Do not place markers over the lines except where the lines deviate visibly from their correct alignment, and then only after obtaining the Engineer's prior approval of the location.

If conflicts between recessed groove placement in relation to pavement joint and striping cannot be resolved, obtain the Engineer's approval to eliminate the marker or revise the alignment.

**E. Disposal of Waste.** Dispose of all removed asphalt pavement, debris, and other waste at sites off the right of way obtained by the Contractor at no additional cost to the Department. See Special Note for waste and Borrow.

**F. Restoration.** Be responsible for all damage to public and/or private property resulting from the work. Restore all damaged features in like kind materials and design at no additional cost to the Department.

**G. On-Site Inspection.** Make a thorough inspection of the site prior to submitting a bid and be thoroughly familiar with existing conditions so that the work can be expeditiously performed after a contract is awarded. The Department will consider submission of a bid as evidence of this inspection having been made and will not honor any claims for money or grant Contract time extensions resulting from site conditions.

**H. Caution.** Do not take information shown on the drawings and in this proposal and the types and quantities of work listed as an accurate or complete evaluation of the material and conditions to be encountered during construction, but consider the types and quantities of work listed as approximate only. The bidder must draw his own conclusion as to the conditions encountered. The Department does not give any guarantee as to the accuracy of the data and no claim will be considered for additional compensation or extension of Contract time if the conditions encountered are not in accordance with the information shown.

## IV. MEASUREMENT.

**A. Maintain and Control Traffic.** See Traffic Control Plan.

**B. Inlaid Pavement Markers.** The Department will measure only the bid items listed. The Department will measure the quantity of IPMs of each type by individual marker, Each. The Department will not measure grooving pavement, removal of asphalt cuttings and debris, preheating pavement to remove moisture, adhesives, or lenses, but shall be incidental to the Inlaid Pavement Markers.

## V. PAYMENT.

**A. Maintain and Control Traffic.** See Traffic Control Plan.

**B. Inlaid Pavement Markers.** The Department will make payment for the completed and accepted quantity of IPMs Markers at the Contract unit price, Each. Accept payment as full compensation for all labor, equipment, materials, and incidentals to accomplish this work to the satisfaction of the Engineer.

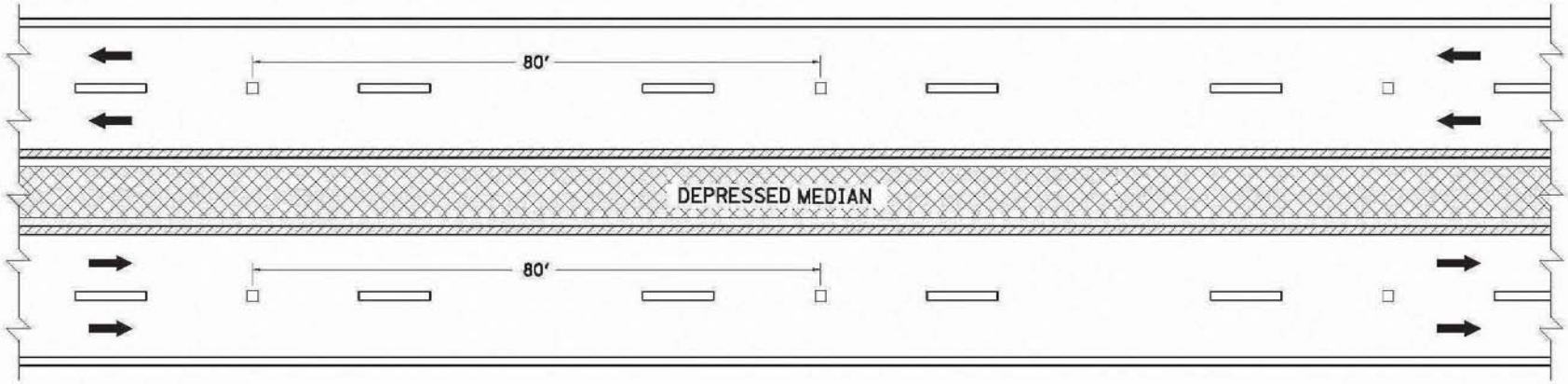


(DIVIDED HIGHWAY WITH DEPRESSED OR RAISED MEDIAN LESS THAN 30' IN WIDTH)

GENERAL NOTES

1. MARKERS INSTALLED ALONG LANE LINES SHOULD BE PLACED BETWEEN AND IN LINE WITH THE SKIPS.
2. MARKERS SHOULD NOT BE INSTALLED ON TOP OF THE PAVEMENT JOINT. OFFSET MARKERS A MINIMUM OF 2' FROM THE PAVEMENT JOINT. ENSURE THAT THE FINISHED LINE OF MARKERS IS STRAIGHT WITH MINIMAL LATERAL DEVIATION. MARKERS MAY BE ELIMINATED AT THE DISCRETION OF THE ENGINEER.

LEGEND

- MONO-DIRECTIONAL (WHITE)
- MARKINGS (YELLOW)
- MARKINGS (WHITE)
- DEPRESSED OR RAISED MEDIAN

DRAWING NOT TO SCALE

KENTUCKY
DEPARTMENT OF HIGHWAYS

PAVEMENT MARKER
ARRANGEMENTS
MULTI-LANE ROADWAYS

Rowan County
I-64
FD04 SPP 103 0064 134-139

# SPECIAL NOTE FOR LONGITUDINAL PAVEMENT JOINT ADHESIVE

1. DESCRIPTION. This specification covers the requirements and practices for applying an asphalt adhesive material to the longitudinal joint of the surface course of an asphalt pavement. Apply the adhesive to the face of longitudinal joint between driving lanes for the first lane paved. Then, place and compact the adjacent lane against the treated face to produce a strong, durable, waterproof longitudinal joint.

2. MATERIALS, EQUIPMENT, AND PERSONNEL.

2.1 Joint Adhesive. Provide material conforming to Subsection 2.1.1 or 2.1.2.

2.1.1 Provide an adhesive conforming to the following requirements:

| Property | Specification | Test Procedure |
|---|---|---|
| Viscosity, 400 ° F (Pa·s) | 4.0 – 10.0 | ASTM D 3236 |
| Cone Penetration, 77 ° F | 60 – 100 | ASTM D 5329 |
| Flow, 140 ° F (mm) | 5.0 max. | ASTM D 5329 |
| Resilience, 77 ° F (%) | 30 min. | ASTM D 5329 |
| Ductility, 77 ° F (cm) | 30.0 min. | ASTM D 113 |
| Ductility, 39 ° F (cm) | 30.0 min. | ASTM D 113 |
| Tensile Adhesion, 77 ° F (%) | 500 min. | ASTM D 5329 |
| Softening Point, ° F | 171 min. | AASHTO T 53 |
| Asphalt Compatibility | Pass | ASTM D 5329 |

Ensure the temperature of the pavement joint adhesive is between 380 and 410 °F when the material is extruded in a 0.125-inch-thick band over the entire face of the longitudinal joint.

2.1.2 Provide an adhesive conforming to the following requirements:

| Property | Specification | Test Procedure |
|---|---|---|
| Softening Point[1] ,° F | 176 min. | AASHTO T 53 |
| Cone Penetration[2], 77 ° F | 20-60 | ASTM D 5329 |
| Flow[1], 140 ° F (mm) | 5.0 max. | ASTM D 5329 |
| Tensile Adhesion, 77 ° F (%) | 500 min. | ASTM D 5329 |
| Asphalt Compatibility | Pass | ASTM D 5329 |
| Resilience[2], 77 ° F (%) | 30 min. | ASTM D 5329 |
| Slump Test[1], 300 ° F (mm) | 2.0 max. | ASTM D 2202 |

[1] Cold sample forced into molds at 325 º F.
[2] Field sample extruded into mold at application temperature.

Ensure the temperature of the pavement joint adhesive is between 300 and 350 °F when the material is extruded in a 0.20 to 0.40-inch-thick band over the entire face of the longitudinal joint.

2.2. Equipment.

2.2.1 Melter Kettle. Provide an oil-jacketed, double-boiler, melter kettle equipped with any needed agitation and recirculating systems.

2.2.2 Applicator System. Provide a pressure-feed-wand applicator system with an applicator shoe attached.

2.3 Personnel. Ensure a technical representative from the manufacturer of the pavement joint adhesive is present during the initial construction activities and available upon the request of the Engineer.

3. CONSTRUCTION.

3.1 Surface Preparation. Prior to the application of the pavement joint adhesive, ensure the face of the longitudinal joint is thoroughly dry and free from dust or any other debris that would inhibit adhesion. Clean the joint face by the use of compressed air. Ensure this preparation process occurs shortly before application to prevent the return of debris on the joint face.

3.2 Pavement Joint Adhesive Application. Ensure the ambient temperature is a minimum of 40 °F during the application of the pavement joint adhesive. Prior to applying the adhesive, demonstrate competence in applying the adhesive according to this note to the satisfaction of the Engineer. Heat the adhesive in the melter kettle to the specified temperature range. Pump the adhesive from the melter kettle through the wand onto the vertical face of the cold joint. Apply the adhesive in a continuous band over the entire face of the longitudinal joint. Do not use excessive material in either thickness or location. Ensure the edge of the extruded adhesive material is flush with the surface of the pavement. Then, place and compact the adjacent lane against the joint face. Remove any excessive material extruded from the joint after compaction (a small line of material may remain).

3.3 Pavement Joint Adhesive Certification. Furnish the joint adhesive's certification to the Engineer stating the material conforms to all requirements herein prior to use.

3.4 Sampling and Testing. The Department will require a random sample of pavement joint adhesive from each manufacturer's lot of material. Extrude two 5 lb. samples of the heated material and forward the sample to the Division of Materials for testing. Reynolds oven bags, turkey size, placed inside small cardboard boxes or cement cylinder molds have been found suitable. Ensure the product temperature is 400°F or below at the time of sampling.

4. MEASUREMENT. The Department will measure the quantity of Pavement Joint Adhesive in linear feet. The Department will not measure for payment any extra materials, labor, methods,

equipment, or construction techniques used to satisfy the requirements of this note. The Department will not measure for payment any trial applications of Pavement Joint Adhesive, the cleaning of the joint face, or furnishing and placing the adhesive. The Department will consider all such items incidental to the Pavement Joint Adhesive.

5. PAYMENT. The Department will pay for the Pavement Joint Adhesive at the Contract unit bid price and apply an adjustment for each manufacturer's lot of material based on the degree of compliance as defined in the following schedule. When a sample fails on two or more tests, the Department may add the deductions, but the total deduction will not exceed 100 percent.

| Pavement Joint Adhesive Price Adjustment Schedule | | | | | | |
|---|---|---|---|---|---|---|
| Test | Specification | 100% Pay | 90% Pay | 80% Pay | 50% Pay | 0% Pay |
| Joint Adhesive Referenced in Subsection 2.1.1 | | | | | | |
| Viscosity, 400 º F (Pa•s) ASTM D 3236 | 4.0-10.0 | 3.5-10.5 | 3.0-3.4<br>10.6-11.0 | 2.5-2.9<br>11.1-11.5 | 2.0-2.4<br>11.6-12.0 | ≤ 1.9<br>≥ 12.1 |
| Cone Penetration, 77 º F ASTM D 5329 | 60-100 | 57-103 | 54-56<br>104-106 | 51-53<br>107-109 | 48-50<br>110-112 | ≤ 47<br>≥ 113 |
| Flow, 140 º F (mm) ASTM D 5329 | ≤ 5.0 | ≤ 5.5 | 5.6-6.0 | 6.1-6.5 | 6.6-7.0 | ≥ 7.1 |
| Resilience, 77 º F (%) ASTM D 5329 | ≥ 30 | ≥ 28 | 26-27 | 24-25 | 22-23 | ≤ 21 |
| Tensile Adhesion, 77 º F (%) ASTM D 5329 | ≥ 500 | ≥ 490 | 480-489 | 470-479 | 460-469 | ≤ 459 |
| Softening Point, º F AASHTO T 53 | ≥ 171 | ≥ 169 | 166-168 | 163-165 | 160-162 | ≤ 159 |
| Ductility, 77 º F (cm) ASTM D 113 | ≥ 30.0 | ≥ 29.0 | 28.0-28.9 | 27.0-27.9 | 26.0-26.9 | ≤ 25.9 |
| Ductility, 39 º F (cm) ASTM D 113 | ≥ 30.0 | ≥ 29.0 | 28.0-28.9 | 27.0-27.9 | 26.0-26.9 | ≤ 25.9 |
| Joint Adhesive Referenced in Subsection 2.1.2 | | | | | | |
| Flow, 140 º F (mm) ASTM D 5329 | ≤ 5 | 5.1-5.2 | 5.3-5.4 | 5.5-5.6 | 5.7-5.8 | ≥ 5.9 |
| Resilience, 77 º F (%) ASTM D 5329 | ≥ 30 | 29 | 28-27 | 26-25 | 24-23 | ≤ 22 |
| Softening Point, º F AASHTO T 53 | ≥ 176 | ≥ 174 | 171-173 | 168-170 | 165-167 | ≤ 164 |
| Cone Penetration, 77 º F ASTM D 5329 | 20-60 | 18-62 | 16-17<br>63-64 | 14-15<br>65-66 | 12-13 67-68 | ≤ 11<br>≥ 69 |
| Tensile Adhesion, 77 º F (%) ASTM D 5329 | ≥ 500 | ≥ 490 | 480-489 | 470-479 | 460-469 | ≤ 459 |
| Slump Test, 300 º F (mm) ASTM D 2202 | ≥ 2.0 | ≤ 2.5 | 2.6-3.0 | 3.1-3.5 | 3.6-4.0 | ≥ 4.1 |
| Asphalt Compatibility, ASTM D 5329 | Pass | | | | | |

| CODE | PAY ITEM | PAY UNIT |
|---|---|---|
| 20071EC | Joint Adhesive | Linear Feet |

# SPECIAL NOTE FOR BRIDGE RESTORATION AND WATERPROOFING WITH CONCRETE OVERLAYS

**I. DESCRIPTION.** Perform all work in accordance with the Kentucky Transportation Cabinet, Department of Highway's 2012 Standard Specifications for Road and Bridge Construction and applicable Supplemental Specifications, the Standard Drawings, this Note, and the attached detail drawings. Section references are to the Standard Specifications.

This work consists of the following: (1) Furnish all labor, materials, tools, and equipment; (2) Remove the existing overlay or machine prep the existing slab; (3) Complete full-depth and partial depth repairs as directed by the Engineer; (4) Repair/replace damaged and corroded reinforcing bars; (5) Place new concrete overlay and epoxy-sand slurry in accordance with Section 606; (6) Complete asphalt approach pavement; (7) Maintain and control traffic; and (8) Any other work specified as part of this contract.

All construction will be in accordance with Section 606 unless otherwise specified.

**II. MATERIALS**.

**A. Latex Concrete.** See Section 606.03.17.

**B. Class "M" Concrete.** Use either "M1" or "M2". See Section 601.

**C. Bituminous Asphalt**. See Paving Summary.

**D. Epoxy-Sand Slurry.** See Section 606.03.10.

**III. CONSTRUCTION.**

**A. Remove Existing Overlay.** In addition to Section 606.03.03, totally remove the existing concrete overlay by milling. See Special Note for Use of Hydrodemolition Method. Do not apply a grout-bond coat on bridge decks prepared by hydrodemolition.

**B. Partial Depth Slab Repair and Latex Overlay.** Remove areas determined to be unsound by the Engineer via hydrodemolition or via hand held jackhammers weighing less than 45lbs in accordance with Section 606.02.10 D. Repair/Replace all damaged or severely corroded reinforcing bars prior to partial depth repair operation. The Department will not measure material removal and will consider this work incidental to the bid item "PARTIAL DEPTH PATCHING". Mix and place Latex Modified Concrete Overlay in accordance with Sections 606.03.08 and 606.03.17.

**C. Asphalt Approach Pavement.** Mill each existing asphalt approach as shown on the roadway plan sheets. The grinding depth may vary depending of the condition of the existing approach and final elevation of bridge end. Dispose of all removed material away from the site.

**D. Surface Texturing.** Texture the concrete surface of the overlay in accordance with Section 609.03.10.

**IV. MEASUREMENT.** See Section 606 and the following:

A. **Latex Modified Concrete for Overlay.** The Department will measure the quantity in cubic yards using the theoretical volume as follows for each bridge:

**width x length x 1.50" (units in cubic yards)**

B. **Latex Modified Concrete for Partial Depth Patching and variable thickness of Overlay.** The Department will measure the quantity in cubic yards by deducting the theoretical volume of bridge deck overlay (LMC) from the total volume (as indicated by the batch quantity tickets) of Concrete required to obtain the finished grade shown on the Plans or established by the Engineer.

C. **Remove Existing Overlay.** The Department will measure the removal of the existing overlay in square yards, which shall include all labor, equipment, and material needed to complete this work.

D. **Steel Reinforcement.** The Department will measure any reinforcing steel necessary for the partial or full depth patch in pounds, which shall include all labor, equipment, and material needed to complete this work.

E. **Asphalt Approach Pavement.** The Department will measure the quantity in square yards, which shall include all labor, equipment, and material needed to complete this work.

V. **PAYMENT.** See Section 606 and the following:

A. **Latex Modified Concrete for Overlay.** The Department will make payment for the Latex Modified Concrete under bid item #08534 "CONCRETE OVERLAY – LATEX" for the theoretical quantity.

B. **Latex Modified Concrete for Partial Depth Patching and variable thickness of Overlay.** The Department will make payment for the Partial Depth Patching under bid item #24094EC "PARTIAL DEPTH PATCHING". Payment will be for the quantity per cubic yard complete in place.

C. **Remove Existing Overlay.** The Department will make payment for the removal of the existing overlay under the bid item #08510 "REM EPOXY BIT FOREIGN OVERLAY". Payment will be for the square yard complete.

D. **Steel Reinforcement.** The Department will make payment for steel reinforcement, if necessary, under bid item #08150 "STEEL REINFORCEMENT". Payment will be at the unit price per pound.

E. **Asphalt Approach Pavement.** See Paving Summary**.**

# SPECIAL NOTE FOR USE OF HYDRODEMOLITION METHOD

To be used if the Contractor chooses to use Hydrodemolition method to complete partial and full depth removal. Also see Section 606.03.03.

## Description

This work consists of bridge surface deck preparation using Hydrodemolition to provide a uniform depth, highly bondable surface and to remove all variable depth, unsound material. This item also includes the removal and disposal of all concrete and debris, vacuuming, shielding, water control, additional jack hammering and all other aspects of work necessary to prepare the deck for the placement of the new latex modified concrete overlay.

## Equipment

Sawing Equipment. Sawing equipment shall be a concrete saw capable of sawing concrete to the specified depth.

Mechanical Scarifying Equipment. The scarifying equipment shall be a power operated mechanical scarifier capable of uniformly scarifying or removing the old concrete or asphalt wearing surface from the bridge deck to the depths required in the plans or as directed by the Engineer. The equipment shall be self-propelled with sufficient power, traction and stability to maintain accurate depth of cut and slope. The equipment shall be capable of accurately and automatically establishing profile grades along each edge of the machine by referencing the existing bridge deck by means of a ski or matching shoe, or from an independent grade control; in addition, it shall be equipped with an integral loading means to remove the material being cut from the bridge deck and to discharge the cuttings into a truck all in a single operation.

Hydro-Demolition Equipment. The Hydrodemolition equipment shall consist of a filtering and pumping unit operating with a self-propelled computerized robot that utilizes a high pressure water jet capable of removing concrete to the depth specified on the plans or as directed by the Engineer and be capable of removing rust and concrete particles from reinforcing steel. The equipment shall provide a rough and bondable surface and remove all unsound concrete during the initial pass. The minimum water usage shall be 43 gal/min operating at 13,000 psi minimum.

Vacuum Cleanup Equipment. The vacuum cleanup equipment shall be equipped with fugitive dust control devices and be capable of removing wet debris and water all in the same pass. Provide equipment capable of washing the deck with pressurized water prior to the vacuum operation to dislodge all debris and slurry from the deck surface.

Hand Held Blast Cleaning Equipment. Hand held blast shall be either sand or water as necessary to expose fine and coarse aggregates; thoroughly clean all exposed reinforcing steel; and remove any unsound concrete or laitance layers from the proposed concrete overlay surface. If sand blasting equipment is utilized, the equipment shall have oil traps. If water blasting equipment is utilized, the equipment must be capable of delivering a minimum of 5,000 psi.

Power Driven Hand Tools. Power driven hand tools and jackhammers will be permitted, but shall not be heavier than the nominal 35 lb class. Chipping hammers shall not be heavier than the nominal 15 lb class. Only hand chipping tools shall be used when removing concrete within 1 in. of reinforcing steel. Mechanically driven tools shall be operated at a maximum angle of 45 degrees from the bridge floor surface.

## Construction Methods

General: Perform Hydrodemolition surface preparation over the entire top surface of the reinforced concrete bridge deck to provide a rough and bondable surface and to remove all unsound concrete during the initial Hydrodemolition surface preparation pass. The use of hand chipping tools, either hand or mechanically driven, shall be limited to trim work and areas inaccessible or inconvenient for the hydro-demolition equipment.

Description: This work shall consist of furnishing the necessary labor, materials and equipment to completely remove the top surface of the Portland cement concrete bridge deck surface in accordance with these Specifications and in reasonably close conformity with the grades, thickness, or sections shown on the Plans or as directed by the Engineer. This work shall include the removal of patches other than sound Portland cement concrete and all loose and unsound concrete by Hydrodemolition; preparation of the sound existing concrete surface; removal, forming and concrete for full depth repairs; blast cleaning or high pressure water cleaning the existing deck prior to placement of the modified concrete overlay; and all other operations necessary to complete this work according to these specifications and to the satisfaction of the Engineer.

### Preparation of Existing Deck

No operations without reasonably available engineering controls that limit fugitive dust will be acceptable.

The Contractor shall be aware that there are federal, state, regional, and local government agencies that have requirements regarding the control of fugitive dust generated by concrete removal and blasting operations.

The Contractor is responsible for protecting traffic traveling adjacent to and under the work zone while removing bridge deck concrete.

Where the deck is sound for less than one third of its original depth, the concrete shall be removed full depth for limited areas as designated by the Engineer. Full depth repairs shall be completed as specified for Full Depth Repair.

## Removal of Existing Asphaltic Concrete Overlays

If an existing asphaltic concrete overlay is present upon the original bridge deck surface to be prepared by Hydrodemolition, the overlay and any waterproofing material that was part of the deck must be removed, and the bridge deck cleaned, prior to commencement of the Hydrodemolition operation. The Contractor may utilize conventional scarifying equipment conforming to these specifications to remove the existing bituminous overlay and waterproofing material from the original bridge deck. Acceptable depth of scarification shall be the overlay and waterproofing material thickness plus X" below the original bridge deck surface. Additional removal depth of existing deck concrete is permitted by mechanical scarification provided. Total surface Hydrodemolition is used to provide a highly bondable surface and to remove partial depth deteriorated concrete.

If the use of mechanical scarifying equipment results in the snagging of the top mat of steel reinforcement, the scarifying equipment shall be immediately stopped and the depth of removal adjusted. Damaged or dislodged reinforcing steel shall be repaired or replaced at the Contractor's expense. Replacement shall include the removal of any additional concrete required to position the new reinforcing steel at the correct height and required lap splice lengths.

## Removal of Existing Modified Concrete Overlays

If an existing modified concrete overlay is present upon the original bridge deck surface to be prepared by Hydrodemolition, the overlay material that was part of the deck must be removed, and the bridge deck cleaned, prior to commencement of the Hydrodemolition operation. The Contractor may utilize conventional scarifying equipment conforming to these specifications to remove the existing concrete overlay from the original bridge deck. Acceptable depth of scarification shall be the overlay thickness plus X" below the original bridge deck surface. Additional removal depth of existing deck concrete is permitted by mechanical scarification provided. Total surface Hydrodemolition is used to provide a highly bondable surface and to remove partial depth deteriorated concrete.

Existing overlay material which is sound and bonded may be left in patch areas with approval of the Project Engineer. If determined the existing patches are to be removed, jackhammers, not to be heavier than the nominal351b class shall be used to remove debonded areas.

If the use of mechanical scarifying equipment results in the snagging of the top mat of steel reinforcement, the scarifying equipment shall be immediately stopped and the depth of removal adjusted. Damaged or dislodged reinforcing steel shall be repaired or replaced at the Contractor's expense. Replacement shall include the removal of any additional concrete.

## Bridge Decks with No Existing Concrete Overlay

If Hydrodemolition is to be performed on an original bridge deck surface without a bituminous or concrete bridge deck overlay, the Contractor may use mechanical scarification equipment conforming to these specifications to remove an initial portion of the hydro-demolition depth. The scarification depth shall be X". Total surface Hydrodemolition is used to provide a highly bondable surface and to remove partial depth deteriorated concrete.

If the use of mechanical scarifying equipment results in the snagging of the top mat of steel reinforcement, the scarifying equipment shall be immediately stopped and the depth of removal adjusted. Damaged or dislodged reinforcing steel shall be repaired or replaced at the Contractor's expense. Replacement shall include the removal of any additional concrete required to position the new reinforcing steel at the correct height and required lap splice lengths.

## Concrete Removal by Hydro-Demolition

General: The total surface area of the reinforced concrete bridge deck shall be completely prepared by Hydrodemolition as necessary to provide a highly roughened and bondable surface prior to placement of the proposed bridge deck overlay while removing any deteriorated and unsound concrete in the initial pass. Unsound concrete is defined as existing bridge deck concrete that is deteriorated, spalied, or determined by the engineer to be unsound.

With the use of Hydrodemolition surface preparation, the requirement to provide a minimum 3/4" clearance around all reinforcing steel that is more than 50% exposed is waived, providing that the existing concrete is sound. The amount of steel exposed shall be kept to a minimum.

Damaged or dislodged reinforcing steel shall be repaired or replaced at the Contractor's expense. Replacement shall include the removal of any additional concrete required to position the new reinforcing steel at the correct height and to provide the required lap splice lengths as required.

Calibration: Prior to commencement of the Hydrodemolition removal operation, the Hydrodemolition equipment shall be calibrated on an existing *sound* concrete surface as designated by the Engineer. The calibration area shall be a minimum of 7 feet wide by 7 feet long to demonstrate the desired result of this specification.

Move the Hydrodemolition equipment to a second area (7'x7') that is unsound as designated by the Engineer to demonstrate the desired result of this specification which is providing a highly rough and bondable surface and removing all unsound concrete during the initial pass is being achieved.

The Engineer shall verify the following settings:

1. Water pressure gauge (13,000 psi minimum)
2. Machine staging control (step)
3. Nozzle size
4. Nozzle speed (travel)
5. Depth of removal
6. Minimum water usage (43 gallons per minute)

During the Hydrodemolition operations of any or all of the above settings may be modified in order to achieve removal of all unsound concrete and to provide a highly bondable surface. The settings may be changed by the Contractor to achieve total removal of unsound concrete, but the Engineer must be notified of all changes. The Engineer may change any or all of the settings in order to achieve the desired results with Hydrodemolition. The removals and depth shall be verified, as necessary, and at least every

30 feet along the cutting path. The readings shall be documented and, if necessary, the equipment re-calibrated to insure the Hydrodemolition process achieves the desired results and removal of unsound concrete.

Calibration shall be required on each structure; each time Hydrodemolition is performed and as required to achieve the results specified by the plan.

Debris and Fluid Containment: Prior to commencement of the Hydrodemolition operation, the Contractor shall submit a plan for approval to the engineer for control and filtering of all water discharged during operation. The Contractor, at a minimum, shall block all drains on the deck and install aggregate dams every 150 feet; 6 inches high by 1foot wide minimum, to strain runoff. The deck shall be used as a settlement basin within itself unless an alternate method of water control, satisfactory to the Engineer and meeting the environmental requirements of any associated Regulatory Agency, is required.

The Contractor shall provide shielding, as necessary, to insure containment of all dislodged concrete within the removal area in order to protect the public from flying debris both on and under the work site.

## Cleaning

Cleaning shall be performed with a vacuum system capable of removing wet debris and water all in the same pass. The vacuum equipment shall be capable of washing the deck with pressurized water prior to the vacuum operation to dislodge all debris and slurry from the deck surface. Cleaning shall be done in a timely manner, before debris and water is allowed to dry on the deck surface.

## Resounding

After the Hydrodemolition operation has completed the removal, and the deck is cleaned and allowed to dry, the deck shall be resounded to assure that the all unsound concrete deck material has been removed. The final sounding of the deck shall be done by the Engineer and shall be performed only when the entire deck is completely dry. In no case shall the final sounding be made unless the deck is dry and frost-free. Final sounding shall consist of as many successive resounding as required to ensure that all deteriorated and fractured concrete has been removed. Additional removal shall be performed with 35 lb maximum weight jackhammers operated at an angle of no more than 45 degrees from horizontal. Aerosol spray paint for outlining and sounding chains shall be provided by the Contractor.

## Full Depth Repair

Where the deck is sound for less than one third of its original depth, the concrete shall be removed full depth except for limited areas as may be designated by the Engineer. Forms shall be provided to support concrete placed in full depth repair areas. The forms for areas of up to 4 square feet may be suspended from wires from the reinforcing steel. For areas greater than 4 square feet, the forms shall be suspended from the primary members of the superstructure or by shoring below. Areas of full depth repair shall have the concrete faces and reinforcing steel cleaned. Only those areas marked in the field by the Engineer as full depth repair will be paid for as full depth repair.

## Preparation Prior to Overlay Placement

Vehicles other than approved construction equipment will not be permitted on those sections of the deck where Hydrodemolition has begun. Contamination of the deck by construction equipment or from any other source shall be prevented.

## Method of Measurement

Wearing Course Removed Asphalt shall be measured as the actual square yards of the existing asphalt wearing course and waterproofing material removed and shall include all labor, materials and equipment required to complete the work.

Existing Modified Concrete Overlay Removed shall be measured as the actual square yards of the existing concrete overlay removed and shall include all labor, materials and equipment required to complete the work.

Surface Preparation Using Hydrodemolition shall be measured as the actual deck area in square yards overlaid and shall include the costs of surface preparation, Hydrodemolition, $W'$ (min.) milling into the original concrete bridge deck surface, removal of the surface preparation debris, cleaning, any incidental materials, and all labor and equipment as necessary to complete the work as described in this specification, but not specifically included in other items for payment.

Full Depth Repair when encountered on a bridge deck and marked in the field by the Engineer, full depth repair shall be paid for per Cubic Yard of Class M Concrete used.

## Basis of Payment

Payment for completed and accepted quantities as measured above will be made at the contract price for one of the following:

| Item | Unit | Description |
|---|---|---|
| 08510 | Square Yard | REM EPOXY BIT FOREIGN OVERLAY |
| 02110 | Cubic yard | PARTIAL DEPTH PATCHING |

Removal of existing flexible (asphalt) concrete overlays and rigid modified concrete overlays are included as parts of this work if the above bid items are part of the project plans:

Contract ID: 121061
Page 81 of 118

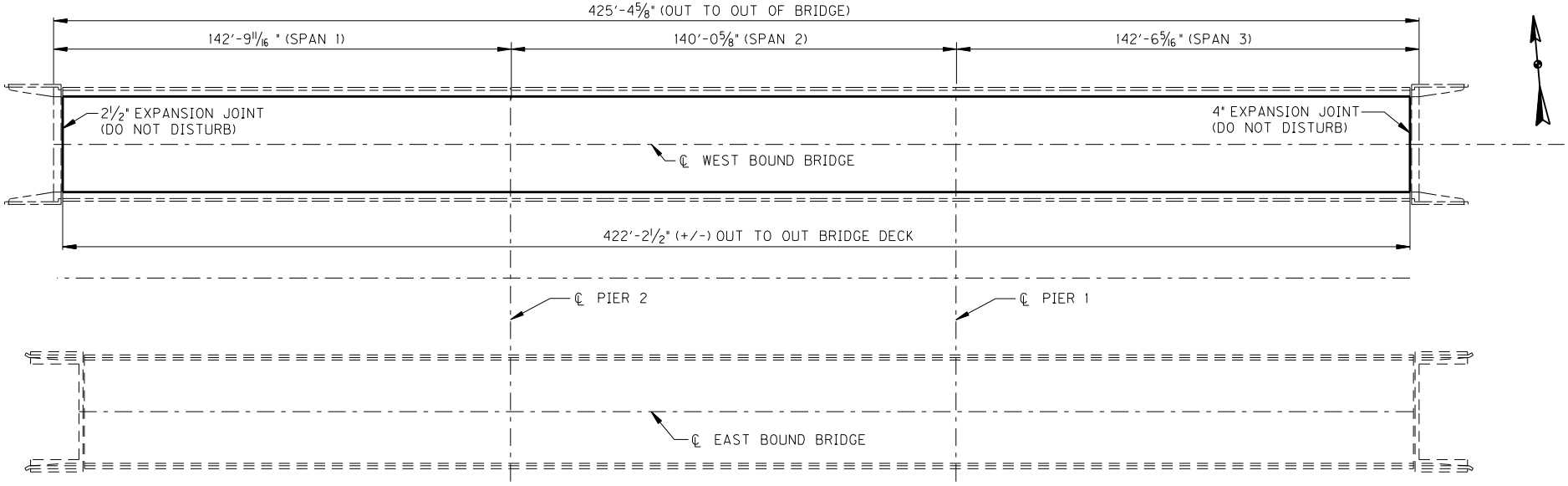


## PLAN

(SHOWING WEST BOUND BRIDGE OVERLAY AND EXISTING EAST BOUND BRIDGE)

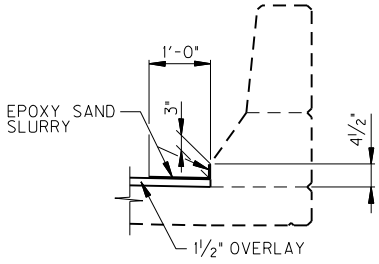


## EPOXY SAND SLURRY DETAIL

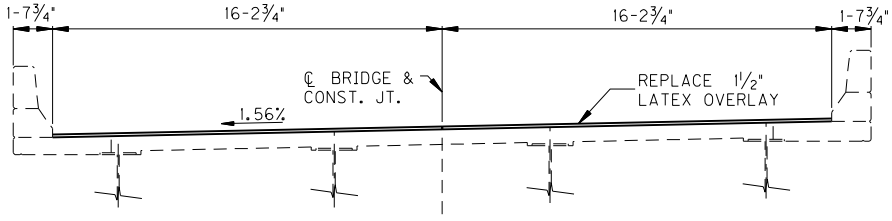


## TYPICAL SECTION

(REPLACE OVERLAY ON WB BRIDGE ONLY)

# ESTIMATE OF QUANTITIES

| BID ITEM CODE | 24094EC | 08504 | 08510 | 08526 | 08534 | 08549 | |
|---|---|---|---|---|---|---|---|
| BID ITEM | Partial Depth Patching | Epoxy Sand Slurry | Rem. Epoxy Bit. Forign Overlay | Conc. Class "M" Full Depth Patch | Concrete Overlay-Latex | Blast Cleaning | |
| BRIDGE | C.Y. | SY. | SY. | C.Y. | C.Y. | S.Y. | |
| | | | | | | | |
| WB I-64 OVER BULL FORK CR.(MP 134.7) | 12.0 | 117 | 1523 | 4.0 | 63.4 | 1660 | |
| | | | | | | | |
| ROADWAY PLAN TOTALS | 12.0 | 117 | 1523 | 4.0 | 63.4 | 1660 | |

**NOTE : QUANTITIES CARRIED OVER TO THE GENERAL SUMMARY**

SPECIAL NOTES:

BRIDGE RESTORATION AND WATERPROOFING WITH CONCRETE OVERLAYS

USE OF HYDRODEMOLITION METHOD

| REVISION | DATE |
|---|---|
| | |
| | |
| | |

| | |
|---|---|
| DATE: JULY, 2012 | CHECKED BY |
| DESIGNED BY: | |
| DETAILED BY: | |

Commonwealth of Kentucky
DEPARTMENT OF HIGHWAYS

COUNTY
**ROWAN**

ROUTE **I-64** | CROSSING **LEXINGTON-CATLETTSBURG ROAD**

**MP 134.7**

ITEM NUMBER
**9-2027.0**

PREPARED BY
**HMB PROFESSIONAL ENGINEERS, INC.**

SHEET NO.

DRAWING NO.

ROWAN COUNTY
FD04 STP 103 0081 134 199
dkirby 8/6/2012 2:49:15 PM
C:\Engineering\Bridges\Cadd\Layout.dgn

# General Note 444
# Asphalt Pavement Ride Quality
# Item 9-2027.00: I-64 Pavement Rehabilitation – Rowan Co.

Pavement Rideability Requirements, in accordance with Section 410 of the Standard Specifications, Current Edition, shall apply on this project. Category A shall apply.

# General Note 447
# Compaction of Asphalt Mixtures
# Item 9-2027.00: I-64 Pavement Rehabilitation – Rowan Co.

Will accept the compaction of asphalt mixtures furnished for the driving lanes and ramps at one inch or greater on this project by option A according to subsections 402 and 403 of the Standard Specifications, Current Edition. Use joint cores as described in subsection 402.03.02 for surface mixtures only. Will accept the compaction of all other asphalt mixtures by option B.

# INTERSTATE 64 REHABILITATION – ROWAN COUNTY HIGHWAY DISTRICT 9 (ITEM # 9-2027) PUBLIC INFORMATION PLAN

The primary goal of the Public Information Plan (PIP) is to inform the motoring public and area stakeholders of project information including Maintenance of Traffic (MOT) plans as well as road, lane or ramp closures. The KYTC District 9 Public Information Officer (PIO) will assist Project Development, Delivery and Construction staff disseminate this information and other materials to stakeholders and the media.

## LOCAL STAKEHOLDERS

- Elected Officials
  - Morehead Mayor David Perkins – (606) 784-8505, (606) 356-7549, dperkins@cityofmorehead.net or Clerk, dreeder@cityofmorehead.net; City Planner Joe Parson, jparson@cityofmorehead.net
  - Rowan County Judge-Executive Jim Nickell – (606) 784-5151
  - Sheriff Jack Carter, (606) 784-5446, j.carter@rowancountysheriff.net
  - State Rep. John Will Stacy – (502) 564-8100, JohnWill.Stacy@lrc.ky.gov
  - State Sen. Walter "Doc" Blevins – (502) 564-8100, Walter.Blevins@lrc.ky.gov

- Local Agencies
  - Rowan County EMS: (606) 784-4333, rowancoems@yahoo.com
  - Bath County EMS: (606) 674-8158
  - Morehead Police: Chief Mike Adams, (606) 784-7511, jmadams@cityofmorehead.net (city dispatches all services)
  - KSP Morehead, Post 8, PAO Endre Samu – (606) 784-4127, Endre.Samu@ky.gov
  - Morehead Fire Department: (606) 780-7773
  - Rowan County Schools: (606) 784-8928; Transportation Director John Maxey, john.maxey@rowan.kyschools.us
  - Morehead Public Works: Director Cecil Cornett, (606) 784-4503, ccornett@cityofmorehead.net
  - Transit Services: Federated Transportation Service of the Bluegrass, Inc., (888) 848-0989
  - Morehead State University – President Dr. Wayne Andrews, (606) 783-2022; Jason Blanton, communications, jblanton@moreheadstate.edu
  - St. Claire Regional Medical Center, Morehead – (606) 783-6500, publicrelations@st-claire.org

- Utility Companies
  - Local utility companies – other than city utilities, which may be contacted via government information above – are kept apprised by project engineers and at any project meetings.

- Industry/Other
  - Morehead Tourism Commission: (800) 654-1944, jbrown@moreheadtourism.com, tholbrook@moreheadtourism.com
  - Daniel Boone National Forest, Cumberland Ranger District, Morehead Ky., District Ranger James Manner: (606) 784-6428
  - US Army Corps of Engineers Cave Run Lake, (606) 784-9709
  - Morehead Chamber of Commerce (for local business notices), Tracy Williams: (606) 784-6221, tcwilliams@moreheadchamber.com

## TRUCKING FIRMS AND OUT-OF-STATE STAKEHOLDERS

Information will be distributed electronically to trucking firms via the Department of Vehicle Regulation (502-564-4540). Information will also be posted on the 511 web site (www.511.ky.gov), the 511 telephone information system, other electronic traffic alert systems in the district, as well as appropriate web-based social media resources. If necessary, the PIO will assist Transportation Operations Center in sending text alerts through various commercial trucking agency systems.

## PRESENTATIONS

A project description including anticipated schedule will be provided to the media, stakeholders, emergency service agencies and tourist destinations (national forest and lake, see below) prior to and during construction. Information will be provided to these groups via traffic advisories, press releases, and District 9/KYTC web sites. Direct information to local trip generators and/or road users – such as flyers, maps and other materials – will be provided if necessary. Variable message boards may be placed at key locations prior to project site to warn incoming motorists. Signed detours may also be provided, if warranted.

## MEDIA RELATIONS

The District PIO will initiate a media campaign involving local newspapers, radio, television, and local travel/recreation agencies if applicable. The PIO will prepare an initial news release regarding the contract award for the project, and a subsequent release at start of construction. The PIO will conduct media interviews as requested throughout the project duration to keep the public informed of construction progress. Traffic advisories will be submitted to the media when a change in the MOT occurs. Considering the project is in an area with little or no daily media, the contractor must provide to the PIO via project engineers notification of any change in the MOT at least seven (7) days prior to the change.

- PIO Contact Information
  - Allen Blair – (606) 845-2551, (606) 748-3716 (cell); email allen.blair@ky.gov

**PIP INFORMATION**

The following information has been gathered for use in the Public Involvement Plan and/or for use in traffic management planning regarding this project:

A: Trip Generators – Destinations relying on the project corridor include the cities of Morehead, Olive Hill, Owingsville and Mount Sterling; as well as the Daniel Boone National Forest, Cave Run Lake, Morehead State University, St. Claire Regional Medical Center and Rowan County Schools (daily bus route), and major connecting highways such as KY 32, KY 36, US 60, I-64, etc.

B: Road Users – Traffic utilizing the project corridor include residents, health care providers/recipients, university students, work and recreation commuters, long-haul truckers, local and regional commercial companies. In addition, this section of I-64 serves many campers, boaters and recreational site users traveling to the Daniel Boone National Forest and Cave Run Lake.

C: Media market – This area is in the Central Kentucky media market, which has a small offering of newspaper, radio and television, including but not limited to:

- The Morehead News
- Bath County News-Outlook
- Mount Sterling Advocate
- West Liberty Courier/Elliott County News
- WIVY Radio/Gateway Radio News – Mount Sterling
- Morehead Public Radio
- Lexington Herald-Leader
- Clearchannel Communications
- WLEX Lexington
- WKYT Lexington
- WTVQ Lexington
- WGOH Go Radio Grayson

D: Public information message – Project is an important rehabilitation of an interstate corridor that serves regional travelers, local commuters, tourists, university, school and hospital visitors. Rehabilitation will provide improved travel conditions and increased highway safety, and includes pavement enhancements and improved longevity for state transportation network.

To accomplish the work with least amount of disruption and most cost efficiency, lane closures and other minimal traffic disruptions are necessary.

Primary communications will involve three basic traffic messages – effects on local and regional travel, delays, and possible alternate routes – for the duration of the project.

# Right-of-Way Certification Form

*Revised 2/22/11*

☑ Federal Funded ☑ Original

☐ State Funded ☐ Re-Certification

This form must be completed and submitted to FHWA with the PS&E package for federal-aid funded Interstate, Appalachia, and Major projects. This form shall also be submitted to FHWA for all federal-aid projects that fall under Conditions No. 2 or 3 outlined elsewhere in this form. When Condition No. 2 or 3 apply, KYTC shall resubmit this ROW Certification prior to construction contract Award. For all other federal-aid projects, this form shall be completed and retained in the KYTC project file.

Date: September 25, 2012

Project Name: I-64 Letting Date:

Project #: MP 134.75 - MP 138.3 County: Rowan

Item #: 09-2027.00 Federal #:

Description of Project: Mill & thin asphalt overlay on I-64

## Projects that require NO new or additional right-of-way acquisitions and/or relocations

☑ The proposed transportation improvement will be built within the existing rights-of -way and there are no properties to be acquired, individuals, families, and businesses ("relocatees") to be relocated, or improvements to be removed as a part of this project.

## Projects that require new or additional right-of-way acquisitions and/or relocations

☐ Per 23 CFR 635.309, the KYTC hereby certify that all relocatees have been relocated to decent, safe, and sanitary housing or that KYTC has made available to relocatees adequate replacement housing in accordance with the provisions of the current FHWA directive(s) covering the administration of the Highway Relocation Assistance Program and that at least one of the following three conditions has been met. (Check those that apply.)

☐ **Condition 1.** All necessary rights-of-way, including control of access rights when applicable, have been acquired including legal and physical possession. Trial or appeal of cases may be pending in court but legal possession has been obtained. There may be some improvements remaining on the right-of-way, but all occupants have vacated the lands and improvements, and KYTC has physical possession and the rights to remove, salvage, or demolish all improvements and enter on all land. Fair market value has been paid or deposited with the court.

☐ **Condition 2.** Although all necessary rights-of-way have not been fully acquired, the right to occupy and to use all rights-of-way required for the proper execution of the project has been acquired. Trial or appeal of some parcels may be pending in court and on other parcels full legal possession has not been obtained, but right of entry has been obtained, the occupants of all lands and improvements have vacated, and KYTC has physical possession and right to remove, salvage, or demolish all improvements. Fair market value has been paid or deposited with the court for most parcels. Fair market value for all pending parcels will be paid or deposited with the court prior to AWARD of construction contract. (See note 1 below.)

**Note 1:** The KYTC shall re-submit a right-of-way certification form for this project prior to AWARD of all Federal-Aid construction contracts. Award must not to be made until after KYTC has obtained full legal possession and fair market value for all parcels has been paid or deposited with the court and FHWA has concurred in the re-submitted right-of-way certification.

# Right-of-Way Certification Form

*Revised 2/22/11*

☐ **Condition 3.** The acquisition or right of occupancy and use of a few remaining parcels are not complete and/or some parcels still have occupants. However, all remaining occupants have had replacement housing made available to them in accordance with 49 CFR 24.204. The KYTC is hereby requesting authorization to advertise this project for bids and to proceed with bid letting even though the necessary rights-of-way will not be fully acquired, and/or some occupants will not be relocated, and/or the fair market value will not be paid or deposited with the court for some parcels until after bid letting. KYTC will fully meet all the requirements outlined in 23 CFR 635.309(c)(3) and 49 CFR 24.102(j) and will expedite completion of all acquisitions, relocations, and full payments after bid letting and prior to AWARD of the construction contract or force account construction. A full explanation and reason for this request, including identification of each such parcel and dates on which acquisitions, payments, and relocations will be completed, is attached to this certification form for FHWA concurrence. (See note 2.)

**Note 2:** The KYTC may request authorization on this basis only in unique and unusual circumstances. Proceeding to bid letting shall be the exception and never become the rule. In all cases, the KYTC shall make extraordinary efforts to expedite completion of the acquisition, payment for all affected parcels, and the relocation of all relocatees prior to AWARD of all Federal-Aid construction contracts or force account construction.

Approved: Danny Mineer (Printed Name) — Signature — Right-of-Way Supervisor — 9/25/12

Approved: DAVID L. ORR (Printed Name) — Signature — KYTC, Director of ROW &Utilities

Approved: David Whitworth (Printed Name) — Signature — FHWA, ROW Officer (when applicable) — 9/26/12

# Right-of-Way Certification Form

*Revised 2/22/11*

Date: September 25, 2012

Project Name: I-64
Project #: MP 134/75 - MP 138.3
Item #: 09-2027.00
Letting Date: _____

County: Rowan
Federal #: _____

This project has 0 total number of parcels to be acquired, and 0 total number of individuals or families to be relocated, as well as 0 total number of businesses to be relocated.

_____ Parcels where acquired by a signed fee simple deed and fair market value has been paid

_____ Parcels have been acquired by IOJ through condemnation and fair market value has been deposited with the court

_____ Parcels have not been acquired at this time (*explain below for each parcel*)

_____ Parcels have been acquired or have a "right of entry" but fair market value has not been paid or has not been deposited with the court *(explain below for each parcel)*

_____ Relocatees have not been relocated from parcels ____, ____, ____, ____, ____, ____, and ____ *(explain below for each parcel)*

| Parcel # | Name/Station | Explanation for delayed acquisition, delayed relocation, or delayed payment of fair market value | Proposed date of payment or of relocation |
|---|---|---|---|
| | | | |
| | | | |
| | | | |
| | | | |
| | | | |
| | | | |
| | | | |

There are 0 billboards and/or 0 cemeteries involved on this project.

There are 0 water or monitoring wells on parcels ____, ____, ____, ____, and ____. All have been acquired and are the responsibility of the project contractor to close/cap.

**Form Effective Date: April 1, 2006**
**Last Revised: February 22, 2011**

# UTILITY NOTES TO BE INCLUDED IN THE PROPOSAL
# SPECIAL NOTES FOR UTILITY CLEARANCE
# IMPACT ON CONSTRUCTION

**ROWAN COUNTY, I-64**
**MP 134.75 - MP 138.30**
**ITEM NO. 9-2027.00**

**There are no utilities involved with this project.**

**There are no railroads involved with this project.**

## PROTECTION OF UTILITIES

The location of utilities provided in the contact documents has been furnished by the facility owners and/or by reviewing record drawings and may not be accurate. It will be the roadway contractor's responsibility to locate utilities before excavating by calling the various utility owners and by examining any supplemental information supplied by the cabinet. If necessary, the roadway contractor shall determine the exact location and elevation of utilities by hand digging to expose utilities before excavating in the area of a utility. The cost for repair and any other associated costs for any damage to utilities caused by the roadway contractor's operations shall be borne by the roadway contractor.

## BEFORE – U – DIG (BUD)

The Contractor is instructed to call 1-800-752-6007 to reach KY 811, the One-Call System for information on the location of existing underground utilities. The call is to be placed a minimum of two (2) and no more than ten (1) business days prior to excavation. The Contractor should be aware that owners of underground facilities are not required to be members of the KY 811 One-Call Before-U-Dig (BUD) Service. The Contractor must coordinate excavation with the utility owners, including those whom do not subscribe to KY 811. It may be necessary for the Contractor to contact the County Court Clerk to determine what utility companies have facilities in the area.

# PART II

# SPECIFICATIONS AND STANDARD DRAWINGS

# SPECIFICATIONS REFERENCE

Any reference in the plans or proposal to previous editions of the *Standard Specifications for Road and Bridge Construction* and *Standard Drawings* are superseded by *Standard Specifications for Road and Bridge Construction, Edition of 2012* and *Standard Drawings, Edition of 2012 with the 2012 Revision.*

| Supplemental Specifications to the Standard Specifications for Road and Bridge Construction, 2012 Edition<br><br>(Effective with the August 17, 2012 Letting) | |
|---|---|
| **Subsection:**<br>**Part:**<br>**Number:**<br>**Revision:** | 402.03.02 Contractor Quality Control and Department Acceptance.<br>D) Testing Responsibilites.<br>4) Density.<br>Replace the second sentence of the Option A paragraph with the following: Perform coring by the end of the following work day. |
| **Subsection:**<br>**Part:**<br>**Number:**<br>**Revision:** | 606.03.17 Special Requirements for Latex Concrete Overlays.<br>A) Existing Bridges and New Structures.<br>1) Prewetting and Grout-Bond Coat.<br>Add the following sentence to the last paragraph: Do not apply a grout-bond coat on bridge decks prepared by hydrodemolition. |
| **Subsection:**<br>**Revision:** | 609.03 Construction.<br>Replace Subsection 609.03.01 with the following:<br>609.03.01 A) Swinging the Spans. Before placing concrete slabs on steel spans or precast concrete release the temporary erection supports under the bridge and swing the span free on its supports.<br>609.03.01 B) Lift Loops. Cut all lift loops flush with the top of the precast beam once the beam is placed in the final location and prior to placing steel reinforcement. At locations where lift loops are cut, paint the top of the beam with galvanized or epoxy paint. |

# PART III

# EMPLOYMENT, WAGE AND RECORD REQUIREMENTS

# TRANSPORTATION CABINET
# DEPARTMENT OF HIGHWAYS

## LABOR AND WAGE REQUIREMENTS
## APPLICABLE TO OTHER THAN FEDERAL-AID SYSTEM PROJECTS

I. Application
II. Nondiscrimination of Employees (KRS 344)
III. Payment of Predetermined Minimum Wages
IV. Statements and Payrolls

### I. APPLICATION

1. These contract provisions shall apply to all work performed on the contract by the contractor with his own organization and with the assistance of workmen under his immediate superintendence and to all work performed on the contract by piecework, station work or by subcontract. The contractor's organization shall be construed to include only workmen employed and paid directly by the contractor and equipment owned or rented by him, with or without operators.

2. The contractor shall insert in each of his subcontracts all of the stipulations contained in these Required Provisions and such other stipulations as may be required.

3. A breach of any of the stipulations contained in these Required Provisions may be grounds for termination of the contract.

### II. NONDISCRIMINATION OF EMPLOYEES

AN ACT OF THE KENTUCKY
GENERAL ASSEMBLY TO PREVENT
DISCRIMINATION IN EMPLOYMENT
KRS CHAPTER 344
EFFECTIVE JUNE 16, 1972

The contract on this project, in accordance with KRS Chapter 344, provides that during the performance of this contract, the contractor agrees as follows:

1. The contractor shall not fail or refuse to hire, or shall not discharge any individual, or otherwise discriminate against an individual with respect to his compensation, terms, conditions, or privileges of employment, because of such individual's race, color, religion, national origin, sex, disability or age (between forty and seventy); or limit, segregate, or classify his employees in any way which would deprive or tend to deprive an individual of employment opportunities or otherwise adversely affect his status as an employee, because of such individual's race, color, religion, national origin, sex, disability or age (between forty and seventy). The contractor agrees to post in conspicuous places, available to employees and applicants for employment, notices to be provided setting forth the provisions of this nondiscrimination clause.

2. The contractor shall not print or publish or cause to be printed or published a notice or advertisement relating to employment by such an employer or membership in or any classification or referral for employment by the employment agency, indicating any preference, limitation, specification, or discrimination, based on race, color, religion, national origin, sex, disability or age (between forty and seventy), except that such notice or advertisement may indicate a preference, limitation, or specification based on religion, or national origin when religion, or national origin is a bona fide occupational qualification for employment.

3. If the contractor is in control of apprenticeship or other training or retraining, including on-the-job training programs, he shall not discriminate against an individual because of his race, color, religion, national origin, sex, disability or age (between forty and seventy), in admission to, or employment in any program established to provide apprenticeship or other training.

4. The contractor will send to each labor union or representative of workers with which he has a collective bargaining agreement or other contract or understanding, a notice to be provided advising the said labor union or workers' representative of the contractor's commitments under this section, and shall post copies of the notice in conspicuous places available to employees and applicants for employment. The contractor will take such action with respect to any subcontract or purchase order as the administrating agency may direct as a means of enforcing such provisions, including sanctions for non-compliance.

### III. PAYMENT OF PREDETERMINED MINIMUM WAGES

1. These special provisions are supplemented elsewhere in the contract by special provisions which set forth certain predetermined minimum wage rates. The contractor shall pay not less than those rates.

2. The minimum wage determination schedule shall be posted by the contractor, in a manner prescribed by the Department of Highways, at the site of the work in prominent places where it can be easily seen by the workers.

### IV. STATEMENTS AND PAYROLLS

1. All contractors and subcontractors affected by the terms of KRS 337.505 to 337.550 shall keep full and accurate payroll records covering all disbursements of wages to their employees to whom they are required to pay not less than the prevailing rate of wages. Payrolls and basic records relating thereto will be maintained during the course of the work and preserved for a period of one (1) year from the date of completion of this contract.

2. The payroll records shall contain the name, address and social security number of each employee, his correct classification, rate of pay, daily and weekly number of hours worked, itemized deductions made and actual wages paid.

3. The contractor shall make his daily records available at the project site for inspection by the State Department of Highways contracting office or his authorized representative.

Periodic investigations shall be conducted as required to assure compliance with the labor provisions of the contract. Interrogation of employees and officials of the contractor shall be permitted during working hours.

Aggrieved workers, Highway Managers, Assistant District Engineers, Resident Engineers and Project Engineers shall report all complaints and violations to the Division of Contract Procurement.

The contractor shall be notified in writing of apparent violations. The contractor may correct the reported violations and notify the Department of Highways of the action taken or may request an informal hearing. The request for hearing shall be in writing within ten (10) days after receipt of the notice of the reported violation. The contractor may submit

records and information which will aid in determining the true facts relating to the reported violations.

Any person or organization aggrieved by the action taken or the findings established as a result of an informal hearing by the Division of Contract Procurement may request a formal hearing.

4. The wages of labor shall be paid in legal tender of the United States, except that this condition will be considered satisfied if payment is made by a negotiable check, on a solvent bank, which may be cashed readily by the employee in the local community for the full amount, without discount or collection charges of any kind. Where checks are used for payments, the contractor shall make all necessary arrangements for them to be cashed and shall give information regarding such arrangements.

5. No fee of any kind shall be asked or accepted by the contractor or any of his agents from any person as a condition of employment on the project.

6. No laborers shall be charged for any tools used in performing their respective duties except for reasonably avoidable loss or damage thereto.

7. Every employee on the work covered by this contract shall be permitted to lodge, board, and trade where and with whom he elects and neither the contractor nor his agents, nor his employees shall directly or indirectly require as a condition of employment that an employee shall lodge, board or trade at a particular place or with a particular person.

8. Every employee on the project covered by this contract shall be an employee of either the prime contractor or an approved subcontractor.

9. No charge shall be made for any transportation furnished by the contractor or his agents to any person employed on the work.

10. No individual shall be employed as a laborer or mechanic on this contract except on a wage basis, but this shall not be construed to prohibit the rental of teams, trucks or other equipment from individuals.

No Covered employee may be employed on the work except in accordance with the classification set forth in the schedule mentioned above; provided, however, that in the event additional classifications are required, application shall be made by the contractor to the Department of Highways and (1) the Department shall request appropriate classifications and rates from the proper agency, or (2) if there is urgent need for additional classification to avoid undue delay in the work, the contractor may employ such workmen at rates deemed comparable to rates established for similar classifications provided he has made written application through the Department of Highways, addressed to the proper agency, for the supplemental rates. The contractor shall retroactively adjust, upon receipt of the supplemental rates schedule, the wages of any employee paid less than the established rate and may adjust the wages of any employee overpaid.

11. No contractor or subcontractor contracting for any part of the contract work which may require or involve the employment of laborers or mechanics shall require or permit any laborer or mechanic in any work-week in which he is employed on such work, to work in excess of eight hours in any calendar day or in excess of forty hours in such work-week unless such laborer or mechanic receives compensation at a rate not less than one and one half times his basic rate of pay for all hours worked in excess of eight hours in any calendar day or in excess of forty hours in such work-week. A laborer, workman or mechanic and an employer may enter into a written agreement or a collective bargaining agreement to work more than eight (8) hours a calendar day but not more than ten (10) hours a calendar day for the straight time hourly rate. This agreement shall be in writing and shall be executed prior to the employee working in excess of eight (8) hours, but not more than ten (10) hours, in any one (1) calendar day.

12. Payments to the contractor may be suspended or withheld due to failure of the contractor to pay any laborer or mechanic employed or working on the site of the work, all or part of the wages required under the terms of the contract. The Department may suspend or withhold payments only after the contractor has been given written notice of the alleged violation and the contractor has failed to comply with the wage determination of the Department of Highways.

13. Contractors and subcontractors shall comply with the sections of Kentucky Revised Statutes, Chapter 337 relating to contracts for Public Works.

Revised 2-16-95

# EXECUTIVE BRANCH CODE OF ETHICS

In the 1992 regular legislative session, the General Assembly passed and Governor Brereton Jones signed Senate Bill 63 (codified as KRS 11A), the Executive Branch Code of Ethics, which states, in part:

KRS 11A.040 (6) provides:

No present or former public servant shall, within six (6) months of following termination of his office or employment, accept employment, compensation or other economic benefit from any person or business that contracts or does business with the state in matters in which he was directly involved during his tenure. This provision shall not prohibit an individual from returning to the same business, firm, occupation, or profession in which he was involved prior to taking office or beginning his term of employment, provided that, for a period of six (6) months, he personally refrains from working on any matter in which he was directly involved in state government. This subsection shall not prohibit the performance of ministerial functions, including, but not limited to, filing tax returns, filing applications for permits or licenses, or filing incorporation papers.

KRS 11A.040 (8) states:

A former public servant shall not represent a person in a matter before a state agency in which the former public servant was directly involved, for a period of one (1) year after the latter of:

a) The date of leaving office or termination of employment; or
b) The date the term of office expires to which the public servant was elected.

This law is intended to promote public confidence in the integrity of state government and to declare as public policy the idea that state employees should view their work as a public trust and not as a way to obtain private benefits.

If you have worked for the executive branch of state government within the past six months, you may be subject to the law's prohibitions. The law's applicability may be different if you hold elected office or are contemplating representation of another before a state agency.

Also, if you are affiliated with a firm which does business with the state and which employs former state executive-branch employees, you should be aware that the law may apply to them.

In case of doubt, the law permits you to request an advisory opinion from the Executive Branch Ethics Commission, Room 136, Capitol Building, 700 Capitol Avenue, Frankfort, Kentucky 40601; telephone (502) 564-7954.

## Kentucky Equal Employment Opportunity Act of 1978

The requirements of the Kentucky Equal Employment Opportunity Act of 1978 (KRS 45.560-45.640) shall apply to this Contract. The apparent low Bidder will be required to submit EEO forms to the Division of Construction Procurement, which will then forward to the Finance and Administration Cabinet for review and approval. No award will become effective until all forms are submitted and EEO/CC has certified compliance. The required EEO forms are as follows:

- EEO-1: Employer Information Report
- Affidavit of Intent to Comply
- Employee Data Sheet
- Subcontractor Report

These forms are available on the Finance and Administration's web page under ***Vendor Information, Standard Attachments and General Terms*** at the following address: **https://www.eProcurement.ky.gov**.

Bidders currently certified as being in compliance by the Finance and Administration Cabinet may submit a copy of their approval letter in lieu of the referenced EEO forms.

For questions or assistance please contact the Finance and Administration Cabinet by email at **finance.contractcompliance@ky.gov** or by phone at 502-564-2874.

General Decision Number: KY120125 08/31/2012 KY125

Superseded General Decision Number: KY20100211

State: Kentucky

Construction Type: Highway

Counties: Anderson, Bath, Bourbon, Boyd, Boyle, Bracken, Breckinridge, Bullitt, Carroll, Carter, Clark, Elliott, Fayette, Fleming, Franklin, Gallatin, Grant, Grayson, Greenup, Hardin, Harrison, Henry, Jefferson, Jessamine, Larue, Lewis, Madison, Marion, Mason, Meade, Mercer, Montgomery, Nelson, Nicholas, Oldham, Owen, Robertson, Rowan, Scott, Shelby, Spencer, Trimble, Washington and Woodford Counties in Kentucky.

HIGHWAY CONSTRUCTION PROJECTS (excluding tunnels, building structures in rest area projects & railroad construction; bascule, suspension & spandrel arch bridges designed for commercial navigation, bridges involving marine construction; and other major bridges).

| Modification Number | Publication Date |
|---|---|
| 0 | 01/06/2012 |
| 1 | 01/13/2012 |
| 2 | 01/20/2012 |
| 3 | 04/13/2012 |
| 4 | 05/11/2012 |
| 5 | 05/25/2012 |
| 6 | 06/01/2012 |
| 7 | 06/22/2012 |
| 8 | 06/29/2012 |
| 9 | 07/13/2012 |
| 10 | 07/20/2012 |
| 11 | 08/03/2012 |
| 12 | 08/10/2012 |
| 13 | 08/17/2012 |
| 14 | 08/24/2012 |
| 15 | 08/31/2012 |

BRIN0004-003 06/01/2011

BRECKENRIDGE COUNTY

| | Rates | Fringes |
|---|---|---|
| BRICKLAYER | $ 24.11 | 10.07 |

---

BRKY0001-005 06/01/2011

BULLITT, CARROLL, GRAYSON, HARDIN, HENRY, JEFFERSON, LARUE, MARION, MEADE, NELSON, OLDHAM, SHELBY, SPENCER, & TRIMBLE COUNTIES:

| | Rates | Fringes |
|---|---|---|
| BRICKLAYER | $ 24.11 | 10.07 |

---
BRKY0002-006 06/01/2011

BRACKEN, GALLATIN, GRANT, MASON & ROBERTSON COUNTIES:

| | Rates | Fringes |
|---|---|---|
| BRICKLAYER | $ 26.57 | 10.26 |

---
BRKY0007-004 06/01/2011

BOYD, CARTER, ELLIOT, FLEMING, GREENUP, LEWIS & ROWAN COUNTIES:

| | Rates | Fringes |
|---|---|---|
| BRICKLAYER | $ 28.29 | 16.80 |

---
BRKY0017-004 06/01/2009

ANDERSON, BATH, BOURBON, BOYLE, CLARK, FAYETTE, FRANKLIN, HARRISON, JESSAMINE, MADISON, MERCER, MONTGOMERY, NICHOLAS, OWEN, SCOTT, WASHINGTON & WOODFORD COUNTIES:

| | Rates | Fringes |
|---|---|---|
| BRICKLAYER | $ 24.11 | 9.97 |

---
CARP0064-001 07/01/2012

| | Rates | Fringes |
|---|---|---|
| CARPENTER | $ 26.40 | 13.91 |
| Diver | $ 39.98 | 13.91 |
| PILEDRIVERMAN | $ 26.65 | 13.91 |

---
ELEC0212-008 05/28/2012

BRACKEN, GALLATIN and GRANT COUNTIES

| | Rates | Fringes |
|---|---|---|
| ELECTRICIAN | $ 26.11 | 15.42 |

---
ELEC0212-014 06/27/2011

BRACKEN, GALLATIN & GRANT COUNTIES:

| | Rates | Fringes |
|---|---|---|
| Sound & Communication Technician | $ 21.55 | 8.46 |

---
ELEC0317-012 05/30/2012

BOYD, CARTER, ELLIOT & ROWAN COUNTIES:

| | Rates | Fringes |
|---|---|---|
| Electricians: | | |

```
     Cable Splicer...............$ 32.68            18.13
     Electrician.................$ 32.22            20.09
-----------------------------------------------------------------
 ELEC0369-007 05/30/2012

ANDERSON, BATH, BOURBON, BOYLE, BRECKINRIDGE, BULLITT, CARROLL,
CLARK, FAYETTE, FRAONKLIN, GRAYSON, HARDIN, HARRISON, HENRY,
JEFFERSON, JESSAMINE, LARUE, MADISON, MARION, MEADE, MERCER,
MONTGOMERY, NELSON, NICHOLAS, OLDHAM, OWEN, ROBERTSON, SCOTT,
SHELBY, SPENCER, TRIMBLE, WASHINGTON, & WOODFORD COUNTIES:


                                   Rates          Fringes

ELECTRICIAN......................$ 29.32            13.78
-----------------------------------------------------------------
* ELEC0575-002 05/28/2012

FLEMING, GREENUP, LEWIS & MASON COUNTIES:

                                   Rates          Fringes

ELECTRICIAN......................$ 30.90            13.44
-----------------------------------------------------------------
 ENGI0181-018 07/01/2012

                                   Rates          Fringes

Operating Engineer:
     GROUP 1.....................$ 27.35            13.40
     GROUP 2.....................$ 24.87            13.40
     GROUP 3.....................$ 25.26            13.40
     GROUP 4.....................$ 24.60            13.40

OPERATING ENGINEER CLASSIFICATIONS

  GROUP 1 - A-Frame Winch Truck; Auto Patrol; Backfiller;
  Batcher Plant; Bituminous Paver; Bituminous Transfer
  Machine; Boom Cat; Bulldozer; Mechanic; Cableway; Carry-All
  Scoop; Carry Deck Crane; Central Compressor Plant; Cherry
  Picker; Clamshell; Concrete Mixer (21 cu. ft. or Over);
  Concrete Paver; Truck-Mounted Concrete Pump; Core Drill;
  Crane; Crusher Plant; Derrick; Derrick Boat; Ditching &
  Trenching Machine; Dragline; Dredge Operator; Dredge
  Engineer; Elevating Grader & Loaders; Grade-All; Gurries;
  Heavy Equipment Robotics Operator/Mechanic; High Lift;
  Hoe-Type Machine; Hoist (Two or More Drums); Hoisting
  Engine (Two or More Drums); Horizontal Directional Drill
  Operator; Hydrocrane;  Hyster; KeCal Loader; LeTourneau;
  Locomotive; Mechanic; Mechanically Operated Laser Screed;
  Mechanic Welder; Mucking Machine; Motor Scraper; Orangepeel
  Bucket; Overhead Crane; Piledriver; Power Blade; Pumpcrete;
  Push Dozer; Rock Spreader, attached to equipment; Rotary
  Drill; Roller (Bituminous); Rough Terrain Crane; Scarifier;
  Scoopmobile; Shovel; Side Boom; Subgrader; Tailboom;
  Telescoping Type Forklift; Tow or Push Boat; Tower Crane
  (French, German & other types); Tractor Shovel; Truck
  Crane; Tunnel Mining Machines, including Moles, Shields or
  similar types of Tunnel Mining Equipment
```

GROUP 2 - Air Compressor (Over 900 cu. ft. per min.); Bituminous Mixer; Boom Type Tamping Machine; Bull Float; Concrete Mixer (Under 21 cu. ft.); Dredge Engineer; Electric Vibrator; Compactor/Self-Propelled Compactor; Elevator (One Drum or Buck Hoist); Elevator (When used to Hoist Building Material); Finish Machine; Firemen & Hoist (One Drum); Flexplane; Forklift (Regardless of Lift Height); Form Grader; Joint Sealing Machine; Outboard Motor Boat; Power Sweeper (Riding Type); Roller (Rock); Ross Carrier; Skid Mounted or Trailer Mounted Conrete Pump; Skid Steer Machine with all Attachments; Switchman or Brakeman; Throttle Valve Person; Tractair & Road Widening Trencher; Tractor (50 H.P. or Over); Truck Crane Oiler; Tugger; Welding Machine; Well Points; & Whirley Oiler

GROUP 3 - All Off Road Material Handling Equipment, including Articulating Dump Trucks; Greaser on Grease Facilities servicing Heavy Equipment

GROUP 4 - Bituminous Distributor; Burlap & Curing Machine; Cement Gun; Concrete Saw; Conveyor; Deckhand Oiler; Grout Pump; Hydraulic Post Driver; Hydro Seeder; Mud Jack; Oiler; Paving Joint Machine; Power Form Handling Equipment; Pump; Roller (Earth); Steerman; Tamping Machine; Tractor (Under 50 H.P.); & Vibrator

CRANES - with booms 150 ft. & Over (Including JIB), and where the length of the boom in combination with the length of the piling leads equals or exceeds 150 ft. - $1.00 over Group 1 rate

EMPLOYEES ASSIGNED TO WORK BELOW GROUND LEVEL ARE TO BE PAID 10%
ABOVE BASIC WAGE RATE. THIS DOES NOT APPLY TO OPEN CUT WORK.

---

IRON0044-009 06/01/2012

BRACKEN, GALLATIN, GRANT, HARRISON, ROBERTSON,
BOURBON (Northern third, including Townships of Jackson, Millersburg, Ruddel Mills & Shawhan);
CARROLL (Eastern third, including the Township of Ghent);
FLEMING (Western part, excluding Townships of Beechburg, Colfax, Elizaville, Flemingsburg, Flemingsburg Junction, Foxport, Grange City, Hillsboro, Hilltop, Mount Carmel, Muses Mills, Nepton, Pecksridge, Plummers Landing, Plummers Mill, Poplar Plains, Ringos Mills, Tilton & Wallingford);
MASON (Western two-thirds, including Townships of Dover, Lewisburg, Mays Lick, Maysville, Minerva, Moranburg, Murphysville, Ripley, Sardis, Shannon, South Ripley & Washington);
NICHOLAS (Townships of Barefoot, Barterville, Carlisle, Ellisville, Headquarters, Henryville, Morningglory, Myers & Oakland Mills);
OWEN (Townships of Beechwood, Bromley, Fairbanks, Holbrook, Jonesville, Long Ridge, Lusby's Mill, New, New Columbus, New Liberty, Owenton, Poplar Grove, Rockdale, Sanders, Teresita & Wheatley);
SCOTT (Northern two-thirds, including Townships of Biddle, Davis, Delaplain, Elmville, Longlick, Muddy Ford, Oxford, Rogers Gap, Sadieville, Skinnersburg & Stonewall)

| | Rates | Fringes |
|---|---|---|
| IRONWORKER | | |
| Fence Erector | $ 22.50 | 15.10 |
| Structural | $ 24.80 | 15.10 |

---

IRON0070-006 06/01/2012

ANDERSON, BOYLE, BRECKINRIDGE, BULLITT, FAYETTE, FRANKLIN, GRAYSON, HARDIN, HENRY, JEFFERSON, JESSAMINE, LARUE, MADISON, MARION, MEADE, MERCER, NELSON, OLDHAM, SHELBY, SPENCER, TRIMBLE, WASHINGTON & WOODFORD
BOURBON (Southern two-thirds, including Townships of Austerlity, Centerville, Clintonville, Elizabeth, Hutchison, Littlerock, North Middletown & Paris);
CARROLL (Western two-thirds, including Townships of Carrollton, Easterday, English, Locust, Louis, Prestonville & Worthville);
CLARK (Western two-thirds, including Townships of Becknerville, Flanagan, Ford, Pine Grove, Winchester & Wyandotte);
OWEN (Eastern eighth, including Townships of Glenmary, Gratz, Monterey, Perry Park & Tacketts Mill);
SCOTT (Southern third, including Townships of Georgetown, Great Crossing, Newtown, Stampling Ground & Woodlake);

| | Rates | Fringes |
|---|---|---|
| IRONWORKER | $ 26.34 | 18.58 |

---

IRON0372-006 06/01/2012

BRACKEN, GALLATIN, GRANT, HARRISON and ROBERTSON
BOURBON (Northern third, including Townships of Jackson, Millersburg, Ruddel Mills & Shawhan);
CARROLL (Eastern third, including the Township of Ghent);
FLEMING (Western part, Excluding Townships of Beechburg, Colfax, Elizaville, Flemingsburg, Flemingsburg Junction, Foxport, Grange City, Hillsboro, Hilltop, Mount Carmel, Muses Mills, Nepton, Pecksridge, Plummers Landing, Plummers Mill, Poplar Plains,
Ringos Mills, Tilton & Wallingford);
MASON (Western two-thirds, including Townships of Dover, Lewisburg, Mays Lick, Maysville, Minerva, Moranburg, Murphysville, Ripley, Sardis, Shannon, South Ripley & Washington);
NICHOLAS (Townships of Barefoot, Barterville, Carlisle, Ellisville, Headquarters, Henryville, Morningglory, Myers & Oakland Mills);
OWEN (Townships of Beechwood, Bromley, Fairbanks, Holbrook, Jonesville, Long Ridge, Lusby's Mill, New, New Columbus, New Liberty, Owenton, Poplar Grove, Rockdale, Sanders, Teresita & Wheatley);
SCOTT (Northern two-thirds, including Townships of Biddle, Davis,Delaplain, Elmville, Longlick, Muddy Ford, Oxford, Rogers Gap, Sadieville, Skinnersburg & Stonewall) COUNTIES

| | Rates | Fringes |
|---|---|---|

IRONWORKER, REINFORCING
Beyond 30-mile radius of
Hamilton County, Ohio
Courthouse.....$ 26.59 18.58
Up to & including 30-mile
radius of Hamilton County,
Ohio Courthouse.....$ 26.34 18.58

---

IRON0769-007 06/01/2012

BATH, BOYD, CARTER, ELLIOTT, GREENUP, LEWIS, MONTGOMERY & ROWAN
CLARK (Eastern third, including townships of Bloomingdale,
Hunt, Indian Fields, Kiddville, Loglick, Rightangele & Thomson);
FLEMING (Townships of Beechburg, Colfax, Elizaville,
Flemingsburg, Flemingsburg Junction, Foxport, Grange City,
Hillsboro, Hilltop, Mount Carmel, Muses Mills, Nepton,
Pecksridge, Plummers Landing, Plummers Mill, Poplar Plains,
Ringos Mills, Tilton & Wallingford);
MASON (Eastern third, including Townships of Helena, Marshall,
Orangeburg, Plumville & Springdale);
NICHOLAS (Eastern eighth, including the Township of Moorefield
Sprout)

| | Rates | Fringes |
|---|---|---|
| IRONWORKER | | |
| ZONE 1 | $ 30.52 | 20.08 |
| ZONE 2 | $ 30.92 | 20.08 |
| ZONE 3 | $ 32.52 | 20.08 |

ZONE 1 - Up to 10 mi. radius of union hall, Ashland, Ky.,
1643 Greenup Avenue
ZONE 2 - 10 to 50 mi. radius of union hall;
ZONE 3 - 50 mi. radius and beyond

---

LABO0189-003 07/01/2012

BATH, BOURBON, BOYD, BOYLE, BRACKEN, CARTER, CLARK, ELLIOTT,
FAYETTE, FLEMING, FRANKLIN, GALLATIN, GRANT, GREENUP, HARRISON,
JESSAMINE, LEWIS, MADISON, MASON, MERCER, MONTGOMERY, NICHOLAS,
OWEN, ROBERTSON, ROWAN, SCOTT, & WOOLFORD COUNTIES

| | Rates | Fringes |
|---|---|---|
| Laborers: | | |
| GROUP 1 | $ 21.15 | 11.41 |
| GROUP 2 | $ 21.40 | 11.41 |
| GROUP 3 | $ 21.45 | 11.41 |
| GROUP 4 | $ 22.05 | 11.41 |

LABORERS CLASSIFICATIONS

GROUP 1 - Aging & Curing of Concrete; Asbestos Abatement
Worker; Asphalt Plant; Asphalt; Batch Truck Dump; Carpenter
Tender; Cement Mason Tender; Cleaning of Machines;
Concrete; Demolition; Dredging; Environmental - Nuclear,
Radiation, Toxic & Hazardous Waste - Level D; Flagperson;

Grade Checker; Hand Digging & Hand Back Filling; Highway Marker Placer; Landscaping, Mesh Handler & Placer; Puddler; Railroad; Rip-rap & Grouter; Right-of-Way; Sign, Guard Rail & Fence Installer; Signal Person; Sound Barrier Installer; Storm & Sanitary Sewer; Swamper; Truck Spotter & Dumper; Wrecking of Concrete Forms; General Cleanup

GROUP 2 - Batter Board Man (Sanitary & Storm Sewer); Brickmason Tender; Mortar Mixer Operator; Scaffold Builder; Burner & Welder; Bushammer; Chain Saw Operator; Concrete Saw Operator; Deckhand Scow Man; Dry Cement Handler; Environmental - Nuclear, Radiation, Toxic & Hazardous Waste - Level C; Forklift Operator for Masonary; Form Setter; Green Concrete Cutting; Hand Operated Grouter & Grinder Machine Operator; Jackhammer; Pavement Breaker; Paving Joint Machine; Pipelayer; Plastic Pipe Fusion; Power Driven Georgia Buggy & Wheel Barrow; Power Post Hole Digger; Precast Manhole Setter; Walk-Behind Tamper; Walk-Behind Trencher; Sand Blaster; Concrete Chipper; Surface Grinder; Vibrator Operator; Wagon Driller

GROUP 3 - Asphalt Luteman & Raker; Gunnite Nozzleman; Gunnite Operator & Mixer; Grout Pump Operator; Side Rail Setter; Rail Paved Ditches; Screw Operator; Tunnel (Free Air); Water Blaster

GROUP 4 - Caisson Worker (Free Air); Cement Finisher; Environmental - Nuclear, Radiation, Toxic & Hazardous Waste - Levels A & B; Miner & Driller (Free Air); Tunnel Blaster; & Tunnel Mucker (Free Air); Directional & Horizontal Boring; Air Track Drillers (All Types); Powdermen & Blasters; Troxler & Concrete Tester if Laborer is Utilized

---

LABO0189-008 07/01/2012

ANDERSON, BULLITT, CARROLL, HARDIN, HENRY, JEFFERSON, LARUE, MARION, MEADE, NELSON, OLDHAM, SHELBY, SPENCER, TRIMBLE & WASHINGTON COUNTIES

| | Rates | Fringes |
|---|---|---|
| Laborers: | | |
| GROUP 1 | $ 21.61 | 10.95 |
| GROUP 2 | $ 21.86 | 10.95 |
| GROUP 3 | $ 21.91 | 10.95 |
| GROUP 4 | $ 22.51 | 10.95 |

LABORERS CLASSIFICATIONS

GROUP 1 - Aging & Curing of Concrete; Asbestos Abatement Worker; Asphalt Plant; Asphalt; Batch Truck Dump; Carpenter Tender; Cement Mason Tender; Cleaning of Machines; Concrete; Demolition; Dredging; Environmental - Nuclear, Radiation, Toxic & Hazardous Waste - Level D; Flagperson; Grade Checker; Hand Digging & Hand Back Filling; Highway Marker Placer; Landscaping, Mesh Handler & Placer; Puddler; Railroad; Rip-rap & Grouter; Right-of-Way; Sign, Guard Rail & Fence Installer; Signal Person; Sound Barrier Installer; Storm & Sanitary Sewer; Swamper; Truck Spotter & Dumper;

Wrecking of Concrete Forms; General Cleanup

GROUP 2 - Batter Board Man (Sanitary & Storm Sewer); Brickmason Tender; Mortar Mixer Operator; Scaffold Builder; Burner & Welder; Bushammer; Chain Saw Operator; Concrete Saw Operator; Deckhand Scow Man; Dry Cement Handler; Environmental - Nuclear, Radiation, Toxic & Hazardous Waste - Level C; Forklift Operator for Masonary; Form Setter; Green Concrete Cutting; Hand Operated Grouter & Grinder Machine Operator; Jackhammer; Pavement Breaker; Paving Joint Machine; Pipelayer; Plastic Pipe Fusion; Power Driven Georgia Buggy & Wheel Barrow; Power Post Hole Digger; Precast Manhole Setter; Walk-Behind Tamper; Walk-Behind Trencher; Sand Blaster; Concrete Chipper; Surface Grinder; Vibrator Operator; Wagon Driller

GROUP 3 - Asphalt Luteman & Raker; Gunnite Nozzleman; Gunnite Operator & Mixer; Grout Pump Operator; Side Rail Setter; Rail Paved Ditches; Screw Operator; Tunnel (Free Air); Water Blaster

GROUP 4 - Caisson Worker (Free Air); Cement Finisher; Environmental - Nuclear, Radiation, Toxic & Hazardous Waste - Levels A & B; Miner & Driller (Free Air); Tunnel Blaster; & Tunnel Mucker (Free Air); Directional & Horizontal Boring; Air Track Drillers (All Types); Powdermen & Blasters; Troxler & Concrete Tester if Laborer is Utilized

---

LABO0189-009 07/01/2012

BRECKINRIDGE & GRAYSON COUNTIES

| | Rates | Fringes |
|---|---|---|
| Laborers: | | |
| GROUP 1 | $ 21.96 | 10.60 |
| GROUP 2 | $ 22.21 | 10.60 |
| GROUP 3 | $ 22.26 | 10.60 |
| GROUP 4 | $ 22.86 | 10.60 |

LABORERS CLASSIFICATIONS

GROUP 1 - Aging & Curing of Concrete; Asbestos Abatement Worker; Asphalt Plant; Asphalt; Batch Truck Dump; Carpenter Tender; Cement Mason Tender; Cleaning of Machines; Concrete; Demolition; Dredging; Environmental - Nuclear, Radiation, Toxic & Hazardous Waste - Level D; Flagperson; Grade Checker; Hand Digging & Hand Back Filling; Highway Marker Placer; Landscaping, Mesh Handler & Placer; Puddler; Railroad; Rip-rap & Grouter; Right-of-Way; Sign, Guard Rail & Fence Installer; Signal Person; Sound Barrier Installer; Storm & Sanitary Sewer; Swamper; Truck Spotter & Dumper; Wrecking of Concrete Forms; General Cleanup

GROUP 2 - Batter Board Man (Sanitary & Storm Sewer); Brickmason Tender; Mortar Mixer Operator; Scaffold Builder; Burner & Welder; Bushammer; Chain Saw Operator; Concrete Saw Operator; Deckhand Scow Man; Dry Cement Handler; Environmental - Nuclear, Radiation, Toxic & Hazardous Waste - Level C; Forklift Operator for Masonary; Form Setter;

Green Concrete Cutting; Hand Operated Grouter & Grinder Machine Operator; Jackhammer; Pavement Breaker; Paving Joint Machine; Pipelayer; Plastic Pipe Fusion; Power Driven Georgia Buggy & Wheel Barrow; Power Post Hole Digger; Precast Manhole Setter; Walk-Behind Tamper; Walk-Behind Trencher; Sand Blaster; Concrete Chipper; Surface Grinder; Vibrator Operator; Wagon Driller

GROUP 3 - Asphalt Luteman & Raker; Gunnite Nozzleman; Gunnite Operator & Mixer; Grout Pump Operator; Side Rail Setter; Rail Paved Ditches; Screw Operator; Tunnel (Free Air); Water Blaster

GROUP 4 - Caisson Worker (Free Air); Cement Finisher; Environmental - Nuclear, Radiation, Toxic & Hazardous Waste - Levels A & B; Miner & Driller (Free Air); Tunnel Blaster; & Tunnel Mucker (Free Air); Directional & Horizontal Boring; Air Track Drillers (All Types); Powdermen & Blasters; Troxler & Concrete Tester if Laborer is Utilized

---

PAIN0012-005 06/11/2005

BATH, BOURBON, BOYLE, CLARK, FAYETTE, FLEMING, FRANKLIN, HARRISON, JESSAMINE, MADISON, MERCER, MONTGOMERY, NICHOLAS, ROBERTSON, SCOTT & WOODFORD COUNTIES:

| | Rates | Fringes |
|---|---|---|
| PAINTER | | |
| Bridge/Equipment Tender and/or Containment Builder | $ 18.90 | 5.90 |
| Brush & Roller | $ 21.30 | 5.90 |
| Elevated Tanks; Steeplejack Work; Bridge & Lead Abatement | $ 22.30 | 5.90 |
| Sandblasting & Waterblasting | $ 22.05 | 5.90 |
| Spray | $ 21.80 | 5.90 |

---

PAIN0012-017 05/01/2012

BRACKEN, GALLATIN, GRANT, MASON & OWEN COUNTIES:

| | Rates | Fringes |
|---|---|---|
| PAINTER (Heavy & Highway Bridges - Guardrails - Lightpoles - Striping) | | |
| Bridge Equipment Tender and Containment Builder | $ 20.49 | 8.33 |
| Brush & Roller | $ 23.10 | 8.33 |
| Elevated Tanks; Steeplejack Work; Bridge & Lead Abatement | $ 24.10 | 8.33 |
| Sandblasting & Water Blasting | $ 23.85 | 8.33 |
| Spray | $ 23.60 | 8.33 |

---

PAIN0118-004 05/01/2010

ANDERSON, BRECKINRIDGE, BULLITT, CARROLL, GRAYSON, HARDIN, HENRY, JEFFERSON, LARUE, MARION, MEADE, NELSON, OLDHAM, SHELBY, SPENCER, TRIMBLE & WASHINGTON COUNTIES:

| | Rates | Fringes |
|---|---|---|
| PAINTER | | |
| Brush & Roller | $ 18.50 | 10.30 |
| Spray, Sandblast, Power Tools, Waterblast & Steam Cleaning | $ 19.50 | 10.30 |

---

PAIN1072-003 12/01/2011

BOYD, CARTER, ELLIOTT, GREENUP, LEWIS and ROWAN COUNTIES

| | Rates | Fringes |
|---|---|---|
| Painters: | | |
| Bridges; Locks; Dams; Tension Towers & Energized Substations | $ 29.33 | 14.20 |
| Power Generating Facilities | $ 26.09 | 14.20 |

---

PLUM0248-003 06/01/2012

BOYD, CARTER, ELLIOTT, GREENUP, LEWIS & ROWAN COUNTIES:

| | Rates | Fringes |
|---|---|---|
| Plumber and Steamfitter | $ 33.00 | 16.93 |

---

PLUM0392-007 06/01/2012

BRACKEN, CARROLL (Eastern Half), GALLATIN, GRANT, MASON, OWEN & ROBERTSON COUNTIES:

| | Rates | Fringes |
|---|---|---|
| Plumbers and Pipefitters | $ 29.30 | 16.59 |

---

PLUM0502-003 08/01/2011

BRECKINRIDGE, BULLITT, CARROLL (Western Half), FRANKLIN (Western three-fourths), GRAYSON, HARDIN, HENRY, JEFFERSON, LARUE, MARION, MEADE, NELSON, OLDHAM, SHELBY, SPENCER, TRIMBLE & WASHINGTON COUNTIES

| | Rates | Fringes |
|---|---|---|
| PLUMBER | $ 31.00 | 16.13 |

---

SUKY2010-160 10/08/2001

| | Rates | Fringes |
|---|---|---|

Truck drivers:

| | | |
|---|---|---|
| GROUP 1 | $ 16.57 | 7.34 |
| GROUP 2 | $ 16.68 | 7.34 |
| GROUP 3 | $ 16.86 | 7.34 |
| GROUP 4 | $ 16.96 | 7.34 |

TRUCK DRIVER CLASSIFICATIONS

GROUP 1 - Mobile Batch Truck Tender

GROUP 2 - Greaser; Tire Changer; & Mechanic Tender

GROUP 3 - Single Axle Dump; Flatbed; Semi-trailer or Pole Trailer when used to pull building materials and equipment; Tandem Axle Dump; Distributor; Mixer; & Truck Mechanic

GROUP 4 - Euclid & Other Heavy Earthmoving Equipment & Lowboy; Articulator Cat; 5-Axle Vehicle; Winch & A-Frame when used in transporting materials; Ross Carrier; Forklift when used to transport building materials; & Pavement Breaker

---

WELDERS - Receive rate prescribed for craft performing operation to which welding is incidental.

==========

Unlisted classifications needed for work not included within the scope of the classifications listed may be added after award only as provided in the labor standards contract clauses (29CFR 5.5 (a) (1) (ii)).

---

The body of each wage determination lists the classification and wage rates that have been found to be prevailing for the cited type(s) of construction in the area covered by the wage determination. The classifications are listed in alphabetical order of "identifiers" that indicate whether the particular rate is union or non-union.

Union Identifiers

An identifier enclosed in dotted lines beginning with characters other than "SU" denotes that the union classification and rate have found to be prevailing for that classification. Example: PLUM0198-005 07/01/2011. The first four letters , PLUM, indicate the international union and the four-digit number, 0198, that follows indicates the local union number or district council number where applicable , i.e., Plumbers Local 0198. The next number, 005 in the example, is an internal number used in processing the wage determination. The date, 07/01/2011, following these characters is the effective date of the most current negotiated rate/collective bargaining agreement which would be July 1, 2011 in the above example.

Union prevailing wage rates will be updated to reflect any changes in the collective bargaining agreements governing the rate.

Non-Union Identifiers

Classifications listed under an "SU" identifier were derived from survey data by computing average rates and are not union rates; however, the data used in computing these rates may include both union and non-union data. Example: SULA2004-007 5/13/2010. SU indicates the rates are not union rates, LA indicates the State of Louisiana; 2004 is the year of the survey; and 007 is an internal number used in producing the wage determination. A 1993 or later date, 5/13/2010, indicates the classifications and rates under that identifier were issued as a General Wage Determination on that date.

Survey wage rates will remain in effect and will not change until a new survey is conducted.

---

WAGE DETERMINATION APPEALS PROCESS

1.) Has there been an initial decision in the matter? This can be:

* an existing published wage determination
* a survey underlying a wage determination
* a Wage and Hour Division letter setting forth a position on a wage determination matter
* a conformance (additional classification and rate) ruling

On survey related matters, initial contact, including requests for summaries of surveys, should be with the Wage and Hour Regional Office for the area in which the survey was conducted because those Regional Offices have responsibility for the Davis-Bacon survey program. If the response from this initial contact is not satisfactory, then the process described in 2.) and 3.) should be followed.

With regard to any other matter not yet ripe for the formal process described here, initial contact should be with the Branch of Construction Wage Determinations. Write to:

Branch of Construction Wage Determinations
Wage and Hour Division
U.S. Department of Labor
200 Constitution Avenue, N.W.
Washington, DC 20210

2.) If the answer to the question in 1.) is yes, then an interested party (those affected by the action) can request review and reconsideration from the Wage and Hour Administrator (See 29 CFR Part 1.8 and 29 CFR Part 7). Write to:

Wage and Hour Administrator
U.S. Department of Labor

200 Constitution Avenue, N.W.
Washington, DC 20210

The request should be accompanied by a full statement of the interested party's position and by any information (wage payment data, project description, area practice material, etc.) that the requestor considers relevant to the issue.

3.) If the decision of the Administrator is not favorable, an interested party may appeal directly to the Administrative Review Board (formerly the Wage Appeals Board). Write to:

Administrative Review Board
U.S. Department of Labor
200 Constitution Avenue, N.W.
Washington, DC 20210

4.) All decisions by the Administrative Review Board are final.

==========

END OF GENERAL DECISION

Fringe benefit amounts are applicable for all hours worked except when otherwise noted.

These rates are listed pursuant to the Kentucky Determination No. CR-III-III- HWY dated September 5, 2012.

No laborer, workman or mechanic shall be paid at a rate less than that of a Journeyman except those classified as bona fide apprentices.

Apprentices or trainees shall be permitted to work as such subject to Administrative Regulations adopted by the Commissioner of Workplace Standards. Copies of these regulations will be furnished upon request from any interested person.

Before using apprentices on the job the contractor shall present to the Contracting Officer written evidence of registration of such employees in a program of a State apprenticeship and training agency approved and recognized by the U. S. Bureau of Apprenticeship and Training. In the absence of such a State agency, the contractor shall submit evidence of approval and registration by the U. S. Bureau of Apprenticeship and Training.

The contractor shall submit to the Contracting Officer, written evidence of the established apprenticeship-journeyman ratios and wage rates in the project area, which will be the basis for establishing such ratios and rates for the project under the applicable contract provisions.

**TO: EMPLOYERS/EMPLOYEES**

**PREVAILING WAGE SCHEDULE:**

**The wages indicated on this wage schedule are the least permitted to be paid for the occupations indicated. When an employee works in more than one classification, the employer must record the number of hours worked in each classification at the prescribed hourly base rate.**

**OVERTIME:**

**Overtime is to be paid after an employee works eight (8) hours a day or forty (40) hours a week, whichever gives the employee the greater wages. At least time and one-half the base rate is required for all overtime. A laborer, workman or mechanic and an employer may enter into a written agreement or a collective bargaining agreement to work more than eight (8) hours a calendar day but not more than ten (10) hours a calendar day for the straight time hourly rate. Wage violations or questions should be directed to the designated Engineer or the undersigned.**

Ryan Griffith, Director
Division of Construction Procurement
Frankfort, Kentucky 40622

# PART IV

# INSURANCE

# INSURANCE

The Contractor shall procure and maintain the following insurance in addition to the insurance required by law:

1) Commercial General Liability-Occurrence form – not less than $2,000,000 General aggregate, $2,000,000 Products & Completed Aggregate, $1,000,000 Personal & Advertising, $1,000,000 each occurrence.

2) Automobile Liability- $1,000,000 per accident

3) Employers Liability:

   a) $100,000 Each Accident Bodily Injury
   b) $500,000 Policy limit Bodily Injury by Disease
   c) $100,000 Each Employee Bodily Injury by Disease

4) The insurance required above must be evidenced by a Certificate of Insurance and this Certificate of Insurance must contain one of the following statements:
   a) "policy contains no deductible clauses."
   b) "policy contains _____ (amount) deductible property damage clause but company will pay claim and collect the deductible from the insured."

5) KENTUCKY WORKMEN'S COMPENSATION INSURANCE. The contractor shall furnish evidence of coverage of all his employees or give evidence of self-insurance by submitting a copy of a certificate issued by the Workmen's Compensation Board.

The cost of insurance is incidental to all contract items. All subcontractors must meet the same minimum insurance requirements.

# PART V

# BID ITEMS

121061

# PROPOSAL BID ITEMS



**Report Date** 11/9/12

## Section: 0001 - PAVING

| LINE | BID CODE | ALT | DESCRIPTION | QUANTITY | UNIT | UNIT PRICI | FP | AMOUNT |
|---|---|---|---|---|---|---|---|---|
| 0010 | 00001 | | DGA BASE | 2,048.00 | TON | | $ | |
| 0020 | 00100 | | ASPHALT SEAL AGGREGATE | 498.00 | TON | | $ | |
| 0030 | 00103 | | ASPHALT SEAL COAT | 124.00 | TON | | $ | |
| 0040 | 00217 | | CL4 ASPH BASE 1.00D PG64-22 | 133.00 | TON | | $ | |
| 0050 | 00342 | | CL4 ASPH SURF 0.38A PG76-22 | 16,812.00 | TON | | $ | |

## Section: 0002 - ROADWAY

121061

# PROPOSAL BID ITEMS



**Report Date** 11/9/12

| LINE | BID CODE | ALT | DESCRIPTION | QUANTITY | UNIT | UNIT PRICI | FP | AMOUNT |
|---|---|---|---|---|---|---|---|---|
| 0060 | 00078 | | CRUSHED AGGREGATE SIZE NO 2 | 3,000.00 | TON | | $ | |
| 0070 | 01028 | | PERF PIPE HEADWALL TY 3-4 IN | 4.00 | EACH | | $ | |
| 0080 | 01825 | | ISLAND CURB AND GUTTER | 5.00 | LF | | $ | |
| 0090 | 01982 | | DELINEATOR FOR GUARDRAIL MONO DIRECTIONAL WHITE | 250.00 | EACH | | $ | |
| 0100 | 01983 | | DELINEATOR FOR GUARDRAIL MONO DIRECTIONAL YELLOW | 20.00 | EACH | | $ | |
| 0110 | 01984 | | DELINEATOR FOR BARRIER - WHITE | 20.00 | EACH | | $ | |
| 0120 | 02003 | | RELOCATE TEMP CONC BARRIER | 700.00 | LF | | $ | |
| 0130 | 02268 | | REMOVE & REPLACE FENCE | 39,300.00 | LF | | $ | |
| 0140 | 02347 | | WATER GATE TYPE 1 | 6.00 | EACH | | $ | |
| 0150 | 02365 | | CRASH CUSHION TYPE IX-A | 1.00 | EACH | | $ | |
| 0160 | 02369 | | GUARDRAIL END TREATMENT TYPE 2A | 7.00 | EACH | | $ | |
| 0170 | 02381 | | REMOVE GUARDRAIL | 822.50 | LF | | $ | |
| 0180 | 02483 | | CHANNEL LINING CLASS II | 1,105.00 | TON | | $ | |
| 0190 | 02484 | | CHANNEL LINING CLASS III | 1,500.00 | TON | | $ | |
| 0200 | 02562 | | SIGNS | 744.00 | SQFT | | $ | |
| 0210 | 02575 | | DITCHING AND SHOULDERING | 18,757.00 | LF | | $ | |
| 0220 | 02650 | | MAINTAIN & CONTROL TRAFFIC | 1.00 | LS | | $ | |
| 0230 | 02671 | | PORTABLE CHANGEABLE MESSAGE SIGN | 6.00 | EACH | | $ | |
| 0240 | 02676 | | MOBILIZATION FOR MILL & TEXT | 1.00 | LS | | $ | |
| 0250 | 02677 | | ASPHALT PAVE MILLING & TEXTURING | 16,812.00 | TON | | $ | |
| 0260 | 02696 | | SHOULDER RUMBLE STRIPS-SAWED | 76,021.00 | LF | | $ | |
| 0270 | 02775 | | ARROW PANEL | 2.00 | EACH | | $ | |
| 0280 | 02898 | | RELOCATE CRASH CUSHION | 1.00 | EACH | | $ | |
| 0290 | 03171 | | CONCRETE BARRIER WALL TYPE 9T | 700.00 | LF | | $ | |
| 0300 | 03240 | | BASE FAILURE REPAIR | 2,812.00 | SQYD | | $ | |
| 0310 | 03383 | | PVC PIPE-4 IN | 20.00 | LF | | $ | |
| 0320 | 05950 | | EROSION CONTROL BLANKET | 15,000.00 | SQYD | | $ | |
| 0330 | 06412 | | STEEL POST MILE MARKERS | 8.00 | EACH | | $ | |
| 0340 | 06417 | | FLEXIBLE DELINEATOR POST-W | 183.00 | EACH | | $ | |
| 0350 | 06418 | | FLEXIBLE DELINEATOR POST-Y | 21.00 | EACH | | $ | |
| 0360 | 06511 | | PAVE STRIPING-TEMP PAINT-6 IN | 5,000.00 | LF | | $ | |
| 0370 | 06546 | | PAVE STRIPING-THERMO-12 IN W | 60.00 | LF | | $ | |
| 0380 | 06592 | | PAVEMENT MARKER TYPE V-B W/R | 131.00 | EACH | | $ | |
| 0390 | 06593 | | PAVEMENT MARKER TYPE V-B Y/R | 107.00 | EACH | | $ | |
| 0400 | 08903 | | CRASH CUSHION TY VI CLASS BT TL3 | 1.00 | EACH | | $ | |
| 0410 | 10020NS | | FUEL ADJUSTMENT | 23,628.00 | DOLL | $1.00 | $ | $23,628.00 |
| 0420 | 10030NS | | ASPHALT ADJUSTMENT | 41,637.00 | DOLL | $1.00 | $ | $41,637.00 |
| 0430 | 20071EC | | JOINT ADHESIVE | 37,514.00 | LF | | $ | |
| 0440 | 21802EN | | G/R STEEL W BEAM-S FACE (7 FT POST) | 822.50 | LF | | $ | |
| 0450 | 23143ED | | KPDES PERMIT AND TEMP EROSION CONTROL | 1.00 | LS | | $ | |
| 0460 | 23237EN10W | | WATERBLAST STRIPE REMOVAL | 2,500.00 | LF | | $ | |
| 0470 | 24189ER | | DURABLE WATERBORNE MARKING-6 IN W | 49,686.00 | LF | | $ | |
| 0480 | 24190ER | | DURABLE WATERBORNE MARKING-6 IN Y | 40,620.00 | LF | | $ | |
| 0490 | 24191ER | | DURABLE WATERBORNE MARKING-12 IN W | 3,078.00 | LF | | $ | |
| 0500 | 24489EC | | INLAID PAVEMENT MARKER | 918.00 | EACH | | $ | |

121061

# PROPOSAL BID ITEMS



**Report Date** 11/9/12

## Section: 0003 - BRIDGE

| LINE | BID CODE | ALT | DESCRIPTION | QUANTITY | UNIT | UNIT PRICI | FP | AMOUNT |
|---|---|---|---|---|---|---|---|---|
| 0510 | 08504 | | EPOXY SAND SLURRY | 117.00 | SQYD | | $ | |
| 0520 | 08510 | | REM EPOXY BIT FOREIGN OVERLAY | 1,523.00 | SQYD | | $ | |
| 0530 | 08526 | | CONC CLASS M FULL DEPTH PATCH | 4.00 | CUYD | | $ | |
| 0540 | 08534 | | CONCRETE OVERLAY-LATEX | 63.40 | CUYD | | $ | |
| 0550 | 08549 | | BLAST CLEANING | 1,660.00 | SQYD | | $ | |
| 0560 | 24094EC | | PARTIAL DEPTH PATCHING | 12.00 | CUYD | | $ | |

## Section: 0004 - MOB AND DEMOB

| LINE | BID CODE | ALT | DESCRIPTION | QUANTITY | UNIT | UNIT PRICI | FP | AMOUNT |
|---|---|---|---|---|---|---|---|---|
| 0570 | 02568 | | MOBILIZATION | 1.00 | LS | | $ | |
| 0580 | 02569 | | DEMOBILIZATION | 1.00 | LS | | $ | |