CALL NO. 319

CONTRACT ID. 142903

CARTER COUNTY

FED/STATE PROJECT NUMBER FE02 022 6062 B00035N

DESCRIPTION BRIDGE OVER TYGARTS CREEK (MP 0.112)

WORK TYPE BRIDGE DECK RESTORATION & WATERPROOFING

PRIMARY COMPLETION DATE 11/15/2015

LETTING DATE: October 24,2014

Sealed Bids will be received electronically through the Bid Express bidding service until 10:00 AM EASTERN DAYLIGHT TIME October 24,2014. Bids will be publicly announced at 10:00 AM EASTERN DAYLIGHT TIME.

NO PLANS ASSOCIATED WITH THIS PROJECT.

REQUIRED BID PROPOSAL GUARANTY: Not less than 5% of the total bid.

TABLE OF CONTENTS

PART I SCOPE OF WORK

- PROJECT(S), COMPLETION DATE(S), & LIQUIDATED DAMAGES
- CONTRACT NOTES
- STATE CONTRACT NOTES
- SPECIAL NOTE(S) APPLICABLE TO PROJECT
- LIQUIDATED DAMAGES
- TRAFFIC CONTROL PLAN
- SKETCH MAP(S)
- BRIDGE DRAWINGS

PART II SPECIFICATIONS AND STANDARD DRAWINGS

- SPECIFICATIONS REFERENCE
- SUPPLEMENTAL SPECIFICATION
- STANDARD DRAWINGS THAT APPLY

PART III EMPLOYMENT, WAGE AND RECORD REQUIREMENTS

- LABOR AND WAGE REQUIREMENTS
- EXECUTIVE BRANCH CODE OF ETHICS
- KENTUCKY EQUAL EMPLOYMENT OPPORTUNITY ACT OF 1978 LOCALITY 1,2,3,4 / STATE (OVER 250,000)
- PROJECT WAGE RATES LOCALITY 3 / FEDERAL & STATE

PART IV INSURANCE

PART V BID ITEMS

PART I

SCOPE OF WORK

ADMINISTRATIVE DISTRICT - 09

CONTRACT ID - 142903

FE02 022 6062 B00035N

COUNTY - CARTER

PCN - MB02260621401
FE02 022 6068 B00035N

KY 6062 (MP 0.111). BRIDGE OVER TYGARTS CREEKBRIDGE DECK RESTORATION & WATERPROOFING
GEOGRAPHIC COORDINATES LATITUDE 38:18:30.45 LONGITUDE 83:08:40.79

COMPLETION DATE(S):

COMPLETED BY 11/15/2015	APPLIES TO ENTIRE CONTRACT
30 CALENDAR DAYS	APPLIES TO 022B00035N

CONTRACT NOTES

PROPOSAL ADDENDA

All addenda to this proposal must be applied when calculating bid and certified in the bid packet submitted to the Kentucky Department of Highways. Failure to use the correct and most recent addenda may result in the bid being rejected.

BID SUBMITTAL

Bidder must use the Department's Expedite Bidding Program available on the Internet web site of the Department of Highways, Division of Construction Procurement. (www.transportation.ky.gov/construction-procurement)

The Bidder must download the bid file located on the Bid Express website (www.bidx.com) to prepare a bid packet for submission to the Department. The bidder must submit electronically using Bid Express.

JOINT VENTURE BIDDING

Joint venture bidding is permissible. All companies in the joint venture must be prequalified in one of the work types in the Qualifications for Bidders for the project. The bidders must get a vendor ID for the joint venture from the Division of Construction Procurement and register the joint venture as a bidder on the project. Also, the joint venture must obtain a digital ID from Bid Express to submit a bid. A joint bid bond of 5% may be submitted for both companies or each company may submit a separate bond of 5%.

UNDERGROUND FACILITY DAMAGE PROTECTION

The contractor is advised that the Underground Facility Damage Protection Act of 1994, became law January 1, 1995. It is the contractor's responsibility to determine the impact of the act regarding this project, and take all steps necessary to be in compliance with the provision of the act.

SPECIAL NOTE FOR PIPE INSPECTION

Contrary to Section 701.03.08 of the 2012 Standard Specifications for Road and Bridge Construction and Kentucky Method 64-114, certification by the Kentucky Transportation Center for prequalified Contractors to perform laser/video inspection is not required on this contract. It will continue to be a requirement for the Contractor performing any laser/video pipe inspection to be prequalified for this specialized item with the Kentucky Transportation Cabinet-Division of Construction Procurement.

SPECIAL NOTE FOR COMPOSITE OFFSET BLOCKS

Contrary to the Standard Drawings (2012 edition) the Cabinet will allow 6" composite offset blocks in lieu of wooden offset blocks, except as specified on proprietary end treatments and crash cushions. The composite blocks shall be selected from the Cabinet's List of Approved Materials.

REGISTRATION WITH THE SECRETARY OF STATE BY A FOREIGN ENTITY

Pursuant to KRS 176.085(1)(b), an agency, department, office, or political subdivision of the Commonwealth of Kentucky shall not award a state contract to a person that is a foreign entity required by KRS 14A.9-010 to obtain a certificate of authority to transact business in the Commonwealth ("certificate") from the Secretary of State under KRS 14A.9-030 unless the person produces the certificate within fourteen (14) days of the bid or proposal opening. If the foreign entity is not required to obtain a certificate as provided in KRS 14A.9-010, the foreign entity should identify the applicable exception. Foreign entity is defined within KRS 14A.1-070.

For all foreign entities required to obtain a certificate of authority to transact business in the Commonwealth, if a copy of the certificate is not received by the contracting agency within the time frame identified above, the foreign entity's solicitation response shall be deemed non-responsive or the awarded contract shall be cancelled.

Businesses can register with the Secretary of State at https://secure.kentucky.gov/sos/ftbr/welcome.aspx .

SPECIAL NOTE FOR PROJECT QUESTIONS DURING ADVERTISEMENT

Questions about projects during the advertisement should be submitted in writing to the Division of Construction Procurement. This may be done by fax (502) 564-7299 or email to kytc.projectquestions@ky.gov. The Department will attempt to answer all submitted questions. The Department reserves the right not to answer if the question is not pertinent or does not aid in clarifying the project intent.

The deadline for posting answers will be 3:00 pm Eastern Daylight Time, the day preceding the Letting. Questions may be submitted until this deadline with the understanding that the later a question is submitted, the less likely an answer will be able to be provided.

The questions and answers will be posted for each Letting under the heading "Questions & Answers" on the Construction Procurement website (www.transportation.ky.gov/contract). The answers provided shall be considered part of

this Special Note and, in case of a discrepancy, will govern over all other bidding documents.

HARDWOOD REMOVAL RESTRICTIONS

The US Department of Agriculture has imposed a quarantine in Kentucky and several surrounding states, to prevent the spread of an invasive insect, the emerald ash borer. Hardwood cut in conjunction with the project may not be removed from the state. Chipping or burning on site is the preferred method of disposal.

INSTRUCTIONS FOR EXCESS MATERIAL SITES AND BORROW SITES

Identification of excess material sites and borrow sites shall be the responsibility of the Contractor. The Contractor shall be responsible for compliance with all applicable state and federal laws and may wish to consult with the US Fish and Wildlife Service to seek protection under Section 10 of the Endangered Species Act for these activities.

ACCESS TO RECORDS

The contractor, as defined in KRS 45A.030 (9) agrees that the contracting agency, the Finance and Administration Cabinet, the Auditor of Public Accounts, and the Legislative Research Commission, or their duly authorized representatives, shall have access to any books, documents, papers, records, or other evidence, which are directly pertinent to this contract for the purpose of financial audit or program review. Records and other prequalification information confidentially disclosed as part of the bid process shall not be deemed as directly pertinent to the contract and shall be exempt from disclosure as provided in KRS 61.878(1)(c). The contractor also recognizes that any books, documents, papers, records, or other evidence, received during a financial audit or program review shall be subject to the Kentucky Open Records Act, KRS 61.870 to 61.884.

In the event of a dispute between the contractor and the contracting agency, Attorney General, or the Auditor of Public Accounts over documents that are eligible for production and review, the Finance and Administration Cabinet shall review the dispute and issue a determination, in accordance with Secretary's Order 11-004. (See attachment)

10/29/12

Commonwealth of Kentucky
Finance and Administration Cabinet
OFFICE OF THE SECRETARY
Room 383, Capitol Annex
702 Capital Avenue
Frankfort, KY 40601-3462
(502) 564-4240
Fax (502) 564-6785

Steven L. Beshear
Governor

Lori H. Flanery
Secretary

SECRETARY'S ORDER 11-004

FINANCE AND ADMINISTRATION CABINET

Vendor Document Disclosure

WHEREAS, in order to promote accountability and transparency in governmental operations, the Finance and Administration Cabinet believes that a mechanism should be created which would provide for review and assistance to an Executive Branch agency if said agency cannot obtain access to documents that it deems necessary to conduct a review of the records of a private vendor that holds a contract to provide goods and/or services to the Commonwealth; and

WHEREAS, in order to promote accountability and transparency in governmental operations, the Finance and Administration Cabinet believes that a mechanism should be created which would provide for review and assistance to an Executive Branch agency if said agency cannot obtain access to documents that it deems necessary during the course of an audit, investigation or any other inquiry by an Executive Branch agency that involves the review of documents; and

WHEREAS, KRS 42.014 and KRS 12.270 authorizes the Secretary of the Finance and Administration Cabinet to establish the internal organization and assignment of functions which are not established by statute relating to the Finance and Administration Cabinet; further, KRS Chapter 45A.050 and 45A.230 authorizes the Secretary of the Finance and Administration Cabinet to procure, manage and control all supplies and services that are procured by the Commonwealth and to intervene in controversies among vendors and state agencies; and

NOW, THEREFORE, pursuant to the authority vested in me by KRS 42.014, KRS 12.270, KRS 45A.050, and 45A.230, I, Lori H. Flanery, Secretary of the Finance and Administration Cabinet, do hereby order and direct the following:

I. Upon the request of an Executive Branch agency, the Finance and Administration Cabinet ("FAC") shall formally review any dispute arising where the agency has requested documents from a private vendor that holds a state contract and the vendor has refused access to said documents under a claim that said documents are not directly pertinent or relevant to the agency's inquiry upon which the document request was predicated.

II. Upon the request of an Executive Branch agency, the FAC shall formally review any situation where the agency has requested documents that the agency deems necessary to

conduct audits, investigations or any other formal inquiry where a dispute has arisen as to what documents are necessary to conclude the inquiry.

III. Upon receipt of a request by a state agency pursuant to Sections I & II, the FAC shall consider the request from the Executive Branch agency and the position of the vendor or party opposing the disclosure of the documents, applying any and all relevant law to the facts and circumstances of the matter in controversy. After FAC's review is complete, FAC shall issue a Determination which sets out FAC's position as to what documents and/or records, if any, should be disclosed to the requesting agency. The Determination shall be issued within 30 days of receipt of the request from the agency. This time period may be extended for good cause.

IV. If the Determination concludes that documents are being wrongfully withheld by the private vendor or other party opposing the disclosure from the state agency, the private vendor shall immediately comply with the FAC's Determination. Should the private vendor or other party refuse to comply with FAC's Determination, then the FAC, in concert with the requesting agency, shall effectuate any and all options that it possesses to obtain the documents in question, including, but not limited to, jointly initiating an action in the appropriate court for relief.

V. Any provisions of any prior Order that conflicts with the provisions of this Order shall be deemed null and void.

SPECIAL NOTE FOR RECIPROCAL PREFERENCE

Reciprocal preference to be given by public agencies to resident bidders

By reference, KRS 45A.490 to 45A.494 are incorporated herein and in compliance regarding the bidders residency. Bidders who want to claim resident bidder status should complete the Affidavit for Claiming Resident Bidder Status along with their bid in the Expedite Bidding Program. Submittal of the Affidavit should be done along with the bid in Bid Express.

SPECIAL NOTE FOR BRIDGE RESTORATION AND WATERPROOFING WITH CONCRETE OVERLAYS

I. DESCRIPTION. Perform all work in accordance with the Kentucky Transportation Cabinet, Department of Highway's 2012 Standard Specifications for Road and Bridge Construction and applicable Supplemental Specifications, the Standard Drawings, this Note, and the attached detail drawings. Section references are to the Standard Specifications.

This work consists of the following: (1) Furnish all labor, materials, tools, and equipment; (2) Machine prep the existing slab; (3) Complete full-depth and partial depth repairs as directed by the Engineer; (4) Repair/replace damaged and corroded reinforcing bars; (5) Place new concrete overlay and epoxy-sand slurry in accordance with Section 606; (6) Complete asphalt approach pavement; (7) Maintain and control traffic; and (8) Any other work specified as part of this contract.

All construction will be in accordance with Section 606 unless otherwise specified.

II. MATERIALS.

A. Latex Concrete. See Section 606.03.17.

B. Class "M" Concrete. Use either "M1" or "M2". See Section 601.

C. Bituminous Asphalt. Use CL2 ASPH SURF 0.38D PG64-22.

D. Epoxy-Sand Slurry. See Section 606.03.10.

III. CONSTRUCTION.

A. Machine prep of existing slab. Remove concrete from existing slab to a depth of at least ¼" below the existing surface, and remove all patches completely, in accordance with the requirements of Section 606.03.03. See Special Note for Use of Hydrodemolition Method.

B. Partial Depth Slab Repair and Latex Overlay. Remove areas determined to be unsound by the Engineer via hydrodemolition or via hand held jackhammers weighing less than 45lbs in accordance with Section 606.02.10 D. Repair/Replace all damaged or severely corroded reinforcing bars prior to partial depth repair operation. The Department will not measure material removal and will consider this work incidental to the bid item "PARTIAL DEPTH PATCHING". Mix and place Latex Modified Concrete Overlay in accordance with Sections 606.03.08 and 606.03.17.

C. Asphalt Approach Pavement. Mill each existing asphalt approach for a distance of 100' from the bridge end. Remove the bituminous material uniformly by making an edge key, so as to provide a smooth transition to the finished bridge when a new bituminous overlay of compacted depth of approximately 1½" is added to the approaches. The grinding depth may vary depending of the condition of the existing approach and final elevation of bridge end. Dispose of all removed material away from the site.

D. Surface Texturing. Texture the concrete surface of the overlay in accordance with Section 609.03.10.

IV. MEASUREMENT. See Section 606 and the following:

A. Latex Modified Concrete for Overlay. The Department will measure the quantity in cubic yards using the theoretical volume as follows for each bridge:

022B00035N (392'x20'x1.50") = 36.3 cuyd

B. Latex Modified Concrete for Partial Depth Patching and variable thickness of Overlay. The Department will measure the quantity in cubic yards by deducting the theoretical volume of bridge deck overlay (LMC) from the total volume (as indicated by the batch quantity tickets) of Concrete required to obtain the finished grade shown on the Plans or established by the Engineer.

C. Machine Prep of Slab. The Department will measure the machine preparation of the existing bridge deck in square yards, which shall include all labor, equipment, and material needed to complete this work.

D. Steel Reinforcement. The Department will measure any reinforcing steel necessary for the partial or full depth patch in pounds, which shall include all labor, equipment, and material needed to complete this work.

E. Asphalt Approach Pavement. The Department will measure the quantity in square yards, which shall include all labor, equipment, and material needed to complete this work.

V. PAYMENT. See Section 606 and the following:

A. Latex Modified Concrete for Overlay. The Department will make payment for the Latex Modified Concrete under bid item #08534 "CONCRETE OVERLAY – LATEX" for the quantity in cubic yards complete in place.

B. Latex Modified Concrete for Partial Depth Patching and variable thickness of Overlay. The Department will make payment for the Partial Depth Patching under bid item #24094EC "PARTIAL DEPTH PATCHING". Payment will be for the quantity per cubic yard complete in place.

C. Machine Prep of Slab. The Department will make payment for the removal of the existing overlay under bid item #08551 "MACHINE PREP OF SLAB". Payment will be for the square yard complete.

D. Steel Reinforcement. The Department will make payment for steel reinforcement, if necessary, under bid item #08150 "STEEL REINFORCEMENT". Payment will be at the unit price per pound.

E. Asphalt Approach Pavement. The Department will make payment for the completed and accepted quantity of this work under the bid item #03304 "BRIDGE OVERLAY APPROACH PAVEMENT".

SPECIAL NOTE FOR REPLACING EXPANSION DAMS AND/OR INSTALLING ARMORED EDGES FOR CONCRETE ON BRIDGES

I. DESCRIPTION. Perform all work in accordance with the Kentucky Transportation Cabinet, Department of Highway's 2012 Standard Specifications for Road and Bridge Construction and applicable Supplemental Specifications, the Standard Drawings, this Note, and the attached detail drawings. Section references are to the Standard Specifications.

This work consists of the following: (1) Furnish all labor, materials, tools, and equipment; (2) Remove existing concrete and expansion device(s) and/or bridge ends; (3) Install armored edges and new concrete as specified and in accordance with the attached detail drawings; (4) Install new joint seals (where required); (5) Maintain and control traffic; and (6) Any other work specified as part of this contract.

II. MATERIALS.

A. Class "M" Concrete. Use either "M1" or "M2". See Section 601.

B. Structural Steel. Use new, commercial grade steel suitable for welding. The Engineer will base acceptance on visual inspection. For armored edges that make up the 4" neoperene joint, use Steelflex Strip Seal expansion joint by DS Brown, or approved equal. To be approved, armored edge extrusions must be embedded.

C. Stud Anchors. The armored edge stud anchors are ¾" x 6" embedded stud shear connectors conforming to ASTM A108, Grade 1015 (Nelson Studs or equal).

D. Steel Reinforcement. Use Grade 60. See Section 602.

E. Epoxy Bond Coat. See Section 511.

F. Neoprene Strip Seals. See attached detail drawings and Section 807.

III. EQUIPMENT.

A. Hammers. See Section 606.02.10 B.

B. Sawing Equipment. See Section 606.02.10 C.

C. Hydraulic Impact Equipment. See Section 606.02.10 D.

IV. CONSTRUCTION.

A. Remove Existing Materials. Remove existing Expansion Dam, Bridge End, Armored Edges and specified areas of concrete as shown on the attached sketches. Remove debris and/or expansion joint filler as directed by the Engineer. . Clean and leave all existing steel reinforcement encountered in place. Damaged steel reinforcement will be repaired/replaced as directed by the Engineer at no additional cost to the Department.

Dispose of all removed material entirely away from the job site. This work is incidental to the contract unit price for "Expansion Joint Replacement" or "Armored Edge for Concrete".

B. Place New Concrete and Armored Edges. After all specified existing materials have been removed; place new armored edges to match the grade of the proposed overlay or to match the original grade (See attached detail drawings). Place the new Class "M" concrete to the scarified grade and finish to receive the new overlay or

place the new Class “M” concrete to the original grade and finish with broom strokes drawn transversely from curb to curb.

All new structural steel shall be cleaned and painted in accordance with requirements of Section 607.03.23, except that surfaces to come in contact with concrete are not to be painted.

Blast clean all areas of existing concrete and structural steel to come in contact with new concrete until free of all laitance and deleterious substances immediately prior to the placement of the Class "M" Concrete. The surface areas of existing concrete to come in contact with the new Class "M" Concrete are to be coated with an epoxy bond coat immediately prior to placing new concrete in accordance with Section 511. The interfaces of the new and old concrete shall be as nearly vertical and horizontal as possible.

C. Additional Steel Reinforcement. Furnish for replacement, as directed by the Engineer, 2550 linear feet of #4 steel reinforcing bars in 20’ lengths. Place these bars in areas deemed by the Engineer to require additional reinforcement. Field cutting and bending is permitted. Do not place any additional steel reinforcement above the height of the top row of Nelson Studs on the armored edges. Ensure that all exposed steel reinforcement is tied in accordance with Section 602.03.04 prior to pouring the new Class “M” concrete. Deliver unused bars to the Local County Maintenance Barn. Payment will be made in accordance with Section 602.

D. Stage Construction. Installation of concrete and armored edges in two (or more if specified) stages is necessary. Join the armored edges at or near the centerline of the roadway or lane line, field weld and grind smooth.

E. Preformed Neoprene Joint Seal. Place the preformed joint seal in one continuous, unbroken length. Place neoprene strip seals as recommended by the manufacturer and in accordance with Section 609.03.04

F. Shop Plans. Shop plans will <u>not</u> be required. The Contractor is responsible for obtaining field measurements and supplying properly sized materials to complete the work.

V. MEASUREMENT.

A. Expansion Joint Replacement – 4". The Department will measure the quantity in linear feet from gutterline to gutterline along the centerline of the joint.

B. Armored Edge for Concrete. The Department will measure the quantity in linear feet from gutterline to gutterline along the face of the bridge end.

C. Steel Reinforcement. See Section 602.

VI. PAYMENT.

A. Expansion Joint Replacement – 4". Payment at the contract unit price per linear foot is full compensation for removing specified existing materials, furnishing and installing the new armored edges, concrete, neoprene strip seal or preformed silicone seal and all incidental items necessary to complete the work (except the overlay material) within the specified pay limits as specified by this note and as shown on the attached detail drawings.

B. Armored Edge for Concrete. Payment at the contract unit price per linear foot is full compensation for removing specified existing materials, furnishing and installing

the new armored edges, concrete and all incidental items necessary to complete the work (except the overlay material) within the specified pay limits as specified by this note and as shown on the attached detail drawings.

C. Steel Reinforcement. See Section 602.

SPECIAL NOTE FOR ELIMINATING TRANSVERSE JOINTS ON BRIDGES

I. DESCRIPTION. Perform all work in accordance with the Kentucky Transportation Cabinet, Department of Highway's 2012 Standard Specifications for Road and Bridge Construction.

Remove existing concrete and existing joint material to eliminate the transverse joint. Install additional reinforcing steel and place concrete.

II. MATERIALS.

A. Class "M" Concrete. Use either "M1" or "M2". See Section 601.

B. Steel Reinforcement. Use Grade 60. See Section 602.

C. Epoxy Bond Coat. See Section 511.

III. EQUIPMENT.

A. Hammers. See Section 606.02.10 B.

B. Sawing Equipment. See Section 606.02.10 C.

C. Hydraulic Impact Equipment. See Section 606.02.10 D.

IV. CONSTRUCTION.

A. Remove Existing Materials. Remove the existing transverse joints, joint filler, and specified areas of concrete as shown on the plans, in accordance with Section 606.02.10 and 606.03.03, and as directed by the Engineer. Clean and leave all existing steel reinforcement encountered in place. Damaged steel reinforcement will be repaired/replaced as directed by the Engineer at no additional cost to the Department. Dispose of all removed material entirely away from the job site. This work is incidental to the contract unit price for "Eliminate Transverse Joint".

B. Additional Steel Reinforcement. Furnish for this work steel reinforcing bars as shown on the plans. Splice these bars to the existing longitudinal reinforcement in the deck and curb/sidewalk in the areas of removed concrete to tie the slabs together as shown on the plans. Ensure that all exposed steel reinforcement is tied in accordance with Section 602.03.04 prior to pouring the new Class "M" concrete.

C. Place New Concrete. Blast clean all areas of existing concrete and structural steel to come in contact with new concrete until free of all laitance and deleterious substances immediately prior to the placement of the Class "M" Concrete. The surface areas of existing concrete to come in contact with the new Class "M" Concrete are to be coated with an epoxy bond coat immediately prior to placing new concrete in accordance with Section 511. The interfaces of the new and old concrete shall be as nearly vertical and horizontal as possible.

Place new Class "M" Concrete to the specified grade and finish to receive the new overlay or as shown on the plans. On the sidewalk and curb, place the new concrete to original grade and finish to match the existing curb/sidewalk.

V. MEASUREMENT.

A. Eliminate Transverse Joint. The Department will measure the quantity in linear feet from plinth to plinth perpendicular to the centerline of the bridge.

B. Steel Reinforcement. See Section 602.

VI. PAYMENT.

A. Eliminate Transverse Joint. Payment at the contract unit price per linear foot is full compensation for furnishing equipment, labor, tools and materials needed to complete removal and disposal of the specified existing materials, cleaning and straighting of existing steel reinforcement, furnishing and installing the concrete, and all incidental items necessary to complete the work (except the overlay material if specified elsewhere in the contract) within the specified pay limits as indicated on the drawings.

B. Steel Reinforcement. See Section 602.

NOTES FOR BRIDGE SUBSTRUCTURE CONCRETE PATCHING

These Notes or designated portions thereof, apply where so indicated on the plans, proposals or bidding instruction.

I. DESCRIPTION. Perform all work in accordance with the Department's 2012 Standard Specifications, and applicable Supplemental Specifications, the attached sketches, and these Notes. Section references are to the Standard Specifications.

This work consists of: (1) Furnish all labor, materials, tools, and equipment; (2) Remove existing spalled/delaminated concrete; (3) Prepare the existing surface for concrete patching; (4) Place hook fasteners and welded wire fabric over surfaces to be repaired (where applicable); (5) Apply concrete patching as specified by this note and as shown on the attached detail drawings; (6) Finish and cure the new Concrete Patches; (7) Maintain & control traffic; and, (8) Any other work specified as part of this contract.

II. MATERIALS.

A. Concrete. Approved Concrete Product for Vertical and Overhead Repair Patch.

B. Steel Reinforcement. Use Grade 60. See Section 602

C. Welded Steel Wire Fabric (WWF). Conform to Section 811

D. Hook Fasteners. Use commercial grade galvanized hook fasteners. Minimum 3/16" diameter.

III. CONSTRUCTION.

A. Concrete Removal and Preparation. The Contractor, as directed by the Engineer shall locate and remove all loose, spalled, deteriorated and delaminated concrete. Sounding shall be used to locate delaminated areas. Care shall be exercised not to damage areas of sound concrete or reinforcing steel during concrete removal operations. Unless specifically *directed by the Engineer*, depth of removal shall not exceed 6 inches. Concrete removal shall be in accordance with a sequence approved by the Engineer.

Concrete removal shall be accomplished by chipping with hand picks, chisels or light duty pneumatic or electric chipping hammers (not to exceed 15 lbs.). If sound concrete is encountered before existing reinforcing steel is exposed, the surface shall be prepared and repaired without further removal of the concrete. When corroded reinforcing steel is exposed, concrete removal shall continue until there is a minimum ¾ inch clearance around the exposed, corroded reinforcing bar. Care shall be taken to not damage bond to adjacent non-exposed reinforcing steel during concrete removal processes.

The perimeter of all areas where concrete is removed shall be tapered at an approximately 45° angle, except that the outer edges of all chipped areas shall be saw cut to minimum depth of ¾ inch to prevent featheredging unless otherwise approved by the Engineer.

After all deteriorated concrete has been removed; the repair surface to receive concrete patching shall be prepared by abrasive blast cleaning. Abrasive blast

cleaning shall remove all fractured surface concrete and all traces of any unsound material or contaminants such as oil, grease, dirt, slurry, or any materials which could interfere with the bond of freshly placed concrete.

The Contractor shall dispose all removed material off State Right Of Way in an approved site.

B. **Steel Reinforcement.** All corroded reinforcing steel exposed during concrete removal shall have corrosion products removed by abrasive grit blasting or wire brush whichever is more appropriate. Furnish for replacement, as directed by the Engineer, additional linear feet of steel reinforcing bars ½" diameter by 20-foot lengths. Place these bars in areas deemed by the Engineer to require additional reinforcement. Field cutting and bending is permitted. Deliver unused bars to the nearest County Maintenance Barn. Payment will be made in accordance with Section 602.

Reinforcing steel displaying deep pitting or loss of more than 20 percent of cross-sectional area shall be removed and replaced. Such bars shall be placed in accordance with the recommendations of ACI 506R, Sections 5.4 and 5.5. In particular, bars shall not be bundled in lapped splices, but shall be placed such that the minimum spacing around each bar is three times the maximum aggregate size to allow for proper encapsulation with concrete patching.

Intersecting reinforcing bars shall be tightly secured to each other using tie wire and adequately supported to minimize movement during concrete placement.

Welded wire fabric (WWF) shall be provided as shown on the attached sketches and at each repair area larger than 1 square foot if the depth of the repair exceeds 3 inches from the original dimension of the repaired member. Sheets of adjoining WWF shall be lapped by at least one and one-half spaces at all intersections, in both directions, and be securely fastened. WWF fabric shall be supported no closer than ½ inch to the prepared concrete surface and shall have a minimum concrete cover of 1.5 inches.

WWF shall be fastened to preset anchors on a grid not more than 12 inches square. Large knots of tie wire which could result in sand pockets and voids during patching shall be avoided.

C. **Hook Fasteners.** Hook fasteners shall be positioned at the spacing as stated above or as directed by the Engineer. Any given area shall have a minimum of four anchors. The WWF shall not move or deform excessively during concrete patching. Maximum hook fastener spacing shall not exceed 2 feet on a grid pattern over the entire repair area.

Hook fasteners shall be of commercial grade galvanized steel with a minimum diameter of 3/16". They may be mechanically set or grouted, as approved by the Engineer.

The Department will randomly select hook fasteners to be tested to verify pullout force is sufficient. If any anchors fail to meet the minimum acceptable pullout value, corrective measures shall be taken by the Contractor and further testing will be conducted.

D. **Concrete Patching.** Place and finish the new concrete for the patching area in accordance with the manufacturer's recommendations, as shown on the attached detail drawings, or as directed by the Engineer. The Engineer shall approve the Contractor's method of placing and consolidating the concrete prior to the beginning of this operation.

E. **Curing.** On completion of finishing operation, patching concrete shall immediately be prevented from drying out and cracking by fogging, wetting, and/or any appropriate method approved by the Engineer. Curing shall continue for duration recommended by the product manufacturer.

Each Contractor submitting a bid for this work shall make a thorough inspection of the site prior to submitting his bid and shall thoroughly familiarize himself with existing conditions so that the work can be expeditiously performed after a contract is awarded. Submission of a bid will be considered evidence of this inspection having been made. Any claims resulting from site conditions will not be honored by the Department. Quantities given are approximate. The quantity for "Concrete Patching Repair" shall be bid with the contingency that quantities may be increased, decreased, or eliminated by the Engineer. Dispose of all removed material entirely away from the job site as approved by the Engineer. This work is incidental to the contract unit price for "Concrete Patching Repair".

IV. MEASUREMENT

A. **Concrete Patching.** The Department will measure the quantity per square feet of each area restored.

B. **Steel Reinforcement.** See Section 602.

C. **Welded Wire Fabric & Hook Fasteners.** Welded Wire Fabric and Hook Fasteners will not be measured for payment, but shall be considered incidental to "Concrete Patching Repair".

V. PAYMENT

A. **Concrete Patching Repair.** Payment at the contract unit price per square feet is full compensation for the following: (1) Furnish all labor, materials, tools, equipment; (2) preparation of specified bents including removing and disposing of specified existing materials; (3) place, finish and cure new concrete patches; and (4) all incidentals necessary to complete the work as specified by this note and as shown on the attached detail drawings.

B. **Steel Reinforcement.** See Section 602.

The Department will consider payment as full compensation for all work required by these notes and detail drawings.

SPECIAL NOTE FOR CONCRETE CLEANING AND SEALING

I. DESCRIPTION

Perform all work in accordance with the Kentucky Transportation Cabinet, Department of Highway's 2012 Standard Specifications for Road and Bridge Construction and applicable Supplemental Specifications, the Standard Drawings, this Note, and Plans. Section references are to the Standard Specifications.

This work consists of: (1) Furnishing all labor, materials, tools, and equipment; (2) Wash & Clean all exposed concrete; (3) Apply concrete sealer per manufacturer recommendations; (4) Perform touch ups as marked by the Engineer, after Engineer's inspection; (5) Maintain & control traffic as necessary; and, (6) Any other work specified as part of this contract.

II. MATERIAL

A. Chem-crete PaviX CCC100, or approved equal.

III. EQUIPMENT

A. Rollers, brushes, sprayers, squeegees or any other equipments/tools recommended by the manufacturer.

IV. CONSTRUCTION

A. Surface Preparation:
   1. Thoroughly clean all existing concrete surfaces (Including all piers, pier caps, abutment walls, etc.) before application.
   2. Make sure surface is clean and free of contaminants (waxes, curing membrane, oil, etc). The surface must be thoroughly cleaned and swept to remove any loose dirt. It should then be wetted and scrubbed with a cleaner/degreaser compound. The abrasive action removes the film of consolidated dirt and exposes the true wearing surface. The surface should then be scrubbed, again, with soapy water and flushed with fresh water. To get the best penetration the area should be allowed to dry thoroughly for a minimum of 24 hours, depending on atmospheric humidity.
   3. Ensure surfaces are clean, dry, and free of dust, oil, grease, sealers, and other surface contaminants that might inhibit penetration of treatment right before the sealing starts.

B. Application:
   1. For best results, apply to concrete cured seven (7) days or longer.
   2. Follow manufacturer's application recommendations.
   3. The surface being treated should be pre-dampened prior to application of the sealer. Apply undiluted sealer to *saturation* level by sprayer, roller, squeegee or any Equipment recommended by the manufacturer.
   4. Clean up any area stained by the sealer unintentionally.

5. Perform Touch ups on areas missed during Concrete Sealing as marked by the engineer to achieve a smooth surface of uniform color.

V. MEASUREMENT

'CONCRETE SEALING' shall be measured in square feet of area cleaned and sealed and accepted.

VI. PAYMENT

The Department shall make payment at the contract unit price per square feet of 'CONCRETE SEALING' for:

1. Furnish all labor, materials, tools, equipment;
2. Preparation of all exposed concrete piers, pier caps and abutment walls.
3. Apply sealer to saturation level.
4. All incidentals necessary to complete the work as specified by this note including touch ups and cleaning of the area.

SPECIAL NOTE FOR CONTRACT COMPLETION DATE AND LIQUIDATED DAMAGES ON BRIDGE REPAIR CONTRACTS

I. COMPLETION DATE. The Contractor has the option of selecting the starting date for this Contract. Once selected, notify the Department in writing of the date selected at least two weeks prior to beginning work. All work is to be completed by November 15, 2015. An allotted number of Calendar days are assigned to each structure in this contract as shown below.

Type of Work	NO. OF CALENDAR DAYS	COMPLETION DATE
Overlay & joint replacement/elimination	30	November 15, 2015
Substructure patching	n/a	November 15, 2015

Contrary to Section 108.07.02, the Engineer will begin charging calendar days for a structure on the day the Contractor starts work or sets up traffic control on that particular structure.

II. LIQUIDATED DAMAGES. Liquidated damages will be assessed the Contractor in accordance with the Transportation Cabinet, Department of Highway's 2012 Standard Specifications for Road and Bridge Construction, Section 108.09, when either the allotted number of calendar days or the November 15, 2015 date is exceeded.

Contrary to the Standard Specifications, liquidated damages will be assessed the Contractor during the months of December, January, February and March when the contract time has expired on any individual bridge or bridges. Contract time will be charged during these months.

All construction must be completed in accordance with the weather limitations specified in Section 606 and/or Section 601 as applicable. No extension of Contract time will be granted due to inclement weather or temperature limitations that occur due to starting work on the Contract or a structure late in the construction season.

SPECIAL NOTE FOR TRAFFIC CONTROL ON BRIDGE REPAIR CONTRACTS

I. TRAFFIC CONTROL GENERAL

Except as provided herein, traffic shall be maintained in accordance with the 2012 Standard Specifications, Section 112. Except for the roadway and traffic control bid items listed, all items of work necessary to maintain and control traffic will be paid at the lump sum bid price to "Maintain and Control Traffic".

Contrary to Section 106.01, traffic control devices used on this project may be new or used in new condition, at the beginning of the work and maintained in like new condition until completion of the work.

II. TRAFFIC COORDINATOR

Furnish a Traffic Coordinator as per Section 112. The Traffic Coordinator shall inspect the project maintenance of traffic, at least three times daily, or as directed by the Engineer, during the Contractor's operations and at any time a lane closure is in place. The personnel shall have access on the project to a radio or telephone to be used in case of emergencies or accidents.

The Traffic Coordinator shall report all incidents throughout the work zone to the Engineer on the project. The Contractor shall furnish the name and telephone number where the Traffic Coordinator can be contacted at all times.

III. SIGNS

Contrary to Section 112.04.02, only long term signs (sign intended to be continuously in place for more than 3 days) will be measured for payment; short term signs (signs intended to be left in place for 3 days or less) will not be measured for payment but will be incidental to Maintain and Control Traffic.

The contractor is to install warning signs for wide loads in advance of the bridge under the direction of the Engineer. The Department will not measure installation, maintenance, or removal for payment, and will consider these incidentals to Maintain and Control Traffic.

IV. BRIDGE CLOSURE

The Bridge shall be closed with 3 type III barricades on each end and one "ROAD CLOSED" sign on each end.

CARTER COUNTY

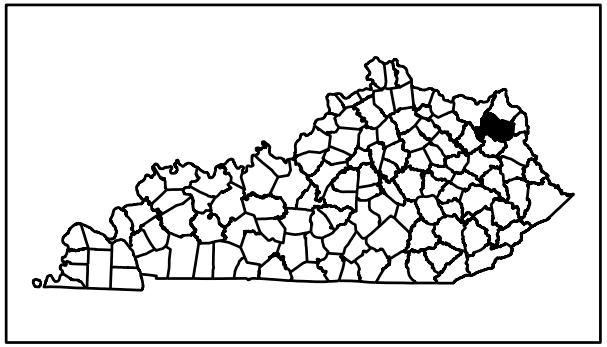

BRIDGE 022B00035N
KY 6062 (MP 0.112)
OVER TYGARTS CREEK
LatDD=38.3084, LonDD=-83.1446

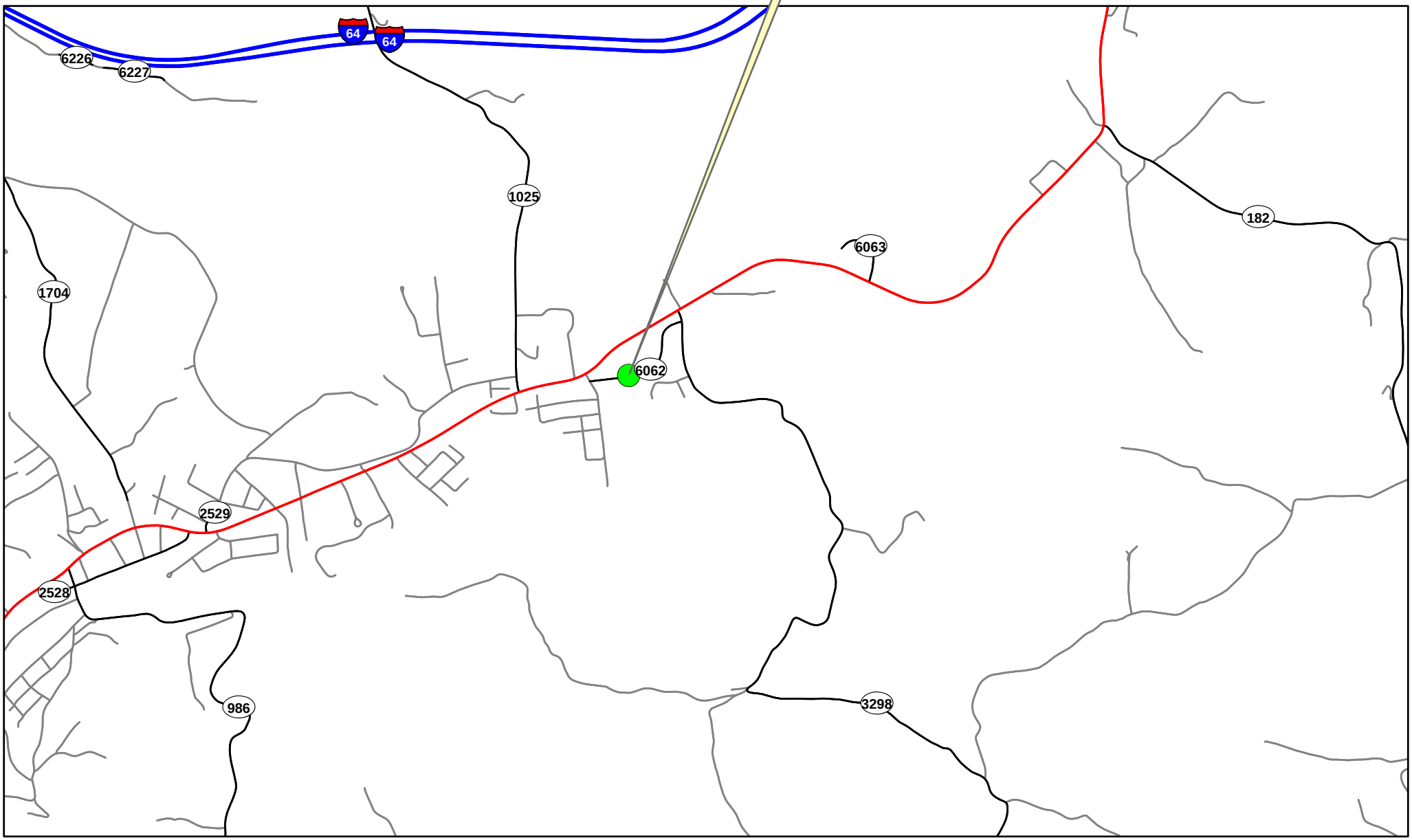

022B00035N

(2) 30' RCDG SPANS (2) 100' & (1) 102' RC ARCH SPANS

NO SKEW - 392' TOTAL

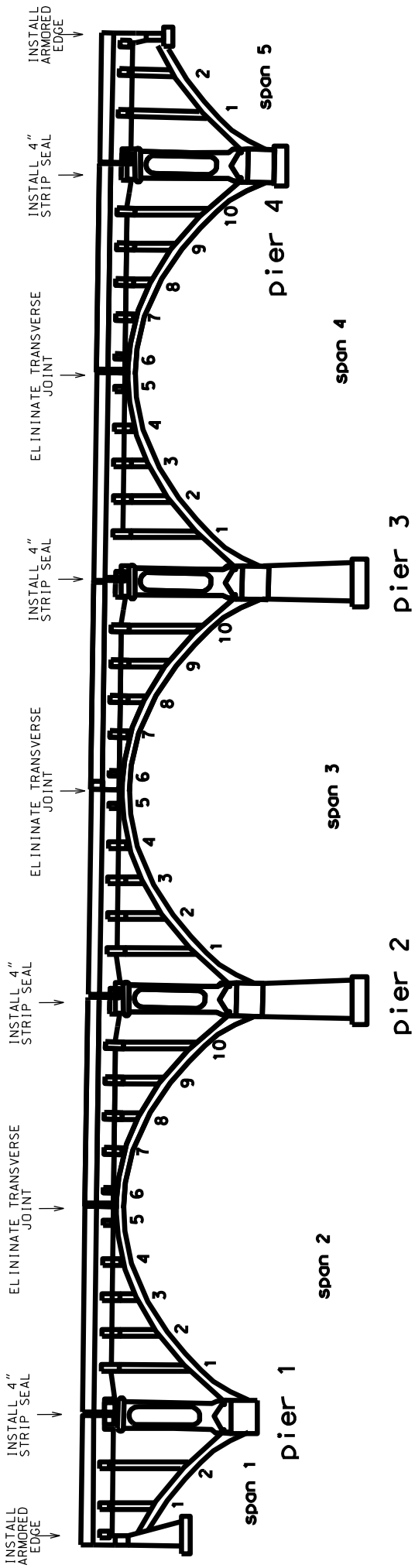

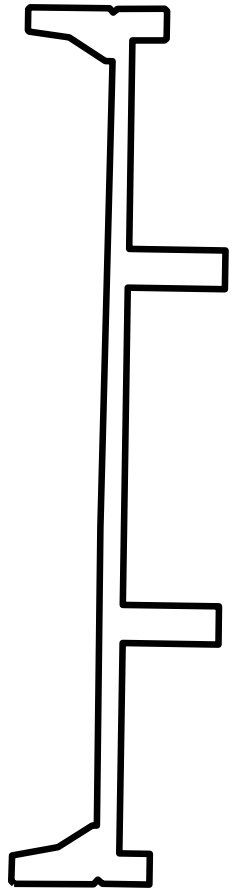

20' CURB TO CURB

ARMORED EDGE DETAIL

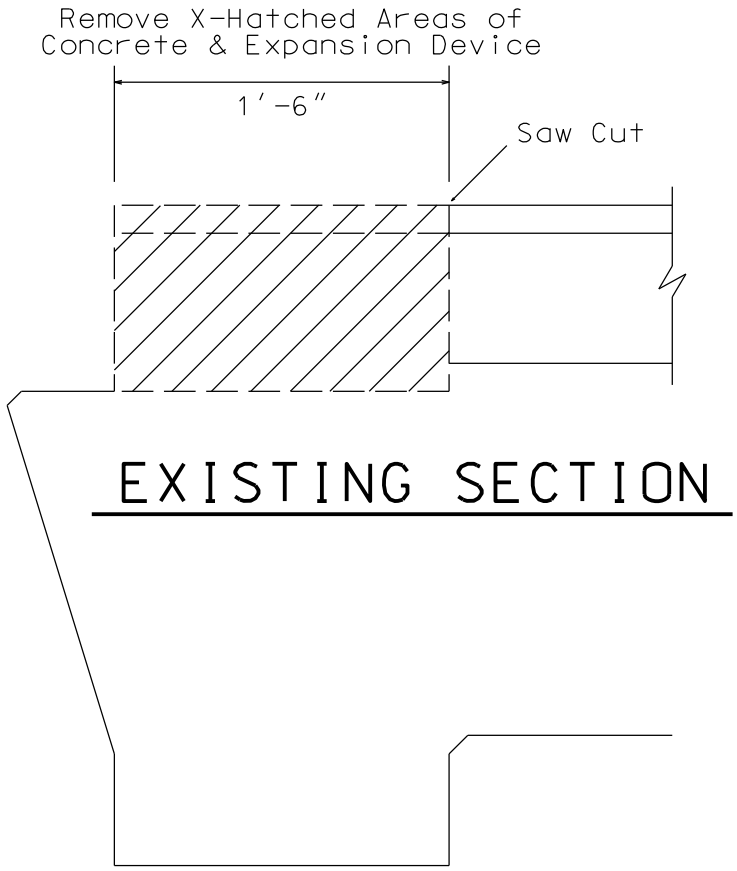

EXISTING SECTION

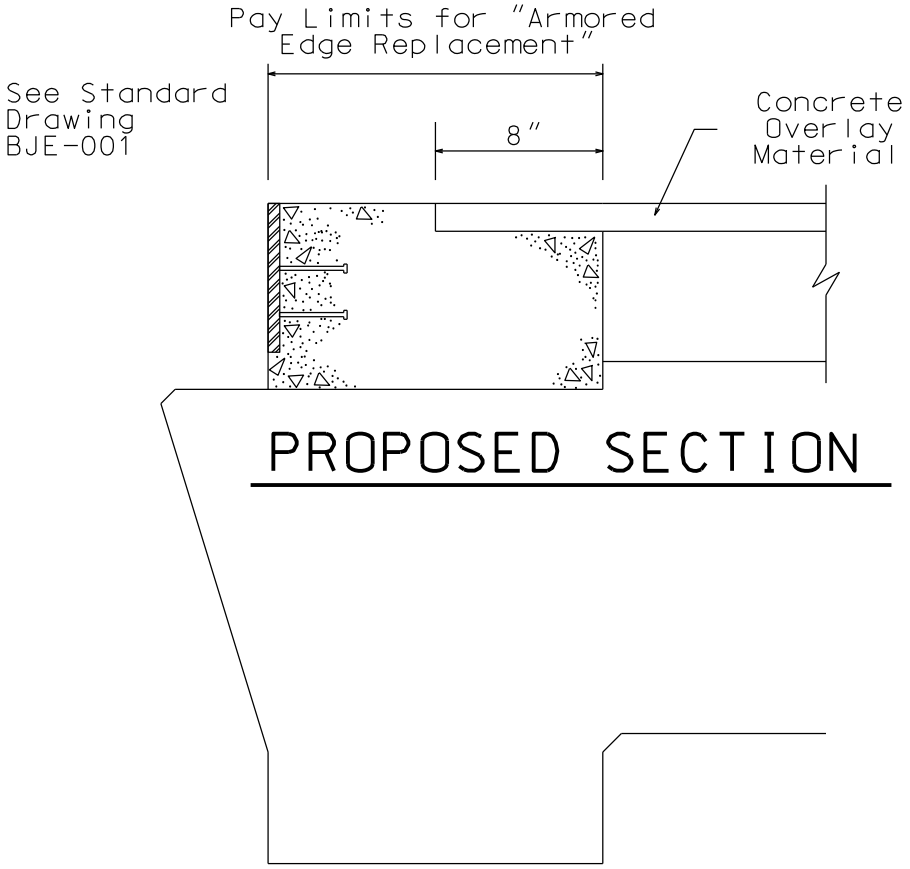

PROPOSED SECTION

EXPANSION DAM DETAIL

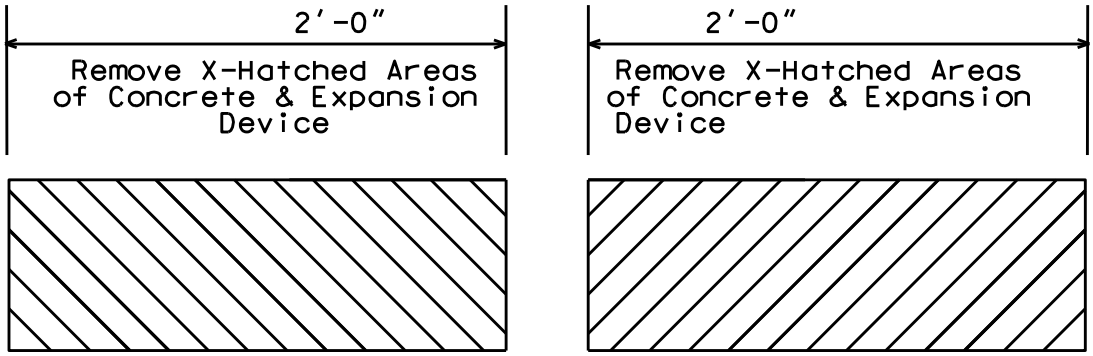

EXISTING SECTION

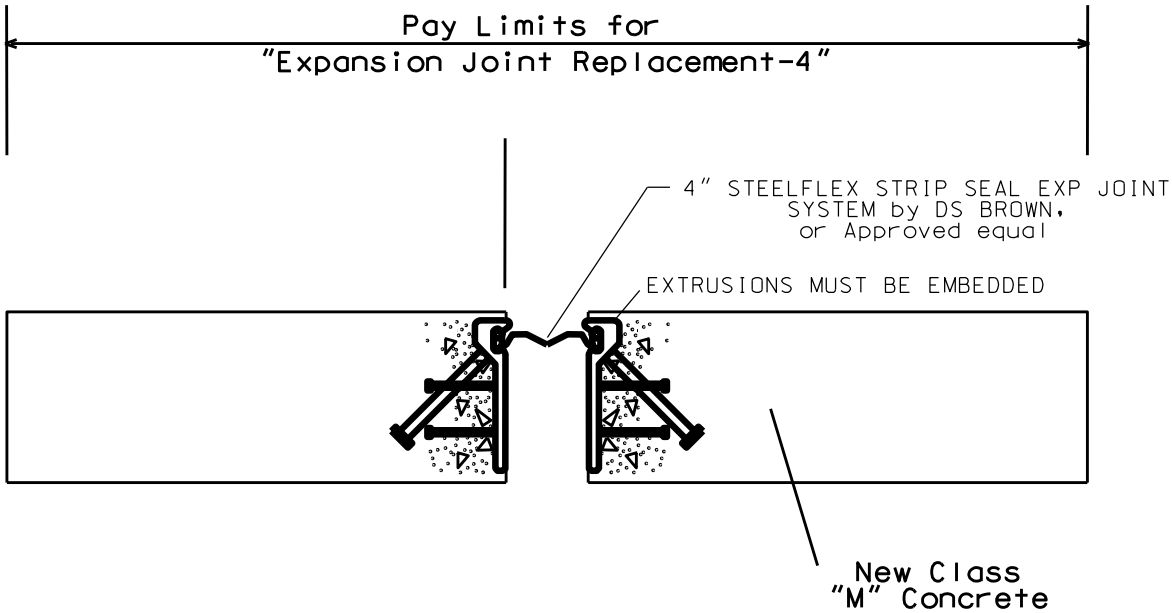

PROPOSED SECTION

CURB SECTION

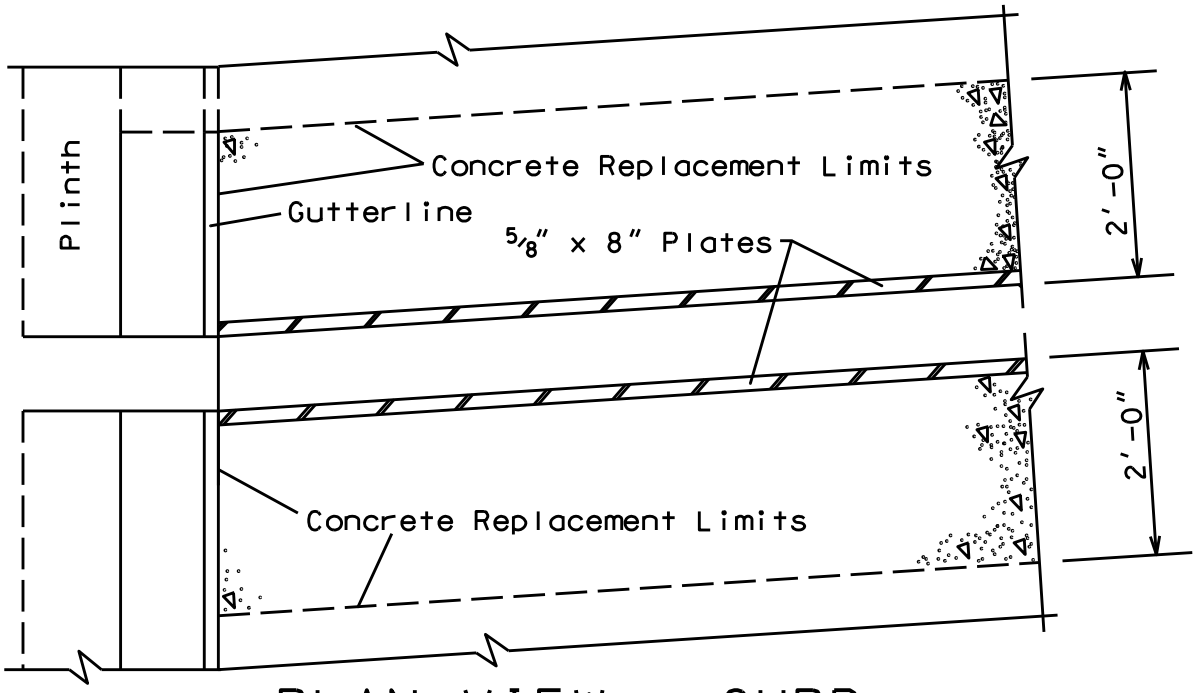

PLAN VIEW @ CURB

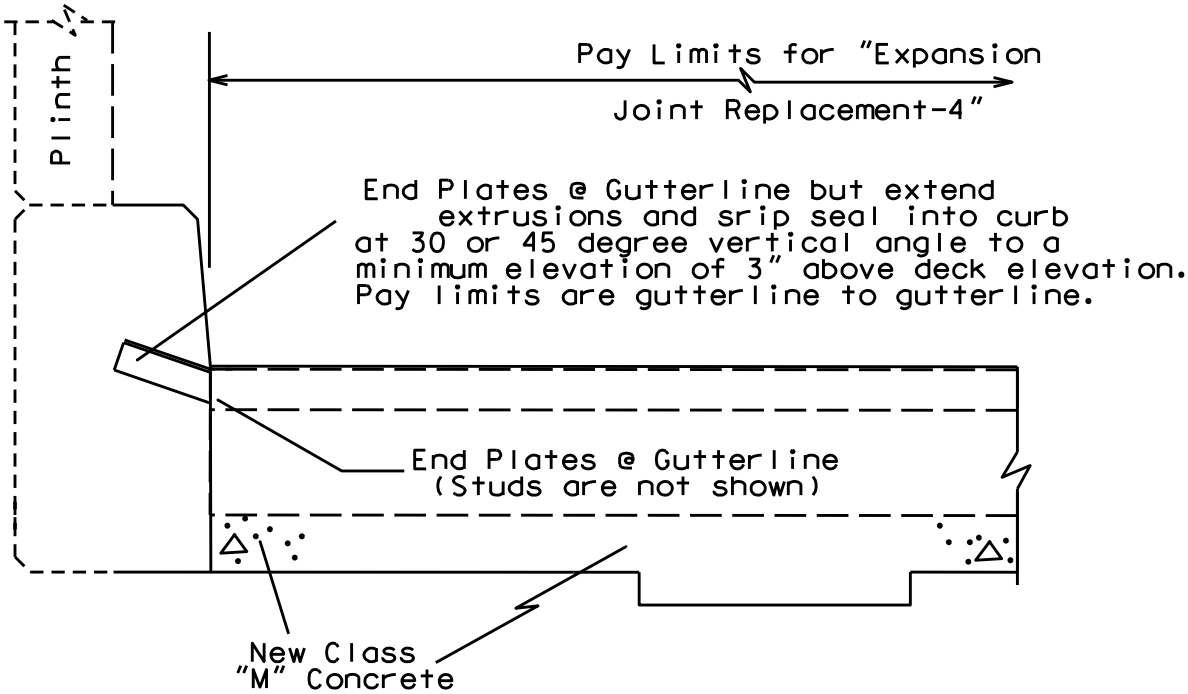

PROPOSED SECTION @ CURB

ELIMINATE TRANSVERSE JOINT DETAIL

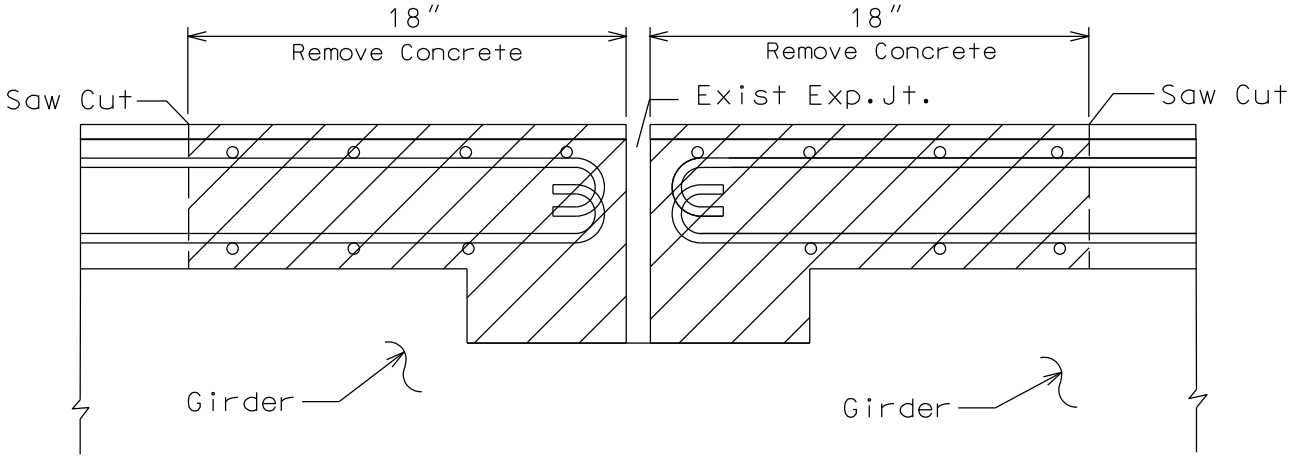

NOTE: Do not disturb existing Steel Reinforcement

EXISTING SECTION @ Transverse Joint

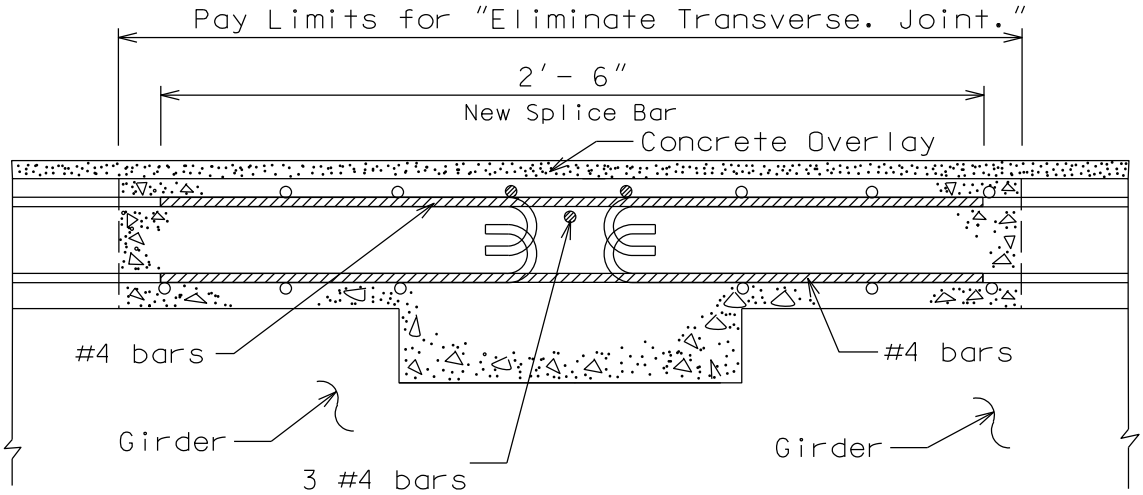

PROPOSED SECTION @ Transverse Joint

ELIMINATE TRANSVERSE JOINT DETAIL

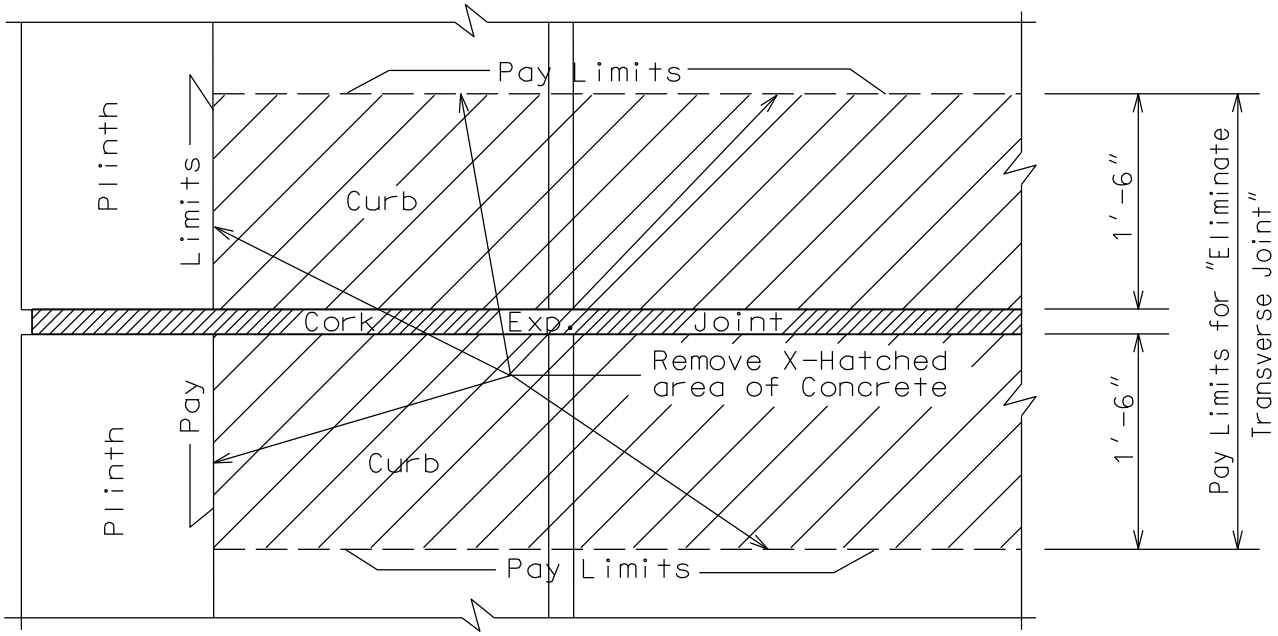

EXISTING PLAN VIEW @ CURB

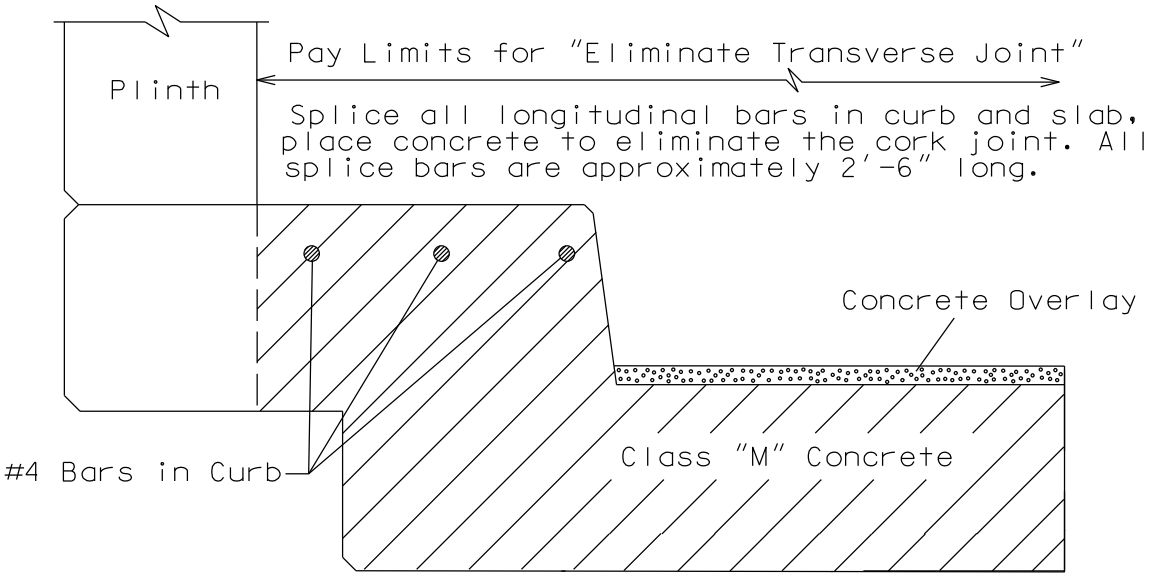

PROPOSED SECTION @ CURB

PIER 1 - NW CORNER
15 SQFT

PIER 1 - SOUTH FACE
63 SQFT

PIER 2 - NORTH SIDE
61 SQFT

PIER 2 - SOUTH SIDE
127 SQFT

PIER 3 NORTH SIDE
142 SQFT

PIER 3 SE CORNER
190 SQFT

PIER 3 - WEST FACE
105 SQFT

PIER 3 - SW CORNER
199 SQFT

PIER 4 - NE CORNER
39 SQFT

PIER 4 - NW CORNER
46 SQFT

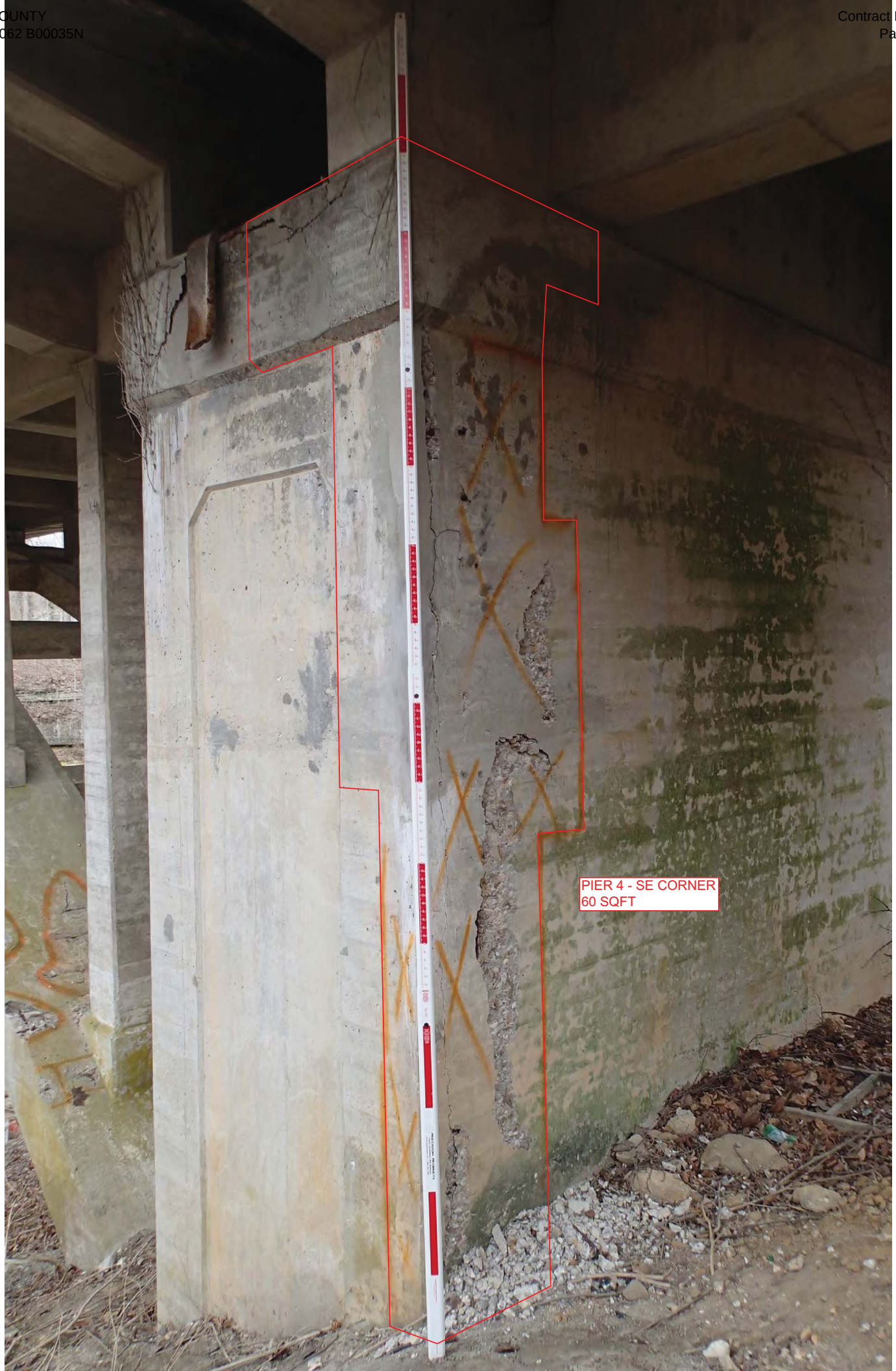
PIER 4 - SE CORNER
60 SQFT

PIER 4 - SW CORNER
22 SQFT

SPAN 4 - NORTH ARCH
9 sqft

SPAN 4 - SOUTH ARCH
21 sqft

SPAN 4 - SOUTH ARCH
39 sqft

PART II

SPECIFICATIONS AND STANDARD DRAWINGS

SPECIFICATIONS REFERENCE

Any reference in the plans or proposal to previous editions of the *Standard Specifications for Road and Bridge Construction* and *Standard Drawings* are superseded by *Standard Specifications for Road and Bridge Construction, Edition of 2012* and *Standard Drawings, Edition of 2012 with the 2012 Revision.*

Supplemental Specifications to the
Standard Specifications for Road and Bridge Construction, 2012 Edition
Effective with the August 22, 2014 Letting

Subsection: **Revision:**	102.15 Process Agent. Replace the 1st paragraph with the following: Every corporation doing business with the Department shall submit evidence of compliance with KRS Sections 14A.4-010, 271B.11-010, 271B.11-070, 271B.11-080, 271B.5-010 and 271B.16-220, and file with the Department the name and address of the process agent upon whom process may be served.
Subsection: **Revision:**	105.13 Claims Resolution Process. Delete all references to TC 63-34 and TC 63-44 from the subsection as these forms are no longer available through the forms library and are forms generated within the AASHTO SiteManager software.
Subsection: **Revision:**	108.03 Preconstruction Conference. Replace 8) Staking with the following: 8) Staking (designated by a Professional Engineer or Land Surveyor licensed in the Commonwealth of Kentucky.
Subsection: **Revision:**	109.07.02 Fuel. Revise item Crushed Aggregate Used for Embankment Stabilization to the following: Crushed Aggregate Used for Stabilization of Unsuitable Materials Used for Embankment Stabilization
	Delete the following item from the table. ~~Crushed Sandstone Base (Cement Treated)~~
Subsection: **Revision:**	110.02 Demobilization. Replace the first part of the first sentence of the second paragraph with the following: Perform all work and operations necessary to accomplish final clean-up as specified in the first paragraph of Subsection 105.12;
Subsection: **Revision:**	112.03.12 Project Traffic Coordinator (PTC). Replace the last paragraph of this subsection with the following: Ensure the designated PTC has sufficient skill and experience to properly perform the task assigned and has successfully completed the qualification courses.
Subsection: **Revision:**	112.04.18 Diversions (By-Pass Detours). Insert the following sentence after the 2nd sentence of this subsection. The Department will not measure temporary drainage structures for payment when the contract documents provide the required drainage opening that must be maintained with the diversion. The temporary drainage structures shall be incidental to the construction of the diversion. If the contract documents fail to provide the required drainage opening needed for the diversion, the cost of the temporary drainage structure will be handled as extra work in accordance with section 109.04.
Subsection: **Revision:**	201.03.01 Contractor Staking. Replace the first paragraph with the following: Perform all necessary surveying under the general supervision of a Professional Engineer or Land Surveyor licensed in the Commonwealth of Kentucky.

Supplemental Specifications to the
Standard Specifications for Road and Bridge Construction, 2012 Edition
Effective with the August 22, 2014 Letting

Subsection: **Revision:**	201.04.01 Contractor Staking. Replace the last sentence of the paragraph with the following: Complete the general layout of the project under the supervision of a Professional Engineer or Land Surveyor licensed in the Commonwealth of Kentucky.
Subsection: **Revision:**	206.04.01 Embankment-in-Place. Replace the fourth paragraph with the following: The Department will not measure **suitable** excavation included in the original plans that is disposed of for payment and will consider it incidental to Embankment-in-Place.
Subsection: **Revision:**	208.02.01 Cement. Replace paragraph with the following: Select Type I or Type II cement conforming to Section 801. Use the same type cement throughout the work.
Subsection: **Revision:**	208.03.06 Curing and Protection. Replace the fourth paragraph with the following: Do not allow traffic or equipment on the finished surface until the stabilized subgrade has cured for a total of 7-days with an ambient air temperature above 40 degrees Fahrenheit. A curing day consists of a continuous 24-hour period in which the ambient air temperature does not fall below 40 degrees Fahrenheit. Curing days will not be calculated consecutively, but must total seven (7) , 24-hour days with the ambient air temperature remaining at or above 40 degrees Fahrenheit before traffic or equipment will be allowed to traverse the stabilized subgrade. The Department may allow a shortened curing period when the Contractor requests. The Contractor shall give the Department at least 3 day notice of the request for a shortened curing period. The Department will require a minimum of 3 curing days after final compaction. The Contractor shall furnish cores to the treated depth of the roadbed at 500 feet intervals for each lane when a shortened curing time is requested. The Department will test cores using an unconfined compression test. Roadbed cores must achieve a minimum strength requirement of 80 psi.
Subsection: **Revision:**	208.03.06 Curing and Protection. Replace paragraph eight with the following: At no expense to the Department, repair any damage to the subgrade caused by freezing.
Subsection: **Part:** **Revision:**	212.03.03 Permanent Seeding and Protection. A) Seed Mixtures for Permanent Seeding. Revise **Seed Mix Type I** to the mixture shown below: 50% Kentucky 31 Tall Fescue (Festuca arundinacea) 35% Hard Fescue (Festuca (Festuca longifolia) 10% Ryegrass, Perennial (Lolium perenne) 5% White Dutch Clover (Trifolium repens)
Subsection: **Part:** **Number:** **Revision:**	212.03.03 Permanent Seeding and Protection. A) Seed Mixtures for Permanent Seeding. 2) Replace the paragraph with the following: Permanent Seeding on Slopes Greater than 3:1 in Highway Districts 4, 5, 6, and 7. Apply seed mix Type II at a minimum application rate of 100 pounds per acre. If adjacent to a golf course replace the crown vetch with Kentucky 31 Tall Fescue.

Supplemental Specifications to the
Standard Specifications for Road and Bridge Construction, 2012 Edition
Effective with the August 22, 2014 Letting

Subsection: **Part:** **Number:** **Revision:**	212.03.03 Permanent Seeding and Protection. A) Seed Mixtures for Permanent Seeding. 3) Replace the paragraph with the following: Permanent Seeding on Slopes Greater than 3:1 in Highway Districts 1, 2, 3, 8, 9, 10, 11, and 12. Apply seed mix Type III at a minimum application rate of 100 pounds per acre. If adjacent to crop land or golf course, replace the Sericea Lespedeza with Kentucky 31 Fescue.
Subsection: **Part:** **Revision:**	212.03.03 Permanent Seeding and Protection. B) Procedures for Permanent Seeding. Delete the first sentence of the section.
Subsection: **Part:** **Revision:**	212.03.03 Permanent Seeding and Protection. B) Procedures for Permanent Seeding. Replace the second and third sentence of the section with the following: Prepare a seedbed and apply an initial fertilizer that contains a minimum of 100 pounds of nitrogen, 100 pounds of phosphate, and 100 pounds of potash per acre. Apply agricultural limestone to the seedbed when the Engineer determines it is needed. When required, place agricultural limestone at a rate of 3 tons per acre.
Subsection: **Part:** **Revision:**	212.03.03 Permanent Seeding and Protection. D) Top Dressing. Change the title of part to D) Fertilizer.
Subsection: **Part:** **Revision:**	212.03.03 Permanent Seeding and Protection. D) Fertilizer. Replace the first paragraph with the following: Apply fertilizer at the beginning of the seeding operation and after vegetation is established. Use fertilizer delivered to the project in bags or bulk. Apply initial fertilizer to all areas prior to the seeding or sodding operation at the application rate specified in 212.03.03 B). Apply 20-10-10 fertilizer to the areas after vegetation has been established at a rate of 11.5 pounds per 1,000 square feet. Obtain approval from the Engineer prior to the 2nd fertilizer application. Reapply fertilizer to any area that has a streaked appearance. The reapplication shall be at no additional cost to the Department. Re-establish any vegetation severely damaged or destroyed because of an excessive application of fertilizer at no cost to the Department.
Subsection: **Part:** **Revision:**	212.03.03 Permanent Seeding and Protection. D) Fertilizer. Delete the second paragraph.
Subsection: **Revision:**	212.04.04 Agricultural Limestone. Replace the entire section with the following: The Department will measure the quantity of agricultural limestone in tons.
Subsection: **Revision:**	212.04.05 Fertilizer. Replace the entire section with the following: The Department will measure fertilizer used in the seeding or sodding operations for payment. The Department will measure the quantity by tons.

Supplemental Specifications to the
Standard Specifications for Road and Bridge Construction, 2012 Edition
Effective with the August 22, 2014 Letting

Subsection: **Revision:**	212.05 PAYMENT. Delete the following item code: Code — Pay Item — Pay Unit 05966 — Topdressing Fertilizer — Ton
Subsection: **Revision:**	212.05 PAYMENT. Add the following pay items: Code — Pay Item — Pay Unit 05963 — Initial Fertilizer — Ton 05964 — 20-10-10 Fertilizer — Ton 05992 — Agricultural Limestone — Ton
Subsection: **Revision:**	213.03.02 Progress Requirements. Replace the last sentence of the third paragraph with the following: Additionally, the Department will apply a penalty equal to the liquidated damages when all aspects of the work are not coordinated in an acceptable manner within 7 calendar days after written notification.
Subsection: **Part:** **Revision:**	213.03.05 Temporary Control Measures. E) Temporary Seeding and Protection. Delete the second sentence of the first paragraph.
Subsection: **Table:** **Revision:**	304.02.01 Physical Properties. Required Geogrid Properties Replace all references to Test Method "GRI-GG2-87" with ASTM D 7737.
Subsection: **Part:** **Revision:**	402.03.02 Contractor Quality Control and Department Acceptance. B) Sampling. Replace the second sentence with the following: The Department will determine when to obtain the quality control samples using the random-number feature of the mix design submittal and approval spreadsheet. The Department will randomly determine when to obtain the verification samples required in Subsections 402.03.03 and 402.03.04 using the Asphalt Mixture Sample Random Tonnage Generator.
Subsection: **Part:** **Number:** **Revision:**	402.03.02 Contractor Quality Control and Department Acceptance. D) Testing Responsibilities. 3) VMA. Add the following paragraph below Number 3) VMA: Retain the AV/VMA specimens and one additional corresponding G_{mm} sample for 5 working days for mixture verification testing by the Department. For Specialty Mixtures, retain a mixture sample for 5 working days for mixture verification testing by the Department. When the Department's test results do not verify that the Contractor's quality control test results are within the acceptable tolerances according to Subsection 402.03.03, retain the samples and specimens from the affected sublot(s) for the duration of the project.
Subsection: **Part:** **Number:** **Revision:**	402.03.02 Contractor Quality Control and Department Acceptance. D) Testing Responsibilities. 4) Density. Replace the second sentence of the Option A paragraph with the following: Perform coring by the end of the following work day.

Supplemental Specifications to the
Standard Specifications for Road and Bridge Construction, 2012 Edition
Effective with the August 22, 2014 Letting

Subsection: **Part:** **Number:** **Revision:**	402.03.02 Contractor Quality Control and Department Acceptance. D) Testing Responsibilities. 5) Gradation. Delete the second paragraph.
Subsection: **Part:** **Number:** **Revision:**	402.03.02 Contractor Quality Control and Department Acceptance. H) Unsatisfactory Work. 1) Based on Lab Data. Replace the second paragraph with the following: When the Engineer determines that safety concerns or other considerations prohibit an immediate shutdown, continue work and the Department will make an evaluation of acceptability according to Subsection 402.03.05.
Subsection: **Revision:**	402.03.03 Verification. Replace the first paragraph with the following: **402.03.03 Mixture Verification.** For volumetric properties, the Department will perform a minimum of one verification test for AC, AV, and VMA according to the corresponding procedures as given in Subsection 402.03.02. The Department will randomly determine when to obtain the verification sample using the Asphalt Mixture Sample Random Tonnage Generator. For specialty mixtures, the Department will perform one AC and one gradation determination per lot according to the corresponding procedures as given in Subsection 402.03.02. However, Department personnel will not perform AC determinations according to KM 64-405. The Contractor will obtain a quality control sample at the same time the Department obtains the mixture verification sample and perform testing according to the procedures given in Subsection 402.03.02. If the Contractor's quality control sample is verified by the Department's test results within the tolerances provided below, the Contractor's sample will serve as the quality control sample for the affected sublot. The Department may perform the mixture verification test on the Contractor's equipment or on the Department's equipment.
Subsection: **Part:** **Revision:**	402.03.03 Verification. A) Evaluation of Sublot(s) Verified by Department. Replace the third sentence of the second paragraph with the following: When the paired *t* -test indicates that the Contractor's data and Department's data are possibly not from the same population, the Department will investigate the cause for the difference according to Subsection 402.03.05 and implement corrective measures as the Engineer deems appropriate.
Subsection: **Part:** **Revision:**	402.03.03 Verification. B) Evaluation of Sublots Not Verified by Department. Replace the third sentence of the first paragraph with the following: When differences between test results are not within the tolerances listed below, the Department will resolve the discrepancy according to Subsection 402.03.05.

Supplemental Specifications to the
Standard Specifications for Road and Bridge Construction, 2012 Edition
Effective with the August 22, 2014 Letting

Subsection: **Part:** **Revision:**	402.03.03 Verification. B) Evaluation of Sublots Not Verified by Department. Replace the third sentence of the second paragraph with the following: When the *F* -test or *t* -test indicates that the Contractor's data and Department's data are possibly not from the same population, the Department will investigate the cause for the difference according to Subsection 402.03.05 and implement corrective measures as the Engineer deems appropriate.
Subsection: **Part:** **Revision:**	402.03.03 Verification. C) Test Data Patterns. Replace the second sentence with the following: When patterns indicate substantial differences between the verified and non-verified sublots, the Department will perform further comparative testing according to subsection 402.03.05.
Subsection: **Revision:**	402.03 CONSTRUCTION. Add the following subsection: **402.03.04 Testing Equipment and Technician Verification.** For mixtures with a minimum quantity of 20,000 tons and for every 20,000 tons thereafter, the Department will obtain an additional verification sample at random using the Asphalt Mixture Sample Random Tonnage Generator in order to verify the integrity of the Contractor's and Department's laboratory testing equipment and technicians. The Department will obtain a mixture sample of at least 150 lb at the asphalt mixing plant according to KM 64-425 and split it according to AASHTO R 47. The Department will retain one split portion of the sample and provide the other portion to the Contractor. At a later time convenient to both parties, the Department and Contractor will simultaneously reheat the sample to the specified compaction temperature and test the mixture for AV and VMA using separate laboratory equipment according to the corresponding procedures given in Subsection 402.03.02. The Department will evaluate the differences in test results between the two laboratories. When the difference between the results for AV or VMA is not within ± 2.0 percent, the Department will investigate and resolve the discrepancy according to Subsection 402.03.05.
Subsection: **Revision:**	402.03.04 Dispute Resolution. Change the subsection number to 402.03.05.
Subsection: **Part:** **Table:** **Revision:**	402.05 PAYMENT. Lot Pay Adjustment Schedule Compaction Option A Base and Binder Mixtures AC Replace the Deviation from JMF(%) that corresponds to a Pay Value of 0.95 to ±0.6.
Subsection: **Revision:**	403.02.10 Material Transfer Vehicle (MTV). Replace the first sentence with the following: In addition to the equipment specified above, provide a MTV with the following minimum characteristics:
Subsection: **Revision:**	412.02.09 Material Transfer Vehicle (MTV). Replace the paragraph with the following: Provide and utilize a MTV with the minimum characteristics outlined in section 403.02.10.

Supplemental Specifications to the
Standard Specifications for Road and Bridge Construction, 2012 Edition
Effective with the August 22, 2014 Letting

Subsection: **Revision:**	412.03.07 Placement and Compaction. Replace the first paragraph with the following: Use a MTV when placing SMA mixture in the driving lanes. The MTV is not required on ramps and/or shoulders unless specified in the contract. When the Engineer determines the use of the MTV is not practical for a portion of the project, the Engineer may waive its requirement for that portion of pavement by a letter documenting the waiver.
Subsection: **Revision:**	412.04 MEASUREMENT. Add the following subsection: 412.04.03. Material Transfer Vehicle (MTV). The Department will not measure the MTV for payment and will consider its use incidental to the asphalt mixture.
Subsection: **Part:** **Revision:**	501.03.19 Surface Tolerances and Testing Surface. B) Ride Quality. Add the following to the end of the first paragraph: The Department will specify if the ride quality requirements are Category A or Category B when ride quality is specified in the Contract. Category B ride quality requirements shall apply when the Department fails to classify which ride quality requirement will apply to the Contract.
Subsection: **Revision:**	603.03.06 Cofferdams. Replace the seventh sentence of paragraph one with the following: Submit drawings that are stamped by a Professional Engineer licensed in the Commonwealth of Kentucky.
Subsection: **Revision:**	605.03.04 Tack Welding. Insert the subsection and the following: 605.03.04 Tack Welding. The Department does not allow tack welding.
Subsection: **Part:** **Number:** **Revision:**	606.03.17 Special Requirements for Latex Concrete Overlays. A) Existing Bridges and New Structures. 1) Prewetting and Grout-Bond Coat. Add the following sentence to the last paragraph: Do not apply a grout-bond coat on bridge decks prepared by hydrodemolition.
Subsection: **Revision:**	609.03 Construction. Replace Subsection 609.03.01 with the following: 609.03.01 A) Swinging the Spans. Before placing concrete slabs on steel spans or precast concrete release the temporary erection supports under the bridge and swing the span free on its supports. 609.03.01 B) Lift Loops. Cut all lift loops flush with the top of the precast beam once the beam is placed in the final location and prior to placing steel reinforcement. At locations where lift loops are cut, paint the top of the beam with galvanized or epoxy paint.
Subsection: **Revision:**	611.03.02 Precast Unit Construction. Replace the first sentence of the subsection with the following: Construct units according to ASTM C1577, **replacing Table 1 (Design Requirements for Precast Concrete Box Sections Under Earth, Dead and HL-93 Live Load Conditions) with KY Table 1 (Precast Culvert KYHL-93 Design Table)**, and Section 605 with the following exceptions and additions:

Supplemental Specifications to the
Standard Specifications for Road and Bridge Construction, 2012 Edition
Effective with the August 22, 2014 Letting

Subsection: **Number:** **Revision:**	613.03.01 Design. 2) Replace "AASHTO Standard Specifications for Highway Bridges" with "AASHTO LRFD Bridge Design Specifications"
Subsection: **Revision:**	615.06.02 Add the following sentence to the end of the subsection. The ends of units shall be normal to walls and centerline except exposed edges shall be beveled ¾ inch.
Subsection: **Revision:**	615.06.03 Placement of Reinforcement in Precast 3-Sided Units. Replace the reference of 6.6 in the section to 615.06.06.
Subsection: **Revision:**	615.06.04 Placement of Reinforcement for Precast Endwalls. Replace the reference of 6.7 in the section to 615.06.07.
Subsection: **Revision:**	615.06.06 Laps, Welds, and Spacing for Precast 3-Sided Units. Replace the subsection with the following: Tension splices in the circumferential reinforcement shall be made by lapping. Laps may not be tack welded together for assembly purposes. For smooth welded wire fabric, the overlap shall meet the requirements of AASHTO 2012 Bridge Design Guide Section 5.11.2.5.2 and AASHTO 2012 Bridge Design Guide Section 5.11.6.3. For deformed welded wire fabric, the overlap shall meet the requirements of AASHTO 2012 Bridge Design Guide Section 5.11.2.5.1 and AASHTO 2012 Bridge Design Guide Section 5.11.6.2. The overlap of welded wire fabric shall be measured between the outer most longitudinal wires of each fabric sheet. For deformed billet-steel bars, the overlap shall meet the requirements of AASHTO 2012 Bridge Design Guide Section 5.11.2.1. For splices other than tension splices, the overlap shall be a minimum of 12" for welded wire fabric or deformed billet-steel bars. The spacing center to center of the circumferential wires in a wire fabric sheet shall be no less than 2 inches and no more than 4 inches. The spacing center to center of the longitudinal wires shall not be more than 8 inches. The spacing center to center of the longitudinal distribution steel for either line of reinforcing in the top slab shall be not more than 16 inches.
Subsection: **Revision:**	615.06.07 Laps, Welds, and Spacing for Precast Endwalls. Replace the subsection with the following: Splices in the reinforcement shall be made by lapping. Laps may not be tack welded together for assembly purposes. For smooth welded wire fabric, the overlap shall meet the requirements of AASHTO 2012 Bridge Design Guide Section 5.11.2.5.2 and AASHTO 2012 Bridge Design Guide Section 5.11.6.3. For deformed welded wire fabric, the overlap shall meet the requirements of AASHTO 2012 Bridge Design Guide Section 5.11.2.5.1 and AASHTO 2012 Bridge Design Guide Section 5.11.6.2. For deformed billet-steel bars, the overlap shall meet the requirements of AASHTO 2012 Bridge Design Guide Section 5.11.2.1. The spacing center-to-center of the wire fabric sheet shall not be less than 2 inches or more than 8 inches.

Supplemental Specifications to the
Standard Specifications for Road and Bridge Construction, 2012 Edition
Effective with the August 22, 2014 Letting

Subsection: **Revision:**	615.08.01 Type of Test Specimen. Replace the subsection with the following: Start-up slump, air content, unit weight, and temperature tests will be performed each day on the first batch of concrete. Acceptable start-up results are required for production of the first unit. After the first unit has been established, random acceptance testing is performed daily for each 50 yd^3 (or fraction thereof). In addition to the slump, air content, unit weight, and temperature tests, a minimum of one set of cylinders shall be required each time plastic property testing is performed.
Subsection: **Revision:**	615.08.02 Compression Testing. Delete the second sentence.
Subsection: **Revision:**	615.08.04 Acceptability of Core Tests. Delete the entire subsection.
Subsection: **Revision:**	615.12 Inspection. Add the following sentences to the end of the subsection: Units will arrive at jobsite with the "Kentucky Oval" stamped on the unit which is an indication of acceptable inspection at the production facility. Units shall be inspected upon arrival for any evidence of damage resulting from transport to the jobsite.
Subsection: **Revision:**	716.02.02 Paint. Replace sentence with the following: Conform to Section 821.
Subsection: **Revision:**	716.03 CONSTRUCTION. Replace bullet 5) with the following: 5) AASHTO Standard Specifications for Structural Supports for Highway Signs, Luminaires, and Traffic Signals, 2013-6th Edition with current interims,
Subsection: **Revision:**	716.03.02 Lighting Standard Installation. Replace the second sentence with the following: Regardless of the station and offset noted, locate all poles/bases behind the guardrail a minimum of four feet from the front face of the guardrail to the front face of the pole base.
Subsection: **Part:** **Revision:**	716.03.02 Lighting Standard Installation. A) Conventional Installation. Replace the third sentence with the following: Orient the transformer base so the door is positioned on the side away from on-coming traffic.
Subsection: **Part:** **Number:** **Revision:**	716.03.02 Lighting Standard Installation. A) Conventional Installation. 1) Breakaway Installation and Requirements. Replace the first sentence with the following: For breakaway supports, conform to Section 12 of the AASHTO Standard Specifications for Structural Supports for Highway Signs, Luminaires, and Traffic Signals, 2013-6th Edition with current interims.
Subsection: **Part:** **Revision:**	716.03.02 Lighting Standard Installation. B) High Mast Installation Replace the first sentence with the following: Install each high mast pole as noted on plans.
Subsection: **Part:** **Number:** **Revision:**	716.03.02 Lighting Standard Installation. B) High Mast Installation 2) Concrete Base Installation Modification of Chart and succeeding paragraphs within this section:

Supplemental Specifications to the
Standard Specifications for Road and Bridge Construction, 2012 Edition
Effective with the August 22, 2014 Letting

Drilled Shaft Depth Data							
Level Ground		3:1 Ground Slope		2:1 Ground Slope		1.5:1 Ground Slope (2)	
Soil	Rock	Soil	Rock	Soil	Rock	Soil	Rock
17 ft	7 ft	19 ft	7 ft	20 ft	7 ft	(1)	7 ft

Steel Requirements			
Vertical Bars		Ties or Spiral	
Size	Total	Size	Spacing or Pitch
#10	16	#4	12 inch

(1): Shaft length is 22' for cohesive soil only. For cohesionless soil, contact geotechnical branch for design.
(2): Do not construct high mast drilled shafts on ground slopes steeper than 1.5:1 without the approval of the Division of Traffic.

If rock is encountered during drilling operations and confirmed by the engineer to be of sound quality, the shaft is only required to be further advanced into the rock by the length of rock socket shown in the table. The total length of the shaft need not be longer than that of soil alone. Both longitudinal rebar length and number of ties or spiral length shall be adjusted accordingly.

If a shorter depth is desired for the drilled shaft, the contractor shall provide, for the state's review and approval, a detailed column design with individual site specific soil and rock analysis performed and approved by a Professional Engineer licensed in the Commonwealth of Kentucky.

Spiral reinforcement may be substituted for ties. If spiral reinforcement is used, one and one-half closed coils shall be provided at the ends of each spiral unit. Subsurface conditions consisting of very soft clay or very loose saturated sand could result in soil parameters weaker than those assumed. Engineer shall consult with the geotechnical branch if such conditions are encountered.

The bottom of the drilled hole shall be firm and thoroughly cleaned so no loose or compressible materials are present at the time of the concrete placement. If the drilled hole contains standing water, the concrete shall be placed using a tremie to displace water. Continuous concrete flow will be required to insure full displacement of any water.

The reinforcement and anchor bolts shall be adequately supported in the proper positions so no movement occurs during concrete placement. Welding of anchor bolts to the reinforcing cage is unacceptable, templates shall be used. Exposed portions of the foundation shall be formed to create a smooth finished surface. All forming shall be removed upon completion of foundation construction.

Subsection: 716.03.03 Trenching.
Part: A) Trenching of Conduit for Highmast Ducted Cables.
Revision: Add the following after the first sentence: If depths greater than 24 inches are necessary, obtain the Engineer's approval and maintain the required conduit depths coming into the junction boxes. No payment for additional junction boxes for greater depths will be allowed.

Supplemental Specifications to the
Standard Specifications for Road and Bridge Construction, 2012 Edition
Effective with the August 22, 2014 Letting

Subsection: **Part:** **Revision:**	716.03.03 Trenching. B) Trenching of Conduit for Non-Highmast Cables. Add the following after the second sentence: If depths greater than 24 inches are necessary for either situation listed previously, obtain the Engineer's approval and maintain the required conduit depths coming into the junction boxes. No payment for additional junction boxes for greater depths will be allowed.
Subsection: **Revision:**	716.03.10 Junction Boxes. Replace subsection title with the following: Electrical Junction Box.
Subsection: **Revision:**	716.04.07 Pole with Secondary Control Equipment. Replace the paragraph with the following: The Department will measure the quantity as each individual unit furnished and installed. The Department will not measure mounting the cabinet to the pole, backfilling, restoration, any necessary hardware to anchor pole, or electrical inspection fees, and will consider them incidental to this item of work. The Department will also not measure furnishing and installing electrical service conductors, specified conduits, meter base, transformer, service panel, fused cutout, fuses, lighting arrestors, photoelectrical control, circuit breaker, contactor, manual switch, ground rods, and ground wires and will consider them incidental to this item of work.
Subsection: **Revision:**	716.04.08 Lighting Control Equipment. Replace the paragraph with the following: The Department will measure the quantity as each individual unit furnished and installed. The Department will not measure constructing the concrete base, excavation, backfilling, restoration, any necessary anchors, or electrical inspection fees, and will consider them incidental to this item of work. The Department will also not measure furnishing and installing electrical service conductors, specified conduits, meter base, transformer, service panel, fused cutout, fuses, lighting arrestors, photoelectrical control, circuit breakers, contactor, manual switch, ground rods, and ground wires and will consider them incidental to this item of work.
Subsection: **Revision:**	716.04.09 Luminaire. Replace the first sentence with the following: The Department will measure the quantity as each individual unit furnished and installed.
Subsection: **Revision:**	716.04.10 Fused Connector Kits. Replace the first sentence with the following: The Department will measure the quantity as each individual unit furnished and installed.
Subsection: **Revision:**	716.04.13 Junction Box. Replace the subsection title with the following: Electrical Junction Box Type Various.
Subsection: **Part:** **Revision:**	716.04.13 Junction Box. A) Junction Electrical. Rename A) Junction Electrical to the following: A) Electrical Junction Box.
Subsection: **Revision:**	716.04.14 Trenching and Backfilling. Replace the second sentence with the following: The Department will not measure excavation, backfilling, underground utility warning tape (if required), the restoration of disturbed areas to original condition, and will consider them incidental to this item of work.

Supplemental Specifications to the
Standard Specifications for Road and Bridge Construction, 2012 Edition
Effective with the August 22, 2014 Letting

Subsection: **Revision:**	716.04.18 Remove Lighting. Replace the paragraph with the following: The Department will measure the quantity as a lump sum for the removal of lighting equipment. The Department will not measure the disposal of all equipment and materials off the project by the contractor. The Department also will not measure the transportation of the materials and will consider them incidental to this item of work.
Subsection: **Revision:**	716.04.20 Bore and Jack Conduit. Replace the paragraph with the following: The Department will measure the quantity in linear feet. This item shall include all work necessary for boring and installing conduit under an existing roadway. Construction methods shall be in accordance with Sections 706.03.02, paragraphs 1, 2, and 4.
Subsection: **Revision:**	716.05 PAYMENT. Replace items 04810-04811, 20391NS835 and, 20392NS835 under Code, Pay Item, and Pay Unit with the following: Code — Pay Item — Pay Unit 04810 — Electrical Junction Box — Each 04811 — Electrical Junction Box Type B — Each 20391NS835 — Electrical Junction Box Type A — Each 20392NS835 — Electrical Junction Box Type C — Each
Subsection: **Revision:**	723.02.02 Paint. Replace sentence with the following: Conform to Section 821.
Subsection: **Revision:**	723.03 CONSTRUCTION. Replace bullet 5) with the following: 5) AASHTO Standard Specifications for Structural Supports for Highway Signs, Luminaires, and Traffic Signals, 2013-6th Edition with current interims,
Subsection: **Revision:**	723.03.02 Poles and Bases Installation. Replace the first sentence with the following: Regardless of the station and offset noted, locate all poles/bases behind the guardrail a minimum of four feet from the front face of the guardrail to the front face of the pole base.
Subsection: **Part:** **Revision:**	723.03.02 Poles and Bases Installation. A) Steel Strain and Mastarm Poles Installation Replace the second paragraph with the following: For concrete base installation, see Section 716.03.02, B), 2), Paragraphs 2-7. Drilled shaft depth shall be based on the soil conditions encountered during drilling and slope condition at the site. Refer to the design chart below:
Subsection: **Part:** **Revision:**	723.03.02 Poles and Bases Installation. B) Pedestal or Pedestal Post Installation. Replace the fourth sentence of the paragraph with the following: For breakaway supports, conform to Section 12 of the AASHTO Standard Specifications for Structural Supports for Highway Signs, Luminaires, and Traffic Signals, 2013-6th Edition with current interims.

Supplemental Specifications to the
Standard Specifications for Road and Bridge Construction, 2012 Edition
Effective with the August 22, 2014 Letting

Subsection: **Part:** **Revision:**	723.03.03 Trenching. A) Under Roadway. Add the following after the second sentence: If depths greater than 24 inches are necessary, obtain the Engineer's approval and maintain ether required conduit depths coming into the junction boxes. No payment for additional junction boxes for greater depths will be allowed.
Subsection: **Revision:**	723.03.11 Wiring Installation. Add the following sentence between the fifth and sixth sentences: Provide an extra two feet of loop wire and lead-in past the installed conduit in poles, pedestals, and junction boxes.
Subsection: **Revision:**	723.03.12 Loop Installation. Replace the fourth sentence of the 2nd paragraph with the following: Provide an extra two feet of loop wire and lead-in past the installed conduit in poles, pedestals, and junction boxes.
Subsection: **Revision:**	723.04.02 Junction Box. Replace subsection title with the following: Electrical Junction Box Type Various.
Subsection: **Revision:**	723.04.03 Trenching and Backfilling. Replace the second sentence with the following: The Department will not measure excavation, backfilling, underground utility warning tape (if required), the restoration of disturbed areas to original condition, and will consider them incidental to this item of work.
Subsection: **Revision:**	723.04.10 Signal Pedestal. Replace the second sentence with the following: The Department will not measure excavation, concrete, reinforcing steel, specified conduits, fittings, ground rod, ground wire, backfilling, restoring disturbed areas, or other necessary hardware and will consider them incidental to this item of work.
Subsection: **Revision:**	723.04.15 Loop Saw Slot and Fill. Replace the second sentence with the following: The Department will not measure sawing, cleaning and filling induction loop saw slot, loop sealant, backer rod, and grout and will consider them incidental to this item of work.
Subsection: **Revision:**	723.04.16 Pedestrian Detector. Replace the paragraph with the following: The Department will measure the quantity as each individual unit furnished, installed and connected to pole/pedestal. The Department will not measure installing R10-3e (with arrow) sign, furnishing and installing mounting hardware for sign and will consider them incidental to this item of work.
Subsection: **Revision:**	723.04.18 Signal Controller- Type 170. Replace the second sentence with the following: The Department will not measure constructing the concrete base or mounting the cabinet to the pole, connecting the signal and detectors, excavation, backfilling, restoration, any necessary pole mounting hardware, electric service, or electrical inspection fees and will consider them incidental to this item of work. The Department will also not measure furnishing and connecting the induction of loop amplifiers, pedestrian isolators, load switches, model 400 modem card; furnishing and installing electrical service conductors, specified conduits, anchors, meter base, fused cutout, fuses, ground rods, ground wires and will consider them incidental to this item of work.

Supplemental Specifications to the
Standard Specifications for Road and Bridge Construction, 2012 Edition
Effective with the August 22, 2014 Letting

Subsection: **Revision:**	723.04.20 Install Signal Controller - Type 170. Replace the paragraph with the following: The Department will measure the quantity as each individual unit installed. The Department will not measure constructing the concrete base or mounting the cabinet to the pole, connecting the signal and detectors, and excavation, backfilling, restoration, any necessary pole mounting hardware, electric service, or electrical inspection fees and will consider them incidental to this item of work. The Department will also not measure connecting the induction loop amplifiers, pedestrian, isolators, load switches, model 400 modem card; furnishing and installing electrical service conductors, specified conduits, anchors, meter base, fused cutout, fuses, ground rods, ground wires and will consider them incidental to this item of work.
Subsection: **Revision:**	723.04.22 Remove Signal Equipment. Replace the paragraph with the following: The Department will measure the quantity as a lump sum removal of signal equipment. The Department will not measure the return of control equipment and signal heads to the Department of Highways as directed by the District Traffic Engineer. The Department also will not measure the transportation of materials of the disposal of all other equipment and materials off the project by the contractor and will consider them incidental to this item of work.
Subsection: **Revision:**	723.04.28 Install Pedestrian Detector Audible. Replace the second sentence with the following: The Department will not measure installing sign R10-3e (with arrow) and will consider it incidental to this item of work.
Subsection: **Revision:**	723.04.29 Audible Pedestrian Detector. Replace the second sentence with the following: The Department will not measure furnishing and installing the sign R10-3e (with arrow) and will consider it incidental to this item of work.
Subsection: **Revision:**	723.04.30 Bore and Jack Conduit. Replace the paragraph with the following: The Department will measure the quantity in linear feet. This item shall include all work necessary for boring and installing conduit under an existing roadway. Construction methods shall be in accordance with Sections 706.03.02, paragraphs 1, 2, and 4.
Subsection: **Revision:**	723.04.31 Install Pedestrian Detector. Replace the paragraph with the following: The Department will measure the quantity as each individual unit installed and connected to pole/pedestal. The Department will not measure installing sign R 10-3e (with arrow) and will consider it incidental to this item of work.
Subsection: **Revision:**	723.04.32 Install Mast Arm Pole. Replace the second sentence with the following: The Department will not measure arms, signal mounting brackets, anchor bolts, or any other necessary hardware and will consider them incidental to this item of work.
Subsection: **Revision:**	723.04.33 Pedestal Post. Replace the second sentence with the following: The Department will not measure excavation, concrete, reinforcing steel, anchor bolts, conduit, fittings, ground rod, ground wire, backfilling, restoration, or any other necessary hardware and will consider them incidental to this item of work.

Supplemental Specifications to the
Standard Specifications for Road and Bridge Construction, 2012 Edition
Effective with the August 22, 2014 Letting

Subsection: **Revision:**	723.04.36 Traffic Signal Pole Base. Replace the second sentence with the following: The Department will not measure excavation, reinforcing steel, anchor bolts, specified conduits, ground rods, ground wires, backfilling, or restoration and will consider them incidental to this item of work.
Subsection: **Revision:**	723.04.37 Install Signal Pedestal. Replace the second sentence with the following: The Department will not measure excavation, concrete, reinforcing steel, anchor bolts, specified conduits, fittings, ground rod, ground wire, backfilling, restoration, or any other necessary hardware and will consider them incidental to this item of work.
Subsection: **Revision:**	723.04.38 Install Pedestal Post. Replace the second sentence with the following: The Department will not measure excavation, concrete, reinforcing steel, anchor bolts, specified conduits, fittings, ground rod, ground wire, backfilling, restoration, or any other necessary hardware and will consider them incidental to this item of work.
Subsection: **Revision:**	723.05 PAYMENT. Replace items 04810-04811, 20391NS835 and, 20392NS835 under Code, Pay Item, and Pay Unit with the following: Code — Pay Item — Pay Unit 04810 — Electrical Junction Box — Each 04811 — Electrical Junction Box Type B — Each 20391NS835 — Electrical Junction Box Type A — Each 20392NS835 — Electrical Junction Box Type C — Each
Subsection: **Revision:**	804.01.02 Crushed Sand. Delete last sentence of the section.
Subsection: **Revision:**	804.01.06 Slag. Add subsection and following sentence. Provide blast furnace slag sand where permitted. The Department will allow steel slag sand only in asphalt surface applications.
Subsection: **Revision:**	804.04 Asphalt Mixtures. Replace the subsection with the following: Provide natural, crushed, conglomerate, or blast furnace slag sand, with the addition of filler as necessary, to meet gradation requirements. The Department will allow any combination of natural, crushed, conglomerate or blast furnace slag sand when the combination is achieved using cold feeds at the plant. The Engineer may allow other fine aggregates.
Subsection: **Revision:**	806.03.01 General Requirements. Replace the second sentence of the paragraph with the following: Additionally, the material must have a minimum solubility of 99.0 percent when tested according to AASHTO T 44 and PG 76-22 must exhibit a minimum recovery of 60 percent, with a J_{NR} (nonrecoverable creep compliance) between 0.1 and 0.5, when tested according to AASHTO TP 70.

Supplemental Specifications to the
Standard Specifications for Road and Bridge Construction, 2012 Edition
Effective with the August 22, 2014 Letting

Subsection: 806.03.01 General Requirements.
Table: PG Binder Requirements and Price Adjustment Schedule
Revision: Replace the Elastic Recovery, % [3] (AASHTO T301) and all corresponding values in the table with the following:

Test	Specification	100% Pay	90% Pay	80% Pay	70% Pay	50%Pay[1]
MSCR recovery, % [3] (AASHTO TP 70)	60 Min.	≥58	56	55	54	<53

Subsection: 806.03.01 General Requirements.
Table: PG Binder Requirements and Price Adjustment Schedule
Superscript: (3)
Revision: Replace [3] with the following:
Perform testing at 64°C.

Subsection: 813.04 Gray Iron Castings.
Revision: Replace the reference to "AASHTO M105" with "ASTM A48".

Subsection: 813.09.02 High Strength Steel Bolts, Nuts, and Washers.
Number: A) Bolts.
Revision: Delete first paragraph and "Hardness Number" Table. Replace with the following:
A) Bolts. Conform to ASTM A325 (AASHTO M164) or ASTM A490 (AASHTO 253) as applicable.

Subsection: 814.04.02 Timber Guardrail Posts.
Revision: Third paragraph, replace the reference to "AWPA C14" with "AWPA U1, Section B, Paragraph 4.1".

Subsection: 814.04.02 Timber Guardrail Posts.
Revision: Replace the first sentence of the fourth paragraph with the following:
Use any of the species of wood for round or square posts covered under AWPA U1.

Subsection: 814.04.02 Timber Guardrail Posts.
Revision: Fourth paragraph, replace the reference to "AWPA C2" with "AWPA U1, Section B, Paragraph 4.1".

Subsection: 814.04.02 Timber Guardrail Posts.
Revision: Delete the second sentence of the fourth paragraph.

Subsection: 814.05.02 Composite Plastic.
Revision: 1) Add the following to the beginning of the first paragraph: Select composite offset blocks conforming to this section and assure blocks are from a manufacturer included on the Department's List of Approved Materials.
2) Delete the last paragraph of the subsection.

Subsection: 816.07.02 Wood Posts and Braces.
Revision: First paragraph, replace the reference to "AWPA C5" with "AWPA U1, Section B, Paragraph 4.1".

Subsection: 816.07.02 Wood Posts and Braces.
Revision: Delete the second sentence of the first paragraph.

Subsection: 818.07 Preservative Treatment.
Revision: First paragraph, replace all references to "AWPA C14" with "AWPA U1, Section A".

Supplemental Specifications to the
Standard Specifications for Road and Bridge Construction, 2012 Edition
Effective with the August 22, 2014 Letting

Subsection: **Revision:**	834.14 Lighting Poles. Replace the first sentence with the following: Lighting pole design shall be in accordance with loading and allowable stress requirements of the AASHTO Standard Specifications for Structural Supports for Highway Signs, Luminaires, and Traffic Signals, 2013-6th Edition with current interims, with the exception of the following: The Cabinet will waive the requirement stated in the first sentence of Section 5.14.6.2 – Reinforced Holes and Cutouts for high mast poles (only). The minimum diameter at the base of the pole shall be 22 inches for high mast poles (only).
Subsection **Revision:**	834.14.03 High Mast Poles. Remove the second and fourth sentence from the first paragraph.
Subsection **Revision:**	834.14.03 High Mast Poles. Replace the third paragraph with the following: Provide calculations and drawings that are stamped by a Professional Engineer licensed in the Commonwealth of Kentucky.
Subsection: **Revision:**	834.14.03 High Mast Poles. Replace paragraph six with the following: Provide a pole section that conforms to ASTM A 595 grade A with a minimum yield strength of 55 KSI or ASTM A 572 with a minimum yield strength of 55 KSI. Use tubes that are round or 16 sided with a four inch corner radius, have a constant linear taper of .144 in/ft and contain only one longitudinal seam weld. Circumferential welded tube butt splices and laminated tubes are not permitted. Provide pole sections that are telescopically slip fit assembled in the field to facilitate inspection of interior surface welds and the protective coating. The minimum length of the telescopic slip splices shall be 1.5 times the inside diameter of the exposed end of the female section. Use longitudinal seam welds as commended in Section 5.15 of the AASHTO 2013 Specifications. The thickness of the transverse base shall not be less than 2 inches. Plates shall be integrally welded to the tubes with a telescopic welded joint or a full penetration groove weld with backup bar. The handhole cover shall be removable from the handhole frame. One the frame side opposite the hinge, provide a mechanism on the handhole cover/frame to place the Department's standard padlock as specified in Section 834.25. The handhole frame shall have two stainless studs installed opposite the hinge to secure the handhole cover to the frame which includes providing stainless steel wing nuts and washers. The handhole cover shall be manufactured from 0.25 inch thick galvanized steel (ASTM A 153) and have a neoprene rubber gasket that is permanently secured to the handhole frame to insure weather-tight protection. The hinge shall be manufactured from 7-guage stainless steel to provide adjustability to insure weather-tight fit for the cover. The minimum clear distance between the transverse plate and the bottom opening of the handhole shall not be less than the diameter of the bottom tube of the pole but needs to be at least 15 inches. Provide products that are hot-dip galvanized to the requirements of either ASTM A123 (fabricated products) or ASTM A 153 (hardware items).
Subsection: **Revision:**	834.16 ANCHOR BOLTS. Insert the following sentence at the beginning of the paragraph: The anchor bolt design shall follow the NCHRP Report 494 Section 2.4 and NCHRP 469 Appendix A Specifications.

Supplemental Specifications to the
Standard Specifications for Road and Bridge Construction, 2012 Edition
Effective with the August 22, 2014 Letting

Subsection: **Revision:**	834.17.01 Conventional. Add the following sentence after the second sentence: Provide a waterproof sticker mounted on the bottom of the housing that is legible from the ground and indicates the wattage of the fixture by providing the first two numbers of the wattage.
Subsection: **Revision:**	834.21.01 Waterproof Enclosures. Replace the last five sentences in the second paragraph with the following sentences: Provide a cabinet door with a louvered air vent, filter-retaining brackets and an easy to clean metal filter. Provide a cabinet door that is keyed with a factory installed standard no. 2 corbin traffic control key. Provide a light fixture with switch and bulb. Use a 120-volt fixture and utilize a L.E.D. bulb (equivalent to 60 watts minimum). Fixture shall be situated at or near the top of the cabinet and illuminate the contents of the cabinet. Provide a 120 VAC GFI duplex receptacle in the enclosure with a separate 20 amp breaker.
Subsection: **Revision:**	835.07 Traffic Poles. Replace the first sentence of the first paragraph with the following: Pole diameter and wall thickness shall be calculated in accordance with the AASHTO Standard Specifications for Structural Supports for Highway Signs, Luminaires, and Traffic Signals, 2013-6th Edition with current interims.
Subsection: **Revision:**	835.07 Traffic Poles. *Replace the first sentence of the fourth paragraph with the following: Ensure transverse plates have a thickness ≥ 2 inches. *Add the following sentence to the end of the fourth paragraph: The bottom pole diameter shall not be less than 16.25 inches.
Subsection: **Revision:**	835.07 Traffic Poles. Replace the third sentence of the fifth paragraph with the following: For anchor bolt design, pole forces shall be positioned in such a manner to maximize the force on any individual anchor bolt regardless of the actual anchor bolt orientation with the pole.
Subsection: **Revision:**	835.07 Traffic Poles. Replace the first and second sentence of the sixth paragraph with the following: The pole handhole shall be 25 inches by 6.5 inches. The handhole cover shall be removable from the handhole frame. On the frame side opposite the hinge, provide a mechanism on the handhole cover/frame to place the Department's standard padlock as specified in Section 834.25. The handhole frame shall have two stainless studs installed opposite the hinge to secure the handhole cover to the frame which includes providing stainless steel wing nuts and washers. The handhole cover shall be manufactured from 0.25 inch thick galvanized steel (ASTM 153) and have a neoprene rubber gasket that is permanently secured to the handhole frame to insure weather-tight protection. The hinge shall be manufactured from 7 gauge stainless steel to provide adjustability to insure a weather-tight fit for the cover. The minimum clear distance between the transverse plate and the bottom opening of the handhole shall not be less than the diameter of the bottom tube but needs to be at least 12 inches.

Supplemental Specifications to the Standard Specifications for Road and Bridge Construction, 2012 Edition Effective with the August 22, 2014 Letting

Subsection: **Revision:**	835.07 Traffic Poles. *Replace the first sentence of the last paragraph with the following: Provide calculations and drawings that are stamped by a Professional Engineer licensed in the Commonwealth of Kentucky. *Replace the third sentence of the last paragraph with the following: All tables referenced in 835.07 are found in the AASHTO Standard Specifications for Structural Supports for Highway Signs, Luminaires, and Traffic Signals, 2013-6th Edition with current interims.
Subsection: **Revision:**	835.07.01 Steel Strain Poles. Replace the second sentence of the second paragraph with the following: The detailed analysis shall be certified by a Professional Engineer licensed in the Commonwealth of Kentucky.
Subsection: **Revision:**	835.07.01 Steel Strain Poles. Replace number 7. after the second paragraph with the following: 7. Fatigue calculations should be shown for all fatigue related connections. Provide the corresponding detail, stress category and example from table 11.9.3.1-1.
Subsection: **Revision:**	835.07.02 Mast Arm Poles. Replace the second sentence of the fourth paragraph with the following: The detailed analysis shall be certified by a Professional Engineer licensed in the Commonwealth of Kentucky.
Subsection: **Revision:**	835.07.02 Mast Arm Poles. Replace number 7) after the fourth paragraph with the following: 7) Fatigue calculations should be shown for all fatigue related connections. Provide the corresponding detail, stress category and example from table 11.9.3.1-1.
Subsection: **Revision:**	835.07.03 Anchor Bolts. Add the following to the end of the paragraph: There shall be two steel templates (one can be used for the headed part of the anchor bolt when designed in this manner) provided per pole. Templates shall be contained within a 26.5 inch diameter. All templates shall be fully galvanized (ASTM A 153).
Subsection: **Revision:**	835.16.05 Optical Units. Replace the 3rd paragraph with the following: The list of certified products can be found on the following website: http://www.intertek.com.
Subsection: **Revision:**	835.19.01 Pedestrian Detector Body. Replace the first sentence with the following: Provide a four holed pole mounted aluminum rectangular housing that is compatible with the pedestrian detector.
Subsection: **Table:** **Revision:**	843.01.01 Geotextile Fabric. TYPE I FABRIC GEOTEXTILES FOR SLOPE PROTECTION AND CHANNEL LINING Add the following to the chart: Property — Minimum Value(1) — Test Method CBR Puncture (lbs) — 494 — ASTM D6241 Permittivity (1/s) — 0.7 — ASTM D4491

Supplemental Specifications to the
Standard Specifications for Road and Bridge Construction, 2012 Edition
Effective with the August 22, 2014 Letting

Subsection: 843.01.01 Geotextile Fabric.
Table: TYPE II FABRIC GEOTEXTILES FOR UNDERDRAINS
Revision: Add the following to the chart:

Property	Minimum Value[1]	Test Method
CBR Puncture (lbs)	210	ASTM D6241
Permittivity (1/s)	0.5	ASTM D4491

Subsection: 843.01.01 Geotextile Fabric.
Table: TYPE III FABRIC GEOTEXTILES FOR SUBGRADE OR EMBANKMENT STABILIZATION
Revision: Add the following to the chart:

Property	Minimum Value[1]	Test Method
CBR Puncture (lbs)	370	ASTM D6241
Permittivity (1/s)	0.05	ASTM D4491

Subsection: 843.01.01 Geotextile Fabric.
Table: TYPE IV FABRIC GEOTEXTILES FOR EMBANKMENT DRAINAGE BLANKETS AND PAVEMENT EDGE DRAINS
Revision: Add the following to the chart:

Property	Minimum Value[1]	Test Method
CBR Puncture (lbs)	309	ASTM D6241
Permittivity (1/s)	0.5	ASTM D4491

Subsection: 843.01.01 Geotextile Fabric.
Table: TYPE V HIGH STRENGTH GEOTEXTILE FABRIC
Revision: Make the following changes to the chart:

Property	Minimum Value[1]	Test Method
CBR Puncture (lbs)	618	ASTM D6241
Grab Strength (lbs)	700	ASTM D4632
Apparent Opening Size	U.S. #40[3]	ASTM D4751

[3] Maximum average roll value.

STANDARD DRAWINGS THAT APPLY

TRAFFIC

~ TEMPORARY ~

TRAFFIC CONTROL

LANE CLOSURE USING TRAFFIC SIGNALS	TTC-110

DEVICES

POST SPLICING DETAIL	TTD-110

BRIDGES

MISCELLANEOUS STANDARDS

BRIDGE RESTORATION AND WATERPROOFING WITH CONCRETE OVERLAYS	BGX-009-04

JOINTS

NEOPRENE EXPANSION DAMS AND ARMORED EDGES	BJE-001-11

PART III

EMPLOYMENT, WAGE AND RECORD REQUIREMENTS

TRANSPORTATION CABINET
DEPARTMENT OF HIGHWAYS

LABOR AND WAGE REQUIREMENTS
APPLICABLE TO OTHER THAN FEDERAL-AID SYSTEM PROJECTS

I. Application
II. Nondiscrimination of Employees (KRS 344)
III. Payment of Predetermined Minimum Wages
IV. Statements and Payrolls

I. APPLICATION

1. These contract provisions shall apply to all work performed on the contract by the contractor with his own organization and with the assistance of workmen under his immediate superintendence and to all work performed on the contract by piecework, station work or by subcontract. The contractor's organization shall be construed to include only workmen employed and paid directly by the contractor and equipment owned or rented by him, with or without operators.

2. The contractor shall insert in each of his subcontracts all of the stipulations contained in these Required Provisions and such other stipulations as may be required.

3. A breach of any of the stipulations contained in these Required Provisions may be grounds for termination of the contract.

II. NONDISCRIMINATION OF EMPLOYEES

AN ACT OF THE KENTUCKY
GENERAL ASSEMBLY TO PREVENT
DISCRIMINATION IN EMPLOYMENT
KRS CHAPTER 344
EFFECTIVE JUNE 16, 1972

The contract on this project, in accordance with KRS Chapter 344, provides that during the performance of this contract, the contractor agrees as follows:

1. The contractor shall not fail or refuse to hire, or shall not discharge any individual, or otherwise discriminate against an individual with respect to his compensation, terms, conditions, or privileges of employment, because of such individual's race, color, religion, national origin, sex, disability or age (between forty and seventy); or limit, segregate, or classify his employees in any way which would deprive or tend to deprive an individual of employment opportunities or otherwise adversely affect his status as an employee, because of such individual's race, color, religion, national origin, sex, disability or age (between forty and seventy). The contractor agrees to post in conspicuous places, available to employees and applicants for employment, notices to be provided setting forth the provisions of this nondiscrimination clause.

2. The contractor shall not print or publish or cause to be printed or published a notice or advertisement relating to employment by such an employer or membership in or any classification or referral for employment by the employment agency, indicating any preference, limitation, specification, or discrimination, based on race, color, religion, national origin, sex, disability or age (between forty and seventy), except that such notice or advertisement may indicate a preference, limitation, or specification based on religion, or national origin when religion, or national origin is a bona fide occupational qualification for employment.

3. If the contractor is in control of apprenticeship or other training or retraining, including on-the-job training programs, he shall not discriminate against an individual because of his race, color, religion, national origin, sex, disability or age (between forty and seventy), in admission to, or employment in any program established to provide apprenticeship or other training.

4. The contractor will send to each labor union or representative of workers with which he has a collective bargaining agreement or other contract or understanding, a notice to be provided advising the said labor union or workers' representative of the contractor's commitments under this section, and shall post copies of the notice in conspicuous places available to employees and applicants for employment. The contractor will take such action with respect to any subcontract or purchase order as the administrating agency may direct as a means of enforcing such provisions, including sanctions for non-compliance.

III. PAYMENT OF PREDETERMINED MINIMUM WAGES

1. These special provisions are supplemented elsewhere in the contract by special provisions which set forth certain predetermined minimum wage rates. The contractor shall pay not less than those rates.

2. The minimum wage determination schedule shall be posted by the contractor, in a manner prescribed by the Department of Highways, at the site of the work in prominent places where it can be easily seen by the workers.

IV. STATEMENTS AND PAYROLLS

1. All contractors and subcontractors affected by the terms of KRS 337.505 to 337.550 shall keep full and accurate payroll records covering all disbursements of wages to their employees to whom they are required to pay not less than the prevailing rate of wages. Payrolls and basic records relating thereto will be maintained during the course of the work and preserved for a period of one (1) year from the date of completion of this contract.

2. The payroll records shall contain the name, address and social security number of each employee, his correct classification, rate of pay, daily and weekly number of hours worked, itemized deductions made and actual wages paid.

3. The contractor shall make his daily records available at the project site for inspection by the State Department of Highways contracting office or his authorized representative.

Periodic investigations shall be conducted as required to assure compliance with the labor provisions of the contract. Interrogation of employees and officials of the contractor shall be permitted during working hours.

Aggrieved workers, Highway Managers, Assistant District Engineers, Resident Engineers and Project Engineers shall report all complaints and violations to the Division of Contract Procurement.

The contractor shall be notified in writing of apparent violations. The contractor may correct the reported violations and notify the Department of Highways of the action taken or may request an informal hearing. The request for hearing shall be in writing within ten (10) days after receipt of the notice of the reported violation. The contractor may submit

records and information which will aid in determining the true facts relating to the reported violations.

Any person or organization aggrieved by the action taken or the findings established as a result of an informal hearing by the Division of Contract Procurement may request a formal hearing.

4. The wages of labor shall be paid in legal tender of the United States, except that this condition will be considered satisfied if payment is made by a negotiable check, on a solvent bank, which may be cashed readily by the employee in the local community for the full amount, without discount or collection charges of any kind. Where checks are used for payments, the contractor shall make all necessary arrangements for them to be cashed and shall give information regarding such arrangements.

5. No fee of any kind shall be asked or accepted by the contractor or any of his agents from any person as a condition of employment on the project.

6. No laborers shall be charged for any tools used in performing their respective duties except for reasonably avoidable loss or damage thereto.

7. Every employee on the work covered by this contract shall be permitted to lodge, board, and trade where and with whom he elects and neither the contractor nor his agents, nor his employees shall directly or indirectly require as a condition of employment that an employee shall lodge, board or trade at a particular place or with a particular person.

8. Every employee on the project covered by this contract shall be an employee of either the prime contractor or an approved subcontractor.

9. No charge shall be made for any transportation furnished by the contractor or his agents to any person employed on the work.

10. No individual shall be employed as a laborer or mechanic on this contract except on a wage basis, but this shall not be construed to prohibit the rental of teams, trucks or other equipment from individuals.

No Covered employee may be employed on the work except in accordance with the classification set forth in the schedule mentioned above; provided, however, that in the event additional classifications are required, application shall be made by the contractor to the Department of Highways and (1) the Department shall request appropriate classifications and rates from the proper agency, or (2) if there is urgent need for additional classification to avoid undue delay in the work, the contractor may employ such workmen at rates deemed comparable to rates established for similar classifications provided he has made written application through the Department of Highways, addressed to the proper agency, for the supplemental rates. The contractor shall retroactively adjust, upon receipt of the supplemental rates schedule, the wages of any employee paid less than the established rate and may adjust the wages of any employee overpaid.

11. No contractor or subcontractor contracting for any part of the contract work which may require or involve the employment of laborers or mechanics shall require or permit any laborer or mechanic in any work-week in which he is employed on such work, to work in excess of eight hours in any calendar day or in excess of forty hours in such work-week unless such laborer or mechanic receives compensation at a rate not less than one and one half times his basic rate of pay for all hours worked in excess of eight hours in any calendar day or in excess of forty hours in such work-week. A laborer, workman or mechanic and an employer may enter into a written agreement or a collective bargaining agreement to work more than eight (8) hours a calendar day but not more than ten (10) hours a calendar day for the straight time hourly rate. This agreement shall be in writing and shall be executed prior to the employee working in excess of eight (8) hours, but not more than ten (10) hours, in any one (1) calendar day.

12. Payments to the contractor may be suspended or withheld due to failure of the contractor to pay any laborer or mechanic employed or working on the site of the work, all or part of the wages required under the terms of the contract. The Department may suspend or withhold payments only after the contractor has been given written notice of the alleged violation and the contractor has failed to comply with the wage determination of the Department of Highways.

13. Contractors and subcontractors shall comply with the sections of Kentucky Revised Statutes, Chapter 337 relating to contracts for Public Works.

Revised 2-16-95

EXECUTIVE BRANCH CODE OF ETHICS

In the 1992 regular legislative session, the General Assembly passed and Governor Brereton Jones signed Senate Bill 63 (codified as KRS 11A), the Executive Branch Code of Ethics, which states, in part:

> KRS 11A.040 (6) provides:
>
> No present or former public servant shall, within six (6) months of following termination of his office or employment, accept employment, compensation or other economic benefit from any person or business that contracts or does business with the state in matters in which he was directly involved during his tenure. This provision shall not prohibit an individual from returning to the same business, firm, occupation, or profession in which he was involved prior to taking office or beginning his term of employment, provided that, for a period of six (6) months, he personally refrains from working on any matter in which he was directly involved in state government. This subsection shall not prohibit the performance of ministerial functions, including, but not limited to, filing tax returns, filing applications for permits or licenses, or filing incorporation papers.
>
> KRS 11A.040 (8) states:
>
> A former public servant shall not represent a person in a matter before a state agency in which the former public servant was directly involved, for a period of one (1) year after the latter of:
>
> a) The date of leaving office or termination of employment; or
> b) The date the term of office expires to which the public servant was elected.

This law is intended to promote public confidence in the integrity of state government and to declare as public policy the idea that state employees should view their work as a public trust and not as a way to obtain private benefits.

If you have worked for the executive branch of state government within the past six months, you may be subject to the law's prohibitions. The law's applicability may be different if you hold elected office or are contemplating representation of another before a state agency.

Also, if you are affiliated with a firm which does business with the state and which employs former state executive-branch employees, you should be aware that the law may apply to them.

In case of doubt, the law permits you to request an advisory opinion from the Executive Branch Ethics Commission, Room 136, Capitol Building, 700 Capitol Avenue, Frankfort, Kentucky 40601; telephone (502) 564-7954.

Kentucky Equal Employment Opportunity Act of 1978

The requirements of the Kentucky Equal Employment Opportunity Act of 1978 (KRS 45.560-45.640) shall apply to this Contract. The apparent low Bidder will be required to submit EEO forms to the Division of Construction Procurement, which will then forward to the Finance and Administration Cabinet for review and approval. No award will become effective until all forms are submitted and EEO/CC has certified compliance. The required EEO forms are as follows:

- EEO-1: Employer Information Report
- Affidavit of Intent to Comply
- Employee Data Sheet
- Subcontractor Report

These forms are available on the Finance and Administration's web page under ***Vendor Information, Standard Attachments and General Terms*** at the following address: **https://www.eProcurement.ky.gov**.

Bidders currently certified as being in compliance by the Finance and Administration Cabinet may submit a copy of their approval letter in lieu of the referenced EEO forms.

For questions or assistance please contact the Finance and Administration Cabinet by email at **finance.contractcompliance@ky.gov** or by phone at 502-564-2874.

General Decision Number: KY140100 08/22/2014 KY100

Superseded General Decision Number: KY20130100

State: Kentucky

Construction Type: Highway

Counties: Anderson, Bath, Bourbon, Boyd, Boyle, Bracken, Breckinridge, Bullitt, Carroll, Carter, Clark, Elliott, Fayette, Fleming, Franklin, Gallatin, Grant, Grayson, Greenup, Hardin, Harrison, Henry, Jefferson, Jessamine, Larue, Lewis, Madison, Marion, Mason, Meade, Mercer, Montgomery, Nelson, Nicholas, Oldham, Owen, Robertson, Rowan, Scott, Shelby, Spencer, Trimble, Washington and Woodford Counties in Kentucky.

HIGHWAY CONSTRUCTION PROJECTS (excluding tunnels, building structures in rest area projects & railroad construction; bascule, suspension & spandrel arch bridges designed for commercial navigation, bridges involving marine construction; and other major bridges).

Modification Number	Publication Date
0	01/03/2014
1	02/14/2014
2	04/18/2014
3	05/09/2014
4	05/23/2014
5	06/06/2014
6	06/27/2014
7	07/04/2014
8	07/18/2014
9	07/25/2014
10	08/22/2014

BRIN0004-003 06/01/2011

BRECKENRIDGE COUNTY

	Rates	Fringes
BRICKLAYER	$ 24.11	10.07

BRKY0001-005 06/01/2013

BULLITT, CARROLL, GRAYSON, HARDIN, HENRY, JEFFERSON, LARUE, MARION, MEADE, NELSON, OLDHAM, SHELBY, SPENCER, & TRIMBLE COUNTIES:

	Rates	Fringes
BRICKLAYER	$ 24.82	10.71

BRKY0002-006 06/01/2011

BRACKEN, GALLATIN, GRANT, MASON & ROBERTSON COUNTIES:

	Rates	Fringes
BRICKLAYER	$ 26.57	10.26

BRKY0007-004 06/01/2011

BOYD, CARTER, ELLIOT, FLEMING, GREENUP, LEWIS & ROWAN COUNTIES:

	Rates	Fringes
BRICKLAYER	$ 28.29	16.80

BRKY0017-004 06/01/2009

ANDERSON, BATH, BOURBON, BOYLE, CLARK, FAYETTE, FRANKLIN, HARRISON, JESSAMINE, MADISON, MERCER, MONTGOMERY, NICHOLAS, OWEN, SCOTT, WASHINGTON & WOODFORD COUNTIES:

	Rates	Fringes
BRICKLAYER	$ 24.11	9.97

CARP0064-001 04/01/2014

	Rates	Fringes
CARPENTER	$ 27.50	14.96
Diver	$ 41.63	14.96
PILEDRIVERMAN	$ 27.75	14.96

ELEC0212-008 06/02/2014

BRACKEN, GALLATIN and GRANT COUNTIES

	Rates	Fringes
ELECTRICIAN	$ 26.74	16.45

ELEC0212-014 07/01/2013

BRACKEN, GALLATIN & GRANT COUNTIES:

	Rates	Fringes
Sound & Communication Technician	$ 22.50	9.51

* ELEC0317-012 05/28/2014

BOYD, CARTER, ELLIOT & ROWAN COUNTIES:

	Rates	Fringes
ELECTRICIAN		
Cable Splicer	$ 32.68	18.13
Electrician	$ 32.62	21.45

ELEC0369-007 05/29/2013

ANDERSON, BATH, BOURBON, BOYLE, BRECKINRIDGE, BULLITT, CARROLL, CLARK, FAYETTE, FRAONKLIN, GRAYSON, HARDIN, HARRISON, HENRY, JEFFERSON, JESSAMINE, LARUE, MADISON, MARION, MEADE, MERCER, MONTGOMERY, NELSON, NICHOLAS, OLDHAM, OWEN, ROBERTSON, SCOTT, SHELBY, SPENCER, TRIMBLE, WASHINGTON, & WOODFORD COUNTIES:

	Rates	Fringes
ELECTRICIAN.....	$ 29.48	14.37

ELEC0575-002 06/02/2014

FLEMING, GREENUP, LEWIS & MASON COUNTIES:

	Rates	Fringes
ELECTRICIAN.....	$ 31.70	14.21

ENGI0181-018 07/01/2014

	Rates	Fringes
POWER EQUIPMENT OPERATOR		
GROUP 1.....	$ 28.85	14.15
GROUP 2.....	$ 26.24	14.15
GROUP 3.....	$ 26.65	14.15
GROUP 4.....	$ 25.95	14.15

OPERATING ENGINEER CLASSIFICATIONS

GROUP 1 - A-Frame Winch Truck; Auto Patrol; Backfiller; Batcher Plant; Bituminous Paver; Bituminous Transfer Machine; Boom Cat; Bulldozer; Mechanic; Cableway; Carry-All Scoop; Carry Deck Crane; Central Compressor Plant; Cherry Picker; Clamshell; Concrete Mixer (21 cu. ft. or Over); Concrete Paver; Truck-Mounted Concrete Pump; Core Drill; Crane; Crusher Plant; Derrick; Derrick Boat; Ditching & Trenching Machine; Dragline; Dredge Operator; Dredge Engineer; Elevating Grader & Loaders; Grade-All; Gurries; Heavy Equipment Robotics Operator/Mechanic; High Lift; Hoe-Type Machine; Hoist (Two or More Drums); Hoisting Engine (Two or More Drums); Horizontal Directional Drill Operator; Hydrocrane; Hyster; KeCal Loader; LeTourneau; Locomotive; Mechanic; Mechanically Operated Laser Screed; Mechanic Welder; Mucking Machine; Motor Scraper; Orangepeel Bucket; Overhead Crane; Piledriver; Power Blade; Pumpcrete; Push Dozer; Rock Spreader, attached to equipment; Rotary Drill; Roller (Bituminous); Rough Terrain Crane; Scarifier; Scoopmobile; Shovel; Side Boom; Subgrader; Tailboom; Telescoping Type Forklift; Tow or Push Boat; Tower Crane (French, German & other types); Tractor Shovel; Truck Crane; Tunnel Mining Machines, including Moles, Shields or similar types of Tunnel Mining Equipment

GROUP 2 - Air Compressor (Over 900 cu. ft. per min.); Bituminous Mixer; Boom Type Tamping Machine; Bull Float; Concrete Mixer (Under 21 cu. ft.); Dredge Engineer; Electric Vibrator; Compactor/Self-Propelled Compactor;

Elevator (One Drum or Buck Hoist); Elevator (When used to Hoist Building Material); Finish Machine; Firemen & Hoist (One Drum); Flexplane; Forklift (Regardless of Lift Height); Form Grader; Joint Sealing Machine; Outboard Motor Boat; Power Sweeper (Riding Type); Roller (Rock); Ross Carrier; Skid Mounted or Trailer Mounted Conrete Pump; Skid Steer Machine with all Attachments; Switchman or Brakeman; Throttle Valve Person; Tractair & Road Widening Trencher; Tractor (50 H.P. or Over); Truck Crane Oiler; Tugger; Welding Machine; Well Points; & Whirley Oiler

GROUP 3 - All Off Road Material Handling Equipment, including Articulating Dump Trucks; Greaser on Grease Facilities servicing Heavy Equipment

GROUP 4 - Bituminous Distributor; Burlap & Curing Machine; Cement Gun; Concrete Saw; Conveyor; Deckhand Oiler; Grout Pump; Hydraulic Post Driver; Hydro Seeder; Mud Jack; Oiler; Paving Joint Machine; Power Form Handling Equipment; Pump; Roller (Earth); Steerman; Tamping Machine; Tractor (Under 50 H.P.); & Vibrator

CRANES - with booms 150 ft. & Over (Including JIB), and where the length of the boom in combination with the length of the piling leads equals or exceeds 150 ft. - $1.00 over Group 1 rate

EMPLOYEES ASSIGNED TO WORK BELOW GROUND LEVEL ARE TO BE PAID 10%
ABOVE BASIC WAGE RATE. THIS DOES NOT APPLY TO OPEN CUT WORK.

IRON0044-009 06/01/2013

BRACKEN, GALLATIN, GRANT, HARRISON, ROBERTSON,
BOURBON (Northern third, including Townships of Jackson, Millersburg, Ruddel Mills & Shawhan);
CARROLL (Eastern third, including the Township of Ghent);
FLEMING (Western part, excluding Townships of Beechburg, Colfax, Elizaville, Flemingsburg, Flemingsburg Junction, Foxport, Grange City, Hillsboro, Hilltop, Mount Carmel, Muses Mills, Nepton, Pecksridge, Plummers Landing, Plummers Mill, Poplar Plains, Ringos Mills, Tilton & Wallingford);
MASON (Western two-thirds, including Townships of Dover, Lewisburg, Mays Lick, Maysville, Minerva, Moranburg, Murphysville, Ripley, Sardis, Shannon, South Ripley & Washington);
NICHOLAS (Townships of Barefoot, Barterville, Carlisle, Ellisville, Headquarters, Henryville, Morningglory, Myers & Oakland Mills);
OWEN (Townships of Beechwood, Bromley, Fairbanks, Holbrook, Jonesville, Long Ridge, Lusby's Mill, New, New Columbus, New Liberty, Owenton, Poplar Grove, Rockdale, Sanders, Teresita & Wheatley);
SCOTT (Northern two-thirds, including Townships of Biddle, Davis, Delaplain, Elmville, Longlick, Muddy Ford, Oxford, Rogers Gap, Sadieville, Skinnersburg & Stonewall)

	Rates	Fringes

IRONWORKER
Fence Erector.....$ 22.50 18.40
Structural.....$ 24.80 18.40

IRON0070-006 06/01/2014

ANDERSON, BOYLE, BRECKINRIDGE, BULLITT, FAYETTE, FRANKLIN, GRAYSON, HARDIN, HENRY, JEFFERSON, JESSAMINE, LARUE, MADISON, MARION, MEADE, MERCER, NELSON, OLDHAM, SHELBY, SPENCER, TRIMBLE, WASHINGTON & WOODFORD
BOURBON (Southern two-thirds, including Townships of Austerlity, Centerville, Clintonville, Elizabeth, Hutchison, Littlerock, North Middletown & Paris);
CARROLL (Western two-thirds, including Townships of Carrollton, Easterday, English, Locust, Louis, Prestonville & Worthville);
CLARK (Western two-thirds, including Townships of Becknerville, Flanagan, Ford, Pine Grove, Winchester & Wyandotte);
OWEN (Eastern eighth, including Townships of Glenmary, Gratz, Monterey, Perry Park & Tacketts Mill);
SCOTT (Southern third, including Townships of Georgetown, Great Crossing, Newtown, Stampling Ground & Woodlake);

	Rates	Fringes
IRONWORKER.....	$ 26.97	19.75

IRON0372-006 06/01/2013

BRACKEN, GALLATIN, GRANT, HARRISON and ROBERTSON
BOURBON (Northern third, including Townships of Jackson, Millersburg, Ruddel Mills & Shawhan);
CARROLL (Eastern third, including the Township of Ghent);
FLEMING (Western part, Excluding Townships of Beechburg, Colfax, Elizaville, Flemingsburg, Flemingsburg Junction, Foxport, Grange City, Hillsboro, Hilltop, Mount Carmel, Muses Mills, Nepton, Pecksridge, Plummers Landing, Plummers Mill, Poplar Plains,
Ringos Mills, Tilton & Wallingford);
MASON (Western two-thirds, including Townships of Dover, Lewisburg, Mays Lick, Maysville, Minerva, Moranburg, Murphysville, Ripley, Sardis, Shannon, South Ripley & Washington);
NICHOLAS (Townships of Barefoot, Barterville, Carlisle, Ellisville, Headquarters, Henryville, Morningglory, Myers & Oakland Mills);
OWEN (Townships of Beechwood, Bromley, Fairbanks, Holbrook, Jonesville, Long Ridge, Lusby's Mill, New, New Columbus, New Liberty, Owenton, Poplar Grove, Rockdale, Sanders, Teresita & Wheatley);
SCOTT (Northern two-thirds, including Townships of Biddle, Davis,Delaplain, Elmville, Longlick, Muddy Ford, Oxford, Rogers Gap, Sadieville, Skinnersburg & Stonewall) COUNTIES

	Rates	Fringes
IRONWORKER, REINFORCING.....	$ 26.47	19.30

IRON0769-007 12/01/2012

BATH, BOYD, CARTER, ELLIOTT, GREENUP, LEWIS, MONTGOMERY & ROWAN
CLARK (Eastern third, including townships of Bloomingdale,
Hunt, Indian Fields, Kiddville, Loglick, Rightangele & Thomson);
FLEMING (Townships of Beechburg, Colfax, Elizaville,
Flemingsburg, Flemingsburg Junction, Foxport, Grange City,
Hillsboro, Hilltop, Mount Carmel, Muses Mills, Nepton,
Pecksridge, Plummers Landing, Plummers Mill, Poplar Plains,
Ringos Mills, Tilton & Wallingford);
MASON (Eastern third, including Townships of Helena, Marshall,
Orangeburg, Plumville & Springdale);
NICHOLAS (Eastern eighth, including the Township of Moorefield
Sprout)

	Rates	Fringes
IRONWORKER	$ 32.54	20.18

LABO0189-003 07/01/2014

BATH, BOURBON, BOYD, BOYLE, BRACKEN, CARTER, CLARK, ELLIOTT,
FAYETTE, FLEMING, FRANKLIN, GALLATIN, GRANT, GREENUP, HARRISON,
JESSAMINE, LEWIS, MADISON, MASON, MERCER, MONTGOMERY, NICHOLAS,
OWEN, ROBERTSON, ROWAN, SCOTT, & WOOLFORD COUNTIES

	Rates	Fringes
Laborers:		
GROUP 1	$ 21.80	11.96
GROUP 2	$ 22.05	11.96
GROUP 3	$ 22.10	11.96
GROUP 4	$ 22.70	11.96

LABORERS CLASSIFICATIONS

GROUP 1 - Aging & Curing of Concrete; Asbestos Abatement Worker; Asphalt Plant; Asphalt; Batch Truck Dump; Carpenter Tender; Cement Mason Tender; Cleaning of Machines; Concrete; Demolition; Dredging; Environmental - Nuclear, Radiation, Toxic & Hazardous Waste - Level D; Flagperson; Grade Checker; Hand Digging & Hand Back Filling; Highway Marker Placer; Landscaping, Mesh Handler & Placer; Puddler; Railroad; Rip-rap & Grouter; Right-of-Way; Sign, Guard Rail & Fence Installer; Signal Person; Sound Barrier Installer; Storm & Sanitary Sewer; Swamper; Truck Spotter & Dumper; Wrecking of Concrete Forms; General Cleanup

GROUP 2 - Batter Board Man (Sanitary & Storm Sewer); Brickmason Tender; Mortar Mixer Operator; Scaffold Builder; Burner & Welder; Bushammer; Chain Saw Operator; Concrete Saw Operator; Deckhand Scow Man; Dry Cement Handler; Environmental - Nuclear, Radiation, Toxic & Hazardous Waste - Level C; Forklift Operator for Masonary; Form Setter; Green Concrete Cutting; Hand Operated Grouter & Grinder Machine Operator; Jackhammer; Pavement Breaker; Paving Joint Machine; Pipelayer; Plastic Pipe Fusion; Power Driven Georgia Buggy & Wheel Barrow; Power Post Hole Digger;

Precast Manhole Setter; Walk-Behind Tamper; Walk-Behind Trencher; Sand Blaster; Concrete Chipper; Surface Grinder; Vibrator Operator; Wagon Driller

GROUP 3 - Asphalt Luteman & Raker; Gunnite Nozzleman; Gunnite Operator & Mixer; Grout Pump Operator; Side Rail Setter; Rail Paved Ditches; Screw Operator; Tunnel (Free Air); Water Blaster

GROUP 4 - Caisson Worker (Free Air); Cement Finisher; Environmental - Nuclear, Radiation, Toxic & Hazardous Waste - Levels A & B; Miner & Driller (Free Air); Tunnel Blaster; & Tunnel Mucker (Free Air); Directional & Horizontal Boring; Air Track Drillers (All Types); Powdermen & Blasters; Troxler & Concrete Tester if Laborer is Utilized

---

LABO0189-008 07/01/2014

ANDERSON, BULLITT, CARROLL, HARDIN, HENRY, JEFFERSON, LARUE, MARION, MEADE, NELSON, OLDHAM, SHELBY, SPENCER, TRIMBLE & WASHINGTON COUNTIES

	Rates	Fringes
Laborers:		
GROUP 1.....$	22.71	11.05
GROUP 2.....$	22.96	11.05
GROUP 3.....$	23.01	11.05
GROUP 4.....$	23.61	11.05

LABORERS CLASSIFICATIONS

GROUP 1 - Aging & Curing of Concrete; Asbestos Abatement Worker; Asphalt Plant; Asphalt; Batch Truck Dump; Carpenter Tender; Cement Mason Tender; Cleaning of Machines; Concrete; Demolition; Dredging; Environmental - Nuclear, Radiation, Toxic & Hazardous Waste - Level D; Flagperson; Grade Checker; Hand Digging & Hand Back Filling; Highway Marker Placer; Landscaping, Mesh Handler & Placer; Puddler; Railroad; Rip-rap & Grouter; Right-of-Way; Sign, Guard Rail & Fence Installer; Signal Person; Sound Barrier Installer; Storm & Sanitary Sewer; Swamper; Truck Spotter & Dumper; Wrecking of Concrete Forms; General Cleanup

GROUP 2 - Batter Board Man (Sanitary & Storm Sewer); Brickmason Tender; Mortar Mixer Operator; Scaffold Builder; Burner & Welder; Bushammer; Chain Saw Operator; Concrete Saw Operator; Deckhand Scow Man; Dry Cement Handler; Environmental - Nuclear, Radiation, Toxic & Hazardous Waste - Level C; Forklift Operator for Masonary; Form Setter; Green Concrete Cutting; Hand Operated Grouter & Grinder Machine Operator; Jackhammer; Pavement Breaker; Paving Joint Machine; Pipelayer; Plastic Pipe Fusion; Power Driven Georgia Buggy & Wheel Barrow; Power Post Hole Digger; Precast Manhole Setter; Walk-Behind Tamper; Walk-Behind Trencher; Sand Blaster; Concrete Chipper; Surface Grinder; Vibrator Operator; Wagon Driller

GROUP 3 - Asphalt Luteman & Raker; Gunnite Nozzleman; Gunnite Operator & Mixer; Grout Pump Operator; Side Rail Setter; Rail Paved Ditches; Screw Operator; Tunnel (Free Air); Water Blaster

GROUP 4 - Caisson Worker (Free Air); Cement Finisher; Environmental - Nuclear, Radiation, Toxic & Hazardous Waste - Levels A & B; Miner & Driller (Free Air); Tunnel Blaster; & Tunnel Mucker (Free Air); Directional & Horizontal Boring; Air Track Drillers (All Types); Powdermen & Blasters; Troxler & Concrete Tester if Laborer is Utilized

---

LABO0189-009 07/01/2014

BRECKINRIDGE & GRAYSON COUNTIES

	Rates	Fringes
Laborers:		
GROUP 1	$ 22.66	11.10
GROUP 2	$ 22.91	11.10
GROUP 3	$ 22.96	11.10
GROUP 4	$ 23.56	11.10

LABORERS CLASSIFICATIONS

GROUP 1 - Aging & Curing of Concrete; Asbestos Abatement Worker; Asphalt Plant; Asphalt; Batch Truck Dump; Carpenter Tender; Cement Mason Tender; Cleaning of Machines; Concrete; Demolition; Dredging; Environmental - Nuclear, Radiation, Toxic & Hazardous Waste - Level D; Flagperson; Grade Checker; Hand Digging & Hand Back Filling; Highway Marker Placer; Landscaping, Mesh Handler & Placer; Puddler; Railroad; Rip-rap & Grouter; Right-of-Way; Sign, Guard Rail & Fence Installer; Signal Person; Sound Barrier Installer; Storm & Sanitary Sewer; Swamper; Truck Spotter & Dumper; Wrecking of Concrete Forms; General Cleanup

GROUP 2 - Batter Board Man (Sanitary & Storm Sewer); Brickmason Tender; Mortar Mixer Operator; Scaffold Builder; Burner & Welder; Bushammer; Chain Saw Operator; Concrete Saw Operator; Deckhand Scow Man; Dry Cement Handler; Environmental - Nuclear, Radiation, Toxic & Hazardous Waste - Level C; Forklift Operator for Masonary; Form Setter; Green Concrete Cutting; Hand Operated Grouter & Grinder Machine Operator; Jackhammer; Pavement Breaker; Paving Joint Machine; Pipelayer; Plastic Pipe Fusion; Power Driven Georgia Buggy & Wheel Barrow; Power Post Hole Digger; Precast Manhole Setter; Walk-Behind Tamper; Walk-Behind Trencher; Sand Blaster; Concrete Chipper; Surface Grinder; Vibrator Operator; Wagon Driller

GROUP 3 - Asphalt Luteman & Raker; Gunnite Nozzleman; Gunnite Operator & Mixer; Grout Pump Operator; Side Rail Setter; Rail Paved Ditches; Screw Operator; Tunnel (Free Air); Water Blaster

GROUP 4 - Caisson Worker (Free Air); Cement Finisher; Environmental - Nuclear, Radiation, Toxic & Hazardous Waste

- Levels A & B; Miner & Driller (Free Air); Tunnel Blaster; & Tunnel Mucker (Free Air); Directional & Horizontal Boring; Air Track Drillers (All Types); Powdermen & Blasters; Troxler & Concrete Tester if Laborer is Utilized

---

PAIN0012-005 06/11/2005

BATH, BOURBON, BOYLE, CLARK, FAYETTE, FLEMING, FRANKLIN, HARRISON, JESSAMINE, MADISON, MERCER, MONTGOMERY, NICHOLAS, ROBERTSON, SCOTT & WOODFORD COUNTIES:

	Rates	Fringes
PAINTER		
Bridge/Equipment Tender and/or Containment Builder	$ 18.90	5.90
Brush & Roller	$ 21.30	5.90
Elevated Tanks; Steeplejack Work; Bridge & Lead Abatement	$ 22.30	5.90
Sandblasting & Waterblasting	$ 22.05	5.90
Spray	$ 21.80	5.90

PAIN0012-017 05/01/2014

BRACKEN, GALLATIN, GRANT, MASON & OWEN COUNTIES:

	Rates	Fringes
PAINTER (Heavy & Highway Bridges - Guardrails - Lightpoles - Striping)		
Bridge Equipment Tender and Containment Builder	$ 20.73	8.71
Brush & Roller	$ 23.39	8.71
Elevated Tanks; Steeplejack Work; Bridge & Lead Abatement	$ 24.39	8.71
Sandblasting & Water Blasting	$ 24.14	8.71
Spray	$ 23.89	8.71

PAIN0118-004 06/01/2014

ANDERSON, BRECKINRIDGE, BULLITT, CARROLL, GRAYSON, HARDIN, HENRY, JEFFERSON, LARUE, MARION, MEADE, NELSON, OLDHAM, SHELBY, SPENCER, TRIMBLE & WASHINGTON COUNTIES:

	Rates	Fringes
PAINTER		
Brush & Roller	$ 18.50	12.02
Spray, Sandblast, Power Tools, Waterblast & Steam Cleaning	$ 19.00	12.02

PAIN1072-003 12/01/2013

BOYD, CARTER, ELLIOTT, GREENUP, LEWIS and ROWAN COUNTIES

	Rates	Fringes
Painters:		
Bridges; Locks; Dams; Tension Towers & Energized Substations	$ 31.03	15.10
Power Generating Facilities	$ 27.79	15.10

PLUM0248-003 06/01/2014

BOYD, CARTER, ELLIOTT, GREENUP, LEWIS & ROWAN COUNTIES:

	Rates	Fringes
Plumber and Steamfitter	$ 33.00	18.95

PLUM0392-007 06/01/2014

BRACKEN, CARROLL (Eastern Half), GALLATIN, GRANT, MASON, OWEN & ROBERTSON COUNTIES:

	Rates	Fringes
Plumbers and Pipefitters	$ 29.80	17.79

PLUM0502-003 08/01/2013

BRECKINRIDGE, BULLITT, CARROLL (Western Half), FRANKLIN (Western three-fourths), GRAYSON, HARDIN, HENRY, JEFFERSON, LARUE, MARION, MEADE, NELSON, OLDHAM, SHELBY, SPENCER, TRIMBLE & WASHINGTON COUNTIES

	Rates	Fringes
PLUMBER	$ 32.00	17.17

SUKY2010-160 10/08/2001

	Rates	Fringes
Truck drivers:		
GROUP 1	$ 16.57	7.34
GROUP 2	$ 16.68	7.34
GROUP 3	$ 16.86	7.34
GROUP 4	$ 16.96	7.34

TRUCK DRIVER CLASSIFICATIONS

GROUP 1 - Mobile Batch Truck Tender

GROUP 2 - Greaser; Tire Changer; & Mechanic Tender

GROUP 3 - Single Axle Dump; Flatbed; Semi-trailer or Pole Trailer when used to pull building materials and equipment;

Tandem Axle Dump; Distributor; Mixer; & Truck Mechanic

GROUP 4 - Euclid & Other Heavy Earthmoving Equipment & Lowboy; Articulator Cat; 5-Axle Vehicle; Winch & A-Frame when used in transporting materials; Ross Carrier; Forklift when used to transport building materials; & Pavement Breaker

---

WELDERS - Receive rate prescribed for craft performing operation to which welding is incidental.

==========

Unlisted classifications needed for work not included within the scope of the classifications listed may be added after award only as provided in the labor standards contract clauses (29CFR 5.5 (a) (1) (ii)).

The body of each wage determination lists the classification and wage rates that have been found to be prevailing for the cited type(s) of construction in the area covered by the wage determination. The classifications are listed in alphabetical order of "identifiers" that indicate whether the particular rate is union or non-union.

Union Identifiers

An identifier enclosed in dotted lines beginning with characters other than "SU" denotes that the union classification and rate have found to be prevailing for that classification. Example: PLUM0198-005 07/01/2011. The first four letters , PLUM, indicate the international union and the four-digit number, 0198, that follows indicates the local union number or district council number where applicable , i.e., Plumbers Local 0198. The next number, 005 in the example, is an internal number used in processing the wage determination. The date, 07/01/2011, following these characters is the effective date of the most current negotiated rate/collective bargaining agreement which would be July 1, 2011 in the above example.

Union prevailing wage rates will be updated to reflect any changes in the collective bargaining agreements governing the rates.

0000/9999: weighted union wage rates will be published annually each January.

Non-Union Identifiers

Classifications listed under an "SU" identifier were derived from survey data by computing average rates and are not union rates; however, the data used in computing these rates may include both union and non-union data. Example: SULA2004-007 5/13/2010. SU indicates the rates are not union majority rates, LA indicates the State of Louisiana; 2004 is the year of the survey; and 007 is an internal number used in producing the wage determination. A 1993 or later date, 5/13/2010, indicates the classifications and rates under that identifier were issued as a General Wage Determination on that date.

Survey wage rates will remain in effect and will not change until a new survey is conducted.

WAGE DETERMINATION APPEALS PROCESS

1.) Has there been an initial decision in the matter? This can be:

* an existing published wage determination
* a survey underlying a wage determination
* a Wage and Hour Division letter setting forth a position on a wage determination matter
* a conformance (additional classification and rate) ruling

On survey related matters, initial contact, including requests for summaries of surveys, should be with the Wage and Hour Regional Office for the area in which the survey was conducted because those Regional Offices have responsibility for the Davis-Bacon survey program. If the response from this initial contact is not satisfactory, then the process described in 2.) and 3.) should be followed.

With regard to any other matter not yet ripe for the formal process described here, initial contact should be with the Branch of Construction Wage Determinations. Write to:

Branch of Construction Wage Determinations
Wage and Hour Division
U.S. Department of Labor
200 Constitution Avenue, N.W.
Washington, DC 20210

2.) If the answer to the question in 1.) is yes, then an interested party (those affected by the action) can request review and reconsideration from the Wage and Hour Administrator (See 29 CFR Part 1.8 and 29 CFR Part 7). Write to:

Wage and Hour Administrator
U.S. Department of Labor
200 Constitution Avenue, N.W.
Washington, DC 20210

The request should be accompanied by a full statement of the interested party's position and by any information (wage payment data, project description, area practice material, etc.) that the requestor considers relevant to the issue.

3.) If the decision of the Administrator is not favorable, an interested party may appeal directly to the Administrative Review Board (formerly the Wage Appeals Board). Write to:

Administrative Review Board
U.S. Department of Labor
200 Constitution Avenue, N.W.
Washington, DC 20210

4.) All decisions by the Administrative Review Board are final.

==========

END OF GENERAL DECISION

Fringe benefit amounts are applicable for all hours worked except when otherwise noted.

These rates are listed pursuant to the Kentucky Determination No. CR-14-III- HWY dated July 14, 2014.

No laborer, workman or mechanic shall be paid at a rate less than that of a Journeyman except those classified as bona fide apprentices.

Apprentices or trainees shall be permitted to work as such subject to Administrative Regulations adopted by the Commissioner of Workplace Standards. Copies of these regulations will be furnished upon request from any interested person.

Before using apprentices on the job the contractor shall present to the Contracting Officer written evidence of registration of such employees in a program of a State apprenticeship and training agency approved and recognized by the U. S. Bureau of Apprenticeship and Training. In the absence of such a State agency, the contractor shall submit evidence of approval and registration by the U. S. Bureau of Apprenticeship and Training.

The contractor shall submit to the Contracting Officer, written evidence of the established apprenticeship-journeyman ratios and wage rates in the project area, which will be the basis for establishing such ratios and rates for the project under the applicable contract provisions.

TO: EMPLOYERS/EMPLOYEES

PREVAILING WAGE SCHEDULE:

The wages indicated on this wage schedule are the least permitted to be paid for the occupations indicated. When an employee works in more than one classification, the employer must record the number of hours worked in each classification at the prescribed hourly base rate.

OVERTIME:

Overtime is to be paid after an employee works eight (8) hours a day or forty (40) hours a week, whichever gives the employee the greater wages. At least time and one-half the base rate is required for all overtime. A laborer, workman or mechanic and an employer may enter into a written agreement or a collective bargaining agreement to work more than eight (8) hours a calendar day but not more than ten (10) hours a calendar day for the straight time hourly rate. Wage violations or questions should be directed to the designated Engineer or the undersigned.

Diana Castle Radcliffe, P.E.
Director, Division of Construction Procurement
Frankfort, Kentucky 40622

PART IV

INSURANCE

INSURANCE

The Contractor shall procure and maintain the following insurance in addition to the insurance required by law:

1) Commercial General Liability-Occurrence form – not less than $2,000,000 General aggregate, $2,000,000 Products & Completed Aggregate, $1,000,000 Personal & Advertising, $1,000,000 each occurrence.

2) Automobile Liability- $1,000,000 per accident

3) Employers Liability:

   a) $100,000 Each Accident Bodily Injury
   b) $500,000 Policy limit Bodily Injury by Disease
   c) $100,000 Each Employee Bodily Injury by Disease

4) The insurance required above must be evidenced by a Certificate of Insurance and this Certificate of Insurance must contain one of the following statements:
   a) "policy contains no deductible clauses."
   b) "policy contains _____ (amount) deductible property damage clause but company will pay claim and collect the deductible from the insured."

5) KENTUCKY WORKMEN'S COMPENSATION INSURANCE. The contractor shall furnish evidence of coverage of all his employees or give evidence of self-insurance by submitting a copy of a certificate issued by the Workmen's Compensation Board.

The cost of insurance is incidental to all contract items. All subcontractors must meet the same minimum insurance requirements.

PART V

BID ITEMS

142903

PROPOSAL BID ITEMS

Report Date 9/30/14

Section: 0001 - BRIDGE

LINE	BID CODE	ALT	DESCRIPTION	QUANTITY	UNIT	UNIT PRICE	FP	AMOUNT
0010	02014		BARRICADE-TYPE III	6.00	EACH		$	
0020	02562		TEMPORARY SIGNS	200.00	SQFT		$	
0030	02650		MAINTAIN & CONTROL TRAFFIC APPLIES TO 022B00035N	1.00	LS		$	
0040	03298		EXPAN JOINT REPLACE 4 IN	80.00	LF		$	
0050	03299		ARMORED EDGE FOR CONCRETE	40.00	LF		$	
0060	03300		ELIMINATE TRANSVERSE JOINT	60.00	LF		$	
0070	03304		BRIDGE OVERLAY APPROACH PAVEMENT	444.00	SQYD		$	
0080	06514		PAVE STRIPING-PERM PAINT-4 IN	1,184.00	LF		$	
0090	08150		STEEL REINFORCEMENT	1,703.40	LB		$	
0100	08504		EPOXY SAND SLURRY	87.00	SQYD		$	
0110	08526		CONC CLASS M FULL DEPTH PATCH	6.00	CUYD		$	
0120	08534		CONCRETE OVERLAY-LATEX	36.30	CUYD		$	
0130	08549		BLAST CLEANING	958.00	SQYD		$	
0140	08551		MACHINE PREP OF SLAB	871.00	SQYD		$	
0150	22146EN		CONCRETE PATCHING REPAIR	1,600.00	SQFT		$	
0160	23378EC		CONCRETE SEALING	10,000.00	SQFT		$	
0170	24094EC		PARTIAL DEPTH PATCHING	27.20	CUYD		$	

Section: 0002 - DEMOBILIZATION

LINE	BID CODE	ALT	DESCRIPTION	QUANTITY	UNIT	UNIT PRICE	FP	AMOUNT
0180	02569		DEMOBILIZATION	1.00	LS		$	