CALL NO. 316

CONTRACT ID. 162135

MAGOFFIN COUNTY

FED/STATE PROJECT NUMBER FD05 077 0460 011-013

DESCRIPTION SALYERSVILLE-PAINTSVILLE (US 460)

WORK TYPE ASPHALT RESURFACING

PRIMARY COMPLETION DATE 6/30/2017

LETTING DATE: July 29,2016

Sealed Bids will be received electronically through the Bid Express bidding service until 10:00 AM EASTERN DAYLIGHT TIME July 29,2016. Bids will be publicly announced at 10:00 AM EASTERN DAYLIGHT TIME.

NO PLANS ASSOCIATED WITH THIS PROJECT.

DEFERRED PAYMENT

REQUIRED BID PROPOSAL GUARANTY: Not less than 5% of the total bid.

TABLE OF CONTENTS

PART I SCOPE OF WORK

- PROJECT(S), COMPLETION DATE(S), & LIQUIDATED DAMAGES
- CONTRACT NOTES
- STATE CONTRACT NOTES
- 2016 DEFERRED PAY
- NATIONAL HIGHWAY
- SURFACING AREAS
- ASPHALT MIXTURE
- INCIDENTAL SURFACING
- COMPACTION OPTION A
- SPECIAL NOTE(S) APPLICABLE TO PROJECT
- ASPHALT MILLING AND TEXTURING
- TYPICAL SECTION DIMENSIONS
- TRAFFIC CONTROL PLAN 4 LANE
- SKETCH MAP(S)
- SUMMARY SHEET(S)
- TYPICAL SECTION(S)
- BRIDGE DETAIL FOR PAVING PROJECT

PART II SPECIFICATIONS AND STANDARD DRAWINGS

- SPECIFICATIONS REFERENCE
- SUPPLEMENTAL SPECIFICATION
- 2016 STANDARD DRAWINGS THAT APPLY

PART III EMPLOYMENT, WAGE AND RECORD REQUIREMENTS

- LABOR AND WAGE REQUIREMENTS
- EXECUTIVE BRANCH CODE OF ETHICS
- KENTUCKY EQUAL EMPLOYMENT OPPORTUNITY ACT OF 1978 LOCALITY 1,2,3,4 / STATE (OVER 250,000)
- PROJECT WAGE RATES LOCALITY 2 / STATE

PART IV INSURANCE

PART V BID ITEMS

PART I

SCOPE OF WORK

ADMINISTRATIVE DISTRICT - 10

CONTRACT ID - 162135

FD05 077 0460 011-013

COUNTY - MAGOFFIN

PCN - MP07704601601
FD05 077 0460 011-013

SALYERSVILLE-PAINTSVILLE (US 460) (MP 11.109) FROM 0.029 MILES WEST OF KY 40 EXTENDING EAST 0.013 EAST OF KY 3048 (MP 12.499), A DISTANCE OF 01.39 MILES.ASPHALT RESURFACING

GEOGRAPHIC COORDINATES LATITUDE 37:44:46.00 LONGITUDE 83:03:36.00

COMPLETION DATE(S):

COMPLETED BY 06/30/2017 APPLIES TO ENTIRE CONTRACT

CONTRACT NOTES

PROPOSAL ADDENDA

All addenda to this proposal must be applied when calculating bid and certified in the bid packet submitted to the Kentucky Department of Highways. Failure to use the correct and most recent addenda may result in the bid being rejected.

BID SUBMITTAL

Bidder must use the Department's Expedite Bidding Program available on the Internet web site of the Department of Highways, Division of Construction Procurement. (www.transportation.ky.gov/construction-procurement)

The Bidder must download the bid file located on the Bid Express website (www.bidx.com) to prepare a bid packet for submission to the Department. The bidder must submit electronically using Bid Express.

JOINT VENTURE BIDDING

Joint venture bidding is permissible. All companies in the joint venture must be prequalified in one of the work types in the Qualifications for Bidders for the project. The bidders must get a vendor ID for the joint venture from the Division of Construction Procurement and register the joint venture as a bidder on the project. Also, the joint venture must obtain a digital ID from Bid Express to submit a bid. A joint bid bond of 5% may be submitted for both companies or each company may submit a separate bond of 5%.

UNDERGROUND FACILITY DAMAGE PROTECTION

The contractor shall make every effort to protect underground facilities from damage as prescribed in the Underground Facility Damage Protection Act of 1994, Kentucky Revised Statute KRS 367.4901 to 367.4917. It is the contractor's responsibility to determine and take steps necessary to be in compliance with federal and state damage prevention directives. When prescribed in said directives, the contractor shall submit Excavation Locate Requests to the Kentucky Contact Center (KY811) via web ticket entry. The submission of this request does not relieve the contractor from the responsibility of contacting non-member facility owners, whom shall be contacted through their individual Protection Notification Center. Non-compliance with these directives can result in the enforcement of penalties.

SPECIAL NOTE FOR COMPOSITE OFFSET BLOCKS

Contrary to the Standard Drawings (2016 edition) the Cabinet will allow 6" composite offset blocks in lieu of wooden offset blocks, except as specified on proprietary end treatments and crash cushions. The composite blocks shall be selected from the Cabinet's List of Approved Materials.

REGISTRATION WITH THE SECRETARY OF STATE BY A FOREIGN ENTITY

Pursuant to KRS 176.085(1)(b), an agency, department, office, or political subdivision of the Commonwealth of Kentucky shall not award a state contract to a person that is a foreign entity required by KRS 14A.9-010 to obtain a certificate of authority to transact business in the Commonwealth ("certificate") from the Secretary of State under KRS 14A.9-030 unless the person produces the certificate within fourteen (14) days of the bid or proposal opening. If the foreign entity is not required to obtain a certificate as provided in KRS 14A.9-010, the foreign entity should identify the applicable exception. Foreign entity is defined within KRS 14A.1-070.

For all foreign entities required to obtain a certificate of authority to transact business in the Commonwealth, if a copy of the certificate is not received by the contracting agency within the time frame identified above, the foreign entity's solicitation response shall be deemed non-responsive or the awarded contract shall be cancelled.

Businesses can register with the Secretary of State at https://secure.kentucky.gov/sos/ftbr/welcome.aspx .

SPECIAL NOTE FOR PROJECT QUESTIONS DURING ADVERTISEMENT

Questions about projects during the advertisement should be submitted in writing to the Division of Construction Procurement. This may be done by fax (502) 564-7299 or email to kytc.projectquestions@ky.gov. The Department will attempt to answer all submitted questions. The Department reserves the right not to answer if the question is not pertinent or does not aid in clarifying the project intent.

The deadline for posting answers will be 3:00 pm Eastern Daylight Time, the day preceding the Letting. Questions may be submitted until this deadline with the understanding that the later a question is submitted, the less likely an answer will be able to be provided.

The questions and answers will be posted for each Letting under the heading "Questions & Answers" on the Construction Procurement website (www.transportation.ky.gov/contract). The answers provided shall be considered part of this Special Note and, in case of a discrepancy, will govern over all other bidding documents.

HARDWOOD REMOVAL RESTRICTIONS

The US Department of Agriculture has imposed a quarantine in Kentucky and several surrounding states, to prevent the spread of an invasive insect, the emerald ash borer. Hardwood cut in conjunction with the project may not be removed from the state. Chipping or burning on site is the preferred method of disposal.

INSTRUCTIONS FOR EXCESS MATERIAL SITES AND BORROW SITES

Identification of excess material sites and borrow sites shall be the responsibility of the Contractor. The Contractor shall be responsible for compliance with all applicable state and federal laws and may wish to consult with the US Fish and Wildlife Service to seek protection under Section 10 of the Endangered Species Act for these activities.

ACCESS TO RECORDS

The contractor, as defined in KRS 45A.030 (9) agrees that the contracting agency, the Finance and Administration Cabinet, the Auditor of Public Accounts, and the Legislative Research Commission, or their duly authorized representatives, shall have access to any books, documents, papers, records, or other evidence, which are directly pertinent to this contract for the purpose of financial audit or program review. Records and other prequalification information confidentially disclosed as part of the bid process shall not be deemed as directly pertinent to the contract and shall be exempt from disclosure as provided in KRS 61.878(1)(c). The contractor also recognizes that any books, documents, papers, records, or other evidence, received during a financial audit or program review shall be subject to the Kentucky Open Records Act, KRS 61.870 to 61.884.

In the event of a dispute between the contractor and the contracting agency, Attorney General, or the Auditor of Public Accounts over documents that are eligible for production and review, the Finance and Administration Cabinet shall review the dispute and issue a determination, in accordance with Secretary's Order 11-004.

06/01/16

SPECIAL NOTE FOR RECIPROCAL PREFERENCE

Reciprocal preference to be given by public agencies to resident bidders

By reference, KRS 45A.490 to 45A.494 are incorporated herein and in compliance regarding the bidders residency. Bidders who want to claim resident bidder status should complete the Affidavit for Claiming Resident Bidder Status along with their bid in the Expedite Bidding Program. Submittal of the Affidavit should be done along with the bid in Bid Express.

DEFERRED PAYMENT: The contractor shall have the distinct understanding that payment for any Work Performed Estimates may be delayed until November 30, 2016.

NATIONAL HIGHWAY

Be advised this project is on the NATIONAL HIGHWAY SYSTEM.

SURFACING AREAS

The Department estimates the mainline surfacing width to be 36-48 feet.
The Department estimates the total mainline area to be surfaced to be 30,828 square yards.
The Department estimates the shoulder width to be varied 0-2.5 feet on each side.
The Department estimates the total shoulder area to be surfaced to be 1,390 square yards.

ASPHALT MIXTURE

Unless otherwise noted, the Department estimates the rate of application for all asphalt mixtures to be 110 lbs/sy per inch of depth.

INCIDENTAL SURFACING

The Department has included in the quantities of asphalt mixtures established in the proposal estimated quantities required for resurfacing or surfacing mailbox turnouts, farm field entrances, residential and commercial entrances, curve widening, ramp gores and tapers, and road and street approaches, as applicable. Pave these areas to the limits as shown on Standard Drawing RPM-110-06 or as directed by the Engineer. In the event signal detectors are present in the intersecting streets or roads, pave the crossroads to the right of way limit or back of the signal detector, whichever is the farthest back of the mainline. Surface or resurface these areas as directed by the Engineer. The Department will not measure placing and compacting for separate payment but shall be incidental to the Contract unit price for the asphalt mixtures.

OPTION A

Be advised that the Department will accept compaction of asphalt mixtures furnished for driving lanes and ramps, at 1 inch (25mm) or greater, on this project according to OPTION A in accordance with Section 402 and Section 403 of the current Standard Specifications. The Department will require joint cores as described in Section 402.03.02 for surface mixtures only. The Department will accept compaction of all other asphalt mixtures according to OPTION B.

SPECIAL NOTE FOR INLAID PAVEMENT MARKERS

I. DESCRIPTION

Except as provided herein, perform all work in accordance with the Department's Standard and Supplemental Specifications and applicable Standard and Sepia Drawings, current editions. Article references are to the Standard Specifications. This work shall consist of:

(1) Maintain and Control Traffic; and (2) Furnish and install Inlaid Pavement Markers (IPMs) in recessed grooves; and (3) Any other work as specified by these notes and the Contract.

II. MATERIALS

The Department will sample all materials in accordance with the Department's Sampling Manual. Make the materials available for sampling a sufficient time in advance of the use of the materials to allow for the necessary time for testing unless otherwise specified in these Notes.

A. Maintain and Control Traffic. See Traffic Control Plan.

B. Markers. Provide reflective lenses with depth control breakaway positioning tabs. Before furnishing the markers, provide to the Engineer the manufacturer's current recommendations for adhesives and installation procedures. Use one brand and design throughout the project. Use markers meeting the specifications in the table below.

SPECIFICATIONS FOR HOUSING AND REFLECTOR	
Material:	Polycarbonate Plastic
Weight:	Housing 2.00 oz.
	Reflector 2.00oz.
Housing Size:	5.00" x 3.00" x 0.70" high
Specific Intensity of Reflectivity at 0.2° Observation Angle	
White:	3.0 at 0°entrance angle
	1.2 at 20°entrance angle
Yellow:	60% of white values
Red:	25% of white values

C. Adhesives. Use adhesives that conform to the manufacturer's recommendations.

III. CONSTRUCTION

A. Experimental Evaluation. The University of Kentucky Transportation Center will be evaluating this installation of IPMs. Notify the Engineer a minimum of 14 calendar days prior to beginning work. The Engineer will coordinate the University's activities with the Contractor's work.

B. Maintain and Control Traffic. See Traffic Control Plan.

C. Installation. Install IPMs in recessed grooves cut into the final course of asphalt pavement according to the manufacturer's recommendations. Do not cut the grooves until the pavement has cured sufficiently to prevent tearing or raveling. Cut installation grooves using diamond blades on saws that accurately control groove dimensions. Remove all dirt, grease, oil, loose or unsound layers, and any other material from the marker area which would reduce the bond of the adhesive. Maintain pavement surfaces in a clean condition until placing markers.

Prepare the pavement surfaces, and install the markers in the recessed groove according to the drawing below. Use an approved snowplowable epoxy adhesive. Ensure that the adhesive bed area is equal to the bottom area of the marker, and apply adhesive in sufficient quantity to force excess out around the entire perimeter of the marker. Use materials, equipment, and construction procedures that ensure proper adhesion of the markers to the pavement surface according to the manufacturer's recommendations. Remove all excess adhesive from in front of the reflective faces. If any adhesive or foreign matter cannot be removed from the reflective faces, or if any marker fails to properly adhere to the pavement surface, remove and replace the marker at no additional cost to the Department.

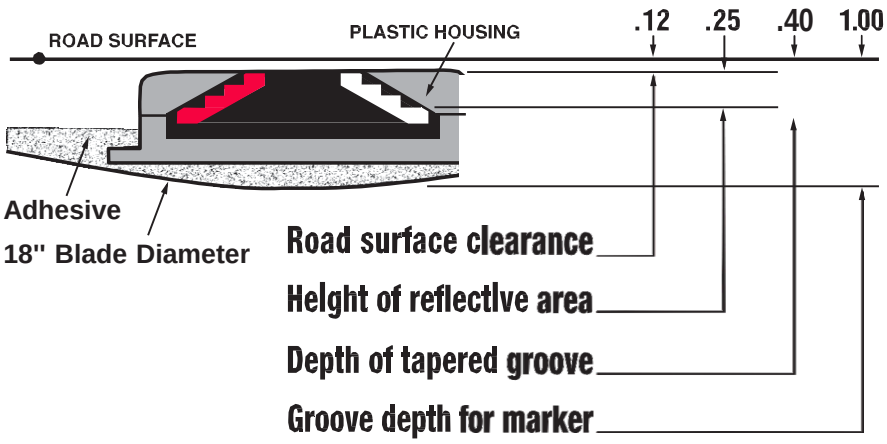

D. Location and Spacing. Install the markers in the pattern for high reflectivity with two (2) IPMs per groove. Locate and space markers as shown in the current standard drawings or sepias (note: use Inlaid Pavement Markers wherever Type V Pavement

Markers are called for). Do not install markers on bridge decks. Do not install a marker on top of a pavement joint or crack. Offset the recessed groove a minimum of 2 inches from any longitudinal pavement joint or crack and at least one inch from the painted stripe, ensuring that the finished line of markers is straight with minimal lateral deviation. Give preference to maintaining the 2-inch offset between recessed groove and joint as opposed to keeping the line of markers straight.

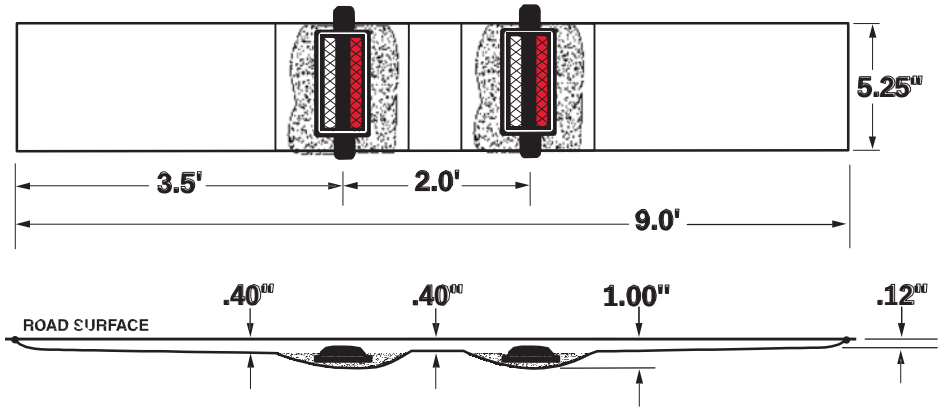

Place inlaid markers as much in line with existing pavement striping as possible. Place markers installed along an edge line or channelizing line so that the near edge of the plastic housing is no more than one inch from the near edge of the line. Place markers installed along a lane line between and in line with the dashes. Do not place markers over the lines except where the lines deviate visibly from their correct alignment, and then only after obtaining the Engineer's prior approval of the location.

If conflicts between recessed groove placement in relation to pavement joint and striping cannot be resolved, obtain the Engineer's approval to eliminate the marker or revise the alignment.

E. Disposal of Waste. Dispose of all removed asphalt pavement, debris, and other waste at sites off the right of way obtained by the Contractor at no additional cost to the Department. See Special Note for waste and Borrow.

F. Restoration. Be responsible for all damage to public and/or private property resulting from the work. Restore all damaged features in like kind materials and design at no additional cost to the Department.

G. On-Site Inspection. Make a thorough inspection of the site prior to submitting a bid and be thoroughly familiar with existing conditions so that the work can be expeditiously performed after a contract is awarded. The Department will consider submission of a bid as evidence of this inspection having been made and will not honor any claims for money or grant Contract time extensions resulting from site conditions.

H. Caution. Do not take information shown on the drawings and in this proposal and the types and quantities of work listed as an accurate or complete evaluation of the material and conditions to be encountered during construction, but consider the types and quantities of work listed as approximate only. The bidder must draw his own conclusion as to the conditions encountered. The Department does not give any guarantee as to the accuracy of the data and no claim will be considered for additional compensation or extension of Contract time if the conditions encountered are not in accordance with the information shown.

IV. MEASUREMENT

A. Maintain and Control Traffic. See Traffic Control Plan.

B. "INLAID PAYMENT MARKER" shall be measured as each. One (1) installation of "INLAID PAVEMENT MARKER" will consist of grooving the pavement, removing asphalt cuttings and debris, preheating pavement to remove moisture, adhesives, and installation of two (2) markers with all lenses in accordance with this note.

Note: Each pay item of Inlaid Pavement Marker will require two markers.

V. PAYMENT

A. Maintain and Control Traffic. See Traffic Control Plan.

B. Inlaid Pavement Markers. The Department will make payment for the completed and accepted quantity of completely installed "INLAID PAVEMENT MARKERS" at the Contract unit price, each. Accept payment as full compensation for all labor, equipment, materials, and incidentals to accomplish this work to the satisfaction of the Engineer. A system of one (1) groove and two (2) markers shall be paid as one "INLAID PAVEMENT MARKER". The bid item "INLAID PAVEMENT MARKER" shall be used regardless of the color and type of lenses required.

SPECIAL NOTE FOR
ASPHALT MILLING AND TEXTURING

Begin paving operations within **48 hours** of commencement of the milling operation. Continue paving operations continuously until completed. If paving operations are not begun within this time period, the Department will assess liquidated damages at the rate prescribed by Section 108.09 until such time as paving operations are begun.

Take possession of the millings and recycle the millings or dispose of the millings off the Right-of-Way at sites obtained by the Contractor at no additional cost to the Department.

1-3520 48 hours Contractor keeps millings
01/2/2012

SPECIAL NOTE FOR TYPICAL SECTION DIMENSIONS

Consider the dimensions shown on the typical sections for pavement and shoulder widths and thickness' to be nominal or typical dimensions. The Engineer may direct or approve varying the actual dimensions to be constructed to fit existing conditions. Do not widen existing pavement or shoulders unless specified elsewhere in this proposal or directed by the engineer.

1-3725 Typical Section Dimensions
01/02/2012

TRAFFIC CONTROL PLAN

TRAFFIC CONTROL GENERAL

Except as provided herein, maintain and control traffic in accordance with the Standard and Supplemental Specifications and the Standard and Sepia Drawings, current editions. Except for the roadway and traffic control bid items listed, all items of work necessary to maintain and control traffic will be paid at the lump sum bid price to "Maintain and Control Traffic".

Contrary to Section 106.01, furnish new, or used in like new condition, traffic control devices at the beginning of the work and maintain in like new condition until completion of the work.

PROJECT PHASING & CONSTRUCTION PROCEDURES

Do not erect lane closures during the following days and hours:

July 2-4, 2016	Independence Day Weekend
August 19-21, 2016	Community Days Weekend
August 30-September 5, 2016	Founders Day/Labor Day Weekend
May 27-29, 2017	Memorial Day Weekend

The Engineer may specify additional days and hours when lane closures will not be allowed.

At locations with three or more lanes, maintain one lane of traffic in each direction at all times during construction. At locations with two lanes, maintain alternating one way traffic during construction. Provide a minimum clear lane width of 11 feet; however, provide for passage of vehicles of up to 16 feet in width. If traffic should be stopped due to construction operations, and a school bus on an official run arrives on the scene, make provisions for the passage of the bus as quickly as possible.

LANE CLOSURES

Do not leave lane closures in place during non-working hours.

SIGNS

Sign posts and splices shall be compliant with NCHRP 350 or MASH. Manufacturer's documentation validating this compliance shall be provided to the Engineer prior to installation. Signs, including any splices, shall be installed according to manufacturer's specifications and installation recommendations. Contrary to section 112.04.02, only long-term signs (signs intended to be continuously in place for more than 3 days) will be measured for payment. Short-term signs

(signs intended to be left in place for 3 days or less) will not be measured for payment but will be incidental to Maintain and Control Traffic.

CHANGEABLE MESSAGE SIGNS

Provide changeable message signs in advance of and within the project at locations determined by the Engineer. If work is in progress concurrently in both directions or if more than one lane closure is in place in the same direction of travel, provide additional changeable message signs as directed by the Engineer. Place changeable message signs one mile in advance of the anticipated queue at each lane closure. As the actual queue lengthens and/or shortens, relocate or provide additional changeable message signs so that traffic has warning of slowed or stopped traffic at least one mile but not more than two miles before reaching the end of the actual queue. The Engineer may vary the designated locations as the work progresses. The Engineer will determine the messages to be displayed. In the event of damage or mechanical/electrical failure, repair or replace the Changeable Message Sign within 24 hours. The Department will measure for payment the maximum number of Changeable Message Signs in concurrent use at the same time on a single day on all sections of the contract. The Department will measure individual Changeable Message Signs only once for payment, regardless of how many times they are set, reset, removed, and relocated during the duration of the project. The Department will not measure replacements for damaged Changeable Message Signs or for signs the Engineer directs be replaced due to poor condition or readability. Retain possession of the Changeable Message Signs upon completion of the work.

ARROW PANELS

Use arrow panels as shown on the Standard Drawings or as directed by the Engineer. The Department will measure for payment the maximum number of arrow panels in concurrent use at the same time on a single day on all sections of the contract. The Department will measure for payment the maximum number of Changeable Message Signs in concurrent use at the same time on a single day on all sections of the contract. The Department will measure individual Arrow Panels only once for payment, regardless of how many times they are set, reset, removed, and relocated during the duration of the project. The Department will not measure replacements for damaged Arrow Panels or for panels signs the Engineer directs be replaced due to poor condition or readability for payment. Retain possession of the Arrow Panels upon completion of the work.

TEMPORARY ENTRANCES

The Engineer will not require the Contractor to provide continuous access to farms, single family, duplex, or triplex residential properties during working hours; however, provide reasonable egress and ingress to each such property when actual operations are not in progress at that location. Limit the time during which a farm or residential entrance is blocked to the minimum length of time required for actual operations, not extended for the Contractor's convenience, and in no case exceeding six (6) hours. Notify all residents twenty-four hours in advance of any driveway or

entrance closings and make any accommodations necessary to meet the access needs of disabled residents.

Except as allowed by the Phasing as specified above, maintain direct access to all side streets and roads, schools, churches, commercial properties and apartments or apartment complexes of four or more units at all times.

The Department will measure asphalt materials required to construct and maintain any temporary entrances which may be necessary to provide temporary access; however, the Department will not measure aggregates, excavation, and/or embankment, but shall be incidental to Maintain and Control Traffic. The Engineer will determine the type of surfacing material, asphalt or aggregate, to be used at each entrance.

TRAFFIC SIGNAL LOOPS

Install traffic signal loops according to the Special Notes for Traffic Signal Loop Replacement. Coordinate the placement of the loops with the Engineer.

THERMOPLASTIC INTERSECTION MARKINGS

Consider the locations listed on the summary as approximate only. Prior to milling and/or resurfacing, locate and document the locations of the existing markings. After resurfacing, replace the markings at their approximate existing locations or as directed by Engineer. Place markings not existing prior to resurfacing as directed by the Engineer.

BARRICADES

The Department will not measure barricades used in lieu of barrels and cones for channelization or delineation, but shall be incidental to Maintain and Control Traffic according to Section 112.04.01.

The Department will measure barricades used to protect pavement removal areas in individual units Each. The Department will measure for payment the maximum number of barricades in concurrent use at the same time on a single day on all sections of the contract. The Department will measure individual barricades only once for payment, regardless of how many times they are set, reset, removed, and relocated during the duration of the project. The Department will not measure replacements for damaged barricades the Engineer directs to be replaced due to poor condition or reflectivity. Retain possession of the Barricades upon completion of the work.

PAVEMENT MARKINGS

If there is to be a deviation from the existing striping plan, the Engineer will furnish the Contractor a striping plan prior to placement of the final surface course. Install Temporary Striping according to Section 112 with the following exceptions:

1. Place Temporary or Permanent Striping before opening a lane to traffic; and
2. If the Contractor's operations or phasing requires temporary markings that must subsequently be removed from the final surface course, use an approved removable lane tape; however, the Department will not measure removable lane tape for separate payment, but will measure and pay for removable lane tape as temporary striping.

PAVEMENT EDGE DROP-OFFS

Do not allow a pavement edge between opposing directions of traffic or lanes that traffic is expected to cross in a lane change situation with an elevation difference greater than 1½". Place Warning signs (MUTCD W8-11 or W8-9A) in advance of and at 1500' intervals throughout the drop-off area. Dual post the signs on both sides of the traveled way. Wedge all transverse transitions between resurfaced and unresurfaced areas which traffic may cross with asphalt mixture for leveling and wedging. Remove the wedges prior to placement of the final surface course.

Protect pavement edges that traffic is not expected to cross, except accidentally, as follows:

Less than 2" - No protection required.

2" to 4" - Place plastic drums, vertical panels, or barricades every 50 feet. During daylight working hours only, the Engineer will allow the Contractor to use cones in lieu of plastic drums, panels, and barricades. Wedge the drop-off with DGA or asphalt mixture for leveling and wedging with a 1:1 or flatter slope in daylight hours, or 3:1 or flatter slope during nighttime hours, when work is not active in the drop-off area.

Greater than 4" - Protect drop-offs greater than 4 inches within 10 feet of traffic by placing drums, vertical panels, or barricades every 25 feet. The Engineer will not allow the use of cones in lieu of drums, vertical panels, or barricades for drop-offs greater than 4". Place Type III Barricades directly in front of the drop-off facing on coming traffic in both directions of travel. Provide warning signs as shown on the Standard Drawings or as directed by the Engineer

Pedestrians & Bicycles - Protect pedestrian and bicycle traffic as directed by the engineer.

TRAFFIC CONTROL FOR INLAID PAVEMENT MARKER INSTALLATIONS

Except as provided herein, maintain and control traffic in accordance with the Standard and Supplemental Specifications and the Standard and Sepia Drawings, current editions. Except for the roadway and traffic control bid items listed, all items of work necessary to maintain and control traffic will be paid at the lump sum bid price to "Maintain and Control Traffic". Contrary to Section 106.01, furnish new, or used in like new condition, traffic control devices at the beginning of the work and maintain in like new condition until completion of the work. Install all necessary traffic control devices before beginning work. Provide egress and ingress to all ramps, side roads, and entrances at all times. After the pavement markers have been placed on the roadway, leave traffic control devices in place to protect the markers from damage by traffic until the Engineer determines the adhesive epoxy has sufficiently hardened. When work is suspended or completed and the Engineer determines the pavement markers are completely bonded to the pavement, immediately remove the traffic control devices.

TWO-LANE, TWO-WAY ROADWAYS:

The Department will consider installation of inlaid pavement markers on two-lane, two-way roadway sections to be short-duration operations. Accomplish the work in only one lane and affect the adjacent lane as little as possible. Sign approaches to the immediate work area in accordance with Standard Drawings TTC-100-03 and TTC-105-02. Install the signs on approved temporary mountings.

As a minimum, equip all work vehicles used in the roadway with strobe lights or rotating beacons. If a flashing arrow board is mounted directly on a work vehicle, operate the board in caution mode only; do not use a flashing arrow indication. The Department will not require the use of a Truck Mounted Attenuator (TMA) on two-lane, two-way roadway sections.

MULTI-LANE ROADWAYS:

Place inlaid pavement markers behind stationary lane closures. Obtain the Engineer's approval for stationary lane closures prior to use. Sign approved stationary lane closures according to Standard Drawings TTC-115-02 and TTC-125-02. If the Contractor desires an interior lane closure, prepare a plan and obtain the Engineer's approval prior to use. Install all necessary traffic control devices before beginning work.

Protect the work zone with a TMA conforming to Sections 725.02.05 and 725.03.03. Place the TMA within the lane closure at locations approved by the Engineer. Contrary to Section 725.03.03, retain possession of the TMA upon completion of the work.

Restrict the work area to not more than one lane of traffic plus 24 inches maximum of only one adjacent lane in each direction of travel. Provide a minimum lane width of 10 feet; however, provide for passage of vehicles of up to 16 feet in width. Limit the length of a lane closure to not exceed 1 mile in urban areas or 3 miles in rural areas as designated by the Engineer. Do not erect more than one lane closure in each direction of travel unless there is at least 2 miles separation between lane closures and both lane closures are in the same lane.

USE AND PLACEMENT OF CHANGEABLE MESSAGE SIGNS

The following policy is based upon current Changeable Message Signs (CMS) standards and practice from many sources, including the Federal Highway Administration (FHWA), other State Departments of Transportation, and Traffic Safety Associations. It is understood that each CMS installation or use requires individual consideration due to the specific location or purpose. However, there will be elements that are constant in nearly all applications. Accordingly these recommended guidelines bring a level of uniformity, while still being open to regional experience and engineering judgment.

Application

The primary purpose of CMS is to advise the driver of unexpected traffic and routing situations. Examples of applications where CMS can be effective include:

- Closures (road, lane, bridge, ramp, shoulder, interstate)
- Changes in alignment or surface conditions
- Significant delays, congestion
- Construction/maintenance activities (delays, future activities)
- Detours/alternative routes
- Special events with traffic and safety implications
- Crash/incidents
- Vehicle restrictions (width, height, weight, flammable)
- Advance notice of new traffic control devices
- Real-time traffic conditions (must be kept up to date)
- Weather /driving conditions, environmental conditions, Roadway Weather Information Systems
- Emergency Situations
- Referral to Highway Advisory Radio (if available)
- Messages as approved by the County Engineer's Office

CMS should not be used for:

- Replacement of static signs (e.g. road work ahead), regulatory signage (e.g. speed limits), pavement markings, standard traffic control devices, conventional warning or guide signs.
- Replacement of lighted arrow board
- Advertising (Don't advertise the event unless clarifying "action" to be taken by driver – e.g. Speedway traffic next exit)
- Generic messages
- Test messages (portable signs only)
- Describe recurrent congestion (e.g. rush hour)
- Public service announcements (not traffic related

Messages

Basic principles that are important to providing proper messages and insuring the proper operation of a CMS are:

- Visible for at least ½ mile under ideal daytime and nighttime conditions
- Legible from all lanes a minimum of 650 feet
- Entire message readable twice while traveling at the posted speed
- Nor more than two message panels should be used (three panels may be used on roadways where vehicles are traveling less than 45 mph). A panel is the message that fits on the face of the sign without flipping or scrolling.
- Each panel should convey a single thought; short and concise
- Do not use two unrelated panels on a sign
- Do not use the sign for two unrelated messages
- Should not scroll text horizontally or vertically
- Should not contain both the words left and right
- Use standardized abbreviations and messages
- Should be accurate and timely
- Avoid filler/unnecessary words and periods (hazardous, a, an, the)
- Avoid use of speed limits
- Use words (not numbers) for dates

Placement

Placement of the CMS is important to insure that the signs is visible to the driver and provides ample time to take any necessary action. Some of the following principles may only be applicable to controlled access roadways. The basic principles of placement for a CMS are:

- When 2 signs are needed, place on same side of roadway and at least 1,000 feet apart
- Place behind semi-rigid/rigid protection (guardrail, barrier) or outside of the clear zone
- Place 1,000 feet in advance of work zone; at least one mile ahead of decision point
- Normally place on right side of roadway; but should be placed closest to the affected lane so that either side is acceptable
- Signs should not be dual mounted (one on each side of roadway facing same direction)
- Point trailer hitch downstream
- Secure to immovable object to prevent thief (if necessary)
- Do not place in sags or just beyond crest
- Check for reflection of sun to prevent the blinding of motorist
- Should be turned ~3 degrees outward from perpendicular to the edge of pavement
- Bottom of sign should be 7 feet above the elevation of edge of roadway
- Should be removed when not in use

Standard Abbreviations

The following is a list of standard abbreviations to be used on CMS.

Word	Abbrev.	Example
Access	ACCS	ACCIDENT AHEAD/USE ACCS RD NEXT RIGHT
Alternate	ALT	ACCIDENT AHEAD/USE ALT RTE NEXT RIGHT
Avenue	AVE	FIFTH AVE CLOSED/DETOUR NEXT LEFT
Blocked	BLKD	FIFTH AVE BLKD/MERGE LEFT
Boulevard	BLVD	MAIN BLVD CLOSED/USE ALT RTE
Bridge	BRDG	SMITH BRDG CLOSED/USE ALT RTE
Cardinal Directions	N, S, E, W	N I75 CLOSED/ DETOUR EXIT 30
Center	CNTR	CNTR LANE CLOSED/MERGE LEFT
Commercial	COMM	OVRSZ COMM VEH/USE I275
Condition	COND	ICY COND POSSIBLE
Congested	CONG	HVY CONG NEXT 3 MI
Construction	CONST	CONST WORK AHEAD/EXPECT DELAYS
Downtown	DWNTN	DWNTN TRAF USE EX 40
Eastbound	E-BND	E-BND I64 CLOSED/DETOUR EXIT 20
Emergency	EMER	EMER VEH AHEAD/PREPARE TO STOP
Entrance, Enter	EX, EXT	DWNTN TRAF USE EX 40
Expressway	EXPWY	WTRSN EXPWY CLOSED/DETOUR EXIT 10
Freeway	FRWY, FWY	GN SYNDR FWY CLOSED/DETOUR EXIT 15
Hazardous Materials	HAZMAT	HAZMAT IN ROADWAY/ALL TRAF EXIT 25
Highway	HWY	ACCIDENT ON AA HWY/EXPECT DELAYS
Hour	HR	ACCIDENT ON AA HWY/2 HR DELAY
Information	INFO	TRAF INFO TUNE TO 1240 AM
Interstate	I	E-BND I64 CLOSED/DETOUR EXIT 20
Lane	LN	LN CLOSED/MERGE LEFT
Left	LFT	LANE CLOSED/MERGE LFT
Local	LOC	LOC TRAF USE ALT RTE
Maintenance	MAINT	MAINT WRK ON BRDG/SLOW

Major	MAJ	MAJ DELWAYS I75/USE ALT RTE
Mile	MI	ACCIDENT 3 MI AHEAD/ USE ALT RTE
Minor	MNR	ACCIDENT 3 MI MNR DELAY
Minutes	MIN	ACCIDENT 3 MI/30 MIN DELAY
Northbound	N-BND	N-BND I75 CLOSED/ DETOUR EXIT 50
Oversized	OVRSZ	OVRSZ COMM VEH/USE I275 NEXT RIGHT
Parking	PKING	EVENT PKING NEXT RGT
Parkway	PKWY	CUM PKWAY TRAF/DETOUR EXIT 60
Prepare	PREP	ACCIDENT 3 MIL/PREP TO STOP
Right	RGT	EVENT PKING NEXT RGT
Road	RD	HAZMAT IN RD/ALL TRAF EXIT 25
Roadwork	RDWK	RDWK NEXT 4 MI/POSSIBLE DELAYS
Route	RTE	MAJ DELAYS I75/USE ALT RTE
Shoulder	SHLDR	SHLDR CLOSED NEXT 5 MI
Slippery	SLIP	SLIP COND POSSIBLE/ SLOW SPD
Southbound	S-BND	S-BND I75 CLOSED/DETOUR EXIT 50
Speed	SPD	SLIP COND POSSIBLE/ SLOW SPD
Street	ST	MAIN ST CLOSED/USE ALT RTE
Traffic	TRAF	CUM PKWAY TRAF/DETOUR EXIT 60
Vehicle	VEH	OVRSZ COMM VEH/USE I275 NEXT RIGHT
Westbound	W-BND	W-BND I64 CLOSED/DETOUR EXIT 50
Work	WRK	CONST WRK 2MI/POSSIBLE DELAYS

Certain abbreviations are prone to inviting confusion because another word is abbreviated or could be abbreviated in the same way. DO NO USE THESE ABBREVIATIONS.

Abbrev.	**Intended Word**	**Word Erroneously Given**
ACC	Accident	Access (Road)
CLRS	Clears	Colors
DLY	Delay	Daily
FDR	Feeder	Federal
L	Left	Lane (merge)
LOC	Local	Location
LT	Light (traffic)	Left
PARK	Parking	Park
POLL	Pollution (index)	Poll
RED	Reduce	Red

STAD	Stadium	Standard
TEMP	Temporary	Temperature
WRNG	Warning	Wrong

TYPICAL MESSAGES

The following is a list of typical messages used on CMS. The list consists of the reason or problem that you want the driver to be aware of and the action that you want the driver to take.

Reason/Problem	Action
ACCIDENT	ALL TRAFFIC EXIT RT
ACCIDENT/XX MILES	AVOID DELAY USE XX
XX ROAD CLOSED	CONSIDER ALT ROUTE
XX EXIT CLOSED	DETOUR
BRIDGE CLOSED	DETOUR XX MILES
BRIDGE/(SLIPPERY, ICE, ETC.)	DO NOT PASS
CENTER/LANE/CLOSED	EXPECT DELAYS
DELAY(S), MAJOR/DELAYS	FOLLOW ALT ROUTE
DEBRIS AHEAD	KEEP LEFT
DENSE FOG	KEEP RIGHT
DISABLED/VEHICLE	MERGE XX MILES
EMER/VEHICLES/ONLY	MERGE LEFT
EVENT PARKING	MERGE RIGHT
EXIT XX CLOSED	ONE-WAY TRAFFIC
FLAGGER XX MILES	PASS TO LEFT
FOG XX MILES	PASS TO RIGHT
FREEWAY CLOSED	PREPARE TO STOP
FRESH OIL	REDUCE SPEED
HAZMAT SPILL	SLOW
ICE	SLOW DOWN
INCIDENT AHEAD	STAY IN LANE
LANES (NARROW, SHIFT, MERGE, ETC.)	STOP AHEAD
LEFT LANE CLOSED	STOP XX MILES
LEFT LANE NARROWS	TUNE RADIO 1610 AM
LEFT 2 LANES CLOSED	USE NN ROAD
LEFT SHOULDER CLOSED	USE CENTER LANE
LOOSE GRAVEL	USE DETOUR ROUTE
MEDIAN WORK XX MILES	USE LEFT TURN LANE
MOVING WORK ZONE, WORKERS IN ROADWAY	USE NEXT EXIT
NEXT EXIT CLOSED	USE RIGHT LANE
NO OVERSIZED LOADS	WATCH FOR FLAGGER
NO PASSING	
NO SHOULDER	

ONE LANE BRIDGE
PEOPLE CROSSING
RAMP CLOSED
RAMP (SLIPPERY, ICE, ETC.)
RIGHT LANE CLOSED
RIGHT LANE NARROWS
RIGHT SHOULDER CLOSED
ROAD CLOSED
ROAD CLOSED XX MILES
ROAD (SLIPPERY, ICE, ETC.)
ROAD WORK
ROAD WORK (OR CONSTRUCTION) (TONIGHT, TODAY, TOMORROW, DATE)
ROAD WORK XX MILES
SHOULDER (SLIPPERY, ICE, SOFT, BLOCKED, ETC.)
NEW SIGNAL XX MILES
SLOW 1 (OR 2) - WAY TRAFFIC
SOFT SHOULDER
STALLED VEHICLES AHEAD
TRAFFIC BACKUP
TRAFFIC SLOWS
TRUCK CROSSING
TRUCKS ENTERING
TOW TRUCK AHEAD
UNEVEN LANES
WATER ON ROAD
WET PAINT
WORK ZONE XX MILES
WORKERS AHEAD

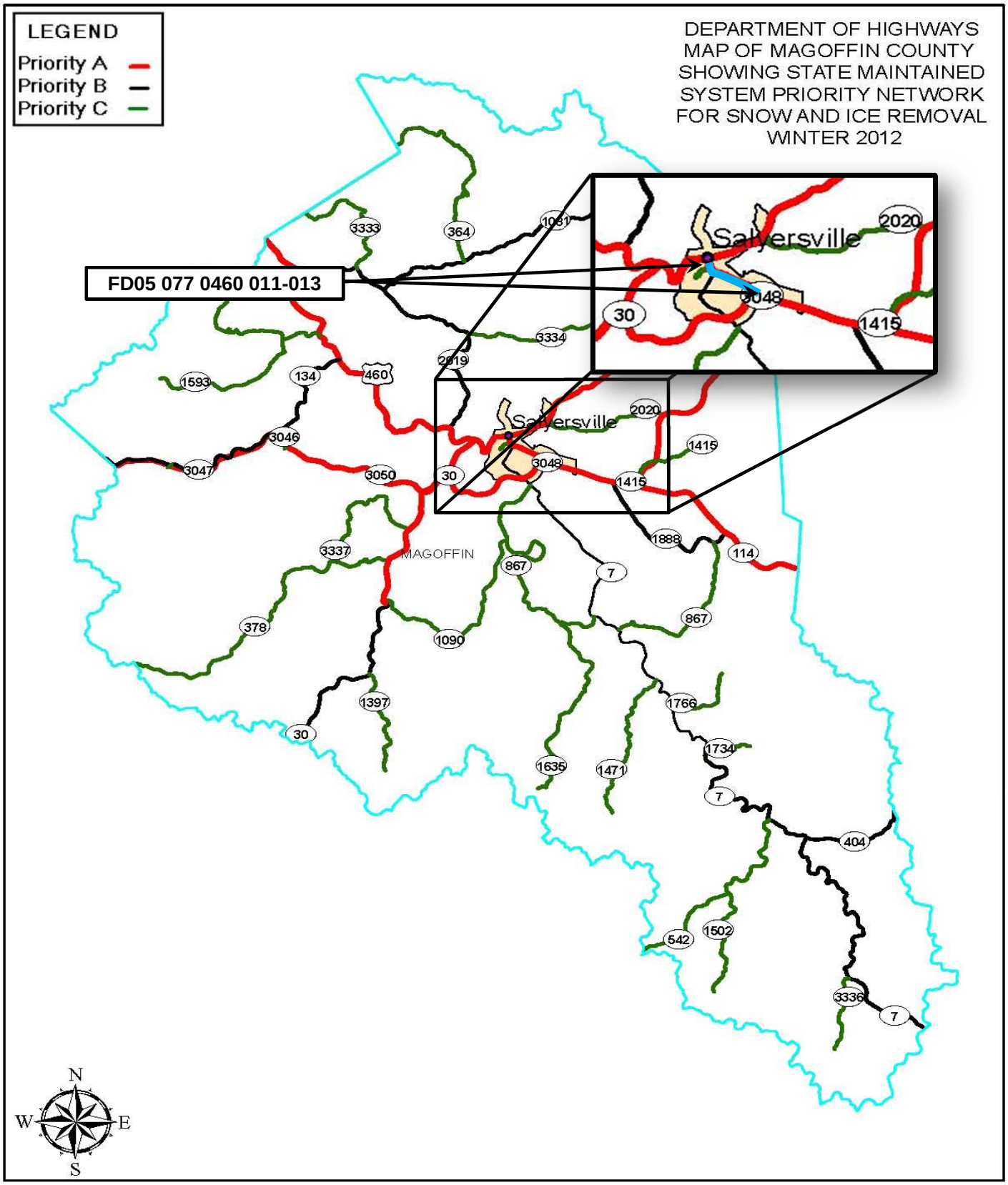
LEGEND
Priority A
Priority B
Priority C
DEPARTMENT OF HIGHWAYS
MAP OF MAGOFFIN COUNTY
SHOWING STATE MAINTAINED
SYSTEM PRIORITY NETWORK
FOR SNOW AND ICE REMOVAL
WINTER 2012
FD05 077 0460 011-013
Salyersville
MAGOFFIN
3333
364
1081
2020
30
3048
1415
3334
2019
1593
134
460
3046
3047
3050
1888
114
3337
867
7
378
1090
1397
1766
1734
1635
1471
404
542
1502
3336
N
W
E
S

Magoffin County
THERMOPLASTIC INTERSECTION PAVEMENT MARKINGS SUMMARY
FD05 077 0460 011-013

MPT.	INTERSECTION	X-WALKS 6 INCH LF	STP BARS 24 INCH LF	ARROWS CURVE EA	ARROWS STR EA	ARROWS COMB EA	"ONLY" EA	CATRAXX 6 INCH LF	RAILROAD "R" 6 FOOT EA	RAILROAD CROSS BUCK 16" LF	NOTES
11.311	Two Way Left Turn Lane			2							
11.338	Rt Turn Onto Dixie Lane From US 460			1							
11.366	Lt Turn Lane Onto Dixie Lane From US 460			1							
11.374	Lt Turn Lane Onto Dixie Lane From US 460						1				
11.380	Lt Turn Lane Onto Dixie Lane From US 460			1							
11.390	Rt Turn Lane Onto KY 7 From US 460			1							
11.403	Rt Turn Lane Onto KY 7 From US 460			1							
11.420	Two Way Left Turn Lane			2							
11.427	Stop Bar At West JCT Of US 460 / KY 7		24								
11.455	Stop Bar At East JCT Of US 460 / KY 7		24								
11.461	Lt Turn Lane Onto KY 7 From US 460			1							
11.468	Lt Turn Lane Onto KY 7 From US 460						1				
11.476	Lt Turn Lane Onto KY 7 From US 460			1							
11.502	Two Way Left Turn Lane			2							
11.597	Two Way Left Turn Lane			2							
11.692	Two Way Left Turn Lane			2							
11.787	Two Way Left Turn Lane			2							
11.882	Two Way Left Turn Lane			2							
11.977	Two Way Left Turn Lane			2							
12.072	Two Way Left Turn Lane			2							
12.167	Two Way Left Turn Lane			2							
12.262	Two Way Left Turn Lane			2							
12.357	Two Way Left Turn Lane			2							
12.452	Two Way Left Turn Lane			2							
12.465	Lt Turn/Str Lane Onto US 460From US 460					1					
12.465	Rt Turn Lane Onto KY 9009 From US 460			1							
12.482	Stop Bar At JCT Of US 460 /KY 9009		28								
12.484	X-Walk At JCT Of US 460 /KY 9009	106									
TOTAL		106	76	34	0	1	2	0	0	0	

Magoffin County
TRAFFIC LOOP SUMMARY
FD05 077 0460 011-013

MPT.	INTERSECTION	SAW, SLOT AND FILL LF	LOOP WIRE LF	CONDUIT 1 1/4 INCH LF	CABLE NO. 14 LF	FIBER OP. LF	JUNCTION TYPE B EA	10X8X4 EA			NOTES
11.458	US 460 / KY 7	180	765								
12.477	US 460 / KY 9009	180	765								
TOTAL		360	1530	0	0	0	0	0			

NOTES: These Items Have Been Added In This Proposal With The Intent Of Replacement Should Damage Occur To Existing Loops However; Project Engineer Has The Final Discretion To Reinstall Even In The Event Of Loops Not Being Damaged.

MAGOFFIN COUNTY
SIDEWALK RAMP AND DETECTABLE WARNING SUMMARY
FD05 077 0460 011-013

MP	INTERSECTION	RAMP TYPE	RAMP SY	DETECTABLE WARNING QUANTITY	DETECTABLE WARNING NEW SF	DETECTABLE WARNING RETROFIT SF	NOTES
11.341	Main St. Dixie Ln./US 460					10	
11.353	Main St. Dixie Ln./US 460					10	
11.433	KY 7/ US 460					10	
11.446	KY 7/ US 460					10	
11.518	Allen Lane/ US 460					10	
11.828	Ward Rd. /US 460					10	
11.849	Ward Rd. /US 460					10	
11.993	Allen Lane/ US 460					10	
TOTAL						80	

TYPICAL SECTION

FD05 077 0460 011-013
MAGOFFIN COUNTY

MP 11.109 - 11.283
MP 11.441 - 12.431

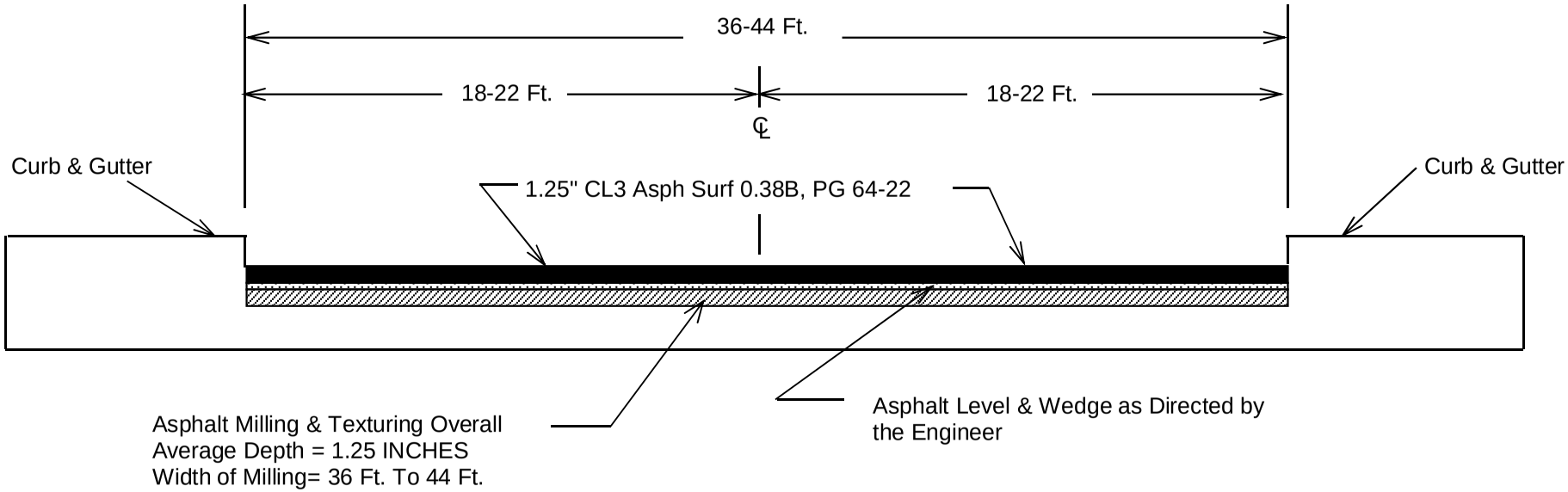

NOTE: NUMBER OF LANES AND DISTANCE OF OFFSET AT CURB VARIES. EXISTING FIELD CONDITIONS ARE TO BE VERIFIED BY CONTRACTOR BEFORE MILLING OPERATION IS STARTED IN ORDER TO OBTAIN EXISTING STRIPING PATTERN AND A COPY OF THE VERIFICATION NOTES AND SKETCHES SHALL BE FURNISHED TO THE SECTION ENGINEERS OFFICE FOR A FILE RECORD.

TYPICAL SECTION
FD05 077 0460 011-013
MAGOFFIN COUNTY

MP 11.283 - 11.441

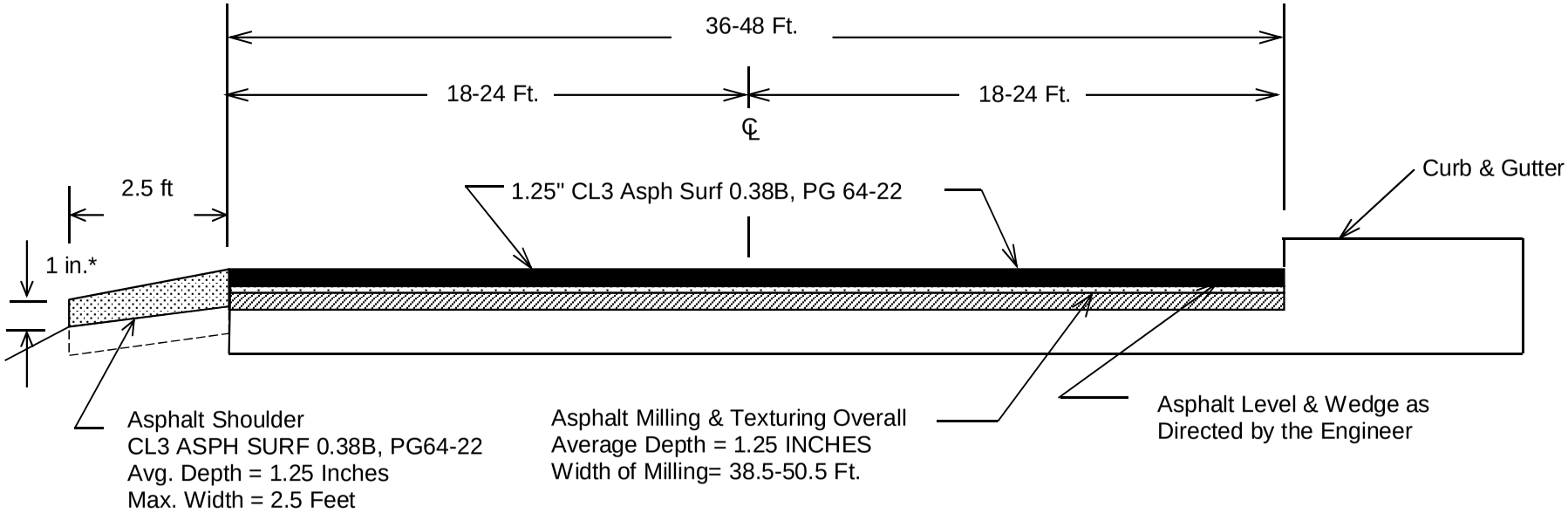

NOTE: NUMBER OF LANES AND DISTANCE OF OFFSET AT CURB VARIES. EXISTING FIELD CONDITIONS ARE TO BE VERIFIED BY CONTRACTOR BEFORE MILLING OPERATION IS STARTED IN ORDER TO OBTAIN EXISTING STRIPING PATTERN AND A COPY OF THE VERIFICATION NOTES AND SKETCHES SHALL BE FURNISHED TO THE SECTION ENGINEERS OFFICE FOR A FILE RECORD.

***1" Max. Drop-off Where Existing Site Conditions Permit**

MAGOFFIN COUNTY

FD05 077 0460 011-013
TYPICAL SECTION
MP 12.431 - 12.499

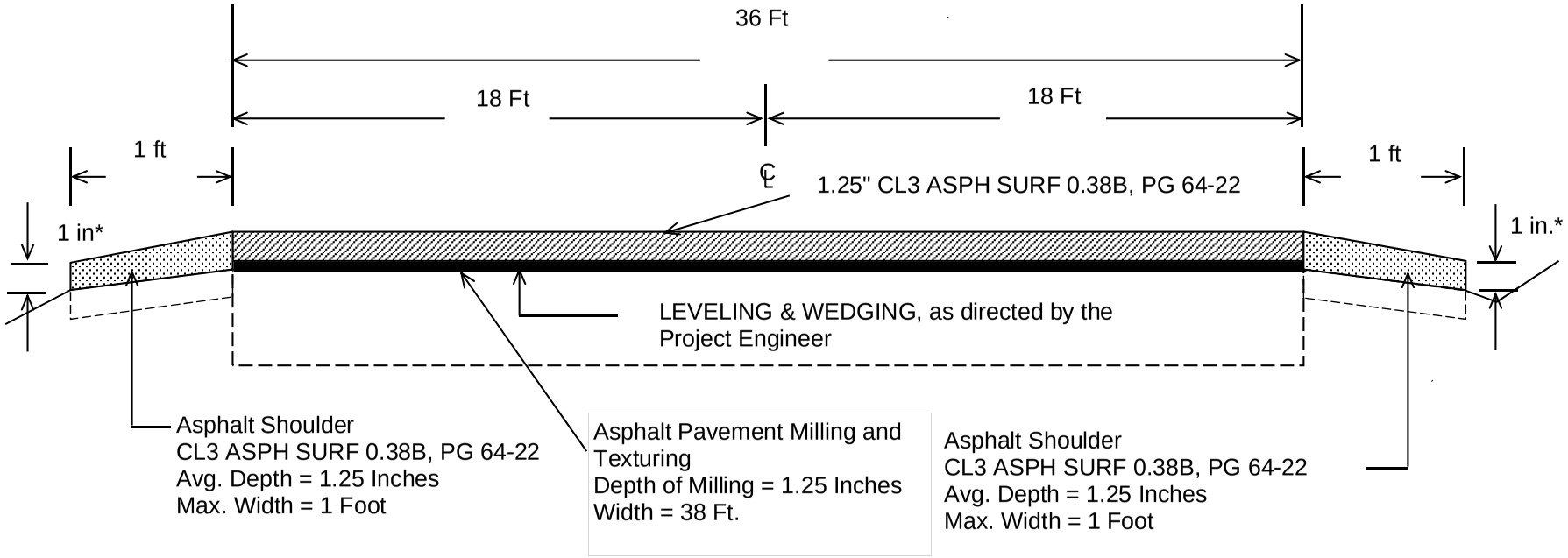

***1" Max. Drop-off Where Existing Site Conditions Permit**

BRIDGE DETAIL FOR PAVING PROJECT

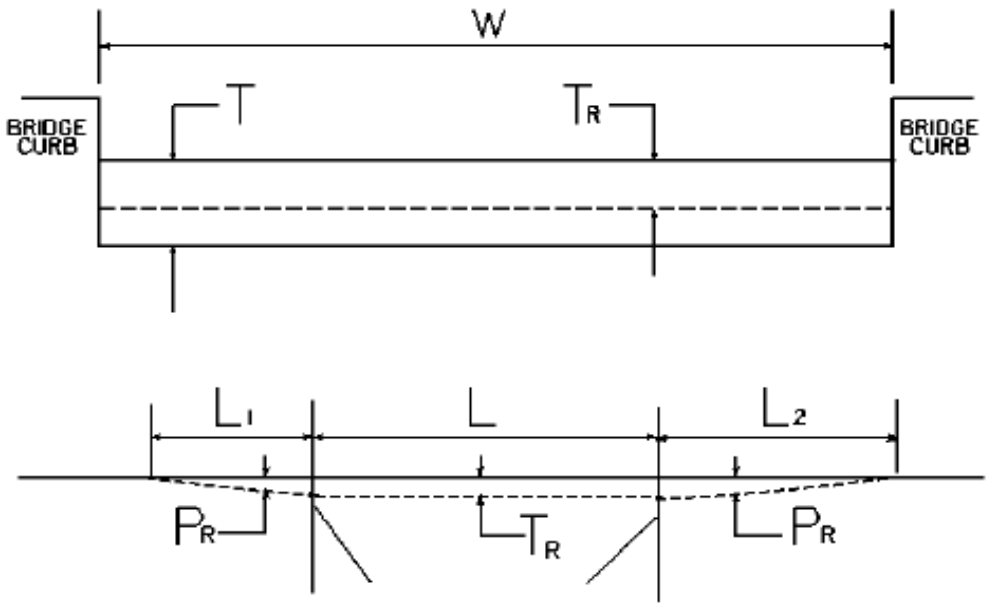

W = bridge width curb to curb
T = thickness of existing asphalt overlay
L = length of bridge
L_1 & L_2 = length of approach pavement to be removed
T_R = thickness to be removed and replaced on bridge
P_R = thickness to be removed and replaced on pavement
Note: L_1 & L_2 lengths shall be determined by using a transition rate of 100 ft/in of thickness

Route	Bridge No.	MP	W (ft)	T (in)	L_1 (ft)	L_2 (ft)	T_R (in)	L (ft)	P_R (in)
US 460	B00082	11.278	36.00	0.00	0.00	0.00	0.00	64.00	1.25

PART II

SPECIFICATIONS AND STANDARD DRAWINGS

SPECIFICATIONS REFERENCE

Any reference in the plans or proposal to previous editions of the *Standard Specifications for Road and Bridge Construction* and *Standard Drawings* are superseded by *Standard Specifications for Road and Bridge Construction, Edition of 2012* and *Standard Drawings, Edition of 2016.*

Supplemental Specifications to the Standard Specifications for Road and Bridge Construction, 2012 Edition Effective with the April 29, 2016 Letting

Subsection: **Revision:**	101.03 DEFINITIONS Add the following Definitions to this section: **Superpave Mix Design Technologist (SMDT)** - An inspector qualified by the KYTC to submit, adjust, or approve asphalt mix designs. **Superpave Plant Technologist (SPT)** - An inspector qualified by the KYTC to perform routine inspection and process control, acceptance, or verification testing on asphalt mixtures.
Subsection: **Revision:**	102.15 Process Agent. Replace the 1st paragraph with the following: Every corporation doing business with the Department shall submit evidence of compliance with KRS Sections 14A.4-010, 271B.11-010, 271B.11-070, 271B.11-080, 271B.5-010 and 271B.16-220, and file with the Department the name and address of the process agent upon whom process may be served.
Subsection: **Revision:**	105.13 Claims Resolution Process. Delete all references to TC 63-34 and TC 63-44 from the subsection as these forms are no longer available through the forms library and are forms generated within the AASHTO SiteManager software.
Subsection: **Revision:**	108.01 Subcontracting of Contract. Replace the section with the following: Do not subcontract, sell, transfer, assign, or otherwise dispose of the Contract or any portion of the Contract or Contracts, or of the right, title, or interest therein, without the Engineer's written consent. If the Contractor chooses to subcontract any portion of the Contract, a written request to sublet work must be submitted on the Subcontract Request (TC 63-35) form for the Engineer's approval. When directed by the Engineer, submit a certified copy of the actual subcontract agreement executed between the parties. The Engineer will allow the Contractor to subcontract a portion, but the Contractor must perform with his own organization work amounting to no less than 30 percent of the total Contract cost. The Engineer will not allow any subcontractor to exceed the percentage to be performed by the Contractor and will require the Contractor to maintain a supervisory role over the entire project. Do not allow any subcontractor to further subcontract any portion of the work without obtaining written consent from the Engineer. When the Engineer gives such consent, the first tier subcontractor may further subcontract a portion of his work not to exceed 50 percent of the work originally subcontracted to him by the Contractor. Do not allow any second tier subcontractor to subcontract any portion of the work. Extra work performed by subcontractors in accordance with Section 109 will not be utilized in the computation of total dollar amount subcontracted. Subcontract percentages are based upon the original contract amount. Payment to subcontractors for satisfactory performance of their work or materials supplied must be made within 7 calendar days from receipt of payment from the Engineer. Upon request by the Engineer, provide proof that payment has been made to the subcontractor within the 7 calendar days. Progress payments may be withheld for failure to comply with this request

Supplemental Specifications to the
Standard Specifications for Road and Bridge Construction, 2012 Edition
Effective with the April 29, 2016 Letting

	The Engineer's written consent to subcontract, assign, or otherwise dispose of any portion of the Contract does not, under any circumstances, relieve the Contractor or the surety of their respective liabilities and obligations under the Contract. The Engineer will make transactions only with the Contractor. The Engineer will recognize subcontractors only in the similar capacity of employees or workers of the Contractor who are subject to the same requirements as to character and competence as specified in Subsection 108.06. Lease agreements are acceptable on Department projects. No additional paperwork is needed when equipment is rented from a commercial rental company unless the leased equipment comes with an operator. In these circumstances, payroll records for the operator of the leased equipment must be maintained and submitted by the contractor in accordance with Department policy. Lease agreements between contractors that involve equipment only will require the submittal of a TC 63-71 Department Equipment Rental Form. If a Contractor is found to be in violation of these requirements, the Engineer reserves the right to withhold payment for the work which was performed in violation of these requirements. This provision does not include the lease or use of equipment from a corporation or company wholly owned by the Contractor. The Contractor shall not use equipment in the performance of the Contract to which title is not held by the Contractor or an approved subcontractor without a submitted lease agreement. If a public official has provided a documented Declaration of Emergency, then the Engineer may verbally waive the requirement of submitting a TC 63-71 Department Equipment Rental Form until the situation has ended. After the emergency situation ends, immediately remove the equipment from the project or submit a completed TC 63-71 Department Equipment Rental Form to the Engineer.
Subsection: **Revision:**	108.03 Preconstruction Conference. Replace 8) Staking with the following: 8) Staking (designated by a Professional Engineer or Land Surveyor licensed in the Commonwealth of Kentucky.
Subsection: **Revision:**	109.07.02 Fuel. Revise item Crushed Aggregate Used for Embankment Stabilization to the following: Crushed Aggregate Used for Stabilization of Unsuitable Materials Used for Embankment Stabilization
	Delete the following item from the table. ~~Crushed Sandstone Base (Cement Treated)~~
Subsection: **Revision:**	110.02 Demobilization. Replace the first part of the first sentence of the second paragraph with the following: Perform all work and operations necessary to accomplish final clean-up as specified in the first paragraph of Subsection 105.12;
Subsection: **Revision:**	112.03.12 Project Traffic Coordinator (PTC). Replace the last paragraph of this subsection with the following: Ensure the designated PTC has sufficient skill and experience to properly perform the task assigned and has successfully completed the qualification courses.

Supplemental Specifications to the
Standard Specifications for Road and Bridge Construction, 2012 Edition
Effective with the April 29, 2016 Letting

Subsection: **Revision:**	112.04.18 Diversions (By-Pass Detours). Insert the following sentence after the 2nd sentence of this subsection. The Department will not measure temporary drainage structures for payment when the contract documents provide the required drainage opening that must be maintained with the diversion. The temporary drainage structures shall be incidental to the construction of the diversion. If the contract documents fail to provide the required drainage opening needed for the diversion, the cost of the temporary drainage structure will be handled as extra work in accordance with section 109.04.
Subsection: **Revision:**	201.03.01 Contractor Staking. Replace the first paragraph with the following: Perform all necessary surveying under the general supervision of a Professional Engineer or Land Surveyor licensed in the Commonwealth of Kentucky.
Subsection: **Revision:**	201.04.01 Contractor Staking. Replace the last sentence of the paragraph with the following: Complete the general layout of the project under the supervision of a Professional Engineer or Land Surveyor licensed in the Commonwealth of Kentucky.
Subsection: **Revision:**	206.04.01 Embankment-in-Place. Replace the fourth paragraph with the following: The Department will not measure **suitable** excavation included in the original plans that is disposed of for payment and will consider it incidental to Embankment-in-Place.
Subsection: **Revision:**	208.02.01 Cement. Replace paragraph with the following: Select Type I or Type II cement conforming to Section 801. Use the same type cement throughout the work.
Subsection: **Revision:**	208.03.06 Curing and Protection. Replace the fourth paragraph with the following: Do not allow traffic or equipment on the finished surface until the stabilized subgrade has cured for a total of 7-days with an ambient air temperature above 40 degrees Fahrenheit. A curing day consists of a continuous 24-hour period in which the ambient air temperature does not fall below 40 degrees Fahrenheit. Curing days will not be calculated consecutively, but must total seven (7) , 24-hour days with the ambient air temperature remaining at or above 40 degrees Fahrenheit before traffic or equipment will be allowed to traverse the stabilized subgrade. The Department may allow a shortened curing period when the Contractor requests. The Contractor shall give the Department at least 3 day notice of the request for a shortened curing period. The Department will require a minimum of 3 curing days after final compaction. The Contractor shall furnish cores to the treated depth of the roadbed at 500 feet intervals for each lane when a shortened curing time is requested. The Department will test cores using an unconfined compression test. Roadbed cores must achieve a minimum strength requirement of 80 psi.
Subsection: **Revision:**	208.03.06 Curing and Protection. Replace paragraph eight with the following: At no expense to the Department, repair any damage to the subgrade caused by freezing.

Supplemental Specifications to the
Standard Specifications for Road and Bridge Construction, 2012 Edition
Effective with the April 29, 2016 Letting

Subsection:	212.03.03 Permanent Seeding and Protection.
Part:	A) Seed Mixtures for Permanent Seeding.
Revision:	Revise **Seed Mix Type I** to the mixture shown below: 50% Kentucky 31 Tall Fescue (Festuca arundinacea) 35% Hard Fescue (Festuca (Festuca longifolia) 10% Ryegrass, Perennial (Lolium perenne) 5% White Dutch Clover (Trifolium repens)
Subsection:	212.03.03 Permanent Seeding and Protection.
Part:	A) Seed Mixtures for Permanent Seeding.
Number:	2)
Revision:	Replace the paragraph with the following: Permanent Seeding on Slopes Greater than 3:1 in Highway Districts 4, 5, 6, and 7. Apply seed mix Type II at a minimum application rate of 100 pounds per acre. If adjacent to a golf course replace the crown vetch with Kentucky 31 Tall Fescue.
Subsection:	212.03.03 Permanent Seeding and Protection.
Part:	A) Seed Mixtures for Permanent Seeding.
Number:	3)
Revision:	Replace the paragraph with the following: Permanent Seeding on Slopes Greater than 3:1 in Highway Districts 1, 2, 3, 8, 9, 10, 11, and 12. Apply seed mix Type III at a minimum application rate of 100 pounds per acre. If adjacent to crop land or golf course, replace the Sericea Lespedeza with Kentucky 31 Fescue.
Subsection:	212.03.03 Permanent Seeding and Protection.
Part:	B) Procedures for Permanent Seeding.
Revision:	Delete the first sentence of the section.
Subsection:	212.03.03 Permanent Seeding and Protection.
Part:	B) Procedures for Permanent Seeding.
Revision:	Replace the second and third sentence of the section with the following: Prepare a seedbed and apply an initial fertilizer that contains a minimum of 100 pounds of nitrogen, 100 pounds of phosphate, and 100 pounds of potash per acre. Apply agricultural limestone to the seedbed when the Engineer determines it is needed. When required, place agricultural limestone at a rate of 3 tons per acre.
Subsection:	212.03.03 Permanent Seeding and Protection.
Part:	D) Top Dressing.
Revision:	Change the title of part to D) Fertilizer.
Subsection:	212.03.03 Permanent Seeding and Protection.
Part:	D) Fertilizer.
Revision:	Replace the first paragraph with the following: Apply fertilizer at the beginning of the seeding operation and after vegetation is established. Use fertilizer delivered to the project in bags or bulk. Apply initial fertilizer to all areas prior to the seeding or sodding operation at the application rate specified in 212.03.03 B). Apply 20-10-10 fertilizer to the areas after vegetation has been established at a rate of 11.5 pounds per 1,000 square feet. Obtain approval from the Engineer prior to the 2nd fertilizer application. Reapply fertilizer to any area that has a streaked appearance. The reapplication shall be at no additional cost to the Department. Re-establish any vegetation severely damaged or destroyed because of an excessive application of fertilizer at no cost to the Department.
Subsection:	212.03.03 Permanent Seeding and Protection.
Part:	D) Fertilizer.
Revision:	Delete the second paragraph.

Supplemental Specifications to the
Standard Specifications for Road and Bridge Construction, 2012 Edition
Effective with the April 29, 2016 Letting

Subsection: **Revision:**	212.04.04 Agricultural Limestone. Replace the entire section with the following: The Department will measure the quantity of agricultural limestone in tons.
Subsection: **Revision:**	212.04.05 Fertilizer. Replace the entire section with the following: The Department will measure fertilizer used in the seeding or sodding operations for payment. The Department will measure the quantity by tons.
Subsection: **Revision:**	212.05 PAYMENT. Delete the following item code: Code Pay Item Pay Unit 05966 Topdressing Fertilizer Ton
Subsection: **Revision:**	212.05 PAYMENT. Add the following pay items: Code Pay Item Pay Unit 05963 Initial Fertilizer Ton 05964 20-10-10 Fertilizer Ton 05992 Agricultural Limestone Ton
Subsection: **Revision:**	213.03.02 Progress Requirements. Replace the third paragraph with the following: After exposing areas of erodible material, make every effort to stabilize and protect the areas as quickly as possible. Permanently seed and mulch all areas at final grade within 14 days. Temporary stabilization practices on those portions of the project where construction activities have temporarily ceased shall be initiated within 14 days of the date of activity cessation. The Engineer will suspend grading operations for instances where the Contractor fails to sustain erosion control measures to effectively control erosion and to prevent water pollution in accordance with the KPDES Permit. In addition, the Engineer will withhold monies due on current estimates until corrective work has been initiated and is continuously progressing to remediate noted deficiencies. Additionally, should noted deficiencies not be adequately addressed to the satisfaction of the Engineer within 7 calendar days of receipt of written notification of deficiencies, the Department will apply a penalty equal to the daily liquidated damages rate until all aspects of the work have been completed.
Subsection: **Part:** **Revision:**	213.03.05 Temporary Control Measures. E) Temporary Seeding and Protection. Delete the second sentence of the first paragraph.
Subsection: **Table:** **Revision:**	304.02.01 Physical Properties. Required Geogrid Properties Replace all references to Test Method "GRI-GG2-87" with ASTM D 7737.
Subsection: **Part:** **Revision:**	402.03.02 Contractor Quality Control and Department Acceptance. B) Sampling. Replace the second sentence with the following: The Department will determine when to obtain the quality control samples using the random-number feature of the mix design submittal and approval spreadsheet. The Department will randomly determine when to obtain the verification samples required in Subsections 402.03.03 and 402.03.04 using the Asphalt Mixture Sample Random Tonnage Generator.

Supplemental Specifications to the
Standard Specifications for Road and Bridge Construction, 2012 Edition
Effective with the April 29, 2016 Letting

Subsection: **Part:** **Number:** **Revision:**	402.03.02 Contractor Quality Control and Department Acceptance. D) Testing Responsibilities. 3) VMA. Add the following paragraph below Number 3) VMA: Retain the AV/VMA specimens and one additional corresponding G_{mm} sample for 5 working days for mixture verification testing by the Department. For Specialty Mixtures, retain a mixture sample for 5 working days for mixture verification testing by the Department. When the Department's test results do not verify that the Contractor's quality control test results are within the acceptable tolerances according to Subsection 402.03.03, retain the samples and specimens from the affected sublot(s) for the duration of the project.
Subsection: **Part:** **Number:** **Revision:**	402.03.02 Contractor Quality Control and Department Acceptance. D) Testing Responsibilities. 4) Density. Replace the second sentence of the Option A paragraph with the following: Perform coring by the end of the following work day.
Subsection: **Part:** **Number:** **Revision:**	402.03.02 Contractor Quality Control and Department Acceptance. D) Testing Responsibilities. 5) Gradation. Delete the second paragraph.
Subsection: **Part:** **Number:** **Revision:**	402.03.02 Contractor Quality Control and Department Acceptance. H) Unsatisfactory Work. 1) Based on Lab Data. Replace the second paragraph with the following: When the Engineer determines that safety concerns or other considerations prohibit an immediate shutdown, continue work and the Department will make an evaluation of acceptability according to Subsection 402.03.05.
Subsection: **Revision:**	402.03.03 Verification. Replace the first paragraph with the following: **402.03.03 Mixture Verification.** For volumetric properties, the Department will perform a minimum of one verification test for AC, AV, and VMA according to the corresponding procedures as given in Subsection 402.03.02. The Department will randomly determine when to obtain the verification sample using the Asphalt Mixture Sample Random Tonnage Generator. For specialty mixtures, the Department will perform one AC and one gradation determination per lot according to the corresponding procedures as given in Subsection 402.03.02. However, Department personnel will not perform AC determinations according to KM 64-405. The Contractor will obtain a quality control sample at the same time the Department obtains the mixture verification sample and perform testing according to the procedures given in Subsection 402.03.02. If the Contractor's quality control sample is verified by the Department's test results within the tolerances provided below, the Contractor's sample will serve as the quality control sample for the affected sublot. The Department may perform the mixture verification test on the Contractor's equipment or on the Department's equipment.
Subsection: **Part:** **Revision:**	402.03.03 Verification. A) Evaluation of Sublot(s) Verified by Department. Replace the third sentence of the second paragraph with the following: When the paired *t* -test indicates that the Contractor's data and Department's data are possibly not from the same population, the Department will investigate the cause for the difference according to Subsection 402.03.05 and implement corrective measures as the Engineer deems appropriate.

Supplemental Specifications to the
Standard Specifications for Road and Bridge Construction, 2012 Edition
Effective with the April 29, 2016 Letting

Subsection: **Part:** **Revision:**	402.03.03 Verification. B) Evaluation of Sublots Not Verified by Department. Replace the third sentence of the first paragraph with the following: When differences between test results are not within the tolerances listed below, the Department will resolve the discrepancy according to Subsection 402.03.05.
Subsection: **Part:** **Revision:**	402.03.03 Verification. B) Evaluation of Sublots Not Verified by Department. Replace the third sentence of the second paragraph with the following: When the F-test or t-test indicates that the Contractor's data and Department's data are possibly not from the same population, the Department will investigate the cause for the difference according to Subsection 402.03.05 and implement corrective measures as the Engineer deems appropriate.
Subsection: **Part:** **Revision:**	402.03.03 Verification. C) Test Data Patterns. Replace the second sentence with the following: When patterns indicate substantial differences between the verified and non-verified sublots, the Department will perform further comparative testing according to subsection 402.03.05.
Subsection: **Revision:**	402.03 CONSTRUCTION. Add the following subsection: **402.03.04 Testing Equipment and Technician Verification.** For mixtures with a minimum quantity of 20,000 tons and for every 20,000 tons thereafter, the Department will obtain an additional verification sample at random using the Asphalt Mixture Sample Random Tonnage Generator in order to verify the integrity of the Contractor's and Department's laboratory testing equipment and technicians. The Department will obtain a mixture sample of at least 150 lb at the asphalt mixing plant according to KM 64-425 and split it according to AASHTO R 47. The Department will retain one split portion of the sample and provide the other portion to the Contractor. At a later time convenient to both parties, the Department and Contractor will simultaneously reheat the sample to the specified compaction temperature and test the mixture for AV and VMA using separate laboratory equipment according to the corresponding procedures given in Subsection 402.03.02. The Department will evaluate the differences in test results between the two laboratories. When the difference between the results for AV or VMA is not within ± 2.0 percent, the Department will investigate and resolve the discrepancy according to Subsection 402.03.05.
Subsection: **Revision:**	402.03.04 Dispute Resolution. Change the subsection number to 402.03.05.
Subsection: **Part:** **Table:** **Revision:**	402.05 PAYMENT. Lot Pay Adjustment Schedule Compaction Option A Base and Binder Mixtures AC Replace the Deviation from JMF(%) that corresponds to a Pay Value of 0.95 to ±0.6.
Subsection: **Revision:**	403.01 Description. Replace the sentence three and four of the first paragraph with the following: Provide a Superpave Plant Technologist (SPT) or Superpave Mix Design Technician (SMDT) qualified by the Laboratories' Quality Acceptance program. Be available to address all Quality Control concerns arising during work performed under section 403.
Subsection: **Revision:**	403.02.10 Material Transfer Vehicle (MTV). Replace the first sentence with the following: In addition to the equipment specified above, provide a MTV with the following minimum characteristics:

Supplemental Specifications to the
Standard Specifications for Road and Bridge Construction, 2012 Edition
Effective with the April 29, 2016 Letting

Subsection: **Part:** **Number:** **Revision:**	403.03.03 Preparation of Mixture C) Mix Design Criteria 2) Revise part 2) to read as follows: Selection of Optimum AC. Normally, the Department will approve the AC at an air-void content of 4.0 percent. The Engineer may assign an AC corresponding to other air-void levels as deemed appropriate. Ensure the optimum AC is a minimum of 5.2 percent by weight of the total mixture for all 0.5-inch nominal surface mixtures and 5.5 percent by weight of the total mixture for all 0.38-inch nominal surface mixtures.
Subsection: **Revision:**	412.02.09 Material Transfer Vehicle (MTV). Replace the paragraph with the following: Provide and utilize a MTV with the minimum characteristics outlined in section 403.02.10.
Subsection: **Revision:**	412.03.07 Placement and Compaction. Replace the first paragraph with the following: Use a MTV when placing SMA mixture in the driving lanes. The MTV is not required on ramps and/or shoulders unless specified in the contract. When the Engineer determines the use of the MTV is not practical for a portion of the project, the Engineer may waive its requirement for that portion of pavement by a letter documenting the waiver.
Subsection: **Revision:**	412.04 MEASUREMENT. Add the following subsection: 412.04.03. Material Transfer Vehicle (MTV). The Department will not measure the MTV for payment and will consider its use incidental to the asphalt mixture.
Subsection: **Part:** **Revision:**	501.03.19 Surface Tolerances and Testing Surface. B) Ride Quality. Add the following to the end of the first paragraph: The Department will specify if the ride quality requirements are Category A or Category B when ride quality is specified in the Contract. Category B ride quality requirements shall apply when the Department fails to classify which ride quality requirement will apply to the Contract.
Subsection: **Revision:**	501.03.05 Weather Limitations and Protection. Replace the reference to Subsection 501.03.19 in Paragraph 5, with Subsection 501.03.20.
Subsection: **Revision:**	601.02.02 Cement Replace the third sentence with the following: The Department will allow the use of Type IP(≤20), Type IS(≤30), Type IL, Type II, and Type III when the Engineer approves.
Subsection: **Revision:**	601.02.02 Cement Replace the fifth sentence with the following: If unsatisfactory test results are obtained using Type IP(≤20), Type IS(≤30), Type IL, Type II, or Type III cement complete the work using Type I cement.

Supplemental Specifications to the
Standard Specifications for Road and Bridge Construction, 2012 Edition
Effective with the April 29, 2016 Letting

Subsection: 601.03.02 Concrete Producer Responsibilities.
Part: E) Trip Tickets.
Revision: Replace the section with the following:
Furnish a trip ticket containing the minimum information shown in the table below. Certify that the data on the ticket is correct and that the mixture conforms to the approved mix design. Ensure that the plant manager or a Level II concrete technician signs the ticket. The Department's jobsite inspector will complete all other necessary information on the back of the trip ticket.

Contract Id:	Proj. Number:	Date:	County:	
Truck No:	Producer Name:		SiteManager Sample Id:	
Qty(Yds^3):	Time Loaded (Non Agitated Concrete Only):			
Begin Mixing Time: _____ AM ____ PM ____ REV _____				
Set Retarder Used		Yes ___	Type____	No____
Water Reducer Used		Yes ___	Type____	No____
Water Underrun _____ Gal/Yd^3 _____ Total Gallons				
Design W/C:	Actual W/C:	Slump (inches)		
Batch Weight Information:				
Material:	Description:	Design Qty:	Required:	Batched:
Remarks:				

%Var:	%Moisture:	Actual:

The data on this ticket is correct for the approved concrete mix design.

Signature: _____ Date: _____
KRMCA Level II Technician or Plant Manager

Subsection: 601.03.03 Proportioning and Requirements
Part: A) Concrete
Revision: Revise Table for INGREDIENT PROPORTIONS AND REQUIREMENTS FOR VARIOUS CLASSES OF CONCRETE as follows: Replace "M1 w/ Type 1 cement" with "M1 w/ Type 1 or blended hydraulic cement"

Subsection: 601.03.03 Proportioning and Requirements
Part: C) Mixtures Using Type IP, IS, and I(SM) Cement or Mineral Admixtures
Revision: Revise part C) header to read as follows: Mixtures Using Type IP(≤20), IS(≤30), and IL Cement and Mineral Admixtures.

Subsection: 601.03.03 Proportioning and Requirements
Part: C) Mixtures Using Type IP, IS, and I(SM) Cement or Mineral Admixtures
Number: 1)
Revision: Revise first sentence to read as follows: Type IP(≤20), IS(≤30), IL Cement.

Subsection: 601.03.03 Proportioning and Requirements
Part: C) Mixtures Using Type IP, IS, and I(SM) Cement or Mineral Admixtures
Number: 2)
Revision: Revise second sentence to read as follows: The use of fly ash, blast furnace slag cement, or micosilica in concrete is the Contractor's option.

Supplemental Specifications to the
Standard Specifications for Road and Bridge Construction, 2012 Edition
Effective with the April 29, 2016 Letting

Subsection: **Part:** **Number:** **Revision:**	601.03.03 Proportioning and Requirements C) Mixtures Using Type IP, IS, and I(SM) Cement or Mineral Admixtures 2) Revise the first sentence in the second paragraph to read as follows: When the ability to use blast furnace slag cement or microsilica has not been demonstrated have the concrete producer provide trial batches in accordance with Subsection 601.03.02 G) 1).
Subsection: **Part:** **Number:** **Part:** **Revision:**	601.03.03 Proportioning and Requirements C) Mixtures Using Type IP, IS, and I(SM) Cement or Mineral Admixtures 2) b) Revise first sentence to read as follows: Blast Furnace Slag Cement
Subsection: **Part:** **Number:** **Part:** **Revision:**	601.03.03 Proportioning and Requirements C) Mixtures Using Type IP, IS, and I(SM) Cement or Mineral Admixtures 2) b) Revise second sentence to read as follows: When added as a separate ingredient, use Grade 120 or Grade 100 slag to reduce the quantity of cement, except do not use blast furnace slag cement to reduce the quantity of Type IS(≤30) cement.
Subsection: **Part:** **Number:** **Part:** **Revision:**	601.03.03 Proportioning and Requirements C) Mixtures Using Type IP, IS, and I(SM) Cement or Mineral Admixtures 2) b) In part b), replace all references to "GGBF slag" with "blast furnace slag cement".
Subsection: **Part:** **Revision:**	601.03.04 Classes and Primary Uses H) Class M1 Revise part H) to read as follows: High early strength for bridge joint repair and full or partial depth bridge deck patching. (Type 1 cement or blended hydraulic cement)
Subsection: **Revision:**	603.03.06 Cofferdams. Replace the seventh sentence of paragraph one with the following: Submit drawings that are stamped by a Professional Engineer licensed in the Commonwealth of Kentucky.
Subsection: **Revision:**	605.03.04 Tack Welding. Insert the subsection and the following: 605.03.04 Tack Welding. The Department does not allow tack welding.
Subsection: **Part:** **Number:** **Revision:**	606.03.17 Special Requirements for Latex Concrete Overlays. A) Existing Bridges and New Structures. 1) Prewetting and Grout-Bond Coat. Add the following sentence to the last paragraph: Do not apply a grout-bond coat on bridge decks prepared by hydrodemolition.
Subsection: **Revision:**	609.03 Construction. Replace Subsection 609.03.01 with the following: 609.03.01 A) Swinging the Spans. Before placing concrete slabs on steel spans or precast concrete release the temporary erection supports under the bridge and swing the span free on its supports. 609.03.01 B) Lift Loops. Cut all lift loops flush with the top of the precast beam once the beam is placed in the final location and prior to placing steel reinforcement. At locations where lift loops are cut, paint the top of the beam with galvanized or epoxy paint.

Supplemental Specifications to the
Standard Specifications for Road and Bridge Construction, 2012 Edition
Effective with the April 29, 2016 Letting

Subsection: **Revision:**	611.03.02 Precast Unit Construction. Replace the first sentence of the subsection with the following: Construct units according to ASTM C1577, **replacing Table 1 (Design Requirements for Precast Concrete Box Sections Under Earth, Dead and HL-93 Live Load Conditions) with KY Table 1 (Precast Culvert KYHL-93 Design Table)**, and Section 605 with the following exceptions and additions:
Subsection: **Number:** **Revision:**	613.03.01 Design. 2) Replace "AASHTO Standard Specifications for Highway Bridges" with "AASHTO LRFD Bridge Design Specifications"
Subsection: **Revision:**	615.06.02 Add the following sentence to the end of the subsection. The ends of units shall be normal to walls and centerline except exposed edges shall be beveled ¾ inch.
Subsection: **Revision:**	615.06.03 Placement of Reinforcement in Precast 3-Sided Units. Replace the reference of 6.6 in the section to 615.06.06.
Subsection: **Revision:**	615.06.04 Placement of Reinforcement for Precast Endwalls. Replace the reference of 6.7 in the section to 615.06.07.
Subsection: **Revision:**	615.06.06 Laps, Welds, and Spacing for Precast 3-Sided Units. Replace the subsection with the following: Tension splices in the circumferential reinforcement shall be made by lapping. Laps may not be tack welded together for assembly purposes. For smooth welded wire fabric, the overlap shall meet the requirements of AASHTO 2012 Bridge Design Guide Section 5.11.2.5.2 and AASHTO 2012 Bridge Design Guide Section 5.11.6.3. For deformed welded wire fabric, the overlap shall meet the requirements of AASHTO 2012 Bridge Design Guide Section 5.11.2.5.1 and AASHTO 2012 Bridge Design Guide Section 5.11.6.2. The overlap of welded wire fabric shall be measured between the outer most longitudinal wires of each fabric sheet. For deformed billet-steel bars, the overlap shall meet the requirements of AASHTO 2012 Bridge Design Guide Section 5.11.2.1. For splices other than tension splices, the overlap shall be a minimum of 12" for welded wire fabric or deformed billet-steel bars. The spacing center to center of the circumferential wires in a wire fabric sheet shall be no less than 2 inches and no more than 4 inches. The spacing center to center of the longitudinal wires shall not be more than 8 inches. The spacing center to center of the longitudinal distribution steel for either line of reinforcing in the top slab shall be not more than 16 inches.
Subsection: **Revision:**	615.06.07 Laps, Welds, and Spacing for Precast Endwalls. Replace the subsection with the following: Splices in the reinforcement shall be made by lapping. Laps may not be tack welded together for assembly purposes. For smooth welded wire fabric, the overlap shall meet the requirements of AASHTO 2012 Bridge Design Guide Section 5.11.2.5.2 and AASHTO 2012 Bridge Design Guide Section 5.11.6.3. For deformed welded wire fabric, the overlap shall meet the requirements of AASHTO 2012 Bridge Design Guide Section 5.11.2.5.1 and AASHTO 2012 Bridge Design Guide Section 5.11.6.2. For deformed billet-steel bars, the overlap shall meet the requirements of AASHTO 2012 Bridge Design Guide Section 5.11.2.1. The spacing center-to-center of the wire fabric sheet shall not be less than 2 inches or more than 8 inches.

Supplemental Specifications to the
Standard Specifications for Road and Bridge Construction, 2012 Edition
Effective with the April 29, 2016 Letting

Subsection: **Revision:**	615.08.01 Type of Test Specimen. Replace the subsection with the following: Start-up slump, air content, unit weight, and temperature tests will be performed each day on the first batch of concrete. Acceptable start-up results are required for production of the first unit. After the first unit has been established, random acceptance testing is performed daily for each 50 yd^3 (or fraction thereof). In addition to the slump, air content, unit weight, and temperature tests, a minimum of one set of cylinders shall be required each time plastic property testing is performed.
Subsection: **Revision:**	615.08.02 Compression Testing. Delete the second sentence.
Subsection: **Revision:**	615.08.04 Acceptability of Core Tests. Delete the entire subsection.
Subsection: **Revision:**	615.12 Inspection. Add the following sentences to the end of the subsection: Units will arrive at jobsite with the "Kentucky Oval" stamped on the unit which is an indication of acceptable inspection at the production facility. Units shall be inspected upon arrival for any evidence of damage resulting from transport to the jobsite.
Subsection: **Revision:**	701.04.16 Deduction for Pipe Deflection. Insert the following at the end of the paragraph: The section length is determined by the length of the pipe between joints where the failure occurred.
Subsection: **Revision:**	716.02.02 Paint. Replace sentence with the following: Conform to Section 821.
Subsection: **Revision:**	716.03 CONSTRUCTION. Replace bullet 5) with the following: 5) AASHTO Standard Specifications for Structural Supports for Highway Signs, Luminaires, and Traffic Signals, 2013-6th Edition with current interims,
Subsection: **Revision:**	716.03.02 Lighting Standard Installation. Replace the paragraph with the following: Locate poles to avoid trees, drainage, structures, etc. Regardless of the station & offset noted, locate all poles/bases behind guardrail a minimum of 4 feet behind the face of the guardrail. All poles shall be placed as close to stations and offsets as stated on Plans to provide proper illumination. If any pole needs to be relocated from stations indicated, the Division of Traffic Operations shall be contacted. When submitting brochures for suggested luminaires include iso lux curves, IES type distribution, lamp lumens, and typical ballast factor used for each type of luminaire. Submit the photometric data in a digital IES format to the Division of Traffic Operations. Include with the submittal a point of contact and phone number to answer technical questions about the luminaire.
Subsection: **Part:** **Revision:**	716.03.02 Lighting Standard Installation. A) Conventional Installation. Replace the third sentence with the following: Orient the transformer base so the door is positioned on the side away from on-coming traffic.
Subsection: **Part:** **Number:** **Revision:**	716.03.02 Lighting Standard Installation. A) Conventional Installation. 1) Breakaway Installation and Requirements. Replace the first sentence with the following: For breakaway supports, conform to Section 12 of the AASHTO Standard Specifications for Structural Supports for Highway Signs, Luminaires, and Traffic Signals, 2013-6th Edition with current interims.

Supplemental Specifications to the
Standard Specifications for Road and Bridge Construction, 2012 Edition
Effective with the April 29, 2016 Letting

Subsection: 716.03.02 Lighting Standard Installation.
Part: B) High Mast Installation
Revision: Replace the first three sentences of the first paragraph with the following: Install each high mast pole as noted on Plans. Install each high mast pole on a separate circuit and use luminaires with light patterns as indicated. Orient luminaires as shown in Plans.

Subsection: 716.03.02 Lighting Standard Installation.
Part: B) High Mast Installation
Number: 2) Concrete Base Installation
Revision: Modification of Chart and succeeding paragraphs within this section:

Drilled Shaft Depth Data							
Level Ground		3:1 Ground Slope		2:1 Ground Slope		1.5:1 Ground Slope (2)	
Soil	Rock	Soil	Rock	Soil	Rock	Soil	Rock
17 ft	7 ft	19 ft	7 ft	20 ft	7 ft	(1)	7 ft

Steel Requirements			
Vertical Bars		Ties or Spiral	
Size	Total	Size	Spacing or Pitch
#10	16	#4	12 inch

Note 1: Shaft length is 22 feet for cohesive soil only. For cohesionless soil, contact Geotechnical Branch for design.
Note 2: Do not construct high mast drilled shafts on ground slopes steeper than 1.5:1 without the approval of the Division of Traffic Operations.

If rock is encountered during drilling operations and confirmed by the Engineer to be of sound quality, the shaft is only required to be further advanced into the rock by the length of rock socket shown in the design table. The total length of the shaft need not be longer than that of soil alone. Both longitudinal rebar length and number of ties or spiral length shall be adjusted

If a shorter depth is desired for the drilled shaft, the Contractor shall provide, for the state's review and approval, a detailed column design with individual site specific soil and rock analysis performed and approved by a Professional Engineer licensed in the Commonwealth of Kentucky.

Spiral reinforcement may be substituted for ties. If spiral reinforcement is used, one and one-half closed coils shall be provided at the ends of each spiral unit. Subsurface conditions consisting of very soft clay or very loose saturated sand could result in soil parameters weaker than those assumed. Engineer shall consult with the Geotechnical Branch if such conditions

The bottom of the drilled hole shall be firm and thoroughly cleaned so no loose or compressible materials are present at the time of the concrete placement. If the drilled hole contains standing water, the concrete shall be placed using a tremie to displace water. Continuous concrete flow will be required to insure full displacement of any water.

The reinforcement and anchor bolts shall be adequately supported in the proper positions so no movement occurs during concrete placement. Welding of anchor bolts to the reinforcing cage is unacceptable, templates shall be used. Exposed portions of the foundation shall be formed to create a smooth finished surface. All forming shall be removed upon completion of foundation construction.

Supplemental Specifications to the
Standard Specifications for Road and Bridge Construction, 2012 Edition
Effective with the April 29, 2016 Letting

Subsection: **Part:** **Revision:**	716.03.03 Trenching. A) Trenching of Conduit for Highmast Ducted Cables. Add the following after the first sentence: If depths greater than 24 inches are necessary, obtain the Engineer's approval and maintain the required conduit depths coming into the junction boxes. No payment for additional junction boxes for greater depths will be allowed.
Subsection: **Part:** **Revision:**	716.03.03 Trenching. B) Trenching of Conduit for Non-Highmast Cables. Add the following after the second sentence: If depths greater than 24 inches are necessary for either situation listed previously, obtain the Engineer's approval and maintain the required conduit depths coming into the junction boxes.
Subsection: **Revision:**	716.03.04 Conduit Installation. Replace the first two sentences of the paragraph with the following: Provide rigid steel conduit encasement for all conductors except as specified in the Contract. Provide conduit that is listed on the Department's List of Approved Materials.
Subsection: **Part:** **Number:** **Revision:**	716.03.04 Conduit Installation. A) Conduit Requirements in Junction Boxes. 1) Highmast Ducted Cable. Replace the first two sentences with the following: Install conduit horizontally through the junction box. Conduit shall be 4 inches from the bottom and 4 inches from the side of the junction box.
Subsection: **Revision:**	716.03.04 Conduit Installation. Add the following to the Part to the Subsection: **G) Bore and Jack.** Construction methods shall be in accordance with Subsections 706.03.02, paragraphs 1, 2 and 4.
Subsection: **Revision:**	716.03.08 Splicing. Replace the last sentence of the paragraph with the following: Ensure the splices are of the correct size for the wire being used.
Subsection: **Revision:**	716.03.10 Junction Boxes. Replace subsection title with the following: Electrical Junction Box and replace the last sentence of the paragraph with the following: Any additional junction boxes shall be approved by the Engineer.
Subsection: **Revision:**	716.03.13 Temporary Lighting. Change subsection heading to the following: **716.03.13 Temporary/Maintain Lighting.**
Subsection: **Revision:**	716.03.13 Temporary /Maintain Lighting. Replace the entire section with the following: The Contractor shall furnish and install all materials necessary to temporarily light the proposed roadway to design standards in Subsection 716.03. The Contractor shall submit his proposed design of temporary lighting to the Division of Traffic Operations for approval at least 30 days before installation. Maintain all lighting elements impacted within or outside the project limits until new lighting elements are installed and a functional inspection has been performed on the new lighting elements. The Contractor shall submit a proposed design for maintaining lighting to the Division of Traffic Operations for approval at least 30 days before installation.

Supplemental Specifications to the
Standard Specifications for Road and Bridge Construction, 2012 Edition
Effective with the April 29, 2016 Letting

Subsection:	716.03.14 Remove Lighting.
Revision:	Replace the section with the following: Remove all lighting equipment that is identified by the Engineer as no longer necessary including, but not limited to, the following: pole bases, poles, junction boxes, cabinets, and wood poles. Pole bases shall be removed a minimum of one foot below finished grade by chipping off or other method that is approved by the Engineer. Dispose of all removed concrete off right-of-way. Wood poles shall be removed a minimum of one foot below finished grade. Backfill holes with material approved by the Engineer. Conduit may be abandoned in the ground. All materials shall be removed from the project as directed by the Engineer. Transformers not owned by a utility shall be tested for PCB's and disposed of in accordance with state regulations.
Subsection:	716.03.15 Painting.
Revision:	Replace the first sentence with the following: Clean non-galvanized or damaged surfaces of exposed junction boxes, pull boxes, control panels, poles, and similar equipment, and apply one coat of an inhibiting paint and two coats of aluminum paint.
Subsection:	716.04.01. Poles.
Revision:	Change the subsection heading to 716.04.01 Pole and replace the last sentence of the subsection with the following: The Department will not measure anchor bolts, washers, nuts, anchor bolt covers, ground lugs, and any associated hardware for payment and will consider them incidental to this item of work.
Subsection:	716.04.02 High Mast Pole.
Revision:	Replace the second sentence with the following: The Department will not measure the lowering device, anchor bolts, head frame assembly, cables, winch unit, power cables, wiring, connectors, circuit breakers, grounding lugs, ground wire, ground rods, conduits, test plugs,, adjustment and calibration of the unit to provide the desired operation, and any associated hardware for payment and will consider them incidental to this item of work.
Subsection:	716.04.03 Bracket.
Revision:	Replace the second sentence with the following: The Department will not measure any associated hardware needed for attaching the bracket to the pole for payment and will consider them incidental to this item of work.
Subsection:	716.04.04 Pole Base.
Revision:	Change the subsection heading to 716.04.04 Pole Bases and delete the paragraph.
Subsection:	716.04.04 Pole Bases.
Revision:	Insert the following: **A. Pole Base**. The Department will measure the quantity as each individual unit furnished and installed. The Department will not measure excavation, concrete, conduits, fittings, ground rods, ground wires, ground lugs, reinforcing steel, restoring disturbed areas to the satisfaction of the Engineer, and any associated hardware for payment and will consider them incidental to this item of work. **B. Pole Base High Mast**. The Department will measure the quantity in cubic yards furnished and installed. The Department will not measure excavation, concrete, conduits, fittings, ground rods, ground wires, ground lugs, reinforcing steel, restoring disturbed areas to the satisfaction of the Engineer, and any associated hardware for payment and will consider them incidental to this item of work.

Supplemental Specifications to the
Standard Specifications for Road and Bridge Construction, 2012 Edition
Effective with the April 29, 2016 Letting

Subsection: **Revision:**	716.04.05 Pole Base in Median Wall. Replace the last sentence with the following: The Department will not measure conduits, fittings, junction boxes, additional reinforcing steel, ground rods, ground wire, ground lugs, and aluminum cover plates (if specified) for payment, and will consider them incidental to this item of work.
Subsection: **Revision:**	716.04.06 Transformer Base. Replace the last sentence with the following: The Department will not measure transformer door, ground lug, anchoring bolts, nuts, washers, and any associated hardware for payment and will consider them incidental to this item of work. The filling of any unused holes will also be considered incidental to this item of work.
Subsection: **Revision:**	716.04.07 Pole with Secondary Equipment. Replace the heading with the following: 716.04.07 Pole with Secondary Control Equipment.
Subsection: **Revision:**	716.04.07 Pole with Secondary Control Equipment. Replace the second and third sentence with the following: The Department will not measure mounting the cabinet to the pole, backfilling, restoration, any necessary hardware to anchor pole, electrical inspection fees, and required building fees involving utility secondary, and primary service for payment and will consider them incidental to this item of work. The Department will also not measure furnishing and installing electrical service conductors, specified conduits, meter base, transformer, service panel, fused cutout, fuses, lighting arrestors, photoelectrical control, circuit breaker, contactor, manual switch, ground rods, ground lugs, and ground wires for payment and will consider them incidental to this item of work. The filling of unused holes will also be considered incidental to this item of work.
Subsection: **Revision:**	716.04.08 Lighting Control Equipment. Replace the paragraph with the following: The Department will measure the quantity as each individual unit furnished and installed. The Department will not measure the concrete base, excavation, backfilling, restoration, any necessary anchors, electrical inspection fees, and required building fees involving utility secondary/primary service for payment and will consider them incidental to this item of work. The Department will also not measure furnishing and installing electrical service conductors, specified conduits, meter base, transformer, service panel, fused cutout, fuses, lighting arrestors, photoelectrical control, circuit breakers, contactor, manual switch, ground rods, ground lugs, and ground wires for payment and will consider them incidental to this item of work. The Department will not measure the filling of any unused holes with and will consider them incidental to this item of work.
Subsection: **Revision:**	716.04.09 Luminaire. Replace the paragraph with the following: The Department will measure the quantity as each individual unit furnished and installed. The Department will not measure lamps, starters, ballasts, drivers, surge protection, dimming modules, photo-control receptacle, specified shielding (if required), and any adjustments necessary to provide the desired lighting pattern for payment and will consider them incidental to this item of work.
Subsection: **Revision:**	716.04.10 Fused Connector Kits. Replace the heading with the following: 716.04.10 Fuse Connector Kits.

Supplemental Specifications to the
Standard Specifications for Road and Bridge Construction, 2012 Edition
Effective with the April 29, 2016 Letting

Subsection: **Revision:**	716.04.10 Fuse Connector Kits. Replace the paragraph with the following: The Department will measure the quantity as each individual unit furnished and installed. The Department will not measure fuses/lugs for payment and will consider them incidental to this item of work.
Subsection: **Revision:**	716.04.11 Conduit. Replace the second sentence with the following: The Department will not measure installation in ground or on structures, conduit fittings, test plugs, expansion joints with bonding straps, grounding lugs, drill anchors, clamps, and any additional hardware required for payment and will consider them incidental to this item of work.
Subsection: **Revision:**	716.04.12 Markers. Replace the section with the following: The Department will measure the quantity as each individual unit furnished and installed.
Subsection: **Revision:**	716.04.13 Junction Box. Replace the subsection title with the following: Electrical Junction Box Type Various.
Subsection: **Revision:**	716.04.13 Electrical Junction Box Type Various. Replace the section with the following: The Department will measure the quantity as each individual unit furnished and installed. The Department will not measure additional junction boxes for greater depths than those identified in Plans, #57 aggregate, backfilling, restoration of disturbed areas to the satisfaction of the Engineer, geotextile filter fabric, concrete, hot dipped galvanized cover, stainless steel screws, rubber gasket, and any associated hardware for payment , and will consider them incidental to this item of work.
Subsection: **Part:** **Revision:**	716.04.13 Junction Box. A) Junction Electrical. Delete Part A.
Subsection: **Revision:**	716.04.14 Trenching and Backfilling. Replace the section with the following: The Department will measure the quantity in linear feet. The Department will not measure excavation, backfilling, underground utility warning tape (if required), and the restoration of disturbed areas to original condition for payment and will consider them incidental to this item of work.
Subsection: **Revision:**	716.04.15 Wire or Cable. Replace the section with the following: The Department will measure the quantity in linear feet furnished and installed. The Department will not measure installation within conduit, splice boots, and any other hardware required for installing cable for payment and will consider them incidental to this item of work.
Subsection: **Revision:**	716.04.16 Ducted Cable. Replace the second sentence of the paragraph with the following: The Department will not measure installation within trench or conduit and any other necessary hardware for payment and will consider them incidental to this item of work.
Subsection: **Revision:**	716.04.17 Temporary Lighting Rename the subsection as follows: 716.04.17 Temporary Lighting/Maintain Lighting.

Supplemental Specifications to the
Standard Specifications for Road and Bridge Construction, 2012 Edition
Effective with the April 29, 2016 Letting

Subsection: **Revision:**	716.04.17 Temporary Lighting/Maintain Lighting. Delete the paragraph and add the following parts: A) Temporary Lighting. The Department will measure the quantity by lump sum. The Department will not measure poles, luminaires, wire, conduit, trenching and backfilling, control equipment, all relocations and removal, design (if required), and any other necessary hardware to make a complete installation for payment and will consider them incidental to this item of work. B) Maintain Lighting. The Department will measure the quantity by lump sum. The Department will not measure maintenance of lighting elements and design (if required) for payment and will consider them incidental to this item of work.
Subsection: **Revision:**	716.04.18 Remove Lighting. Replace the paragraph with the following: The Department will measure the quantity by lump sum. The Department will not measure backfilling and the disposal or transportation of equipment and materials associated with any structural or electrical component of the lighting system including, but not limited to pole bases, poles, junction boxes, cabinets, and wood poles for payment and will consider them incidental to this item of work.
Subsection: **Revision:** **Subsection:** **Revision:**	716.04.19 Remove Pole Base. Delete Subsection. 716.04.20 Bore and Jack Conduit. Renumber Subsection to 716.04.19 Bore and Jack Conduit.
Subsection: **Revision:**	716.04.19 Bore and Jack Conduit. Replace the paragraph with the following: The Department will measure the quantity in linear feet. This item shall include all work necessary for boring and installing conduit under an existing roadway.
Subsection: **Revision:**	716.05 PAYMENT. Revise the following under Code, Pay Item, and Pay Unit with the following: Code — Pay Item — Pay Unit 04700-04701 — Pole(Various)Mtg Ht — Each 04710-04714 — Pole(Various)Mtg Ht High Mast — Each 04810-04811 — Electrical Junction Box (Various) — Each 20391NS835 — Electrical Junction Box Type A — Each 20392NS835 — Electrical Junction Box Type C — Each 04770-04773 — Luminaire (Various) — Each 04780 — Fuse Connector Kit — Each 20410ED — Maintain Lighting — Lump Sum ~~04941 — Remove Pole Base — Each~~
Subsection: **Revision:**	723.02.02 Paint. Replace sentence with the following: Conform to Section 821.
Subsection: **Revision:**	723.03 CONSTRUCTION. Replace bullet 5) with the following: 5) AASHTO Standard Specifications for Structural Supports for Highway Signs, Luminaires, and Traffic Signals, 2013-6th Edition with current interims,
Subsection: **Revision:**	723.03.02 Poles and Bases Installation. Replace the title with the following: 723.03.02 Pole and Base Installation.

Supplemental Specifications to the
Standard Specifications for Road and Bridge Construction, 2012 Edition
Effective with the April 29, 2016 Letting

Subsection: **Revision:**	723.03.02 Pole and Base Installation. Replace the first paragraph with the following: Regardless of the station and offset noted, locate all poles/bases behind the guardrail a minimum of four feet from the front face of the guardrail to the front face of the pole base. Orient the handhole door away from traffic travel path. If pole base is installed within a sidewalk the top of the pole base shall be the same grade as the sidewalk.
Subsection: **Part:** **Revision:**	723.03.02 Poles and Bases Installation. A) Steel Strain and Mastarm Poles Installation Replace the title of Part A) Steel Strain and Mast Arm Pole Installation.
Subsection: **Part:** **Revision:**	723.03.02 Pole and Base Installation. A) Steel Strain and Mast Arm Pole Installation. Insert the following sentence at the beginning of the first paragraph: Install pole bases 4 to 6 inches above grade.
Subsection: **Part:** **Revision:**	723.03.02 Pole and Base Installation. A) Steel Strain and Mast Arm Pole Installation. Replace the second paragraph with the following: For concrete base installation, see Subsection 716.03.02 B), 2), Paragraphs 2-6. Drilled shaft depth shall be based on the soil conditions encountered during drilling and slope condition at the site. Refer to the design chart below:
Subsection: **Part:** **Revision:**	723.03.02 Pole and Base Installation. B) Pedestal or Pedestal Post Installation. Replace the second sentence with the following: If over 12 feet high the base shall have the minimum depth and diameter as Subsection 716.03.02 (A), paragraph 2.
Subsection: **Part:** **Revision:**	723.03.02 Poles and Bases Installation. B) Pedestal or Pedestal Post Installation. Replace the fourth sentence of the paragraph with the following: For breakaway supports, conform to Section 12 of the AASHTO Standard Specifications for Structural Supports for Highway Signs, Luminaires, and Traffic Signals, 2013-6th Edition with current interims.
Subsection: **Revision:**	723.03.03 Trenching. Replace the first sentence with the following: See Subsection 716.03.03 (B).
Subsection: **Part:** **Revision:**	723.03.03 Trenching. A) Under Roadway. Delete Part A) Under Roadway.
Subsection: **Revision:**	723.03.05 Conduit Requirements in Junction Boxes. Delete the Subsection and replace with the following: 723.03.05 Fuse Connector Kits. See Subsection 716.03.09.
Subsection: **Revision:**	723.03.06 Coupling Installation. Delete the Subsection and replace with the following: 723.03.06 Painting. See Subsection 716.03.15.
Subsection: **Revision:**	723.03.07 Bonding Requirements. Delete the Subsection and replace with the following: 723.03.07 Electrical Junction Boxes. See Subsection 716.03.10.

Supplemental Specifications to the
Standard Specifications for Road and Bridge Construction, 2012 Edition
Effective with the April 29, 2016 Letting

Subsection:	723.03.08 Painting.
Revision:	Replace with 723.03.06 Painting. See Subsection 716.03.15.
Subsection:	723.03.09 Underground Warning Tape.
Revision:	Renumber Subsection to 723.03.08 Underground Warning Tape.
Subsection:	723.03.10 Backfilling and Disturbed Areas.
Revision:	Renumber Subsection to 723.03.09 Backfilling and Disturbed Areas.
Subsection:	723.03.11 Wiring Installation.
Revision:	Renumber Subsection to 723.03.10 Wiring Installation.
Subsection:	723.03.10 Wiring Installation.
Revision:	Add the following sentence between the fifth and sixth sentences: Provide an extra two feet of loop wire and lead-in past the installed conduit in poles, pedestals, and junction boxes.
Subsection:	723.03.12 Loop Installation.
Revision:	Renumber Subsection to 723.03.11 Loop Installation.
Subsection:	723.03.11 Loop Installation.
Revision:	Replace the fourth sentence of the 2nd paragraph with the following: Provide an extra two feet of loop wire and lead-in past the installed conduit in poles, pedestals, and junction boxes.
Subsection:	723.03.13 Grounding Installation.
Revision:	Renumber Subsection to 723.03.12 Grounding Installation.
Subsection:	723.03.12 Grounding Installation.
Revision:	Replace the reference to "Standard Detail Sheets" in the first sentence with "Plans".
Subsection:	723.03.14 Splicing.
Revision:	Renumber Subsection to 723.03.13 Splicing.
Subsection:	723.03.13 Splicing.
Revision:	Delete the reference to (IMSA 19-2) from the 5th sentence of the paragraph.
Subsection:	723.03.15 Painting.
Revision:	Delete Subsection.
Subsection:	723.03.14 Splicing.
Revision:	Replace with new Subsection 723.03.14 Remove Signal Equipment.
Subsection:	723.03.14 Remove Signal Equipment.
Revision:	Insert the following for the new subsection: Remove all traffic signal equipment that is identified by the Engineer as no longer necessary including, but not limited to, the following: pole bases, poles, junction boxes, cabinets, wood poles, and advance warning flashers. Pole bases shall be removed a minimum of one foot below finished grade by chipping off or other method that is approved by the Engineer. Dispose of all removed concrete off right-of-way. Wood poles shall be removed a minimum of one foot below finished grade. Backfill holes with material approved by the Engineer. Conduit may be abandoned in the ground. Contact the district traffic Engineer to determine if any removed signal equipment needs to be returned to the district and to determine the location/time for such deliveries.
Subsection:	723.05.16 Drawings.
Revision:	Renumber the Subsection to 723.03.15 Drawings.

Supplemental Specifications to the
Standard Specifications for Road and Bridge Construction, 2012 Edition
Effective with the April 29, 2016 Letting

Subsection: **Revision:**	723.03.15 Drawings. Replace Subsection with the following: Before final inspection of the traffic control device, provide a complete set of reproducible as-built drawings that show the arrangement and locations of all equipment including: junction boxes, conduits, spare conduits, etc. Keep a daily record of all conduits placed in trenches, showing the distance from the pavement edge, the depth, and the length of runs, and indicate this information on the as-built drawings.
Subsection: **Revision:**	723.03.17 Acceptance and Inspection Requirements. Renumber Subsection to 723.03.16 Acceptance and Inspection Requirements.
Subsection: **Revision:**	723.03.16 Acceptance and Inspection Requirements. Replace the first paragraph of the section with the following: See Subsection 105.12. In coordination with the District Traffic Engineer, energize traffic control device as soon as it is fully functional and ready for inspection. After the work has been completed, conduct an operational test demonstrating that the system operates in accordance with the Plans in the presence of the Engineer. The Department will also conduct its own tests with its own equipment before final acceptance. Ensure that the traffic control device remains operational until the Division of Traffic Operations has provided written acceptance of the electrical work.
Subsection: **Revision:**	723.04.01 Conduit. Replace the second sentence of the subsection with the following: The Department will not measure conduit fittings, ground lugs, test plugs, expansion joints, and clamps for payment and will consider them incidental to this item of work.
Subsection: **Revision:**	723.04.02 Junction Box. Replace subsection title with the following: Electrical Junction Box Type Various.
Subsection: **Revision:**	723.04.02 Electrical Junction Box Type Various. Replace the subsection with the following: The Department will measure the quantity as each individual unit furnished and installed. The Department will not measure additional junction boxes for greater depths than those identified in Plans, Aggregate (#57), backfilling, restoration of disturbed areas to the satisfaction of the Engineer, geotextile fabric, concrete, hot dipped galvanized cover, stainless steel screws, rubber gasket, and any associated hardware for payment and will consider them incidental to this item of work.
Subsection: **Revision:**	723.04.03 Trenching and Backfilling. Replace the second sentence with the following: The Department will not measure excavation, backfilling, underground utility warning tape, and the restoration of disturbed areas to original condition for payment and will consider them incidental to this item of work.
Subsection: **Revision:**	723.04.04 Open Cut Roadway. Replace the second sentence of the subsection with the following: The Department will not measure concrete, reinforcing steel, and asphalt for payment and will consider them incidental to this item of work.
Subsection: **Revision:**	723.04.05 Loop Wire. Replace the second sentence of the subsection with the following: The Department will not measure splice boots, cable rings, and any other necessary hardware for payment and will consider them incidental to this item of work.
Subsection: **Revision:**	723.04.06 Cable. Replace the second sentence of the subsection with the following: The Department will not measure splice boots, cable rings, and any other hardware for payment and will consider them incidental to this item of work.

Supplemental Specifications to the
Standard Specifications for Road and Bridge Construction, 2012 Edition
Effective with the April 29, 2016 Letting

Subsection:	723.04.07 Pole-Wooden.
Revision:	Replace the second sentence of the subsection with the following: The Department will not measure excavation, backfilling, and restoring disturbed areas for payment and will consider them incidental to this item of work.
Subsection:	723.04.08 Steel Strain Pole.
Revision:	Replace the second sentence of the subsection with the following: The Department will not measure excavation, backfilling, and restoring disturbed areas for payment and will consider them incidental to this item of work.
Subsection:	723.04.09 Mast Arm Pole.
Revision:	Replace the second sentence of the subsection with the following: The Department will not measure anchor bolts, arms, mounting brackets, and any other necessary hardware for payment and will consider them incidental to this item of work.
Subsection:	723.04.10 Signal Pedestal.
Revision:	Replace the second sentence of the subsection with the following: The Department will not measure excavation, concrete, reinforcing steel, conduits, fittings, ground rods, ground wire, ground lugs, backfilling, restoring disturbed areas, and other necessary hardware for payment and will consider them incidental to this item of work.
Subsection:	723.04.11 Post.
Revision:	Replace the second sentence of the subsection with the following: The Department will not measure excavation, backfilling, and restoring disturbed areas for payment and will consider them incidental to this item of work.
Subsection:	723.04.12 Anchor.
Revision:	Replace the second sentence of the subsection with the following: . The Department will not measure down-guy, messenger, clamps, guy guard, or insulators, and possible installation in various soil conditions for payment and will consider them incidental to this item of work.
Subsection:	723.04.13 Messenger.
Revision:	Replace the second sentence of the subsection with the following: The Department will not measure strand vises, bolts, washers, and other necessary hardware for payment and will consider them incidental to this item of work.
Subsection:	723.04.14 Install Signal LED.
Revision:	Revise subsection title to 723.04.14 Install Beacon Controller - 2 Circuit.
Subsection:	723.04.14 Install Beacon Controller - 2 Circuit.
Revision:	Replace the subsection with the following: The Department will measure the quantity as each individual unit furnished and installed. The Department will not measure the controller housing, mounting equipment, S5-1 school zone sign, time clock, nema flasher, ground rods, ground wires, ground lugs, metering disconnect hardware, electrical inspection fees, and required building fees involving utility secondary/primary service for payment and will consider them incidental to this item of work.

Supplemental Specifications to the
Standard Specifications for Road and Bridge Construction, 2012 Edition
Effective with the April 29, 2016 Letting

Subsection:	723.04.15 Loop Saw Slot and Fill.
Revision:	Replace the second sentence of the subsection with the following: The Department will not measure sawing, cleaning, filling induction loop saw slot, loop sealant, backer rod, drilling hole for conduit, and grout for payment and will consider them incidental to this item of work.
Subsection:	723.04.16 Pedestrian Detector.
Revision:	Replace the subsection with the following: The Department will measure the quantity as each individual unit furnished, installed and connected to pole/pedestal. The Department will not measure installing R10-3e signs, detector housing, and installing mounting hardware for sign for payment and will consider them incidental to this item of work.
Subsection:	723.04.17 Signal.
Revision:	Replace the second sentence of the subsection with the following: The Department will not measure furnishing and installing LED modules, retroreflective tape, back plates, and any other hardware for payment and will consider them incidental to this item of work.
Subsection:	723.04.18 Signal Controller- Type 170.
Revision:	Replace the second sentence of the subsection with the following: The Department will not measure the concrete base, mounting the cabinet, connecting the signal and detectors, excavation, backfilling, restoration, any necessary pole mounting hardware, electric service, electrical inspection fees, and building fees involving secondary/primary service for payment and will consider them incidental to this item of work. The Department will also not measure furnishing and connecting the induction of loop amplifiers, pedestrian isolators, load switches, model 400 modem card, electrical service conductors, conduits, anchors, meter base, fused cutout, fuses, ground rods, ground wires, and ground lugs for payment and will consider them incidental to this item of work.
Subsection:	723.04.19 Beacon Controller - 2 Circuit.
Revision:	Replace the second sentence of the subsection with the following: The Department will not measure the controller housing, mounting equipment, S5-1 school zone sign, time clock, nema flasher, ground rods, ground wires, ground lugs, metering disconnect hardware, electrical inspection fees, and required building fees involving utility secondary/primary service for payment and will consider them incidental to this item of work.
Subsection:	723.04.20 Install Signal Controller - Type 170.
Revision:	Replace the paragraph with the following: The Department will measure the quantity as each individual unit installed. The Department will not measure the concrete base, mounting the cabinet, connecting the signal and detectors, excavation, backfilling, restoration, any necessary pole mounting hardware, electric service, electrical inspection fees, and required building fees involving utility secondary/primary service for payment and will consider them incidental to this item of work. The Department will also not measure connecting the induction loop amplifiers, pedestrian isolators, load switches, model 400 modem card for payment and will consider them incidental to this item of work. The Department will also not measure furnishing and installing electrical service conductors, conduits, anchors, meter base, fused cutout, fuses, ground rods, ground lugs, and ground wires for payment and will consider them incidental to this item of work.
Subsection:	723.04.21 Install Steel Strain Pole.
Revision:	Replace the second sentence of the subsection with the following: The Department will not measure any necessary clamp assemblies for payment and will consider them incidental to this item of work.

Supplemental Specifications to the
Standard Specifications for Road and Bridge Construction, 2012 Edition
Effective with the April 29, 2016 Letting

Subsection: **Revision:**	723.04.22 Remove Signal Equipment. Replace the paragraph with the following: The Department will measure the quantity by lump sum. The Department will not measure backfilling and the disposal or transportation of equipment and materials associated with any structural or electrical component of the signal system including, but not limited to pole bases, poles, junction boxes, cabinets, and wood poles for payment and will consider them incidental to this item of work.
Subsection: **Revision:**	723.04.23 Install Span/Pole Mounted Sign. Replace the second sentence of the subsection with the following: The Department will not measure the hanger or any other hardware necessary to install the sign for payment and will consider them incidental to this item of work.
Subsection: **Revision:**	723.04.24 Install Pedestrian Head LED. Insert the following sentence at the end of the paragraph: The Department will not measure the installation of LED modules and any other necessary hardware for payment and will consider them incidental to this item of work.
Subsection: **Revision:**	723.04.25 Install Signal LED. Insert the following sentence at the end of the paragraph: The Department will not measure the installation of LED modules, retroreflective tape, back plates, and any other necessary hardware for payment and will consider them incidental to this item of work.
Subsection: **Revision:**	723.04.26 Install Coordinating Unit. Replace the subsection with the following: The Department will measure the quantity as each individual unit installed. The Department will not measure radio, modem, cable(s), antenna(s), router, repeater, and any other necessary hardware for payment and will consider them incidental to this item of work.
Subsection: **Revision:**	723.04.27 Video Camera. Replace the second sentence of the subsection with the following: The Department will not measure video modules, mounting bracket, truss type arm, power cable, coaxial cable, and any other necessary hardware for payment and will consider them incidental to this item of work.
Subsection: **Revision:**	723.04.28 Install Pedestrian Detector Audible. Replace the second sentence with the following: The Department will not measure installing R10-3e sign, detector housing, and installing mounting hardware for payment and will consider them incidental to this item of work.
Subsection: **Revision:**	723.04.29 Audible Pedestrian Detector. Replace the second sentence with the following: The Department will not measure furnishing and installing the R10-3e sign, detector housing, and installing mounting hardware for payment and will consider them incidental to this item of work.
Subsection: **Revision:**	723.04.30 Bore and Jack Conduit. Replace the paragraph with the following: The Department will measure the quantity in linear feet. This item shall include all work necessary for boring and installing conduit under an existing roadway.

Supplemental Specifications to the
Standard Specifications for Road and Bridge Construction, 2012 Edition
Effective with the April 29, 2016 Letting

Subsection: **Revision:**	723.04.31 Install Pedestrian Detector. Replace the paragraph with the following: The Department will measure the quantity as each individual unit installed and connected to pole/pedestal. The Department will not measure installing R 10-3e sign, detector housing, and installing mounting hardware for payment and will consider them incidental to this item of work.
Subsection: **Revision:**	723.04.32 Install Mast Arm Pole. Replace the second sentence with the following: The Department will not measure installation of arms, signal mounting brackets, anchor bolts, and any other necessary hardware for payment and will consider them incidental to this item of work.
Subsection: **Revision:**	723.04.33 Pedestal Post. Replace the second sentence with the following: The Department will not measure excavation, backfilling, restoration, furnishing and installing concrete, reinforcing steel, anchor bolts, conduit, fittings, ground rod, ground wire, ground lugs, or any other necessary hardware for payment and will consider them incidental to this item of work.
Subsection: **Revision:**	723.04.34 Span Mounted Sign. Revise subsection title to 723.04.34 Span/Pole-Mounted Sign.
Subsection: **Revision:**	723.04.34 Span/Pole-Mounted Sign. Replace the second sentence of the subsection with the following: The Department will not measure the hanger, sign, and any other necessary hardware for payment and will consider them incidental to this item of work.
Subsection: **Revision:**	723.04.35 Remove and Reinstall Coordinating Unit. Add the following sentence to the end of the subsection: The Department will not measure removing, storage, reinstalling, and connecting radio, modem, cable(s), antenna(s), router, repeater, and any other necessary hardware for payment and will consider them incidental to this item of work.
Subsection: **Revision:**	723.04.36 Traffic Signal Pole Base. Replace the second sentence of the subsection with the following: The Department will not measure excavation, backfilling, restoration, furnishing and installing reinforcing steel, anchor bolts, conduits, ground rods, ground wires, and ground lugs for payment and will consider them incidental to this item of work.
Subsection: **Revision:**	723.04.37 Install Signal Pedestal. Replace the second sentence of the subsection with the following: . The Department will not measure excavation, backfilling, restoration, furnishing and installing concrete, reinforcing steel, conduits, fittings, ground rod, ground wire, ground lugs, and any other necessary hardware for payment and will consider them incidental to this item of work.
Subsection: **Revision:**	723.04.38 Install Pedestal Post. Replace the second sentence of the subsection with the following: The Department will not measure excavation, backfilling, restoration, furnishing and installing concrete, reinforcing steel, conduit, fittings, ground rod, ground wire, ground lugs, and any other necessary hardware for payment and will consider them incidental to this item of work.
Subsection: **Revision:**	723.04.39 Install Antenna. Replace the second sentence of the subsection with the following: The Department will not measure any other materials necessary to complete the installation for payment and will consider them incidental to this item of work.

Supplemental Specifications to the
Standard Specifications for Road and Bridge Construction, 2012 Edition
Effective with the April 29, 2016 Letting

Subsection: 723.05 PAYMENT.
Revision: Replace items 04810-04811, 20391NS835, 20392NS835,23052NN and add item number 24526ED under Code, Pay Item, and Pay Unit with the following:

Code	Pay Item	Pay Unit
04810	Electrical Junction Box	Each
04811	Electrical Junction Box Type B	Each
20391NS835	Electrical Junction Box Type A	Each
20392NS835	Electrical Junction Box Type C	Each
23052NN	Span/Pole-Mounted Sign	Each
24526ED	Install Beacon Controller 2 Cir	Each

Subsection: 801.01 REQUIREMENTS
Revision: Replace first sentence in paragraph one with the following: Provide Portland cement *or blended hydraulic cement* from approved mills listed in the Department's List of Approved Materials.

Subsection: 801.01 REQUIREMENTS
Number: 1)
Revision: Replace first sentence with the following: Type I, II, III, and IV *Portland cement* conforms to ASTM C 150.

Subsection: 801.01 REQUIREMENTS
Number: 3)
Revision: Replace the first sentence with the following: Type IP (≤20), Portland-pozzolan cement, conforms to ASTM C595, and the following additional requirements to Type IP (≤20).

Subsection: 801.01 REQUIREMENTS
Number: 3)
Part: b)
Revision: Delete part b)

Subsection: 801.01 REQUIREMENTS
Number: 3)
Part: c)
Revision: Rename Part c) to Part b) and replace the text with the following: The cement manufacturer shall furnish to the Engineer reports showing the results of tests performed on the fly ash used in the manufacture of the Type IP(≤20) cement shipped to the project.

Subsection 801.01 REQUIREMENTS
Number: 3)
Part: d)
Revision: Rename Part d) to Part c)

Subsection: 801.01 REQUIREMENTS
Number: 3)
Part: e)
Revision: Rename Part e) to Part d) and replace the text with the following: Use only one brand of Type IP(≤20) cement throughout the project, unless the Engineer approved a change in brand in writing.

Subsection: 801.01 REQUIREMENTS
Number: 4)
Revision: Replace first sentence with the following: Type IS(≤30), Portland blast furnace slag cement, conforms to ASTM C 595 and the following requirements:

Supplemental Specifications to the
Standard Specifications for Road and Bridge Construction, 2012 Edition
Effective with the April 29, 2016 Letting

Subsection:	801.01 REQUIREMENTS
Number:	4)
Part:	a)
Revision:	Replace part a) with the following: Use Grade 100 or 120 blast furnace slag cement conforming to the requirements of ASTM C 989.
Subsection:	801.01 REQUIREMENTS
Number:	4)
Part:	b)
Revision:	Delete part b)
Subsection:	801.01 REQUIREMENTS
Number:	4)
Part:	c)
Revision:	Rename Part c) to Part b) and replace the text with the following: The cement manufacturer shall furnish to the Engineer reports showing the results of the tests performed on the blast furnace slag cement used in the manufacturing of the Type IS(≤30) shipped to the project.
Subsection:	801.01 REQUIREMENTS
Number:	4)
Part:	d)
Revision:	Rename Part d) to Part c)
Subsection:	801.01 REQUIREMENTS
Number:	4)
Part:	e)
Revision:	Rename Part e) to Part d) and replace the text with the following: Use only one brand of Type IS(≤30) cement throughout the project, unless the Engineer approves otherwise.
Subsection:	801.01 REQUIREMENTS
Number:	5)
Revision:	Insert part 5) as the following: Type IL(5-15), Portland-limestone cement, conforms to ASTM C 595 and the following additional requirements:
Subsection:	801.01 REQUIREMENTS
Number:	5)
Part:	a)
Revision:	Insert part a) as the following: The cement manufacturer shall furnish to the Engineer reports showing the results of test performed on the limestone used in the manufacture of the Type IL cement shipped to the project.
Subsection:	801.01 REQUIREMENTS
Number:	5)
Part:	b)
Revision:	Insert part b) as the following: Use only one brand of Type IL cement throughout the project, unless the Engineer approves a brand change in writing.
Subsection:	801.01 REQUIREMENTS
Number:	5)
Part:	c)
Revision:	Insert part c) as the following: The Type IL blended cement shall be an intimate and uniform blend produced by intergrinding of the Portland cement and limestone.
Subsection:	804.01.02 Crushed Sand.
Revision:	Delete last sentence of the section.

Supplemental Specifications to the
Standard Specifications for Road and Bridge Construction, 2012 Edition
Effective with the April 29, 2016 Letting

Subsection: 804.01.06 Slag.
Revision: Add subsection and following sentence.
Provide blast furnace slag sand where permitted. The Department will allow steel slag sand only in asphalt surface applications.

Subsection: 804.04 Asphalt Mixtures.
Revision: Replace the subsection with the following:
Provide natural, crushed, conglomerate, or blast furnace slag sand, with the addition of filler as necessary, to meet gradation requirements. The Department will allow any combination of natural, crushed, conglomerate or blast furnace slag sand when the combination is achieved using cold feeds at the plant. The Engineer may allow other fine aggregates.

Subsection: 806.03.01 General Requirements.
Revision: Replace the second sentence of the paragraph with the following:
Additionally, the material must have a minimum solubility of 99.0 percent when tested according to AASHTO T 44 and PG 76-22 must exhibit a minimum recovery of 60 percent, with a J_{NR} (non-recoverable creep compliance) between 0.1 and 0.5, when tested according to AASHTO TP 70.

Subsection: 806.03.01 General Requirements.
Table: PG Binder Requirements and Price Adjustment Schedule
Revision: Replace the Elastic Recovery, % [3] (AASHTO T301) and all corresponding values in the table with the following:

Test	Specification	100% Pay	90% Pay	80% Pay	70% Pay	50%Pay[1]
MSCR recovery, % [3] (AASHTO TP 70)	60 Min.	≥58	56	55	54	<53

Subsection: 806.03.01 General Requirements.
Table: PG Binder Requirements and Price Adjustment Schedule
Superscript: (3)
Revision: Replace [3] with the following:
Perform testing at 64°C.

Subsection: 808.07 Polypropylene Waterproofing Membrane.
Revision: Replace the paragraph and table with the following: Furnish a layered waterproofing membrane. The layers will consist of an internal puncture resistant woven polypropylene fabric sandwiched between two rubberized mastic layers. The mastic will have a heavy polyethylene membrane attached on the top and the bottom mastic layer will be covered by a protective release film.

Subsection: 808.09 Acceptance.
Revision: Replace the reference to "KMIMS" in the second paragraph with SiteManager.

Subsection: 811.10.04 Properties of the Coated Bar.
Part: B) Flexibility of Coating.
Revision: Replace the second sentence of the paragraph with the following: Ensure that the coated bars are capable of being bent to 180 degrees (after rebound) over a mandrel, without any visible evidence of cracking the coating.

Subsection: 813.04 Gray Iron Castings.
Revision: Replace the reference to "AASHTO M105" with "ASTM A48".

Subsection: 813.09.02 High Strength Steel Bolts, Nuts, and Washers.
Number: A) Bolts.
Revision: Delete first paragraph and "Hardness Number" Table. Replace with the following:
A) Bolts. Conform to ASTM A325 (AASHTO M164) or ASTM A490 (AASHTO 253) as applicable.

Supplemental Specifications to the
Standard Specifications for Road and Bridge Construction, 2012 Edition
Effective with the April 29, 2016 Letting

Subsection: **Revision:**	814.04.02 Timber Guardrail Posts. Third paragraph, replace the reference to "AWPA C14" with "AWPA U1, Section B, Paragraph 4.1".
Subsection: **Revision:**	814.04.02 Timber Guardrail Posts. Replace the first sentence of the fourth paragraph with the following: Use any of the species of wood for round or square posts covered under AWPA U1.
Subsection: **Revision:**	814.04.02 Timber Guardrail Posts. Fourth paragraph, replace the reference to "AWPA C2" with "AWPA U1, Section B, Paragraph 4.1".
Subsection: **Revision:**	814.04.02 Timber Guardrail Posts. Delete the second sentence of the fourth paragraph.
Subsection: **Revision:**	814.05.02 Composite Plastic. 1) Add the following to the beginning of the first paragraph: Select composite offset blocks conforming to this section and assure blocks are from a manufacturer included on the Department's List of Approved Materials. 2) Delete the last paragraph of the subsection.
Subsection: **Revision:**	816.07.02 Wood Posts and Braces. First paragraph, replace the reference to "AWPA C5" with "AWPA U1, Section B, Paragraph 4.1".
Subsection: **Revision:**	816.07.02 Wood Posts and Braces. Delete the second sentence of the first paragraph.
Subsection: **Revision:**	818.07 Preservative Treatment. First paragraph, replace all references to "AWPA C14" with "AWPA U1, Section A".
Subsection: **Revision:**	833.01.02 Sheeting Signs. Replace the second sentence with the following: Provide a thickness of 125 mils if any single edge dimension of the sign exceeds 3 feet.
Subsection: **Revision:**	834.14 Lighting Poles. Replace the first sentence with the following: Lighting pole design shall be in accordance with loading and allowable stress requirements of the AASHTO Standard Specifications for Structural Supports for Highway Signs, Luminaires, and Traffic Signals, 2013-6th Edition with current interims, with the exception of the following: The Cabinet will waive the requirement stated in the first sentence of Section 5.14.6.2 – Reinforced Holes and Cutouts for high mast poles (only). The minimum diameter at the base of the pole shall be 22 inches for high mast poles (only).
Subsection **Revision:**	834.14.03 High Mast Poles. Remove the second and fourth sentence from the first paragraph.
Subsection **Revision:**	834.14.03 High Mast Poles. Replace the third paragraph with the following: Provide calculations and drawings that are stamped by a Professional Engineer licensed in the Commonwealth of Kentucky.

Supplemental Specifications to the
Standard Specifications for Road and Bridge Construction, 2012 Edition
Effective with the April 29, 2016 Letting

Subsection: **Revision:**	834.14.03 High Mast Poles. Replace paragraph six with the following: Provide a pole section that conforms to ASTM A 595 grade A with a minimum yield strength of 55 KSI or ASTM A 572 with a minimum yield strength of 55 KSI. Use tubes that are round or 16 sided with a four inch corner radius, have a constant linear taper of .144 in/ft and contain only one longitudinal seam weld. Circumferential welded tube butt splices and laminated tubes are not permitted. Provide pole sections that are telescopically slip fit assembled in the field to facilitate inspection of interior surface welds and the protective coating. The minimum length of the telescopic slip splices shall be 1.5 times the inside diameter of the exposed end of the female section. Use longitudinal seam welds as commended in Section 5.15 of the AASHTO 2013 Specifications. The thickness of the transverse base shall not be less than 2 inches. Plates shall be integrally welded to the tubes with a telescopic welded joint or a full penetration groove weld with backup bar. The handhole cover shall be removable from the handhole frame. One the frame side opposite the hinge, provide a mechanism on the handhole cover/frame to place the Department's standard padlock as specified in Section 834.25. The handhole frame shall have two stainless studs installed opposite the hinge to secure the handhole cover to the frame which includes providing stainless steel wing nuts and washers. The handhole cover shall be manufactured from 0.25 inch thick galvanized steel (ASTM A 153) and have a neoprene rubber gasket that is permanently secured to the handhole frame to insure weather-tight protection. The hinge shall be manufactured from 7-guage stainless steel to provide adjustability to insure weather-tight fit for the cover. The minimum clear distance between the transverse plate and the bottom opening of the handhole shall not be less than the diameter of the bottom tube of the pole but needs to be at least 15 inches. Provide products that are hot-dip galvanized to the requirements of either ASTM A123 (fabricated products) or ASTM A 153 (hardware items).
Subsection: **Revision:**	834.16 ANCHOR BOLTS. Insert the following sentence at the beginning of the paragraph: The anchor bolt design shall follow the NCHRP Report 494 Section 2.4 and NCHRP 469 Appendix A Specifications.
Subsection: **Revision:**	834.17.01 Conventional. Add the following sentence after the second sentence: Provide a waterproof sticker mounted on the bottom of the housing that is legible from the ground and indicates the wattage of the fixture by providing the first two numbers of the wattage.
Subsection: **Revision:**	834.21.01 Waterproof Enclosures. Replace the last five sentences in the second paragraph with the following sentences: Provide a cabinet door with a louvered air vent, filter-retaining brackets and an easy to clean metal filter. Provide a cabinet door that is keyed with a factory installed standard no. 2 corbin traffic control key. Provide a light fixture with switch and bulb. Use a 120-volt fixture and utilize a L.E.D. bulb (equivalent to 60 watts minimum). Fixture shall be situated at or near the top of the cabinet and illuminate the contents of the cabinet. Provide a 120 VAC GFI duplex receptacle in the enclosure with a separate 20 amp breaker.

Supplemental Specifications to the
Standard Specifications for Road and Bridge Construction, 2012 Edition
Effective with the April 29, 2016 Letting

Subsection: **Revision:**	835.07 Traffic Poles. Replace the first sentence of the first paragraph with the following: Pole diameter and wall thickness shall be calculated in accordance with the AASHTO Standard Specifications for Structural Supports for Highway Signs, Luminaires, and Traffic Signals, 2013-6th Edition with current interims.
Subsection: **Revision:**	835.07 Traffic Poles. *Replace the first sentence of the fourth paragraph with the following: Ensure transverse plates have a thickness ≥ 2 inches. *Add the following sentence to the end of the fourth paragraph: The bottom pole diameter shall not be less than 16.25 inches.
Subsection: **Revision:**	835.07 Traffic Poles. Replace the third sentence of the fifth paragraph with the following: For anchor bolt design, pole forces shall be positioned in such a manner to maximize the force on any individual anchor bolt regardless of the actual anchor bolt orientation with the pole.
Subsection: **Revision:**	835.07 Traffic Poles. Replace the first and second sentence of the sixth paragraph with the following: The pole handhole shall be 25 inches by 6.5 inches. The handhole cover shall be removable from the handhole frame. On the frame side opposite the hinge, provide a mechanism on the handhole cover/frame to place the Department's standard padlock as specified in Section 834.25. The handhole frame shall have two stainless studs installed opposite the hinge to secure the handhole cover to the frame which includes providing stainless steel wing nuts and washers. The handhole cover shall be manufactured from 0.25 inch thick galvanized steel (ASTM 153) and have a neoprene rubber gasket that is permanently secured to the handhole frame to insure weather-tight protection. The hinge shall be manufactured from 7 gauge stainless steel to provide adjustability to insure a weather-tight fit for the cover. The minimum clear distance between the transverse plate and the bottom opening of the handhole shall not be less than the diameter of the bottom tube but needs to be at least 12 inches.
Subsection: **Revision:**	835.07 Traffic Poles. *Replace the first sentence of the last paragraph with the following: Provide calculations and drawings that are stamped by a Professional Engineer licensed in the Commonwealth of Kentucky. *Replace the third sentence of the last paragraph with the following: All tables referenced in 835.07 are found in the AASHTO Standard Specifications for Structural Supports for Highway Signs, Luminaires, and Traffic Signals, 2013-6th Edition with current interims.
Subsection: **Revision:**	835.07.01 Steel Strain Poles. Replace the second sentence of the second paragraph with the following: The detailed analysis shall be certified by a Professional Engineer licensed in the Commonwealth of Kentucky.
Subsection: **Revision:**	835.07.01 Steel Strain Poles. Replace number 7. after the second paragraph with the following: 7. Fatigue calculations should be shown for all fatigue related connections. Provide the corresponding detail, stress category and example from table 11.9.3.1-1.
Subsection: **Revision:**	835.07.02 Mast Arm Poles. Replace the second sentence of the fourth paragraph with the following: The detailed analysis shall be certified by a Professional Engineer licensed in the Commonwealth of Kentucky.

Supplemental Specifications to the
Standard Specifications for Road and Bridge Construction, 2012 Edition
Effective with the April 29, 2016 Letting

Subsection: 835.07.02 Mast Arm Poles.
Revision: Replace number 7) after the fourth paragraph with the following: 7) Fatigue calculations should be shown for all fatigue related connections. Provide the corresponding detail, stress category and example from table 11.9.3.1-1.

Subsection: 835.07.03 Anchor Bolts.
Revision: Add the following to the end of the paragraph: There shall be two steel templates (one can be used for the headed part of the anchor bolt when designed in this manner) provided per pole. Templates shall be contained within a 26.5 inch diameter. All templates shall be fully galvanized (ASTM A 153).

Subsection: 835.16.05 Optical Units.
Revision: Replace the 3rd paragraph with the following:
The list of certified products can be found on the following website: http://www.intertek.com.

Subsection: 835.19.01 Pedestrian Detector Body.
Revision: Replace the first sentence with the following: Provide a four holed pole mounted aluminum rectangular housing that is compatible with the pedestrian detector.

Subsection: 843.01.01 Geotextile Fabric.
Table: TYPE I FABRIC GEOTEXTILES FOR SLOPE PROTECTION AND CHANNEL LINING
Revision: Add the following to the chart:

Property	Minimum Value(1)	Test Method
CBR Puncture (lbs)	494	ASTM D6241
Permittivity (1/s)	0.7	ASTM D4491

Subsection: 843.01.01 Geotextile Fabric.
Table: TYPE II FABRIC GEOTEXTILES FOR UNDERDRAINS
Revision: Add the following to the chart:

Property	Minimum Value(1)	Test Method
CBR Puncture (lbs)	210	ASTM D6241
Permittivity (1/s)	0.5	ASTM D4491

Subsection: 843.01.01 Geotextile Fabric.
Table: TYPE III FABRIC GEOTEXTILES FOR SUBGRADE OR EMBANKMENT STABILIZATION
Revision: Add the following to the chart:

Property	Minimum Value(1)	Test Method
CBR Puncture (lbs)	370	ASTM D6241
Permittivity (1/s)	0.05	ASTM D4491

Subsection: 843.01.01 Geotextile Fabric.
Table: TYPE IV FABRIC GEOTEXTILES FOR EMBANKMENT DRAINAGE BLANKETS AND PAVEMENT EDGE DRAINS
Revision: Add the following to the chart:

Property	Minimum Value(1)	Test Method
CBR Puncture (lbs)	309	ASTM D6241
Permittivity (1/s)	0.5	ASTM D4491

Supplemental Specifications to the
Standard Specifications for Road and Bridge Construction, 2012 Edition
Effective with the April 29, 2016 Letting

Subsection: 843.01.01 Geotextile Fabric.

Table: TYPE V HIGH STRENGTH GEOTEXTILE FABRIC

Revision: Make the following changes to the chart:

Property	Minimum Value[1]	Test Method
CBR Puncture (lbs)	618	ASTM D6241
Apparent Opening Size	U.S. #40[3]	ASTM D4751

[3] Maximum average roll value.

2016 KENTUCKY STANDARD DRAWINGS
SUPPLEMENTS TO STANDARD SPECIFICATIONS
TABLE OF CONTENTS

CURVE WIDENING AND SUPERELEVATION TRANSITIONS RGS-001-07
SUPERELEVATION FOR MULTILANE PAVEMENT RGS-002-06
MISCELLANEOUS STANDARDS RGX-001-06
DETECTABLE WARNINGS RGX-040-03
APPROACHES, ENTRANCES, AND MAIL BOX TURNOUT RPM-110-07
PAVEMENT MARKER ARRANGEMENTS TWO-WAY LEFT, TURN LANE TPM-140-03
LANE CLOSURE TWO-LANE HIGHWAY TTC-100-04
LANE CLOSURE MULTI-LANE HIGHWAY CASE I TTC-115-03
LANE CLOSURE MULTI-LANE HIGHWAY CASE II TTC-120-03
SHOULDER CLOSURE TTC-135-02
PAVEMENT CONDITION WARNING SIGNS TTD-125-02
MOBILE OPERATION FOR PAINT STRIPING CASE I TTS-100-02
MOBILE OPERATION FOR PAINT STRIPING CASE II TTS-105-02
MOBILE OPERATION FOR PAINT STRIPING CASE III TTS-110-02
MOBILE OPERATION FOR PAINT STRIPING CASE IV TTS-115-02

PART III

EMPLOYMENT, WAGE AND RECORD REQUIREMENTS

TRANSPORTATION CABINET
DEPARTMENT OF HIGHWAYS

LABOR AND WAGE REQUIREMENTS
APPLICABLE TO OTHER THAN FEDERAL-AID SYSTEM PROJECTS

I. Application
II. Nondiscrimination of Employees (KRS 344)
III. Payment of Predetermined Minimum Wages
IV. Statements and Payrolls

I. APPLICATION

1. These contract provisions shall apply to all work performed on the contract by the contractor with his own organization and with the assistance of workmen under his immediate superintendence and to all work performed on the contract by piecework, station work or by subcontract. The contractor's organization shall be construed to include only workmen employed and paid directly by the contractor and equipment owned or rented by him, with or without operators.

2. The contractor shall insert in each of his subcontracts all of the stipulations contained in these Required Provisions and such other stipulations as may be required.

3. A breach of any of the stipulations contained in these Required Provisions may be grounds for termination of the contract.

II. NONDISCRIMINATION OF EMPLOYEES

AN ACT OF THE KENTUCKY
GENERAL ASSEMBLY TO PREVENT
DISCRIMINATION IN EMPLOYMENT
KRS CHAPTER 344
EFFECTIVE JUNE 16, 1972

The contract on this project, in accordance with KRS Chapter 344, provides that during the performance of this contract, the contractor agrees as follows:

1. The contractor shall not fail or refuse to hire, or shall not discharge any individual, or otherwise discriminate against an individual with respect to his compensation, terms, conditions, or privileges of employment, because of such individual's race, color, religion, national origin, sex, disability or age (between forty and seventy); or limit, segregate, or classify his employees in any way which would deprive or tend to deprive an individual of employment opportunities or otherwise adversely affect his status as an employee, because of such individual's race, color, religion, national origin, sex, disability or age (between forty and seventy). The contractor agrees to post in conspicuous places, available to employees and applicants for employment, notices to be provided setting forth the provisions of this nondiscrimination clause.

2. The contractor shall not print or publish or cause to be printed or published a notice or advertisement relating to employment by such an employer or membership in or any classification or referral for employment by the employment agency, indicating any preference, limitation, specification, or discrimination, based on race, color, religion, national origin, sex, disability or age (between forty and seventy), except that such notice or advertisement may indicate a preference, limitation, or specification based on religion, or national origin when religion, or national origin is a bona fide occupational qualification for employment.

3. If the contractor is in control of apprenticeship or other training or retraining, including on-the-job training programs, he shall not discriminate against an individual because of his race, color, religion, national origin, sex, disability or age (between forty and seventy), in admission to, or employment in any program established to provide apprenticeship or other training.

4. The contractor will send to each labor union or representative of workers with which he has a collective bargaining agreement or other contract or understanding, a notice to be provided advising the said labor union or workers' representative of the contractor's commitments under this section, and shall post copies of the notice in conspicuous places available to employees and applicants for employment. The contractor will take such action with respect to any subcontract or purchase order as the administrating agency may direct as a means of enforcing such provisions, including sanctions for non-compliance.

III. PAYMENT OF PREDETERMINED MINIMUM WAGES

1. These special provisions are supplemented elsewhere in the contract by special provisions which set forth certain predetermined minimum wage rates. The contractor shall pay not less than those rates.

2. The minimum wage determination schedule shall be posted by the contractor, in a manner prescribed by the Department of Highways, at the site of the work in prominent places where it can be easily seen by the workers.

IV. STATEMENTS AND PAYROLLS

1. All contractors and subcontractors affected by the terms of KRS 337.505 to 337.550 shall keep full and accurate payroll records covering all disbursements of wages to their employees to whom they are required to pay not less than the prevailing rate of wages. Payrolls and basic records relating thereto will be maintained during the course of the work and preserved for a period of one (1) year from the date of completion of this contract.

2. The payroll records shall contain the name, address and social security number of each employee, his correct classification, rate of pay, daily and weekly number of hours worked, itemized deductions made and actual wages paid.

3. The contractor shall make his daily records available at the project site for inspection by the State Department of Highways contracting office or his authorized representative.

Periodic investigations shall be conducted as required to assure compliance with the labor provisions of the contract. Interrogation of employees and officials of the contractor shall be permitted during working hours.

Aggrieved workers, Highway Managers, Assistant District Engineers, Resident Engineers and Project Engineers shall report all complaints and violations to the Division of Contract Procurement.

The contractor shall be notified in writing of apparent violations. The contractor may correct the reported violations and notify the Department of Highways of the action taken or may request an informal hearing. The request for hearing shall be in writing within ten (10) days after receipt of the notice of the reported violation. The contractor may submit

records and information which will aid in determining the true facts relating to the reported violations.

Any person or organization aggrieved by the action taken or the findings established as a result of an informal hearing by the Division of Contract Procurement may request a formal hearing.

4. The wages of labor shall be paid in legal tender of the United States, except that this condition will be considered satisfied if payment is made by a negotiable check, on a solvent bank, which may be cashed readily by the employee in the local community for the full amount, without discount or collection charges of any kind. Where checks are used for payments, the contractor shall make all necessary arrangements for them to be cashed and shall give information regarding such arrangements.

5. No fee of any kind shall be asked or accepted by the contractor or any of his agents from any person as a condition of employment on the project.

6. No laborers shall be charged for any tools used in performing their respective duties except for reasonably avoidable loss or damage thereto.

7. Every employee on the work covered by this contract shall be permitted to lodge, board, and trade where and with whom he elects and neither the contractor nor his agents, nor his employees shall directly or indirectly require as a condition of employment that an employee shall lodge, board or trade at a particular place or with a particular person.

8. Every employee on the project covered by this contract shall be an employee of either the prime contractor or an approved subcontractor.

9. No charge shall be made for any transportation furnished by the contractor or his agents to any person employed on the work.

10. No individual shall be employed as a laborer or mechanic on this contract except on a wage basis, but this shall not be construed to prohibit the rental of teams, trucks or other equipment from individuals.

No Covered employee may be employed on the work except in accordance with the classification set forth in the schedule mentioned above; provided, however, that in the event additional classifications are required, application shall be made by the contractor to the Department of Highways and (1) the Department shall request appropriate classifications and rates from the proper agency, or (2) if there is urgent need for additional classification to avoid undue delay in the work, the contractor may employ such workmen at rates deemed comparable to rates established for similar classifications provided he has made written application through the Department of Highways, addressed to the proper agency, for the supplemental rates. The contractor shall retroactively adjust, upon receipt of the supplemental rates schedule, the wages of any employee paid less than the established rate and may adjust the wages of any employee overpaid.

11. No contractor or subcontractor contracting for any part of the contract work which may require or involve the employment of laborers or mechanics shall require or permit any laborer or mechanic in any work-week in which he is employed on such work, to work in excess of eight hours in any calendar day or in excess of forty hours in such work-week unless such laborer or mechanic receives compensation at a rate not less than one and one half times his basic rate of pay for all hours worked in excess of eight hours in any calendar day or in excess of forty hours in such work-week. A laborer, workman or mechanic and an employer may enter into a written agreement or a collective bargaining agreement to work more than eight (8) hours a calendar day but not more than ten (10) hours a calendar day for the straight time hourly rate. This agreement shall be in writing and shall be executed prior to the employee working in excess of eight (8) hours, but not more than ten (10) hours, in any one (1) calendar day.

12. Payments to the contractor may be suspended or withheld due to failure of the contractor to pay any laborer or mechanic employed or working on the site of the work, all or part of the wages required under the terms of the contract. The Department may suspend or withhold payments only after the contractor has been given written notice of the alleged violation and the contractor has failed to comply with the wage determination of the Department of Highways.

13. Contractors and subcontractors shall comply with the sections of Kentucky Revised Statutes, Chapter 337 relating to contracts for Public Works.

Revised 2-16-95

EXECUTIVE BRANCH CODE OF ETHICS

In the 1992 regular legislative session, the General Assembly passed and Governor Brereton Jones signed Senate Bill 63 (codified as KRS 11A), the Executive Branch Code of Ethics, which states, in part:

> KRS 11A.040 (6) provides:
>
> No present or former public servant shall, within six (6) months of following termination of his office or employment, accept employment, compensation or other economic benefit from any person or business that contracts or does business with the state in matters in which he was directly involved during his tenure. This provision shall not prohibit an individual from returning to the same business, firm, occupation, or profession in which he was involved prior to taking office or beginning his term of employment, provided that, for a period of six (6) months, he personally refrains from working on any matter in which he was directly involved in state government. This subsection shall not prohibit the performance of ministerial functions, including, but not limited to, filing tax returns, filing applications for permits or licenses, or filing incorporation papers.
>
> KRS 11A.040 (8) states:
>
> A former public servant shall not represent a person in a matter before a state agency in which the former public servant was directly involved, for a period of one (1) year after the latter of:
>
> a) The date of leaving office or termination of employment; or
> b) The date the term of office expires to which the public servant was elected.

This law is intended to promote public confidence in the integrity of state government and to declare as public policy the idea that state employees should view their work as a public trust and not as a way to obtain private benefits.

If you have worked for the executive branch of state government within the past six months, you may be subject to the law's prohibitions. The law's applicability may be different if you hold elected office or are contemplating representation of another before a state agency.

Also, if you are affiliated with a firm which does business with the state and which employs former state executive-branch employees, you should be aware that the law may apply to them.

In case of doubt, the law permits you to request an advisory opinion from the Executive Branch Ethics Commission, Room 136, Capitol Building, 700 Capitol Avenue, Frankfort, Kentucky 40601; telephone (502) 564-7954.

Kentucky Equal Employment Opportunity Act of 1978

The requirements of the Kentucky Equal Employment Opportunity Act of 1978 (KRS 45.560-45.640) shall apply to this Contract. The apparent low Bidder will be required to submit EEO forms to the Division of Construction Procurement, which will then forward to the Finance and Administration Cabinet for review and approval. No award will become effective until all forms are submitted and EEO/CC has certified compliance. The required EEO forms are as follows:

- EEO-1: Employer Information Report
- Affidavit of Intent to Comply
- Employee Data Sheet
- Subcontractor Report

These forms are available on the Finance and Administration's web page under ***Vendor Information, Standard Attachments and General Terms*** at the following address: **https://www.eProcurement.ky.gov**.

Bidders currently certified as being in compliance by the Finance and Administration Cabinet may submit a copy of their approval letter in lieu of the referenced EEO forms.

For questions or assistance please contact the Finance and Administration Cabinet by email at **finance.contractcompliance@ky.gov** or by phone at 502-564-2874.

KENTUCKY LABOR CABINET
PREVAILING WAGE DETERMINATION
CURRENT REVISION
HIGHWAY CONSTRUCTION LOCALITY NO. II

Determination No. CR-16-II-HWY

Project No.
Highway

Date of Determination: July 1, 2016

This schedule of the prevailing rate of wages for Locality No. II including the counties of ADAIR, BARREN, BELL, BREATHITT, CASEY, CLAY, CLINTON, CUMBERLAND, ESTILL, FLOYD, GARRARD, GREEN, HARLAN, HART, JACKSON, JOHNSON, KNOTT, KNOX, LAUREL, LAWRENCE, LEE, LESLIE, LETCHER, LINCOLN, MCCREARY, MAGOFFIN, MARTIN, MENIFEE, METCALFE, MONROE, MORGAN, OWSLEY, PERRY, PIKE, POWELL, PULASKI, ROCKCASTLE, RUSSELL, TAYLOR, WAYNE, WHITLEY, and WOLFE has been determined in accordance with the provisions of KRS 337.505 to 337.550. This determination shall be referred to as Prevailing Wage Determination No. CR-15-II-HWY.

The following schedule of rates is to be used for highway construction projects advertised or awarded by the Kentucky Transportation Cabinet. This includes any contracts for the relocation of any utilities or other incidental construction projects advertised or awarded by public authorities as a result of the highway construction project.

Apprentices or trainees shall be permitted to work in accordance with Administrative Regulations. Copies of these regulations will be furnished upon request to any interested person.

Overtime is to be computed at not less than one and one-half (1 1/2) times the indicated BASE RATE for all hours worked in excess of eight (8) hours per day, or in excess of forty (40) hours per week. However, KRS 337.540 permits an employee and employer to agree, in writing, that the employee will be compensated at a straight time base rate for hours worked in excess of eight (8) hours in any one calendar day, but not more than ten (10) hours worked in any one calendar day, if such written agreement is prior to the over eight (8) hours in a calendar day actually being worked, or where provided for in a collective bargaining agreement. The fringe benefit rate is to be paid for each hour worked at a straight time rate for all hours worked. Fringe benefit amounts are applicable for all hours worked except when otherwise noted. Welders will receive rate for craft in which welding is incidental.

No laborer, workman or mechanic shall be paid at a rate less than that of the General Laborer except those classified as bona fide apprentices registered with the Kentucky State Apprenticeship Supervisor unless otherwise specified in this schedule of wage rates.

Ervin Dimeny, Commissioner
Department of Workplace Standards

CLASSIFICATIONS	RATE AND FRINGE BENEFITS	
BOILERMAKERS:	BASE RATE	$24.65
	FRINGE BENEFIT	12.94

BRICKLAYERS:

Bricklayers:	BASE RATE	$22.90
	FRINGE BENEFITS	8.50
Stone Mason:	BASE RATE	$21.50
	FRINGE BENEFITS	8.50

CARPENTERS:

Carpenters:	BASE RATE	$24.90
	FRINGE BENEFITS	14.50
Piledrivers:	BASE RATE	$24.55
	FRINGE BENEFITS	14.50

CEMENT MASONS:	BASE RATE	$21.25
	FRINGE BENEFITS	8.50

ELECTRICIANS:	*BASE RATE	$29.36
	FRINGE BENEFITS	10.55

*When workmen are required to work from bosum chairs, trusses, stacks, tanks, scaffolds, catwalks, radio and T.V. towers, structural steel (open, unprotected, unfloored raw steel), and bridges or similar hazardous locations where workmen are subject to a direct fall, except where using JLG's and bucket trucks up to 75 feet: Add 25% to workman's base rate for 50 to 75 feet, and add 50% to workman's base rate for over 75 feet.

LINEMAN:	*BASE RATE	$30.09
	FRINGE BENEFITS	10.94
EQUIPMENT OPERATOR:	*BASE RATE	$26.90
	FRINGE BENEFITS	10.31
GROUNDSMAN:	*BASE RATE	$17.79
	FRINGE BENEFITS	8.51

IRONWORKERS:	BASE RATE	$ 27.91
	FRINGE BENEFITS	22.00

CLASSIFICATIONS RATE AND FRINGE BENEFITS

LABORERS:

GROUP 1: Aging and curing of concrete (any mode or method), asbestos abatement worker, asphalt plant laborers, asphalt laborers; batch truck dumpers; carpenter tenders, cement mason tenders, cleaning of machines, concrete laborers, demolition laborers, dredging laborers, drill helper, environmental laborer - nuclear, radiation, toxic and hazardous waste – Level D, flagmen, grade checkers, all hand digging and hand back filling, highway marker placers, landscaping laborers, mesh handlers and placers, puddler, railroad laborers, rip-rap and grouters, right of way laborers, sign, guard rail and fence installers (all types), signalmen, sound barrier installer, storm and sanitary sewer laborers, swampers, truck spotters and dumpers, wrecking of concrete forms, general cleanup, tending of setting precast concrete products, applying sealer, epoxies, coating, curing compounds, cure and seal products and preparation on all services of concrete wall expansion materials:

BASE RATE	$22.75
FRINGE BENEFITS	12.00

GROUP 2: Batter board men (sanitary and storm sewer), brickmason tenders, mortar mixer operator, scaffold builders, burner and welder, bushammers, chain saw operator, concrete saw operators, deckhand scow man, dry cement handlers, environmental laborers – nuclear, radiation, toxic and hazardous waste – Level C, forklift operators for masonry, form setters, green concrete cutting, hand operated grouter and grinder machine operator, jack hammers, lead paint abatement, pavement breakers, paving joint machine, pipe layers – laser operators (non-metallic), plastic pipe fusion, power driven Georgia buggy and wheel barrow, power post hole diggers, precast manhole setters, walk-behind tampers, walk-behind trenchers, sand blasters, concrete chippers, surface grinders, vibrator operators, wagon drillers:

BASE RATE	$23.00
FRINGE BENEFITS	12.00

GROUP 3: Air track driller (all types), asphalt luteman and rakersm gunnite nozzleman, gunnite operators and mixers, grout pump operator, powderman and blaster, side rail setters, rail paved ditches, screw operators, tunnel laborers (free air), and water blasters, remote control compactors, air lifting, dewatering, water pumps and asphalt sealer applicator:

BASE RATE	$23.05
FRINGE BENEFITS	12.00

GROUP 4: Caisson workers (free air), cement finishers, environmental laborer – nuclear, radiation, toxic and hazardous waste – Level A and B, miners and drillers (free air), tunnel blasters, and tunnel mockers (free air), directional and horizontal boring, air track drillers (all types), powder man and blasters, troxler and concrete tester if laborer is utilized, concrete vibrator, tv inspection, cleaning tech, GPS tech if performed by a laborer:

BASE RATE	$23.65
FRINGE BENEFITS	12.00

CLASSIFICATIONS RATE AND FRINGE BENEFITS

OPERATING ENGINEERS:

CLASS A-1:
NCCCO or OECP Certified or US Coast Guard approved Boat Pilot License; Crane, dragline, hoist (1 drum when used for stack or chimney construction or repair), hoisting engineer (2 or more drums), orangepeel, overhead crane, piledriver, truck crane, tower crane, hydraulic crane, cableway, carry deck, cherry picker, clamshell, derrick, derrick boat, hydraulic boom truck, licensed boat pilot, rough terrain crane, tower cranes (French, German & other types), truck crane:

BASE RATE	$32.21
FRINGE BENEFITS	15.00

CLASS A:
A-Frame winch truck, auto patrol, backfiller, batcher plant, bituminous paver, bituminous transfer machine, all types of boom cats, bulldozer, cableway, carry-all scoop, carry deck crane, central compressor plant operator, cherry picker, clamshell, concrete mixer (21 cu. Ft. or over), concrete paver, truck mounted concrete pump, core drills, crane, crusher plant, derrick, derrick boat, ditching and trenching machine, dragline, dredge operator, dredge engineer, earth movers, elevating grader and all types of loaders, grade-all gurries, heavy equipment robotics operator/mechanic, high lift, hoe type machine, hoist (2 drums or more), hoisting engine, (2 or more drums), horizontal directional drill, hydraulic boom truck, hydrocrane, hyster, KeCal loader, Letourneau, locomotive, mechanic, mechanically operated laser screed, mechanic welder, mucking machine, motor scraper, orange-peel bucket, overhead crane, piledriver, power blade, pumpcrete, push dozer, rock spreader attached to equipment, all rotary drills, roller (bituminous), rough terrain crane, scarifier, scoopmobile, shovel, side boom, subgrader, tailboom, telescoping type forklift, tow or push boat, tower cranes (French, German and other types), tractor shovel and truck crane, tunnel mining machines including moles, shields or similar types of tunnel mining equipment, self-propelled modular transporter, hydro excavator, micro pile machine, remote controlled demolition equipment, milling machine, track hoe, rubber tire back hoe, reclaimer/stabilizer:

BASE RATE	$31.05
FRINGE BENEFITS	15.00

Group B:
All air compressors (over 900 cu. ft. per min), bituminous mixer, boom type tamping machine, bull float, concrete mixer (under 21 cu ft), dredge engineer, electric vibrator compactor/self-propelled compactor, elevator (on drum or buck hoist), finish machine, firemen, flexplane, forklift (regardless of lift height), form grader, hoist (one drum), joint sealing machine, mechanic helper, outboard motor boat, power sweeper (riding type), roller (rock), ross carrier, skid mounted or trailer mounted concrete pumps, skid steer machine with all attachments, switchman or b5rakeman, throttle valve man, tract air and road widening trencher, tractor (50 hp and over), truck crane oiler, tugger, welding machine, well points, whirley oiler, water pull/water pull/water truck when used for compacting:

BASE RATE	$28.28
FRINGE BENEFITS	15.00

Group B2:
Greaser on grease facilities servicing heavy equipment, all off road material handling equipment, including articulating dump trucks:

BASE RATE	$28.71
FRINGE BENEFITS	15.00

CLASSIFICATIONS RATE AND FRINGE

BENEFITS
OPERATING ENGINEERS (CONTINUED):

Group C:
Bituminous distributor, cement gun, conveyor, mud jack, paving joint machine, pump, tamping machine, tractors (under 50 H.P.), vibrator, oiler, air compressors (under 200 cu. ft. per min. capacity), concrete saw,

burlap and curing machine, hydro seeder, power form handling equipment, deckhand oiler, hydraulic post driver, caisson drill and core drill helper (track or skid mounted), concrete saw, paving joint machine, roller (earth), steermen, tractors (under 50 hp):

BASE RATE $27.97
FRINGE BENEFITS 15.00

Operators on cranes with booms 150 ft. and over including jib shall receive $1.00 above Class A-1 or Class A rate; 250 ft. and over including jib shall receive $1.00 above Class A-1 or Class A rate. All cranes with the length of the boom in combination with length of the piling leads equals or exceeds 150 ft. shall receive $1.00 above Class A-1 or Class A.

PAINTERS:

Brush & Roller:
BASE RATE $24.74
FRINGE BENEFITS 9.54

Spray:
BASE RATE $25.24
FRINGE BENEFITS 9.54

Sand Blasting & Hopper Tender:
BASE RATE
$24.49
FRINGE BENEFITS 9.54

Bridges (when highest point of clearance is 60 feet or more):
BASE RATE $24.99
FRINGE BENEFITS 9.54

Sand Blasting, Hopper Tender (bridges when highest point of clearance is 60 feet or more):
BASE RATE $25.49
FRINGE BENEFITS 9.54

Bridge/Equipment Tender and or Containment Builder:
BASE RATE $21.33
FRINGE BENEFITS 9.54

Bridge Quality Control:
BASE RATE $16.45
FRINGE BENEFITS 9.54

Lead Abatement:
BASE RATE $24.99
FRINGE BENEFITS 9.54

PLUMBERS:
BASE RATE $22.52
FRINGE BENEFITS 7.80

SHEET METAL:
BASE RATE $20.40

FRINGE BENEFITS 7.80

CLASSIFICATIONS	RATE AND FRINGE BENEFITS	
TRUCK DRIVERS:		
Truck helper and warehouseman:	BASE RATE	$23.20
	FRINGE BENEFITS	14.50
Driver, winch truck and A-Frame when used in transporting materials:	BASE RATE	$23.30
	FRINGE BENEFITS	14.50
Driver, (semi-trailer or pole trailer), driver (dump truck, tandem axle), driver of distributor:	BASE RATE	$23.40
	FRINGE BENEFITS	14.50
Driver on mixer trucks (all types):	BASE RATE	$23.45
	FRINGE BENEFITS	14.50
Truck mechanic:	BASE RATE	$23.50
	FRINGE BENEFITS	14.50
Driver (3 tons and under), tire changer and truck mechanic helper:	BASE RATE	$23.53
	FRINGE BENEFITS	14.50
Driver on pavement breakers:	BASE RATE	$23.55
	FRINGE BENEFITS	14.50
Driver (over 3 tons), driver (truck mounted rotary drill):	BASE RATE	$23.74
	FRINGE BENEFITS	14.50
Driver, Euclid and other heavy earth moving equipment and Low Boy:	BASE RATE	$24.31
	FRINGE BENEFITS	14.50
Greaser on greasing facilities:	BASE RATE	$24.40
	FRINGE BENEFITS	14.50

END OF DOCUMENT

Kentucky Determination No. CR-16-II-HWY dated July 1, 2016

Fringe benefit amounts are applicable for all hours worked except when otherwise noted.

No laborer, workman or mechanic shall be paid at a rate less than that of the General Laborer except those classified as bona fide apprentices registered with the Kentucky State Apprenticeship Supervisor unless otherwise specified in this schedule of wage rates.

These rates are listed pursuant to the Kentucky Determination No. CR-16-II-HWY dated July 1, 2016. Apprentices or trainees shall be permitted to work as such subject to Administrative Regulations adopted by the Commissioner of Workplace Standards. Copies of these regulations will be furnished upon request from any interested person.

Before using apprentices on the job the contractor shall present to the Contracting Officer written evidence of registration of such employees in a program of a State apprenticeship and training agency approved and recognized by the U. S. Bureau of Apprenticeship and Training. In the absence of such a State agency, the contractor shall submit evidence of approval and registration by the U. S. Bureau of Apprenticeship and Training.

The contract or shall submit to the Contracting Officer, written evidence of the established apprenticeship-journeyman ratios and wage rates in the project area, which will be the basis for establishing such ratios and rates for the project under the applicable contract provisions.

TO: EMPLOYERS/EMPLOYEES

PREVAILING WAGE SCHEDULE:

The wages indicated on this wage schedule are the least permitted to be paid for the occupations indicated. When an employee works in more than one classification, the employer must record the numbers of hours worked in each classification at the prescribed hourly base rate.

OVERTIME:

Overtime is to be paid after an employee works eight (8) hours a day or forty (40) hours a week, whichever gives the employee the greater wage. At least time and one-half the base rate is required for all overtime. A laborer, workman or mechanic and an employer may enter into a written agreement or a collective bargaining agreement to work more than eight (8) hours a calendar day but not more than ten (10) hours a calendar day for the straight time hourly rate. Wage violations or questions should be directed to the designated Engineer or to the undersigned.

Director
Division of Construction Procurement
Frankfort, Kentucky 40622
502-564-3500

PART IV

INSURANCE

INSURANCE

The Contractor shall procure and maintain the following insurance in addition to the insurance required by law:

1) Commercial General Liability-Occurrence form – not less than $2,000,000 General aggregate, $2,000,000 Products & Completed Aggregate, $1,000,000 Personal & Advertising, $1,000,000 each occurrence.

2) Automobile Liability- $1,000,000 per accident

3) Employers Liability:

   a) $100,000 Each Accident Bodily Injury
   b) $500,000 Policy limit Bodily Injury by Disease
   c) $100,000 Each Employee Bodily Injury by Disease

4) The insurance required above must be evidenced by a Certificate of Insurance and this Certificate of Insurance must contain one of the following statements:
   a) "policy contains no deductible clauses."
   b) "policy contains _____ (amount) deductible property damage clause but company will pay claim and collect the deductible from the insured."

5) KENTUCKY WORKMEN'S COMPENSATION INSURANCE. The contractor shall furnish evidence of coverage of all his employees or give evidence of self-insurance by submitting a copy of a certificate issued by the Workmen's Compensation Board.

The cost of insurance is incidental to all contract items. All subcontractors must meet the same minimum insurance requirements.

PART V

BID ITEMS

162135

PROPOSAL BID ITEMS

Report Date 7/5/16

Section: 0001 - PAVING

LINE	BID CODE	ALT	DESCRIPTION	QUANTITY	UNIT	UNIT PRIC	FP	AMOUNT
0010	00190		LEVELING & WEDGING PG64-22	288.00	TON		$	
0020	00388		CL3 ASPH SURF 0.38B PG64-22	2,220.00	TON		$	
0030	02562		TEMPORARY SIGNS	330.00	SQFT		$	
0040	02650		MAINTAIN & CONTROL TRAFFIC	1.00	LS		$	
0050	02671		PORTABLE CHANGEABLE MESSAGE SIGN	2.00	EACH		$	
0060	02676		MOBILIZATION FOR MILL & TEXT	1.00	LS		$	
0070	02677		ASPHALT PAVE MILLING & TEXTURING	2,220.00	TON		$	
0080	02775		ARROW PANEL	2.00	EACH		$	
0090	04830		LOOP WIRE	1,530.00	LF		$	
0100	04895		LOOP SAW SLOT AND FILL	360.00	LF		$	
0110	06510		PAVE STRIPING-TEMP PAINT-4 IN	9,389.00	LF		$	
0120	06514		PAVE STRIPING-PERM PAINT-4 IN	37,554.00	LF		$	
0130	06565		PAVE MARKING-THERMO X-WALK-6 IN	106.00	LF		$	
0140	06568		PAVE MARKING-THERMO STOP BAR-24IN	76.00	LF		$	
0150	06574		PAVE MARKING-THERMO CURV ARROW	34.00	EACH		$	
0160	06575		PAVE MARKING-THERMO COMB ARROW	1.00	EACH		$	
0170	06576		PAVE MARKING-THERMO ONLY	2.00	EACH		$	
0180	06600		REMOVE PAVEMENT MARKER TYPE V	410.00	EACH		$	
0190	23158ES505		DETECTABLE WARNINGS (RETROFIT)	80.00	SQFT		$	
0200	24489EC		INLAID PAVEMENT MARKER	200.00	EACH		$	

Section: 0002 - DEMOBILIZATION

LINE	BID CODE	ALT	DESCRIPTION	QUANTITY	UNIT	UNIT PRIC	FP	AMOUNT
0210	02569		DEMOBILIZATION	1.00	LS		$	