**Steven L. Beshear**
Governor

**TRANSPORTATION CABINET**
Frankfort, Kentucky 40622
www.transportation.ky.gov/

**Michael W. Hancock, P.E.**
Secretary

August 17, 2010

CALL NO. 306
CONTRACT ID NO. 101030
ADDENDUM # 1

Subject: Bracken County, JL03 021 0009 003-004
Letting August 27, 2010

(1) Revised - Plan Sheets - R2a, R2b, & R2e
(2) Revised - Bid Items - Pages 77-79 of 79

Proposal revisions are available at http://transportation.ky.gov/contract/.
Plan revisions are available at http://www.lynnimaging.com/kytransportation/.

If you have any questions, please contact us at 502-564-3500.

Sincerely,

Ryan Griffith

Ryan Griffith, P.E.
Director
Division of Construction Procurement

Enclosures
RG:ks

| COUNTY OF | ITEM NO. | SHEET NO. |
|---|---|---|
| BRACKEN | 6-8308.00 | R2E |

# GENERAL NOTES

## N.G.S. (U.S.G.S.) BENCH MARKS

DO NOT DISTURB N.G.S. (U.S.G.S.) BENCH MARKS IN ANY MANNER UNLESS DIRECTED BY THE ENGINEER.

## BEFORE YOU DIG

CALL 1-800-752-6007 TOLL FREE A MINIMUM OF TWO AND NO MORE THAN TEN BUSINESS DAYS PRIOR TO EXCAVATION FOR INFORMATION ON THE LOCATION OF EXISTING UNDERGROUND UTILITIES WHICH SUBSCRIBE TO THE BEFORE-U-DIG (BUD) SERVICE. COORDINATE EXCAVATION WITH ALL UTILITY OWNERS, INCLUDING THOSE WHO DO NOT SUBSCRIBE TO BUD.

## DEPARTMENT OF THE ARMY PERMIT AND WATER QUALITY CERTIFICATION APPROVALS

A DEPARTMENT OF THE ARMY (DA) PERMIT, WHICH MAY REQUIRE APPROVAL OF A STATE WATER QUALITY CERTIFICATION FROM THE KENTUCKY DIVISION OF WATER, REGULATES THIS PROJECT AT ONE OR MORE LOCATIONS. PERFORM ALL APPLICABLE WORK IN COMPLIANCE WITH THE CONDITIONS STATED IN THE DA PERMIT AND THE APPROVED WATER QUALITY CERTIFICATION. POST A COPY OF THE DA PERMIT AND THE WATER QUALITY CERTIFICATION IN A CONSPICUOUS PLACE AT THE PROJECT SITE. IF A DA PERMIT OR WATER QUALITY CERTIFICATION APPROVAL IS PENDING, DO NOT WORK IN OR DISTURB THE DESIGNATED AREA(S) UNTIL OBTAINING THE APPROPRIATE APPROVAL(S). REFER TO NOTICE(S) CONTAINED IN THE CONTRACT BID PROPOSAL FOR DESIGNATED AREA(S) WHERE WORK IS PROHIBITED BY THE ABSENCE OF APPROVAL

## COMPACTION OF ASPHALT MIXTURES

WILL ACCEPT THE COMPACTION OF ASPHALT MIXTURES FURNISHED ON THIS PROJECT BY OPTION B ACCORDING TO SUBSECTIONS 402.03.02 AND 403.03.10 OF THE STANDARD SPECIFICATIONS.

## STANDARD DRAWINGS FOR HEADWALLS

STANDARD DRAWINGS ARE NOT ATTACHED TO THESE PLANS, A STANDARD DRAWING BOOK AND THE HEADWALL SUPPLEMENTAL BOOK MAY BE OBTAINED FROM THE POLICY SUPPORT BRANCH OF THE DEPARTMENT OF ADMINISTRATIVE SERVICES IN FRANKFORT, KY. AT (502) 564-3670.

## CLEARING AND GRUBBING

CONTRARY TO SECTION 202 OF THE STANDARD SPECIFICATIONS, NO DIRECT PAYMENT WILL BE ALLOWED FOR CLEARING AND GRUBBING ON THIS PROJECT.

## NOTES SPECIFIC TO PROJECT

### SAW CUT

THE BID ITEM "SAW CUT" SHALL INCLUDE ALL LABOR AND MATERIALS NECESSARY TO SAW CUT THE EXISTING PAVEMENT ALONG THE LINES INDICATED IN THE PLANS TO PROVIDE A NEAT EDGE FOR MATCHING THE PROPOSED PAVEMENT TO THE EXISTING PAVEMENT. PROVIDE SAWS THAT ARE POWER DRIVEN, HAVING DIAMOND-EDGE OR ABRASIVE SAW BLADES, AND THAT ARE CAPABLE OF CUTTING THE EXISTING PAVEMENT TO A MINIMUM DEPTH OF 6 INCHES.

### TRAFFIC NOTE

SEE THE PLANS FOR MAINTENANCE OF TRAFFIC NOTES AND DETOUR SIGNING PLAN.

### EROSION CONTROL

USE SEED MIXTURE NO. 1. QUANTITIES FOR TEMPORARY EROSION CONTROL BLANKET (TECB) ARE LISTED UNDER BID ITEM - EROSION CONTROL BLANKET.

### DROP BOX INLETS

ALL DROP BOX INLETS WITHOUT APRONS SHALL BE CONSTRUCTED USING "SAG CONDITIONS" AS NOTED IN STANDARD DRAWINGS.

The following abbreviations may have been used in the preparation of these plans:

| | |
|---|---|
| C.Y. | Cubic Yard |
| CL | Center Line |
| Conc. | Concrete |
| Cu. | Cubic |
| MPH | Miles per Hour |
| PC | Point of Curve |
| PI | Point of Intersection |
| PPC | Precast Prestressed Concrete |
| PT | Point of Tangent |
| R | Radius |
| Shld | Shoulder |
| Sta. | Station |
| Std. | Standard |
| Typ. | Typical |
| Vert. | Vertical |
| Yd. | Yard |

PREPARED BY _____ DATE _____
CHECKED BY _____ DATE _____
APPROVED BY _____ DATE _____

USER: $$$$USER$$$$
DATE: $$$$DATE$$$$
FILE NAME: $$$$design$file$specification$$$$
E-SHEET NAME: _____

KY 9 AA HIGHWAY
GENERAL NOTES

| COUNTY OF | ITEM NO. | SHEET NO. |
|---|---|---|
| BRACKEN | 6-8308.00 | R2E |

# GENERAL NOTES

## N.G.S. (U.S.G.S.) BENCH MARKS

DO NOT DISTURB N.G.S. (U.S.G.S.) BENCH MARKS IN ANY MANNER UNLESS DIRECTED BY THE ENGINEER.

## BEFORE YOU DIG

CALL 1-800-752-6007 TOLL FREE A MINIMUM OF TWO AND NO MORE THAN TEN BUSINESS DAYS PRIOR TO EXCAVATION FOR INFORMATION ON THE LOCATION OF EXISTING UNDERGROUND UTILITIES WHICH SUBSCRIBE TO THE BEFORE-U-DIG (BUD) SERVICE. COORDINATE EXCAVATION WITH ALL UTILITY OWNERS, INCLUDING THOSE WHO DO NOT SUBSCRIBE TO BUD.

## DEPARTMENT OF THE ARMY PERMIT AND WATER QUALITY CERTIFICATION APPROVALS

A DEPARTMENT OF THE ARMY (DA) PERMIT, WHICH MAY REQUIRE APPROVAL OF A STATE WATER QUALITY CERTIFICATION FROM THE KENTUCKY DIVISION OF WATER, REGULATES THIS PROJECT AT ONE OR MORE LOCATIONS. PERFORM ALL APPLICABLE WORK IN COMPLIANCE WITH THE CONDITIONS STATED IN THE DA PERMIT AND THE APPROVED WATER QUALITY CERTIFICATION. POST A COPY OF THE DA PERMIT AND THE WATER QUALITY CERTIFICATION IN A CONSPICUOUS PLACE AT THE PROJECT SITE. IF A DA PERMIT OR WATER QUALITY CERTIFICATION APPROVAL IS PENDING, DO NOT WORK IN OR DISTURB THE DESIGNATED AREA(S) UNTIL OBTAINING THE APPROPRIATE APPROVAL(S). REFER TO NOTICE(S) CONTAINED IN THE CONTRACT BID PROPOSAL FOR DESIGNATED AREA(S) WHERE WORK IS PROHIBITED BY THE ABSENCE OF APPROVAL

## COMPACTION OF ASPHALT MIXTURES

WILL ACCEPT THE COMPACTION OF ASPHALT MIXTURES FURNISHED ON THIS PROJECT BY OPTION B ACCORDING TO SUBSECTIONS 402.03.02 AND 403.03.10 OF THE STANDARD SPECIFICATIONS.

## STANDARD DRAWINGS FOR HEADWALLS

STANDARD DRAWINGS ARE NOT ATTACHED TO THESE PLANS, A STANDARD DRAWING BOOK AND THE HEADWALL SUPPLEMENTAL BOOK MAY BE OBTAINED FROM THE POLICY SUPPORT BRANCH OF THE DEPARTMENT OF ADMINISTRATIVE SERVICES IN FRANKFORT, KY. AT (502) 564-3670.

## CLEARING AND GRUBBING

CONTRARY TO SECTION 202 OF THE STANDARD SPECIFICATIONS, NO DIRECT PAYMENT WILL BE ALLOWED FOR CLEARING AND GRUBBING ON THIS PROJECT.

## NOTES SPECIFIC TO PROJECT

## SAW CUT

THE BID ITEM "SAW CUT" SHALL INCLUDE ALL LABOR AND MATERIALS NECESSARY TO SAW CUT THE EXISTING PAVEMENT ALONG THE LINES INDICATED IN THE PLANS TO PROVIDE A NEAT EDGE FOR MATCHING THE PROPOSED PAVEMENT TO THE EXISTING PAVEMENT. PROVIDE SAWS THAT ARE POWER DRIVEN, HAVING DIAMOND-EDGE OR ABRASIVE SAW BLADES, AND THAT ARE CAPABLE OF CUTTING THE EXISTING PAVEMENT TO A MINIMUM DEPTH OF 6 INCHES.

## TRAFFIC NOTE

SEE THE PLANS FOR MAINTENANCE OF TRAFFIC NOTES AND DETOUR SIGNING PLAN.

## EROSION CONTROL

USE SEED MIXTURE NO. 1. QUANTITIES FOR TEMPORARY EROSION CONTROL BLANKET (TECB) ARE LISTED UNDER BID ITEM - EROSION CONTROL BLANKET.

## DROP BOX INLETS

ALL DROP BOX INLETS WITHOUT APRONS SHALL BE CONSTRUCTED USING "SAG CONDITIONS" AS NOTED IN STANDARD DRAWINGS.

The following abbreviations may have been used in the preparation of these plans:

| | |
|---|---|
| C.Y. | Cubic Yard |
| CL | Center Line |
| Conc. | Concrete |
| Cu. | Cubic |
| MPH | Miles per Hour |
| PC | Point of Curve |
| PI | Point of Intersection |
| PPC | Precast Prestressed Concrete |
| PT | Point of Tangent |
| R | Radius |
| Shld | Shoulder |
| Sta. | Station |
| Std. | Standard |
| Typ. | Typical |
| Vert. | Vertical |
| Yd. | Yard |

PREPARED BY _____ DATE _____
CHECKED BY _____ DATE _____
APPROVED BY _____ DATE _____

USER: $$$$USER$$$$
DATE: $$$$DATE$$$$
FILE NAME: $$$$design$file$specification$$$$
E-SHEET NAME: _____

KY 9 AA HIGHWAY
GENERAL NOTES

| COUNTY OF | ITEM NO. | SHEET NO. |
|---|---|---|
| BRACKEN | 6-8308 | R2B |

# GENERAL SUMMARY

| ITEM | DESCRIPTION | UNIT | AA Highway | HOOK LANE ENTRANCES | | | | | | | | | | | | | TOTAL PROJECT | |
|---|---|---|---|---|---|---|---|---|---|---|---|---|---|---|---|---|---|---|
| 01310 | REMOVE PIPE | LN FT | 94 | | | | | | | | | | | | | | 94 | |
| 02159 | TEMPORARY DITCH | LN FT | 2524 | | | | | | | | | | | | | | 2524 | |
| 02200 | ROADWAY EXCAVATION | CU YD | 7379 | | | | | | | | | | | | | | 7379 | |
| 02242 | WATER ② | M GAL | 1000 | | | | | | | | | | | | | | 1000 | ② |
| 02562 | SIGNS | SQ FT | 170 | | | | | | | | | | | | | | 170 | |
| | | | | | | | | | | | | | | | | | | |
| 02569 | DEMOBILIZATION | LP SUM | 1 | | | | | | | | | | | | | | 1 | |
| 02585 | EDGE KEY | LN FT | 250 | | | | | | | | | | | | | | 250 | |
| 02599 | FABRIC GEO-TEXTILE TYPE IV ① | SQ YD | 16913 | 1129 | | | | | | | | | | | | | 18042 | ① |
| 02650 | MAINTAIN AND CONTROL TRAFFIC ③ | LP SUM | 1 | | | | | | | | | | | | | | 1 | ③ |
| 02671 | PORTABLE CHANGEABLE MESSAGE SIGN | EACH | 2 | | | | | | | | | | | | | | 2 | |
| 02701 | TEMPORARY SILT FENCE | LN FT | 2232 | | | | | | | | | | | | | | 2232 | |
| 02704 | SILT TRAP TYPE B | EACH | 10 | | | | | | | | | | | | | | 10 | |
| 02705 | SILT TRAP TYPE C | EACH | 4 | | | | | | | | | | | | | | 4 | |
| 02707 | CLEAN SILT TRAP TYPE B | EACH | 30 | | | | | | | | | | | | | | 30 | |
| 02708 | CLEAN SILT TRAP TYPE C | EACH | 12 | | | | | | | | | | | | | | 12 | |
| 02709 | CLEAN TEMPORARY SILT FENCE | LN FT | 4464 | | | | | | | | | | | | | | 4464 | |
| 02726 | STAKING | LP SUM | 1 | | | | | | | | | | | | | | 1 | |
| 05950 | EROSION CONTROL BLANKET | SQ YD | 830 | | | | | | | | | | | | | | 830 | |
| 05952 | TEMPORARY MULCH | SQ YD | 23877 | | | | | | | | | | | | | | 23877 | |
| 05953 | TEMPORARY SEEDING AND PROTECTION | SQ YD | 23877 | | | | | | | | | | | | | | 23877 | |
| 05966 | TOPDRESSING FERTILIZER | TON | 0.5 | | | | | | | | | | | | | | 0.5 | |
| 05985 | SEEDING AND PROTECTION | SQ YD | 8204 | | | | | | | | | | | | | | 8204 | |
| 05989 | SPECIAL SEEDING CROWN VETCH | SQ YD | 8000 | | | | | | | | | | | | | | 8000 | |
| 06510 | PAVE-STRIPING-TEMP PAINT-4 IN | LN FT | 10200 | | | | | | | | | | | | | | 10200 | |
| 06514 | PAVE STRIPING-PERM PAINT-4 IN | LN FT | 10200 | | | | | | | | | | | | | | 10200 | |
| 06570 | PAVE MARKING-PAINT CROSS-HATCH | SQ FT | 10965 | | | | | | | | | | | | | | 10965 | |
| 06574 | PAVE MARKING-THERMO CURVE ARROW | EACH | 4 | | | | | | | | | | | | | | 4 | |
| 06576 | PAVE MARKING-THERMO ONLY | EACH | 2 | | | | | | | | | | | | | | 2 | |
| 06589 | PAVEMENT MARKER TYPE V-MW | EACH | 10 | | | | | | | | | | | | | | 10 | |
| 06591 | PAVEMENT MARKER TYPE V-BY | EACH | 160 | | | | | | | | | | | | | | 160 | |
| 10020NS | FUEL ADJUSTMENT | DOLL | 7438 | | | | | | | | | | | | | | 7438 | |
| 10030NS | ASPHALT ADJUSTMENT | DOLL | 13108 | | | | | | | | | | | | | | 13108 | |
| 02600 | FABRIC GEOTEXTILE TYPE IV FOR PIPE ⑤④ | SQ YD | 434 | | | | | | | | | | | | | | 434 | ⑤④ |
| 08100 | CONCRETE-CLASS A ⑤ | CY YD | 0.5 | | | | | | | | | | | | | | 0.5 | ⑤ |
| 23131ER701 | PIPELINE VIDEO INSPECTION ⑤ | LN FT | 1714 | | | | | | | | | | | | | | 1714 | ⑤ |
| 21370ED | LONGITUDINAL SAW CUT 6 IN. | LN FT | 5050 | | | | | | | | | | | | | | 5050 | |

## NOTES:

① FOR ROCK ROADBED

② FOR CONTROLLING DUST CAUSED BY MAINTAINING TRAFFIC ONLY.

③ INCLUDES ALL LABOR AND MATERIALS.

④ FOR WRAPPING PIPE TRENCH BACKFILL FROM PIPE SUMMARY

⑤ QUANTITIES CARRIED OVER FROM PIPE DRAINAGE SUMMARY

TOTAL PROJECT EARTHWORK

6733 CU YD EMB

1560 CU YD COM

646 CU YD EMB BENCH

ESTIMATE FOR EARTHWORK CALCULATIONS FOR DESIGN ONLY. THE CONTRACTOR IS ADVISED THAT THE CALCULATIONS SHOWN ARE FOR INFORMATION ONLY. ASSUMPTIONS FOR SHRINKAGE AND SWELL FACTORS ARE THE CONSTRACTORS RESPONSIBILITY.

PREPARED BY _____ DATE _____

CHECKED BY _____ DATE _____

APPROVED BY _____ DATE _____

USER: $$$$USER$$$$

DATE: $$$$DATE$$$$

FILE NAME: $$$$design$file$specification$$$$

E-SHEET NAME: _____

GENERAL SUMMARY

| COUNTY OF | ITEM NO. | SHEET NO. |
|---|---|---|
| BRACKEN | 6-8308 | R2B |

# GENERAL SUMMARY

| ITEM | DESCRIPTION | UNIT | AA Highway | HOOK LANE ENTRANCES | | | | | | | | | | | | | TOTAL PROJECT | |
|---|---|---|---|---|---|---|---|---|---|---|---|---|---|---|---|---|---|---|
| 01310 | REMOVE PIPE | LN FT | 94 | | | | | | | | | | | | | | 94 | |
| 02159 | TEMPORARY DITCH | LN FT | 2524 | | | | | | | | | | | | | | 2524 | |
| 02200 | ROADWAY EXCAVATION | CU YD | 7379 | | | | | | | | | | | | | | 7379 | |
| 02242 | WATER (2) | M GAL | 1000 | | | | | | | | | | | | | | 1000 | (2) |
| 02562 | SIGNS | SQ FT | 170 | | | | | | | | | | | | | | 170 | |
| | | | | | | | | | | | | | | | | | | |
| 02569 | DEMOBILIZATION | LP SUM | 1 | | | | | | | | | | | | | | 1 | |
| 02585 | EDGE KEY | LN FT | 250 | | | | | | | | | | | | | | 250 | |
| 02599 | FABRIC GEO-TEXTILE TYPE IV (1) | SQ YD | 16913 | 1129 | | | | | | | | | | | | | 18042 | (1) |
| 02650 | MAINTAIN AND CONTROL TRAFFIC (3) | LP SUM | 1 | | | | | | | | | | | | | | 1 | (3) |
| 02671 | PORTABLE CHANGEABLE MESSAGE SIGN | EACH | 2 | | | | | | | | | | | | | | 2 | |
| 02701 | TEMPORARY SILT FENCE | LN FT | 2232 | | | | | | | | | | | | | | 2232 | |
| 02704 | SILT TRAP TYPE B | EACH | 10 | | | | | | | | | | | | | | 10 | |
| 02705 | SILT TRAP TYPE C | EACH | 4 | | | | | | | | | | | | | | 4 | |
| 02707 | CLEAN SILT TRAP TYPE B | EACH | 30 | | | | | | | | | | | | | | 30 | |
| 02708 | CLEAN SILT TRAP TYPE C | EACH | 12 | | | | | | | | | | | | | | 12 | |
| 02709 | CLEAN TEMPORARY SILT FENCE | LN FT | 4464 | | | | | | | | | | | | | | 4464 | |
| 02726 | STAKING | LP SUM | 1 | | | | | | | | | | | | | | 1 | |
| 05950 | EROSION CONTROL BLANKET | SQ YD | 830 | | | | | | | | | | | | | | 830 | |
| 05952 | TEMPORARY MULCH | SQ YD | 23877 | | | | | | | | | | | | | | 23877 | |
| 05953 | TEMPORARY SEEDING AND PROTECTION | SQ YD | 23877 | | | | | | | | | | | | | | 23877 | |
| 05966 | TOPDRESSING FERTILIZER | TON | 0.5 | | | | | | | | | | | | | | 0.5 | |
| 05985 | SEEDING AND PROTECTION | SQ YD | 8204 | | | | | | | | | | | | | | 8204 | |
| 05989 | SPECIAL SEEDING CROWN VETCH | SQ YD | 8000 | | | | | | | | | | | | | | 8000 | |
| 06510 | PAVE-STRIPING-TEMP PAINT-4 IN | LN FT | 10200 | | | | | | | | | | | | | | 10200 | |
| 06514 | PAVE STRIPING-PERM PAINT-4 IN | LN FT | 10200 | | | | | | | | | | | | | | 10200 | |
| 06570 | PAVE MARKING-PAINT CROSS-HATCH | SQ FT | 10965 | | | | | | | | | | | | | | 10965 | |
| 06574 | PAVE MARKING-THERMO CURVE ARROW | EACH | 4 | | | | | | | | | | | | | | 4 | |
| 06576 | PAVE MARKING-THERMO ONLY | EACH | 2 | | | | | | | | | | | | | | 2 | |
| 06589 | PAVEMENT MARKER TYPE V-MW | EACH | 10 | | | | | | | | | | | | | | 10 | |
| 06591 | PAVEMENT MARKER TYPE V-BY | EACH | 160 | | | | | | | | | | | | | | 160 | |
| 10020NS | FUEL ADJUSTMENT | DOLL | 7438 | | | | | | | | | | | | | | 7438 | |
| 10030NS | ASPHALT ADJUSTMENT | DOLL | 13108 | | | | | | | | | | | | | | 13108 | |
| 02600 | FABRIC GEOTEXTILE TYPE IV FOR PIPE (5)(4) | SQ YD | 434 | | | | | | | | | | | | | | 434 | (5)(4) |
| 08100 | CONCRETE-CLASS A (5) | CY YD | 0.5 | | | | | | | | | | | | | | 0.5 | (5) |
| 23131ER701 | PIPELINE VIDEO INSPECTION (5) | LN FT | 1714 | | | | | | | | | | | | | | 1714 | (5) |
| 21370ED | LONGITUDINAL SAW CUT 6 IN. | LN FT | 5050 | | | | | | | | | | | | | | 5050 | |

## NOTES:

(1) FOR ROCK ROADBED

(2) FOR CONTROLLING DUST CAUSED BY MAINTAINING TRAFFIC ONLY.

(3) INCLUDES ALL LABOR AND MATERIALS.

(4) FOR WRAPPING PIPE TRENCH BACKFILL FROM PIPE SUMMARY

(5) QUANTITIES CARRIED OVER FROM PIPE DRAINAGE SUMMARY

TOTAL PROJECT EARTHWORK

6733 CU YD EMB

1560 CU YD COM

646 CU YD EMB BENCH

ESTIMATE FOR EARTHWORK CALCULATIONS FOR DESIGN ONLY. THE CONTRACTOR IS ADVISED THAT THE CALCULATIONS SHOWN ARE FOR INFORMATION ONLY. ASSUMPTIONS FOR SHRINKAGE AND SWELL FACTORS ARE THE CONSTRACTORS RESPONSIBILITY.

PREPARED BY _____ DATE _____

CHECKED BY _____ DATE _____

APPROVED BY _____ DATE _____

USER: $$$$USER$$$$

DATE: $$$$DATE$$$$

FILE NAME: $$$$design$file$specification$$$$

E-SHEET NAME: _____

GENERAL SUMMARY

| COUNTY OF | ITEM NO. | SHEET NO. |
|---|---|---|
| BRACKEN | 6-8308.00 | R2A |

# TYPICAL SECTIONS
# HOOK LANE ENTRANCES

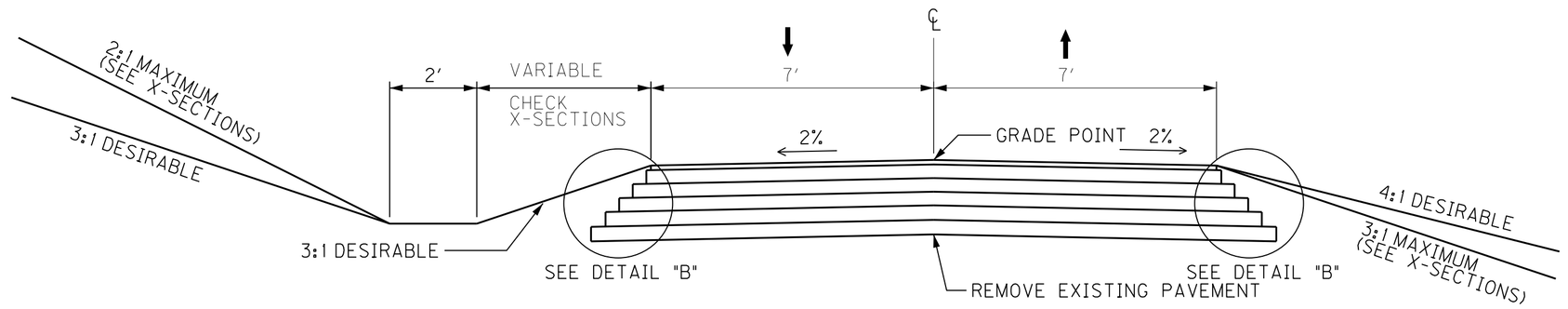


**HOOK LANE**
**STA. 9+49.05 TO 10+00.00**

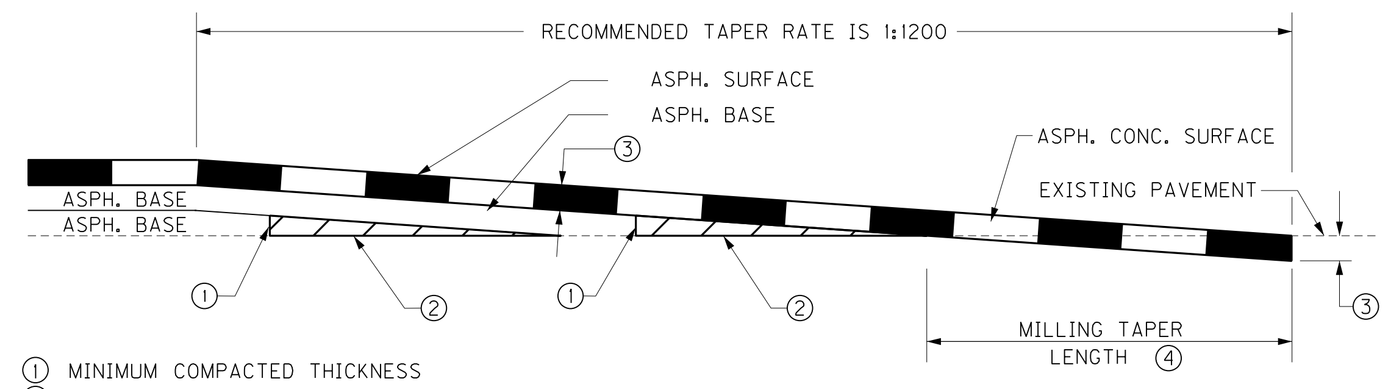


① MINIMUM COMPACTED THICKNESS
② ASPHALT MIXTURE FOR LEVELING AND WEDGING OR NEXT COURSE OF ASPHALT MIXTURE.
③ ASPHALT SURFACE THICKNESS (FULL DEPTH)
④ MILL EXISTING PAVEMENT TO RECEIVE ASPHALT SURFACE FULL DEPTH (EDGE KEY).

$$\text{TAPER LENGTH (ft)} = \frac{t\ \text{(in)} \times \text{TAPER RATE}}{12}$$

FOR A TAPER RATE OF 1:1200
TAPER LENGTH = 125 FEET WHEN t = 1.25 inches

**TAPERING OF OVERLAYS ON KY 9 AA HIGHWAY**

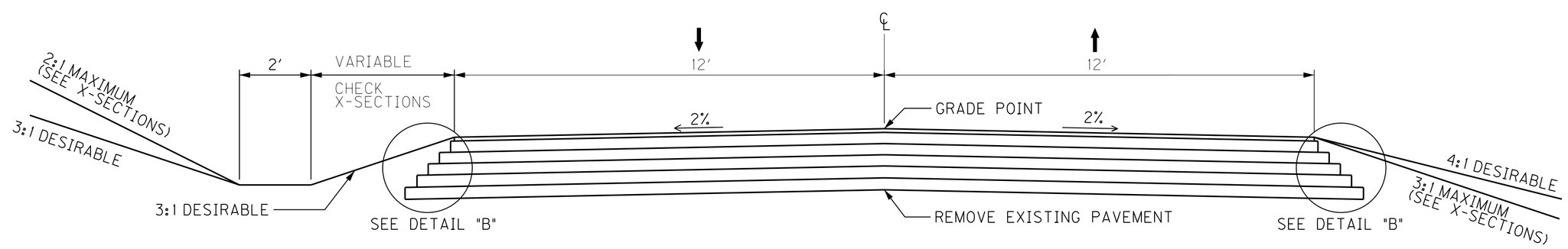


**HOOK LANE**
**STA. 10+00.00 TO 11+01.24**

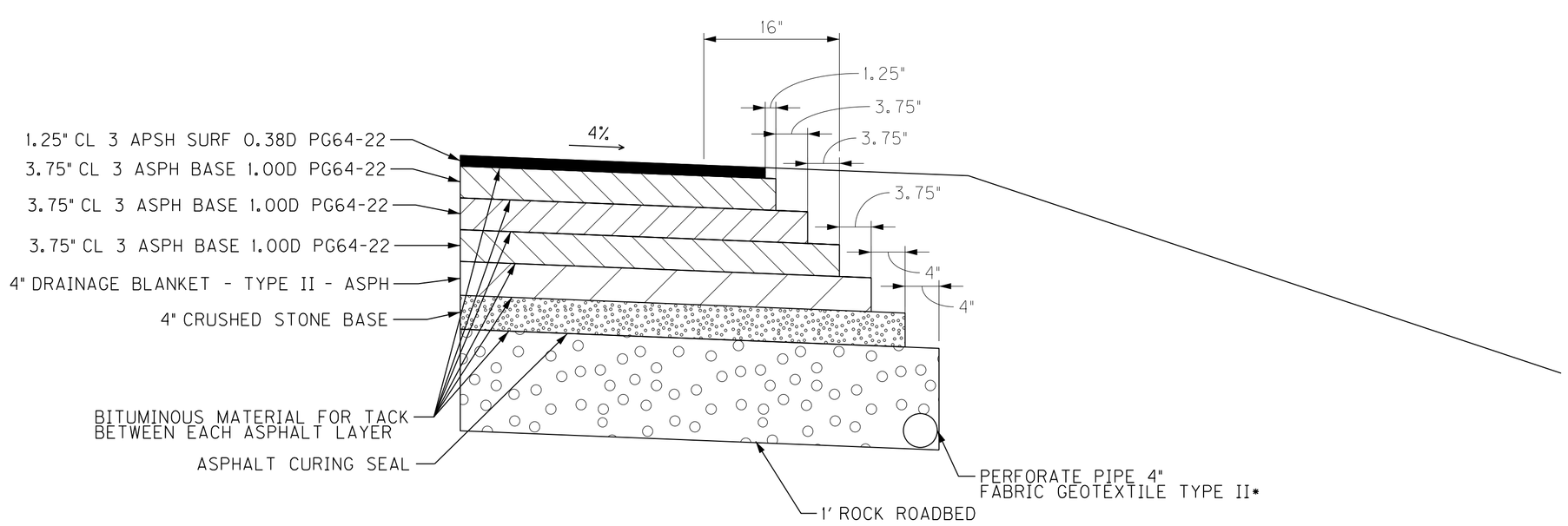


* ITEM INCEDENTAL TO PERFORATED PIPE 4"

**DETAIL "A"**
**KY 9 AA HIGHWAY**
**SHOULDER PAVEMENT SECTION**
NOTE: SHALE CANNOT BE USED IN SUBGRADE

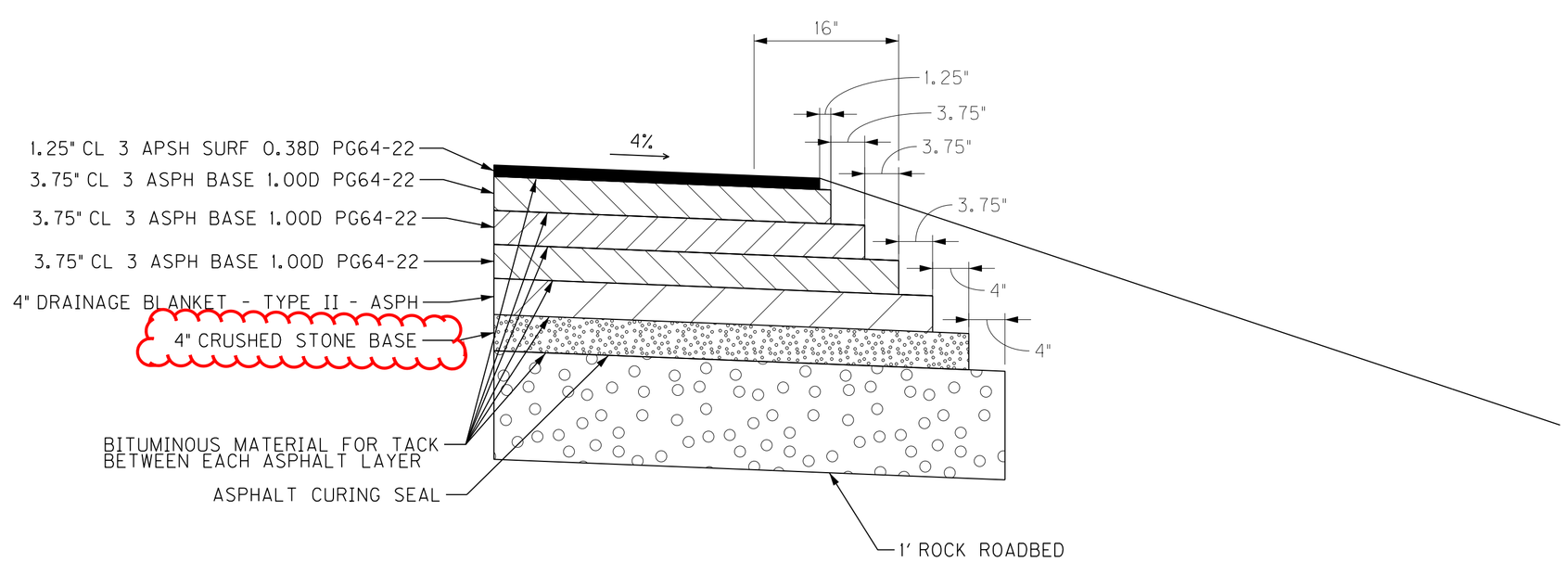


**DETAIL "B"**
**HOOK LANE**
**SHOULDER PAVEMENT SECTION**
NOTE: SHALE CANNOT BE USED IN SUBGRADE

NOT TO SCALE

HOOK LANE
TYPICAL SECTION

PREPARED BY ____ DATE ____
CHECKED BY ____ DATE ____
APPROVED BY ____ DATE ____

USER: $$$$USER$$$$
DATE: $$$$DATE$$$$
FILE NAME: $$$$design$file$specification$$$$
E-SHEET NAME: ____

| COUNTY OF | ITEM NO. | SHEET NO. |
|---|---|---|
| BRACKEN | 6-8308.00 | R2A |

# TYPICAL SECTIONS
# HOOK LANE ENTRANCES

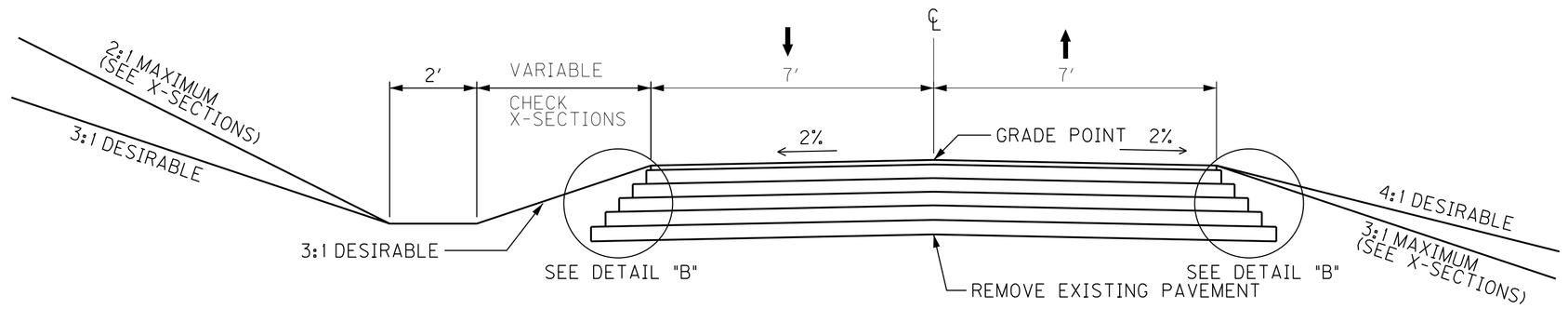


**HOOK LANE**
**STA. 9+49.05 TO 10+00.00**

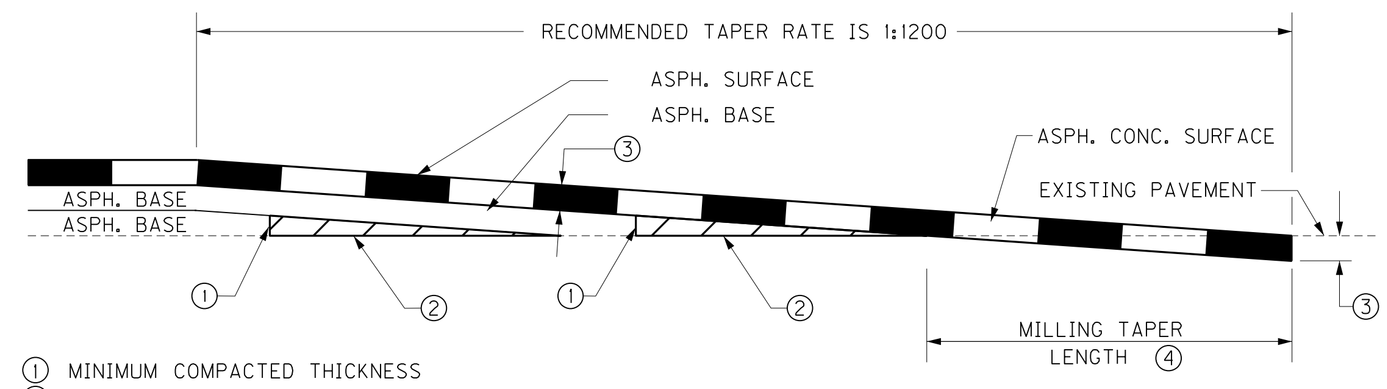


① MINIMUM COMPACTED THICKNESS
② ASPHALT MIXTURE FOR LEVELING AND WEDGING OR NEXT COURSE OF ASPHALT MIXTURE.
③ ASPHALT SURFACE THICKNESS (FULL DEPTH)
④ MILL EXISTING PAVEMENT TO RECEIVE ASPHALT SURFACE FULL DEPTH (EDGE KEY).

$$\text{TAPER LENGTH (ft)} = \frac{t\ \text{(in)} \times \text{TAPER RATE}}{12}$$

FOR A TAPER RATE OF 1:1200
TAPER LENGTH = 125 FEET WHEN t = 1.25 inches

**TAPERING OF OVERLAYS ON KY 9 AA HIGHWAY**

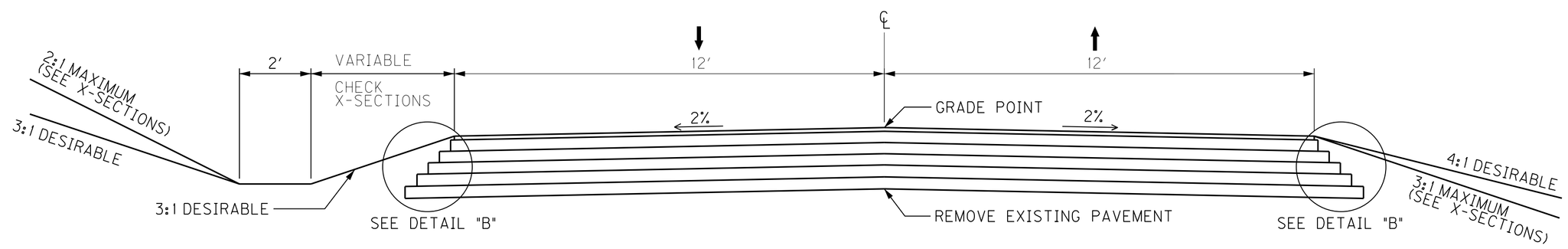


**HOOK LANE**
**STA. 10+00.00 TO 11+01.24**

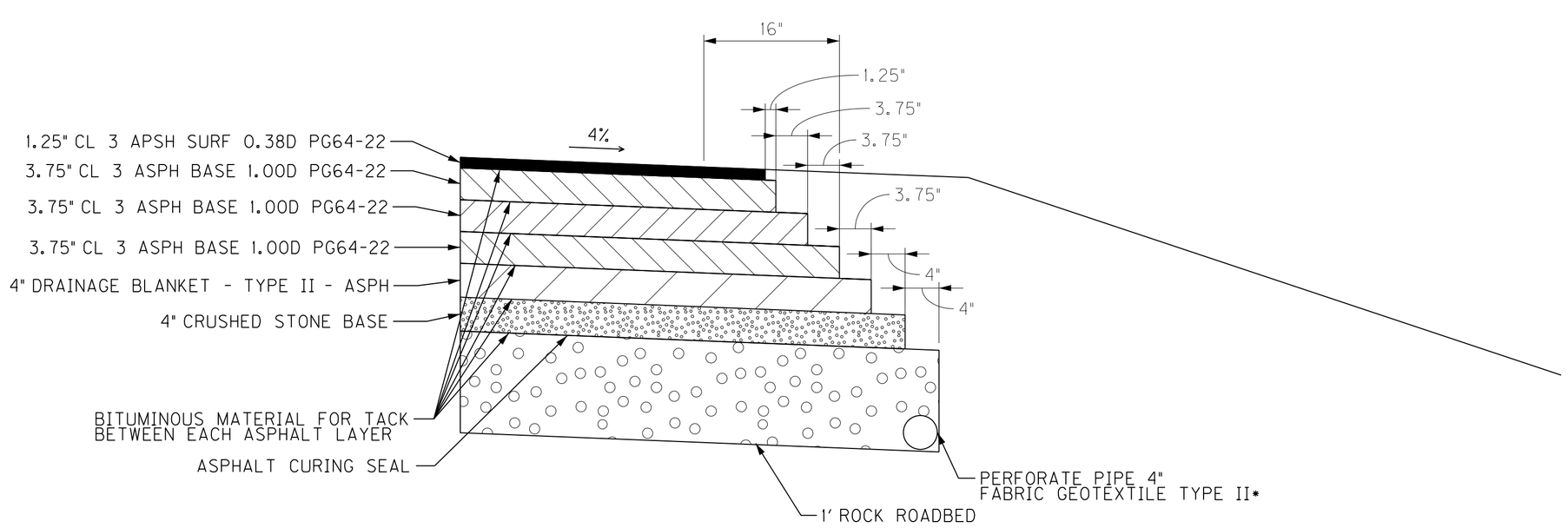


* ITEM INCEDENTAL TO PERFORATED PIPE 4"

**DETAIL "A"**
**KY 9 AA HIGHWAY**
**SHOULDER PAVEMENT SECTION**
NOTE: SHALE CANNOT BE USED IN SUBGRADE

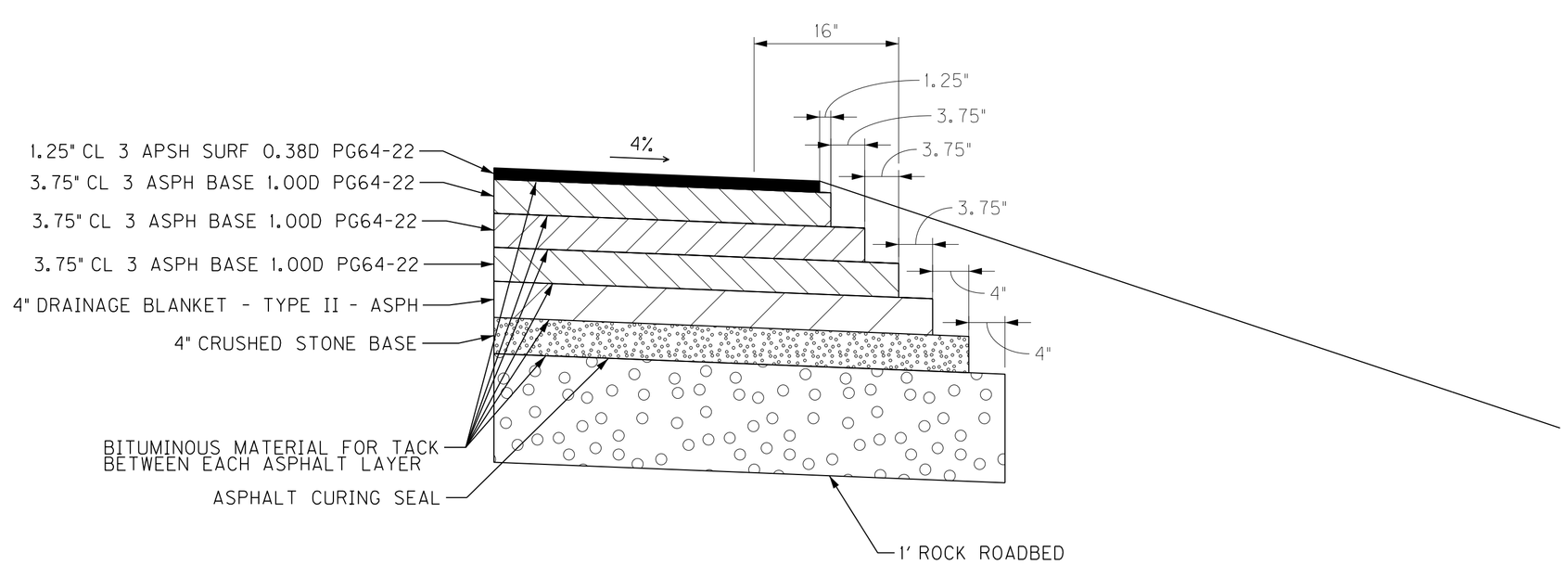


**DETAIL "B"**
**HOOK LANE**
**SHOULDER PAVEMENT SECTION**
NOTE: SHALE CANNOT BE USED IN SUBGRADE

NOT TO SCALE

HOOK LANE
TYPICAL SECTION

PREPARED BY ____ DATE ____
CHECKED BY ____ DATE ____
APPROVED BY ____ DATE ____

USER: $$$$USER$$$$
DATE: $$$$DATE$$$$
FILE NAME: $$$$design$file$specification$$$$
E-SHEET NAME: ____

CONTRACT ID: 101030
COUNTY: BRACKEN
PROPOSAL: JL03 021 0009 003-004

PAGE: 1
LETTING: 08/27/10
CALL NO: 306

| LINE NO | ITEM | DESCRIPTION | APPROXIMATE UNIT QUANTITY | UNIT PRICE | AMOUNT |
|---|---|---|---|---|---|
| | SECTION 0001 | ROADWAY | | | |
| 0010 | 00003 | CRUSHED STONE BASE | 1,738.000 TON | | |
| 0020 | 00018 | DRAINAGE BLANKET-TYPE II-ASPH | 1,456.000 TON | | |
| 0030 | 00078 | CRUSHED AGGREGATE SIZE NO 2 | 4,975.000 TON | | |
| 0040 | 00190 | LEVELING & WEDGING PG64-22 | 108.000 TON | | |
| 0050 | 00214 | CL3 ASPH BASE 1.00D PG64-22 | 4,353.000 TON | | |
| 0060 | 00358 | ASPHALT CURING SEAL | 5.500 TON | | |
| 0070 | 00388 | CL3 ASPH SURF 0.38B PG64-22 | 1,088.000 TON | | |
| 0080 | 00462 | CULVERT PIPE-18 IN | 11.360 LF | | |
| 0090 | 00464 | CULVERT PIPE-24 IN | 246.480 LF | | |
| 0100 | 01000 | PERFORATED PIPE-4 IN | 3,170.000 LF | | |
| 0110 | 01020 | PERF PIPE HEADWALL TY 1-4 IN | 2.000 EACH | | |
| 0120 | 01310 | REMOVE PIPE | 94.000 LF | | |
| 0130 | 01371 | METAL END SECTION TY 1-18 IN | 1.000 EACH | | |
| 0140 | 01373 | METAL END SECTION TY 1-24 IN | 2.000 EACH | | |
| 0150 | 01490 | DROP BOX INLET TYPE 1 | 2.000 EACH | | |
| 0160 | 01740 | CORED HOLE DRAINAGE BOX CON-4 IN | 1.000 EACH | | |
| 0170 | 02159 | TEMP DITCH | 2,524.000 LF | | |
| 0180 | 02200 | ROADWAY EXCAVATION (REVISED: 8-17-10) | 7,379.000 CUYD | | |
| 0190 | 02242 | WATER | 1,000.000 MGAL | | |
| 0200 | 02562 | SIGNS | 170.000 SQFT | | |

CONTRACT ID: 101030
COUNTY: BRACKEN
PROPOSAL: JL03 021 0009 003-004

PAGE: 2
LETTING: 08/27/10
CALL NO: 306

| LINE NO | ITEM | DESCRIPTION | APPROXIMATE UNIT QUANTITY | UNIT PRICE | AMOUNT |
|---|---|---|---|---|---|
| 0210 | 02585 | EDGE KEY | 250.000 LF | | |
| 0220 | 02599 | FABRIC-GEOTEXTILE TYPE IV | 18,042.000 SQYD | | |
| 0230 | 02600 | FABRIC GEOTEXTILE TY IV FOR PIPE | 434.000 SQYD | 2.00 | 868.00 |
| 0240 | 02650 | MAINTAIN & CONTROL TRAFFIC | ( 1.00) LS | | |
| 0250 | 02671 | PORTABLE CHANGEABLE MESSAGE SIGN | 2.000 EACH | | |
| 0260 | 02676 | MOBILIZATION FOR MILL & TEXT | ( 1.00) LS | | |
| 0270 | 02677 | ASPHALT PAVE MILLING & TEXTURING | 613.000 TON | | |
| 0280 | 02701 | TEMP SILT FENCE | 2,232.000 LF | | |
| 0290 | 02704 | SILT TRAP TYPE B | 10.000 EACH | | |
| 0300 | 02705 | SILT TRAP TYPE C | 4.000 EACH | | |
| 0310 | 02707 | CLEAN SILT TRAP TYPE B | 30.000 EACH | | |
| 0320 | 02708 | CLEAN SILT TRAP TYPE C | 12.000 EACH | | |
| 0330 | 02709 | CLEAN TEMP SILT FENCE | 4,464.000 LF | | |
| 0340 | 02726 | STAKING | ( 1.00) LS | | |
| 0350 | 05950 | EROSION CONTROL BLANKET | 830.000 SQYD | | |
| 0360 | 05952 | TEMP MULCH | 23,877.000 SQYD | | |
| 0370 | 05953 | TEMP SEEDING AND PROTECTION | 23,877.000 SQYD | | |
| 0380 | 05966 | TOPDRESSING FERTILIZER | 0.500 TON | | |
| 0390 | 05985 | SEEDING AND PROTECTION | 8,204.000 SQYD | | |
| 0400 | 05989 | SPECIAL SEEDING CROWN VETCH | 8,000.000 SQYD | | |
| 0410 | 06510 | PAVE STRIPING-TEMP PAINT-4 IN | 10,200.000 LF | | |

CONTRACT ID: 101030 PAGE: 3
COUNTY: BRACKEN LETTING: 08/27/10
PROPOSAL: JL03 021 0009 003-004 CALL NO: 306

| LINE NO | ITEM | DESCRIPTION | APPROXIMATE UNIT QUANTITY | UNIT PRICE | AMOUNT |
|---|---|---|---|---|---|
| 0420 | 06514 | PAVE STRIPING-PERM PAINT-4 IN | 10,200.000 LF | | |
| 0430 | 06570 | PAVE MARKING-PAINT CROSS-HATCH | 10,965.000 SQFT | | |
| 0440 | 06574 | PAVE MARKING-THERMO CURV ARROW | 4.000 EACH | | |
| 0450 | 06576 | PAVE MARKING-THERMO ONLY | 2.000 EACH | | |
| 0460 | 06589 | PAVEMENT MARKER TYPE V-MW | 10.000 EACH | | |
| 0470 | 06591 | PAVEMENT MARKER TYPE V-BY | 160.000 EACH | | |
| 0480 | 08100 | CONCRETE-CLASS A | 0.480 CUYD | | |
| 0490 | 10020NS | FUEL ADJUSTMENT | 7,438.000 DOLL | 1.00 | 7,438.00 |
| 0500 | 10030NS | ASPHALT ADJUSTMENT | 13,108.000 DOLL | 1.00 | 13,108.00 |
| 0510 | 21370ED | LONGITUDINAL SAW CUT- 6 IN (ADDED: 8-17-10) | 5,050.000 LF | | |
| 0520 | 23131ER701 | PIPELINE VIDEO INSPECTION | 1,714.000 LF | | |
| | SECTION 0002 | DEMOBILIZATION | | | |
| 0530 | 02569 | DEMOBILIZATION (AT LEAST 1.5%) | LUMP | | |
| | | TOTAL BID | | | |