CALL NO. 302

CONTRACT ID. 142360

EDMONSON COUNTY

FED/STATE PROJECT NUMBER CB06 031 0655 002-003

DESCRIPTION SEGAL ROAD (KY 655)

WORK TYPE GUARDRAIL

PRIMARY COMPLETION DATE 6/30/2015

LETTING DATE: December 12,2014

Sealed Bids will be received electronically through the Bid Express bidding service until 10:00 AM EASTERN STANDARD TIME December 12,2014. Bids will be publicly announced at 10:00 AM EASTERN STANDARD TIME.

NO PLANS ASSOCIATED WITH THIS PROJECT.

REQUIRED BID PROPOSAL GUARANTY: Not less than 5% of the total bid.

TABLE OF CONTENTS

PART I SCOPE OF WORK

- PROJECT(S), COMPLETION DATE(S), & LIQUIDATED DAMAGES
- CONTRACT NOTES
- STATE CONTRACT NOTES
- DGA BASE FOR SHOULDERS
- COORDINATION OF WORK WITH OTHER CONTRACTS
- GUARDRAIL
- TYPICAL SECTION DIMENSIONS
- TRAFFIC CONTROL PLAN
- SKETCH MAP(S)
- SUMMARY SHEET(S)
- TYPICAL SECTION(S)
- DETAIL SHEET(S)
- GUARDRAIL DELIVERY VERIFICATION SHEET
- GUARDRAIL ON BRIDGE CASE I-A

PART II SPECIFICATIONS AND STANDARD DRAWINGS

- SPECIFICATIONS REFERENCE
- SUPPLEMENTAL SPECIFICATION
- STANDARD DRAWINGS THAT APPLY
- DELINEATORS FOR GUARDRAIL
- GUARDRAIL COMPONENTS
- STEEL BEAM GUARDRAIL ("W" BEAM)
- GUARDRAIL POSTS
- LANE CLOSURE TWO-LANE HIGHWAY

PART III EMPLOYMENT, WAGE AND RECORD REQUIREMENTS

- LABOR AND WAGE REQUIREMENTS
- EXECUTIVE BRANCH CODE OF ETHICS
- KENTUCKY EQUAL EMPLOYMENT OPPORTUNITY ACT OF 1978 LOCALITY 1,2,3,4 / STATE (UNDER 250,000)
- PROJECT WAGE RATES LOCALITY 1,2,3,4 / STATE

PART IV INSURANCE

PART V BID ITEMS

PART I

SCOPE OF WORK

ADMINISTRATIVE DISTRICT - 03

CONTRACT ID - 142360

CB06 031 0655 002-003

COUNTY - EDMONSON

PCN - 0303106551403
CB06 031 0655 002-003

SEGAL ROAD (KY 655) (MP 2.601) FROM 200 FEET SOUTH OF GULF CREEK CULVERT EXTENDING NORTH TO 200 FT NORTH OF GULF CREEK CULVERT (MP 2.681), A DISTANCE OF 0.08 MILES.GUARDRAIL

GEOGRAPHIC COORDINATES LATITUDE 37:13:06.91 LONGITUDE 86:22:44.01

COMPLETION DATE(S):

COMPLETED BY 06/30/2015	SPECIFIED COMPLETION DATE ALL ITEMS IN CONTRACT

CONTRACT NOTES

PROPOSAL ADDENDA

All addenda to this proposal must be applied when calculating bid and certified in the bid packet submitted to the Kentucky Department of Highways. Failure to use the correct and most recent addenda may result in the bid being rejected.

BID SUBMITTAL

Bidder must use the Department's Expedite Bidding Program available on the Internet web site of the Department of Highways, Division of Construction Procurement. (www.transportation.ky.gov/construction-procurement)

The Bidder must download the bid file located on the Bid Express website (www.bidx.com) to prepare a bid packet for submission to the Department. The bidder must submit electronically using Bid Express.

JOINT VENTURE BIDDING

Joint venture bidding is permissible. All companies in the joint venture must be prequalified in one of the work types in the Qualifications for Bidders for the project. The bidders must get a vendor ID for the joint venture from the Division of Construction Procurement and register the joint venture as a bidder on the project. Also, the joint venture must obtain a digital ID from Bid Express to submit a bid. A joint bid bond of 5% may be submitted for both companies or each company may submit a separate bond of 5%.

UNDERGROUND FACILITY DAMAGE PROTECTION

The contractor is advised that the Underground Facility Damage Protection Act of 1994, became law January 1, 1995. It is the contractor's responsibility to determine the impact of the act regarding this project, and take all steps necessary to be in compliance with the provision of the act.

SPECIAL NOTE FOR PIPE INSPECTION

Contrary to Section 701.03.08 of the 2012 Standard Specifications for Road and Bridge Construction and Kentucky Method 64-114, certification by the Kentucky Transportation Center for prequalified Contractors to perform laser/video inspection is not required on this contract. It will continue to be a requirement for the Contractor performing any laser/video pipe inspection to be prequalified for this specialized item with the Kentucky Transportation Cabinet-Division of Construction Procurement.

SPECIAL NOTE FOR COMPOSITE OFFSET BLOCKS

Contrary to the Standard Drawings (2012 edition) the Cabinet will allow 6" composite offset blocks in lieu of wooden offset blocks, except as specified on proprietary end treatments and crash cushions. The composite blocks shall be selected from the Cabinet's List of Approved Materials.

REGISTRATION WITH THE SECRETARY OF STATE BY A FOREIGN ENTITY

Pursuant to KRS 176.085(1)(b), an agency, department, office, or political subdivision of the Commonwealth of Kentucky shall not award a state contract to a person that is a foreign entity required by KRS 14A.9-010 to obtain a certificate of authority to transact business in the Commonwealth ("certificate") from the Secretary of State under KRS 14A.9-030 unless the person produces the certificate within fourteen (14) days of the bid or proposal opening. If the foreign entity is not required to obtain a certificate as provided in KRS 14A.9-010, the foreign entity should identify the applicable exception. Foreign entity is defined within KRS 14A.1-070.

For all foreign entities required to obtain a certificate of authority to transact business in the Commonwealth, if a copy of the certificate is not received by the contracting agency within the time frame identified above, the foreign entity's solicitation response shall be deemed non-responsive or the awarded contract shall be cancelled.

Businesses can register with the Secretary of State at https://secure.kentucky.gov/sos/ftbr/welcome.aspx .

SPECIAL NOTE FOR PROJECT QUESTIONS DURING ADVERTISEMENT

Questions about projects during the advertisement should be submitted in writing to the Division of Construction Procurement. This may be done by fax (502) 564-7299 or email to kytc.projectquestions@ky.gov. The Department will attempt to answer all submitted questions. The Department reserves the right not to answer if the question is not pertinent or does not aid in clarifying the project intent.

The deadline for posting answers will be 3:00 pm Eastern Daylight Time, the day preceding the Letting. Questions may be submitted until this deadline with the understanding that the later a question is submitted, the less likely an answer will be able to be provided.

The questions and answers will be posted for each Letting under the heading "Questions & Answers" on the Construction Procurement website (www.transportation.ky.gov/contract). The answers provided shall be considered part of

this Special Note and, in case of a discrepancy, will govern over all other bidding documents.

HARDWOOD REMOVAL RESTRICTIONS

The US Department of Agriculture has imposed a quarantine in Kentucky and several surrounding states, to prevent the spread of an invasive insect, the emerald ash borer. Hardwood cut in conjunction with the project may not be removed from the state. Chipping or burning on site is the preferred method of disposal.

INSTRUCTIONS FOR EXCESS MATERIAL SITES AND BORROW SITES

Identification of excess material sites and borrow sites shall be the responsibility of the Contractor. The Contractor shall be responsible for compliance with all applicable state and federal laws and may wish to consult with the US Fish and Wildlife Service to seek protection under Section 10 of the Endangered Species Act for these activities.

ACCESS TO RECORDS

The contractor, as defined in KRS 45A.030 (9) agrees that the contracting agency, the Finance and Administration Cabinet, the Auditor of Public Accounts, and the Legislative Research Commission, or their duly authorized representatives, shall have access to any books, documents, papers, records, or other evidence, which are directly pertinent to this contract for the purpose of financial audit or program review. Records and other prequalification information confidentially disclosed as part of the bid process shall not be deemed as directly pertinent to the contract and shall be exempt from disclosure as provided in KRS 61.878(1)(c). The contractor also recognizes that any books, documents, papers, records, or other evidence, received during a financial audit or program review shall be subject to the Kentucky Open Records Act, KRS 61.870 to 61.884.

In the event of a dispute between the contractor and the contracting agency, Attorney General, or the Auditor of Public Accounts over documents that are eligible for production and review, the Finance and Administration Cabinet shall review the dispute and issue a determination, in accordance with Secretary's Order 11-004. (See attachment)

10/29/12

Commonwealth of Kentucky
Finance and Administration Cabinet
OFFICE OF THE SECRETARY
Room 383, Capitol Annex
702 Capital Avenue
Frankfort, KY 40601-3462
(502) 564-4240
Fax (502) 564-6785

Steven L. Beshear
Governor

Lori H. Flanery
Secretary

SECRETARY'S ORDER 11-004

FINANCE AND ADMINISTRATION CABINET

Vendor Document Disclosure

WHEREAS, in order to promote accountability and transparency in governmental operations, the Finance and Administration Cabinet believes that a mechanism should be created which would provide for review and assistance to an Executive Branch agency if said agency cannot obtain access to documents that it deems necessary to conduct a review of the records of a private vendor that holds a contract to provide goods and/or services to the Commonwealth; and

WHEREAS, in order to promote accountability and transparency in governmental operations, the Finance and Administration Cabinet believes that a mechanism should be created which would provide for review and assistance to an Executive Branch agency if said agency cannot obtain access to documents that it deems necessary during the course of an audit, investigation or any other inquiry by an Executive Branch agency that involves the review of documents; and

WHEREAS, KRS 42.014 and KRS 12.270 authorizes the Secretary of the Finance and Administration Cabinet to establish the internal organization and assignment of functions which are not established by statute relating to the Finance and Administration Cabinet; further, KRS Chapter 45A.050 and 45A.230 authorizes the Secretary of the Finance and Administration Cabinet to procure, manage and control all supplies and services that are procured by the Commonwealth and to intervene in controversies among vendors and state agencies; and

NOW, THEREFORE, pursuant to the authority vested in me by KRS 42.014, KRS 12.270, KRS 45A.050, and 45A.230, I, Lori H. Flanery, Secretary of the Finance and Administration Cabinet, do hereby order and direct the following:

I. Upon the request of an Executive Branch agency, the Finance and Administration Cabinet ("FAC") shall formally review any dispute arising where the agency has requested documents from a private vendor that holds a state contract and the vendor has refused access to said documents under a claim that said documents are not directly pertinent or relevant to the agency's inquiry upon which the document request was predicated.

II. Upon the request of an Executive Branch agency, the FAC shall formally review any situation where the agency has requested documents that the agency deems necessary to

conduct audits, investigations or any other formal inquiry where a dispute has arisen as to what documents are necessary to conclude the inquiry.

III. Upon receipt of a request by a state agency pursuant to Sections I & II, the FAC shall consider the request from the Executive Branch agency and the position of the vendor or party opposing the disclosure of the documents, applying any and all relevant law to the facts and circumstances of the matter in controversy. After FAC's review is complete, FAC shall issue a Determination which sets out FAC's position as to what documents and/or records, if any, should be disclosed to the requesting agency. The Determination shall be issued within 30 days of receipt of the request from the agency. This time period may be extended for good cause.

IV. If the Determination concludes that documents are being wrongfully withheld by the private vendor or other party opposing the disclosure from the state agency, the private vendor shall immediately comply with the FAC's Determination. Should the private vendor or other party refuse to comply with FAC's Determination, then the FAC, in concert with the requesting agency, shall effectuate any and all options that it possesses to obtain the documents in question, including, but not limited to, jointly initiating an action in the appropriate court for relief.

V. Any provisions of any prior Order that conflicts with the provisions of this Order shall be deemed null and void.

SPECIAL NOTE FOR RECIPROCAL PREFERENCE

Reciprocal preference to be given by public agencies to resident bidders

By reference, KRS 45A.490 to 45A.494 are incorporated herein and in compliance regarding the bidders residency. Bidders who want to claim resident bidder status should complete the Affidavit for Claiming Resident Bidder Status along with their bid in the Expedite Bidding Program. Submittal of the Affidavit should be done along with the bid in Bid Express.

DGA BASE FOR SHOULDERS

Unless otherwise noted, the Department estimates the rate of application for DGA Base for Shoulders to be 115 lbs/sy per inch of depth. The Department will not measure necessary grading and/or shaping of existing shoulders prior to placing of DGA Base, but shall be incidental to the Contract unit price per ton for DGA Base.

Accept payment at the Contract unit price per ton as full compensation for all labor, materials, equipment, and incidentals for grading and/or shaping of existing shoulders and furnishing, placing, and compacting the DGA Base.

COORDINATION OF WORK WITH OTHER CONTRACTS

Be advised, there may be an active project(s) adjacent to or within this project. The Engineer will coordinate the work of the Contractors. See Section 105.06.

1-3193 Coordination Contracts
01/02/2012

SPECIAL NOTES FOR GUARDRAIL
CB06 031 0655 002-003

I. DESCRIPTION

Except as specified herein, perform all work in accordance with the Department's Standard and Supplemental Specifications and Standard and Sepia Drawings, current editions. Article references are to the Standard Specifications.

Furnish all equipment, labor, materials, and incidentals for the following work items:

(1) Site preparation; (2) Remove existing guardrail systems; (3) Construct Single Face and Single Face-A Guardrail; (4) Construct Bridge Guardrail Case I-A Modified: (5) Construct End Treatments and Terminal Sections, as applicable; (7) Construct Delineators for Guardrail; (8) Maintain and Control Traffic; and (9) all other work specified as part of this contract.

II. MATERIALS

Except as specified herein, provide for all materials to be sampled and tested in accordance with the Department's Sampling Manual and make the materials available for sampling a sufficient time in advance of the use of the materials to allow for the necessary time for testing.

A Maintain and Control Traffic. See Traffic Control Plan.

B. Guardrail. Furnish guardrail system components according to section 814 and the Standard Drawings; except use steel posts only, no alternates. Furnish Bridge Guardrail Case I-A Modified according to the detail drawings. Furnish Guardrail, Steel W Beam Single Face - A according to Standard Drawing BHS-007-006: except use steel posts only, no alternates.

C. Delineators for Guardrail. Furnish white and/or yellow Delineators for Guardrail according to the Delineators for Guardrail Sepia Drawing.

III. CONSTRUCTION METHODS

A. Maintain and Control Traffic. See Traffic Control Plan.

B. Site Preparation. Be responsible for all site preparation, including but not limited to, clearing and grubbing, excavation, embankment, and removal of all obstructions or any other items; regrading, reshaping, adding and compacting of DGA and other suitable materials on the existing shoulders to provide proper template or foundation for the guardrail, terminal sections, and end treatments; filling voids left as the result of removing existing guardrail and guard posts with dry sand; temporary pollution and erosion control; disposal of excess and waste materials and debris; and final dressing, cleanup, and seeding and protection. Perform all site preparation as approved or directed by the Engineer.

C. Remove Existing Guardrail System. Remove existing guardrail system including guard posts, guardrail, end treatments and terminal sections, bridge end connectors, bridge handrail and/or existing bridge guardrail, and all other elements of the existing guardrail system according to Section 719; however, contrary to Section 719, deliver removed guardrail to the Department's Edmonson County Maintenance facility. Perform guardrail removal operations under a full lane closure. After guardrail is removed, protect the removal area with a shoulder closure until the new guardrail system is completed.

D. Guardrail. Except as specified herein, construct guardrail system according to Section 719 and the Standard Drawings. Locations listed on the summary and/or shown on the drawings are approximate only. The Engineer will determine the exact termini for individual guardrail installations at the time of construction. Unless directed otherwise by the Engineer, provide a minimum two (2) foot shoulder width. Construct radii at entrances and road intersections as directed by the Engineer. Erect bridge guardrail according to the detail drawings. Erect Single Face-A guardrail according to the Standard Drawings on all four corners of the bridge.

Erect guardrail to the lines and grades shown on current Standard Drawings or as directed by the Engineer by any method approved by the Engineer which allows construction of the guardrail to the true grade without apparent sags.

When installing guardrail, do not leave blunt ends exposed where they would be hazardous to the public. When it is not practical to complete the construction of the guardrail and the permanent end treatments and terminal sections first, provide a temporary end by connecting at least 25 feet of rail to the last post, and by slightly flaring, and burying the end of the rail completely into the existing shoulder. If left overnight, place a drum with bridge panel in advance of the guardrail end and maintain during use.

E. Delineators for Guardrail. Construct Delineators for Guardrail according to the delineators for Guardrail Sepia Drawing.

F. Property Damage. Be responsible for all damage to public and/or private property resulting from the work. Restore damaged roadway features and private property at no additional cost to the Department.

G. Coordination with Utility Companies. Locate all underground, above ground and overhead utilities prior to beginning construction. Be responsible for contacting and maintaining liaison with all utility companies that have utilities located within the project limits. Do not disturb existing overhead or underground utilities. It is not anticipated that any utility facilities will need to be relocated and/or adjusted; however, in the event that it is discovered that the work does require that utilities be relocated and/or adjusted, the utility companies will work concurrently with the Contractor while relocating their facilities. Be responsible for repairing all utility damage that occurs as a result of guardrail operations at no additional cost to the Department.

H. Right of Way Limits. The Department has not established exact limits of the Right-of-Way. Limit work activities to obvious Right-of-Way, permanent or temporary easements, and work areas secured by the Department through consent and release of the adjacent property owners. Be responsible for all encroachments onto private lands.

I. Disposal of Waste. Dispose of all removed concrete, debris, and other waste and debris off the Right-of-Way at sites obtained by the Contractor at no additional cost to thee Department.

J. Final Dressing, Clean Up, and Seeding and Protection. Apply Class A Final Dressing to all disturbed areas, both on and off the Right-of-Way. Sow all disturbed earthen areas according to the Special Note for Erosion Control.

IV. METHOD OF MEASUREMENT

A. Maintain and Control Traffic. See Traffic Control Plan.

B. Site preparation. Other than the bid items listed, the Department will not measure Site Preparation for separate payment but shall be incidental to DGA, Guardrail, End Treatments, and Terminal Sections as applicable.

C. Guardrail, Terminal Sections, End Treatments, and Remove Guardrail. See Section 719.04.

D. Delineators for Guardrail. See Delineators for Guardrail Sepia Drawing.

E. Guardrail, Steel W Beam Single Face - A. See Standard Drawing BHS-007-006.

F. Remove Guardrail. See Section 719.04.08.

G. Bridge Guardrail Case I-A. The Department will measure Bridge Guardrail Case I-A in linear feet at the face of the guardrail between the limits for Single Face-A guardrail.

V. BASIS OF PAYMENT

A. Maintain and Control Traffic. See Traffic Control Plan.

B. Guardrail, Terminal Sections, Extra Length Posts, End Treatments, and Remove Guardrail. See Section 719.05.

C. Delineators for Guardrail. See Delineators for Guardrail Sepia Drawing.

D. Guardrail, Steel W Beam Single Face –A. Payment at the Contract unit price per linear foot shall be full compensation for all labor, equipment, materials, and incidentals to construct the Single Face-A guardrail according to Standard Drawing BHS-007-006 and these notes.

E. Bridge Guardrail Case I-A. Payment at the Contract unit price per linear foot shall be full compensation for all labor, equipment, materials, and incidentals to construct the Bridge Guardrail according to the detail drawings and these notes.

SPECIAL NOTE FOR TYPICAL SECTION DIMENSIONS

Consider the dimensions shown on the typical sections for pavement and shoulder widths and thickness' to be nominal or typical dimensions. The Engineer may direct or approve varying the actual dimensions to be constructed to fit existing conditions. Do not widen existing pavement or shoulders unless specified elsewhere in this proposal or directed by the engineer.

1-3725 Typical Section Dimensions
01/02/2012

TRAFFIC CONTROL PLAN
CB06 031 0655 002-003

TRAFFIC CONTROL GENERAL

Except as provided herein, maintain and control traffic in accordance with the Standard and Supplemental Specifications and the Standard and Sepia Drawings, current editions. Except for the roadway and traffic control bid items listed, all items of work necessary to maintain and control traffic will be paid at the lump sum bid price to "Maintain and Control Traffic".

Contrary to Section 106.01, furnish new, or used in like new condition, traffic control devices at the beginning of the work and maintain in like new condition until completion of the work.

PROJECT PHASING & CONSTRUCTION PROCEDURES

The Engineer may specify days and hours when lane closures will not be allowed.

Maintain alternating one way traffic during construction. Provide a minimum clear lane width of eight (8) feet; however, provide for passage of vehicles of up to 16 feet in width. If traffic should be stopped due to construction operations, and a school bus on an official run arrives on the scene, make provisions for the passage of the bus as quickly as possible.

LANE & SHOULDER CLOSURES

Perform all guardrail removal and construction operations protected by lane closures; however, do not leave lane closures in place during non-working hours. During non-working hours, protect all areas where guardrail has been removed and all areas with partially completed guardrail erection with a shoulder closure.

SIGNS

Contrary to section 112.04.02, only long term signs (signs intended to be continuously in place for more than 3 days) will be measured for payment; short term signs (signs intended to be left in place for 3 days or less) will not be measured for payment but will be incidental to Maintain and Control Traffic.

CHANGEABLE MESSAGE SIGNS

If deemed necessary by the Engineer, the Department will furnish, operate, and maintain Changeable Message Signs.

BARRICADES

The Department will not measure barricades used in lieu of barrels and cones for channelization or delineation, but shall be incidental to Maintain and Control Traffic according to Section 112.04.01.

The Department will measure barricades used to protect pavement removal areas in individual units Each. The Department will measure for payment the maximum number of barricades in concurrent use at the same time on a single day on all sections of the contract. The Department will measure individual barricades only once for payment, regardless of how many times they are set, reset, removed, and relocated during the duration of the project. The Department will not measure replacements for damaged barricades the Engineer directs to be replaced due to poor condition or reflectivity. Retain possession of the Barricades upon completion of construction.

PAVEMENT MARKINGS

If existing striping is damaged by the Contractor's operations, place Temporary and Permanent Striping according to Sections 112 and 713; however, the Department will not measure Temporary and Permanent Striping for separate payment, but shall be incidental to DGA, Guardrail, and End Treatments.

PAVEMENT EDGE DROP-OFFS

Do not allow a pavement edge between opposing directions of traffic or lanes that traffic is expected to cross in a lane change situation with an elevation difference greater than 1½". Place Warning signs (MUTCD W8-11 or W8-9A) in advance of and at 1500' intervals throughout the drop-off area. Dual post the signs on both sides of the traveled way. Wedge all transverse transitions between resurfaced and unresurfaced areas which traffic may cross with asphalt mixture for leveling and wedging. Remove the wedges prior to placement of the final surface course.

Protect pavement edges that traffic is not expected to cross, except accidentally, as follows:

> Less than 2" - No protection required.
>
> 2" to 4" - Place plastic drums, vertical panels, or barricades every 50 feet. During daylight working hours only, the Engineer will allow the Contractor to use cones in lieu of plastic drums, panels, and barricades. Wedge the drop-off with DGA or asphalt mixture for leveling and wedging with a 1:1 or flatter slope in daylight hours, or 3:1 or flatter slope during nighttime hours, when work is not active in the drop-off area.

Greater than 4' - Protect drop-offs greater than 4 inches within 10 feet of traffic by placing drums, vertical panels, or barricades every 25 feet. The Engineer will not allow the use of cones in lieu of drums, vertical panels, or barricades for drop-offs greater than 4". Place Type III Barricades directly in front of the drop-off facing on coming traffic in both directions of travel. Provide warning signs as shown on the Standard Drawings or as directed by the Engineer

Pedestrians & Bicycles - Protect pedestrian and bicycle traffic as directed by the engineer.

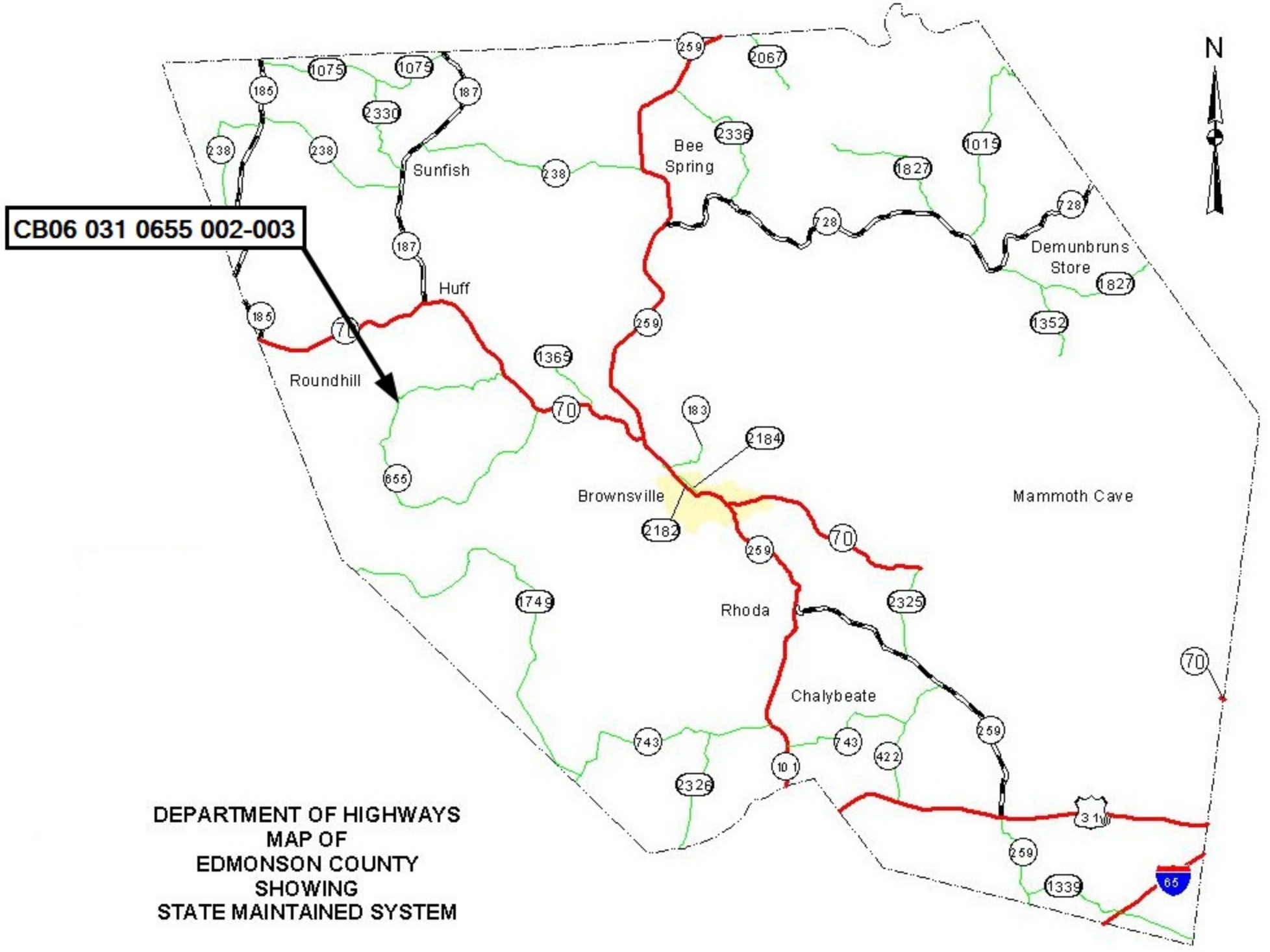

DEPARTMENT OF HIGHWAYS
MAP OF
EDMONSON COUNTY
SHOWING
STATE MAINTAINED SYSTEM

GUARDRAIL SUMMARY
CB06 031 0655 002-003

Right Milepoint 2.641 – Construct 137.5 LF Steel Beam Guardrail with 20 LF Bridge Guardrail Case I-A Modified and 50 LF Steel Beam Guardrail Single Face A

Left Milepoint 2.641 – Construct 187.5 LF Steel Beam Guardrail with 20 LF Bridge Guardrail Case I-A Modified and 50 LF Steel Beam Guardrail Single Face A

NOTE: Guardrail system locations and quantities are approximate only. The Engineer will determine the actual locations and quantities at the time of construction.

TYPICAL SECTION
CB06 031 0655 002-003

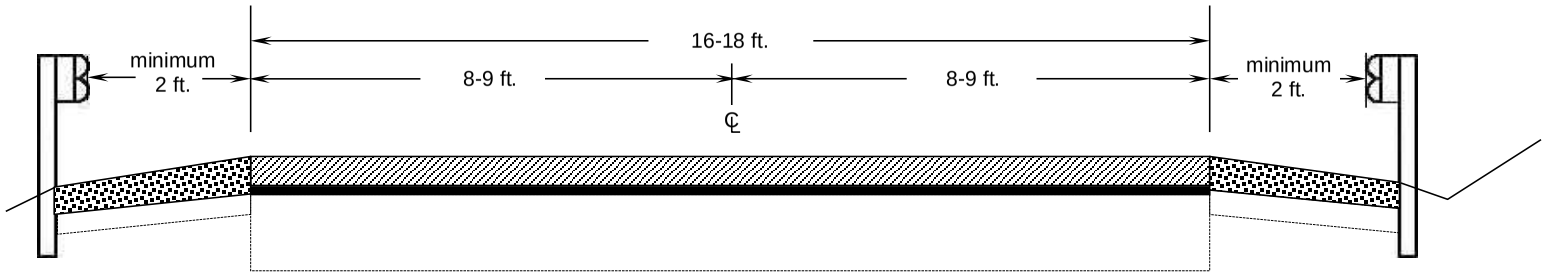

GUARDRAIL LAYOUT DETAIL
CB06 031 0655 002-003

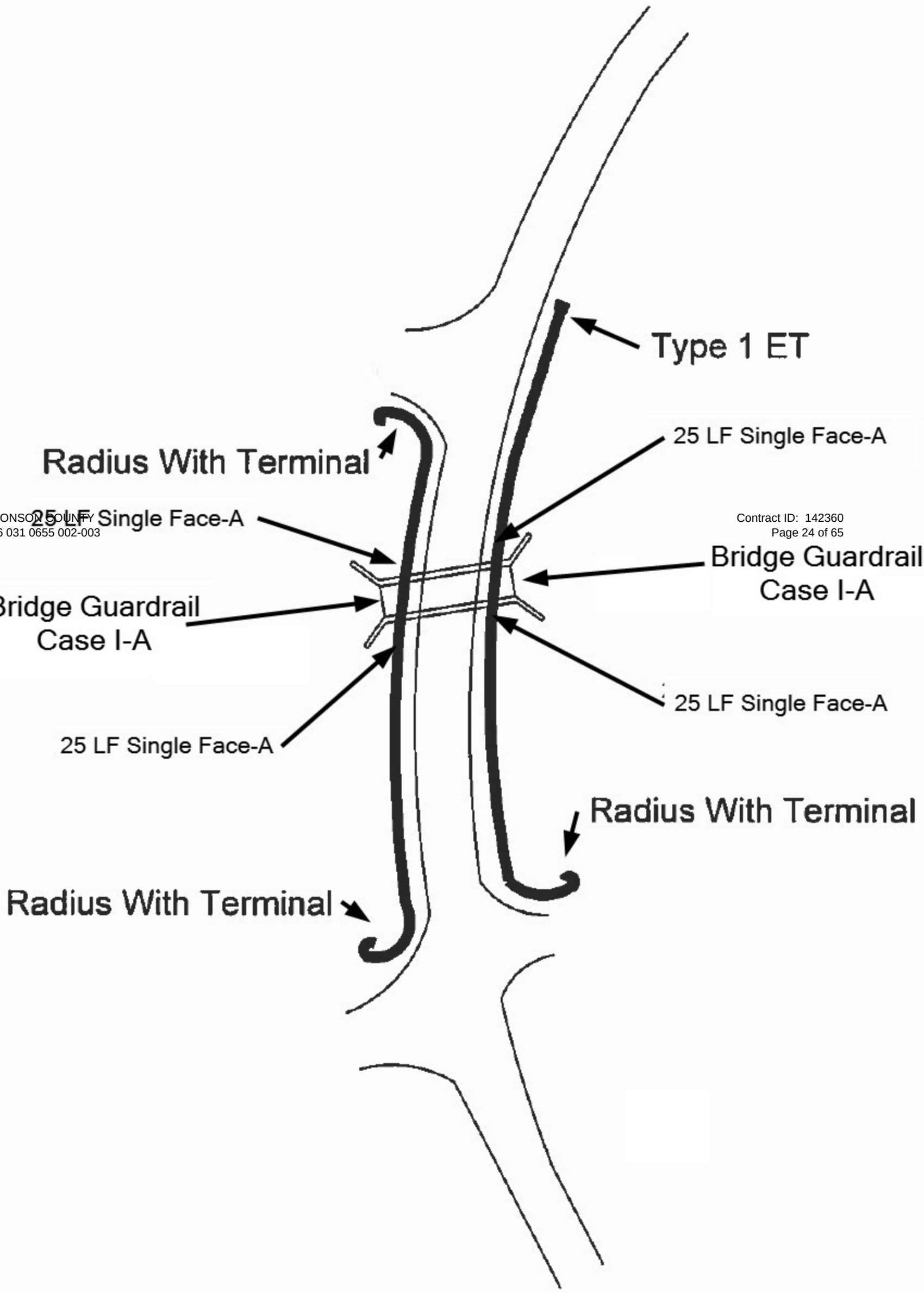

GUARDRAIL DELIVERY VERIFICATION SHEET

Contract Id: _____ **Contractor:** _____

Section Engineer: _____ **District & County:** _____

DESCRIPTION	UNIT	QTY LEAVING PROJECT	QTY RECEIVED@BB YARD
GUARDRAIL (Includes End treatments & crash cushions)	LF	_____	_____
STEEL POSTS	EACH	_____	_____
STEEL BLOCKS	EACH	_____	_____
WOOD OFFSET BLOCKS	EACH	_____	_____
BACK UP PLATES	EACH	_____	_____
CRASH CUSHION	EACH	_____	_____
NUTS, BOLTS, WASHERS	BAG/BCKT	_____	_____
DAMAGED RAIL TO MAINT. FACILITY	LF	_____	_____
DAMAGED POSTS TO MAINT. FACILITY	EACH	_____	_____

****Required Signatures before Leaving Project Site***

Printed Section Engineer's Representative_____& Date_____

Signature Section Engineer's Representative_____& Date_____

Printed Contractor's Representative_____& Date_____

Signature Contractor's Representative_____& Date_____

****Required Signatures after Arrival at Edmonson County Maintenance Facility (All material on truck must be counted & the quantity received column completed before signatures)***

Printed Edmonson County Representative_____& Date_____

Signature Edmonson County Representative_____& Date_____

Printed Contractor's Representative_____& Date_____

Signature Contractor's Representative_____& Date_____

**Payment for the bid item remove guardrail will be based upon the quantities shown in the Edmonson County yard received column. Payment will not be made for guardrail removal until the guardrail verification sheets are returned to the Section Engineer by the Edmonson County Representative.

Completed Form Submitted to Section Engineer Date: _____ By: _____

GUARDRAIL ON BRIDGE, CASE I-A
CURB HEIGHT GREATER THAN 2 INCHES

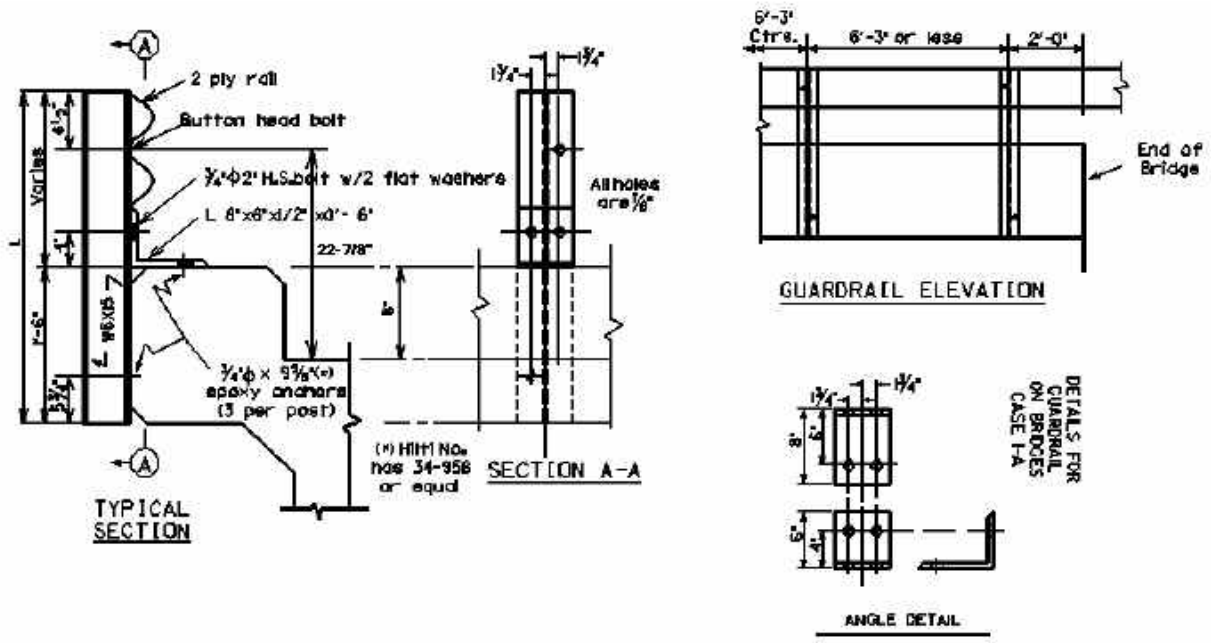

				On the Bridge
Bridge MP	L=	D=	No. Posts	LF of 2 PLY Rail
2.641	6 ft.	3 – 12 in.	14	40 LF

L = Length of Guardrail Post D = Curb Height W = Width of Bridge Curb

NOTES:

1. Remove existing guardrail bridge rail and erect Case I-A Bridge Guardrail.

2. Add a single or double offset block to each post as directed by the Engineer so that the existing plinth wall/curb does not extend beyond the face of the Case I-A rail.

3. Consider dimensions to be approximate only; verify in the field and obtain the Engineer's approval prior to erection.

PART II

SPECIFICATIONS AND STANDARD DRAWINGS

SPECIFICATIONS REFERENCE

Any reference in the plans or proposal to previous editions of the *Standard Specifications for Road and Bridge Construction* and *Standard Drawings* are superseded by *Standard Specifications for Road and Bridge Construction, Edition of 2012* and *Standard Drawings, Edition of 2012 with the 2012 Revision.*

Supplemental Specifications to the
Standard Specifications for Road and Bridge Construction, 2012 Edition
Effective with the August 22, 2014 Letting

Subsection: **Revision:**	102.15 Process Agent. Replace the 1st paragraph with the following: Every corporation doing business with the Department shall submit evidence of compliance with KRS Sections 14A.4-010, 271B.11-010, 271B.11-070, 271B.11-080, 271B.5-010 and 271B.16-220, and file with the Department the name and address of the process agent upon whom process may be served.
Subsection: **Revision:**	105.13 Claims Resolution Process. Delete all references to TC 63-34 and TC 63-44 from the subsection as these forms are no longer available through the forms library and are forms generated within the AASHTO SiteManager software.
Subsection: **Revision:**	108.03 Preconstruction Conference. Replace 8) Staking with the following: 8) Staking (designated by a Professional Engineer or Land Surveyor licensed in the Commonwealth of Kentucky.
Subsection: **Revision:**	109.07.02 Fuel. Revise item Crushed Aggregate Used for Embankment Stabilization to the following: Crushed Aggregate Used for Stabilization of Unsuitable Materials Used for Embankment Stabilization
	Delete the following item from the table. ~~Crushed Sandstone Base (Cement Treated)~~
Subsection: **Revision:**	110.02 Demobilization. Replace the first part of the first sentence of the second paragraph with the following: Perform all work and operations necessary to accomplish final clean-up as specified in the first paragraph of Subsection 105.12;
Subsection: **Revision:**	112.03.12 Project Traffic Coordinator (PTC). Replace the last paragraph of this subsection with the following: Ensure the designated PTC has sufficient skill and experience to properly perform the task assigned and has successfully completed the qualification courses.
Subsection: **Revision:**	112.04.18 Diversions (By-Pass Detours). Insert the following sentence after the 2nd sentence of this subsection. The Department will not measure temporary drainage structures for payment when the contract documents provide the required drainage opening that must be maintained with the diversion. The temporary drainage structures shall be incidental to the construction of the diversion. If the contract documents fail to provide the required drainage opening needed for the diversion, the cost of the temporary drainage structure will be handled as extra work in accordance with section 109.04.
Subsection: **Revision:**	201.03.01 Contractor Staking. Replace the first paragraph with the following: Perform all necessary surveying under the general supervision of a Professional Engineer or Land Surveyor licensed in the Commonwealth of Kentucky.

Supplemental Specifications to the Standard Specifications for Road and Bridge Construction, 2012 Edition Effective with the August 22, 2014 Letting

Subsection: **Revision:**	201.04.01 Contractor Staking. Replace the last sentence of the paragraph with the following: Complete the general layout of the project under the supervision of a Professional Engineer or Land Surveyor licensed in the Commonwealth of Kentucky.
Subsection: **Revision:**	206.04.01 Embankment-in-Place. Replace the fourth paragraph with the following: The Department will not measure **suitable** excavation included in the original plans that is disposed of for payment and will consider it incidental to Embankment-in-Place.
Subsection: **Revision:**	208.02.01 Cement. Replace paragraph with the following: Select Type I or Type II cement conforming to Section 801. Use the same type cement throughout the work.
Subsection: **Revision:**	208.03.06 Curing and Protection. Replace the fourth paragraph with the following: Do not allow traffic or equipment on the finished surface until the stabilized subgrade has cured for a total of 7-days with an ambient air temperature above 40 degrees Fahrenheit. A curing day consists of a continuous 24-hour period in which the ambient air temperature does not fall below 40 degrees Fahrenheit. Curing days will not be calculated consecutively, but must total seven (7) , 24-hour days with the ambient air temperature remaining at or above 40 degrees Fahrenheit before traffic or equipment will be allowed to traverse the stabilized subgrade. The Department may allow a shortened curing period when the Contractor requests. The Contractor shall give the Department at least 3 day notice of the request for a shortened curing period. The Department will require a minimum of 3 curing days after final compaction. The Contractor shall furnish cores to the treated depth of the roadbed at 500 feet intervals for each lane when a shortened curing time is requested. The Department will test cores using an unconfined compression test. Roadbed cores must achieve a minimum strength requirement of 80 psi.
Subsection: **Revision:**	208.03.06 Curing and Protection. Replace paragraph eight with the following: At no expense to the Department, repair any damage to the subgrade caused by freezing.
Subsection: **Part:** **Revision:**	212.03.03 Permanent Seeding and Protection. A) Seed Mixtures for Permanent Seeding. Revise **Seed Mix Type I** to the mixture shown below: 50% Kentucky 31 Tall Fescue (Festuca arundinacea) 35% Hard Fescue (Festuca (Festuca longifolia) 10% Ryegrass, Perennial (Lolium perenne) 5% White Dutch Clover (Trifolium repens)
Subsection: **Part:** **Number:** **Revision:**	212.03.03 Permanent Seeding and Protection. A) Seed Mixtures for Permanent Seeding. 2) Replace the paragraph with the following: Permanent Seeding on Slopes Greater than 3:1 in Highway Districts 4, 5, 6, and 7. Apply seed mix Type II at a minimum application rate of 100 pounds per acre. If adjacent to a golf course replace the crown vetch with Kentucky 31 Tall Fescue.

Supplemental Specifications to the
Standard Specifications for Road and Bridge Construction, 2012 Edition
Effective with the August 22, 2014 Letting

Subsection: **Part:** **Number:** **Revision:**	212.03.03 Permanent Seeding and Protection. A) Seed Mixtures for Permanent Seeding. 3) Replace the paragraph with the following: Permanent Seeding on Slopes Greater than 3:1 in Highway Districts 1, 2, 3, 8, 9, 10, 11, and 12. Apply seed mix Type III at a minimum application rate of 100 pounds per acre. If adjacent to crop land or golf course, replace the Sericea Lespedeza with Kentucky 31 Fescue.
Subsection: **Part:** **Revision:**	212.03.03 Permanent Seeding and Protection. B) Procedures for Permanent Seeding. Delete the first sentence of the section.
Subsection: **Part:** **Revision:**	212.03.03 Permanent Seeding and Protection. B) Procedures for Permanent Seeding. Replace the second and third sentence of the section with the following: Prepare a seedbed and apply an initial fertilizer that contains a minimum of 100 pounds of nitrogen, 100 pounds of phosphate, and 100 pounds of potash per acre. Apply agricultural limestone to the seedbed when the Engineer determines it is needed. When required, place agricultural limestone at a rate of 3 tons per acre.
Subsection: **Part:** **Revision:**	212.03.03 Permanent Seeding and Protection. D) Top Dressing. Change the title of part to D) Fertilizer.
Subsection: **Part:** **Revision:**	212.03.03 Permanent Seeding and Protection. D) Fertilizer. Replace the first paragraph with the following: Apply fertilizer at the beginning of the seeding operation and after vegetation is established. Use fertilizer delivered to the project in bags or bulk. Apply initial fertilizer to all areas prior to the seeding or sodding operation at the application rate specified in 212.03.03 B). Apply 20-10-10 fertilizer to the areas after vegetation has been established at a rate of 11.5 pounds per 1,000 square feet. Obtain approval from the Engineer prior to the 2nd fertilizer application. Reapply fertilizer to any area that has a streaked appearance. The reapplication shall be at no additional cost to the Department. Re-establish any vegetation severely damaged or destroyed because of an excessive application of fertilizer at no cost to the Department.
Subsection: **Part:** **Revision:**	212.03.03 Permanent Seeding and Protection. D) Fertilizer. Delete the second paragraph.
Subsection: **Revision:**	212.04.04 Agricultural Limestone. Replace the entire section with the following: The Department will measure the quantity of agricultural limestone in tons.
Subsection: **Revision:**	212.04.05 Fertilizer. Replace the entire section with the following: The Department will measure fertilizer used in the seeding or sodding operations for payment. The Department will measure the quantity by tons.

Supplemental Specifications to the Standard Specifications for Road and Bridge Construction, 2012 Edition Effective with the August 22, 2014 Letting

Subsection: **Revision:**	212.05 PAYMENT. Delete the following item code: Code — Pay Item — Pay Unit 05966 — Topdressing Fertilizer — Ton
Subsection: **Revision:**	212.05 PAYMENT. Add the following pay items: Code — Pay Item — Pay Unit 05963 — Initial Fertilizer — Ton 05964 — 20-10-10 Fertilizer — Ton 05992 — Agricultural Limestone — Ton
Subsection: **Revision:**	213.03.02 Progress Requirements. Replace the last sentence of the third paragraph with the following: Additionally, the Department will apply a penalty equal to the liquidated damages when all aspects of the work are not coordinated in an acceptable manner within 7 calendar days after written notification.
Subsection: **Part:** **Revision:**	213.03.05 Temporary Control Measures. E) Temporary Seeding and Protection. Delete the second sentence of the first paragraph.
Subsection: **Table:** **Revision:**	304.02.01 Physical Properties. Required Geogrid Properties Replace all references to Test Method "GRI-GG2-87" with ASTM D 7737.
Subsection: **Part:** **Revision:**	402.03.02 Contractor Quality Control and Department Acceptance. B) Sampling. Replace the second sentence with the following: The Department will determine when to obtain the quality control samples using the random-number feature of the mix design submittal and approval spreadsheet. The Department will randomly determine when to obtain the verification samples required in Subsections 402.03.03 and 402.03.04 using the Asphalt Mixture Sample Random Tonnage Generator.
Subsection: **Part:** **Number:** **Revision:**	402.03.02 Contractor Quality Control and Department Acceptance. D) Testing Responsibilities. 3) VMA. Add the following paragraph below Number 3) VMA: Retain the AV/VMA specimens and one additional corresponding G_{mm} sample for 5 working days for mixture verification testing by the Department. For Specialty Mixtures, retain a mixture sample for 5 working days for mixture verification testing by the Department. When the Department's test results do not verify that the Contractor's quality control test results are within the acceptable tolerances according to Subsection 402.03.03, retain the samples and specimens from the affected sublot(s) for the duration of the project.
Subsection: **Part:** **Number:** **Revision:**	402.03.02 Contractor Quality Control and Department Acceptance. D) Testing Responsibilities. 4) Density. Replace the second sentence of the Option A paragraph with the following: Perform coring by the end of the following work day.

Supplemental Specifications to the
Standard Specifications for Road and Bridge Construction, 2012 Edition
Effective with the August 22, 2014 Letting

Subsection: **Part:** **Number:** **Revision:**	402.03.02 Contractor Quality Control and Department Acceptance. D) Testing Responsibilities. 5) Gradation. Delete the second paragraph.
Subsection: **Part:** **Number:** **Revision:**	402.03.02 Contractor Quality Control and Department Acceptance. H) Unsatisfactory Work. 1) Based on Lab Data. Replace the second paragraph with the following: When the Engineer determines that safety concerns or other considerations prohibit an immediate shutdown, continue work and the Department will make an evaluation of acceptability according to Subsection 402.03.05.
Subsection: **Revision:**	402.03.03 Verification. Replace the first paragraph with the following: **402.03.03 Mixture Verification.** For volumetric properties, the Department will perform a minimum of one verification test for AC, AV, and VMA according to the corresponding procedures as given in Subsection 402.03.02. The Department will randomly determine when to obtain the verification sample using the Asphalt Mixture Sample Random Tonnage Generator. For specialty mixtures, the Department will perform one AC and one gradation determination per lot according to the corresponding procedures as given in Subsection 402.03.02. However, Department personnel will not perform AC determinations according to KM 64-405. The Contractor will obtain a quality control sample at the same time the Department obtains the mixture verification sample and perform testing according to the procedures given in Subsection 402.03.02. If the Contractor's quality control sample is verified by the Department's test results within the tolerances provided below, the Contractor's sample will serve as the quality control sample for the affected sublot. The Department may perform the mixture verification test on the Contractor's equipment or on the Department's equipment.
Subsection: **Part:** **Revision:**	402.03.03 Verification. A) Evaluation of Sublot(s) Verified by Department. Replace the third sentence of the second paragraph with the following: When the paired *t* -test indicates that the Contractor's data and Department's data are possibly not from the same population, the Department will investigate the cause for the difference according to Subsection 402.03.05 and implement corrective measures as the Engineer deems appropriate.
Subsection: **Part:** **Revision:**	402.03.03 Verification. B) Evaluation of Sublots Not Verified by Department. Replace the third sentence of the first paragraph with the following: When differences between test results are not within the tolerances listed below, the Department will resolve the discrepancy according to Subsection 402.03.05.

Supplemental Specifications to the
Standard Specifications for Road and Bridge Construction, 2012 Edition
Effective with the August 22, 2014 Letting

Subsection: **Part:** **Revision:**	402.03.03 Verification. B) Evaluation of Sublots Not Verified by Department. Replace the third sentence of the second paragraph with the following: When the *F* -test or *t* -test indicates that the Contractor's data and Department's data are possibly not from the same population, the Department will investigate the cause for the difference according to Subsection 402.03.05 and implement corrective measures as the Engineer deems appropriate.
Subsection: **Part:** **Revision:**	402.03.03 Verification. C) Test Data Patterns. Replace the second sentence with the following: When patterns indicate substantial differences between the verified and non-verified sublots, the Department will perform further comparative testing according to subsection 402.03.05.
Subsection: **Revision:**	402.03 CONSTRUCTION. Add the following subsection: **402.03.04 Testing Equipment and Technician Verification.** For mixtures with a minimum quantity of 20,000 tons and for every 20,000 tons thereafter, the Department will obtain an additional verification sample at random using the Asphalt Mixture Sample Random Tonnage Generator in order to verify the integrity of the Contractor's and Department's laboratory testing equipment and technicians. The Department will obtain a mixture sample of at least 150 lb at the asphalt mixing plant according to KM 64-425 and split it according to AASHTO R 47. The Department will retain one split portion of the sample and provide the other portion to the Contractor. At a later time convenient to both parties, the Department and Contractor will simultaneously reheat the sample to the specified compaction temperature and test the mixture for AV and VMA using separate laboratory equipment according to the corresponding procedures given in Subsection 402.03.02. The Department will evaluate the differences in test results between the two laboratories. When the difference between the results for AV or VMA is not within ± 2.0 percent, the Department will investigate and resolve the discrepancy according to Subsection 402.03.05.
Subsection: **Revision:**	402.03.04 Dispute Resolution. Change the subsection number to 402.03.05.
Subsection: **Part:** **Table:** **Revision:**	402.05 PAYMENT. Lot Pay Adjustment Schedule Compaction Option A Base and Binder Mixtures AC Replace the Deviation from JMF(%) that corresponds to a Pay Value of 0.95 to ±0.6.
Subsection: **Revision:**	403.02.10 Material Transfer Vehicle (MTV). Replace the first sentence with the following: In addition to the equipment specified above, provide a MTV with the following minimum characteristics:
Subsection: **Revision:**	412.02.09 Material Transfer Vehicle (MTV). Replace the paragraph with the following: Provide and utilize a MTV with the minimum characteristics outlined in section 403.02.10.

Supplemental Specifications to the
Standard Specifications for Road and Bridge Construction, 2012 Edition
Effective with the August 22, 2014 Letting

Subsection: **Revision:**	412.03.07 Placement and Compaction. Replace the first paragraph with the following: Use a MTV when placing SMA mixture in the driving lanes. The MTV is not required on ramps and/or shoulders unless specified in the contract. When the Engineer determines the use of the MTV is not practical for a portion of the project, the Engineer may waive its requirement for that portion of pavement by a letter documenting the waiver.
Subsection: **Revision:**	412.04 MEASUREMENT. Add the following subsection: 412.04.03. Material Transfer Vehicle (MTV). The Department will not measure the MTV for payment and will consider its use incidental to the asphalt mixture.
Subsection: **Part:** **Revision:**	501.03.19 Surface Tolerances and Testing Surface. B) Ride Quality. Add the following to the end of the first paragraph: The Department will specify if the ride quality requirements are Category A or Category B when ride quality is specified in the Contract. Category B ride quality requirements shall apply when the Department fails to classify which ride quality requirement will apply to the Contract.
Subsection: **Revision:**	603.03.06 Cofferdams. Replace the seventh sentence of paragraph one with the following: Submit drawings that are stamped by a Professional Engineer licensed in the Commonwealth of Kentucky.
Subsection: **Revision:**	605.03.04 Tack Welding. Insert the subsection and the following: 605.03.04 Tack Welding. The Department does not allow tack welding.
Subsection: **Part:** **Number:** **Revision:**	606.03.17 Special Requirements for Latex Concrete Overlays. A) Existing Bridges and New Structures. 1) Prewetting and Grout-Bond Coat. Add the following sentence to the last paragraph: Do not apply a grout-bond coat on bridge decks prepared by hydrodemolition.
Subsection: **Revision:**	609.03 Construction. Replace Subsection 609.03.01 with the following: 609.03.01 A) Swinging the Spans. Before placing concrete slabs on steel spans or precast concrete release the temporary erection supports under the bridge and swing the span free on its supports. 609.03.01 B) Lift Loops. Cut all lift loops flush with the top of the precast beam once the beam is placed in the final location and prior to placing steel reinforcement. At locations where lift loops are cut, paint the top of the beam with galvanized or epoxy paint.
Subsection: **Revision:**	611.03.02 Precast Unit Construction. Replace the first sentence of the subsection with the following: Construct units according to ASTM C1577, **replacing Table 1 (Design Requirements for Precast Concrete Box Sections Under Earth, Dead and HL-93 Live Load Conditions) with KY Table 1 (Precast Culvert KYHL-93 Design Table)**, and Section 605 with the following exceptions and additions:

Supplemental Specifications to the
Standard Specifications for Road and Bridge Construction, 2012 Edition
Effective with the August 22, 2014 Letting

Subsection: **Number:** **Revision:**	613.03.01 Design. 2) Replace "AASHTO Standard Specifications for Highway Bridges" with "AASHTO LRFD Bridge Design Specifications"
Subsection: **Revision:**	615.06.02 Add the following sentence to the end of the subsection. The ends of units shall be normal to walls and centerline except exposed edges shall be beveled ¾ inch.
Subsection: **Revision:**	615.06.03 Placement of Reinforcement in Precast 3-Sided Units. Replace the reference of 6.6 in the section to 615.06.06.
Subsection: **Revision:**	615.06.04 Placement of Reinforcement for Precast Endwalls. Replace the reference of 6.7 in the section to 615.06.07.
Subsection: **Revision:**	615.06.06 Laps, Welds, and Spacing for Precast 3-Sided Units. Replace the subsection with the following: Tension splices in the circumferential reinforcement shall be made by lapping. Laps may not be tack welded together for assembly purposes. For smooth welded wire fabric, the overlap shall meet the requirements of AASHTO 2012 Bridge Design Guide Section 5.11.2.5.2 and AASHTO 2012 Bridge Design Guide Section 5.11.6.3. For deformed welded wire fabric, the overlap shall meet the requirements of AASHTO 2012 Bridge Design Guide Section 5.11.2.5.1 and AASHTO 2012 Bridge Design Guide Section 5.11.6.2. The overlap of welded wire fabric shall be measured between the outer most longitudinal wires of each fabric sheet. For deformed billet-steel bars, the overlap shall meet the requirements of AASHTO 2012 Bridge Design Guide Section 5.11.2.1. For splices other than tension splices, the overlap shall be a minimum of 12" for welded wire fabric or deformed billet-steel bars. The spacing center to center of the circumferential wires in a wire fabric sheet shall be no less than 2 inches and no more than 4 inches. The spacing center to center of the longitudinal wires shall not be more than 8 inches. The spacing center to center of the longitudinal distribution steel for either line of reinforcing in the top slab shall be not more than 16 inches.
Subsection: **Revision:**	615.06.07 Laps, Welds, and Spacing for Precast Endwalls. Replace the subsection with the following: Splices in the reinforcement shall be made by lapping. Laps may not be tack welded together for assembly purposes. For smooth welded wire fabric, the overlap shall meet the requirements of AASHTO 2012 Bridge Design Guide Section 5.11.2.5.2 and AASHTO 2012 Bridge Design Guide Section 5.11.6.3. For deformed welded wire fabric, the overlap shall meet the requirements of AASHTO 2012 Bridge Design Guide Section 5.11.2.5.1 and AASHTO 2012 Bridge Design Guide Section 5.11.6.2. For deformed billet-steel bars, the overlap shall meet the requirements of AASHTO 2012 Bridge Design Guide Section 5.11.2.1. The spacing center-to-center of the wire fabric sheet shall not be less than 2 inches or more than 8 inches.

Supplemental Specifications to the
Standard Specifications for Road and Bridge Construction, 2012 Edition
Effective with the August 22, 2014 Letting

Subsection: **Revision:**	615.08.01 Type of Test Specimen. Replace the subsection with the following: Start-up slump, air content, unit weight, and temperature tests will be performed each day on the first batch of concrete. Acceptable start-up results are required for production of the first unit. After the first unit has been established, random acceptance testing is performed daily for each 50 yd^3 (or fraction thereof). In addition to the slump, air content, unit weight, and temperature tests, a minimum of one set of cylinders shall be required each time plastic property testing is performed.
Subsection: **Revision:**	615.08.02 Compression Testing. Delete the second sentence.
Subsection: **Revision:**	615.08.04 Acceptability of Core Tests. Delete the entire subsection.
Subsection: **Revision:**	615.12 Inspection. Add the following sentences to the end of the subsection: Units will arrive at jobsite with the "Kentucky Oval" stamped on the unit which is an indication of acceptable inspection at the production facility. Units shall be inspected upon arrival for any evidence of damage resulting from transport to the jobsite.
Subsection: **Revision:**	716.02.02 Paint. Replace sentence with the following: Conform to Section 821.
Subsection: **Revision:**	716.03 CONSTRUCTION. Replace bullet 5) with the following: 5) AASHTO Standard Specifications for Structural Supports for Highway Signs, Luminaires, and Traffic Signals, 2013-6th Edition with current interims,
Subsection: **Revision:**	716.03.02 Lighting Standard Installation. Replace the second sentence with the following: Regardless of the station and offset noted, locate all poles/bases behind the guardrail a minimum of four feet from the front face of the guardrail to the front face of the pole base.
Subsection: **Part:** **Revision:**	716.03.02 Lighting Standard Installation. A) Conventional Installation. Replace the third sentence with the following: Orient the transformer base so the door is positioned on the side away from on-coming traffic.
Subsection: **Part:** **Number:** **Revision:**	716.03.02 Lighting Standard Installation. A) Conventional Installation. 1) Breakaway Installation and Requirements. Replace the first sentence with the following: For breakaway supports, conform to Section 12 of the AASHTO Standard Specifications for Structural Supports for Highway Signs, Luminaires, and Traffic Signals, 2013-6th Edition with current interims.
Subsection: **Part:** **Revision:**	716.03.02 Lighting Standard Installation. B) High Mast Installation Replace the first sentence with the following: Install each high mast pole as noted on plans.
Subsection: **Part:** **Number:** **Revision:**	716.03.02 Lighting Standard Installation. B) High Mast Installation 2) Concrete Base Installation Modification of Chart and succeeding paragraphs within this section:

Supplemental Specifications to the
Standard Specifications for Road and Bridge Construction, 2012 Edition
Effective with the August 22, 2014 Letting

Drilled Shaft Depth Data							
Level Ground		3:1 Ground Slope		2:1 Ground Slope		1.5:1 Ground Slope (2)	
Soil	Rock	Soil	Rock	Soil	Rock	Soil	Rock
17 ft	7 ft	19 ft	7 ft	20 ft	7 ft	(1)	7 ft

Steel Requirements			
Vertical Bars		Ties or Spiral	
Size	Total	Size	Spacing or Pitch
#10	16	#4	12 inch

(1): Shaft length is 22' for cohesive soil only. For cohesionless soil, contact geotechnical branch for design.
(2): Do not construct high mast drilled shafts on ground slopes steeper than 1.5:1 without the approval of the Division of Traffic.

If rock is encountered during drilling operations and confirmed by the engineer to be of sound quality, the shaft is only required to be further advanced into the rock by the length of rock socket shown in the table. The total length of the shaft need not be longer than that of soil alone. Both longitudinal rebar length and number of ties or spiral length shall be adjusted accordingly.

If a shorter depth is desired for the drilled shaft, the contractor shall provide, for the state's review and approval, a detailed column design with individual site specific soil and rock analysis performed and approved by a Professional Engineer licensed in the Commonwealth of Kentucky.

Spiral reinforcement may be substituted for ties. If spiral reinforcement is used, one and one-half closed coils shall be provided at the ends of each spiral unit. Subsurface conditions consisting of very soft clay or very loose saturated sand could result in soil parameters weaker than those assumed. Engineer shall consult with the geotechnical branch if such conditions are encountered.

The bottom of the drilled hole shall be firm and thoroughly cleaned so no loose or compressible materials are present at the time of the concrete placement. If the drilled hole contains standing water, the concrete shall be placed using a tremie to displace water. Continuous concrete flow will be required to insure full displacement of any water.

The reinforcement and anchor bolts shall be adequately supported in the proper positions so no movement occurs during concrete placement. Welding of anchor bolts to the reinforcing cage is unacceptable, templates shall be used. Exposed portions of the foundation shall be formed to create a smooth finished surface. All forming shall be removed upon completion of foundation construction.

Subsection: 716.03.03 Trenching.
Part: A) Trenching of Conduit for Highmast Ducted Cables.
Revision: Add the following after the first sentence: If depths greater than 24 inches are necessary, obtain the Engineer's approval and maintain the required conduit depths coming into the junction boxes. No payment for additional junction boxes for greater depths will be allowed.

Supplemental Specifications to the
Standard Specifications for Road and Bridge Construction, 2012 Edition
Effective with the August 22, 2014 Letting

Subsection: **Part:** **Revision:**	716.03.03 Trenching. B) Trenching of Conduit for Non-Highmast Cables. Add the following after the second sentence: If depths greater than 24 inches are necessary for either situation listed previously, obtain the Engineer's approval and maintain the required conduit depths coming into the junction boxes. No payment for additional junction boxes for greater depths will be allowed.
Subsection: **Revision:**	716.03.10 Junction Boxes. Replace subsection title with the following: Electrical Junction Box.
Subsection: **Revision:**	716.04.07 Pole with Secondary Control Equipment. Replace the paragraph with the following: The Department will measure the quantity as each individual unit furnished and installed. The Department will not measure mounting the cabinet to the pole, backfilling, restoration, any necessary hardware to anchor pole, or electrical inspection fees, and will consider them incidental to this item of work. The Department will also not measure furnishing and installing electrical service conductors, specified conduits, meter base, transformer, service panel, fused cutout, fuses, lighting arrestors, photoelectrical control, circuit breaker, contactor, manual switch, ground rods, and ground wires and will consider them incidental to this item of work.
Subsection: **Revision:**	716.04.08 Lighting Control Equipment. Replace the paragraph with the following: The Department will measure the quantity as each individual unit furnished and installed. The Department will not measure constructing the concrete base, excavation, backfilling, restoration, any necessary anchors, or electrical inspection fees, and will consider them incidental to this item of work. The Department will also not measure furnishing and installing electrical service conductors, specified conduits, meter base, transformer, service panel, fused cutout, fuses, lighting arrestors, photoelectrical control, circuit breakers, contactor, manual switch, ground rods, and ground wires and will consider them incidental to this item of work.
Subsection: **Revision:**	716.04.09 Luminaire. Replace the first sentence with the following: The Department will measure the quantity as each individual unit furnished and installed.
Subsection: **Revision:**	716.04.10 Fused Connector Kits. Replace the first sentence with the following: The Department will measure the quantity as each individual unit furnished and installed.
Subsection: **Revision:**	716.04.13 Junction Box. Replace the subsection title with the following: Electrical Junction Box Type Various.
Subsection: **Part:** **Revision:**	716.04.13 Junction Box. A) Junction Electrical. Rename A) Junction Electrical to the following: A) Electrical Junction Box.
Subsection: **Revision:**	716.04.14 Trenching and Backfilling. Replace the second sentence with the following: The Department will not measure excavation, backfilling, underground utility warning tape (if required), the restoration of disturbed areas to original condition, and will consider them incidental to this item of work.

Supplemental Specifications to the
Standard Specifications for Road and Bridge Construction, 2012 Edition
Effective with the August 22, 2014 Letting

Subsection: **Revision:**	716.04.18 Remove Lighting. Replace the paragraph with the following: The Department will measure the quantity as a lump sum for the removal of lighting equipment. The Department will not measure the disposal of all equipment and materials off the project by the contractor. The Department also will not measure the transportation of the materials and will consider them incidental to this item of work.
Subsection: **Revision:**	716.04.20 Bore and Jack Conduit. Replace the paragraph with the following: The Department will measure the quantity in linear feet. This item shall include all work necessary for boring and installing conduit under an existing roadway. Construction methods shall be in accordance with Sections 706.03.02, paragraphs 1, 2, and 4.
Subsection: **Revision:**	716.05 PAYMENT. Replace items 04810-04811, 20391NS835 and, 20392NS835 under Code, Pay Item, and Pay Unit with the following: Code — Pay Item — Pay Unit 04810 — Electrical Junction Box — Each 04811 — Electrical Junction Box Type B — Each 20391NS835 — Electrical Junction Box Type A — Each 20392NS835 — Electrical Junction Box Type C — Each
Subsection: **Revision:**	723.02.02 Paint. Replace sentence with the following: Conform to Section 821.
Subsection: **Revision:**	723.03 CONSTRUCTION. Replace bullet 5) with the following: 5) AASHTO Standard Specifications for Structural Supports for Highway Signs, Luminaires, and Traffic Signals, 2013-6th Edition with current interims,
Subsection: **Revision:**	723.03.02 Poles and Bases Installation. Replace the first sentence with the following: Regardless of the station and offset noted, locate all poles/bases behind the guardrail a minimum of four feet from the front face of the guardrail to the front face of the pole base.
Subsection: **Part:** **Revision:**	723.03.02 Poles and Bases Installation. A) Steel Strain and Mastarm Poles Installation Replace the second paragraph with the following: For concrete base installation, see Section 716.03.02, B), 2), Paragraphs 2-7. Drilled shaft depth shall be based on the soil conditions encountered during drilling and slope condition at the site. Refer to the design chart below:
Subsection: **Part:** **Revision:**	723.03.02 Poles and Bases Installation. B) Pedestal or Pedestal Post Installation. Replace the fourth sentence of the paragraph with the following: For breakaway supports, conform to Section 12 of the AASHTO Standard Specifications for Structural Supports for Highway Signs, Luminaires, and Traffic Signals, 2013-6th Edition with current interims.

Supplemental Specifications to the
Standard Specifications for Road and Bridge Construction, 2012 Edition
Effective with the August 22, 2014 Letting

Subsection: **Part:** **Revision:**	723.03.03 Trenching. A) Under Roadway. Add the following after the second sentence: If depths greater than 24 inches are necessary, obtain the Engineer's approval and maintain ether required conduit depths coming into the junction boxes. No payment for additional junction boxes for greater depths will be allowed.
Subsection: **Revision:**	723.03.11 Wiring Installation. Add the following sentence between the fifth and sixth sentences: Provide an extra two feet of loop wire and lead-in past the installed conduit in poles, pedestals, and junction boxes.
Subsection: **Revision:**	723.03.12 Loop Installation. Replace the fourth sentence of the 2nd paragraph with the following: Provide an extra two feet of loop wire and lead-in past the installed conduit in poles, pedestals, and junction boxes.
Subsection: **Revision:**	723.04.02 Junction Box. Replace subsection title with the following: Electrical Junction Box Type Various.
Subsection: **Revision:**	723.04.03 Trenching and Backfilling. Replace the second sentence with the following: The Department will not measure excavation, backfilling, underground utility warning tape (if required), the restoration of disturbed areas to original condition, and will consider them incidental to this item of work.
Subsection: **Revision:**	723.04.10 Signal Pedestal. Replace the second sentence with the following: The Department will not measure excavation, concrete, reinforcing steel, specified conduits, fittings, ground rod, ground wire, backfilling, restoring disturbed areas, or other necessary hardware and will consider them incidental to this item of work.
Subsection: **Revision:**	723.04.15 Loop Saw Slot and Fill. Replace the second sentence with the following: The Department will not measure sawing, cleaning and filling induction loop saw slot, loop sealant, backer rod, and grout and will consider them incidental to this item of work.
Subsection: **Revision:**	723.04.16 Pedestrian Detector. Replace the paragraph with the following: The Department will measure the quantity as each individual unit furnished, installed and connected to pole/pedestal. The Department will not measure installing R10-3e (with arrow) sign, furnishing and installing mounting hardware for sign and will consider them incidental to this item of work.
Subsection: **Revision:**	723.04.18 Signal Controller- Type 170. Replace the second sentence with the following: The Department will not measure constructing the concrete base or mounting the cabinet to the pole, connecting the signal and detectors, excavation, backfilling, restoration, any necessary pole mounting hardware, electric service, or electrical inspection fees and will consider them incidental to this item of work. The Department will also not measure furnishing and connecting the induction of loop amplifiers, pedestrian isolators, load switches, model 400 modem card; furnishing and installing electrical service conductors, specified conduits, anchors, meter base, fused cutout, fuses, ground rods, ground wires and will consider them incidental to this item of work.

Supplemental Specifications to the
Standard Specifications for Road and Bridge Construction, 2012 Edition
Effective with the August 22, 2014 Letting

Subsection: **Revision:**	723.04.20 Install Signal Controller - Type 170. Replace the paragraph with the following: The Department will measure the quantity as each individual unit installed. The Department will not measure constructing the concrete base or mounting the cabinet to the pole, connecting the signal and detectors, and excavation, backfilling, restoration, any necessary pole mounting hardware, electric service, or electrical inspection fees and will consider them incidental to this item of work. The Department will also not measure connecting the induction loop amplifiers, pedestrian, isolators, load switches, model 400 modem card; furnishing and installing electrical service conductors, specified conduits, anchors, meter base, fused cutout, fuses, ground rods, ground wires and will consider them incidental to this item of work.
Subsection: **Revision:**	723.04.22 Remove Signal Equipment. Replace the paragraph with the following: The Department will measure the quantity as a lump sum removal of signal equipment. The Department will not measure the return of control equipment and signal heads to the Department of Highways as directed by the District Traffic Engineer. The Department also will not measure the transportation of materials of the disposal of all other equipment and materials off the project by the contractor and will consider them incidental to this item of work.
Subsection: **Revision:**	723.04.28 Install Pedestrian Detector Audible. Replace the second sentence with the following: The Department will not measure installing sign R10-3e (with arrow) and will consider it incidental to this item of work.
Subsection: **Revision:**	723.04.29 Audible Pedestrian Detector. Replace the second sentence with the following: The Department will not measure furnishing and installing the sign R10-3e (with arrow) and will consider it incidental to this item of work.
Subsection: **Revision:**	723.04.30 Bore and Jack Conduit. Replace the paragraph with the following: The Department will measure the quantity in linear feet. This item shall include all work necessary for boring and installing conduit under an existing roadway. Construction methods shall be in accordance with Sections 706.03.02, paragraphs 1, 2, and 4.
Subsection: **Revision:**	723.04.31 Install Pedestrian Detector. Replace the paragraph with the following: The Department will measure the quantity as each individual unit installed and connected to pole/pedestal. The Department will not measure installing sign R 10-3e (with arrow) and will consider it incidental to this item of work.
Subsection: **Revision:**	723.04.32 Install Mast Arm Pole. Replace the second sentence with the following: The Department will not measure arms, signal mounting brackets, anchor bolts, or any other necessary hardware and will consider them incidental to this item of work.
Subsection: **Revision:**	723.04.33 Pedestal Post. Replace the second sentence with the following: The Department will not measure excavation, concrete, reinforcing steel, anchor bolts, conduit, fittings, ground rod, ground wire, backfilling, restoration, or any other necessary hardware and will consider them incidental to this item of work.

Supplemental Specifications to the
Standard Specifications for Road and Bridge Construction, 2012 Edition
Effective with the August 22, 2014 Letting

Subsection: **Revision:**	723.04.36 Traffic Signal Pole Base. Replace the second sentence with the following: The Department will not measure excavation, reinforcing steel, anchor bolts, specified conduits, ground rods, ground wires, backfilling, or restoration and will consider them incidental to this item of work.
Subsection: **Revision:**	723.04.37 Install Signal Pedestal. Replace the second sentence with the following: The Department will not measure excavation, concrete, reinforcing steel, anchor bolts, specified conduits, fittings, ground rod, ground wire, backfilling, restoration, or any other necessary hardware and will consider them incidental to this item of work.
Subsection: **Revision:**	723.04.38 Install Pedestal Post. Replace the second sentence with the following: The Department will not measure excavation, concrete, reinforcing steel, anchor bolts, specified conduits, fittings, ground rod, ground wire, backfilling, restoration, or any other necessary hardware and will consider them incidental to this item of work.
Subsection: **Revision:**	723.05 PAYMENT. Replace items 04810-04811, 20391NS835 and, 20392NS835 under Code, Pay Item, and Pay Unit with the following: Code — Pay Item — Pay Unit 04810 — Electrical Junction Box — Each 04811 — Electrical Junction Box Type B — Each 20391NS835 — Electrical Junction Box Type A — Each 20392NS835 — Electrical Junction Box Type C — Each
Subsection: **Revision:**	804.01.02 Crushed Sand. Delete last sentence of the section.
Subsection: **Revision:**	804.01.06 Slag. Add subsection and following sentence. Provide blast furnace slag sand where permitted. The Department will allow steel slag sand only in asphalt surface applications.
Subsection: **Revision:**	804.04 Asphalt Mixtures. Replace the subsection with the following: Provide natural, crushed, conglomerate, or blast furnace slag sand, with the addition of filler as necessary, to meet gradation requirements. The Department will allow any combination of natural, crushed, conglomerate or blast furnace slag sand when the combination is achieved using cold feeds at the plant. The Engineer may allow other fine aggregates.
Subsection: **Revision:**	806.03.01 General Requirements. Replace the second sentence of the paragraph with the following: Additionally, the material must have a minimum solubility of 99.0 percent when tested according to AASHTO T 44 and PG 76-22 must exhibit a minimum recovery of 60 percent, with a J_{NR} (nonrecoverable creep compliance) between 0.1 and 0.5, when tested according to AASHTO TP 70.

Supplemental Specifications to the Standard Specifications for Road and Bridge Construction, 2012 Edition Effective with the August 22, 2014 Letting

Subsection: 806.03.01 General Requirements.
Table: PG Binder Requirements and Price Adjustment Schedule
Revision: Replace the Elastic Recovery, % [3] (AASHTO T301) and all corresponding values in the table with the following:

Test	Specification	100% Pay	90% Pay	80% Pay	70% Pay	50%Pay[1]
MSCR recovery, % [3] (AASHTO TP 70)	60 Min.	≥58	56	55	54	<53

Subsection: 806.03.01 General Requirements.
Table: PG Binder Requirements and Price Adjustment Schedule
Superscript: (3)
Revision: Replace [3] with the following:
Perform testing at 64°C.

Subsection: 813.04 Gray Iron Castings.
Revision: Replace the reference to "AASHTO M105" with "ASTM A48".

Subsection: 813.09.02 High Strength Steel Bolts, Nuts, and Washers.
Number: A) Bolts.
Revision: Delete first paragraph and "Hardness Number" Table. Replace with the following:
A) Bolts. Conform to ASTM A325 (AASHTO M164) or ASTM A490 (AASHTO 253) as applicable.

Subsection: 814.04.02 Timber Guardrail Posts.
Revision: Third paragraph, replace the reference to "AWPA C14" with "AWPA U1, Section B, Paragraph 4.1".

Subsection: 814.04.02 Timber Guardrail Posts.
Revision: Replace the first sentence of the fourth paragraph with the following:
Use any of the species of wood for round or square posts covered under AWPA U1.

Subsection: 814.04.02 Timber Guardrail Posts.
Revision: Fourth paragraph, replace the reference to "AWPA C2" with "AWPA U1, Section B, Paragraph 4.1".

Subsection: 814.04.02 Timber Guardrail Posts.
Revision: Delete the second sentence of the fourth paragraph.

Subsection: 814.05.02 Composite Plastic.
Revision: 1) Add the following to the beginning of the first paragraph: Select composite offset blocks conforming to this section and assure blocks are from a manufacturer included on the Department's List of Approved Materials.
2) Delete the last paragraph of the subsection.

Subsection: 816.07.02 Wood Posts and Braces.
Revision: First paragraph, replace the reference to "AWPA C5" with "AWPA U1, Section B, Paragraph 4.1".

Subsection: 816.07.02 Wood Posts and Braces.
Revision: Delete the second sentence of the first paragraph.

Subsection: 818.07 Preservative Treatment.
Revision: First paragraph, replace all references to "AWPA C14" with "AWPA U1, Section A".

Supplemental Specifications to the
Standard Specifications for Road and Bridge Construction, 2012 Edition
Effective with the August 22, 2014 Letting

Subsection: **Revision:**	834.14 Lighting Poles. Replace the first sentence with the following: Lighting pole design shall be in accordance with loading and allowable stress requirements of the AASHTO Standard Specifications for Structural Supports for Highway Signs, Luminaires, and Traffic Signals, 2013-6th Edition with current interims, with the exception of the following: The Cabinet will waive the requirement stated in the first sentence of Section 5.14.6.2 – Reinforced Holes and Cutouts for high mast poles (only). The minimum diameter at the base of the pole shall be 22 inches for high mast poles (only).
Subsection **Revision:**	834.14.03 High Mast Poles. Remove the second and fourth sentence from the first paragraph.
Subsection **Revision:**	834.14.03 High Mast Poles. Replace the third paragraph with the following: Provide calculations and drawings that are stamped by a Professional Engineer licensed in the Commonwealth of Kentucky.
Subsection: **Revision:**	834.14.03 High Mast Poles. Replace paragraph six with the following: Provide a pole section that conforms to ASTM A 595 grade A with a minimum yield strength of 55 KSI or ASTM A 572 with a minimum yield strength of 55 KSI. Use tubes that are round or 16 sided with a four inch corner radius, have a constant linear taper of .144 in/ft and contain only one longitudinal seam weld. Circumferential welded tube butt splices and laminated tubes are not permitted. Provide pole sections that are telescopically slip fit assembled in the field to facilitate inspection of interior surface welds and the protective coating. The minimum length of the telescopic slip splices shall be 1.5 times the inside diameter of the exposed end of the female section. Use longitudinal seam welds as commended in Section 5.15 of the AASHTO 2013 Specifications. The thickness of the transverse base shall not be less than 2 inches. Plates shall be integrally welded to the tubes with a telescopic welded joint or a full penetration groove weld with backup bar. The handhole cover shall be removable from the handhole frame. One the frame side opposite the hinge, provide a mechanism on the handhole cover/frame to place the Department's standard padlock as specified in Section 834.25. The handhole frame shall have two stainless studs installed opposite the hinge to secure the handhole cover to the frame which includes providing stainless steel wing nuts and washers. The handhole cover shall be manufactured from 0.25 inch thick galvanized steel (ASTM A 153) and have a neoprene rubber gasket that is permanently secured to the handhole frame to insure weather-tight protection. The hinge shall be manufactured from 7-guage stainless steel to provide adjustability to insure weather-tight fit for the cover. The minimum clear distance between the transverse plate and the bottom opening of the handhole shall not be less than the diameter of the bottom tube of the pole but needs to be at least 15 inches. Provide products that are hot-dip galvanized to the requirements of either ASTM A123 (fabricated products) or ASTM A 153 (hardware items).
Subsection: **Revision:**	834.16 ANCHOR BOLTS. Insert the following sentence at the beginning of the paragraph: The anchor bolt design shall follow the NCHRP Report 494 Section 2.4 and NCHRP 469 Appendix A Specifications.

Supplemental Specifications to the
Standard Specifications for Road and Bridge Construction, 2012 Edition
Effective with the August 22, 2014 Letting

Subsection: **Revision:**	834.17.01 Conventional. Add the following sentence after the second sentence: Provide a waterproof sticker mounted on the bottom of the housing that is legible from the ground and indicates the wattage of the fixture by providing the first two numbers of the wattage.
Subsection: **Revision:**	834.21.01 Waterproof Enclosures. Replace the last five sentences in the second paragraph with the following sentences: Provide a cabinet door with a louvered air vent, filter-retaining brackets and an easy to clean metal filter. Provide a cabinet door that is keyed with a factory installed standard no. 2 corbin traffic control key. Provide a light fixture with switch and bulb. Use a 120-volt fixture and utilize a L.E.D. bulb (equivalent to 60 watts minimum). Fixture shall be situated at or near the top of the cabinet and illuminate the contents of the cabinet. Provide a 120 VAC GFI duplex receptacle in the enclosure with a separate 20 amp breaker.
Subsection: **Revision:**	835.07 Traffic Poles. Replace the first sentence of the first paragraph with the following: Pole diameter and wall thickness shall be calculated in accordance with the AASHTO Standard Specifications for Structural Supports for Highway Signs, Luminaires, and Traffic Signals, 2013-6th Edition with current interims.
Subsection: **Revision:**	835.07 Traffic Poles. *Replace the first sentence of the fourth paragraph with the following: Ensure transverse plates have a thickness ≥ 2 inches. *Add the following sentence to the end of the fourth paragraph: The bottom pole diameter shall not be less than 16.25 inches.
Subsection: **Revision:**	835.07 Traffic Poles. Replace the third sentence of the fifth paragraph with the following: For anchor bolt design, pole forces shall be positioned in such a manner to maximize the force on any individual anchor bolt regardless of the actual anchor bolt orientation with the pole.
Subsection: **Revision:**	835.07 Traffic Poles. Replace the first and second sentence of the sixth paragraph with the following: The pole handhole shall be 25 inches by 6.5 inches. The handhole cover shall be removable from the handhole frame. On the frame side opposite the hinge, provide a mechanism on the handhole cover/frame to place the Department's standard padlock as specified in Section 834.25. The handhole frame shall have two stainless studs installed opposite the hinge to secure the handhole cover to the frame which includes providing stainless steel wing nuts and washers. The handhole cover shall be manufactured from 0.25 inch thick galvanized steel (ASTM 153) and have a neoprene rubber gasket that is permanently secured to the handhole frame to insure weather-tight protection. The hinge shall be manufactured from 7 gauge stainless steel to provide adjustability to insure a weather-tight fit for the cover. The minimum clear distance between the transverse plate and the bottom opening of the handhole shall not be less than the diameter of the bottom tube but needs to be at least 12 inches.

Supplemental Specifications to the Standard Specifications for Road and Bridge Construction, 2012 Edition Effective with the August 22, 2014 Letting

Subsection: **Revision:**	835.07 Traffic Poles. *Replace the first sentence of the last paragraph with the following: Provide calculations and drawings that are stamped by a Professional Engineer licensed in the Commonwealth of Kentucky. *Replace the third sentence of the last paragraph with the following: All tables referenced in 835.07 are found in the AASHTO Standard Specifications for Structural Supports for Highway Signs, Luminaires, and Traffic Signals, 2013-6th Edition with current interims.
Subsection: **Revision:**	835.07.01 Steel Strain Poles. Replace the second sentence of the second paragraph with the following: The detailed analysis shall be certified by a Professional Engineer licensed in the Commonwealth of Kentucky.
Subsection: **Revision:**	835.07.01 Steel Strain Poles. Replace number 7. after the second paragraph with the following: 7. Fatigue calculations should be shown for all fatigue related connections. Provide the corresponding detail, stress category and example from table 11.9.3.1-1.
Subsection: **Revision:**	835.07.02 Mast Arm Poles. Replace the second sentence of the fourth paragraph with the following: The detailed analysis shall be certified by a Professional Engineer licensed in the Commonwealth of Kentucky.
Subsection: **Revision:**	835.07.02 Mast Arm Poles. Replace number 7) after the fourth paragraph with the following: 7) Fatigue calculations should be shown for all fatigue related connections. Provide the corresponding detail, stress category and example from table 11.9.3.1-1.
Subsection: **Revision:**	835.07.03 Anchor Bolts. Add the following to the end of the paragraph: There shall be two steel templates (one can be used for the headed part of the anchor bolt when designed in this manner) provided per pole. Templates shall be contained within a 26.5 inch diameter. All templates shall be fully galvanized (ASTM A 153).
Subsection: **Revision:**	835.16.05 Optical Units. Replace the 3rd paragraph with the following: The list of certified products can be found on the following website: http://www.intertek.com.
Subsection: **Revision:**	835.19.01 Pedestrian Detector Body. Replace the first sentence with the following: Provide a four holed pole mounted aluminum rectangular housing that is compatible with the pedestrian detector.
Subsection: **Table:** **Revision:**	843.01.01 Geotextile Fabric. TYPE I FABRIC GEOTEXTILES FOR SLOPE PROTECTION AND CHANNEL LINING Add the following to the chart: Property — Minimum Value(1) — Test Method CBR Puncture (lbs) — 494 — ASTM D6241 Permittivity (1/s) — 0.7 — ASTM D4491

Supplemental Specifications to the
Standard Specifications for Road and Bridge Construction, 2012 Edition
Effective with the August 22, 2014 Letting

Subsection: 843.01.01 Geotextile Fabric.
Table: TYPE II FABRIC GEOTEXTILES FOR UNDERDRAINS
Revision: Add the following to the chart:

Property	Minimum Value[1]	Test Method
CBR Puncture (lbs)	210	ASTM D6241
Permittivity (1/s)	0.5	ASTM D4491

Subsection: 843.01.01 Geotextile Fabric.
Table: TYPE III FABRIC GEOTEXTILES FOR SUBGRADE OR EMBANKMENT STABILIZATION
Revision: Add the following to the chart:

Property	Minimum Value[1]	Test Method
CBR Puncture (lbs)	370	ASTM D6241
Permittivity (1/s)	0.05	ASTM D4491

Subsection: 843.01.01 Geotextile Fabric.
Table: TYPE IV FABRIC GEOTEXTILES FOR EMBANKMENT DRAINAGE BLANKETS AND PAVEMENT EDGE DRAINS
Revision: Add the following to the chart:

Property	Minimum Value[1]	Test Method
CBR Puncture (lbs)	309	ASTM D6241
Permittivity (1/s)	0.5	ASTM D4491

Subsection: 843.01.01 Geotextile Fabric.
Table: TYPE V HIGH STRENGTH GEOTEXTILE FABRIC
Revision: Make the following changes to the chart:

Property	Minimum Value[1]	Test Method
CBR Puncture (lbs)	618	ASTM D6241
Grab Strength (lbs)	700	ASTM D4632
Apparent Opening Size	U.S. #40[3]	ASTM D4751

[3] Maximum average roll value.

STANDARD DRAWINGS THAT APPLY
CB06 031 0655 002-003

GUARDRAIL TRANSITION FROM NORMAL SHOULDER TO NARROW BRIDGE RBB-010-04
TYPICAL GUARDRAIL INSTALLATIONS RBI-001-10
TYPICAL GUARDRAIL INSTALLATIONS RBI-002-06
INSTALLATION OF GUARDRAIL END TREATMENT TYPE 1 ..... RBI-004-04
GUARDRAIL TERMINAL SECTIONS RBR-010-05
GUARDRAIL POSTS RBR-016-04
GUARDRAIL END TREATMENT TYPE 1 ..... RBR-020-05
CURVE WIDENING AND SUPERELEVATION TRANSITIONS RGS-001-06
MISCELLANEOUS STANDARDS PART 1 ..... RGX-001-05
APPROACHES, ENTRANCES, AND MAIL BOX TURNOUT RPM-110-06
SHOULDER CLOSURE TTC-135-01
POST SPLICING DETAIL TTD-110-01
PAVEMENT CONDITION WARNING SIGNS TTD-125-01
RAILING SYSTEM, TYPE II, GUARDRAIL TREATMENT BHS-007-05

Contract ID: 142286 Page 50 of 6

COUNTY OF	ITEM NO.	SHEET NO.

NOTES

1. THE DELINEATOR'S SHAPE AND DIMENSIONS ARE SHOWN FOR ILLUSTRATION PURPOSES ONLY. TYPES OF DELINEATORS PERMITTED SHALL BE FROM THE LIST OF APPROVED MATERIALS.
2. DELINEATOR SHALL BE MEASURED AND PAID FOR AT THE CONTRACT UNIT PRICE EACH AND SHALL INCLUDE ALL MATERIALS AND LABOR NECESSARY FOR ONE COMPLETE INSTALLATION.
3.

CODE	PAY ITEM	PAY UNIT
1982	DELINEATOR FOR GUARDRAIL - MONO DIRECTIONAL WHITE	EACH
1983	DELINEATOR FOR GUARDRAIL - MONO DIRECTIONAL YELLOW	EACH
1987	DELINEATOR FOR GUARDRAIL - BI-DIRECTIONAL WHITE	EACH

4. GUARDRAIL DELINEATORS SHALL BE REQUIRED ON ALL GUARDRAIL.
5. DELINEATORS SHALL BE MANUFACTURED FROM 12 GA. GALVANIZED STEEL.
6. DIMENSIONS SHOWN ARE APPROXIMATE AND ARE SUBJECT TO MANUFACTURER'S TOLERANCES.
7. WHEN CONCRETE BARRIERS EXTEND ACROSS BRIDGE STRUCTURES IN LIEU OF STEEL BEAM GUARDRAIL, DELINEATORS SHALL BE INSTALLED AT SAME VERTICAL ALIGNMENT AS ON THE GUARDRAIL, AND DELINEATORS SHALL COMPLY WITH CURRENT SEPIA DRAWING 004.
8. DELINEATORS SHALL BE INSTALLED IN ACCORDANCE WITH MANUFACTURER'S RECOMMENDATIONS.

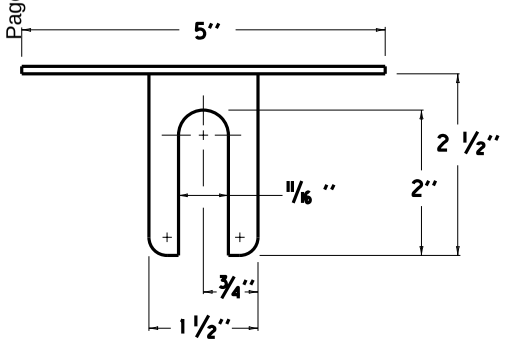

PLAN VIEW

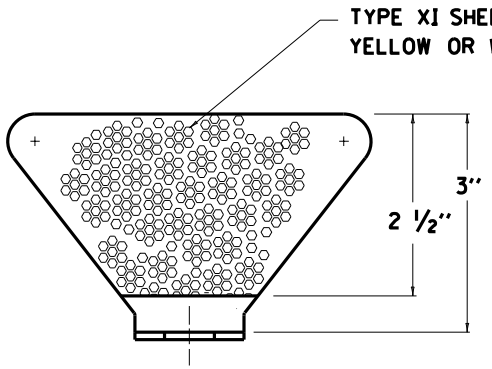

FRONT VIEW

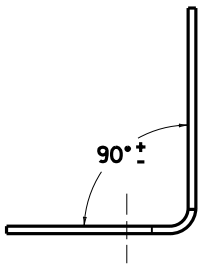

SIDE VIEW

NOTE: DIMENSIONS SHOWN ARE FOR ONE VERSION OF A WEB-MOUNTED GUARDRAIL DELINEATOR. DELINEATORS WITH ALTERNATE DIMENSIONS MAY BE CONSIDERED FOR INCLUSION ON THE APPROVED PRODUCTS LIST.

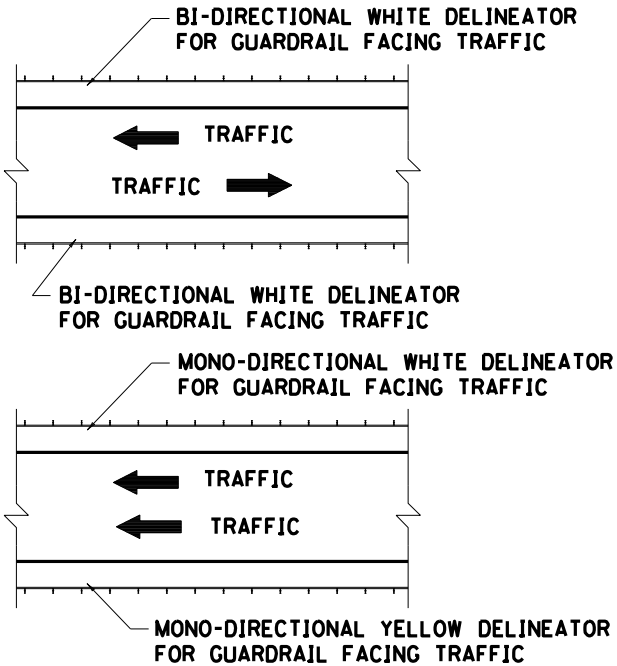

PLACEMENT OF DELINEATORS FOR GUARDRAIL

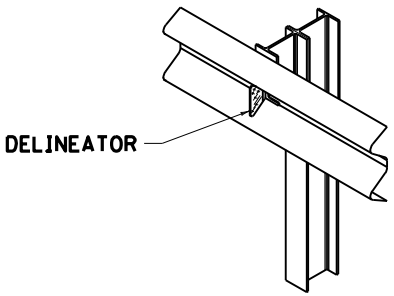

ISOMETRIC VIEW

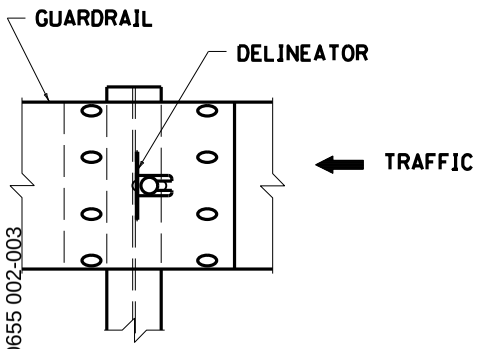

FRONT VIEW

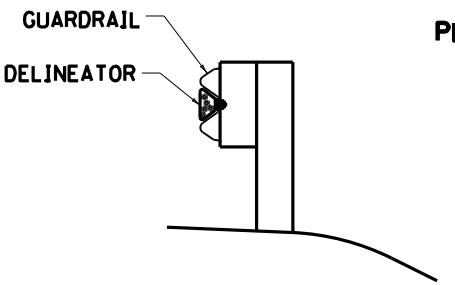

SIDE VIEW

APPROXIMATE DELINEATOR SPACING	
TANGENT	100'
CURVE	50'

SPACING SHOULD BE ADJUSTED IN CURVES SO THAT SEVERAL DELINEATORS ARE ALWAYS SIMULTANEOUSLY VISIBLE TO THE ROAD USER.

KENTUCKY DEPARTMENT OF HIGHWAYS

DELINEATORS FOR GUARDRAIL

SUBMITTED Jeff Vogen DIRECTOR DIVISION OF DESIGN 6-15-2012 DATE

002

EDMONSON COUNTY
CBC 031 0655 002-003

COUNTY OF	ITEM NO.	SHEET NO.

NOTES

1. RAIL BOLT SIMILAR EXCEPT LENGTH.
2. THE THRIE BEAM TO "W" BEAM CONNECTOR SHALL COMPLY WITH AASHTO M-180 CLASS A, TYPE 2 EXCEPT WHERE IN CONFLICT WITH THIS DETAIL.

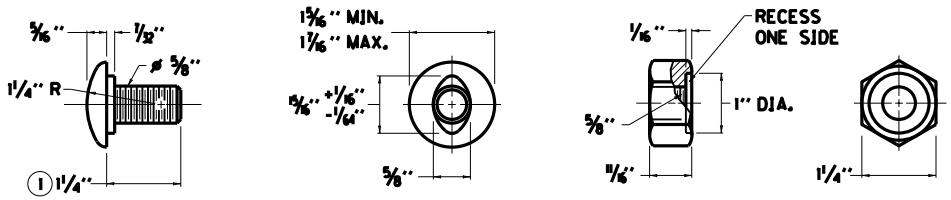

5/8" BUTTON HEAD BOLT AND RECESSED NUT

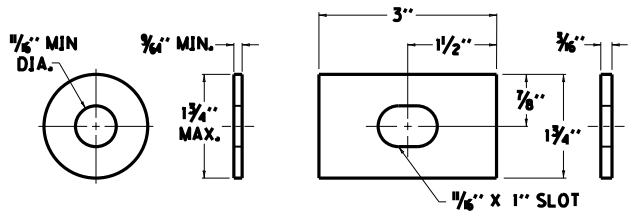

ROUND WASHER AND RECTANGULAR PLATE WASHER

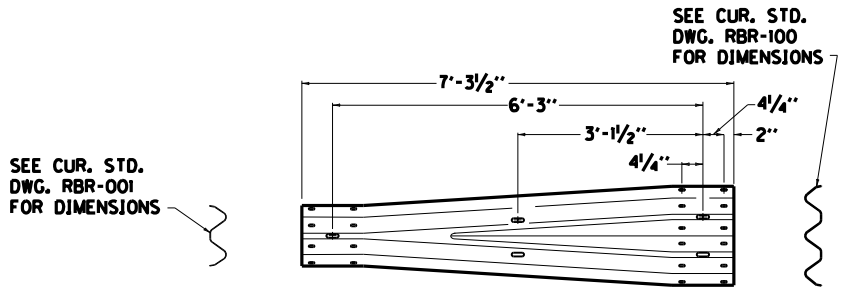

THRIE BEAM TO "W" BEAM CONNECTOR 2

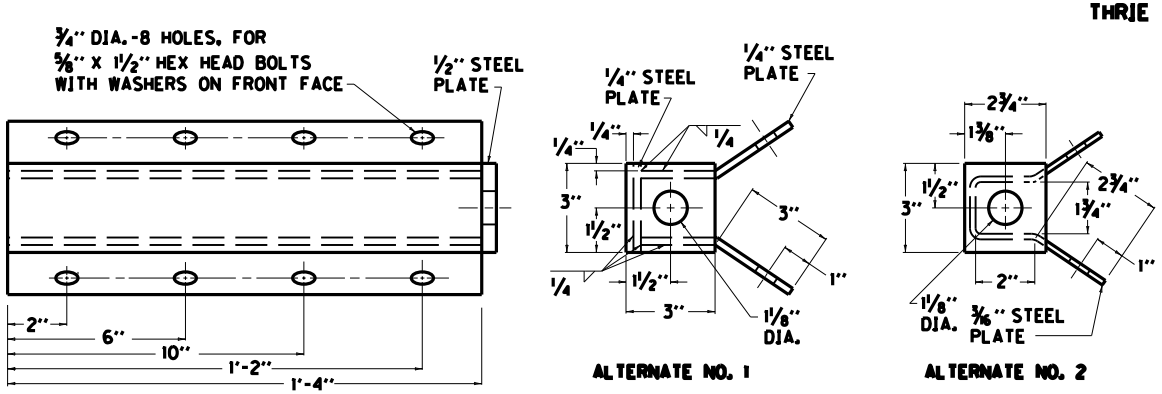

ALTERNATE NO. 1

ALTERNATE NO. 2

RAIL ANCHOR ASSEMBLY

KENTUCKY
DEPARTMENT OF HIGHWAYS

GUARDRAIL COMPONENTS

SUBMITTED [signature] TEBM DIVISION OF DESIGN 6-15-2012 DATE

008

Cont
EDMONSON COUNTY
CB06 031 0655 002-003

Contract ID: 142300
Page 52 of 81

COUNTY OF	ITEM NO.	SHEET NO.

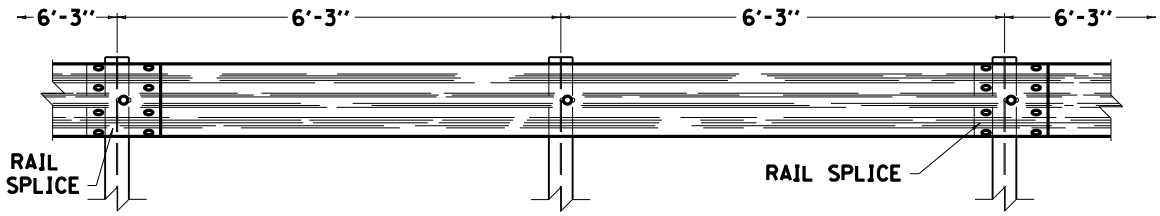

ELEVATION VIEW

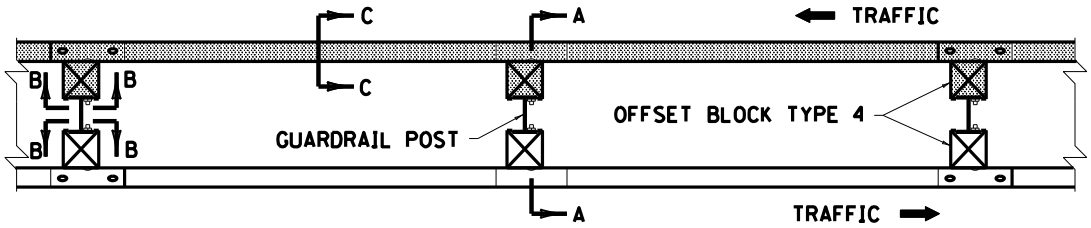

PLAN VIEW
(DOUBLE FACE RAIL OR SINGLE FACE RAIL)

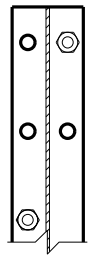

SECTION B-B

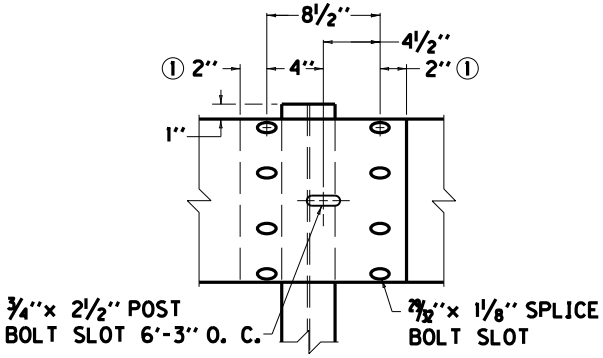

RAIL SPLICE ②

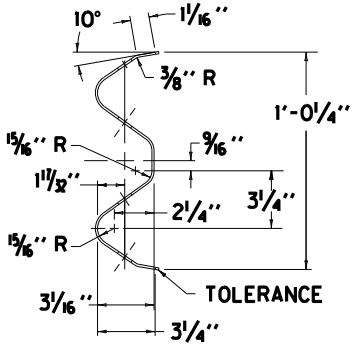

SECTION C-C
(RAIL CORRUGATED
SHEET STEEL BEAM)

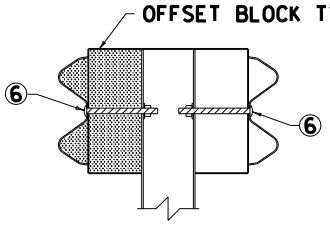

SECTION A-A
DOUBLE FACE RAIL WITH
STEEL POST (W6x9)
(TIMBER OFFSET BLOCK)

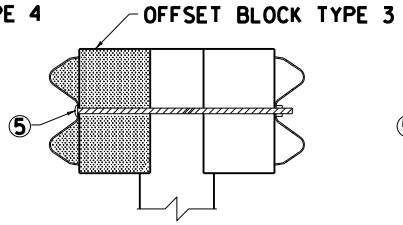

SECTION A-A
DOUBLE FACE RAIL WITH
ROUND TIMBER POST

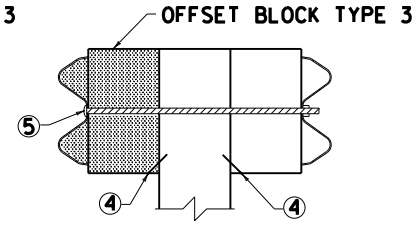

SECTION A-A
DOUBLE FACE RAIL WITH
TIMBER POST

NOTES

THE CONTRACT UNIT PRICE BID SHALL BE:
GUARDRAIL-STEEL W BEAM-SINGLE FACE - LIN. FT.
OR
GUARDRAIL-STEEL W BEAM-DOUBLE FACE - LIN. FT.

DIMENSIONAL TOLERANCES NOT SHOWN OR IMPLIED ARE INTENDED TO BE THOSE CONSISTENT WITH THE PROPER FUNCTIONING OF THE PART, INCLUDING ITS APPEARANCE AND ACCEPTED MANUFACTURING PRACTICES.

THE RAIL ELEMENT SHALL COMPLY WITH AASHTO M-180 -CLASS A, TYPE II.

ALL LAPS SHALL BE PLACED IN THE DIRECTION OF TRAFFIC FLOW.

① TOLERANCE + 1 1/4", - 1/4"

② 8 - 5/8" x 1 1/4" LONG BUTTON HEAD BOLTS AND HEX HEAD RECESS NUTS REQUIRED FOR EACH RAIL SPLICE.

③ LENGTH EQUALS POST AND BLOCK WIDTH PLUS: 2" FOR BOLT OR 2 1/4" FOR THREADED ROD.

④ GALVANIZED STEEL 10d COMMON COATED NAIL (DRIVE NAIL AT THE TOP OR BOTTOM CENTER OF BLOCK AND POST AFTER BOLT IS INSTALLED).

⑤ 5/8" x ③ STEEL THREADED ROD AND TWO (2) HEX HEAD NUTS OR 5/8" x ③ BUTTON OR HEX HEAD BOLT AND HEX HEAD NUT.

⑥ 5/8" x 8" BUTTON HEAD BOLT, HEX HEAD RECESS NUT AND ONE 5/8" ROUND WASHER (TYP.). BOLT SHALL HAVE A MINIMUM THREAD LENGTH OF 2".

REQUIRED FOR DOUBLE RAIL

7 BOTH 12'-6" AND 25' LENGTHS OF "W" BEAM GUARDRAIL SECTIONS WILL BE PERMITTED UNLESS OTHERWISE DIRECTED BY THE ENGINEER.

KENTUCKY
DEPARTMENT OF HIGHWAYS

STEEL BEAM GUARDRAIL ("W" BEAM)

SUBMITTED _____ DIRECTOR DIVISION OF DESIGN — DATE 12-11-12

012

FILE NAME: C:\PWWORK\JEFF.LAIL\D0512631\SEP1A 012.DGN
USER: Jeff.Lail
DATE PLOTTED: December 11, 2012
E-SHEET NAME:
EDMONSON COUNTY
CB06 031 0655 002-003

COUNTY OF	ITEM NO.	SHEET NO.

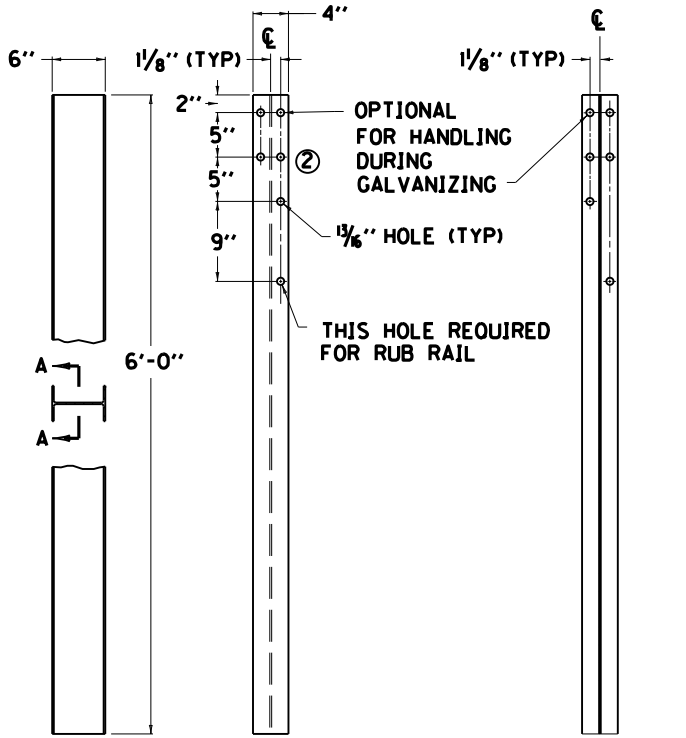

SIDE VIEW FRONT VIEW SECTION A-A

~ W6 X 9.0 STEEL POST ① ~

~ NOTES ~

① W6 X 8.5 IS AN ACCEPTABLE ALTERNATE.
② THESE HOLES REQUIRED FOR ATTACHING RAIL.

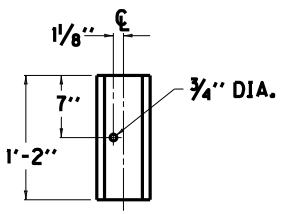

REAR ELEVATION

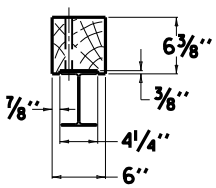

PLAN VIEW

OFFSET BLOCK TYPE 4
(TIMBER)
(FOR USE WITH STEEL POST ONLY)

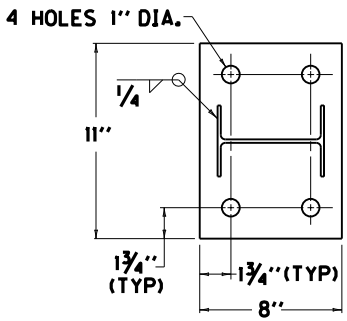

PLAN VIEW

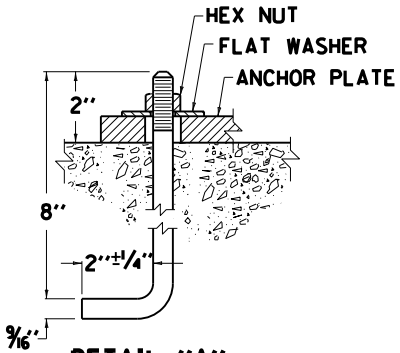

DETAIL "A"

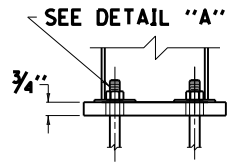

SIDE VIEW
ANCHOR PLATE

KENTUCKY
DEPARTMENT OF HIGHWAYS

GUARDRAIL POSTS

SUBMITTED [signature] 9-27-13
DATE

013

COUNTY OF	ITEM NO.	SHEET NO.

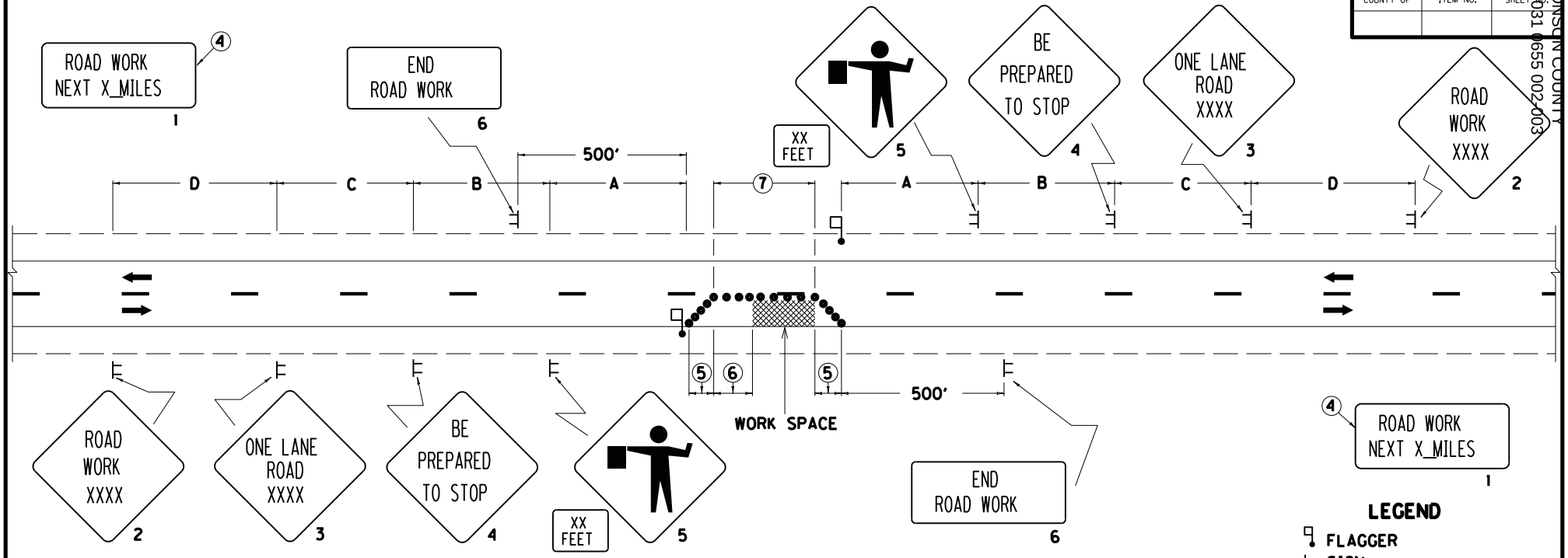

LEGEND

- FLAGGER
- SIGN
- CHANNELIZING DEVICES
  - CONES
  - DRUMS
  - TYPE II BARRICADES
  - TUBULAR MARKERS

1. THE SIZE OF SIGNS 2 THRU 5 SHALL BE 48" X 48" WITH 30" X 24" SUPPLEMENTAL PLAQUES FOR EXPRESSWAYS/FREEWAYS. THE MINIMUM SIZE OF SIGNS 2 THRU 5 SHALL BE 36" X 36" WITH 24" X 18" SUPPLEMENTAL PLAQUES FOR OTHER ROADWAYS. SIGN NOS. 1 AND 6 SHALL BE 48" X 24" FOR EXPRESSWAYS/FREEWAYS AND 36" X 18" FOR OTHER ROADWAYS. A FREEWAY SHALL BE DEFINED AS A DIVIDED HIGHWAY WITH FULL CONTROL OF ACCESS. AN EXPRESSWAY SHALL BE DEFINED AS A DIVIDED HIGHWAY WITH PARTIAL CONTROL OF ACCESS.
2. THE FLAGGERS SHALL BE IN SIGHT OF EACH OTHER OR IN DIRECT COMMUNICATION AT ALL TIMES. FLAGGER STATIONS SHALL BE LOCATED FAR ENOUGH IN ADVANCE OF THE ACTIVITY AREA SO THAT APPROACHING ROAD USERS WILL HAVE SUFFICIENT DISTANCE TO STOP BEFORE ENTERING THE WORK SPACE (REFER TO TABLE 6C-2 OF THE MUTCD). ILLUMINATION SHALL BE PROVIDED TO MARK FLAGGER STATIONS AT NIGHT.
3. DRUMS OR TYPE II BARRICADES SHALL BE USED IN LIEU OF CONES OR TUBULAR MARKERS IF CLOSURE EXTENDS INTO NIGHTTIME HOURS.
4. SIGN NO. 1 SHOULD BE INSTALLED AT THE LIMITS OF THE PROJECT WHEN THE CONSTRUCTION ZONE IS LONGER THAN TWO MILES IN LENGTH. THE DISTANCE SHOWN SHALL BE STATED TO THE NEAREST WHOLE MILE.
5. TAPERS SHALL BE 50' (MIN) TO 100' (MAX) IN LENGTH. SPACING OF CHANNELIZING DEVICES SHOULD BE 20' THRU THE TAPER AREAS.
6. BUFFER SPACE (OPTIONAL). IF USED, THE BUFFER SPACE SHOULD BE EXTENDED SO THAT THE TWO-WAY TRAFFIC TAPER IS PLACED BEFORE A HORIZONTAL OR CREST VERTICAL CURVE TO PROVIDE ADEQUATE SIGHT DISTANCE FOR THE FLAGGER AND A QUEUE OF STOPPED VEHICLES.
7. SPACING OF CHANNELIZING DEVICES THRU THE ACTIVITY AREA SHOULD BE 80'. ON ROADWAYS WITH WIDTHS LESS THAN 20 FEET, CHANNELIZING DEVICES MAY BE OMITTED THRU THE ACTIVITY AREA BASED ON ENGINEERING JUDGMENT.
8. WHEN NIGHTTIME WORK IS BEING PERFORMED, FLOODLIGHTS SHOULD BE USED TO ILLUMINATE THE WORK AREA.

APPLICATION

THIS DRAWING APPLIES TO LANE CLOSURES ON TWO-LANE, TWO DIRECTION HIGHWAYS.

SIGNING AND SPACING TABLE				
ROAD TYPE	A	B	C	D
EXPRESSWAY/ FREEWAY	1000'	500'	1100'	2600'
SP. LT. ≥ 45 MPH*	500'	500'	500'	1100'
SP. LT. ≤ 40 MPH*	250'	250'	250'	250'

*NOTE: USE NORMAL POSTED SPEED LIMIT

DRAWING NOT TO SCALE

USE WITH CURRENT STD. DWG TTD-110

KENTUCKY DEPARTMENT OF HIGHWAYS

LANE CLOSURE TWO-LANE HIGHWAY

SUBMITTED R. Jeffrey Wolfe DATE 8-29-13

017

FILE NAME: C:\PWWORK\JEFF.LAIL\D05\263\SEP1A 017.DGN
USER: Jeff.Lail
DATE PLOTTED: August 29, 2013
E-SHEET NAME:
MicroStation v8.11.7.180

PART III

EMPLOYMENT, WAGE AND RECORD REQUIREMENTS

TRANSPORTATION CABINET
DEPARTMENT OF HIGHWAYS

LABOR AND WAGE REQUIREMENTS
APPLICABLE TO OTHER THAN FEDERAL-AID SYSTEM PROJECTS

I. Application
II. Nondiscrimination of Employees (KRS 344)
III. Payment of Predetermined Minimum Wages
IV. Statements and Payrolls

I. APPLICATION

1. These contract provisions shall apply to all work performed on the contract by the contractor with his own organization and with the assistance of workmen under his immediate superintendence and to all work performed on the contract by piecework, station work or by subcontract. The contractor's organization shall be construed to include only workmen employed and paid directly by the contractor and equipment owned or rented by him, with or without operators.

2. The contractor shall insert in each of his subcontracts all of the stipulations contained in these Required Provisions and such other stipulations as may be required.

3. A breach of any of the stipulations contained in these Required Provisions may be grounds for termination of the contract.

II. NONDISCRIMINATION OF EMPLOYEES

AN ACT OF THE KENTUCKY
GENERAL ASSEMBLY TO PREVENT
DISCRIMINATION IN EMPLOYMENT
KRS CHAPTER 344
EFFECTIVE JUNE 16, 1972

The contract on this project, in accordance with KRS Chapter 344, provides that during the performance of this contract, the contractor agrees as follows:

1. The contractor shall not fail or refuse to hire, or shall not discharge any individual, or otherwise discriminate against an individual with respect to his compensation, terms, conditions, or privileges of employment, because of such individual's race, color, religion, national origin, sex, disability or age (between forty and seventy); or limit, segregate, or classify his employees in any way which would deprive or tend to deprive an individual of employment opportunities or otherwise adversely affect his status as an employee, because of such individual's race, color, religion, national origin, sex, disability or age (between forty and seventy). The contractor agrees to post in conspicuous places, available to employees and applicants for employment, notices to be provided setting forth the provisions of this nondiscrimination clause.

2. The contractor shall not print or publish or cause to be printed or published a notice or advertisement relating to employment by such an employer or membership in or any classification or referral for employment by the employment agency, indicating any preference, limitation, specification, or discrimination, based on race, color, religion, national origin, sex, disability or age (between forty and seventy), except that such notice or advertisement may indicate a preference, limitation, or specification based on religion, or national origin when religion, or national origin is a bona fide occupational qualification for employment.

3. If the contractor is in control of apprenticeship or other training or retraining, including on-the-job training programs, he shall not discriminate against an individual because of his race, color, religion, national origin, sex, disability or age (between forty and seventy), in admission to, or employment in any program established to provide apprenticeship or other training.

4. The contractor will send to each labor union or representative of workers with which he has a collective bargaining agreement or other contract or understanding, a notice to be provided advising the said labor union or workers' representative of the contractor's commitments under this section, and shall post copies of the notice in conspicuous places available to employees and applicants for employment. The contractor will take such action with respect to any subcontract or purchase order as the administrating agency may direct as a means of enforcing such provisions, including sanctions for non-compliance.

III. PAYMENT OF PREDETERMINED MINIMUM WAGES

1. These special provisions are supplemented elsewhere in the contract by special provisions which set forth certain predetermined minimum wage rates. The contractor shall pay not less than those rates.

2. The minimum wage determination schedule shall be posted by the contractor, in a manner prescribed by the Department of Highways, at the site of the work in prominent places where it can be easily seen by the workers.

IV. STATEMENTS AND PAYROLLS

1. All contractors and subcontractors affected by the terms of KRS 337.505 to 337.550 shall keep full and accurate payroll records covering all disbursements of wages to their employees to whom they are required to pay not less than the prevailing rate of wages. Payrolls and basic records relating thereto will be maintained during the course of the work and preserved for a period of one (1) year from the date of completion of this contract.

2. The payroll records shall contain the name, address and social security number of each employee, his correct classification, rate of pay, daily and weekly number of hours worked, itemized deductions made and actual wages paid.

3. The contractor shall make his daily records available at the project site for inspection by the State Department of Highways contracting office or his authorized representative.

Periodic investigations shall be conducted as required to assure compliance with the labor provisions of the contract. Interrogation of employees and officials of the contractor shall be permitted during working hours.

Aggrieved workers, Highway Managers, Assistant District Engineers, Resident Engineers and Project Engineers shall report all complaints and violations to the Division of Contract Procurement.

The contractor shall be notified in writing of apparent violations. The contractor may correct the reported violations and notify the Department of Highways of the action taken or may request an informal hearing. The request for hearing shall be in writing within ten (10) days after receipt of the notice of the reported violation. The contractor may submit

records and information which will aid in determining the true facts relating to the reported violations.

Any person or organization aggrieved by the action taken or the findings established as a result of an informal hearing by the Division of Contract Procurement may request a formal hearing.

4. The wages of labor shall be paid in legal tender of the United States, except that this condition will be considered satisfied if payment is made by a negotiable check, on a solvent bank, which may be cashed readily by the employee in the local community for the full amount, without discount or collection charges of any kind. Where checks are used for payments, the contractor shall make all necessary arrangements for them to be cashed and shall give information regarding such arrangements.

5. No fee of any kind shall be asked or accepted by the contractor or any of his agents from any person as a condition of employment on the project.

6. No laborers shall be charged for any tools used in performing their respective duties except for reasonably avoidable loss or damage thereto.

7. Every employee on the work covered by this contract shall be permitted to lodge, board, and trade where and with whom he elects and neither the contractor nor his agents, nor his employees shall directly or indirectly require as a condition of employment that an employee shall lodge, board or trade at a particular place or with a particular person.

8. Every employee on the project covered by this contract shall be an employee of either the prime contractor or an approved subcontractor.

9. No charge shall be made for any transportation furnished by the contractor or his agents to any person employed on the work.

10. No individual shall be employed as a laborer or mechanic on this contract except on a wage basis, but this shall not be construed to prohibit the rental of teams, trucks or other equipment from individuals.

No Covered employee may be employed on the work except in accordance with the classification set forth in the schedule mentioned above; provided, however, that in the event additional classifications are required, application shall be made by the contractor to the Department of Highways and (1) the Department shall request appropriate classifications and rates from the proper agency, or (2) if there is urgent need for additional classification to avoid undue delay in the work, the contractor may employ such workmen at rates deemed comparable to rates established for similar classifications provided he has made written application through the Department of Highways, addressed to the proper agency, for the supplemental rates. The contractor shall retroactively adjust, upon receipt of the supplemental rates schedule, the wages of any employee paid less than the established rate and may adjust the wages of any employee overpaid.

11. No contractor or subcontractor contracting for any part of the contract work which may require or involve the employment of laborers or mechanics shall require or permit any laborer or mechanic in any work-week in which he is employed on such work, to work in excess of eight hours in any calendar day or in excess of forty hours in such work-week unless such laborer or mechanic receives compensation at a rate not less than one and one half times his basic rate of pay for all hours worked in excess of eight hours in any calendar day or in excess of forty hours in such work-week. A laborer, workman or mechanic and an employer may enter into a written agreement or a collective bargaining agreement to work more than eight (8) hours a calendar day but not more than ten (10) hours a calendar day for the straight time hourly rate. This agreement shall be in writing and shall be executed prior to the employee working in excess of eight (8) hours, but not more than ten (10) hours, in any one (1) calendar day.

12. Payments to the contractor may be suspended or withheld due to failure of the contractor to pay any laborer or mechanic employed or working on the site of the work, all or part of the wages required under the terms of the contract. The Department may suspend or withhold payments only after the contractor has been given written notice of the alleged violation and the contractor has failed to comply with the wage determination of the Department of Highways.

13. Contractors and subcontractors shall comply with the sections of Kentucky Revised Statutes, Chapter 337 relating to contracts for Public Works.

Revised 2-16-95

EXECUTIVE BRANCH CODE OF ETHICS

In the 1992 regular legislative session, the General Assembly passed and Governor Brereton Jones signed Senate Bill 63 (codified as KRS 11A), the Executive Branch Code of Ethics, which states, in part:

> KRS 11A.040 (6) provides:
>
> No present or former public servant shall, within six (6) months of following termination of his office or employment, accept employment, compensation or other economic benefit from any person or business that contracts or does business with the state in matters in which he was directly involved during his tenure. This provision shall not prohibit an individual from returning to the same business, firm, occupation, or profession in which he was involved prior to taking office or beginning his term of employment, provided that, for a period of six (6) months, he personally refrains from working on any matter in which he was directly involved in state government. This subsection shall not prohibit the performance of ministerial functions, including, but not limited to, filing tax returns, filing applications for permits or licenses, or filing incorporation papers.
>
> KRS 11A.040 (8) states:
>
> A former public servant shall not represent a person in a matter before a state agency in which the former public servant was directly involved, for a period of one (1) year after the latter of:
>
> a) The date of leaving office or termination of employment; or
> b) The date the term of office expires to which the public servant was elected.

This law is intended to promote public confidence in the integrity of state government and to declare as public policy the idea that state employees should view their work as a public trust and not as a way to obtain private benefits.

If you have worked for the executive branch of state government within the past six months, you may be subject to the law's prohibitions. The law's applicability may be different if you hold elected office or are contemplating representation of another before a state agency.

Also, if you are affiliated with a firm which does business with the state and which employs former state executive-branch employees, you should be aware that the law may apply to them.

In case of doubt, the law permits you to request an advisory opinion from the Executive Branch Ethics Commission, Room 136, Capitol Building, 700 Capitol Avenue, Frankfort, Kentucky 40601; telephone (502) 564-7954.

Kentucky Equal Employment Opportunity Act of 1978

The requirements of the Kentucky Equal Employment Opportunity Act of 1978 (KRS 45.560-45.640) shall not apply to this Contract.

TRANSPORTATION CABINET
DIVISION OF CONSTRUCTION PROCUREMENT
COMPLIANCE SECTION
PROJECT WAGE RATES

WORKERS……..MINIMUM HOURLY RATE…..$7.25

Note: Parts III and IV of **"Labor and Wage Requirements Applicable to Other Than Federal-Aid System Projects"** do not apply to this project.

EMPLOYEE RIGHTS

UNDER THE FAIR LABOR STANDARDS ACT

THE UNITED STATES DEPARTMENT OF LABOR WAGE AND HOUR DIVISION

FEDERAL MINIMUM WAGE

$7.25 PER HOUR

BEGINNING JULY 24, 2009

OVERTIME PAY

At least 1½ times your regular rate of pay for all hours worked over 40 in a workweek.

CHILD LABOR

An employee must be at least **16** years old to work in most non-farm jobs and at least **18** to work in non-farm jobs declared hazardous by the Secretary of Labor.

Youths **14** and **15** years old may work outside school hours in various non-manufacturing, non-mining, non-hazardous jobs under the following conditions:

EDMONSON COUNTY
CB06 031 0655 002-003

Contract ID: 142360
Page 61 of 65

No more than

- **3** hours on a school day or **18** hours in a school week;
- **8** hours on a non-school day or **40** hours in a non-school week.

Also, work may not begin before **7 a.m.** or end after **7 p.m.**, except from June 1 through Labor Day, when evening hours are extended to **9 p.m.** Different rules apply in agricultural employment.

TIP CREDIT

Employers of "tipped employees" must pay a cash wage of at least $2.13 per hour if they claim a tip credit against their minimum wage obligation. If an employee's tips combined with the employer's cash wage of at least $2.13 per hour do not equal the minimum hourly wage, the employer must make up the difference. Certain other conditions must also be met.

ENFORCEMENT

The Department of Labor may recover back wages either administratively or through court action, for the employees that have been underpaid in violation of the law. Violations may result in civil or criminal action.

Employers may be assessed civil money penalties of up to $1,100 for each willful or repeated violation of the minimum wage or overtime pay provisions of the law and up to $11,000 for each employee who is the subject of a violation of the Act's child labor provisions. In addition, a civil money penalty of up to $50,000 may be assessed for each child labor violation that causes the death or serious injury of any minor employee, and such assessments may be doubled, up to $100,000, when the violations are determined to be willful or repeated. The law also prohibits discriminating against or discharging workers who file a complaint or participate in any proceeding under the Act.

ADDITIONAL INFORMATION

- Certain occupations and establishments are exempt from the minimum wage and/or overtime pay provisions.
- Special provisions apply to workers in American Samoa and the Commonwealth of the Northern Mariana Islands.
- Some state laws provide greater employee protections; employers must comply with both.
- The law requires employers to display this poster where employees can readily see it.
- Employees under 20 years of age may be paid $4.25 per hour during their first 90 consecutive calendar days of employment with an employer.
- Certain full-time students, student learners, apprentices, and workers with disabilities may be paid less than the minimum wage under special certificates issued by the Department of Labor.

For additional information:

1-866-4-USWAGE

(1-866-487-9243) TTY: 1-877-889-5627

WWW.WAGEHOUR.DOL.GOV

U.S. Department of Labor | Wage and Hour Division

WHD Publication 1088 (Revised July 2009)

PART IV

INSURANCE

INSURANCE

The Contractor shall procure and maintain the following insurance in addition to the insurance required by law:

1) Commercial General Liability-Occurrence form – not less than $2,000,000 General aggregate, $2,000,000 Products & Completed Aggregate, $1,000,000 Personal & Advertising, $1,000,000 each occurrence.

2) Automobile Liability- $1,000,000 per accident

3) Employers Liability:

   a) $100,000 Each Accident Bodily Injury
   b) $500,000 Policy limit Bodily Injury by Disease
   c) $100,000 Each Employee Bodily Injury by Disease

4) The insurance required above must be evidenced by a Certificate of Insurance and this Certificate of Insurance must contain one of the following statements:
   a) "policy contains no deductible clauses."
   b) "policy contains _____ (amount) deductible property damage clause but company will pay claim and collect the deductible from the insured."

5) KENTUCKY WORKMEN'S COMPENSATION INSURANCE. The contractor shall furnish evidence of coverage of all his employees or give evidence of self-insurance by submitting a copy of a certificate issued by the Workmen's Compensation Board.

The cost of insurance is incidental to all contract items. All subcontractors must meet the same minimum insurance requirements.

PART V

BID ITEMS

142360

PROPOSAL BID ITEMS

Report Date 11/18/14

Section: 0001 - GUARDRAIL

LINE	BID CODE	ALT	DESCRIPTION	QUANTITY	UNIT	UNIT PRIC	FP	AMOUNT
0010	00001		DGA BASE	75.00	TON		$	
0020	01987		DELINEATOR FOR GUARDRAIL BI DIRECTIONAL WHITE	10.00	EACH		$	
0030	02351		GUARDRAIL-STEEL W BEAM-S FACE	390.00	LF		$	
0040	02355		GUARDRAIL-STEEL W BEAM-S FACE A	100.00	LF		$	
0050	02360		GUARDRAIL TERMINAL SECTION NO 1	3.00	EACH		$	
0060	02367		GUARDRAIL END TREATMENT TYPE 1	1.00	EACH		$	
0070	02381		REMOVE GUARDRAIL	150.00	LF		$	
0080	02562		TEMPORARY SIGNS	150.00	SQFT		$	
0090	02650		MAINTAIN & CONTROL TRAFFIC KY 655	1.00	LS		$	
0100	08806		GUARDRAIL-BRIDGE CASE I-A MODIFIED WITH OFFSET BLOCKS	40.00	LF		$	

Section: 0002 - DEMOBILIZATION

LINE	BID CODE	ALT	DESCRIPTION	QUANTITY	UNIT	UNIT PRIC	FP	AMOUNT
0110	02569		DEMOBILIZATION	1.00	LS		$	